PD-DO-EX

CONTRACT NAS8-29674

GRUMMAN

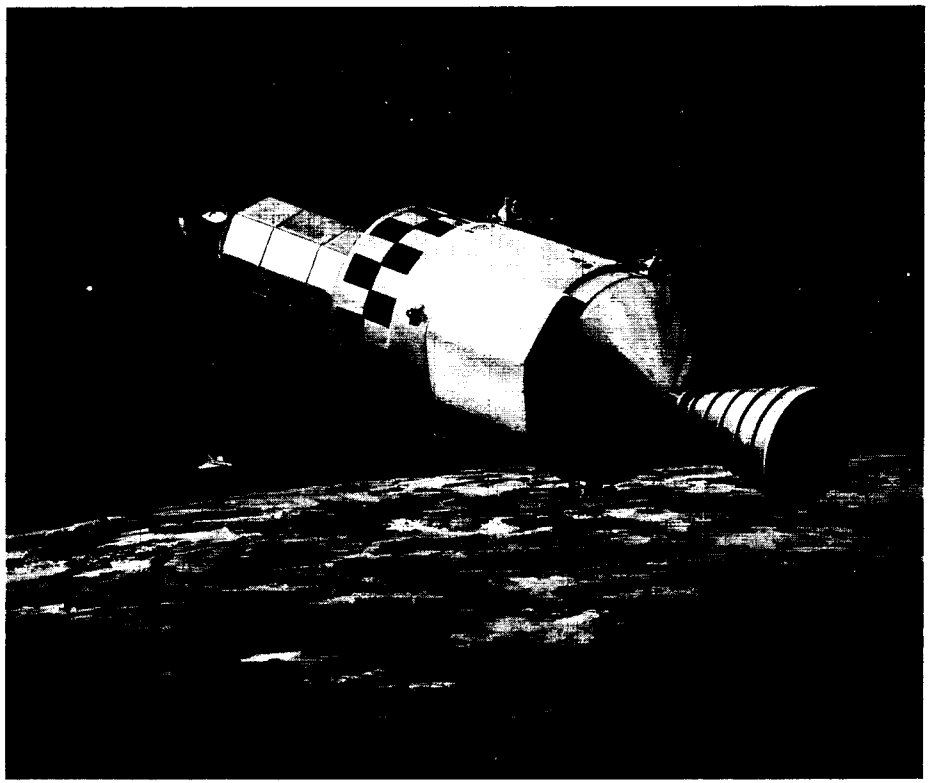

STORABLE SPACE TUG SYSTEMS STUDY
Data Dump
Volume 3–Summary, Program Option 3

RPT NO. 300 RP-73-006

STORABLE SPACE TUG SYSTEMS STUDY
Data Dump

Volume 3–Summary, Program Option 3

19 September 1973

CONTRACT NAS8-29674

RPT NO. 300 RP-73-006

GRUMMAN

STORABLE TUG DATA REVIEW

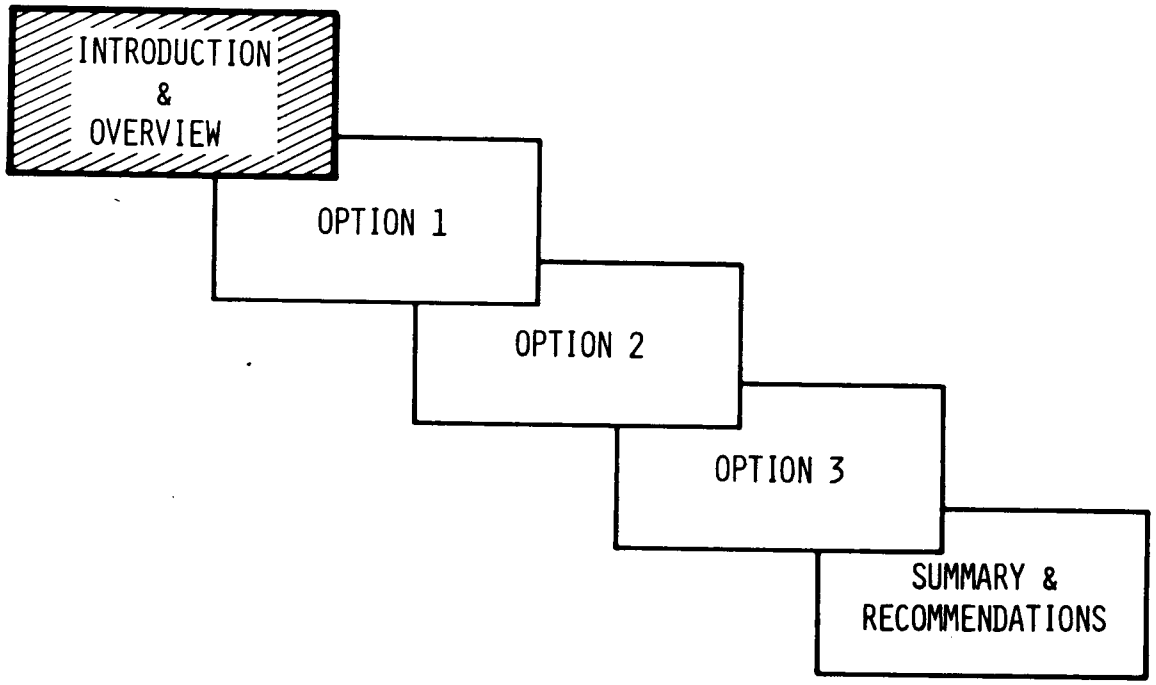

I-10
II-12
III-41

DATA DUMP MATRIX

This chart identifies the concepts Grumman developed for the September Data Dumps.

The essential features of the program options are listed under each option heading and then a small sketch of the candidate concepts are placed under the appropriate option heading. For example, within Program Option 1, Grumman studied concept 110A-1 which is seen to be a single stage tug with an apogee kick stage module.

The concepts are identified by a two-part numbering system. The first part of the number provides traceability to the July Concept Selection meeting design which was used as the starting point in developing the configuration. The dash number simply specifies the Program Option within which the concept has been developed.

DATA DUMP MATRIX

OPTION	1	2	3A				3B			
IOC	DEC '79	DEC '83	DEC '79	DEC '83	DEC '79	DEC '83	DEC '79	DEC '83	DEC '79	DEC '83
GEOSYNCH DEPLOY, LB	3500									
GEOSYNCH RETRV, LB	0	3500	0	2200	0	2200	0	3500	0	3500
COST EMPHASIS	MIN DDT&E	LOW DDT&E - LOW TOTAL COST								

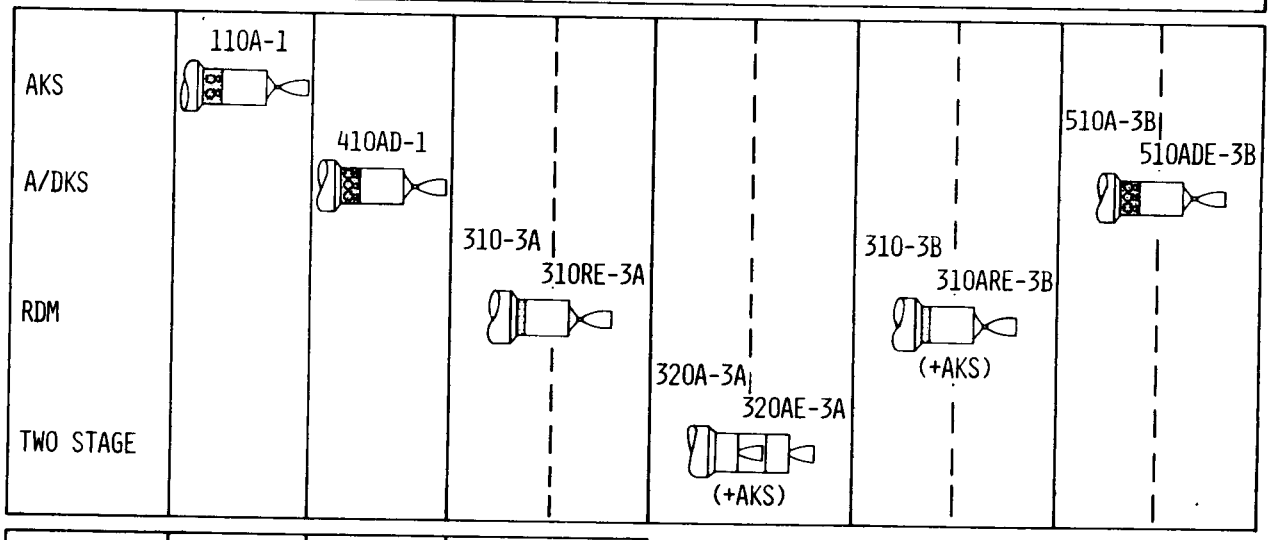

SENSITIVITY STUDIES	• DELAY IOC 2 YR	• ADV IOC 2 YR • DKS VS RDM • SERVICE MISS.	• DELAY IOC 2 YR

I-19, II-21, III-59

DATA DUMP VOLUME GENERATION

We have carefully followed NASA's detailed Data Dumps outline in preparing the Data Dump Volumes.

Volumes 1, 2 and 3 are extracts from the information of Volumes 4 - 8 and summarize the three program options.

DATA DUMP VOLUME GENERATION

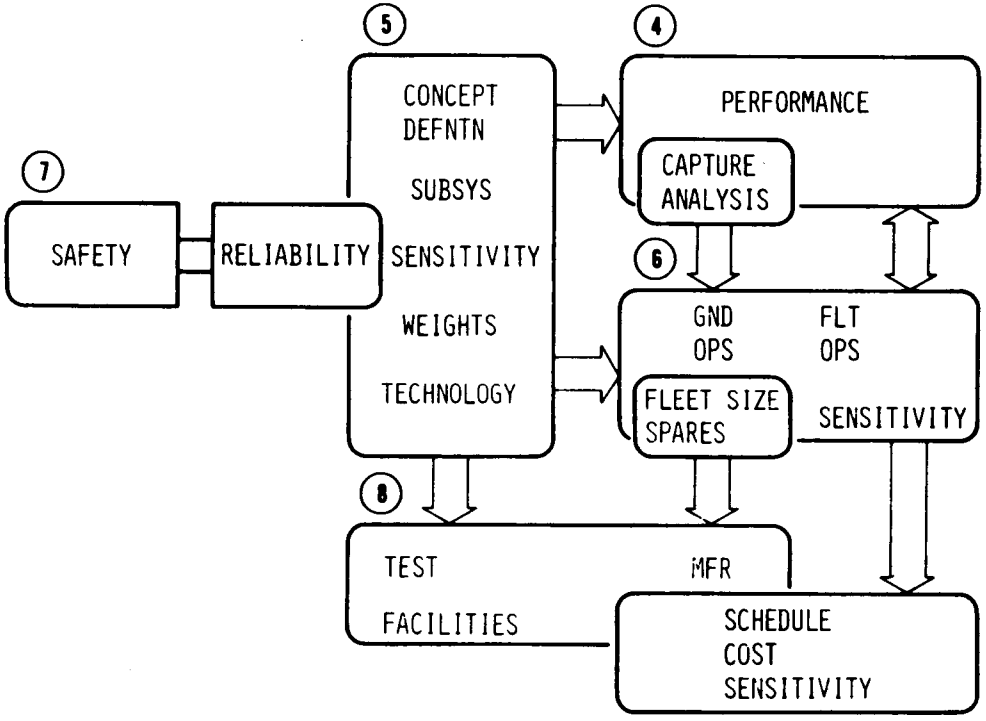

VOLUME	EDITOR
4 MISSION ACCOMP	B. SIDOR LR5-1491
5 SYSTEMS	C. J. GOODWIN LR5-2453
6 OPS - GND	M. H. DANDRIDGE LR5-1494
OPS - FLT	R. GENDIELLIEE LR5-1631
7 SAFETY (INCL REL)	A. NATHAN LR5-1486
8 PROGRAMMATICS	H. WOLF LR5-1492
	B. FRUMKIN LR5-1492
	R. McCAFFREY LR5-1487

I-18

VEHICLE CHARACTERISTICS SUMMARY

This is a brief overview of the physical characteristics of the vehicles. Each concept meets or exceeds its performance requirements.

Tug lengths are short. As will be seen later in the inboard arrangement drawings, extra payload length beyond the 25 ft. requirement can be accommodated. For example, concept 110A-1 can deploy a payload 30.5 ft. long. When operated with an apogee kick stage, the payload can be 25.5 ft. long. Only the two-stage concept, using both stages, requires a two-position nozzle to keep length down.

In no case is it necessary to use a higher flexibility engine than Class 1. The Shuttle OME 7.5K lb. thrust engine is ample for Option 1.

VEHICLE CHARACTERISTICS SUMMARY

OPTION	1	2	3A				4A			
GEOSYNCH RETRIEVE CAP (LB)	—	3500	—	2200	—	2200	—	3500	—	3500
TUG DESIGNATION	110A-1	410AD-2	310-3A	310RE-3A	320A-3A	320AE-3A	310-3B	310ARE-3B	510A-3B	510ADE-3B
TUG LENGTH, FT	27.92	24.75	24.75		17.06 EACH		24.75		25.0	
BODY DIA, FT	9.92	10.0	10.0		8.16		10.0		10.0	
MAIN PROP. CAPACITY, KLB	56.9	59.5	59.5		32 EACH		59.5		59.5	
MAIN ENGINE										
- OME F=7.5K ISP=	327.2	—	—		—		—		327.2	
- CL. 1 F=12K ISP=	—	338	338		—		338		—	
- CL. 1 (RET.NOZ.) F=12K ISP=	—	—	—		338		—		—	
SUBSYS TECH										
- LOW COST	—	—	—		—		—		—	
- LOW WT	—	—	—		—		—		—	
AUTONOMY LEVEL	IIIA	IIB	IIIA	IIB	IIIA		IIIA	IIB	IIIA	IIB

FIXED WT
NASA MISSIONS SHOWN,
ADD SECURE COMM
FOR DOD MISSIONS

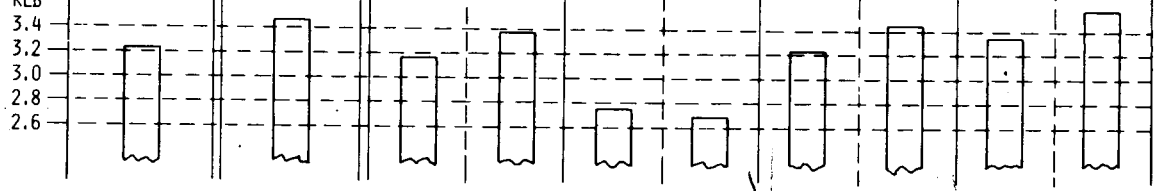

I-8, II-10, III-39

SYSTEMS SUMMARY & TECHNOLOGY

The next two charts summarize the subsystems which are part of each concept. Arrows are used within the Option 3 concepts to show evolutionary changes.

Asterisks have been placed by subsystems to point out SR&T needs. The details of these programs and schedules are developed in Volume 8. These are small programs. The total SR&T funding requirements, excluding engines, are less than $4M.

SUBSYSTEMS SUMMARY & TECHNOLOGY

	OPT 1	OPT 2	OPT 3A		OPT 3B	
	110A-1	410AD-2	310-3A 310RE-3A	320A-3A 320AE-3A	310-3B 310ARE-3B	510A-3B 510ADE-3B
OME 7.5K ENGINE	X					X
*CLASS I ENGINE		X	X		X	
*CLASS I ENGINE - 2 POS. NOZZLE				X		
*PFR HELIUM TANK	X	X	X	X	X	X
*SPACE STORABLE SRM		X				X
16 APS THRUSTERS	X		X	X	X	X
24 APS THRUSTERS		x	X	X	X	X
NESTED DOME TANKS		X	X	X	X	X
SEPARATE TANKS	X					
TITANIUM GORES		X	X	X	X	
*SPUN-FORM ALUM	X					X
*GRAPHITE COMPOSITE SHELL		X	X	X	X	
STIFFENED ALUM SHELL						X
ALUM HONEYCOMB SHELL	X					

*REQ SUPPORTING RESEARCH & TECHNOLOGY

I-7, II-9, III-38, IX-2

THIS PAGE INTENTIONALLY LEFT BLANK

SUBSYSTEMS SUMMARY & TECHNOLOGY

	OPT 1	OPT 2	OPT 3A		OPT 3B	
	110A-1	410AD-2	310-3A 310RE-3A	320A-3A 320AE-3A	310-3B 310ARE-3B	510A-3B 510ADE-3B
CAROUSEL IMU	X		X → X	X → X	X → X	X → X
*MICRON IMU		X				
*LASER RADAR		X	- X	- X	- X	- X
621B & DOPPLER RCVRS		X	- X		- X	- X
48K WORD CDC 469 COMPUTER	X		X → X	X	X → X	X → X
65K WORD CDC 469 COMPUTER		X				
DFS COMM	X		X → X	X → X	X → X	X → X
DFS + CSS COMM		X				
TV		X	- X	- X	- X	- X
PRIME BATTERY	X					
MOD FUEL CELL		X	X		X	X
*ADV FUEL CELL				X		
CRYOGENIC H_2/O_2 STORAGE		X	X	X	X	X

*REQ SUPPORTING RESEARCH & TECHNOLOGY

I-6, II-8, III-37, IX-1

PERFORMANCE SUMMARY

This is a sumary of the performance capability of each Tug concept, grouped by flight mode. Each concept meets or exceeds all performance requirements.

A characteristic of the modular concepts is that they have very wide flexibility in the way they can be operated.

Although they incur increased flight operational cost, the more complex modes represent a powerful technique for increasing Tug performance.

PERFORMANCE SUMMARY

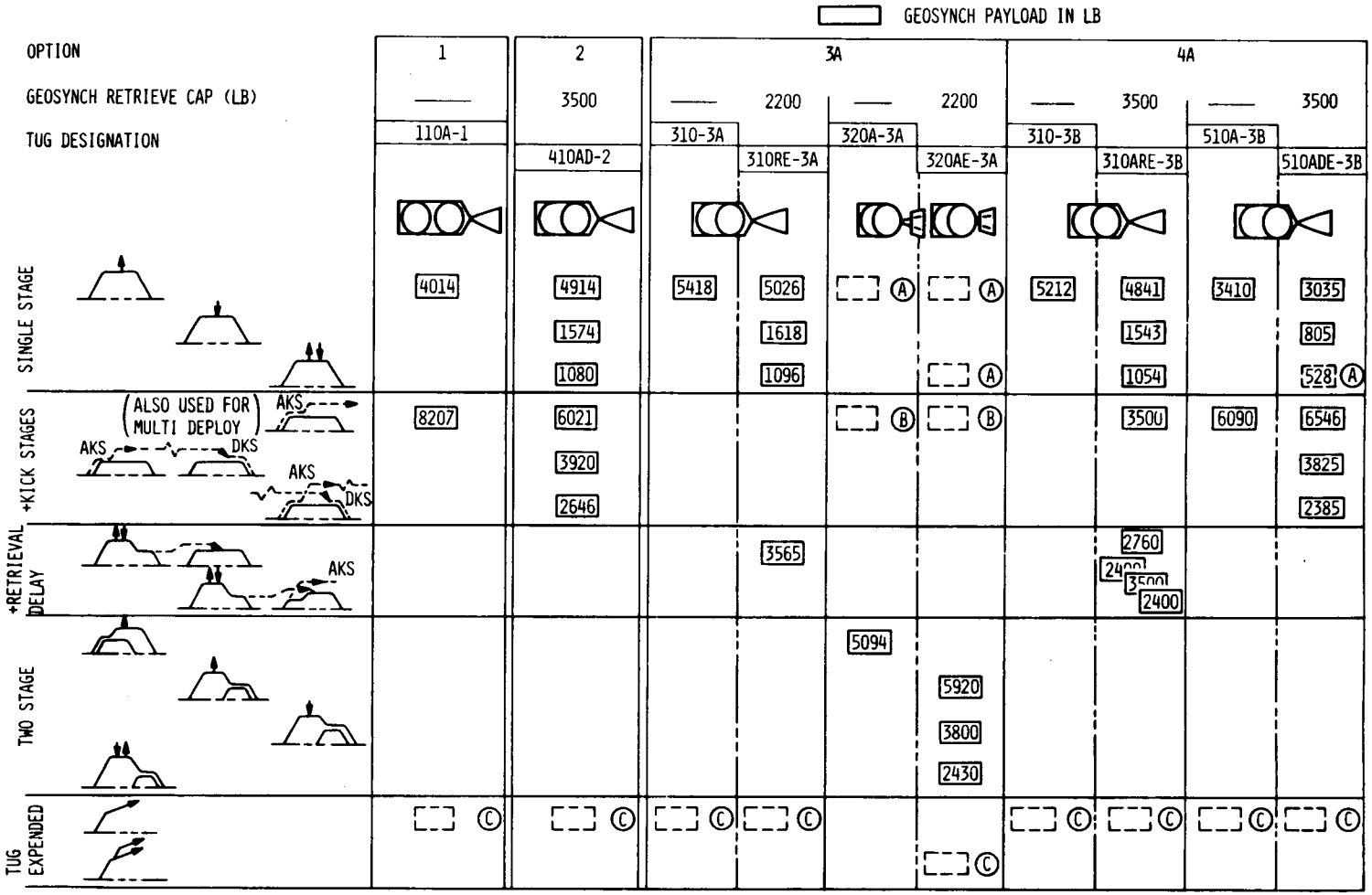

NOTES - (A) USED FOR LOW ENERGY ORBITS (B) USED FOR PLANETARY (P.L. 1920 & 23) (C) USED FOR EXTREME FAR PLANETARY (P.L. 22 & 24)

I-9, II-11, III-40

PROGRAMMATIC/COST CHARACTERISTICS SUMMARY

This highlights key cost features for each of the concepts.

DDT&E for Option 1 is $191M. Since an apogee kick stage is not required to meet the 3500 lb payload deployment requirement, this module has been deferred in the program until it is phased into planetary flight and multiple deployment operations. While the AKS really is optional, we have included it in the program to minimize total program cost.

There is no significant difference between the initial DDT&E of the two 3B evolutionary concepts and, in fact, total DDT&E is only $25M higher for the configuration evolving to Retrieval Delay Module usage as compared to that using apogee and deorbit kick stages. Tug program cost is $50M lower for the RDM program, but this comparison reverses when shuttle flight costs are included. Due to the lower number of shuttle flights of the 510A-3B/510ADE-3B, its program cost is $25M lower.

The two stage configuration has the lowest number of shuttle flights within Option 3. This depresses the total program cost below the other concepts in spite of its high DDT&E and Tug program cost.

PROGRAMMATIC/COST CHARACTERISTICS SUMMARY

OPTION	1	2	3A		3B	
GEOSYNCH RETRIEVE CAP (LB)	——	3500	—— 2200	—— 2200	—— 3500	—— 3500
● TUG DESIGNATION	110A-1	410AD-2	310-3A/310RE-3A	320A-3A/320AE-3A	310-3B/310ARE-3B	510A-3B/510ADE-3B
● PROGRAMMATICS						
IOC	DEC'79	DEC'83	DEC'79/DEC'83	DEC'79/DEC'83	DEC'79/DEC'83	DEC'79/DEC'83
SHUTTLE FLIGHTS	218	245	355	301	365	336
PAYLOAD DELIV - KLB	705	931	1142	1142	1206	1206
TUG FLEET - MAIN STAGE	11	10	23	13L+11U	16	14
AUX STAGE	14A	14A, 72D	4R	9A	34A, 4R	32A, 95D
● COST - $M						
TOTAL PROG (T+S△)	2820	3362	4586	4075	4694	4424
TOTAL PROG (T)	531	789	858	914	861	906
DDT&E - INITIAL/TOTAL	191/220	350	255/329	333/370	255/346	254/318
COST/FLT NASA REUSE T	.96	1.15	.97	1.17	1.05	1.19
EXPEDN T	8.26	11.52	9.37	17.7	9.45	9.19
EXPEND A	2.16	2.40	–	2.42	2.10	2.44
DOD REUSE T	1.03	1.21	1.04	1.26	1.04	1.17
EXPEND A	2.23	–	–	–	2.09	–
PEAK YEAR FUNDING (YR)	71/81(79)	151(82)	85(78)	107(78)	88(78)	97(78)
FIRST UNIT - MAIN STAGE	9.4	13.1	10.7/13.1	10.2/12.7	10.7/13.1	10.2/12.2
AUX STAGE	1.4	A D 1.4 2.4	RDM 1.6	AKS 1.6	RDM AKS 1.6 1.5	AKS DKS 1.6 2.4
TUG PAYLOAD DELIV COST $/LB	277	222	240	258	242	237

III-103

SENSITIVITY STUDIES VS. APPLICABLE CONCEPTS

This chart lists the 15 sensitivity studies that were performed and their relationship to the 6 Space Tug concepts that were considered.

A check (✔) indicates that specific analyses were performed against the indicated baseline concept to establish the sensitivity results. Applicability (APPLIC.) indicates that, although the sensitivity analyses did not specifically address that baseline concept, the results of the analysis are applicable by similarity.

The results of the sensitivity analysis are generally applicable to most of the concepts with two notable gaps:

(1) Many of the performance trades cannot be applied to the two stage concept (320A/320AE-3A) because of its unique operational modes

(2) Most trades related to payload retrieval or payload support are not applicable to the deploy only Tug concept (110A-1)

The results of these sensitivity studies are discussed on the following three charts. The only sensitivity studies not discussed here are the ground operations sensitivity studies, which are covered under Operations, and the two year IOC delay sensitivity which is discussed under Programmatics.

(Ref. Vol. 5, Book III, Section 5.9)

SENSITIVITY STUDIES VS. APPLICABLE CONCEPTS

CONCEPT

SENSITIVITY	110A-1	410AD-2	310 - 3A/ 310RE-3A	320A- 3A/ 320AE-3A	310- 3B/ 310ARE-3B	510A- 3B/ 510ADE-3B
1. AUTONOMY	✓	✓	APPLIC.		✓	APPLIC.
2. 0.97 RELIABILITY		✓	APPLIC.		APPLIC	APPLIC.
3. 30 DAY SERV. MISS		✓	APPLIC.		APPLIC	
4. DOD COMM. REQM'TS		APPLIC	✓	APPLIC.	APPLIC.	APPLIC.
5. P/L COMMAND, & C/O		APPLIC.	✓	APPLIC.	APPLIC.	APPLIC.
6. ELEC. POWER TO P/L	✓	✓	✓	✓	✓	✓
7. DESIGN LIFE	APPLIC.	APPLIC.	✓	APPLIC.	✓	APPLIC.
8. SPIN-STAB. P/L RET.			✓	APPLIC.	APPLIC.	
9. RENDEZVOUS & DOCK.	✓	APPLIC.	APPLIC.		APPLIC.	APPLIC.
10. NESTED VS. SEP. TANKS	APPLIC.	APPLIC.	✓		APPLIC.	APPLIC.
11. IN-FL PROP. DUMP	✓	APPLIC.	APPLIC.		APPLIC.	APPLIC.
12. MAIN ENGINE SELECT.	✓	✓	✓		✓	✓
13. USE OF RDM		✓				
14. GROUND OPS TRADES	✓	APPLIC.	APPLIC.	APPLIC.	APPLIC.	APPLIC.
15. 2 YEAR IOC DELAY	✓	✓	✓			

SENSITIVITY STUDY RESULTS - SUMMARY

1. Autonomy

The results of our autonomy sensitivity study indicated that:

- o Autonomy level II is best suited for Option 2 and 3
- o Autonomy level IV is an attractive candidate in Option 1 because of low DDT&E. A close second choice is autonomy level II with relatively low DDT&E and close to $40M total program cost savings.

The level I system had degraded performance due to the slow convergence characteristics of the Horizon Scanner Star Tracker system.

The selected level II system requires the use of the 621B NAV SAT which introduces schedule risk and technology issues. It is recommended that the interferometer approach which utilizes undedicated RF sources as landmarks be considered as an option.

The level III system introduces high software development and operating costs for both ground and onboard computer systems.

High ground involvement and costs precludes the use of a level IV system for the more complex Option 2 and 3 programs.

2. Reliability

All but 10 of the 67 lbs of redundancy required on the 410AD-2 Tug to achieve the baseline 0.97 mission success reliability is also required to maintain safety of flight when the Tug is in the vicinity of the orbiter. The Tug without any of the 67 lbs. of redundancy has a 0.98 reliability for a 36 hour deployment mission. Therefore, the safety of flight requirement in the vicinity of the orbiter has a more pronounced effect on hardware redundancy than mission duration.

The sensitivity analysis also indicated that it may be cost effective to design the Tug for a mission success reliability goal greater than 0.98.

3. 30-DAY SERVICING MISSION

The 30 day servicing mission involves servicing of four satellites in geosynchronous orbit. The Tug carries a reusable 500 lb. servicing unit for this purpose. The Tug accomodates the 30 day servicing mission requirement by providing add-on EPS cryogenic tanks and APS propellant tanks. The EPS tanks were sized for 340 kwh for Service Mode I and 451 kwh for Service Mode II. The total usable APS propellant requirement was 1020 lb. The performance capability and cost impact are indicated on the chart.

SENSITIVITY STUDY RESULTS - SUMMARY

SENSITIVITY AREA	RESULTS
1. AUTONOMY	o LEVEL II - MOST ATTRACTIVE FOR OPTIONS 2 AND 3 o LEVEL IV - MOST ATTRACTIVE FOR LOW DDT&E OPTION 1 o LEVEL I - HIGHEST PERFORMANCE PENALTIES o LEVEL III - HI DDT&E AND TOTAL PROGRAM COST
2. 0.97 RELIABILITY	o TUG WEIGHT SAVING (10-67 LB) IS MORE DEPENDENT ON SAFETY CRITICAL ISSUES THAN SHORTER MISSION DURATION o TUG RELIABILITY GOAL > 0.98 MAY BE COST EFFECTIVE
3. 30-DAY SERVICING MISSION	o SERVICE MODE I - TOTAL SRU DEPLOY WEIGHT = 686 LB OR 172 LB/SATELLITE - INCREASES TO 2516 LB OR 629 LB/SATELLITE IF SERVICE UNIT IS LEFT IN MISSION ORBIT - TUG DDT&E COST INCREASE IS $8.4M (SERVICE UNIT ASSUMED GFE)

4. DOD COMMUNICATION REQUIREMENTS

The baseline Tug communication subsystem was designed to accomodate both the NASA requirements (STDN and TDRS compatibility) and the DOD requirements (SGLS compatibility plus secure comm). The Tug performance and cost penalty to accomodate SGLS and secure comm., in addition to meeting the NASA requirements was estimated to be 32 lbs. of communication subsystem hardware and $430K DDT&E cost. The per unit production cost impact was estimated to be $75K. All secure comm. equipment is assumed to be GFE to the Tug program and is not costed.

It was noted that the biggest contributor to the baseline communication subsystem cost was the requirement for TDRS spread spectrum compatibility. This requirement results in a 12 lb. weight penalty and a $7M DDT&E cost impact.

5. PAYLOAD COMMAND CONTROL AND CHECKOUT

The baseline Tug was designed to provide a payload command control and checkout interface. The Tug performance and cost penalty to meet this requirement was estimated to be 53 lb. of subsystem hardware with a $4M DDT&E cost impact. The per unit production cost impact was estimated to be $570K. The TV assembly was assumed to be required for payload monitoring and support only.

6. ELECTRICAL POWER TO PAYLOADS

Providing 300 watts of electrical power to payloads while they are attached to the Tug requires additional primary battery capacity for concept 110A-1 and increased fuel cell reactant storage for the other concepts. The required payloads support times were 11 hours for concept 110A-1, 57 hours for concept 320AE-3A and about 100 hours for all the other concepts. The performance penalty was a reduction in payload delivery capability of 140 lbs. for 110A-1 and less than 40 lbs. for all the other concepts. The DDT&E cost impact was negligible. The total productions cost impact ranged from $400K for 110A-1 to about $1M for 310RE-3A.

7. DESIGN LIFE

The Tug design life study indicated that most Tug hardware is not life limited and a design life of 100 missions is practical. Major areas of concern are the main propulsion tanks, main engine, fuel cell and thermal coatings and MLI.

It was found that the number of Tugs expended (for planetary missions) during the program had a significant effect on the operating life and consequently the optimum design life of a Tug. For example, for the 310/310RE-3A program where 17 Tugs are expended, a difference in Tug design of from 20 to 50 missions only changed the fleet size by one vehicle.

SENSITIVITY STUDY RESULTS - SUMMARY (CONT.)

SENSITIVITY AREA	RESULTS
4. DOD COMM REQUIREMENTS	o ADDING DOD COMM REQUIREMENTS (SGLS PLUS SECURE COMM) TO NASA REQUIREMENTS: - INCREASES TUG WEIGHT BY 32 LB - INCREASES TUG DDT&E COST BY $430K (SECURE COMM EQUIPMENT IS GFE) o PROVIDING TDRS (SPREAD SPECTRUM) COMPATIBILITY IS LARGEST COST DRIVER - INCREASES DDT&E BY $7M
5. PAYLOAD COMMAND CONTROL AND C/O	o WEIGHT INCREASE OF 53 LB o DDT&E COST INCREASE OF $4M
6. ELECTRICAL POWER TO PAYLOADS	o PROVIDING 300W POWER TO PAYLOADS - REDUCES CONCEPT 110A-1 DEPLOY CAPABILITY BY 140 LB - REDUCES OTHER CONCEPTS DEPLOY CAPABILITY BY $<$ 40 LB - NEGLIGIBLE DDT&E IMPACT. TOTAL PRODUCTION COST BETWEEN $0.4-1.1M
7. DESIGN LIFE	o MOST TUG HARDWARE IS NOT LIFE LIMITED o OPTIMUM DESIGN LIFE VERY DEPENDENT ON NO. OF TUGS EXPENDED

8. SPIN-STABILIZED PAYLOAD RETRIEVAL

The objective was to determine the effect if the Tug were required to despin spin-stabilized payloads which are candidates for retrieval. Using TOPSS study results a reusable despin kit was assumed to be carried by the Tug. The only significant impact was the reduction in Tug payload retrieval capability of about 120 lbs.

9. RENDEZVOUS AND DOCKING

The objective was to determine the impact on the Tug of providing retrieval capability. Concept 110A-1 was chosen as the point of departure. It was estimated that 350 lbs of weight must be added to 110A-1 to achieve retrieval capability. The net result is a reduction in Tug deployment capability of over 900 lbs. The DDT&E increase to 110A-1 to provide retrieval capability was estimated to be $54M.

10. NESTED DOME vs. SEPARATE TANK

A comparison between nested dome and separate tank configurations indicated that the separate tanks were heavier by 70 lbs for titanium and 129 lbs for aluminum. A cost comparison for titanium tanks indicated that the separate tank configuration would reduce DDT&E by $1.2M and first unit cost by $90K. The separate tank configuration simplifies manufacturing and inspection and reduces the potential hazard associated with leaks.

11. IN-FLIGHT PROPELLANT DUMP

Providing in-flight propellant dump instead of designing for landing with full tanks results in a reduction in Tug weight of 42 lbs, a reduction in adapter weight of 11 lbs and an orbiter increse of 4 lbs. This results in an equivalent Tug weight reduction of 49 lbs. In-flight propellant dump reduces Tug DDT&E by $400K and increases total Tug production cost by $35K.

12. MAIN ENGINE SELECTION

A sensitivity analysis based on performance and cost indicated that the 8096-B2 engine merits further consideration in all of the concepts considered. The performance improvement of the OME 12 over the OME 7.5 is very small and does not justify the increased DDT&E. The performance improvement of the Class II over the Class I again is not large enought ot justify the delta DDT&E.

13. USE OF RDM

The objective was to determine the program impact of substituting an RDM for the DKS in the direct-developed high performance Option 2 concept. The Tug with RDM reduced DDT&E by $14M and Tug only program cost by about $70M, but resulted in a total program cost increase of over $200M.

SENSITIVITY STUDY RESULTS - SUMMARY (CONT.)

SENSITIVITY AREA	RESULTS
8. SPIN-STABILIZED PAYLOAD RETRIEVAL	o ASSUMED TUG USED GFE DESPIN KIT o TUG PAYLOAD RETRIEVAL CAPABILITY REDUCED BY 120 LB.
9. RENDEZVOUS AND DOCKING	o ADDING RETRIEVAL CAPABILITY TO TUG INCREASES WEIGHT BY 350 LB AND REDUCES DEPLOYMENT CAPABILITY BY >900 LB o COST OF PROVIDING RETRIEVAL CAPABILITY IS $54M
10. NESTED DOME VS. SEPARATE TANK	o SEPARATE TANK CONFIGURATION: - INCREASES TUG WEIGHT BY 70 LB (T_I) AND 129 LB (A_L) - DECREASES COST: DDT&E BY $1.2M AND PRODUCTION BY $1M - SIMPLIFIES MANUFACTURING AND REDUCES POTENTIAL HAZARDS
11. IN-FLIGHT PROPELLANT DUMP	o RESULTS IN EQUIVALENT TUG WEIGHT REDUCTION OF 49 LB o REDUCES DDT&E COST BY $400K. INCREASES PRODUCTION COST BY $35K.
12. MAIN ENGINE SELECTION	o 8096-B2 ENGINE MERITS FURTHER CONSIDERATION IN ALL OPTIONS o OME 12 AND CLASS II ENGINES ARE NOT COST-EFFECTIVE
13. USE OF RDM	o USE OF A TUG WITH RDM INSTEAD OF DKS IN OPTION 2 - REDUCES DDT&E BY $14M. - INCREASES TOTAL (TUG + SHUTTLE) PROGRAM COST BY OVER $200M.

THIS PAGE INTENTIONALLY LEFT BLANK

STORABLE TUG DATA REVIEW

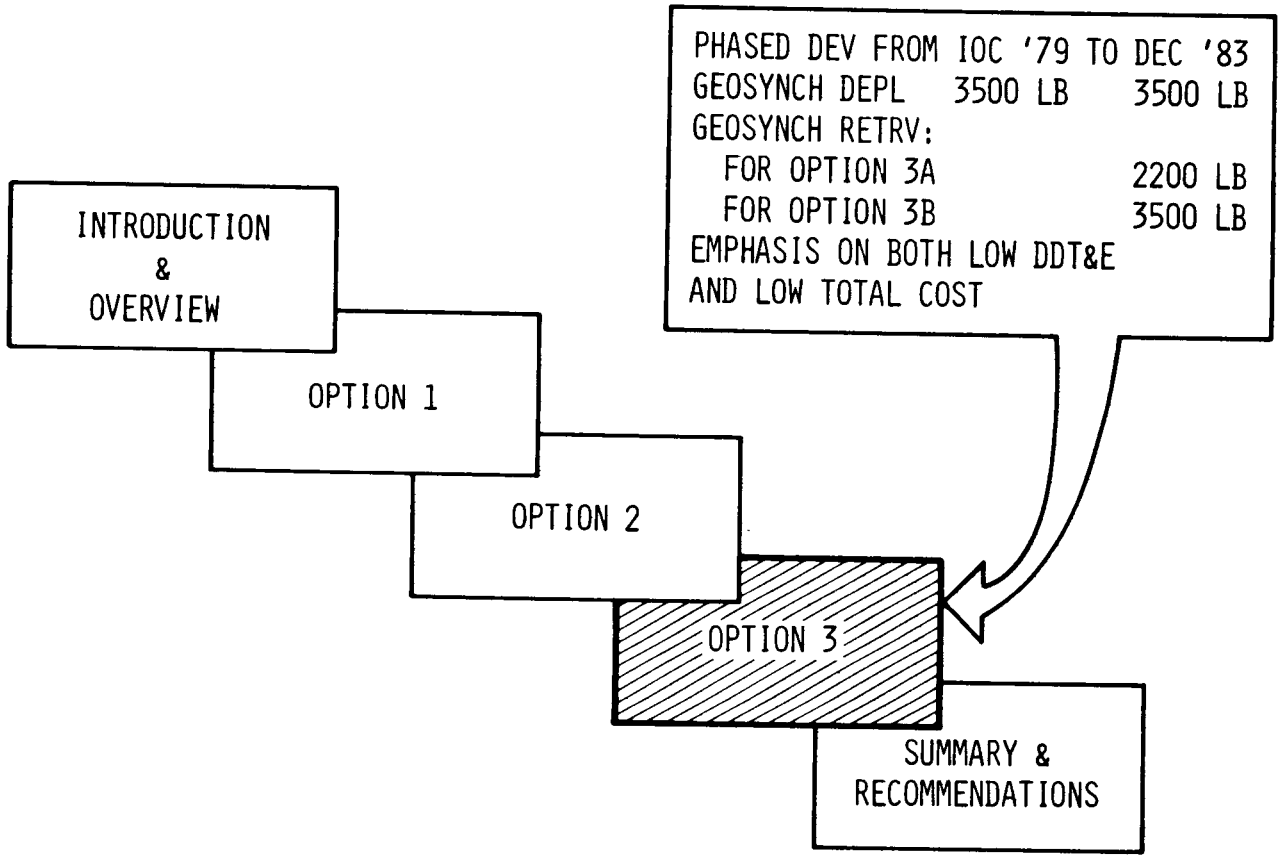

I-13
II-15
III-44

OVERVIEW 310-3A → 310RE-3A

This is a high performance tug which, in its unevolved state (310-3A) has high payload capability for both single (5418 lb) and double (25301b) deployment. When evolved to 310RE-3A, its performance as a plain tug drops very little on deployment and it has a useful retrieval and round trip capability. To increase the retrieval capability, a Retrieval Delay Module is used in the mode shown but this requires two shuttle flights to complete the mission.

The deployment and retrieval payload capabilities of the tug are shown for candidate flight modes and missions, together with costs and the number of flights and vehicles upon which they were based.

(Ref. Vol. 5, Part I, Opt. 3A/1, Sect. 5.2)

310-3A/310RE-3A OVERVIEW

- FEATURES
  - SINGLE STAGE TUG-PHASED INTRO OF RETRIEVAL DELAY MODULE
  - HIGH PERF OF BASIC TUG GIVES BASIS FOR MULTI DEPLOY & RETRIEVAL DELAY
  - RETRIEVAL KIT FOR RETRIEVAL FLIGHTS ONLY
  - MAIN ENGINE - CLASS 1, I_{SP} = 338 SECS
  - FIXED WEIGHT: 310-3A _____ 3190 LB
    : 310ORE-3A _____ 3394 LB
- FLIGHT MODES

310RE-3A

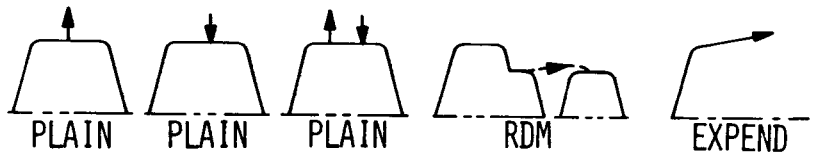

- PERFORMANCE ← GEOSYNCH → ← PLANET →
  - DEPLOY (LB) 5026 PL 22 & 24 & 23
  - RETRIEVE (LB) 1618
  - ROUND TRIP (LB) 1096 3021
- PROGRAMMATICS
  - DDT&E $M 255/329
  - TOTAL PROGRAM $M 4586
  - NO. OF FLIGHTS 355
  - NO. OF TUGS 23
  - NO. OF RDM 4

III-72

OPTION 3A 310/310RE-3A PERFORMANCE SUMMARY

Concept 310/310RE meets the 3500 lb deploy and 2200 lb retrieve requirements without kick stages. The retrieval delay module provides the capability to retrieve an 8250 lb payload with two shuttle flights or deploy and retrieve a 3000 lb payload in two flights.

The delta-V budgets shown on the facing page test accounts for gravity losses resulting from the 12,000 lbs thrust engine. A finite burn simulation which utilizes a gravity turn during the early portion of the maneuver and cross product steering during the terminal portion was used to define delta-V's for the transfer and circularization burns. The transfer to geosynchronous altitude was split into two burns. A 2 degree plane change was split between the two outbound transfer maneuvers and the remaining 26.5° degrees performed during the circularization burns.

All performance calculations account for APS and stop/start consumables. A detailed calcualtion was made for each concept and flight mode by accounting for attitude maneuvers for prethrust orientations, navigation sightings and IMU alignments. All limit cycle operations, both narrow and wide, were accounted for in the calculations. Midcourse corrections, terminal rendezvous and translations required to null residuals after each main engine burn was taken into account in the evaluation.

Reference Vol. 6, Section 6.3

OPTION 3A - 310/310RE-3A PERFORMANCE SUMMARY

VEHICLE CHARACTERISTICS

W_{BO} = 3190 LBS
ADAPTER WT. = 1510 LBS
W_P- CAPACITY = 59500 LBS

I_{SP} = 338 SEC
THRUST = 12,000 LBS
FPR = 1.7% Δ V

DELTA-V ~ FPS

CORE

	OUTBOUND	ON-ORBIT	INBOUND	LOSSES
• DEPLOY	13967	0	13885	84
• RETRIEVE	13967	30	13885	84
• ROUND TRIP	13967	130	13885	84
• RETRV'L DELAY (FLT 1)	13967	114	13906	85
• RETRV'L DELAY (FLT 2)	12687	30	13555	83

CONSUMABLES ~ LBS

	APS	EPS + LOSSES
• DEPLOY	281	73
• RETRIEVE	409	87
• ROUND TRIP	454	162
• RET.DLY MAX DWN	453	166
• RET.DLY EQL UP/DWN	628	72

GEOSYNCHRONOUS PAYLOAD - LBS

310	310RE
5418	5026
	1618
	1096
	8250
	3000

OPTION 3A - 310/310RE-3A - MISSION PERFORMANCE

The 310/310RE concept exceeds all retrieval requirements for the option because of the retrieval delay flight mode. All DOD geosynchronous missions requiring retrieval can be performed with the RDM. Two flights are then needed to place a satellite, deorbit a like satellite to a holding orbit and retrieve it on the second flight.

All NASA geosynchronous P/L's requiring retrieval can be performed in the retrieval delay mode. Economy in flight scheduling can be achieved with NASA ground rules permitting mixed payloads. In two flight instances, a double deployment was considered with the first flight of this dual mission approach.

(Ref. Vol. 4, Sect. 4.3.3.2)

GEOSYNCHRONOUS PERFORMANCE ~ RETRIEVAL DELAY MODE
CONCEPT 310RE-3A

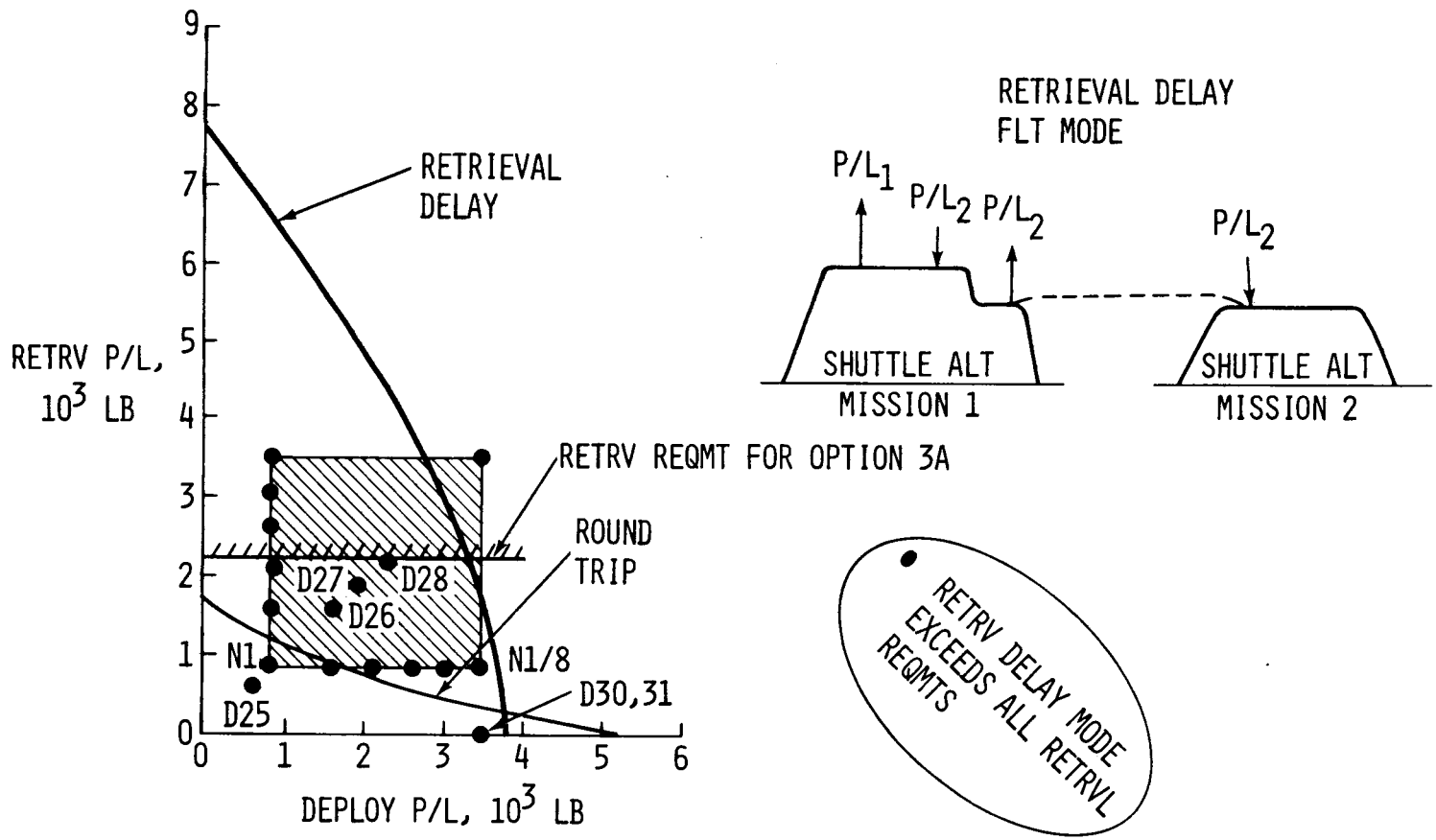

III-15

OPTION 3A-310/310RE FLIGHT SUMMARY

The retrieval delay module is required for approximately 1/6 of the required flights. The number of expendable TUGS required by this concept (17) is higher than other options because no kick stages have been included for the far planetary missions. The addition of a kick stage would save 9 TUGS.

There are a total of 216 NASA flights of which 181 are launched from ETR and 35 from WTR. Of the 174 DOD flights, 153 are launched from ETR and 21 from WTR.

Concept 310/310RE-3A has the potential of capturing 43 of the 52 additional P/L's designated for Option 3A.

(Ref. Vol. 4, Sect. 4.3.3.2)

FLIGHT SUMMARY OPTION: (310/310RE-3A)

FLIGHT MODE		CALENDAR YEAR											TOTAL
		80	81	82	83	84	85	86	87	88	89	90	
TOTAL FLIGHTS	SHUTTLE	20	15	17	27	51	42	46	43	40	42	47	390
	TUG												SAME
TUG FLIGHT DISTRIBUTION	DEPLOY	(20)	(15)	(17)	(26)	(16)	(7)	(10)	(17)	(9)	(13)	(10)	(160)
	1 P/L	9	7	8	9	8	4	3	6	2	5	5	66
	2 P/L	8	8	7	13	2	2	2	7	6	1	2	58
	3 P/L	3			4	2	1	1	1	1	4	2	19
	1 P/L EXPEND TUG			2		4		4	3		3	1	17
	RETRIEVAL DELAY MODE					(10)	(10)	(8)	(5)	(6)	(9)	(11)	(59)
	RETRIEVAL DELAY					3					1	1	5
	1 P/L DEPLOY + RETRV DELAY					7	10	8	5	6	8	8	52
	2 P/L DEPLOY + RETRV DELAY											2	2
	RETRIEVE					(17)	(11)	(18)	(11)	(14)	(9)	(20)	(100)
	ROUND TRIP				(1)	(8)	(14)	(10)	(10)	(11)	(11)	(6)	(71)
	1 P/L ROUND TRIP					8	11	10	9	11	8	6	63
	2 P/L DEPLOY ROUND TRIP						2				2		4
	SORTIE				1		1		1		1		4
MISSION MODEL	(TOTAL)	(34)	(23)	(24)	(48)	(62)	(61)	(60)	(61)	(59)	(62)	(60)	(554)
	DEPLOY	34	23	24	47	37	36	32	40	34	42	34	383
	RETRIEVE					25	24	28	20	25	19	26	167
	SORTIE				1		1		1		1		4
FLT RATE USED IN COSTING		3	12	17	27	32	42	46	43	40	42	47	351

RETRIEVAL DELAY USED ON 1/6 OF FLIGHTS

III-21

CONFIGURATION 310RE-3A

The 310RE-3A configuration employs nested propellant tanks, sharing a common pressure interface only by virtue of the nested separate domes. They are of titanium alloy, welded gore construction, with the cylindrical portion of sheet-stringer construction.

The remaining outer shell is of composite honeycomb construction, attached to the tank girths by mechanical joints.

The engine thrust structure is a conical section of aluminum stiffened sheet construction also. All main support and intermediate frames are of aluminum alloy construction.

An aluminum meteorite shield, supported by fiberglass standoffs on 6" centers, protects the propellant tank over its cylindrical portion.

Twelve lock latches are located at both ends of the Tug for final securing of payloads to Tug and Tug to support adapter. Twelve conical index fittings at both forward and aft interfaces serve to index and align the mating surfaces and transmit shear and compression loads across the interface.

All subsystem equipments are located in side mounted equipment modules for easy access and serviceability.

Double goldized mylar blankets with nylon net spacers in conjunction with suitable surface foatings on all exterior surfaces provide the required thermal balance for the spacecraft. In addition aluminum heat pipe radiators mounted on the surface of the equipment modules maintain the thermal balance of the equipment modules.

Four equally spaced probe/drogue type probes are installed at the forward interface for executing retrieval operations.

A complete inboard profile and structural arrangement for this configuration may be found in Volume 5.

(Ref. Vol. 5, Part I, Opt. 3A/1, Sect. 5.2)

INBOARD PROFILE - 310RE-3A: SIDE VIEW

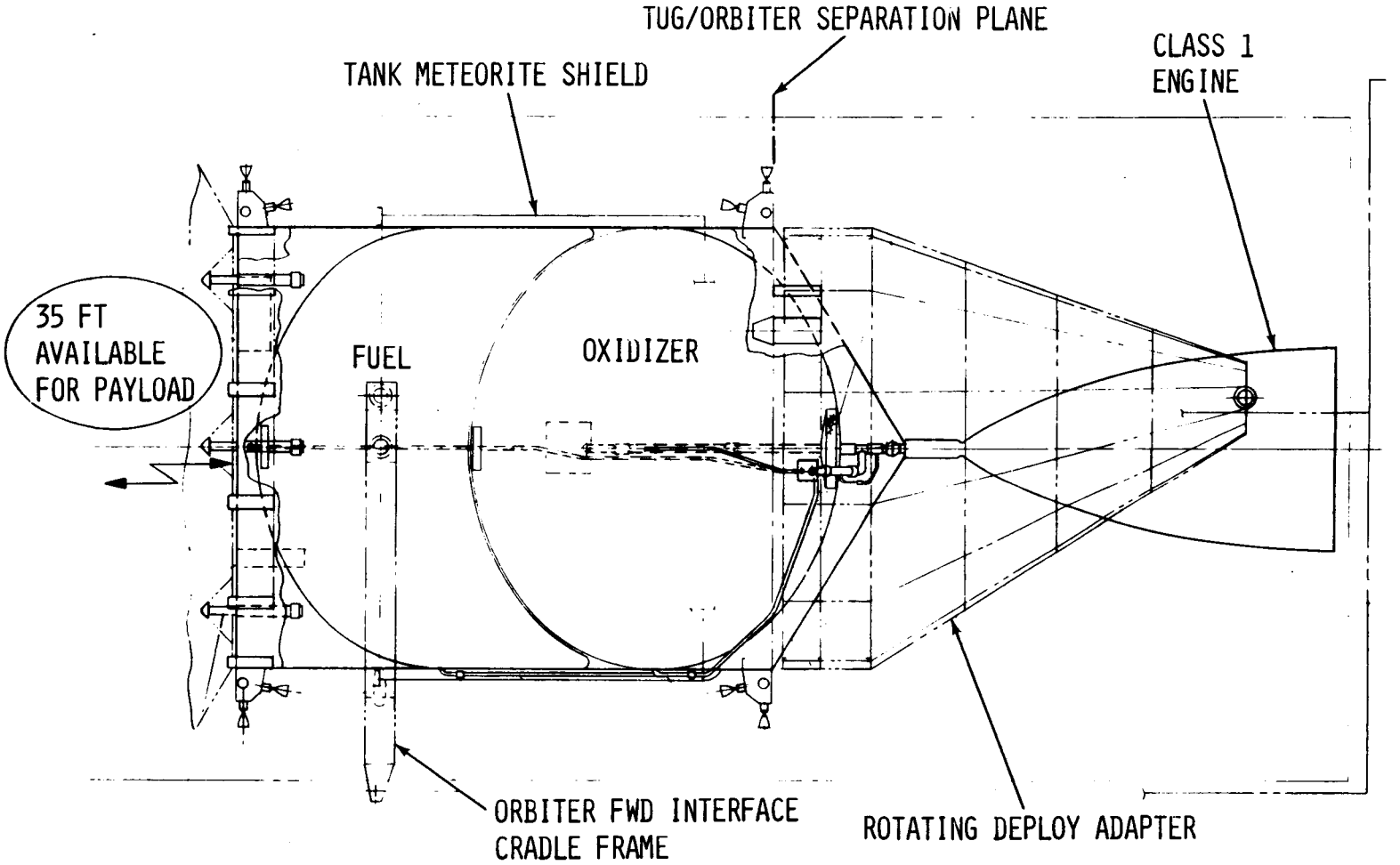

III-96

THIS PAGE INTENTIONALLY LEFT BLANK

INBOARD PROFILE - 310RE-3A: PLAN VIEW

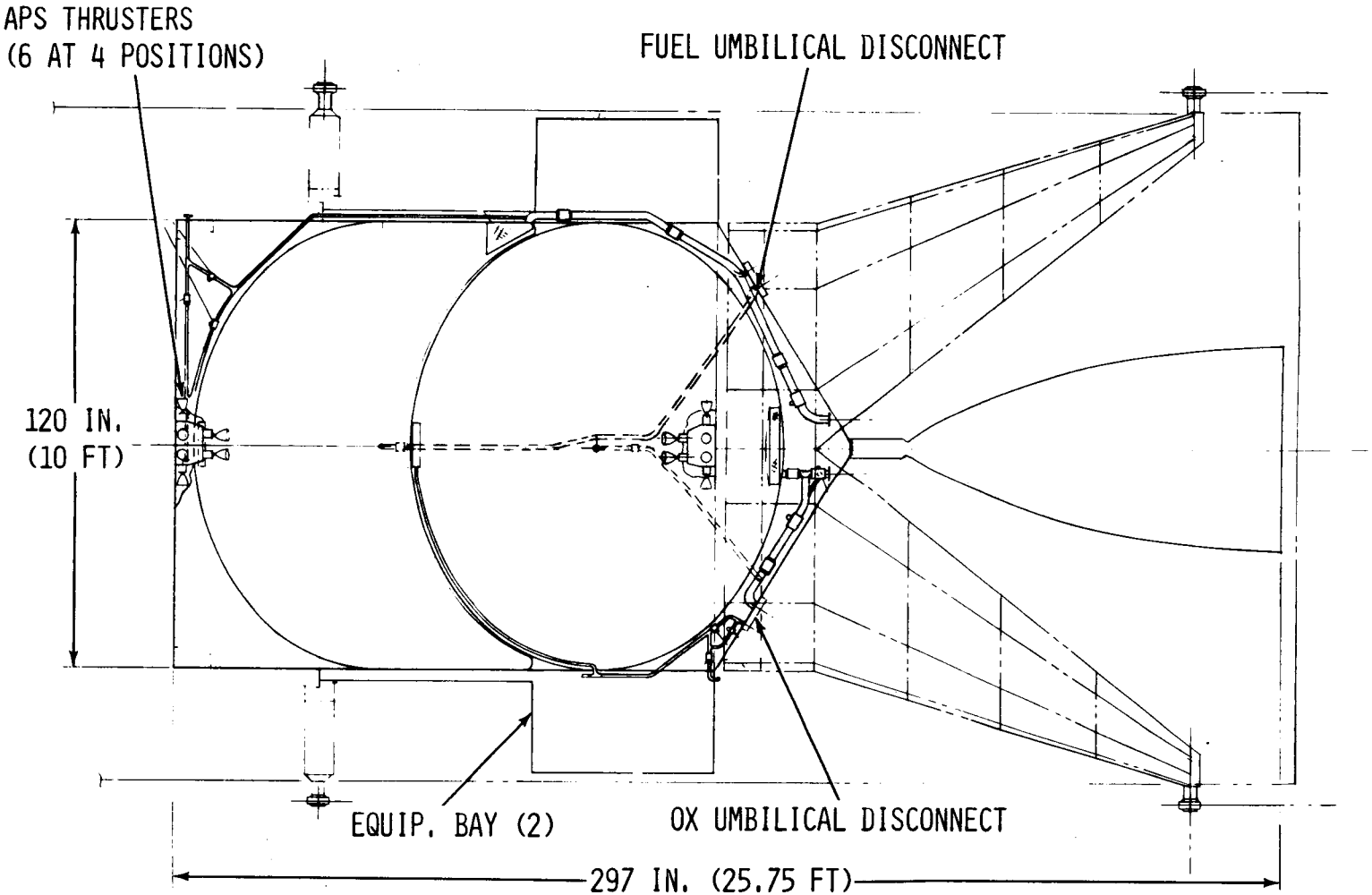

III-97

CONFIGURATION DESIGN DATA AND WEIGHT SUMMARY - TUG 310-3A/310RE-3A

The features summarized on this chart and the similar one on the previous page provide some insight into the subsystem details and reflect the option for which the Tug is designed. The fully developed Tug described in this chart is nearly identical to December 1983 direct developed 410AD-2 Tug of option 2. The introduction of the Retrieval Delay Module instead of the ADKS makes only minor differences in the Scar Weight of the Core vehicle. The items of special interest are these that reflect the phased development between 310-3A and 310RE-3A. Thus:

- The addition of retrieval capability affects the docking mechanism, leads to the introduction of Laser Radar and T.V., a change from 16 to 24 APS thrusters and an increase of APS propellant capacity from 317 to 450 lb.
- The upgrading of Autonomy level from IIIA to IIB adds the satellite receiver and doppler subsystem and leads to an increased size of computer.
- With the Micron IMU becoming available in 1983 we judge it cost effective to change from the Carousel to the Micron unit for the development Tug.

The weights - summarized by subsystem are presented to WBS level 6 in Vol. 5 together with C.G. and inertia data. These weights are further itemized in Volume 5 to WBS level 7 or lower; all subsystem components being listed on the Data Forms "B" which are included in each subsystem description for each Tug.

At the bottom of the chart are weights showing a typical build up to the 65000 lb. Shuttle payload capacity. The example given is for a plain Tug deploy mission. Other missions have different figures for consumables, main propellant loading and payload. These are given in detail in Vol. 4 and Vol. 6.

(Ref. Vol. 5, Part I, Opt. 3A/1, Sect. 5.2)

CONFIGURATION DESIGN DATA AND WEIGHT SUMMARY
SINGLE STAGE STORABLE TUG 310-3A

ITEM	FEATURES	WEIGHT-LB
• STRUCTURE		1226
TANKS	NESTED DOME-TI GORES CAP. = 59500 LB	
FRAMES	ALUMINUM	
OUTER SHELL	COMPOSITE HONEYCOMB	
DOCKING	DEPLOYMENT MECHANISMS	
• PROPULSION		697
MAIN ENGINE	CLASS I-THRUST = 12000 LB I_{SP} = 338 SECS	
PRESSURIZATION	AMBIENT HELIUM - PFR TANKS-CAP. = 14.2 LB	
ACPS	HYDRAZINE-16 THRUSTERS x 25 LB-CAP.=317 LB	
• THERMAL CONTROL		89
	MYLAR TANK INSUL. COATINGS, RADIATOR	
• AVIONICS		663
RENDEZVOUS & DOCK	AUTONOMY LEVEL IIIA-DEPLOYMENT CAPABILITY	
DATA MANAGEMENT	COMPUTER-48K WORDS - 2 REQ'D	
GUIDANCE AND NAV	CAROUSEL IMU WITH GYRO BACKUP	
GUIDANCE UPDATE	GROUND UPDATE	
POWER	MODIFIED F/C-CRYO TANKS CAP. = 104 LB	
	DRY WEIGHT	2675
	DRY WEIGHT & CONTINGENCY	2943
	NON USABLE PROPELLANT	247
	BURNOUT WEIGHT	3190
DEPLOY MISSION	NON IMPULSE EXPENDABLES	73
	ATTITUDE CONTROL PROPELLANT	281
	MAIN PROPELLANT	54528
	PAYLOAD	5418
	TUG AT FIRST IGNITION	63490
	SHUTTLE INTERFACE ITEMS	1510
	TOTAL-SHUTTLE INSTALLED	65000

III-53

THIS PAGE INTENTIONALLY LEFT BLANK

CONFIGURATION DESIGN DATA AND WEIGHT SUMMARY
SINGLE STAGE STORABLE TUG 310RE-3A

ITEM	FEATURES	WEIGHT-LB
• STRUCTURE		1279
TANKS	NESTED DOME-TI GORES CAP. = 59500 LB	
FRAMES	ALUMINUM	
OUTER SHELL	COMPOSITE HONEYCOMB	
DOCKING	DEPLOYMENT AND RETRIEVAL MECHANISMS	
• PROPULSION		735
MAIN ENGINE	CLASS I-THRUST = 12000 LB-Isp = 338 SECS	
PRESSURIZATION	AMBIENT HELIUM - PFR TANKS-CAP. = 14.2 LB	
ACPS	HYDRAZINE - 25 THRUSTERS x 25 LB-CAP.=450 LB	
• THERMAL CONTROL		89
	MYLAR TANK INSUL COATINGS, RADIATOR	
• AVIONICS		758
RENDEZVOUS & DOCK	AUTONOMY LEVEL IIB-RETRIEVAL-LASER RADAR + TV	
DATA MANAGEMENT	COMPUTER-65K WORDS-2 REQ'D	
GUIDANCE AND NAV	2 x MICRON IMU - 1x STAR TRACKER	
GUIDANCE UPDATE	SATELLITE AND DOPPLER	
POWER	MODIFIED F/C-CRYO TANKS CAPACITY=104 LB	
	DRY WEIGHT	2861
	DRY WEIGHT & CONTINGENCY	3147
	NON USABLE PROPELLANT	247
	BURNOUT WEIGHT	3394
DEPLOY MISSION	NON IMPULSE EXPENDABLES	73
	ATTITUDE CONTROL PROPELLANT	281
	MAIN PROPELLANT	54716
	PAYLOAD	5026
	TUG AT FIRST IGNITION	63490
	SHUTTLE INTERFACE ITEMS	1510
	TOTAL SHUTTLE INSTALLED	65000

MAIN PROPULSION SUBSYSTEM (MPS) DESCRIPTION 310-3A/310RE-3A VEHICLE

This vehicle utilizes the Class I engine to meet performance goals and reduce operational costs through multiple deployment.

The MPS is based upon a design which is almost completely state-of-the-art. The only new design is the helium tanks which are of light weight prestressed filament reinforced (PFR) construction.

The remainder of the pressurization system is conventional, with pressure control provided by modified OMS regulators and relief valves. The requirement to meet a 0.97 mission reliability dictates the installation of redundant regulators and helium initiating valves. Quad check valves downstream of each regulator prevent the backflow of propellant vapors into the regulators and upstream portions of the helium system. Solenoid valves straddling each relief valve/burst disc assembly allows selective tank depressurization.

Zero g starts are provided for by screen type propellant retention devices located over each tank outlet. These provide sufficient propellant to maintain engine operation until the remainder of the propellant settles. A prevalve is installed upstream of each engine inlet during ground and launch operations and allows engine drain between burns.

Ground drain, in both the horizontal and vertical positions, is provided. The horizontal drain lines lead from the tank equators to the umbilical disconnect panels. Two umbilical disconnect panels are provided on opposite sides of the vehicle. All lines leading to a panel have redundant shutoff capability to meet the MPS fail safe requirement.

(Ref. Vol. 5, Part I, Opt. 3A/1, Sect. 5.2)

310-3A/310RE-3A MAIN PROPULSION SUBSYSTEM (MPS)

DRIVER REQUIREMENTS

- $20X10^6$ LB-SEC TOTAL IMPULSE
- 10 BURNS/MISSIONS
- 121 HR ON-ORBIT TIME
- 10 MIN MIN RESTART TIME
- 69 HR MAX RESTART TIME
- VERTICAL & HORIZONTAL DRAIN
- MIN 16 PSIA ENG INLET PRESS.
- OFF-LINE SERVICING & CHECKOUT

MPS DEFINITION

- CLASS I ENG
- NESTED DOME TANKS
- PFR He TANKS (3500 PSIA)
- 2 IN. (FUEL), 3-1/4 IN. (OXID) DIA FEEDLINES
- DUAL He ISOL VALVES & REG ASSY
- 23 INC. DIA. He BOTTLE

MPS PERFORMANCE

- 12000 LB THRUST
- 338.0 SEC ISP
- 24 PSIA (MAX) MMH TANK PRESS.
- 36 PSIA (MAX) N_2O_4 TANK PRESS.
- 14.2 LB He
- 59,500 LB PROP.
- 1.9 MIXTURE RATIO

DEVELOPMENT RISK & TECHNOLOGY

- PFR TANK

- NEW ENG BASED UPON CURRENT TECHNOLOGY, MODERATE RISK
- 88% OF COMPONENTS EXISTING OR MOD EXISTING DESIGNS

III-83

MAIN PROPULSION SUBSYSTEM (MPS) - 310-3A/310RE-3A

The 310-3A/310RE-3A engine is required to start up to 10 times per mission, and must remain on-orbit for up to 121 hours. The planetary missions require that the Tug be turned around and retrofired as soon as possible after the planetary insertion burn. This leads to the minimum restart requirement of 10 minutes.

The capability to drain and depressurize the vehicle in both the horizontal and vertical positions is provided. An in-flight dump system was not included; however, a sensitivity study has been conducted which indicates that it can save vehicle weight and cost due to the reduction in maximum landing weight, and it probably will be baselined.

This vehicle uses nested dome propellant tanks and a pair of prestressed filament reinforced (PFR) helium tanks. In order to meet the 0.97 mission reliability, redundant helium isolation valves and regulators are included.

The engine is the Class I producing a thrust of 12,000 lbs. and an Isp of 338 seconds at a 1.9 mixture ratio. It is a new design based upon current technology. As such, it can provide reasonably high performance at moderate development risk and cost.

The PFR tank is the only subsystem component, other than the engine, representing any significant development risk. Failure to develop the tank would mean a 48 lb. weight increase should a titanium tank be used as a fall back position.

Fourteen of the sixteen (88%) types of subsystems are either existing or modifications of existing designs, further reducing subsystem development risk.

MPS SCHEMATIC - 410AD-2, 310-3A, 310RE-3A, 310-3B, 310ARE-3B, 510A-3B, 510ADE-3B

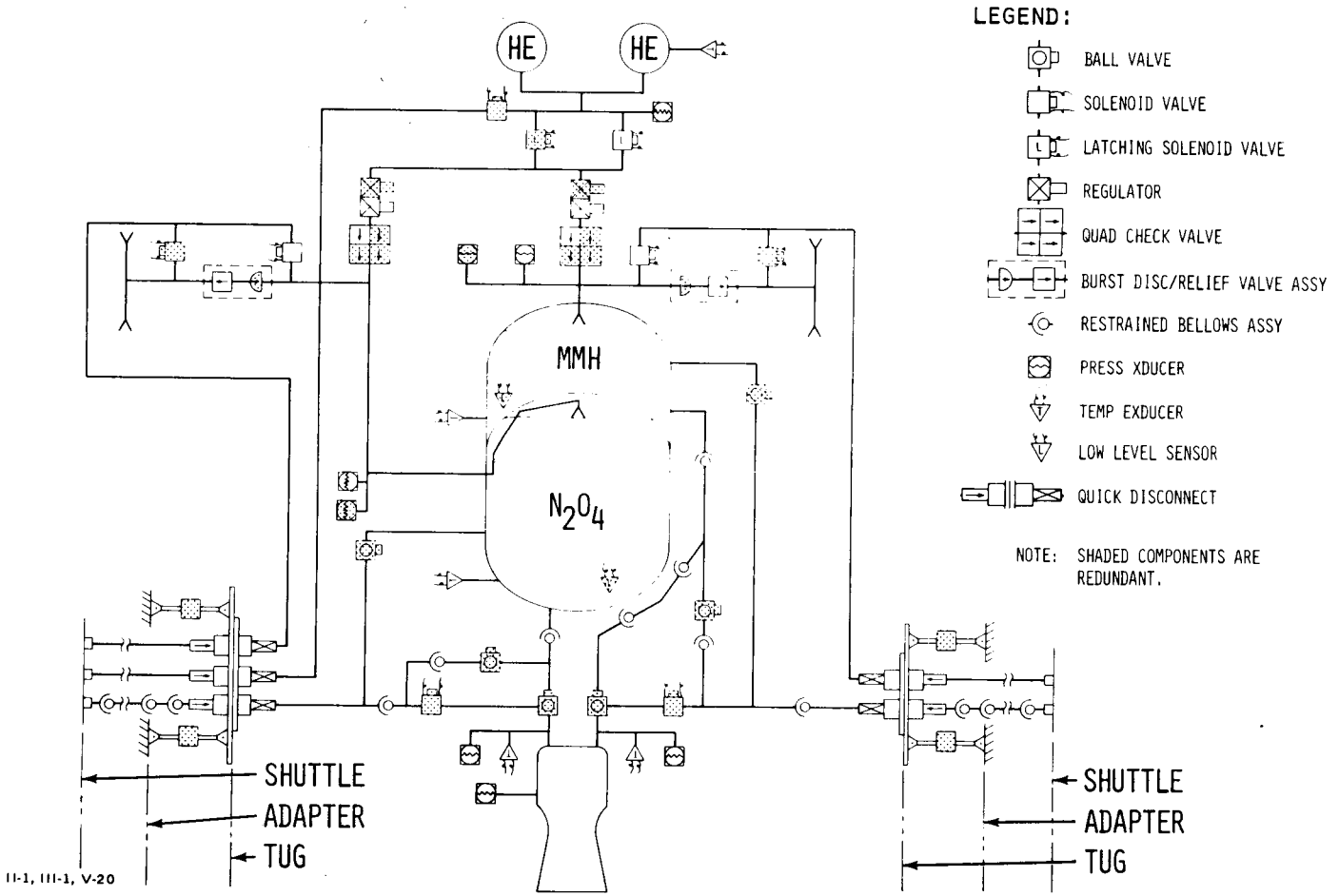

II-1, III-1, V-20

AUXILIARY PROPULSION SYSTEM - 310-3A/310RE-3A

The fail operational/fail safe requirement demands that the mission be completed after any single failure and shuttle/crew safety be guaranteed after two failures.

Sixteen thrusters is the minimum number required to provide attitude control after two thruster failures. Thrust level is driven by the requirement to provide relatively high acceleration in one axis for mid-course corrections on Tugs which deploy only and by the requirement for high accelerations in three axes to achieve successful rendezvous on Tugs which retrieve payloads. The retrieval case requires an increase to twenty four thrusters. The "minimum thrust" requirement is derived from minimum tolerable accelerations which achieve mission completion and is used to establish thruster requirements for the one engine failed case.

Tanks are sized for the guaranteed usable propellant plus 10% contingency. Contingencies include quantity gaging error, trapped propellant and propellant for cross-coupling losses in the event of a thruster failure.

The only component in the system which is not classified as existing or modified existing is the bladder. However the advanced state of elastomeric bladder technology renders it a non-risk item.

310-3A/310RE-3A AUXILIARY PROPULSION SYSTEM (APS)

DRIVER REQUIREMENTS

- USABLE PROPELLANT = 317/450 LB
- MIN THRUST PER AXIS = 50*/±50 LB
- NOMINAL THRUST PER AXIS = 100*/±100 LB
- FAIL-OPERATIONAL/FAIL SAFE DESIGN
- VENT SYS TO 20 PSI AT TUG RETRIEVAL
- VERIFY PROPELLENT QUANT PRE-DOCKING
- NO VENTING IN PAYLOAD BAY

* Y AXIS ONLY

APS DEFINITION

- MONOPROPELLANT HYDRAZINE
- 16/24 THRUSTERS @ 25 LB THRUST EACH
- 3/4 PROPELLANT TANKS, LM RCS DESIGN 12.5" D x 34" LONG
- ELASTOMERIC BLADDER PROPELLANT ACQ
- 1/2 TITANIUM HELIUM TANK, 15.3/12.3" D
- 5/8" LIQUID LINES, 1/2" GAS LINES

APS PERFORMANCE

- I_{SP} = 232 STEADY STATE, 170 MIN PULSING
- PRESSURE BUDGET
  - HELIUM TANK = 2600/3900 PSI MAX
  - PROPELLANT TANK = 340 PSI
  - THRUSTER INLET = 325 PSI MIN
  - CHAMBER PRESS. = 140 PSI
- 10% CONTINGENT PROPELLANT REQ

DEVELOPMENT RISK & TECHNOLOGY

- NO TECHNOLOGY ISSUES
- APPROX 90% EXISTING OR MOD EXISTING COMPONENTS

III-33

APS SCHEMATIC - 310RE-3A

The description utilized for the initial configuration applies. Additions incorporated in the evolved configuration consist of one helium pressurization tank, one monopropellant tank, and two additional thrusters per APS cluster.

(Ref. Vol. 5, Part I, Opt. 3A/1, Sect. 5.2)

APS SCHEMATIC - 310-3A, 310A-3B, 510A-3B

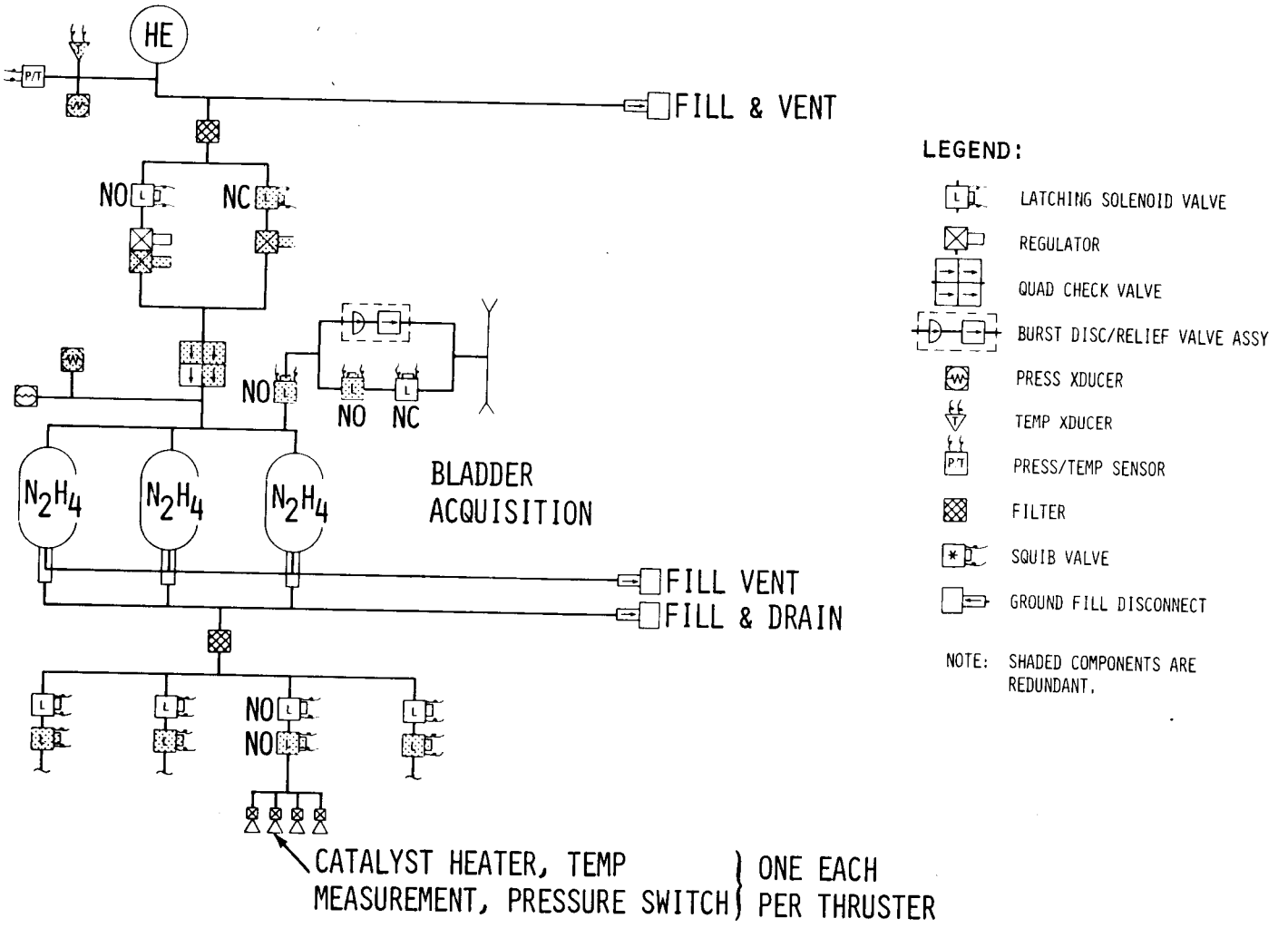

III-7, V-19

APS SCHEMATIC - 320 - 3A

The Auxiliary Propulsion System is a helium pressurized, monopropellant hydrazine design incorporating state-of-the-art hardware. All components are redundant to the extent that mission completion is possible after any single failure and shuttle/crew safety is guaranteed after any two failures (fail operational/fail safe).

Helium is stored in off-the-shelf, spherical titanium vessels. The helium latching solenoid valve and regulator package, modified LM components, provide pressure regulation to approximately 350 psi. A downstream quad check valve, another LM type design, protects the regulators/solenoid valves against contamination by propellant vapors which may diffuse through the propellant tank bladders. The propellant tanks are modified LM Reaction Control System tanks. They are equipped with fully reusable elastomeric (EPT-10) bladders for propellant acquisition.

The solenoid valve upstream of the relief and vent valve package protects against a failure of the relief valve to reseat or of both vent valves to close after vent, conditions which create a potential tank implosion situation during reentry. Series redundant thruster isolation valves, normally open during Tug operation, are closed in the event of an open thruster failure. Each set of valves isolate one of four groups of thrusters. Four manifolds is the minimum number possible which retains the fail op/fail safe criteria. That is, two groups of thrusters can be isolated and vehicle attitude controlled in all axes.

The thrusters are the 25 lb. thrust, 232 sec. Isp Hamilton Standard model REA 19-3, which was developed for use as the shuttle vernier engine when it incorporated a monopropellant reaction control system. Each thruster is equipped with a catalyst heater to maintain it at 150°F for life considerations.

APS SCHEMATIC - 310RE-3A, 310ARE-3B, 410AD-2, 510ADE-3B

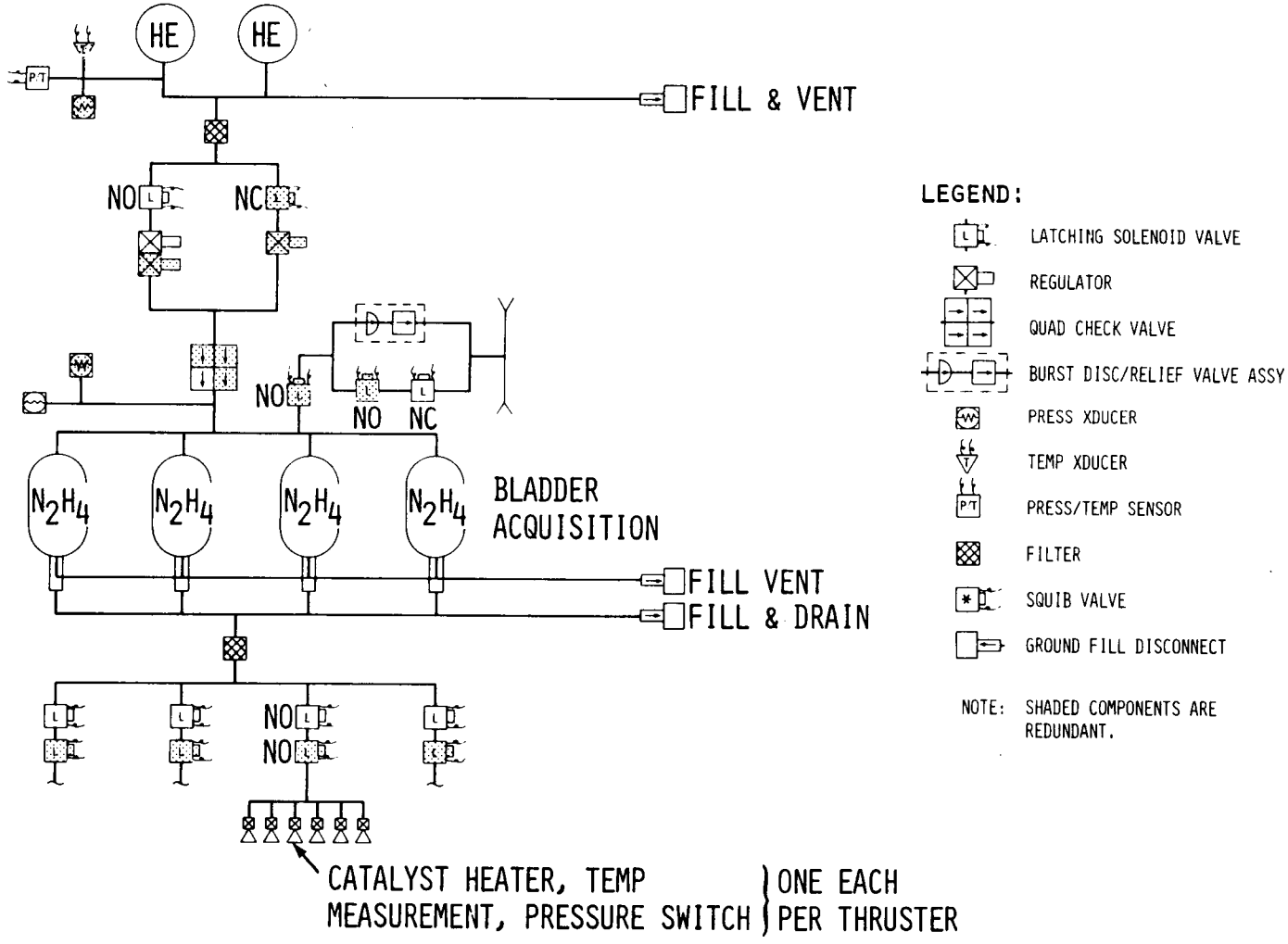

II-2, III-3, V-16

ASTRIONICS SUBSYSTEMS - 310-3A

The 310-3A is a single stage deploy-only Tug that evolves into configuration 310RE-3A. The reliability requirements are met with redundant transmitters and power amplifiers in the Dedicated Frequency Station (DFS) communication subsystem. The other redundant equipment (computer, APS electronics and DFS receiver) is there for safety reasons as is the rate gyro back up unit for the IMU. The fuel cell power supply is also backed up by a 10 ampere-hour battery for the same safety reason when the Tug is in the vicinity of the orbiter.

The fuel cell reactants are cryogenically stored as opposed to gaseous storage resulting in a weight saving of approximately 50 lbs.

Since the 310-3A does not have the capability to retrieve payloads, there is no requirement for the Tug to communicate with payloads via RF link, thus permitting a single Dedicated Frequency Station (DFS) to be used for radio communication between Tug and Orbiter or between Tug and ground. The DFS is designed to be compatible with the NASA (STDN) and Air Force (SGLS) tracking networks as well as the projected NASA Telemetry and Data Relay Satellite System (TDRSS).

With the exception of the communications subsystem, a high percentage (80%-95%) of all astrionics equipment is modified existing equipment. The S-Band communications equipment is new primarily because it is designed to be compatible with TDRSS (spread spectrum) and CCIR interference requirements. No new technology is required for any 310-3A astrionics equipment.

(Ref. Vol. 5, Part I, Option 3A, Section 5.2)

310-3A ASTRIONICS SUBSYSTEMS - AUTONOMY LEVEL IIIA

GUIDANCE, NAVIGATION & CONTROL

- CAROUSEL IVB IMU BACKED UP BY RATE GYRO UNIT FOR SAFETY
- STAR TRACKER
- 95% MOD EXISTING EQUIP.
- NO NEW TECHNOLOGY

ELECTRICAL POWER

- MODIFIED SHUTTLE FUEL CELL STACK
  - 2.5KW AT 28 VDC
- CRYOGENICALLY STORED REACTANTS
  - 1 O_2 TANK & 1 H_2 TANK
  - ENERGY CAPABILITY = 94 KW-HR
- 10 AMP-HR EMERGENCY BAT. FOR SAFETY
- 70% MOD EXISTING EQUIP.
- NO NEW TECHNOLOGY

DATA MANAGEMENT

- 48K WORD CDC 469 COMPUTER DUAL REDUNDANT
- ODETICS DDS 3000 TAPE RECORDER
- FLEXIBLE SIGNAL INTERFACE
- 90% MODIFIED EQUIPMENT
- NO NEW TECHNOLOGY

NO NEW TECHNOLOGY

COMMUNICATIONS

- TUG/ORBITER OR TUG/GND COMM
- DEDICATED FREQ STA (DFS)
- STDN/SGLS/TDRSS COMPATIBLE
- S-BAND SYS INTERNALLY REDUNDANT
- NEW EQUIP. REQ
- NO NEW TECHNOLOGY REQ

III-25

ASTRIONICS SUBSYSTEMS - 310RE-3A

The 310RE-3A evolves from the 310-3A to a Tug with retrieval capability and a higher level of autonomy. The addition of a laser rendezvous radar and TV provide the sensing capability necessary for the rendezvous and docking functions. Level IIB autonomy in navigation is achieved by the addition of a 621B satellite receiver and one way doppler equipment. Reliability requirements are met by adding a redundant IMU. The redundant IMU (an advanced strapped-down unit) also eliminates the need for a rate gyro backup.

Communications evolves to a system that can now communicate to the payload using the Channel Selectable Station (CSS). The added burden of processing the on board navigation measurements necessitates an increase in computer capacity from a previous 48K word memory to a 65K word memory.

New technology is required for the advanced IMU and the laser radar.

310RE-3A ASTRIONICS SUBSYSTEMS - AUTONOMY LEVEL IIB

GUIDANCE, NAVIGATION & CONTROL

- ■ ADVANCED IMU
- ● STAR TRACKER
- ■ LASER RENDEZVOUS RADAR
- ■ 621B SATELLITE RCVR
- ■ ONE-WAY DOPPLER RCVR
- ● RISK-AVAILABILITY OF 621B SYS
- ● NEW EQUIP. REQ
- ● NEW TECHNOLOGY
  - IMU
  - LASER RADAR

COMMUNICATIONS

- ■ TUG/PAYLOAD, TUG/GND, TUG/ORBITER TV COMM
- ● DEDICATED FREQ STA (DFS)
- ■ CHANNEL SELECTABLE STA (CSS)
- ● S-BAND SYS - INTERNALLY REDUNDANT
- ● STDN/SGLS/TDRSS COMPATIBLE
- ● NEW EQUIP. REQ
- ● NO NEW TECHNOLOGY

DATA MANAGEMENT

- ■ 65K WORD CDC 469 COMPUTER DUAL-REDUNDANT
- ● ODETICS DDS 3000 TAPE RECORDER
- ● FLEXIBLE SIGNAL INTERFACE SYS
- ● 90% MOD EQUIP.
- ● NO NEW TECHNOLOGY

ELECTRICAL POWER

- ● MOD. SHUTTLE FUEL CELL STACK
  - 2.5KW AT 28VDC
- ● CRYOGENICALLY STORED REACTANTS
  - 1 O_2 TANK & 1 H_2 TANK
  - ENERGY CAPABILITY = 94 KW-HR
- ● 10 AMP-HR EMERGENCY BAT. FOR SAFETY
- ● 70% MOD EXISTING EQUIP.
- ● NO NEW TECHNOLOGY

- ● EVOLUTION BY REPLACEMENT/ADD ON
- ● AVG POWER SAME

III-26 ■ EVOLUTIONARY CHANGE

ASTRIONICS SCHEMATIC - 310-3A

The Data Management Subsystem (DMS) with its Flexible Signal Interface (FSI) is the pivot around which all other astrionic systems revolve. The remaining astrionic systems feed data or commands to the DMS or take commands and information from it. The Communication Subsystem receives and transmits over 2 antennas located 180° apart on the vehicle for total coverage. The incoming information and commands move through the diplexers, redundant receivers and baseband processors to the DOD secure communication units. The secure comm. is used for DOD payloads only. From the output of the Comm. Subsystem the information flows to the Flexible Signal Interface Controller (FSI) and then into the computer. Telemetry signals flow from the instrumentation sensors through Data Acquisition Control Units (DACU) to the FSI and then out through the Comm. system. The guidance, navigation and control information that is measured by the IMU, Star Tracker and Rate Gyros flows through a DACU to the FSI and then to the computer for processing with uplinked data. The control outputs from the computer go to the MPS, EPS and APS Subsystems as well as to the ME/TVC and APS electronic units. These are the outputs that activate and control the electrical power systems and thrusting systems of the vehicle.

Status information flows from auxiliary stages to the computer and commands flow from the computer to the auxiliary stages over hardwires.

The information to and from the orbiter is also sent over hardwires when the Tug is in the orbiter payload bay.

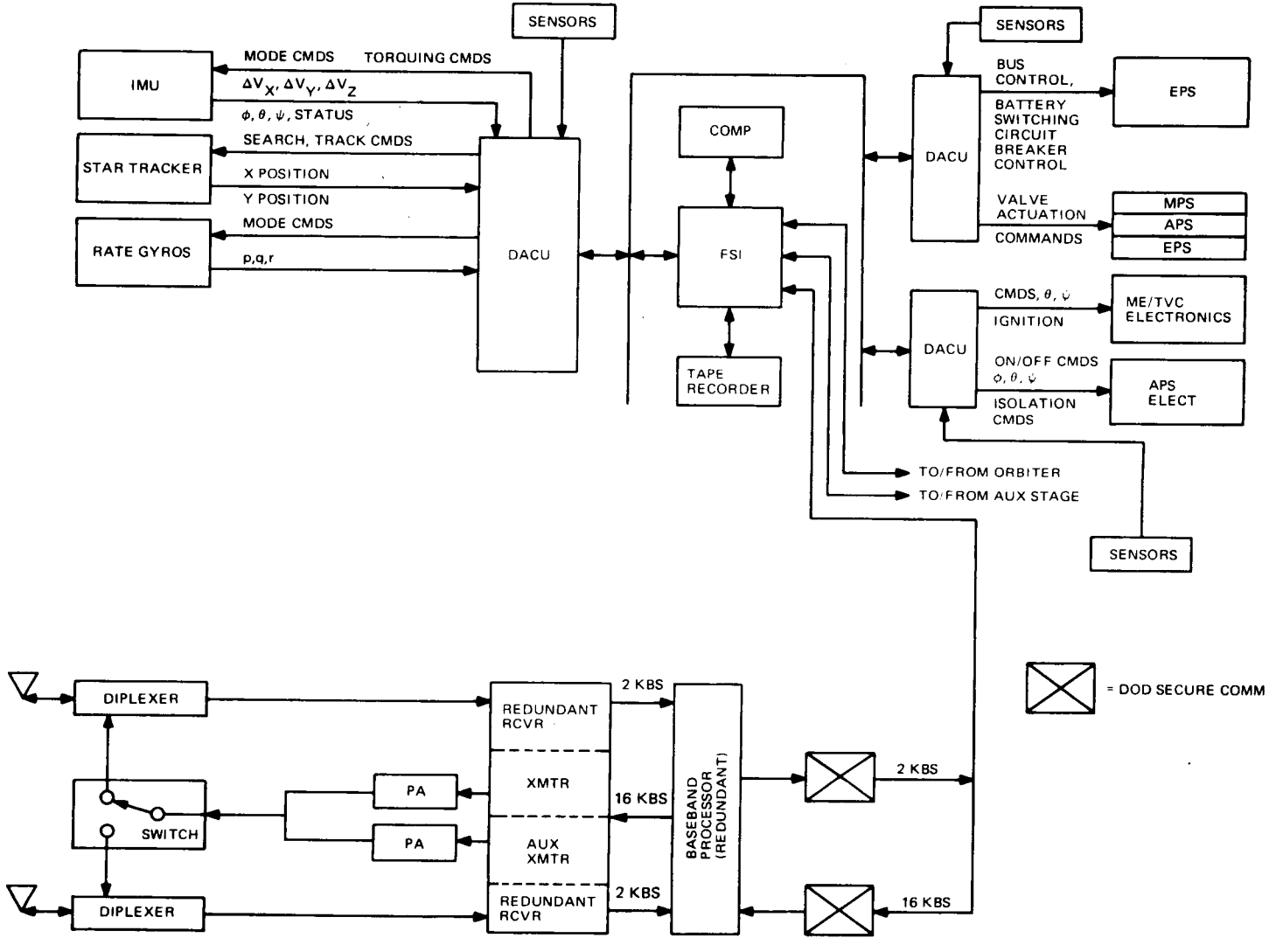

V-1B

Astrionics Schematic For Configuration 110A-1, 310-3A, 310-3B, 510A-3B Level IIIA Autonomy

ASTRIONICS SCHEMATIC - 310RE-3A

The Data Management Subsystem (DMS) with its Flexible Signal Interface (FSI) is the pivot around which all other astrionic systems revolve. The remaining astrionic systems feed data or commands to the DMS or take commands and information from it.

The Communication Subystem in these configurations consists of a Dedicated Frequency Station (for communication between Tug and Orbiter or between Tug and ground) and a Channel Selectable Station (for communication between Tug and payloads or Tug and Orbiter). The incoming information and commands move through the diplexers, redundant receivers and baseband processors to the DOD secure communication units. The secure comm. is used for DOD payloads only. From the output of the Comm. Subsystem the information flows to the Flexible Signal Interface Controller (FSI) and then into the computer. Telemetry signals flow from the instrumentation sensors through Data Acquisition Control Units (DACU) to the FSI and then out through the Comm. system.

The television camera is a ground controlled unit and its commands flow through the communication subsystems to the DMS system for processing then out to control the camera. The TV information flows back to the ground via the comm. subsystem. The guidance navigation and control information that is measured by the IMU, Star Tracker, Laser Radar, 621B Satellite Receiver and Doppler Receiver flows through a DACU to the FSI and then to the computer for processing. The control outputs from the computer go to the MPS, EPS and APS Subsystems as well as to the ME/TVC and APS electronic units. These are the outputs that activate and control the electrical power systems and thrusting systems of the vehicle.

Status information flows from auxiliary stages to the computer and commands flow from the computer to the auxiliary stages and hardwires.

The information to and from the orbiter is also sent over hardwires when the Tug is in the orbiter payload bay.

(Ref. Vol. 5, Part I, Opt. 3A/1, Sect. 5.2)

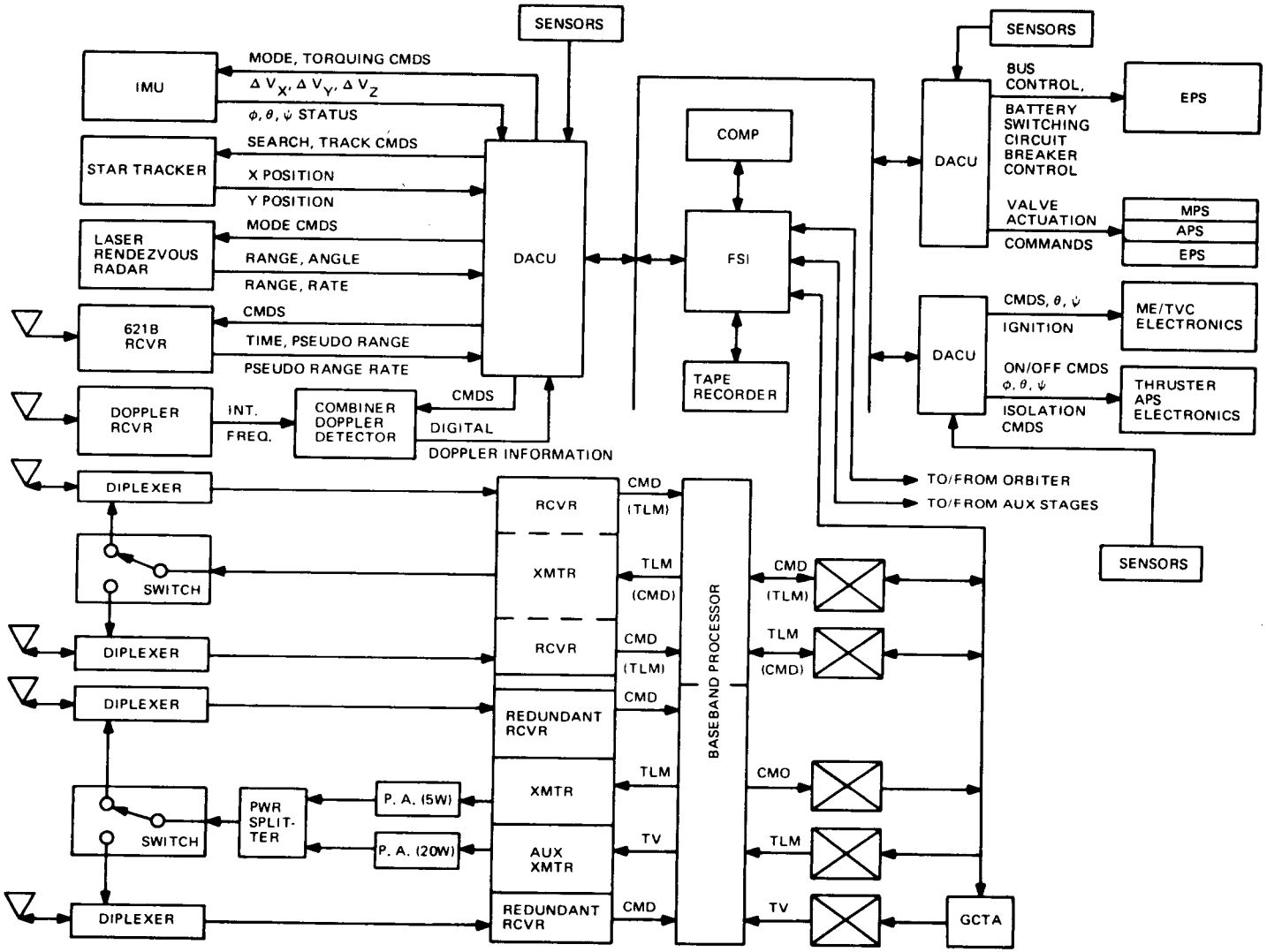

V-1A

Astrionics Schematic For Configuration 310RE-3A, 310ARE-3B, 410AD-2, 510ADE-3B Level II B Autonomy

ELECTRICAL POWER SUBSYSTEM SCHEMATIC 310-3A/310RE-3A

The prime power source is a modified fuel cell providing up to 2.5 KW at 28 VDC. The hydrogen and oxygen fuel cell reactants are stored in single cryogenic dewars above the supercritical point and supply high pressure gases to the reactant pressure control valves. The fuel cell nominally operates at 60 PSIA and 180°F. The fuel cell oxygen and hydrogen purge plus product water vents are routed overboard. The coolant loop pump is provided within the fuel cell assembly. The fuel cell feeds both equipment bay buses and is backed up by a 10 amp-hr secondary silver zinc battery. This emergency battery powers essential equipment during Orbiter/Tug deployment and retrieval operations and provides for Orbiter crew safety.

The distribution section is a combination two-wire and structure ground (return bus) system. Solid state power controllers are used for applications requiring 5 amps or less and electromechanical remote control circuit breakers are used for 20 amps or larger applications. The orbiter supplies power for critical Tug equipments (e.g. I M U) from earth launch through Tug deployment. GSE power is required for ground checkout. The Tug supplies payload power when separated from the Orbiter.

(Ref. Vol. 5, Part I, Opt. 3A/1, Sect. 5.2)

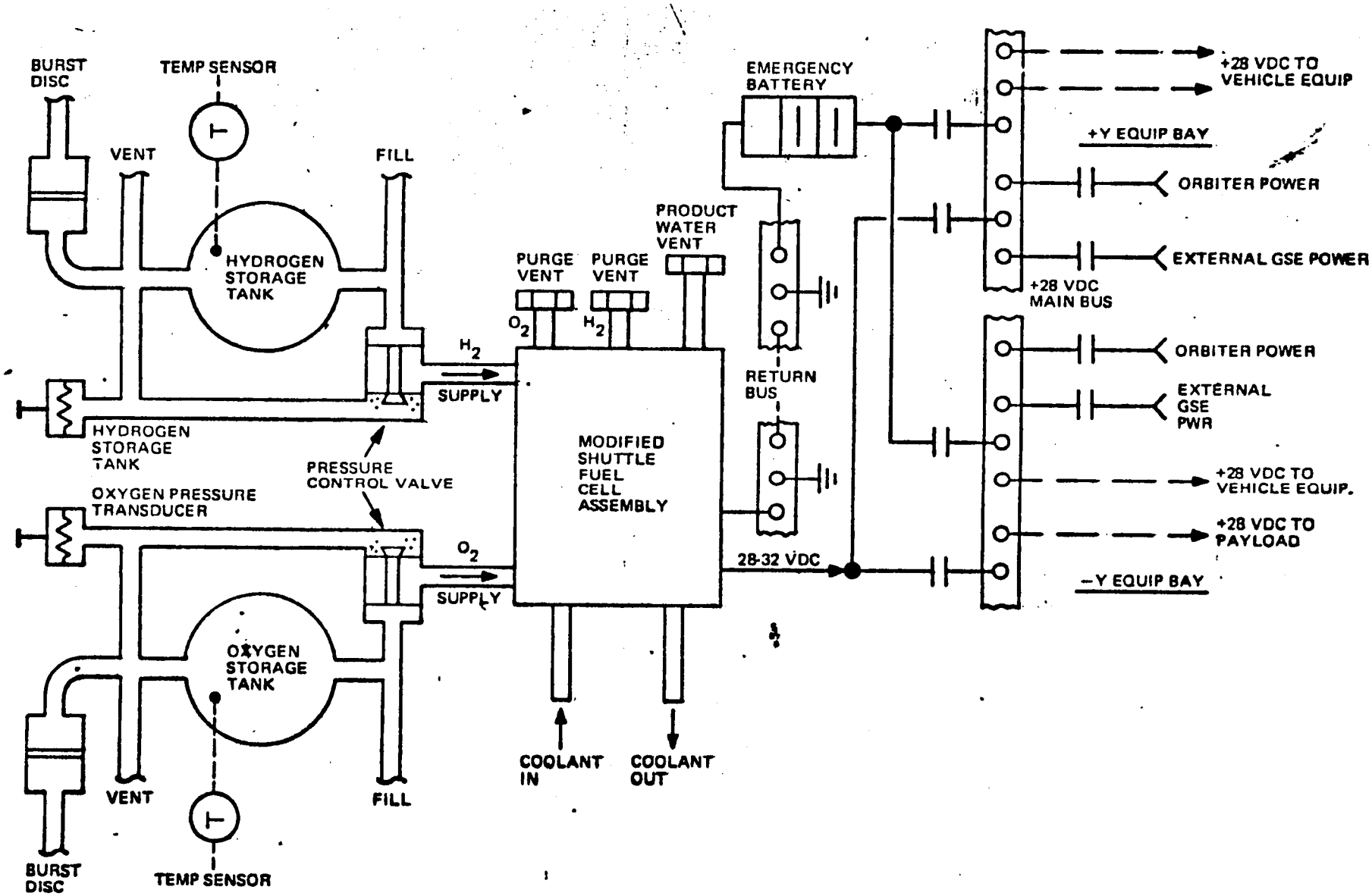

Electrical Power Subsystem for 410AD-2
310-3A → 310RE-3A
310A-3B → 310ARE-3B
510A-3B → 510ADE-3B

THERMAL CONTROL 310-3A

The Interim Tug Thermal Control is driven by the wide latitude in missions, the requirement for no preferred orientation, the limited propellant heat sink when the low altitude polar missions are flown, and by the complement of high power density avionics chosen for a particular configuration.

The MLI blanket required to keep propellants above 40°F for offloaded missions is carried on all missions. It consists of double goldized mylar with nylon net spacers, lying between the tank and micrometeoroid shield along the cylindrical section and directly over both end domes.

An Alzak coating over the outside of the vehicle keeps tank temperatures below 90°F. Silver backed teflon on the saddle bags and heat pipe radiators minimize incident environmental heat absorption and allow a high degree of heat rejection from the avionics.

A base heat shield protects the thrust structure for the main engine nozzle radiation. Electrical heaters on ME and APS assures that unacceptable cold temperatures, 40°F and 150°F respectively, are never reached.

The majority of avionics are mounted on aluminum plates located in the saddle bags and maintained at acceptable temperatures, 30°F to 120°F, through appropriate radiation couplings and electrical strip heaters. The modified fuel cell and the Carousel V IMU require active cooling. They are on the same active pumped heat transport loop which interfaces with a variable conductance heat pipe radiator (VCHP). The VCHP feature offers its own inherent controls, thereby reducing the need for complex bypass valving with automatic controls.

(Ref. Vol. 5, Part I, Opt. 3A/1, Sect. 5.2)

310-3A THERMAL CONTROL (T/C)

DRIVER REQUIREMENTS

- NO PREFERRED ORIENTATION
- LOW ALT POLAR MISSION
- MISSION DURATION - 5 DAYS
- ME NOZZLE RADIATION-COOLED
- MOD FUEL CELL ACTIVELY COOLED
- AUGMENTED COOLING FOR CAROUSEL IMU

T/C DEFINITION

- 500 FT^2 GOLDIZED MYLAR MLI
- AL BASE HEAT SHIELD
- SILVER-BACKED TEFLON & ALZAK COATINGS
- MOST AVIONICS PASSIVELY COOLED
- 22 FT^2 VCHP/RADIATOR FOR FUEL CELL
- APS & ME ELECT HEATERS
- HEATERS FOR AVIONICS PALLETS

T/C PERFORMANCE

- 70^oF VEHICLE FROM LAUNCH TO DEPLOY
- PROPELLANTS - 40^oF TO 90^oF
- AVIONICS - 30^oF TO 120^oF
- BASE SHIELD - 600^oF, THRUST
- STR - 250^oF
- STRUCT 130^oF MAX ON ENTRY
- IMU ON FUEL CELL RADIATOR LOOP
- FUEL CELL RADIATOR REJECTS 2400 BTU/HR

DVT RISK & TECH

- VCHP REQ ADDITIONAL PERFORMANCE DATA
- UNCERTAINITY IN LIFE/REUSABILITY OF COATINGS & INSULATION

III-64

THERMAL CONTROL 310RE-3A

As the configuration matures from the interim (310-3A) to evolved state (310RE-3A), avionics necessary to accomplish the rendezvous and docking function are added and some units are replaced with advanced versions. The thermal control system is modified to accommodate these changes. Mission durations, propellant histories and duty cycles remain essentially unchanged so that the thermal provisions impacted by these drivers (insulation, coatings, heaters) remain unchanged.

The added avionics units, with the exception of the TV power amplifier and the laser radar, can be integrated into the saddlebags and cooled passively. The TV power amplifier, used infrequently, is placed on its own small heat pipe circuit. This circuit consists of a variable conductance heat pipe header and a 4 ft^2 simple heat pipe radiator. The laser radar is carried up forward on the outside of the vehicle but is passively cooled.

The Carousel IMU, a unit on the active fuel cell heat transport loop, is replaced by an advanced unit, the Micron IMU. This unit can be passively cooled and draws far less power, 15w vs 125w. The total power generated by the fuel cell remains essentially unchanged, the increased units offset by the decrease in IMU power. Fuel cell radiator area decreases slightly because of the removal of the IMU from the loop and the consistency of the generated power.

(Ref. Vol. 5, Part I, Opt. 3A/1, Sect. 5.2)

310RE-3A THERMAL CONTROL (T/C)

DRIVER REQUIREMENTS

- NO PREFERRED ORIENTATION
- LOW ALT POLAR MISSION
- MISSION DURATION - 5 DAYS
- ME NOZZLE RADIATION COOLED
- MOD FUEL CELL ACTIVELY COOLED
- AUGMENTED COOLING FOR TV PWR AMP

T/C DEFINITION

- 500 FT^2 GOLDIZED MYLAR MLI
- AL BASE HEAT SHIELD
- SILVER-BACKED TEFLON & ALZAK COATINGS
- MOST AVIONICS PASSIVELY COOLED
- 17 FT^2 VCHP/RADIATOR FOR FUEL CELL
- 4 FT^2 VCHP/RADIATOR FOR TV PWR AMP
- APS & ME ELECT HEATERS
- HEATERS FOR AVIONICS PALLETS

T/C PERFORMANCE

- 70^oF VEHICLE FROM LAUNCH TO DEPLOY
- PROPELLANTS - 40^oF TO 90^oF
- AVIONICS - 30^oF TO 120^oF
- BASE SHIELD - 600^oF, THRUST STR - 250^oF
- STRUCT 130^oF MAX ON ENTRY
- FUEL CELL RADIATOR REJECTS 2000 BTU/HR

DVT RISK & TECH

- VCHP REQ ADDITIONAL PERFORMANCE DATA
- UNCERTAINITY IN LIFE/REUSABILITY OF COATINGS & INSULATION

III-65

THERMAL CONTROL SCHEMATIC - 310-3A

The fuel cell and Carousel V IMU are placed on the active loop. These units are readily integrated since both run continuously, at a relatively constant power level, with the operating temperature of the IMU, 130°F, matching the desired fuel cell coolant inlet temperature. Redundant bypass valves with automatic temperature controllers and sensors monitor the flow rate of coolant through the fuel cell so that the fuel cell outlet temperature lies between 180°F and 190°F, a range which permits maximum fuel cell efficiency. The pumped loop exchanges heat with individual Variable Conductance Heat Pipes (VCHP). The VCHP radiator provides its own control, thereby eliminating the need for an additional bypass circuit, decreases the operating temperature of the pumped loop which in turn minimizes the accumulator size and makes the task of selecting a coolant fluid less difficult. A VCHP radiator has already been built and tested at GAC.

(Ref. Vol. 5, Part I, Opt. 3A/1, Sect. 5.2)

THERMAL CONTROL SCHEMATIC-310-3A,310-3B,510A-3B,320-3A

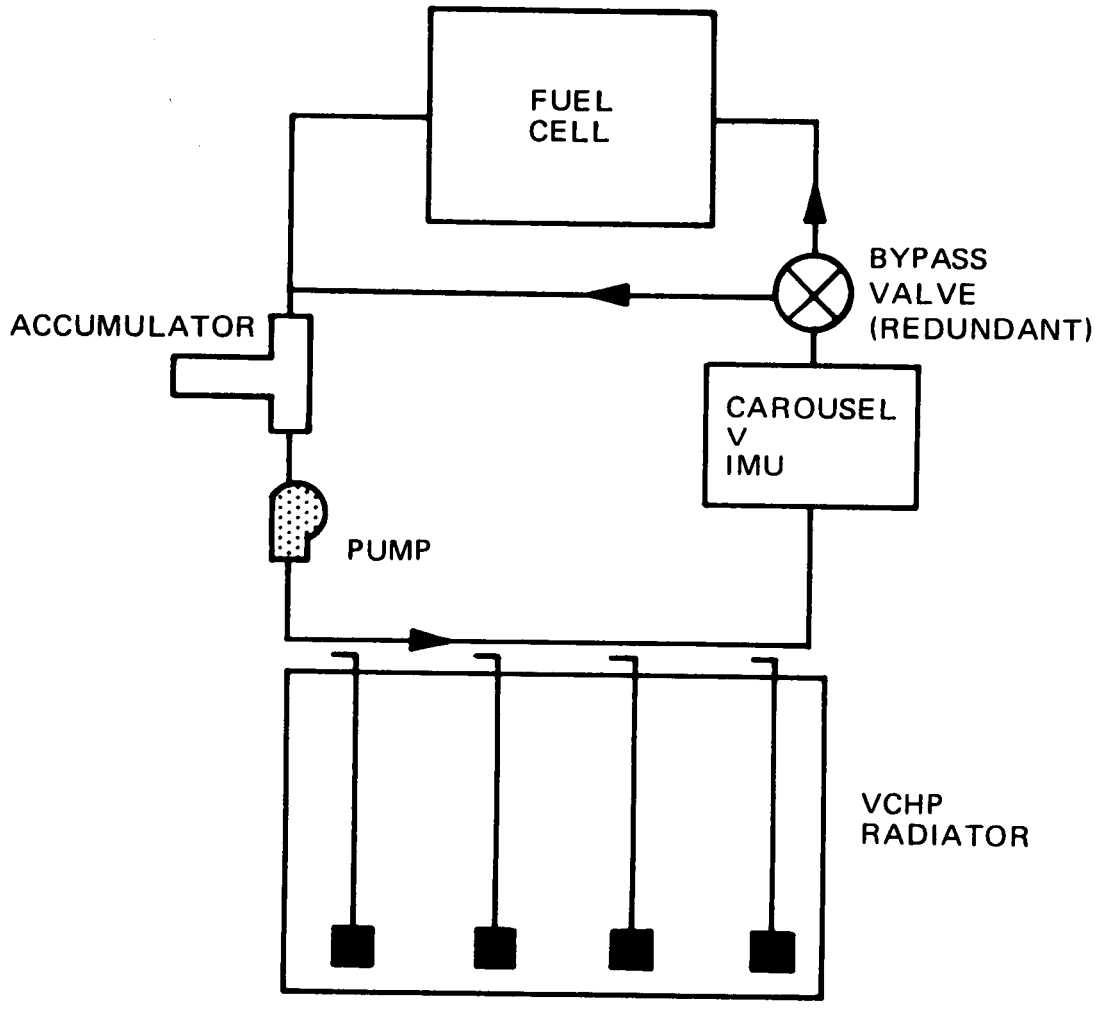

THERMAL CONTROL SCHEMATIC - 310RE-3A

The fuel cell requires active cooling to maintain acceptable temperatures. The pumped loop fuel cell heat transport circuit has redundant by-pass valves with automatic temperature controllers to monitor the flow rate of coolant through the fuel cell as the load changes. The Micron IMU of the evolved configurations does not require active cooling as did the Carousel V IMU Flown on the interim versions.

The 20 watt Power Amplifier used in conjunction with the TV, is a small solid state unit which dissipates 80 watts in converting 100 watts of DC power to 20 watts of RF power. Because of its infrequent use, less than 2 hours per mission, it is placed on its own loop. A Variable Conductance heat pipe header transports heat to a small, simple heat pipe radiator, providing a self regulating simple heat rejection system.

(Ref. Vol. 5, Part I, Opt. 3A/1, Sect. 5.2)

THERMAL CONTROL SCHEMATIC 310RE-3A,310ARE-3B, 410AD-2,510ADE-3B,320AE-3A

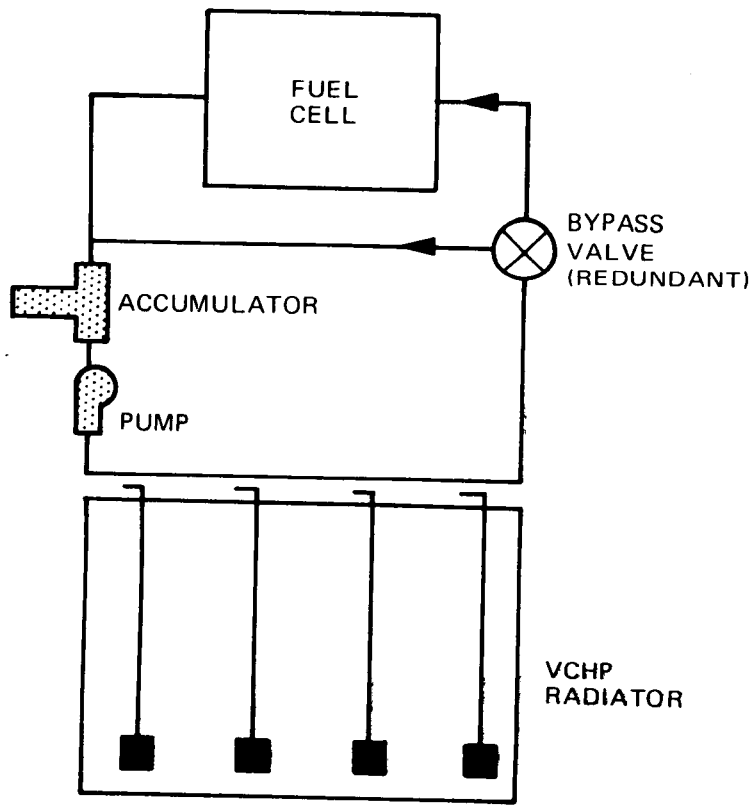

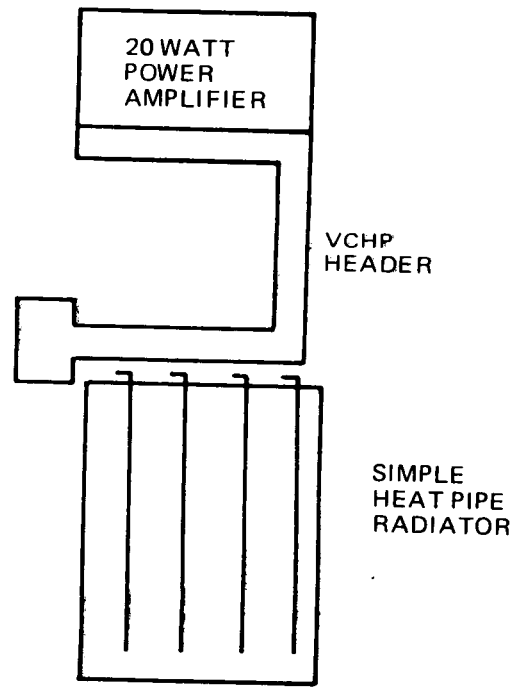

SUBSYSTEM REDUNDANCY ALLOCATION
310-3A/310RE-3A, 310A-3B/310ARE-3B, 510A-3B/510ADE-3B

Reliability of the six single stage vehicles is shown in the facing page, along with the redundancies required for each vehicle to achieve a 0.97 Mission reliability for both the Reliability Reference Mission (168 hours) and the most complex mission including add-ons.

To achieve the 0.97 mission reliability with "add-ons", the following is the reliability, and the redundancies of the "add-on" stages:

	AKS	ADKS	RDM
Reliability	0.9987	0.9791	0.9824
Mission Time	2 hours	5 years	2 weeks
Redundancy			
• Structures			
• Propulsion			
MPS			
APS		Regulator	Regulator
• Avionics			
GN&C		Att. Ref. Unit Programmer Sequencer Star Tracker APS Control Elect.	APS Control Elect Timer Control Relays
Comm		OMNI Antenna Duplexer Baseband Processor Receivers (8)	Receivers (2) Power Amp.
DMS		Signal Cond/PCM	Signal Cond/PCM
EPS			

SUBSYSTEM REDUNDANCY ALLOCATION TABLE

MISSION - 168 HR. RELIABILITY
REFERENCE MISSION

		3A		3B			
SUBSYSTEM	REDUNDANCY	310	310RE	310	310ARE	510A	510ADE
STRUCTURE	-----						
(INCLUDING INTERFACE SUBSYSTEMS)							
PROPULSION							
MPS	He ISO VALVE	X	X	X	X	X	X
	VENT VALVES	X	X	X	X	X	X
APS	THRUST ISO VALVES	X	X	X	X	X	X
	VENT VALVES	X	X	X	X	X	X
AVIONICS							
GNC	IMU		X		X		X
	APS CONT. ELECT	X	X	X	X	X	X
COMM	RECEIVERS	X	X	X	X	X	X
	POWER AMP	X		X		X	
	TRANSMITTER	X		X		X	
DMS	COMPUTER	X	X	X	X	X	X
THERMO	CONTROL VALVE	X		X		X	
POWER	-----						
REF. MISSION	RELIABILITY	0.9700	0.9750*	0.9700	0.9750*	0.9700	0.9750*

* RELIABILITY DRIVEN BY MISSIONS WITH ADD-ONS

RETRIEVAL DELAY MODULE 310RE-3A

The retrieval delay module (RDM) serves as a temporary communications and control link when attached to a payload left in a parking orbit for subsequent retrieval. Its structure is of simple aluminum alloy semi-monocoque sheet-stringer construction. Twelve conical interface fittings exist on both the forward and aft faces of the module and serve to index and align the RDM to the payload and Tug as well as transmit lateral shear and axial compression loads. Twelve latches adjacent to the conical index fittings lock the RDM to the payload and Tug.

Four Apollo type probe/drogue units aid in docking the RDM to a payload and Tug. Twelve nitrogen gas fed APS thrusters located around the waist of the RDM exercise the attitude control function. GN&C, communications and data management astrionics are located inside the RDM. A 250 ampere/hr. battery provides electrical power for the 342 hours required.

(Ref. Vol. 5, Part I, Opt. 3A, Sect. 5.2)

RETRIEVAL DELAY MODULE - RDM

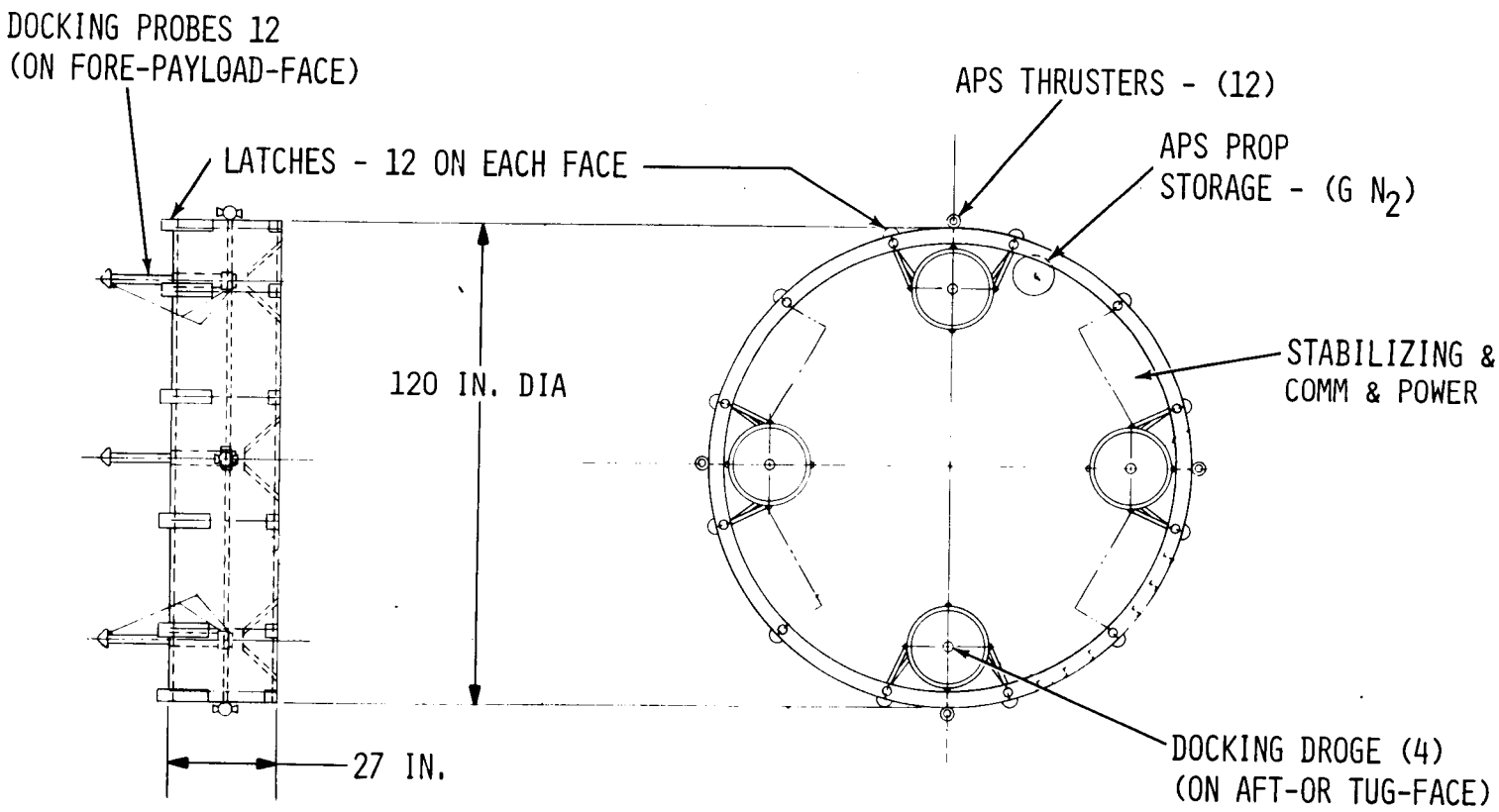

III-102

THIS PAGE INTENTIONALLY LEFT BLANK

RETRIEVAL DELAY MODULE CHARACTERISTICS

		WT (LBS)
FUNCTION	- PROVIDE COMM. & CONTROL TO DEORBITED QUIESCENT PAYLOAD TO BE RETRIEVED ON LATER FLIGHT	
STRUCTURE	- CONVENTIONAL ALUM. ALLOY SEMI-MONOCOQUE	245
PROPULSION	- GASEOUS N_2 APS - 12 THRUSTERS	36
ASTRIONICS		207
DATA MGMT	- 2 POST CODE MODULATOR/SIGNAL CONDITIONER UNITS 10 SENSORS	
GN&C	- STRAPPED DOWN GYRO SYSTEM FOR ATT. STAB. APS CONTROL ELECTRONICS TIMER & CONTROL RELAYS FOR AUTOMATIC CONTROL OF GN&C UPON COMMAND	
COMM	- 4 RECEIVERS, 2 TRANSMITTERS 2 KBIT/SEC. COMMAND 16 KBIT/SEC. TELEMETRY	
EPS	- 250 AMP/HR BATTERY SUPPLIES COMM. RECEIVERS - 336 HRS SUPPLIES ALL. EQUIPMENT - 6 HRS	
RELIABILITY	- .9824 PER MISSION	
DDT & E	- $25M	

THIS PAGE INTENTIONALLY LEFT BLANK

APOGEE KICK STAGE - 320AE-3A

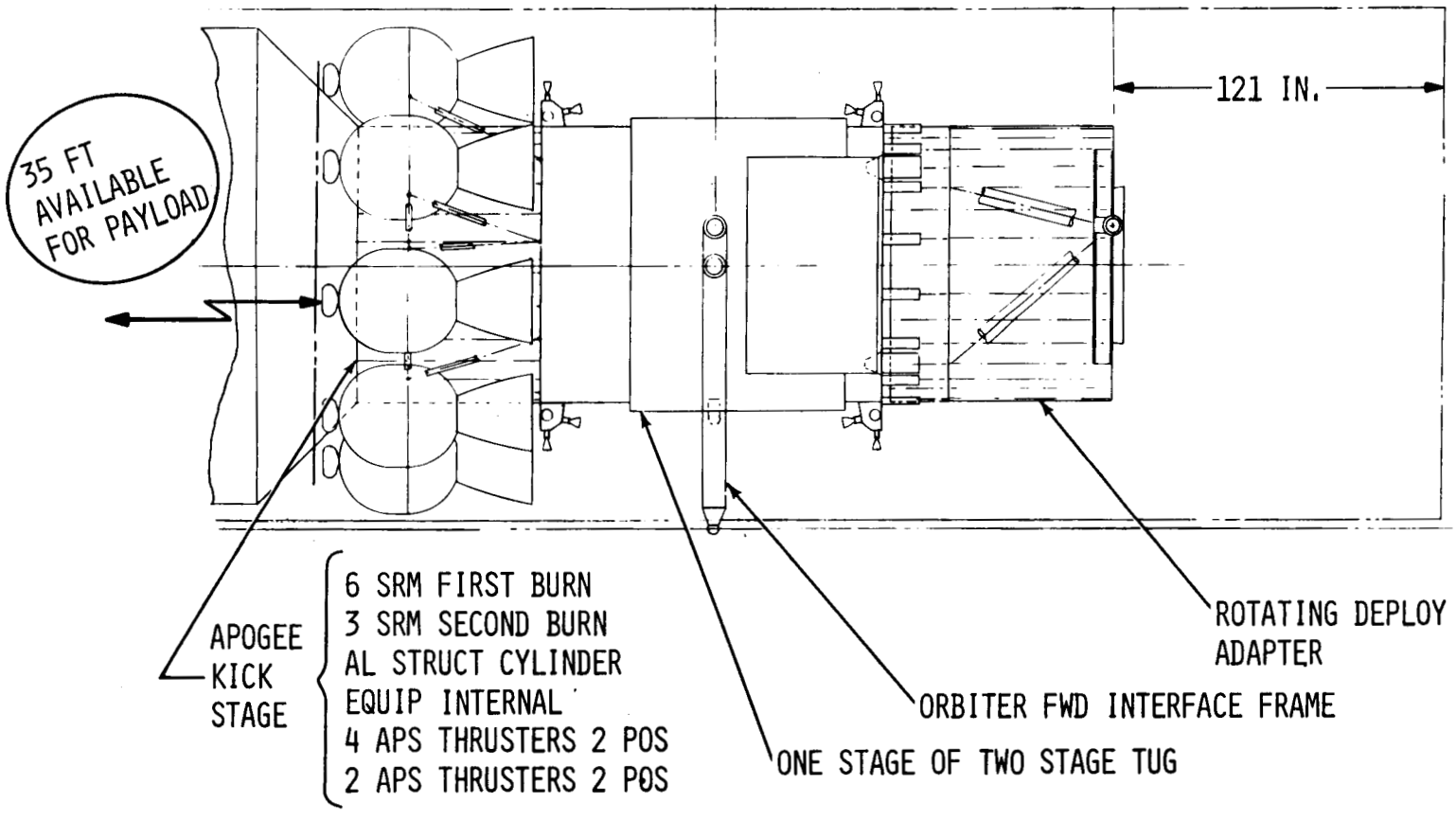

III-104

INTERFACES - 310RE-3A

The interfaces consist of all structural and mechanical hardware enabling the Tug to link with Shuttle and to separate from it in flight. It includes those items that will remain in the Shuttle during the flight of the Tug. Included is the operational docking/undocking attachment of the Tug to the shuttle, mechanisms, Propulsion Interconnects, astrionics wiring and umbilicals and the mission specialist station.

The weights chart identifies and summarizes by subsystem those Orbiter/Tug interface elements which are chargeable against the 65,000 lb. Payload. Weights have been established and these elements have been included in the WBS build-up of Tug costs.

The interface schematic divides these items into operational categories rather than by subsystem, starting with signal and service lines (which are part of Tug system) installed in the Orbiter. The schematic identifies the signal or service lines at the interface.

(Ref. Vol. 5, Part I, Opt. 3A/1, Sect. 5.4)

INTERFACE SUBSYSEM WEIGHTS

CONCEPT 310RE-3A

	WEIGHT (LB)
STRUCTURE	(1090)
• ROTATING ADAPTER	
• FORWARD CRADLE	
MECHANISMS	(96)
• ADAPTER-ROTATION ACTUATOR/BERTHING PROBES & LATCHES	
• CRADLE - BERTHING LATCHES	
• INFLATABLE SUPPORT FOR MAIN ENGINE NOZZLE	
PROPULSION (MAIN)	(47)
• MAIN PROPELLANT FILL & DRAIN LINES AND VENT LINES	
• HIGH PRESSURE GASEOUS He LINES	
• UMPILICAL PANELS	
ASTRIONICS	(131)
• DMS-HARD WIRING	
• GN&C-HARD WIRING	
• COMM. - HARD WIRING + RF.	
• EPS - H_2 & O_2 FILL, VENT DRAIN & PURGE	
• UMBILICAL PANELS	
M.S.S	(146)
• CONTROL & DISPLAY - DATA & COMM. EQUIP.	
• POWER - WIRING - SUPPORT	
TOTAL WITH CONT.	1510

THIS PAGE INTENTIONALLY LEFT BLANK

INTERFACE LOCATIONS - SINGLE STAGE TUG 310RE-3A

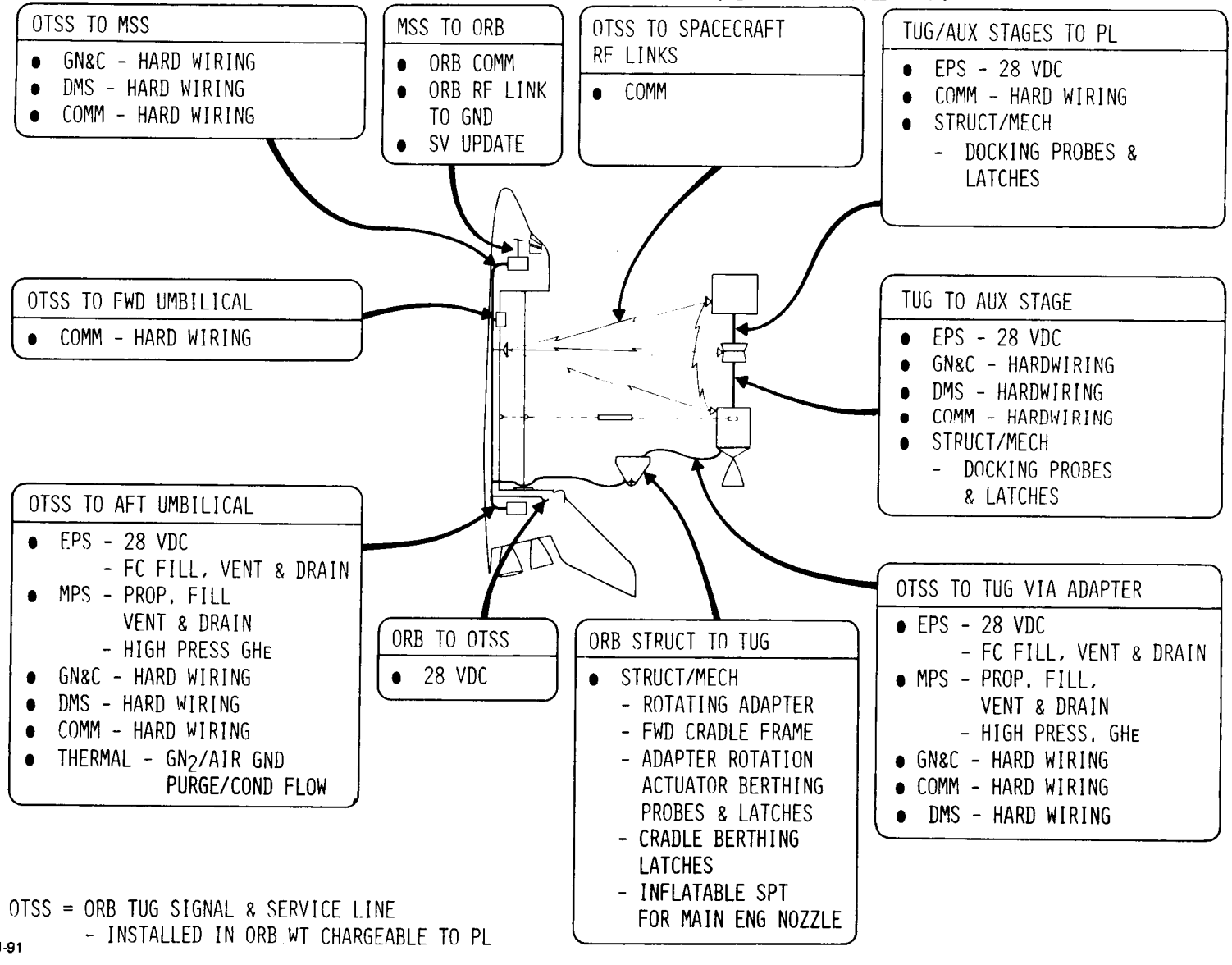

OTSS = ORB TUG SIGNAL & SERVICE LINE
- INSTALLED IN ORB WT CHARGEABLE TO PL

III-91

310-310RE - MISSION FLOW/COMPLEXITY FACTOR

A methodology has been established to determine the relative complexity of concept flight modes by taking the weighted sum of operations required to perform a mission. All Level I operations (facing page chart) were weighed with the following multipliers:

- 8 for operations involving crew safety
- 4 for operations needed for TUG recovery
- 2 for operations needed for P/L deployment
- 1 for operations needed for P.L recovery

An additional complement of factors were added as follows:

- 8 for critical functions (i.e., docking, staging, etc.)
- 4 for unique trajectory functions (i.e., correct for nodal regression)
- 4 for deficient functions (i.e. P/L loiter C/O)

This approach provides a basis for comparing the operations complexity of the various options and is also used as the scaling factor for determining flight operations cost. Our approach to costing flight operations was to establish a detailed "strawman" cost based on a "Bottoms-Up" estimate of the geosynchronous round trip mission. Our files on LM costs (complexity factor 177) were used to establish this estimate. The costs were then scaled by the complexity factor to establish cost differences between concepts.

Based on this Cost Estimating Relationship, a 310/310RE TUG would have a 13% increase in flight operation costs relative to a single stage round trip mission due to the added tasks associated with planning and controling the retrieval delay module.

(Ref. Vol. 6, Part I, Sect. 6.4.3)

CONCEPT 310ARE-3A DEPLOY AND RETRIEVAL DELAYED COMPLEXITY FACTOR

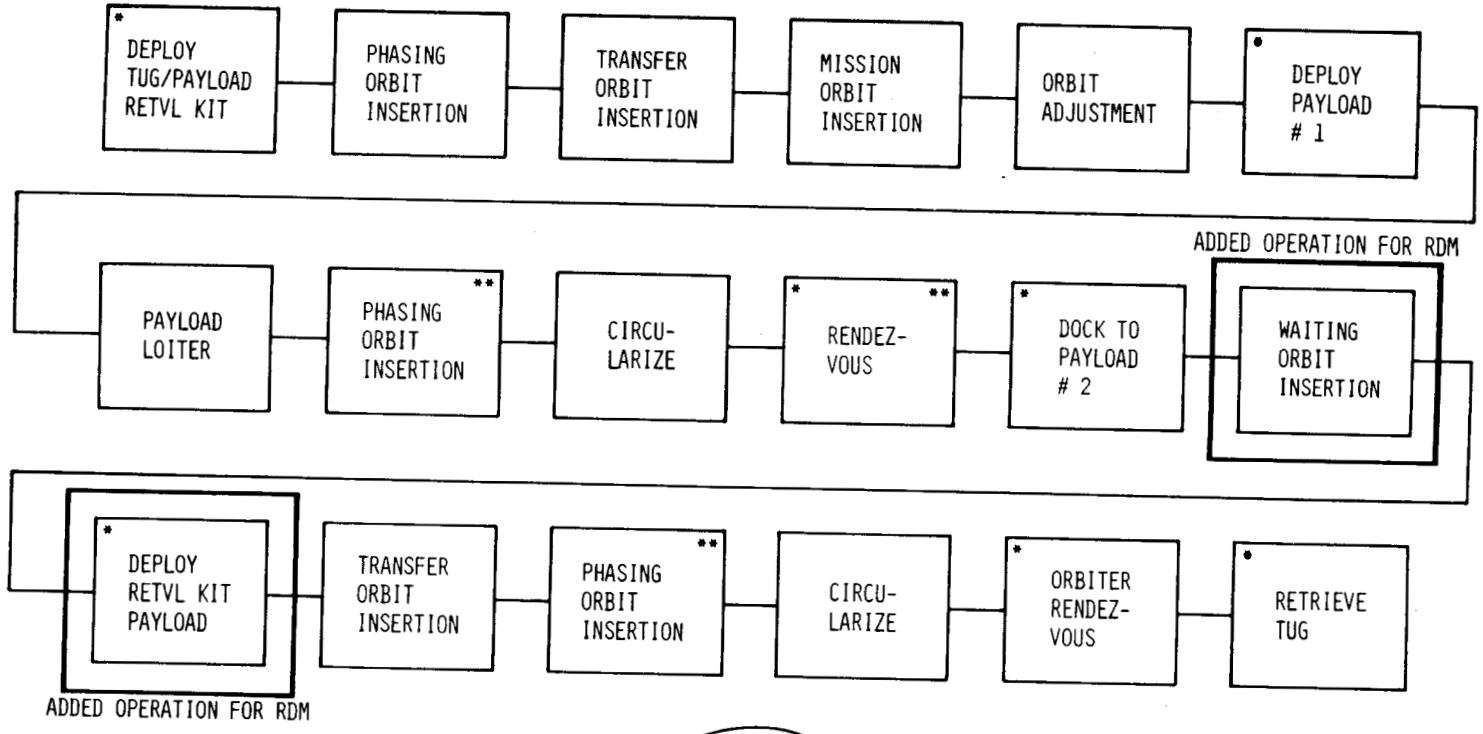

RDM INCREASES FLT OPS COMPLEXITY 11% RELATIVE TO RND TRIP MISSION

MAJOR FUNCTION MULTIPLIERS

● CREW SAFETY	2 x 8
● TUG RECOVERY	7 x 4
● PAYLOAD PLACEMENT	6 x 2
● PAYLOAD RETRIEVAL	6 x 1

*CRITICAL FUNCTIONS	7 x 8
**UNIQUE TRAJECTORY FACTORS	3 x 4
COMPLEXITY FACTOR	130

III-20

OPTION 3A - 310/310RE-3A - FLIGHT OPERATIONS COST

Costs for Flight Operations have been split between those funds required prior to IOC and those required after IOC. In establishing these estimates it was assumed that NASA is the contracting agency. If the DOD is the responsible agency, the cost estimates presented on the facing page are reversed. Included in these estimates are the manpower for mission planning, flight control, flight evaluation and flight software. The detailed justification for these estimates can be found in Volume 6 "Operations Data Book."

The major driver of flight operations non-recurring cost is the development of the software. Estimates are included for the following major computer systems:

- TUG on-board software
- Mission Control Center Real Time Computer Complex
- Vehicle Management and Mission Planning System
- Mission Control Center Simulator

The software costs were established by estimating the word count required to meet the functional requirements of each of the computer systems. Dollar values per word consistent with GAC experience on the F-14, EA2-C and OAO MCC development programs were used for the design phase and programming/verification phase of the development cycle. Word size estimates for the on-board software and real time computer complex were based on the software routines in the LM Guidance Computer which have similar functional requirements to that of the TUG, adjusted to account for the LM software needed for man/machine interfaces. The software estimates for the MCC simulator were based on the requirements for the LM Full Mission Engineering Simulator requirement adjusted to reflect the relative complexity of the vehicles. This software package was assumed to play a threefold role; namely, provide simulator capability to the MCC, and to provide the environment to the Astrionics Software development facility and the electronics integration facility. The software estimates for the semi-automated non-real time Vehicle Management and Mission Planning System (VMMPS) requires more in-depth evaluation to determine costs. However, for purposes of at least establishing a cost line element a 30K word system was assumed necessary.

Based on these cost procedures, the total flt. ops DDT&E cost for the 310/310RE-3B is $35M for NASA and $4M for DOD. The average cost per flight is $388K which converts to approximately $272K per payload. The cost for evolving the concept to a Level II autonomous system with a retrieval delay capability is $12M.

(Ref. Vol. 6, Part I, Sect. 6.4.4)

310-3A
↓
310RE-3A

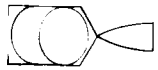

AUTONOMY III→II

FLIGHT OPERATION COST

	NASA, $M			DOD, $M		
	DDT & E INTM	EVOL	POST IOC	DDT&E INTM	EVOL	POST IOC
MISSION PLANNING	8.10	2.88	20.85	2.65	.67	14.69
FLIGHT CONTROL	1.43	.24	22.95	.68	.07	21.18
FLIGHT EVALUATION	.47	.15	2.91	.45	.11	2.45
FLIGHT SOFTWARE	24.72	8.00	30.85	-	-	16.16
	34.72	11.27	77.56	3.78	.85	54.48

AVG FLT OP COST PER FLT
(NASA = 200 FLT; DOD = 160 FLT)

	NASA, $M	DOD, $M
MISSION PLANNING	.104	.092
FLIGHT CONTROL	.115	.132
FLIGHT EVALUATION	.015	.015
FLIGHT SOFTWARE	.154	.101
	.388	.340

$12M EVOL COST

III-63

MATURE OPERATIONAL FLOW

The Tug can be turned around at ETR in two weeks using two shift operation. It is expected that WTR will work single shift, requiring four weeks. The mature flow is based on a 90% learning curve flattening out at the 100th flight. This time puts no constraint on the usage based on the current planned buy of Tugs.

It should be noted that our turnaround time stops after mate to the Orbiter and is baselined on mating a fully fueled Tug.

(Ref. Vol. 6, Sect. 6.16)

MATURE OPERATIONS FLOW

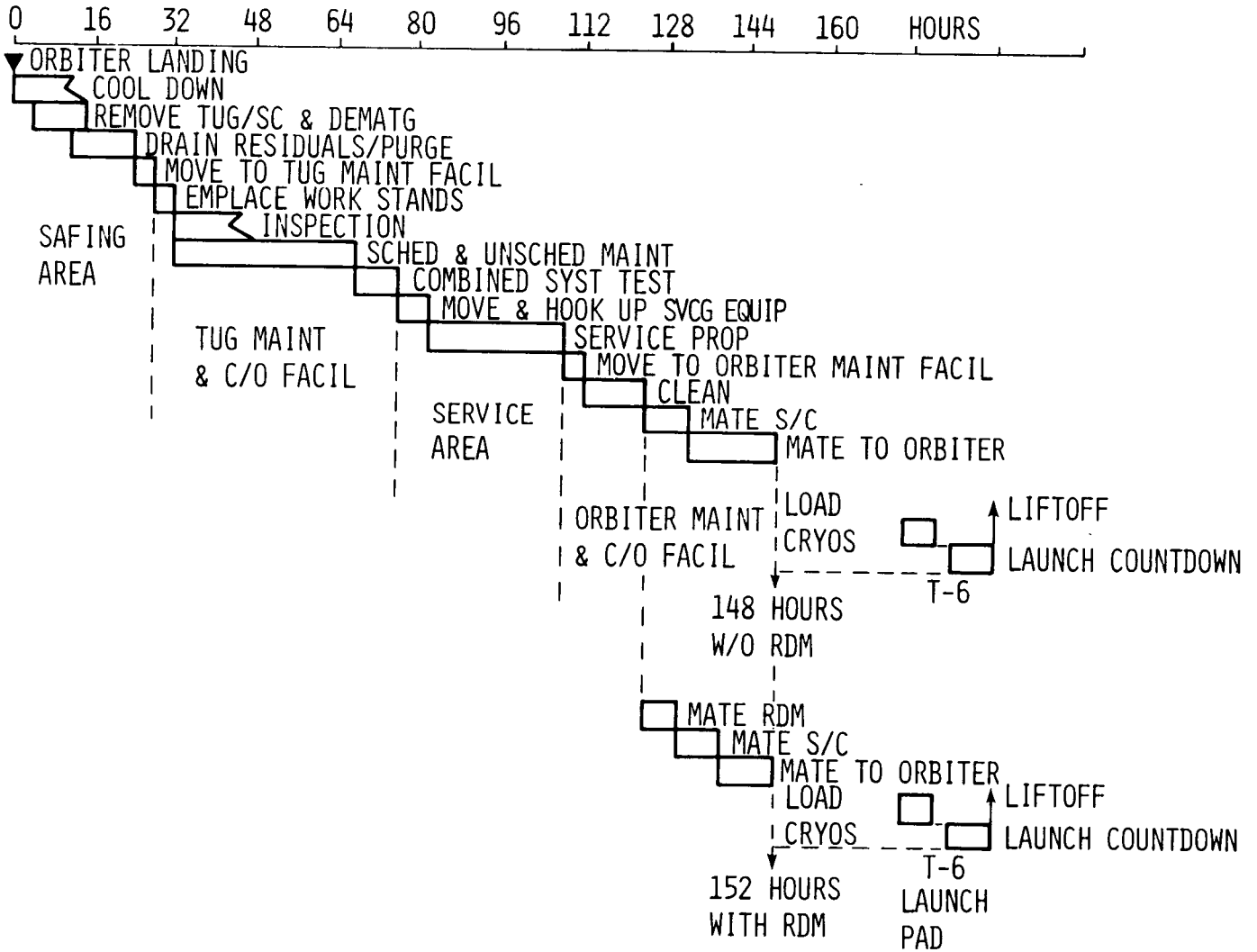

III-107

MATURE FLOW BUILDUP

The Mature operational flow was developed by: defining each task identified by functional analysis, identifying the skills required, identifying the GSE requirements and estimating the time to perform each task. The summation of these data is used to create the time lines. This technique lends credability to the resultant total flow indicating the Tug can be turned around in normal servicing in less than 160 hours.

(Ref. Vol. 6, Sect. 6.16)

MATURE FLOW BUILDUP

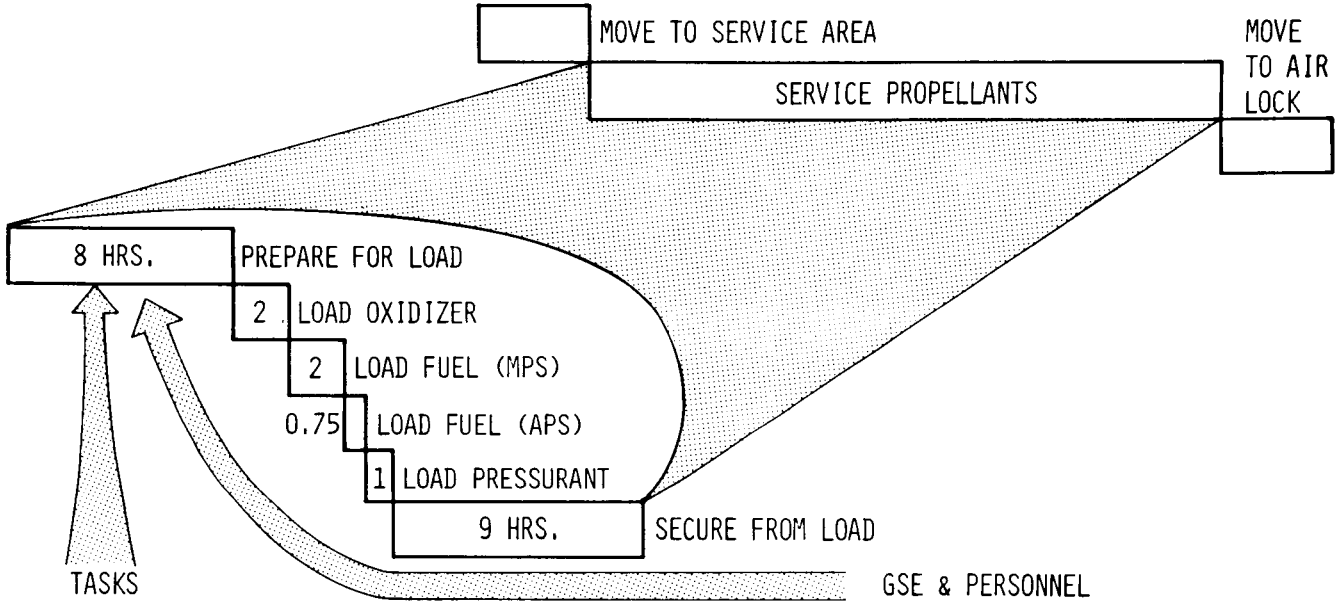

2.1.2 PREP FOR LOAD

- 2.1.2.1 MOVE TO SERVICE AREA
- 2.1.2.2 CONFIGURE TRANSPORTER FOR ROTATION
- 2.1.2.3 ATTACH ROTATING/AGE/GSE TO TUG. VERIFY TBD POUNDS AUX. CRANE CONTROL
- 2.1.2.4 VERIFY FORWARD ATTACH LATCH OPEN
- 2.1.2.5 ROTATE TO VERTICAL
- 2.1.2.6 ROUTE AND ATTACH FUEL AND OXIDIZER SERVICE LINES; ATTACH PRESSURANT LINES

PREP FOR LOAD

AGE/GSE
- HOISTING FIXTURE, TUG ROTATE
- HOSE SET MPS
- HOSE SET APS

PERSONNEL REQUIREMENTS

PROP TECHS	6		
MECH/STRUCT	6	BASE SUPPORT	
SAFETY	5	CRANE OPER	1
QC	5	TOW OPER	1

~~1-36, 11-36~~, 111-108

TUG LAUNCH SITE PROCESSING FLOW AND FACILITIES

Trade studies were used in determining the desired facilities and flow to process the Tug. An advantage of the storable Tug is that many options are open to the operator as to where and when such operations as safeing, mating and servicing are performed. All servicing and mating can be done prior to moving to the pad so the Tug will not be a constraint on launch preperation. This is the approach we chose.

The results of the study show that the Tug can be supported with the baseline facilities in the KSC facilities report. This will keep the facilities cost to a minimum since no new facilities are required.

(Ref. Vol. 6, Sect. 6.16)

TUG LAUNCH SITE PROCESSING FLOW FACILITIES

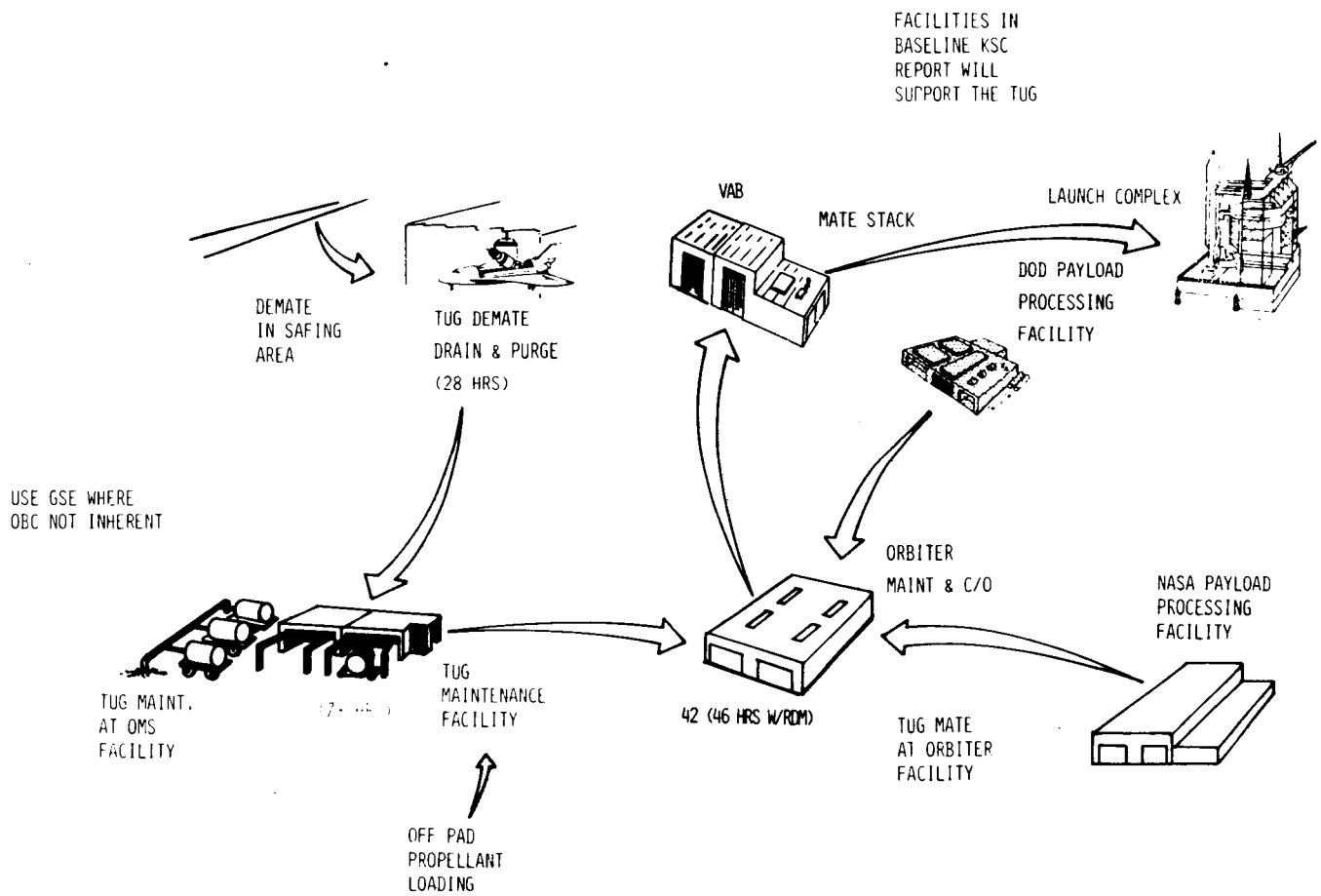

TUG GRND OPS
TURN AROUND LESS
THAN 2 WKS ETR
4 WKS WTR

I-34, II-34, III-107, VI-31, IX-1

THIS PAGE INTENTIONALLY LEFT BLANK

SUMMARY OF SIGNIFICANT TRADES

STORABLE TUG HAS MANY OPTIONS IN MEETING PAYLOAD AND ORBITER

- ON PAD VS OFF PAD PROPELLANT LOADING
  - REDUCES ON-LINE OPERATIONS BY 6 HOURS
  - ALLOWS COMPLETE VISUAL VIEW AND ACCESS TO TUG DURING LOAD
  - ELIMINATES WETTING TUG/ORB INTERFACE LINES AND RESULTANT CLEANING
  - ELIMINATES SPILLS INTO ORBITER
  - AVOIDS $450,000 STORAGE AND SERVICE FACILITY AT PAD (BASED ON KSC BASELINE OF 19 APRIL 73)

  VERSUS

  - HANDLING LOADED, HEAVIER TUG
  - REQUIRES STRONGER TRANSPORTER TO PREVENT RACKING AND LEAKS
- HORIZONTAL MATE WITH ORBITER VS. VERTICAL MATE AT PAD
  - EASIER HANDLING
  - NO WEATHER CONSTRAINTS
  - ELIMINATES ADDITIONAL 6 HOUR SERIAL PAD TIME

  VERSUS

  - PAYLOAD LOADED 9 DAYS EARLIER
  - LOADED TUG IN ORBITER 9 MORE DAYS

SUMMARY OF SIGNIFICANT TRADES (CONT'D)

- o OPTIMIZATION OF FACILITIES AND FLOWS
  - TUG MAINTENANCE - VAL. OMS FACIL., OR ORBITER MAINT. FACIL.
    - o OMS FACIL. VENT SYST. & SCRUBBERS SIZED TO HANDLE TUG ALSO
    - o HAZARDOUS FUEL HANDLING AREA ISOLATED AND CONSOLIDATED
  - TUG/SC MATE - TUG MAINT. FACIL. P/L PROC. FACIL., VAR. OR ORB. MAINT. FACIL
    - o ADEQUATE HOOK HEIGHT
    - o CLEAN AREA AVAILABLE
    - o NO ADDITIONAL FLOWTIME TO ORBITER
  - FLOW OPTIMIZATION
    - o USE SERIAL FLOW TILL FLIGHT RATE REQUIRES PARALLEL FLOW AND INCREASED CREW SIZE
    - o USE STAGGERED PARALLEL FLOW FOR 2 STAGE PROCESSING TO OPTIMIZE SKILL UTILIZATION
    - o WTR BASED ON ONE SHIFT, ETR BASED ON TWO SHIFTS

SUMMARY OF SIGNIFICANT TRADES (CONT'D)

- o DEMATE IN SAFING AREA VS TUG MAINTENANCE AREA
  - AVOIDS 6 HOUR ADDITIONAL SERIAL FLOW FOR ORBITER
  - PROVIDES EARLIEST ACCESS TO TUG/SC
  - AVOIDS SIZING TUG MAINTENANCE FACILITY FOR ORBITER
    - $1.08M SAVED
  - ONE HYPERGOLIC HANDLING CREW REMOVES ORBITER OMS & RCS AND TUG

- o GROUND CHECKOUT VS ON BOARD CHECKOUT
  - DECISION TO USE OBC BASED ON FLIGHT OPERATIONS REQUIREMENTS
    - * CRITICAL FUNCTION
    - * CORRECTIVE ACTION CAPABLE
  - NO OBC SPECIFICALLY FOR GROUND TURNAROUND OPERATIONS
    - * VEHICLE WEIGHT VALUED AT $100K/LB.
    - * USE ON BOARD COMPUTER AND INHERENT CAPABILITY ON GROUND AUGMENTED BY GSE
    - * LAUNCH PROCESSING SYSTEM WILL BE AVAILABLE FOR ORBITER

RESIDUAL HAZARDS AND SINGLE FAILURE POINTS: 310-3A/310RE-3A

Those hazards for which design, special procedures and safety or warning devices may not resolve the problem, are considered residual hazards. In addition, where failure of a single hardware element leads to loss of life, vehicle or mission, a single failure point (SFP) is identified. The ones falling into these categories for this concept are shown in this chart.

If a jet on the Retrieval Delay Module (RDM) fails on, there is no mechanism for shutting it off; early propellant depletion is highly likely. The Tug is protected by its ability to sense unstable targets; however the payload would be lost. The use of high reliability components on the RDM reduces the possibility of this type of failure to a rare event.

Although a rationale for acceptance of these situations has been defined for now, additional study effort is required in the next phase to reduce the hazard to the lowest possible level (controlled category) and/or to eliminate the single failure points.

Additional information on these items is included in Volume VII, Safety and Reliability.

(Ref. Vol. 7, Sections II & VII)

RESIDUAL HAZARDS/SFP : 310-3A/310RE-3A

SATISFACTORY PROGRESS

HAZARDS/SFP	RATIONALE FOR ACCEPTANCE
ABNORMAL LANDING WITH FULL TANKS	ABORT DUMP PREFERRED BY SENSITIVITY STUDY
VENT PROPELLANT FUMES TO PAYLOAD BAY VIA TUG OVERBOARD VENTS (MPS/APS)	EXTREME PAYLOAD BAY TEMPERATURE AND MULTIPLE FAILURES NECESSARY FOR VENTING
LACK OF RDM APS COMMAND OVERRIDE	DETECT UNSTABLE TARGET PRIOR TO DOCKING
VENT FUEL CELL WATER TO PAYLOAD BAY DURING CHECKOUT	VENT DIRECTED AWAY FROM EOS
ABORT LANDING WITH FULL FUEL CELL TANKS	TANKAGE AND SUPPORTS DESIGNED FOR CRASH LOADS
SFP : VALVES FAILED CLOSED (MISSION SUCCESS) - MPS He REGULATOR - ENGINE PREVALVE(S) - APS VENT - APS QUAD ISOLATION - RDM GN_2 SHUTOFF - RDM GN_2 REGULATOR(S)	HIGH RELIABILITY COMPONENTS

SAFETY ASSESSMENT RESULTS: 510A-3B/510ADE-3B

Ann assessment of this configuration was performed to determine whether it satisfied the NASA Safety Requirements specified in the Data Package, Space Tug System Studies, April 1973 and those safety requirements derived through analysis. The first column identifies the source of the safety requirement, NASA Data Package or identified hazard. Items in the next column are labelled (R) for requirement unsatisfied, (C) for an operational constraint or (E) for an exception to the NASA or derived safety requirements. The specific items are summarized. In the comments column, the reasons or reactions to the safety assessment items are stated.

On roundtrip missions, four SRM cases are jettisoned to reduce weight and enable mission accomplishment. Of the 98 missions, 50 are to geosynchronous altitudes. As assessment of payload impact probability is needed for this traffic to this altitude to ascertain if a problem exists.

The checkmark in the upper right corner signifies a satisfactory/safety mark for the configuration for Phase A. The completed Safety Evaluation form for this concept is presented in Volume VII.

(Ref. Vol. VII, Sect. II & VII)

310- 3A/310RE-3A SAFETY ASSESSMENT RESULTS

- DATA PACKAGE/ANALYSIS-DERIVED SAFETY REQUIREMENTS USED AS ASSESSMENT TOOL
- ASSESSMENT RESULTS:

REQ'T SOURCE	REQ'T/CONSTRAINT/EXCEPTION	COMMENTS
NASA REQTS	(E) DETECT POTENTIAL TANK FAILURES ON GROUND	FRACTURES MECHANICS PROGRAM USED
	(E) FUEL CELL VAPOR VENTED TO BAY DURING C/O	VENT DIRECTED AWAY FROM EOS
	(R) NESTED TANKS	SEPARATE TANKS PREFERRED
VENTING	(C) NEED FLUID GSE DURING GROUND TRANSPORT	CONTAINS AND NEUTRALIZES VAPORS
RESIDUALS	(R) NO ABORT DUMP	TO BE INCORPORATED
	(R) NO MPS DEPLETE	IMPLEMENTATION IS OPEN QUESTION
	(C) "EMPTY" TANKS AT LANDING	SAFEST LANDING CONFIGURATION
COMMAND/ CONTROL	(C) WITHIN 30 NM OF EOS; OVER GROUND STATION WHEN TRACKING	SATISFACTORY TO SAFETY
LOSS OF ATT. CONTROL	(C) RDM DICTATES P/L RADAR REFLECTORS/DOCKING TARGET	SMALL P/L IMPACT

PROGRAMMATICS/COST OVERVIEW 310-3A/310RE-3A

Similar supporting programmatics and cost data is defined for 310-3A/310RE-3A, as in the prior programs. We also addressed the activities leading to initial IOC (Dec. 79) impact of introducing retrieval 4 years later. These data are presented in Volume 8, Part III.

Concept 310-3A/310RE-3A has a total development cycle of 99 months. Required flight hardware are produced in 112 months. Peak annual funding ($85M) occurs in FY78. Initial DDT&E total DDT&E and total program costs are $255M, $329M and $858M respectively.

PROGRAMMATICS/COST OVERVIEW - 310-3A/310RE-3A

CHARACTERISTICS

		MAIN STAGE	AUXILIARY STAGE
PHYSICAL:	WEIGHT, LB	3190 → 3394	544
	LENGTH, IN	297	27
	DIAMETER, IN	120	120
TECHNICAL:	REUSABLE	ONE-STAGE	RDM
	AUXILIARY STAGE		RDM
	RETRIEVAL	EVOLVED	
	PROPELLANT CAPACITY, LB	59,500	
	THRUST, LB	12,000	
	ISP, SEC	338	
	AUTONOMY LEVEL	IIIA → IIB	
	RELIABILITY	.97 → .9750	.9824

PROJECT SUMMARY

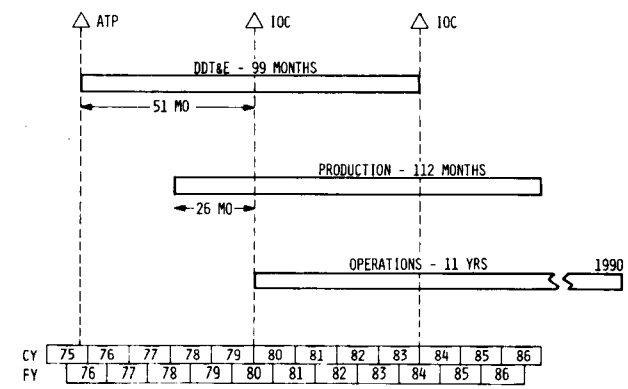

ANNUAL - PROJECT COSTS

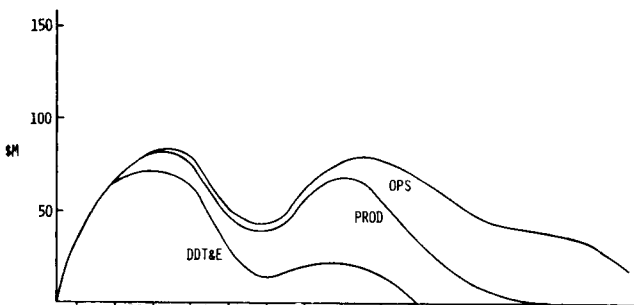

CY	76	77	78	79	80	81	82	83	84	85	86	87	88	89	90	
FY	76	77	78	79	80	81	82	83	84	85	86	87	88	89	90	91
DDT&E	37	65	71	64	27	11	19	21	14	0	0	0	0	0	0	0
PROD	0	0	12	12	22	27	27	44	46	35	19	8	2	0	0	0
OPS	0	0	0	0	3	4	6	7	19	33	40	40	40	38	31	12
TOTAL	37	65	83	76	52	42	52	72	79	68	59	48	42	38	31	12

CUMULATIVE - PROJECT COSTS

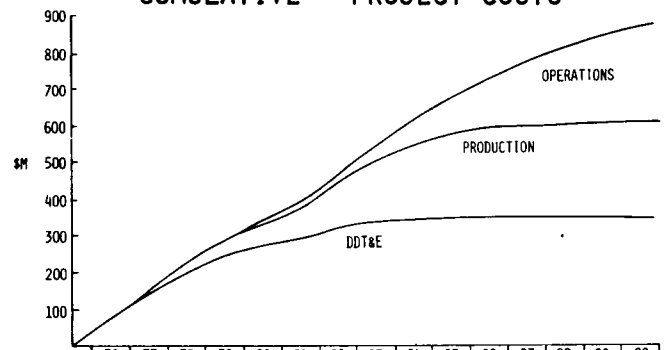

CY	76	77	78	79	80	81	82	83	84	85	86	87	88	89	90	
FY	76	77	78	79	80	81	82	83	84	85	86	87	88	89	90	91
DDT&E	37	102	173	237	264	275	294	315	329	329	329	329	329	329	329	329
PROD	0	0	12	24	46	73	100	144	190	225	244	252	254	254	254	255
OPS	0	0	0	0	3	7	13	20	39	72	112	152	192	230	261	274
TOTAL	37	102	185	261	313	355	407	479	558	626	685	733	775	813	844	858

VIII, IX-8, III-112

SUMMARY SCHEDULE - 310-3A/310RE-3A

The primary elements of the 310-3A/310RE-3A Project Schedule include Main Stage, Retrieval Delay Module, Vehicle Test, GSE, Facilities and dependent SR&T. Authorization to Proceed (ATP) occurs on October 1, 1975 with IOC of the initial configuration targeted for December 31, 1979. The Class I main engine ATP occurs at the same time as the main stage with Final Flight Certification occuring 4 months after First Orbital Flight (FOF). Main stage vehicle tests are essentially as described for 110A-1 except that phased retrieval requires additional Integrated Avionics testing and a flight test to demonstrate retrieval capability. First flight of the evolved configuration is targeted for December 1, 1983. Development of the Retrieval Delay Module (RDM) starts on June 1, 1980 with related vehicle tests starting at the same time as main stage evolved vehicle tests. Another feature of the schedule is the 3 Lot buy of production main stages. This production approach was deemed necessary to avoid a manufacturing gap between initial production to meet deploy only operations and production of evolved vehicles. Lot 1 Tugs have deploy only system capability, Lot 2 Tugs begin with deploy capability and are then upgraded to retrieval capability and Lot 3 Tugs will include retrieval capability. Lot 1 includes 5 production vehicles, Lot 2 includes 5 and and Lot 3 includes 13 for a total fleet of 23 vehicles. GSE and Facilities are scheduled essentially as described for 110A-1.

(Ref. Vol. 8, Part III, Sect. 8.1)

310-3A/310RE-3A SUMMARY PROJECT SCHEDULE

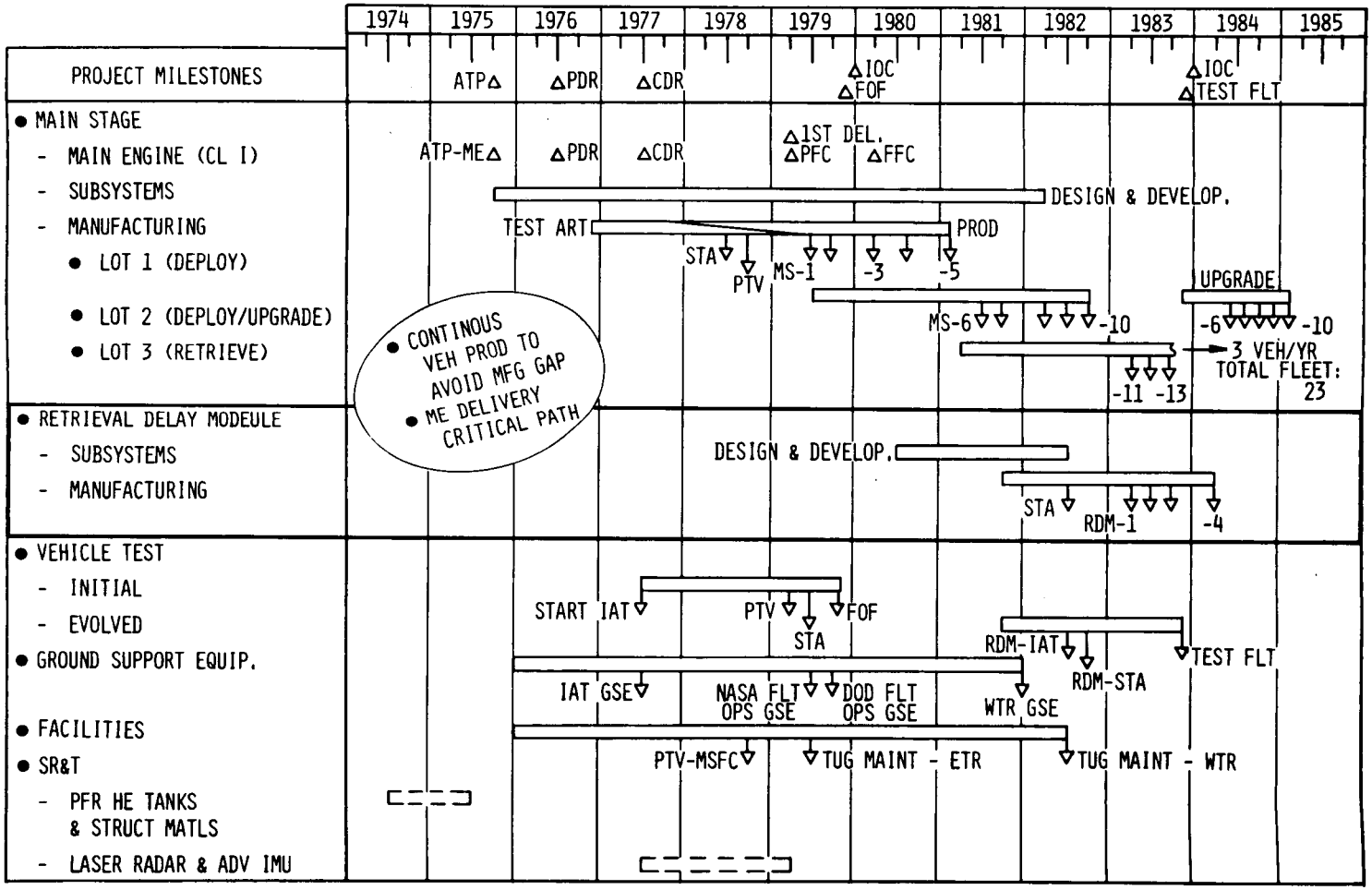

III-54

310-3B/310ARE-3B GROUND TESTS

VEHICLE TEST PROGRAM

The vehicle test program for 310-3B/310ARE-3B was developed in a similar manner to that described for 110A-1.

STRUCTURAL TEST ARTICLES (STA)

The structural test programs for the 310-3B/310ARE-3B are identical to those described for the MS 110A and the RDM for the 310RE configuration. The AKS STA for this configuration will be tested as described for the 110A STA test program, however, the test will be accomplished in 1983. The 310-3B STA will be configured to include the evolved 310ARE-3B avionic retrieval hardware and mechanical interfaces, and the test loads will envelope both configurations.

PROPULSION TEST VEHICLE (PTV)

The PTV and AKS PTV and AKS propulsion test programs for this configuration are the same as those described for configuration 110A.

(Ref. Vol. 8, Part V, Sect. 8.2)

310-3A/310RE-3A GROUND TESTS

EVOLVED RETRIEVAL PLUS RETRIEVAL DELAY ADDS $10.01M TO VEH TEST

TEST	TEST ART.	OBJECTIVES	APPROACH TEST DESCRIPTION
STRUCTURES • 310-3A - MAIN STAGE (MS) • 310-RE - RETRIEVAL DELAY MODULE STRUCT (RDM)	• COMPLETE M.S. PRIM. & SEC. STRUCT. INCL. TUG/ORB., TUG/RDM TUG/P.L. ADAPTERS • COMPLETE RDM PRIM. & SEC. STRUCT.	• EVAL DYN., STATIC STRENGTH, SAFE-LIFE & SEPARATION • VERIFY STRUCT./ MECH. INTERFACES AT LAUNCH SITE	• VIB./ACOUSTIC TESTS • DES. LIMIT STATIC TESTS • STATIC FATIGUE • ULT. STATIC TESTS • SEP. DEMO. • INTERFACE VALIDAT. DEMO. AT KSC • RDM TESTED SEPARATELY AS ABOVE (1982)
PROPULSION (MS 310-3A ONLY)	• FLIGHT WT. MAIN STG. STRUCT. • MAIN ENG. SUPPT. S/S LESS ENG. • ENG. SIMUL. UNIT • PTV REFURB. TO FLIGHT OPS	• DEMO OPS OF ASSEM. COMPONENTS • DEVELOP C/O & OPS PROCEDURES • VERIFY SERV/HANDLG PROCEDURES • DEMO SYS PERF. & CHARACTERISTICS	• COLD FLOW ONLY • REFEREE FLUIDS PHASE -FILL/DRAIN/FLOW TESTS • LIVE PROPELLANTS PHASE - LOAD CONTROL/ACCURACY - SYS. COMPAT. & DYN. - PERF. SERV./HANDLG PROCEDURES

Integrated Avionics Tests

The MS Integrated Avionics Test program for the 310-3A configuration is the same as for 110A-1.

The IAT and ASDL will be initially configured for the basic mission hardware and software including autonomy level IIIA. As the retrieval capability and Autonomy level II B is evolved, the IAT hardware and ASDL software will be updated and evolved system verification and mission simulation performed.

The RDM bread board will be integrated and functionally tested in the main stage IAT facility to take advantage of the existing facility simulation and GSE capabilities.

Mockups

The Main stage mockups for this configuration are the same as for 110A. In addition a mockup of the RDM will be required for this configuration. The evolved system hardware will also be installed and evaluated using the M.S. mockups.

(Ref. Vol. 8, Part III, Sect 8.2)

310-3A/310RE-3A GROUND TESTS (CONTINUED)

TEST	DESCRIPTION	OBJECTIVE	APPROACH
INTEGRATED AVIONICS TEST • INTEG. AVIONICS TEST(IAT) - MS - RDM • AVIONICS SOFTWARE DEVELOPMENT LAB.(ASDL). - MS	• IAT - SHIP SET OF AVIONICS - COMPUTER SIMULATION - SENSOR STIMULUS - FACTORY & LAUNCH GSE • ASDL - COMPUTER FACILITY WITH MATH MODEL SIMULATION OF MS HARDWARE	• VERIFY HARDWARE/SOFTWARE PRIOR TO VEHICLE INSTALLATION & FOF.79 • VERIFY EVOLVED RETRIEVAL AND AUTONOMY LEVEL IIB HARDWARE & SOFTWARE FOR 83 IOC	• IAT - SUBSYSTEM INTEG & END FUNCTIONAL VERIFICATION - VERIFY FACTORY C/O PROCED - HARDWARE/SOFTWARE VERIF. - MISSION SIMULATION - INTEGRATE & VERIFY RETRIEVAL CAPABILITY HARDWARE/SOFTWARE - RETRIEVAL MISSION SIMULATION • ASDL - SOFTWARE DEVELOP FOR BASIC & EVOLVED SYSTEM
MOCKUPS • MS • RDM	• WOOD AND CARDBOARD MOCKUP OF THE TUG MS AND RDM STRUCTURE INCLUDING EQUIPMENT FOR PDR. • WOOD & METAL MOCKUP OF TUG MS AND RDM STRUCT. & EQUIPMENT FOR CDR.	EVALUATE EQUIPMENT ACCESSIBILITY AND MAINTAINABILITY. EVALUATE SHUTTLE & PAYLOAD INTERFACE AND TUG LINES RUN PRIOR TO FAB OF FINAL HARDWARE.	• COMPONENT INSTALLATION • ESTABLISH LINE LENGTHS FOR FINAL HARDWARE FAB • DEMONSTRATE MAINTAINABILITY - ASSESSMENT & DEMOS OF EQUIPMENT CLEARANCES - CONNECTOR & MOUNTING ACCESSIBILITY DEMO. • SHUTTLE & PAYLOAD INTERFACE ASSESSMENT

GROUND TEST COST - INITIAL = $18.74M
- INITIAL & EVOLVED = $25.31M

310-3B-310ARE-3B FLIGHT TESTS

Nine flights are included in the 310-3B/310ARE-3B flight test program.

The MS flight test program for the 310-3B configuration will be the same as described for 110A. The AKS flight test program is also the same as described for 110A-1 with FOF of the AKS occuring in 1984.

The RDM and MS retrieval capability will be flight verified as described for configuration 310RE-3A.

(Ref. Vol. 8, Part V, Sect. 8.2)

310-3A/310RE-3A FLIGHT TESTS

TEST ARTICLE	OBJECTIVES	APPROACH
• MAIN STAGE (310-3A)- 1ST PROD. UNIT INCLUDING DFI • MAIN STAGE (310RE-3A) 1ST PROD. UNIT INCLUDING DFI • RDM - 1ST PROD. UNIT INCLUDING DFI	INITIAL IOC • THERMO-VERIFY SYS. THERMAL CONTROL • STRUCT - VERIFY LAUNCH/ ORBIT/ENTRY/LANDING LOADS & DYNAMICS • PROP - VERIFY MPS/APS • AVIONICS - VERIFY AVIONICS OPS • OPS - EVALUATE TUG/ORB, TUG/ PAYLOAD INTERFACES - EVALUATE SYS. PERF. CAPABILITY - DEMO PAYLOAD DEPLOY EVOLVED IOC • EVALUATE TUG/RDM INTERFACES • DEMO PAYLOAD RETRIEVAL AND AUTONOMY LEVEL IIb	• 8 FLIGHT-TEST PROGRAM - 5 INITIAL - 3 EVOLVED • FIRST ORBITAL FLIGHT (FOF) COSTED WITHOUT OPERATIONAL PAYLOAD - FLOWN WITHIN RETRIEVAL CAPABILITY OF ORB. - SEQUENCE INCL: SYS C/O, MPS/APS BURNS, DUMMY PAYLOAD DEPLOY, ORBITER RETRIEVAL • SUBSQ. FLIGHTS DEPLOY OPERATIONAL PAYLOADS SELECTED TO DEMO BUILDUP IN TUG CAPABILITY • FOF OF 310RE-3A IS A DEPLOY ONLY FLIGHT. RETRIEVAL DEMO WITH RDM PERFORMED UPON RETURN TO 160NM ORBIT

FLIGHT TEST COST-INITIAL	= $13.38M
INITIAL & EVOLVED	= $16.82M
TOTAL VEHICLE TEST	= $42.13

310-3A/310RE-3A - FACILITIES

Grumman's proposed Facility utilization plan was developed using the following ground rules or assumptions:

- Maximum utilization of existing and planned Shuttle facilities.
- Minimize total Facility, GSE and Manpower costs.
- Shuttle Ground Operations Approach - NASA, KSC 4/73.
- WTR - No existing facilities available. Shuttle facilities will be same as ETR.
- Kickstages or RDM's will not operate from WTR.

Facilities Definition Development

- Establish requirements (area, crane and environment) for Manufacturing, Test and Operations' facilities.
- Check availability of existing facilities.
- Schedule construction and activation to coincide with Program Master Schedule need dates.

Costing Procedure

New construction costs were calculated on $/sq.ft. basis. Activation costs are % of construction cost, GSE cost or $/sq.ft. Maintenance costs are based on $/sq.ft./yr.

Differences from Concept 110A-1

- Less Manufacturing space required (310-3A/310RE-3A is smaller vehicle).
- Higher traffic model requires additional TUG Maintenance Facility at ETR.
- Kickstage SRM facility not required.

Facilities requirement sheets (Ref., Vol. 6, Part 2, Appendix F.) and Facilities Plan (Ref., Vol. 8, Part 1., Section 8.3) provide detail requirement, schedule and cost data.

(Ref. Vol. 8, Part III, Sect. 8.3)

310-3A/310RE-3A FACILITIES

$0.9M HIGHER THAN 110A DUE TO HIGHER FLIGHT RATES

FUNCTION	SIZE, SQ FT	EXISTING	MODIFIED/NEW	COST, $M C OF F	COST, $M TOTAL
MANUFACTURING				.055	.474
FAB & ASSY	7,800	GAC-BPA, PLTS 2 & 3			
F/A & C/O	14,200		GAC-BPA, PLT 5		
RDM	3,400	GAC-BPA, PLT 5			
TEST				.100	.325
STA	VARIOUS REQMTS	GAC, PLT 5 & WYLE-HUNTS			
THERMAL	-	GAC-BPA, PLT 5			
IAT	1,000	JSC - SHUTTLE ASDL & IATL			
PROPULSION	700	GAC-BPA,HPTF&MSFC-TST ST			
TANK QUAL & ACCEPT	700	GAC-BPA, HPTF			
MAINT & REFURB ETR/WTR				2.225/2.200	3.430/2.900
TUG MAINT FAC	12,000/6,000		EXT ON ORBITER OMS FAC		
PROP SYS SERV FAC	6,000		EXT ON ORBITER OMS FAC		
TUG CLEANING FAC	3,000		EXT ON ORBITER MCO FAC		
SUPPORT/WHSE FAC	AS REQD/-	SHUTTLE SHARED @ ETR			
OFFICE	5,000/4,000	EXISTING @ ETR	NEW FAC @ WTR		
ETR/WTR LAUNCH				.413/.494	.571/.656
LAUNCH PAD	-	SHUTTLE FAC-TUG GSE			
SAFING AREA	-	SHUTTLE FAC-TUG GSE			
MISSION CONTROL CENTER	7,500		MOD SPACE @ JSC & SUNNYDALE, CALIF.		
			TOTALS	5.487	8.356

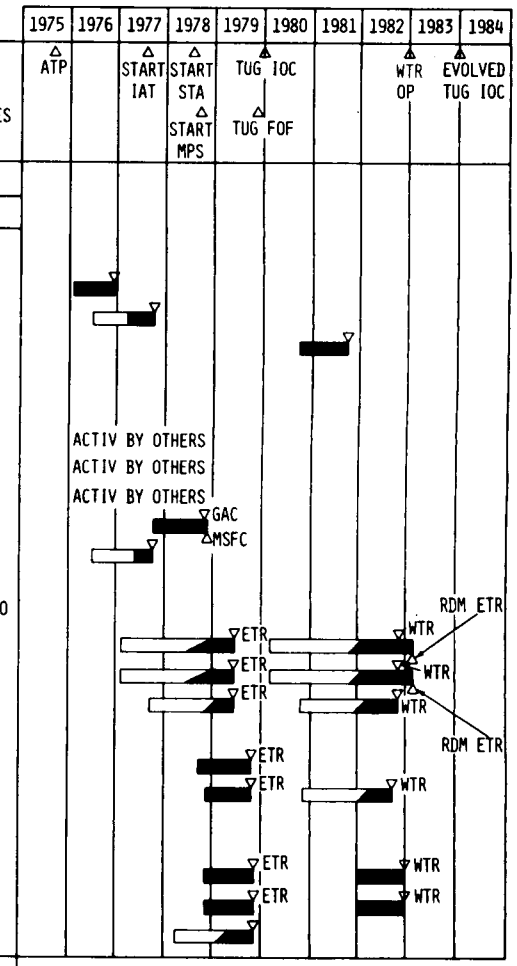

III-8

THIS PAGE INTENTIONALLY LEFT BLANK

3103A/310RE-3A MANUFACTURING FLOW

The manufacturing flow and sequence of assembly of the main stage and auxiliary stages is depicted. The flow diagram shows program milestones, engineering drawing release requirements, tool design and fabrication, operation sheet preparation, work order release and the manufacturing and assembly sequence for the major test articles (STA, PTV) and the first flight article.

Tooling for the main propellant tanks is the long lead manufacturing item. This configuration uses the nested tank design with gored titanium construction and the 19 month flow from start of tank assembly through delivery is longer than the 110A-1 option because of the increased time for forming and welding the gore sections and because additional time is required for assembly and test of the tanks.

The assembly sequence includes (1) joining the nested tanks by mechanically mating with the aft skirt, (2) adding the forward skirt and (3) systems installation, checkout and acceptance test.

(Ref. Vol. 8, Part III, Sect. 8.4)

310-3A/310RE-3A SPECIAL PROGRAMMATICS

This chart summarizes the salient features defined for implementing and managing Program 310-3A/310RE-3A.

The main factors derived from our analysis of 110A-1 include: defining the initial/evolved flight build up based on Shuttle/Tug launch constraint and ground crew launch capability; implementing a 3 lot main stage production run with deploy capability, deploy capability up graded to retrieval, and retrieval capability vehicles to avoid initial/evolved production gaps; refurbishing the propulsion test article for operational use; and defining a fall back position for every identified risk.

Specific areas for government participation include: establishing Tug/Shuttle interface requirements before Orbiter design freeze; providing payload interface design requirements and mission model data; initiating required activities for supporting Research and Technology; providing GFE systems and components (eg: main engines, and DOD secure comm); supporting propulsion system testing and development; supporting integrated avionics hardware testing and related software development; providing required facilities; performing vehicle flight operations and ground operations; and providing logistic support.

(Ref. Vol. 8, Part III, Sect. 8.5)

310-3A/310RE-3A SPECIAL PROGRAMMATICS

- PROGRAM IMPLEMENTATION AND MANAGEMENT
  - INITIAL/EVOLVED FLIGHT BUILD-UP SET BY SHUTTLE/TUG LAUNCH CONSTRAINT AND GROUND CREW LAUNCH CAPABILITY
  - 3 LOT PRODUCTION (DEPLOY, DEPLOY-UPGRADE, AND RETRIEVE) TO AVOID MFG GAP
  - PROPULSION ARTICLE REFURBISHED FOR FLIGHT
  - FALL BACK POSITION SHOWN FOR EVERY IDENTIFIED RISK

- AREAS FOR GOVERNMENT PARTICIPATION
  - FIRM TUG/SHUTTLE INTERFACES BEFORE ORBITER PDR
  - PROVIDE PAYLOAD INTERFACE DESIGN REQUIREMENTS AND MISSION MODEL DATA
  - INITIATE REQUIRED SR&T
  - SUPPORT SYSTEM TEST - AVIONIC HARDWARE/SOFTWARE, PROPULSION
  - PROVIDE GFE SYSTEMS AND COMPONENTS, FACILITIES, LOGISTIC SUPPORT
  - PERFORM VEHICLE GROUND AND FLIGHT OPERATIONS

310-3A/310RE-3B FLIGHT OPERATIONS BUILDUP

The methodology used to establish the 310-3A/310RE-3A flight buildup is keyed to achieving all flights defined by the 100% payload capture analysis after the second year of initial operations and the first year of evolved operations. The primary factors considered include: NASA defined Shuttle/Tug launch constraints, initial ETR ground crew launch capabilities, and flight mode buildup.

Shuttle/Tug launch constraints affect the first year of operations and allow only 3 flights. During the second year of operations the allowable Shuttle/Tug launches exceed the payload capture traffic model.

Initial ground crew launch capability is derived in the same manner as that described for 110A-1. We approached the evolved flight build up in a similar fashion. The ground crew capability for 1984 was based on the learning effect of adding additional personnel to accommodate the increase flight rate between 1983 and 1985.

As in the prior options, we recommend that initial/evolved flight crew experience be developed by starting with the simplest flight mode and then progressively introducing the more complex flight modes required initially for 1982 and subsequently for 1985.

Our recommended flight buildup for 310-3A/310RE-3A, including 3 flights in 1980, 12 flights in 1981, and 27 flights in 1984 encompasses 355 total flights through 1990 or 35 less than 100% payload capture traffic.

(Ref. Vol. 8, Part V, Sect. 8.7)

310-3A/310RE-3A FLIGHT OPERATIONS BUILDUP

INPUTS	CY 80	81	82	83	84	85	86	TOTAL FLTS.
	▽ IOC_I				▽ IOC_E			
• 100% P/L CAPTURE - ETR+WTR FLTS	20	15	17	27	51	42	46	390
ETR FLTS	20	15	17	20	46	34	37	
• SHUTTLE/TUG LAUNCH CONSTRAINT-ETR	3	21						
• INITIAL GND CREW LAUNCH CAPABIL.-ETR	12	15	16					
• EVOLVED IOC GND CREW LAUNCH CAPAB/ETR				20	27	34	37	
• TUG FLIGHT MODE BUILDUP								
SINGLE DEPLOY	3	ALL	ALL	ALL	ALL	ALL	ALL	
MULTI DEPLOY	NONE	SOME	ALL	ALL	ALL	ALL	ALL	
SORTIE	NONE	NONE	NONE	ALL	ALL	ALL	ALL	
RETRIEVE	NONE	NONE	NONE	NONE	SOME	ALL	ALL	
ROUND TRIP	NONE	NONE	NONE	NONE	SOME	ALL	ALL	
RETRIEVAL DELAY	NONE	NONE	NONE	NONE	SOME	ALL	ALL	
RECOMMENDED FLIGHT BUILDUP ETR+WTR	3	12	17	27	32	42	46	355
ETR	3	12	17	20	27	34	37	

BUILDUP RATIONALE

- EARLY BUILDUP - SAME AS 110A-1
- PRE IOC_E FLT CREW EXPERIENCE ALLOWS EVOLVED FLIGHT BUILDUP IN 1 YEAR
- EASE INTO EVOLVED OPERATIONS TO MAXIMIZE BENEFITS OF GROUND/FLIGHT CREW LEARNING WITHOUT EXCEEDING DOWN STREAM OPERATIONS

PROGRAM SENSITIVITY TO IOC SHIFT - 310-3A/310RE-3A

The schedule shift and stretch programmatic options can also be used for implementing program concept 310-3A/310RE-3A under a 2 year delay.

In this program IOC delay results in 68 undeployed payloads and 52 unretrieved payloads. Similar conclusions can be drawn on production impact as in the two prior options.

In addition, development impact conclusions considering type of contractor support available to NASA/DOD for defining Tug/Shuttle systems and interfaces, vehicle test, facilities and SR&T are also similar to the results of 110A-1. However, in the stretch program the IOC delay allows a more relaxed schedule for Class I main engine development to avoid the critical path. Assuming that the initial period of schedule stretch is devoted to systems engineering studies we estimate that cost of stretch-out will be $8M. Peak funding occurs in 1980 and is $66M for the schedule stretch option.

PROGRAM SENSITIVITY TO IOC SHIFT 310-3A/310-3A/310RE-3A

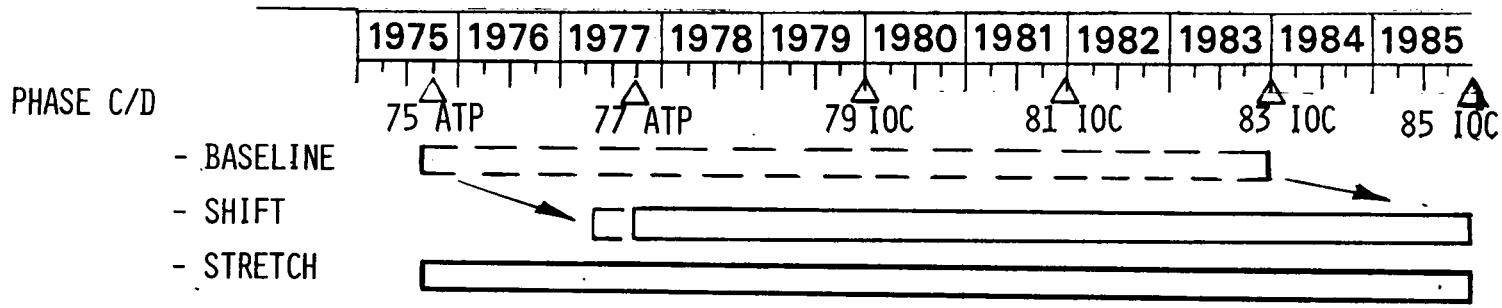

	SHIFT	STRETCH
OPERATIONS IMPACT		
UNCAPTURED PAYLOADS	66 DEPLOY/52 RETRIEVE	66 DEPLOY/52 RETRIEVE
PRODUCTION IMPACT		
MFG TEST ART/PROD LEARN	BEST	FAIR
EXIST HDWR AVAIL	FAIR	BEST
DEVELOPMENT IMPACT		
SCHEDULE	99 + 6(ME-ATP)MO	112 MO
SYS & INTERFACE DEFN BY	GOVT + STUDY CONTR	GOVT + PRIME CONTR
- VEH. TEST	2 YEAR DELAY	1½ YEAR DELAY
- FACILITIES	2 YEAR DELAY	
- SR&T	EXTEND	CONTINUE
- DDT&E - INITIAL/TOTAL	255/329	263/337
- "PAF"(YR)	85(81)	66(80)

The technology items and their potential impact are shown on the opposite chart. If the PFR helium tank does not meet its goals, a 6Al4V titanium tank adds 48 lbs. to the vehicle. If the advanced IMU (Micron) is unavailable, a Carousel VB IMU plus a rate gyro unit adds 30 lbs. If the graphite composite shell fails to meet its objectives an aluminum honeycomb shell adds 30 lbs. The laser radar is an item for which no attractive alternative exists, hence it represents both a cost and schedule risk. If materials compatibility or fracture mechanics data indicate the need to change propellant tank materials from titanium to either aluminum or stainless steel the added weight would: be + 13 lbs. or +3 lbs. respectively. If the heat pipes are replaced by incorporating high heat rejection items on the active loop, there are no weight changes. To recover the weight impact on payload capability due to these possible weight increases, the advanced fuel cell is an open option.

The Class I engine is a new design based on current technology with the exception of the uncertainity in engine life and in the predicted performance with the high expansion ratio nozzles used. It is estimated that this engine can miss its performance goals by -3 seconds Isp.

Although the proposed SR&T programs protect against schedule slippage by virtue of being completed at ATP, the availability of both the main engine and the 621B Navigation Satellites remain schedule risk items.

Converting the potential Isp loss and weight increases to a total program cost at a $111K/lb value and adding the potential cost increase items, yields a total cost risk of $25.9M for 310-3A/310RE-3A.

(Ref. Vol. 8, Part III, Sect. 8.9)

310-3A/310 RE-3A RISK ASSESSMENT

TECHNOLOGY ITEM IMPACT	
• CLASS I ENG	-3 SEC ISP
• PFR TANK	+48 LB
• ADVANCED IMU	+30 LB
• GRAPHITE COMPOSITE	+38 LB
• LASER RADAR	COST/SCHED
• MATERIALS COMPATIBILITY	+13 LB
• FRACTURE MECHANICS	+13 LB
• HEAT PIPES	SCHED

VEHICLE SENSITIVITY (DEPLOY)	PLAIN
$\frac{\partial P/L}{\partial W \text{ FIXED}}$ (LB/LB)	-3.66
$\frac{\partial P/L}{\partial ISP}$ (LB/SEC)	96

- TECHNICAL RISK
  - POTENTIAL WT IMPACT: +129 LB } ≈ 760 LB OF PAYLOAD
  - POTENTIAL ISP LOSS: -3 SEC }
  - OPEN WEIGHT REDUCTION OPTION: ADV. FUEL CELL
- SCHEDULE RISK
  - PROPOSED SR&T PROGRAMS COMPLETED PRIOR TO ATP PROTECT AGAINST SCHEDULE SLIP
  - AVAILABILITY OF 621 B SATELLITES & MAIN ENGINE
- COST RISK
  - POTENTIAL Δ COST $25.9M

MODERATE RISK PROGRAM

III-87

TECHNOLOGY REQUIREMENTS AND DESIRED DATA - 310-3A/310RE-3A

The upper part of the facing chart contains the supporting research and technology (SR&T) items required for 310-3A/310RE-3A; the lower part of the chart contains what we have termed as "desired data". The distinction between the two is that the "desired data" items do not require technology but are considered straightforward engineering development tasks to produce design data prior to Tug program go-ahead (ATP); this will preclude impacting Tug schedules should the data indicate the desirability of an alternative approach, (vis., aluminum or stainless steel tanks rather than titanium).

Excluding the SR&T on the Class I engine, the total SR&T funds requested for 310-3A/310RE-3A is $1,290 K to be expended over an 18 month period culminating at Tug ATP or prior to go-ahead on the evolved Tug. The advanced (Micron) IMU is the long lead item (18 months), again excluding the Class I engine.

(Ref. Vol. 8, Part III, Sect. 8.10)

310-3A/310RE-3A TECHNOLOGY REQUIREMENTS & DESIRABLE DATA

	ITEM	SR&T FUNDS, $K	SR&T SCHEDULE, MO	PROPOSED PROGRAM
SR&T	CLASS I ENGINE	TBD	TBD	HIGH ALT TESTS TO OBTAIN PERF DATA ON HIGH ϵ NOZZLE FOR MIXTURE RATIO RANGE
SR&T	LASER RADAR	500	12	FAB & TEST LIGHTWEIGHT, LOW-POWER UNIT USING IMPROVED OPTICS & LIGHTER MIRROR DRIVES
SR&T	PFR HELIUM TANK	125	12	FAB & TEST 3 TANKS UNDER STATIC & DYNAMIC LOADING; ENVIRONMENTAL & COMPATIBILITY TESTS
SR&T	ADVANCED IMU	500	18	DEVELOP SOFTWARE FOR REDUNDANCY MGMT & CALIBRATION OF TWO MULTI-SENSOR TYPE IMU'S
SR&T	GRAPHITE COMPOSITE	15	6	FAB GRAPHITE EPOXY HONEYCOMB SAMPLES & TEST IN VARIOUS PLY DIRECTIONS FOR DESIGN DATA
DESIRABLE DATA	MATERIALS COMPATIBILITY DATA	25	6	2219-T87, 2219-T81 & 6A14VTI; WITH N_2O_4 & MMH UP TO 130°
DESIRABLE DATA	FRACTURE MECHANICS DATA	25	6	2219-T87 & 6A14VTI; K_{IC}, K_{TH} & FLAW GROWTH WITH N_2O_4 & MMH UP TO 130°
DESIRABLE DATA	HEAT PIPES	100	12	FAB & TEST VARIABLE CONDUCTANCE HEAT PIPE RADIATOR PANEL & HEADER FOR TURN-DOWN RATIO & SHUTOFF HEAT FLUX DATA

III-76

DOD AQUISITION APPROACH (AFSCP 800-3) 310-3A/310RE-3A

ANNUAL PROJECT COSTS

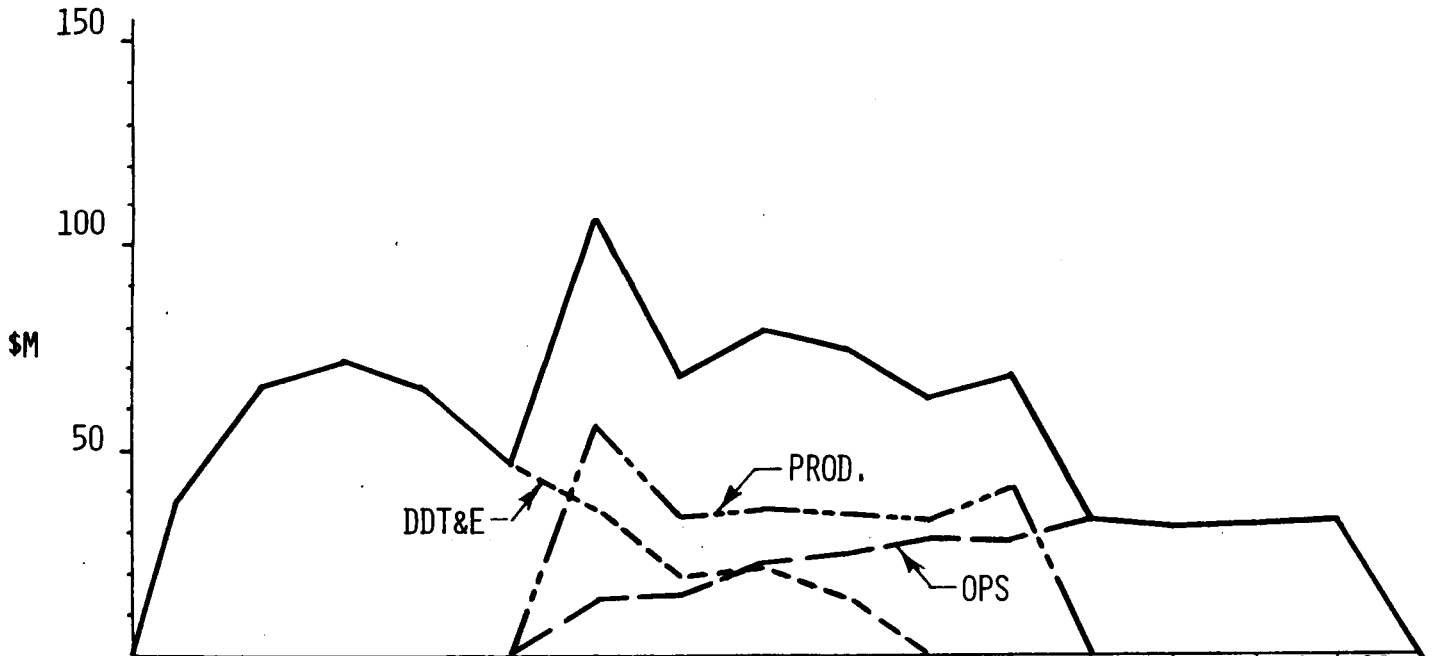

FY	76	77	78	79	80	81	82	83	84	85	86	87	88	89	90	TOTAL
DDT&E	37	65	71	64	47	36	19	21	14							374
PROD						56	34	36	34	33	40					233
OPS						14	15	22	26	29	28	34	31	32	33	264
TOTAL	37	65	71	64	47	106	68	79	74	62	68	34	31	32	33	871

DOD ACQUISITION APPROACH (AFSCP 800-3) 310A/310RE-3A

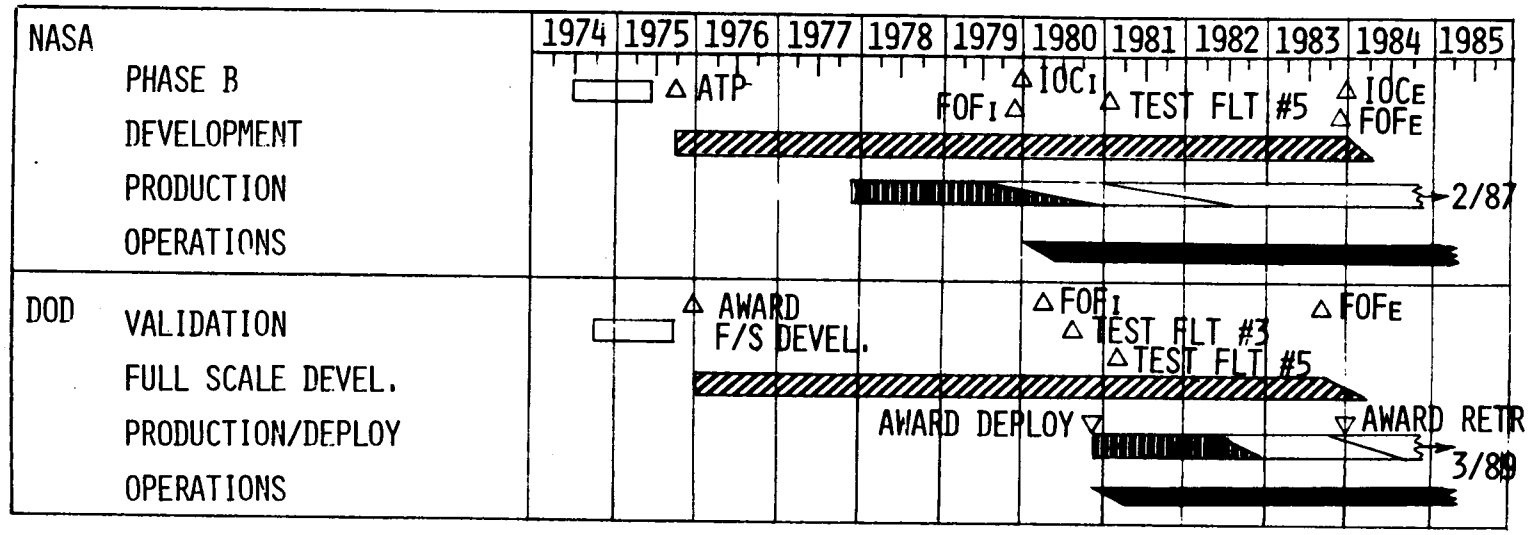

FULL SCALE DEVELOPMENT

- EXTEND TO INCLUDE 5 INITIAL & 3 EVOLVED TEST FLIGHTS
- USE FLIGHT TEST VEHICLES FOR INITIAL PAYLOAD OPERATIONS
- ADD 2ND & 3RD DEPLOY VEHICLES FOR INITIAL OPERATIONS

PRODUCTION/DEPLOYMENT

- PROVIDE 7 ADDITIONAL DEPLOY VEHICLES (4/3 - 2 LOT BUY)
- UPGRADE 2 DEPLOY VEHICLES FOR EVOLVE FLIGHT TEST
- PROVIDE 13 ADDITIONAL RETRIEVE VEHICLES (3/3/3/4-4 LOT BUY) AND UPGRADE 3 DEPLOY VEHICLES

OPERATIONS

- DELETE 7 TEST FLIGHTS - 348 TOTAL FLIGHTS
- TOTAL FLEET - 23 MAIN STAGES AND 4 RDM

THIS PAGE INTENTIONALLY LEFT BLANK

PHASE C/D STRETCH FOR DELAYED IOC - 310-3A/310RE-3A

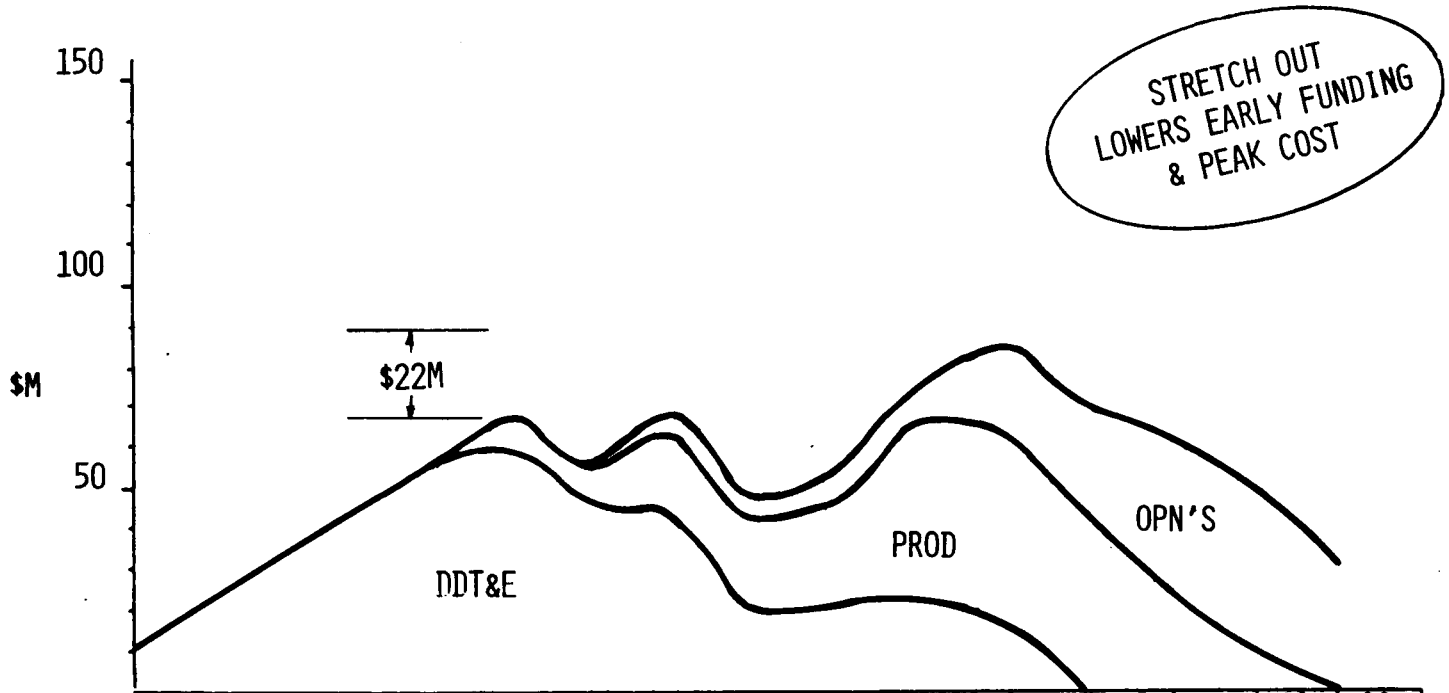

FY	76	77	78	79	80	81	82	83	84	85	86	87	88	89	90
DDT&E	13	27	40	51	54	41	41	16	19	21	14				
PROD					12	12	22	27	27	44	46	35	19	8	2
OPS							3	4	6	7	19	33	40	40	38
TOTAL	13	27	40	51	66	53	66	47	52	72	79	68	59	48	40

OVERVIEW 320A-3A ⟶ 320AE-3A

The two stage tug uses the same basic vehicle for each stage with subsystems equipments added as required. To provide volume in the orbiter cargo bay for a 25 ft long payload, the tandem mounted tugs require retractable nozzles on their main engines. An AKS is necessary to deploy some planetary payloads and, in this event, only one stage of the two stage tug is used.

The flight modes and payload capabilities shown apply to the evolved tug, 320AE-3A. For geosynchronous missions, retrieval capability is required even for deployment only missions. With the initial tug, 320A-3A, flying deployment missions only, a flight can be used where the "outbound" leg from the orbiter is flown as two stages with independent return of each stage to the orbiter. This mode does not require retrieval capability, yet can deploy a payload of 5094 lbs.

The deployment and retrieval payload capabilities of the tug are shown for candidate flight modes and missions, together with costs and the number of flights and vehicles upon which they were based.

(Ref. Vol. 5, Part II, Opt. 3A/2, Sect. 5.2)

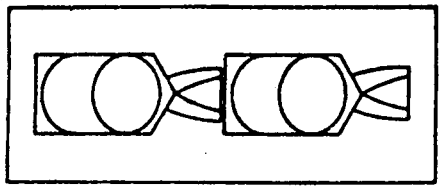

320A-3A/320AE-3A OVERVIEW

- FEATURES
  - TWO STAGE TUG WITH AKS FOR SOME PLANETARY PAYLOADS
  - PHASED INTRO OF RETRIEVAL
  - TANDEM STOWAGE IN ORBITER
  - TWO POSITION NOZZLE MAIN ENGINE - CLASS 1, I_{SP} = 338 SEC
  - FIXED WEIGHT: 320A-3A ____ 2695 LB
    : 320AE-3A ____ 2768 LB

- FLIGHT MODES

320AE-3A

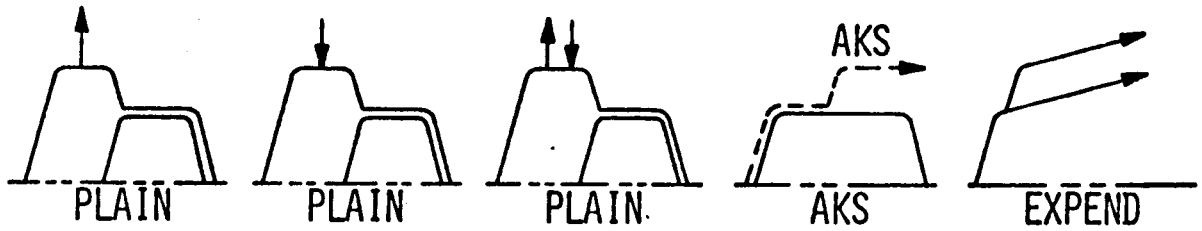

- PERFORMANCE
  - DEPLOY (LB)
  - RETRIEVE (LB)
  - ROUND TRIP (LB)

GEOSYNCH — PLANETARY

	GEOSYNCH	PLANETARY PL 19, 20, 23	PLANETARY PL 22 & 24
DEPLOY (LB)	5920		
RETRIEVE (LB)	3800		
ROUND TRIP (LB)	2430		

- PROGRAMMATICS
  - INITIAL DDT&E
  - PAF
  - TOTAL PROGRAM
  - NO. OF FLIGHTS
  - NO. OF TUGS
  - NO. OF AKS

OPTIONS 3A 320A/320AE-3A PERFORMANCE SUMMARY

Concept 320A meets the interim deployment requirement of 3500 lbs by utilizing either the 2 stg slingshot mode or one of the stages with an apogee kick stage. The high capability version, 320 AE, can meet the 2200 lb retrieval requirement with the reverse sling shot mode. This flight mode avoids the severe performance degradation due to nodal regression experienced with the trapeze flight mode. This concept has been found to have the highest performance capability of all the unaugmented TUG's evaluated.

Other performance advantages of this concept have not been fully explored. These advantages include an inherent capability to perform in a retrieval delay mode, where the upper stage acts as the retrieval delay module. The service mission performance capability of this concept should be very high. In the first Shuttle flight,the slingshot mode can be utilized to deploy in excess of 5000 lbs of repair parts. A second Shuttle flight, 30 days latter, utilizes one of the stages to retrieve the upper stage which has deorbited to a lower energy holding orbit. An estimate of the retrieval payload, composed of the service kit and parts is in excess of 5000 lbs. This same high performance capability combined with the favorable on-orbit operating times inherent in a storable TUG make 320 ideal for geosynchronous Sortie missions.

We were unable to complete our consumables analysis of the 320 reverse sling shot flight mode in this study period. The reverse sling shot performance was calculated using the sling shot consumables numbers.

(Ref. Vol. 6, Sect. 6.3)

OPTION 3A - 320A/320AE-3A PERFORMANCE SUMMARY

VEHICLE CHARACTERISTICS

W_{BO}	= 2695 LBS	I_{SP}	= 338 SEC
ADAPTOR WT	= 1611 (1-STG); 1924 (2-STG)	THRUST	= 12,000 LBS
W_P - CAPACITY	= 32,000 LBS	FPR	= 1.7% ΔV

DELTA-V (FPS)

	LOWER STG			
	OUTBOUND	ON ORBIT	INBOUND	LOSSES
• DEPLOY - SLING SHOT	4449	0	4541	43
• RETRIEVE - REVERSE SLING SHOT	7283	30	7814	64
• R'ND TRIP- REVERSE SLING SHOT	7283	30	7814	64

	UPPER STG			
	OUTBOUND	ON ORBIT	INBOUND	LOSSES
• DEPLOY - SLING SHOT	9522	0	13920	51
• RETRIEVE - REVERSE SLING SHOT	14000	30	6706	69
• R'ND TRIP- REVERSE SLING SHOT	14000	130	6706	69

CONSUMABLES (LOWER/UPPER) LBS

	APS	EPS+LOSSES	GEO PERFORMANCE (LBS)
• DEPLOY - SLING SHOT	54/208	73	5094
• RETRIEVE - REVERSE SLING SHOT	TBD	TBD	3800
• R'ND TRIP- REVERSE SLING SHOT	TBD	TBD	2430

OPTION 3A-320AE-FLIGHT SUMMARY

Concept 320A/320AE has the highest payload/flight ratio (1.70) of all the storable TUG concepts evaluated. The reverse sling shot flight mode is only required for 1/3 of the flights. All other missions can be performed with the simpler sling shot mode or as a single stage.

There are a total of 177 NASA flights of which 134 are flown from ETR and 35 from WTR. Of the 148 DOD flights, 58 are launched from ETR and 21 from WTR.

Concept 320A/320AE has the potential of capturing 27 of the 52 additional P/L's assigned to option 3A.

(Ref. Vol. 4, Sect. 4.3.3.3)

320A-3A HIGH INCLINATION PERFORMANCE

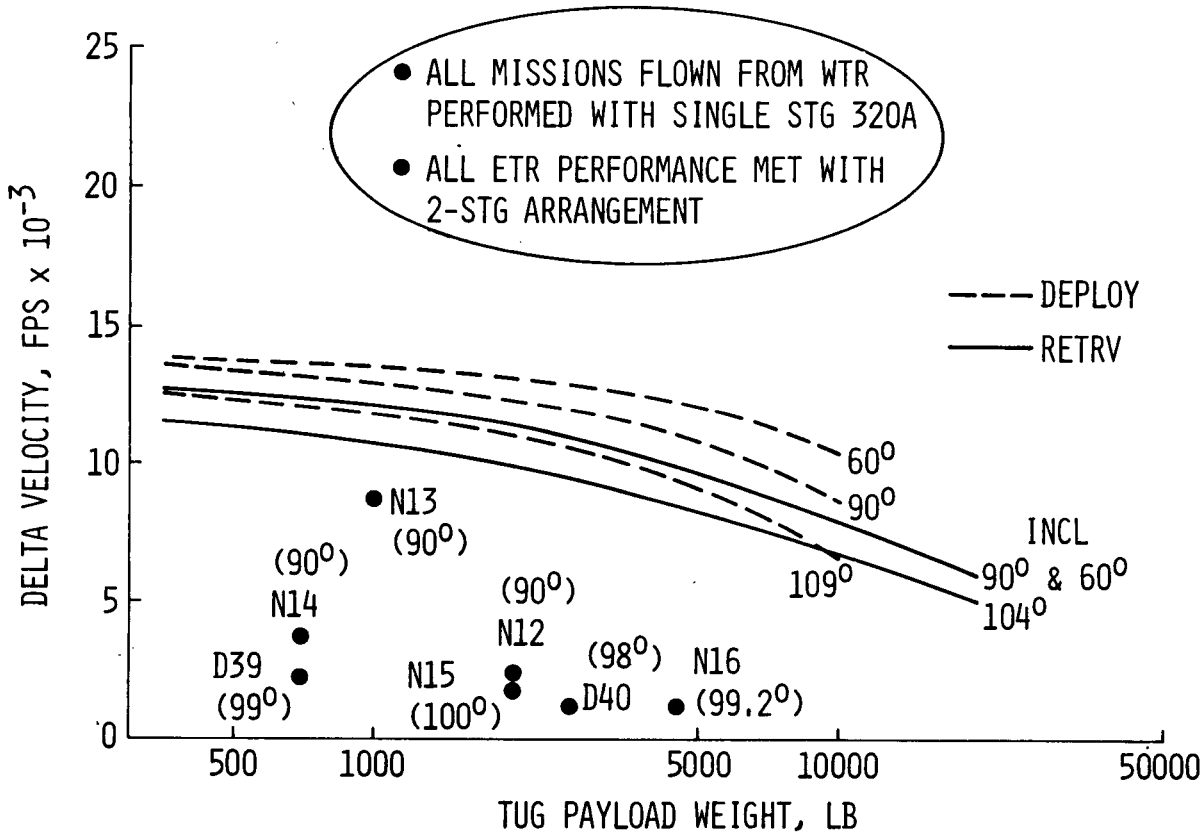

III-14

OPTION 3A-320AE-FLIGHT SUMMARY

Concept 320A/320AE has the highest payload/flight ratio (1.70) of all the storable TUG concepts evaluated. The reverse sling shot flight mode is only required for 1/3 of the flights. All other missions can be performed with the simpler sling shot mode or as a single stage.

There are a total of 177 NASA flights of which 134 are flown from ETR and 35 from WTR. Of the 148 DOD flights, 58 are launched from ETR and 21 from WTR.

Concept 320A/320AE has the potential of capturing 27 of the 52 additional P/L's assigned to option 3A.

FLIGHT SUMMARY OPTION: 3A (320A/320AE-3A)

FLIGHT MODE		CALENDAR YEAR											TOTAL
		80	81	82	83	84	85	86	87	88	89	90	
TOTAL FLIGHTS	SHUTTLE	21	16	18	29	36	31	36	37	32	33	34	325
	TUG STAGES	35	27	28	44	63	52	57	60	55	53	60	534
TUG FLIGHT DISTRIBUTION	ONE STAGE	(7)	(5)	(8)	(14)	(13)	(10)	(15)	(14)	(9)	(13)	(8)	(116)
	DEPLOY	(7)	(5)	(8)	(13)	((6)	(1)	(4)	(5)		(6)	(2)	(57)
	-SINGLE P/L	5	5	6	5	5		3	4		3	1	37
	-MULTI P/L	2		2	8	1	1	1	1		3	1	20
	RETRIEVE					(3)		(5)	(4)	(3)		(2)	(17)
	ROUND TRIP					(4)	(8)	(6)	(4)	(6)	(6)	(4)	(38)
	SORTIE				(1)		(1)		(1)		(1)		
	TWO STAGE	(14)	(11)	(10)	(15)	(25)	(21)	(21)	(23)	(23)	(20)	(26)	(209)
	DEPLOY (SLINGSHOT)	(14)	(11)	(10)	(15)	(7)	(5)	(4)	(11)	(7)	(7)	(6)	(97)
	-SINGLE P/L	6	4	7	8	5	3	4	8	2	5	5	57
	-MULTI P/L	8	7	3	7	2	2		3	5	2	1	40
	RETRIEVE (RCRS SLING)					(3)		(1)		(1)	(1)	(2)	(8)
	ROUND TRIP (RVRS SLING)					(15)	(16)	(16)	(12)	(15)	(12)	(18)	(104)
MISSION MODEL	(TOTAL)	(34)	(23)	(24)	(48)	(62)	(61)	(60)	(61)	(59)	(62)	(60)	(554)
	DEPLOY	34	23	24	47	37	36	32	40	34	42	34	383
	RETRIEVE					25	24	28	20	25	19	26	167
	SORTIE				1		1		1		1		4
FLT RATE USED IN COSTING		3	15	18	29	30	31	36	37	32	33	34	298

- 1/3 OF FLIGHTS DONE AS SINGLE STG
- 2/3 OF FLIGHTS DONE WITHOUT TUG TO TUG RENDEZVOUS

III-24

CONFIGURATION 320AE-3A

The 320AE-3A configuration employs nested propellant tanks, sharing a common pressure interface only by virtue of the nested separate domes. They are of titanium alloy, welded gore construction, with the cylindrical portion of sheet-stringer construction.

The remaining outer shell is of composite honeycomb construction, attached to the tank girths by mechanical joints.

The engine thrust structure is a conical section of aluminum stiffened sheet construction also. All main support and intermediate frames are of aluminum alloy construction.

An aluminum meteorite shield, supported by fiberglass standoffs on 6" centers, protects the propellant tank over its cylindrical portion.

Twelve lock latches are located at both ends of the Tug for final securing of payloads to Tug and Tug to support adapter. Twelve conical index fittings at both forward and aft interfaces serve to index and align the mating surfaces and transmit shear and compression loads across the interface.

All subsystem equipments are located in side mounted equipment modules for easy access and serviceability.

Double goldized mylar blankets with nylon net spacers in conjunction with suitable surface coatings on all exterior surfaces provide the required thermal balance for the spacecraft. In addition aluminum heat pipe radiators mounted on the surface of the equipment modules maintain the thermal balance of the equipment modules.

Four equally spaced probe/drogue type probes are installed at the forward interface for executing retrieval operations.

A complete inboard profile and structural arrangement for this configuration may be found in Volume 5.

(Ref. Vol. 5, Part II, Opt. 3A/2, Sect. 5.2)

INBOARD PROFILE - 320AE-3A: PLAN VIEW

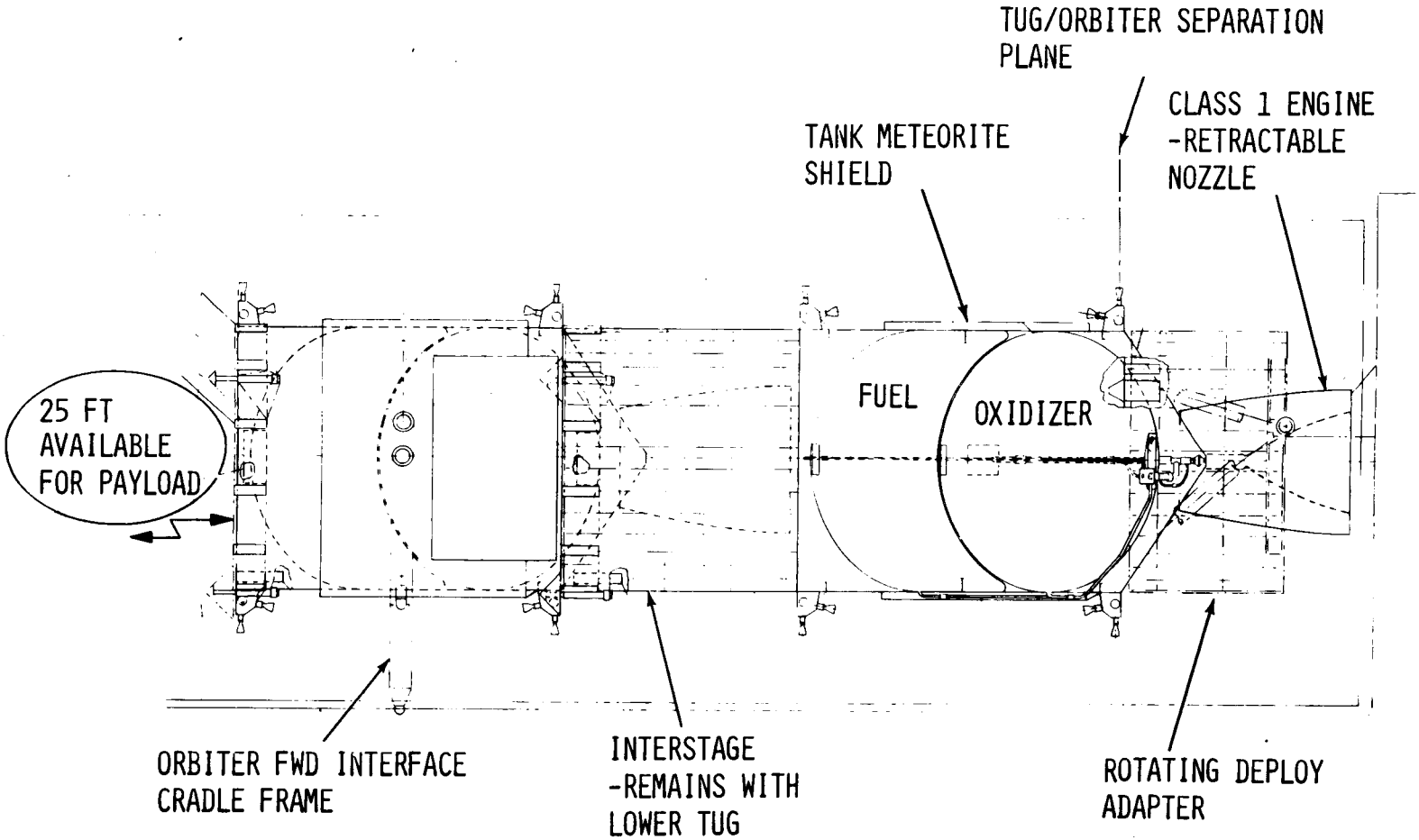

III-95

THIS PAGE INTENTIONALLY LEFT BLANK

INBOARD PROFILE - 320AE-3A: PLAN VIEW

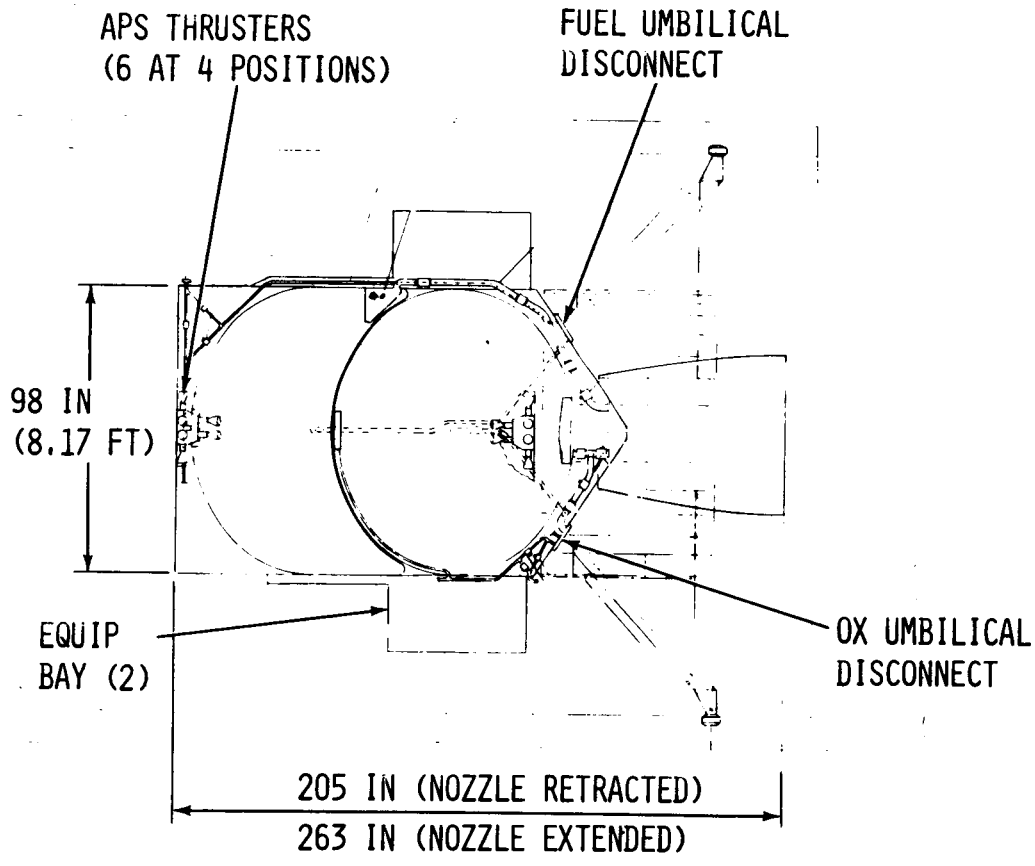

III-94

CONFIGURATION DESIGN DATA & WEIGHT SUMMARY TUG 320A-3A

The features summarized on this chart and the similar one on the following page provide some insight into the subsystem details and reflect the option for which the tug is designed. Thus:

- The tank capacity of 32000 lb in each tug is the largest that can be accomodated without exceeding the combined tug length limitations.
- The high performance technology of the subsystems is reflected in the use of titanium tanks, composite honeycomb structure. the Class I engine, and advanced technology fuel cells.
- The early deploy only missions are satisfied by the low weight deploy only mechanisms.

The weights - summarized by subsystem are presented to WBS level 6 in Vol. 5 together with C.G. and inertia data. These weights are further itemized in Vol. 5 to WBS level 7 or lower; all subsystem components being listed on the Data Forms "B" which are included in each subsystem description for each Tug.

At the bottom of the chart are weights showing a typical build up to the 65000 lb. Shuttle payload capacity. The example given is for a plain Tug deploy mission. Other missions have different figures for consumables, main prop ellant loading and payload. These are given in detail both in Vol. 4 and Vol. 6.

(Ref. Vol. 5, Part II, Opt. 3A/2, Sect. 5.2)

CONFIGURATION DESIGN DATA AND WEIGHT SUMMARY
TWO STAGE STORABLE TUG 320A-3A

ITEM	FEATURES	WEIGHT - LB LOWER	WEIGHT - LB UPPER
	STAGES:		
• STRUCTURE		946	946
TANKS	NESTED DOME-TI GORES CAP. = 32000 LB		
FRAMES	ALUMINUM		
OUTER SHELL	COMPOSITE HONEYCOMB		
DOCKING	DEPLOYMENT MECHANISMS		
• PROPULSION		698	698
MAIN ENGINE	CLASS I-12K THRUST-Isp = 338 SEC-EXT NOZZLE		
PRESSURIZATION	AMBIENT HELIUM - PFR TANKS-CAP. = 8.0 LB		
ACPS	HYDRAZINE - 16 THRUSTERS x 25 LB CAP. = 297 LB		
• THERMAL CONTROL		61	61
	MYLAR TANK INSUL. COATINGS, RADIATOR		
• AVIONICS		612	612
RENDEZVOUS & DOCK	AUTONOMY LEVEL IIIA-DEPLOYMENT CAPABILITY		
DATA MANAGEMENT	COMPUTER-48K WORDS		
GUIDANCE AND NAV	2 x CAROUSEL IMU's-1 x STAR TRACKERS		
GUIDANCE UPDATE	GROUND UPDATE		
POWER	ADV F/C-CRYO TANKAGE CAP. = 71 LB		
	DRY WEIGHT	2317	2317
	DRY WEIGHT & CONTINGENCY	2549	2549
	NON USABLE PROPELLANT	146	146
	BURNOUT WEIGHT	2695	2695
DEPLOY MISSION	NON IMPULSE EXPENDABLES	48	73
	ATTITUDE CONTROL PROPELLANT	54	208
	MAIN PROPELLANT	20209	32000
	PAYLOAD	5094	
	TUG AT FIRST IGNITION	63076	
	SHUTTLE INTERFACE ITEMS	1924	
	TOTAL-SHUTTLE INSTALLED	65000	

III-51

CONFIGURATION DESIGN DATA AND WEIGHT SUMMARY - TUG 320AE-3A

The differences between this chart and that on the previous page provide insight into the phased development program.

- The introduction of retrieval docking mechanism Laser Radar and T.V., and the increase in the number of APS thrusters from 16 to 24 to provide increased translational velocity at the braking gates during rendezvous
- As part of the phased development we have changed from two Carousel IMU's in the initial version to two Micron units in the developed Tug. This yields a big weight reduction and a reliability improvement for negligable net program cost.

(Ref. Vol. 5, Part II, Opt. 3A/2, Sect. 5.2)

CONFIGURATION DESIGN DATA AND WEIGHT SUMMARY
TWO STAGE STORABLE TUG 320AE-3A

ITEM	FEATURES	WEIGHT LB LOWER	WEIGHT LB UPPER
• STRUCTURE		988	988
TANKS	NESTED DOME-TI GORES CAP. = 32000 LB		
FRAMES	ALUMINUM		
OUTER SHELL	COMPOSITE HONEYCOMB		
DOCKING	DEPLOYMENT AND RETRIEVAL MECHANISMS		
• PROPULSION		718	718
MAIN ENGINE	CLASS I-12K THRUST-Isp=338 SECS-EXT NOZZLE		
PRESSURIZATION	AMBIENT HELIUM - PFR TANKS-CAP. = 8.0 LB		
ACPS	HYDRAZINE - 24 THRUSTERS x 25 LB CAP. = 297 LB		
• THERMAL CONTROL		62	62
	MYLAR TANK INSUL. COATINGS, RADIATOR		
• AVIONICS		616	616
RENDEZVOUS & DOCK	AUTONOMY LEVEL IIIA-RETRIEVAL-LASER RADAR + TV		
DATA MANAGEMENT	COMPUTER - 48K WORDS - 2 REQ'D		
GUIDANCE AND NAV	2 x MICRON IMU - 1 x STAR TRACKER		
GUIDANCE UPDATE	GROUND UPDATE		
POWER	ADV F/C-CYRO TANKS CAP. = 71 LB		
	DRY WEIGHT	2384	2384
	DRY WEIGHT & CONTINGENCY	2622	2622
	NON USABLE PROPELLANT	146	146
	BURNOUT WEIGHT	2768	2768
DEPLOY MISSION	NON IMPULSE EXPENDABLES	48	73
DEPLOY MISSION	ATTITUDE CONTROL PROPELLANT	54	208
DEPLOY MISSION	MAIN PROPELLANT	20063	32000
DEPLOY MISSION	PAYLOAD	5094	
DEPLOY MISSION	TUG AT FIRST IGNITION	63076	
DEPLOY MISSION	SHUTTLE INTERFACE ITEMS	1924	
DEPLOY MISSION	TOTAL-SHUTTLE INSTALLED	65000	

III-50

MAIN PROPULSION SUBSYSTEM (MPS) - 320A-3A/320AE-3A

The 320A-3A/320AE-3A engine is required to start up to 7 times per mission, and must remain on-orbit for up to 41 hours. The planetary missions require that the Tug be turned around and retrofired as soon as possible after the planetary insertion burn. This leads to the minimum restart requirement of 10 minutes.

The capability to drain and depressurize the vehicle in both the horizontal and vertical positions is provided. An in-flight dump system was not included; however, a sensitivity study has been conducted which indicates that it can save vehicle weight and cost due to the reduction in maximum landing weight, and it probably will be baselined.

This vehicle uses nested dome propellant tanks and a pair of prestressed filament reinforced (PFR) helium tanks. In order to meet the 0.97 mission reliability, redundant helium isolation valves and regulators are included despite the reduced on orbit time; similar to the 110A-1. This is because the twin vehicles must each have a 0.985 reliability.

The engine is the Class I producing a thrust of 12,000 lbs. and an Isp of 338 seconds at a 1.9 mixture ratio. The requirement to minimize engine length on the two stage vehicle led to the utilization of a two position nozzle. Although the basic engine design is based on current technology, the two position nozzle increases the otherwise moderate risk in meeting performance goals and projected schedules and cost.

The PFR tank is the only subsystem component, other than the engine, representing any significant development risk. Failure to develop the tank would mean a 39 lb. weight increase should a titanium tank be used as a fall back position.

Fourteen of the sixteen (88%) types of subsystem components are either existing or modifications of existing designs, further reducing subsystem development risk.

320A-3A/320AE-3A MAIN PROPULSION SUBSYSTEM (MPS)

DRIVER REQUIREMENTS

- 11×10^6 LB-SEC TOTAL IMPULSE
- 7 BURNS/MISSIONS
- 41 HR ON-ORBIT TIME
- 10 MIN MIN RESTART TIME
- 10 HR MAX RESTART TIME
- VERTICAL & HORIZONTAL DRAIN
- MIN 16 PSIA ENG INLET PRESS.
- OFF-LINE SERVICING & CHECKOUT

MPS DEFINITION

- CLASS I ENG (2-POSITION NOZZLE)
- NESTED DOME TANKS
- PFR He TANKS (3500 PSIA)
- 2 IN. (FUEL), 3 1/4 IN. (OXID) DIA FEEDLINES
- DUAL He ISOL VALVES & REG ASSY
- 19 IN. DIA He BOTTLE

MPS PERFORMANCE

- 12000 LB THRUST
- 338.0 SEC. ISP
- 24 PSIA (MAX) MMH TANK PRESS.
- 36 PSIA (MAX) N_2O_4 TANK PRESS.
- 8.0 LB He
- 32,000 LB PROP.
- 1.9 MIXTURE RATIO

DEVELOPMENT RISK & TECHNOLOGY

- PFR TANK

- NEW ENG BASED UPON CURRENT TECHNOLOGY, MODERATE RISK
- 88% OF COMPONENTS EXISTING OR MOD EXISTING DESIGNS
- 2-POSITION NOZZLE INCR ENG DEVELOPMENT RKSKS

III-85

MAIN PROPULSION SUBSYSTEM (MPS) DESCRIPTION 320A-3A/320AE-3A VEHICLE

This vehicle utilizes the Class I engine to meet performance goals and reduce operational costs through multiple deployment. The engine has a two position nozzle to reduced stowed length.

The MPS is based upon a design which is almost completely state-of-the-art. The only new design is the helium tanks which are of light weight prestressed filament reinforced (PFR) construction.

The remainder of the pressurization system is conventional, with pressure control provided by modified OMS regulators and relief valves. The requirement to meet a 0.97 mission reliability dictates the installation of redundant regulators and helium initiating valves. Quad check valves downstream of each regulator prevent the backflow of propellant vapors into the regulators and upstream portions of the helium system. Solenoid valves straddling each relief valve/burst disc assembly allows selective tank depressurization.

Zero g starts are provided for by screen type propellant retention devices located over each tank outlet. These provide sufficient propellant to maintain engine operation until the remainder of the propellant settles. A prevalve is installed upstream of each engine inlet to isolate the propellants from the engine during ground and launch operations and allow engine drain between burns.

Ground drain, in both the horizontal and vertical positions, is provided. The horizontal drain lines lead from the tank equators to the umbilical disconnect panels. Two umbilical disconnect panels are provided on opposite sides of each vehicle. All lines leading to a panel have redundant shutoff capability to meet the MPS fail safe requirement. Access to the forward stage panels is provided by apertures in the interstage structure.

(Ref. Vol. 5, Part II, Opt. 3A/2, Sect. 5.2)

MPS SCHEMATIC - 320A-3A, 320AE-3A

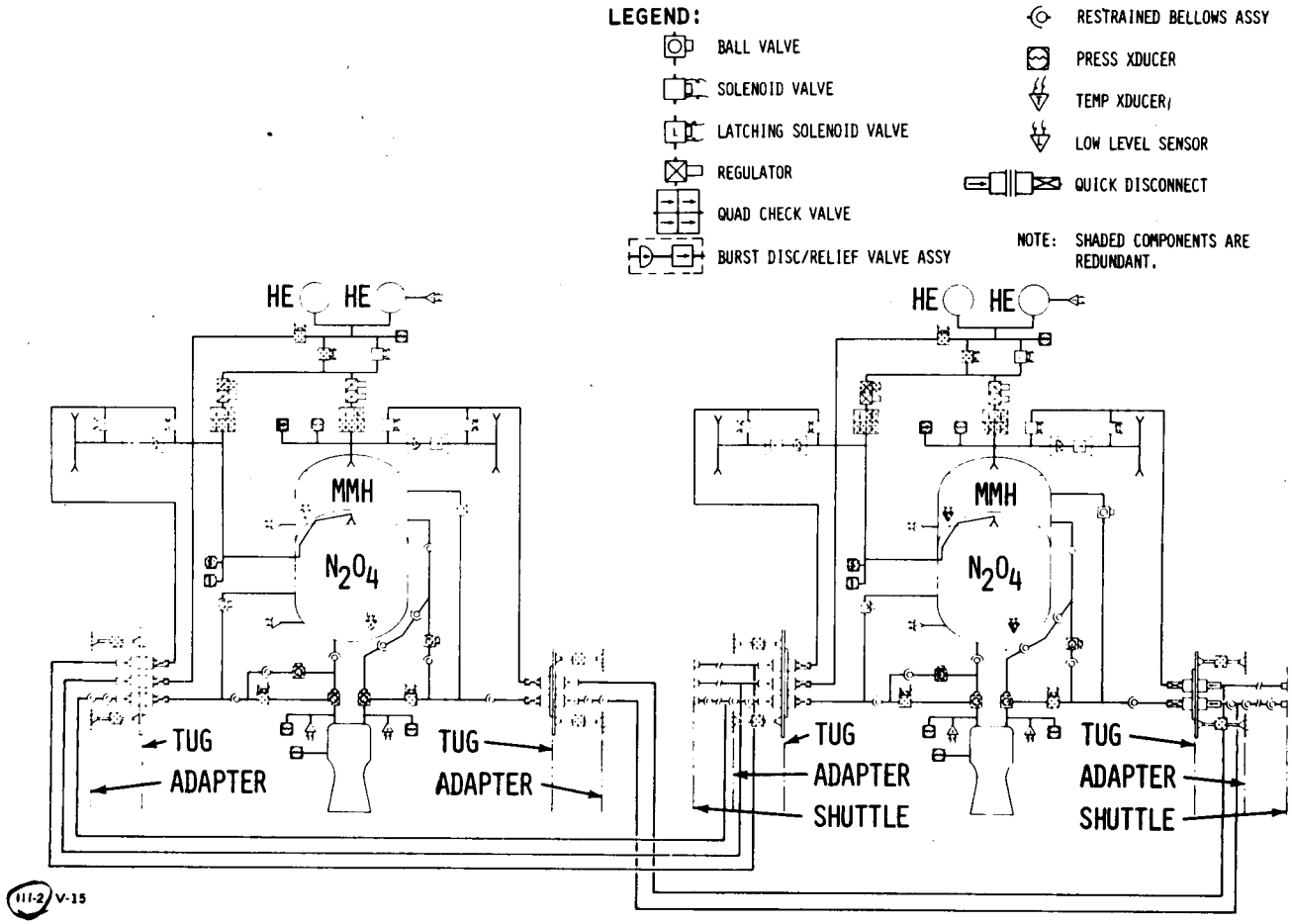

AUXILIARY PROPULSION SYSTEM - 320A/320AE-3A

The fail operational/fail safe requirement demands that the mission be completed after any single failure and shuttle/crew safety be guaranteed after two failures.

Sixteen thrusters is the minimum number required to provide attitude control after two thruster failures. Thrust level is driven by the requirement to provide relatively high acceleration in one axis for mid-course corrections on Tugs which deploy only and by the requirement for high accelerations in three axes to achieve successful rendezvous on Tugs which retrieve payloads. The retrieval case requires an increase to twenty four thrusters. The "minimum thrust" requirement is derived from minimum tolerable accelerations which achieve mission completion and is used to establish thruster requirements for the one engine failed case.

Tanks are sized for the guaranteed usable propellant plus 10% contingency. Contingencies include quantity gaging error, trapped propellant and propellant for cross-coupling losses in the event of a thruster failure.

The only component in the system which is not classified as existing or modified existing is the bladder. However the advanced state of elastomeric bladder technology renders it a non-risk item.

320A-3A/320AE-3A AUXILIARY PROPULSION SYSTEM (APS)

DRIVER REQUIREMENTS

- USABLE PROPELLANT = 295/398 LB
- MIN THRUST PER AXIS = 50*/±50 LB
- NOMINAL THRUST PER AXIS = 100*/±100 LB
- FAIL-OPERATIONAL/FAIL SAFE DESIGN
- VENT SYS TO 20 PSI AT TUG RETRIEVAL
- VERIFY PROPELLENT QUANT PRE-DOCKING
- NO VENTING IN PAYLOAD BAY

* Y AXIS ONLY

APS DEFINITION

- MONOPROPELLANT HYDRAZINE
- 16/24 THRUSTERS @ 25 LB THRUST EACH
- 3 PROPELLANT TANKS, LM RCS DESIGN 12.5 IN. D x 39 IN. LONG
- ELASTOMERIC BLADDER PROPELLANT ACQ
- 2 TITANIUM HELIUM TANKS, 12.3" D
- 5/8" LIQUID LINES, 1/2" GAS LINES

APS PERFORMANCE

- I_{SP} = 232 STEADY STATE, 170 MIN PULSING
- PRESSURE BUDGET
  - HELIUM TANK = 3425 PSI MAX
  - PROPELLANT TANK = 340 PSI
  - THRUSTER INLET = 325 PSI MIN
  - CHAMBER PRESS. = 140 PSI
- 10% CONTINGENT PROPELLANT REQ

DEVELOPMENT RISK & TECHNOLOGY

- NO TECHNOLOGY ISSUES
- APPROX 90% EXISTING OR MOD EXISTING COMPONENTS

III-35

APS SCHEMATIC - 310-3A

The Auxiliary Propulsion System is a helium pressurized, monopropellant hydrazine design incorporating state-of-the-art hardware. All components are redundant to the extent that mission completion is possible after any single failure and shuttle/crew safety is guaranteed after any two failures (fail operational/fail safe).

Helium is stored in off-the-shelf, spherical titanium vessels. The helium latching solenoid valve and regulator package, modified LM components, provide pressure regulation to approximately 350 psi. A downstream quad check valve, another LM type design, protects the regulators/solenoid valves against contamination by propellant vapors which may diffuse through the propellant tank bladders. The propellant tanks are modified LM Reaction Control System tanks. They are equipped with fully reusable elastomeric (EPT-10) bladders for propellant acquisition.

The solenoid valve upstream of the relief and vent valve package protects against a failure of the relief valve to reseat or of both vent valves to close after vent, conditions which create a potential tank implosion situation during reentry. Series redundant thruster isolation valves, normally open during Tug operation, are closed in the event of an open thruster failure. Each set of valves isolate one of four groups of thrusters. Four manifolds is the minimum number possible which retains the fail op/fail safe criteria. That is, two groups of thrusters can be isolated and vehicle attitude controlled in all axes.

The thrusters are the 25 lb. thrust, 232 sec. Isp Hamilton Standard model REA 19-3, which was developed for use as the shuttle vernier engine when it incorporated a monopropellant reaction control system. Each thruster is equipped with a catalyst heater to maintain it at 150°F for life considerations.

(Ref. Vol. 5, Part I, Opt. 3A/1, Sect. 5.2)

APS SCHEMATIC - 320A-3A

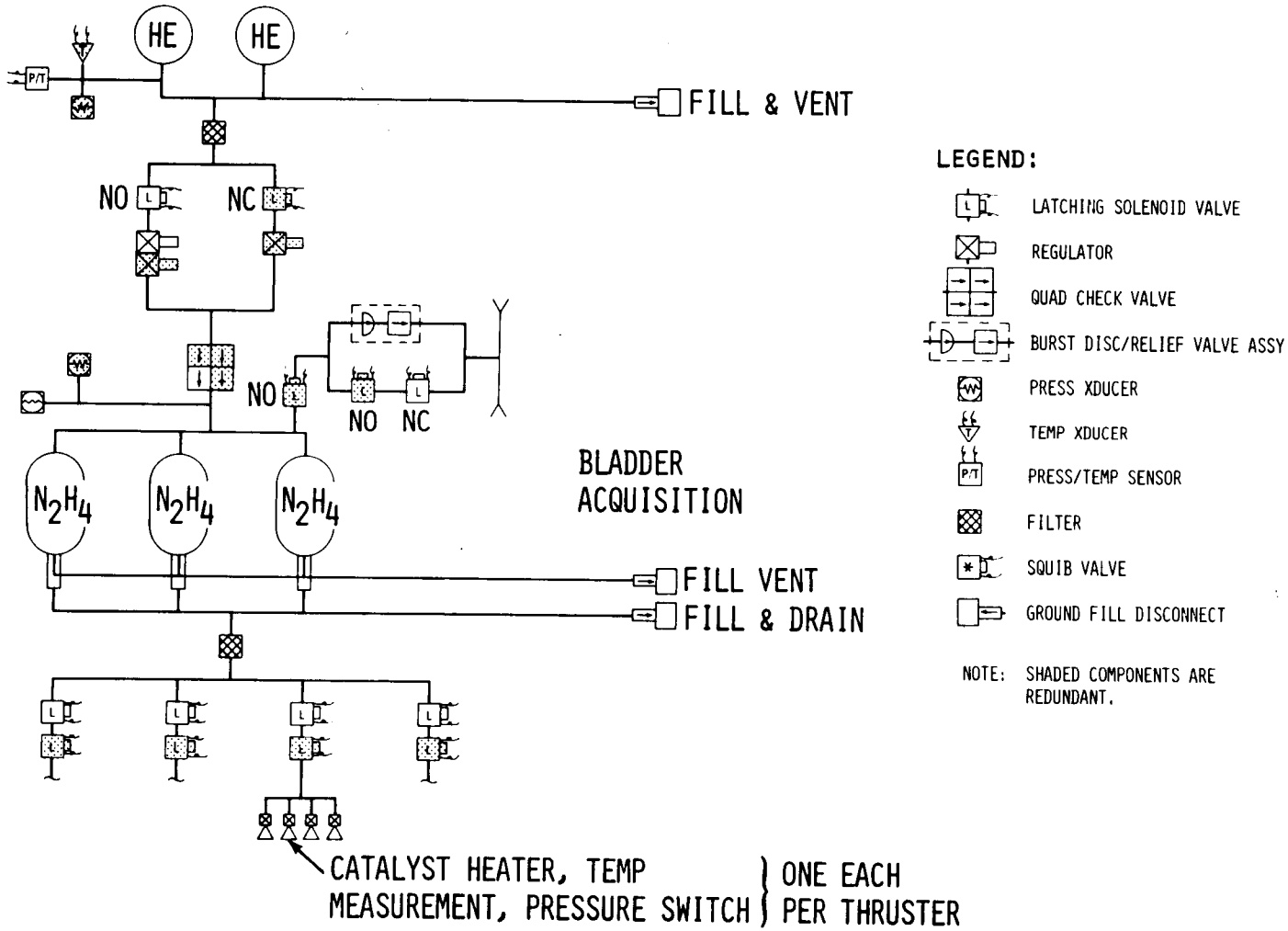

III-5, V-17

APS SCHEMATIC - 320AE-3A

The description utilized for the initial configuration applies. Additions incorporated in the evolved configuration consist of one helium pressurization tank, one monopropellant tank, and two additional thrusters per APS cluster.

(Ref. Vol. 5, Part II, Opt. 3A/2, Sect. 5.2)

APS SCHEMATIC - 320AE-3A

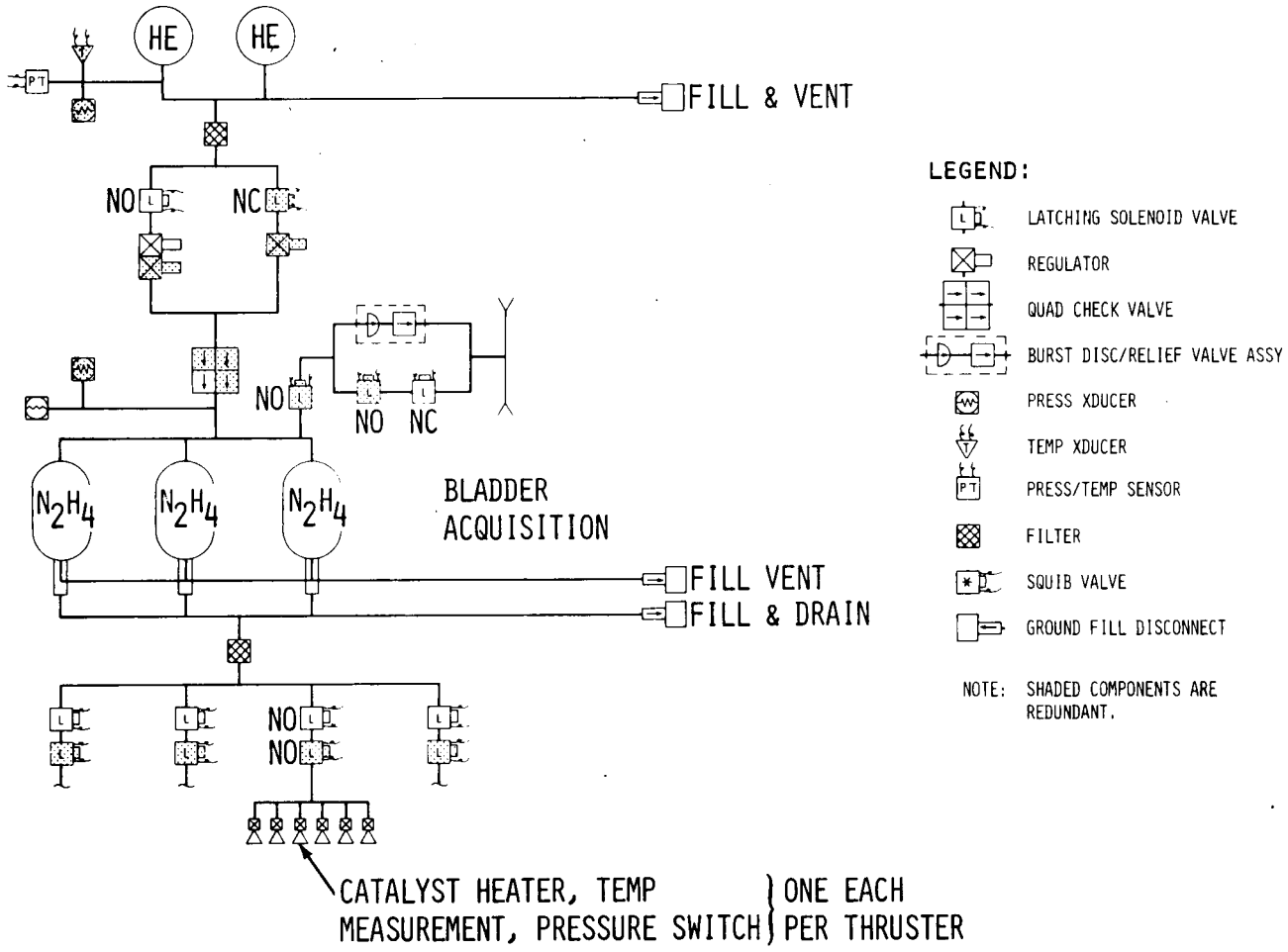

III-4, V-5

ASTRIONICS SUBSYSTEMS - 320AE-3A

The 320AE-3A is a two stage full capability Tug that uses apogee kick stages to enhance its capabilities. It evolves from the 320A-3A through the addition of a laser rendezvous radar and TV providing the sensing capability necessary for the rendezvous and docking functions. The equipment added to the 320A-3A Tug for crew safety has been retained in the evolved version. The cryogenic tanks are filled when flying the round-trip missions. The 2 Carousel IMU's on the 320A-3A Tug are replaced by 2 advanced IMU's (strapped-down) on the 320AE-3A Tug.

Communications evolves to a system that can now communicate with the payload using the Channel Selectable Station.

No new technology is required for the DMS and Communications Subsystem as in the early configuration. However, new technology is required for the advanced IMU and the laser radar. The advanced fuel cell will be developed for the earlier 320A-3A configuration.

(Ref. Vol. 5, Part Ii, Option 3A, Section 5.2)

320A-3A ASTRIONICS SUBSYSTEM - AUTONOMY LEVEL IIIA

GUIDANCE, NAVIGATION & CONTROL

- CAROUSEL IMU
- STAR TRACKER
- 95% MOD EXISTING EQUIP.
- NO NEW TECHNOLOGY

COMMUNICATIONS

- TUG/ORBITER OR TUG/GND COMM
- DEDICATED FREQ STA (DFS)
- S-BAND SYS - INTERNALLY REDUNDANT
- STDN/SGLS/TDRSS COMPATIBLE
- NEW EQUIP. REQ'D
- NO NEW TECHNOLOGY REQ

DATA MANAGEMENT

- 48K WORD CDC 469 COMPUTER DUAL-REDUNDANT
- ODETICS DDS 3000 TAPE RECORDER
- FLEXIBLE SIGNAL INTERFACE
- 90% MOD EQUIP.
- NO NEW TECHNOLOGY

ELECTRICAL POWER

- ADV FUEL CELL ASSEMBLY (2.5KW 28 VDC)
- CRYOGENICALLY STORED REACTANTS
  - 1 O_2 TANK & 1 H_2 TANK
  - ENERGY CAPABILITY = 78 KW-HR
- 10 AMP-HR EMERGENCY BAT. FOR SAFETY
- NEW TECHNOLOGY
  - ADVANCED FUEL CELL
- 40% MOD EXISTING EQUIP.

ADV FUEL CELL REQ NEW TECHNOLOGY

III-27

ASTRIONICS SUBSYSTEMS - 320AE-3A

The 320AE-3A is a two stage full capability Tug that uses apogee kick stages to enhance its capabilities. It evolves from the 320A-3A through the addition of a laser rendezvous radar and TV providing the sensing capability necessary for the rendezvous and docking functions. The equipment added to the 320A-3A Tug for crew safety has been retained in the evolved version. The cryogenic tanks are filled when flying the round-trip missions. The 2 Carousel IMU's on the 320A-3A Tug are replaced by 2 advanced IMU's (strapped-down) on the 320AE-3A Tug.

Communications evolves to a system that can now communicate with the payload using the Channel Selectable Station.

No new technology is required for the DMS and Communications Subsystem as in the early configuration. However, new technology is required for the advanced IMU and the laser radar. The advanced fuel cell will be developed for the earlier 320A-3A configuration.

320AE-3A ASTRIONICS SUBSYSTEMS AUTONOMY LEVEL IIIA

GUIDANCE, NAVIGATION & CONTROL

- ■ ADV IMU
- ● STAR TRACKER
- ■ LASER RENDEZVOUS RADAR
- ● NEW EQUIP.
- ● NEW TECHNOLOGY
  - IMU
  - LASER RADAR

COMMUNICATIONS

- ■ TUG/PAYLOAD, TUG/GND, TUG/ORBITER, TV COMM
- ● DEDICATED FREQ STA (DFS)
- ■ CHANNEL SELECTABLE STA (CSS)
- ● S-BAND SYS - INTERNALLY REDUNDANT
- ● STDN/SGLS/TDRSS COMPATIBLE
- ● NEW EQUIP. REQ

NO NEW TECHNOLOGY REQ

DATA MANAGEMENT

- ● 48K WORD CDC 469 COMPUTER DUAL-REDUNDANT
- ● ODETICS DDS 3000 TAPE RECORDER
- ● FLEXIBLE SIGNAL INTERFACE
- ● 90% MOD EQUIP.
- ● NO NEW TECHNOLOGY

NO CHANGE IN AUTONOMY LEVEL

ELECTRICAL POWER

- ● ADV FUEL CELL ASSY
  - 2.5KW AT 28VDC
- ● CRYOGENICALLY STORED REACTANTS
  - 1 O_2 TANK & 1 H_2 TANK
  - ENERGY CAPABILITY = 78KW-HR
- ● 10AMP-HR EMERGENCY BAT. FOR SAFETY
- ● NEW TECHNOLOGY
- ● - ADV FUEL CELL

40% MOD EXISTING EQUIP.

III-28

■ EVOLUTIONARY CHANGE

ASTRIONICS SCHEMATIC - 320A-3A

The Data Management Subsystem (DMS) with its Flexible Signal Interface (FSI) is the pivot around which all other astrionic systems revolve. The remaining astrionic systems feed data or commands to the DMS or take commands and information from it. The Communication Subsystem receives and transmits over 2 antennas located 180° apart on the vehicle for total coverage. The incoming information and commands move through the diplexers, redundant receivers and baseband processors to the DOD secure communication units. The secure comm. is used for DOD payloads only. From the output of the Comm. Subsystem the information flows to the Flexible Signal Interface Controller (FSI) and then into the computer. Telemetry signals flow from the instrumentation sensors through Data Acquisition Control Units (DACU) to the FSI and then out through the Comm. system. The guidance, navigation and control information that is measured by the IMU and Star Tracker flows through a DACU to the FSI and then to the computer for processing with uplinked data. The control outputs from the computer go to the MPS, EPS and APS Subsystems as well as to the ME/TVC and APS electronic units. These are the outputs that activate and control the electrical power systems and thrusting systems of the vehicle.

Status information flows from auxiliary stages to the computer and commands flow from the computer to the auxiliary stages over hardwires.

The information to and from the orbiter is also sent over hardwires when the Tug is in the orbiter payload bay.

(Ref. Vol. 5, Part II, Opt. 3A/2, Sect. 5.2)

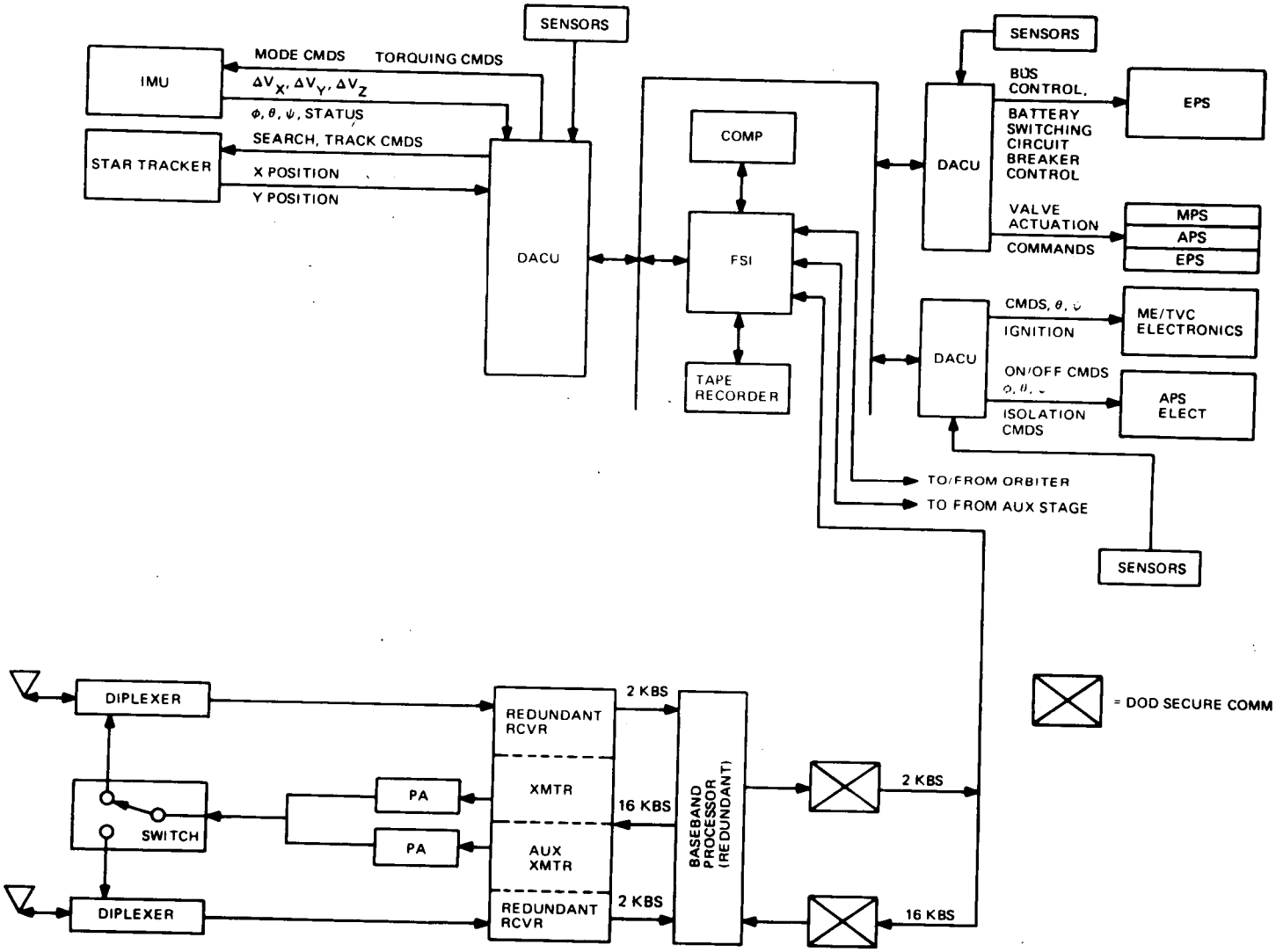

Astrionics Schematic for Configuration 320A-3A Level IIIA Autonomy

ASTRIONICS SCHEMATIC - 320AE-3A

The Data Management Subsystem (DMS) with its Flexible Signal Interface (FSI) is the pivot around which all other astrionic systems revolve. The remaining astrionic systems feed data or commands to the DMS or take commands and information from it.

The Communication Subsystem in this configuration consists of a Dedicated Frequency Station (for communication between Tug and Orbiter or between Tug and ground)and a Channel Selectable Station (for communication between Tug and payloads or Tug and Orbiter). The incoming information and commands move through the diplexers, redundant receivers and baseband processors to the DOD secure communication units. The secure comm. is used for DOD payloads only. From the output of the Comm. Subsystem the information flows to the Flexible Signal Interface Controller (FSI) and then into the computer. Telemetry signals flow from the instrumentation sensors through Data Acquisition Control Units (DACU) to the FSI and then out through the Comm. system. The guidance, navigation and control information that is measured by the IMU, Star Tracker and Laser Radar flows through a DACU to the FSI and then to the computer for processing with uplinked data. The control outputs from the computer go to the MPS, EPS and APS Subsystems as well as to the ME/TVC and APS electronic units. These are the outputs that activate and control the electrical power systems and thrusting systems of the vehicle.

Status information flows from auxiliary stages to the computer and commands flow from the computer to the auxiliary stages over hardwires.

The information to and from the orbiter is also sent over hardwires when the Tug is in the orbiter payload bay.

(Ref. Vol. 5, Part II, Opt. 3A/2, Sect. 5.2)

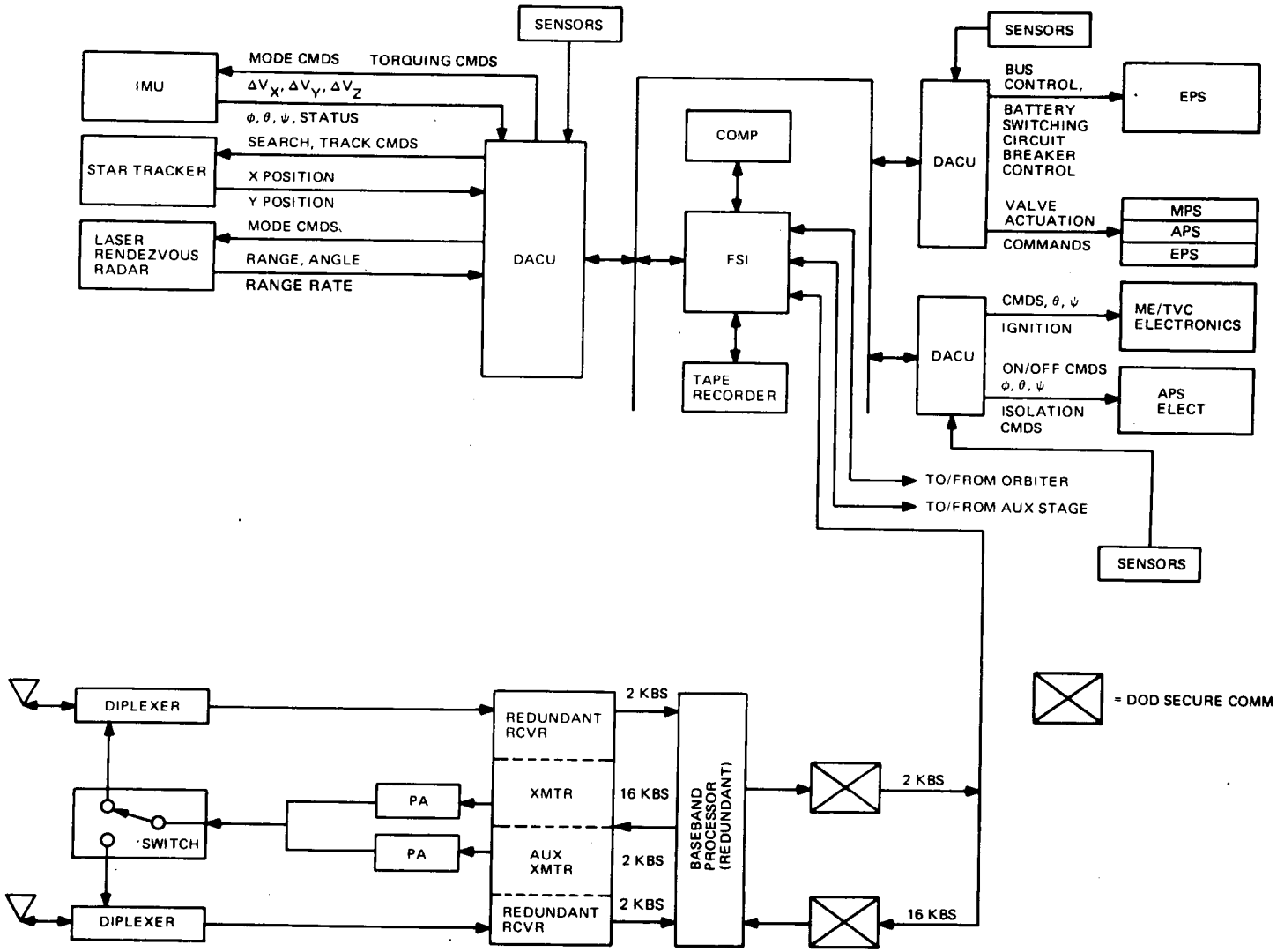

V-1C

Astrionics Schematic For Configuration 320AE-3A Level IIIA Autonomy

ELECTRICAL POWER SUBSYSTEM SCHEMATIC 320A-3A/320AE-3A

The prime power source is an advanced fuel cell providing up to 2.5 KW at 28 VDC. The hydrogen and oxygen fuel cell reactants are stored in single cryogenic dewars above the supercritical point and supply high pressure gases to the reactant pressure control valves. The fuel cell nominally operates at 60 PSIA and 180°F. The fuel cell oxygen and hydrogen purge plus product water vents are routed overboard. The coolant loop pump is provided within the fuel cell assembly. The fuel cell feeds both equipment bay buses and is backed up by a 10 amp-hr secondary silver zinc battery. This emergency battery powers essential equipment during Orbiter/Tug deployment and retrieval operations and provides for Orbiter crew safety.

The distribution section is a combination two-wire and structure ground (return bus) system. Solid state power controllers are used for applications requiring 5 amps or less and electromechanical remote control circuit breakers are used for 20 amps or larger applications. The orbiter supplies power for critical Tug equipments (e.g. I M U) from earth launch through Tug deployment. GSE power is required for ground checkout. The Tug supplies payload power when separated from the Orbiter.

(Ref. Vol. 5, Part I, Opt. 3A/1, Sect. 5.2)

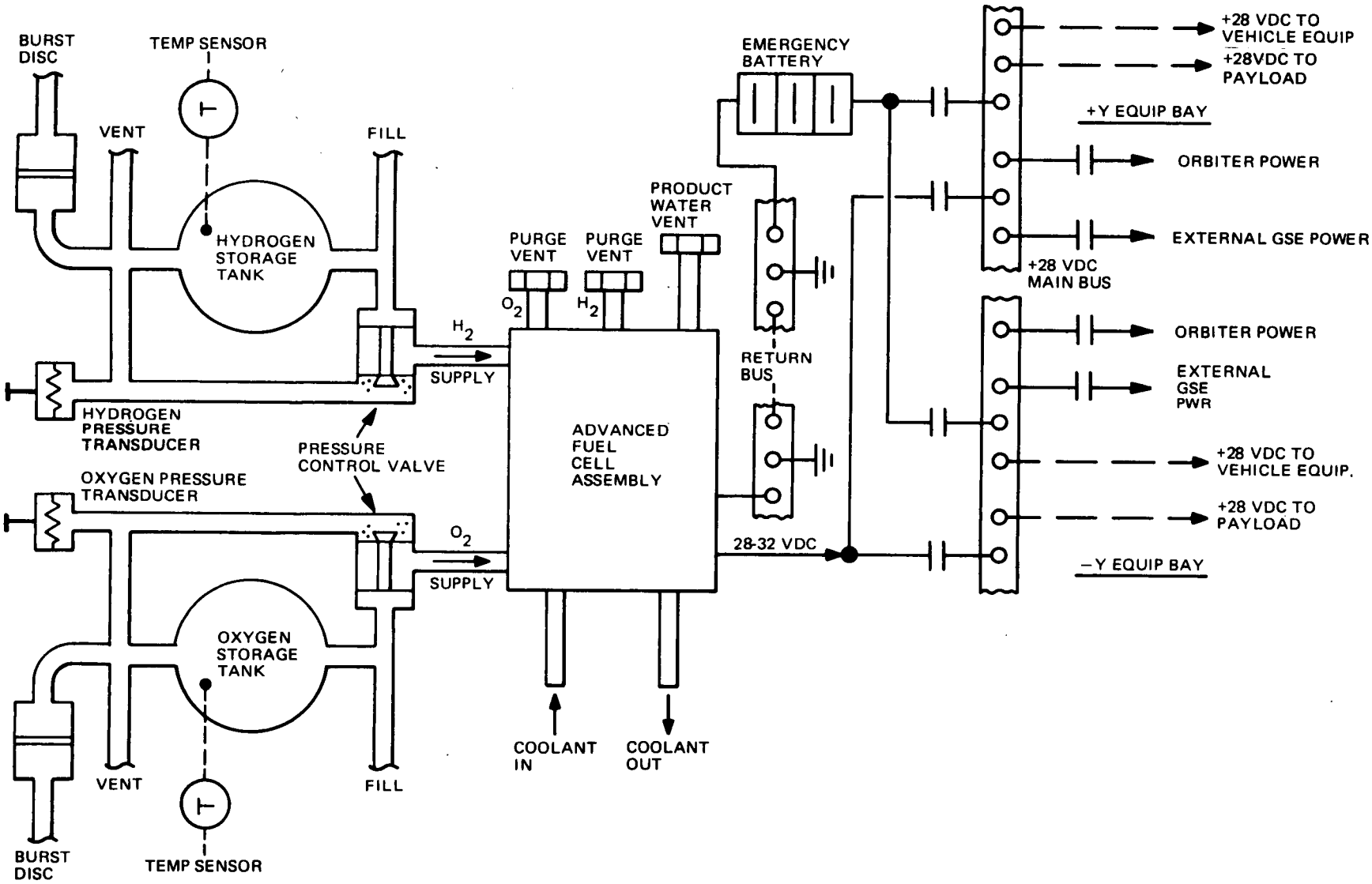

Electrical Power Subsystem 320A-3A ⟶ 320AE-3A

THERMAL CONTROL 320A-3A

The Tug Thermal Control is driven by the wide latitude in missions, the requirement for no preferred orientation, the limited propellant heat sink when the low altitude polar missions are flown, and by the complement of high power density avionics chosen for a particular configuration.

The MLI blanket required to keep propellants above 40°F for certain missions is carried on all missions. It consists of double goldized mylar with nylon net spacers, lying between the tank and micrometeoroid shield along the cylindrical section and directly over both end domes.

An Alzak coating over the outside of the vehicle keeps tank temperatures below 90°F. Silver backed teflon on the saddle bags and heat pipe radiators minimize incident environmental heat absorption and allow a high degree of heat rejection from the avionics.

A base heat shield protects the thrust structure for the main engine nozzle radiation. Electrical heaters on ME and APS assures that unacceptable cold temperatures, 40°F and 150°F respectively, are never reached.

The majority of avionics are mounted on aluminum plates located in the saddle bags and maintained at acceptable temperatures, 30°F to 120°F, through appropriate radiation couplings and electrical strip heaters. The advanced fuel cell and two Carousel V IMUs are on the same active pumped heat transport loop which interfaces with a variable conductance heat pipe radiator (VCHP). The VCHP feature offers its own inherent controls, thereby reducing the need for complex bypass valving with automatic controls.

(Ref. Vol. 5, Part II, Opt. 3A/2, Sect. 5.2)

320A-3A THERMAL CONTROL (T/C)

DRIVER REQUIREMENTS

- NO PREFERRED ORIENTATION
- LOW ALT POLAR MISSION
- ME NOZZLE RADIATION-COOLED
- ADV FUEL CELL ACTIVELY COOLED
- AUGMENTED COOLING FOR 2 CAROUSEL IMUS

T/C DEFINITION

- 300 FT^2 GOLDIZED MYLAR MLI
- AL BASE HEAT SHIELD
- SILVER-BACKED TEFLON & ALZAK COATINGS
- MOST AVIONICS PASSIVELY COOLED
- 24 FT^2 VCHP/RADIATOR FOR FC & IMU'S
- APS & ME ELECT HEATERS
- HEATERS FOR AVIONICS PALLETS
- IMU'S ON FUEL CELL RADIATOR LOOP

T/C PERFORMANCE

- 70^oF VEHICLE FROM LAUNCH TO DEPLOY
- PROPELLANTS-40^oF TO 90^oF
- AVIONISC - 30^oF TO 120^oF
- BASE SHIELD-600^oF, THRUST STR-250^oF
- STRUCT 130^oF MAX ON ENTRY
- FUEL CELL RADIATOR REJECTS 2300 BTU/HR

DVT RISK & TECH

- VCHP REQ ADDITIONAL PERFORMANCE DATA
- UNCERTAINITY IN LIFE/REUSABILITY OF COATINGS & INSULATION

III-67

THERMAL CONTROL 320AE-3A

As the configuration matures from the interim 320-3A to evolved state 320AE-3A avionics necessary to accomplish the rendezvous and docking function are added and some units are replaced with advanced versions. The thermal control system is modified to accommodate these changes. Mission durations, propellant histories and duty cycles remain essentially unchanged so that the thermal provisions inpacted by these drivers (insulation, coatings, heaters) remain unchanged.

The added avionics units, with the exception of the TV power amplifier and the laser radar, can be integrated into the saddlebags and cooled passively. The TV power amplifier, used infrequently, is placed on its own small heat pipe circuit. This circuit consists of a variable conductance heat pipe header and a 4 ft^2 simple heat pipe radiator. The laser radar is carried up forward on the outside of the vehicle but is passively cooled.

The Carousel IMU, a unit on the active fuel cell heat transport loop, is replaced by an advanced unit, the Micron IMU. This unit can be passively cooled and draws far less power, 15w vs 125w. The total power generated by the advanced fuel cell remains essentially unchanged, the increased units offset by the decrease in IMU power. Fuel cell radiator area decreases slightly because of the removal of the IMU from the loop and the consistency of the generated power.

(Ref. Vol. 5, Part II, Opt. 3A/2, Sect. 5.2)

320AE-3A THERMAL CONTROL (T/C)

DRIVER REQUIREMENTS

- NO PREFERRED ORIENTATION
- LOW ALT POLAR MISSION
- MISSION DURATION = 5 DAYS
- ME NOZZLE RADIATION-COOLED
- ADV FUEL CELL ACTIVELY COOLED
- AUGMENTED COOLING FOR TV PWR AMP

T/C DEFINITION

- 300 FT^2 GOLDIZED MYLAR MLI
- AL BASE HEAT SHIELD
- SILVER-BACKED TEFLON & ALZAK COATINGS
- MOST AVIONICS PASSIVELY COOLED
- 12.6 FT^2 VCHP/RADIATOR FOR FUEL CELL
- 4 FT^2 VCHP/RADIATOR FOR TV PWR AMP
- APS & ME ELECT HEATERS
- HEATERS FOR AVIONICS PALLETS

T/C PERFORMANCE

- 70^oF VEHICLE FROM LAUNCH TO DEPLOY
- PROPELLANTS - 40^oF TO 90^oF
- AVIONICS - 30^oF TO 120^oF
- BASE SHIELD-600^oF, THRUST STR-250^oF
- STRUCT 130^oF MAX ON ENTRY
- FUEL CELL RADIATOR REJECTS 1450 BTU/HR

DVT RISK & TECH

- VCHP REQUIRE ADDITIONAL PERFORMANCE DATA
- UNCERTAINITY IN LIFE/REUSABILITY OF COATINGS & INSULATION

III-66

THERMAL CONTROL SCHEMATIC - 320-3A

The fuel cell and Carousel V IMU are placed on the active loop. These units are readily integrated since both run continuously, at a relatively constant power level, with the operating temperature of the IMU, 130°F, matching the desired fuel cell coolant inlet temperature. Redundant bypass valves with automatic temperature controllers and sensors monitor the flow rate of coolant through the fuel cell so that the fuel cell outlet temperature lies between 180°F and 190°F, a range which permits maximum fuel cell efficiency. The pumped loop exchanges heat with individual Variable Conductance Heat Pipes (VCHP). The VCHP radiator provides its own control, thereby eliminating the need for an additional bypass circuit, decreases the operating temperature of the pumped loop which in turn minimizes the accumulator size and makes the task of selecting a coolant fluid less difficult. A VCHP radiator has already been built and tested at GAC.

(Ref. Vol. 5, Part II, Opt. 3A/2, Sect. 5.2)

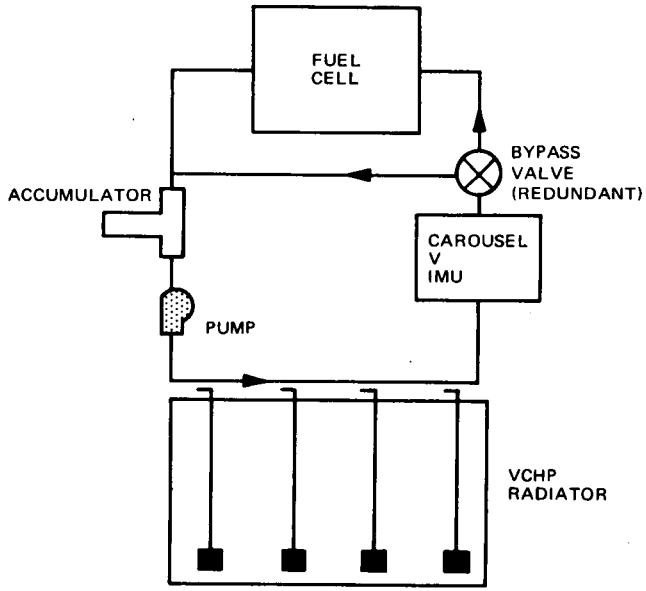

Thermal Control Schematic – 310-3A, 310-3B, 510A-3B, 320-3A

THERMAL CONTROL SCHEMATIC - 320AE-3A

The fuel cell requires active cooling to maintain acceptable temperatures. The pumped loop fuel cell heat transport circuit has redundant by-pass valves with automatic temperature controllers to monitor the flow rate of coolant through the fuel cell as the load changes. The Micron IMU of the evolved configurations does not require active cooling as did the Carousel V IMU Flown on the interim versions.

The 20 watt Power Amplifier used in conjunction with the TV, is a small solid state unit which dissipates 80 watts in converting 100 watts of DC power to 20 watts of RF power. Because of its infrequent use, less than 2 hours per mission, it is placed on its own loop. A Variable Conductance heat pipe header transports heat to a small, simple heat pipe radiator, providing a self regulating simple heat rejection system.

(Ref. Vol. 5, Part II, Opt. 3A/2, Sect. 5.2)

THERMAL CONTROL SCHEMATIC 310RE-3A,310ARE-3B, 410AD-2,510ADE-3B,320AE-3A

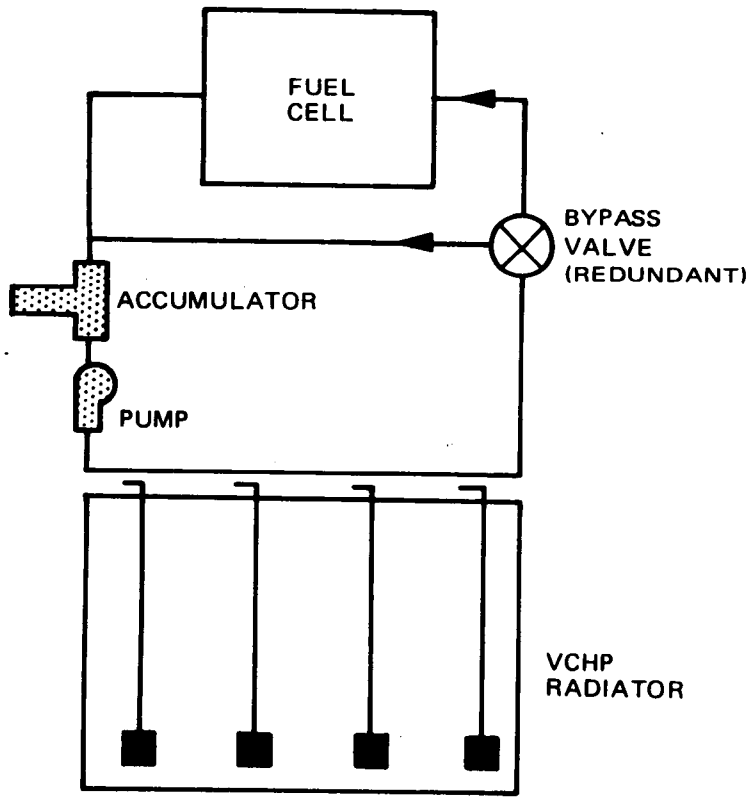

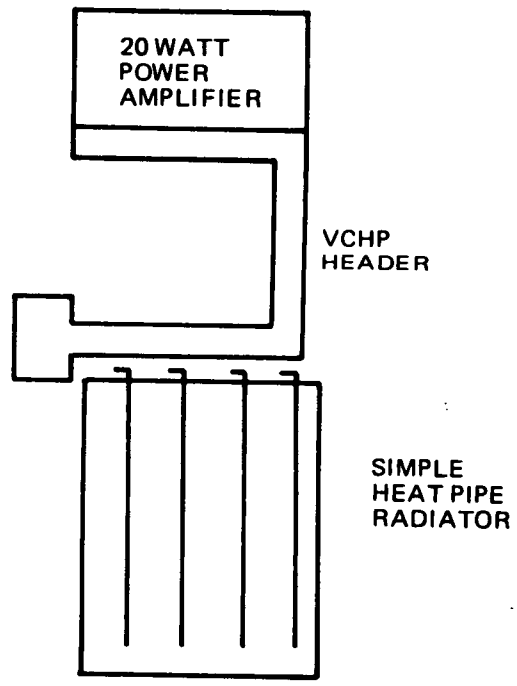

SUBSYSTEM REDUNDANCY ALLOCATION - 320A-3A/320AE-3A

Reliability of the two stage configuration 320A-3A → 320AE-3A is shown on the facing page. For the two stage configuration, reliability is driven by the "sling shot" round trip mission. Reliability was calculated on the basis of the upper stage operations for the reliability reference mission time of 160 hours, and the lower stage operating for 54 hours (longer than the actual sling shot mode of 26.22 Tug hours).

Redundancies to achieve the 0.97 reliability for both stages, combined, are shown in the subsystem reliability table.

(Ref. Vol. 5, Part II, Opt. 3A/2, Sect. 5.6)

SUBSYSTEM REDUNDANCY ALLOCATION TABLE

MISSION - RELIABILITY REFERENCE
UPPER STAGE - 168 HRS
LOWER STAGE - 54 HRS.

SUBSYSTEM	REDUNDANCY	320A-3A	320AE-3A
STRUCTURE	-----		
PROPULSION			
MPS	He ISO VALVE	X	X
	VENT VALVES	X	X
APS	THRUSTER ISO VALVES	X	X
	VENT VALVES	X	X
AVIONICS			
G N & C	IMU	X	X
	APS CONT ELECT	X	X
COMM	RECEIVER	X	X
	POWER AMP	X	
	TRANSMITTER	X	
DMS	COMPUTER	X	X
THERMO	CONTROL VALVE	X	
POWER	-----		
	RELIABILITY - UPPER STAGE	0.9768	0.9763
	LOWER STAGE	0.9939	0.9936
	TOTAL	0.9708	0.9701

APOGEE KICK STAGE 320AE-3A

For the 320A configuration, deployment of some payloads on planetary missions requires the assistance of a second stage using solid rocket motors (SRM). Only one stage of the two stage tug is flown on this mission with a kick stage.

Each payload requiring an AKS for deployment is ballasted to weigh 5000 lbs so that a common stage can be used. The configuration comprises a truncated cone structure of aluminum alloy with nine identical SRM mounted externally. To minimize the number of SRM, and to limit the maximum g, the total burn is split into two. The first burns six SRM and the second burns the remaining three. After the first burn, the six SRM cases are jettisoned outboard and aft.

Each AKS has a simple GN&C subsystem which is updated by the tug just prior to their separation. Control during SRM burn is provided by vectoring motor thrusts. Attitude control prior to payload activation is provided by limit cycle APS. Power comes from an electrical battery. All equipment is mounted within the structural shell of the stage.

A payload up to 35 feet long, including the payload/kick stage adapter, can be accommodated within the orbiter cargo bay.

(Ref. Vol. 5, Part II, Opt. 3A/2, Sect. 5.2)

APOGEE KICK STAGE - 320AE-3A

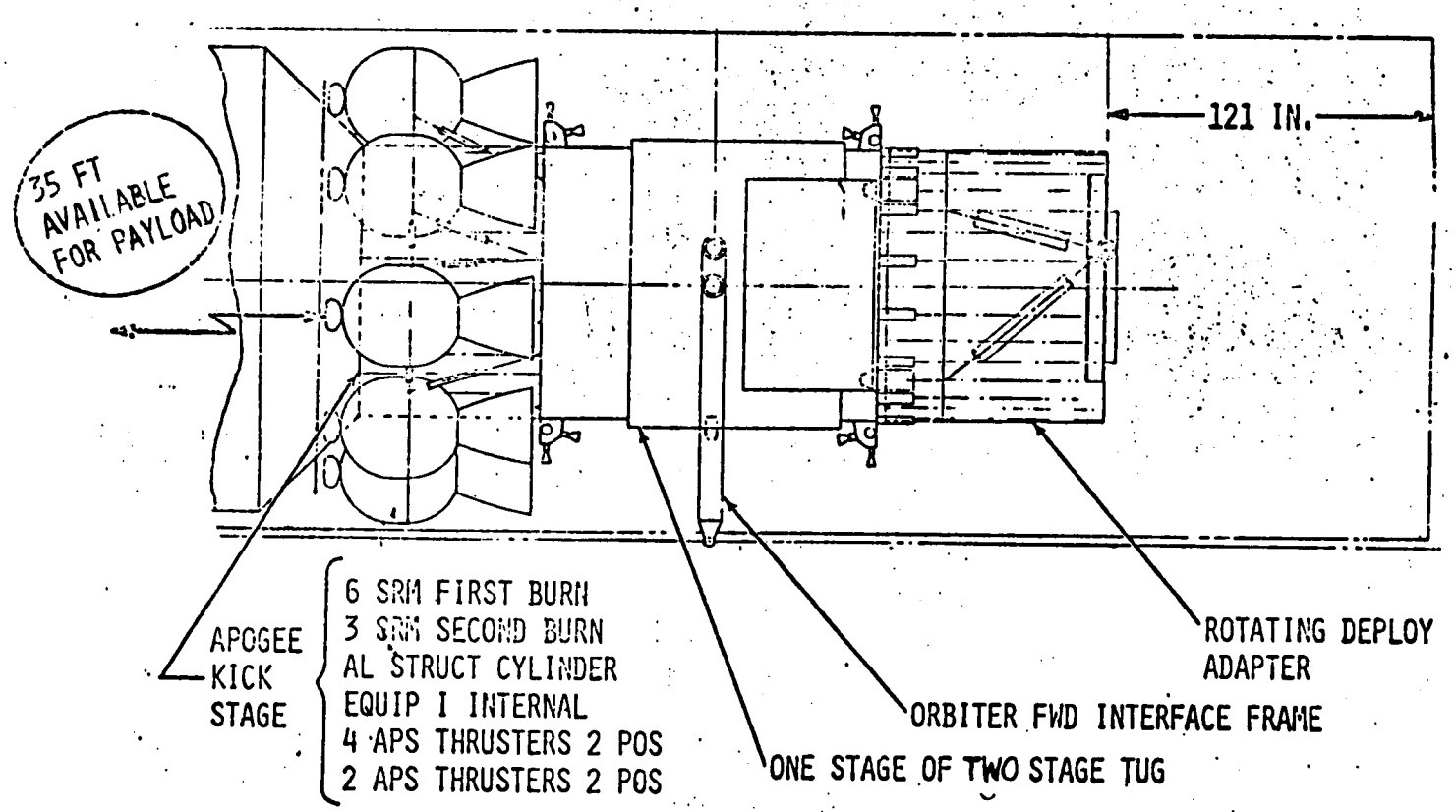

THIS PAGE INTENTIONALLY LEFT BLANK

APOGEE KICK STAGE (AKS) CHARACTERISTICS - 320AE-3A

(PLANETARY MISSIONS ONLY)

			WT. (LB.)
SRM:		- CLUSTER OF 9	1900 EACH
		- = 50/1	
		- I_{SP} = 295 SECS.	
		- λ' = .920	
	3 G LIMIT BY	- 67 SEC. BURN & SERIES BURN	
STRUCTURE:	AL. FRAMES, SKIN AND STRINGERS		449
PROPULSION:	SWIVEL NOZZLE T.V.C.		
	GASEOUS N_2 APS		27
ASTRIONICS:	INITIAL STATE VECTOR FROM TUG		
	BATTERY POWER FOR	- 30 MINS	67
	DIRECTIONAL CONTROL	- 15 MINS	
RELIABILITY:	STAGE	- .9987	
	OVERALL MISSION	- .970	
PERFORMANCE:	DEPLOY PAYLOAD #23		5000
	STAGE Δ V FPS	- 10880	
COSTS:	DDT&E	- $29M	

INTERFACES - 320AE-3A

The interfaces consist of all structural and mechanical hardware enabling the Tug to link with Shuttle and to separate from it in flight. It includes those items that will remain in the Shuttle during the flight of the Tug. Included is the operational docking/undocking attachment of the Tug to the shuttle, mechanisms, Propulsion Interconnects, astrionics wiring and umbilicals and the mission specialist station.

The weights chart identifies and summarizes by subsystem those Orbiter/Tug interface elements which are chargeable against the 65,000 lb. Payload. Weights have been established and these elements have been included in the WBS build-up of Tug costs.

The interface schematic divides these items into operational categories rather than by subsystem, starting with signal and service lines (which are part of Tug system) installed in the Orbiter. The schematic identifies the signal or service lines at the interface. A feature of the two stage tug interface is the route taken by the signal/service lines to the upper tug. These by-pass the lower (aft) tug and connect with the umbilical panels on the thrust cone of the upper tug through access ports in the interstage.

(Ref. Vol. 5, Part II, Opt. 3A/2, Sect. 5.4)

INTERFACE SUBSYSTEM WEIGHT

320A-3A CONFIGURATION - 2 STAGE

	WEIGHT (LB)
STRUCTURE	(1362)
• ROTATING ADAPTER	
• FORWARD CRADLE	
• INTERSTAGE	
MECHANISMS	(108)
• ADAPTER - ROTATING ACTUATOR/BERTHING PROBES AND LATCHES	
• CRADLE - BERTHING LATCHES	
• INFLATABLE SUPPORT FOR MAIN ENGINE NOZZLES	
PROPULSION (MAIN)	(98)
• MAIN PROPELLANT FILL & DRAIN AND VENT LINES	
• HIGH PRESSURE GASEOUS HELIUM LINES	
• UMBILICAL PANELS	
ASTRIONICS	(200)
• DMS-HARD WIRING	
• GN&C - HARD WIRING	
• COMM - HARD WIRING + R.F.	
• UMBILICAL PANELS/EPS FILL,VENT,DRAIN&PURGE	
M.S.S.	(156)
• CONTROLS AND DISPLAY - DATA AND COMM EQUIP.	
• POWER - WIRING - SUPPORT	
TOTAL	1924

THIS PAGE INTENTIONALLY LEFT BLANK

INTERFACE LOCATIONS - TWO STAGE 320AE-3A

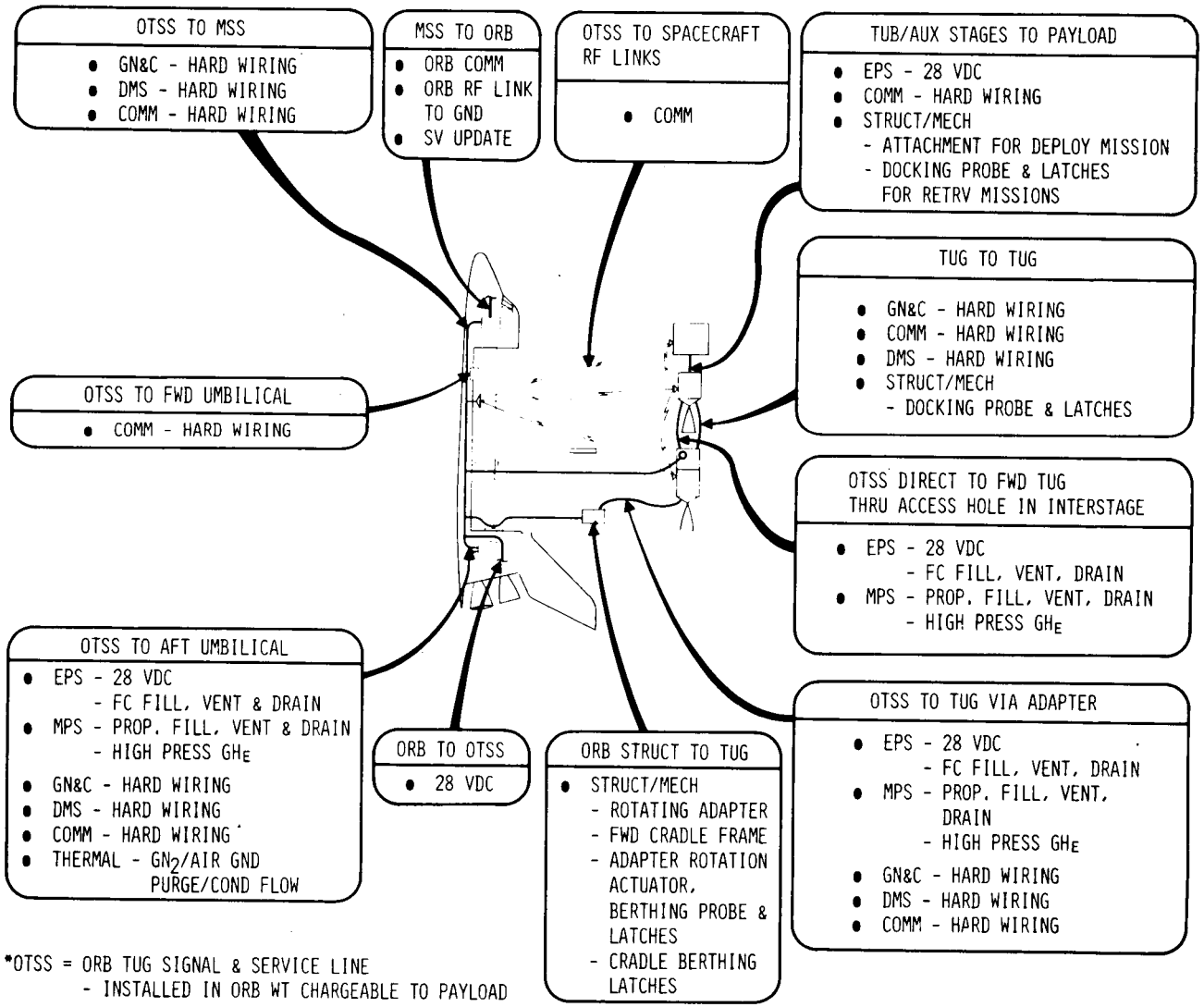

*OTSS = ORB TUG SIGNAL & SERVICE LINE
- INSTALLED IN ORB WT CHARGEABLE TO PAYLOAD

III-105

320A/320AE-3A - MISSION FLOW/COMPLEXITY FACTOR

A methodology has been applied to determine the relative complexity of concept flight modes by taking the weighted sum of operations required to perform a mission. All Level I operations (facing page chart) were weighed with the following multipliers:

- 8 for operations involving crew safety
- 4 for operations needed for TUG recovery
- 2 for operations needed for P/L deployment
- 1 for operations needed for P/L recovery

An additional complement of factors were added as follows:

- 8 for critical functions (i.e., docking, staging, etc.)
- 4 for unique trajectory funtions (i.e., correct for nodal regression)
- 4 for deficient functions (i.e., P/L loiter C/O)

This approach provides a basis for comparing the operations complexity of the various options and is also used as the scaling factor for determining flight operations cost. Our approach to costing flight operations was to establish a detailed "strawman" cost based on a "Bottoms-Up" estimate of the geosynchronous round trip mission. Our files on LM costs (complexity factor 177) were used to establish this estimate. The costs were then scaled by the complexity factor to establish cost differences between concepts.

Based on this Cost Estimating Relationship, a 320AE concept would have a 50% increase in flight operations cost relative to a single stage roundtrip mission, for those missions in which the 2 stage configuration is used in a reverse sling-shot mode. These additional costs included the added software, mission planning, documentation, etc., needed to accommodate the increased complexity of the TUG to TUG rendezvous and docking. An additional cost increase is incurred by this concept for the TUG to TUG docking. Because of the complexity of this operation, it has been assumed that 320A cannot evolve to a Level II autonomous system. The complex rendezvous manuevers needed in real time require ground tracking and targeting support.

(Ref. Vol. 6, Part I, Para. 6.4.3)

MULTIPLE DEPLOYMENT & RETRIEVAL (REVERSE SLING SHOT) COMPLEXITY FACTOR 320AE-3A

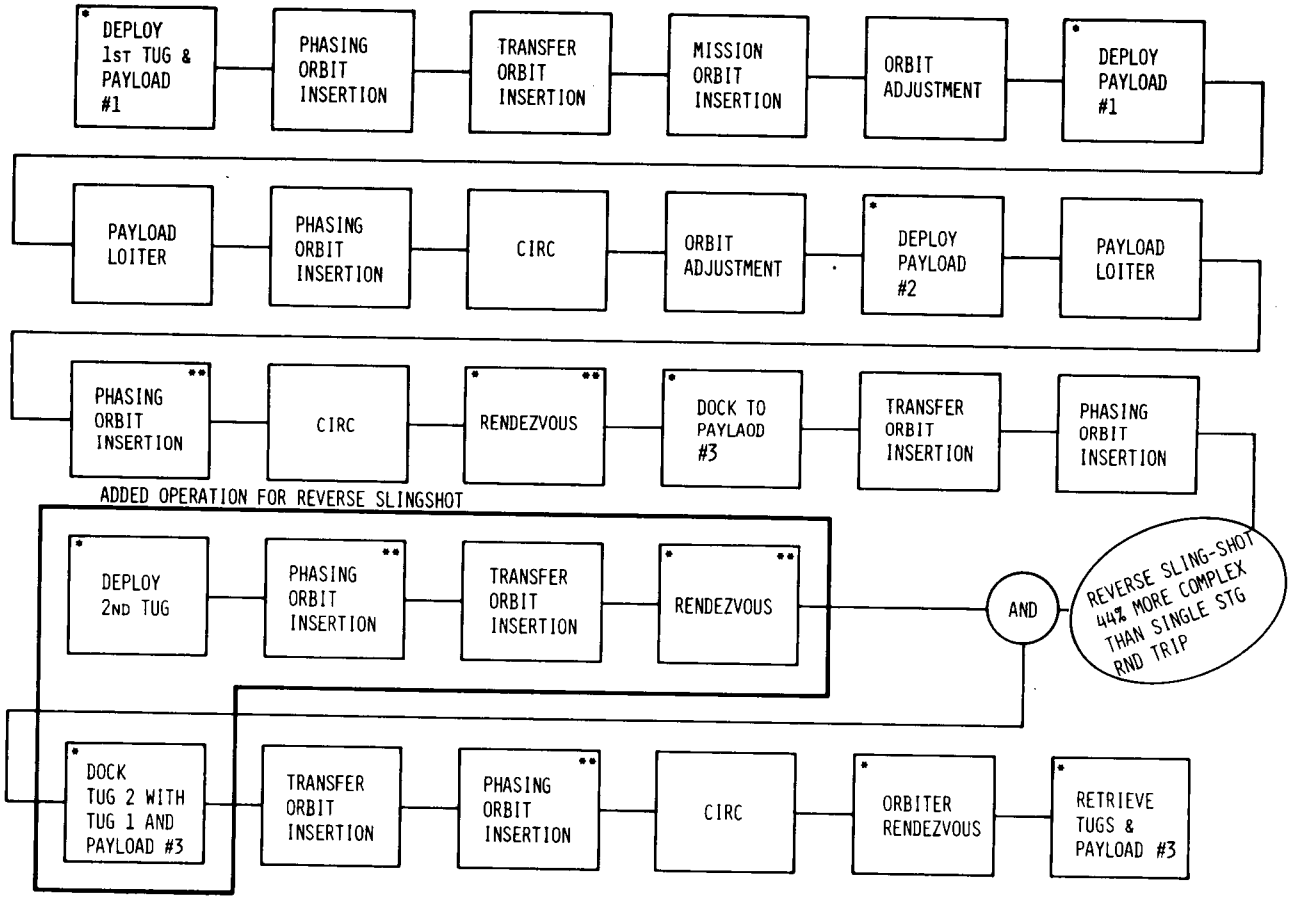

COMPLEXITY MULTIPLIERS	1 P/L	2 P/L
● CREW SAFETY	3 x 8	3 x 8
● TUG RECOVERY	8 x 4	8 x 4
● PAYLOAD PLACEMENT	6 x 2	10 x 2
● PAYLOAD RETRIEVAL	16 x 1	16 x 1

	1 P/L	2 P/L
*CRITICAL FUNCTIONS	9 x 8	10 x 8
**UNIQUE TRAJECTORY FACTORS	5 x 4	5 x 4
COMPLEXITY FACTOR	176	192

III-18

OPTION 3A- 320A/320AE-3A - FLIGHT OPERATIONS COST

Costs for Flight Operations has been split between those funds required prior to IOC and those required after IOC. In establishing these estimates it was assumed that NASA is the contracting agency. If the DOD is the responsible agency the cost estimates presented on the facing page are reversed. Included in these estimates are the manpower for mission planning, flight control, flight evaluation and flight software. The detailed justification for these estimates can be found in Volume 6 "Operations Data Book."

The major driver of flight operations non-recurring cost is the development of the software. Estimates are included for the following major computer systems:

- TUG on-board software
- Mission Control Center Real Time Computer Complex
- Vehicle Management and Mission Planning System
- Mission Control Center Simulator

The software costs were established by estimating the word count required to meet the functional requirements of each of the computer systems. Dollar values per word consistent with GAC experience on the F-14, EA2-C and OAO MCC development programs were used for the design phase and programming/verification phase of the development cycle. Word size estimates for the on-board software and real time computer complex were based on the software routines in the LM Guidance Computer which have similar functional requirements to that of the TUG, adjusted to account for the LM software needed for man/machine interfaces. The software estimates for the MCC simulator were based on the requirements for the LM Full Mission Engineering Simulator requirement adjusted to reflect the relative complexity of the vehicles. This software package was assumed to play a threefold role; namely, provide simulator capability to the MCC, and to provide the environment to the Astrionics Software development facility and the electronics integration facility. The software estimates for the semi-automated non-real time Vehicle Management and Mission Planning System (VMMPS) requires more in-depth evaluation to determine costs. However, for purposes of at least establishing a cost line element a 30K word system was assumed.

Based on these cost procedures, the total flt. ops DDT&E for the 320A is $43M for NASA and $4.5M for DOD. The average cost per flight is $540K which converts to approximately $320K per payload. The prime driver in the high cost to the payload is the need to retain Level III autonomy throughout the program.

(Ref. Vol. 6, Part I, Sect. 6.4.4)

320A-3A
↓
320AE-3A

AUTONOMY→III

FLIGHT OPERATION COST

	NASA, $M			DOD, $M		
	DDT &E INTM EVOL		POST IOC$	DDT&E INTM EVOL		POST IOC$
MISSION PLANNING	9.76	1.88	24.46	2.99	.57	17.77
FLIGHT CONTROL	1.95	0.15	26.12	.92	.07	21.71
FLIGHT EVALUATION	.58	0.09	3.28	.51	.08	2.89
FLIGHT SOFTWARE	30.46	5.22	35.63	-	-	18.14
	42.75	7.34	89.49	4.42	.72	60.51

AVG FLT OP COST PER FLIGHT
(NASA = 165 FLT/ DOD = 135 FLT)

	NASA, $M	DOD, $M
MISSION PLANNING	.148	.132
FLIGHT CONTROL	.158	.161
FLIGHT EVALUATION	.020	.021
FLIGHT SOFTWARE	.216	.134
	.542	.448

2 STG PER FLT COSTS HIGHER THAN RDM CONCEPT BECAUSE TUG-TO-TUG DOCKING PRECLUDES EVOLUTION TO LEVEL II AUTONOMY

RESIDUAL HAZARDS AND SINGLE FAILURE POINTS: 320-3A/320AE-3A

Those hazards for which design, special procedures and safety or warning devices may not resolve the problem, are considered residual hazards. In addition, where failure of a single hardware element leads to loss of life, vehicle or mission, a single failure point (SFP) is identified. The ones falling into these categories for this concept are shown in this chart.

The fact that hazard sources are doubled in this concept is most significant; it adds operational complexity and increases the possibility of a safety hazard occurring. In addition, the ability to abort dump both tugs sequentially or simultaneously needs study; feasibility has been established.

Although a rationale for acceptance of these situations has been defined for now, additional study effort is required in the next phase to reduce the hazard to the lowest possible level (controlled category) and/or to eliminate the single failure points.

Additional information on these items is included in Volume VII, Safety and Reliability.

(Ref. Vol. VII, Sect. II and VII)

RESIDUAL HAZARDS/SFP : 320-3A/320AE-3A*

ACCEPTABLE PROGRESS

HAZARDS/SFP	RATIONALE FOR ACCEPTANCE
ABNORMAL LANDING WITH FULL TANKS	ABORT DUMP STUDY REQ'D
VENT PROPELLANT FUMES TO PAYLOAD BAY VIA TUG OVERBOARD VENTS (MPS/APS)	EXTREME PAYLOAD BAY TEMPERATURE AND MULTIPLE FAILURES NECESSARY FOR VENTING
SRMs SENSITIVE TO LIQUID PROPELLANT FIRES	IGNITION SOURCES PRECLUDED IN PAYLOAD BAY
VENT FUEL CELL WATER TO PAYLOAD BAY DURING CHECKOUT	VENTS DIRECTED AWAY FROM EOS
ABORT LANDING WITH FULL FUEL CELL TANKS	TANKAGE AND SUPPORTS DESIGNED FOR CRASH LOADS
SFP : VALVES FAILED CLOSED (MISSION SUCCESS) - MPS He REGULATOR(S) - ENGINE PREVALVE(S) - APS VENT(S) - APS QUAD ISOLATION - AKS GN_2 SHUTOFF	HIGH RELIABILITY COMPONENTS

* HAZARD SOURCES DOUBLED

SAFETY ASSESSMENT RESULTS: 320-3A/320AE-3A

An assessment of this configuration was performed to determine whether it satisfied the NASA Safety Requirements specified in the Data Package, Space Tug System Studies, April 1973 and those safety requirements derived through analysis. The first column identifies the source of the safety requirement, NASA Data Package or identified hazard. Items in the next column are labelled (R) for requirement unsatisfied, (C) for an operational constraint or (E) for an exception to the NASA or derived safety requirements. The specific items are summarized. In the comments column, the reasons or reactions to the safety assessment items are stated.

For the majority of items mentioned a multiplication factor of two is involved. This fact coupled with the need for an abort dump study and an indepth mission equipment utilization study by safety leads to an uncertainty about the two stage concept.

The checkmark in the upper right corner with the associated question mark signifies this safety uncertainty. The completed Safety Evaluation form for this concept is presented in Volume VII.

(Ref. Vol. VII, Sect. II & VII)

320-3A/320AE-3A SAFETY ASSESSMENT RESULTS

- DATA PACKAGE/ANALYSIS-DERIVED SAFETY REQUIREMENTS USED AS ASSESSMENT TOOL
- ASSESSMENT RESULTS :

REQ'T SOURCE	REQ'T/CONSTRAINT/EXCEPTION	COMMENTS
NASA REQTS	(E) DETECT POTENTIAL TANK FAILURES ON GROUND	FRACTURE MECHANICS PROGRAM USED
	(E) FUEL CELL VAPORS VENTED TO BAY DURING C/O	VENTS DIRECTED AWAY FROM EOS
	(C) NESTED TANKS	SEPARATE TANKS PREFERRED
VENTING	(C) NEED FLUID GSE DURING GROUND TRANSPORT	CONTAINS AND NEUTRALIZES VAPORS FROM ALL MPS TANKS
RESIDUALS	(R) NO ABORT DUMP	△ STUDY REQ'D
	(R) NO MPS DEPLETE	IMPLEMENTATION IS OPEN QUESTION
	(C) "EMPTY"TANKS AT LANDING	SAFEST LANDING CONFIGURATION
COLLISION	(R) SRMs JETTISONED ON PLANETARY P/L 23 MISSIONS	SRMs ACHIEVE ESCAPE VELOCITY
COMMAND/ CONTROL	(C) WITHIN 30 NM OF EOS; OVER GROUND STATION	SATISFACTORY TO SAFETY

PROGRAMMATICS/COST OVERVIEW 320A-3A/320AE-3A

Similar programmatics and cost data are defined for 320A-3A/320AE-3A, in Vol. 8 part IV, as in the prior phased program.

Concept 320A-3A/320AE-3A requires 99 months to complete development plus an additional 103 months to complete flight hardware production. Peak annual funding ($107M) occurs in FY 78. Initial/total DDT&E and total program costs are $330/370M and $914M respectively.

PROGRAMMATICS/COST OVERVIEW - 320A-3A/320AE-3A

CHARACTERISTICS

		MAIN STAGE	AUXILIARY STAGE
PHYSICAL:	WEIGHT, LB	2695 - 2768	545
	LENGTH, IN	205 EACH	80
	DIAMETER, IN	98	180
TECHNICAL:	REUSABLE	TWO-STAGE	
	AUXILIARY STAGE		AKS
	RETRIEVAL	EVOLVED	
	PROPELLANT CAPACITY, LB	59,500	
	THRUST, LB	12,000	
	ISP, SEC	338	295
	AUTONOMY LEVEL	111A	
	RELIABILITY	.9763/.9936	.9987

WBS #320-00

PROJECT SUMMARY

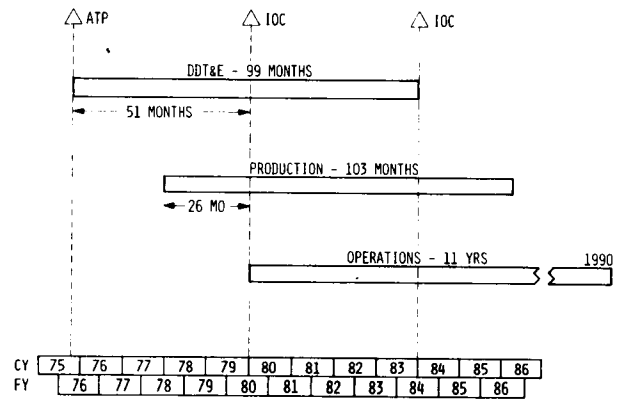

ANNUAL - PROJECT COSTS

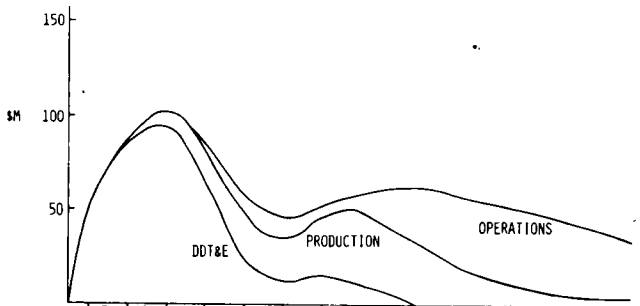

CY	76	77	78	79	80	81	82	83	84	85	86	87	88	89	90	
FY	76	77	78	79	80	81	82	83	84	85	86	87	88	89	90	91
DDT&E	50	88	101	65	25	11	16	11	3							
PROD	0	1	6	19	22	19	30	39	36	27	18	10	7	6	5	2
OPS				6	12	9	6	8	23	35	38	38	39	37	32	14
TOTAL	50	89	107	90	59	39	52	58	62	62	56	48	46	43	37	16

VIII, IX-7, III-110

CUMULATIVE - PROJECT COSTS

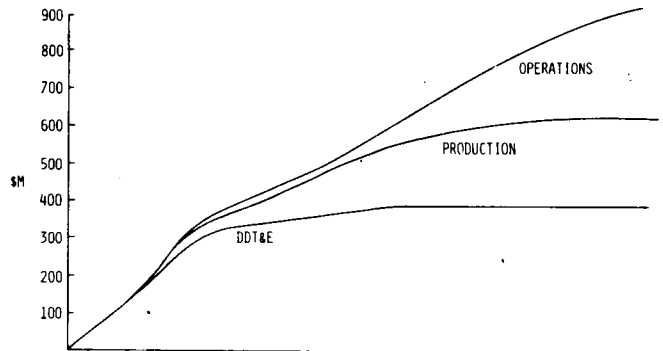

CY	76	77	78	79	80	81	82	83	84	85	86	87	88	89	90	
FY	76	77	78	79	80	81	82	83	84	85	86	87	88	89	90	91
DDT&E	50	138	239	304	329	340	356	367	370	370	370	370	370	370	370	370
PROD	0	1	7	26	48	67	97	136	172	199	217	227	234	240	245	247
OPS	0	0	0	6	18	27	33	41	64	99	137	175	214	251	283	297
TOTAL	50	139	246	336	395	434	486	544	606	668	724	772	818	861	898	914

SUMMARY SCHEDULE - 320A-3A/320AE-3A

The primary elements of the 320A-3A/320AE-3A Project Schedule include Upper and Lower Main Stages, Apogee Kick Stage, Vehicle Test, GSE, Facilities and dependent SR&T. Authorization to Proceed (ATP) occurs on October 1, 1975, with IOC of the initial configuration targeted for December 31, 1979. The Class I main engine milestones are the same as for 310-3A/310RE-3A except that quantities of engines are doubled since this is a two stage vehicle. Main Stage vehicle tests are essentially the same as for 110A-1 except for additional Integrated Avionics testing to demonstrate retrieval capability. First flight of the evolved configuration is targeted for December 1, 1983. Upper and Lower Stage manufacturing begins December 1, 1976 with production of the major ground test articles and continues through production of 11 upper and 13 lower stages to support fleet operations. These are manufactured in 3 Lots similar to 310-3A/310RE-3A for the purpose of avoiding a manufacturing gap between deploy only vehicles and evolved vehicles. As with 110A-1, development of the Apogee Kick Stage starts in May 1979 ($3\frac{1}{2}$ years after main stage ATP) and continues through the same vehicle tests to an operational test flight during the second year of operations. Nine kick stages will be manufactured to support fleet operations. GSE and Facilities are scheduled essentially the same as for 110A-1.

(Ref. Vol. 3, Part IV, Sect. 8.1)

320A-3A/320AE-3A SUMMARY PROJECT SCHEDULE

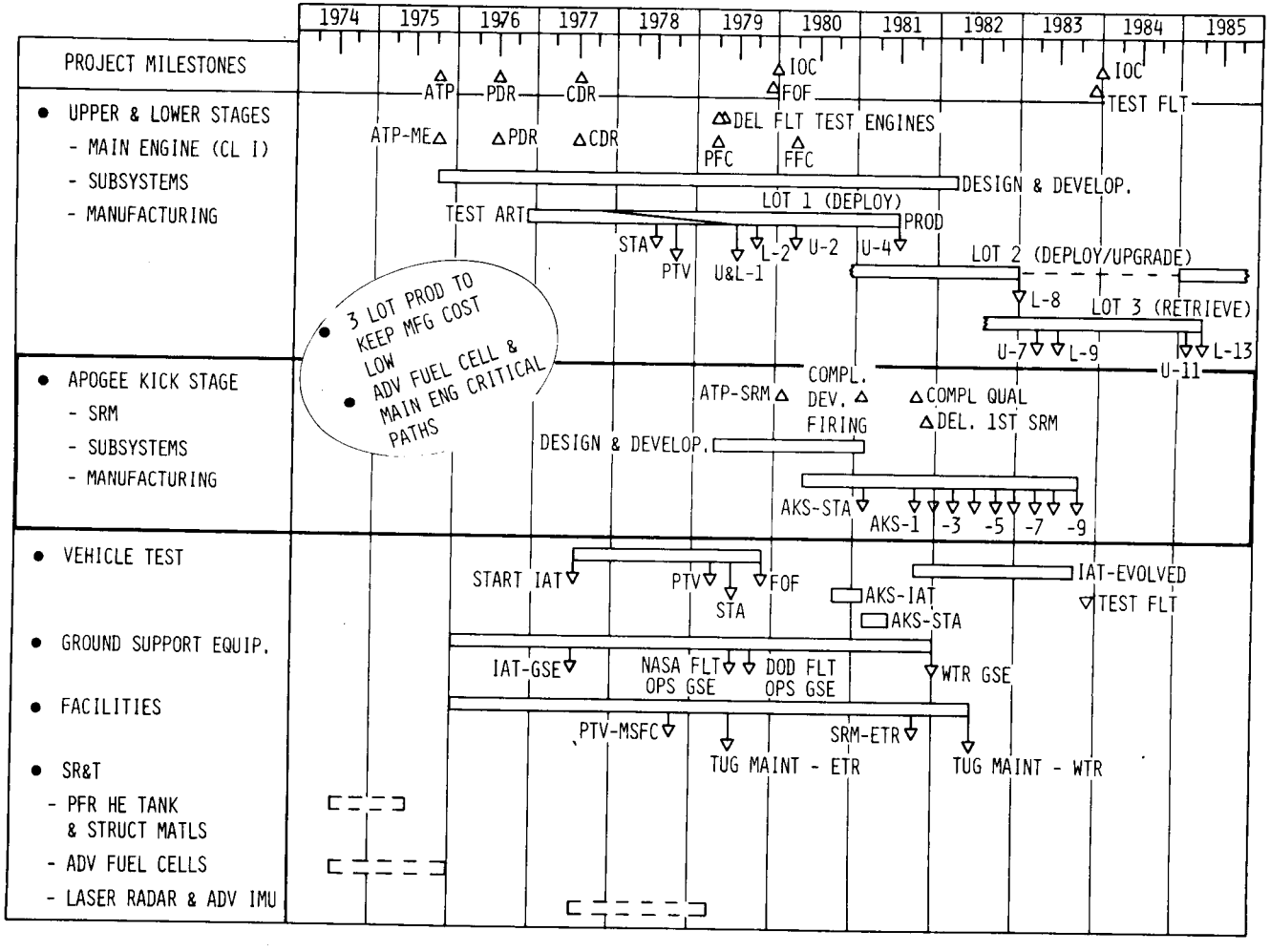

320A-3A/320AE-3A - GROUND TESTS

Vehicle Test Program

The vehicle test program for 320A-3A/320AE-3A was developed in a similar manner to that described for 110A-1

Structural Test Article (STA)

Since the two 320A Main Stages are basically structurally identical only one MS STA will be tested. The STA program for this configuration is essentially the same as that described for the 110A STA. The 320A STA will be configured to include the evolved 320AE-3A avionic retrieval hardware and mechanical interfaces, and testing will envelope both configurations.

Propulsion Test Vehicle (PTV)

The PTV and AKS propulsion test programs for this configuration are the same as those described for the 110A configuration. The two-position nozzle will be developed and qualified along with the engine at the engine contractors facility.

(Ref. Vol. 8, Part IV; Sect. 8.2)

320A-3A/320AE-3A GROUND TESTS

$19.23M Δ OVER 1 STAGE TEST

TEST	TEST ARTICLE	OBJECTIVES	APPROACH
STRUCTURES • 320A-3A - MAIN STAGE (MS) - APOGEE KICK STAGE (AKS)	• COMPLETE LOWER STAGE PRIM. & SEC. STRUCT. • INTERSTAGE & TUG/ORB. ADAPT. • COMPLETE AKS PRIM. & SEC. STRUCT.	• EVALUATE DYN, STATIC STRENGTH, SAFE-LIFE & SEPARATION • VERIFY STRUCT./MECH. INTERFACES AT LAUNCH SITE	• VIB/ACOUSTIC TESTS • DES. LIMIT STATIC TESTS • STATIC FATIGUE • ULT. STATIC TEST • SEP. DEMO. • INTERFACE VALID. DEMO AT KSC • AKS TESTED SEPARATELY AS ABOVE (1982)
PROPULSION (MS-320A-3A ONLY)	• FLIGHT WT. LOWER STAGE STRUCT. • MAIN ENG. SUPPT. S/S LESS ENG. • ENG. SIMUL. UNIT • PTV REFURB. TO FLIGHT OPS	• DEMO OPS OF ASSEM. COMPONENTS • DEVELOP C/O & OPS PROCEDURES • VERIFY SERV/HANDLG PROCEDURES • DEMO. SYS. PERF & CHARACTERISTICS	• COLD FLOW ONLY • REFEREE FLUIDS PHASE - FILL/DRAIN/FLOW TESTS • LIVE PROPELLANTS PHASE - LOAD CONTROL/ACCURACY - SYS. COMPAT. & DYN. - PERF. SERV./HANDLING PROCEDURES

Integrated Avionics Test

The 320A MS and AKS integrated avionics test program is the same as described for the 110A configuration. The second stage will be simulated for the IAT software verification and mission simulations. The retrieval capability will be incorporated in the IAT facility and ASDL software as it is developed. IAT testing for the evolved system will include hardware and software verifications and mission simulations.

Mockups

The mockups required for the 320A MS and AKS are the same as the mockups described for the 110A configuration and includes all stages. Installation of the evolved configuration hardware will be verified using the MS mockup.

(Ref. Vol. 8, Part IV, Sect. 8.2)

320A-3A/320AE-3A GROUND TESTS (CONT'D)

TEST	TEST ARTICLE/FACILITY	OBJECTIVES	TEST DESCRIPTION
INTEGRATED AVIONICS • INTEG. AVIONICS TEST (IAT) FAC. - MS - AKS • AVIONICS SOFTWARE DEVELOPMENT LAB (ASDL) - MS	• IAT - SHIP SET OF AVIONICS - COMPUTER SIMULATION - SENSOR STIMULUS - FACTORY & LAUNCH GSE • ASDL - COMPUTER FACILITY WITH MATH MODEL SIMULATION OF MS HARDWARE	• VERIFY HARDWARE/SOFTWARE PRIOR TO VEHICLE INSTALLATION & FOF-79 • VERIFY EVOLVED RETRIEVAL HARDWARE/SOFTWARE FOR 83 IOC.	• IAT - SUBSYSTEM INTEG. & END TO END FUNCTIONAL VERIFICATION - VERIFY FACTORY C/O PROCED. - HARDWARE/SOFTWARE VERIF. - MISSION SIMULATION - INTEGRATE AND VERIFY RETRIEVAL CAPABILITY HARDWARE/SOFTWARE - RETRIEVAL MISSION SIMULATION • ASDL - SOFTWARE DEVELOPMENT FOR BASIC & EVOLVED SYSTEM
MOCKUPS • MS • AKS	• WOOD AND CARDBOARD MOCKUP OF THE TUG MS STAGES & AKS STRUCTURE INCLUDING EQUIPMENT FOR PDR. • WOOD & METAL MOCKUP OF TUG MS STAGES AND AKS STRUCT. & COMPONENTS FOR CDR	EVALUATE EQUIPMENT ACCESSABILITY & MAINTAINABILITY. EVALUATE SHUTTLE & PAYLOAD INTERFACES & LINES RUN PRIOR TO FAB OF FINAL HARDWARE	• COMPONENT INSTALLATION • ESTABLISH LINE LENGTHS FOR FINAL HARDWARE FAB. • DEMONSTRATE MAINTAIN. - ASSESSMENTS & DEMOS OF EQUIPMENT & LINES CLEARANCES - CONNECTOR & MOUNTING ACCESSIBILITY DEMO. • SHUTTLE & PAYLOAD INTERFACE ASSESSMENT
	GROUND TEST COST - Initial &	Initial: $19.19M Evolved: $25.00M	

320A-3A/320AE-3A FLIGHT TESTS

10 flights are included in the 320A-3A/320AE-3A Flight Test Program. Since the first year of operations for 320A-3A includes single stage deploy only flights, FOF will be a dedicated flight test using only one main stage in a manner similar to that described for 110A-1. Single stage multi deploy, single stage with AKS and two stage deploy missions will be introduced incrementally during the second year of operations to demonstrate a build-up in Tug flight modes and operations. Flight test data will be acquired via the DFI during these payload deploy operational missions. Introduction of single stage retrieval (320AE-3A) will be accomplished during an operational deploy only flight in 1983 using as a retrieval target a telescoping test fixture deployed from the Shuttle. Two stage round trip operations will be demonstrated during a normal operational flight in 1984. Flight test data will also be acquired during the first two years of 320AE-3A operations via the installed DFI system.

(Ref. Vol. 8, Part IV, Sect. 8.2)

320A-3A / 320AE-3A FLIGHT TESTS

TEST ARTICLE	OBJECTIVES	APPROACH
• LOWER STAGE 320A-3A-1ST PROD. UNIT INCLUDING DFI • 1ST PRODUCTION AKS INCLUDING DFI • LOWER STAGE 320AE-3A-1ST PRODUCTION UNIT INCLUDING DFI	INITIAL IOC • THERMO-VERIFY SYS. THERMAL CONTROL • STRUCT.-VERIFY LAUNCH/ORBIT/ENTRY/LANDING LOADS & DYNAMICS • PROP-VERIFY MPS/APS • AVIONICS-VERIFY AVIONICS OPS • OPS - EVALUATE TUG/ORB. TUG/PAYLOAD INTERFACES - EVALUATE SYS. PERF. CAPABILITY - DEMO PAYLOAD DEPLOY EVOLVED IOC • DEMO PAYLOAD & TUG RETRIEVAL Flight Test Cost - Initial: $23.52M Initial & Evolved: $27.06M Total Vehicle Test: $52.05M	• 10 FLIGHT TEST PROGRAM - 7 INITIAL - 3 EVOLVED • FOF COSTED WITHOUT OPERATIONAL PAYLOAD - FLOWN WITHIN RETRIEVAL CAPABILITY OF ORB - SEQUENCE INCL: SYS. C/O, STAGE SEP., MPS/APS BURNS OF ONE STAGE, DUMMY PAYLOAD DEPLOY, ORBITER RETRIEVAL. • SUBSQ. FLIGHTS DEPLOY PAYLOADS SELECTED TO DEMO BUILDUP IN TUG CAPABILITY • AKS INTRODUCED DURING 1981 OPS FLIGHT • FOF OF 320AE-3A IS A DEPLOY ONLY FLIGHT WITH TUG RETRIEVAL DEMO PERFORMED USING ORB. MOUNTED TEST FIXTURE • SUBSEQUENT OPS FLTS - DEMO BUILDUP IN CAPABILITY

320A-3A/320AE-3A - FACILITIES

Ground rules, assumptions, facilities definition development and costing procedure same as 310-3A/310RE-3A.

Differences from Concept 110A-1

- Considerably larger Manufacturing area required (larger number of vehicles are manufactured concurrently).
- Requires additional TUG Maintenance Facility at ETR and WTR.

Facilities Requirements Sheets (Ref., Vol. 6, Part 2., Appendix F.) and Facilities Plan (Ref. Vol. 8., Part 1, Section 8.3) provide detail requirement, schedule and cost data.

(Ref. Vol. 8, Part IV, Sect. 8.3)

320A-3A/320AE-3A FACILITIES

HIGH MFG & MAINT. COSTS DUE TO LARGE FLEET SIZE

FUNCTION	SIZE, SQ FT	EXISTING	MODIFIED/NEW	COST, $M C OF F	COST, $M TOTAL
MANUFACTURING				.128	.700
FAB & ASSY	11,200	GAC-BPA, PLTS 2 & 3			
F/A & C/O	25,300		GAC-BPA, PLT 5		
KICKSTAGE	3,400	GAC-BPA, PLT 5			
TEST				.100	.312
STA	VARIOUS REQMTS	GAC, PLT 5 & WYLE-HUNTS			
THERMAL	-	GAC-BPA, PLT 5			
IAT	1,000	JSC - SHUTTLE ASDL & IATL			
PROPULSION	700	GAC-BPA,HPTF&MSFC-TST ST			
TANK QUAL & ACCEPT	700	GAC-BPA, HPTF			
MAINT & REFURB ETR/WTR				2.742/2.850	4.462/3.774
TUG MAINT FAC	18,000/12,000		EXT ON ORBITER OMS FAC		
PROP SYS SERV FAC	6,000		EXT ON ORBITER OMS FAC		
TUG CLEANING FAC	3,000		EXT ON ORBITER MCO FAC		
KICKSTAGE SRM FAC	1,400/-		EXT ON SHUTTLE SRM FAC		
SUPPORT/WHSE FAC	AS REQD/-	SHUTTLE SHARED @ ETR			
OFFICE	5,000/4,000	EXISTING @ ETR	NEW FAC @ WTR		
ETR/WTR LAUNCH				.413/.494	.571/.656
LAUNCH PAD	-	SHUTTLE FAC-TUG GSE			
SAFING AREA	-	SHUTTLE FAC-TUG GSE			
MISSION CONTROL CENTER	7,500		MOD SPACE @ JSC & SUNNYDALE, CALIF.		
			TOTALS	6.727	10.475

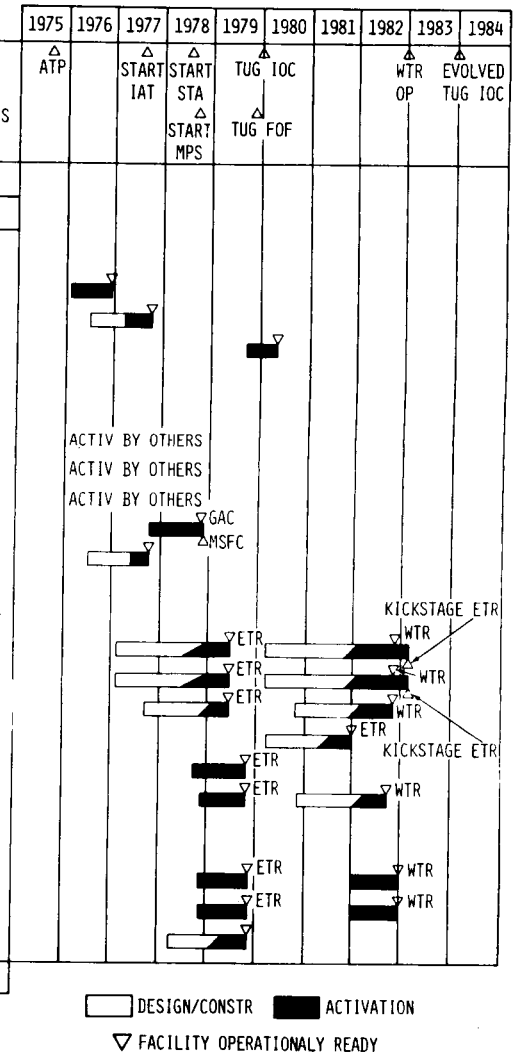

III-9

THIS PAGE INTENTIONALLY LEFT BLANK

320A-3A/320AE-3A MANUFACTURING FLOW

The manufacturing flow and sequence of assembly of the main stage and apogee kick stage is depicted. The flow diagram shows program milestones, engineering drawing release requirements, tool design and fabrication, operation sheet preparation, work order release and the manufacturing and assembly sequence for the major test articles (STA, PTV) and the first flight article.

The two stage TUG requires duplicate tank tooling and additional assembly stations to meet schedule milestones because constraints of ATP and IOC require building the two stages simultaneously. Basic flow and assembly sequence are the same as the single stage nested propellant tank configurations. The apogee kick stage (AKS) modules do not impact the basic flow critical path.

(Ref. Vol. 8, Part IV, Sect. 8.4)

320A-3/320AE-3A SPECIAL PROGRAMMATICS

The salient features defined for implementing and managing Program 320A-3A/320AE-3A include: defining the initial/evolved flight build up based on Shuttle/Tug launch constraint and ground crew launch capability; implementing 3 lot production (deploy, deploy-upgrade and retrieve); developing common upper stage and lower stage subsystems; using lower stage to perform single stage payload deploys; refurbishing the propulsion test article for operational use; and defining a fall back position for every identified risk.

Specific areas for government participation include: establishing Tug/Shuttle interface requirements before Orbiter design freeze; providing payload interface design requirements and mission model data; initiating required activities for supporting Research and Technology; providing GFE systems and components (eg: main engines, and DOD secure comm); supporting propulsion system testing and development and supporting as integrated avionics hardware testing and related software development; providing required facilities; performing vehicle ground operations, and logistic support operations.

(Ref. Vol.8, Part IV, Sect. 8.5)

320A-3A/320AE-3A SPECIAL PROGRAMMATICS

- PROGRAM IMPLEMENTATION AND MANAGEMENT
  - INITIAL/EVOLVED FLIGHT BUILD-UP SET BY SHUTTLE/TUG LAUNCH CONSTRAINTS AND GROUND CREW LAUNCH CAPABILITY
  - 3 LOT PRODUCTION (DEPLOY, DEPLOY-UPGRADE, AND RETRIEVE) TO AVOID MFG GAP
  - ✓ COMMON UPPER/LOWER SUBSYSTEMS
  - ✓ LOWER STAGE USED AS SINGLE STAGE
  - PROPULSION ARTICLE REFURBED FOR FLIGHT
  - FALL BACK POSITION SHOWN FOR EVERY IDENTIFIED RISK

- AREAS FOR GOVERNMENT PARTICIPATION
  - FIRM TUG/SHUTTLE INTERFACES BEFORE ORBITER PDR
  - PROVIDE PAYLOAD INTERFACE DESIGN REQUIREMENTS AND MISSION MODEL DATA
  - INITIATE REQUIRED SR&T
  - SUPPORT SYSTEM TEST - AVIONIC HARDWARE/SOFTWARE, PROPULSION
  - PROVIDE GFE SYSTEMS AND COMPONENTS, FACILITIES, LOGISTIC SUPPORT
  - PERFORM VEHICLE GROUND AND FLIGHT OPERATIONS

320A-3A/320AE-3A FLIGHT OPERATIONS BUILDUP

The 320A-3A/320AE-3A flight buildup is defined with the same methodology used in 310-3A/310RE-3A, ie considering: NASA defined Shuttle/Tug launch constraints, initial and evolved ETR ground crew launch capabilities, and flight mode buildup.

However, in this program a slightly larger ground crew had to be used to accommodate multiple stages during the buildup from 3 flights in 1980 to 18 flights in 1982. During the evolved period the same crew size was increased to handle the higher flight rate needed for 1986.

During the flight buildup period we recommend that initial/evolved flight crew experience be developed by starting with the simplest flight mode and then progressively introducing the more complex flight modes required for 1982 and beyond.

Our recommended flight buildup for 320A-3A/320AE-3A, including 3 flights in 1980, 15 flights in 1981, and 30 flights in 1984, encompasses 301 total flights through 1990 or 24 less than 100% payload capture traffic.

(Ref. Vol. 8, Part IV, Sect. 8.7)

320A-3A/320AE-3A FLIGHT OPERATIONS BUILDUP

INPUTS	CY 80	81	82	83	84	85	86	TOTAL FLTS.
	▽ IOC_I				▽ IOC_E			
• 100% PAYLOAD CAPTURE - ETR+WTR FLTS	21	16	18	29	38	31	36	325
ETR FLTS	21	16	18	22	33	23	27	
• SHUTTLE/TUG LAUNCH CONSTRAINT - ETR	3	21						
• INITIAL GND CREW LAUNCH CAPABIL.-ETR	15	16	19					
• EVOLVED IOC GND CREW LAUNCH CAPAB/ETR				22	25	23	27	
• TUG FLIGHT MODE BUILDUP								
SINGLE DEPLOY - 1 STAGE	3	ALL	ALL	ALL	ALL	ALL	ALL	
MULTI DEPLOY - 1 STAGE	NONE	NONE	ALL	ALL	ALL	ALL	ALL	
SINGLE DEPLOY - 1 STG. W/KS	NONE	SOME	ALL	ALL	ALL	ALL	ALL	
SINGLE/MULTI DEPLOY - 2 STAGE	NONE	SOME	ALL	ALL	ALL	ALL	ALL	
SORTIE - 1 STAGE	NONE	NONE	NONE	ALL	ALL	ALL	ALL	
RETRIEVE - 1 STAGE	NONE	NONE	NONE	NONE	ALL	ALL	ALL	
ROUND TRIP	NONE	NONE	NONE	NONE	ALL	ALL	ALL	
RETRIEVE/ROUND TRIP 2 STAGE	NONE	NONE	NONE	NONE	SOME	ALL	ALL	
RECOMMENDED FLIGHT BUILDUP ETR+WTR	3	15	18	29	30	31	36	301
ETR	3	15	18	22	25	23	27	

BUILDUP RATIONALE

- SAME AS 310-3A/310RE-3A

RISK ASSESSMENT 320A-3A/320AE-3A

The following items and their potential impact are shown on the opposite chart. The Class I engine is a new design based on current technology with the exception of the uncertainty in engine life and in the predicted performance with the high expansion, 2-position nozzle used. The 2-position, radiation cooled nozzle is itself a technology issue which complicates and increases the risk associated with the development of this engine. It is estimated engine performance can be low by 3 seconds Isp and engine nozzle/actuation system weight can increase by 10 lbs.

All existing weight reduction options have been incorporated into this vehicle; if any or all of these options fail to meet their goals there are no lighter weight alternatives available; the only recourse is to incorporate the Class II engine at a $72M cost increase, and to initiate a super weight reduction program (SWIP) down to the piece-part by piece-part level.

Although the proposed SR & T programs protect against schedule slippage by virtue of being completed at ATP, the availability of both the main engine and the advanced fuel cell remain schedule risk items.

Converting the potential weight increases to a total program cost at a $125K/lb value and adding to that the potential cost increase items, yields a total cost risk of $94.3M for 320A-3A/320AE-3A.

(Ref. Vol. 8, Part IV, Sect. 8.9)

320A-3A/320AE-3A RISK ASSESSMENT

TECHNOLOGY ITEM IMPACT	
• CLASS I ENG	-3 SEC ISP
• 2-POSITION NOZZLE	+10 LB
• PFR TANK	+39 LB
• ADV FUEL CELL	+50 LB
• ADV IMU	+30 LB
• GRAPHITE COMPOSITE	+23 LB
• LASER RADAR	COST/SCHED
• MATERIALS COMPATIBILITY • FRACTURE MECHANICS	+10 LB
• HEAT PIPES	SCHED

VEHICLE SENSITIVITY (DEPLOY)	PLAIN	WITH AKS
$\frac{\partial P/L}{\partial W}$ FIXED (LB/LB)	TBD	TBD
$\frac{\partial P/L}{\partial ISP}$ (LB/SEC)	TBD	TBD

- TECHNICAL RISK
  - POTENTIAL WT IMPACT: +162 LB
  - POTENTIAL ISP LOSS: -3 SEC

  } ≈ PAYLOAD IMPACT TBD
  - NO OPEN WEIGHT REDUCTION OPTIONS
- SCHEDULE RISK
  - PROPOSED SR&T PROGRAMS (COMPL PRIOR TO ATP) PROTECT AGAINST SCHEDULE SLIPPAGE
  - AVAILABILITY OF MAIN ENGINE & ADV FUEL CELL
- COST RISK
  - POTENTIAL Δ COST $94.3 M

HIGH RISK PROGRAM

III-88

TECHNOLOGY REQUIREMENTS AND DESIRED DATA - 320-3A/320AE-3A

The upper part of the facing chart contains the supporting research and technology (SR&T) items required for 320-3A/320AE-3A; the lower part of the chart contains what we have termed as "desired data". The distinction between the two is that the "desired data" items do not require technology but are considered straightforward engineering development tasks to produce design data prior to Tug program go-ahead (ATP); this will preclude impacting Tug schedules should the data indicate the desirability of an alternative approach, (vis., aluminum or stainless propellant tanks rather than titanium.

Excluding the SR&T on the Class I engine with its two-position nozzle, the total SR&T funds requested for 320-3A/320AE-3A is $3,290 K to be expended over a 24 month period culminating at Tug ATP or prior to go-ahead on the evolved Tug. The advanced fuel cell is the long lead item (24 months) followed by the advanced (Micron) IMU (18 months). The unusually large sum for the advanced fuel cell ($2,000 K) is the result of compressing the SR&T program to support advanced fuel cell availability prior to Tug ATP.

The SR&T for the Class I engine with a two-position nozzle will be provided by the engine contractor.

(Ref. Vol. 8, Part IV, Sect. 8.10)

320A-3A/320AE-3A TECHNOLOGY REQUIREMENTS & DESIRABLE DATA

	ITEM	SR&T FUNDS, $K	SR&T SCHEDULE, MO	PROPOSED PROGRAM
SR&T	CLASS I ENGINE WITH 2-POSITION NOZZLE	TBD	TBD	HIGH ALT TESTS TO OBTAIN PERF DATA ON HIGH ϵ NOZZLE FOR MIXTURE RATIO RANGE. ALT TESTS FOR 2-POS NOZZLE DURABILITY WITH RADIATION-COOLED SKIRT.
SR&T	LASER RADAR	500	12	FAB & TEST LIGHTWEIGHT, LOW POWER UNIT USING IMPROVED OPTICS & LIGHTER MIRROR DRIVES
SR&T	PFR HELIUM TANK	125	12	FAB & TEST 3 TANKS UNDER STATIC & DYNAMIC LOADING; AND ENVIRONMENTAL & COMPATIBILITY TESTS
SR&T	ADVANCED FUEL CELL	2000	24	FAB & TEST 3 UNITS WITH INCREASED CURRENT DENSITY, PASSIVE H_2O REMOVAL AND O_2-DRIVEN DIAPHRAGM COOLANT PUMP
SR&T	ADVANCED IMU	500	18	DEVELOP SOFTWARE FOR REDUNDANCY MGMT & CALIBRATION OF TWO MULTI-SENSOR TYPE IMU'S
SR&T	GRAPHITE COMPOSITE	15	6	FAB GRAPHITE EPOXY HONEYCOMB SAMPLES & TEST IN VARIOUS PLY DIRECTIONS FOR DESIGN DATA
DESIRABLE DATA	MATERIALS COMPATIBILITY DATA	25	6	2219-T87, 2219-T81 & 6A14VTI; WITH N_2O_4 & MMH UP TO 130°F
DESIRABLE DATA	FRACTURE MECHANICS, DATA	25	6	2219-T87 & 6A14VTI; K_{IC}, K_{TH} & FLAW GROWTH WITH N_2O_4 & MMH UP TO 130°F.
DESIRABLE DATA	HEAT PIPES	100	12	FAB & TEST VARIABLE CONDUCTANCE HEAT PIPE RADIATOR PANEL & HEADER FOR TURN-DOWN RATIO & SHUT OFF HEAT FLUX DATA

III-75

OVERVIEW 310-3B -> 310ARE-3B

This is a high performance Tug which, in its unevolved state (310-3B) has high payload capability for both single (5212 lb) and double (2350 lb) deployment. When evolved to 310RE-3B, its performance as a plain Tug drops a little on deployment but it has a useful retrieval and round trip capability. To increase the retrieval capability, a Retrieval Delay module is used in the mode shown but this requires two shuttle flights to complete the mission.

This vehicle and its flight modes is similar to 310-3A → 310RE-3A except that in this option, an AKS is used to augment the round trip capability. This in turn entails a scar weight on the otherwise identical core vehicle which degrades the plain vehicle performance relative to the 3A option.

The deployment and retrieval payload capabilities of the Tug are shown for candidate flight modes and missions, together with costs and the number of flights and vehicles upon which they were based.

(Ref. Vol. 5, Part 2, Opt 3B/1, Sect. 5.2)

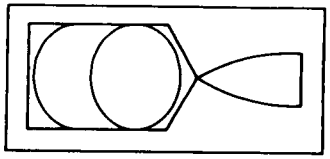

310-3B/310ARE-3B OVERVIEW

- FEATURES
  - SINGLE STAGE TUG - PHASED INTRODUCTION OF AKS & RETRIEVAL DELAY (RD)
  - CORE VEHICLE AS 310-3A EXCEPT SCAR WEIGHT FOR AKS
  - AKS USED FOR: EXTRA DEPLOYMENT ON 2ND LEG OF RD MISSIONS
  - MAIN ENGINE - CLASS 1, I_{SP} = 338 SECS
  - FIXED WEIGHTS: 310-3B _____ 3212 LB
    : 310ARE-3B _____ 3416 LB

FLIGHT MODES

310ARE-3B

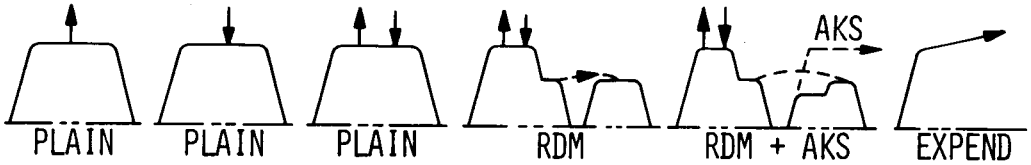

- PERFORMANCE ← GEOSYNCH → ← PLANETARY →
  PL 22 & 24
  - DEPLOY (LB) 4841
  - RETRIEVE (LB) 1543
  - ROUND TRIP (LB) 1054 2760 2400/3500/2400

- PROGRAMMATICS
  - DDT&E $M 255/346
  - TOTAL PROGRAM $M 4694
  - NO. OF FLIGHTS 365
  - NO. OF TUGS 16
  - NO. OF AKS 34
  - NO. OF RDM 4

III-78

OPTION 3B 310/310ARE-3B PERFORMANCE SUMMARY

Concept 310/310ARE meets the 3500 lb deployment and retrieval requirements for the option. The apogee kick stage has been added to the concept to increase the traffic capture potential of the concept. With the add-on stage, 2 payloads can be deployed and one payload retrieved with 2 shuttle flights. The full advantage of this potential could not be demonstrated with the traffic schedule assigned to this option. The opportunities to utilize the 3 payload to 2 shuttle flight combination did not occur frequently enought to show an advantage.

The delta-V budgets shown on the facing page text accounts for gravity losses resulting from 12,000 lb thrust engine. A finite burn simulation which utilizes a gravity turn during the early portion of the maneuver and cross product steering during the terminal portion was used to define delta-V's for the transfer and circularization burns. The transfer to geosynchronous altitude was split into two burns. A 2 degree plane change was split between the two outbound transfer maneuvers and the remaining 26.5 degrees performed during the circularization burn.

All performance calculations account for APS, EPS and stop/start consumables. A detailed calculation was made for each concept and flight mode by accounting for attitude maneuvers for prethrust orientations, navigation sightings and IMU alignments. All limit cycle operations, both narrow and wide, were accounted for in the calculations. Midcourse corrections, terminal rendezvous and translations required to null residuals after each main engine burn were taken into account in the evaluation.

(Reference Vol. 6, Section 6.3)

OPTION 3B - 310/310ARE-3B PERFORMANCE SUMMARY

VEHICLE CHARACTERISTICS (310/310ARE)

W_{BO} = 3212/3416 LBS

ADAPTOR WT = 1510 LBS

W_P - CAPACITY = 59,500 LBS

I_{SP} = 338 SEC

THRUST = 12,000 LBS

FPR = 1.7% ΔV

DELTA V FPS

	OUTBOUND	CORE ON-ORBIT	INBOUND	LOSSES
• DEPLOY	13967	0	13885	84
• RETRIEVE	13967	30	13885	84
• R'ND TRIP	13967	130	13885	84
• RETR'VL DELAY (FLT 1)	13967	114	13906	85
• RETR'VL DELAY (FLT 2)	12687	30	13555	83

CONSUMABLES - LBS

	APS	EPS+LOSSES
• DEPLOY	281	73
• RETRIEVE	409	87
• R'ND TRIP	454	162
• RETR'VL DELAY (MAX DWN)	453	166
• RETR'VL DELAY (EQ'L UP/DWN)	423	96
• FLT 2 DEPLOY		

GEO PAYLOAD-LBS

310	310ARE	
5212	4841	
	1543	
	1054	
	7000	
	2760	(2400)*
	3500	

* EQ'L UP/DWN IF KICK STAGE USED ON FLT 2

OPTION 3B - 310/310ARE - MISSION PERFORMANCE

The 310/310ARE concept can deploy and deorbit a payload on the first flight (facing page chart) and deploy a payload and retrieve the deorbited payload on the second flight. This approach for handling 3 payloads on 2 flights can be utilized for all NASA and DOD geosynchronous payloads except DOD Mission 31. If DOD elects to mix payloads to economize flights, Mission 31 could also be performed in this retrieval delay mode with an AKS assisted deployment on the second flight.

(Ref Vol. 4, Sect 4.3.4.2)

GEOSYNCHRONOUS PERFORMANCE - RETRIEVAL DELAY MODE WITH AKS CONCEPT 310ARE-3B

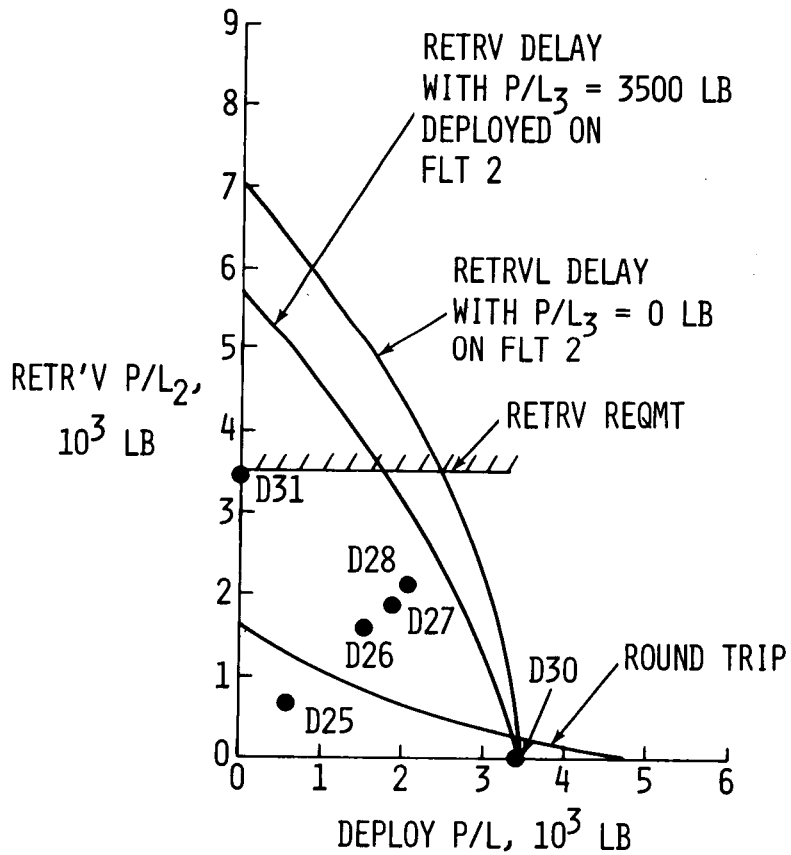

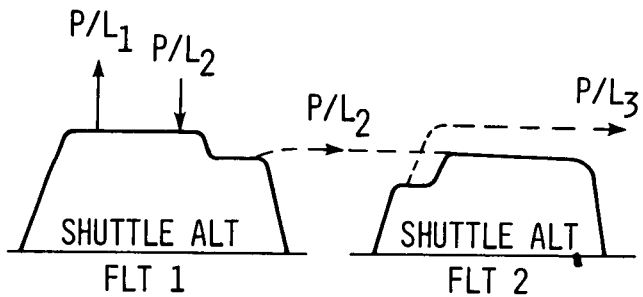

CAN DEPLOY & RETRIEVE ON EACH FLIGHT EXCEPT WITH DOD 31

III-13

OPTION 3B-310/310ARE FLIGHT SUMMARY

The addition of the AKS to the 310 concept saves approximately 14 Shuttle/Tug flights and eliminates the expending of 7 Tugs.

There are a total of 215 NASA flights, 180 of which are launched from ETR and 35 from WTR. Of the 179 DOD flights, 158 are launched from ETR and 21 from WTR. None of the WTR launches require the use of the AKS or Retrieval Delay mode.

Concept 310/310ARE has the potential of capturing 40 of the 49 additional P/L's assigned to Option 3B.

(Ref. Vol 4, Sect. 4.3.4.2)

FLIGHT SUMMARY | OPTION: (310/310ARE-3B)

FLIGHT MODE		CALENDAR YEAR											TOTAL
		80	81	82	83	84	85	86	87	88	89	90	
TOTAL FLIGHTS	SHUTTLE	20	15	17	28	52	45	45	44	38	41	49	394
	TUG												SAME
TUG FLIGHT DISTRIBUTION	DEPLOY	(20)	(15)	(17)	(27)	(21)	(12)	(15)	(21)	(13)	(18)	(18)	(197)
	SINGLE P/L-CORE	9	7	10	11	6	2	4	6	2	7	4	68
	-CORE + RD					8	8	5	7	6	6	9	49
	-CORE + KS					2		3	2				7
	MULTI P/L-CORE	11	8		16	4	2	3	6	5	4	5	71
	-CORE + KS					1					1		2
	RETRIEVE					(22)	(13)	(17)	(12)	(10)	(9)	(20)	(103)
	RETRIEVAL DELAY					4	5	2			3	3	17
	PURE RETRIEVE					9		11	8	8	1	7	44
	DELAYED RETRIEVE					9	8	4	4	2	5	10	42
	ROUND TRIP					(9)	(19)	(13)	(10)	(15)	(13)	(11)	(90)
	CORE ONLY					6	14	10	7	11	9	8	65
	CORE + KS					3	5	3	3	4	4	3	25
	SORTIE				(1)		(1)		(1)		(1)		(4)
MISSION MODEL	(TOTAL)	(34)	(23)	(24)	(48)	(64)	(64)	(60)	(63)	(59)	(62)	(62)	(563)
	DEPLOY	34	23	24	47	37	36	32	40	34	42	34	383
	RETRIEVE					27	27	28	22	25	19	28	176
	SORTIE				1		1		1		1		4
FLT RATE USED IN COSTING		3	12	17	28	39	45	45	44	38	41	49	361

ADDITION OF AKS SAVES 14 SHUTTLE FLTS ($146M)

III-23

CONFIGURATION 310ARE-3B

The 310ARE-3B configuration employs nested propellant tanks, sharing a common pressure interface only by virtue of the nested separate domes. They are of titanium alloy, welded gore construction, with the cylindrical portion of sheet-stringer construction.

The remaining outer shell is of composite honeycomb construction, attached to the tank girths by mechanical joints.

The engine thrust structure is a conical section of aluminum stiffened sheet construction also. All main support and intermediate frames are of aluminum alloy construction.

An aluminum meteorite shield, supported by fiberglass standoffs on 6" centers, protects the propellant tank over its cylindrical portion.

Twelve lock latches are located at both ends of the Tug for final securing of payloads to Tug and Tug to support adapter. Twelve conical index fittings at both forward and aft interfaces serve to index and align the mating surfaces and transmit shear and compression loads across the interface.

All subsystem equipments are located in side mounted equipment modules for easy access and serviceability.

Double goldized mylar blankets with nylon net spacers in conjunction with suitable surface coatings on all exterior surfaces provide the required thermal balance for the spacecraft. In addition aluminum heat pipe radiators mounted on the surface of the equipment modules maintain the thermal balance of the equipment modules.

Four equally spaced probe/drogue type probes are installed at the forward interface for executing retrieval operations.

A complete inboard profile and structural arrangement for this configuration may be found in Volume 5.

(Ref. Vol 5, Part II, Opt 3B/1, Sect 5.2)

INBOARD PROFILE - 310ARE-3B: SIDE VIEW

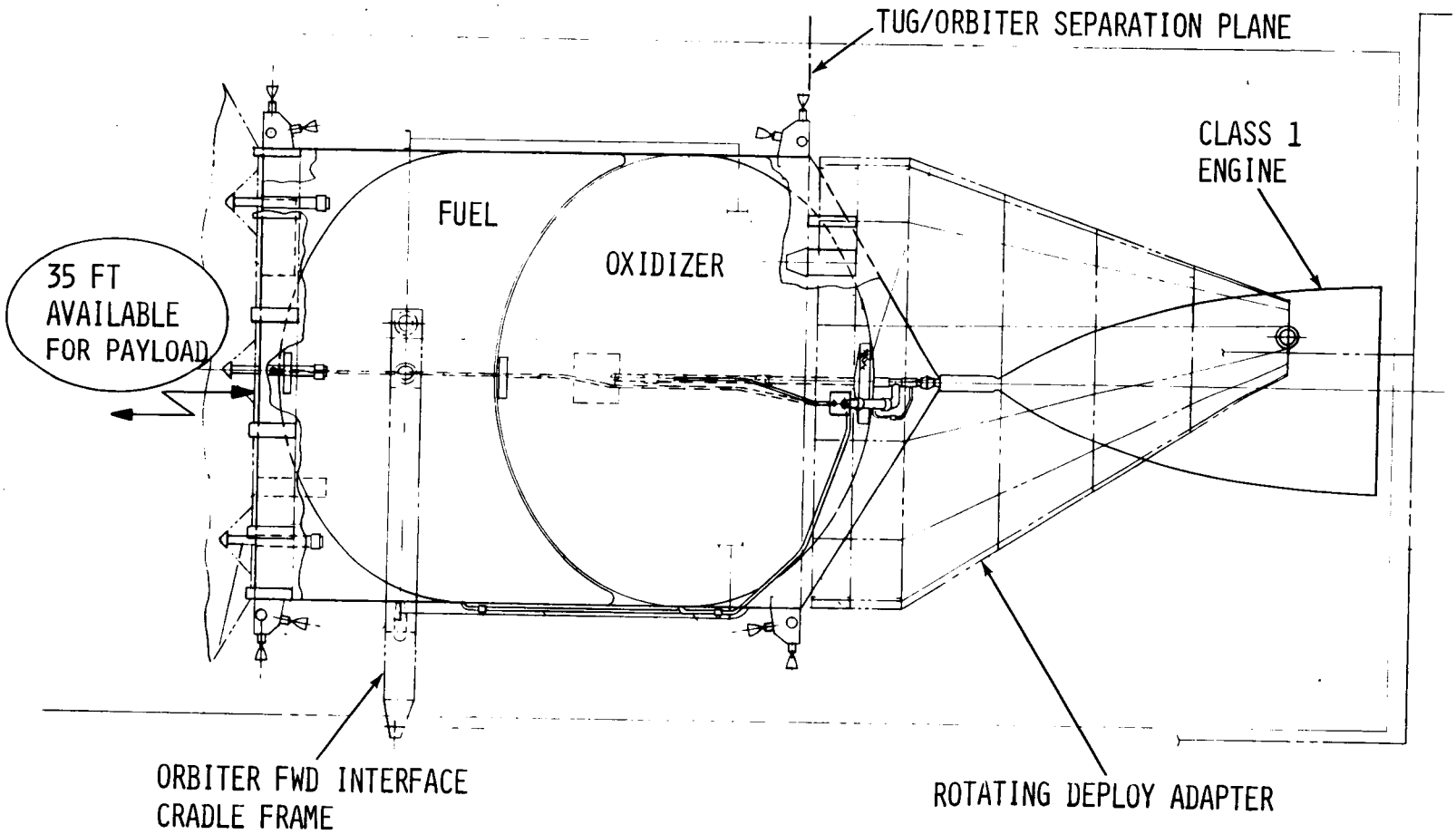

III-101

THIS PAGE INTENTIONALLY LEFT BLANK

INBOARD PROFILE - 310ARE-3B: PLAN VIEW

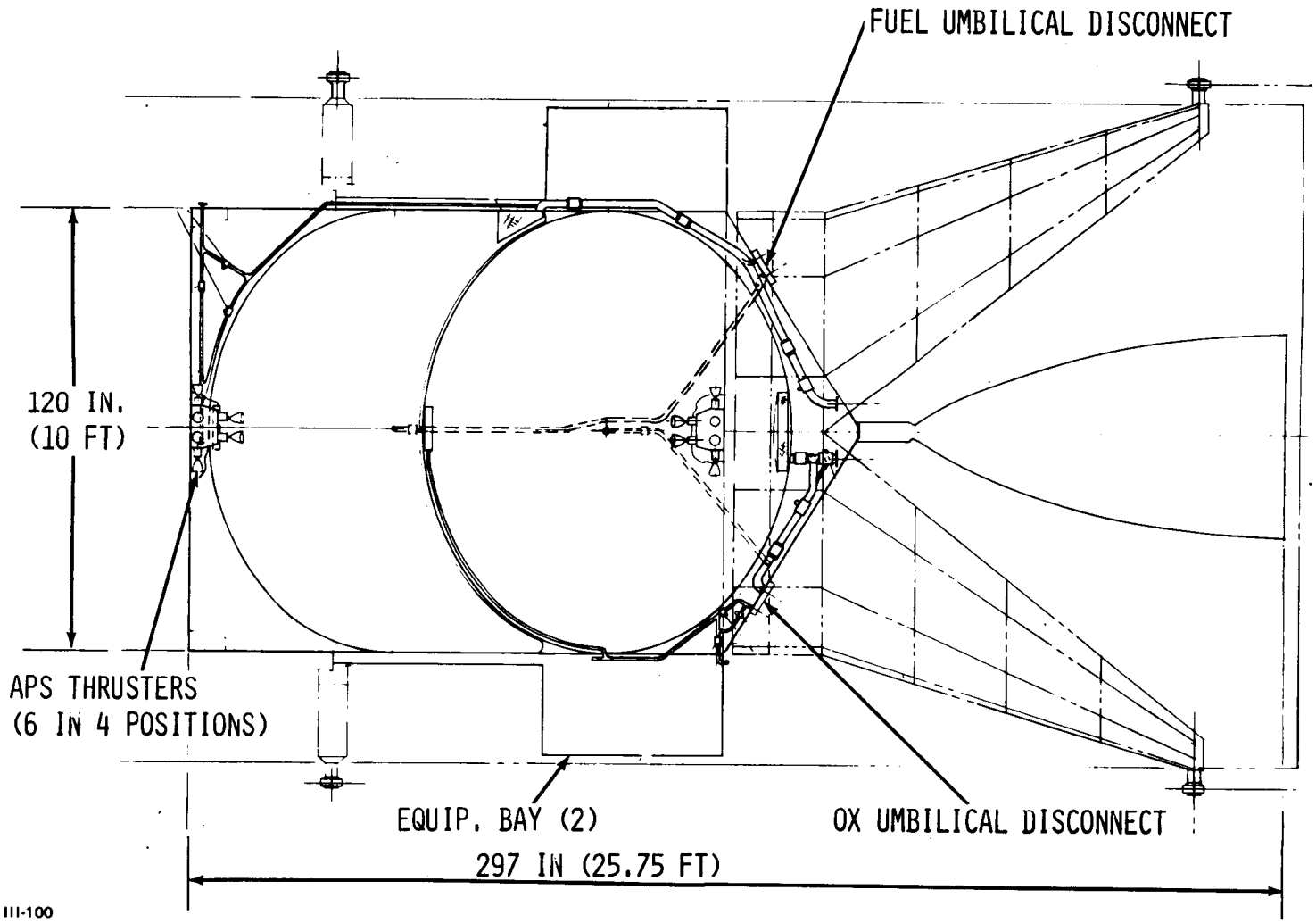

III-100

THIS PAGE INTENTIONALLY LEFT BLANK

CONFIGURATION DESIGN DATA AND WEIGHT SUMMARY
SINGLE STAGE STORABLE TUG 310-3B

ITEM	FEATURES	WEIGHT-LB
• STRUCTURE		1233
TANKS	NESTED DOME-TI GORES CAP. = 59500 LB	
FRAMES	ALUMINUM	
OUTER SHELL	COMPOSITE HONEYCOMB	
DOCKING	DEPLOYMENT MECHANISMS	
• PROPULSION		700
MAIN ENGINE	CLASS I-THRUST =12000 LB Isp = 338 SECS	
PRESSURIZATION	AMBIENT HELIUM - PFR TANKS-CAP. = 14.2 LB	
ACPS	HYDRAZINE - 16 THRUSTERS x 25 LB CAP.=317 LB	
• THERMAL CONTROL		89
	MYLAR TANK INSUL. COATINGS, RADIATOR	
• AVIONICS		673
RENDEZVOUS & DOCK	AUTONOMY LEVEL IIIA-DEPLOYMENT CAPABILITY	
DATA MANAGEMENT	COMPUTER - 48K WORDS -2 REQ'D	
GUIDANCE AND NAV	CAROUSEL IMU WITH GYRO BACKUP	
GUIDANCE UPDATE	GROUND UPDATE	
POWER	MODIFIED F/C - CYRO TANKS CAP. = 104 LB	
	DRY WEIGHT	2695
	DRY WEIGHT & CONTINGENCY	2965
	NON USABLE PROPELLANT	247
	BURNOUT WEIGHT	3212
DEPLOY MISSION	NON IMPULSE EXPENDABLES/ACS PROPELLANT	354
	MAIN PROPELLANT	54712
	PAYLOAD	5212
	TUG AT FIRST IGNITION	63490
	SHUTTLE INTERFACE ITEMS	1510
	TOTAL-SHUTTLE INSTALLED	65000

III-49

CONFIGURATION DESIGN DATA & WEIGHT SUMMARY · TUG 310-3B/310ARE-3B

The features summarized in this chart and the similar one on the previous page provide some insight into the subsystem details and reflect the option for which the Tug is designed. The Tug described on these two charts are directly comparable to 310-3A/310RE-3A outlined earlier in Option 3A. The only development or engineering difference between this Tug and the 310 in Option 3A is the phased introduction in Option 3B of an Apogee Kick stage in addition to the Retrieval Delay Module. This makes only minor additions to the core vehicle scar weight.

The weights - summarized by subsystem are presented to WBS level 6 in Vol. 5 together with c.g. and inertia data. These weights are further itemized in Vol. 5 to WBS level 7 or lower; all subsystem components being listed on the Data Forms "B" which are included in each subsystem description for each Tug.

At the bottom of the chart are weights showing a typical build-up to the 65,000 lb Shuttle payload capacity. The example given is for a plain Tug deploy mission. Other missions have different figures for consumables, main propellant loading and payload. These are given in detail both in Vol. 4 and Vol. 6.

(Ref. Vol 5, Part II, Opt. 3B/1, Sect 5.2)

CONFIGURATION DESIGN DATA AND WEIGHT SUMMARY
SINGLE STAGE STORABLE TUG 310ARE-3B

ITEM	FEATURES	WEIGHT-LB
• STRUCTURE		1286
TANKS	NESTED DOME-TI,CORES CAP. = 59500 LB	
FRAMES	ALUMINUM	
OUTER SHELL	COMPOSITE HONEYCOMB	
DOCKING	DEPLOYMENT AND RETRIEVAL MECHANISMS	
• PROPULSION		738
MAIN ENGINE	CLASS I-THRUST = 12000 LB-Isp=338 SECS	
PRESSURIZATION	AMBIENT HELIUM - PFR TANKS-CAP. = 14.2 LB	
ACPS	HYDRAZINE - 25 THRUSTERS x 25 LB CAP. = 450 LB	
• THERMAL CONTROL		89
	MYLAR TANK INSUL. COATINGS, RADIATOR	
• AVIONICS		768
RENDEZVOUS & DOCK	AUTONOMY LEVEL IIB-RETRIEVAL-LASER RADAR + TV	
DATA MANAGEMENT	COMPUTER-65K WORDS-2REQ'D	
GUIDANCE AND NAV	2 x MICRON IMU - 1 x STAR TRACKER	
GUIDANCE UPDATE	SATELLITE AND DOPPLER	
POWER	MODIFIED F/C-CRYO TANKS CAP. = 104 LB	
	DRY WEIGHT	2881
	DRY WEIGHT & CONTINGENCY	3169
	NONUSABLE PROPELLANT	247
	BURNOUT WEIGHT	3416
DEPLOY MISSION	NON IMPULSE EXPENDABLES	73
	ATTITUDE CONTROL PROPELLANT	281
	MAIN PROPELLANT	54879
	PAYLOAD	4841
	TUG AT FIRST IGNITION	63490
	SHUTTLE INTERFACE ITEMS	1510
	TOTAL-SHUTTLE INSTALLED	65000

MAIN PROPULSION SUBSYSTEM (MPS) DESCRIPTION 310-3B/310ARE-3B VEHICLE

This vehicle utilizes the Class I engine to meet performance goals and reduce operational costs through multiple deployment.

The MPS is based upon a design which is almost completely state-of-the-art. the only new design is the helium tanks which are of light weight prestressed filament reinforced (PFR) construction.

The remainder of the pressurization system in conventional, with pressure control provided by modified OMS regulators and relief valves. The requirement to meet a 0.97 mission reliability dictates the installation of redundant regulators and helium initiating valves. Quad check valves downstream of each regulator prevent the backflow of propellant vapors into the regulators and upstream portions of the helium system. Solenoid valves straddling each relief valve/burst disc assembly allows selective tank depressurization.

Zero g starts are provided for by screen type propellant retention devices located over each tank outlet and provide sufficient propellant to maintain engine operation until the remainder of the propellant settles. A prevalve is installed upstream of each engine inlet to isolate the propellants from the engine during ground and launch operations and allow engine drain between burns.

Ground drain, in both the horizontal and vertical positions, is provided. The horizontal drain lines lead from the tank equators to the umbilical disconnect panels. Two umbilical disconnect panels are provided on opposite sides of the vehicle. All lines leading to a panel have redundant shutoff capability to meet the MPS fail safe requirement.

310-3B/310ARE-3B MAIN PROPULSION SUBSYSTEM (MPS)

DRIVER REQUIREMENTS

- $20X10^6$ LB-SEC TOTAL IMPULSE
- 10 BURNS/MISSIONS
- 121 HR ON-ORBIT TIME
- 10 MIN MIN RESTART TIME
- 69 HR MAX RESTART TIME
- VERTICAL & HORIZONTAL DRAIN
- MIN 16 PSIA ENG INLET PRESS.
- OFF-LINE SERVICING & CHECKOUT

MPS DEFINITION

- CLASS I ENG
- NESTED DOME TANKS
- PFR He TANKS (3500 PSIA)
- 2 IN. (FUEL), 3 1/4 IN. (OXID) DIA FEEDLINES
- DUAL He ISOL VALVES & REG ASSY
- 23 IN. DIA He BOTTLE

MPS PERFORMANCE

- 12000 LB THRUST
- 338.0 SEC ISP
- 24 PSIA (MAX) MMH TANK PRESS
- 36 PSIA (MAX) N_2O_4 TANK PRESS.
- 14.2 LB HELIUM
- 59,500 LB PROP.
- 1.9 MIXTURE RATIO

DEVELOPMENT RISK & TECHNOLOGY

- PFR TANK

- NEW ENG BASED UPON CURRENT TECHNOLOGY, MODERATE RISK
- 88% OF COMPONENTS EXISTING OR MOD EXISTING DESIGNS

III-84

MAIN PROPULSION SUBSYSTEM (MPS) - 310-3B/310ARE-3B

The 310-3B/310ARE-3B engine is required to start up to 10 times per mission, and must remain on-orbit for up to 121 hours. The planetary missions require that the Tug be turned around and retrofired as soon as possible after the planetary insertion burn. This leads to the minimum restart requirement of 10 minutes.

The capability to drain and depressurize the vehicle in both the horizontal and vertical positions is provided. An in-flight dump system was not included; however, a sensitivity study has been conducted which indicates that it can save vehicle weight and cost due to the reduction in maximum landing weight, and it probably will be baselined.

This vehicle uses nested dome propellant tanks and a pair of prestressed filament reinforced (PRF) helium tanks. In order to meet the 0.97 mission reliability, redundant helium isolation valves and regulators are included. The engine is the Class I producing a thrust of 12,000 lbs. and an Isp of 338 seconds at a 1.9 mixture ratio. This engine is a new design based upon current technology. As such, it can provide reasonably high performance at moderate development risk and cost.

The PFR tank is the only subsystem component, other than the engine, representing any significant development risk. Failure to develop the tank would mean a 48 lb. weight increase should a titanium tank be used as a fall back position. Fourteen of the sixteen (88%) types of subsystem components are either existing or modifications of existing designs, further reducing subsystem development risk.

MPS SCHEMATIC - 410AD-2, 310-3A, 310RE-3A, 310-3B, 310ARE-3B, 510A-3B, 510ADE-3B

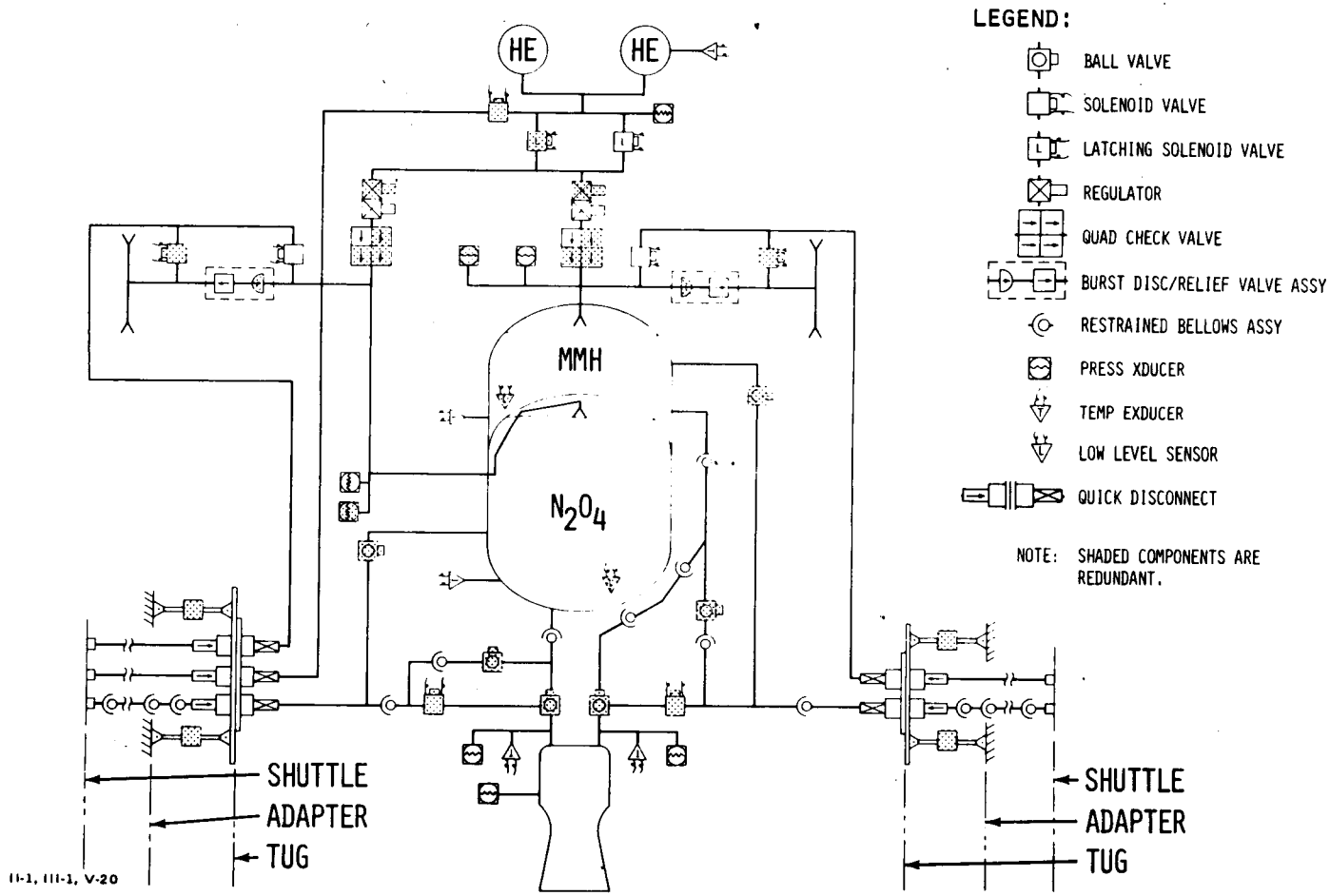

AUXILIARY PROPULSION SYSTEM - 310/310ARE-3B

The fail operational/fail safe requirement demands that the mission be completed after any single failure and shuttle/crew safety be guaranteed after two failures.

Sixteen thrusters is the minimum number required to provide attitude control after two thruster failures. Thrust level is driven by the requirement to provide relatively high acceleration in one axis for mid-course corrections on Tugs which deploy only and by the requirement for high accelerations in three axes to achieve successful rendezvous on Tugs which retrieve payloads. The retrieval case requires an increase to twenty four thrusters. The "minimum thrust" requirement is derived from minimum tolerable accelerations which achieve mission completion and is used to establish thruster requirements for the one engine failed case.

Tanks are sized for the guaranteed usable propellant plus 10% contingency. Contingencies include quantity gaging error, trapped propellant and propellant for cross-coupling losses in the event of a thruster failure.

The only component in the system which is not classified as existing or modified existing is the bladder. However the advanced state of elastomeric bladder technology renders it a non-risk item.

310A-3B/310ARE-3B AUXILIARY PROPULSION SYSTEM (APS)

DRIVER REQUIREMENTS

- USABLE PROPELLANT = 317/450 LB
- MIN THRUST PER AXIS = 50*/±50 LB
- NOMINAL THRUST PER AXIS = 100*/±100 LB
- FAIL-OPERATIONAL/FAIL SAFE DESIGN
- VENT SYS TO 20 PSI AT TUG RETRIEVAL
- VERIFY PROPELLENT QUANT PRE-DOCKING
- NO VENTING IN PAYLOAD BAY

* Y AXIS ONLY

APS DEFINITION

- MONOPROPELLANT HYDRAZINE
- 16/24 THRUSTERS @ 25 LB THRUST EACH
- 3/4 PROPELLANT TANKS, LM RCS DESIGN 12.5" D x 34" LONG
- ELASTOMERIC BLADDER PROPELLANT ACQ
- 1/2 TITANIUM HELIUM TANK, 15.3/12.3" D
- 5/8" LIQUID LINES, 1/2" GAS LINES

APS PERFORMANCE

- I_{SP} = 232 STEADY STATE, 170 MIN PULSING
- PRESSURE BUDGET
  - HELIUM TANK = 2600/3900 PSI MAX
  - PROPELLANT TANK = 340 PSI
  - THRUSTER INLET = 325 PSI MIN
  - CHAMBER PRESS. = 140 PSI
- 10% CONTINGENT PROPELLANT REQ

DEVELOPMENT RISK & TECHNOLOGY

- NO TECHNOLOGY ISSUES
- APPROX 90% EXISTING OR MOD EXISTING COMPONENTS

III-34

APS SCHEMATIC - 310ARE-3B

The description utilized for the initial configuration applies. Additions incorporated in the evolved configuration consist of one helium pressurization tank, one monopropellant tank, and two additional thrusters per APS cluster.

Ref. Vol. 5, Part II, Opt. 3B/1, Sect. 5.2

APS SCHEMATIC - 310RE-3A, 310ARE-3B, 410AD-2, 510ADE-3B

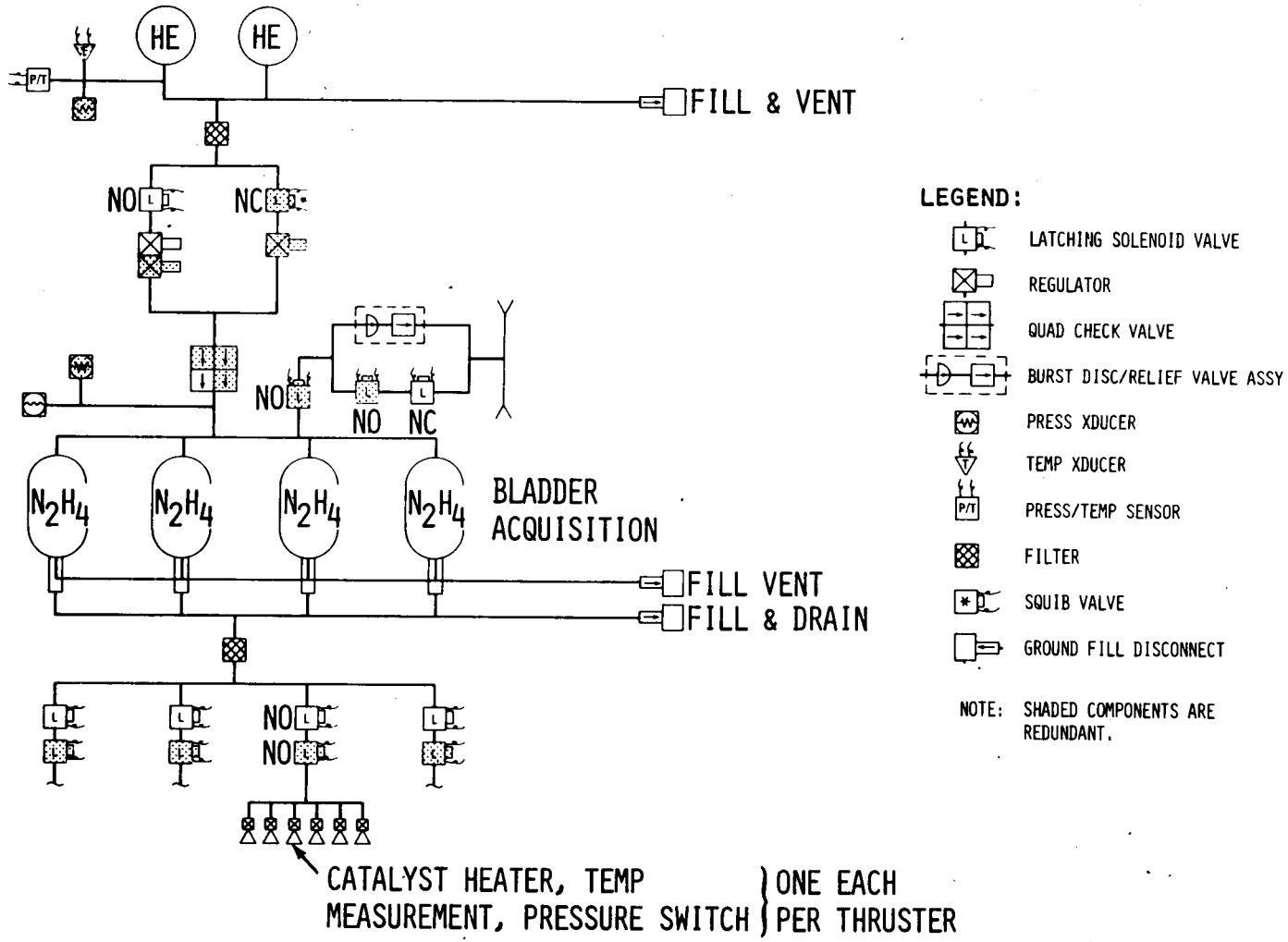

II-2 III-3, V-16

The Auxiliary Propulsion System is a helium pressurized, monopropellant hydrazine design incorporating state-of-the-art hardware. All components are redundant to the extent that mission completion is possible after any single failure and shuttle/crew safety is guaranteed after any two failures (fail operational/fail safe).

Helium is stored in off-the-shelf, spherical titanium vessels. The helium latching solenoid valve and regulator package, modified LM components, provide pressure regulation to approximately 350 psi. A downstream quad check valve, another LM type design, protects the regulators/solenoid valves against contamination by propellant vapors which may diffuse through the propellant tank bladders. The propellant tanks are modified LM Reaction Control System tanks. They are equipped with fully reusable elastomeric (EPT-10) bladders for propellant acquisition.

The solenoid valve upstream of the relief and vent valve package protects against a failure of the relief valve to reseat or of both vent valves to close after vent, conditions which create a potential tank implosion situation during reentry. Series redundant thruster isolation valves, normally open during Tug operation, are closed in the event of an open thruster failure. Each set of valves isolate one of four groups of thrusters. Four manifolds is the minimum number possible which retains the fail op/fail safe criteria. That is, two groups of thrusters can be isolated and vehicle attitude controlled in all axes.

The thrusters are the 25 lb. thrust, 232 sec. Isp Hamilton Standard model REA 19-3, which was developed for use as the shuttle vernier engine when it incorporated a monopropellant reaction control system. Each thruster is equipped with a catalyst heater to maintain it at 150°F for life considerations.

APS SCHEMATIC -310-3A, 310A-3B, 510A-3B

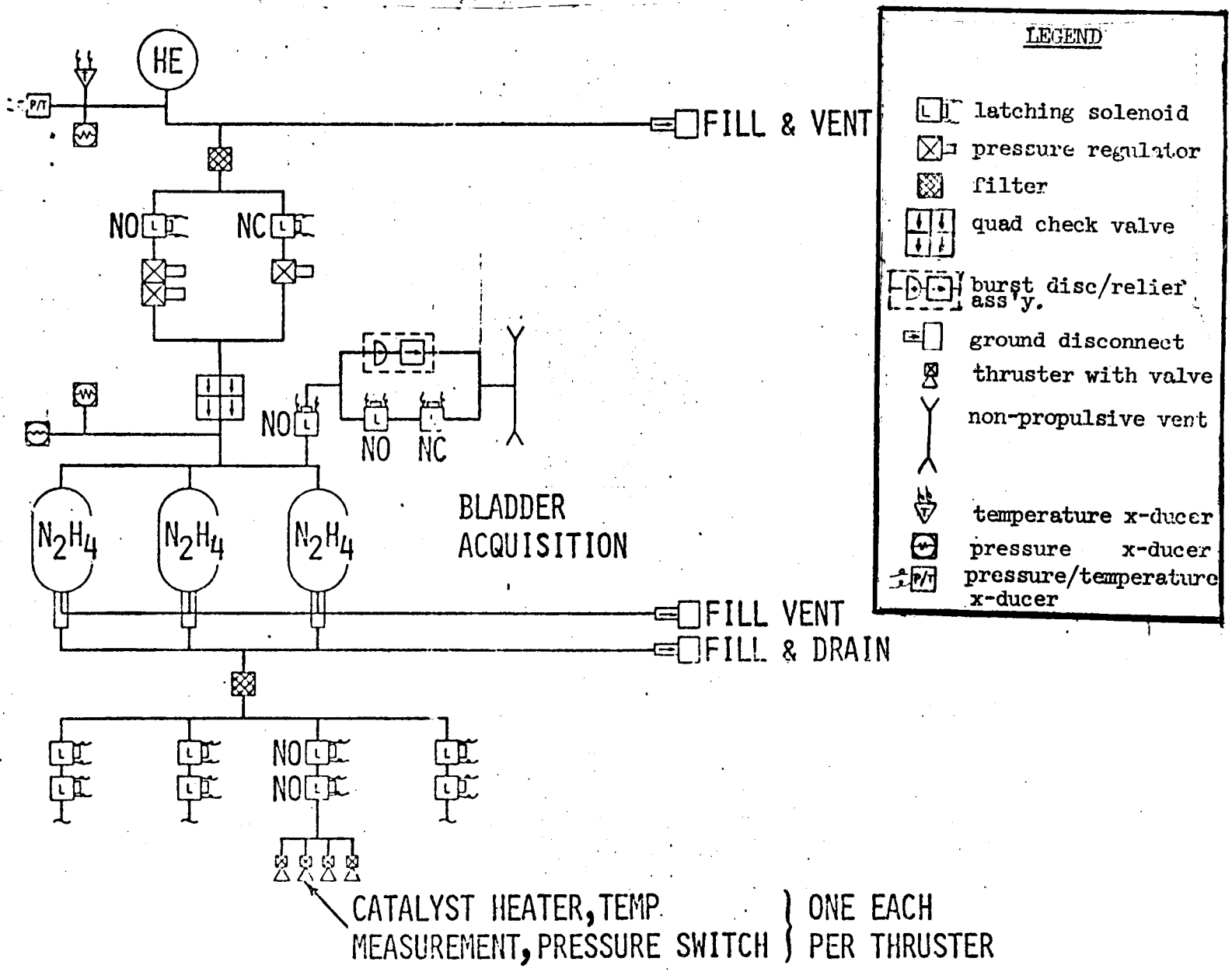

ASTRIONICS SUBSYSTEMS - 310-3B

The 310-3B is a single stage deploy-only Tug that evolves into configuration 310ARE-3B. The mission reliability requirements are met with a redundant transmitter and power amplifier in the Dedicated Frequency Station of the Communications Subsystem. The other redundant equipments (computer, APS control electronics, and 2 DFS receivers) are carried for safety reasons as is the rate gyro backup unit for the IMU. The fuel cell power supply is also backed up by a 10 amp-hr. battery for the same safety reason i.e., Orbiter crew safety during Tug deployment and docking.

Since the 310-3B does not have the capability to retrieve payloads, there is no requirement for the Tug to communicate with payloads via RF link, thus permitting a single Dedicated Frequency Station (DFS) to be used for radio communication between Tug and ground. The DFS is designed to be compatible with the NASA (STDN) and Air Force (SGLS) tracking networks as well as the projected NASA Telemetry and Data Relay Satellite System (TDRSS).

With the exception of the communications subsystem, a high percentage of all astrionics equipment is modified existing equipment. The S-Band communications equipment is new primarily because it is designed to be compatible with TDRSS (spread spectrum) and CCIR interference requirements. No new technology is required for any 310-3B astrionics equipment.

(Ref. Vol. 5, Part II, Option 3B, Section 5.2)

310-3B ASTRIONICS SUBSYSTEMS - AUTONOMY LEVEL IIIA

GUIDANCE, NAVIGATION & CONTROL

- CAROUSEL IVB IMU BACKED UP BY RATE GYRO UNIT FOR SAFETY
- STAR TRACKER
- 95% MOD EXISTING EQUIP.
- NO NEW TECHNOLOGY

COMMUNICATION

- TUG/ORBITER OR TUG/GND COMM
- DEDICATED FREQ STA (DFS)
- S-BAND SYS - INTERNALLY REDUNDANT
- STDN/SGLS/TDRSS COMPATIBLE
- NEW EQUIP. REQ
- NO NEW TECHNOLOGY REQ

DATA MANAGEMENT

- 48K WORD CDC 469 COMPUTER DUAL-REDUNDANT
- ODETICS DDS 3000 TAPE RECORDER
- FLEXIBLE SIGNAL INTERFACE SYS
- 90% MOD EQUIP.
- NO NEW TECHNOLOGY

NO NEW TECHNOLOGY

ELECTRICAL POWER

- MOD SHUTTLE FUEL CELL STACK (2.5KW AT 28VDC)
- CRYOGENICALLY STORED REACTANTS
  - 1-O_2 TANK & 1-H_2 TANK
  - CAPACITY = 94 KW-HR
- 10 AMP-HR EMERGENCY BAT. FOR SAFETY
- 70% MOD EXISTING EQUIP.
- NO NEW TECHNOLOGY

III-29

ASTRIONICS SUBSYSTEMS 310ARE-3B

The 310ARE-3B evolves from the 310-3B to a Tug with full deployment and retrieval capability and a higher level of autonomy. The addition of laser rendezvous radar and TV provide the sensing capability necessary for the rendezvous and docking functions. Level IIB autonomy in navigation is achieved by the addition of a 621B satellite receiver and one-way doppler equipment.

Two advanced IMU's are installed in place of the Carousel IMU and the rate gyro back-up unit. The mission reliability requirements are met by the redundant IMU. The crew safety equipment added to the 310-3B is retained in the evolved version. Communications evolves to a system that can communicate with the payload using the Channel Selectable Station. The added burden of processing the on-board navigation measurements necessitates an increase in computer capacity from a previous 48K word memory to a 65K memory.

No new technology is required for the DMS, EPS and Communications Subsystems. However, new technology is required for the advanced IMU and laser radar.

(Ref. Vol. 5, Part II, Option 3B, Section 5.2)

310ARE-3B ASTRIONICS SUBSYSTEMS - AUTONOMY LEVEL IIB

GUIDANCE, NAVIGATION & CONTROL

- ■ ADV IMU
- ● STAR TRACKER
- ■ LASER RENDEZVOUS RADAR
- ■ 621B SATELLITE RCVR
- ■ ONE-WAY DOPPLER RCVR
- ● RISK - AVAILABILITY OF 621 B SYS
- ● NEW EQUIPMENT REQ
- ● NEW TECHNOLOGY
  - IMU
  - LASER RADAR

COMMUNICATIONS

- ■ TUG/PAYLOAD, TUG/GND, TUG/ORBITER, TV COMM
- ● DEDICATED FREQ STA (DFS)
- ■ CHANNEL SELECTABLE STA (CSS)
- ● S-BAND SYS - INTERNALLY REDUNDANT
- ● STDN/SGLS/TDRSS COMPATIBLE
- ● NEW EQUIP. REQ
- ● NO NEW TECHNOLOGY REQ

DATA MANAGEMENT

- ■ 65K WORD CDC 469 COMPUTER DUAL-REDUNDANT
- ● ODETICS DDS 3000 TAPE RECORDER
- ● FLEXIBLE SIGNAL INTERFACE SYS
- ● 90% MOD EQUIP.
- ● NO NEW TECHNOLOGY

ELECTRICAL POWER

- ● MOD SHUTTLE FUEL CELL STACK
  - 2.5KW AT 28VDC
- ● CRYOGENICALLY STORED REACTANTS
  - 1-O_2 TANK & 1-H_2 TANK
  - ENERGY CAPABILITY = 94 KW-HR
- ● 10 AMP-HR EMERGENCY BAT. FOR SAFETY
- ● SOLID-STATE & ELECTROMECH POWER CONTROLLERS
- ● 70% MOD EXISTING EQUIP.
- ● NO NEW TECHNOLOGY

● EVOLUTION BY REPLACEMENT & ADD-ONS

● AVG POWER SAME

■ EVOLUTIONARY CHANGE

III-30

ASTRIONICS SCHEMATIC - 310-3B

The Data Management Subsystem (DMS) with its Flexible Signal Interface (FSI) is the pivot around which all other astrionic systems revolve. The remaining astrionic systems feed data or commands to the DMS or take commands and information from it. The Communication Subsystem receives and transmits over 2 antennas located 180° apart on the vehicle for total coverage. The incoming information and commands move through the diplexers, redundant receivers and baseband processors to the DOD secure communication units. The secure comm. is used for DOD payloads only. From the output of the Comm. Subsystem the information flows to the Flexible Signal Interface Controller (FSI) and then into the computer. Telemetry signals flow from the instrumentation sensors through Data Acquisition Control Units (DACU) to the FSI and then out through the Comm. system. The guidance, navigation and control information that is measured by the IMU, Star Tracker and Rate Gyros flows through a DACU to the FSI and then to the computer for processing with uplinked data. The control outputs from the computer go to the MPS, EPS and APS Subsystems as well as to the ME/TVC and APS electronic units. These are the outputs that activate and control the electrical power systems and thrusting systems of the vehicle.

Status information flows from auxiliary stages to the computer and commands flow from the computer to the auxiliary stages over hardwires.

The information to and from the orbiter is also sent over hardwires when the Tug is in the orbiter payload bay.

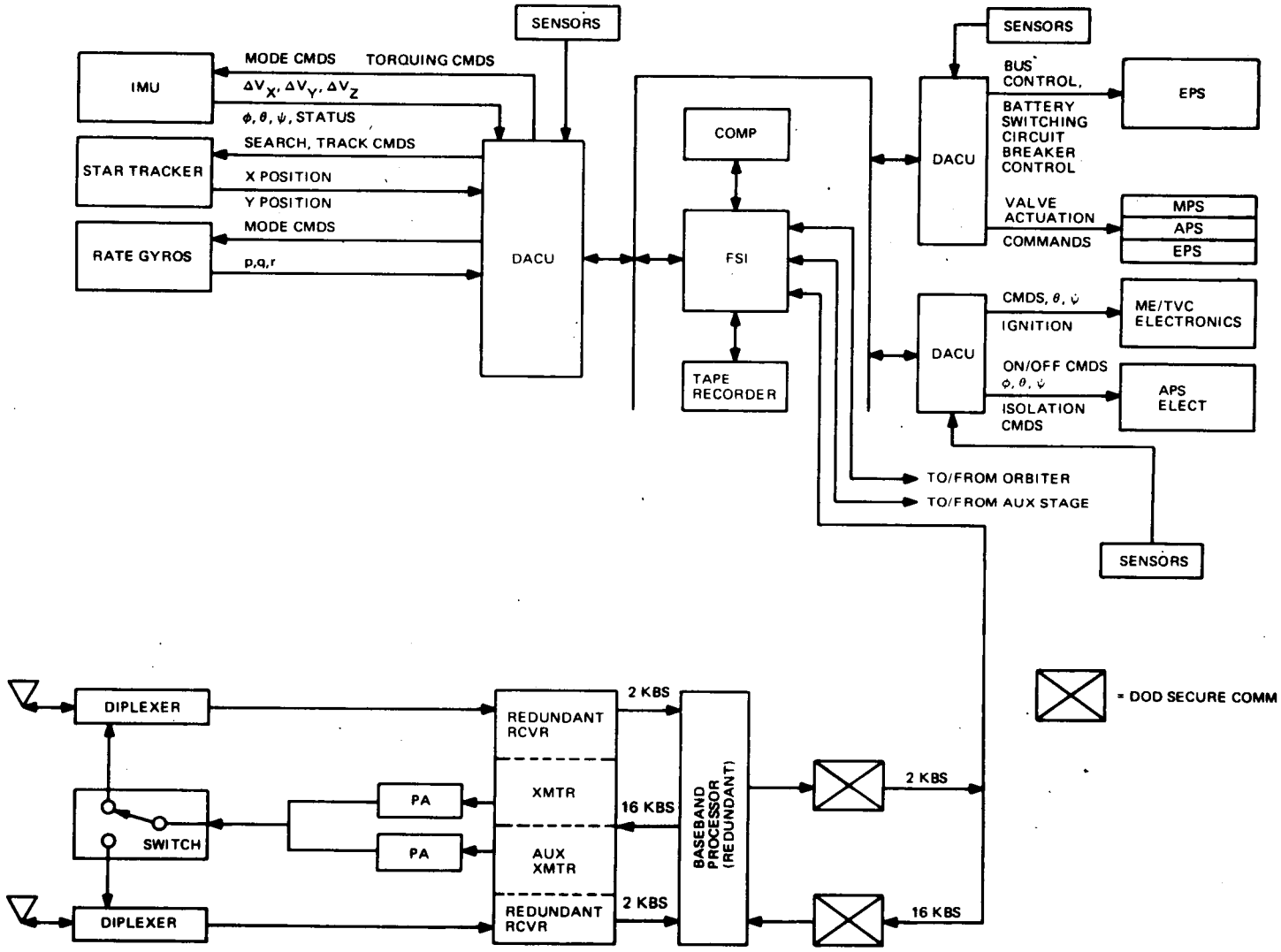

V-1B

Astrionics Schematic For Configuration 110A-1, 310-3A, 310-3B, 510A-3B Level IIIA Autonomy

ASTRIONICS SCHEMATIC - 310ARE-3B

The Data Management Subsystem (DMS) with its Flexible Signal Interface (FSI) is the pivot around which all other astrionic systems revolve. The remaining astrionic systems feed data or commands to the DMS or take commands and information from it.

The Communication Subystem in these configurations consists of a Dedicated Frequency Station (for communication between Tug and Orbiter or between Tug and ground) and a Channel Selectable Station (for communication between Tug and payloads or Tug and Orbiter). The incoming information and commands move through the diplexers, redundant receivers and baseband processors to the DOD secure communication units. The secure comm. is used for DOD payloads only. From the output of the Comm. Subsystem the information flows to the Flexible Signal Interface Controller (FSI) and then into the computer. Telemetry signals flow from the instrumentation sensors through Data Acquisition Control Units (DACU) to the FSI and then out through the Comm. system.

The television camera is a ground controlled unit and its commands flow through the communication subsystems to the DMS system for processing then out to control the camera. The TV information flows back to the ground via the comm. subsystem. The guidance navigation and control information that is measured by the IMU, Star Tracker, Laser Radar, 621B Satellite Receiver and Doppler Receiver flows through a DACU to the FSI and then to the computer for processing. The control outputs from the computer go to the MPS, EPS and APS Subsystems as well as to the ME/TVC and APS electronic units. These are the outputs that activate and control the electrical power systems and thrusting systems of the vehicle.

Status information flows from auxiliary stages to the computer and commands flow from the computer to the auxiliary stages and hardwires.

The information to and from the orbiter is also sent over hardwires when the Tug is in the orbiter payload bay.

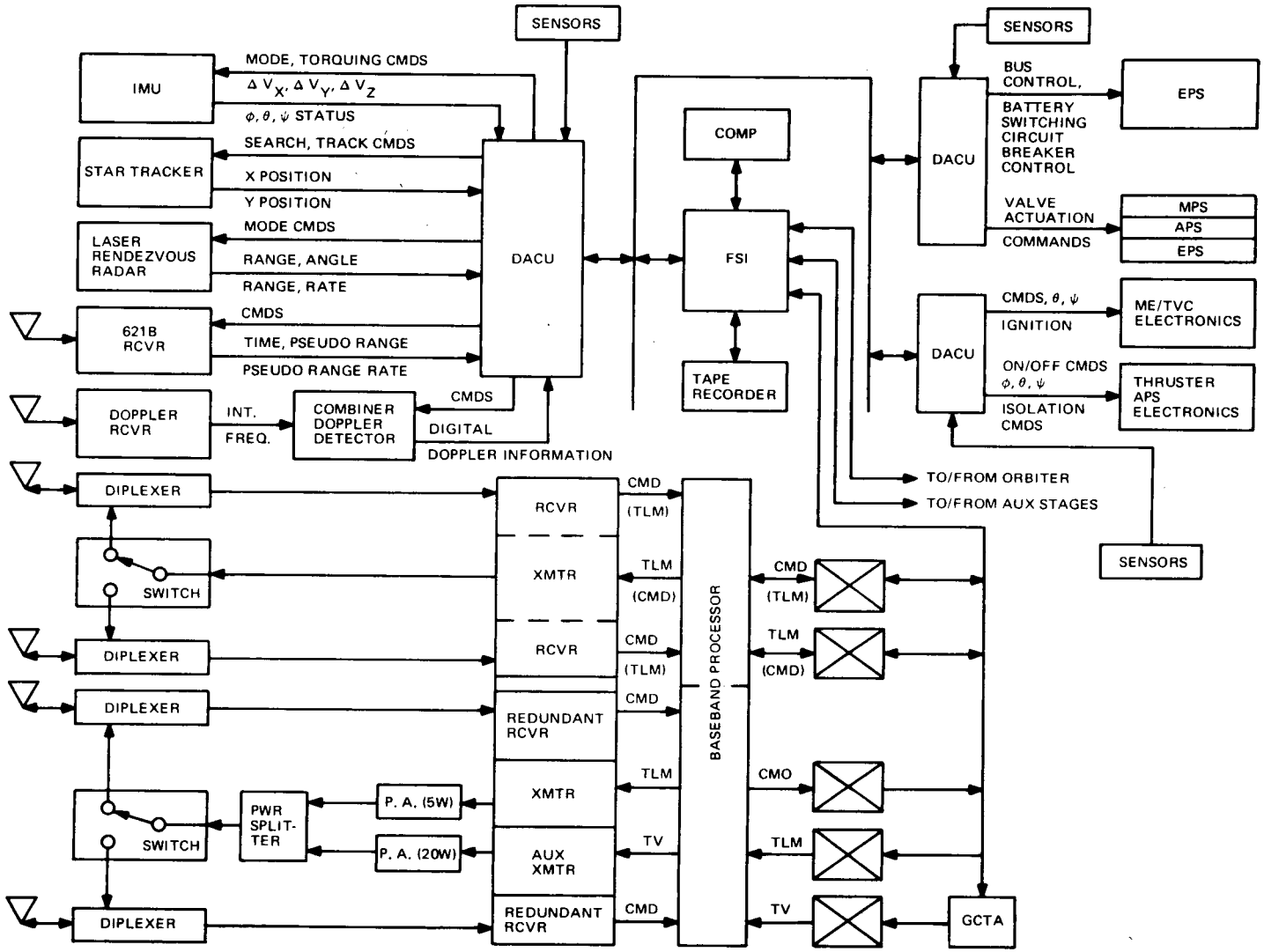

V-1A

Astrionics Schematic For Configuration 310RE-3A, 310ARE-3B, 410AD-2, 510ADE-3B Level II B Autonomy

ELECTRICAL POWER SUBSYSTEM SCHEMATIC 310-3B/310ARE-3B

The prime power source is a modified fuel cell providing up to 2.5 KW at 28 VDC. The hydrogen and oxygen fuel cell reactants are stored in single cryogenic dewars above the supercritical point and supply high pressure gases to the reactant pressure control valves. The fuel cell nominally operates at 60 PSIA and 180°F. The fuel cell oxygen and hydrogen purge plus product water vents are routed overboard. The coolant loop pump is provided within the fuel cell assembly. The fuel cell feeds both equipment bay buses and is backed up by a 10 amp-hr secondary silver zinc battery. This emergency battery powers essential equipment during Orbiter/Tug deployment and retrieval operations and provides for Orbiter crew safety.

The distribution section is a combination two-wire and structure ground (return bus) system. Solid state power controllers are used for applications requiring 5 amps or less and electromechanical remote control circuit breakers are used for 20 amps or larger applications. The orbiter supplies power for critical Tug equipments (e.g. I M U) from earth launch through Tug deployment. GSE power is required for ground checkout. The Tug supplies payload power when separated from the Orbiter.

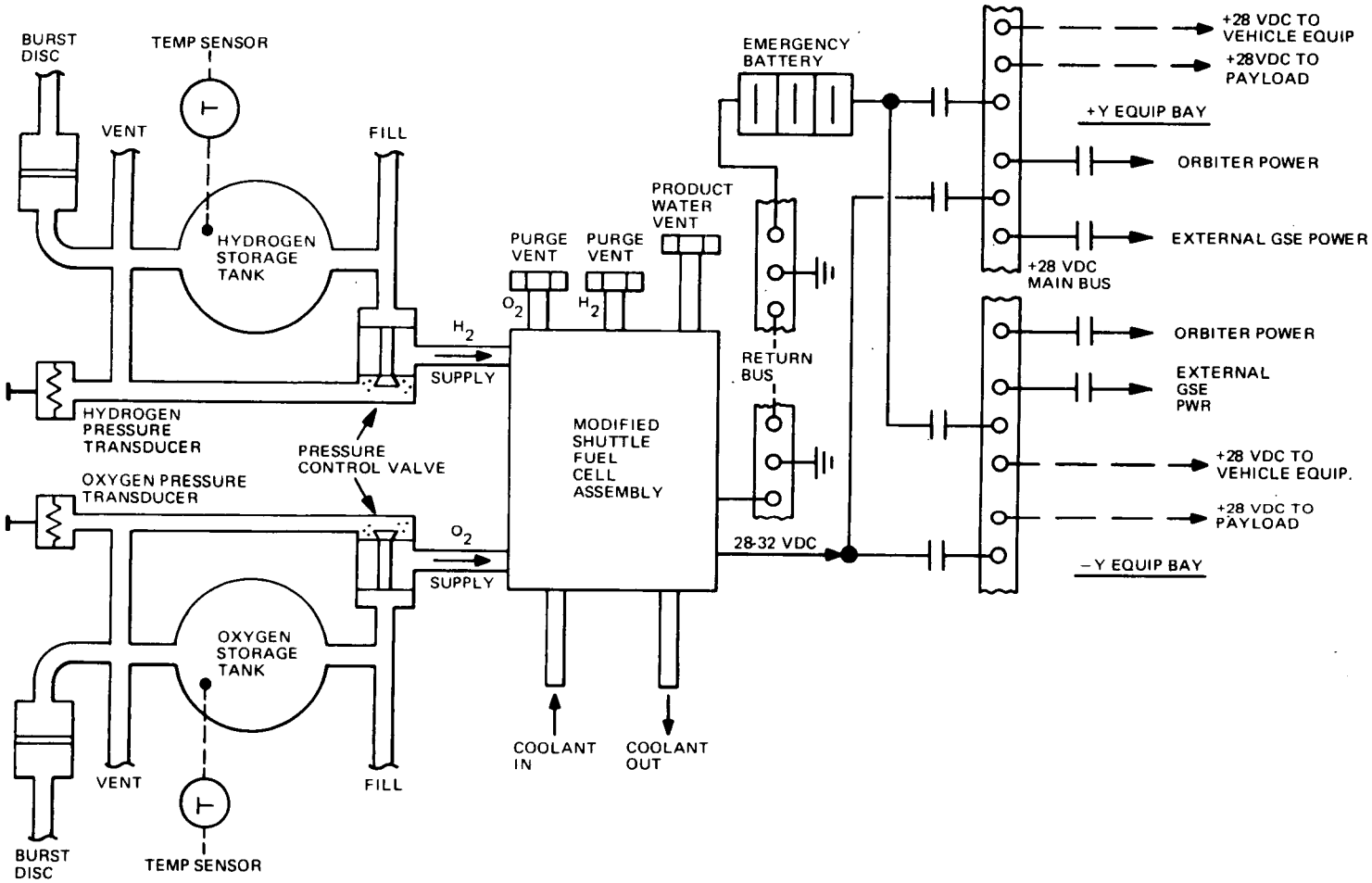

V-2

Electrical Power Subsystem for { 410AD-2; 310-3A → 310RE-3A; 310A-3B → 310ARE-3B; 510A-3B → 510ADE-3B }

The Interim Tug Thermal Control is driven by the wide latitude in missions, the requirement for no preferred orientation, the limited propellant heat sink when the low altitude polar missions are flown, and by the complement of high power density avionics chosen for a particular configuration.

The MLI blanket required to keep propellants above 40°F for offloaded missions is carried on all missions. It consists of double goldized mylar with nylon net spacers, lying between the tank and micrometoroid shield along the cylindrical section and directly over both end domes.

An Alzak coating over the outside of the vehicle keeps tank temperatures below 90°F. Silver backed teflon on the saddle bags and heat pipe radiators minimize incident environmental heat absorption and allow a high degree of heat rejection from the avionics.

A base heat shield protects the thrust structure for the main engine nozzle radiation. Electrical heaters on ME and APS assures that unacceptable cold temperatures, 40°F and 150°F respectively, are never reached.

The majority of avionics are mounted on aluminum plates located in the saddle bags and maintained at acceptable temperatures, 30°F to 120°F, through appropriate radiation couplings and electrical strip heaters. The modified fuel cell and the Carousel V IMU require active cooling. They are on the same active pumped heat transport loop which interfaces with a variable conductance heat pipe radiator (VCHP). The VCHP feature offers its own inherent controls, thereby reducing the need for complex bypass valving with automatic controls.

310-3B THERMAL CONTROL (T/C)

DRIVER REQUIREMENTS

- NO PREFERRED ORIENTATION
- LOW ALT POLAR MISSION
- MISSION DURATION = 5 DAYS
- ME NOZZLE RADIATION COOLED
- MOD FUEL CELL ACTIVELY COOLED
- AUGMENTED COOLING FOR CAROUSEL IMU

T/C DEFINITION

- 500 FT^2 GOLDIZED MYLAR MLI
- AL BASE HEAT SHIELD
- SILVER-BACKED TEFLON & ALZAK COATINGS
- MOST AVIONICS PASSIVELY COOLED
- 22 FT^2 VCHP/RADIATOR FOR FUEL CELL & IMU
- APS & ME ELECT HEATERS
- HEATERS FOR AVIONICS PALLETS

T/C PERFORMANCE

- 70^oF VEHICLE FROM LAUNCH TO DEPLOY
- PROPELLANTS - 40^oF TO 90^oF
- AVIONICS - 30^oF TO 120^oF
- BASE SHIELD - 600^oF, THRUST STR - 250^oF
- STRUCT 130^oF MAX ON ENTRY
- IMU ON FUEL CELL RADIATOR LOOP
- FUEL CELL RADIATOR REJECTS 2400 BTU/HR

DVT RISK & TECH

- VCHP REQ ADDITIONAL PERFORMANCE DATA
- UNCERTAINITY IN LIFE/REUSABILITY OF COATINGS & INSULATION

III-68

THERMAL CONTROL 310ARE-3B

As the configuration matures from the interim (310-3B) to evolved state (310ARE-3B), avionics necessary to accomplish the rendezvous and docking function are added and some units are replaced with advanced versions. The thermal control system is modified to accommodate these changes. Mission durations, propellant histories and duty cycles remain essentially unchanged so that the thermal provisions impacted by these drivers (insulation, coatings, heaters) remain unchanged.

The added avionics units, with the exception of the TV power amplifier and the laser radar, can be integrated into the saddlebags and cooled passively. The TV power amplifier, used infrequently, is placed on its own small heat pipe circuit. This circuit consists of a variable conductance heat pipe header and a 4 ft^2 simple heat pipe radiator. The laser radar is carried up forward on the outside of the vehicle but is passively cooled.

The Carousel IMU, a unit on the active fuel cell heat transport loop, is replaced by an advanced unit, the Micron IMU. This unit can be passively cooled and draws far less power, 15w vs 125w. The total power generated by the fuel cell remains essentially unchanged, the increased units offset by the decrease in IMU power. Fuel cell radiator area decreases slightly because of the removal of the IMU from the loop and the consistency of the generated power.

310ARE-3B THERMAL CONTROL (T/C)

DRIVER REQUIREMENTS

- NO PREFERRED ORIENTATION
- LOW ALT POLAR MISSION
- MISSION DURATION = 5 DAYS
- ME NOZZLE RADIATION-COOLED
- MOD FUEL CELL ACTIVELY COOLED
- AUGMENTED COOLING FOR TCV PWR AMP

T/C DEFINITION

- 500 FT^2 GOLDIZED MYLAR MLI
- AL BASE HEAT SHIELD
- SILVER-BACKED TEFLON & ALZAK COATINGS
- MOST AVIONICS PASSIVELY COOLED
- 17 FT^2 VCHP/RADIATOR FOR FUEL CELL
- 4 FT^2 VCHP/RADIATOR FOR TV PWR AMP
- APS & ME ELECT HEATERS
- HEATERS FOR AVIONICS PALLETS

T/C PERFORMANCE

- 70°F VEHICLE FROM LAUNCH TO DEPLOY
- PROPELLANTS - 40°F TO 90°F
- AVIONICS - 30°F TO 120°F
- BASE SHIELD - 600°F, THRUST STR - 250°F
- STRUCT 130°F MAX ON ENTRY
- FUEL CELL RADIATOR REJECTS 2000 BTU/HR

DVT RISK & TECH

- VCHP REQ ADDITIONAL PERFORMANCE DATA
- UNCERTAINITY IN LIFE/REUSABILITY OF COATINGS & INSULATION

III-69

THERMAL CONTROL SCHEMATIC - 310-3B

The fuel cell and Carousel V IMU are placed on the active loop. These units are readily integrated since both run continuously, at a relatively constant power level, with the operating temperature of the IMU, 130°F, matching the desired fuel cell coolant inlet temperature. Redundant bypass valves with automatic temperature controllers and sensors monitor the flow rate of coolant through the fuel cell so that the fuel cell outlet temperature lies between 180°F and 190°F, a range which permits maximum fuel cell efficiency. The pumped loop exchanges heat with individual Variable Conductance Heat Pipes (VCHP). The VCHP radiator provides its own control, thereby eliminating the need for an additional bypass circuit, decreases the operating temperature of the pumped loop which in turn minimizes the accumulator size and makes the task of selecting a coolant fluid less difficult. A VCHP radiator has already been built and tested at GAC.

THERMAL CONTROL SCHEMATIC-310-3A,310-3B,510A-3B,320-3A

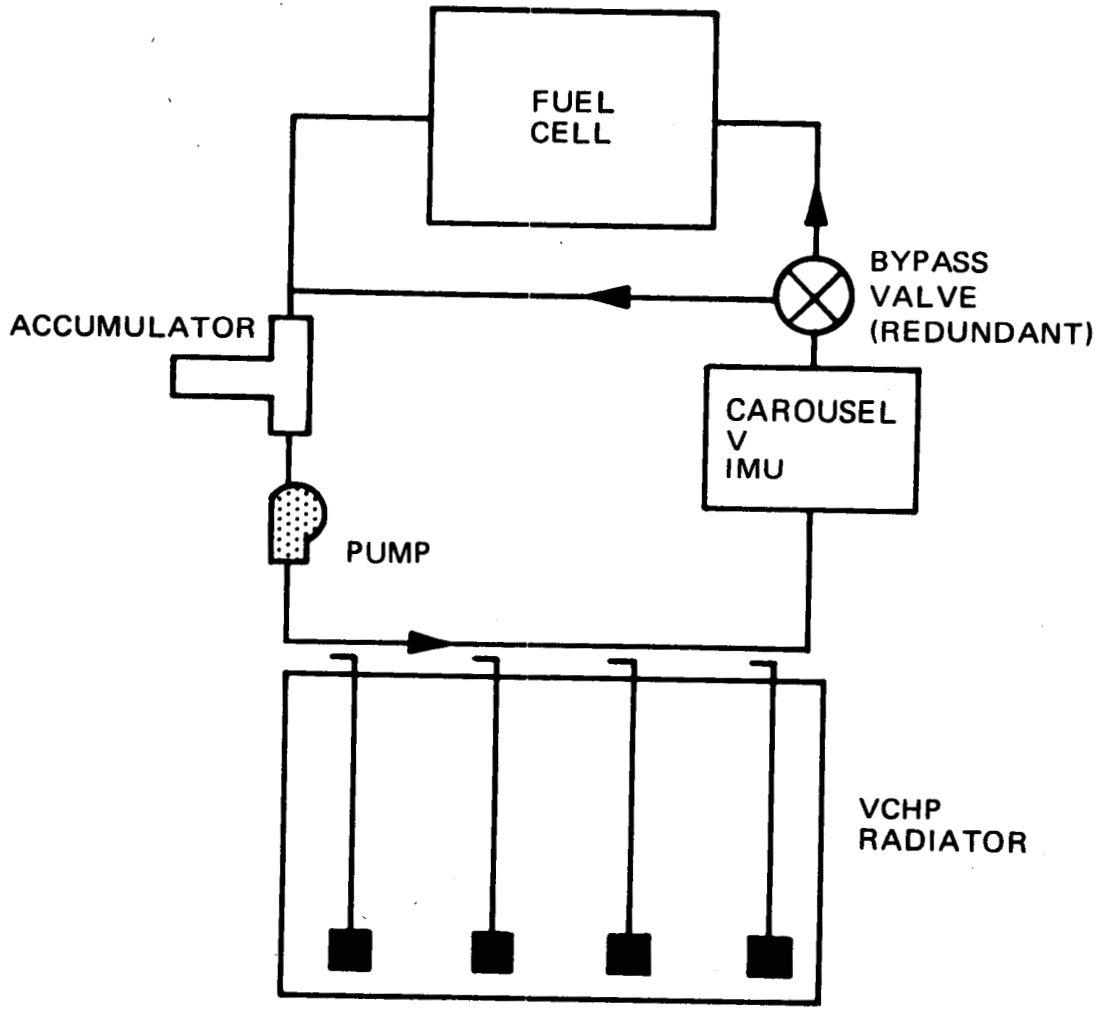

THERMAL CONTROL SCHEMATIC - 310ARE-3B

The fuel cell requires active cooling to maintain acceptable temperatures. The pumped loop fuel cell heat transport circuit has redundant by-pass valves with automatic temperature controllers to monitor the flow rate of coolant through the fuel cell as the load changes. The Micron IMU of the evolved configurations does not require active cooling as did the Carousel V IMU Flown on the interim versions.

The 20 watt Power Amplifier used in conjunction with the TV, is a small solid state unit which dissipates 80 watts in converting 100 watts of DC power to 20 watts of RF power. Because of its infrequent use, less than 2 hours per mission, it is placed on its own loop. A Variable Conductance heat pipe header transports heat to a small, simple heat pipe radiator, providing a self regulating simple heat rejection system.

THERMAL CONTROL SCHEMATIC 310RE-3A,310ARE-3B, 410AD-2,510ADE-3B,320AE-3A

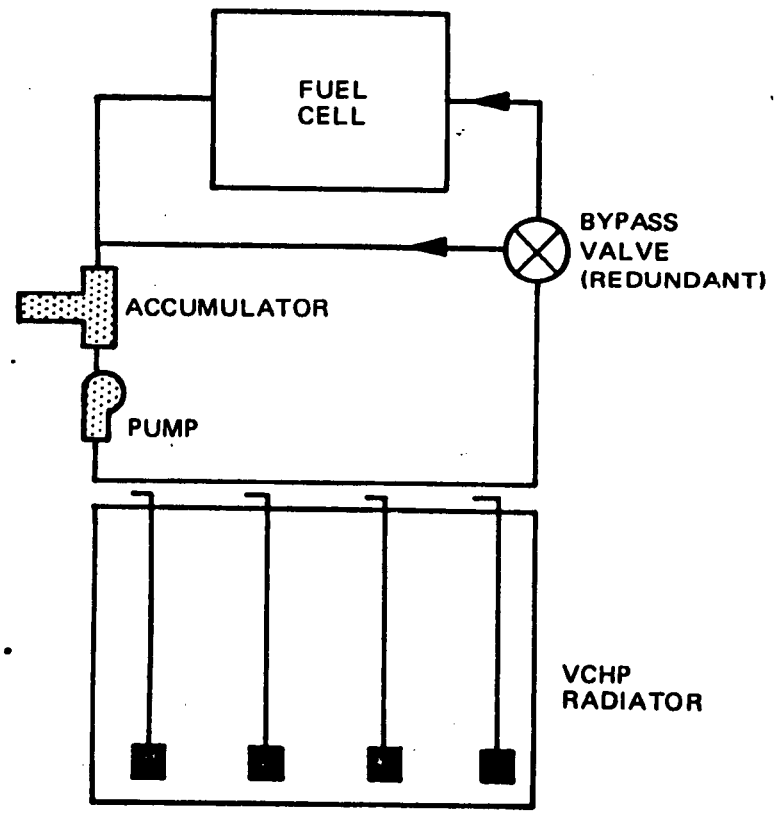

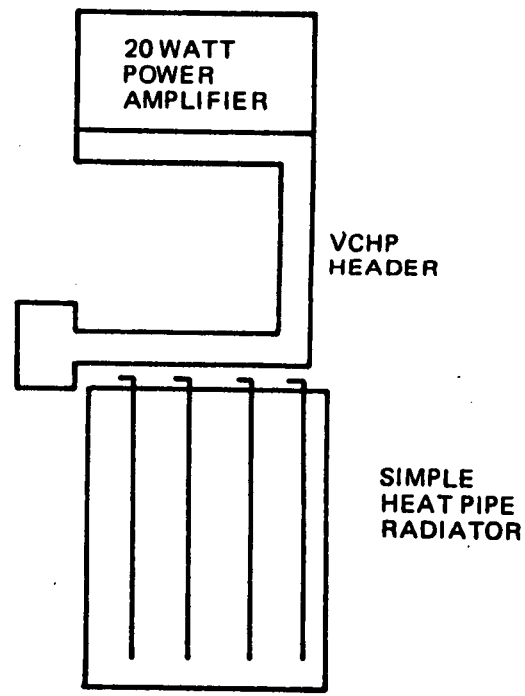

THIS PAGE INTENTIONALLY LEFT BLANK

APOGEE KICK STAGES (AKS) CHARACTERISTICS - 310ARE-3B

			GEOSYNCH SINGLE P.L*	GEOSYNCH MULTI P.L	PLANETARY
SRM		WEIGHT EACH	1483 LB	1880 LB	1880 LB
		CLUSTER OF	3	1	9
		ϵ	34/1		50/1
		I_{SP}	287 SECS		295 SECS
		λ'	.909		.920
		3.6G LIMIT BY BURN=	63 SEC	67 SEC	67 SEC & SERIES BURN
STRUCTURE:	- AL FRAMES. SKIN & STRINGERS	WEIGHT	427 LB	420 LB	449 LB
PROPULSION:	- SWIVEL NOSSLE TVC	WEIGHT	27 LB		
	- GASEOUS N_2 APS				
ASTRIONICS:	-	WEIGHT	67 LB		
	- BATTERY POWER FOR		30 MIN		
	- INITIAL STATE VECTOR FROM TUG				
	- DIRECTIONAL CONTROL FOR		15 MIN		
RELIABILITY:	- STAGE		.9987		
	- OVERALL MISSION		.970		
PERFORMANCE:	- DEPLOY PAYLOAD	WEIGHT	3500 LB	3515 LB	5000 LB
	- STAGE DELTA V F.P.S.		6006	3250	10840
COSTS	- DDT & E		$29M		

*THIS IS THE OPTIONAL AKS TO BE USED IN THE SECOND FLIGHT OF A RETRIEVAL DELAY PAIR

RETRIEVAL DELAY MODULE 310ARE-3B

The retrieval delay module (RDM) sverves as a temporary communications and control link when attached to a payload left in a parking orbit for subsequent retrieval. Its structure is of simple aluminum alloy semi-monocoque sheet-stringer construction. Twelve conical interface fittings exist on both the forward and aft faces of the module and serve to index and align the RDM to the payload and Tug as well as transmit lateral shear and axial compression loads. Twelve latches adjacent to the conical index fittings lock the RDM to the payload and Tug.

Four Apollo type probe/drogue units aid in docking the RDM to a payload and Tug. Twelve nitrogen gas fed APS thrusters located around the waist of the RDM exercise the attitude control function. GN&C, communications and data management astrionics are located inside the RDM. A 250 ampere/hr. battery provides electrical power for the 342 hours required.

Reference Vol. 5, Part II, Opt. 3B, Sect. 5.2

RETRIEVAL DELAY MODULE - RDM

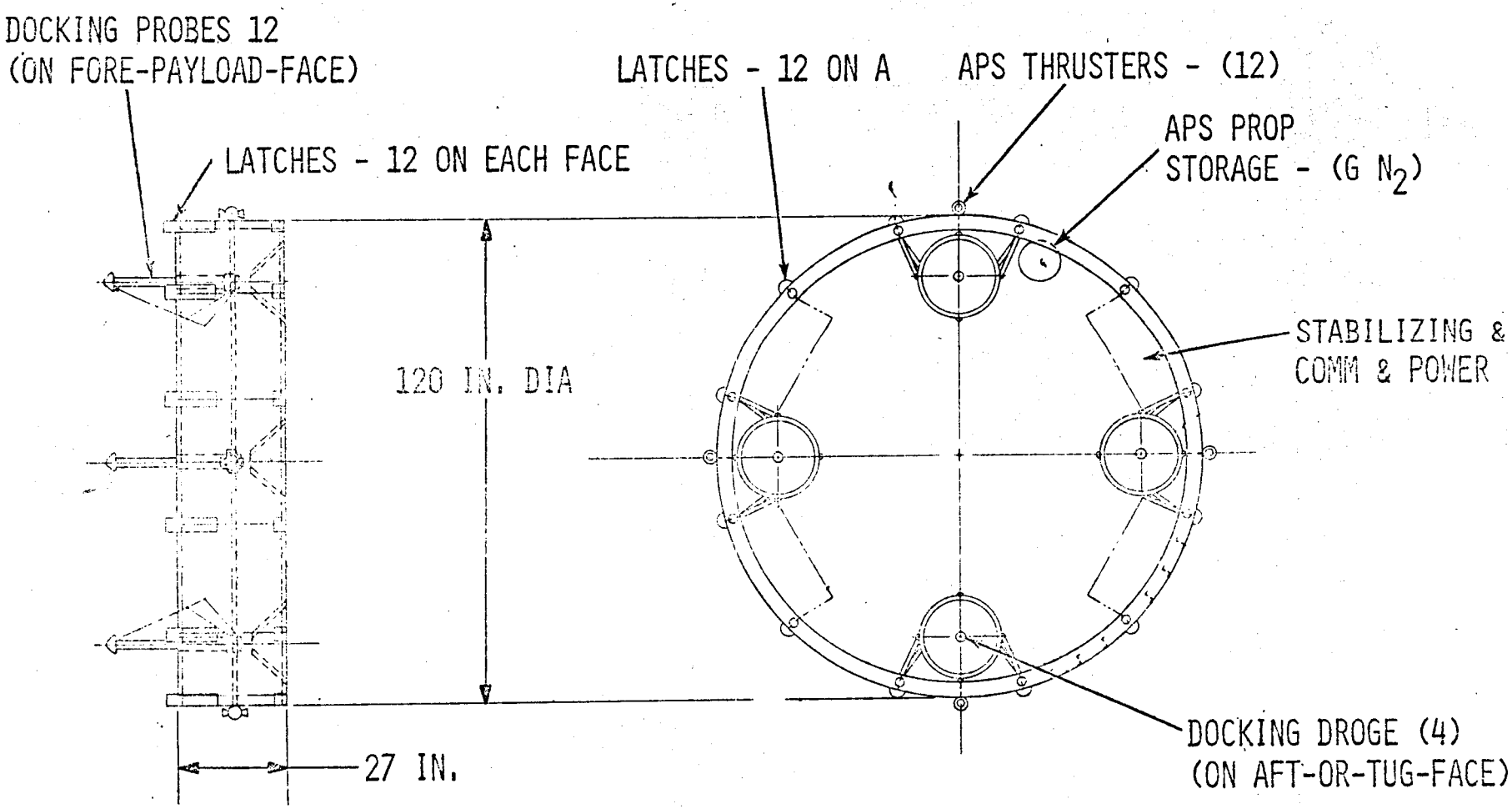

INTERFACES - 310ARE-3B

The interfaces consist of all structural and mechanical hardware enabling the Tug to link with Shuttle and to separate from it in flight. It includes those items that will remain in the Shuttle during the flight of the Tug. Included is the operational docking/undocking attachment of the Tug to the shuttle, mechanisms, Propulsion Interconnects, astrionics wiring and umbilicals and the mission specialist station.

The weights chart identifies and summerizes by subsystem those Orbiter/Tug interface elements which are chargeable against the 65,000 lb. Payload. Weights have been established and these elements have been included in the WBS build-up of Tug costs.

The interface schematic divides these items into operational categories rather than by subsystem, starting with signal and service lines (which are part of Tug system) installed in the Orbiter. The schematic identifies the signal or service lines at the interface.

More detailed information is given in Volume V.

INTERFACE SUBSYSEM WEIGHTS

CONCEPT 310APF-3B	WEIGHT (LB)
STRUCTURE	(1090)
• ROTATING ADAPTER	
• FORWARD CRADLE	
MECHANISMS	(96)
• ADAPTER-ROTATION ACTUATOR/BERTHING PROBES & LATCHES	
• CRADLE - BERTHING LATCHES	
• INFLATABLE SUPPORT FOR MAIN ENGINE NOZZLE	
PROPULSION (MAIN)	(47)
• MAIN PROPELLANT FILL & DRAIN LINES AND VENT LINES	
• HIGH PRESSURE GASEOUS He LINES	
• UMBILICAL PANELS	
ASTRIONICS	(131)
• DMS-HARD WIRING	
• GN&C-HARD WIRING	
• COMM. - HARD WIRING + RF.	
• EPS - H_2 & O_2 FILL, VENT DRAIN & PURGE	
• UMBILICAL PANELS	
M.S.S	(146)
• CONTROL & DISPLAY - DATA & COMM. EQUIP.	
• POWER - WIRING - SUPPORT	
TOTAL WITH CONT.	1510

THIS PAGE INTENTIONALLY LEFT BLANK

INTERFACE LOCATIONS - SINGLE STAGE TUG 310ARE-3B

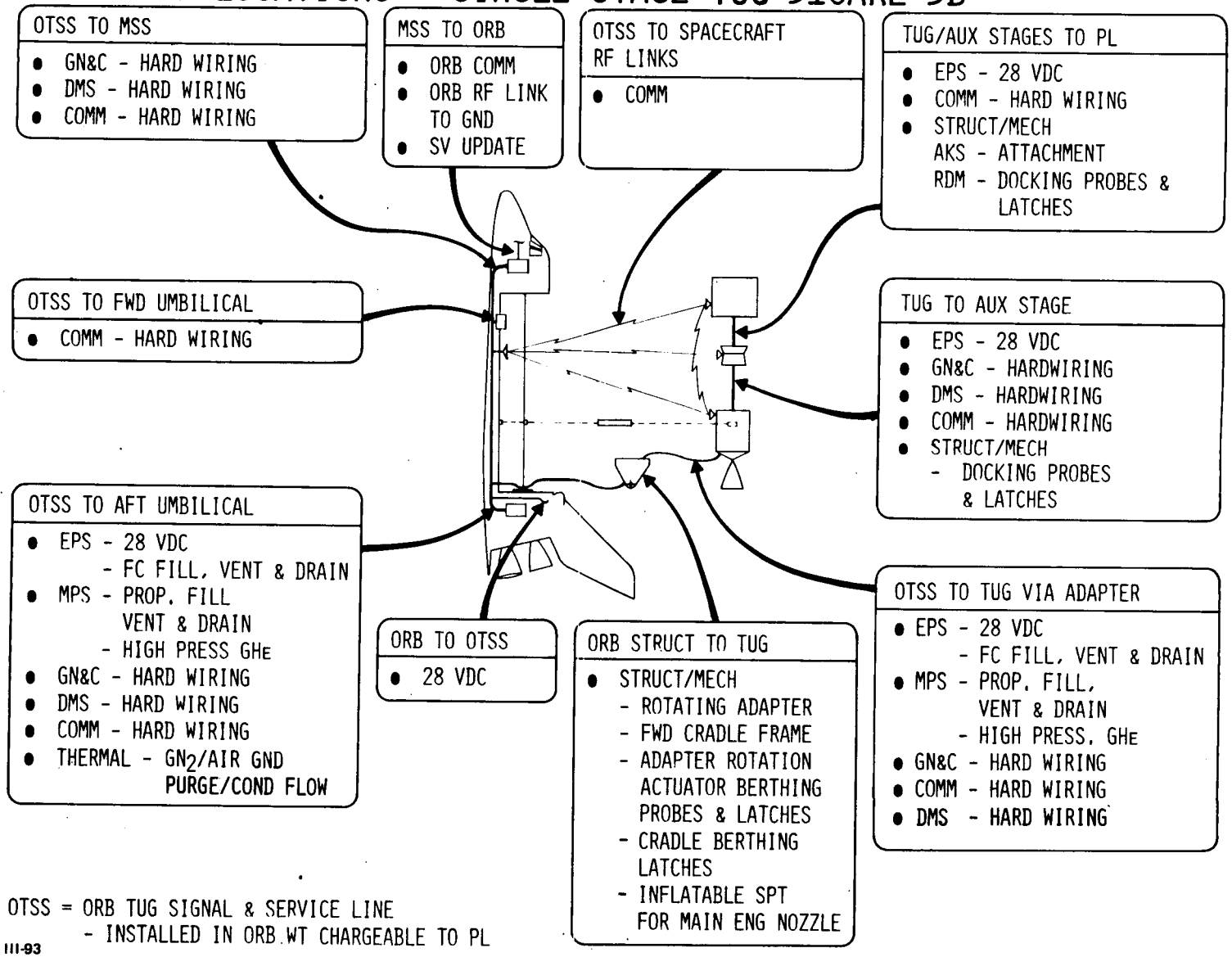

OTSS = ORB TUG SIGNAL & SERVICE LINE
- INSTALLED IN ORB WT CHARGEABLE TO PL

III-93

310/310ARE MISSION FLOW/COMPLEXITY FACTOR

A methadology has been established to determine the relative complexity of concept flight modes by taking the weighted sum of operations required to perform a mission. All Level I operations (facing page chart) were weighed with the following multipliers:

- 8 for operations involving crew safety
- 4 for operations needed for TUG recovery
- 2 for operations needed for P/L deployment
- 1 for operations needed for P/L recovery

An additional complement of factors were added as follows:

- 8 for critical functions (i.e., docking, staging, etc.)
- 4 for unique trajectory functions (i.e. correct for nodal regression)
- 4 for deficient functions (i.e. P/O loiter C/O)

This approach provides a basis for comparing the operations complexity of the various options and is also used as the scaling factor for determining flight operations cost. Our approach to costing flight operations was to establish a detailed "strawman" cost based on a "Bottoms-Up" estimate of the geosynchronous round trip mission. Our files on LM costs (complexity factor 177) were used to establish this estimate. The costs were then scaled by the complexity factor to establish cost differences between concepts.

Based on the Cost Estimating Relationship, 310/310ARE TUG without an AKS in the program would have a 26% increase in flight operations cost relative to a single stage round trip mission.

CONCEPT 310ARE-3B (FLT 2 OF RETRIEVAL DELAY MODE) COMPLEXITY FACTOR

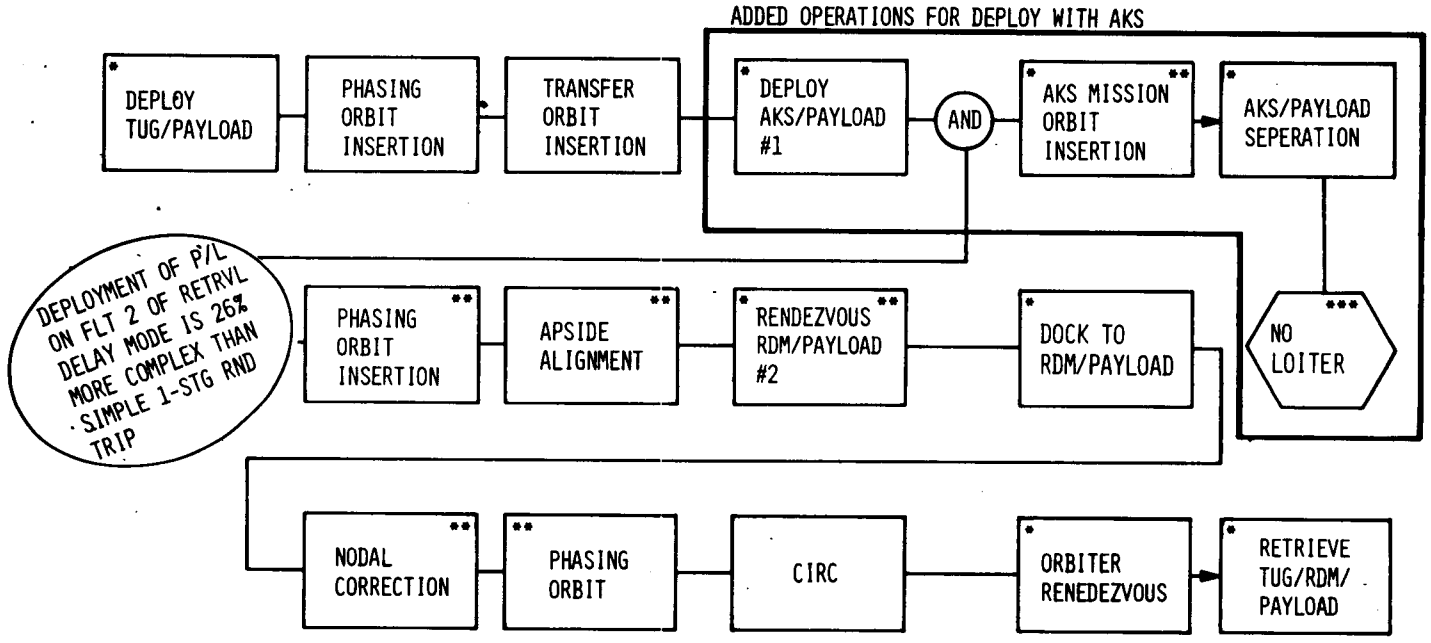

MAJOR FUNCTION MULTIPLIERS

● CREW SAFETY	2 x 8
● TUG RECOVERY	5 x 4
● PAYLOAD PLACEMENT	6 x 2
● PAYLOAD RETRIEVAL	9 x 1

*CRITICAL FUNCTIONS	8 x 8
**UNIQUE TRAJECTORY FACTORS	6 x 4
***DEFICIENT FUNCTION	1 x 4
COMPLEXITY FACTOR	149

III-17

OPTION 3B - 310/310ARE-3B - FLIGHT OPERATIONS COST

Costs for Flight Operations has been split between those funds required prior to IOC and those required after IOC. In establishing these estimates it was assumed that NASA is the contracting agency. If the DOD is the responsible agency the cost estimates presented on the facing page are reversed. Included in these estimates are the manpower for mission planning, flight control, flight evaluation and flight software. The detailed justification for these estimates can be found in Volume 6 "Operations Data Book."

The major driver of flight operations non-recurring cost is the development of the software. Estimates are included for the following major computer systems:

- TUG on-board software
- Mission Control Center Real Time Computer Complex
- Vehicle Management and Mission Planning System
- Mission Control Center Simulator

The software costs were established by estimating the word count required to meet the functional requirements of each of the computer systems. Dollar values per word consistent with GAC experience on the F-14, EA2-C and OAO MCC development programs were used for the design phase and programming/verification phase of the development cycle. Word size estimates for the on-board software and real time computer complex were based on the software routines in the LM Guidance Computer which have similar functional requirements to that of the TUG, adjusted to account for the LM software needed for man/machine interfaces. The software estimates for the MCC simulator were based on the requirements for the LM Full Mission Engineering Simulator requirement adjusted to reflect the relative complexity of the vehicles. This software package was assumed to play a threefold role; namely, provide simulator capability to the MCC, and to provide the environment to the Astrionics Software development facility and the electronics integration facility. The software estimates for the semi-automated non-real time Vehicle Management and Mission Planning System (VMMPS) requires more in-depth evaluation to determine costs. However, for purposes of at least establishing a cost line element a 30K word system was assumed necessary.

Based on these cost procedures, the total flt. ops DDT&E for the 310/310ARE-3B is $35M for NASA and $4M for DOD. The average cost perflight is $411K which converts to approximately $290K per payload. The cost to evolve to a Level II autonomous system and provide retrieval delay capability is $13M.

310-3B 310ARE-3B	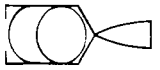
AUTONOMY LEVEL III→II	

FLIGHT OPERATION COST

	NASA, $M			DOD, $M		
	DDT&E INTM	EVOL	POST IOC	DDT&E INTM	EVOL	POST IOC
MISSION PLANNING	8.23	3.01	22.38	3.13	1.15	15.57
FLIGHT CONTROL	1.44	.25	24.05	.73	.12	19.30
FLIGHT EVALUATION	.47	.15	3.17	.50	.16	2.59
FLIGHT SOFTWARE	25.07	8.35	32.61	-	-	16.88
	35.21	11.76	82.21	4.36	1.43	54.34

AVG FLT OPS COST PER FLIGHT

(NASA = 200 FLT, DOD = 165 FLT)

	NASA, $M	DOD, $M
MISSION PLANNING	.112	.094
FLIGHT CONTROL	.120	.117
FLIGHT EVALUATION	.016	.102
FLIGHT SOFTWARE	.163	.102
	.411	.329

$13M EVOL COST

III-61

RESIDUAL HAZARDS AND SINGLE FAILURE POINTS : 310-3B/310ARE-3B

Those hazards for which design, special procedures and safety or warning devices may not resolve the problem, are considered residual hazards. In addition, where failure of a single hardware element leads to loss of life, vehicle or mission, a single failure point (SFP) is identified. The ones falling into these categories for this concept are shown in this chart.

Although a rationale for acceptance of this situation has been defined for now. additional study effort is required in the next phase to reduce the hazard to the lowest possible level (controlled category) and/or to eliminate the single failure point.

Additional information on these items is included in Volume VII, Safety and Reliability.

RESIDUAL HAZARDS/SFP : 310-3B/310ARE-3B

SATISFACTORY PROGRESS

HAZARDS/SFP	RATIONALE FOR ACCEPTANCE
ABNORMAL LANDING WITH FULL TANKS	ABORT DUMP PREFERRED BY SENSITIVITY STUDY
VENT PROPELLANT FUMES TO PAYLOAD BAY VIA TUG OVERBOARD VENTS (MPS/APS)	EXTREME PAYLOAD BAY TEMPERATURE AND MULTIPLE FAILURES NECESSARY FOR VENTING
SRMS SENSITIVE TO LIQUID PROPELLANT FIRES	IGNITION SOURCES PRECLUDED IN PAYLOAD BAY
VENT FUEL CELL WATER TO PAYLOAD BAY DURING CHECKOUT	VENT DIRECTED AWAY FROM EOS
ABORT LANDING WITH FULL FUEL CELL TANKS	TANKAGE AND SUPPORTS DESIGNED FOR CRASH LOADS
SFP : VALVES FAILED CLOSED (MISSION SUCCESS) - MPS He REGULATOR - ENGINE PREVALVE(S) - APS VENT - APS QUAD ISOLATION - AKS GN_2 SHUTOFF	HIGH RELIABILITY COMPONENTS
LACK OF RDM APS COMMAND OVERRIDE	DETECT UNSTABLE TARGET PRIOR TO DOCKING

SAFETY ASSESSMENT RESULTS: 310-3B/310ARE-3B

An assessment of this configuration was performed to determine whether it satisfied the NASA Safety Requirements specified in the Data Package, Space Tug System Studies, April 1973 and those safety requirements derived through analysis. The first column identifies the source of the safety requirement, NASA Data Package or identified hazard. Items in the next column are labelled (R) for requirement unsatisfied, (C) for an operational constraint or (E) for an exception to the NASA or derived safety requirements. The specific items are summarized. In the comments column, the reasons or reactions to the safety assessment items are stated.

The RDM APS doesn't satisfy the FO/FS requirements as it does not operate near the orbiter and the possibility of failed on/off jets is significantly reduced by use of highly reliable components.

The checkmark in the upper right corner signifies a satisfactory/safety mark for the configuration for Phase A. The completed Safety Evaluation form for this concept is presented in Volume VII.

310-3B/310ARE-3B SAFETY ASSESSMENT RESULTS

- DATA PACKAGE/ANALYSIS-DERIVED SAFETY REQUIREMENTS USED AS ASSESSMENT TOOL
- ASSESSMENT RESULTS :

REQ'T SOURCE	REQ'T/CONSTRAINT/EXCEPTION	COMMENTS
NASA REQTS	(E) DETECT POTENTIAL TANK FAILURE ON GROUND	FRACTURE MECHANICS PROGRAM USED
	(E) FUEL CELL VAPOR VENTED TO BAY DURING C/O	VENT DIRECTED AWAY FROM EOS
	(E) RDM APS NOT FO/FS	NOT CREW SAFETY
	(R) NESTED TANKS	SEPARATE TANKS PREFERRED
VENTING	(C) NEED FLUID GSE DURING GROUND TRANSPORT	CONTAINS AND NEUTRALIZES VAPORS
RESIDUALS	(R) NO ABORT DUMP	DUMP PREFERRED
	(R) NO MPS DEPLETE	IMPLEMENTATION IS OPEN QUESTION
	(C) "EMPTY" TANKS AT LANDING	SAFEST LANDING CONFIGURATION
COMMAND/ CONTROL	(C) WITHIN 30 NM OF EOS; OVER GROUND STATION WHEN TRACKING	SATISFACTORY TO SAFETY
LOSS OF ATT. CONTROL	(C) RDM DICTATES P/L RADAR REFLECTORS/DOCKING TARGET	SMALL P/L IMPACT

PROGRAMMATICS/COST OVERVIEW 310-3B/310ARE-3B

310-3B/310ARE-3B programmatics and cost data are defined similar to the two previous programs and are contained in Volume 8, Part IV.

This program also requires 99 months to complete development and the production periods lasts 106 months. Peak annual funding ($88M) occurs in FY78. Initial/total DDT&E and total program costs are $255/346M and $861M respectively.

PROGRAMMATICS/COSTS OVERVIEW - 310-3B/310ARE-3B

CHARACTERISTICS

		MAIN STAGE	AUXILIARY STAGE
PHYSICAL:	WEIGHT, LB	3212 → 3416	545/544
	LENGTH, IN	297	80/27
	DIAMETER, IN	120	180/120
TECHNICAL:	REUSABLE	ONE-STAGE	RDM
	AUXILIARY STAGE		AKS/RDM
	RETRIEVAL	EVOLVED	
	PROPELLANT CAPACITY, LB	59,500	
	THRUST, LB	12,000	
	ISP, SEC	338	287 & 295
	AUTONOMY LEVEL	IIIA → IIB	
	RELIABILITY	.97 → .9750	.9987/.9824

PROJECT SUMMARY

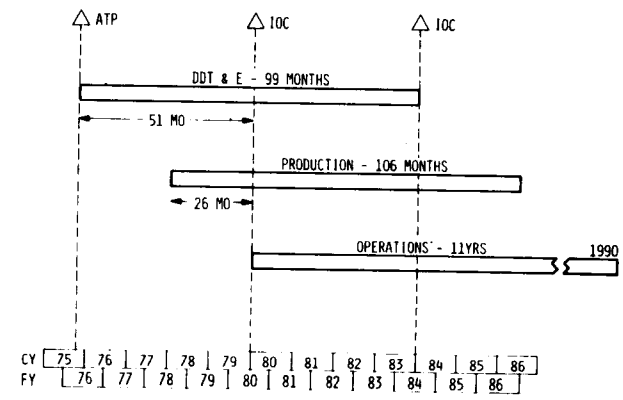

ANNUAL - PROJECT COSTS

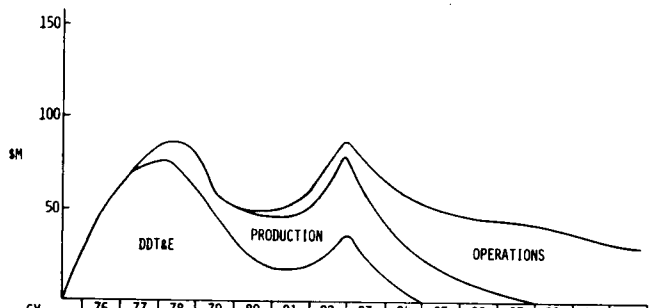

CY	76	77	78	79	80	81	82	83	84	85	86	87	88	89	90
FY	76	77	78	79	80	81	82	83	84	85	86	87	88	89	90	91
DDT&E	33	68	75	58	29	18	18	36	11							
PROD			13	14	21	28	33	44	33	22	9	6				
OPS					3	5	7	8	21	32	36	38	41	39	33	30
TOTAL	33	68	88	72	53	51	58	88	65	54	45	44	41	39	33	30

CUMULATIVE - PROJECT COSTS

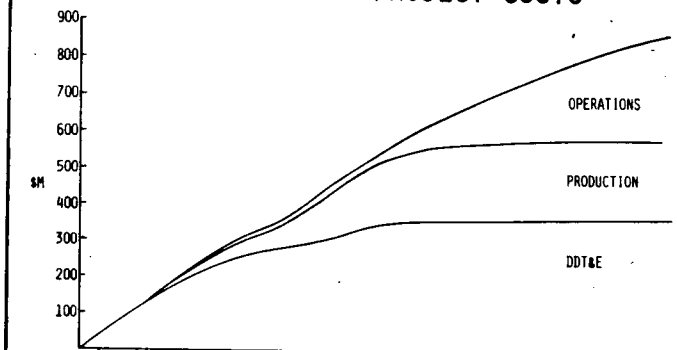

CY	76	77	78	79	80	81	82	83	84	85	86	87	88	89	90
FY	76	77	78	79	80	81	82	83	84	85	86	87	88	89	90	91
DDT&E	33	101	176	234	263	281	299	335	346	346	346	346	346	346	346	346
PROD	0	0	13	27	48	76	109	153	186	208	217	223	223	223	223	223
OPS	0	0	0	0	3	8	15	23	44	76	112	150	191	230	263	292
TOTAL	33	101	189	161	314	365	423	511	576	630	675	719	760	799	832	861

VIII, IX-9, III-111

SUMMARY SCHEDULE - 310-3B/310ARE-3B

The primary elements of the 310-3B/310ARE-3B Project Schedule are as described for 310-3A/310RE-3A except for addition of an Apogee Kick Stage. Authorization to Proceed (ATP) occurs on October 1, 1975 with IOC of the initial configuration target for December 31, 1979. The Class I main engine milestones are the same as for 310-3A/310RE-3A with Final Flight Certification occuring 4 months after First Orbital Flight (FOF). Vehicle tests are essentially the same as for 310-3A/310RE-3A except for the addition of structural testing of the Apogee Kick Stage (AKS-STA). First flight of the evolved vehicle is targeted for December 1, 1983. Main Stage Manufacturing begins December 1, 1976 with production of the major ground test articles and continues through production of 16 vehicles to support fleet operations. These are manufactured in 3 Lots for the purpose of avoiding manufacturing gaps. Development of the Apogee Kick Stage and the Retrieval Delay Module begins in June 1980, with related vehicle tests starting at the same time as main stage evolved vehicle tests. 34 Apogee Kick Stages and 4 Retrieval Delay Modules will be manufactured to support fleet operations. GSE and Facilities are scheduled essentially the same as for 110A-1.

(Ref. Vol. 8, Part V, Sect. 8.1)

310-3B/310ARE-3B SUMMARY PROJECT SCHEDULE

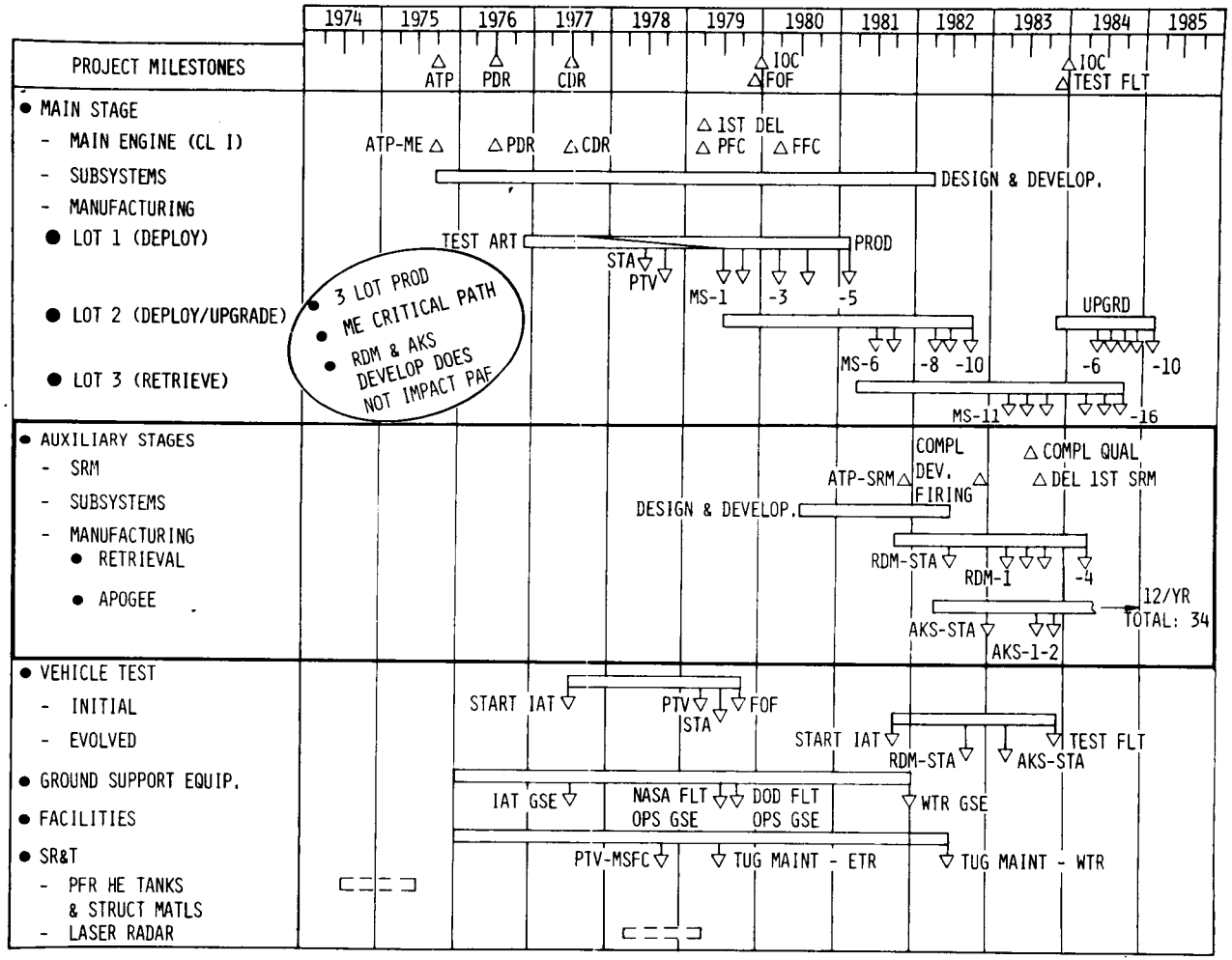

III-55

Vehicle Test Program

The vehicle test program for 310-3A/310RE-3A was developed in a similar manner to that described for 110A-1.

Structural Test Article (STA)

The Main Stage structural test program for the 310A-3A/310RE-3A configuration is identical to 110A-1. The differences for this configuration are the deletion of the kickstage, phased addition of the RDM, and added avionic retrieval hardware and mechanical interfaces. The 310-3A STA will be configured to include the evolved 310RE-3A hardware interfaces and the test program will envelop both configurations. The RDM STA will be tested similarily to the mainstage in 1982.

Propulsion Test Vehicle (PTV)

The PTV test program for this configuration is identical to the PTV test program for the 110A-1 configuration.

(Ref. Vol.8, Part III, Sect. 8.2)

310-3B/310ARE-3B GROUND TESTS

EVOLVED RETRIEVAL, RETRIEVAL DELAY AND KICK ADDS $14.21M TO VEH. TEST

TEST	TEST ART.	OBJECTIVES	APPROACH
STRUCTURES • 310-3B - MAIN STAGE(MS) • 310-RE - RETRIEVAL DELAY MODULE (RDM) STRUCT. - APOGEE KICK STAGE (AKS) STRUCT.	• COMPLETE M.S. PRIM. & SEC. STRUCT. INCL. TUG/ORB & TUG/P.L. ADAPTERS • COMPLETE RDM PRIME & SEC. STRUCT. • COMPLETE AKS PRIME & SEC. STRUCT.	• EVAL. DYN., STATIC STRENGTH, SAFE-LIFE & SEPARATION. • VERIFY STRUCT./MECH. INTERFACES AT LAUNCH SITE.	• VIB/ACOUSTIC TESTS • DES. LIMIT STATIC TESTS • STATIC FATIGUE • ULT. STATIC TESTS • SEP. DEMO. • INTERFACE VALID. DEMO. AT KSC. • RDM & AKS TESTED SEPARATELY AS ABOVE (1982,1983 RESPECT.)
PROPULSION • MAIN STAGE (310-3B ONLY)	• FLIGHT WT. MAIN STG. STRUCT. • MAIN ENG. SUPPT. S/S LESS ENG. • ENG. SIMUL. UNIT. • PTV REFURB. TO FLIGHT OPS	• DEMO OPS OF ASSEM. COMPONENTS • DEVELOP C/O & OPS PROCEDURES • VERIFY SERV/HANDLG. PROCEDURES • DEMO SYS. PERF. & CHARACTERISTICS	• COLD FLOW ONLY • REFERENCE FLUIDS PHASE -FILL/DRAIN/FLOW TESTS • LIVE PROPELLANTS PHASE - LOAD CONTROL/ ACCURACY - SYS. COMPAT. & DYN. - PERF. SERV./HANDLG PROCEDURES.

INTEGRATED AVIONICS TESTS

The MS and Integrated Avionics Test program for the 310-3B configuration is the same as for 110A-1. The IAT and ASDL will initially be configured for the basic mission hardware and software including autonomy level IIIA.

As the retrieval capability and Autonomy Level IIB is evolved, the IAT hardware and ASDL software will be updated and evolved system verification and mission simulations performed.

The RDM and AKS breadboards will be integrated and functionally tested in the main stage IAT facility to take advantage of the existing facility simulation and GSE capabilities.

MOCKUPS

The MS and AKS mockups for this configuration will be the same as those described for configuration 110A. In addition mockups of the RDM will be required for this configuration. Installation of the evolved configuration hardware will also be evaluated using the MS mockups.

(Ref. Vol. 8, Part V, Sect. 8.2)

310-3B/310ARE-3B GROUND TEST (cont'd)

TEST	TEST ART.	OBJECTIVES	APPROACH
INTEGRATED AVIONICS • INTEG.AVIONICS TEST (IAT) FACILITY - MS - RDM - AKS • AVIONICS SOFTWARE DEVELOPMENT LAB (ASDL) - MS	• IAT - SHIP SET OF AVIONICS - COMPUTER-SIMULATION - SENSOR STIMULUS - FACTORY & LAUNCH GSE • ASDL - COMPUTER FACILITY WITH MATH MODEL SIMULATION OF MS HARDWARE	• VERIFY HARDWARE/SOFTWARE PRIOR TO VEHICLE INSTALLATION & FOF • VERIFY EVOLVED RETRIEVAL AND AUTONOMY LEVEL IIB HARDWARE AND SOFTWARE FOR 83-IOC	• IAT - SUBSYSTEM INTEG & END TO END FUNCTIONAL VERIF. - VERIFY FACTORY C/O PROCED. - HARDWARE/SOFTWARE VERIF. - MISSION SIMULATION - INTEGRATE AND VERIFY RETRIEVAL CAPABILITY HARDWARE/SOFTWARE - RETRIEVAL MISSION SIMULATION • ASDL - SOFTWARE DEVELOPMENT FOR BASIC & EVOLVED CONFIG.
MOCKUPS • MS • RDM • AKS	• WOOD & CARDBOARD MOCKUPS OF THE TUG MS, RDM & AKS STRUCTURE INCLUDING EQUIPMENT FOR PDR, • WOOD & METAL MOCKUPS OF TUG MS, RDM, AND AKS STRUCT. & COMPONENTS FOR CDR.	EVALUATE EQUIPMENT ACCESSABILITY AND MAINTAINABILITY. EVALUATE SHUTTLE & PAYLOAD INTERFACE AND LINES RUN PRIOR TO FAR OR FINAL HARDWARE.	• COMPONENT INSTALLATION • ESTABLISH LINE LENGTHS FOR FINAL HARDWARE FAB. • DEMONSTRATE MAINTAINABILITY - ASSESSMENT & DEMO OF EQUIP CLEARANCES, LINES CLEARANCES - CONNECTOR & MOUNTING ACCESSABILITY DEMO • SHUTTLE & PAYLOAD INTERFACE ASSESSMENT.

GROUND TEST COST - INITIAL = $18.76M
INITIAL + EVOLVED = $26.53M

310-3A/310RE-3A FLIGHT TESTS

Eight flights are included in the flight test program for configuration 310-3A/310RE-3A. The MS Flight test program for the 310-3A configuration is the same as for 110A-1. The major difference is the evolution of the RDM and MS retrieval capability.

The RDM and MS retrieval capability will be demonstrated as part of a normal deploy only operational flight. During this flight an RDM will be deployed from the shuttle. When the tug returns from its deployment mission it will demonstrate retrieval capability by retrieving the RDM. RDM performance will be evaluated while it is free flying in the vicinity of the shuttle. Subsequent operational flights will serve to demonstrate all Tug mission modes.

(Ref. Vol. 8, Part III, Sect. 8.2)

310-3B/310ARE-3B FLIGHT TESTS

TEST	OBJECTIVES	APPROACH
• MAIN STAGE (310-3B) - 1ST PROD UNIT INCLUDING DFI • MAIN STAGE (310ARE-3B) - 1ST PROD UNIT INCLUDING DFI • RDM - 1ST PROD. UNIT INCLUDING DFI • AKS - 1ST PROD. UNIT INCLUDING DFI	INITIAL IOC • THERMO-VERIFY SYS. THERMAL CONTROL • STRUCT - VERIFY LAUNCH/ ORBIT/ENTRY/LANDING LOADS & DYNAMICS • PROP-VERIFY MPS/APS • AVIONICS - VERIFY AVIONICS OPS • OPS - EVALUATE TUG/ORB & TUG PAYLOAD INTERFACES - EVALUATE SYS. PERF. CAPABILITY - DEMO PAYLOAD DEPLOY EVOLVED IOC • EVALUATE TUG/RDM & TUG/AKS INTERFACES • DEMO PAYLOAD RETRIEVAL & AUTONONY LEVEL IIB.	• 9 FLIGHT TEST PROGRAM - 5 INITIAL - 4 FINAL • FIRST ORBITAL FLIGHT (FOF) COSTED WITHOUT OPERATIONAL PAYLOADS - FLOWN WITHIN RETRIEVAL CAPABILITY OF ORB. - SEQUENCE INCL: SYS C/O MPS/APS BURNS, DUMMY PAYLOAD DEPLOY, ORBITER RETRIEVAL • SUBSEQ. FLIGHTS DEPLOY OPERATIONAL PAYLOADS SELECTED TO DEMO BUILD-UP IN TUG CAPABILITY • FOF OF 310ARE-3B IS A DEPLOY ONLY FLIGHT. RETRIEVAL DEMO WITH RDM PERFORMED UPON RETURN TO 160NM ORBIT • AKS VERIFIED ON OPERATIONAL FLIGHT

FLIGHT TEST COST - INITIAL = $13.39M
- INITIAL + EVOLVED = $19.83M
TOTAL VEHICLE TEST = $46.36M

310-3B/310ARE-3B - FACILITIES

Ground rules, assumptions, facilities definition development and costing procedure same as 310-3A/310RE-3A.

Differences from Concept 110A-1

Higher traffic model requires additional TUG Maintenance Facility at ETR.

Facilities Requirements Sheets (Ref., Vol., 6, Part 2., Appendix F.) and Facilities Plan (Ref., Vol. 8., Part 1., Section 8.3) provide detail requirement, schedule and cost data.

(Ref. Vol 8, Part V, Sect. 8.3)

310-3B/310ARE-3B FACILITIES

SIMILAR TO 310-3A/310RE-3A EXCEPT FOR ADDL SRM FACILITIES

FUNCTION	SIZE, SQ FT	EXISTING	MODIFIED/NEW	COST, $M C OF F	COST, $M TOTAL
MANUFACTURING				.055	.478
FAB & ASSY	7,800	GAC-BPA, PLTS 2 & 3			
F/A & C/O	14,200		GAC-BPA, PLT 5		
KICKSTAGE & RDM	7,700	GAC-BPA, PLT 5			
TEST				.100	.305
STA	VARIOUS REQMTS	GAC, PLT 5 & WYLE-HUNTS			
THERMAL	-	GAC-BPA, PLT 5			
IAT	1,300	JSC - SHUTTLE ASDL & IATL			
PROPULSION	700	GAC-BPA,HPTF&MSFC-TST ST			
TANK QUAL & ACCEPT	700	GAC-BPA, HPTF			
MAINT & REFURB ETR/WTR				2,302/2,200	3.531/2.900
TUG MAINT FAC	12,000/6,000		EXT ON ORBITER OMS FAC		
PROP SYS SERV FAC	6,000		EXT ON ORBITER OMS FAC		
TUG CLEANING FAC	3,000		EXT ON ORBITER MCO FAC		
KICKSTAGE SRM FAC	1,400/-		EXT ON SHUTTLE SRM FAC		
SUPPORT/WHSE FAC	AS REQD/-	SHUTTLE SHARED @ ETR			
OFFICE	5,000/4,000	EXISTING @ ETR	NEW FAC @ WTR		
ETR/WTR LAUNCH				.413/.494	.571/.656
LAUNCH PAD	-	SHUTTLE FAC-TUG GSE			
SAFING AREA	-	SHUTTLE FAC-TUG GSE			
MISSION CONTROL CENTER	7,500		MOD SPACE @ JSC & SUNNYDALE, CALIF.		
			TOTALS	5.564	8.441

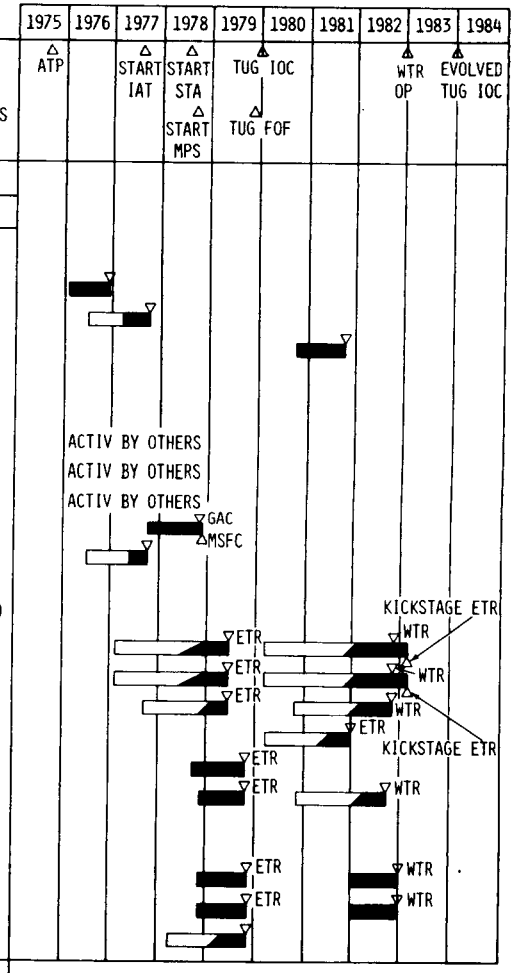

III-10

THIS PAGE INTENTIONALLY LEFT BLANK

310-3B/310ARE-3B MANUFACTURING FLOW

The manufacturing flow and sequence of assembly of the main stage and auxiliary stages is depicted. The flow diagram shows program milestones, engineering drawing release requirements, tool design and fabrication, operation sheet preparation, work order release and the manufacturing and assembly sequence for the major test articles (STA, PTV) and the first flight article.

Tooling for the main propellant tanks is the long lead manufacturing item. This configuration uses the nested tank design with gored titanium construction and the 19 month flow from start of tank assembly through delivery is longer than the 110A-1 option because of the increased time for forming and welding the gore sections and because additional time is required for assembly and test of the tanks.

The assembly sequence includes (1) joining the nested tanks by mechanically mating with the aft skirt, (2) adding the forward skirt and (3) systems installation, checkout and acceptance test.

(Ref. Vol. 8, Part V, Sect. 8.4)

310-3B/310ARE-3B SPECIAL PROGRAMMATICS

Program 310-3B/310ARE-3B has features similar to those defined for implementing and managing Program 310-3A/310RE-3A.

These features include: defining the initial/evolved flight build up based on Shuttle/Tug launch constraint and ground crew launch capability; implementing 3 lot production (deploy, deploy-upgrade, and retrieve); refurbishing the propulsion test article for operational use; and defining a fall back position for every identified risk.

Specific areas for government participation in 310-3B/310ARE-3B include: establishing Tug/Shuttle interface requirements before Orbiter design freeze; providing payload interface design requirements and mission model data; initiating required activities for Supporting Research and Technology; providing GFE systems and components (eg: main engines, and DOD secure comm); supporting propulsion system testing and development and supporting integrated avionics hardware testing and related software development; providing required facilities; and performing vehicle ground operations, flight operations, and logistic support operations.

(Ref. Vol. 8, Part V, Sect. 8.5)

310-3R/310ARE-3R SPECIAL PROGRAMMATICS

- PROGRAM IMPLEMENTATION AND MANAGEMENT
  - INITIAL/EVOLVED FLIGHT BUILD UP SET BY SHUTTLE/TUG LAUNCH CONSTRAINT AND GROUND CREW LAUNCH CAPABILITY
  - 3 LOT PRODUCTION (DEPLOY, DEPLOY-UPGRADE, AND RETRIEVE) TO AVOID MFG GAP
  - PROPULSION ARTICLE REFURBED FOR FLIGHT
  - FALL BACK POSITION SHOWN FOR EVERY IDENTIFIED RISK

- AREAS FOR GOVERNMENT PARTICIPATION
  - FIRM TUG/SHUTTLE INTERFACES BEFORE ORBITER PDR
  - PROVIDE TUG/PAYLOAD INTERFACE DESIGN REQUIREMENTS AND MISSION MODEL DATA
  - INITIATE REQUIRED SR&T
  - SUPPORT SYSTEM TEST - AVIONIC HARDWARE/SOFTWARE PROPULSION
  - PROVIDE GFE SYSTEMS AND COMPONENTS, FACILITIES, LOGISTIC SUPPORT
  - PERFORM VEHICLE GROUND AND FLIGHT OPERATIONS

310-3B/310ARE-3B FLIGHT OPERATIONS BUILDUP

The same methodology was used to establish the 310-3B/310ARE-3B flight buildup as in the two prior phased programs.

Our recommended flight buildup for 310-3B/310ARE-3B, including 3 flights in 1980, 12 flights in 1981, and 39 flights in 1984, encompasses 365 total flights through 1990 or 29 less than 100% payload capture traffic.

(Ref. Vol. 8, Part V, Sect. 8.9)

310-3B/310ARE-3B FLIGHT OPERATIONS BUILDUP

INPUTS	CY 80	81	82	83	84	85	86	TOTAL FLTS.
	▽ IOC_I				▽ IOC_E			
• 100% PAYLOAD CAPTURE - ETR+WTR FLTS	20	15	17	28	52	45	45	394
ETR FLTS	20	15	17	21	47	37	36	
• SHUTTLE/TUG LAUNCH CONSTRAINT - ETR	3	21						
• INITIAL GND CREW LAUNCH CAPABIL.-ETR	12	15	16					
• EVOLVED IOC GND CREW LAUNCH CAPAB/ETR				21	34	37	36	
• TUG FLIGHT MODE BUILDUP								
SINGLE DEPLOY	3	ALL	ALL	ALL	ALL	ALL	ALL	
MULTI DEPLOY	NONE	SOME	ALL	ALL	ALL	ALL	ALL	
SORTIE	NONE	NONE	NONE	ALL	ALL	ALL	ALL	
DEPLOY WITH KICK STAGE	NONE	NONE	NONE	NONE	ALL	ALL	ALL	
RETRIEVE	NONE	NONE	NONE	NONE	ALL	ALL	ALL	
ROUND TRIP	NONE	NONE	NONE	NONE	SOME	ALL	ALL	
RETRIEVAL DELAY	NONE	NONE	NONE	NONE	SOME	ALL	ALL	
RECOMMENDED FLIGHT BUILDUP ETR+WTR	3	12	17	28	39	45	45	365
ETR	3	12	17	21	34	37	36	

BUILDUP RATIONALE

- SAME AS 310-3A/310RE-3A

The technology items and their potential impact are shown on the opposite page. If the prestressed filament reinforced (PFR) helium tank fails to meet its goals, a 6Al4V titanium tank adds 48 lbs to the vehicle. If the advanced (Micron) IMU is unavailable, a Carousel VB IMU plus a rate gyro unit adds 30 lbs. If the graphite composite shell fails to meet its objectives, an aluminum honeycomb shell adds 38 lbs. The laser radar is an item which has no alternative, hence it represents both a schedule and cost risk. If materials compatibility or fracture mechanics data indicate the need to change propellant tank material from titanium to either aluminum or stainless steel, the added weight would be +13 lbs or +3 lbs respectively. If the heat pipes are replaced by incorporating high heat rejection items on the active loop, there are no weight changes. To recover the weight impact on payload capability due to these possible weight increases, the advanced fuel cell is an open option.

The Class I engine is a new design based on current technology with the exception of the uncertainty in engine life and in the predicted performance with the high expansion ratio nozzles used. It is estimated this engine can miss its performance goals by -3 seconds Isp.

Although the proposed SR&T programs protect against schedule slippage by virtue of being completed at ATP, the availability of both the main engine and the 621B Navigation Satellites remain schedule risk items.

Converting the potential Isp loss and weight increases to a total program cost at a $111/lb value and adding to the potential cost increase items, yields a total cost risk of $23.1M for 310-3B/310ARE-3B.

(Ref. Vol. 8, Part V, Sect. 8.9)

310-3B/310ARE-3B RISK ASSESSMENT

TECHNOLOGY ITEM IMPACT	
• CLASS I ENG	-3 SEC ISP
• PFR TANK	+48 LB
• ADV IMU	+30 LB
• GRAPHITE COMPOSITE	+38 LB
• LASER RADAR	COST/SCHED
• MATERIALS COMPATIBILITY • FRACTURE MECHANICS	+13 LB
• HEAT PIPES	SCHED

VEHICLE SENSITIVITY (DEPLOY)	PLAIN	WITH AKS
$\frac{\partial P/L}{\partial W \text{ FIXED}}$ (LB/LB)	-3.66	266
$\frac{\partial P/L}{\partial ISP}$ (LB/SEC)	96	93

TECHNICAL RISK
- POTENTIAL WT IMPACT: +129 LB } ≈ 622 LB OF PAYLOAD (W AKS)
- POTENTIAL ISP LOSS: -3 SEC }
- OPEN WEIGHT REDUCTION OPTION: ADV FUEL CELL

SCHEDULE RISK
- PROPOSED SR&T PROGRAMS (COMPLETED PRIOR TO ATP) PROTECT AGAINST SCHEDULE SLIP
- AVAILABILITY OF 621 B SATELLITES & MAIN ENGINE

• COST RISK
- POTENTIAL Δ COST $23.1 M

MODERATE RISK PROGRAM

III-39

TECHNOLOGY REQUIREMENTS AND DESIRED DATA - 310-3B/310ARE-3B

The upper part of the facing chart contains the supporting research and technology (SR&T) items required for 310-3B/310ARE-3B; the lower part of the chart contains what we have termed as "desired data". The distinction between the two is that the "desired data" items do not require technology but are considered straightforward engineering development tasks to produce design data prior to Tug program go-ahead (ATP); this will preclude impacting Tug schedules should the data indicate the desirability of an alternate approach, (vis., aluminum or stainless steel propellant tanks rather than titanium).

Excluding the SR&T on the Class I engine the total SR&T funds requested for 310-3B/310ARE-3B is $1290K to be expended over an 18 month period cluminating at Tug ATP or prior to go-ahead on the evolved Tug. The advanced (Micron) IMU is the long lead item (18 months), again excluding the Class I engine.

(Ref. Vol. 8, Part V, Sect. 8.10)

310-3B/310ARE-3B TECHNOLOGY REQUIREMENTS & DESIRABLE DATA

	ITEM	SR&T FUNDS, $K	SR&T SCHEDULE, MO	PROPOSED PROGRAM
SR&T	CLASS I ENGINE	TBD	TBD	HIGH ALT TESTS TO OBTAIN PERF DATA ON HIGH ϵ NOZZLE FOR MIXTURE RATIO RANGE
SR&T	LASER RADAR	500	12	FAB & TEST LIGHTWEIGHT, LOW-POWER UNIT USING IMPROVED OPTICS & LIGHTER MIRROR DRIVES
SR&T	PFR HELIUM TANK	125	12	FAB & TEST 3 TANKS UNDER STATIC & DYNAMIC LOADING; ENVIRONMENTAL & COMPATIBILITY TESTS
SR&T	ADVANCED IMU	500	18	DEVELOP SOFTWARE FOR REDUNDANCY MGMT & CALIBRATION OF TWO MULTI-SENSOR TYPE IMU'S
SR&T	GRAPHITE COMPOSITE	15	6	FAB GRAPHITE EPOXY HONEYCOMB SAMPLES & TEST IN VARIOUS PLY DIRECTIONS FOR DESIGN DATA
DESIRABLE DATA	MATERIALS COMPATIBILITY DATA	25	6	2219-T87, 2219-T81 & 6A14VTI; WITH N_2O_4 & MMH UP TO 130°
DESIRABLE DATA	FRACTURE MECHANICS DATA	25	6	2219-T87 & 6A14VTI; K_{IC}, K_{TH} & FLAW GROWTH WITH N_2O_4 & MMH UP TO 130°
DESIRABLE DATA	HEAT PIPES	100	12	FAB & TEST VARIABLE CONDUCTANCE HEAT PIPE RADIATOR PANEL & HEADER FOR TURN-DOWN RATIO & SHUTOFF HEAT FLUX DATA

III-76

OVERVIEW 510-3B ⟶ 510ADE-3B

The conventional all aluminum structure of this vehicle and the use of the OME as the main engine leads to low DDT&E. This tug concept is matched to the use of kick stages, initially AKS for increased deployment capability followed by phased introduction of the DKS for retrieval from 1983 onwards. This combination of low cost tug with kick stages provides full retrieval capability at the lowest deployment cost.

The deployment and retrieval payload capabilities of the tug are shown for candidate flight modes and missions, together with costs and the number of flights and vehicles upon which they were based.

(Ref. Vol. 5, Part II, Opt. 3B/2, Sect. 5.2)

510A-3B/510ADE-3B OVERVIEW

- FEATURES
  - SINGLE STAGE TUG WITH AKS FOR SOME PAYLOADS
  - PHASED INTRO OF DKS RETRIEVAL
  - SOME DKS LAUNCHED IN '79/83 FOR PL RETRIEVAL FROM '83
  - LOW DDT&E TUG EXPLOITS PERF OF KICK STAGES
  - MAIN ENGINE - OME 7.5K — I_{SP} = 327.2 SECS
  - FIXED WEIGHTS: 510A-3B — 3329 LB
    : 510ADE-3B — 3534 LB

- FLIGHT MODES

510ADE-3B

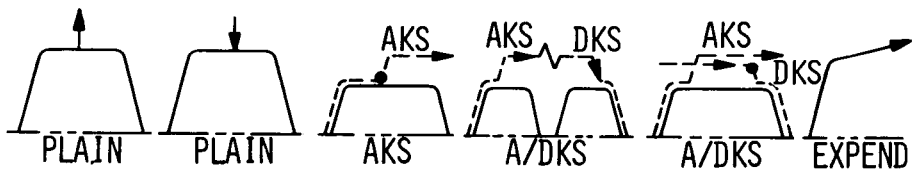

- PERFORMANCE — GEOSYNCH — PLANET

- DEPLOY (LB)	3035	6546	3825	PL 22 & 24
- RETRIEVE (LB)	805	(& PL 23)	3825	
- ROUND TRIP (LB)		2385		

- PROGRAMMATICS
  - DDT&E $M 254/318
  - TOTAL PROGRAM $M 4439
  - NO. OF FLIGHTS 336
  - NO. OF TUGS 14
  - NO. OF AKS 32
  - NO. OF A/DKS 95

III-79

OPTION 3B 510A/510ADE-3B PERFORMANCE SUMMARY

This concept requires kick stages to meet both the 3500 pound deployment and retrieval requirement. The objective of this concept was to develop a low DDT&E option without regard to weight, keeping in mind the high performance capability of the kick stages.

The delta-V budgets shown on the facing page text accounts for gravity losses resulting from the relatively low 7500 lb thrust engine. A finite burn simulation which utilizes a gravity turn during the early portion of the maneuver and cross product steering during the terminal portion was used to define delta-V's for the transfer and circularization burns. The transfer to geosynchronous altitude was split into two burns. A 2 degree plane change was split between the two outbound transfer maneuvers and the remaining 26.5 degrees performed during the circularization burns.

All performance calculations account for APS, EPS, and stop/start consumables. A detailed calculation was made for each concept and flight mode by accounting for attitude maneuvers for prethrust orientations, navigation sightings and IMU alignments. All limit cycle operations, both narrow and wide, were accounted for in the calculations. Midcourse corrections, terminal rendezvous, and translations required to null residuals after each main engine burn was accounted for in the evaluation.

(Ref. Vol. 6, Sect. 6.3)

OPTION 3B - 510A/510ADE-3B PERFORMANCE SUMMARY

VEHICLE CHARACTERISTICS (510A/510ADE)

W_{BO}	= 3329/3534	I_{SP}	= 327.2 SEC
ADAPTOR WT	= 1510 LBS	THRUST	= 7500 LBS
W_P CAPACITY	= 59,500 LBS	FPR	= 1.7% ΔV

DELTA FPS	OUTBOUND	CORE ON-ORBIT	INBOUND	K.S.	LOSSES
• DEPLOY	14018	0	13891	N/A	107
• DEPLOY + AKS	11587	0	11956	2485	98
• RETRIEVE	14018	30	13891	N/A	107
• RETRIEVE + DKS	10653	30	11460	3412	98
• RND TRIP	14018	130	13891	N/A	107
• RND TRIP + A/DKS	8312	630	9460	5729/5868	107

	CONSUMABLES - LBS		GEO PAYLOAD - LBS	
	APS	EPS+LOSSES	510A	510ADE
• DEPLOY	281	69	3410	3035
• DEPLOY + AKS	217	48	6090	6546
• RETRIEVE	409	82		805
• RETRIEVE + DKS	628	72		3825
• RND TRIP	449	148		528
• RND TRIP + A/DKS	423	96		2385

OPTION 3B-510A/510ADE - MISSION PERFORMANCE

All non geosynchronous payloads can be retrieved without the DKS. The facing page chart summarized the retrieval capability for Shuttle launches into 28.5° and 60° inclined orbits. Only DOD missions are indicated; however, the same conculsions can be drawn for NASA missions.

(Ref. Vol. 4, Sect. 4.3.4.3)

510ADE-3B RETRIEVE PERFORMANCE

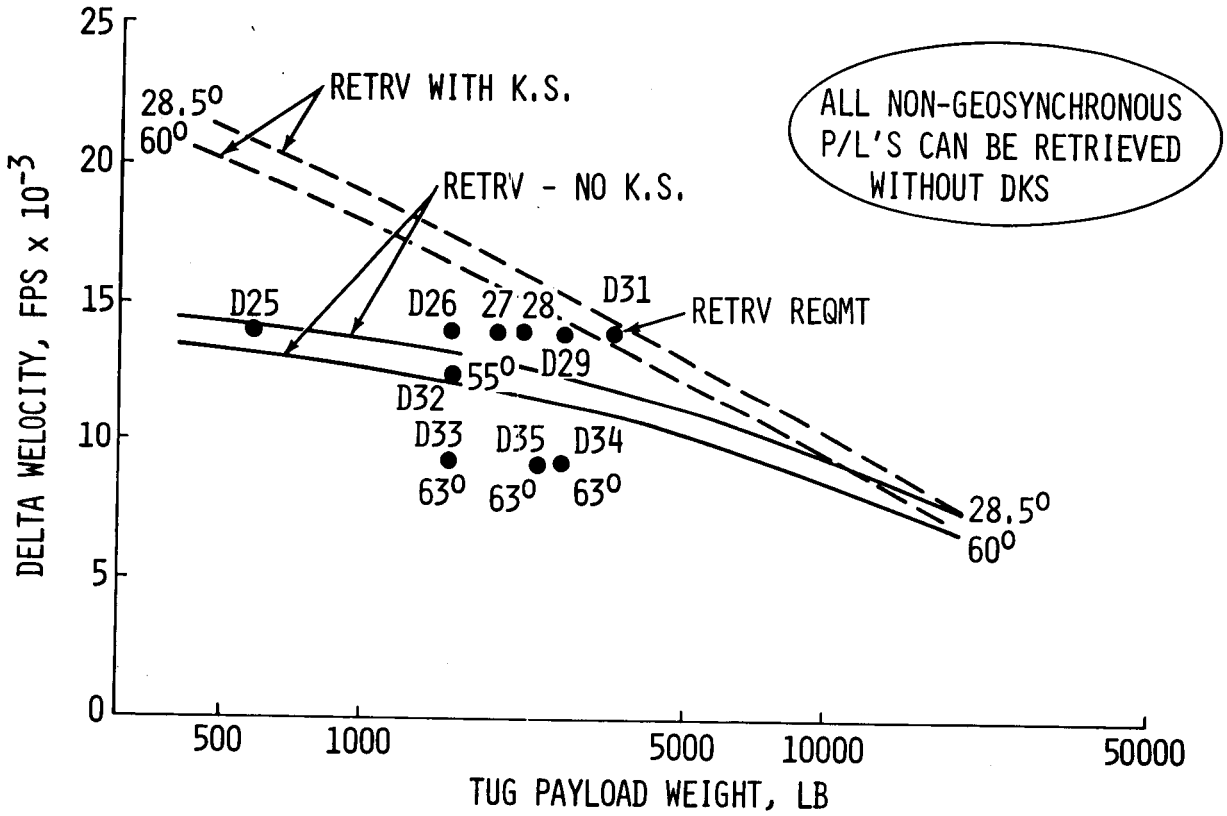

III-12

OPTION 3B-510A/510ADE - FLIGHT SUMMARY

The AKS/DKS approach of the 510A510ADE concept reduces the number of required Shuttle/Tug flights by 33 relative to concept 310/310ARE by taking greater advantage of the opportunites for round-trip flights.

There are a total of 198 NASA flights, comprised of 162 ETR launches and 36 WTR launches. There are a total of 163 DOD flights, of which 142 are launched from ETR and 21 from WTR. Kick stages are not required for any of the WTR flights.

Concept 510A/510ADE has the potential of capturing 18 of the 49 additional P/L's assigned to Option 3B using the flight modes explored to meet option requirements. Variations in the application of the designated kick stages may increase the additional capture significantly.

(Ref. Vol. 4, Sect. 4.3.4.3)

FLIGHT SUMMARY OPTION: (510/510ADE-3B)

FLIGHT MODE		CALENDAR YEAR											TOTAL
		80	81	82	83	84	85	86	87	88	89	90	
TOTAL FLIGHTS	SHUTTLE	26	21	23	37	41	36	36	39	33	33	36	361
	TUG												SAME
TUG FLIGHT DISTRIBUTION	DEPLOY	(26)	(21)	(23)	(36)	(14)	(8)	(8)	(16)	(8)	(13)	(8)	(181)
	SINGLE P/L CORE	7	6	8	7	4	3	2	5	2	4	3	51
	- CORE + KS	14	13	14	22	6	2	4	5	2	1	2	85
	CORE + -EXPEND TUG					2		1	1		3	1	8
	MULTI P/L-CORE	5	2	1	7	2	3	1	1	1	4	2	29
	-CORE + KS								4	3	1		8
	RETRIEVE					(8)	(3)	(6)	(4)	(4)	(1)	(6)	(32)
	CORE ONLY					3		6	2	4		2	17
	CORE + KS					5	3		2		1	4	15
	ROUND TRIP					(19)	(24)	(22)	(18)	(21)	(18)	(22)	(144)
	CORE ONLY					4	10	7	6	8	7	4	46
	CORE + KS					15	14	15	12	13	11	18	98
	SORTIE				(1)		(1)		(1)		(1)		(4)
MISSION MODEL	(TOTAL)	(34)	(23)	(24)	(48)	(64)	(64)	(60)	(63)	(59)	(62)	(59)	(560)
	DEPLOY	34	23	24	47	37	36	32	40	34	42	34	383
	RETRIEVE					27	27	28	22	25	19	25	173
	SORTIE				1		1		1		1		4
FLT RATE USED IN COSTING		3	18	23	37	38	36	36	39	33	33	36	332

AKS/DKS CONCEPT REDUCES FLTS BY 33 RELATIVE TO RDM CONCEPT

III-22

CONFIGURATION 510ADE-3B

The 510ADE-3B configuration employs nested propellant tanks sharing a common pressure interface only by virtue of the nested separate domes. The tanks are made of spun aluminum alloy half-sections, welded together around their girth diameter. Outer shell sections are made of aluminum skin/core honeycomb construction, attached to the tank girths by mechanical joints.

The engine thrust structure is a conical section of aluminum stiffened sheet construction also. All main support and intermediate frames are of aluminum allow construction.

An aluminum meteorite shield, supported by fiberglass standoffs on 6" centers, protects the propellant tank over its cylindrical portion.

Twelve lock latches are located at both ends of the Tug for final securing of payloads to tug and tug to support adapter. Twelve comical index fittings at both forward and aft interfaces serve to index and align the mating surfaces and transmit shear and compression loads across the interface.

All subsystem equipments are located in side mounted equipment modules for easy access and serviceablility.

Double goldized blankets with nylon net spacers in conjunction with suitable surface coatings on all exterior surfaces provide the required thermal balance for the spacecraft. In addition aluminum heat pipe radiators mounted on the surface of the equipment modules maintain the thermal balance of the equipment modules.

Four equally spaced probe/drogue type probes are installed at the forward interface for executing retrieval operations.

A complete inboard profile and structural arrangement for this configuration may be found in Volume 5.

(Ref. Vol. 5, Part II, Opt. 3B/2, Sect. 5.2)

INBOARD PROFILE - 510ADE-3B: SIDE VIEW

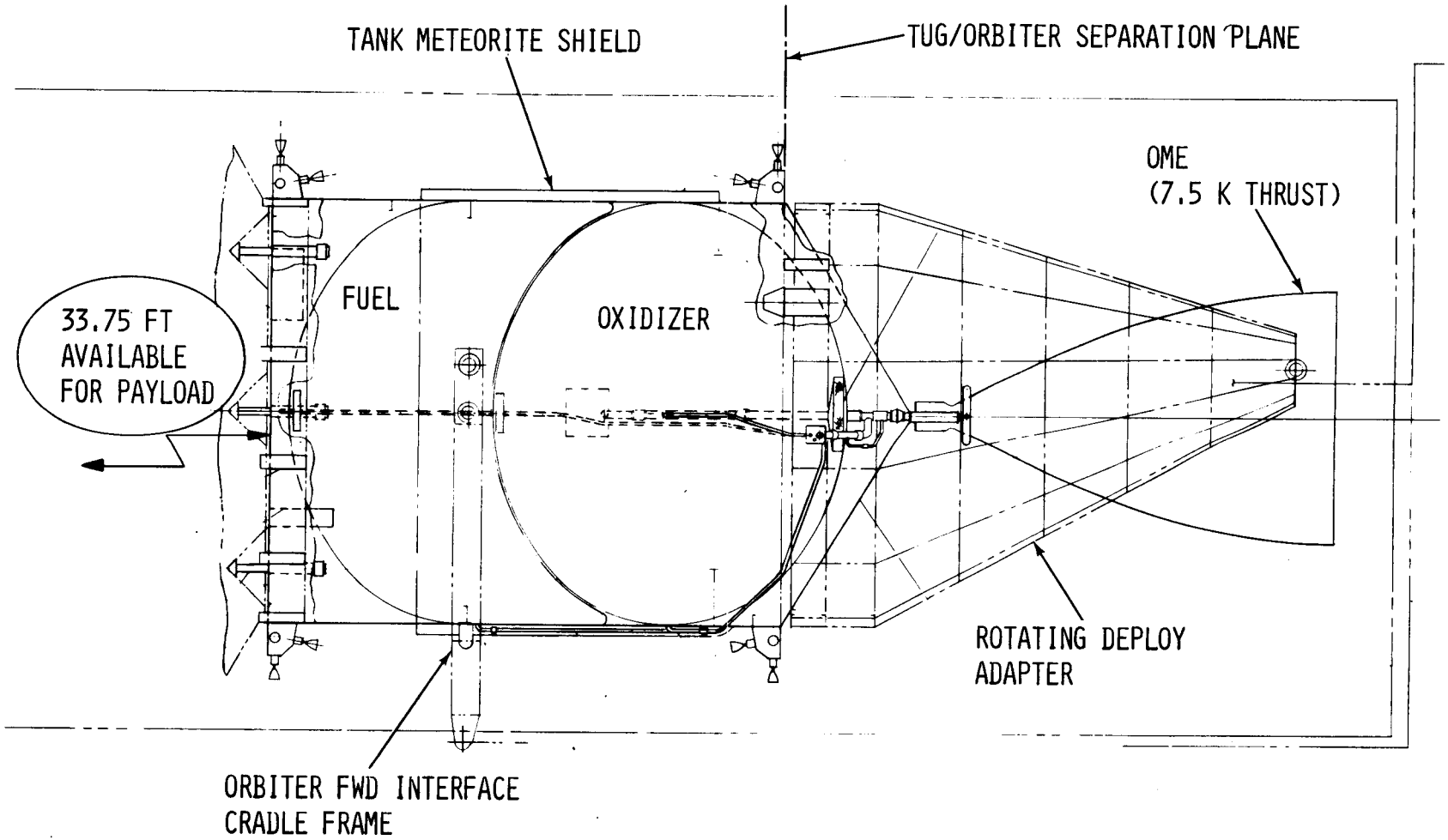

III-99

THIS PAGE INTENTIONALLY LEFT BLANK

INBOARD PROFILE - 510ADE-3B: PLAN VIEW

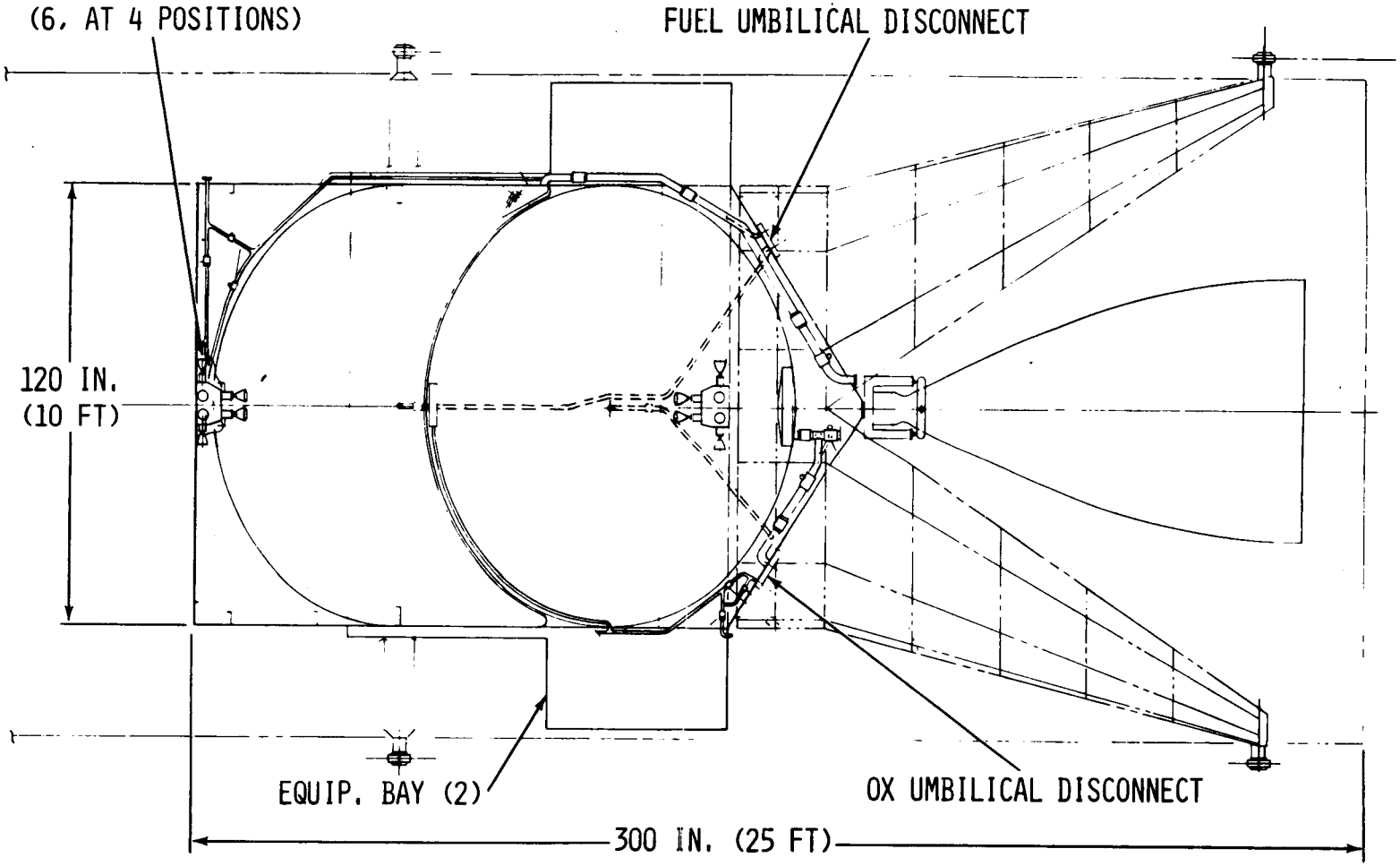

III-98

CONFIGURATION DESIGN DATA & WEIGHT SUMMARY - TUG 510A-3B

The features summarized on this chart and the similar one on the following page provide some insight into the subsystem details and reflect the option for which the Tug is designed. Thus:

- The tank capacity of 59500 lb suits the phased development to retrieval missions.
- Low cost technology of the subsystems is reflected in the aluminum structure and the OME 7.5K main engine.
- The early deploy only missions are satisfied by the light deploy only mechanisms, the use of 16 APS thrusters and modest 317 lb capacity APS propellant tankage.

The weights - summarized by subsystem are presented to WBS level 6 in Vol. 5 together with C. G. and inertia data. These weights are further itemized in Vol. 5 to WBS level 7 or lower; all subsystem components being listed on the Data Forms "B" which are included in each subsystem description for each Tug.

At the bottom of the chart are weights showing a typical build up to the 65000 lb. Shuttle payload capacity. The example given is for a plain Tug deploy mission. Other missions have different figures for consumables, main propellant loading and payload. These are given in detail both in Vol. 4 and Vol. 6.

(Ref. Vol. 5, Part II, Opt. 3B/2, Sect. 5.2)

CONFIGURATION DESIGN DATA AND WEIGHT SUMMARY: SINGLE STAGE STORABLE TUG 510A-3B

ITEM	FEATURES	WEIGHT-LB
• STRUCTURE		1285
TANKS	ALUMINUM SPUN-NESTED DOME CAPACITY = 59500 LB	
FRAMES	ALUMINUM	
OUTER SHELL	ALUMINUM STIFFENED SHEET	
DOCKING	DEPLOYMENT MECHANISMS	
• PROPULSION		755
MAIN ENGINE	OME-7500 LB THRUST-I_{SP} = 327.2 SECS	
PRESSURIZATION	AMBIENT HELIUM - PFR TANKS-CAP. = 14.2 LB	
ACPS	HYDRAZINE-16 THRUSTERS x 25 LB-CAPACITY=317 LB	
• THERMAL CONTROL		89
	MYLAR TANK INSUL. COATINGS, RADIATOR	
• AVIONICS		673
RENDEZVOUS & DOCK	AUTONOMY LEVEL IIIA-DEPLOYMENT CAPABILITY	
DATA MANAGEMENT	COMPUTER-48K WORDS	
GUIDANCE AND NAV	CAROUSEL IMU WITH GYRO BACKUP	
GUIDANCE UPDATE	GROUND UPDATE	
POWER	MODIFIED F/C-CYRO TANKS CAP. = 104 LB	
	DRY WEIGHT	2802
	DRY WEIGHT & CONTINGENCY	3082
	NONUSABLE PROPELLANT	247
	BURNOUT WEIGHT	3329
DEPLOY MISSION	NON IMPULSE EXPENDABLES	73
	ATTITUDE CONTROL PROPELLANT	281
	MAIN PROPELLANT	56397
	PAYLOAD	3410
	TUG AT FIRST IGNITION	63490
	SHUTTLE INTERFACE ITEMS	1510
	TOTAL-SHUTTLE INSTALLED	65000

III-47

CONFIGURATION DESIGN DATA AND WEIGHT SUMMARY TUG 510ADE-3B

The differences between this chart and that on the previous page provide insight into the phased development program. Points to be noted are:

- The introduction of retrieval docking mechanism Laser Radar and TV, and the increase in APS thrusters from 16 to 24 and the APS propellant capacity from 317 to 450 lb. to suit the longer missions.
- The change from autonomy level IIIA to level IIB which is not possible before the new generation of navigation satellites are in place. This is reflected in the satellite communication and doppler navigation additions, and is responsible, in part, for the increase in computer size to 65K words.
- As for other phased developments we have changed from a Carousel IMU with gyro backup in the initial version to twin micron IMU's in the developed version. This yields a big weight decrease and a reliability improvement for negligible net program cost.

(Ref. Vol. 5, Part II, Opt. 3B/2, Sect. 5.2)

CONFIGURATION DESIGN DATA AND WEIGHT SUMMARY: SINGLE STAGE STORABLE TUG 510ADE-3B

ITEM	FEATURES	WEIGHT, LB
• STRUCTURE		1338
TANKS	ALUMINUM SPUN-NESTED DOME CAP. = 59500 LB	
FRAMES	ALUMINUM	
OUTER SHELL	ALUMINUM STIFFENED SHEET	
DOCKING	DEPLOYMENT MECHANISM	
• PROPULSION		793
MAIN ENGINE	OME-7500 LB THRUST-Isp = 327.2 SEC	
PRESSURIZATION	AMBIENT HELIUM-PFR TANKS-CAP. = 14.2 LB	
ACPS	HYDRAZINE-24 THRUSTERS x 25 LB CAP. = 450 LB	
• THERMAL CONTROL		89
	MYLAR TANK INSUL COATINGS, RADIATOR	
• AVIONICS		768
RENDEZVOUS & DOCK	AUTONOMY LEVEL IIB-RETRIEVAL-LASER RADAR + TV	
DATA MGMT	COMPUTER-65K WORDS-2 REG	
GUIDANCE NAV	2 x MICRON IMU - 1 x STAR TRACKED	
GUIDANCE UPDATE	SATELLITE AND DOPPLER	
POWER	MOD F/C-CYRO TANKS CAP. 104 LB	
	DRY WEIGHT	2988
	DRY WEIGHT & CONTINGENCY	3287
	NONUSABLE PROPELLANT	247
	BURNOUT WEIGHT	3534
DEPLOY MISSION	NON-IMPULSE EXPENDABLES	73
	ATTITUDE CONTROL PROPELLANT	281
	MAIN PROPELLANT	56567
	PAYLOAD	3035
	TUG AT FIRST IGNITION	63490
	SHUTTLE INTERFACE ITEMS	1510
	TOTAL SHUTTLE INSTALLED	65000

MAIN PROPULSION SUBSYSTEM (MPS) DESCRIPTION 510A-3B/510ADE-3B VEHICLE

This vehicle utilizes the OME 7.5 engine in order to reduce the development cost. Simplest in terms of development, this engine consists of a gas generator driven turbopump assembly supplying propellants to the "existing" OME thrust chamber assembly.

The MPS is based upon a design which is almost completely state-of-the-art. The only components which represent a new design are the helium tanks which are of light weight prestressed filament reinforced (PFR) construction.

The remainder of the pressurization system is conventional, with pressure control provided by modified OMS regulators and relief valves. The requirement to meet a 0.97 mission reliability dictates the installation of redundant regulators and helium initiating valves. Quad check valves downstream of each regulator prevent the back-flow of propellant vapors into the regulators and upstream portions of the helium system. Solenoid valves straddling each relief valve/burst disc assembly allows selective tank depressurization.

Zero g starts are provided for by screen type propellant retention devices located over each tank outlet and provide sufficient propellant to maintain engine operation until the remainder of the propellant settles. A prevalve is installed upstream of each engine inlet to isolate the propellants from the engine during ground and launch operations and allow engine drain between burns.

Ground drain, in both the horizontal and vertical positions, is provided. The horizontal drain lines lead from the tank equators to the umbilical disconnect panels. Two umbilical disconnect panels are provided on opposite sides of the vehicle. All lines leading to a panel have redundant shutoff capability to meet the MPS fail safe requirement.

(Ref. Vol. 5, Part II, Opt. 3B/2, Sect. 5.2)

510A-3B/510ADE-3B MAIN PROPULSION SUBSYSTEM (MPS)

DRIVER REQUIREMENTS

- 19×10^6 LB-SEC TOTAL IMPULSE
- 9 BURNS/MISSIONS
- 117 HR ON-ORBIT TIME
- 10 MIN MIN RESTART TIME
- 69 HR MAX RESTART TIME
- VERTICAL & HORIZONTAL DRAIN
- MIN 16 PSIA ENG INLET PRESS.
- OFF-LINE SERVICING & CHECKOUT

MPS DEFINITION

- OME 7.5 K ENG
- NESTED DOME TANKS
- PFR He TANKS (2500 PSIA)
- 2 IN (FUEL), 3 1/4 IN (OXID) DIA FEEDLINES
- DUAL He ISOL VALVES & REG ASSY
- 23 IN. DIA He BOTTLE

MPS PERFORMANCE

- 7500 LB THRUST
- 327.2 SEC ISP
- 24 PSIA (MAX) MMH TANK PRESS.
- 34 PSIA (MAX) N_2O_4 TANK PRESS.
- 14.2 LB He
- 59,500 LB PROP.
- 1.9 MIXTURE RATIO

DEVELOPMENT RISK & TECHNOLOGY

- PFR TANK

- MOD TO EXISTING ENG DESIGN, LOW RISK
- 88% OF COMPONENTS EXISTING OR MOD EXISTING DESIGNS

III-86

MAIN PROPULSION SUBSYSTEM (MPS) - 510A-3B/510ADE-3B

The 510A-3B/510ADE-3B engine is required to start up to 9 times per mission, and must remain on-orbit for up to 117 hours. The planetary missions require that the Tug be turned around and retrofired as soon as possible after the planetary insertion burn. This leads to the minimum restart requirement of 10 minutes.

The capability to drain and depressurize the vehicle in both the horizontal and vertical positions is provided. An in-flight dump system was not included; however, a sensitivity study has been conducted which indicates that it can save vehicle weight and cost due to the reduction in maximum landing weight, and it probably will be baselined.

This vehicle uses nested dome propellant tanks and a pair of prestressed filament reinforced (PFR) helium tanks. In order to meet the 0.97 mission reliability, redundant helium isolation valves and regulators are included. The engine is the OME 7.5 producing a thrust of 7500 lbs. and an Isp of 327.2 seconds at a 1.9 mixture ratio. This engine is a modified version of the Shuttle OMS engine with a turbopump added to avoid the weight penalties of pressurized tanks. As such, it represents the minimum development risk of all the engine candidates.

The PFR tank is the only subsystem component representing any significant development risk. Failure to develop the tank would mean a 48 lb. weight increase should a titanium tank be used as a fall back position.

Fourteen of sixteen (88%) types of subsystem components are either existing or modifications of existing designs, further reducing subsystem development risk.

MPS SCHEMATIC - 410AD-2, 310-3A, 310RE-3A, 310-3B, 310ARE-3B, 510A-3B, 510ADE-3B

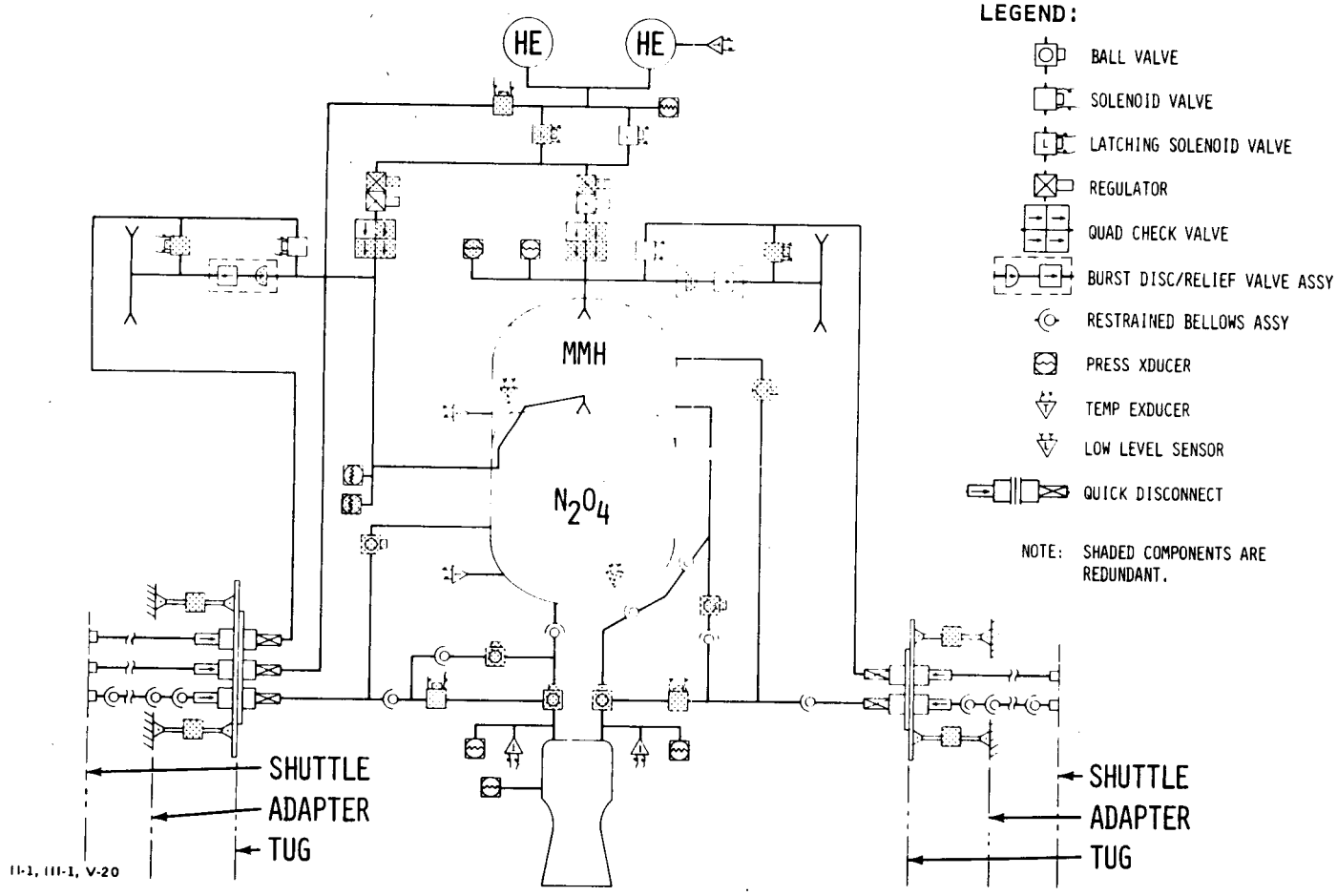

AUXILIARY PROPULSION SYSTEM - 510A/510ADE-3B

The fail operational/fail safe requirement demands that the mission be completed after any single failure and shuttle/crew safety be guaranteed after two failures.

Sixteen thrusters is the minimum number required to provide attitude control after two thruster failures. Thrust level is driven by the requirement to provide relatively high acceleration in one axis for mid-course corrections on Tugs which deploy only and by the requirement for high accelerations in three axes to achieve successful rendezvous on Tugs which retrieve payloads. The retrieval case requires an increase to twenty four thrusters. The "minimum thrust" requirement is derived from minimum tolerable accelerations which achieve mission completion and is used to establish thruster requirements for the one engine failed case.

Tanks are sized for the guaranteed usable propellant plus 10% contingency. Contingencies include quantity gaging error, trapped propellant and propellant for cross-coupling losses in the event of a thruster failure.

The only component in the system which is not classified as existing or modified existing is the bladder. However the advanced state of elastomeric bladder technology renders it a non-risk item.

510A-3B/510ADE-3B AUXILIARY PROPULSION SYSTEM (APS)

DRIVER REQUIREMENTS

- USABLE PROPELLANT = 317/450 LB
- MIN THRUST PER AXIS = 50*/±50 LB
- NOMINAL THRUST PER AXIS = 100*/±100 LB
- FAIL-OPERATIONAL/FAIL SAFE DESIGN
- VENT SYS TO 20 PSI AT TUG RETRIEVAL
- VERIFY PROPELLENT QUANT PRE-DOCKING
- NO VENTING IN PAYLOAD BAY

* Y AXIS ONLY

APS DEFINITION

- MONOPROPELLANT HYDRAZINE
- 16/24 THRUSTERS @ 25 LB THRUST EACH
- 3/4 PROPELLANT TANKS, LM RCS DESIGN 12.5" D x 34" LONG
- ELASTOMERIC BLADDER PROPELLANT ACQ
- 1/2 TITANIUM HELIUM TANK, 15.3/12.3" D
- 5/8" LIQUID LINES, 1/2" GAS LINES

APS PERFORMANCE

- I_{SP} = 232 STEADY STATE, 170 MIN PULSING
- PRESSURE BUDGET
  - HELIUM TANK = 2600/3900 PSI MAX
  - PROPELLANT TANK = 340 PSI
  - THRUSTER INLET = 325 PSI MIN
  - CHAMBER PRESS. = 140 PSI
- 10% CONTINGENT PROPELLANT REQ

DEVELOPMENT RISK & TECHNOLOGY

- NO TECHNOLOGY ISSUES
- APPROX 90% EXISTING OR MOD EXISTING COMPONENTS

III-36

APS SCHEMATIC - 510ADE-3B

The description utilized for the initial configuration applies. Additions incorporated in the evolved configuration consist of one helium pressurization tank, one monopropellant tank, and two additional thrusters per APS cluster.

Ref. Vol. 5, Part II, Opt 3B/2, Sect. 5.2

APS SCHEMATIC -310-3A, 310A-3B, 510A-3B

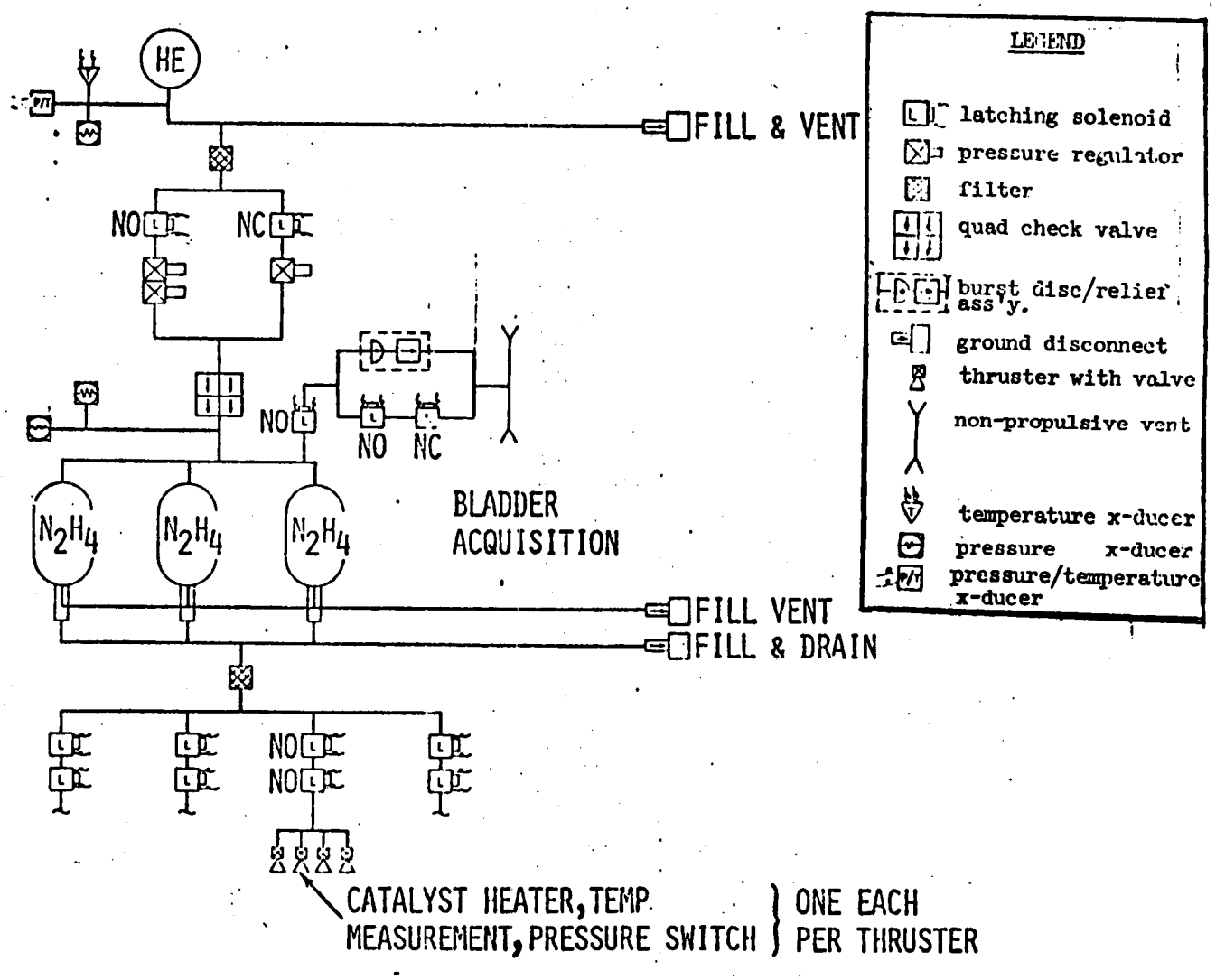

The Auxiliary Propulsion System is a helium pressurized, monopropellant hydrazine design incorporating state-of-the-art hardware. All components are redundant to the extent that mission completion is possible after any single failure and shuttle/crew safety is guaranteed after any two failures (fail operational/fail safe).

Helium is stored in off-the-shelf, spherical titanium vessels. The helium latching solenoid valve and regulator package, modified LM components, provide pressure regulation to approximately 350 psi. A downstream quad check valve, another LM type design, protects the regulators/solenoid valves against contamination by propellant vapors which may diffuse through the propellant tank bladders. The propellant tanks are modified LM Reaction Control System tanks. They are equipped with fully reusable elastomeric (EPT-10) bladders for propellant acquisition.

The solenoid valve upstream of the relief and vent valve package protects against a failure of the relief valve to reseat or of both vent valves to close after vent, conditions which create a potential tank implosion situation during reentry. Series redundant thruster isolation valves, normally open during Tug operation, are closed in the event of an open thruster failure. Each set of valves isolate one of four groups of thrusters. Four manifolds is the minimum number possible which retains the fail op/fail safe criteria. That is, two groups of thrusters can be isolated and vehicle attitude controlled in all axes.

The thrusters are the 25 lb. thrust, 232 sec. Isp Hamilton Standard model REA 19-3, which was developed for use as the shuttle vernier engine when it incorporated a monopropellant reaction control system. Each thruster is equipped with a catalyst heater to maintain it at 150°F for life considerations.

APS SCHEMATIC - 310RE-3A, 310ARE-3B, 410AD-2, 510ADE-3B

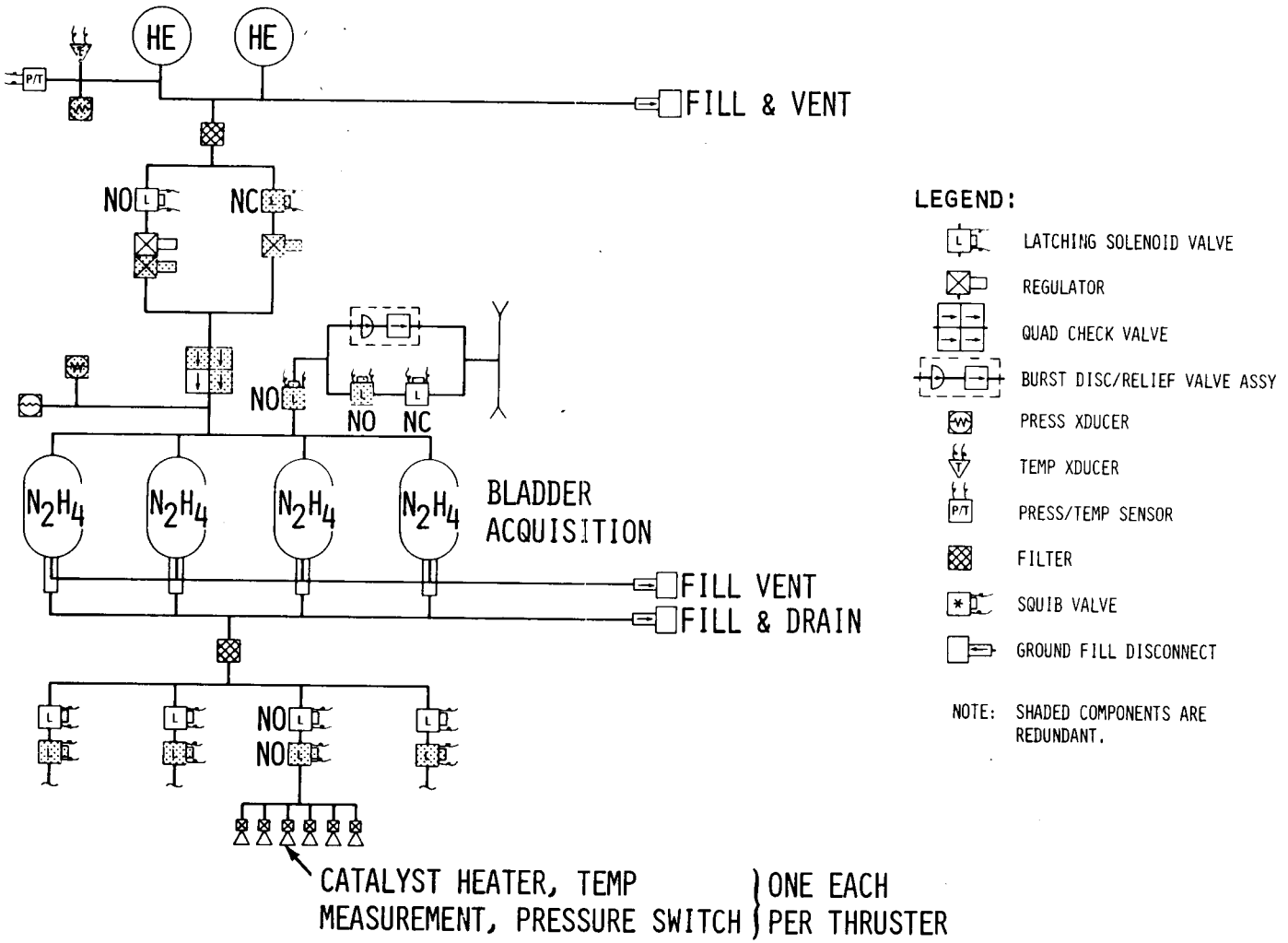

II-2, III-3, V-16

ASTRIONICS SUBSYSTEM - 510A-3B

The 510A-3B is a single stage deploy-only Tug that evolves into configuration 510ADE-3B. The mission reliability requirements are met with a redundant transmitter and power amplifier in the Dedicated Frequency Station of the Communications Subsystem. The other redundant equipments (computer, APS control electronics, and 2 DFS receivers) are carried for safety reasons as is the rate gyro backup unit for the IMU. The fuel cell power supply is also backed up by a 10 amp-hr. battery for the same safety reason i.e., Orbiter crew safety during Tug deployment and docking.

Since the 510A-3B does not have the capability to retrieve payloads, there is no requirement for the Tug to communicate with payloads via RF link, thus permitting a single Dedicated Frequency Station (DFS) to be used for radio communication between Tug and Orbiter or between Tug and ground. The DFS is designed to be compatible with the NASA (STDN) and Air Force (SGLS) tracking networks as well as the projected NASA Telemetry and Data Relay Satellite System (TDRSS).

With the exception of the communications subsystem, a high percentage of all astrionics equipment is modified existing equipment. The S-Band communications equipment is new primarily because it is designed to be compatible with TDRSS (spread spectrum) and CCIR interference requirements. No new technology is required for any 510A-3B astrionics equipment.

(Ref. Vol. 5, Part II, Option 3B, Section 5.2)

510A-3B ASTRIONICS SUBSYSTEM - AUTONOMY LEVEL IIIA

GUIDANCE NAVIGATION & CONTROL

- CAROUSEL IVB IMU BACKED UP BY RATE GYRO UNIT FOR SAFETY
- STAR TRACKER
- 95% MOD EXISTING EQUIP.
- NO NEW TECHNOLOGY

COMMUNICATIONS

- TUG/ORBITER OR TUG/GND COMM
- DEDICATED FREQ STA (DFS)
- S-BAND SYS - INTERNALLY REDUNDANT
- STDN/SGLS/TDRSS COMPATIBLE
- NEW EQUIP. REQ
- NO NEW TECHNOLOGY REQ

DATA MANAGEMENT

- 48K WORD CDC 469 COMPUTER DUAL-REDUNDANT
- ODETICS DDS 3000 TAPE RECORDER
- FLEXIBLE SIGNAL INTERFACE
- 90% MOD EQUIP.
- NO NEW TECHNOLOGY

ELECTRICAL POWER

- MOD SHUTTLE FUEL CELL STACK
  - 2.5 KW AT 28 VDC
- CRYOGENICALLY STORED REACTANTS
  - 1-O_2 TANK AND 1-H_2 TANK
  - ENERGY CAPABILITY = 94 KW-HR
- 10 AMP-HR EMERGENCY BAT. FOR SAFETY
- 70% MOD EXISTING EQUIP.
- NO NEW TECHNOLOGY

NO NEW TECHNOLOGY

III-31

ASTRIONICS SUBSYSTEMS - 510ADE-3B

The 510ADE-3B evolves from the 510A-3B to a Tug with full deployment and retrieval capability and a higher level of autonomy. The addition of laser rendezvous radar and TV provide the sensing capability necessary for the rendezvous and docking functions. Level IIB autonomy in navigation is achieved by the addition of a 621B satellite receiver and one way doppler equipment.

2 Advanced IMU's are installed in place of the Carousel IMU and the rate gyro back up unit. The mission reliability requirements are met by the redundant IMU. The crew safety equipment added to the 510A-3B is retained in the evolved version. Communications evolves to a system that can communicate with the payload using the Channel Selectable Station. The added burden of processing the on-board navigation measurements necessitates an increase in computer capacity from a previous 48K word memory to a 65K memory.

No new technology is required for the DMS, EPS and Communications Subsystems. However, new technology is required for the advanced IMU and laser radar.

(Ref. Vol. 5, Part II, Option 3B, Section 5.2)

510ADE-3B ASTRIONICS SUBSYSTEMS - AUTONOMY LEVEL IIB

GUIDANCE, NAVIGATION & CONTROL

- ■ ADVANCED IMU
- • STAR TRACKER
- ■ LASER RENDEZVOUS RADAR
- ■ 621B SATELLITE RCVR
- ■ ONE WAY DOPPLER RCVR
- • RISK-AVAILABILITY OF 621B SYS
- • NEW EQUIP.
- • NEW TECHNOLOGY
  - IMU
  - LASER RADAR

COMMUNICATIONS

- ■ TUG/PAYLOAD, TUG/GND, TUG/ORBITER, TV COMM
- • DEDICATED FREQ STA
- ■ CHANNEL SELECTABLE STA
- • S-BAND SYS - INTERNALLY REDUNDANT
- • STDN/SGLS/TDRSS COMPATIBLE
- • NEW EQUIP.
- • NO NEW TECHNOLOGY

DATA MANAGEMENT

- ■ 65K WORD CDC 469 COMPUTER DUAL-REDUNDANT
- • ODETICS DDS 3000 TAPE RECORDER
- • FLEXIBLE SIGNAL INTERFACE
- • 90% MOD EQUIP.
- • NO NEW TECHNOLOGY

EVOLUTION BY REPLACEMENT/ADD-ON
• AVG PWR SAME

ELECTRICAL POWER

- • MOD SHUTTLE FUEL CELL STACK
  - 2.5KW AT 28VDC
- • CRYOGENICALLY STORED REACTANTS
  - 1-O_2 TANK & 1-H_2 TANK
  - ENERGY CAPABILITY = 94KW-HR
- • 10 AMP-HR EMERGENCY BAT. FOR SAFETY
- • 70% MOD EXISTING EQUIP.
- • NO NEW TECHNOLOGY

■ EVOLUTIONARY CHANGE

III-32

ASTRIONICS SCHEMATIC - 510A-3B

The Data Management Subsystem (DMS) with its Flexible Signal Interface (FSI) is the pivot around which all other astrionic systems revolve. The remaining astrionic systems feed data or commands to the DMS or take commands and information from it. The Communication Subsystem receives and transmits over 2 antennas located 180° apart on the vehicle for total coverage. The incoming information and commands move through the diplexers, redundant receivers and baseband processors to the DOD secure communication units. The secure comm. is used for DOD payloads only. From the output of the Comm. Subsystem the information flows to the Flexible Signal Interface Controller (FSI) and then into the computer. Telemetry signals flow from the instrumentation sensors through Data Acquisition Control Units (DACU) to the FSI and then out through the Comm. system. The guidance, navigation and control information that is measured by the IMU, Star Tracker and Rate Gyros flows through a DACU to the FSI and then to the computer for processing with uplinked data. The control outputs from the computer go to the MPS, EPS and APS Subsystems as well as to the ME/TVC and APS electronic units. These are the outputs that activate and control the electrical power systems and thrusting systems of the vehicle.

Status information flows from auxiliary stages to the computer and commands flow from the computer to the auxiliary stages over hardwires.

The information to and from the orbiter is also sent over hardwires when the Tug is in the orbiter payload bay.

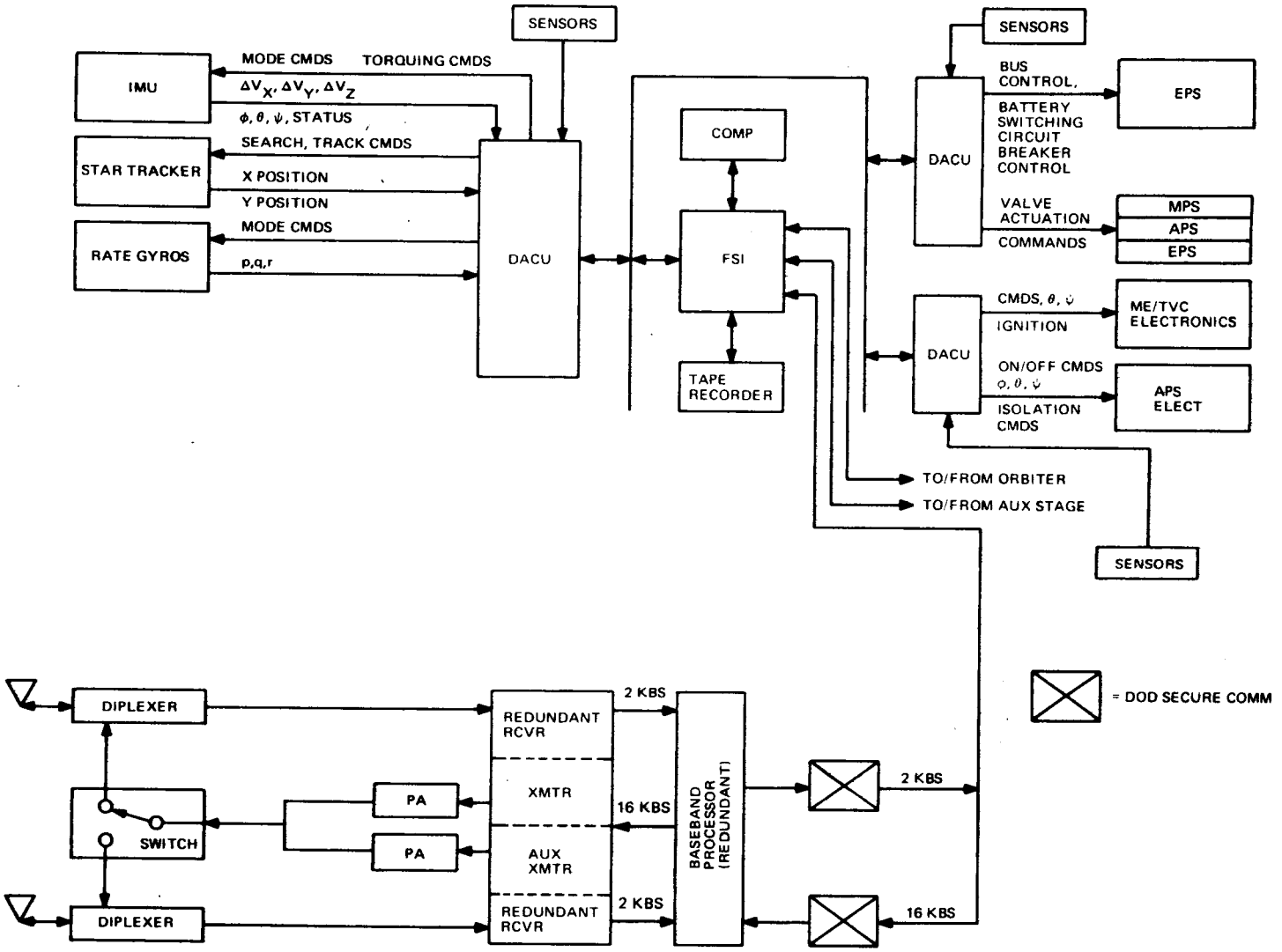

V-1B

Astrionics Schematic For Configuration 110A-1, 310-3A, 310-3B, 510A-3B Level IIIA Autonomy

ASTRIONICS SCHEMATIC - 510ADE-3B

The Data Management Subsystem (DMS) with its Flexible Signal Interface (FSI) is the pivot around which all other astrionic systems revolve. The remaining astrionic systems feed data or commands to the DMS or take commands and information from it.

The Communication Subystem in these configurations consists of a Dedicated Frequency Station (for communication between Tug and Orbiter or between Tug and ground) and a Channel Selectable Station (for communication between Tug and payloads or Tug and Orbiter). The incoming information and commands move through the diplexers, redundant receivers and baseband processors to the DOD secure communication units. The secure comm. is used for DOD payloads only. From the output of the Comm. Subsystem the information flows to the Flexible Signal Interface Controller (FSI) and then into the computer. Telemetry signals flow from the instrumentation sensors through Data Acquisition Control Units (DACU) to the FSI and then out through the Comm. system.

The television camera is a ground controlled unit and its commands flow through the communication subsystems to the DMS system for processing then out to control the camera. The TV information flows back to the ground via the comm. subsystem. The guidance navigation and control information that is measured by the IMU, Star Tracker, Laser Radar, 621B Satellite Receiver and Doppler Receiver flows through a DACU to the FSI and then to the computer for processing. The control outputs from the computer go to the MPS, EPS and APS Subsystems as well as to the ME/TVC and APS electronic units. These are the outputs that activate and control the electrical power systems and thrusting systems of the vehicle.

Status information flows from auxiliary stages to the computer and commands flow from the computer to the auxiliary stages and hardwires.

The information to and from the orbiter is also sent over hardwires when the Tug is in the orbiter payload bay.

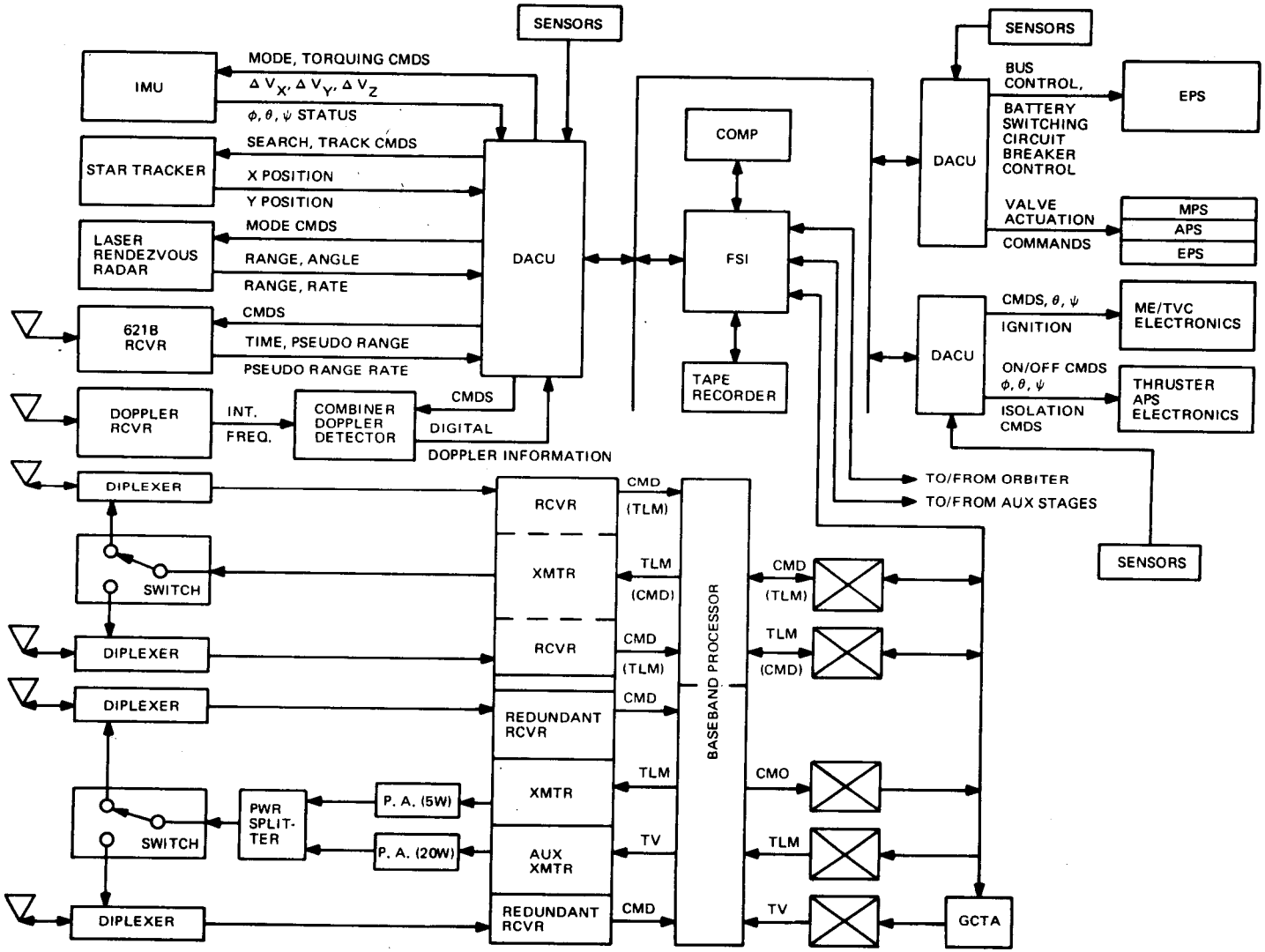

V-1A

Astrionics Schematic For Configuration 310RE-3A, 310ARE-3B, 410AD-2, 510ADE-3B Level II B Autonomy

ELECTRICAL POWER SUBSYSTEM SCHEMATIC 510A-3B/510ADE-3B

The prime power source is a modified fuel cell providing up to 2.5 KW at 28 VDC. The hydrogen and oxygen fuel cell reactants are stored in single cryogenic dewars above the supercritical point and supply high pressure gases to the reactant pressure control valves. The fuel cell nominally operates at 60 PSIA and 180°F. The fuel cell oxygen and hydrogen purge plus product water vents are routed overboard. The coolant loop pump is provided within the fuel cell assembly. The fuel cell feeds both equipment bay buses and is backed up by a 10 amp-hr secondary silver zinc battery. This emergency battery powers essential equipment during Orbiter/Tug deployment and retrieval operations and provides for Orbiter crew safety.

The distribution section is a combination two-wire and structure ground (return bus) system. Solid state power controllers are used for applications requiring 5 amps or less and electromechanical remote control circuit breakers are used for 20 amps or larger applications. The orbiter supplies power for critical Tug equipments (e.g. I M U) from earth launch through Tug deployment. GSE power is required for ground checkout. The Tug supplies payload power when separated from the Orbiter.

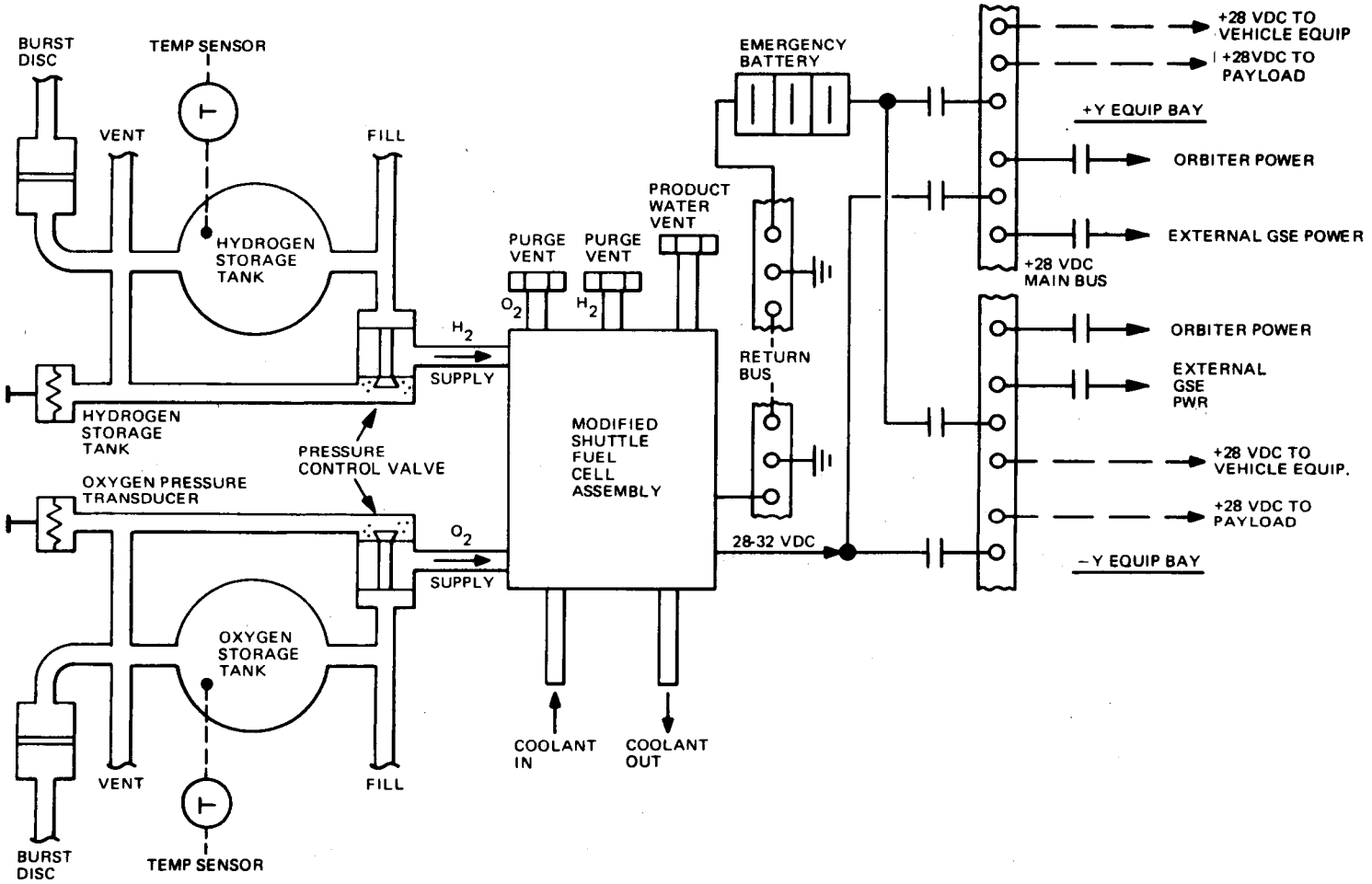

Electrical Power Subsystem for { 410AD-2; 310-3A → 310RE-3A; 310A-3B → 310ARE-3B; 510A-3B → 510ADE-3B }

V-2

The Interim Tug Thermal Control is driven by the wide latitude in missions, the requirement for no preferred orientation, the limited propellant heat sink when the low altitude polar missions are flown, and by the complement of high power density avionics chosen for a particular configuration.

The MLI blanket required to keep propellants above 40°F for offloaded missions is carried on all missions. It consists of double goldized mylar with nylon net spacers, lying between the tank and micrometoroid shield along the cylindrical section and directly over both end domes.

An Alzak coating over the outside of the vehicle keeps tank temperatures below 90°F. Silver backed teflon on the saddle bags and heat pipe radiators minimize incident environmental heat absorption and allow a high degree of heat rejection from the avionics.

A base heat shield protects the thrust structure for the main engine nozzle radiation. Electrical heaters on ME and APS assures that unacceptable cold temperatures, 40°F and 150°F respectively, are never reached.

The majority of avionics are mounted on aluminum plates located in the saddle bags and maintained at acceptable temperatures, 30°F to 120°F, through appropriate radiation couplings and electrical strip heaters. The modified fuel cell and the Carousel V IMU require active cooling. They are on the same active pumped heat transport loop which interfaces with a variable conductance heat pipe radiator (VCHP). The VCHP feature offers its own inherent controls, thereby reducing the need for complex bypass valving with automatic controls.

510A-3B THERMAL CONTROL (T/C)

DRIVER REQUIREMENTS

- NO PREFERRED ORIENTATION
- LOW ALT POLAR MISSION
- MISSION DURATION = 5 DAYS
- ME NOZZLE RADIATION COOLED
- MOD FUEL CELL ACTIVELY COOLED
- AUGMENTER COOLING FOR CAROUSEL IMU

T/C DEFINITION

- 500 FT^2 GOLDIZED MYLAR MLI
- AL BASE HEAT SHIELD
- SILVER-BACKED TEFLON & ALZAK COATINGS
- MOST AVIONICS PASSIVELY COOLED
- 22 FT^2 VCHP/RADIATOR FOR FUEL CELL & IMU
- APS & ME ELECT HEATERS
- HEATERS FOR AVIONICS PALLETS

T/C PERFORMANCE

- 70^oF VEHICLE FROM LAUNCH TO DEPLOY
- PROPELLANTS - 40^oF TO 90^oF
- AVIONICS - 30^oF TO 120^oF
- BASE SHIELD - 600^oF, THRUST STR - 250^oF
- STRUCT 130^oF MAX ON ENTRY
- IMU ON FUEL CELL RADIATOR LOOP
- FUEL CELL RADIATOR REJECTS 2400 BTU/HR

DVT RISK & TECH

- VCHP REQ ADDITIONAL PERFORMANCE DATA
- UNCERTAINITY IN LIFE/REUSABILITY OF COATINGS & INSULATION

III-70

As the configuration matures from the interim (510A-3B) to evolved state (510ADE-3B), avionics necessary to accomplish the rendezvous and docking function are added and some units are replaced with advanced versions. The thermal control system is modified to accommodate these changes. Mission durations, propellant histories and duty cycles remain essentially unchanged so that the thermal provisions impacted by these drivers (insulation, coatings, heaters) remain unchanged.

The added avionics units, with the exception of the TV power amplifier and the laser radar, can be integrated into the saddlebags and cooled passively. The TV power amplifier, used infrequently, is placed on its own small heat pipe circuit. This circuit consists of a variable conductance heat pipe header and a 4 ft^2 simple heat pipe radiator. The laser radar is carried up forward on the outside of the vehicle but is passively cooled.

The Carousel IMU, a unit on the active fuel cell heat transport loop, is replaced by an advanced unit, the Micron IMU. This unit can be passively cooled and draws far less power, 15w vs 125w. The total power generated by the fuel cell remains essentially unchanged, the increased units offset by the decrease in IMU power. Fuel cell radiator area decreases slightly because of the removal of the IMU from the loop and the consistency of the generated power.

510ADE-3B THERMAL CONTROL (T/C)

DRIVER REQUIREMENTS

- NO PREFERRED ORIENTATION
- LOW ALT POLAR MISSION
- MISSION DURATION = 5 DAYS
- ME NOZZLE RADIATION-COOLED
- MOD FUEL CELL ACTIVELY COOLED
- AUGMENTED COOLING FOR TV PWR AMP

T/C DEFINITION

- 500 FT^2 GOLDIZED MYLAR MLI
- AL BASE HEAT SHIELD
- SILVER-BACKED TEFLON & ALZAK COATINGS
- MOST AVIONICS PASSIVELY COOLED
- 17 FT^2 VCHP/RADIATOR FOR FUEL CELL
- 4 FT^2 VCHP/RADIATOR FOR TV PWR AMP
- PAS & ME ELECT HEATERS
- HEATERS FOR AVIONICS PALLETS

T/C PERFORMANCE

- 70^oF VEHICLE FROM LAUNCH TO DEPLOY
- PROPELLANTS - 40^oF TO 90^oF
- AVIONICS - 30^oF TO 120^oF
- BASE SHIELD - 600^oF, THRUST STR - 250^oF
- STRUCT 130^oF MAX ON ENTRY
- FUEL CELL RADIATOR REJECTS 2000 BTU/HR

DVT RISK & TECH

- VCHP REQ ADDITIONAL PERFORMANCE DATA
- UNCERTAINITY IN LIFE/REUSABILITY OF COATINGS & INSULATION

III-71

THERMAL CONTROL SCHEMATIC - 510A-3B

The fuel cell and Carousel V IMU are placed on the active loop. These units are readily integrated since both run continuously, at a relatively constant power level, with the operating temperature of the IMU, 130°F, matching the desired fuel cell coolant inlet temperature. Redundant bypass valves with automatic temperature controllers and sensors monitor the flow rate of coolant through the fuel cell so that the fuel cell outlet temperature lies between 180°F and 190°F, a range which permits maximum fuel cell efficiency. The pumped loop exchanges heat with individual Variable Conductance Heat Pipes (VCHP). The VCHP radiator provides its own control, thereby eliminating the need for an additional bypass circuit, decreases the operating temperature of the pumped loop which in turn minimizes the accumulator size and makes the task of selecting a coolant fluid less difficult. A VCHP radiator has already been built and tested at GAC.

THERMAL CONTROL SCHEMATIC-310-3A,310-3B,510A-3B,320-3A

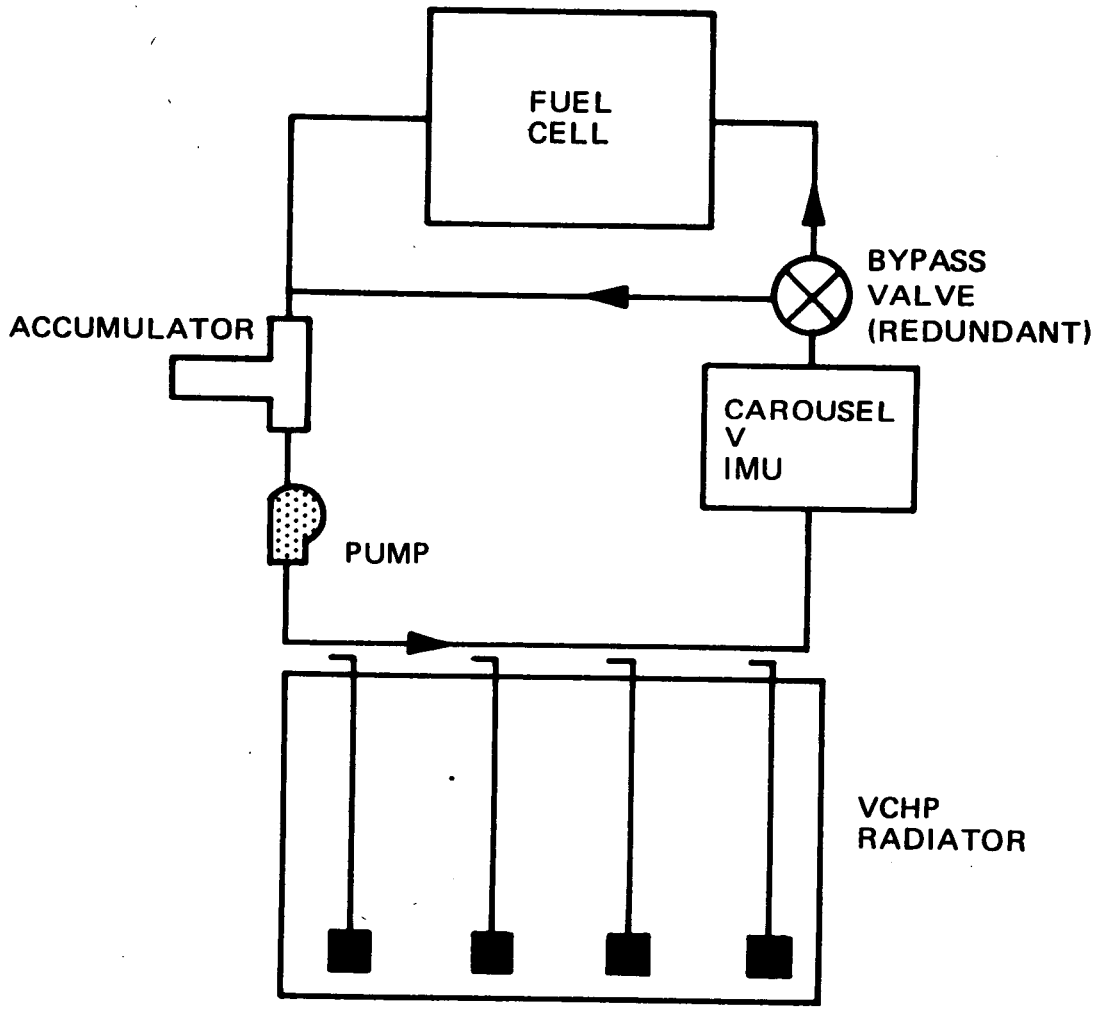

THERMAL CONTROL SCHEMATIC - 510ADE-3B

The fuel cell requires active cooling to maintain acceptable temperatures. The pumped loop fuel cell heat transport circuit has redundant by-pass valves with automatic temperature controllers to monitor the flow rate of coolant through the fuel cell as the load changes. The Micron IMU of the evolved configurations does not require active cooling as did the Carousel V IMU Flown on the interim versions.

The 20 watt Power Amplifier used in conjunction with the TV, is a small solid state unit which dissipates 80 watts in converting 100 watts of DC power to 20 watts of RF power. Because of its infrequent use, less than 2 hours per mission, it is placed on its own loop. A Variable Conductance heat pipe header transports heat to a small, simple heat pipe radiator, providing a self regulating simple heat rejection system.

THERMAL CONTROL SCHEMATIC 310RE-3A,310ARE-3B, 410AD-2,510ADE-3B,320AE-3A

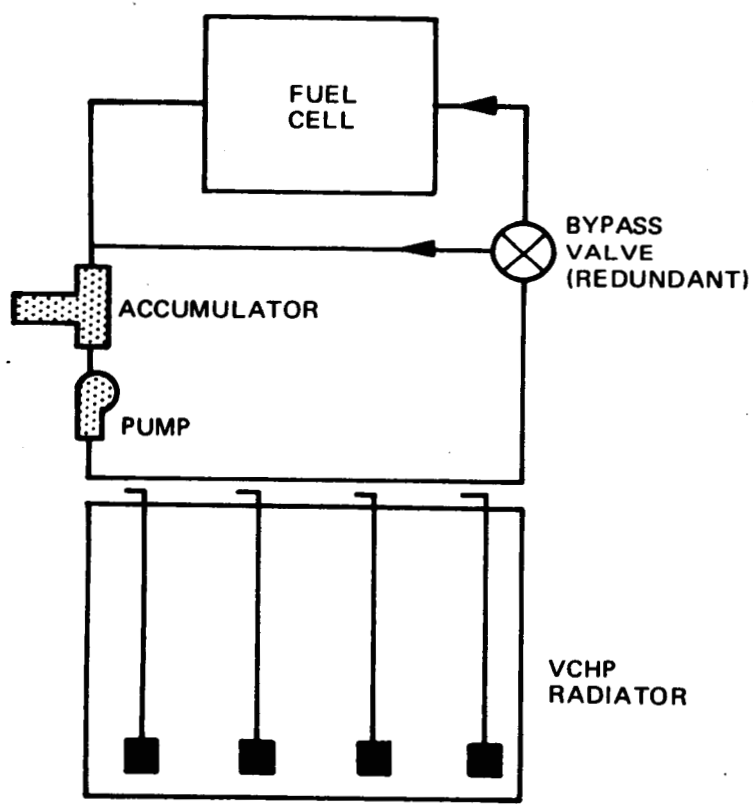

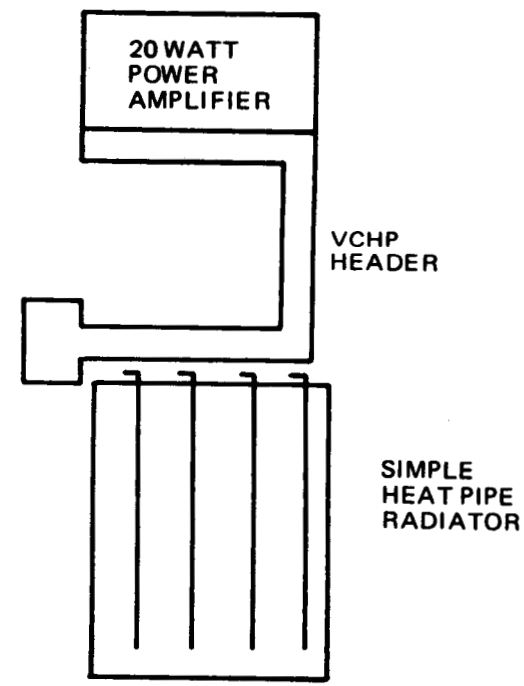

APOGEE/DEORBIT KICK STAGES (A/DKS) CHARACTERISTICS - 510ADE-3B

			GEOSYNCH				PLANETARY
			ROUND TRIP	DEP/RETRV	MULTI DEP IND RETRV	MULTI DEP	
SRM :	APOGEE	WEIGHT EACH	1742 LB	1250 LB	2500 LB	1742 LB	1742 LB
		CLUSTER OF	4	2	2	2	9
		3.6G LIMIT BY BURN=	65 SEC	62 SEC	69 SEC	65 SEC	65 SEC & SERIES BURN
	DEORBIT	WEIGHT EACH	1742 LB	2500 LB	1400 LB	—	—
		CLUSTER OF	2	1	1	—	—
		3.6G LIMIT BY BURN=	65 SEC	69 SEC	63 SEC	—	—
		ϵ	34/1				50/1
		I_{SP}	287 SEC				295 SEC
		λ'	.909				.920
STRUCTURE:	- AL FRAMES, SKIN & STRINGERS	WEIGHT	501 LB	441 LB	455 LB	420 LB	449 LB
PROPULSION:	- SWIVEL NOZZLE TVC	WEIGHT	47 LB	47 LB	47 LB	27 LB	27 LB
	- GASEOUS N_2 APS						

APOGEE/DEORBIT KICK STAGES (A/DKS) CHARACTERISTICS - 510ADE-3B

(CONTINUED)

			GEOSYNCH				
			ROUND TRIP	DEP RETRV	MULTI DEP IND RETRV	MULTI DEP	PLANETARY
ASTRIONICS:		WEIGHT	310 LB	310 LB	310 LB	67 LB	67 LB
APOGEE	DIRECTIONAL CONTROL FOR INITIAL STATE VECTOR FROM TUG		15 MINS				
	BATTERY POWER FOR		30 MINS				
DEORBIT	STATE VECTOR & DIRECTIONAL CONTROL (STAR TRACKER)		✓				
	BATTERY CHARGED BY SOLAR ARRAYS						
	COMMAND TO INITIATE DEORBIT						
	STAGE STATUS INFORMATION						
RELIABILITY:							
STAGE	APOGEE					.9987	
	DEORBIT (CHALLENGE IS 5 YR. IN ORBIT)		.9791				
OVERALL MISSION			.970				
PERFORMANCE:	PAYLOAD	WEIGHT	2385 LB	3825 LB	2400 LB	3815 LB	5000 LB
	STAGE ΔV F.P.S.	APOGEE	5729	2485	5900	4920	10300
		DEORBIT	5868	3412	2650	-	-
COSTS:	DDT&E		$65M				

INTERFACES - 510ADE-3B

The interfaces consist of all structural and mechanical hardware enabling the Tug to link with Shuttle and to separate from it in flight. It includes those items that will remain in the Shuttle during the flight of the Tug. Included is the operational docking/undocking attachment of the Tug to the shuttle, mechanisms, Propulsion Interconnects, astrionics wiring and umbilicals and the mission specialist station.

The weights chart identifies and summerizes by subsystem those Orbiter/Tug interface elements which are chargeable against the 65,000 lb. Payload. Weights have been established and these elements have been included in the WBS build-up of Tug costs.

The interface schematic divides these items into operational categories rather than by subsystem, starting with signal and service lines (which are part of Tug system) installed in the Orbiter. The schematic identifies the signal or service lines at the interface.

INTERFACE SUBSYSEM WEIGHTS

CONCEPT 510ADE-3B	WEIGHT (LB)
STRUCTURE	(1090)
• ROTATING ADAPTER	
• FORWARD CRADLE	
MECHANISMS	(96)
• ADAPTER-ROTATION ACTUATOR/BERTHING PROBES & LATCHES	
• CRADLE - BERTHING LATCHES	
• INFLATABLE SUPPORT FOR MAIN ENGINE NOZZLE	
PROPULSION (MAIN)	(47)
• MAIN PROPELLANT FILL & DRAIN LINES AND VENT LINES	
• HIGH PRESSURE GASEOUS He LINES	
• UMBILICAL PANELS	
ASTRIONICS	(131)
• DMS-HARD WIRING	
• GN&C-HARD WIRING	
• COMM. - HARD WIRING + RF.	
• EPS - H_2 & O_2 FILL, VENT DRAIN & PURGE	
• UMBILICAL PANELS	
M.S.S	(146)
• CONTROL & DISPLAY - DATA & COMM. EQUIP.	
• POWER - WIRING - SUPPORT	
TOTAL WITH CONT.	1510

THIS PAGE INTENTIONALLY LEFT BLANK

INTERFACE LOCATIONS - SINGLE STAGE TUG 510ADE-3B

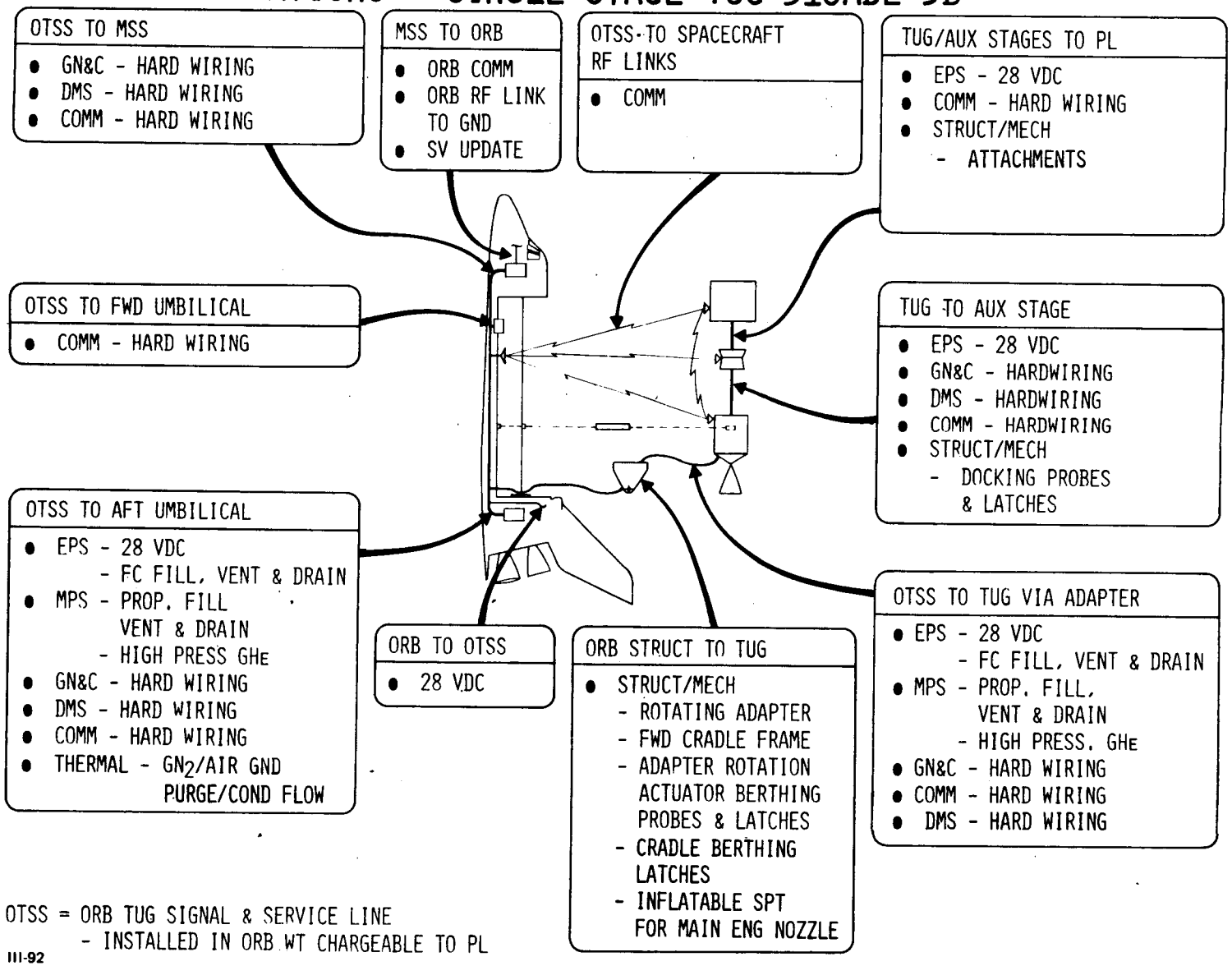

OTSS = ORB TUG SIGNAL & SERVICE LINE
- INSTALLED IN ORB WT CHARGEABLE TO PL

III-92

510A/510ADE-3B - MISSION FLOW/COMPLEXITY FACTOR

A methodology has been established to determine the relative complexity of concept flight modes by taking the weighted sum of operations required to perform a mission. All Level I operations (facing page chart) were weighed with the following multipliers:

- 8 for operations involving crew safety
- 4 for operations needed for TUG recovery
- 2 for operations needed for P/L deployment
- 1 for operations needed for P/L recovery

An additional complement of factors were added as follows:

- 8 for critical functions (i.e. docking, staging, etc.)
- 4 for unique trajectory functions (i.e. correct for nodal regression)
- 4 for deficient functions (i.e. P/L loiter C/O)

This approach provides a basis for comparing the operations complexity of the various options and is also used as the scaling factor for determining flight operations cost. Our approach to costing flight operations was to establish a detailed "strawman" cost based on a "Bottoms-Up" estimate of the geosynchronous round trip mission. Our files on LM costs (complexity factor 177) were used to establish this estimate. The costs were then scaled by the complexity factor to establish cost differences between concepts.

Based on this Cost Estimating Relationship, a 510A/510ADE TUG would have a 46% increase in flight operations costs relative to the single stage round trip mission for developing software, mission planning, documentation, etc.

(Ref. Vol. 6, Part I, Para. 6.4.3)

CONCEPT 510ADE - COMPLEXITY FACTOR

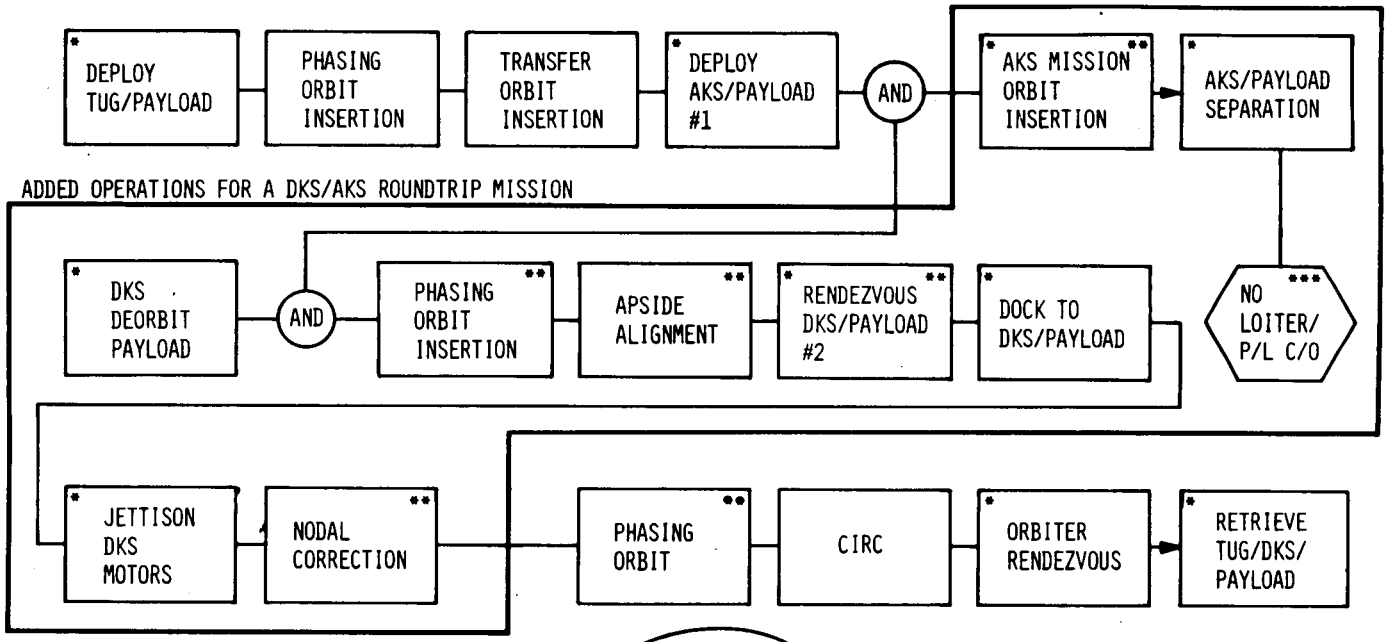

510ADE ROUNTRIP MISSION IS 104% MORE COMPLEX OPERATIONALLY THAN SIMPLE DEPLOY

COMPLEXITY MULTIPLIERS

- CREW SAFETY 2 x 8
- TUG RECOVERY 6 x 4
- PAYLOAD PLACEMENT 6 x 2
- PAYLOAD RETRIEVAL 11 x 1

*CRITICAL FUNCTIONS	10 x 8
**UNIQUE TRAJECTORY FACTORS	6 x 4
***DEFICIENT FUNCTION	1 x 4
COMPLEXITY FACTOR	171

III-16

OPTION 3B - 310/310ARE-3B - FLIGHT OPERATIONS COST

Costs for Flight Operations has been split between those funds required prior to IOC and those required after IOC. In establishing these estimates it was assumed that NASA is the contracting agency. If the DOD is the responsible agency the cost estimates presented on the facing page are reversed. Included in these estimates are the manpower for mission planning, flight control, flight evaluation and flight software. The detailed justification for these estimates can be found in Volume 6 "Operations Data Book."

The major driver of flight operations non-recurring cost is the development of the software. Estimates are included for the following major computer systems:

- TUG on-board software
- Mission Control Center Real Time Computer Complex
- Vehicle Management and Mission Planning System
- Mission Control Center Simulator

The software costs were established by estimating the word count required to meet the functional requirements of each of the computer systems. Dollar values per word consistent with GAC experience on the F-14, EA2-C and OAO MCC development programs were used for the design phase and programming/verification phase of the development cycle. Word size estimates for the on-board software and real time computer complex were based on the software routines in the LM Guidance Computer which have similar functional requirements to that of the TUG, adjusted to account for the LM software needed for man/machine interfaces. The software estimates for the MCC simulator were based on the requirements for the LM Full Mission Engineering Simulator requirement adjusted to reflect the relative complexity of the vehicles. This software package was assumed to play a threefold role; namely, provide simulator capability to the MCC, and to provide the environment to the Astrionics Software development facility and the electronics integration facility. The software estimates for the semi-automated non-real time Vehicle Management and Mission Planning System (VMMPS) requires more in-depth evaluation to determine costs. However, for purposes of at least establishing a cost line element a 30K word system was assumed necessary.

Based on these cost procedures, the total flt. ops DDT&E for the 310/310ARE-3B is $35M for NASA and $4M for DOD. The average cost perflight is $411K which converts to approximately $290K per payload. The cost to evolve to a Level II autonomous system and provide retrieval delay capability is $13M.

(Ref. Vol. 6, Part I, Para. 6.4.4)

510A-3B
↓
510ADE-3B

AUTONOMY LEVEL III→II

FLIGHT OPERATION COST

	NASA, $M			DOD, $M		
	DDT&E INTM	EVOL	POST IOC$	DDT&E INTM	EVOL	POST IOC$
MISSION PLANNING	9.47	3.94	18.51	3.61	1.51	17.43
FLIGHT CONTROL	1.58	.32	24.76	.80	.15	21.72
FLIGHT EVALUATION	.54	.20	3.04	.57	.21	2.89
FLIGHT SOFTWARE	28.66	10.95	26.15	-	-	19.10
	40.25	15.41	72.46	4.98	1.87	61.14

AVG COST PER FLIGHT
(NASA = 202 FLT/ DOD = 151 FLT)

	NASA, $M	DOD, $M
MISSION PLANNING	.092	.115
FLIGHT CONTROL	.123	.144
FLIGHT EVALUATION	.015	.019
FLIGHT SOFTWARE	.130	.127
	.360	.405

HIGH EVOLUTION COST
COST DUE TO A/DKS
FLT COMPLEXITY

III-60

RESIDUAL HAZARDS AND SINGLE FAILURE POINTS: 510A-3B/510ADE-3B

Those hazards for which design, special procedures and safety or warning devices may not resolve the problem, are considered residual hazards. In addition, where failure of a single hardware element leads to loss of life, vehicle or mission, a single failure point (SFP) is identified. The ones falling into these categories for this concept are shown in this chart.

Although a rationale for acceptance of these situations has been defined for now. Additional study effort is required in the next phase to reduce the hazard to the lowest possible level (controlled category) and/or to eliminate the single failure point.

Additional information on these items is included in Volume VII, Safety and Reliability.

(Ref. Vol. VII, Sects. II & VII)

RESIDUAL HAZARDS/SFP : 510A-3B/510ADE-3B

SATISFACTORY PROGRESS

HAZARDS/SFP	RATIONALE FOR ACCEPTANCE
ABNORMAL LANDING WITH FULL TANKS	ABORT DUMP PREFERRED BY SENSITIVITY STUDY
VENT PROPELLANT FUMES TO PAYLOAD BAY VIA TUG OVERBOARD VENTS (MPS/APS)	EXTREME PAYLOAD BAY TEMPERATURE AND MULTIPLE FAILURES NECESSARY FOR VENTING
JETTISON OF AKS SRM CASES AT PAYLOAD ALTITUDES	CONTACT HAZARD CONSIDERED LOW
VENT FUEL CELL WATER TO PAYLOAD BAY DURING CHECKOUT	VENT DIRECTED AWAY FROM EOS
ABORT LANDING WITH FULL FUEL CELL TANKS	TANKAGE AND SUPPORTS DESIGNED FOR CRASH LOADS
SFP : VALVES FAILED CLOSED (MISSION SUCCESS) - MPS He REGULATOR - ENGINE PREVALVE(S) - APS VENT - APS QUAD ISOLATION - A/DKS GN_2 SHUTOFF - AKS GN_2 REGULATOR	HIGH RELIABILITY COMPONENTS
LACK OF AKS/ADKS COMMAND OVERRIDE	DETECT UNSTABLE TARGET PRIOR TO DOCKING, NOT CREW SAFETY, SRM TVC
SRMS SENSITIVE TO LIQ. PROP. FIRES	IGNITION SOURCES PRECLUDED IN P/L BAY

SAFETY ASSESSMENT RESULTS: 510A-3B/510ADE-3B

Ann assessment of this configuration was performed to determine whether it satisfied the NASA Safety Requirements specified in the Data Package, Space Tug System Studies, April 1973 and those safety requirements derived through analysis. The first column identifies the source of the safety requirement, NASA Data Package or identified hazard. Items in the next column are labelled (R) for requirement unsatisfied, (C) for an operational constraint or (E) for an exception to the NASA or derived safety requirements. The specific items are summarized. In the comments column, the reasons or reactions to the safety assessment items are stated.

On roundtrip missions, four SRM cases are jettisoned to reduce weight and enable mission accomplishment. Of the 98 missions, 50 are to geosynchronous altitudes. As assessment of payload impact probability is needed for this traffic to this altitude to ascertain if a problem exists.

The checkmark in the upper right corner signifies a satisfactory/safety mark for the configuration for Phase A. The completed Safety Evaluation form for this concept is presented in Volume VII.

510A-3B/510ADE-3B SAFETY ASSESSMENT RESULTS

- DATA PACKAGE/ANALYSIS-DERIVED SAFETY REQUIREMENTS USED AS ASSESSMENT TOOL
- ASSESSMENT RESULTS :

REQ'T SOURCE	REQ'T/CONSTRAINT/EXCEPTION	COMMENTS
NASA REQTS	(E) DETECT POTENTIAL TANKS FAILURES ON GROUND	FRACTURES MECHANICS PROGRAM USED
	(E) FUEL CELL VAPORS VENTED TO BAY DURING C/O	VENT DIRECTED AWAY FROM EOS
	(R) NESTED TANKS	SEPARATE TANKS PREFERRED
VENTING	(C) NEED FLUID GSE DURING GROUND TRANSPORT	CONTAINS AND NEUTRALIZES VAPORS
RESIDUALS	(R) NO ABORT DUMP	TO BE INCORPORATED
	(R) NO MPS DEPLETE	IMPLEMENTATION IS OPEN QUESTION
	(C) "EMPTY" TANKS AT LANDING	SAFEST LANDING CONFIGURATION
COLLISION	(R) (4) SRMs JETTISONED ON ROUNDTRIP MISSIONS	98 MISSIONS PLANNED
COMMAND/ CONTROL	(C) WITHIN 30 NM OF EOS; OVER GROUND STATION WHEN TRACKING	SATISFACTORY TO SAFETY

PROGRAMMATICS/COST OVERVIEW 510A-3/510ADE-3B

510A-3B/510ADE-3B is also defined similar to the other phased programs and the detailed programmatics and cost data are included in Volume 8, Part VI.

This program has an overall development cycle of 99 months and a 95 month production activity. Peak annual funding ($97M) occurs in FY78. Initial/total DDT&E and total program costs are $254/318M and $906M respectively.

PROGRAMMATICS/COST OVERVIEW - 510A-3B/510ADE-3B

CHARACTERISTICS

		MAIN STAGE	AUXILIARY STAGE
PHYSICAL:	WEIGHT, LB	3329 - 3534	864
	LENGTH, IN	300	80
	DIAMETER, IN	120	180
TECHNICAL:	REUSABLE	ONE-STAGE	DKS
	AUXILIARY STAGE		AKS - AKS/DKS
	RETRIEVAL	EVOLVED	
	PROPELLANT CAPACITY, LB	59,500	
	THRUST, LB	7,500	
	ISP, SEC	327.2	287 & 295
	AUTONOMY LEVEL	111A - 11B	
	RELIABILITY	.97 - .9750	.9791

WBS #320-00

PROJECT SUMMARY

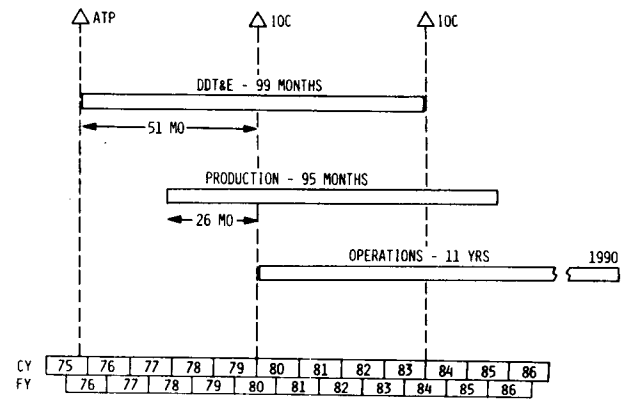

ANNUAL - PROJECT COSTS

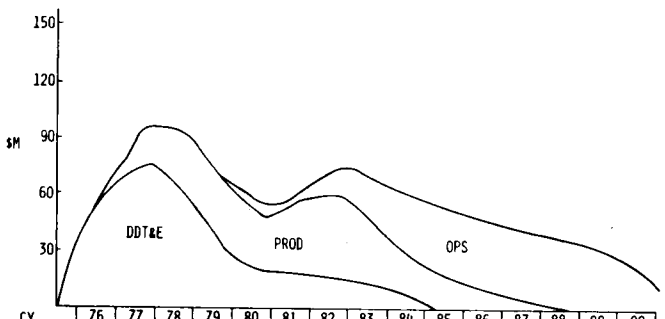

CY	76	77	78	79	80	81	82	83	84	85	86	87	88	89	90	
FY	76	77	78	79	80	81	82	83	84	85	86	87	88	89	90	91
DDT&E	39	65	74	56	28	20	18	15	5							
PROD			23	37	38	30	41	45	38	25	16	7	1			
OPS					3	4	5	15	21	32	39	39	40	39	33	16
TOTAL	39	65	97	93	69	54	64	75	64	57	55	46	41	39	33	16

CUMULATIVE - PROJECT COSTS

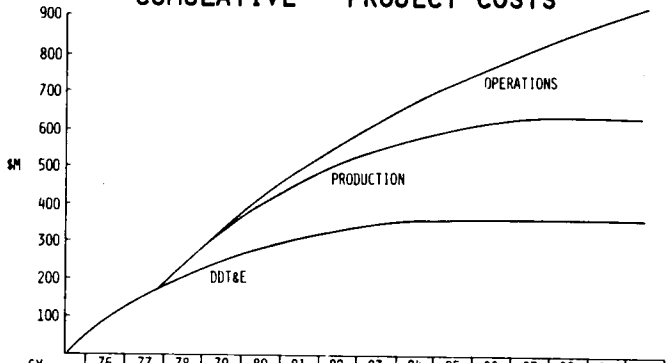

CY	76	77	78	79	80	81	82	83	84	85	86	87	88	89	90	
FY	76	77	78	79	80	81	82	83	84	85	86	87	88	89	90	91
DDT&E		104	178	234	262	282	300	315	320	320	320	320	320	320	320	320
PROD			23	60	98	128	169	214	252	277	293	300	301	301	301	301
OPS					3	7	12	27	48	80	119	158	198	237	270	256
TOTAL		104	201	294	363	417	556	620	677	732	778	819	858	891	907	

VIII, IX-6, III-109

SUMMARY SCHEDULE 510A-3B/510ADE-3B

The primary elements of the 510A-3B/510ADE-3B Project Schedule are as described for 310-3A/310RE-3A except for addition of an Apogee Kick Stage an substitution of a Deorbit Kick Stage for the Retrieval Delay Module. Authorization to Proceed (ATP) occurs on October 1,1975 with IOC of the initial configuration targeted for December 31, 1979. The OME main engine milestones are the same as for 110A-1 with Final Flight Certification occuring 8 months before First Orbital Flight (FOF). Main Stage vehicle tests are essentially the same as for 310-3A/310RE-3A. First flight of the evolved vehicle is targeted for December 1, 1983. Main Stage manufacturing begins December 1, 1976 with production of the major ground test articles and continues through production of 14 vehicles to support fleet operations. They are manufactured in 3 lots for the purpose of avoiding manufacturing gaps between deploy only vehicles and evolved vehicles. Development of the Apogee and Deorbit Kick Stages begins in March 1978, to permit deployment of the DKS with payloads in 1981, approximately 3 years prior to the evolved vehicle IOC. The Apogee Kick Stage is scheduled for deployment in November 1981. 95 Deorbit Kick Stages and 32 Apogee Kick Stages will be manufactured to support fleet operations. GSE and Facilities are scheduled essentially the same as for 110A-1.

(Ref. Vol. 8, Part VI, Sect. 8.1)

510A-3B/510ADE-3B SUMMARY PROJECT SCHEDULE

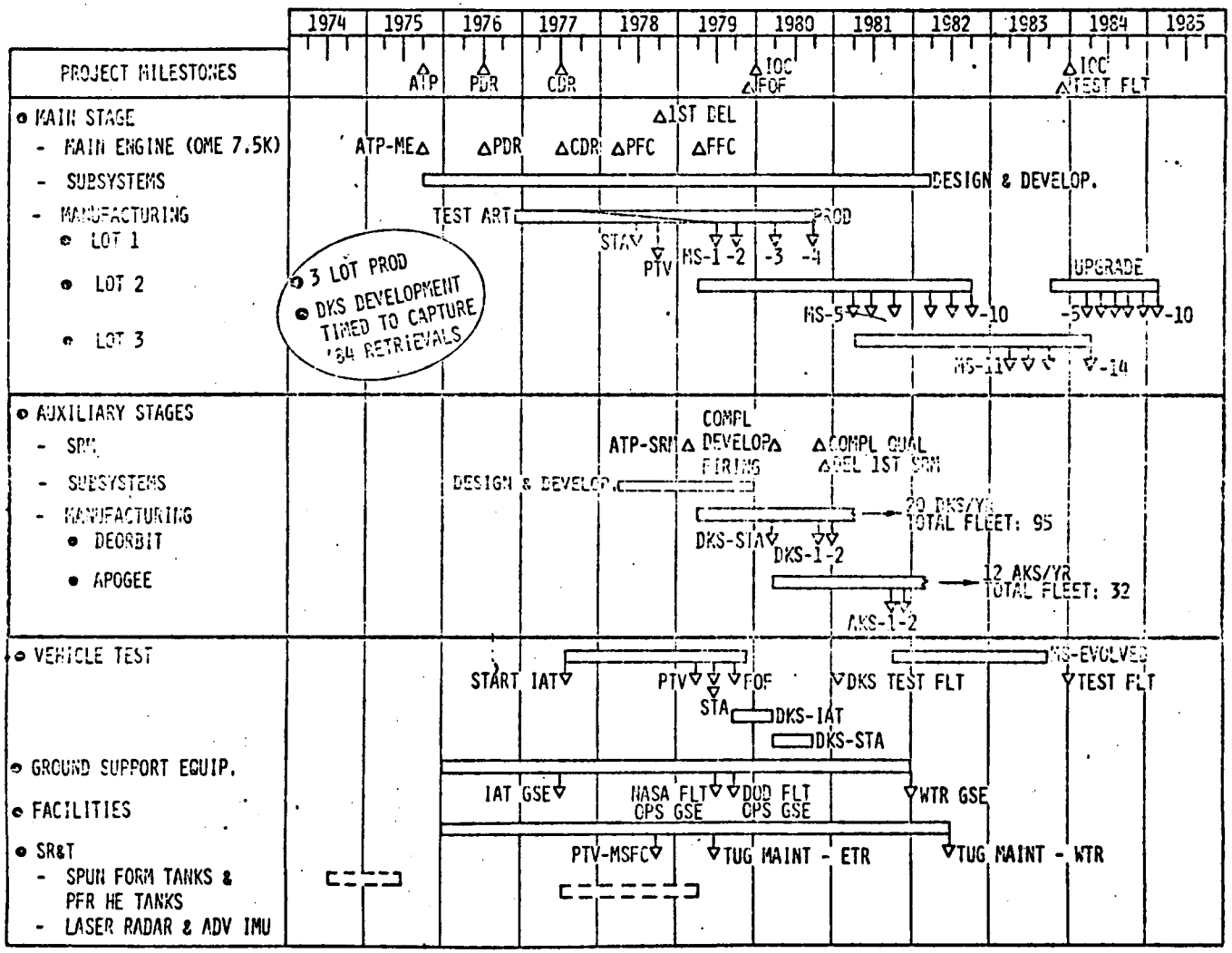

III-56

510A-3B/510ADE-3B GROUND TESTS

Vehicle Test Program

The vehicle test program for 510A-3B/510ADE-3B was developed in a similar manner to that described for 110A-1

Structural Test Articles

The Structural test program for the 510A-3B is the same as that described for the 110A-1. The DKS Structural test philosophy is basically the same as the MS test program. The AKS structure is the same as the DKS and therefore does not require a separate structural test program. The 510A-3B STA will be configured to include the evolved 510ADE-3B avionic retrieval hardware and mechanical interfaces with test loads enveloping both configurations.

Propulsion Test Vehicle

The M.S. Propulsion test program for the 510A-3B configuration is the same as that described for the 110A-1. The DKS propulsion test philosophy is also the same as for the 110A-1 AKS. Since the only difference between the DKS and AKS propulsion system is a reconfiguration in SRM's no additional DKS propulsion tests are required.

(Ref. Vol. 8, Part VI, Sect. 8.2)

510A-3B/510ADE-3B GROUND TESTS

TEST	TEST ART.	OBJECTIVES	APPROACH
STRUCTURES • 510-3B ONLY - MAIN STG (MS) - APOGEE KICK STAGE (AKS)/ DEORBIT KICK STAGE (DKS)	• COMPLETE M.S. PRIM & SEC. STRUCT. INCL. TUG/ORB, TUG/AKS TUG/P.L. ADAPTERS • COMPLETE AKS/DKS PRIM & SEC. STRUCT.	• EVAL. DYN., STATIC STRENGTH, SAFE-LIFE & SEPARATION • VERIFY STRUCT./MECH INTERFACES AT LAUNCH SITE	• VIB/ACOUSTIC TESTS • DES. LIMIT STATIC TESTS • STATIC FATIGUE • ULT. STATIC TESTS • SEP. DEMO. • INTERFACE VALID DEMO. AT KSC. • COMMON AKS/DKS TESTED SEPARATELY AS ABOVE (1980)
PROPULSION MS 510-3B ONLY	• FLIGHT WT. MAIN STAGE STRUCT. • MAIN ENG. SUPPT. S/S LESS ENG. • ENG. SIMUL. UNIT • PTV REFURB. TO FLIGHT OPS	• DEMO OPS OF ASSEM COMPONENTS • DEVELOP C/O & OPS PROCEDURES • VERIFY SERV./HANDLG. PROCEDURES • DEMO SYS. PERF. & CHARACTERISTICS	• COLD FLOW ONLY • REFEREE FLUIDS PHASE - FILL/DRAIN/FLOW TESTS • LIVE PROPELLANTS PHASE - LOAD CONTROL/ACCURACY - SYS. COMPAT & DYN. - PERF. SERV./HANDLG. PROCEDURES

Integrated Avionics Tests

The MS Integrated Avionics Test program for the 510A configuration will be the same as the 110A-1 test program. The DKS will be integrated in the same facility as the MS IAT to take advantage of the facility simulation and GSE capability. The DKS will be modified to simulate the AKS for MS-AKS IAT Mission Simulations. The IAT and ASDL facilities will initially be configured for the basic mission hardware and software including autonomy level III A. As the retrieval capability and autonomy level II B is evolved the IAT hardware and ASDL software will be updated and the evolved system verifications and mission simulation performed.

Mockups

The MS mockups for this configuration will be the same as those required for 110A. The DKS will also require mockup which will be modified at a later date to serve as AKS mockups.

(Ref. Vol. 8, Part VI, Sect. 8.2)

510A/510ADE GROUND TESTS (CONT'D)

TEST	DESCRIPTION	OBJECTIVES	APPROACH
INTEGRATED AVIONICS • INTEG. AVIONIC TEST (IAT) FACILITY - MS - DKS - AKS • AVIONICS SOFTWARE DEVELOPMENT LAB (ASDL) - MS	• IAT - SHIP SET OF AVIONICS - COMPUTER SIMULATION - SENSOR STIMULUS - FACTORY & LAUNCH GSE • ASDL - COMPUTER FACILITY WITH MATH MODEL SIMULATION OF MS HARDWARE	• VERIFY HARDWARE/ SOFTWARE PRIOR TO VEHICLE INSTALLATION & FOF • VERIFY EVOLVED RETRIEVAL HARDWARE/SOFTWARE PRIOR TO VEHICLE INSTALLATION & FOR 83 IOC.	• IAT - SUBSYSTEM INTEG. & END-TO-END FUNCTIONAL VERIFICATION - VERIFY FACTORY C/O PROCED - HARDWARE/SOFTWARE VERIF. - MISSION SIMULATION - INTEGRATE & VERIFY RETRIEVAL CAPABILITY HARDWARE/SOFTWARE - RETRIEVAL MISSION SIMULATION • ASDL SOFTWARE VERIFICATION FOR BASIC & EVOLVED CONFIGURATION
MOCKUPS • MS • DKS • AKS	• WOOD & CARDBOARD MOCKUP OF THE TUG MS, DKS & AKS STRUCTURE INCLUDING EQUIPMENT FOR PDR. • WOOD & METAL MOCKUP OF MS, DKS & AKS STRUCT. & COMPONENTS FOR CDR	EVALUATE EQUIPMENT ACCESSIBILITY & MAINTAINABILITY. EVALUATE SHUTTLE & PAYLOAD INTERFACE AND LINES RUN PRIOR TO FAB OF FINAL HARDWARE	• COMPONENT INSTALLATION • ESTABLISH LINE LENGHTS FOR FINAL HARDWARE FAB. • DEMONSTRATE MAINTAINABILITY - ASSESSMENT & DEMOS OF EQUIPMENT CLEARANCES - CONNECTOR & MOUNTING ACCESSIBILITY DEMO • SHUTTLE & PAYLOAD INTERFACE ASSESSMENT

GROUND TEST COST = $26.85M

510A-3B/510ADE-3B FLIGHT TESTS

Nine flights are included in the 510A-3B/510ADE-3B flight test program.

The main stage flight test program is essentially as described for configuration 110A-1. The test sequence for the evolved configuration includes a retrieval demonstration as described in 310RE-3A using a DKS to serve as the retrieval target.

Since the DKS is developed and flown earlier than the main stage a separate and dedicated flight test is planned to verify the capability of the DKS to function during and after extended exposure to orbital environments. This flight will occur in early 1981 and could be accomplished as part of a normal Shuttle launch or by some other means.

(Ref. Vol. 8 Part VI, Sect. 8.2)

510A-3B/510ADE-3B FLIGHT TESTS

TEST ARTICLE	OBJECTIVES	APPROACH
• MAIN STAGE (510A-3B) - 1ST PROD. UNIT INCLUDING DFI • MAIN STAGE (510ADE-3B) - 1ST PROD. UNIT INCLUDING DFI • DKS 1ST PROD. UNIT INCLUDING DFI.	INITIAL IOC • THERMO-VERIFY SYS. THERMAL CONTROL • STRUCT-VERIFY LAUNCH/ORBIT/ ENTRY/LANDING LOADS & DYNAMICS • PROP-VERIFY MPS/APS • AVIONICS - VERIFY AVIONICS OPS • OPS - EVALUATE TUG/ORB & TUG/PAYLOAD & TUG/AKS INTERFACES - EVALUATE SYS. PERF. CAPABILITY - DEMO. PAYLOAD DEPLOY EVOLVED IOC • DEMO PAYLOAD RETRIEVAL AND AUTONOMY LEVEL IIB. • DKS - DEMO SYS. PERF. AFTER EXTENDED ON-ORBIT OPS	• 9 FLIGHT-TEST PROGRAM - 6 INITIAL - 3 FINAL • FIRST ORBITAL FLIGHT (FOF) COSTED WITHOUT OPERATIONAL PAYLOAD - FLOWN WITHIN RETRIEVAL CAPABILITY OF ORBITER - TEST SEQUENCE INCL: SYS C/O, MPS/APS BURNS, DUMMY PAYLOAD DEPLOY, ORBITER RETRIEVAL • SUBSEQ. FLIGHTS DEPLOY OPERATIONAL PAYLOADS SELECTED TO DEMO BUILD-UP IN TUG CAPABILITY • FOF OF 310ADE-3B IS A DEPLOY ONLY FLIGHT. RETRIEVAL DEMO WITH DKS PERFORMED UPON RETURN TO 160NM ORBIT • ONE DEDICATED FLIGHT TEST OF DKS IN 1982

FLIGHT TEST COST = $23.04M

TOTAL VEHICLE TEST = $49.91M

510A-3B/510ADE-3B FACILITIES

Ground rules, assumptions, facilities definition development and costing procedure same as 310-3A/310RE-3A.

Differences from Concept 110A-1

- Large number of Kickstages require additional manufacturing area.
- Higher traffic model requires additional TUG Maintenance Facility at ETR.
- Larger Kickstage SRM Facility required at ETR.

Facilities Requirements Sheets (Ref. Vol. 6, Part 2, Appendix F) and Facilities Plan (Ref. Vol. 8, Part 1, Section 8.3) provide detail requirement, schedule and cost data.

(Ref. Vol. 8, Part VI, Sect. 8.3)

510A-3B/510ADE-3B FACILITIES

SIMILAR TO 310-3B/310ARE-3B EXCEPT FOR ADD'L SRM FACILITIES

FUNCTION	SIZE, SQ FT	EXISTING	MODIFIED/NEW	COST, $M C OF F	COST, $M TOTAL
MANUFACTURING				.055	.650
FAB & ASSY	7,800	GAC-BPA, PLTS 2 & 3			
F/A & C/O	14,200		GAC-BPA, PLT 5		
KICKSTAGE	17,200	GAC-BPA, PLT 5			
TEST				.100	.308
STA	VARIOUS REQMTS	GAC, PLT 5 & WYLE-HUNTS			
THERMAL	-	GAC-BPA, PLT 5			
IAT	1,300	J[illegible] - SHUTTLE ASDL & IATL			
PROPULSION	700	GAC-BPA, HPTF&MSFC-TST ST			
TANK QUAL & ACCEPT	700	GAC-BPA, HPTF			
MAINT & REFURB ETR/WTR				2.378/2.200	3.631/2.900
TUG MAINT FAC	12,000/6,000		EXT ON ORBITER OMS FAC		
PROP SYS SERV FAC	6,000		EXT ON ORBITER OMS FAC		
TUG CLEANING FAC	3,000		EXT ON ORBITER MCO FAC		
KICKSTAGE SRM FAC	2,800/-		EXT ON SHUTTLE SRM FAC		
SUPPORT/WHSE FAC	AS REQD/-	SHUTTLE SHARED @ ETR			
OFFICE	5,000/4,000	EXISTING @ ETR	NEW FAC @ WTR		
ETR/WTR LAUNCH				.413/.494	.571/.656
LAUNCH PAD	-	SHUTTLE FAC-TUG GSE			
SAFING AREA	-	SHUTTLE FAC-TUG GSE			
MISSION CONTROL CENTER	7,500		MOD SPACE @ JSC & SUNNYDALE, CALIF.		
			TOTALS	5.640	8.716

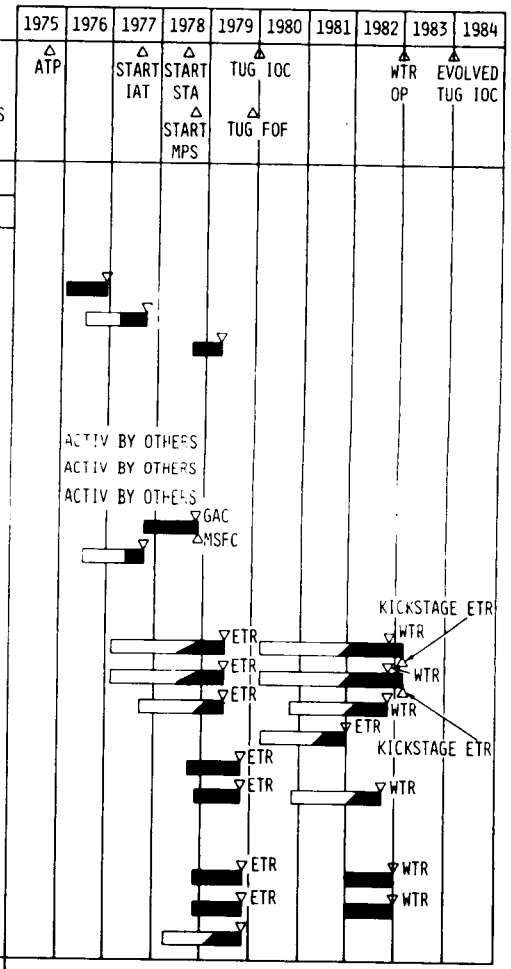

III-111

THIS PAGE INTENTIONALLY LEFT BLANK

510A-3B/510ADE-3B MANUFACTURING FLOW

The manufacturing flow and sequence of assembly of the main stage and apogee kick stage is depicted. The flow diagram shows program milestones, engineering drawing release requirements, tool design and fabrication, operation sheet preparation, work order release and the manufacturing and assembly sequence for the major test articles (STA, PTV) and the first flight article.

This configuration is similar to the other nested propellant tank single stage configurations (310, 410) except that the OMS engine is used and lower construction cost is achieved by using aluminum tanks and a stiffened sheet outer shell. The basic flow and assembly sequence are essentially the same as the (310,410) spacecraft. The AKS and the DKS for the evolved missions do not impact the critical path.

(Ref. Vol. 8, Part VI, Sect. 8.4)

510A-3B/510ADE-3B SPECIAL PROGRAMMATICS

The main features defined for implementing and managing Program 510A-3B/510ADE-3B include: defining the initial/evolved flight build up based on Shuttle/Tug launch constraint and ground crew launch capability; timing DKS development to capture 1984 retrievals: implementing 3 lot vehicle production (deploy, deploy-upgrade, and retrieve); refurbishing the propulsion test article for operational use; and defining a fall back position for every identified risk.

Specific areas for government participation include: establishing Tug/Shuttle interface requirements before Orbiter design freeze; providing payload interface design requirements and mission model data; initiating required activities for supporting Research and Technology; providing GFE systems and components (eg: main engines, and DOD secure comm); supporting propulsion system testing and development and supporting integrated avionics hardware testing and related software development; providing required facilities; and performing vehicle ground operations, flight operations, and logistic support operations.

(Ref. Vol. 8, Part VI, Sect. 8.5)

510A-3B/510ADE-3B SPECIAL PROGRAMMATICS

- PROGRAM IMPLEMENTATION AND MANAGEMENT
  - INITIAL/EVOLVED FLIGHT BUILD-UP SET BY SHUTTLE/TUG LAUNCH CONSTRAINT AND GROUND CREW LAUNCH CAPABILITY
  - 3 LOT PRODUCTION (DEPLOY, DEPLOY-UPGRADE AND RETRIEVE) TO AVOID MFG GAP
  - DKS TIMED TO CAPTURE '84 RETRIEVALS
  - PROPULSION ARTICLE REFURBED FOR FLIGHT
  - FALL BACK POSITION SHOWN FOR EVERY IDENTIFIED RISK

- AREAS FOR GOVERNMENT PARTICIPATION
  - FIRM TUG/SHUTTLE INTERFACES BEFORE ORBITER PDR
  - PROVIDE PAYLOAD INTERFACE DESIGN REQUIREMENTS AND MISSION MODEL DATA
  - INITIATE REQUIRED SR&T
  - SUPPORT SYSTEM TEST - AVIONIC HARDWARE/SOFTWARE, PROPULSION
  - PROVIDE GFE SYSTEMS AND COMPONENTS, FACILITIES AND LOGISTIC SUPPORT
  - PERFORM VEHICLE GROUND AND FLIGHT OPERATIONS

510A-3B/510ADE-3B FLIGHT OPERATIONS BUILDUP

As in the prior programs the 510A-3B/510ADE-3B flight buildup was defined considering: NASA defined Shuttle/Tug launch constraints, initial and evolved ETR ground crew launch capabilities, and flight mode buildup.

Our recommended flight buildup for 510A-3B/510ADE-3B, including 3 flights in 1980, 18 flights in 1981, and 38 flights in 1984, encompasses 336 total flights through 1990 or 25 less than 100% payload capture traffic.

(Ref. Vol. 8, Part VI, Sect. 8.9)

510A-3B/510ADE-3B FLIGHT OPERATIONS BUILDUP

INPUTS	CY 80	81	82	83	84	85	86	TOTAL FLTS.
	▽ IOC_I				▽ IOC_E			
• 100% PAYLOAD CAPTURE - ETR+WTR FLTS	26	21	23	37	41	36	36	361
ETR FLTS	26	21	23	30	36	27	27	
• SHUTTLE/TUG LAUNCH CONSTRAINT - ETR	3	21						
• INITIAL GND CREW LAUNCH CAPABIL. - ETR	18	22	23					
• EVOLVED IOC GND CREW LAUNCH CAPAB/ETR				30	33	27	27	
• TUG FLIGHT MODE BUILDUP								
SINGLE DEPLOY	3	ALL	ALL	ALL	ALL	ALL	ALL	
SINGLE DEPLOY WITH KICK STAGE	NONE	SOME	ALL	ALL	ALL	ALL	ALL	
MULTI DEPLOY	NONE	SOME	ALL	ALL	ALL	ALL	ALL	
SORTIE	NONE	NONE	NONE	ALL	ALL	ALL	ALL	
RETRIEVE	NONE	NONE	NONE	NONE	ALL	ALL	ALL	
ROUND TRIP	NONE	NONE	NONE	NONE	ALL	ALL	ALL	
ROUND TRIP WITH KICK STAGE	NONE	NONE	NONE	NONE	SOME	ALL	ALL	
RECOMMENDED FLIGHT BUILDUP ETR+WTR	3	18	23	37	38	36	36	336
ETR	3	18	23	30	33	27	27	

BUILDUP RATIONALE

- SAME AS 310-3A/310RE-3A

510A-3B/510ADE-3B RISK ASSESSMENT

The technology items and their potential impact are shown on the opposite chart. If the Spun-form aluminum tank does not meet its goals, a welded gore aluminum tank adds 4 lbs. to the vehicle, similarly if the prestressed filament reinforced tank is replaced by a 6Al4V titanium tank, 48 lbs. are added. If the advanced (Micron) IMU is unavailable, a Carousel VB IMU plus a rate gyro unit adds 30 lbs. There are no attractive alternatives for the laser radar and the space storable SRM, hence, they represent both a schedule and cost risk. If materials compatibility or fracture mechanics data indicate the need to change propellant tank material, a change from aluminum to titanium results in a 13 lb. weight reduction but increases costs by $10M. If high heat rejection items are placed on the active loop rather than on heat pipes there are no weight changes. To recover the weight impact on payload capability due to these possible weight increases, graphite composites and the advanced fuel cell remain open options.

The use of the OME 7.5K engine provides high confidence that the weight, performance and reusability goals will be met because the basic engine will have been developed for use in the Shuttle Orbiter. As a result there is no projected potential weight or Isp loss with this engine.

Schedule risk is minimized by the proposed SR & T programs which provide the feasibility of the approach by ATP; however, the availability of the 621B Navigation Satellites remains a schedule risk.

Converting the potential Isp loss and weight increases to a total program cost at a $111K/lb value and adding the potential cost increase items, yields a total cost risk of $15.8M for 510A-3B/510ADE-3B.

(Ref. Vol. 8, Part VI, Sect. 8.9)

510A-3B/510ADE-3B RISK ASSESSMENT

TECHNOLOGY ITEM IMPACT	
• SPUN-FORM AL TANK	+4 LB
• PFR TANK	+48 LB
• ADV IMU	+30 LB
• LASER RADAR	COST/SCHED
• SPACE STORABLE SRM	COST/SCHED
• MATERIALS COMPATIBILITY	-13 LB
• FRACTURE MECHANICS	
• HEAT PIPES	SCHED

VEHICLE SENSITIVITY (DEPLOY)	PLAIN	WITH AKS
$\frac{\partial P/L}{\partial W}$ FIXED (LB/LB)	-3.52	-2.44
$\frac{\partial P/L}{\partial ISP}$ (LB/SEC)	112	92

- TECHNICAL RISK
  - POTENTIAL WT IMPACT: +82 LB ≈ 200 LB OF PAYLOAD (W/AKS)
  - POTENTIAL ISP LOSS: MIN WITH OME 7.5K ENG
  - OPEN WEIGHT REDUCTION OPTIONS: GRAPHITE COMPOSITE, ADV. FUEL CELL
- SCHEDULE RISK
  - PROPOSED SR&T PROGRAMS (COMPL PRIOR TO ATP) PROTECT AGAINST SCHEDULE SLIP
  - AVAILABILITY OF 621 B SATELLITES
- COST RISK
  - POTENTIAL Δ COST $15.9 M

LOW RISK PROGRAM

III-90

TECHNOLOGY REQUIREMENTS AND DESIRED DATA - 510A-3B/510ADE-3B

The upper part of the facing chart contains the supporting research and technology (SR&T) items required for 510A-3B/510ADE-3B; the lower part of the chart contains what we have termed as "desired data". The distinction between the two is that the "desired data" items do not require technology but are considered straightforward engineering development tasks to produce design data prior to Tug program go-ahead (ATP); this will preclude impacting Tug schedules should the data indicate the desirability of an alternative approach, (vis., titanium propellant tanks rather than aluminum).

The total SR&T funds requested for 510A-3B/510ADE-3B is $1,425 K to be expended over an 18 month period culminating at Tug ATP or prior to go-ahead on the evolved Tug. The advanced (Micron) IMU is the long lead item (18 months).

(Ref. Vol. 8, Part VI, Sect. 8.10)

510A-3B/510ADE-3B TECHNOLOGY REQUIREMENTS & DESIRABLE DATA

	ITEM	SR & T FUNDS, $K	SR & T SCHEDULE, MO	PROPOSED PROGRAM
SR & T	SPUN-FORM ALUM TANKS	50	6	HIGH ALT TESTS TO OBTAIN PERF DATA ON HIGH ϵ NOZZLE FOR MIXTURE RATIO RANGE
SR & T	LASER RADAR	500	12	FAB & TEST LIGHTWEIGHT, LOW-POWER UNIT USING IMPROVED OPTICS & LIGHTER MIRROR DRIVES
SR & T	PFR HELIUM TANK	125	12	FAB & TEST 3 TANKS UNDER STATIC & DYNAMIC LOADING; ENVIRONMENTAL & COMPATIBILITY TESTS
SR & T	ADVANCED IMU	500	18	DEVELOP SOFTWARE FOR REDUNDANCY MGMT & CALIBRATION OF TWO MULTI-SENSOR TYPE IMU'S
SR & T	LONG-TERM SPACE STORABLE SRM	100	12	PHYSICAL & BALLISTICS PROPERTIES TESTS ON SAMPLES AFTER VACUUM EXPOSURE
DESIRABLE DATA	MATERIALS COMPATIBLITY DATA	25	6	2219-T87, 2218-T81 & 6A14VTI; WITH N_2O_4 & MMH UP TO 130°F
DESIRABLE DATA	FRACTURE MECHANICS DATA	25	6	2219-T87 & 6A14VTI; K_{IC}, K_{TH} & FLAW GROWTH WITH N_2O_4 & MMH UP TO 130°F
DESIRABLE DATA	HEAT PIPES	100	12	FAB & TEST VARIABLE CONDUCTANCE HEAT PIPE RADIATOR PANEL & HEADER FOR TURN-DOWN RATIO & SHUTOFF HEAT FLUX DATA

III-74

THIS PAGE INTENTIONALLY LEFT BLANK

STORABLE TUG DATA REVIEW

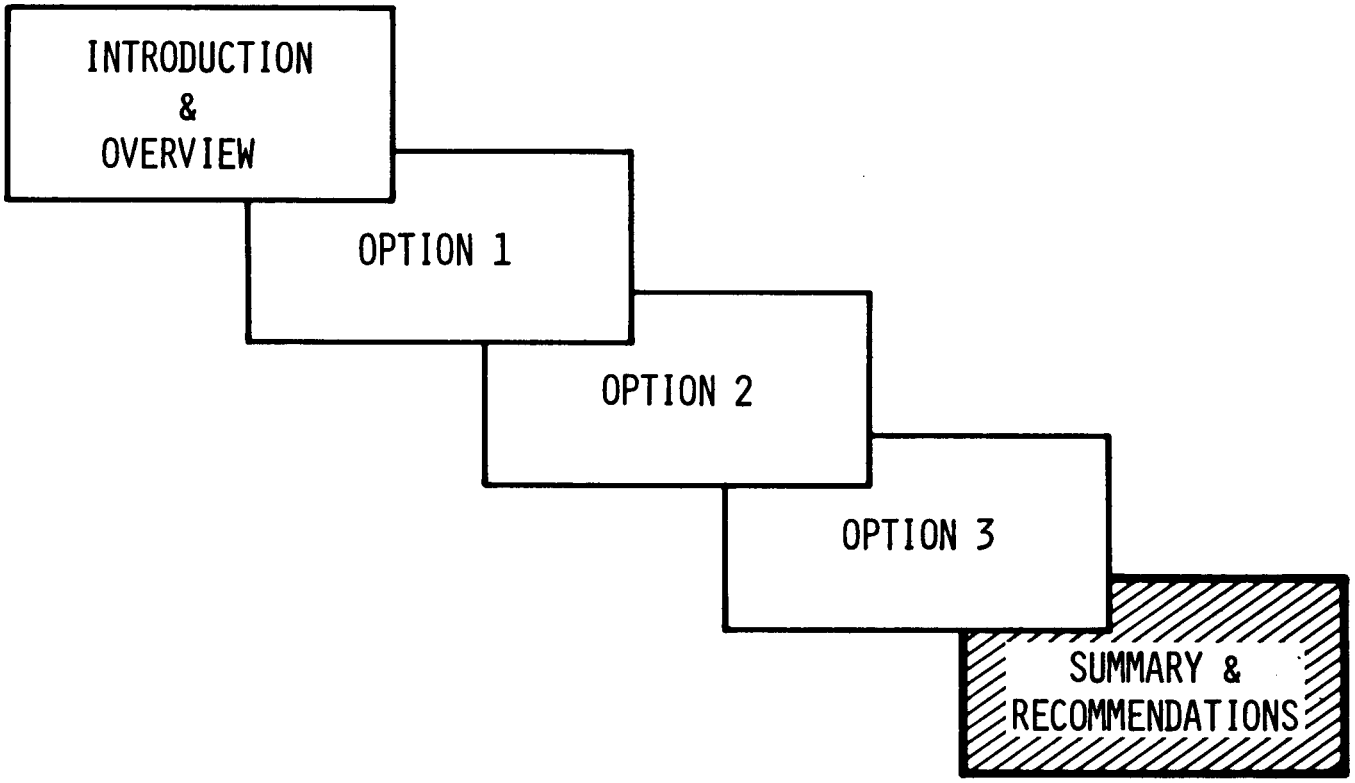

OPTION 1 FINDINGS

DDT&E for this option can be kept below $200M.

Use of the Shuttle OME 7.5K lb thrust engine in the 110A-1 vehicle results in deployment capability in excess of the 3500 lb geosynchronous requirement without use of an apogee kick stage. We have taken advantage of this feature by deferring the kick stage development until it is desired for planetary missions and multiple payload deployments.

The resulting vehicle is short; it will accommodate payloads up to 30.5 ft. in length. Even with an AKS attached, the payload can be 25.5 ft. long without having to resort to a 2-position engine nozzle.

A maintenance approach has been developed and included in the operating costs which replace subsystems before the equipment failure probability rises significantly. Tanks are operated for 1/4 the life which is demonstrated during development. For costing purposes, this was assumed to be 30 flights after which the tanks are replaced in overhaul and systems verified.

This approach makes it possible to provide all Tug users, including those with planetary missions, a vehicle with reliability in excess of 0.97.

OPTION 1 FINDINGS - 110A-1

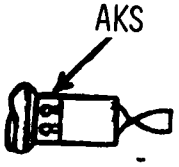

- o 3500 LB DEPLOY W/O AKS
  - $191 DDT&E
  - 7.5K OME ENGINE
- o PAYLOAD LENGTH TO 32 FT: SEPARATE TANKS
- o CHANGE TANKS NOT TUGS
- o LOW TECHNOLOGY
- o HIGE SCHEDULE CONFIDENCE

OPTION 1 RECOMMENDATIONS

Further work can be done to reduce the initial DDT&E of this program by some avionic subsystems rework, resizing and possibly operational equipment improvements.

It is also recommended that evolutionary options be identified for the minimum DDT&E vehicle to provide deployment growth and limited payload retrieval capabilities. The initial 110-1 vehicle would be unscarred to keep DDT&E below $200M for these evolutionary options so growth, while feasible, would be more expensive than in Option 3.

OPTION 1 RECOMMENDATION - 110A-1

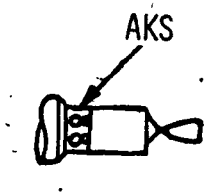

- o EXAMINE FURTHER POTENTIAL DDT&E REDUCTIONS
- o DEVELOP EVOLUTIONARY PROGRAM
  - LIMITED RETRIEVE PAYLOAD
  - NO INITIAL SCAR

OPTION 2 FINDINGS

DDT&E is $130M higher than Option 1 due to the greater requirement of this option.

680 lb. of equipment can be delivered for payload servicing of 4 payloads assuming a 500 lb. servicing unit is used for the mission and then returned with the Tug. If the servicing unit is left in orbit, up to 2510 lb. of equipment can be delivered.

A payload servicing approach which requires that all equipment and the servicing unit be returned resulting in only 100 lbs. capability under the present ground rules.

The AKS/DKS is required for 7 payloads (4 NASA and 3 DOD) flying a total of 62 missions or roughly 1/3 of the retrievals. If these 7 payloads could be handled by a servicing mission, it would be possible to eliminate the AKS/DKS from the program, saving development costs, and, more importantly, reducing operational costs.

OPTION 2 FINDINGS - 410AD-2

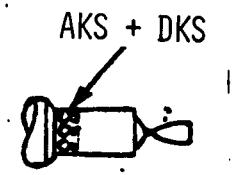

- DDT&E $130 GREATER THAN OPTION 1
- PAF $70M HIGHER
- PAYLOAD SERVICING CAPABILITY

  680 LB W/O EQUIPMENT RETURN
  2510 LB W/O SERVICE UNIT RETURN
  100 LB WITH EQUIPMENT RETURN

- AKS/DKS NEEDED FOR 7 PAYLOADS
  - SERVICE MISSION COULD ELIMINATE

OPTION 2 RECOMMENDATIONS

A study should be made of the feasibility of eliminating the AKS/DKS requirement by making use of payload service concepts for at least some of the payloads. The study could be performed equally well within this study option or within the framework of Option 3B.

Some further reduction in program costs may be possible by alternate subsystem selection.

OPTION 2 RECOMMENDATIONS - 410AD-2

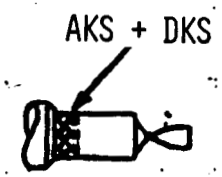

- o EXPLORE ELIMINATION OF AKS/DKS USING SERVICING MISSION
- o SEEK FURTHER COST REDUCTIONS

OPTION 3 FINDINGS

The evolutionary performance concept of this option is quite practical. Initial DDT&E can be depressed and still provide a vehicle with a clear path to eventual high performance and payload retrieval.

The choice between candidate within option 3B is not clear. Configuration 310-3B has more expensive low weight subsystems including a Class 7 engine. Its DDT&E is almost the same, however, as 510A with its OME 7.5K lb engine and somewhat heavier but lower cost subsystems because this option also included an apogee kick stage.

With 29 fewer shuttle flights required by the 510A-3B/510ADE-3B concept, it has a total program cost advantage of $255 when compared with the 310-3B/310ARE-3B. The DKS payload impact inherent to 510A-3B/510ADE-3B must be weighed against this total program differential.

If a Retrieval Delay Module is provided in a concept retrieval of some of the heavy payloads, there is no reason to limit retrieving to less than 3500 lb. DDT&E is only $17M higher for 310-3B/310ARE-3B when compared to 310-3A/310RE-3A and this small difference is actually due to an apogee kick stage feature on the 310ARE-3B configuration which is not a disseminating feature.

The two stage study has produced some interesting results. 320A-3A/320AE-3A deploys 3500 lb. and retrieves 2200 lb payloads from geosynchronous orbit without the use of solid rocket motor stages.

It has outstanding service mission potential due to its capability to perform in a Retrieval Delay Mode.

Total program cost, $4106M, is lower than the single stage alternatives because of its ability to perform the payload missions with only 301 shuttle flights. While performance is attractive, the concept has high DDT&E and operationally is complex.

OPTION 3 FINDINGS

310-3A/310RE-3

510A-3B/510ADE-3B

320A-3A/320AE-3A

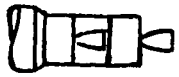

310-3B/310ARE-3B

- o EVOLUTIONARY APPROACH FLEXIBLE & COST-EFFECTIVE
- o 3B OPTION CHOICE NOT CLEAR
  - INITIAL DDT&E SAME
  - 310 TOTAL PROGRAM COST $254M HIGHER

  BUT AVOIDS DKS PAYLOAD IMPACT
- o 2 STAGE CONCEPT
  - 3500 LB DEPLOY/2200 LB RETRIEVE W/O SRM'S
  - OUTSTANDING SERVICE MISSION POTENTIAL
  - HIGHEST INITIAL DDT&E $333M
  - LOWEST TOTAL PROGRAM COST IN OPTION 3
  - COMPLEX OPERATIONALLY
- o 3500 LB RETRIEVAL DELAY COST-EFFECTIVE
  - 2200 LBS SAVES ONLY $17M DDT&E

OPTION 3 RECOMMENDATIONS

Concentrate study effort on 3000 lb retrieval. If retrieval requirements fall beyond the single stage capability of about 1800 lb., there is no gain in compromising user retrieval needs below 3500 lb.

The impact of the DKS on the pay loads needs to be established before much more work should be done on this concept.

Evolution to retrieval should be considered in steps. Retrieval could be provided starting with single stage capability and progressing to higher capability using a combination of servicing unit concepts where practical and the Retrieval Delay Module where necessary.

OPTION 3 RECOMMENDATIONS

310-3A/310RE-3A

320-3A/320AE-3A

510A-3B/510ADE-3B

310-3B/310ARE-3B

- o FOCUS ON 3500 LB RETRIEVAL (OPTION 3B)
- o INVESTIGATE RETRIEVAL EVOLUTION

  "NATURAL" RETRIEVAL → RETRIEVAL DELAY MODULE AND SERVICING MODULE

- o DETERMINE PAYLOAD IMPACT OF DKS (GOVT. TASK)
  - AFFECTS CHOICE OF 310 Vs. 510