(NASA-CR-179093) STORABLE SPACE TUG SYSTEMS STUDY DATA DUMP. VOLUME 6: OPERATIONS. PART 1, SECTION 1 (Grumman Aerospace Corp.) 196 p Avail: NTIS

N87-70388

Unclas

00/18 0072692

GRUMMAN

STORABLE SPACE TUG SYSTEMS STUDY
DATA DUMP
VOL. 6, OPERATIONS, PART I, SECT. 1

19 SEPTEMBER 1973

REPORT NO. 300RP-73-009

CONTRACT NO. NAS8-29674

PREPARED FOR

GEORGE C. MARSHALL SPACE FLIGHT CENTER

BY

GRUMMAN AEROSPACE CORPORATION
BETHPAGE, NEW YORK 11714

GRUMMAN

VOLUME 6

PART 1

SECTION 1

TABLE OF CONTENTS

		PAGE
6.0	INTRODUCTION	6.0-1
6.1	CONFIGURATION & MISSION SUMMARY	6.1-1
6.1.1	Configuration Nomenclature	6.1-2
	Table 6.1.2-1	6.1-2
6.1.2	Configuration Description	6.1-3
	Table 6.1.2-1	6.1-3
	Table 6.1.2-2	6.1-4
6.1.3	Flight Mode Description	6.1-5
	Summary Table 6.1.3-0	6.1-5
6.1.3.1	Single Stage, Deploy	6.1-6
	Figure 6.1.3.1-1	6.1-6
6.1.3.2	Single Stage, Multiple Deploy	6.1-7
	Figure 6.1.3-2	6.1-7
6.1.3.3	Single Stage With AKS, Far Planet	6.1-8
	Figure 6.1.3-3	6.1-8
6.1.3.4	Single Stage (Expended), Extreme Far Planet	6.1-9
	Figure 6.1.3-4	6.1-9
6.1.3.5	Reserved	
6.1.3.6	Single Stage With AKS/DKS, Round Trip	6.1-10
	Figure 6.1.3-6	
6.1.3.7	Single Stage, Retrieval Delayed and Single Stage, Deorbited Payload	6.1-11
	Figure 6.1.3-7	6.1-11
6.1.3.8	Two Stage Sling Shot, Deploy	6.1-12
	Figure 6.1.3-8	6.1-12
6.1.3.9	Two Stage Reverse Sling Shot, Deploy and Delayed Retrieval Round Trip	6.1-13
	Figure 6.1.3-9	
6.1.3.10	Reserved	
6.1.3.11	Single Stage With Retrieval Delayed and Single Stage Deployment With AKS and Delayed Retrieval	6.1-14
	Figure 6.1.3-11a	6.1-14
	Figure 6.1.3-11b	6.1-15

PAGE

6.1.3.12 Reserved

6.1.3.13 Reserved

6.1.3.14 Single Stage, Sortie 6.1-16
Figure 6.1.3-14 6.1-16

6.1.3.15 Single Stage Deployment And Retrieval 6.1-17
Figure 6.1.3-15 6.1-17

6.1.4 Weight Summary 6.1-18

Options 1, 2 & 3 Table 6.1.4-1 6.1-18
Auxiliary Stages Table 6.1.4-2 6.1-19

6.1.5 Avionics Schematics

Configuration 110A-1, 310-3A, 510A-3B, 320A-3A Figure 6.1.5-1 6.1-20

Configuration 310RE-3A, 310ARE-3B, 410AD-2, 510ADE-3B Figure 6.1.5-2 6.1.21

Configuration 320AE-3A Figure 6.1.5-3 6.1.22

Apogee Kick Stage Figure 6.1.5-4 6.1.23
Deorbit Kick Stage Figure 6.1.5-5 6.1.24
Retrieval Delay Mode Figure 6.1.5-6 6.1.25

6.2 ORBITAL OPERATIONS SUMMARY 6.2-1

6.2.1 Performance Summary 6.2-1

6.2.1.1 Consumables/Delta-V Matrix 6.2-1
Table 6.2.1.1-1 6.2-2

6.2.1.2 Performance Comparison for NASA Geosynchronous Equatorial Mission. 6.2-3
Table 6.2.1.2-1 6.2-4

6.2.1.3 Performance Sensitivity Factors 6.2-5
Table 6.2.1.3-1 6.2-6

6.2.1.4 Payload Capture Comparison 6.2-8

6.2.1.4.1 Flight Summary - Options 1,2, 3A & 3B 6.2-8

Table 6.2.1.4.1-1 Flight Summary Option 1 110A-1 NASA Traffic 6.2-9
Table 6.2.1.3.1-2 Flight Summary Option 1 110A-1 DOD Traffic 6.2-10
Table 6.2.1.3.1-3 Flight Summary Option 1 110A-1 Combined NASA/DOD Traffic 6.2-11
Table 6.2.1.3.1-4 Flight Summary Option 2 410AD-2 Combined NASA/DOD Traffic 6.2-12
Table 6.2.1.3.1-5 Flight Summary Option 2 410AD-2 NASA Traffic 6.2-13
Table 6.2.1.3.1-6 Flight Summary Option 2 410AD-2 DOD Traffic 6.2-14

PAGE

Table 6.2.1.3.1-7 Flight Summary Option 3A 310-3A/310RE-3A Combined NASA and DOD Traffic 6.2-15

Table 6.2.1.3.1-8 Flight Summary Option 3A 310-3A/310RE-3A NASA Traffic 6.2-16

Table 6.2.1.3.1-9 Flight Summary Option 3A 310-3A/310RE-3A DOD Traffic 6.2-17

Table 6.2.1.3.1-10 Flight Summary Option 3A 320A-3A/320AE-3A Combined NASA/DOD Traffic 6.2-18

Table 6.2.1.4.1-11 Flight Summary Option 3A 320A-3A/320AE-3A NASA Traffic 6.2-19

Table 6.2.1.4.1-12 Flight Summary Option 3A 320A-3A/320AE DOD Traffic 6.2-20

Table 6.2.1.4.1-13 Flight Summary Option 3A 310-3B/310ARE-3B Combined NASA/DOD Traffic 6.2-21

Table 6.2.1.3.1-14 Flight Summary Option 3A 310-3B/310ARE-3B NASA Traffic 6.2-22

Table 6.2.1.3.1-15 Flight Summary Option 3A 310-3B/310ARE-3B DOD Traffic 6.2-23

Table 6.2.1.3.1-16 Flight Summary Option 3A 510A-3B/510ADE-3B Combined NASA/DOD Traffic 6.2-24

Table 6.2.1.3.1-17 Flight Summary Option 3A 510A-3B/510ADE-3B NASA Traffic 6.2-25

Table 6.2.1.3.1-18 Flight Summary Option 3A 510A-3B/510ADE-3B DOD Traffic 6.2-26

6.2.1.4.2 Flight Elements Requirements - Options 1,2,3A & 3B 6.2-27

Table 6.2.1.4.2-1 Flight Element Requirements Option 1 110A-1 NASA Traffic 6.2.28

Table 6.2.1.4.2-2 Flight Element Requirements Option 1 110A-1 DOD Traffic 6.2.29

PAGE

Table 6.2.1.4.2-3	Flight Element Requirements Option 1 110A-1 Combined NASA/DOD Traffic	6.2-30
Table 6.2.1.4.2-4	Kick Stage Definitions 110A-1	6.2-31
Table 6.2.1.4.2-5	Flight Element Requirements Option 2 410AD-2 Combined NASA/DOD Traffic	6.2-32
Table 6.2.1.4.2-6	Flight Element Requirements Option 2 410AD-2 NASA Traffic	6.2-33
Table 6.2.1.4.2-7	Flight Element Requirements Option 2 410AD-2 DOD Traffic	6.2-34
Table 6.2.1.4.2-8	Kick Stage Definition 410AD-2	6.2-35
Table 6.2.1.4.2-9	Flight Element Requirements Option 3A 310-3A/310RE-3A Combined NASA/DOD Traffic	6.2-36
Table 6.2.1.4.2-10	Flight Element Requirements Option 3A 310-3A/310RE-3A NASA Traffic	6.2-37
Table 6.2.1.4.2-11	Flight Element Requirements Option 3A 310-3A/310RE-3A DOD Traffic	6.2-38
Table 6.2.1.4.2-12	Flight Element Requirements Option 3A 320A-3A/320AE-3A NASA Traffic	6.2-39
Table 6.2.1.4.2-13	Flight Element Requirements Option 3A 320A-3A/320AE-32 Combined NASA/DOD Traffic	6.2-40
Table 6.2.1.4.2-14	Flight Element Requirements Option 3A 320A-3A/320AE-32 DOD Traffic	6.2-41
Table 6.2.1.4.2-15	Kick Stage Definition 320A-3A/320AE-32	6.2-42
Table 6.2.1.4.2-16	Flight Element Requirements Options 3A 310-3B/310ARE-3B Combined NASA/DOD Traffic	6.2-43
Table 6.2.1.4.2-17	Flight Element Requirements Option 3A 310-3B/310ARE-3B Combined NASA/DOD Traffic	6.2-44
Table 6.2.1.4.2-18	Flight Element Requirements Option 3A 310-3B/310ARE-3B NASA Traffic	6.2-45

		PAGE
	Table 6.2.1.4.2-19 Kick Stage Definition 310ARE-3B	6.2-46
	Table 6.2.1.4.2-20 Flight Element Requirements Option 3B 510A-3B Combined NASA/DOD Traffic	6.2-47
	Table 6.2.1.4.2-21 Flight Element Requirements Option 3B 510A-3B NASA Traffic	6.2-48
	Table 6.2.1.4.2-22 Flight Element Requirements Option 3B 510A-3B DOD Traffic	6.2-49
	Table 6.2.1.4.2-23 Kick Stage Definition Option 3B 510A-3B/510ADE-3B	6.2-50
	Table 6.2.1.4.2-24 Kick Stage Definition Option 3B 510A-3B/510ADE-3B (Cont.)	6.2-51
6.2.2	Baseline Mission Functional Requirements	6.2-52
	Figure 6.2.2-1 Space Tug Top Level Flow Diagram	6.2-53
6.2.2.1	Onboard Functional Requirements (Geosync.Round Trip, Autonomy III)	6.2-53
6.2.2.2	Ground Functional Requirements (Geosync. Round Trip, Autonomy III)	6.2-60
6.2.2.3	Network Duty Cycle (Action Item Response)	6.2-66
6.2.2.3.1	STDN (Autonomy Levels II & III)	
	Geosynchronous Table 6.2.2.3-1	6.2-76
	High Inclination Elliptical Table 6.2.2.3-2	
	Planetary Table 6.2.2.3-3	6.2-85
6.2.2.3.2	AFSCF (Autonomy Levels II & III)	6.2-90
	Geosynchronous Table 6.2.2.3-4	6.2-90
6.2.2.3.3	Network Duty Cycle	6.2-100
	Table 6.2.2.3-5	6.2-100
6.2.3	Shuttle Interface Requirements	6.2-101
6.2.3.1	Launch to Tug Activiation	6.2-101
6.2.3.2	Activation to Deployment	6.2-102
6.2.3.3	Deployment to Phasing Orbit Insertion	6.2-103
6.2.3.4	Phasing to Phasing Orbit Insertion	6.2-104
6.2.3.5	Preparation for Docking to Stowage in Orbiter	6.2-105
6.2.3.6	Storage in Orbiter to Landing	6.2-106
6.2.4	Inflight Dump Summary	6.2-107

PAGE

6.2.5	Operational Complexity Summary Table 6.2.5-0 Complexity Factors	6.2-108 6.2-109
6.2.5.1	Option 1, Configuration 110A-1 Table 6.2.5-1	6.2-110
6.2.5.2	Option 2, Configuration 410AD-2 Table 6.2.5-2	6.2-111
6.2.5.3	Option 3A, Configuration 310-3A 310RE-3A Table 6.2.5-3	6.2-112
6.2.5.4	Option 3A, Configuration 320-3A 320AE-3A Table 6.2.5-4	6.2-113
6.2.5.5	Option 3B, Configuration 310-3B 310ARE-3B Table 6.2.5-5	6.2-114
6.2.5.6	Option 3B, Configuration 510-3B 510ADE-3B Table 6.2.5-6	6.2-115
6.2.5.7	Software Complexity Factor For Autonomy Table 6.2.5-7	6.2-116
6.2.6	Cost Summary	6.2-117
6.2.6.1	Methodology Table 6.2.6-1 Cost Summary Flight Operations	6.2-118 6.2-119
6.2.6.2	Non Recurring Flight Operations Cost Table 6.2.6.2-1 Non-Recurring Flight Operations Cost Excluding Flight Test	6.2-120 6.2-121
6.2.6.3	Non Recurring Flight Test Operations Cost Table 6.2.6.3-1 Non-Recurring Flight Test Operations Cost	6.2-124 6.2-125
6.2.6.4	Recurring Flight Operations Cost Table 6.2.6.4-1 Recurring Flight Operations Cost	6.2-128 6.2-129

VOL. 6 OPERATIONS DATA BOOK

PART I FLIGHT OPERATIONS

SECTION I SUMMARY

6.0 INTRODUCTION

Part I of Volume 6 includes the supporting data on performance, mission techniques and flight operations cost used in the definition of the three Storable Tug options. This part of the Operations Volume has been split into 3 sections for convenience in handling. Section 1 is a summary of the pertinent information defined in detail in Section 2 "Performance", and Section 3 "Orbital Operations Cost". Part II of Volume 6 presents the Ground Operations Data.

Section 1 includes configuration nomenclature, summary of weight statements, an overview of the configuration elements, avionics schematics and flight mode summaries. A more detailed description including in-board profiles can be found in Volume 5 "Systems". The performance data of Section 1 summarizes the detailed consumables analyses and performance assessments presented in Section 2 for each configuration and its associated flight modes. The results of the payload capture analysis using this performance assessment is shown in 6.2.1.4, which includes the number of expendable Tug's and add-on elements used by the concept on a yearly basis. This capture comparison is presented in more detail in Volume 4 "Mission Accomplishment".

Para. 6.2.2 summarizes the flight operations functional requirements for both the vehicle and ground flight support organization. The functional requirements presented are for single stage geosynchronous missions. We have used this mission flow as a baseline in performing a "grass-roots" estimate for flight operations costs based on our data files from the LM. It has been estimated that the Tug geosynchronous round trip mission is approximately equivalent in complexity, exlcuding crew safety issues, to the stable of earth orbital and lunar missions performed by the LM. Complexity factors, Para. 6.2.5.7, have been established for each candidate based on the weighted sum of level 1 operations in the flight modes used by the concept. These complexity factors are normalized relative to the single stage round trip mission and used to establish the cost differences between concepts. To establish the impact of autonomy on costs, two factors where considered, namely, impact of autonomy on ground network duty cycle and the impact on on-board and MCC software. Section 6.2.2.3 summarizes the analysis of network scheduleing for 3 NASA missions, which reflects different levels of payload energy requirements. A scheduling analysis of a geosynchronous mission using the AF SCF is also provided. The network coverage available for ground activity is based on the network coverage schedules

6 0 INTRODUCTION (continued)

provided in Section 2 (Para. 6.3.8). Note that the coverage available in most cases exceeds the required time to perform the communications and navigation functions for the Tug Level III & II Autonomous systems used in the analysis. Para. 6.2.5.7 summarizes the software requirements for the on-board and MCC computers as a function of Autonomy level. The relative size of these software packages was used as an autonomy complexity factor on manpower requirements for mission planning (proportional to on-board software) and flight control (proportional to MCC software).

Para. 6.2.6 summarizes the cost data provided to our Programmatics and Cost Task and used as the basis for flight operations reporting in Volume 8. A detailed Task flow, task description, schedule and manpower loading are provided in Para. 6.4 for all the WBS elements impacting flight operations.

Para. 6.5 thru 6.10 include trade-off study results pertinent to evaluating flight related issues. Effort has been made in presenting this trade-off information to identify key study areas for the next period of the contract.

In addition to the open technology issues identified in Section 3, deeper analysis of the Flight Operations Cost assumptions made by us is recommended. This would include deeper penetration of functional software requirements particularly for the Automatic Mission Design program, MCC real time software and simulation software. Preliminary system architecture for the mission control centers should be prepared and equipment lists generated as a means of establishing better cost estimates for facilities. It is also recommended that a NASA/DOD effort be initiated to correlate the cost complexity factors with previous upper stage programs.

6.1 Configuration and Mission Summary

The tables and figures which follow summarize the configuration which will satisfy NASA and DOD program requirements for a phased and direct development TUG in accordance with options 1, 2, 3A and 3B. An overview of the salient design features and a brief description of the proposed missions for each configuration is presented.

CONFIGURATION NOMENCLATURE

	NASA OPTION									
	1	2	3A				3B			
IOC	DEC 1979	DEC 1983	DEC 1979	DEC 1983	DEC 1979	DEC 1983	DEC 1979	DEC 1983	DEC 1979	DEC 1983
DEPLOY/ RETRIEVE	3500/0	3500/3500	3500/0	3500/0	3500/2200	3500/2200	3500/0	3500/0	3500/3500	3500/3500
COST	MIN DDT&E	LOW DDT&E LOW PROG COST	LOW DDT&E LOW PROG COST	LOW DDT&E LOW PROG COST	LOW DDT&E LOW PROG COST	LOW DDT&E LOW PORG COST	LOW DDT&E LOW PROG COST	LOW DDT&E LOW PROG COST	LOW DDT&E LOW PROG COST	LOW DDT&E LOW PROG COST
TUG CONFIGURA-TION	110A-1	410A-1	3103A	310RE-3A	320A-3A	320AE-3A	310-3B	310ARE-3B	510A-3B	510ADE-3B

CONFIGURATION NOMENCLATURE

3 1 0 A R E - 3 B

FORMER NASA OPTION NUMBER

NUMBER OF STAGES
10: SINGLE STAGE
20: TWO STAGE

ADD ON MODULES
R: RETRIEVAL DELAY
A: APOGEE KICKSTAGE
D: DEORBIT KICK STAGE

CONFIGURATION
E: EVOLVED

NASA OPTION
1
2
3A
3B

TABLE 6.1.1-1

CONFIGURATION DESCRIPTION

TABLE 6.1.2-1

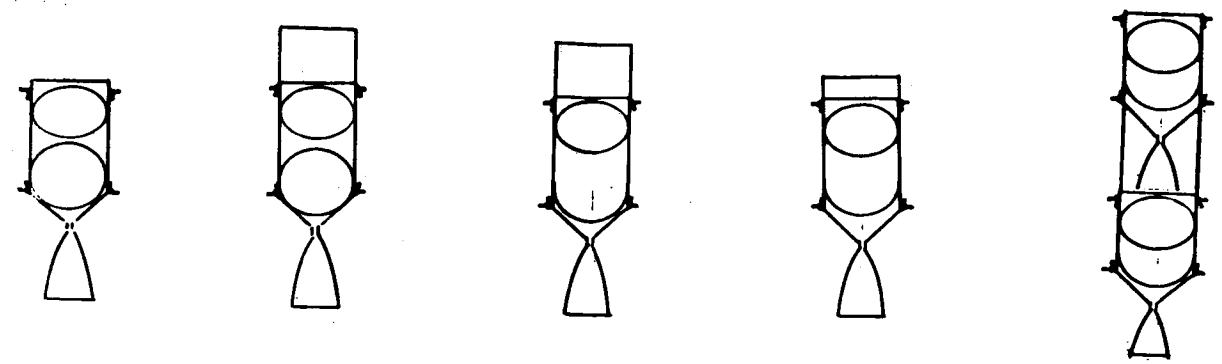

	SINGLE STAGE STORABLE SPACE TUG	OPTION 1 (110A-1)	OPTION 2 (410AD-2)	OPTION 3A SINGLE STAGE (310-3A/310RE-A1)	OPTION 3A TWO STAGE (320A-3A/320AE-3A)
VEHICLE DESCRIPTION	THE SINGLE STAGE STORABLE TUG WILL BE DEPLOYED AND RETRIEVED BY THE ORBITER. THE BASIC SUBSYSTEM COMPLEMENT IS AS FOLLOWS:	SINGLE STAGE STORABLE TUG WITH THE ADDITION OF AN APOGEE KICK STAGE. LEVEL IIIA AUTONOMY.	SINGLE STAGE STORABLE TUG WITH THE ADDITION OF AN APOGEE/DEORBIT KICK STAGE. LEVEL IIB AUTONOMY.	SINGLE STAGE STORABLE TUG WITH PHASED ADDITION OF APOGEE KICK STAGE AND RETRIEVAL DELAY CAPABILITY. LEVEL IIIA AUTONOMY UPDATED TO IIB	o TWO NESTED SMALL SIZE TUGS WITH PHASED ADDITION OF AN APOGEE KICK STAGE AND A RETRIEVAL DELAY MODULE. LEVEL IIIA AUTONOMY
MAIN PROPULSION	o 7.5K ORBITAL MANEUVERING ENGINE (OME) o HELIUM PRESSURIZED STORABLE BIPROPELLANTS o SCREENS FOR PROPELLANT ACQUISITION o PUMP FED PROPELLANTS o GIMBALLED NOZZLE FOR TVC	o 7.5K ORBITAL MANEUVERING ENGINE (OME) o HELIUM PRESSURIZED STORABLE BIPROPELLANTS o SCREENS FOR PROPELLANT ACQUISITION o PUMP FED PROPELLANTS o GIMBALLED NOZZLE FOR TVC	o 12K CLASS I HIGHER PRESSURE ENGINE	o 12K CLASS I HIGHER PRESSURE ENGINE	o 12K CLASS I HIGHER PRESSURE ENGINE WITH EXTENDABLE NOZZLE
AUXILIARY PROPULSION	o (16) 25# THRUSTERS IN 4 QUADS o MONOPROPELLANT o BLADDER TANKS o THRUSTER REDUNDANCY	o (16) 25# THRUSTERS IN 4 QUADS o MONOPROPELLANT o BLADDER TANKS o THRUSTER REDUNDANCY	o (24) 25# THRUSTERS IN 4 QUADS	o (16) 25# THRUSTERS IN 4 QUADS INCREASED TO o (24) 25# THRUSTERS IN 4 QUADS	o (16) 25# THRUSTERS IN 4 QUADS INCREASED TO o (25) 25# THRUSTERS IN 4 QUADS
STRUCTURES	o ALUMINUM FRAME o ALUMINUM HONEYCOMB OUTER SHELL o SEPARATE SPUN ALUMINUM FUEL & OXIDIZER TANKS	o ALUMINUM FRAME o ALUMINUM HONEYCOMB OUTER SHELL o SEPARATE SPUN ALUMINUM FUEL & OXIDIZER TANKS	o ALUMINUM FRAME o COMPOSITE HONEYCOMB OUTER SHELL o NESTED DOME TITANIUM FUEL AND OXIDIZER TANKS	o ALUMINUM FRAME o COMPOSITE HONEYCOMB OUTER SHELL o NESTED DOME TITANIUM FUEL AND OXIDIZER TANKS	o ALUMINUM FRAME o COMPOSITE HONEYCOMB OUTER SHELL o NESTED DOME TITANIUM FUEL AND OXIDIZER TANKS
E.P.S.	o DUAL FEED DISTRIBUTION SYS o (1) SILVER ZINC BATTERY o (1) SILVER ZINC EMERGENCY BATTERY FOR ESSENTIAL BUS o ORBITER SUPPLIES PWR TO TUG IN TRANSIT o TUG SUPPLIES PWR TO PAYLOAD IN FLIGHT	o DUAL FEED DISTRIBUTION SYS o (1) SILVER ZINC BATTERY o (1) SILVER ZINC EMERGENCY BATTERY FOR ESSENTIAL BUS o ORBITER SUPPLIES PWR TO TUG IN TRANSIT	o DUAL FEED DISTRIBUTION SYS o FUEL CELL o (1) SILVER ZINC EMERGENCY BATTERY FOR ESSENTIAL BUS o CRYO TANKS	o DUAL FEED DISTRIBUTION SYS o FUEL CELL o (1) SILVER ZINC EMERGENCY BATTERY FOR ESSENTIAL BUS o CRYO TANKS	o DUAL FEED DISTRIBUTION SYS o ADVANCED FUEL CELL o (1) SILVER ZINC EMERGENCY BATTERY FOR ESSENTIAL BUS o CRYO TANKS
DATA MANAGEMENT	o PERFORM GUIDANCE & NAVIGATION FUNCTIONS AND ON-BOARD CHECKOUT o STATE VECTOR UPDATES ARE TRANSMITTED FROM THE GND o SOME MAINTENANCE VIA ON-BOARD SYSTEM SOME VIA UPLINK (TIME CRITICAL CORRECTIVE ACTION PERFORMED VIA ON-BOARD SYSTEM) o 48K WORD COMPUTER o TAPE RECORDER ON-BOARD	o PERFORM GUIDANCE & NAVIGATION FUNCTIONS AND ON-BOARD CHECKOUT o STATE VECTOR UPDATES ARE TRANSMITTED FROM THE GND o SOME MAINTENANCE VIA ON-BOARD SYSTEM SOME VIA UPLINK (TIME CRITICAL CORRECTIVE ACTION PERFORMED VIA ON-BOARD SYSTEM) o 48K WORD COMPUTER o TAPE RECORDER ON-BOARD	o STATE VECTOR UPDATES PERFORMED ON-BOARD VIA SATELLITE AND GROUND BEACON TRACKING o MAINTENANCE ON-BOARD WITH GROUND OVERRIDE o ALL CHECKOUTS THAT HAVE A CORRECTIVE ACTION WILL BE PERFORMED VIA ON-BOARD SYS o (2) 65K WORD COMPUTERS o TAPE RECORD ON-BOARD	o (2) 48K WORD COMPUTERS UPDATED TO (2) 65K WORD COMPUTERS o TAPE RECORDER ON- BOARD	o (2) 48K WORD COMPUTERS o TAPE RECORDER ON-BOARD
GUIDANCE AND NAVIGATION	o CAROUSEL VB IMU WITH RATE GYRO BACKUP o STAR TRACKER	o CAROUSEL VB IMU WITH RATE GYRO BACKUP o STAR TRACKER	o (2) MICRON IMU's o (1) STAR TRACKER o LASER RADAR FOR RENDEZVOUS DOCKING	o CAROUSEL VB IMU WITH RATE GYRO BACKUP & STAR TRACKER UPDATED TO o (2) MICRON IMU'S o (1) STAR TRACKER o LASER RADAR FOR RENDEZVOUS DOCKING	o (2) CAROUSEL VB IMU WITH RATE BACKUP AND STAR TRACKER UPDATED TO o (2) MICRON IMU'S o (1) STAR TRACKER o LASER RADAR FOR RENDEZVOUS DOCKING
COMMUNICATIONS	o COMPATIBLE WITH DOD/NASA COMMUNICATION NETWORKS o DEDICATED FREQUENCY (S-BAND) STATION	o COMPATIBLE WITH DOD/NASA COMMUNICATION NETWORKS o DEDICATED FREQUENCY (S-BAND) STATION	o COMPATIBLE WITH DOD/NASA COMMUNICATION NETWORKS o DEDICATED FREQUENCY (S-BAND) STATION AND CHANNEL SELECTABLE STATION (CSS) o TV	o COMPATIBLE WITH DOD/NASA COMMUNICATION NETWORKS o DEDICATED FREQUENCY (S-BAND) STATION AND CHANNEL SELECTABLE STATION (CSS) o TV	o COMPATIBLE WITH DOD/NASA COMMUNICATION NETWORKS o DEDICATED FREQUENCY (S-BAND) STATION AND CHANNEL SELECTABLE STATION (CSS) o TV

CONFIGURATION DESCRIPTION
TABLE 6.1.2-2

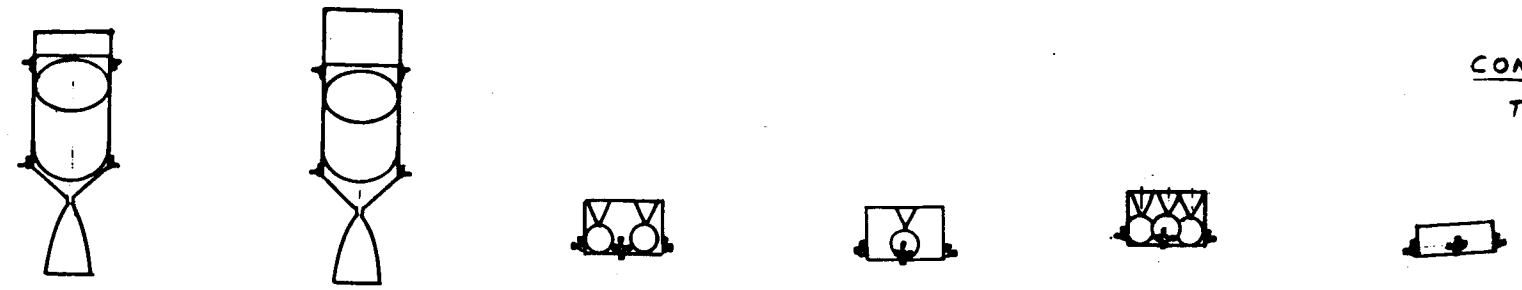

	OPTION 3B WITH RETRIEVAL DELAY (310-38/310ARE-38)	OPTION 3B WITH DEORBIT KICK STAGE (510A-3B/510ADE-3B)	APOGEE KICK STAGE	DEORBIT KICK STAGE	APOGEE/DEORBIT KICK STAGE	RETRIEVAL DELAY MODULE
VEHICLE DESCRIPTION	SINGLE STAGE STORABLE TUG WITH PHASED ADDITION OF APOGEE KICK STAGE AND RETRIEVAL DELAY MODULE. LEVEL IIIA AUTONOMY UPDATED TO IIB.	SINGLE STAGE STORABLE TUG WITH PHASED ADDITION OF APOGEE/DEORBIT KICK STAGE. LEVEL IIIA AUTONOMY UPDATED TO IIB.	PROPULSIVE STAGE WHICH ATTACHES TO HEAVY PAYLOAD TO PLACE IT IN ORBIT.	PROPULSIVE STAGE WHICH ATTACHES TO HEAVY PAYLOAD TO RETURN IT FROM ORBIT.	PROPULSIVE STAGE WHICH ATTACHES TO HEAVY PAYLOAD TO PLACE IT INTO & RETRIEVE IT FROM ORBIT.	ATTITUDE STABILIZATION STAGE WHICH ATTACHES TO PAYLOAD TO STABILIZE IT IN ORBIT PRIOR TO SUBSEQUENT RECOVERY.
MAIN PROPULSION	o 12K CLASS I HIGHER PRESSURE ENGINE	o 7.5K ORBITAL MANEUVERING ENGINE (OME)	o CLUSTER OF 2 OR 4 SOLID ROCKET MORTORS (SRM'S) o GIMBALLED NOZZLES FOR TVC	o 1 OR 2 SOLID ROCKET MOTORS (SRM'S) o GIMBALLED NOZZLES FOR TVC	o CLUSTER OF UP TO 6 SOLID ROCKET MOTORS (SRM'S) o GIMBALLED NOZZLES FOR TVC	NONE
AUXILIARY PROPULSION	o (16) 25# THRUSTERS IN 4 QUADS INCREASED TO (24) 25# THRUSTERS IN 4 QUADS o MONOPROPELLANT o BLADDER TANKS o THRUSTER REDUNDANCY	o (24) 25# THRUSTERS IN 4 QUADS	o (12) 1# THRUSTERS IN 4 QUADS o MONOPROPELLANT	o (12) 1# THRUSTERS IN 4 QUADS o MONOPROPELLANT	o (12) 1# THRUSTERS IN 4 QUADS o MONOPROPELLANT	o (12) 1# THRUSTERS IN 4 QUADS o MONOPROPELLANT
STRUCTURES	o ALUMINUM FRAME o COMPOSITE HONEYCOMB OUTER SHELL o NESTED DOME TITANIUM TANK	o ALUMINUM FRAME o ALUMINUM STIFFENED SHEET OUTER SHELL o NESTED DOME SPUN AL. TANK	o ALUMINUM FRAME o ALUMINUM STIFFENED SHEET OUTER SHELL	o ALUMINUM FRAME o ALUMINUM STIFFENED SHEET OUTER SHELL	o ALUMINUM FRAME o ALUMINUM STIFFENED SHEET OUTER SHELL	o ALUMINUM FRAME o ALUMINUM STIFFENED SHEET OUTER SHELL
E.P.S.	o DUAL FEED DISTRIBUTION SYS o FUEL CELL o (1) SILVER ZINC EMERGENCY BATTERY FOR ESSENTIAL BUS	o DUAL FEED DISTRIBUTION SYS o FUEL CELL o (1) SILVER ZINC EMERGENCY BATTERY FOR ESSENTIAL BUS	o (1) SILVER ZINC BATTERY	o DUAL FEED DISTRIBUTION SYSTEM o SOLAR ARRAY o (1) SILVER ZINC BATTERY	o DUAL FEED DISTRIBUTION SYS o SOLAR ARRAY o (1) SILVER ZINC BATTERY	o (1) SILVER ZINC BATTERY
DATA MANAGEMENT	o PERFORM GUIDANCE AND NAVIGATION FUNCTIONS AND ON-BOARD CHECKOUT o INITIALLY STATE VECTOR UPDATES ARE TRANSMITTED FROM GROUND LATER UPDATED TO ON-BOARD VIA SATELLITE AND GROUND BEACON TRACKING o TAPE RECORDER ON-BOARD o (2) 48K WORD COMPUTERS UPDATED TO (2) 65K WORD COMPUTERS o EVOLVES TO INCREASED OBC	o PERFORM GUIDANCE AND NAVIGATION FUNCTIONS AND ON-BOARD CEHCKOUT o INITIALLY STATE VECTOR UPDATES ARE TRANSMITTED FROM GROUND, LATER UPDATED TO ON-BOARD VIA SATELLITE AND GROUND BEACON TRACKING o TAPE RECORDER ON-BOARD o (2) 48K WORD COMPUTERS UPDATED TO (2) 65K WORD COMPUTERS o EVOLVES TO INCREASED OBC	o 2 SENSORS CHECKOUT AKS TANK PRESS. & TEMPS PRIOR TO SEPARATION	o PCM'S & SENSORS PERMIT MONITORING OF DKS ATTITUDE CONTROL SYS BY TUG, ORBITER AND GROUND	o PCM & SENSORS PERMIT MONITORING DKS AND ATTITUDE CONTROL SYS BY TUG, ORBITER AND GROUND	o PCM & SENSORS PERMIT MONITORING ATTITUDE CONTROL BY TUG, ORBITER AND GROUND
GUIDANCE AND NAVIGATION	o CAROUSEL VB IMU WITH RATE GYRO BACKUP AND STAR TRACKER UPDATED TO (2) MICRON IMU'S (1) STAR TRACKER o LASER RADAR FOR RENDEZVOUS TRACKING	o CAROUSEL VB IMU WITH RATE GYRO BACKUP AND STAR TRACKER UPDATED TO (2) MICRON IMU'S (1) STAR TRACKER o LASER RADAR FOR RENDEZVOUS TRACKING	o ATTITUDE GYRO REFERENCE UNIT o SEQUENCER PROGRAMMER AND CONTROLS	o ATTITUDE GYRO REFERENCE UNIT o STAR TRACKER o SEQUENCER PROGRAMMER AND CONTROLS	o ATTITUDE GYRO REFERENCE UNIT o STAR TRACKER o SEQUENCER PROGRAMMER AND CONTROLS	o ATTITUDE GYRO REFERENCE UNIT
COMMUNICATION	o COMPATIBLE WITH DOD/NASA COMMUNICATIONS NETWORKS o DEDICATED FREQUENCY (S-BAND) STATION AND CHANNEL SELECTABLE STATION (CSS) o TV	o COMPATIBLE WITH DOD/NASA COMMUNICATIONS NETWORKS o DEDICATED FREQUENCY(S-BAND) STATION AND CHANNEL SELECTABLE STATION (CSS)	NONE	o COMPATIBLE WITH DOD/NASA COMMUNICATIONS NETWORKS o DEDICATED FREQUENCY (S-BAND) STATION	o COMPATIBLE WITH DOD/NASA COMMUNICATIONS NETWORKS o DEDICATED FREQUENCY (S-BAND)	o COMPATIBLE WITH DOD/NASA COMMUNICATIONS NETWORKS o DEDICATED FREQUENCY (S-BAND)

TABLE 6.1.3.0 FLIGHT MODE DESCRIPTION SUMMARY

FLIGHT MODE DESCRIPTION FIGURE NUMBERS

MISSION \ CONFIGURATION	110A-1	410AD-2	310-3A	310RE-3A	320A-3A	320AE-3A	310-3B	310ARE-3B	510A-3B	510ADE-3B
SINGLE STAGE DEPLOY	6.1.3.1	6.1.3.1	6.1.3.1	6.1.3.1			6.1.3.1	6.1.3.1	6.1.3.1	6.1.3.1
SINGLE STAGE MULTIPLE DEPLOY	6.1.3.2	6.1.3.2	6.1.3.2	6.1.3.2			6.1.3.2	6.1.3.2	6.1.3.2	6.1.3.2
SINGLE STAGE + AKS DEPLOY	6.1.3.3	6.1.3.3						6.1.3.3		6.1.3.3
SINGLE STAGE + AKS MULTIPLE DEPLOY										
SINGLE STAGE EXPENDED EXTREME FAR PLANET	6.1.3.4	6.1.3.4	6.1.3.4	6.1.3.4			6.1.3.4	6.1.3.4	6.1.3.4	6.1.3.4
SINGLE STAGE RETRIEVE DEORBITED PAYLOAD		6.1.3.6		6.1.3.7				6.1.3.7 6.1.3.11		6.1.3.6
SINGLE STAGE WITH AKS FAR PLANET	6.1.3.3	6.1.3.3						6.1.3.3		6.1.3.3
SINGLE STAGE WITH AKS/DKS ROUND TRIP		6.1.3.6						6.1.3.6		
SINGLE STAGE DEPLOY AND RETRIEVAL				6.1.3.15					6.1.3.15	6.1.3.15
SINGLE STAGE + RETRIEVAL DELAY DEPLOY AND RETRIEVAL				6.1.3.7						
TWO STAGE SLING SHOT DEPLOY					6.1.3.8	6.1.3.8				
TWO STAGE REVERSE SLING SHOT DEPLOY, DELAYED RETRIEVAL, ROUND TRIP						6.1.3.9				
SINGLE STAGE + AKS WITH RETRIEVAL DELAY								6.1.3.11		
SINGLE STAGE SORTIE	6.1.3.14									
SINGLE STAGE SERVICE 1 PAYLOAD										
SINGLE STAGE SERVICE 2 PAYLOAD		6.1.3.13						6.1.3.11		
SINGLE STAGE RETRIEVAL DELAY				6.1.3.7						
SINGLE STAGE 2 DEPLOYMENT AND RETRIEVAL										

6.1.3.1 SINGLE STAGE DEPLOY

CONFIGURATION: 110A-1, 410 AD-2, 310-3A, 310RE-3A, 310-3B, 310ARE-3B 510A-3B, 510ADE-3B

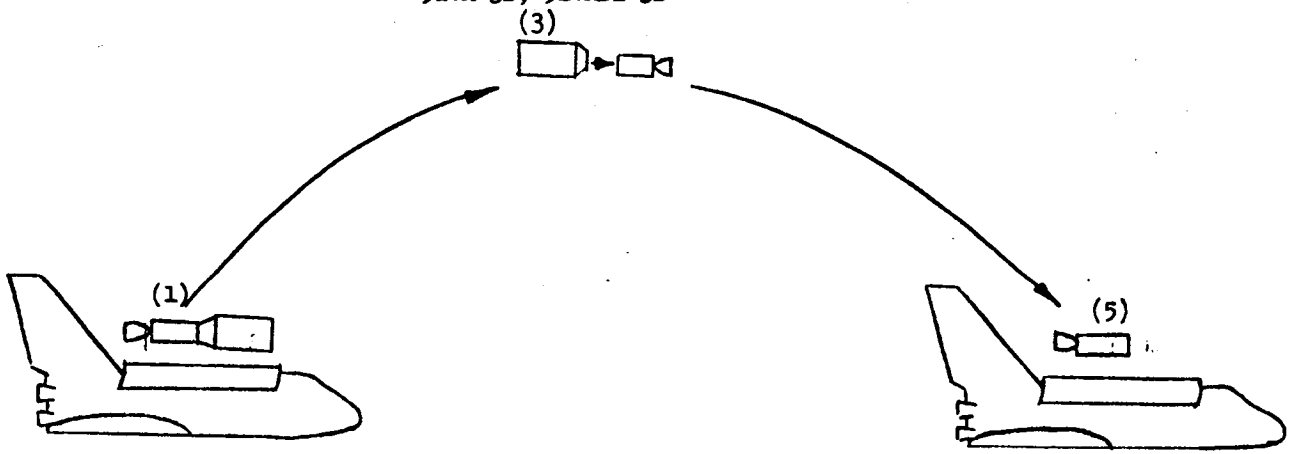

GET (HOURS)	STEP
$12\frac{1}{4}$	1. ORBITER DEPLOYS TUG AND PAYLOAD.
13	2. TUG PERFORMS PHASING BURN, TRANSFER BURN, AND INSERTION BURN INTO GEOSYNCHRONOUS ORBIT.
21	3. TUG DEPLOYS PAYLOAD AND SEPARATES.
$21\frac{1}{2}$	4. TUG PERFORMS TRANSFER BURN, PHASING BURN, AND INSERTION BURN INTO ORBITER ORBIT.
$32\frac{1}{2}$	5. ORBITER RETRIEVES TUG.

FIGURE 6.1.3-1

6.1.3-2 SINGLE STAGE MULTIPLE DEPLOY

CONFIGURATION: 110A-1 (Both payloads are deployed in a single package), 410AD-2
310-3A, 310RE-3A, 310-3B, 310ARE-3B, 510A-3B, 510ADE-3B

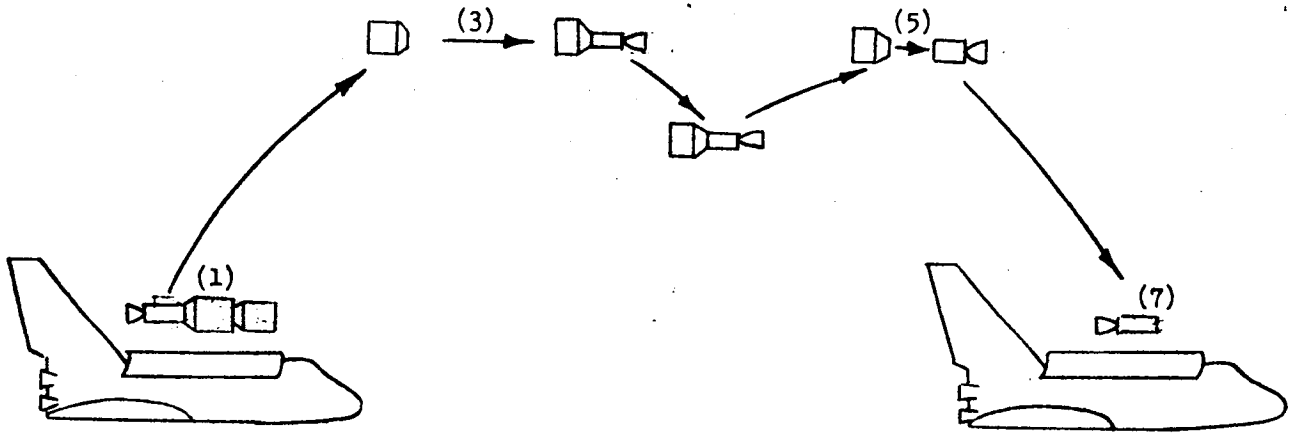

GET (HOURS)	STEP
$12\frac{1}{4}$	1. ORBITER DEPLOYS TUG AND PAYLOADS.
13	2. TUG PERFORMS PHASING BURN, TRANSFER BURN AND INSERTION BURN INTO GEOSYNCHRONOUS ORBIT.
21	3. TUG DEPLOYS PAYLOAD AND SEPARATES.
$22\frac{1}{2}$	4. TUG PERFORMS PHASING BURN AND INSERTION BURN INTO GEOSYNCHRONOUS ORBIT.
$136\frac{1}{2}$	5. TUG DEPLOYS SECOND PAYLOAD AND SEPARATES.
143	6. TUG PERFORMS TRANSFER BURN, PHASING BURN, AND INSERTION BURN TO ORBITER ORBIT.
153-3/4	7. ORBITER RETRIEVES TUG.

FIGURE 6.1.3-2

6.1.3.3 SINGLE STAGE WITH AKS FAR PLANET

CONFIGURATION: 410AD-2, 320A-3A, 320AE-3A, 310ARE-3B, 510ADE-3B

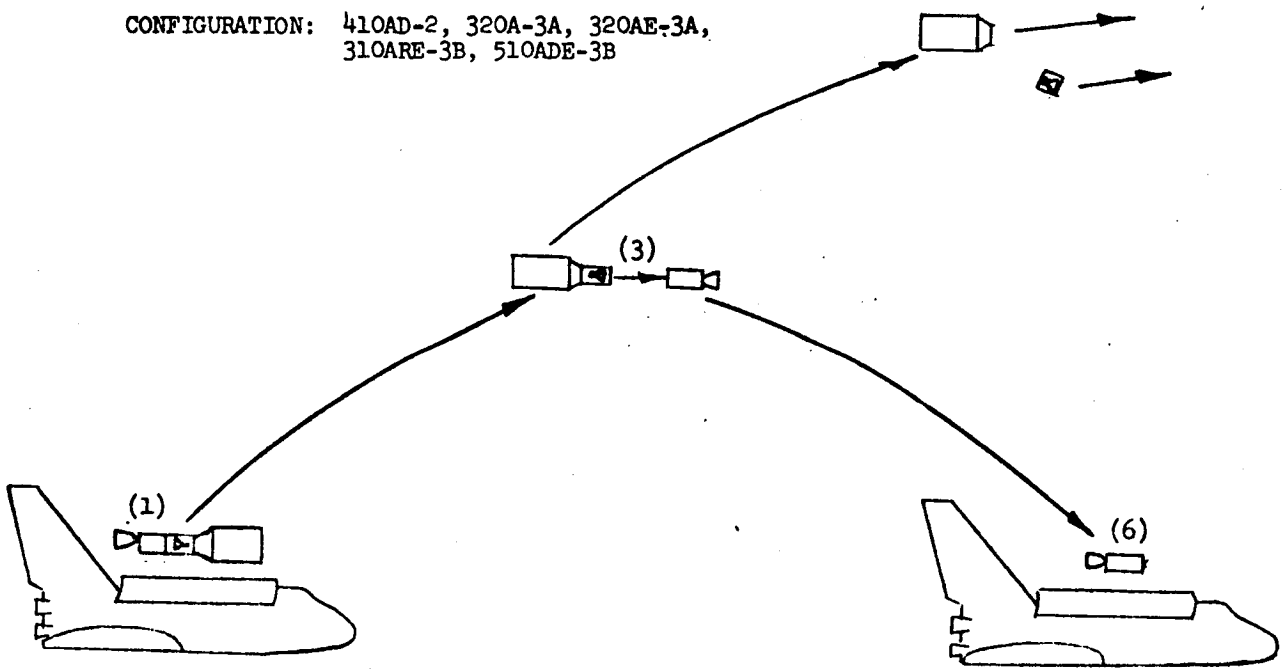

GET (HOURS)	STEP
9-3/4	1. ORBITER DEPLOYS TUG AND PAYLOAD.
$10\frac{1}{2}$	2. TUG PERFORMS TRANSFER BURN.
$15\frac{1}{4}$	3. TUG DEPLOYS PAYLOAD AND SEPARATES.
$15\frac{1}{2}$	4. AKS PERFORMS INSERTION BURN.
$20\frac{1}{2}$	5. TUG PERFORMS INSERTION BURN TO SHUTTLE ORBIT.
$22\frac{1}{2}$	6. ORBITER RETRIEVES TUG.

FIGURE 6.1.3-3

6.1.3-4 SINGLE STAGE EXPENDED EXTREME FAR PLANET

CONFIGURATION: 110A-1, 410AD-2, 310-3A, 310RE-3A, 310-3B, 310ARE-3B, 510A-3B, 510ADE-3B

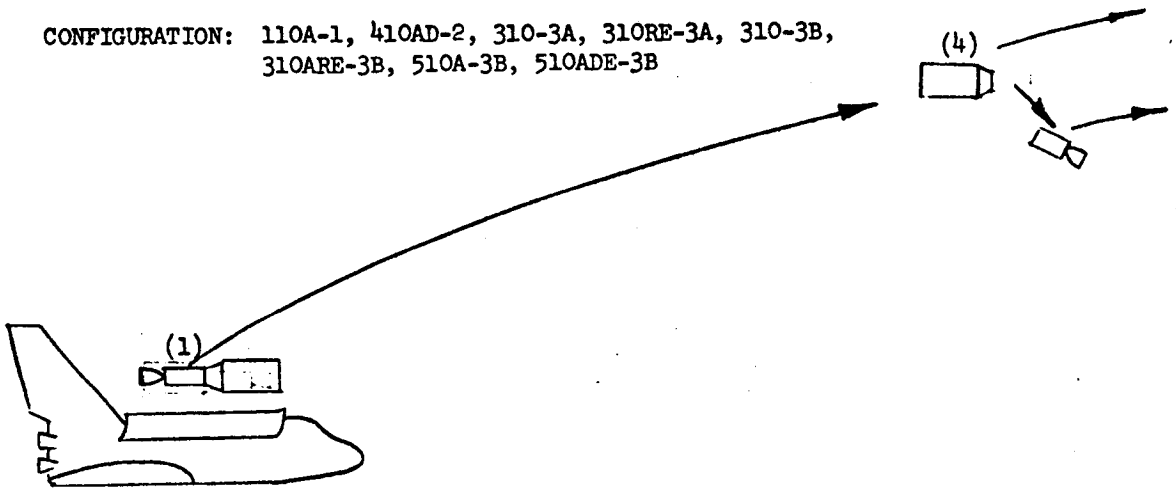

GET (HOURS)	STEP
$4\frac{1}{4}$	1. ORBITER DEPLOYS TUG AND PAYLOAD.
$4\frac{1}{2}$	2. TUG PERFORMS PHASING BURN.
$9\frac{1}{2}$	3. TUG PERFORMS ESCAPE ORBIT INSERTION BURN.
18-3/4	4. TUG SEPARATES FROM PAYLOAD

FIGURE 6.1.3-4

6.1.3.6 SINGLE STAGE WITH AKS/DKS ROUND TRIP

CONFIGURATION: 410AD-2, 510ADE-3B

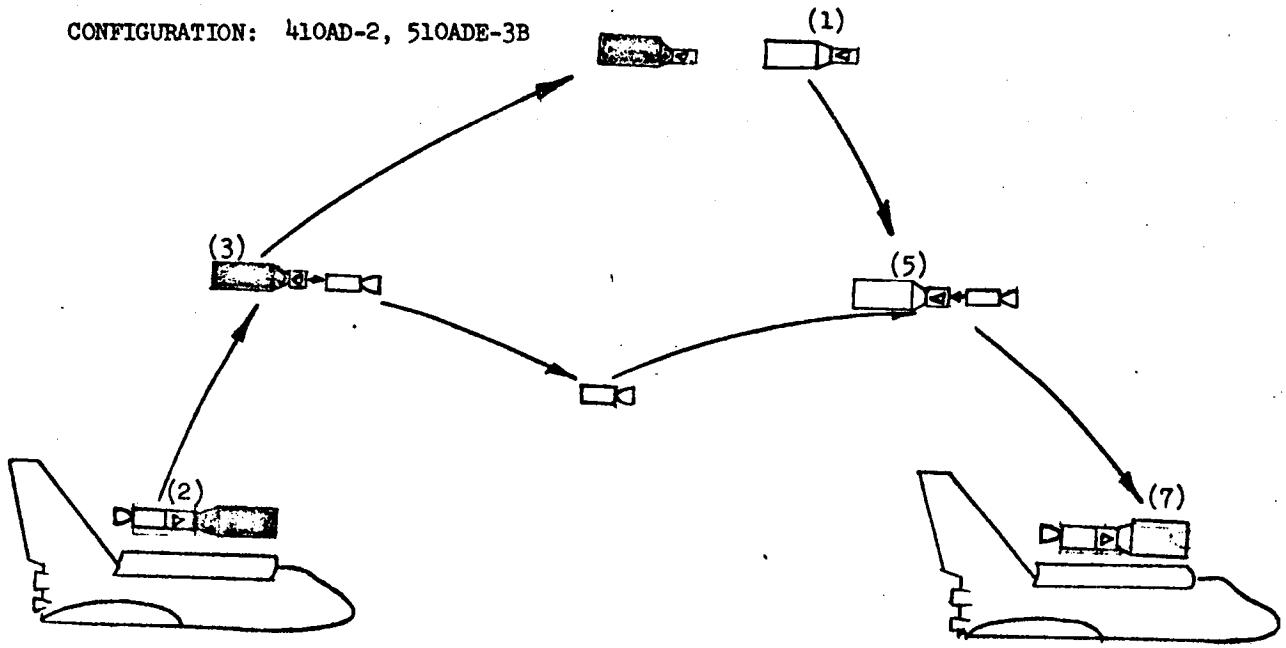

GET (HOURS)	STEP
13½	1. DKS DEORBITS OLD PAYLOAD TO HOLDING ORBIT.
9-3/4	2. ORBITER DEPLOYS TUG AND PAYLOAD.
10½	3. TUG PERFORMS PHASING BURN, TRANSFER BURN, SEPARATES FROM PAYLOAD AND AKS PERFORMS INSERTION BURN TO GEOSYNCHRONOUS ORBIT.
18½	4. TUG PERFORMS TRANSFER BURN, PHASING BURN, AND INSERTION BURN INTO PAYLOAD HOLDING ORBIT.
34½	5. TUG DOCKS WITH OLD PAYLOAD.
44½	6. TUG PERFORMS TRANSFER BURN, PHASING BURN, AND INSERTION BURN INTO ORBITER ORBIT.
56-3/4	7. ORBITER RETRIEVES TUG AND PAYLOAD.

FIGURE 6.1.3-6

6.1.3-7 SINGLE STAGE RETRIEVAL DELAYED, AND SINGLE STAGE RETRIEVE (DEORBITED) PAYLOAD

CONFIGURATION: 410AD-2, 310RE-3A, 310ARE-3B, 510ADE-3B (Retrieve)
310RE-3A (Deploy)

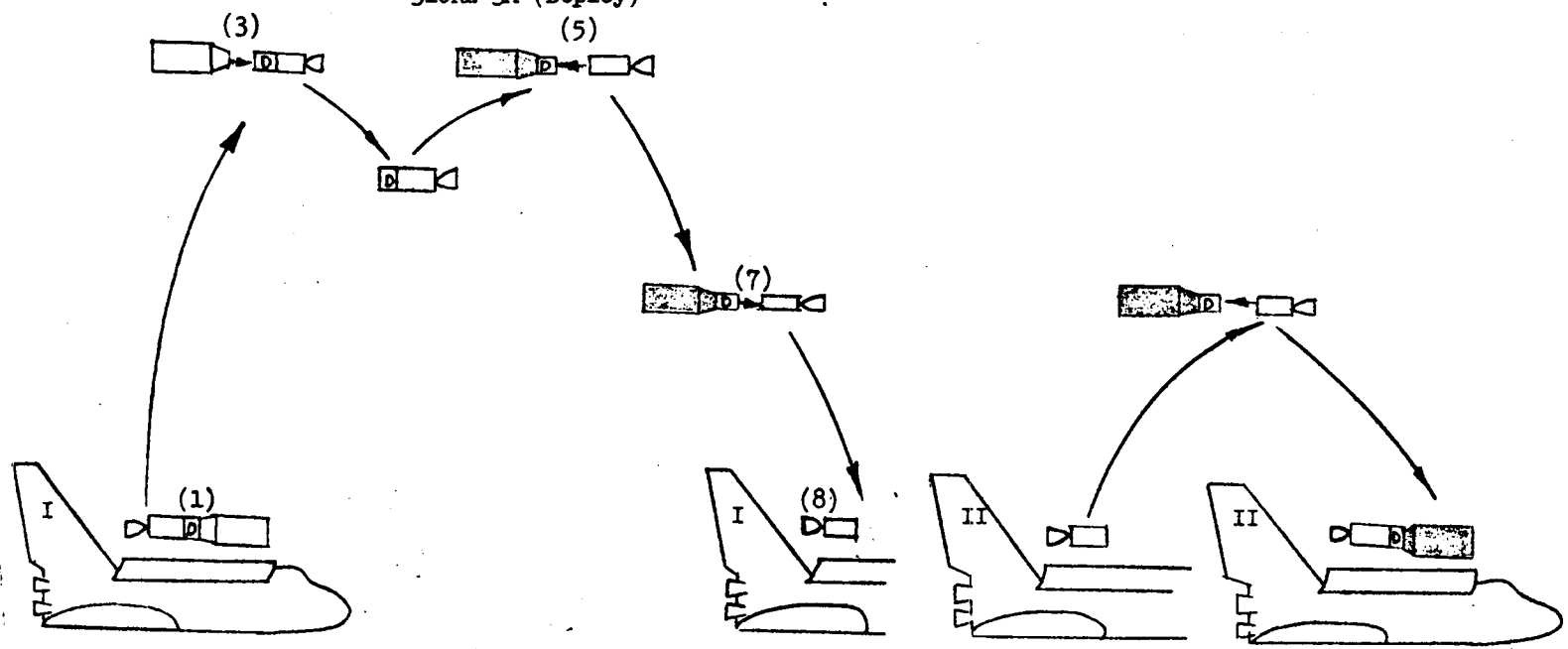

GET(HOURS)	STEP
$12\frac{1}{4}$	1. ORBITER DEPLOYS TUG, RETRIEVAL MODULE, AND PAYLOAD.
13	2. TUG PERFORMS PHASING BURN, TRANSFER BURN, AND INSERTION BURN TO GEOSYNCHRONOUS ORBIT.
21	3. TUG DEPLOYS PAYLOAD AND SEPARATES.
22	4. TUG PERFORMS PHASING BURN, INSERTION BURN, AND TRANSFER BURN TO GEOSYNCHRONOUS ORBIT.
$101\frac{1}{4}$	5. TUG DOCKS WITH OLD PAYLOAD, ATTACHES RETRIEVAL MODULE.
$102\frac{1}{4}$	6. TUG PERFORMS INSERTION BURN TO HOLDING ORBIT.
$111\frac{1}{4}$	7. TUG SEPARATES FROM PAYLOAD AND PERFORMS TRANSFER BURN, PHASING BURN, AND INSERTION BURN TO ORBITER ORBIT.
$133\frac{1}{4}$	8. ORBITER RETRIEVES TUG.
	9. PAYLOAD WITH RETRIEVAL MODULE WILL BE RECOVERED ON LATER ORBITER FLIGHT. (SEE RETRIEVAL MISSIONS)

FIGURE 6.1.3-7

6.1.3.8 TWO STAGE SLING SHOT DEPLOY

CONFIGURATION: 320A-3A

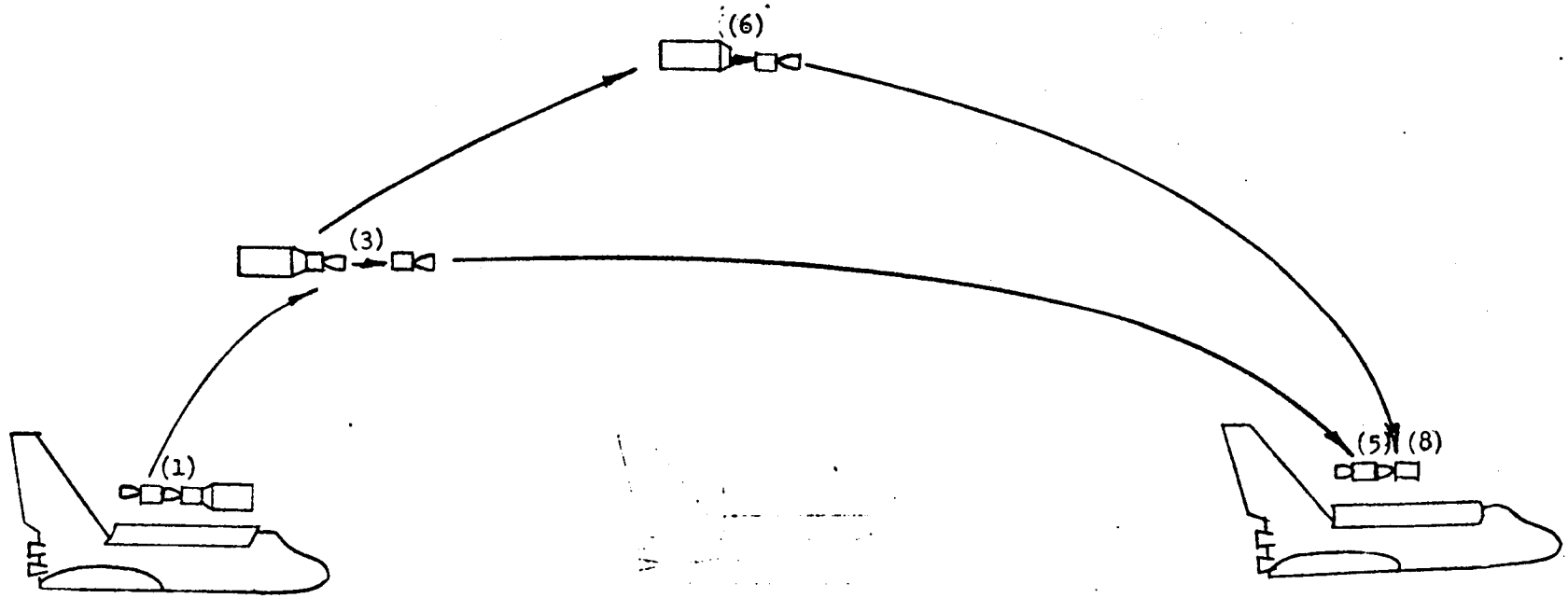

GET(HOURS)	STEP
$5\frac{1}{4}$	1. ORBITER DEPLOYS TUG AND PAYLOAD.
$7\frac{1}{4}$	2. LOWER STAGE TUG PERFORMS PHASING BURN.
$7\frac{1}{2}$	3. LOWER STAGE TUG DEPLOYS PAYLOAD AND UPPER STAGE TUG.
7-3/4	4. LOWER STAGE TUG PERFORMS ORBIT ADJUST BURN, TRANSFER TURN, AND ORBIT INSERTION BURN TO ORBITER ORBIT.
15-3/4	5. ORBITER RETRIEVES LOWER STAGE TUG.
$13\frac{1}{2}$	6. UPPER STAGE TUG PERFORMS TRANSFER BURN AND INSERTION BURN TO GEOSYNCHRONOUS ORBIT.
$42\frac{1}{4}$	7. UPPER STAGE TUG PERFORMS TRANSFER BURN, PHASING BURN, AND ORBIT INSERTION BURN TO ORBITER ORBIT.
53-3/4	8. ORBITER RETRIEVES TUG.

FIGURE 6.1.3-8

6.1.3-9 TWO STAGE REVERSE SLING SHOT DEPLOY, DELAYED RETRIEVAL, ROUND TRIP

CONFIGURATION: 320AE-3A

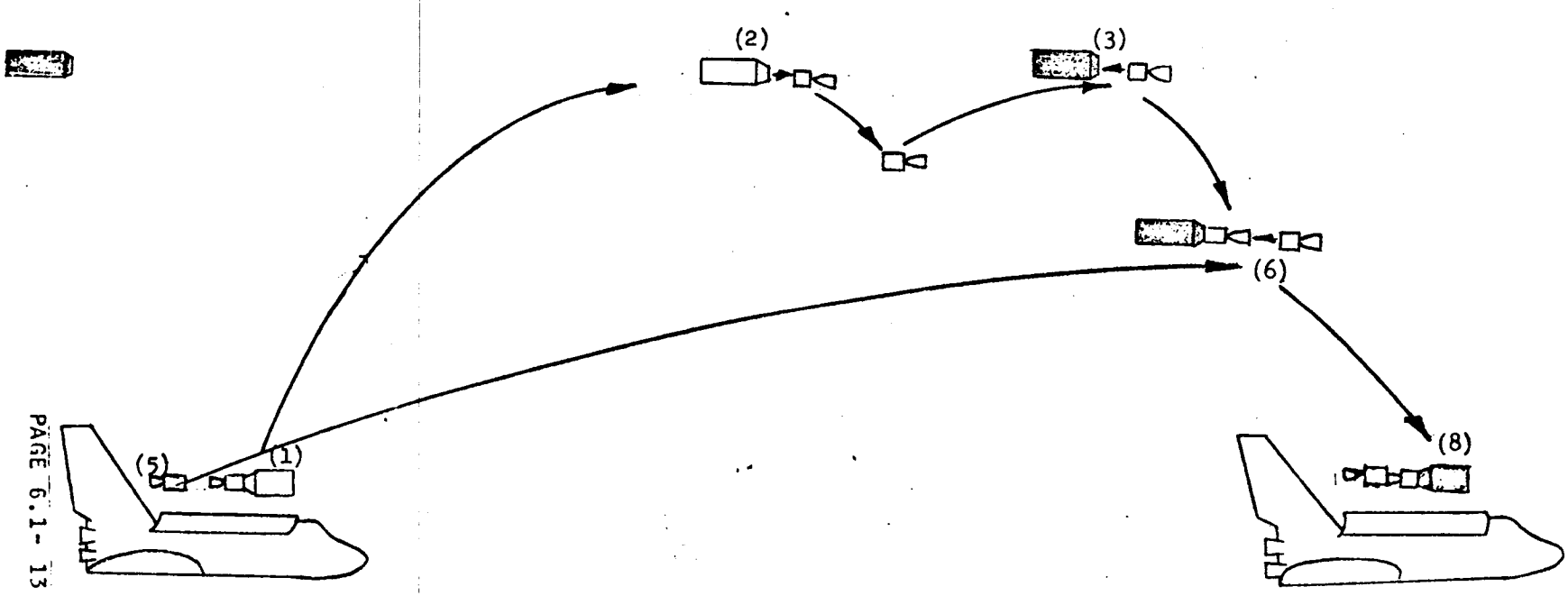

GET (HOURS	STEP
$8\frac{1}{2}$	1. ORBITER DEPLOYS TUG AND PAYLOAD
$10\frac{1}{2}$	2. TUG PERFORMS PHASING BURN, TRANSFER BURN, ORBIT INSERTION BURN, DEPLOYS PAYLOAD AND SEPARATES.
19	3. TUG PERFORMS PHASING BURN, INSERTION BURN INTO GEOSYNCHRONOUS ORBIT, TRANSFER BURN AND DOCKS TO OLD PAYLOAD
99-3/4	4. TUG PERFORMS TRANSFER BURN AND INSERTION BURN TO HOLDING ORBIT
$118\frac{1}{4}$	5. ORBITER DEPLOYS SECOND TUG
$120\frac{1}{4}$	6. SECOND TUG PERFORMS PHASING BURN, TRANSFER BURN AND RETRIEVES FIRST TUG AND PAYLOAD
$136\frac{1}{2}$	7. SECOND TUG PERFORMS TRANSFER BURN, PHASING BURN AND ORBIT INSERTION BURN TO ORBITER ORBIT
144-3/4	8. ORBITER RETRIEVES BOTH TUGS AND PAYLOAD

FIGURE 6.1.3-9

6.1.3-11a SINGLE STAGE WITH RETRIEVAL DELAYED SINGLE STAGE DEPLOYMENT WITH AKS AND DELAYED RETRIEVAL

CONFIGURATION: 310RE-3A (Deploy) 310ARE-3B (Retrieval)

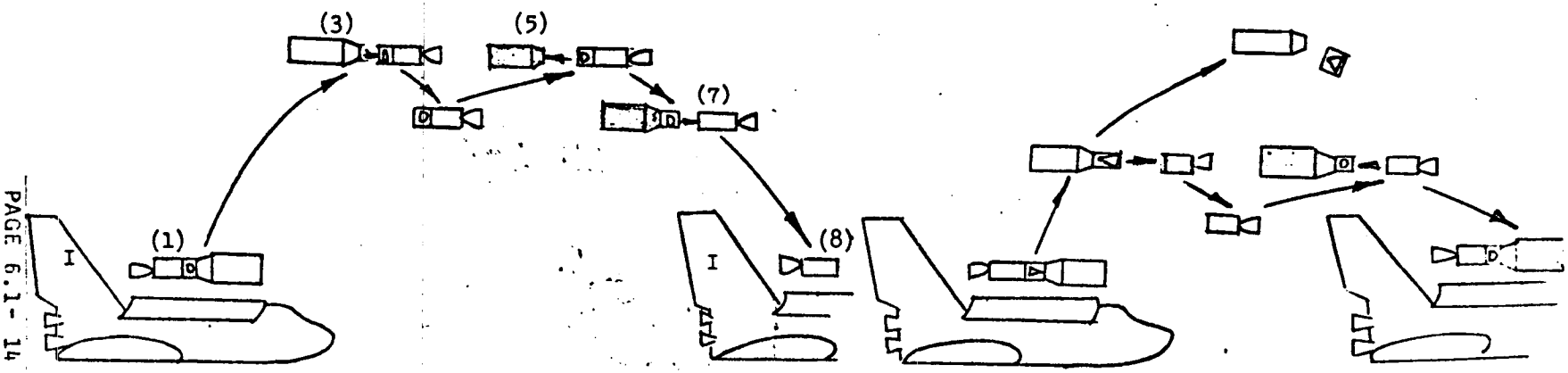

GET(HOURS)	STEP
$12\frac{1}{4}$	1. ORBITER DEPLOYS TUG, RETRIEVAL MODULE, AND PAYLOAD
13	2. TUG PERFORMS PHASING BURN, TRANSFER BURN, AND INSERTION BURN TO GEOSYNCHRONOUS ORBIT
21	3. TUG DEPLOYS PAYLOAD AND SEPARATES
22	4. TUG PERFORMS PHASING BURN, INSERTION BURN, AND TRANSFER BURN TO GEOSYNCHRONOUS ORBIT
$101\frac{1}{4}$	5. TUG DOCKS WITH OLD PAYLOAD, ATTACHES RETRIEVAL MODULE
$102\frac{1}{4}$	6. TUG PERFORMS INSERTION BURN TO HOLDING ORBIT
$111\frac{1}{4}$	7. TUG SEPARATES FROM PAYLOAD AND PERFORMS TRANSFER BURN, PHASING BURN, AND INSERTION BURN TO ORBITER ORBIT
$133\frac{1}{4}$	8. ORBITER RETRIEVES TUG
	9. PAYLOAD WITH RETRIEVAL MODULE WILL BE RECOVERED ON LATER ORBITER FLT(SEE RETV'L MISSION)

FIGURE 6.1.3-11a

6.1.3-11b SINGLE STAGE WITH RETRIEVAL DELAYED SINGLE STAGE DEPLOYMENT WITH AKS AND DELAYED RETRIEVAL

CONFIGURATION: 310RE-3A (Deploy), 310RE-3B (Retrieval)

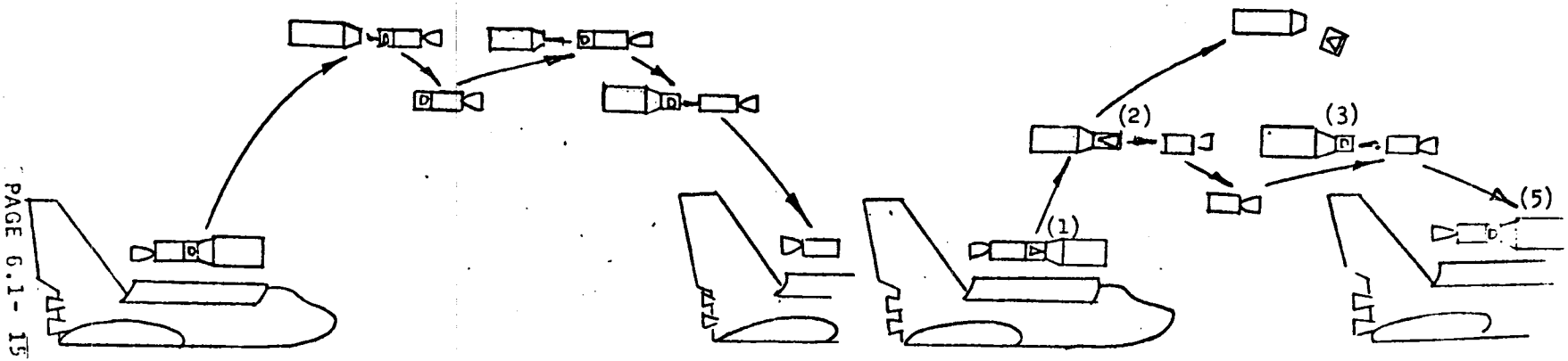

GET (HOURS)	STEP
9-3/4	1. ORBITER DEPLOYS TUG AND PAYLOAD
$10\frac{1}{2}$	2. TUG PERFORMS PHASING BURN, TRANSFER BURN, INSERTION BURN. DEPLOYS PAYLOAD AND AKS INSERTS PAYLOAD INTO GEOSYNCHRONOUS ORBIT.
$18\frac{1}{2}$	3. TUG PERFORMS TRANSFER BURN, PHASING BURN TO HOLDING ORBIT AND DOCKS WITH OLD TUG AND PAYLOAD.
$44\frac{1}{2}$	4. TUG PERFORMS TRANSFER, PHASING AND INSERTION BURN TO ORBITER ORBIT.
56-3/4	5. ORBITER RETRIVES TUG AND PAYLOAD.

FIGURE 6.1.3-11b

6.1.3-14 SINGLE STAGE SORTIE

CONFIGURATION: 110A-1, 410AD-2, 310RE-3A, 320A-3A, 320AE-3A, 310ARE-3B, 510ADE-3B

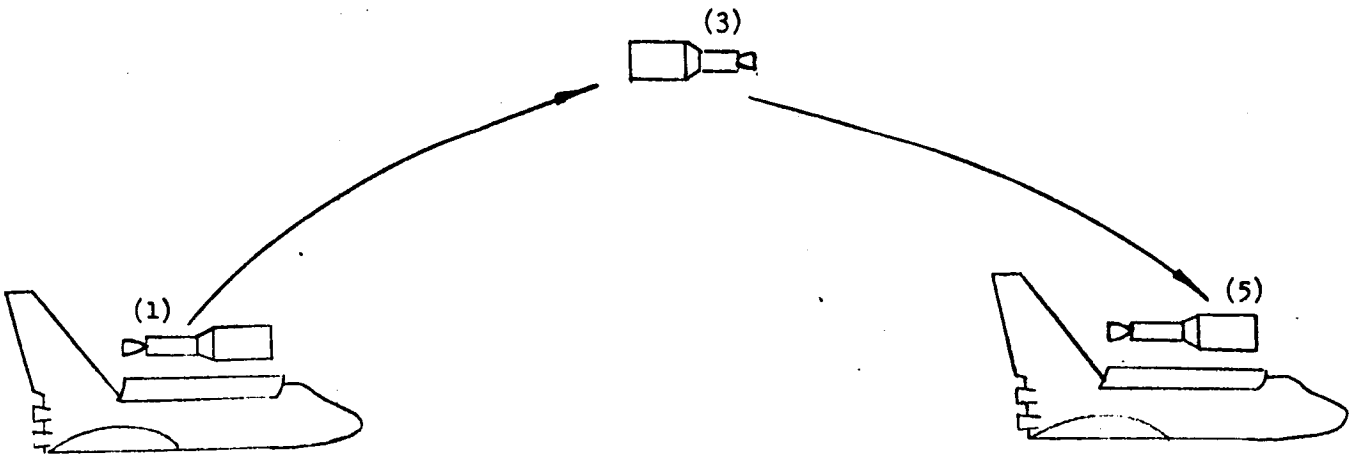

GET (HOURS)	STEP
$12\frac{1}{4}$	1. ORBITER DEPLOYS TUG AND PAYLOAD
13	2. TUG PERFORMS PHASING BURN, TRANSFER BURN, AND INSERTION BURN TO GEOSYNCHRONOUS ORBIT
21	3. TUG PERFORMS SORTIE MISSION
20 DAYS	4. TUG PERFORMS TRANSFER BURN, PHASING BURN AND INSERTION BURN TO ORBITER ORBIT
	5. ORBITER RETRIEVES TUG AND PAYLOAD

FIGURE 6.1.3-14

6.1.3-15 SINGLE STAGE DEPLOYMENT AND RETRIEVAL

CONFIGURATION: 410AD-2, 310RE-3A, 310ARE-3B, 510ADE-3B

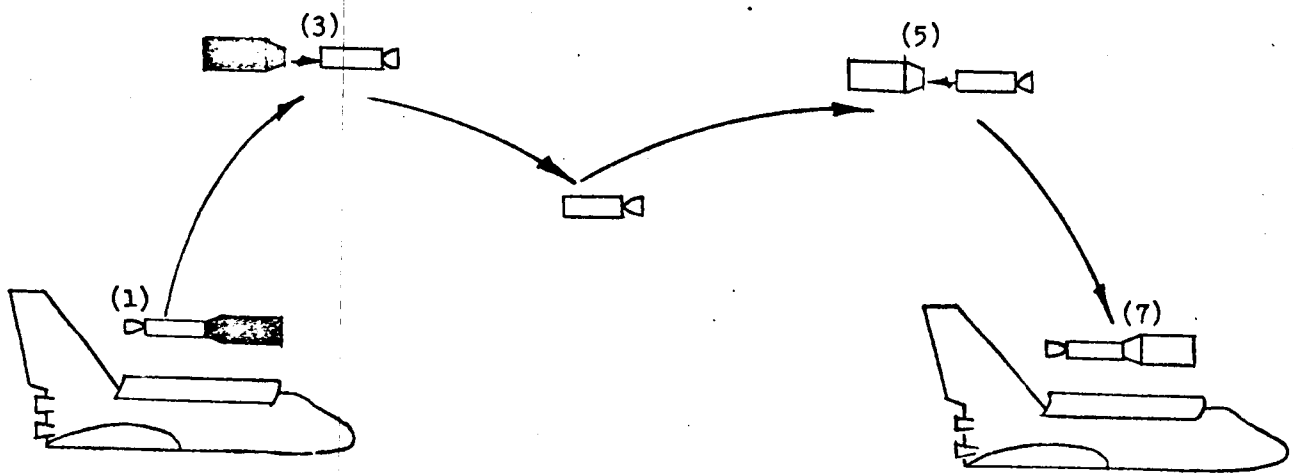

GET (HOURS)	STEP
12 1/4	1. ORBITER DEPLOYS TUG AND PAYLOAD.
13	2. TUG PERFORMS PHASING BURN, TRANSFER BURN AND ORBIT INSERTION BURN TO GEOSYNCHRONOUS ORBIT.
45	3. TUG DEPLOYS PAYLAOD AND SEPARATES.
45 3/4	4. TUG PERFORMS PHASING BURN, CIRCULARIZATION BURN AND TRANSFER BURN TO GEOSYNCHRONOUS ORBIT
97	5. TUG DOCK TO OLD PAYLOAD.
109 3/4	6. TUG PERFORMS TRANSFER BURN, PHASING BURN AND CIRCULARIZATION BURN TO ORBITER ORBIT.
119 1/2	7. ORBITER RETRIEVES TUG AND PAYLOAD.

FIGURE 6.1.3-15

WEIGHT SUMMARY - OPTIONS 1, 2 AND 3

OPTION	1	2	3A		3A				3B		3B	
	SINGLE STAGE				TWO STAGE				SINGLE STAGE			
CONCEPT / ITEM	110A	410-AD-2	310-3A	310 RE-3A	320 A-3A LOWER	UPPER	320 AE - 3A LOWER	UPPER	310 A-3B	310 ARE-3B	510 A-3B	510 ADE-3B
WEIGHT DATA												
Structure	1326	1288	1226	1279	946	946	988	988	1233	1286	1285	1338
Propulsion	734	737	697	735	698	698	718	718	700	738	755	793
Thermal Control	45	89	89	89	61	61	62	62	89	89	89	89
Avionics	596	762	663	758	612	612	616	616	673	768	673	768
Dry Weight	2701	2876	2675	2861	2317	2317	2384	2384	2695	2881	2802	2988
Contingency	270	288	268	286	232	232	238	238	270	288	280	299
DRY WEIGHT + CON'T	2971	3164	2943	3147	2549	2549	2662	2662	2965	3169	3082	3287
NON USABLE PROPELLANT	234	247	247	247	146	146	146	146	247	247	247	247
BURNOUT WEIGHT	3205	3411	3190	3394	2695	2695	2768	2768	3212	3416	3329	3534
Non Impulse Expendables	48	48	73	73	48	73	48	73	73	73	73	73
Attitude Control Prop.	281	217	281	281	54	208	54	208	281	281	281	281
Main Propellant	55942	54900	54528	54716	20209	32000	20063	32000	54712	54879	56397	56567
Payload-Deployed	4014	4914	5418	5026	5094		5094		5212	4841	3410	3035
TOG @ 1ST IGNITION	63490	63490	63490	63490	63076		63076		63490	63490	63490	63490
SHUTTLE INTERFACE	1510	1510	1510	1510	1924		1924		1510	1510	1510	1510
TOTAL SHUTTLE INSTALLED	65000	65000	65000	65000	65000		65000		65000	65000	65000	65000
CAPACITIES AND PERFORMANCE												
Main Propellant - LB	56900	59500	59500	59500	32000		32000		59500	59500	59500	59500
APS Propellant - LB	281	450	317	450	297		297		317	450	317	450
Main :Helium - LB	13.7	14.2	14.2	14.2	8.0		8.0		14.2	14.2	14.2	14.2
Fuel Cell Reactants - LB	-	90	104	104	72.0		72.0		104	104	104	104
Main Engine ISP-SECS	327.2	338	338	388	338		338		338	338	327.2	327.2
APS Engine ISP. - SECS	230	230	230	230	230		230		230	230	230	230

(1) Excluding reserves. Reserves are included in main propellant.

WEIGHT SUMMARY - AUXILIARY STAGES - LB

OPTION	1		2					3A		3B										
CONCEPT	110A-1		410AD-2					310RE -3A	320A -3A	310ARE-3B				510A-3B		510A-3B		510ADE-3B		
MISSION	P/L #23	SINGLE DEPLOY	P/L #23	ROUND TRIP	DEPLOY/ RETRV.	DOUB DEPLOY/ RETRV.	DOUB DEPLOY	RETRIEVE	P/L #23	P/L #23	SINGLE DEPLOY	DOUB DEPLOY	RETR.	P/L #23	SINGLE DEPLOY	P/L #23	ROUND TRIP	DEPLOY RETRV.	DOUB DEPLOY RETRV.	DOUB DEPLOY
STAGE	AKS	AKS	AKS	AKS	AKS	AKS	AKS	RDM	AKS	AKS	AKS	AKS	RDM	AKS	AKS	AKS	AKS	AKS	AKS	AKS
STRUCTURE	403	388	403	448	393	406	376	245	403	403	383	376	245	403	376	403	448	393	406	376
PROPULSION	25	25	25	43	43	43	25	36	25	25	25	25	36	25	25	25	43	43	43	25
THERMAL CONTROL	5	5	5	7	7	7	5	5	5	5	5	5	5	5	5	5	7	7	7	5
ASTRIONICS	61	61	61	282	282	282	61	207	61	61	61	61	207	61	61	61	282	282	282	61
DRY WEIGHT	494	479	494	780	725	738	467	493	494	494	474	467	493	494	467	494	780	725	738	467
CONTINGENCY	49	48	49	78	73	74	47	49	49	49	47	47	49	49	47	49	78	73	74	47
DRY WEIGHT + CON'T	543	527	543	858	798	812	514	542	543	543	521	514	542	543	514	543	858	798	812	514
GASES	2	2	2	6	6	6	2	2	2	2	2	2	2	2	2	2	6	6	6	2
INERT WEIGHT	545	529	545	864	804	818	516	544	545	545	523	516	544	545	516	545	864	804	818	516
SRMS																				
1ST BURN	10000	3334	11280	7520	1880	5640	1880	-	11400	7520	4450	1880		10452	3484	10452	6968	2500	5000	3484
2ND BURN	5000	-	5640	3760	1880	1300	-	-	5700	3760	-	-		5226	-	5256	3484	2500	1400	-
TOTAL STAGE	15545	3863	17465	12144	4564	7758	2396	544	17645	11825	4973	2396	544	16223	4000	16223	11316	5804	7218	4000
SRM λ'	.92	.909	.92	.909	.909	.909	.909	-	.92	.92	.909	.909	-	.92	.92	.92	.909	.909	.909	.92
SRM I_{sp}	295	287	295	287	287	287	287		295	295	287	287		295	295	295	287	287	287	295

TABLE 6.1.4-2

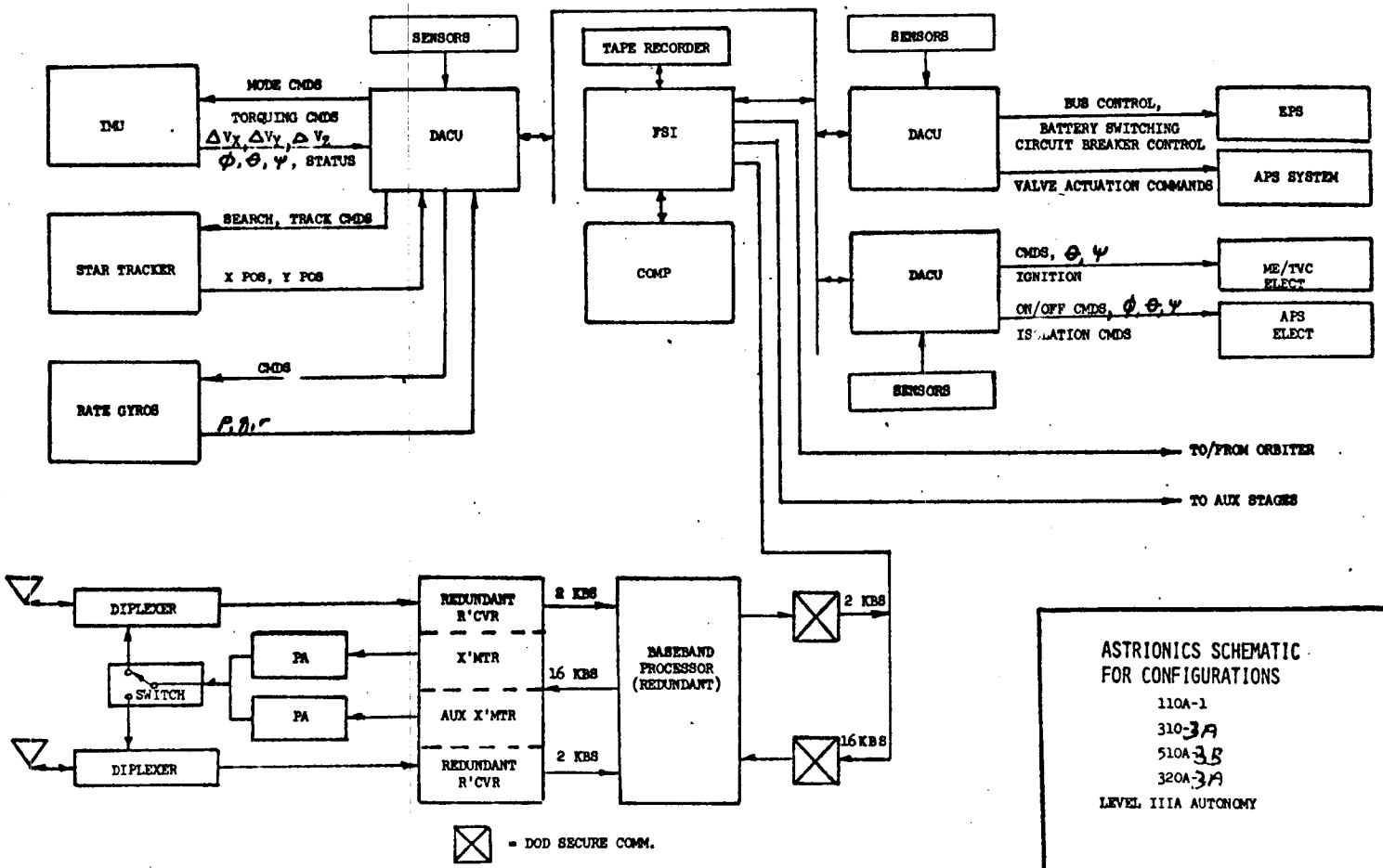

ASTRIONICS SCHEMATIC
FOR CONFIGURATIONS

110A-1
310-3A
510A-3B
320A-3A

LEVEL IIIA AUTONOMY

8-27-73

GRUMMAN

FIGURE 6.1.5-1

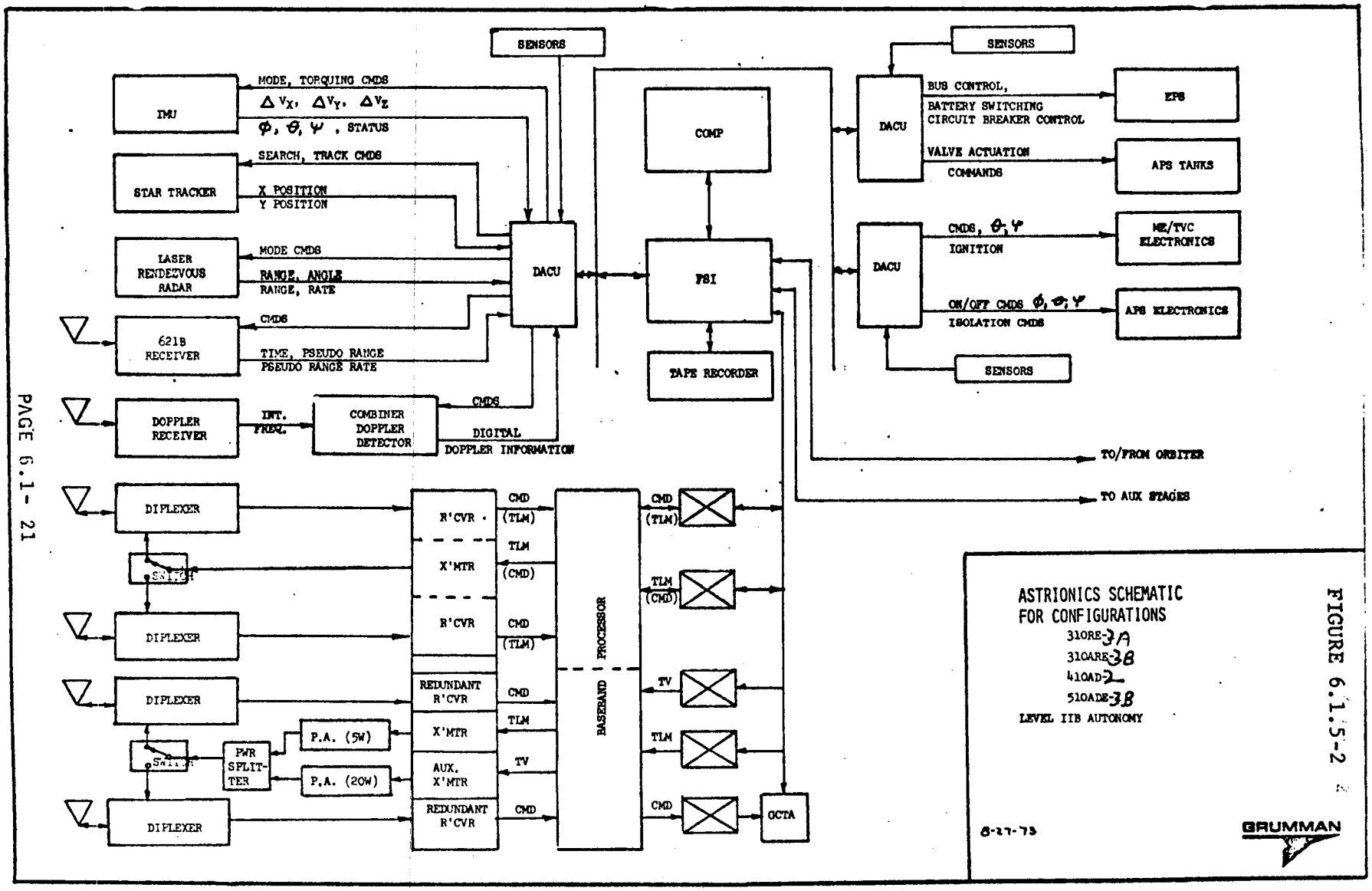

ASTRIONICS SCHEMATIC
FOR CONFIGURATIONS
310RE-3A
310ARE-3B
410AD-2
510ADE-3B
LEVEL IIB AUTONOMY

8-27-73

GRUMMAN

FIGURE 6.1.5-2

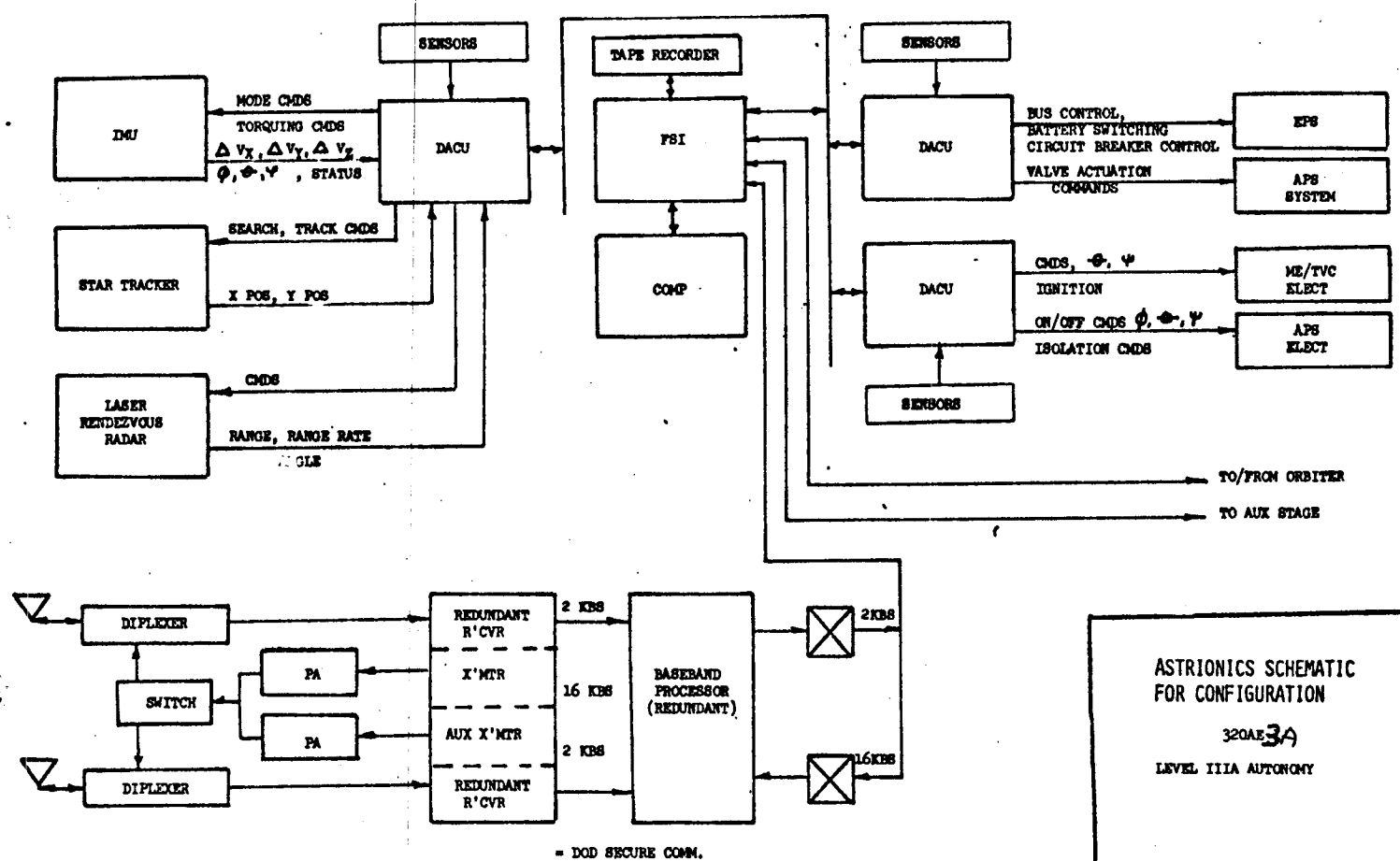

ASTRIONICS SCHEMATIC
FOR CONFIGURATION

320AE3A

LEVEL IIIA AUTONOMY

8-27-73

GRUMMAN

FIGURE 6.1.5-3

FIGURE 6.1.5-4

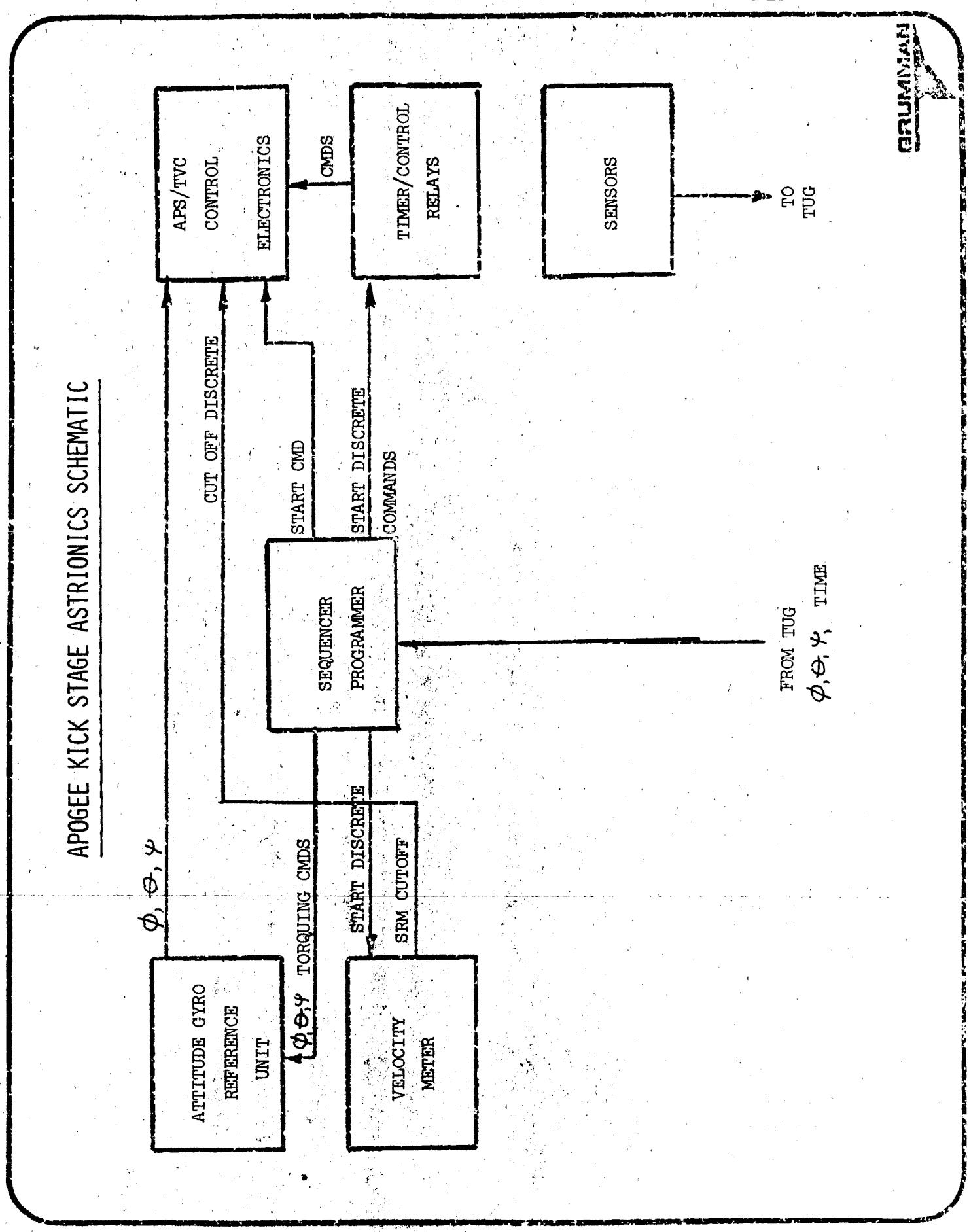
APOGEE KICK STAGE ASTRIONICS SCHEMATIC
APS/TVC CONTROL ELECTRONICS
CMDS
TIMER/CONTROL RELAYS
SENSORS
TO TUG
CUT OFF DISCRETE
START CMD
START DISCRETE
COMMANDS
SEQUENCER PROGRAMMER
FROM TUG
ϕ, θ, ψ, TIME
ϕ, θ, ψ
TORQUING CMDS
START DISCRETE
SRM CUTOFF
ϕ, θ, ψ
ATTITUDE GYRO REFERENCE UNIT
VELOCITY METER

FIGURE 6.1.5-5

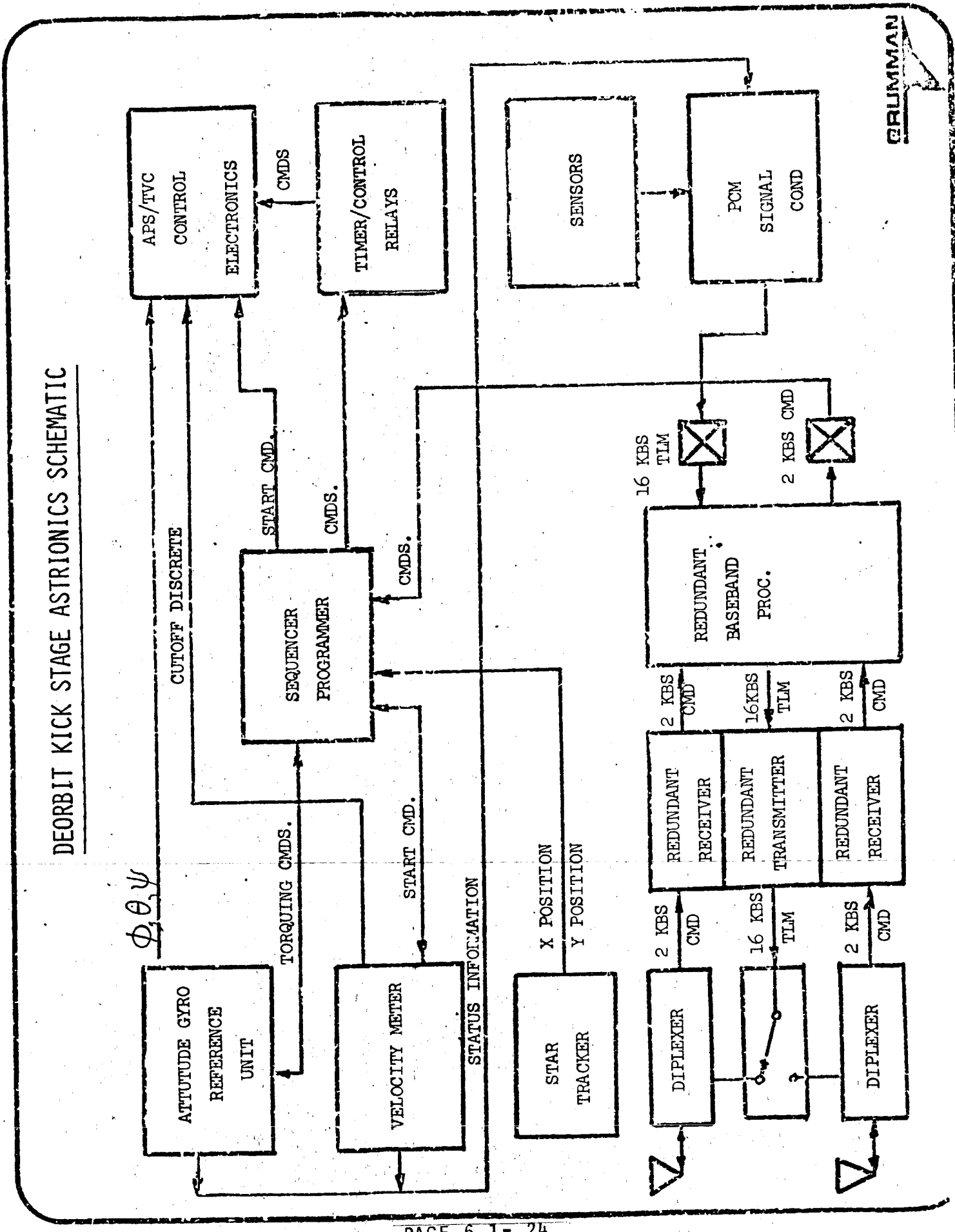
DEORBIT KICK STAGE ASTRIONICS SCHEMATIC
GRUMMAN
APS/TVC CONTROL ELECTRONICS
CMDS
TIMER/CONTROL RELAYS
SENSORS
PCM SIGNAL COND
START CMD.
CMDS.
CMDS.
CUTOFF DISCRETE
SEQUENCER PROGRAMMER
16 KBS TLM
2 KBS CMD
REDUNDANT BASEBAND PROC.
2 KBS CMD
16KBS TLM
2 KBS CMD
REDUNDANT RECEIVER
REDUNDANT TRANSMITTER
REDUNDANT RECEIVER
TORQUING CMDS.
START CMD.
X POSITION
Y POSITION
STATUS INFORMATION
2 KBS CMD
16 KBS TLM
2 KBS CMD
ATTUTUDE GYRO REFERENCE UNIT
VELOCITY METER
STAR TRACKER
DIPLEXER
DIPLEXER

FIGURE 6.1.5-6

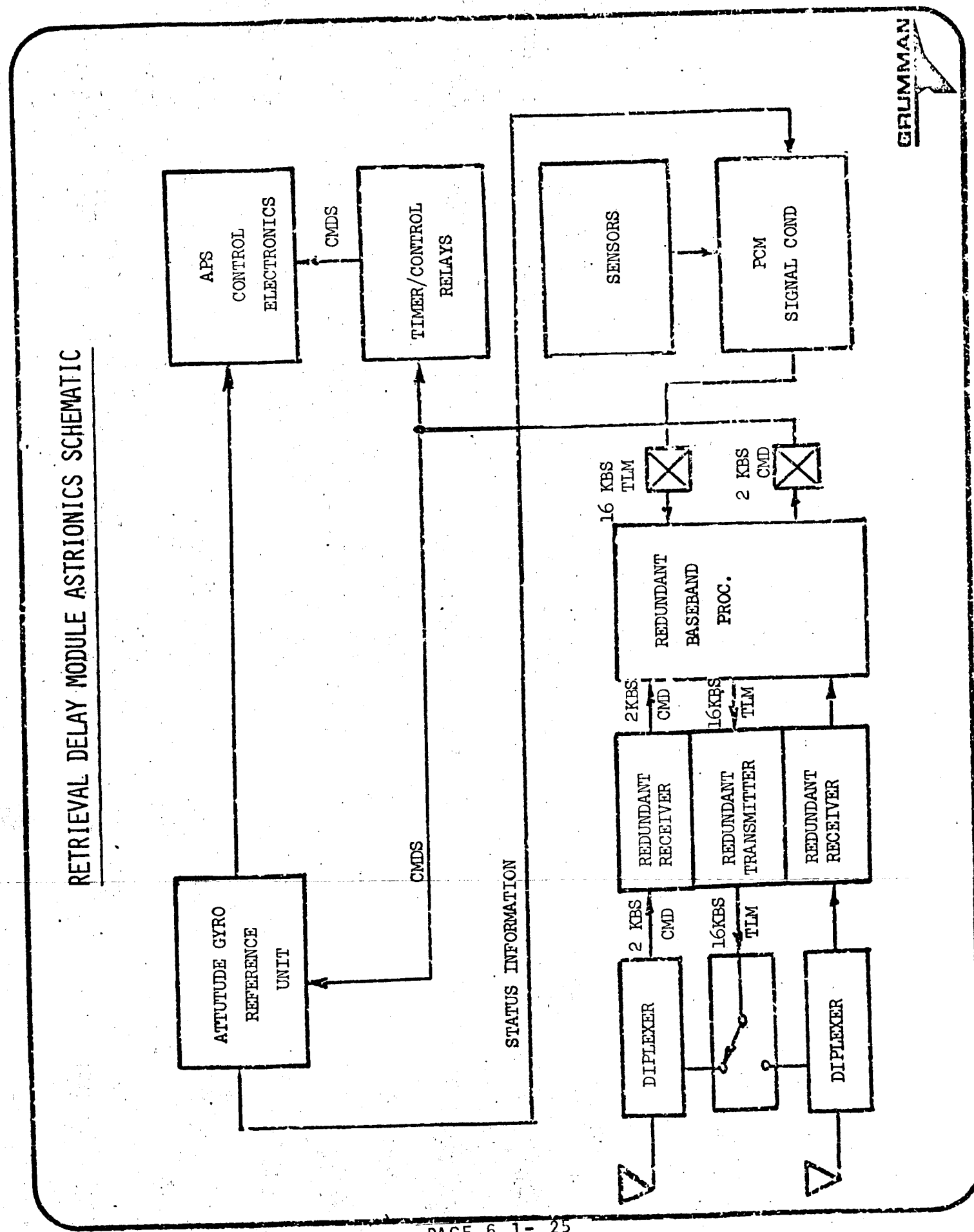
RETRIEVAL DELAY MODULE ASTRIONICS SCHEMATIC
GRUMMAN
APS CONTROL ELECTRONICS
CMDS
TIMER/CONTROL RELAYS
SENSORS
PCM SIGNAL COND
16 KBS TLM
2 KBS CMD
REDUNDANT BASEBAND PROC.
2KBS CMD
16KBS TLM
REDUNDANT RECEIVER
REDUNDANT TRANSMITTER
REDUNDANT RECEIVER
2 KBS CMD
16KBS TLM
DIPLEXER
DIPLEXER
ATTUTUDE GYRO REFERENCE UNIT
CMDS
STATUS INFORMATION

6.2 ORBITAL OPERATIONS SUMMARY

6.2.1 Performance Summary

6.2.1.1 Consumable/Delta-V Matrix

Table 6.2.1.1-1 contains, in summary form, the delta-V and non-propulsive consumables data used to establish the APS usage for a mission and in addition lists the resulting APS propellant quantity required for the mission/concept. The weight statements which show detailed time histories of MPS propellant usage, APS propellant usage, consumables (from Table 6.2.1.1-1) and payload are contained in section 6.3.

TABLE 6.2.1.1-1

CONSUMABLES/DELTA-V MATRIX

OPTION NO	PERFORMANCE REQUIREMENT DEPLOY	PERFORMANCE REQUIREMENT RETRIEVE	CONCEPT	DEPLOY PLAIN SINGLE P/L	DEPLOY PLAIN MULTI P/L	DEPLOY WITH AKS SINGLE P/L	DEPLOY WITH AKS MULTI P/L	RETRIEVE PLAIN	RETRIEVE WITH DKS	RETRIEVE	ROUND TRIP PLAIN	ROUND TRIP WITH A/DKS	ROUND TRIP	RETRIEVAL DELAY MISSION 1	RETRIEVAL DELAY MISSION 2
1	3500	N/A	110A-1	34 27984 281 1.7 0 6 48 (329)	(A)	25 16278 217 1.7 0 4 32 (249)	(A)								
2	3500	3500	410AD-2	34 27984 281 1.7 21 6 48 (350)	117 28342 366 1.7 89 8 64 (519)	25 16278 217 1.7 16 4 32 (265)	41 18478 247 1.7 32 7 56 (335)	37 27716 409 1.7 26 7 56 (491)	36 16852 588 1.7 24 6 48 (660)		110 28064 454 1.7 76 9 72 (602)	45 17461 426 1.7 32 8 64 (522)			
3A	3500	N/A ↓ 2200	310-3A ↓ 310RE-3A	34 27984 281 1.7 25 6 48 (354)	117 28342 366 1.7 104 8 64 (534)			37 27716 409 1.7 31 7 56 (496)			110 28064 454 1.7 90 9 72 (616)			121 28115 453 1.7 86 10 80 (619)	36 16852 398 1.7 24 6 48 (470)
	3500	N/A ↓ 3500	320A-3A ↓ 320AE-3A	LOWER STG. 36 5204 54 1.7 16 4 32 (102)	UPPER STG. 48 23439 208 1.7 25 5 48 (281)	25 16278 217 1.7 16 4 32 (265)	41 18478 257 1.7 32 7 56 (335)	UPPER STG. TBD		LOWER STG. TBD	UPPER STG. TBD		LOWER STG. TBD		
3B	3500	N/A ↓ 3500	310-3B ↓ 310ARE-3B	34 27984 281 1.7 25 6 48 (354)	117 28342 366 1.7 104 8 64 (534)	25 16278 217 1.7 20 4 32 (269)	41 18478 247 1.7 39 7 56 (342)	37 27716 409 1.7 31 7 56 (496)			110 28064 454 1.7 90 9 72 (616)			121 28115 453 1.7 86 10 80 (619)	45 17461 438 1.7 32 8 64 (534)
	3500	N/A ↓ 3500	510A-3B ↓ 510ADE-3B	34 27984 281 1.7 25 6 48 (354)	117 28342 366 1.7 104 8 64 (534)	25 16278 217 1.7 20 4 32 (269)	41 18478 247 1.7 39 7 56 (342)	37 27716 409 1.7 31 7 56 (496)	36 16852 588 1.7 24 6 48 (660)		110 28064 454 1.7 90 9 72 (616)	45 17461 426 1.7 39 8 64 (529)			

NOTE (A) In Option 1, multi-deploy requires no phasing. Use single deploy data.

MISSION TIME (HOURS)

Total ΔV (fps) APS Prop (Lbs)
FPR (% ΔV) F/C React (Lbs)
No. of Burns S/S Losses (Lbs)
(TOTAL CONSUMABLES)

DATA KEY

6.2.1.2 Performance Comparison for the NASA Geosynchronous Equatorial Mission.

The payload capability for each concept within the four basic options has been summarized in Table 6.2.1.2-1. The payload data presented for deployments using an apogee kick stage (AKS) represent the total capability of the concept; if a deorbit kick stage (DKS) is required to eventually deorbit the payload its weight must be subtracted from the payload capability number presented in Table 6.2.1.2-1.

The payloads quoted in the table for the Retrieval Delay Mode represent deployments and retrievals of equal weight. In fact, the Tug can deploy a payload in the first of the two missions which constitute this mode, which is heavier or lighter than the payload which is eventually returned on the second mission. The curve which establishes the relationship of first mission deployment capability to second mission retrieval capability is contained in section 6.3 under the applicable concept heading.

The payloads quantities listed under the heading "DOUBLE P/L" represent the weight of <u>each</u> of the two payloads that can be deployed.

[illegible] PERFORMANCE

PAYLOAD LBS.

OPTION #	PERFORMANCE REQUIREMENT DEPLOY	PERFORMANCE REQUIREMENT RETRIEVE	CONCEPT	DEPLOY PLAIN SINGLE P/L	DEPLOY PLAIN DOUBLE P/L	DEPLOY WITH AKS SINGLE P/L	DEPLOY WITH AKS DOUBLE P/L	RETRIEVE PLAIN	RETRIEVE WITH DKS	ROUND TRIP PLAIN	ROUND TRIP WITH A/DKS	RETRIEVAL DELAY MISSION 1 DEPLOY	RETRIEVAL DELAY MISSION 2 DEPLOY W/AKS	RETRIEVAL DELAY MISSION 2 RETRIEVE
1	3500	N/A	110A-1	4014	2007	8207	4103	N/A	N/A	N/A	N/A	N/A	N/A	N/A
2	3500	3500	410AD-2	4914	2170	6021	3500	1574	3920	1080	2640	N/A	N/A	N/A
3A	3500	N/A	310-3A	5418	2530	N/A	N/A	N/A	N/A	N/A	N/A	N/A	N/A	N/A
		2200	310RE-3A	5026	2250	N/A	N/A	1618	N/A	1096	N/A	3021	N/A	3021
	3500	N/A	320A-3A	5094 *	2375 *	N/A	4708 **	N/A	N/A	N/A	N/A	N/A	N/A	N/A
		3500	320AE-3A	5920 $	2770 $	N/A	4728 **	3800 $	N/A	2340 $	N/A	N/A	N/A	N/A
3B	3500	N/A	310-3B	5212	2350	N/A	N/A	N/A	N/A	N/A	N/A	N/A	N/A	N/A
		3500	310ARE-3B	4841	2160	3500	3515	1543	N/A	1054	N/A	2400	3500	2400
												2760	N/A	2760
	3500	N/A	510A-3B	3410	1440	6090	3815	N/A	N/A	N/A	N/A	N/A	N/A	N/A
		3500	510ADE-3B	3035	1250	6546	3815	805	3825	528	2385	N/A	N/A	N/A

* 2 STAGES OPERATING IN SLINGSHOT MODE
** LOWER STAGE
$ 2 STAGES OPERATING IN REVERSE SLINGSHOT MODE

6.2.1.3 Performance Sensitivity Factors

Table 6.2.1.3-1 contains a series of sensitivity coefficients that enable the effect on payload capability of various weight and performance factors to be evaluated. The sensitivity of payload to TUG fixed (burnout) weight, initial weight, MPS specific impulse, outbound delta-V, is presented for all options in Table 6.2.1.3-1. For example, a one second increase in the 110A-1 vehicle specific impulse would increase the payload capability of the vehicle by 117 lbs. Similarly, the effect of the other factors on payload can be evaluated.

TABLE 6.2.1.3-1

PERFORMANCE SENSITIVITY FACTORS

OPTION	1		2				3A						4A						
GEOSYNCH RETRIEVE C-P(lb)	—		3500				—		2200	—		2200	—		3500	—		3500	
TUG DESIGNATION	110A-1		410AD-2				310-3A		310RE-3A	320A-3A		320AE3A	310A-3E		310RE-3B	310A-3E		310ADE3B	
SENSITIVITY	DEPLOY	DEPLOY WITH AKS	DEPLOY	RETRIEVE	ROUND TRIP	DEPLOY WITH AKS	DEPLOY	RETRIEVE	ROUND TRIP		DEPLOY	RETRIEVE	ROUND TRIP	DEPLOY	RETRIEVE	ROUND TRIP	DEPLOY WITH AKS
$\frac{\partial P/L}{\partial W_{FIXED}}$ - P/L TO FIXED WT. (lb/lb)	-3.83	-2.32	-3.66	-1.37	-1.0	-2.44	-3.66	-1.37	-1.0	TBD	-3.66	-1.37	-1.0	-3.82	-1.35	-1.0	-2.44
$\frac{\partial P/L}{\partial W_o}$ - P/L TO INITIAL WT. (lb/lb)	.258	.248	.27	.10	.07	.26	.27	.10	.07	TBD	.27	.10	.07	.26	.09	.067	.25
$\frac{\partial P/L}{\partial I_{SP}}$ - P/L TO I_{SP} (lb/SEC)	117	90.2	97	55	37	93	96	56	37	TBD	97	55	37	112	51	36	92
$\frac{\partial P/L}{\partial \Delta V_{OUT}}$ - P/L TO OUTBOUND ΔV (lb/fps)	-1.59	-1.59	-1.6	-.6	-.4	-1.6	-1.6	-.61	-.44	TBD	-1.6	-.6	-.44	-1.6	-.6	-.3	-1.5
$\frac{\partial P/L}{\partial \Delta V_{IN}}$ - P/L TO INBOUND ΔV (lb/fps)	-1.21	-.7	-1.2	-.7	-.4	-.8	-1.2	-.7	-.44	TBD	-1.2	-.7	-.44	-1.3	-.6	-.4	-.8
$\frac{\partial P/L}{\partial AKS\ \Delta V}$ - P/L TO AKS ΔV (lb/fps)		-.9			-.4	-.7				TBD						-.4	-.7

6.2.1.4 Payload Capture Comparison

6.2.1.4.1 Flight Summary

This represents the first of the three successive subsections of the capture analysis which constitute the Mission Accomplishment input to the Programmetics/Costing effort reported on in Volume 8. The Flight Summaries are presented, in order, for NASA, DOD, and combined NASA/DOD traffic. The entries for each concept are intended to emphasize the principle characteristics of the subject concept. These summaries are contained in tables 6.2.1.4.1-1 through 6.2.1.4.1-18 which follow.

Information relative to expendable mode and WTR operations may be obtained from the Flight Element Requirements and/or the Detailed Traffic Assessment Data contained in Volume 4.

FLIGHT SUMMARY

OPTION: 1 110A-1

FLIGHT MODE		CALENDAR YEAR 80	81	82	83	84	85	86	87	88	89	90	TOTAL
TOTAL FLIGHTS	SHUTTLE	8	7	8	13	13	11	11	14	8	16	9	118
	TUG												SAME
TUG FLIGHT DISTRIBUTION	DEPLOY	(8)	(7)	(8)	(13)	(13)	(11)	(11)	(14)	(8)	(16)	(9)	(118)
	SINGLE - CORE ALONE	3	2	3	5	7	3	4	6	2	9	4	48
	- CORE +AKS			2		2		3	2				9
	DOUBLE - CORE ALONE	4	1	2	6	4	5	3	2	4	4	3	38
	- CORE + AKS											1	1
	TRIPLE - CORE ALONE	1	3	1	2		3	1	3	2	3	1	20
	- CORE + AKS		1						1				2
MISSION MODEL	(TOTAL)	(14)	(16)	(12)	(23)	(17)	(22)	(16)	(24)	(16)	(26)	(15)	(201)
	DEPLOY	14	16	12	23	17	22	16	24	16	26	15	201
	RETRIEVE												0
	SORTIE												0

TABLE
NASA TRAFFIC

TABLE 6.2.1.4.1-1

FLIGHT SUMMARY

OPTION: 1 110A-1

FLIGHT MODE		CALENDAR YEAR 80	81	82	83	84	85	86	87	88	89	90	TOTAL
TOTAL FLIGHTS	SHUTTLE	8	6	9	14	11	10	10	12	11	10	11	112
	TUG												SAME
TUG FLIGHT DISTRIBUTION	DEPLOY	(8)	(6)	(9)	(13)	(11)	(9)	(10)	(11)	(11)	(9)	(11)	(108)
	SINGLE - CORE ALONE	5	5	6	6	6	7	5	7	7	6	7	67
	DOUBLE - CORE ALONE	3	1	3	5	3	2	4	3	4	2	3	33
	- CORE + AKS				1	1							2
	TRIPLE - CORE ALONE				1	1		1	1		1	1	6
	SORTIE				(1)		(1)		(1)		(1)		(4)
MISSION MODEL	(TOTAL)	(11)	(7)	(12)	(22)	(17)	(12)	(16)	(17)	(15)	(14)	(16)	(159)
	DEPLOY	11	7	12	21	17	11	16	16	15	13	16	155
	RETRIEVE												0
	SORTIE				1		1		1		1		4

TABLE

DOD TRAFFIC

TABLE 6.2.1.4.1-2

FLIGHT SUMMARY

OPTION: 1 110A-1

FLIGHT MODE		CALENDAR YEAR 80	81	82	83	84	85	86	87	88	89	90	TOTAL
TOTAL FLIGHTS	SHUTTLE	16	13	17	27	24	21	21	26	19	26	20	230
	TUG												SAME
TUG FLIGHT DISTRIBUTION	DEPLOY	(16)	(13)	(17)	(26)	(24)	(20)	(21)	(25)	(19)	(25)	(20)	(226)
	SINGLE P/L - CORE ALONE	8	7	9	11	13	10	9	13	9	15	11	115
	- CORE + AKS			2		2		3	2				9
	DOUBLE P/L - CORE ALONE	7	2	5	11	7	7	7	5	8	6	6	71
	- CORE + AKS				1	1						1	3
	TRIPLE P/L - CORE ALONE	1	3	1	3	1	3	2	4	2	4	2	26
	- CORE + AKS		1						1				2
	SORTIE				(1)		(1)		(1)		(1)		(4)
MISSION MODEL	(TOTAL)	(25)	(23)	(24)	(45)	(34)	(34)	(32)	(41)	(31)	(40)	(31)	(360)
	DEPLOY	25	23	24	44	34	33	32	40	31	39	31	356
	RETRIEVE												0
	SORTIE				1		1		1		1		4

TABLE

COMBINED NASA/DOD TRAFFIC

TABLE 6.2.1.4.1-3

FLIGHT SUMMARY

OPTION: 2 (410 AD-2)

FLIGHT MODE		CALENDAR YEAR 80	81	82	83	84	85	86	87	88	89	90	TOTAL
TOTAL FLIGHTS	SHUTTLE					43	35	38	38	33	37	38	262
	TUG												SAME
TUG FLIGHT DISTRIBUTION	DEPLOY					(16)	(7)	(10)	(15)	(8)	(17)	(10)	(83)
	SINGLE P/L - CORE					6	5	5	4	3	6	5	34
	- CORE + KS					6		3	4	1	3	2	19
	- EXPEND TUG					2		1	1		3	1	8
	MULTI-P/L - CORE					2	2	1	2	2	5	2	16
	CORE+KS								4	2			6
	RETRIEVE					(10)	(3)	(8)	(6)	(4)	(3)	(8)	(42)
	CORE ONLY					3		7	4	4		3	21
	CORE + KS					7	3	1	2		3	5	21
	ROUND TRIP					(17)	(24)	(20)	(16)	(21)	(16)	(20)	(134)
	CORE ONLY					8	13	10	6	11	10	8	66
	CORE+KS					9	11	10	10	10	6	12	68
	SORTIE						(1)		(1)		(1)		(3)
MISSION MODEL	(TOTAL)					(64)	(64)	(60)	(63)	(59)	(62)	(62)	(434)
	DEPLOY					37	36	32	40	34	42	34	255
	RETRIEVE					27	27	28	22	25	19	28	176
	SORTIE						1		1		1		3

COMBINED NASA/DOD TRAFFIC

TABLE 6.2.1.4.1-4

FLIGHT SUMMARY

OPTION: 2 (410AD-2)

FLIGHT MODE		CALENDAR YEAR 80	81	82	83	84	85	86	87	88	89	90	TOTAL
TOTAL FLIGHTS	SHUTTLE					19	12	17	17	17	14	18	114
	TUG												SAME
TUG FLIGHT DISTRIBUTION	DEPLOY					(6)	(4)	(2)	(4)	(2)	(3)	(4)	(25)
	SINGLE P/L - CORE						2		1		1		4
	- CORE + KS					4		1	2	1		2	10
	MULTI P/L - CORE					2	2	1	1	1	2	2	11
	- CORE + KS												0
	RETRIEVE					(3)		(3)	(2)	(1)	(1)	(3)	(13)
	CORE ONLY					1		3		1			5
	CORE (+ KS)					2			2		1	3	8
	ROUND TRIP					(10)	(7)	(12)	(10)	(14)	(9)	(11)	(73)
	CORE ONLY					4	6	7	4	8	7	4	40
	CORE + KS					6	1	5	6	6	2	7	33
	SORTIE						(1)		(1)		(1)		(3)
MISSION MODEL	(TOTAL)					(33)	(22)	(31)	(29)	(33)	(27)	(33)	(208)
	DEPLOY					20	14	16	16	18	16	19	119
	RETRIEVE					13	7	15	12	15	10	14	86
	SORTIE						1		1		1		3

BAS 8-30-73

DOD TRAFFIC

TABLE 6.2.1.4.1-6

FLIGHT SUMMARY

OPTION: 3A (~~3A10 1/3A10RE 1~~) 310 3A / 310RG-3A

FLIGHT MODE		CALENDAR YEAR 80	81	82	83	84	85	86	87	88	89	90	TOTAL
TOTAL FLIGHTS	SHUTTLE	20	15	17	27	51	42	46	43	40	42	47	390
	TUG												SAME
TUG FLIGHT DISTRIBUTION	DEPLOY	(20)	(15)	(17)	(26)	(16)	(7)	(10)	(17)	(9)	(13)	(10)	(160)
	1 P/L	9	7	8	9	8	4	3	6	2	5	5	66
	2 P/L	8	8	7	13	2	2	2	7	6	1	2	58
	3 P/L	3			4	2	1	1	1	1	4	2	19
	1 P/L EXPEND TUG			2		4		4	3		3	1	17
	RETRIEVAL DELAY MODE					(10)	(10)	(8)	(5)	(6)	(9)	(11)	(59)
	RETRIEVAL DELAY					3					1	1	5
	1 P/L DEPLOY + RETRV DELAY					7	10	8	5	6	8	8	52
	2 P/L DEPLOY + RETRV DELAY											2	2
	RETRIEVE					(17)	(11)	(18)	(11)	(14)	(9)	(20)	(100)
	ROUND TRIP				(1)	(8)	(14)	(10)	(10)	(11)	(11)	(6)	(71)
	1 P/L ROUND TRIP					8	11	10	9	11	8	6	63
	2 P/L DEPLOY ROUND TRIP						2				2		4
	SORTIE				1		1		1		1		4
MISSION MODEL	(TOTAL)	(34)	(23)	(24)	(48)	(62)	(61)	(60)	(61)	(59)	(62)	(60)	(554)
	DEPLOY	34	23	24	47	37	36	32	40	34	42	34	383
	RETRIEVE					25	24	28	20	25	19	26	167
	SORTIE				1		1		1		1		4

RELIABILITY = + 4 FLTS

COMBINED NASA/DOD TRAFFIC

TABLE 6.2.1.4.1-7

FLIGHT SUMMARY

OPTION: 3A (~~3A10-1/3A10RE-1~~) 3103A/310RE-3A

FLIGHT MODE		CALENDAR YEAR 80	81	82	83	84	85	86	87	88	89	90	TOTAL
TOTALS	SHUTTLE	9	9	8	12	30	29	26	24	19	25	25	(216)
	TUG												SAME
TUG FLIGHT DISTRIBUTION	DEPLOY	(9)	(9)	(8)	(12)	(8)	(3)	(6)	(11)	(5)	(10)	(4)	(85)
	SINGLE DEPLOY	4	2	2	3	4	2	2	3	1	4	3	30
	DOUBLE "	5	7	4	7		1		5	4	1		34
	TRIPLE "				2						2		4
	SINGLE " + EXPEND TUG			2		4		4	3		3	1	17
	RETRIEVAL DELAY MODE					(8)	(9)	(7)	(3)	(4)	(6)	(7)	(44)
	RETRIEVAL DELAY					3							3
	SINGLE DEPLOY + RETRIEVAL DELAY					5	9	7	3	4	6	5	39
	DOUBLE " + " "											2	2
	RETRIEVE					(10)	(10)	(10)	(5)	(7)	(6)	(12)	(60)
	ROUND TRIP					(4)	(7)	(3)	(5)	(3)	(3)	(2)	(27)
	ROUND TRIP					4	5	3	5	3	1	2	23
	DOUBLE DEPLOY ROUND TRIP						2				2		4
MISSION MODEL	TOTAL	(14)	(16)	(12)	(23)	(31)	(39)	(29)	(34)	(26)	(35)	(29)	(288)
	DEPLOY	14	16	12	23	17	22	16	24	16	26	15	201
	RETRIEVE					14	17	13	10	10	9	14	87

NASA TRAFFIC

TABLE 6.2.1.4.1-8

FLIGHT SUMMARY

OPTION: 3A (~~3A10 I/3A10RE I~~ 310-3A / 310RE-3A)

FLIGHT MODE		CALENDAR YEAR 80	81	82	83	84	85	86	87	88	89	90	TOTAL
TOTALS	SHUTTLE	11	6	9	15	21	13	20	19	21	17	22	174
	TUG												SAME
TUG FLIGHT DISTRIBUTION	DEPLOY	(11)	(6)	(9)	(14)	(8)	(4)	(4)	(6)	(4)	(3)	(6)	(75)
	1 P/L	5	5	6	6	4	2	1	3	1	1	2	36
	2 P/L	3	1	3	6	2	1	2	2	2	0	2	24
	3 P/L	3	0	0	2	2	1	1	1	1	2	2	15
	RETRIEVAL DELAY MODE					(2)	(1)	(1)	(2)	(2)	(3)	(4)	(15)
	RETRIEVAL DELAY										1	1	2
	1 P/L DEPLOY + RETRV DELAY					2	1	1	2	2	2	3	13
	RETRIEVE					(7)	(1)	(8)	(6)	(7)	(3)	(8)	(40)
	RETRIEVE					7	1	8	6	7	3	8	40
	ROUND TRIP				(1)	(4)	(7)	(7)	(5)	(8)	(8)	(4)	(44)
	ROUND TRIP					4	6	7	4	8	7	4	40
	SORTIE				1		1		1		1		4
MISSION MODES	(TOTAL)	(20)	(7)	(12)	(25)	(31)	(22)	(31)	(27)	(33)	(27)	(31)	(266)
	DEPLOY	20	7	12	24	20	14	16	16	18	16	19	182
	RETRIEVE					11	7	15	10	15	10	12	80
	SORTIE				1		1		1		1		4

DOD TRAFFIC

TABLE 6.2.1.4.1-9

FLIGHT SUMMARY

OPTION: (3A) 320A-3A/320AE-3A ~~320A/320AE-3A~~

FLIGHT MODE		CALENDAR YEAR 80	81	82	83	84	85	86	87	88	89	90	TOTAL
TOTAL FLIGHTS	SHUTTLE	21	16	18	29	38	31	36	37	32	33	34	325
	TUG STAGES	35	27	28	44	63	52	57	60	55	53	60	534
TUG FLIGHT DISTRIBUTION	ONE STAGE	(7)	(5)	(8)	(14)	(13)	(10)	(15)	(14)	(9)	(13)	(8)	(116)
	DEPLOY	(7)	(5)	(8)	(13)	(6)	(1)	(4)	(5)		(6)	(2)	(57)
	- SINGLE P/L	5	5	6	5	5		3	4		3	1	37
	- MULTI P/L	2		2	8	1	1	1	1		3	1	20
	RETRIEVE					(3)		(5)	(4)	(3)		(2)	(17)
	ROUND TRIP					(4)	(8)	(6)	(4)	(6)	(6)	(4)	(38)
	SORTIE				(1)		(1)		(1)		(1)		
	TWO STAGE	(14)	(11)	(10)	(15)	(25)	(21)	(21)	(23)	(23)	(20)	(26)	(209)
	DEPLOY (Slingshot)	(14)	(11)	(10)	(15)	(7)	(5)	(4)	(11)	(7)	(7)	(6)	(97)
	- SINGLE P/L	6	4	7	8	5	3	4	8	2	5	5	57
	- MULTI P/L	8	7	3	7	2	2		3	5	2	1	40
	RETRIEVE (Rvrs Sling)					(3)		(1)		(1)	(1)	(2)	(8)
	ROUND TRIP (Rvrs Sling)					(15)	(16)	(16)	(12)	(15)	(12)	(18)	(104)
MISSION MODEL	(TOTAL)	(34)	(23)	(24)	(48)	(62)	(61)	(60)	(61)	(59)	(62)	(60)	(554)
	DEPLOY	34	23	24	47	37	36	32	40	34	42	34	383
	RETRIEVE					25	24	28	20	25	19	26	167
	SORTIE				1		1		1		1		4

COMBINED NASA/DOD TRAFFIC

TABLE 6.2.1.4.1-10

FLIGHT SUMMARY

OPTION: 3A ~~320A/320AE~~ 320A-3A/320AE-3A

FLIGHT MODE		CALENDAR YEAR 80	81	82	83	84	85	86	87	88	89	90	TOTAL
TOTAL FLIGHTS	SHUTTLE	10	10	9	14	22	19	19	22	15	19	18	177
	TUG STAGES	18	18	16	24	35	32	31	34	26	31	31	296
TUG FLIGHT DISTRIBUTION	ONE STAGE	(2)	(2)	(2)	(4)	(9)	(6)	(7)	(10)	(4)	(7)	(5)	(58)
	DEPLOY	(2)	(2)	(2)	(4)	(5)		(3)	(4)		(5)	(1)	(28)
	- SINGLE P/L	2	2	2	1	5		3	4		3	1	23
	- MULTI P/L				3						2		5
	RETRIEVE					(2)		(2)	(4)	(2)		(2)	(12)
	ROUND TRIP					(2)	(6)	(2)	(2)	(2)	(2)	(2)	(18)
	TWO STAGE	(8)	(8)	(7)	(10)	(13)	(13)	(12)	(12)	(11)	(12)	(13)	(119)
	DEPLOY (Slingshot)	(8)	(8)	(7)	(10)	(3)	(2)	(3)	(8)	(5)	(5)	(3)	(62)
	- SINGLE P/L	4	2	5	6	3	1	3	5	1	4	3	37
	- MULTI P/L	4	6	2	4		1		3	4	1		25
	RETRIEVE (Rvrs Sling)					(3)		(1)		(1)		(1)	(6)
	ROUND TRIP (Rvrs Sling)					(7)	(11)	(8)	(4)	(5)	(7)	(9)	(51)
MISSION MODEL	(TOTAL)	(14)	(16)	(12)	(23)	(31)	(39)	(29)	(34)	(26)	(35)	(29)	(288)
	DEPLOY	14	16	12	23	17	22	16	24	16	26	15	201
	RETRIEVE					14	17	13	10	10	9	14	87
	SORTIE												

BAS 9-6-73

NASA TRAFFIC

TABLE 6.2.1.4.1-11

FLIGHT SUMMARY

OPTION: (3A) 320A-3A / 320AE-3A ~~320A/320AE-3A~~

FLIGHT MODE		CALENDAR YEAR 80	81	82	83	84	85	86	87	88	89	90	TOTAL
TOTAL FLIGHTS	SHUTTLE	11	6	9	15	16	12	17	15	17	14	16	148
	TUG STAGES	17	9	12	20	28	20	26	26	29	22	29	238
TUG FLIGHT DISTRIBUTION	ONE STAGE	(5)	(3)	(6)	(10)	(4)	(4)	(8)	(4)	(5)	(6)	(3)	(58)
	DEPLOY	(5)	(3)	(6)	(9)	(1)	(1)	(1)	(1)		(1)	(1)	(29)
	- SINGLE P/L	3	3	4	4								14
	- MULTI P/L	2		2	5	1	1	1	1		1	1	15
	RETRIEVE					(1)		(3)		(1)			(5)
	ROUND TRIP					(2)	(2)	(4)	(2)	(4)	(4)	(2)	(20)
	SORTIE				(1)		(1)		(1)		(1)		(4)
	TWO STAGE	(6)	(3)	(3)	(5)	(12)	(8)	(9)	(11)	(12)	(8)	(13)	(90)
	DEPLOY (Slingshot)	(6)	(3)	(3)	(5)	(4)	(3)	(1)	(3)	(2)	(2)	(3)	(35)
	- SINGLE P/L	2	2	2	2	2	2	1	3	1	1	2	20
	- MULTI P/L	4	1	1	3	2	1			1	1	1	15
	RETRIEVE (Rvrs Sling)										(1)	(1)	(2)
	ROUND TRIP (Rvrs Sling)					(8)	(5)	(8)	(8)	(10)	(5)	(9)	(53)
MISSION MODEL	(TOTAL)	(20)	(7)	(12)	(25)	(31)	(22)	(31)	(27)	(33)	(27)	(31)	(266)
	DEPLOY	20	7	12	24	20	14	16	16	18	16	19	182
	RETRIEVE					11	7	15	10	15	10	12	80
	SORTIE				1		1		1		1		4

DOD TRAFFIC

TABLE 6.2.1.3.1-12

FLIGHT SUMMARY

OPTION: (310-3B/310ARE-3B)

FLIGHT MODE		CALENDAR YEAR 80	81	82	83	84	85	86	87	88	89	90	TOTAL
TOTAL FLIGHTS	SHUTTLE	20	15	17	28	52	45	45	44	38	41	49	394
	TUG												SAME
TUG FLIGHT DISTRIBUTION	DEPLOY	(20)	(15)	(17)	(27)	(21)	(12)	(15)	(21)	(13)	(18)	(18)	(197)
	SINGLE P/L - CORE	9	7	10	11	6	2	4	6	2	7	4	68
	- CORE + RD					8	8	5	7	6	6	9	49
	- CORE + KS					2		3	2				7
	MULTI P/L - CORE	11	8	7	16	4	2	3	6	5	4	5	71
	- CORE + KS					1					1		2
	RETRIEVE					(22)	(13)	(17)	(12)	(10)	(9)	(20)	(103)
	RETRIEVAL DELAY					4	5	2			3	3	17
	PURE RETRIEVE					9		11	8	8	1	7	44
	DELAYED RETRIEVE					9	8	4	4	2	5	10	42
	ROUND TRIP					(9)	(19)	(13)	(10)	(15)	(13)	(11)	(90)
	CORE ONLY					6	14	10	7	11	9	8	65
	CORE + KS					3	5	3	3	4	4	3	25
	SORTIE				(1)		(1)		(1)		(1)		(4)
MISSION MODEL	(TOTAL)	(34)	(23)	(24)	(48)	(64)	(64)	(60)	(63)	(59)	(62)	(62)	(563)
	DEPLOY	34	23	24	47	37	36	32	40	34	42	34	383
	RETRIEVE					27	27	28	22	25	19	28	176
	SORTIE				1		1		1		1		4

BAS 9-1-73

COMBINED NASA/DOD TRAFFIC

TABLE 6.2.1.3.1-13

FLIGHT SUMMARY

OPTION: (310-3B/310 ARE - 3B)

FLIGHT MODE		CALENDAR YEAR 80	81	82	83	84	85	86	87	88	89	90	TOTAL
TOTAL FLIGHTS	SHUTTLE	9	9	8	13	30	32	25	23	17	24	25	215
	TUG												(SAME
TUG FLIGHT DISTRIBUTION	DEPLOY	(9)	(9)	(8)	(13)	(12)	(7)	(10)	(13)	(7)	(13)	(9)	(110)
	SINGLE P/L + CORE	4	2	4	5	6		3	5	1	6	4	40
	- CORE + RD					4	7	4	3	4	4	4	30
	- CORE + KS					2		3	2				7
	MULTI P/L - CORE	5	7	4	8				3	2	2	1	32
	- CORE + KS										1		1
	RETRIEVE					(13)	(12)	(9)	(4)	(3)	(5)	(9)	(55)
	CORE RETRIEVE					4		4	4	3	1	3	19
	RETRIEVAL DELAY					4	5	2			2	2	15
	DELAYED RETRIEVE					5	7	3			2	4	21
	ROUND TRIP					(5)	(13)	(6)	(6)	(7)	(6)	(7)	(50)
	CORE ONLY					2	8	3	3	3	2	4	25
	CORE + KS					3	5	3	3	4	4	3	25
MISSION MODEL	(TOTAL)	(14)	(16)	(12)	(23)	(31)	(42)	(29)	(34)	(26)	(35)	(29)	(291)
	DEPLOY	14	16	12	23	17	22	16	24	16	26	15	201
	RETRIEVE					14	20	13	10	10	9	14	90
	SORTIE												0

BAS 9-1-73

NASA TRAFFIC

TABLE 6.2.1.3.1-14

FLIGHT SUMMARY

OPTION: (310-3B / 310 ARE - 3B)

FLIGHT MODE		CALENDAR YEAR 80	81	82	83	84	85	86	87	88	89	90	TOTAL
TOTAL FLIGHTS	SHUTTLE	11	6	9	15	22	13	20	21	21	17	24	179
	TUG												SAME
TUG FLIGHT DISTRIBUTION	DEPLOY	(11)	(6)	(9)	(14)	(9)	(5)	(5)	(8)	(6)	(5)	(9)	(87)
	SINGLE P/L - CORE	5	5	6	6		2	1	1	1	1		28
	- CORE + RD					4	1	1	4	2	2	5	19
	MULTI-P/L - CORE	6	1	3	8	4	2	3	3	3	2	4	39
	- CORE + KS					1							1
	RETRIEVE					(9)	(1)	(8)	(8)	(7)	(4)	(11)	(48)
	RETRIEVAL DELAY										1	1	2
	PURE RETRIEVE					5		7	4	5		4	25
	DELAYED RETRIEVAL					4	1	1	4	2	3	6	21
	ROUND TRIP					(4)	(6)	(7)	(4)	(8)	(7)	(4)	(40)
	SORTIE				(1)		(1)		(1)		(1)		(4)
MISSION MODEL	(TOTAL)	(20)	(7)	(12)	(25)	(33)	(22)	(31)	(29)	(33)	(27)	(33)	(272)
	DEPLOY	20	7	12	24	20	14	16	16	18	16	19	182
	RETRIEVE					13	7	15	12	15	10	14	86
	SORTIE				1		1		1		1		4

BAS 9-1-73

DOD TRAFFIC

TABLE 6.2.1.3.1-15

FLIGHT SUMMARY

OPTION: (510A-3B/510ADE-3B)

FLIGHT MODE		CALENDAR YEAR 80	81	82	83	84	85	86	87	88	89	90	TOTAL
TOTAL FLIGHTS	SHUTTLE	26	21	23	37	41	36	36	39	33	33	36	361
	TUG												SAME
TUG FLIGHT DISTRIBUTION	DEPLOY	(26)	(21)	(23)	(36)	(14)	(8)	(8)	(16)	(8)	(13)	(8)	(181)
	SINGLE P/L - CORE	7	6	8	7	4	3	2	5	2	4	3	51
	- CORE + KS	14	13	14	22	6	2	4	5	2	1	2	85
	- CORE + EXPEND TUG					2		1	1		3	1	8
	MULTI P/L - CORE	5	2	1	7	2	3	1	1	1	4	2	29
	- CORE + KS								4	3	1		8
	RETRIEVE					(8)	(3)	(6)	(4)	(4)	(1)	(6)	(32)
	CORE ONLY					3		6	2	4		2	17
	CORE + KS					5	3		2		1	4	15
	ROUND TRIP					(19)	(24)	(22)	(18)	(21)	(18)	(22)	(144)
	CORE ONLY					4	10	7	6	8	7	4	46
	CORE + KS					15	14	15	12	13	11	18	98
	SORTIE				(1)		(1)		(1)		(1)		(4)
MISSION MODEL	(TOTAL)	(34)	(23)	(24)	(48)	(64)	(64)	(60)	(63)	(59)	(62)	(59)	(560)
	DEPLOY	34	23	24	47	37	36	32	40	34	42	34	383
	RETRIEVE					27	27	28	22	25	19	25	173
	SORTIE				1		1		1		1		4

COMBINED NASA & DOD TRAFFIC

TABLE 6.2.1.3.1-16

FLIGHT SUMMARY

OPTION: (510D-3B/510ADE-3B)

FLIGHT MODE		CALENDAR YEAR 80	81	82	83	84	85	86	87	88	89	90	TOTAL
TOTAL FLIGHTS	SHUTTLE	13	15	12	18	22	24	19	22	16	19	18	198
	TUG												SAME
TUG FLIGHT DISTRIBUTION	DEPLOY	(13)	(15)	(12)	(18)	(8)	(4)	(6)	(12)	(6)	(10)	(4)	(108)
	SINGLE P/L - CORE	4	3	4	3	4	3	2	5	2	4	3	37
	- CORE + KS	8	11	8	12	2		3	2	1			47
	- CORE + EXPEND TUG					2		1	1		3	1	8
	MULTI P/L - CORE	1	1		3		1				2		8
	- CORE + KS								4	3	1		8
	RETRIEVE					(5)	(3)	(3)	(2)	(3)		(3)	(19)
	CORE ONLY					2		3	2	3		2	12
	CORE + KS					3	3					1	7
	ROUND TRIP					(9)	(17)	(10)	(8)	(7)	(9)	(11)	(71)
	CORE ONLY					2	6	2	4	2	2	2	20
	CORE + KS					7	11	8	4	5	7	9	51
MISSION MODEL	(TOTAL)	(14)	(16)	(12)	(23)	(31)	(42)	(29)	(34)	(26)	(35)	(26)	(288)
	DEPLOY	14	16	12	23	17	22	16	24	16	26	15	201
	RETRIEVE					14	20	13	10	10	9	11	87
	SORTIE												

NASA TRAFFIC

TABLE 6.2.1.3.1-17

FLIGHT SUMMARY

OPTION: (510A-3B/510ADE-3B)

FLIGHT MODE		CALENDAR YEAR 80	81	82	83	84	85	86	87	88	89	90	TOTAL
TOTAL FLIGHTS	SHUTTLE	13	6	11	19	19	12	17	17	17	14	18	163
	TUG												SAME
TUG FLIGHT DISTRIBUTION	DEPLOY	(13)	(6)	(11)	(18)	(6)	(4)	(2)	(4)	(2)	(3)	(4)	(73)
	SINGLE P/L-CORE	3	3	4	4								14
	CORE + KS	6	2	6	10	4	2	1	3	1	1	2	38
	MULTI P/L-CORE	4	1	1	4	2	2	1	1	1	2	2	21
	RETRIEVE					(3)		(3)	(2)	(1)	(1)	(3)	(13)
	CORE ONLY					1		3		1			5
	CORE + KS					2			2		1	3	8
	ROUNDTRIP					(10)	(7)	(12)	(10)	(14)	(9)	(11)	(73)
	CORE ONLY					2	4	5	2	6	5	2	26
	CORE + KS					8	3	7	8	8	4	9	47
	SORTIE				(1)		(1)		(1)		(1)		(4)
MISSION MODEL	(TOTAL)	(20)	(7)	(12)	(25)	(33)	(22)	(31)	(29)	(33)	(27)	(33)	272
	DEPLOY	20	7	12	24	20	14	16	16	18	16	19	182
	RETRIEVE					13	7	15	12	15	10	14	86
	SORTIE				1		1		1		1		4

DOD TRAFFIC

TABLE 6.2.1.3.1-18

6.2.1.4.2 Flight Element Requirements

These summaries are the second input to Programmatics/ Costing. The charts identify the number of Tugs and auxiliary flight elements flown each year for each of the categories listed. For those Tug concepts employing kick stages, recovery of the kick stages is determined from the Flight Summary in Paragraph 6.2.1.4.1 and/or Detailed Traffic Assessment Data contained in Volume 4. In addition, summary descriptions of the kick stages used are included where applicable. As with the Flight Summaries, the order of presentation is NASA, DOD and Combined NASA/DOD traffic. These summaries are contained in Tables 6.2.1.4.2-1 through 6.2.1.4.2-24 which follow.

FLIGHT ELEMENT REQUIREMENTS OPTION: 1 110A-1

ITEM			CALENDAR YEAR											TOTAL
			80	81	82	83	84	85	86	87	88	89	90	
SHUTTLE FLIGHTS		TOTAL	8	7	8	13	13	11	11	14	8	16	9	118
BASIC TUG FLIGHTS	ETR	RECOVERED	8	7	8	10	10	8	9	11	7	9	7	94
		EXPENDED					2		1	1		3	1	8
	WTR	RECOVERED				3	1	3	1	2	1	4	1	16
	(TOTAL)		(8)	(7)	(8)	(13)	(13)	(11)	(11)	(14)	(8)	(16)	(9)	(118)
KICK STAGES	KS 101				2		2		3	2				9
	KS 102			1	2					1			1	3
	(TOTAL)			(1)	(4)		(2)		(3)	(3)			(1)	(12)

TABLE 6.2.1.4.2-1

NASA TRAFFIC

FLIGHT ELEMENT REQUIREMENTS OPTION: 1 110A-1

ITEM			CALENDAR YEAR 80	81	82	83	84	85	86	87	88	89	90	TOTAL
SHUTTLE FLIGHTS		TOTAL	8	6	9	14	11	10	10	12	11	10	11	112
BASIC TUG FLIGHTS	ETR	RECOVERED	8	6	9	10	10	8	8	10	10	7	10	96
		EXPENDED												0
	WTR	RECOVERED				4	1	2	2	2	1	3	1	16
	(TOTAL)		(8)	(6)	(9)	(14)	(11)	(10)	(10)	(12)	(11)	(10)	(11)	(112)
KICK STAGES	KS 101													
	KS 102					1	1							2
	(TOTAL)					(1)	(1)							(2)

TABLE 6.2.1.4.2-2

DOD TRAFFIC

FLIGHT ELEMENT REQUIREMENTS OPTION: 1 110A-1

ITEM			CALENDAR YEAR 80	81	82	83	84	85	86	87	88	89	90	TOTAL
SHUTTLE FLIGHTS		TOTAL	16	13	17	27	24	21	21	26	19	26	20	230
BASIC TUG FLIGHTS	ETR	RECOVERED	16	13	17	20	20	16	17	21	17	16	17	190
		EXPENDED					2		1	1		3	1	8
	WTR	RECOVERED				7	2	5	3	4	2	7	2	32
	(TOTAL)		(16)	(13)	(17)	(27)	(24)	(21)	(21)	(26)	(19)	(26)	(20)	(230)
KICK STAGES	KS 101				2		2		3	2				9
	KS 102			1		1	1			1			1	5
	(TOTAL)			(1)	(2)	(1)	(3)		(3)	(3)			(1)	(14)
													RELIABILITY =	+2 FLTS

COMBINED NASA/DOD TRAFFIC

TABLE 6.2.1.4.2-3

CONCEPT 110A-1

KICK STAGE DEFINITION

KICK STAGE DESIGNATION	GEOMETRY (all stages >10 ft diam. & are 5.5 ft long unless otherwise noted)		PERFORMANCE (Geosynch Payload) (lbs)	SRM CHARACTERISTICS INDIVIDUAL WEIGHT (lbs)	NUMBER	TOTAL SRM WEIGHT (lbs)	STAGE INERT WEIGHT (lbs)	TOTAL STAGE WEIGHT (lbs)
KS 101	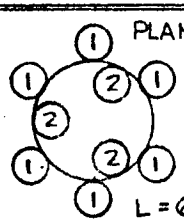 PLANETARY L = 6 ft 8 in	STAGE 1	5000 lbs TO ΔV = 18,400 fps	1667	6	10002	-	10002
		STAGE 2		1667	3	5001	545	5546
		(TOTAL)						(15548)
KS 102	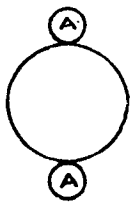 DEPLOY AKS		8207	1667	2	3334	529	(3863)

TABLE 6.2.1.4.2-4

BAS 9-6-73

FLIGHT ELEMENT REQUIREMENTS OPTION: 2(410 AD-2)

ITEM			CALENDAR YEAR 80	81	82	83	84	85	86	87	88	89	90	TOTAL
SHUTTLE FLIGHTS		TOTAL					43	35	38	38	33	37	38	262
BASIC TUG FLIGHTS	ETR	RECOVERED					36	27	28	29	27	25	32	204
		EXPENDED					2		1	1		3	1	8
	WTR	RECOVERED					5	8	9	8	6	9	5	50
	(TOTAL)						(43)	(35)	(38)	(38)	(33)	(37)	(38)	(262)
KICK STAGES	KS 401						2		2	2				6
	KS 403		5	3		4	3		1	2	1	3	2	24
	KS 404									8	4			12
	KS 405		12	9	9	14	9	9	10	7	10	5	10	104
	KS 405A						1	2		3		1	2	9
	(TOTAL)		(17)	(12)	(9)	(18)	(15)	(11)	(13)	(22)	(15)	(9)	(14)	(155)

TABLE 6.2.1.4.2-5

COMBINED NASA/DOD TRAFFIC

FLIGHT ELEMENT REQUIREMENTS OPTION: 2 (410AD-2)

ITEM			CALENDAR YEAR 80	81	82	83	84	85	86	87	88	89	90	TOTAL
SHUTTLE FLIGHTS		TOTAL					24	23	21	21	16	23	20	148
BASIC TUG FLIGHTS	ETR	RECOVERED					18	17	16	14	12	15	15	107
		EXPENDED					2		1	1		3	1	8
	WTR	RECOVERED					4	6	4	6	4	5	4	33
	(TOTAL)						(24)	(23)	(21)	(21)	(16)	(23)	(20)	(148)
KICK STAGES	KS 401						2		2	2				6
	KS 403		5	1		3						3		12
	KS 404									8	4			12
	KS405		5	9	3	7	2	8	5	1	4	3	3	50
	KS405A						1	2		3		1	2	9
	(TOTAL)		(10)	(10)	(3)	(10)	(5)	(10)	(7)	(14)	(8)	(7)	(5)	(89)

TABLE 6.2.1.4.2-6

NASA TRAFFIC

FLIGHT ELEMENT REQUIREMENTS OPTION: 2 (410AD-2)

ITEM			CALENDAR YEAR											TOTAL
			80	81	82	83	84	85	86	87	88	89	90	
SHUTTLE FLIGHTS		TOTAL					19	12	17	17	17	14	18	114
BASIC TUG FLIGHTS	ETR	RECOVERED					18	10	12	15	15	10	17	97
		EXPENDED												0
	WTR	RECOVERED					1	2	5	2	2	4	1	17
	(TOTAL)						(19)	(12)	(17)	(17)	(17)	(14)	(18)	(114)
KICK STAGES	KS 403			2		1	3		1	2	1		2	12
	KS 405		7		6	7	7	1	5	6	6	2	7	54
	(TOTAL)		(7)	(2)	(6)	(8)	(10)	(1)	(6)	(8)	(7)	(2)	(9)	(66)

TABLE 6.2.1.4.2-7

BAS 8-30-73

DOD TRAFFIC

CONCEPT 410AD-2

KICK STAGE DEFINITION**

KICK STAGE DESIGNATION	GEOMETRY (all stages >10 ft diam. & are 5.5 ft long unless otherwise noted)		PERFORMANCE (Geosynch Payload) (lbs)	SRM CHARACTERISTICS INDIVIDUAL WEIGHT (lbs)	NUMBER	TOTAL SRM WEIGHT (lbs)	STAGE INERT WEIGHT (lbs)	TOTAL STAGE WEIGHT (lbs)
KS 401	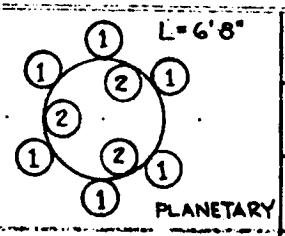	STAGE 1	5000 lbs TO ΔV=18400 fps	1880	6	11280	-	11280
		STAGE 2		1880	3	5640	545	6185
		(TOTAL)						(17465)
KS403	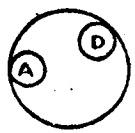	AKS	3920	1880	1	1880	-	1880
		DKS	3920	1880	1	1880	804*	2684
		(TOTAL)						(4564)
KS404	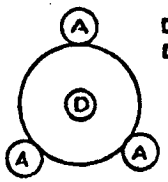	AKS	2770	1880	3	5640	-	5640
		DKS	2770	1300	1	1300	818*	2118
		(TOTAL)						(7758)
KS405	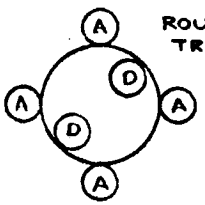	AKS	2640	1880	4	7520	-	7520
		DKS	2640	1880	2	3760	864*	4624
		(TOTAL)						(12144)
KS405A	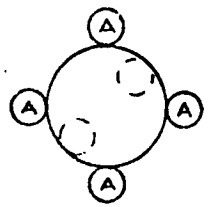	AKS Delete 2 DKS from KS 405	6620	1880	4	7520	643*	8163

* ADD 12 lb FOR DOD MISSIONS

** Based on Kick Stage Characteristics, Issue 2, dated 8-29-73

BAS 8-30-73

TABLE 6.2.4.2-8

FLIGHT ELEMENT REQUIREMENTS

OPTION: 3A 310/310RE-3A

ITEM			CALENDAR YEAR 80	81	82	83	84	85	86	87	88	89	90	TOTAL
SHUTTLE FLIGHTS		TOTAL	20	15	17	27	51	42	46	43	40	42	47	390
BASIC TUG FLIGHTS	ETR	RECOVERED	20	15	15	20	42	34	33	32	34	31	41	317
		EXPENDED			2		4		4	3		3	1	17
	WTR	RECOVERED				7	5	8	9	8	6	8	5	56
	(TOTAL)		(20)	(15)	(17)	(27)	(51)	(42)	(46)	(43)	(40)	(42)	(47)	(390)
RETRIEVAL DELAY MODULES							10	10	8	5	6	9	11	59
									RELIABILITY				=	+4 FLTS

TABLE 6.2.4.2-9

COMBINED NASA/DOD TRAFFIC

FLIGHT ELEMENT REQUIREMENTS

OPTION: 3A 310/310RE-3A

ITEM			CALENDAR YEAR 80	81	82	83	84	85	86	87	88	89	90	TOTAL
SHUTTLE FLIGHTS		TOTAL	9	9	8	12	30	29	26	24	19	25	25	216
BASIC TUG FLIGHTS	ETR	RECOVERED	9	9	6	9	22	23	18	15	15	18	20	164
		EXPENDED			2		4		4	3		3	1	17
	WTR	RECOVERED				3	4	6	4	6	4	4	4	35
	(TOTAL)		(9)	(9)	(8)	(12)	(30)	(29)	(26)	(24)	(19)	(25)	(25)	(216)
RETRIEVAL DELAY MODULES							8	9	7	3	4	6	7	44

TABLE 6.2.4.2-10

NASA TRAFFIC

FLIGHT ELEMENT REQUIREMENTS

OPTION: 3A 310/310RE-3A

ITEM			CALENDAR YEAR 80	81	82	83	84	85	86	87	88	89	90	TOTAL
SHUTTLE FLIGHTS		TOTAL	11	6	9	15	21	13	20	19	21	17	22	174
BASIC TUG FLIGHTS	ETR	RECOVERED	11	6	9	11	20	11	15	17	19	13	21	153
		EXPENDED												0
	WTR	RECOVERED				4	1	2	5	2	2	4	1	21
	(TOTAL)		(11)	(6)	(9)	(15)	(21)	(13)	(20)	(19)	(21)	(17)	(22)	(174)
RETRIEVAL DELAY MODULES							2	1	1	2	2	3	4	15

TABLE 6.2.1.4.2-11

DOD TRAFFIC

FLIGHT ELEMENT REQUIREMENTS

OPTION: 3A 320A/320AE-3A

ITEM			CALENDAR YEAR 80	81	82	83	84	85	86	87	88	89	90	TOTAL
SHUTTLE FLIGHTS		TOTAL	10	10	9	14	22	19	19	22	15	19	18	177
BASIC TUG FLIGHTS (ONE STAGE)	ETR	RECOVERED	2	2	2	1	5		3	4		3	1	23
		EXPENDED												0
	WTR	RECOVERED				3	4	6	4	6	4	4	4	35
	(TOTAL)		(2)	(2)	(2)	(4)	(9)	(6)	(7)	(10)	(4)	(7)	(5)	(58)
BASIC TUG FLIGHTS (TWO STAGE)	ETR	RECOVERED	8	8	7	10	11	13	11	11	11	9	12	111
		EXPENDED					2		1	1		3	1	8
	WTR	RECOVERED												0
	(TOTAL)		(8)	(8)	(7)	(10)	(13)	(13)	(12)	(12)	(11)	(12)	(13)	(119)
TOTAL TUG STAGES FLOWN			18	18	16	24	35	32	31	34	26	31	31	296
KICK STAGES (USED ONLY WITH RECOVERABLE ONE STAGE FLIGHTS FROM ETR)	KS 321				2		2		3	2				9
	(TOTAL)				(2)		(2)		(3)	(2)				(9)

TABLE 6.2.1.4.2-12

BAS 9-6-73

FLIGHT ELEMENT REQUIREMENTS

OPTION: 3A 320A/320AE-3A

ITEM			CALENDAR YEAR 80	81	82	83	84	85	86	87	88	89	90	TOTAL
SHUTTLE FLIGHTS		TOTAL	21	16	18	29	38	31	36	37	32	33	34	325
BASIC TUG FLIGHTS (ONE STAGE)	ETR	RECOVERED	7	5	8	7	8	2	6	6	3	5	3	60
		EXPENDED												0
	WTR	RECOVERED				7	5	8	9	8	6	8	5	56
	(TOTAL)		(7)	(5)	(8)	(14)	(13)	(10)	(15)	(14)	(9)	(13)	(8)	(116)
BASIC TUG FLIGHTS (TWO STAGE)	ETR	RECOVERED	14	11	10	15	23	21	20	22	23	17	25	201
		EXPENDED					2		1	1		3	1	8
	WTR	RECOVERED												0
	(TOTAL)		(14)	(11)	(10)	(15)	(25)	(21)	(21)	(23)	(23)	(20)	(26)	(209)
TOTAL TUG STAGES FLOWN			35	27	28	44	63	52	57	60	55	53	60	534
KICK STAGES (USED ONLY WITH RECOVERABLE ONE STAGE FLIGHTS FROM ETR)	KS 321				2		2		3	2				9
	(TOTAL)				(2)		(2)		(3)	(2)				(9)
									RELIABILITY =					+3 FLTS

BAS 9-6-73

TABLE 6.2.1.4.2-13

COMBINED NASA/DOD TRAFFIC

FLIGHT ELEMENT REQUIREMENTS

OPTION: 3A 320A/320AE-3A

ITEM			CALENDAR YEAR 80	81	82	83	84	85	86	87	88	89	90	TOTAL
SHUTTLE FLIGHTS		TOTAL	11	6	9	15	16	12	17	15	17	14	16	148
BASIC TUG FLIGHTS (ONE STAGE)	ETR	RECOVERED	5	3	6	6	3	2	3	2	3	2	2	37
		EXPENDED												0
	WTR	RECOVERED				4	1	2	5	2	2	4	1	21
	(TOTAL)		(5)	(3)	(6)	(10)	(4)	(4)	(8)	(4)	(5)	(6)	(3)	(58)
BASIC TUG FLIGHTS (TWO STAGE)	ETR	RECOVERED	6	3	3	5	12	8	9	11	12	8	13	90
		EXPENDED												0
	WTR	RECOVERED												0
	(TOTAL)		(6)	(3)	(3)	(5)	(12)	(8)	(9)	(11)	(12)	(8)	(13)	(90)
TOTAL TUG STAGES FLOWN			17	9	12	20	28	20	26	26	29	22	29	238
KICK STAGES	KS 321													0
	(TOTAL)													0

TABLE 6.2.1.4.2-14

BAS 9-6-73

DOD TRAFFIC

CONCEPT 320A/320AE-3A

KICK STAGE DEFINITION

KICK STAGE DESIGNATION	GEOMETRY (all stages >10 ft diam. & are 5.5 ft long unless otherwise noted)		PERFORMANCE (Geosynch) Payload (lbs)	SRM CHARACTERISTICS INDIVIDUAL WEIGHT (lbs)	NUMBER	TOTAL SRM WEIGHT (lbs)	STAGE INERT WEIGHT (lbs)	TOTAL STAGE WEIGHT (lbs)
KS321	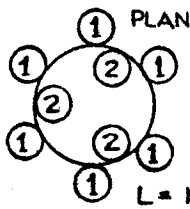	STAGE 1	5000 lbs TO ΔV = 18400 fps	1900	6	11400	-	11400
		STAGE 2		1900	3	5700	545	6245
		(TOTAL)						17645

BAS 9-6-73

TABLE 6.2.1.4.2-15

FLIGHT ELEMENT REQUIREMENTS

OPTION: (310-3A/310ARE-3B)

ITEM			CALENDAR YEAR 80	81	82	83	84	85	86	87	88	89	90	TOTAL
SHUTTLE FLIGHTS		TOTAL	20	15	17	28	52	45	45	44	38	41	49	394
BASIC TUG FLIGHTS	ETR	RECOVERED	20	15	15	21	45	37	35	35	32	30	43	328
		EXPENDED			2		2		1	1		3	1	10
	WTR	RECOVERED				7	5	8	9	8	6	8	5	56
	(TOTAL)		(20)	(15)	(17)	(28)	(52)	(45)	(45)	(44)	(38)	(41)	(49)	(394)
RETRIEVAL DELAY MODULES (ALL AT ETR)							12	13	7	7	6	9	12	66
KICK STAGES	KS 301						2		3	2				7
	KS 302						2					2		4
	KS 303						3	5	3	3	4	4	3	25
	(TOTAL)						(7)	(5)	(6)	(5)	(4)	(6)	(3)	(36)

RELIABILITY = +4 FLTS

COMBINED NASA/DOD TRAFFIC

BLS 9-1-73

TABLE 6.2.1.4.2.-16

FLIGHT ELEMENT REQUIREMENTS — OPTION: (310/310 ARE - 3B)

ITEM			CALENDAR YEAR 80	81	82	83	84	85	86	87	88	89	90	TOTAL
SHUTTLE FLIGHTS		TOTAL	9	9	8	13	30	32	25	23	17	24	25	215
BASIC TUG FLIGHTS	ETR	RECOVERED	9	9	6	10	24	26	20	16	13	17	20	170
		EXPENDED			2		2		1	1		3	1	10
	WTF	RECOVERED				3	4	6	4	6	4	4	4	35
	(TOTAL)		(9)	(9)	(8)	(13)	(30)	(32)	(25)	(23)	(17)	(24)	(25)	(215)
RETRIEVAL DELAY MODULES (ALL AT ETR)							8	12	6	3	4	6	6	45
KICK STAGES	KS 301						2		3	2				7
	KS 302											2		2
	KS 303						3	5	3	3	4	4	3	25
	(TOTAL)						(5)	(5)	(6)	(5)	(4)	(6)	(3)	(34)

TABLE 6.2.1.4.2-17

BAS 9-1-73

FLIGHT ELEMENT REQUIREMENTS — OPTION: (310 / 310ARE - 3B)

ITEM			CALENDAR YEAR 80	81	82	83	84	85	86	87	88	89	90	TOTAL
SHUTTLE FLIGHTS		TOTAL	11	6	9	15	22	13	20	21	21	17	24	179
BASIC TUG FLIGHTS	ETR	RECOVERED	11	6	9	11	21	11	15	19	19	13	23	158
		EXPENDED												0
	WTR	RECOVERED				4	1	2	5	2	2	4	1	21
	(TOTAL)		(11)	(6)	(9)	(15)	(22)	(13)	(20)	(21)	(21)	(17)	(24)	(179)
RETRIEVAL DELAY MODULES (ALL AT ETR)			[illegible]	[illegible]	[illegible]	[illegible]	4	1	1	4	2	3	6	21
KICK STAGES	KS 301													
	KS 302						2							2
	KS 303													
	(TOTAL)						(2)							(2)

TABLE 6.2.1.4.2-18

BAS 9-1-73

DOD TRAFFIC

310ARE-3B

KICK STAGE DEFINITION

KICK STAGE DESIGNATION	GEOMETRY (all stages >10 ft diam. & are 5.5 ft long unless otherwise noted)		PERFORMANCE (Geosynch Payload) (lbs)	SRM CHARACTERISTICS: INDIVIDUAL WEIGHT (lbs)	NUMBER	TOTAL SRM WEIGHT (lbs)	STAGE INERT WEIGHT (lbs)	TOTAL STAGE WEIGHT (lbs)
KS 301	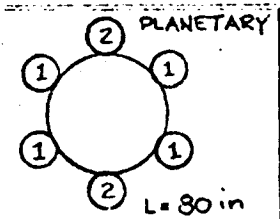	STAGE 1	5000 lbs To ΔV=18400 fps	1880	4	7520	–	7520
		STAGE 2		1880	2	3760	494	4305
		(TOTAL)						11,825
KS 302	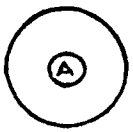	DOUBLE DEPLOY AKS	3515 (each P/L)	1880	1	1880	516	2396
KS 303	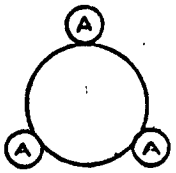	DELAYED RETRIEVE SINGLE DEPLOY AKS	P/L = f(RTRV'D P/L)	1483	3	4449	523	4972

BAS 9-4-73

TABLE 6.2.1.4.2-19

FLIGHT ELEMENT REQUIREMENTS

OPTION: 3B (510A/510ADE - 3B)

ITEM			CALENDAR YEAR 80	81	82	83	84	85	86	87	88	89	90	TOTAL
SHUTTLE FLIGHTS		TOTAL	26	21	23	37	41	36	36	39	33	33	36	361
BASIC TUG FLIGHTS	ETR	RECOVERED	26	21	23	30	34	27	26	30	27	22	30	296
		EXPENDED					2		1	1		3	1	8
	WTR	RECOVERED				7	5	9	9	8	6	8	5	57
	(TOTAL)		(26)	(21)	(23)	(37)	(41)	(36)	(36)	(39)	(33)	(33)	(36)	(361)
KICK STAGES	KS 501				2		2		3	2				9
	KS 502													0
	KS 503		3*	2		4	8	3	1	4	1	1	5	32
	KS 504									8	6	2		16
	KS 505		15*	10	11	16	13	12	13	10	12	6	15	133
	KS 505A		2	1	1	2	3	2	2	2	2	5	4	26
	(TOTAL)		(20)**	(13)	(14)	(22)	(26)	(17)	(19)	(26)	(21)	(14)	(24)	(216)**

KS'S LAUNCHED IN 1979 FOR SUBSEQUENT RETRIEVALS
* 3
** 6

RELIABILITY = ± 4 FLTS

BAS 9.4-2

TABLE 6.2.2.4.2-20

COMBINED NASA/DOD TRAFFIC

FLIGHT ELEMENT REQUIREMENTS: OPTION: 3B (510A/510ADE - 3B)

ITEM			CALENDAR YEAR 80	81	82	83	84	85	86	87	88	89	90	TOTAL
SHUTTLE FLIGHTS		TOTAL	13	15	12	18	22	24	19	22	16	19	18	198
BASIC TUG FLIGHTS	ETR	RECOVERED	13	15	12	15	16	17	14	15	12	12	13	154
		EXPENDED					2		1	1		3	1	8
	WTR	RECOVERED				3	4	7	4	6	4	4	4	36
	(TOTAL)		(13)	(15)	(12)	(18)	(22)	(24)	(19)	(22)	(16)	(19)	(18)	(198)
KICK STAGES	KS 501				2		2		3	2				9
	KS 502													0
	KS 503		3*			3	3	3						12
	KS 504									8	6	2		16
	KS 505		8**	10	5	7	4	9	6	2	4	2	6	63
	KS 505A		2	1	1	2	3	2	2	2	2	5	4	26
	(TOTAL)		(13)***	(11)	(8)	(12)	(12)	(14)	(11)	(14)	(12)	(9)	(10)	(126)***

* LAUNCHED IN 1979 FOR SUBSEQUENT RETRIEVALS

** INCLUDES 2 KS LAUNCHED IN 1979 FOR SUBSEQUENT RETRIEVALS

*** INCLUDES 5 KS LAUNCHED IN 1979 FOR SUBSEQUENT RETRIEVALS

TABLE 6.2-14.2-21

BAS 9-4-73

FLIGHT ELEMENT REQUIREMENTS

OPTION: 3B (510A/510ADE-3B)

ITEM			CALENDAR YEAR 80	81	82	83	84	85	86	87	88	89	90	TOTAL
SHUTTLE FLIGHTS		TOTAL	13	6	11	19	19	12	17	17	17	14	18	163
BASIC TUG FLIGHTS	ETR	RECOVERED	13	6	11	15	18	10	12	15	15	10	17	142
		INTENDED												0
	W/TR	RECOVERED				4	1	2	5	2	2	4	1	21
	(TOTAL)		(13)	(6)	(11)	(19)	(19)	(12)	(17)	(17)	(17)	(14)	(18)	(163)
KICK STAGES	KS 501													0
	KS 502													0
	KS 503			2		1	5		1	4	1	1	5	20
	KS 504													0
	KS 505		7*		6	9	9	3	7	8	8	4	9	70
	KS 505A													0
	(TOTAL)		(7)	(2)	(6)	(10)	(14)	(3)	(8)	(12)	(9)	(5)	(14)	(90)

*INCLUDES 1 KS LAUNCHED IN 1979 FOR SUBSEQUENT RETRIEVAL

TABLE 6.2.1.4.2-22

BAS 9-4-73

CONCEPT 510A-3B/510ADE-3B

KICK STAGE DEFINITION (cont)

KICK STAGE DESIGNATION	GEOMETRY (all stages >10 ft diam. & are 5.5 ft long unless otherwise noted)	PERFORMANCE (Geosynch Payload) (lbs)	SRM CHARACTERISTICS			STAGE INERT WEIGHT (lbs)	TOTAL STAGE WEIGHT (lbs)
			INDIVIDUAL WEIGHT (lbs)	NUMBER	TOTAL SRM WEIGHT (lbs)		
KS 505A	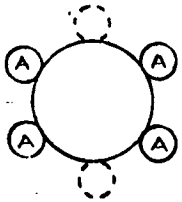 AKS Delete 2 DKS from KS 505	6090	1742	4	6968	643	7611

TABLE 6.2.1.4.2-2B

CONCEPT 510A/510ADE-3B

KICK STAGE DEFINITION

KICK STAGE DESIGNATION	GEOMETRY (all stages >10 ft diam. & are 5.5 ft long unless otherwise noted)		PERFORMANCE (geosynch Payload) (lbs)	SRM CHARACTERISTICS: INDIVIDUAL WEIGHT (lbs)	NUMBER	TOTAL SRM WEIGHT (lbs)	STAGE INERT WEIGHT (lbs)	TOTAL STAGE WEIGHT (lbs)
KS 501	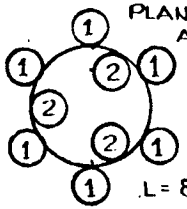 PLANETARY AKS L = 80 in	STAGE 1	5000 lbs TO ΔV = 18,100 fps	1742	6	10452	–	10 452
		STAGE 2		1742	3	5226	545	5771
		(TOTAL)						(16223)
KS 502	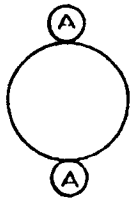	DOUBLE DEPLOY AKS	3815 (each P/L)	1742	2	3484	516	(4000)
KS 503	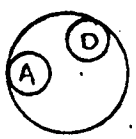 DEPLOY WITH SUBSEQUENT RETRIEVE	AKS	3825	2500	1	2500	–	2500
		DKS		2500	1	2500	804	3304
		(TOTAL)						(5804)
KS 504	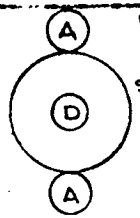 DOUBLE DEPLOY WITH SUBSEQUENT INDIVIDUAL RETRIEVE	AKS	2400 (each P/L)	2500	2	5000	–	5000
		DKS		1400	1	1400	818	2218
		(TOTAL)						(7218)
KS 505	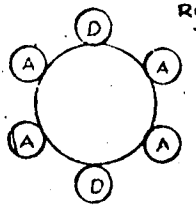 ROUND TRIP	AKS	2385 (each way)	1742	4	6968	–	6968
		DKS		1742	2	3484	864	4348
		(TOTAL)						(11316)

TABLE 6.2.1.4.2-24

FIGURE 6.2.2-1

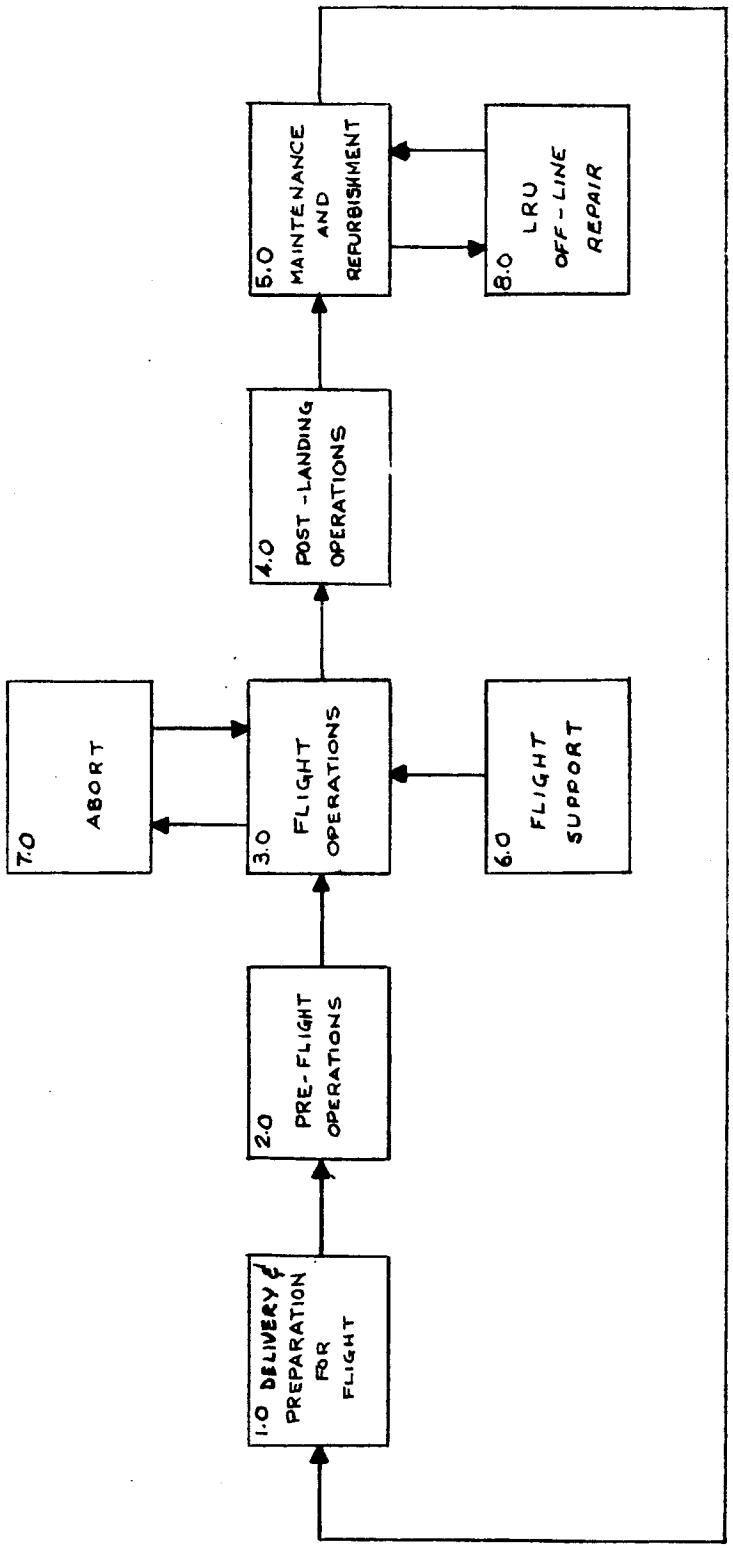

SPACE TUG

TOP LEVEL FLOW DIAGRAM

6.2.2.1 ONBOARD FUNCTIONAL REQUIREMENTS

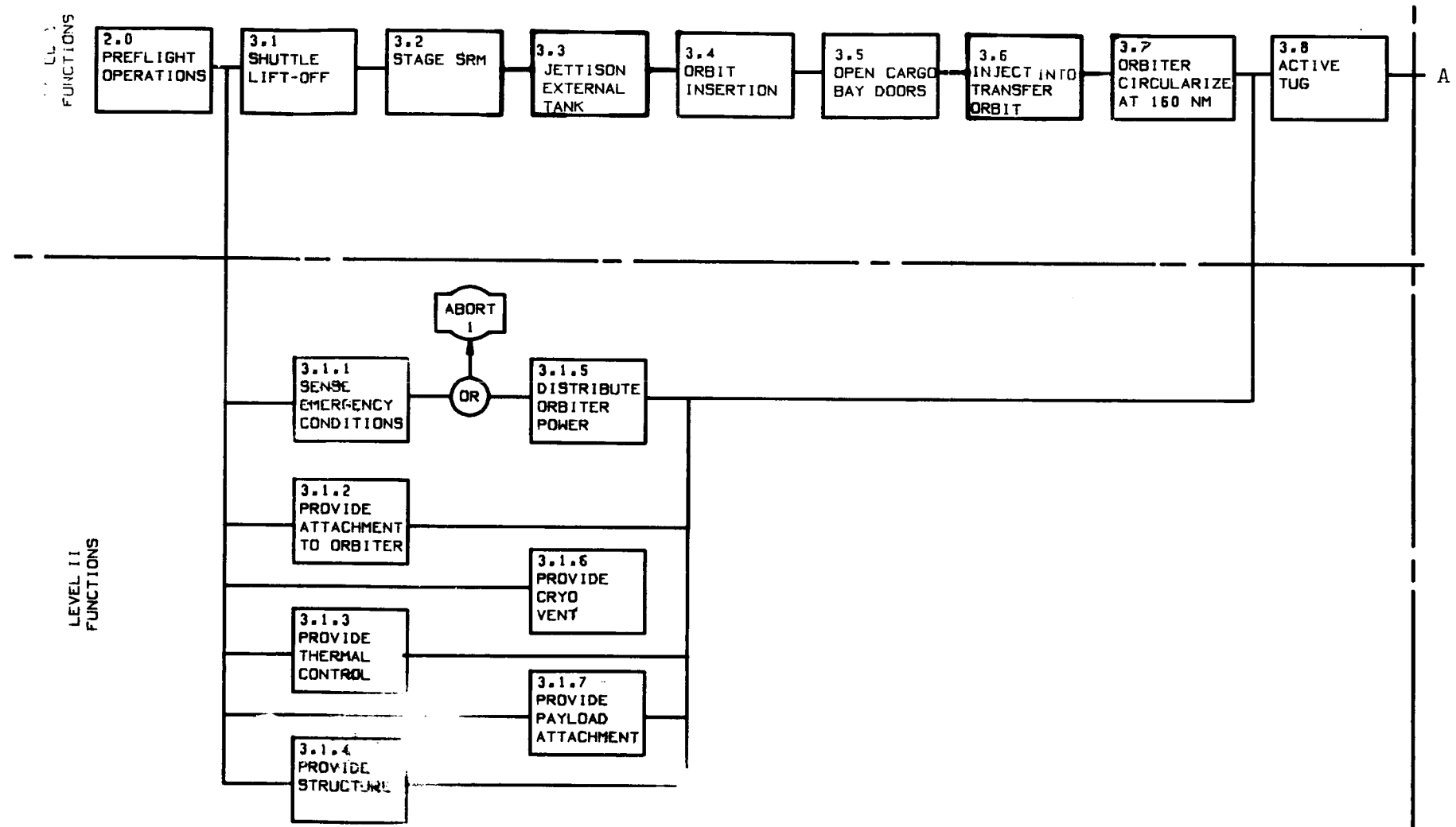

MISSION PHASE- LIFT-OFF TO ACTIVATE TUG

VI-1A

6.2.2.1 (cont)

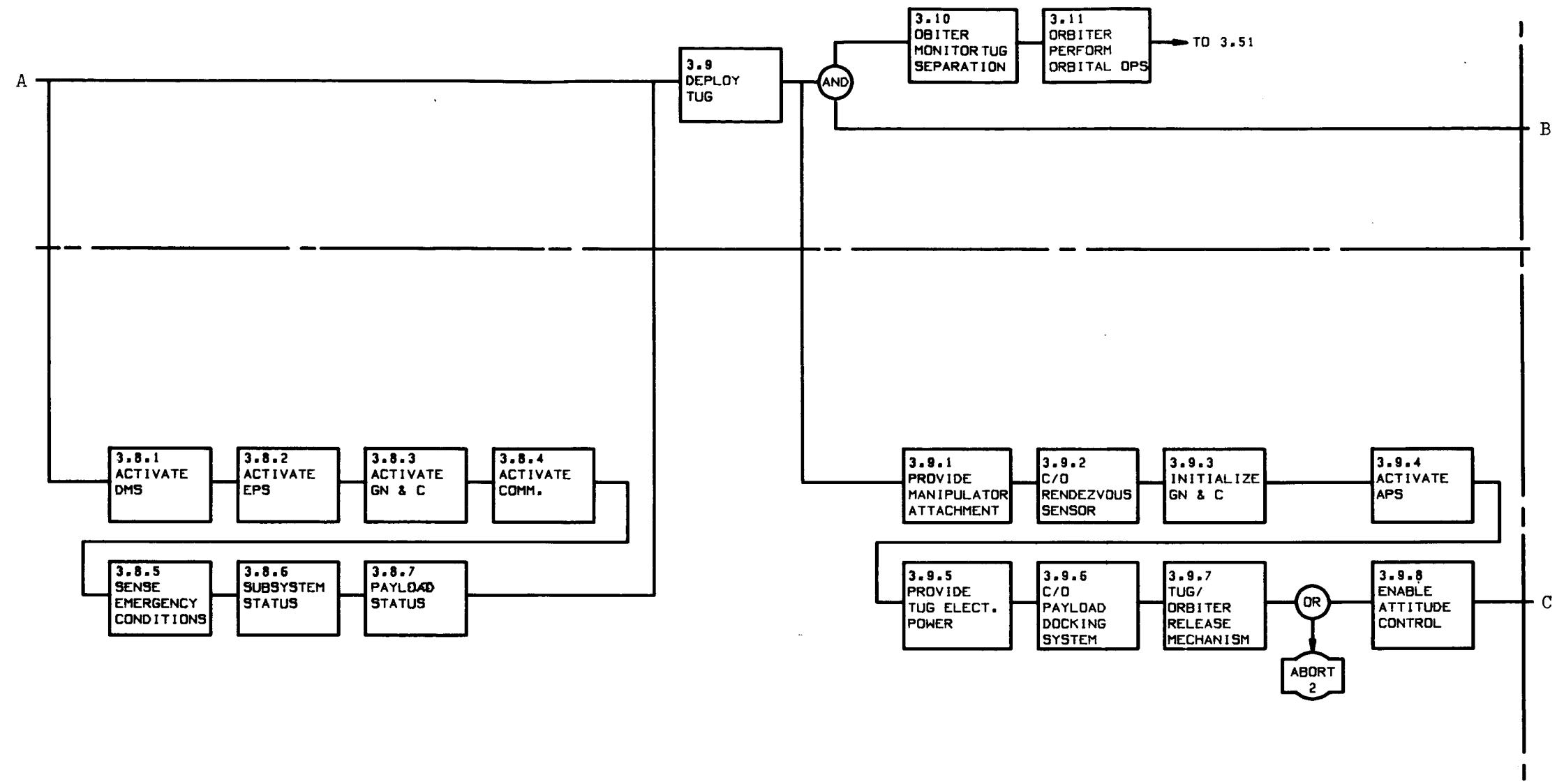

MISSION PHASE- ACTIVATE TUG TO PHASING ORBIT INSERTION

6.2.2.1 (cont)

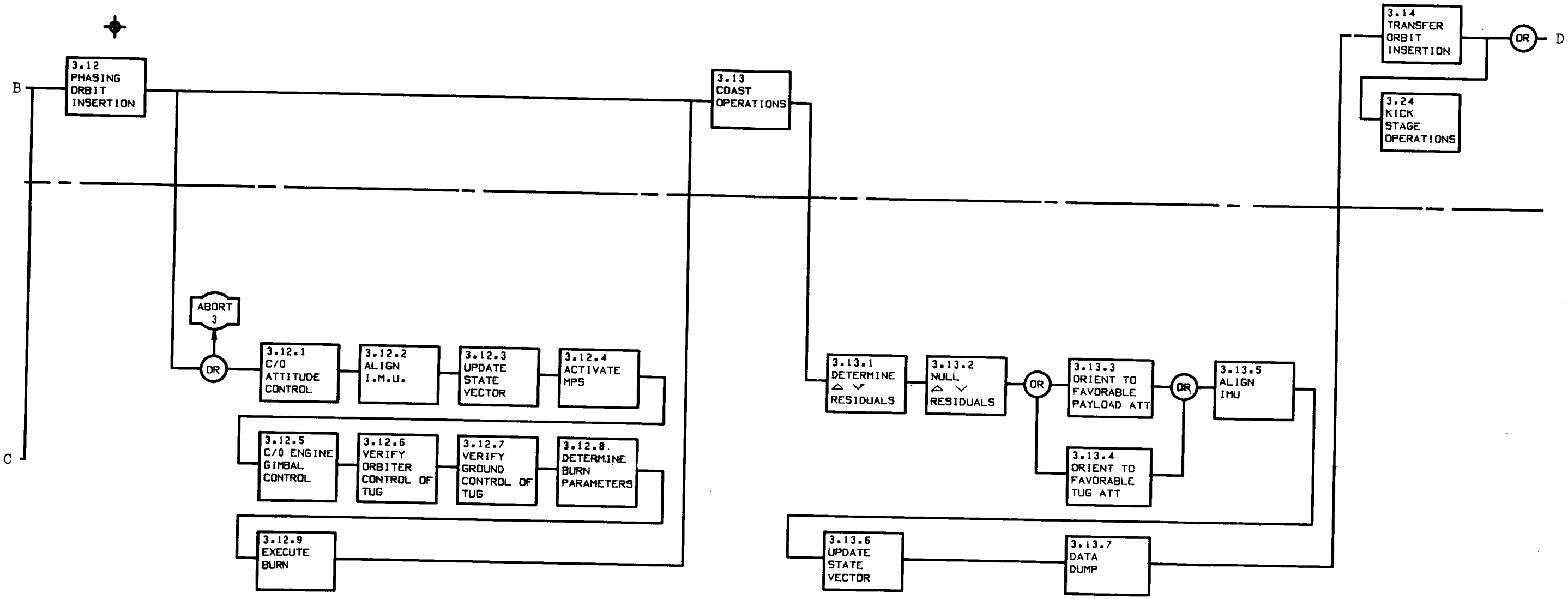

MISSION PHASE- PHASING ORBIT INSERTION TO TRANSFER ORBIT INSERTION

6.2.2.1 (cont)

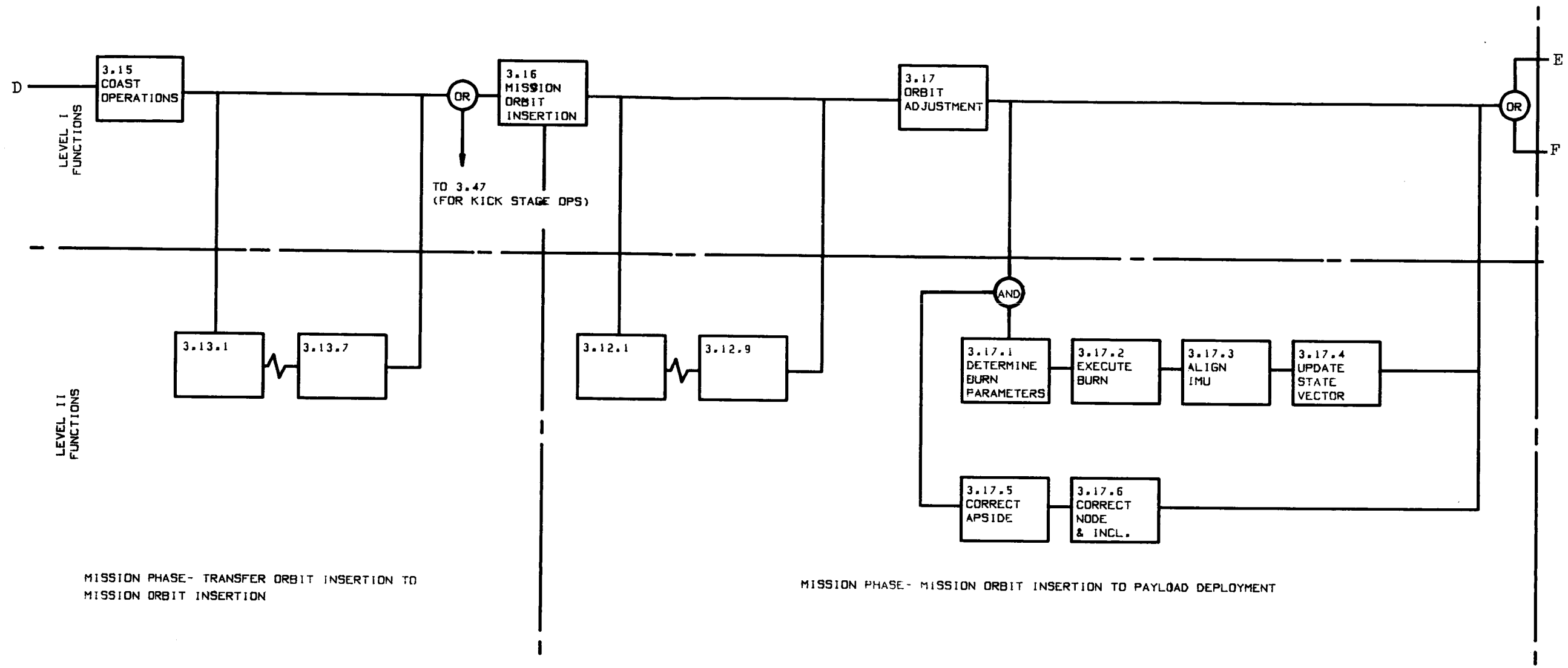
D
LEVEL I FUNCTIONS
3.15 COAST OPERATIONS
OR
3.16 MISSION ORBIT INSERTION
TO 3.47 (FOR KICK STAGE OPS)
3.17 ORBIT ADJUSTMENT
OR
E
F
LEVEL II FUNCTIONS
3.13.1
3.13.7
3.12.1
3.12.9
AND
3.17.1 DETERMINE BURN PARAMETERS
3.17.2 EXECUTE BURN
3.17.3 ALIGN IMU
3.17.4 UPDATE STATE VECTOR
3.17.5 CORRECT APSIDE
3.17.6 CORRECT NODE & INCL.
MISSION PHASE- TRANSFER ORBIT INSERTION TO MISSION ORBIT INSERTION
MISSION PHASE- MISSION ORBIT INSERTION TO PAYLOAD DEPLOYMENT

6.2.2.1 (cont)

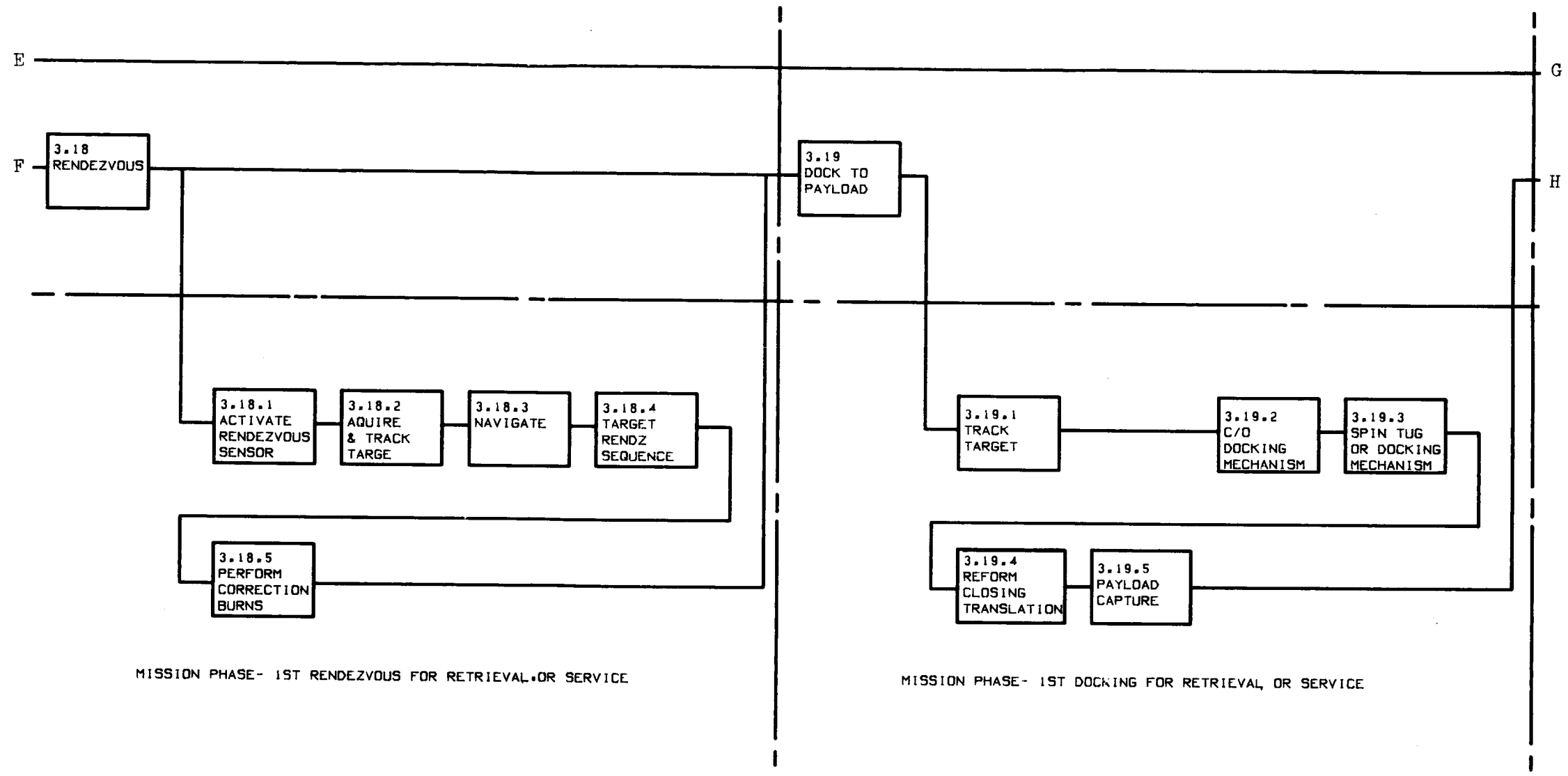
E
G
F
H
3.18
RENDEZVOUS
3.19
DOCK TO
PAYLOAD
3.18.1
ACTIVATE
RENDEZVOUS
SENSOR
3.18.2
AQUIRE
& TRACK
TARGE
3.18.3
NAVIGATE
3.18.4
TARGET
RENDZ
SEQUENCE
3.18.5
PERFORM
CORRECTION
BURNS
MISSION PHASE- 1ST RENDEZVOUS FOR RETRIEVAL.OR SERVICE
3.19.1
TRACK
TARGET
3.19.2
C/O
DOCKING
MECHANISM
3.19.3
SPIN TUG
OR DOCKING
MECHANISM
3.19.4
REFORM
CLOSING
TRANSLATION
3.19.5
PAYLOAD
CAPTURE
MISSION PHASE- 1ST DOCKING FOR RETRIEVAL, OR SERVICE

6.2.2.1 (cont)

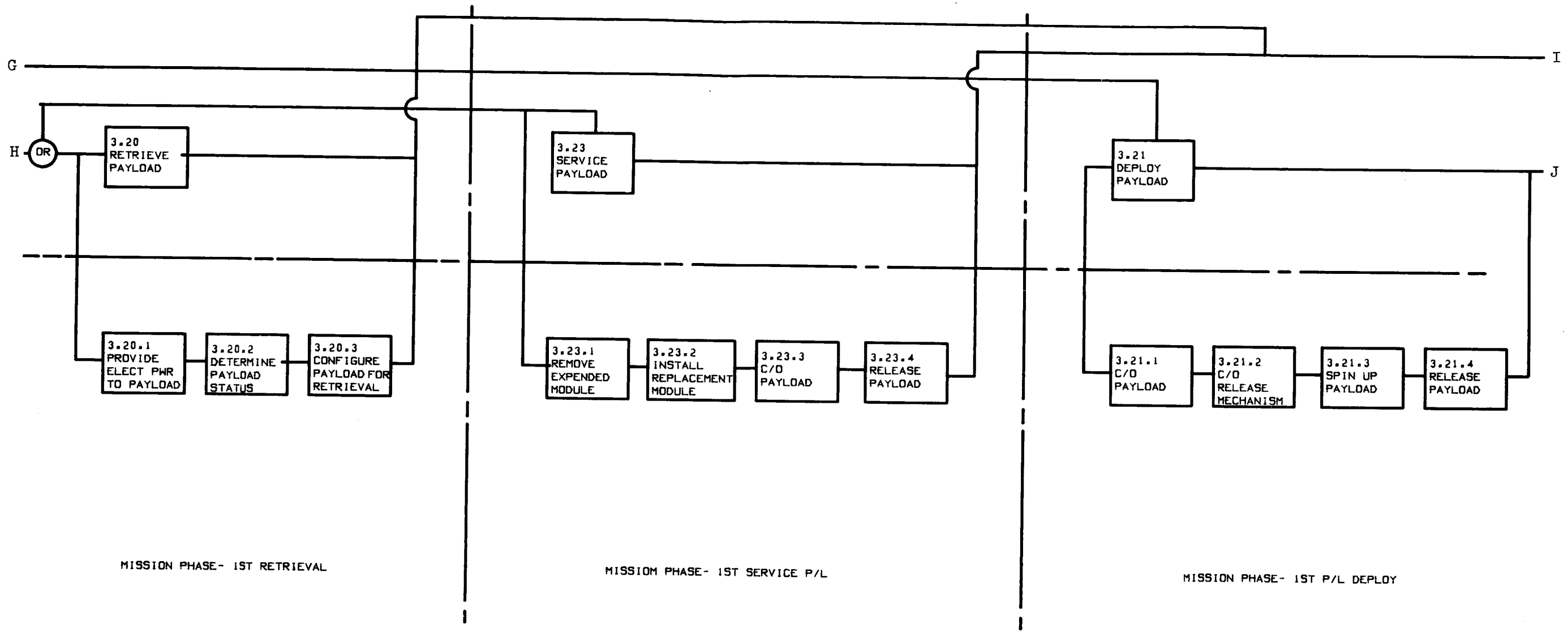
G
I
H
OR
3.20
RETRIEVE
PAYLOAD
3.20.1
PROVIDE
ELECT PWR
TO PAYLOAD
3.20.2
DETERMINE
PAYLOAD
STATUS
3.20.3
CONFIGURE
PAYLOAD FOR
RETRIEVAL
MISSION PHASE- 1ST RETRIEVAL
3.23
SERVICE
PAYLOAD
3.23.1
REMOVE
EXPENDED
MODULE
3.23.2
INSTALL
REPLACEMENT
MODULE
3.23.3
C/O
PAYLOAD
3.23.4
RELEASE
PAYLOAD
MISSIOM PHASE- 1ST SERVICE P/L
3.21
DEPLOY
PAYLOAD
J
3.21.1
C/O
PAYLOAD
3.21.2
C/O
RELEASE
MECHANISM
3.21.3
SPIN UP
PAYLOAD
3.21.4
RELEASE
PAYLOAD
MISSION PHASE- 1ST P/L DEPLOY

6.2.2.1 (cont)

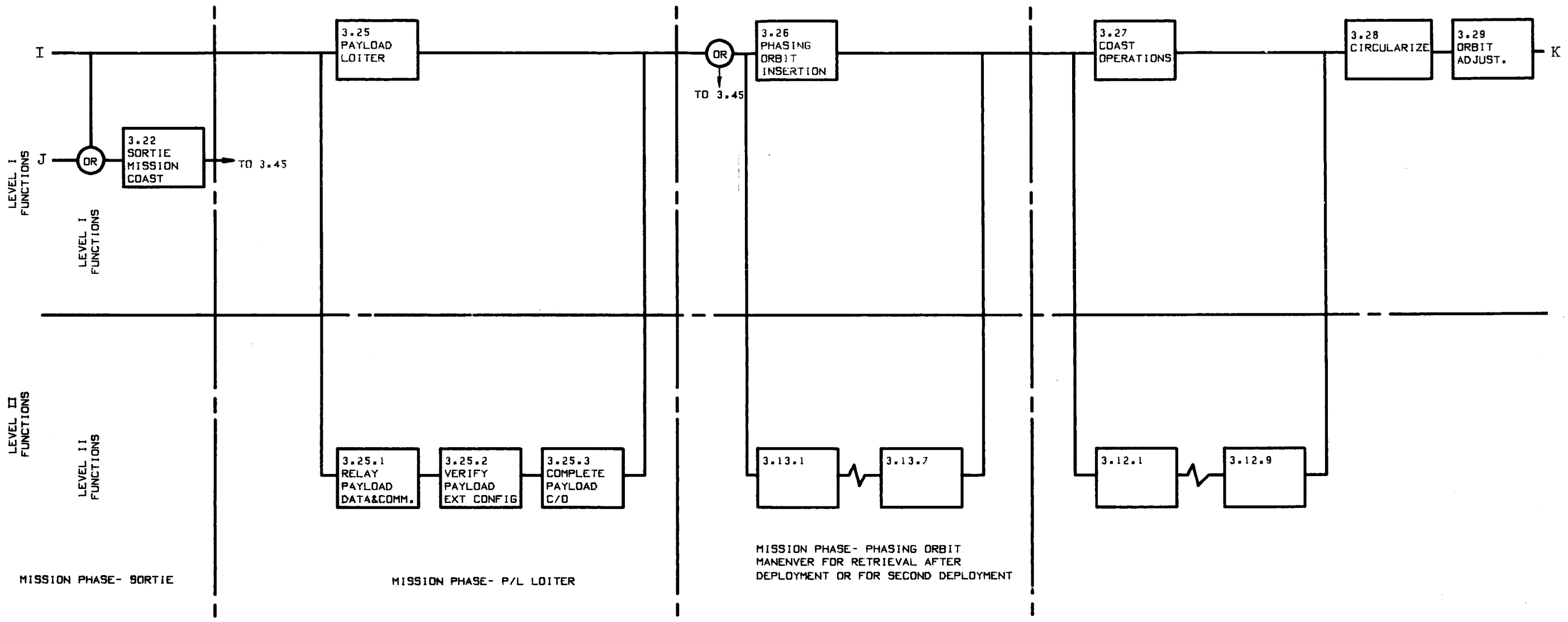
I
J
OR
3.22
SORTIE
MISSION
COAST
TO 3.45
LEVEL I
FUNCTIONS
LEVEL I
FUNCTIONS
LEVEL II
FUNCTIONS
LEVEL II
FUNCTIONS
3.25
PAYLOAD
LOITER
3.25.1
RELAY
PAYLOAD
DATA&COMM.
3.25.2
VERIFY
PAYLOAD
EXT CONFIG
3.25.3
COMPLETE
PAYLOAD
C/O
OR
TO 3.45
3.26
PHASING
ORBIT
INSERTION
3.13.1
3.13.7
3.27
COAST
OPERATIONS
3.12.1
3.12.9
3.28
CIRCULARIZE
3.29
ORBIT
ADJUST.
K
MISSION PHASE- SORTIE
MISSION PHASE- P/L LOITER
MISSION PHASE- PHASING ORBIT
MANENVER FOR RETRIEVAL AFTER
DEPLOYMENT OR FOR SECOND DEPLOYMENT

6.2.2.1 (cont)

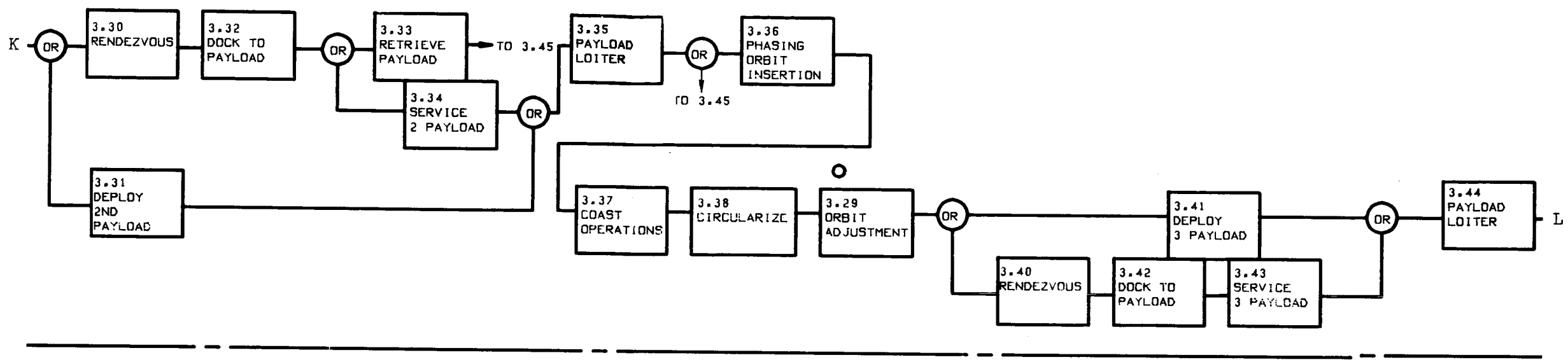

NOTE - LEVEL II FUNCTIONS IDENTICAL TO PREVIOUS EVENTS

MISSION PHASE- ON-ORBIT OPERAIONS

6.2.2.1 (cont)

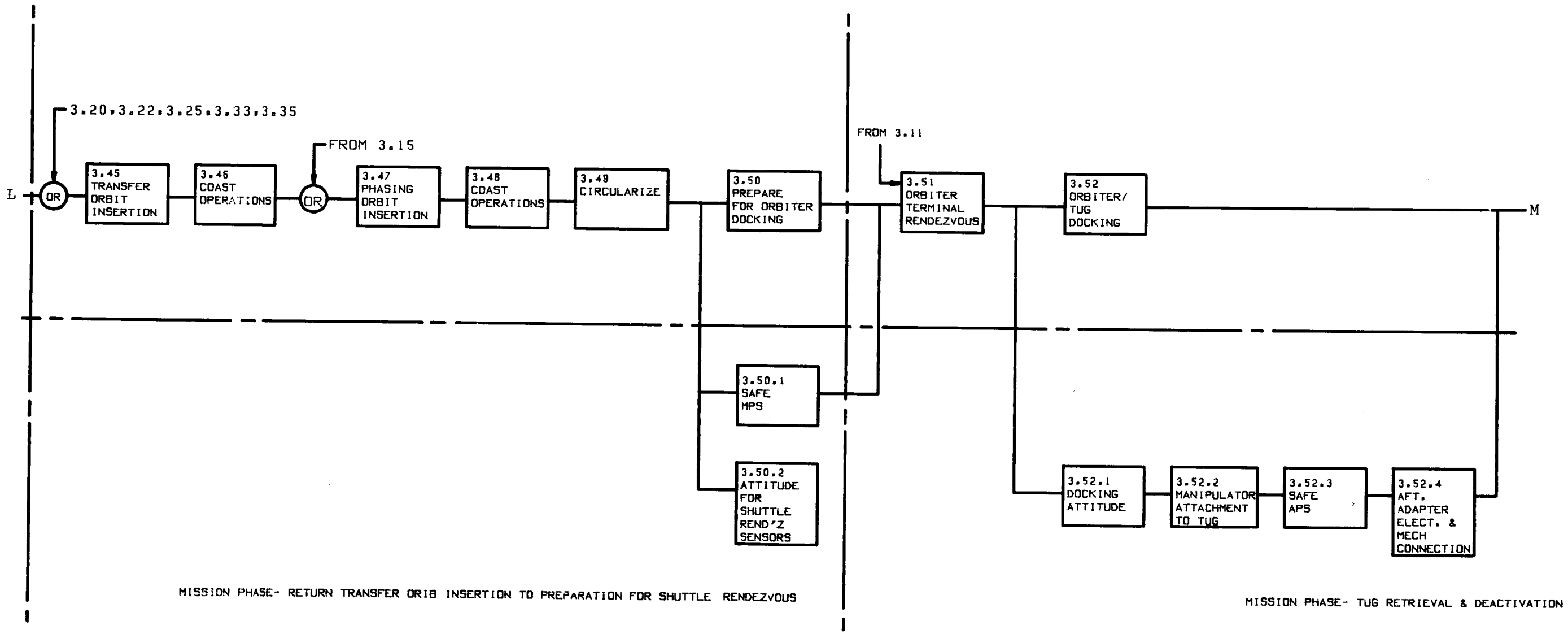
3.20,3.22,3.25,3.33,3.35
FROM 3.15
FROM 3.11
L
OR
3.45 TRANSFER ORBIT INSERTION
3.46 COAST OPERATIONS
OR
3.47 PHASING ORBIT INSERTION
3.48 COAST OPERATIONS
3.49 CIRCULARIZE
3.50 PREPARE FOR ORBITER DOCKING
3.51 ORBITER TERMINAL RENDEZVOUS
3.52 ORBITER/ TUG DOCKING
M
3.50.1 SAFE MPS
3.50.2 ATTITUDE FOR SHUTTLE REND'Z SENSORS
3.52.1 DOCKING ATTITUDE
3.52.2 MANIPULATOR ATTACHMENT TO TUG
3.52.3 SAFE APS
3.52.4 AFT. ADAPTER ELECT. & MECH CONNECTION
MISSION PHASE- RETURN TRANSFER ORIB INSERTION TO PREPARATION FOR SHUTTLE RENDEZVOUS
MISSION PHASE- TUG RETRIEVAL & DEACTIVATION

6.2.2.1 (cont)

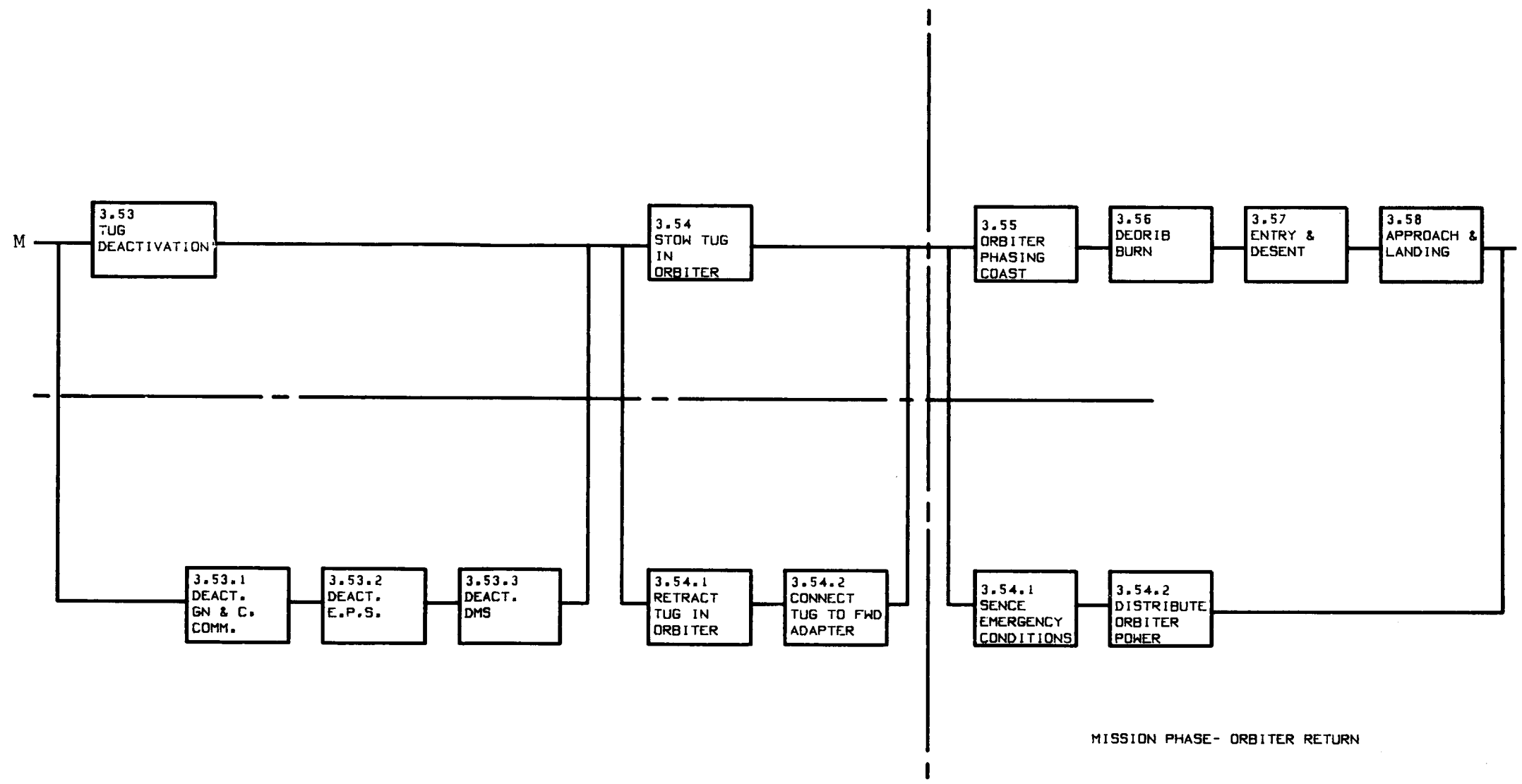
M
3.53
TUG
DEACTIVATION
3.53.1
DEACT.
GN & C.
COMM.
3.53.2
DEACT.
E.P.S.
3.53.3
DEACT.
DMS
3.54
STOW TUG
IN
ORBITER
3.54.1
RETRACT
TUG IN
ORBITER
3.54.2
CONNECT
TUG TO FWD
ADAPTER
3.55
ORBITER
PHASING
COAST
3.56
DEORIB
BURN
3.57
ENTRY &
DESENT
3.58
APPROACH &
LANDING
3.54.1
SENCE
EMERGENCY
CONDITIONS
3.54.2
DISTRIBUTE
ORBITER
POWER
MISSION PHASE- ORBITER RETURN

6.2.2.2 GROUND FUNCTIONAL REQUIREMENTS

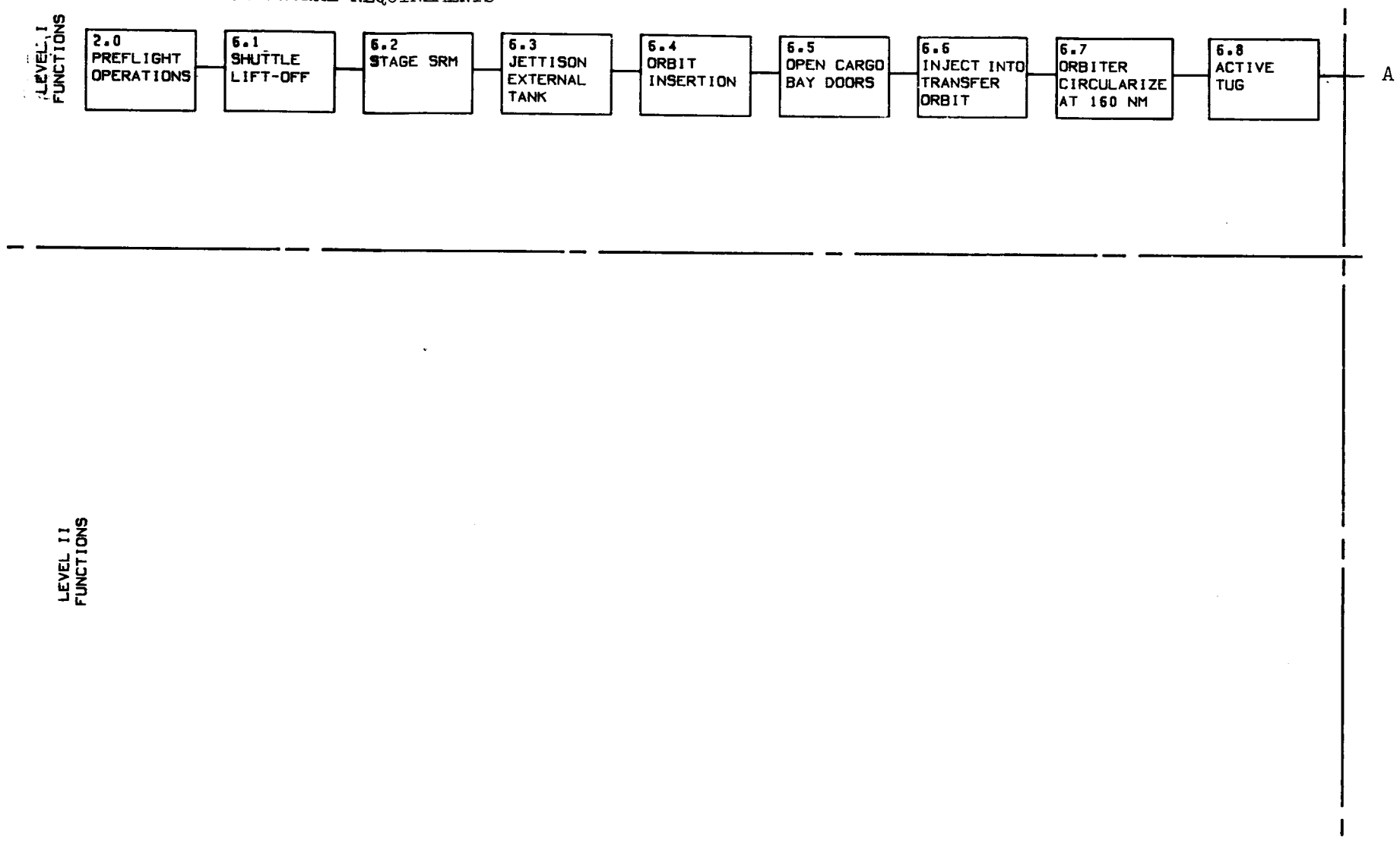

6.2.2.2 (cont)

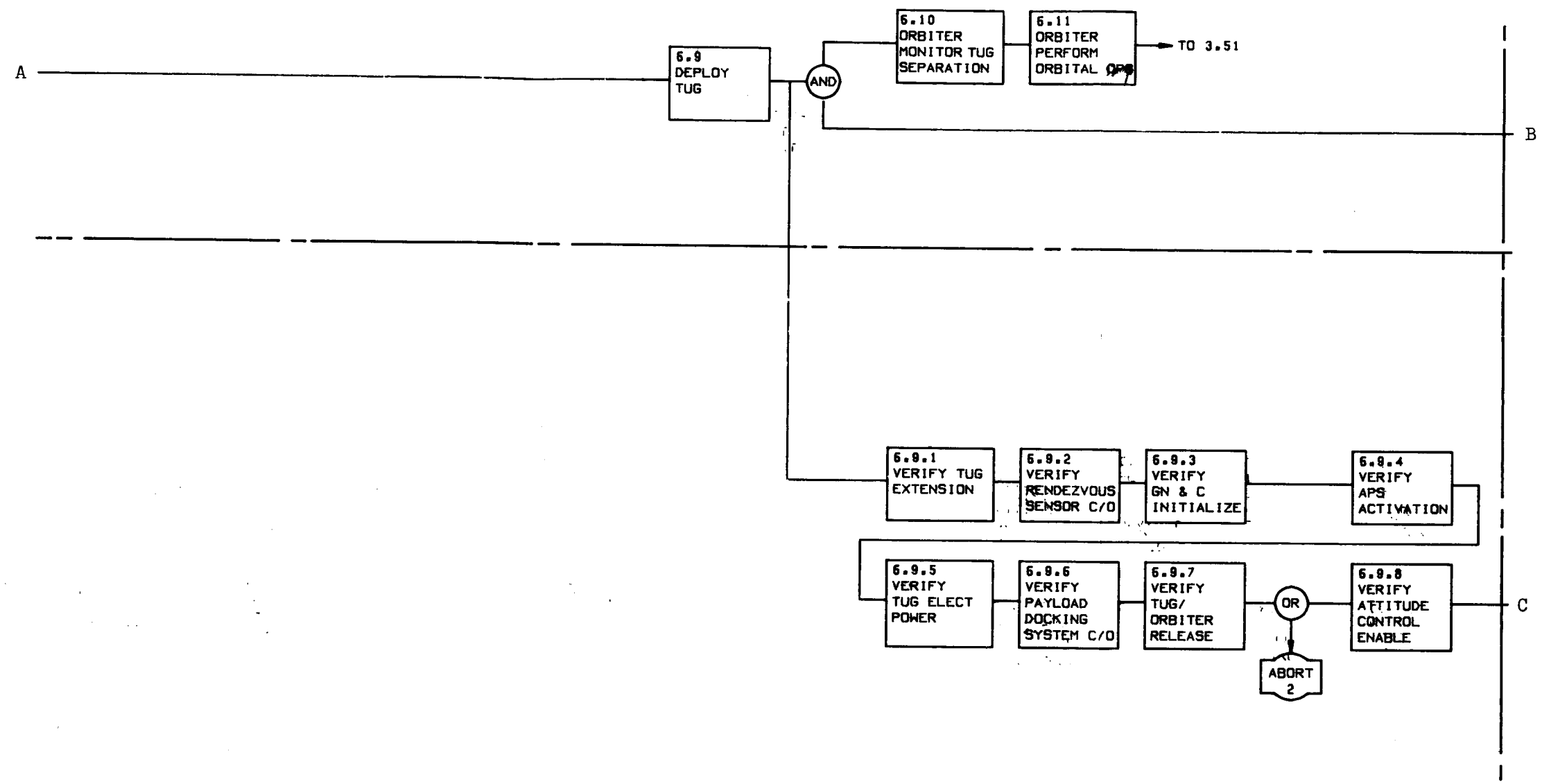

MISSION PHASE- ACTIVATE TUG TO PHASING ORBIT INSERTION

6.2.2.2 (cont)

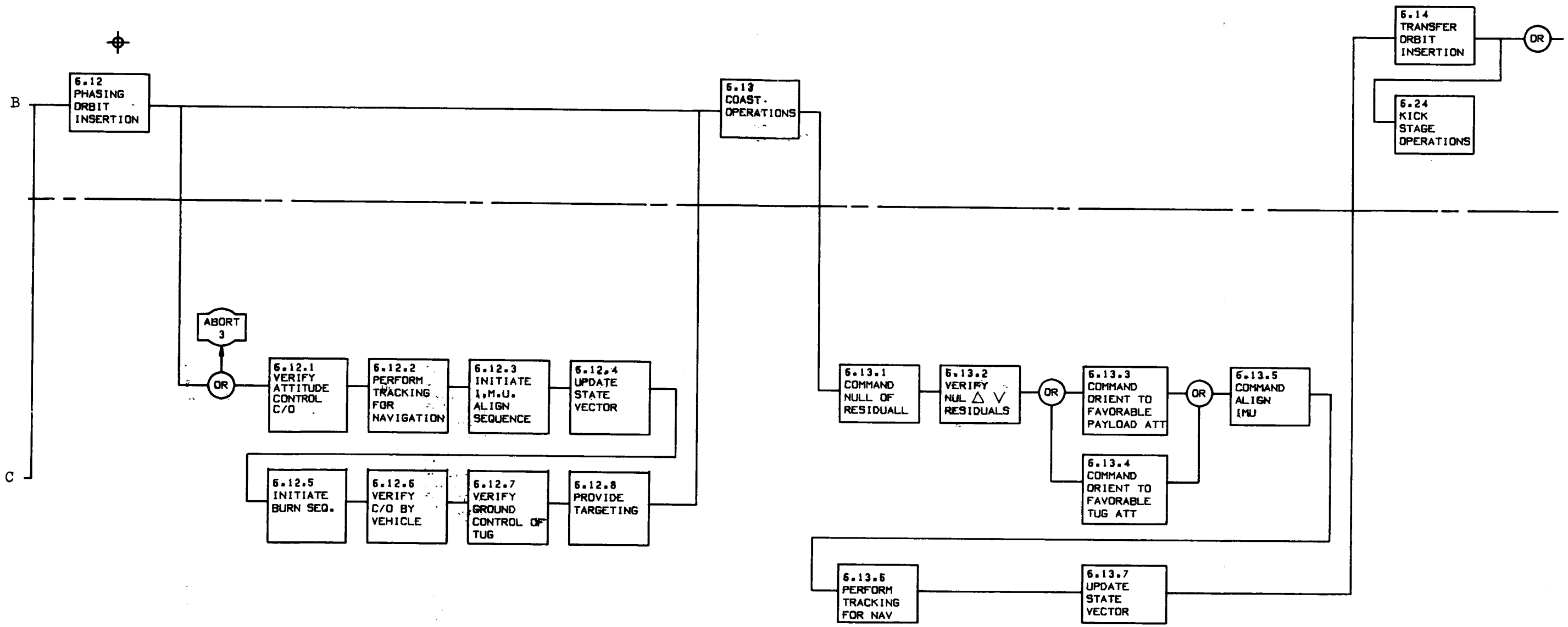

MISSION PHASE- PHASING ORBIT INSERTION TO TRANSFER ORBIT INSERTION

6.2.2.2 (cont)

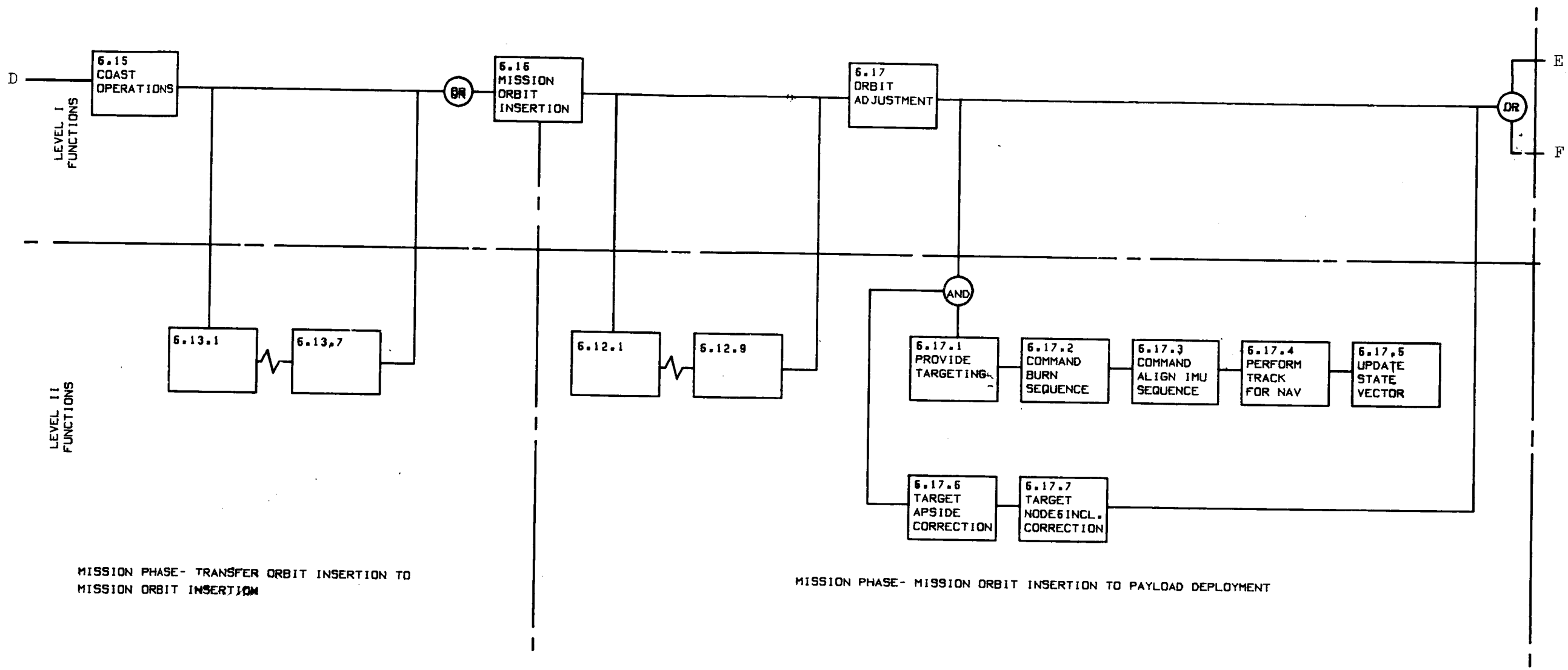
D
LEVEL I FUNCTIONS
6.15 COAST OPERATIONS
OR
6.16 MISSION ORBIT INSERTION
6.17 ORBIT ADJUSTMENT
OR
E
F
LEVEL II FUNCTIONS
6.13.1
6.13.7
6.12.1
6.12.9
AND
6.17.1 PROVIDE TARGETING
6.17.2 COMMAND BURN SEQUENCE
6.17.3 COMMAND ALIGN IMU SEQUENCE
6.17.4 PERFORM TRACK FOR NAV
6.17.5 UPDATE STATE VECTOR
6.17.6 TARGET APSIDE CORRECTION
6.17.7 TARGET NODE&INCL. CORRECTION
MISSION PHASE- TRANSFER ORBIT INSERTION TO MISSION ORBIT INSERTION
MISSION PHASE- MISSION ORBIT INSERTION TO PAYLOAD DEPLOYMENT

6.2.2.2 (cont)

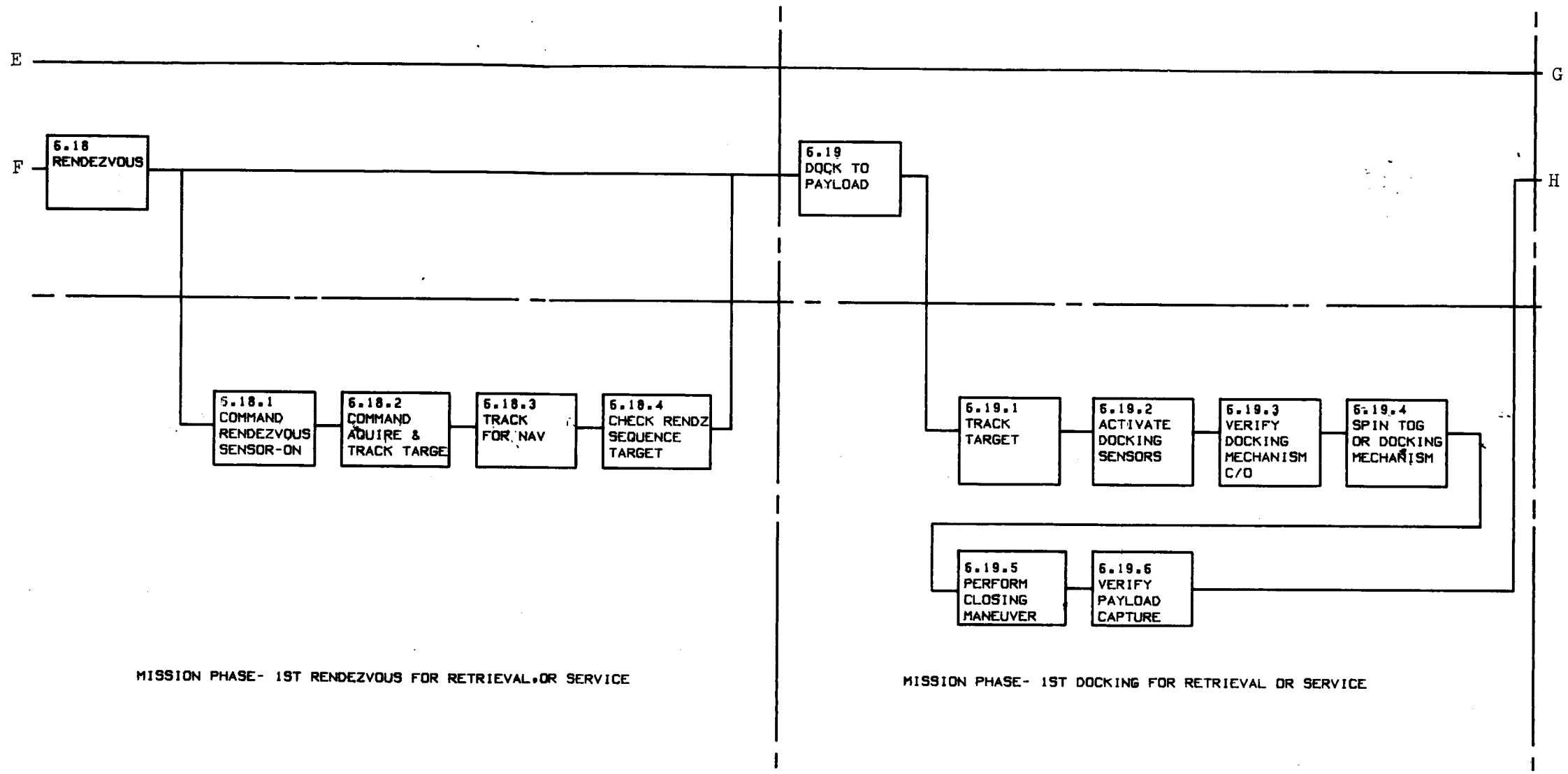
E
F
G
H
6.18
RENDEZVOUS
6.18.1
COMMAND
RENDEZVOUS
SENSOR-ON
6.18.2
COMMAND
ACQUIRE &
TRACK TARGE
6.18.3
TRACK
FOR NAV
6.18.4
CHECK RENDZ
SEQUENCE
TARGET
MISSION PHASE- 1ST RENDEZVOUS FOR RETRIEVAL,OR SERVICE
6.19
DOCK TO
PAYLOAD
6.19.1
TRACK
TARGET
6.19.2
ACTIVATE
DOCKING
SENSORS
6.19.3
VERIFY
DOCKING
MECHANISM
C/O
6.19.4
SPIN TOG
OR DOCKING
MECHANISM
6.19.5
PERFORM
CLOSING
MANEUVER
6.19.6
VERIFY
PAYLOAD
CAPTURE
MISSION PHASE- 1ST DOCKING FOR RETRIEVAL OR SERVICE

6.2.2.2 (cont)

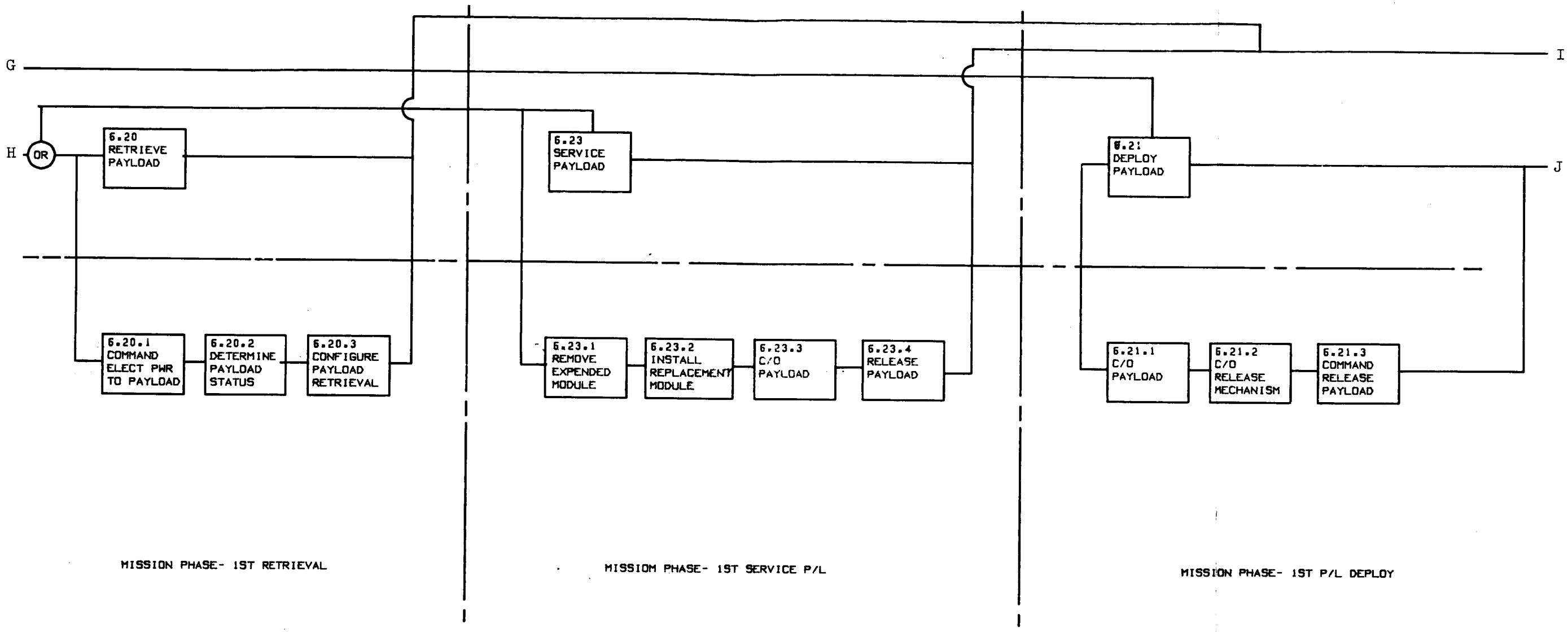
G
H
OR
6.20
RETRIEVE
PAYLOAD
6.20.1
COMMAND
ELECT PWR
TO PAYLOAD
6.20.2
DETERMINE
PAYLOAD
STATUS
6.20.3
CONFIGURE
PAYLOAD
RETRIEVAL
MISSION PHASE- 1ST RETRIEVAL
6.23
SERVICE
PAYLOAD
6.23.1
REMOVE
EXPENDED
MODULE
6.23.2
INSTALL
REPLACEMENT
MODULE
6.23.3
C/O
PAYLOAD
6.23.4
RELEASE
PAYLOAD
MISSIOM PHASE- 1ST SERVICE P/L
I
6.21
DEPLOY
PAYLOAD
J
6.21.1
C/O
PAYLOAD
6.21.2
C/O
RELEASE
MECHANISM
6.21.3
COMMAND
RELEASE
PAYLOAD
MISSION PHASE- 1ST P/L DEPLOY

6.2.2.2 (cont)

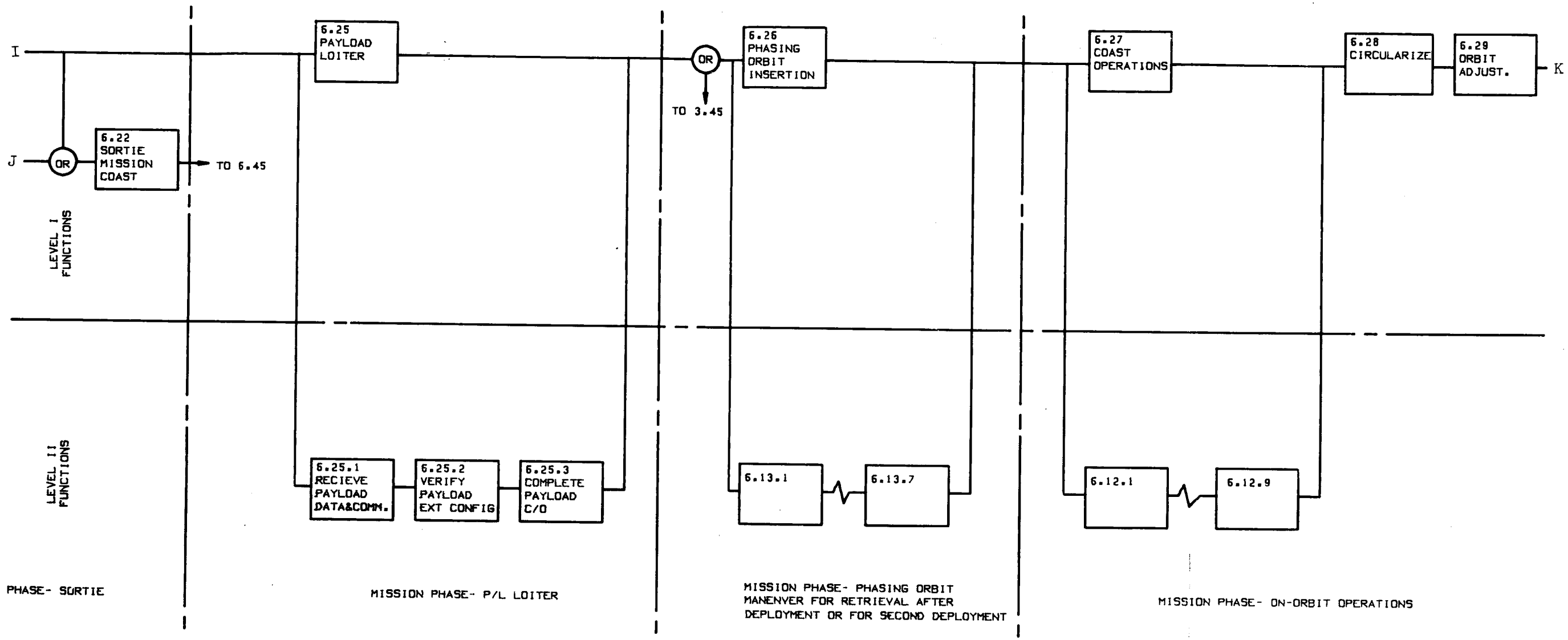
I
J
OR
6.22
SORTIE
MISSION
COAST
TO 6.45
LEVEL I
FUNCTIONS
LEVEL II
FUNCTIONS
6.25
PAYLOAD
LOITER
6.25.1
RECIEVE
PAYLOAD
DATA&COMM.
6.25.2
VERIFY
PAYLOAD
EXT CONFIG
6.25.3
COMPLETE
PAYLOAD
C/O
OR
TO 3.45
6.26
PHASING
ORBIT
INSERTION
6.13.1
6.13.7
6.27
COAST
OPERATIONS
6.12.1
6.12.9
6.28
CIRCULARIZE
6.29
ORBIT
ADJUST.
K
MISSION PHASE- SORTIE
MISSION PHASE- P/L LOITER
MISSION PHASE- PHASING ORBIT
MANENVER FOR RETRIEVAL AFTER
DEPLOYMENT OR FOR SECOND DEPLOYMENT
MISSION PHASE- ON-ORBIT OPERATIONS

6.2.2.2 (cont)

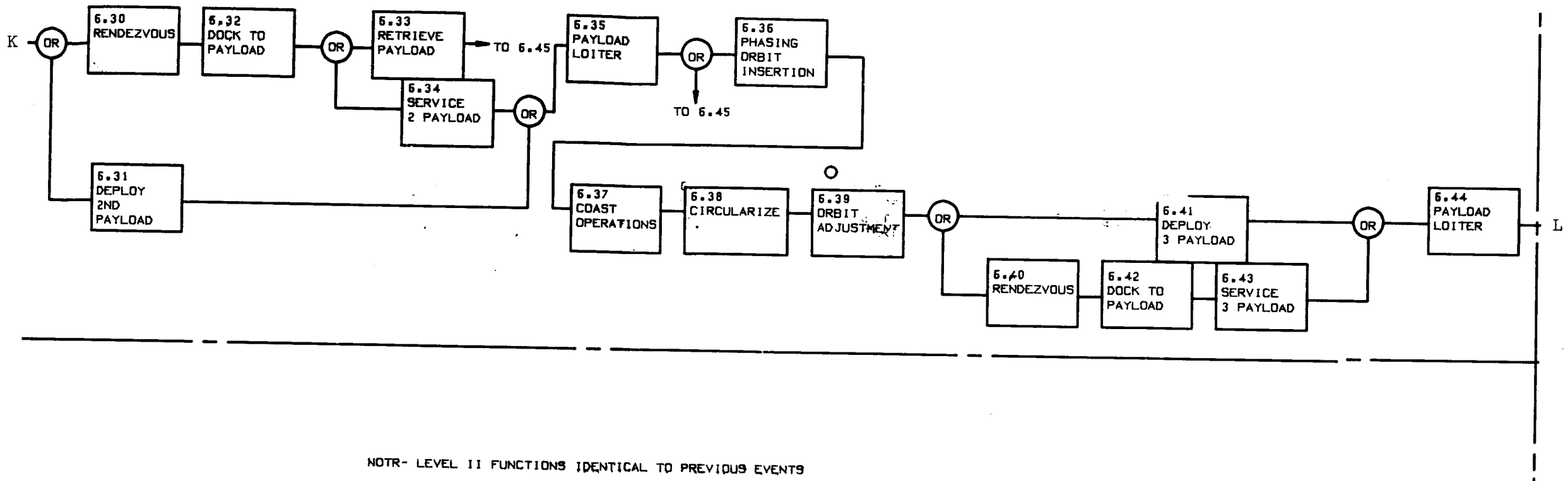

MISSION PHASE- ON-ORBIT OPERATIONS

6.2.2.2 (cont)

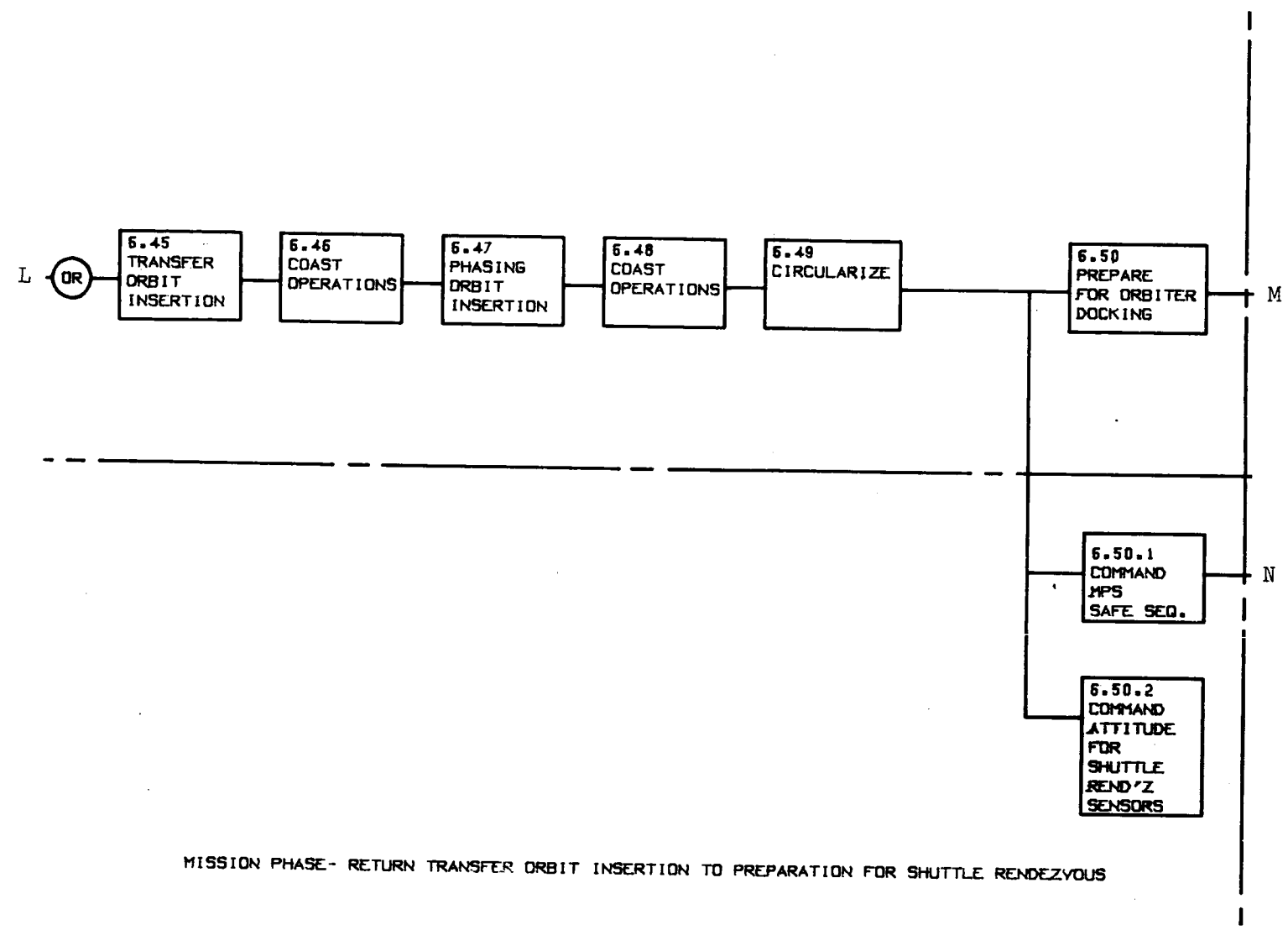

MISSION PHASE- RETURN TRANSFER ORBIT INSERTION TO PREPARATION FOR SHUTTLE RENDEZVOUS

6.2.2.2 (cont)

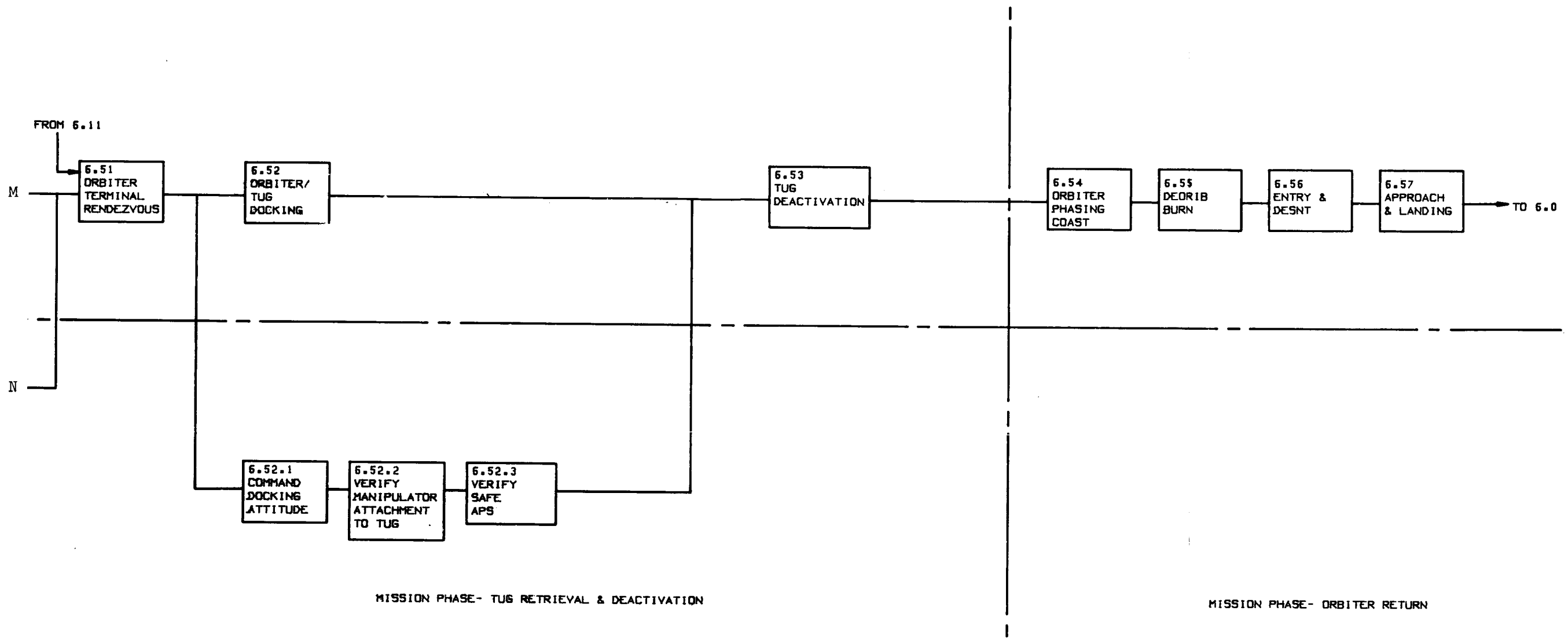
FROM 6.11
M
N
6.51 ORBITER TERMINAL RENDEZVOUS
6.52 ORBITER/ TUG DOCKING
6.53 TUG DEACTIVATION
6.54 ORBITER PHASING COAST
6.55 DEORIB BURN
6.56 ENTRY & DESNT
6.57 APPROACH & LANDING
TO 6.0
6.52.1 COMMAND DOCKING ATTITUDE
6.52.2 VERIFY MANIPULATOR ATTACHMENT TO TUG
6.52.3 VERIFY SAFE APS
MISSION PHASE- TUG RETRIEVAL & DEACTIVATION
MISSION PHASE- ORBITER RETURN

TUG MISSION TIMELINE AND NETWORK COVERAGE SCHEDULE - DEPLOY AND RETRIEVE PAYLOAD IN GEOSYNC. ORBIT - SINGLE STAGE (NASA)

TUG OPERATION			GROUND OPERATION				
						AUTONOMY	
G.E.T. HR:MIN:SEC	ΔT HR:MIN:SEC	EVENT OPERATION	STA	G.E.T. HR:MIN:SEC	ΔT MIN	LEVEL III A	LEVEL II B
00:00:00		LAUNCH TO ORBIT					
00:00:00		Liftoff (489 Sec. Burn)					
00:01:52		Stage SRM's					
		Verify Tank Ready For Separation					
00:08:09		Main Engine Cutoff					
		Coast - Jettison External Tank					
		OMS Burn (185 Sec. Burn)					
00:11:44		OMS Cutoff 50 x 100 NM Orbit					
00:11:44	00:11:44	ORBITER OPERATIONS					
		Release Cargo Bay Door Locks					
00:12:10	00:00:26	Open Orbiter Cargo Bay Doors					
		Update G & N					
		Verify Electrical Power To Tug					
		Monitor Tug Critical Parameters					
		Checkout Manipulator Control Station					
		Checkout Manipulator					
		Release Manipulator Arm Latches					
		Deploy Manipulator					
		Connect Manipulator to Tug					
		Coast					
00:55:22	00:43:12	Inject Into 100 x 160 NM Orbit (223 Sec. OMS Burn)					
		Coast	HAW	1:19:09	6.2		
01:39:57	00:44:35	Circularize At 160 NM (120 Sec. OMS Burn)	GDS	1:29:49	5.8	Shuttle Support	Shuttle Support
01:40:00	00:00:03	Update G & N	ROS	1:37:24	5.3		
			MIL	1:37:29	6.8	Note: All Station Contacts Not Shown	
		Coast	GDS	4:41:24	3.9		
		Establish 6/3 Hr. Barbeque Thermal Cycling	QUI	6:28:29	6.3		
			BUR	6:55:59	6.8		

Table 6.2.2.3 - 1

6.2.2.3.1.1 TUG MISSION TIMELINE AND NETWORK COVERAGE SCHEDULE - DEPLOY AND RETRIEVE PAYLOAD IN GEOSYNC. ORBIT - SINGLE STAGE (NASA)

TUG OPERATION			GROUND OPERATION				
						AUTONOMY	
G.E.T. HR:MIN:SEC	ΔT HR:MIN:SEC	EVENT OPERATION	STA	G.E.T. HR:MIN:SEC	ΔT MIN	LEVEL III A	LEVEL II B
07:00:00	05:20:00	TUG CHECKOUT & DEPLOYMENT					
		Activate Tug					
		Verify Tug Ready For Activation	TAN	7:01:09	6.8	Shuttle Support	Shuttle Support
		Power Comm. & Data Management Subsystem	HAW	7:42:24	6.8		
		Verify Thermal Control					
		Power G & N & Initialize					
		Verify MPS					
		Activate EPS Fuel Cells					
		Verify Payload Status					
		Verify Adapter Ready For Extension					
		Verify Tug/Payload Ready For Extension					
		Release Tug Latches					
08:00:00	01:00:00	Extend Tug/Payload					
		Checkout Tug	AGO	08:11:24	2.8		
		Activate APS					
		Hot Fire Selective APS Thusters					
		Verify MPS Gimbal Drive					
		Update G & N					
		Configure G & N For Release					
		Verify Tug/Orbiter RF Links					
		Switch from Orbiter to Tug Power					
		Terminate Tug/Orbiter Hardlines					
		Verify Tug/Payload Ready For Deployment					
		Release Tug From Orbiter					
08:30:00	00:30:00	Deploy Tug	BUR	08:32:24	5.0	Verify Tug Ext.	Verify Tug Ext.
		Extend Manipulator	TAN	08:38:24	3.3	Verify Tug Deploy	Verify Tug Deploy
08:40:00	00:10:00	Release Tug				Verify Attitude Control	Verify Attitude Control
		Enable Attitude Control					

Table 6.2.2.3 - 1 (cont.)

6.2.2.3.1.1 TUG MISSION TIMELINE AND NETWORK COVERAGE SCHEDULE - DEPLOY AND RETRIEVE PAYLOAD IN GEOSYNC. ORBIT - SINGLE STAGE (NASA)

TUG OPERATION			GROUND OPERATION				
						AUTONOMY	
G.E.T. HR:MIN:SEC	ΔT HR:MIN:SEC	EVENT OPERATION	STA	G.E.T. HR:MIN:SEC	ΔT MIN	LEVEL III A	LEVEL II B
09:18:34	00:38:34	PAYLOAD PLACEMENT Orbiter Translation Tug Readiness Verification Tug Maintain Attitude Align G & N Maneuver For Orbital Navigation Update State Vector Verify MPS Ready For Operation Maneuver To Burn Attitude Verify Tug & Payload Ready For Separation Activate Average g	HAW GWM	09:18:34 10:43:49	5.8 2.1	o Tug Readiness Verify o Initiate Align Sequence o Track for Nav Update State Vector Verify MPS Ready Initiate Burn Seq. Provide Targeting	Receive Tug Status Receive P/L Status
11:00:36	01:42:02	Phasing Orbit Insertion (667 Sec MPS Burn) 182 x 4105 NM Monitor Burn Null Burn Residuals (APS) If Required Deactivate Average g Perform MCC(s) If Required Coast - Attitude Hold Payload (Wide D.B.) ± 30° To Sun Align G & N Maneuver For Orbital Navigation Update State Vector Maneuver To Burn Attitude Verify Tug & Payload Ready For Burn Activate Average g	AGO BUR TAN	11:15:36 11:51:51 12:14:31	10 15 15	Command Null of Residuals Track for Nav (10 Min) Track for Nav (15 Min) Target & Command MCC Track for Nav (15 Min) Initiate IMU Align Update State Vector Verify Ready for Burn Initiate Burn Seq.	Station Dump (10 Min)
13:54:36	02:54:00	Transfer Orbit Insertion (420 Sec. MPS Burn) 186 x 19322 NM Monitor Burn Null Burn Residuals (APS) If Required Deactivate Average g Perform MCC(s) If Required Coast Align G & N Maneuver For Orbital Navigation	 AGO QUI	 14:17:11 14:18:46	 10 10	Command Null of Resid. Track for Nav (10 Min) Track for Nav (10 Min)	Status Dump (10 Min)

Table 6.2.2.3 - 1 (cont.)

6.2.2.3.1.1 TUG MISSION TIMELINE AND NETWORK COVERAGE SCHEDULE - DEPLOY AND RETRIEVE PAYLOAD IN GEOSYNC. ORBIT - SINGLE STAGE (NASA)

TUG OPERATION			GROUND OPERATION				
						AUTONOMY	
G.E.T. HR:MIN:SEC	ΔT HR:MIN:SEC	EVENT OPERATION	STA	G.E.T. HR:MIN:SEC	ΔT MIN	LEVEL III A	LEVEL II B
		Update State Vector Attitude Hold Payload (Wide D.B.) ± 30° To Sun Perform G & N Alignment Maneuver To Burn Attitude Verify Tug & Payload Ready For Burn Activate Average g	MIL GDS	14:31:36 14:38:31	20 20	Track for Nav (20 Min) Target & Command MCC Initiate IMU Align (20 Min) Update State Vector Target MOI	
19:11:24	05:16:48	Mission Orbit Insertion (410 Sec MPS Burn) 19323 x 19323 NM Monitor Burn Null Burn Residuals (APS) If Required Deactivate Average g Align G & N Maneuver For Orbital Navigation Update State Vector	ROS	19:08:00	25	Initiate Burn Seq. Monitor MOI Burn Command Null of Resid. Track for Nav.	Status Dump (10 Min)
19:20:24	00:09:00	PAYLOAD DEPLOYMENT Maneuver To Deploy Attitude Verify Payload Status Go Arm Payload Release Deploy Payload 19323 x 19323 NM Visually Inspect Payload Stow/Safe Deployment Mechanism Separate From Payload (14 Sec. APS Burn)	GDS	19:15:00	20	o Command Maneuver to Deploy Attitude o Initiate P/L Release o Activate TV o Visually Inspect P/L	o Receive P/L Status o Activate TV o Visually Inspect P/L
		PAYLOAD LOITER Relay Payload Data & Commands Verify Payload External Configuration Complete Payload Checkout	ROS	19:30:00	15	Track for Nav.	

Table 6.2.2.3 - 1 (cont.)

6.2.2.3.1.1 TUG MISSION TIMELINE AND NETWORK COVERAGE SCHEDULE - DEPLOY AND RETRIEVE PAYLOAD IN GEOSYNC. ORBIT - SINGLE STAGE (NASA)

TUG OPERATION			GROUND OPERATION				
						AUTONOMY	
G.E.T. HR:MIN:SEC	ΔT HR:MIN:SEC	EVENT OPERATION	STA	G.E.T. HR:MIN:SEC	ΔT MIN	LEVEL III A	LEVEL II B
		PAYLOAD RENDEZVOUS	MIL	20:05:00	15	Initiate Align	
		Align G & N				Update State Vector	
		Maneuver For Orbital Navigation				Provide Targeting	
		Update State Vector				Initiate Phase Burn	
		Maneuver To Burn Attitude					
		Activate Average g					
20:11:24	00:51:00	Phasing Orbit Insertion (3 Sec. MPS Burn) 18886 x 19323 NM	GDS	20:10:00	10	Monitor Burn	Status Dump
		Monitor Burn					
		Deactivate Average g	ROS	20:40:00	10	Track for Nav.	
		Align G & N	GDS	31:00:00	10	Initiate Align	
		Maneuver For Orbital Navigation				Update State Vector	
		Update State Vector				Target Apogee Adj.	
		Maneuver To Burn Attitude				Initiate Burn Seq.	
		Activate Average g					
32:11:24	12:00:00	Apogee Adjust (5 Sec. APS Burn) 18886 x 19283 NM					
		Monitor Burn	MIL	32:05:00	10	Monitor Burn	Status Dump
		Deactivate Average g					
		Coast (Wide D.B.)	ROS	32:30:00	10	Track for Nav.	
		Align G & N	GDS	43:50:00	20	Initiate Align	
		Search & Aquire Target				Update State Vector	
		Update State Vector				Target Phase Adj.	
		Maneuver To Burn Attitude				Initiate Burn Seq.	
		Activate Average g					
44:00:24	11:49:00	Phasing Adjust	MIL	43:56:00	10	Monitor Burn	Status Dump
		Monitor Burn					
		Deactivate Average g					
		Coast (Wide D.B.)	ROS	44:30:00	20	Track for Nav.	
		Align G & N				Initiate Align	
		Track Target				Update State Vector	
		Update State Vector				Initiate RR Aquisition	
		Maneuver To Burn Attitude				Verify Acquisition	
		Activate Average g				Initiate Rend. Seq.	
82:00:00	37:59:36	Midcourse Correction					
		Deactivate Average g					

Table 6.2.2.3 - 1 (cont.)

6.2.2.3.1.1 TUG MISSION TIMELINE AND NETWORK COVERAGE SCHEDULE - DEPLOY AND RETRIEVE PAYLOAD IN GEOSYNC. ORBIT - SINGLE STAGE (NASA)

TUG OPERATION			GROUND OPERATION				
						AUTONOMY	
G.E.T. HR:MIN:SEC	ΔT HR:MIN:SEC	EVENT OPERATION	STA	G.E.T. HR:MIN:SEC	ΔT MIN	LEVEL III A	LEVEL II B
		Coast (Wide D.B.) Align G & N Track Target Update State Vector Maneuver To Burn Attitude Activate Average g					
87:00:00	05:00:00	Circularization (2 Sec. MPS Burn) 19283 x 19283 Monitor Burn Deactivate Average g	MIL	86:55:00	10	Monitor Burn	Status Dump
		Coast (Wide D.B.) Align G & N Track Target Update State Vector Maneuver To Burn Attitude Activate Average g	GDS	88:50:00	10	Verify TPI Solution	
89:03:00	02:03:00	Terminal Phase Initiation (2 Sec. MPS Burn) Monitor Burn Deactivate Average g	ROS	89:00:00	10	Monitor Burn	Status Dump
		Coast (Wide D.B.) Align G & N Track Target Update State Vector Maneuver To Burn Attitude Activate Average g					
		Midcourse Correction If Required Align G & N Track Target Update State Vector Maneuver To Burn Attitude Activate Average g					
91:00:00	01:57:00	Terminal Phase Final (42 Sec. APS Burn) Braking Gates Monitor Burn Deactivate Average g	ROS	91:00:00	10		Status Dump

Table 6.2.2.3 - 1 (cont.)

6.2.2.3.1.1 TUG MISSION TIMELINE AND NETWORK COVERAGE SCHEDULE - DEPLOY AND RETRIEVE PAYLOAD IN GEOSYNC. ORBIT - SINGLE STAGE (NASA)

TUG OPERATION			GROUND OPERATION				
						AUTONOMY	
G.E.T. HR:MIN:SEC	ΔT HR:MIN:SEC	EVENT OPERATION	STA	G.E.T. HR:MIN:SEC	ΔT MIN	LEVEL III A	LEVEL II B
91:05:00	00:05:00	PAYLOAD DOCKING Align G & N Activate TV Aquire & Track Target Maneuver To Station Keeping Verify Payload Stability & Configuration For Docking Maneuver To Docking Attitude	GDS	91:05:00	45	Activate TV Perform Remote Docking	
91:35:00	00:30:00	Perform Closing Maneuver (7 Sec. APS Burn)					
91:35:00		Payload Capture Hard Docking Switch Payload To Tug Power Safe Payload Vent Unrequired Consumables Verify Payload Go For Return	MIL ROS	91:35:00 91:40:00	10 20	Verify P/L Status Track for Nav. Initiate Align Update State Vector Target DTOI Initiate Burn Seq.	P/L Status Dump
91:50:00	00:15:00	RENDEZVOUS WITH ORBITER Coast (Wide D.B.) Align G & N Receive State Vector Update From Orbiter Maneuver To Burn Attitude Activate Average g					
100:11:24	08:21:24	Transfer Orbit Insertion (228 Sec. MPS Burn) 170 x 19323 NM Monitor Burn	GDS	100:09:00	10	Monitor Burn Command Null of Residuals	Status Dump
		Deactivate Average g Null Burn Residuals (APS) If Required	ROS	100:30:00	10	Track for Nav.	
		Align G & N State Vector Update From Orbiter Perform MCC(s) If Required	MIL	101:00:00	10	Initiate Align Update State Vector Target MCC Initiate Burn Seq.	

Table 6.2.2.3 - 1 (cont.)

6.2.2.3.1.1 TUG MISSION TIMELINE AND NETWORK COVERAGE SCHEDULE - DEPLOY AND RETRIEVE PAYLOAD IN GEOSYNC. ORBIT - SINGLE STAGE (NASA)

TUG OPERATION			GROUND OPERATION				
G.E.T. HR:MIN:SEC	ΔT HR:MIN:SEC	EVENT OPERATION	STA	G.E.T. HR:MIN:SEC	ΔT MIN	AUTONOMY LEVEL III A	AUTONOMY LEVEL II B
		Coast-Attitude Hold Payload (Wide D.B.)	ROS	103:00:00	10	Track for Nav.	
			MIL	104:15:00	10	Track for Nav.	
			QUI	104:30:00	10	Track for Nav.	
		Align G & N	CYI	105:15:00	10	Initiate Align	
		Receive State Vector Update From Orbiter				Update State Vector	
		Maneuver To Burn Attitude				Target POI	
		Activate Average g				Initiate Burn Seq.	
105:21:36	05:10:12	Phasing Orbit Insertion (96 Sec. MPS Burn) 170 x 4032 NM	ORR	105:47:36	10	Command Null Residuals	Status Dump
		Monitor Burn					
		Deactivate Average g	ROS	105:50:00	10	Track for Nav.	
		Null Burn Residuals (APS) If Necessary	GWM	105:55:21	10	Track for Nav.	
		Coast - Attitude Hold Payload	BDA	107:51:51	15.3	Initiate Align	
		Align G & N				Update State Vector	
		Receive State Vector Update From Orbiter				Target Cirul.	
		Maneuver To Burn Attitude				Initiate Burn Seq.	
		Activate Average g					
108:14:24	02:52:48	Circularize (70 Sec. MPS Burn) 170 x 170 NM Orbit	ANC	108:15:49	10	Monitor Burn	Status Dump
		Monitor Burn				Command Null of Residuals	
		Deactivate Average g					
		Align G & N					
		Receive State Vector Update From Orbiter	HAW	109:13:49	10	Track for Nav.	
109:15:00	01:00:36	Midcourse Correction If Required				Target MCC Backup	
		Tug Attitude Hold (Wide D.B.) Awaiting Orbiter	QUI	111:12:09	7	Track for Nav.	
			BUR	111:39:34		Update State Vector	
						Target TPI Backup	

Table 6.2.2.3 - 1 (cont.)

6.2.2.3.1.1 TUG MISSION TIMELINE AND NETWORK COVERAGE SCHEDULE - DEPLOY AND RETRIEVE PAYLOAD IN GEOSYNC. ORBIT - SINGLE STAGE (NASA)

TUG OPERATION			GROUND OPERATION				
						AUTONOMY	
G.E.T. HR:MIN:SEC	ΔT HR:MIN:SEC	EVENT OPERATION	STA	G.E.T. HR:MIN:SEC	ΔT MIN	LEVEL III A	LEVEL II B
111:44:00	02:29:00	ORBITER/TUG DOCKING					
		Orbiter Terminal Phase Initiation	TAN	111:45:14	7	Track for Nav.	
		Midcourse Correction If Required					
		Orbiter Perform Braking Gates					
		Station Keep With Tug					
		Prepare Tug/Payload For Docking					
		Vent MPS Tanks	HAW	112:26:44	7		Status Dump
		Vent Tug Cryro Tanks					
		Select Narrow D.B. For Capture	QUI	112:49:24	5	Activate TV	
		Verify Tug/Payload Go For Capture					
		Release Manipulator Arm Latches					
		Deploy Manipulator Arm					
		Verify Adaptor Ready To Receive Tug					
		Capture Tug					
113:16:00	01:32:00	Dock Tug To Orbiter	BUR	113:16:19	7		
		Hard Dock					
		Verify Tug/Orbiter Electrical Interfaces					
		Deactivate Tug Subsystems					
		Shut Down Tug Fuel Cells					
		Verify Tug/Payload Ready For Stowage					
113:41:00	00:25:00	Stow Tug/Payload In Orbiter Cargo Bay	HAW	114:02:49	7	Verify Stowage	Status Dump
		Stow Manipulator					
114:10:00	00:29:00	PHASING COAST					
		Establish 7 Hr. Barbeque Thermal Cycling					

Table 6.2.2.3 - 1 (cont.)

6.2.2.3.1.1 TUG MISSION TIMELINE AND NETWORK COVERAGE SCHEDULE - DEPLOY AND RETRIEVE PAYLOAD IN GEOSYNC. ORBIT - SINGLE STAGE (NASA)

TUG OPERATION			GROUND OPERATION				
						AUTONOMY	
G.E.T. HR:MIN:SEC	ΔT HR:MIN:SEC	EVENT OPERATION	STA	G.E.T. HR:MIN:SEC	ΔT MIN	LEVEL III A	LEVEL II B
114:10:00		ORBIT TO LANDING					
		Close Cargo Bay Doors					
		Orient Orbiter For Deorbit					
114:23:00	00:13:00	Deorbit Burn (OMS)					
		Coast For Atmosphere Reentry					
		Orient Orbiter For Reentry					
114:50:00	00:27:00	Reentry (400 K. FT.)					
		Aerodynamic Coast					
115:29:00	00:39:00	Approach					
115:31:00	00:02:00	Touch Down					

Table 6.2.2.3 - 1 (cont.)

6.2.2.3.1.2 TUG MISSION TIMELINE AND NETWORK COVERAGE SCHEDULE - DEPLOY AND RETRIEVE PAYLOAD IN HIGH INCLINATION - SINGLE STAGE

DPC 471-04

9/5/73

TUG OPERATION			GROUND OPERATION				
						AUTONOMY	
G.E.T. HR:MIN:SEC	ΔT HR:MIN:SEC	EVENT OPERATION	STA	G.E.T. HR:MIN:SEC	ΔT MIN	LEVEL III A	LEVEL II B
	00:01:52	LAUNCH TO ORBIT					
00:00:00		Liftoff					
00:01:52		Stage SRM's					
		Verify Tank Ready For Separation					
		Main Engine Cutoff					
		Jettison External Tank					
		OMS Burn (50 X 100 NM Orbit)					
00:08:50	00:06:58	ORBITER OPERATIONS					
		Release Cargo Bay Door Locks					
00:12:10	00:03:20	Open Orbiter Cargo Bay Doors					
		Update G & N					
		Verify Electrical Power To Tug					
		Monitor Tug Critical Parameters					
		Checkout Manipulator Control Station					
		Checkout Manipulator					
		Release Manipulator Arm Latches					
		Deploy Manipulator					
		Connect Manipulator to Tug					
		Coast					
00:52:03	00:39:53	Inject Into 100 x 100 NM Orbit (223 Sec OMS Burn)					
00:52:50	00:00:47	Coast	TAN	00:52:48	2.8		
			ULA	01:23:42	4.9		
			BUR	02:17:31	4.5	Shuttle	Shuttle
			ULA	02:52:19	3.6	Support	Support
			HAW	03:03:04	3.4		
	03:13:10	TUG CHECKOUT & DEPLOYMENT	MAD	04:01:52	4.7		
04:06:00		Activate Tug					
		Verify Tug Ready For Activation					
		Power Comm. & Data Management Subsystem				Shuttle	Shuttle
		Verify Thermal Control				Support	Support
		Power G & N & Initialize					
		Verify MPS					
		Activate EPS Fuel Cells					

Table 6.2.2.3 - 2

6.2.2.3.1.2 TUG MISSION TIMELINE AND NETWORK COVERAGE SCHEDULE - DEPLOY AND RETRIEVE PAYLOAD IN HIGH INCLINATION - SINGLE STAGE

9/5/73

TUG OPERATION			GROUND OPERATION				
						AUTONOMY	
G.E.T. HR:MIN:SEC	ΔT HR:MIN:SEC	EVENT OPERATION	STA	G.E.T. HR:MIN:SEC	ΔT MIN	LEVEL III A	LEVEL II B
		Verify Payload Status					
		Verify Adapter Ready For Extension					
		Verify Tug/Payload Ready For Extension					
		Release Tug Latches					
4:36:00	00:30:00	Extend Tug/Payload					
		Checkout Tug					
		Activate APS					
		Hot Fire Selective APS Thusters					
		Verify MPS Gimbal Drive					
		Update G & N					
		Configure G & N For Release					
		Verify Tug/Orbiter RF Links					
		Switch from Orbiter to Tug Power					
		Terminate Tug/Orbiter Hardlines					
		Verify Tug/Payload Ready For Deployment					
		Release Tug From Orbiter					
5:18:00	00:42:00	Deploy Tug	ACN	05:18:47	3.4	Verify Deploy	
		Extend Manipulator					
5:27:00		Release Tug					
		Enable Attitude Control					
5:29:00	00:11:00	PAYLOAD PLACEMENT	CYI	05:27:32	3.5 (2.1 Min)	o Tug Readiness Verification	
		Orbiter Translation				o Initiate Alignment Track for Nav Update	
		Tug Readiness Verification					
		Tug Maintain Attitude					
		Align G & N					
		Maneuver For Orbital Navigation					
		Update State Vector	GWM	06:01:19	4.3 (2.6 Min)	o Update State Vector	o Receive Downlink Status Data (4 Min)
		Verify MPS Ready For Operation				o Verify MPS Ready	
		Maneuver To Burn Attitude				o Initiate Maneuver to Burn Attitude	
		Verify Tug & Payload Ready For Separation					
		Activate Average g				o Activate Ave. G.	

Table 6.2.2.3 - 2 (cont.)

6.2.2.3.1.2 TUG MISSION TIMELINE AND NETWORK COVERAGE SCHEDULE - DEPLOY AND RETRIEVE PAYLOAD IN HIGH INCLINATION - SINGLE STAGE

9/5/73

TUG OPERATION			GROUND OPERATION				
						AUTONOMY	
G.E.T. HR:MIN:SEC	ΔT HR:MIN:SEC	EVENT OPERATION	STA	G.E.T. HR:MIN:SEC	ΔT MIN	LEVEL III A	LEVEL II B
06:06:00	00:37:00	Phasing Orbit Insertion (449 Sec MPS Burn) 100 x 2078 NM	ORR	06:11:53	8.5	o Monitor MPS Burn	
		Monitor Burn				o Command Null Of Residuals	
		Null Burn Residuals (APS) If Required				o Track For Nav	
		Deactivate Average g					
		Perform MCC(s) If Required					
		Coast - Attitude Hold Payload (Wide D.B.) ± 30° To Sun					
		Align G & N	AGO	06:37:59	10	O Track For Nav	o Receive Status Data (16 Min)
		Maneuver For Orbital Navigation	ACN	06:48:22	15	o Target& Command MCC	
		Update State Vector	QUI	06:53:56	10	o Track For Nav	
		Maneuver To Burn Attitude	BDA	07:04:34	10	o Track for Nav Command Alignment	
		Verify Tug & Payload Ready For Burn					
			CYI	07:06:03	10	o Track for Nav	
			MIL	07:07:23	10	o Track for Nav	
			ROS	07:11:02	20	o P/L Status Data	o Receive P/L Status (10 Min)
			ULA	07:39:00	15	o Update State Vector	
						o Command Preburn Sequence	
						o Activate Ave. G.	
	02:08:00	Activate Average g	AGO	08:44:02	10	o Command Null Of Residuals	
08:14:00		Transfer Orbit Insertion (119 Sec MPS Burn) 100 x 3000 NM				o Track for Nav	
		Monitor Burn					
		Null Burn Residuals (APS) If Required					
		Deactivate Average g					
		Perform MCC(s) If Required	QUI	08:50:42	10	o Track for Nav	
		Coast	MIL	09:12:04	15	o Command MCC	
		Align G & N				o Command Align	
		Maneuver For Orbital Navigation				o Initiate MOI Burn Sequence	
		Update State Vector					
		Attitude Hold Payload (Wide D.B.) ± 30° To Sun					
		Perform G & N Alignment					

Table 6.2.2.3 - 2 (cont.)

6.2.2.3.1.2 TUG MISSION TIMELINE AND NETWORK COVERAGE SCHEDULE - DEPLOY AND RETRIEVE PAYLOAD IN HIGH INCLINATION - SINGLE STAGE

9/5/73

TUG OPERATION			GROUND OPERATION				
						AUTONOMY	
G.E.T. HR:MIN:SEC	ΔT HR:MIN:SEC	EVENT OPERATION	STA	G.E.T. HR:MIN:SEC	ΔT MIN	LEVEL III A	LEVEL II B
		Maneuver To Burn Attitude Verify Tug & Payload Ready For Burn Activate Average g					
09:28:00	01:14:00	Mission Orbit Insertion (43 Sec. MPS Burn) 300 x 3000 NM Monitor Burn Null Burn Residuals (APS) If Required Deactivate Average g Align G & N Maneuver For Orbital Navigation Update State Vector	GDS	09:23:56	15	o Monitor Burn o Command Null Of Residuals o Track for Nav	
		Coast To Orbit Station G & N Alignment	ULA	09:40:08	20	o Activate TV o Monitor P/L Deploy o Receive P/L Status	o Activate TV o Monitor P/L Deploy o Receive P/l Status
09:43:00		Activate Payload Activate TV Monitor Payload Readiness Test Null Velocity To Intercept Orbit Station (APS) Terminate Tug Power To Payload					
09:53:00	00:25:00	PAYLOAD DEPLOYMENT Maneuver To Deploy Attitude Verify Payload Status Go Arm Payload Release					
10:03:00	00:10:00	Deploy Payload 300 x 3000 NM Visually Inspect Payload Stow/Safe Deployment Mechanism					
10:13:00	00:10:00	Separate From Payload (60 Sec. APS Burn)					
		PAYLOAD LOITER Maneuver to Loiter Station Relay Payload Data & Commands Verify Payload External Configuration Complete Payload Checkout Maintain Loiter (180 Sec. APS Burns)	ULA	10:10:00	10	o Receive TV Inspection	

Table 6.2.2.3 - 2 (cont.)

TUG MISSION TIMELINE AND NETWORK COVERAGE SCHEDULE - DEPLOY AND RETRIEVE PAYLOAD IN HIGH INCLINATION - SINGLE STAGE

9/5/73

TUG OPERATION			GROUND OPERATION				
						AUTONOMY	
G.E.T. HR:MIN:SEC	ΔT HR:MIN:SEC	EVENT OPERATION	STA	G.E.T. HR:MIN:SEC	ΔT MIN	LEVEL III A	LEVEL II B
		PAYLOAD RENDEZVOUS					
		Align G & N				o Initiate Align	
		Maneuver For Orbital Navigation				o Track for Nav	
		Update State Vector				o Update State Vector	
		Maneuver To Burn Attitude					
		Activate Average g					
10:44:00	00:31:00	Phasing Orbit Insertion (7 Sec. MPS Burn) 300 x 3063 NM				o Initiate Burn Seq.	
		Monitor Burn	AGO	11:16:52	10	o Null Residuals	
		Deactivate Average g				o Track for Nav	
		Align G & N					
		Maneuver For Orbital Navigation	OUI	11:34:26	15	o Track for Nav	
		Update State Vector				o Command Align Sequence	
		Maneuver To Burn Attitude					
		Activate Average g					
		Apogee Adjust				o Command Apogee Adjust.	
		Monitor Burn					
		Deactivate Average g					
		Coast (Wide D.B.)					
		Align G & N					o Receive Status (10 Min)
		Search & Aquire Target					
		Update State Vector					
		Maneuver To Burn Attitude					
		Activate Average g					
		Phasing Adjust	ULA	12:10:52	10	o Track for Nav	
		Monitor Burn				o Initiate Align	
		Deactivate Average g	TAN	13:17:42	10	o Command Phase Adjust	
		Coast (Wide D.B.)					
		Align G & N	BUR	13:19:37	10	o Track for Nav	o Receive Status (10 Min)
		Track Target					
		Update State Vector					
		Maneuver To Burn Attitude					
		Activate Average g					
		Midcourse Correction					
		Deactivate Average g	GDS	23:13:12	10	o Status	o Status (10 Min)
		Coast (Wide D.B.)	GDS	34:49:37	20	o Status	o Status (10 Min)

Table 6.2.2.3 - 2 (cont.)

6.2.2.3.1.2 TUG MISSION TIMELINE AND NETWORK COVERAGE SCHEDULE - DEPLOY AND RETRIEVE PAYLOAD IN HIGH INCLINATION - SINGLE STAGE

9/5/73

TUG OPERATION			GROUND OPERATION				
						AUTONOMY	
G.E.T. HR:MIN:SEC	ΔT HR:MIN:SEC	EVENT OPERATION	STA	G.E.T. HR:MIN:SEC	ΔT MIN	LEVEL III A	LEVEL II B
		Align G & N	GDS	57:53:13	20	o Status	o Status (10 Min)
		Track Target	AGO	77:45:18	10	o Track for Nav	
		Update State Vector	CYI	78:14:31	10	o Track for Nav	
		Maneuver To Burn Attitude	BDA	78:18:43	10	o State Vector Update	o Status (10 Min)
		Activate Average g				o Rendez Targeting	
79:46:00	69:02:00	Mission Orbit Insertion (7 Sec MPS Burn) 300 x 3000				o Align Sequence	
		Monitor Burn				o Initiate Rend. Sequence	
		Deactivate Average g					
		Coast (Wide D.B.)					
		Align G & N					
		Track Target					
		Update State Vector					
		Maneuver To Burn Attitude					
		Activate Average g					
80:16:00	00:30:00	Terminal Phase Initiation (15 Sec MPS Burn)	AGO	80:16:44	10	o Verify TPI (10 Min)	o Verify TPI (10 Min)
		Monitor Burn					
		Deactivate Average g					
		Coast (Wide D.B.)					
		Align G & N					
		Track Target					
		Update State Vector					
		Maneuver To Burn Attitude					
		Activate Average g					
		Midcourse Correction If Required	MIL	80:45:40	10	o Verify MCC (10 Min)	
		Align G & N					
		Track Target					
		Update State Vector					
		Maneuver To Burn Attitude					
		Activate Average g					
		Terminal Phase Final (80 Sec APS Burn) Braking Gates	GDS	80:59:06	45	o Verify TPF	o Verify TPF (10 Min)
		Monitor Burn					
		Deactivate Average g				o Activate TV	
						o Initiate Docking	
						o Dock	

Table 6.2.2.3 - 2 (cont.)

6.2.2.3.1.2 TUG MISSION TIMELINE AND NETWORK COVERAGE SCHEDULE - DEPLOY AND RETRIEVE PAYLOAD IN HIGH INCLINATION - SINGLE STAGE

9/5/73

TUG OPERATION			GROUND OPERATION				
						AUTONOMY	
G.E.T. HR:MIN:SEC	ΔT HR:MIN:SEC	EVENT OPERATION	STA	G.E.T. HR:MIN:SEC	ΔT MIN	LEVEL III A	LEVEL II B
81:04:00	00:48:00	PAYLOAD DOCKING					
		Align G & N					
		Activate TV					
		Aquire & Track Target					
		Maneuver To Station Keeping					
		Verify Payload Stability & Configuration For Docking					
		Maneuver To Docking Attitude					
		Perform Closing Maneuver (7 Sec APS Burn)					
		Payload Capture					
		Hard Docking	ULA	81:22:26	15	o Verify Docking	o Verify Docking
		Switch Payload To Tug Power				o Payload Status	o Payload Status (15 Min)
		Safe Payload					
		Vent Unrequired Consumables					
		Verify Payload Go For Return					
		RENDEZVOUS WITH ORBITER					
		Coast (Wide D.B.)					
		Align G & N	AGO	82:50:17	15	o Initiate Align.	
		Receive State Vector Update From Orbiter				o Track For Nav	
		Maneuver To Burn Attitude	QUI	83:06:36	10	o Track For Nav	
		Activate Average g				o Update State Vector	
83:34:00	02:30:00	Transfer Orbit Insertion (36 Sec MPS Burn) 110 x 3000 NM				o Initiate Burn Seq.	
		Monitor Burn	GDS	83:21:47	15	o Monitor Burn	o Status (10 Min)
		Deactivate Average g				o Command Null Of Residuals	
		Null Burn Residuals (APS) If Required					
		Align G & N				o Track for Nav	
		State Vector Update From Orbiter					
		Peform MCC(s) If Required	HAW	85:36:54	10	o Track for Nav	
		Coast-Attitude Hold Payload (Wide D.B.)				o Command MCC	
		Align G & N	ULA	85:53:20	10	o Track for Nav	
						o Initiate Align	
		Receive State Vector Update From Orbiter	HAW	87:24:40	10	o State Vector Update	
		Maneuver To Burn Attitude					

Table 6.2.2.3 - 2 (cont.)

6.2.2.3.1.2 TUG MISSION TIMELINE AND NETWORK COVERAGE SCHEDULE - DEPLOY AND RETRIEVE PAYLOAD IN HIGH INCLINATION - SINGLE STAGE

9/5/73

TUG OPERATION			GROUND OPERATION				
						AUTONOMY	
G.E.T. HR:MIN:SEC	ΔT HR:MIN:SEC	EVENT OPERATION	STA	G.E.T. HR:MIN:SEC	ΔT MIN	LEVEL III A	LEVEL II B
		Activate Average g				o Initiate Burn Sequence o Monitor Burn	
87:44:00	04:10:00	Phasing Orbit Insertion (214 Sec MPS Burn) 110 x 1185 NM Monitor Burn	ULA	87:44:49	15	o Command Null of Residuals o Track for Nav	o Status (10 Min)
		Deactivate Average g	MAD	88:11:35	7.7	o Track For Nav	
		Align G&N	CYI	88:16:08	5.8	o Track For Nav	
		Receive State Vector Update From Orbiter Maneuver to Burn Attitude Active Average g Midcourse Correction (232 Sec APS Burn)				o State Vector Update o Initiate Burn Sequence	
		Coast - Attitude Hold Payload Align G & N Receive State Vector Update From Orbiter Maneuver To Burn Attitude Activate Average g					
88:26:00	00:42:00	Circularize (161 Sec MPS Burn) 110 x 110 NM Orbit Monitor Burn Deactivate Average g Align G & N Receive State Vector Update From Orbiter Coast					
		Tug Attitude Hold (Wide D.B.) Awaiting Orbiter	ORR GWM	89:00:32 90:40:34	1.3 1.5	o Status o Status	o Status o Status
91:26:00	03:00:00	ORBITER/TUG DOCKING Orbiter Terminal Phase Initiation Midcourse Correction If Required Orbiter Perform Braking Gates Station Keep With Tug Prepare Tug/Payload For Docking Vent MPS Tanks	ROS	92:40:05	3.5	o Configure For Shuttle Capture	o Status

Table 6.2.2.3 - 2 (cont.)

6.2.2.3.1.2 TUG MISSION TIMELINE AND NETWORK COVERAGE SCHEDULE - DEPLOY AND RETRIEVE PAYLOAD IN HIGH INCLINATION - SINGLE STAGE

9/5/73

TUG OPERATION			GROUND OPERATION				
						AUTONOMY	
G.E.T. HR:MIN:SEC	ΔT HR:MIN:SEC	EVENT OPERATION	STA	G.E.T. HR:MIN:SEC	ΔT MIN	LEVEL III A	LEVEL II B
		Vent Tug Cryro Tanks	QUI	92:48:18	4.6	o Verify Go For Capture	o Status
		Select Narrow D.B. For Capture					
		Verify Tug/Payload Go For Capture	AGO	92:56:53	3.4	o Load & Initiate Safing Sequence	
		Release Manipulator Arm Latches					
		Deploy Manipulator Arm					
		Verify Adaptor Ready To Receive Tug					
		Capture Tug					
		Dock Tug To Orbiter					
		Hard Dock					
		Verify Tug/Orbiter Electrical Interfaces					
		Deactivate Tug Subsystems					
		Shut Down Tug Fuel Cells					
		Verify Tug/Payload Ready For Stowage					
		Stow Tug/Payload In Orbiter Cargo Bay					
		Stow Manipulator					
93:26:00	02:00:00	PHASING COAST					
		Establish 7 Hr. Barbeque Thermal Cycling					
100:26:00	07:00:00	ORBIT TO LANDING					
		Close Cargo Bay Doors					
		Orient Orbiter For Deorbit					
		Deorbit Burn (OMS)					
		Coast For Atmosphere Reentry					
		Orient Orbiter For Reentry					
		Reentry (400 K. FT.)					
		Aerodynamic Coast					
		Approach					
101:46:00	01:20:00	Touch Down					

Table 6.2.2.3 - 2 (cont.)

TUG MISSION TIMELINE AND NETWORK COVERAGE SCHEDULE

PLANETARY (SINGLE STAGE-EXPENDABLE)

TUG OPERATION			GROUND OPERATION				
						AUTONOMY	
G.E.T. HR:MIN:SEC	ΔT HR:MIN:SEC	EVENT OPERATION	STA	G.E.T. HR:MIN:SEC	ΔT MIN	LEVEL III A	LEVEL II B
		LAUNCH TO ORBIT					
00:00:00		Liftoff					
00:01:52		Stage SRM's					
		Verify Tank Ready For Separation					
		Main Engine Cutoff					
		Jettison External Tank					
		OMS Burn (50 x 100 NM Orbit)	BDA	00:06:00	5	Shuttle Support NOTE: All Station Contracts Not Shown	Shuttle Support NOTE: All Station Contracts Not Shown
00:08:50	00:08:50	ORBITER OPERATIONS					
		Release Cargo Bay Door Locks					
00:12:10	00:03:20	Open Orbiter Cargo Bay Doors					
		Update G & N					
		Verify Electrical Power To Tug					
		Monitor Tug Critical Parameters					
		Checkout Manipulator Control Station	BUR	00:33:00	2.9		
		Checkout Manipulator	TAN	00:35:00	5.0		
		Release Manipulator Arm Latches					
		Deploy Manipulator					
		Connect Manipulator to Tug					
		Coast					
00:52:03	00:39:53	Inject Into 100 x 160 NM Orbit (223 Sec. OMS Burn)					
		Coast					
01:34:52	00:42:49	Circularize At 160 NM (120 Sec. OMS Burn)					
01:40:00		Update G & N					
	00:05:08	Align IMU					
		Orbital Navigation					

Table 6.2.2.3 - 3

6.2.2.3.1.3 TUG MISSION TIMELINE AND NETWORK COVERAGE SCHEDULE

PLANETARY (SINGLE STAGE-EXPENDABLE)

TUG OPERATION			GROUND OPERATION				
						AUTONOMY	
G.E.T. HR:MIN:SEC	ΔT HR:MIN:SEC	EVENT OPERATION	STA	G.E.T. HR:MIN:SEC	ΔT MIN	LEVEL III A	LEVEL II B
02:45:00	01:05:00	TUG CHECKOUT & DEPLOYMENT					
		Activate Tug					
		Verify Tug Ready For Activation	HAW	02:51:37	6.8	Shuttle Support	Shuttle Support
		Power Comm. & Data Management Subsystem					
		Verify Thermal Control					
		Power G & N and Initialize					
		Verify MPS					
		Activate EPS Fuel Cells	MII	03:10:52	5.4		
		Verify Payload Status					
		Verify Adapter Ready For Extension				Shuttle Support	Shuttle Support
		Verify Tug/Payload Ready For Extension					
		Release Tug Latches					
03:45:00	01:00:00	Extend Tug/Payload	BUR	03:4[illegible]:32	6.8	Monitor Tug/ Payload Ext.	
		Checkout Tug					
		Activate APS					
		Hot Fire Selective APS Thusters					
		Verify MPS Gimbal Drive					
		Update G & N					
		Configure G & N For Release					
		Verify Tug/Orbiter RF Links					
		Switch from Orbiter to Tug Power					
		Terminate Tug/Orbiter Hardlines					
		Verify Tug/Payload Ready For Deployment					
		Release Tug From Orbiter					
04:10:00	00:25:00	Deploy Tug					
		Extend Manipulator					
04:14:00	00:04:00	Release Tug					
		Enable Attitude Control					

Table 6.2.2.3 - 3 (cont.)

6.2.2.3.1.3 TUG MISSION TIMELINE AND NETWORK COVERAGE SCHEDULE

PLANETARY (SINGLE STAGE-EXPENDABLE)

TUG OPERATION			GROUND OPERATION				
						AUTONOMY	
G.E.T. HR:MIN:SEC	ΔT HR:MIN:SEC	EVENT OPERATION	STA	G.E.T. HR:MIN:SEC	ΔT MIN	LEVEL III A	LEVEL II B
04:15:00	00:01:00	PAYLOAD PLACEMENT	GWM	04:13:32	6.8	Verify Tug Ext.	Verify Tug Ext.
		Orbiter Translation				Verify Tug Deploy	Verify Tug Deploy
		Tug Readiness Verification				Verify Attitude Control	Verify Attitude Control
		Tug Maintain Attitude				o Verify Tug Readiness	Receive Tug Status (10 Min)
		Align G & N				o Initiate Align Sequence	Receive P/L Status
		Maneuver For Orbital Navigation	HAW	04:27:57	6.1	o Track for Nav.	
		Update State Vector				o Update State Vector	
		Verify MPS Ready For Operation				Verify MPS Ready	
		Maneuver To Burn Attitude				Initiate Burn Seq.	
		Verify Tug & Payload Ready For Separation				Provide Targeting	
		Activate Average g					
04:37:46	00:22:46	Phasing Orbit Insertion (920 Sec. MPS Burn) 200 x 9000 NM	GDS	04:38:32	3.9	Monitor Burn	
		Monitor Burn					
		Null Burn Residuals (APS) If Required	QUI	04:50:17	6.1	Command Null of Residuals	
		Deactivate Average g					
		Perform MCC(s) If Required					
		Coast - Attitude Hold Payload (Wide D.B.) ± 30° To Sun	ACN	05:02:16	10	Track for Nav. (10 Min)	
			BUR	05:30:00	15	Track for Nav. (15 Min)	Status Dump (10 Min)
						Target & Command MCC	
			TAN	08:00:00	15	Track for Nav. (15 Min)	
		Align G & N	GWM	09:30:00	15	Initiate IMU Align	
		Maneuver For Orbital Navigation				Update State Vector	
		Update State Vector				Verify Ready for Burn	
		Maneuver To Burn Attitude				Initiate Burn Seq.	
		Verify Tug & Payload Ready For Burn					
		Activate Average g					

Table 6.2.2.3 - 3 (cont.)

6.2.2.3.1.3 TUG MISSION TIMELINE AND NETWORK COVERAGE SCHEDULE

PLANETARY (SINGLE STAGE-EXPENDABLE)

TUG OPERATION			GROUND OPERATION				
						AUTONOMY	
G.E.T. HR:MIN:SEC	ΔT HR:MIN:SEC	EVENT OPERATION	STA	G.E.T. HR:MIN:SEC	ΔT MIN	LEVEL III A	LEVEL II B
09:36:36	04:58:50	Escape Orbit Insertion (951 Sec. MPS Burn) Monitor Burn Null Burn Residuals (APS) If Required Deactivate Average g Attitude Hold Payload (Wide D.B.) ± 30° To Sun Coast Align G & N Maneuver For Orbital Navigation Update State Vector Maneuver To Burn Attitude Verify Tug & Payload Ready For Burn Activate Average g	HAW	09:45:31	15	Monitor Burn Command Null of Residuals	Status Dump (10 Min)
18:30:00	08:53:24	Perform Midcourse Correction (APS Burn) Monitor Burn					
18:40:00	00:10:00	PAYLOAD DEPLOYMENT Maneuver To Deploy Attitude Verify Payload Status Go Arm Payload Release					
18:45:00	00:05:00	Deploy Payload Visually Inspect Payload Stow/Safe Deployment Mechanism Separate From Payload (14 Sec. APS Burn)					
19:00:00	00:15:00	PAYLOAD LOITER Relay Payload Data & Commands Verify Payload External Configuration Complete Payload Checkout					

Table 6.2.2.3 - 3 (cont.)

6.2.2.3.1.3 TUG MISSION TIMELINE AND NETWORK COVERAGE SCHEDULE

PLANETARY (SINGLE STAGE-EXPENDABLE)

TUG OPERATION			GROUND OPERATION				
						AUTONOMY	
G.E.T. HR:MIN:SEC	ΔT HR:MIN:SEC	EVENT OPERATION	STA	G.E.T. HR:MIN:SEC	ΔT MIN	LEVEL III A	LEVEL II B
21:00:00	02:00:00	TUG TRAJECTORY Align G & N Maneuver To Burn Attitude Activate Average g					
21:10:00	00:10:00	Tug Trajectory (30 Sec. APS Burn) Monitor Tug Until Expended					

Table 6.2.2.3 - 3 (cont.)

TUG OPERATION			GROUND OPERATION				
						AUTONOMY	
G.E.T. HR:MIN:SEC	ΔT HR:MIN:SEC	EVENT OPERATION	STA	G.E.T. HR:MIN:SEC	ΔT MIN	LEVEL III A	LEVEL II B
00:00:00		LAUNCH TO ORBIT					
00:00:00		Liftoff (489 Sec. Burn)					
00:01:52		Stage SRM's					
		Verify Tank Ready For Separation					
00:08:09		Main Engine Cutoff					
		Coast - Jettison External Tank					
		OMS Burn (185 Sec. Burn)					
00:11:44		OMS Cutoff 50 x 100 NM Orbit					
00:11:44	00:11:44	ORBITER OPERATIONS					
		Release Cargo Bay Door Locks					
00:12:10	00:00:26	Open Orbiter Cargo Bay Doors					
		Update G & N					
		Verify Electrical Power To Tug					
		Monitor Tug Critical Parameters					
		Checkout Manipulator Control Station					
		Checkout Manipulator					
		Release Manipulator Arm Latches					
		Deploy Manipulator					
		Connect Manipulator to Tug					
		Coast					
00:55:22	00:43:12	Inject Into 100 x 160 NM Orbit (223 Sec. OMS Burn)					
		Coast	HTS	1:19:19	6.3		
01:39:57	00:44:35	Circularize At 160 NM (120 Sec. OMS Burn)	VTS	1:29:04	5.7	Shuttle Support	Shuttle Support
01:40:00	00:00:03	Update G & N					
						Note: All Station Contacts Not Shown	
		Coast	GTS	4:16:29	6.7		
		Establish 6/3 Hr. Barbeque Thermal Cycling					

Table 6.2.2.3 - 4

6.2.2.3.2.4 TUG MISSION TIMELINE AND NETWORK COVERAGE SCHEDULE - DEPLOY AND RETRIEVE PAYLOAD IN HIGH INCLINATION - SINGLE STAGE

9/5/73

TUG OPERATION			GROUND OPERATION				
						AUTONOMY	
G.E.T. HR:MIN:SEC	ΔT HR:MIN:SEC	EVENT OPERATION	STA	G.E.T. HR:MIN:SEC	ΔT MIN	LEVEL III A	LEVEL II B
07:00:00	05:20:00	TUG CHECKOUT & DEPLOYMENT					
		Activate Tug					
		Verify Tug Ready For Activation					
		Power Comm. & Data Management Subsystem					
		Verify Thermal Control	IOS	7:05:29	5.3	Shuttle Support	Shuttle Support
		Power G & N & Initialize	HTS	7:42:49	6.8		
		Verify MPS					
		Activate EPS Fuel Cells					
		Verify Payload Status					
		Verify Adapter Ready For Extension					
		Verify Tug/Payload Ready For Extension					
		Release Tug Latches					
08:00:00	01:00:00	Extend Tug/Payload					
		Checkout Tug					
		Activate APS					
		Hot Fire Selective APS Thusters					
		Verify MPS Gimbal Drive					
		Update G & N					
		Configure G & N For Release					
		Verify Tug/Orbiter RF Links					
		Switch from Orbiter to Tug Power					
		Terminate Tug/Orbiter Hardlines					
		Verify Tug/Payload Ready For Deployment					
		Release Tug From Orbiter					
08:30:00	00:30:00	Deploy Tug					
		Extend Manipulator					
08:40:00	00:10:00	Release Tug					
		Enable Attitude Control	IOS	8:40:29	6.7	Verify Tug Ext. Verify Tug Deploy Verify Attitude Control	Verify Tug Ext. Verify Tug Deploy Verify Attitude Control

Table 6.2.2.3 - 4 (cont.)

6.2.2.3.2.4 TUG MISSION TIMELINE AND NETWORK COVERAGE SCHEDULE - DEPLOY AND RETRIEVE PAYLOAD IN HIGH INCLINATION - SINGLE STAGE (DOD)

9/5/73

TUG OPERATION			GROUND OPERATION				
						AUTONOMY	
G.E.T. HR:MIN:SEC	ΔT HR:MIN:SEC	EVENT OPERATION	STA	G.E.T. HR:MIN:SEC	ΔT MIN	LEVEL III A	LEVEL II B
09:18:34	00:38:34	PAYLOAD PLACEMENT	HTS	09:18:59	5.7	o Tug Readiness Verify	Receive Tug Status
		Orbiter Translation				o Initiate Align Sequence	Receive P/L Status
		Tug Readiness Verification				o Track for Nav	
		Tug Maintain Attitude					
		Align G & N					
		Maneuver For Orbital Navigation	GTS	10:43:34	2.1	Update State Vector	
		Update State Vector					
		Verify MPS Ready For Operation				Verify MPS Ready	
		Maneuver To Burn Attitude				Initiate Burn Seq.	
		Verify Tug & Payload Ready For Separation				Provide Targeting	
		Activate Average g					
11:00:36	01:42:02	Phasing Orbit Insertion (667 Sec MPS Burn) 182 x 4105 NM				Command Null of Residuals	
		Monitor Burn					
		Null Burn Residuals (APS) If Required				Track for Nav (10 Min)	
		Deactivate Average g					
		Perform MCC(s) If Required	IOS	12:25:51	15	Track for Nav (15 Min)	Station Dump (10 Min)
		Coast - Attitude Hold Payload (Wide D.B.) ± 30° To Sun					
		Align G & N				Target & Command MCC	
		Maneuver For Orbital Navigation					
		Update State Vector				Track for Nav (15 Min)	
		Maneuver To Burn Attitude					
		Verify Tug & Payload Ready For Burn				Initiate IMU Align	
		Activate Average g	GTS	13:45:46	7.8	Update State Vector	
						Verify Ready for Burn	
						Initiate Burn Seq.	
13:54:36	02:54:00	Transfer Orbit Insertion (420 Sec. MPS Burn) 186 x 19322 NM					
		Monitor Burn					
		Null Burn Residuals (APS) If Required				Command Null of Resid.	Status Dump (10 Min)
		Deactivate Average g					
		Perform MCC(s) If Required				Track for Nav (10 Min)	
		Coast					
		Align G & N	VTS	14:40:56	10	Track for Nav (10 Min)	
		Maneuver For Orbital Navigation					

Table 6.2.2.3 - 4 (cont.)

6.2.2.3.2.4 TUG MISSION TIMELINE AND NETWORK COVERAGE SCHEDULE - DEPLOY AND RETRIEVE PAYLOAD IN HIGH INCLINATION - SINGLE STAGE (DOD)

9/5/73

TUG OPERATION			GROUND OPERATION				
						AUTONOMY	
G.E.T. HR:MIN:SEC	ΔT HR:MIN:SEC	EVENT OPERATION	STA	G.E.T. HR:MIN:SEC	ΔT MIN	LEVEL III A	LEVEL II B
		Update State Vector Attitude Hold Payload (Wide D.B.) ± 30° To Sun Perform G & N Alignment Maneuver To Burn Attitude Verify Tug & Payload Ready For Burn Activate Average g	NHS HTS	14:56:11 17:07:56	20 20	Track for Nav (20 Min) Target & Command MCC Initiate IMU Align (20 Min) Update State Vector	
			KTS	18:31:11	20	Target MOI Initiate Burn Seq.	
19:11:24	05:16:48	Mission Orbit Insertion (410 Sec MPS Burn) 19323 x 19323 NM Monitor Burn Null Burn Residuals (APS) If Required Deactivate Average g Align G & N Maneuver For Orbital Navigation Update State Vector	VTS	19:10:00	20	Monitor MOI Burn Command Null of Resid. Track for Nav.	Status Dump (10 Min)
19:20:24	00:09:00	PAYLOAD DEPLOYMENT Maneuver To Deploy Attitude Verify Payload Status Go Arm Payload Release Deploy Payload 19323 x 19323 NM Visually Inspect Payload Stow/Safe Deployment Mechanism Separate From Payload (14 Sec. APS Burn)	NHS	19:18:00	20	o Command Maneuver to Deploy Attitude o Initiate P/L Release o Activate TV o Visually Inspect P/L	o Receive P/L Status o Activate TV o Visually Inspect P/L
		PAYLOAD LOITER Relay Payload Data & Commands Verify Payload External Configuration Complete Payload Checkout	HTS	19:30:00	15	Track for Nav.	

Table 6.2.2.3 - 4 (cont.)

6.2.2.3.2.4 TUG MISSION TIMELINE AND NETWORK COVERAGE SCHEDULE - DEPLOY AND RETRIEVE PAYLOAD IN HIGH INCLINATION - SINGLE STAGE (DOD)

9/5/73

TUG OPERATION			GROUND OPERATION				
						AUTONOMY	
G.E.T. HR:MIN:SEC	ΔT HR:MIN:SEC	EVENT OPERATION	STA	G.E.T. HR:MIN:SEC	ΔT MIN	LEVEL III A	LEVEL II B
		PAYLOAD RENDEZVOUS	KTS	20:05:00	15	Initiate Align	
		Align G & N				Update State Vector	
		Maneuver For Orbital Navigation				Provide Targeting	
		Update State Vector				Initiate Phase Burn	
		Maneuver To Burn Attitude					
		Activate Average g					
20:11:24	00:51:00	Phasing Orbit Insertion (3 Sec. MPS Burn) 18886 x 19323 NM	VTS	20:10:00	10	Monitor Burn	Status Dump
		Monitor Burn					
		Deactivate Average g	NHS	20:40:00	10	Track for Nav.	
		Align G & N	HTS	31:00:00	10	Initiate Align	
		Maneuver For Orbital Navigation				Update State Vector	
		Update State Vector				Target Apogee Adj.	
		Maneuver To Burn Attitude				Initiate Burn Seq.	
		Activate Average g					
32:11:24	12:00:00	Apogee Adjust (5 Sec. APS Burn) 18886 x 19283 NM					
		Monitor Burn	KTS	32:05:00	10	Monitor Burn	Status Dump
		Deactivate Average g					
		Coast (Wide D.B.)	VTS	32:30:00	10	Track for Nav.	
		Align G & N	NHS	43:50:00	20	Initiate Align	
		Search & Aquire Target				Update State Vector	
		Update State Vector				Target Phase Adj.	
		Maneuver To Burn Attitude				Initiate Burn Seq.	
		Activate Average g					
44:00:24	11:49:00	Phasing Adjust	HTS	43:56:00	10	Monitor Burn	Status Dump
		Monitor Burn					
		Deactivate Average g					
		Coast (Wide D.B.)	KTS	44:30:00	20	Track for Nav.	
		Align G & N				Initiate Align	
		Track Target				Update State Vector	
		Update State Vector				Initiate RR Aquisition	
		Maneuver To Burn Attitude					
		Activate Average g					
82:00:00	37:59:36	Midcourse Correction				Verify Acquisition	
		Deactivate Average g				Initiate Rend. Seq.	

Table 6.2.2.3 - 4 (cont.)

6.2.2.3.2.4 TUG MISSION TIMELINE AND NETWORK COVERAGE SCHEDULE - DEPLOY AND RETRIEVE PAYLOAD IN HIGH INCLINATION - SINGLE STAGE (DOD)

9/5/73

TUG OPERATION			GROUND OPERATION				
						AUTONOMY	
G.E.T. HR:MIN:SEC	ΔT HR:MIN:SEC	EVENT OPERATION	STA	G.E.T. HR:MIN:SEC	ΔT MIN	LEVEL III A	LEVEL II B
		Coast (Wide D.B.) Align G & N Track Target Update State Vector Maneuver To Burn Attitude Activate Average g					
87:00:00	05:00:00	Circularization (2 Sec. MPS Burn) 19283 x 19283 Monitor Burn Deactivate Average g	VTS	86:55:00	10	Monitor Burn	Status Dump
		Coast (Wide D.B.) Align G & N Track Target Update State Vector Maneuver To Burn Attitude Activate Average g	NHS	88:50:00	10	Verify TPI Solution	
89:03:00	02:03:00	Terminal Phase Initiation (2 Sec. MPS Burn) Monitor Burn Deactivate Average g	HTS	89:00:00	10	Monitor Burn	Status Dump
		Coast (Wide D.B.) Align G & N Track Target Update State Vector Maneuver To Burn Attitude Activate Average g					
		Midcourse Correction If Required Align G & N Track Target Update State Vector Maneuver To Burn Attitude Activate Average g					
91:00:00	01:57:00	Terminal Phase Final (42 Sec. APS Burn) Braking Gates Monitor Burn Deactivate Average g	VTS	91:00:00	10		Status Dump

Table 6.2.2.3 - 4 (cont.)

6.2.2.3.2.4 TUG MISSION TIMELINE AND NETWORK COVERAGE SCHEDULE - DEPLOY AND RETRIEVE PAYLOAD IN HIGH INCLINATION - SINGLE STAGE (DOD)

9/5/73

TUG OPERATION			GROUND OPERATION				
						AUTONOMY	
G.E.T. HR:MIN:SEC	ΔT HR:MIN:SEC	EVENT OPERATION	STA	G.E.T. HR:MIN:SEC	ΔT MIN	LEVEL III A	LEVEL II B
91:05:00	00:05:00	PAYLOAD DOCKING	NHS	91:05:00	45	Activate TV	
		Align G & N				Perform Remote Docking	
		Activate TV					
		Aquire & Track Target					
		Maneuver To Station Keeping					
		Verify Payload Stability & Configuration For Docking					
		Maneuver To Docking Attitude					
91:35:00	00:30:00	Perform Closing Maneuver (7 Sec. APS Burn)					
91:35:00		Payload Capture	HTS	91:35:00	10	Verify P/L Status	P/L Status Dump
		Hard Docking	NTS	91:40:00	20	Track for Nav.	
		Switch Payload To Tug Power				Initiate Align	
		Safe Payload				Update State Vector	
		Vent Unrequired Consumables				Target DTOI	
		Verify Payload Go For Return				Initiate Burn Seq.	
91:50:00	00:15:00	RENDEZVOUS WITH ORBITER					
		Coast (Wide D.B.)					
		Align G & N					
		Receive State Vector Update From Orbiter					
		Maneuver To Burn Attitude					
		Activate Average g					
100:11:24	08:21:24	Transfer Orbit Insertion (228 Sec. MPS Burn) 170 x 19323 NM	NHS	100:09:00	10	Monitor Burn	Status Dump
		Monitor Burn				Command Null of Residuals	
		Deactivate Average g	HTS	100:30:00	10	Track for Nav.	
		Null Burn Residuals (APS) If Required					
		Align G & N	VTS	101:00:00	10	Initiate Align	
		State Vector Update From Orbiter				Update State Vector	
		Perform MCC(s) If Required				Target MCC	
						Initiate Burn Seq.	

TABLE 6.2.2.3-4 (Cont'd)

6.2.2.3.2.4 TUG MISSION TIMELINE AND NETWORK COVERAGE SCHEDULE - DEPLOY AND RETRIEVE PAYLOAD IN HIGH INCLINATION - SINGLE STAGE (DOD)

9/5/73

TUG OPERATION			GROUND OPERATION				
						AUTONOMY	
G.E.T. HR:MIN:SEC	ΔT HR:MIN:SEC	EVENT OPERATION	STA	G.E.T. HR:MIN:SEC	ΔT MIN	LEVEL III A	LEVEL II B
		Coast-Attitude Hold Payload (Wide D.B.)	NHS	103:00:00	10	Track for Nav.	
			HTS	104:00:00	10	Track for Nav.	
			KTS	104:20:00	10	Track for Nav.	
		Align G & N	NHS	105:45:00	10	Initiate Align	
		Receive State Vector Update From Orbiter				Update State Vector	
		Maneuver To Burn Attitude				Target POI	
		Activate Average g				Initiate Burn Seq.	
105:21:36	05:10:12	Phasing Orbit Insertion (96 Sec. MPS Burn) 170 x 4032 NM	IOS	105:28:26	10	Command Null Residuals	Status Dump
		Monitor Burn					
		Deactivate Average g	GTS	106:00:00	10	Track for Nav.	
		Null Burn Residuals (APS) If Necessary	HTS	106:26:00	10	Track for Nav.	
		Coast - Attitude Hold Payload	NHS	107:47:26	16.3	Initiate Align	
		Align G & N				Update State Vector	
		Receive State Vector Update From Orbiter				Target Cirul.	
		Maneuver To Burn Attitude				Initiate Burn Seq.	
		Activate Average g					
108:14:24	02:52:48	Circularize (70 Sec. MPS Burn) 170 x 170 NM Orbit	NHS		10	Monitor Burn	Status Dump
		Monitor Burn				Command Null of Residuals	
		Deactivate Average g					
		Align G & N					
		Receive State Vector Update From Orbiter	GTS	109:00:40	5.6	Track for Nav.	
109:15:00	01:00:36	Midcourse Correction If Required				Target MCC Backup	
		Tug Attitude Hold (Wide D.B.) Awaiting Orbiter	HTS	109:14:6.6	7	Track for Nav.	
			VTS	109:23:29	5.8	Update State Vector	
						Target TPI Backup	
			HTS	110:50:59	6.1	Track for Nav.	
			VTS	111:00:39	3.0	Track for Nav.	

TABLE 6.2.2.3-4 (Cont'd)

6.2.2.3.2.4 TUG MISSION TIMELINE AND NETWORK COVERAGE SCHEDULE - DEPLOY AND RETRIEVE PAYLOAD IN HIGH INCLINATION - SINGLE STAGE (DOD)

9/5/73

TUG OPERATION			GROUND OPERATION				
						AUTONOMY	
G.E.T. HR:MIN:SEC	ΔT HR:MIN:SEC	EVENT OPERATION	STA	G.E.T. HR:MIN:SEC	ΔT MIN	LEVEL III A	LEVEL II B
111:44:00	02:29:00	ORBITER/TUG DOCKING					
		Orbiter Terminal Phase Initiation					
		Midcourse Correction If Required					
		Orbiter Perform Braking Gates	GTS	112:13:29	4.6		Status Dump
		Station Keep With Tug					
		Prepare Tug/Payload For Docking					
		Vent MPS Tanks					
		Vent Tug Cryro Tanks					
		Select Narrow D.B. For Capture					
		Verify Tug/Payload Go For Capture					
		Release Manipulator Arm Latches					
		Deploy Manipulator Arm					
		Verify Adaptor Ready To Receive Tug					
		Capture Tug					
113:16:00	01:32:00	Dock Tug To Orbiter					
		Hard Dock					
		Verify Tug/Orbiter Electrical Interfaces	IOS	113:25:00	7.0	Activate TV	
		Deactivate Tug Subsystems					
		Shut Down Tug Fuel Cells					
		Verify Tug/Payload Ready For Stowage					
113:41:00	00:25:00	Stow Tug/Payload In Orbiter Cargo Bay	GTS	113:40:00	6	Verify Stowage	Status Dump
		Stow Manipulator					
114:10:00	00:29:00	PHASING COAST					
		Establish 7 Hr. Barbeque Thermal Cycling					

TABLE 6.2.2.3-4 (Cont'd)

6.2.2.3.2.4 TUG MISSION TIMELINE AND NETWORK COVERAGE SCHEDULE - DEPLOY AND RETRIEVE PAYLOAD IN HIGH INCLINATION - SINGLE STAGE

(DOD)

9/5/73

TUG OPERATION			GROUND OPERATION				
						AUTONOMY	
G.E.T. HR:MIN:SEC	ΔT HR:MIN:SEC	EVENT OPERATION	STA	G.E.T. HR:MIN:SEC	ΔT MIN	LEVEL III A	LEVEL II B
114:10:00		ORBIT TO LANDING					
		Close Cargo Bay Doors					
		Orient Orbiter For Deorbit					
114:23:00	00:13:00	Deorbit Burn (OMS)					
		Coast For Atmosphere Reentry					
		Orient Orbiter For Reentry					
114:50:00	00:27:00	Reentry (400 K. FT.)					
		Aerodynamic Coast					
115:29:00	00:39:00	Approach					
115:31:00	00:02:00	Touch Down					

TABLE 6.2.2.3-4 (Cont'd)

NETWORK DUTY CYCLE
SINGLE STG CONCEPT

NASA 15 STATION STDN

	AUTONOMY			
	III		II	
MISSION	NETWORK TIME (HR)	% FLT. TIME	NETWORK TIME (HR)	% FLT TIME
GEOSYNCH RND TRIP	9.5	8.7	3.3	3.0
HI INCL. ELLIPTICAL	8.6	8.6	3.0	3.0
OUTER PLANET	1.5	20.6	0.5	6.9
AVERAGE % TIME		12.6		4.3

AF SCF

GEOSYNCH RND TRIP	9.5	8.7	3.0	2.7

TABLE 6.2.1.3-5

6.2.3 SHUTTLE INTERFACE REQUIREMENTS

6.2.3.1 LAUNCH TO TUG ACTIVATION

TUG FUNCTIONAL FLOW

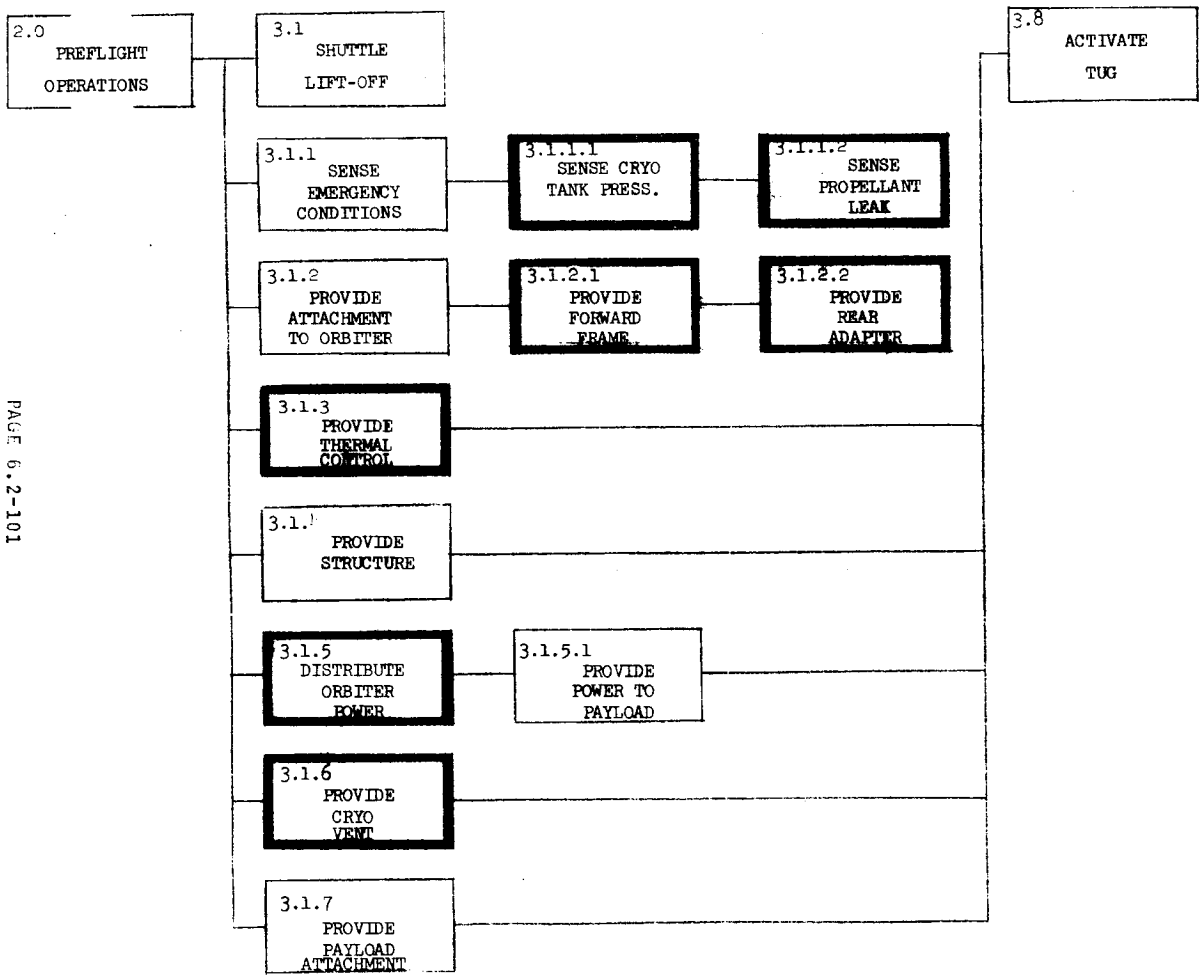

ORBITER INTERFACES

3.1.1.1	Provide caution and warning to the crew and ground control should Cryo tank pressure exceed limits. Pressure transducer output will be available in the tug umbilical.
3.1.1.2	Provide transducers in the payload bay to sense propellant (3 to 6).
3.1.2.1 & 2	Provide standard mechanical & structure attachment in the payload bay for the tug rear adapter & forward fra
3.1.3	Thermally control the payload bay to the payload bay stated temperature limits.
3.1.5	Provide power to tug via the interface umbilical (700 W)
3.1.6	Provide venting provisions and plumbing attachment to tug cradle.

6.2.3.2 TUG ACTIVATION TO DEPLOYMENT

TUG FUNCTIONAL FLOW

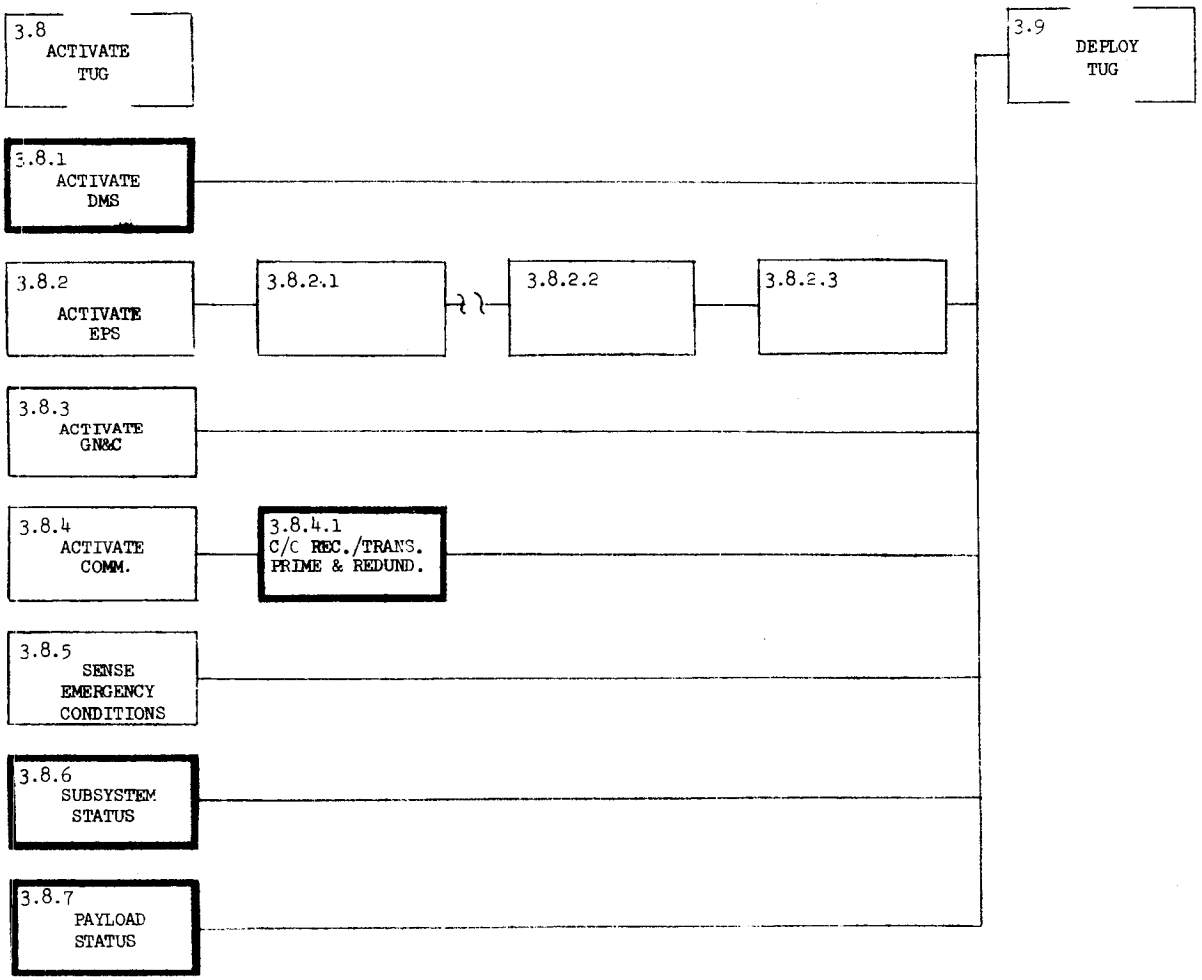

ORBITER INTERFACES

3.8.1
- o Provide power on signal for DMS
- o Provide conditioning equipment to accept tug bit stream and display tug parameters (including limits) so that crew can monitor tug C/O as required.
- o Provide caution/warning to crew upon receipt of DMS caution/warning.

3.8.4.1 Upon DMS activation of comm., crew will transmit and verify tug receipt of commands.

3.8.6 & 7 Review DMS "go" assuring tug and Payload ready for extension.

6.2.3.3 TUG DEPLOYMENT TO PHASING ORBIT INSERTION

TUG FUNCTIONAL FLOW

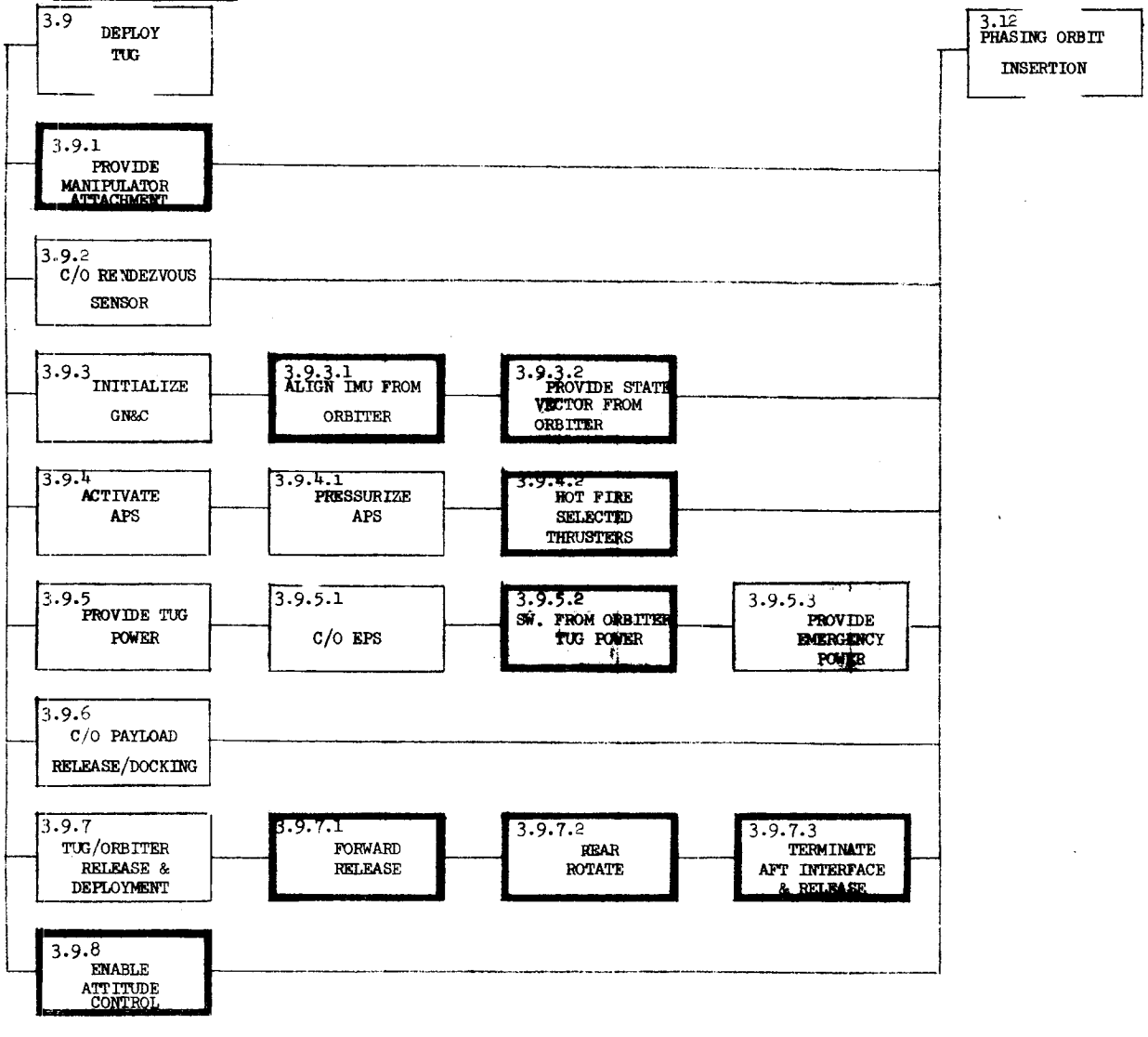

ORBITER INTERFACES

3.9.1	Attach manipulator to tug.
3.9.3.1	Transfer orbiter platform alignment to tug.
3.9.3.2	Provide state vector to tug.
3.9.4.2	Provide proceed signal to DMS for thruster firing.
3.9.5.2	Provide proceed signal to DMS for power switch over.
3.9.7.1	Release forward tug attachment.
3.9.7.2	Command & provide power to rotate tug out of payload bay.
3.9.7.3	o Terminate power/interfaces to tug.
	o Extend manipulator placing tug clear of orbiter.
	o Release tug.
3.9.8	o Separate from tug
	o Provide attitude enable signal to tug.

6.2.3.4 TUG PHASING ORBIT INSERTION TO COAST OPERATIONS

TUG FUNCTIONAL FLOW

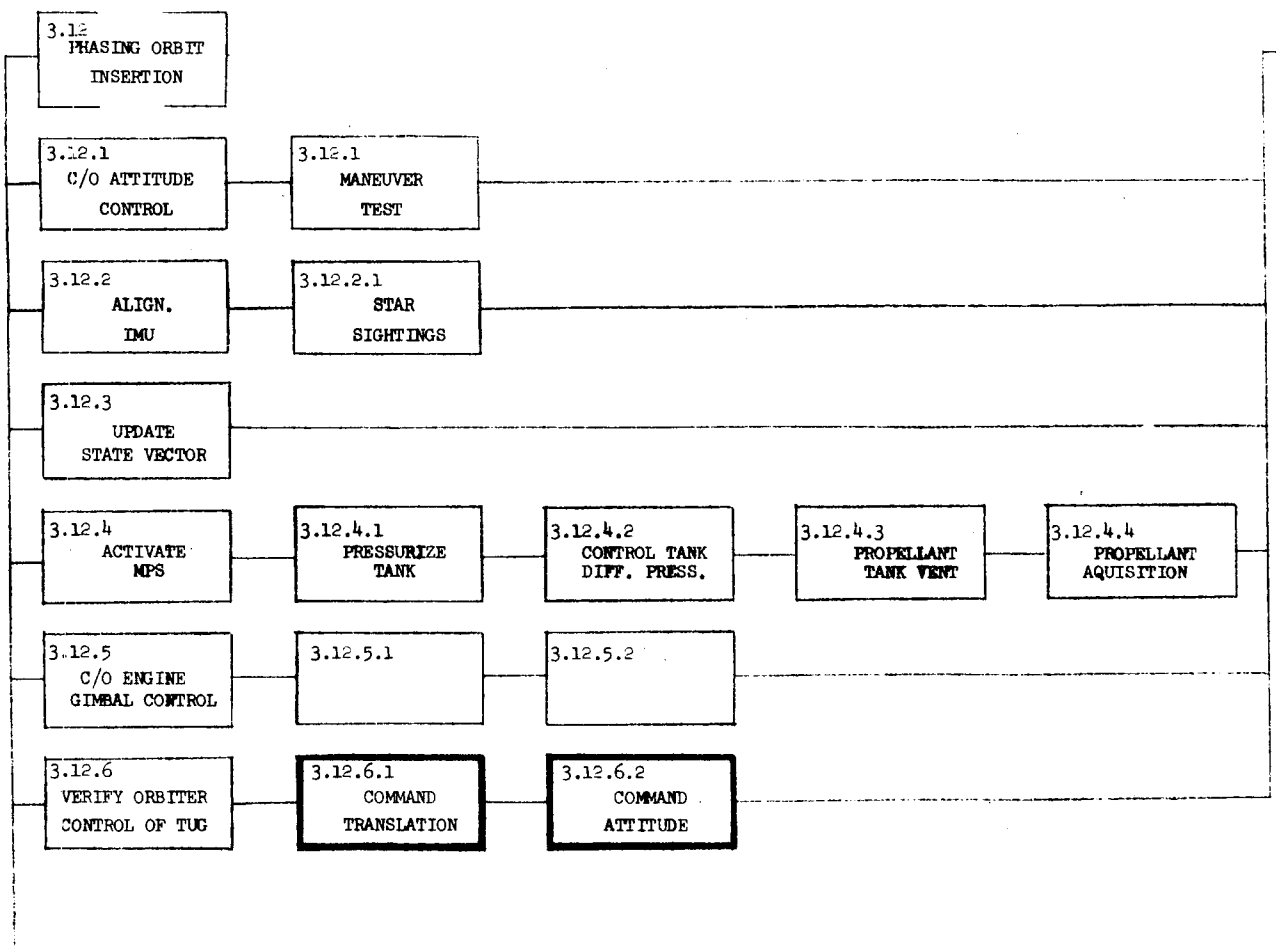

ORBITER INTERFACE

3.12.6.1 Command tug to translate in all directions.

3.12.6.2 Command tug to change attitude abort 3 axis.

6.2.3.5 TUG PREPARATION FOR DOCKING TO STOWAGE IN ORBITER

TUG FUNCTIONAL FLOW

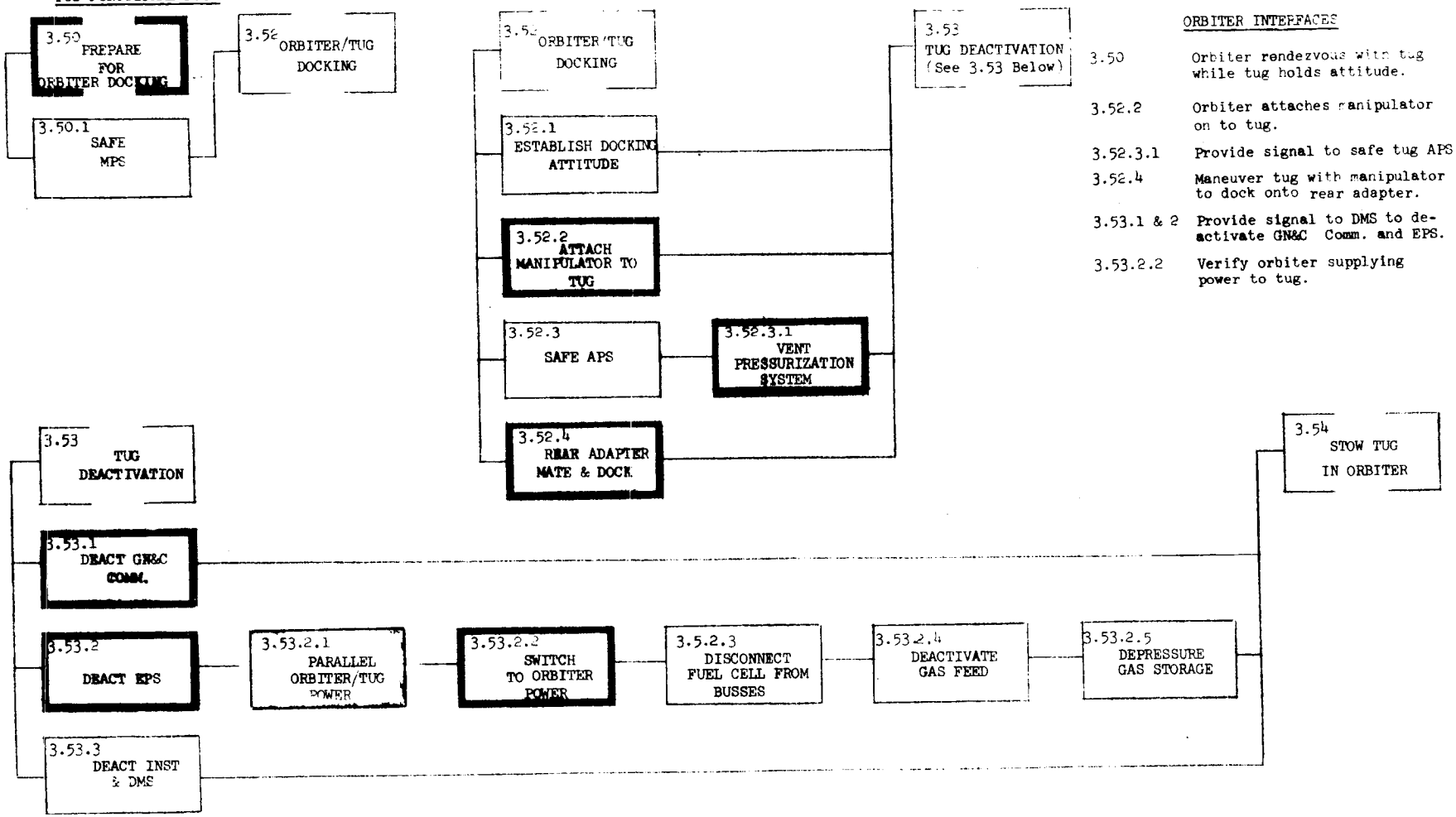

ORBITER INTERFACES

3.50	Orbiter rendezvous with tug while tug holds attitude.
3.52.2	Orbiter attaches manipulator on to tug.
3.52.3.1	Provide signal to safe tug APS
3.52.4	Maneuver tug with manipulator to dock onto rear adapter.
3.53.1 & 2	Provide signal to DMS to de-activate GN&C Comm. and EPS.
3.53.2.2	Verify orbiter supplying power to tug.

6.2.3.6 TUG STOWAGE IN ORBITER TO LANDING

TUG FUNCTIONAL FLOW

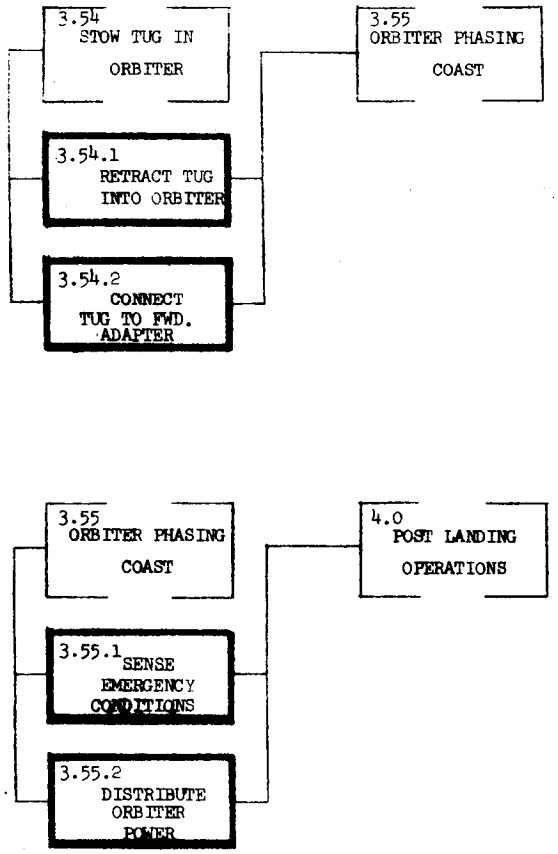

ORBITER INTERFACE

3.54.1	Provide power to actuator retracting tug into payload bay.
3.54.2	Connect forward frame to tug.
3.55.1	Monitor tug during return to earth.
3.55.2	Provide power to tug until landing.

6.2.4 IN-FLIGHT DUMP

SUMMARY

INCORPORATING AN IN-FLIGHT DUMP SYSTEM WILL SAVE 49 LB. EQUIVALENT TUG INERT WEIGHT (HALVE THIS IF REDUNDANCY REQUIRED), AND SAVE $365,000 PROGRAM COST

(See Section 3, Para. 6.5.7 for Details)

GRUMMAN

6.2.5 OPERATIONS COMPLEXITY

A methodology has been applied to determine the relative complexity of concept flight modes by taking the weighted sum of operations required to perform a mission. All Level 1 operations were weighed with the following multipliers:

- 8 for operations involving crew safety
- 4 for operations needed for TUG recovery
- 2 for operations needed for payload deployment
- 1 for operations needed for payload recovery

An additional complement of factors were added as follows:

- 8 for critical functions (i.e., docking, staging, etc.)
- 4 for unique trajectory functions (i.e., correct for nodal regression)
- 4 for deficient functions (i.e., payload loiter checkout)

This approach provides a basis for comparing the operations complexity of the various options and is also used as the scaling factor for determin flight operations cost. Our approach to costing flight operations was to establish a detailed "strawman" cost based on a "bottoms-up" estimate of the geosynchronous round trip mission. Our files on LM costs (complexity factor 177) were used to establish this estimate. The costs were then scaled by the complexity factor to establish cost differences between concepts.

Table 6.2.5-1 lists the complexity factor for each Tug configuration and for each mission flown by the configurations to meet the payload model. This table also lists the figures that contain the mission functional flows and the weighted values used to determine the complexity factors.

TABLE 6.2.5-1 OPERATIONS COMPLEXITY

COMPLEXITY FACTORS

FIGURE NUMBER	MISSION/MODE	CONFIGURATION/CONCEPT									
		110A-1	410AD-2	310-3A	310RE-3A	320A-3A	320AE-3A	310-3B	310ARE-3B	510A-3B	510ADE-3B
6.4.3.1	SINGLE STAGE MULTIPLE DEPLOY (1 P/L)	84	84	84	84	-	-	84	84	84	84
	SINGLE STAGE MULTIPLE DEPLOY (2 P/L)	102	102	102	102	-	-	102	102	102	102
6.4.3.2	SINGLE STAGE MULTIPLE DEPLOY WITH AKS FOR EACH PAYLOAD (1 P/L)	108	108	-	-	108	108	-	108	108	108
	SINGLE STAGE MULTIPLE DEPLOY WITH AKS FOR EACH PAYLOAD (2 P/L)	150	150	-	-	150	150	-	150	-	150
6.4.3.3	SINGLE STAGE EXPENDED EXTREME FAR PLANET	40	40	40	40	-	-	40	40	-	40
6.4.3.4	SINGLE STAGE RETRIEVE (DEORBITED) P/L	-	90	-	90	-	-	-	90	-	90
6.4.3.5	SINGLE STAGE WITH AKS FAR PLANET	-	108	-	-	108	108	-	108	-	108
6.4.3.6	SINGLE STAGE WITH AKS/DKS ROUND TRIP	-	163	-	-	-	-	-	-	-	163
6.4.3.7	SINGLE STAGE DEPLOYMENT AND RETRIEVAL	-	117	-	117	-	-	-	117	-	117
6.4.3.8	SINGLE STAGE MULTIPLE DEPLOYMENT WITH RETRIEVAL DELAY (1 P/L)	-	-	-	130	-	-	-	130	-	-
	SINGLE STAGE MULTIPLE DEPLOYMENT WITH RETRIEVAL DELAY (2 P/L)	-	-	-	148	-	148	-	-	-	-
6.4.3.9	TWO STAGE SLING SHOT DEPLOY (1 P/L)	-	-	-	-	130	138	-	-	-	-
	TWO STAGE SLING SHOT DEPLOY (2 P/L)	-	-	-	-	-	162	-	-	-	-
6.4.3.10	TWO STAGE REVERSE SLING SHOT DEPLOY DELAYED RETRIEVAL ROUND TRIP (1 P/L)	-	-	-	-	-	176	-	-	-	-
	TWO STAGE REVERSE SLING SHOT DEPLOY DELAYED RETRIEVAL ROUND TRIP (2 P/L)	-	-	-	-	-	192	-	-	-	-
6.4.3.11	SINGLE STAGE DEPLOYMENT WITH AKS AND DELAYED RETRIEVAL	-	-	-	-	-	-	-	149	-	-
6.4.3.12	SINGLE STAGE SORTIE	71	71	-	71	71	71	-	71	-	71
6.4.3.13	DELETED	-	-	-	-	-	-	-	-	-	-
		-	-	-	-	-	-	-	-	-	-
6.4.3.14	SINGLE STAGE RETRIEVAL DELAYED	-	-	-	88	-	-	-	-	-	-
6.4.3.15	SINGLE STAGE MULTIPLE DEPLOYMENTS & RETRIEVAL	-	-	-	139	-	-	-	-	-	-
6.4.3.16	TWO STAGE EXPENDED EXTREME FAR PLANET	-	-	-	-	-	50	-	-	-	-
6.4.3.17	TWO STAGE RETRIEVE (REVERSE SLING SHOT)	-	-	-	-	-	152	-	-	-	-

6.2.5-1 OPTION 1 CONFIGURATION 110A-1

MISSION / COMPLEXITY CONSIDERATIONS	1 STG DEPLOY 1 P/L	1 STG + AKS DEPLOY 1 P/L	1 STG (EXPENDED) DEPLOY 1 P/L	1 STG REPRIEVE 1 P/L	1 STG + AKS DEPLOY 1 P/L (PLANETARY)	1 STG + AKS DEPLOY 1 P/L & RETRIEVAL	1 STG DEPLOY 1 P/L & RETRIEVAL	1 STG + RD DEPLOY 1 P/L & RETRIEVAL	2 STG. DEPLOYMENT (SLINGSHOT)	2 STG. DEPLOY & RETRIEVE (REV.SLING-SHOT)	1 STG + AKS/DR 1 P/L DEPLOY & RETRIEVAL	1 STG SORTIE	1 STG SERVICE 1 P/L	1 STG + RD DELAYED RETRIEVAL	1 STG. DEPLOY 2 P/L & RETRIEVAL
CREW SAFETY	2X8	2X8	1X8									2X8			
TUG RECOVERY	5X4	5X4	-									5X4			
PAYLOAD PLACEMENT	6X2	6X2	4X2									5X2			
PAYLOAD RETRIEVAL	-	-	-									5X1			
CRITICAL FUNCTIONS	4X8	6X8	2X8									1X8			
UNIQUE TRAJECTORY FACTORS	1X4	2X4	1X4									3X4			
DEFICIENT FUNCTIONS	-	1X4	1X4									-			
TOTAL	84	108	40									71			
MAJOR COMPLEXITY ISSUES	o AKS ORBIT INSERTION ACCURACY										o ORBITER RECOVERY OF TUG				

TABLE 6.2.5-1

6.2.5-2 OPTION 2 CONFIGURATION 410:AD-2

MISSION / COMPLEXITY CONSIDERATIONS	1 STG DEPLOY 1 P/L	1 STG + AKS DEPLOY 1 P/L	1 STG (EXPENDED) DEPLOY 1 P/L	1 STG REPRIEVE 1 P/L	1 STG + AKS DEPLOY 1 P/L (PLANETARY)	1 STG+AKS/DRS DEPLOY 1 P/L & RETRIEVAL	1 STG DEPLOY 1 P/L & RETRIEVAL	1 STG + RD DEPLOY 1 P/L & RETRIEVAL	2 STG. DEPLOYMENT (SLINGSHOT)	2 STG. DEPLOY & RETRIEVE (REV.SLING-SHOT)	1 STG + AKS/DR 1P/L DEPLOY & RETRIEVAL	1 STG SORTIE	1 STG SERVICE 1 P/L	1 STG + RD DELAYED RETRIEVAL	1 STG. DEPLOY 2 P/L & RETRIEVAL
CREW SAFETY	2X8	2X8	1X8	2X8	2X8	2X8	2X8					2X8	2X8		
TUG RECOVERY	5X4	5X4	-	5X4	5X4	6X4	5X4					5X4	6X4		
PAYLOAD PLACEMENT	6X2	6X2	4X2	-	6X2	6X2	6X2					5X2	6X2		
PAYLOAD RETRIEVAL	-	-	-	6X1	-	11X1	9X1					5X1	-		
CRITICAL FUNCTIONS	4X8	6X8	2X8	5X8	6X8	10X8	6X8					1X8	6X8		
UNIQUE TRAJECTORY FACTORS	1X4	2X4	1X4	2X4	2X4	6X4	3X4					3X4	3X4		
DEFICIENT FUNCTIONS	-	1X4	1X4	-	1X4	1X4	-					-	-		
TOTAL	84	108	40	90	108	171	117					71	112		
MAJOR COMPLEXITY ISSUES	o AKS ORBIT INSERTION ACCURACY o DOCKING TO PAYLOAD o DKS RELIABILITY o NODAL REGRESSION o LAUNCH WINDOW CONSTRAINTS o RENDEZVOUS IN ELLIPITCAL ORBIT														

TABLE 6.2.5-2

6.2.5-3 OPTION 3A CONFIGURATION 310-3A → 310 RE-3A

MISSION / COMPLEXITY CONSIDERATIONS	1 STG DEPLOY 1 P/L	1 STG + AKS DEPLOY 1 P/L	1 STG (EXPENDED) DEPLOY 1 P/L	1 STG REPRIEVE 1 P/L	1 STG + AKS DEPLOY 1 P/L (PLANETARY)	1 STG + AKS DEPLOY 1 P/L & RETRIEVAL	1 STG DEPLOY 1 P/L & RETRIEVAL	1 STG + RD DEPLOY 1 P/L & RETRIEVAL	2 STG. DEPLOYMENT (SLINGSHOT)	2 STG. DEPLOY & RETRIEVE (REV.SLING-SHOT)	1 STG + AKS/DR 1 P/L DEPLOY & RETRIEVAL	1 STG SORTIE	1 STG SERVICE 1 P/L	1 STG + RD DELAYED RETRIEVAL	1 STG. DEPLOY 2 P/L & RETRIEVAL
CREW SAFETY	2X8		1X8	2X8			2X8	2X8				2X8		2X8	2X8
TUG RECOVERY	5X4		-	5X4			5X4	7X4				5X4		5X4	5X4
PAYLOAD PLACEMENT	6X2		4X2	-			6X2	6X2				5X2		8X2	11X2
PAYLOAD RETRIEVAL	-		-	6X1			9X1	6X1				5X1		-	13X1
CRITICAL FUNCTIONS	4X8		2X8	5X8			6X8	7X8				1X8		3X8	7X8
UNIQUE TRAJECTORY FACTORS	1X4		1X4	2X4			3X4	3X4				3X4		3X4	3X4
DEFICIENT FUNCTIONS	-		1X4	-			-	-				-		-	-
TOTAL	84		40	90			117	130				71		88	139
MAJOR COMPLEXITY ISSUES	o DOCKING TO PAYLOAD o RENDEZVOUS IN ELLIPTICAL ORBIT							o RD MODULE DOCKING & DEACTIVATION							

TABLE 6.2.5-3

6.2.5-4 OPTION 3A CONFIGURATION 320A-3A → 320AE-3A

MISSION / COMPLEXITY CONSIDERATIONS	1 STG DEPLOY 1 P/L	1 STG + AKS DEPLOY 1 P/L	1 STG (EXPENDED) DEPLOY 1 P/L	1 STG REPRIEVE 1 P/L	1 STG + AKS DEPLOY 1 P/L (PLANETARY)	1 STG + AKS DEPLOY 1 P/L & RETRIEVAL	1 STG DEPLOY 1 P/L & RETRIEVAL	1 STG + RD DEPLOY 1 P/L & RETRIEVAL	2 STG. DEPLOYMENT (SLINGSHOT)	2 STG. DEPLOY & RETRIEVE (REV.SLING-SHOT)	1 STG + AKS/DR 1 P/L DEPLOY & RETRIEVAL	1 STG SORTIE	1 STG RETRIEVE 1 P/L (REV. SLING-SHOT)	1 STG + RD DELAYED RETRIEVAL	1 STG. DEPLOY 2 P/L & RETRIEVAL
CREW SAFETY		2X8			2X8				3X8	3X8		2X8	2X8		
TUG RECOVERY		5X4			5X4				10X4	8X4		5X4	8X4		
PAYLOAD PLACEMENT		6X2			6X2				5X2	6X2		5X2	-		
PAYLOAD RETRIEVAL		-			-				-	16X1		5X1	12X1		
CRITICAL FUNCTIONS		6X8			6X8				7X8	9X8		1X8	8X8		
UNIQUE TRAJECTORY FACTORS		2X4			2X4				2X4	5X4		3X4	5X4		
DEFICIENT FUNCTIONS		1X4			1X4				-	-		-	-		
TOTAL		108			108				138	176		71	144		
MAJOR COMPLEXITY ISSUES	o TUG TO TUG DOCKING o RENDEZVOUS IN ELLIPTICAL ORBIT o AKS ORBIT INSERTION ACCURACY														

TABLE 6.2.5-4

6.2.5-5 OPTION 3B CONFIGURATION 310-3B → 310 ARE-3B

MISSION / COMPLEXITY CONSIDERATIONS	1 STG DEPLOY 1 P/L	1 STG + AKS DEPLOY 1 P/L	1 STG (EXPENDED) DEPLOY 1 P/L	1 STG REPRIEVE 1 P/L	1 STG + AKS DEPLOY 1 P/L (PLANETARY)	1 STG + AKS DEPLOY 1 P/L & RETRIEVAL	1 STG DEPLOY 1 P/L & RETRIEVAL	1 STG + RD DEPLOY 1 P/L & RETRIEVAL	2 STG. DEPLOYMENT (SLINGSHOT)	2 STG. DEPLOY & RETRIEVE (REV.SLING-SHOT)	1 STG + AKS/DR 1 P/L DEPLOY & RETRIEVAL	1 STG SORTIE	1 STG SERVICE 1 P/L	1 STG + RD DELAYED RETRIEVAL	1 STG. DEPLOY 2 P/L & RETRIEVAL
CREW SAFETY	2X8	2X8	1X8	2X8	2X8		2X8	2X8			2X8	2X8			
TUG RECOVERY	5X4	5X4	-	5X4	5X4		5X4	7X4			5X4	5X4			
PAYLOAD PLACEMENT	6X2	6X2	4X2	-	6X2		6X2	6X2			6X2	5X2			
PAYLOAD RETRIEVAL	-	-	-	6X1	-		9X1	6X1			9X1	5X1			
CRITICAL FUNCTIONS	4X8	6X8	2X8	5X8	6X8		6X8	7X8			8X8	1X8			
UNIQUE TRAJECTORY FACTORS	1X4	2X4	1X4	2X4	2X4		3X4	3X4			6X4	3X4			
DEFICIENT FUNCTIONS	-	1X4	1X4	-	1X4		-	-			1X4	-			
TOTAL	84	108	40	90	108		117	130			149	71			
MAJOR COMPLEXITY ISSUES	o AKS ORBIT INSERTION ACCURACY o RENDEZVOUS IN ELLIPTICAL ORBIT O RD MODULE DOCKING & DEACTIVATION														

TABLE 6.2.5-5

6.2.5-6 OPTION 3B CONFIGURATION 510A-3B → 510ADE-3B

MISSION / COMPLEXITY CONSIDERATIONS	1 STG DEPLOY 1 P/L	1 STG + AKS DEPLOY 1 P/L	1 STG (EXPENDED) DEPLOY 1 P/L	1 STG REPRIEVE 1 P/L	1 STG + AKS DEPLOY 1 P/L (PLANETARY)	1 STG + AKS DEPLOY 1 P/L & RETRIEVAL	1 STG DEPLOY 1 P/L & RETRIEVAL	1 STG + RD DEPLOY 1 P/L & RETRIEVAL	2 STG. DEPLOYMENT (SLINGSHOT)	2 STG. DEPLOY & RETRIEVE (REV.SLING-SHOT)	1 STG + AKS/DR 1 P/L DEPLOY & RETRIEVAL	1 STG SORTIE	1 STG SERVICE 1 P/L	1 STG + RD DELAYED RETRIEVAL	1 STG. DEPLOY 2 P/L & RETRIEVAL
CREW SAFETY	2X8	2X8	1X8	2X8	2X8	2X8	2X8					2X8			
TUG RECOVERY	5X4	5X4	-	5X4	5X4	6X4	5X4					5X4			
PAYLOAD PLACEMENT	6X2	6X2	4X2	-	6X2	6X2	6X2					5X2			
PAYLOAD RETRIEVAL	-	-	-	6X1	-	11X1	9X1					5X1			
CRITICAL FUNCTIONS	4X8	6X8	2X8	5X8	6X8	10X8	6X8					1X8			
UNIQUE TRAJECTORY FACTORS	1X4	2X4	1X4	2X4	2X4	6X4	3X4					3X4			
DEFICIENT FUNCTIONS	-	1X4	1X4	-	1X4	1X4	-					-			
TOTAL	84	108	40	90	108	171	117					71			
MAJOR COMPLEXITY ISSUES	o AKS ORBIT INSERTION ACCURACY o DKS RELIABILITY o NODAL REGRESSION o RENDEZVOUS IN ELLIPTICAL ORBIT o LAUNCH WINDOW CONSTRAINTS														

TABLE 6.2.5-6

ON-BOARD VS. GROUND SOFTWARE

AS A FUNCTION OF LEVELS OF AUTONOMY

ITEM	LEVEL I		LEVEL II		LEVEL III		LEVEL IV	
	ON BOARD	GRND	ON BOARD	GRND	ON BOARD	GRND	ON BOARD	GRND
EXECUTIVE:	9800		9800		9800		9800	
NAV	6550		6550		5150	8200	1200	8200
COAST FLT ROUTINES	3000		3000		3000			3700
GUIDANCE	2060		2060		2060	2000	300	4600
TARGETING	2800		2800		2800			3500
CONTROL	5000		5000		5000		5000	
S/S MONITOR	4500		4500		900	5600	900	5600
SEQUENCING	4500	5600	4500	5600	2500	5600	200	5600
BACK-UP		6000		6000		6000		6000
TOTAL	38,210	11,600	38,210	11,600	31,210	27,400	17,400	37,200
D&D	$7.6M	$2.3M	$7.6M	$2.3M	$6.2M	$5.48M	$3.48M	$7.44M
$/FLT.	$65,000	116,000	$65,000	116,000	$28,600	138K	$5.6K	138K

TABLE 6.2.5-7

GRUMMAN

6.2.6 Cost Summary

Flight operations costs are summarized in Table 6.2.6-1 for 6 programs. Within NASA or DOD, cost is separated into the following categories: (1) DDT&E prior to IOC, (2) Flight Test prior to IOC, and (3) Operations, which includes DDT&E following IOC, Flight Test following IOC, and Recurring Operations. Under Option 1, Configuration 110 (without Apogee Kick Stage) is included for comparison with Configuration 110A. The costs for the evolved configurations are based on the assumption that the initial configuration preceded the evolved configuration.

Inspecting the cost summary table, the minimum cost program is 110A, Option 1, with the NASA cost at $76.50M and the DOD cost at $43.35M. The maximum cost program is 320A → 320AE Option 3A for NASA at $134.56M and 510A → 510ADE Option 3B for DOD at $66.12M (with 320A → 320AE Option 3A a close second for DOD at $64.93M).

6.2.6.1 Methodology

The overall approach used to generate costs for flight operations is summarized below and details are contained in section 6.4.

(1) A bottoms up estimate based on LM cost records was used for the 1 stage round trip mission estimate. The manpower and software requirements were estimated for the categories of mission planning, flight control, flight evaluation, and flight software, distinguishing between NASA and DOD, between the agency and contractor, between the nonrecurring operations and recurring operations, and between pre-IOC and post-IOC operations.

(2) Translate the manpower and software requirements into dollar costs.

(3) Reduce the level of breakout to show mission planning, flight control, flight evaluation, and flight software, for DDT&E (pre-and post-IOC), Flight Test (pre-and post-IOC) and Recurring Operations.

(4) Multiply the results obtained in step 3 for the round-trip flight by the normalized complexity factor associated with each other type of flight to obtain the costs for the other types of flight.

(5) Perform steps 1, 2, 3 and 4 for autonomy level 2.

(6) Apply the above results to each configuration - option at autonomy levels 3 and 2 as appropriate and adjusting for the actual flights/year (as compared to the 3 flights/year assumed in generating baseline costs).

TABLE 6.2.6-1 COST SUMMARY

FLIGHT OPERATIONS

CONFIG.	OPTION	$M							
		NASA				DOD			
		DDT&E BEFORE IOC	FLIGHT TEST BEFORE IOC	OPS	TOTAL	DDT&E BEFORE IOC	FLIGHT TEST BEFORE IOC	OPS	TOTAL
110A	1	24.84	1.30	50.36	76.50	3.11	0	40.24	43.35
110		19.32	1.02			2.41	0		
410AD	2	41.84	3.31	63.00	108.15	5.08	0	42.83	47.91
310	3A	23.45	1.23	22.15	46.83	2.93	0	13.70	16.63
310RE		11.27	0.57	55.41	67.25	0.85	0	40.78	41.63
BOTH		34.72	1.80	77.56	114.08	3.78	0	54.48	58.26
320A	3A	35.41	1.85	36.53	73.79	4.42	0	18.28	22.70
320AE		7.34	0.37	52.96	60.67	0	0	42.23	42.23
BOTH		42.75	2.32	89.49	134.56	4.42	0	60.51	64.93
310	3B	23.45	1.23	24.25	48.93	2.93	0	13.70	16.63
310ARE		11.76	0.60	57.96	69.82	2.26	0	40.64	42.90
BOTH		35.21	1.83	82.21	119.25	5.19	0	54.34	59.53
510A	3B	24.84	1.30	16.30	42.44	3.11	0	16.53	19.64
510ADE		15.41	0.78	56.16	72.35	1.87	0	44.61	46.48
BOTH		40.25	2.08	72.46	114.79	4.98	0	61.14	66.12

NOTE: OPS = DDT&E AFTER IOC + FLIGHT TEST AFTER IOC + RECURRING OPERATIONS.
COSTS FOR EVOLVED CONFIGS ARE BASED ON INITIAL CONFIG. PRECEDING EVOLVED CONFIG.

6.2.6.2 Non-Recurring Flight Operations Cost

Non-recurring flight operations cost excluding flight test is given in Table 6.2.6.2-1 under the heading DDT&E for those costs which occur prior to IOC. In the cases of the options in which configurations evolve, data is given for the initial, evolved, and initial plus evolved configurations. The minimum and maximum costs are given below:

	MINIMUM COST			MAXIMUM COST		
	CONFIG	OPTION	$M	CONFIG.	OPTION	$M
NASA	110A	1	24.84	320A→320AE	3A	42.75
DOD	110A	1	3.10	410AD	2	5.08

TABLE 6.2.6.2-1

NON-RECURRING FLIGHT OPERATIONS COST EXCLUDING FLIGHT TEST

CONFIG.	OPTION	CATEGORY	DDT&E BEFORE IOC, $M	
			NASA	DOD
110A	1	MISSION PLANNING	5.53	2.10
		FLIGHT CONTROL	1.26	0.65
		FLIGHT EVALUATION	0.34	0.36
		FLIGHT SOFTWARE	17.71	0.0
		TOTAL	24.84	3.11
410AD	2	MISSION PLANNING	10.71	4.09
		FLIGHT CONTROL	0.86	0.42
		FLIGHT EVALUATION	0.54	0.57
		FLIGHT SOFTWARE	29.73	0.0
		TOTAL	41.84	5.08
310	3A	MISSION PLANNING	5.22	1.98
		FLIGHT CONTROL	1.19	0.61
		FLIGHT EVALUATION	0.32	0.34
		FLIGHT SOFTWARE	16.72	0.0
		TOTAL	23.45	2.93
↓ 310RE	3A	MISSION PLANNING	2.88	0.67
		FLIGHT CONTROL	0.24	0.07
		FLIGHT EVALUATION	0.15	0.11
		FLIGHT SOFTWARE	8.00	0.0
		TOTAL	11.27	0.85
310 ↓ 310RE	3A	MISSION PLANNING	8.10	2.65
		FLIGHT CONTROL	1.43	0.68
		FLIGHT EVALUATION	0.47	0.45
		FLIGHT SOFTWARE	24.72	0.00
		TOTAL	34.72	3.78

TABLE 6.2.6.2-1 (CONTINUATION)

NON-RECURRING FLIGHT OPERATIONS COST EXCLUDING FLIGHT TEST

CONFIG.	OPTION	CATEGORY	DDT&E BEFORE IOC, $M	
			NASA	DOD
320A	3A	MISSION PLANNING	7.88	2.99
		FLIGHT CONTROL	1.80	0.92
		FLIGHT EVALUATION	0.49	0.51
		FLIGHT SOFTWARE	25.24	0.0
		TOTAL	35.41	4.42
320AE	3 A	MISSION PLANNING	1.88	0.0
		FLIGHT CONTROL	0.15	0.0
		FLIGHT EVALUATION	0.09	0.0
		FLIGHT SOFTWARE	5.22	0.0
		TOTAL	7.34	0.0
320A → 320AE	3A	MISSION PLANNING	9.76	2.99
		FLIGHT CONTROL	1.95	0.92
		FLIGHT EVALUATION	0.58	0.51
		FLIGHT SOFTWARE	30.46	0.0
		TOTAL	42.75	4.42
310	3 B	MISSION PLANNING	5.22	1.98
		FLIGHT CONTROL	1.19	0.61
		FLIGHT EVALUATION	0.32	0.34
		FLIGHT SOFTWARE	16.72	0.0
		TOTAL	23.45	2.93
310ARE	3 B	MISSION PLANNING	3.01	1.15
		FLIGHT CONTROL	0.25	0.12
		FLIGHT EVALUATION	0.15	0.16
		FLIGHT SOFTWARE	8.35	0.0
		TOTAL	11.76	1.43

TABLE 6.2.6.2-1 (CONTINUATION)

NON-RECURRING FLIGHT OPERATIONS COST EXCLUDING FLIGHT TEST

CONFIG.	OPTION	CATEGORY	DDT&E BEFORE IOC, $M	
			NASA	DOD
310 ↓ 310ARE	3B	MISSION PLANNING	8.23	3.13
		FLIGHT CONTROL	1.44	0.73
		FLIGHT EVALUATION	0.47	0.50
		FLIGHT SOFTWARE	25.07	0.0
		TOTAL	35.21	4.36
510A ↓ 510ADE	3B	MISSION PLANNING	5.53	2.10
		FLIGHT CONTROL	1.26	0.65
		FLIGHT EVALUATION	0.34	0.36
		FLIGHT SOFTWARE	17.71	0.0
		TOTAL	24.84	3.11
	3B	MISSION PLANNING	3.94	1.51
		FLIGHT CONTROL	0.32	0.15
		FLIGHT EVALUATION	0.20	0.21
		FLIGHT SOFTWARE	10.95	0.0
		TOTAL	15.41	1.87
510A ↓ 510ADE	3B	MISSION PLANNING	9.47	3.61
		FLIGHT CONTROL	1.58	0.80
		FLIGHT EVALUATION	0.54	0.57
		FLIGHT SOFTWARE	28.66	0.0
		TOTAL	40.25	4.98
		MISSION PLANNING		
		FLIGHT CONTROL		
		FLIGHT EVALUATION		
		FLIGHT SOFTWARE		
		TOTAL		

6.2.6.3 Non-Recurring Flight Test Operations Cost

Non-recurring Flight Test Operations Costs are summarized in Table 6.2.6.3-1 for NASA and DOD separately. The costs are those incurred prior to IOC and are given for the 6 programs, with breakout for mission planning, flight control, flight evaluation, and flight software. In the case of configurations which evolve, costs are given for the initial and evolved configurations separately and then for the initial and evolved configurations combined.

Minimum and Maximum costs are given below:

	MINIMUM COST			MAXIMUM COST		
	CONFIG.	OPTION	COST $M	CONFIG.	OPTION	COST $M
NASA	110A	1	1.30	410AD	2	3.31
DOD	-	-	-	-	-	-

TABLE 6.2.6.3-1

NON-RECURRING FLIGHT TEST OPERATIONS COST

CONFIG.	OPTION	CATEGORY	FLIGHT TEST COST BEFORE IOC, $M	
			NASA	DOD
110A	1	MISSION PLANNING	0.79	0.0
		FLIGHT CONTROL	0.27	0.0
		FLIGHT EVALUATION	0.24	0.0
		FLIGHT SOFTWARE	0.0	0.0
		TOTAL	1.30	0.0
410AD	2	MISSION PLANNING	2.41	0.0
		FLIGHT CONTROL	0.32	0.0
		FLIGHT EVALUATION	0.58	0.0
		FLIGHT SOFTWARE	0.0	0.0
		TOTAL	3.31	0.0
310	3A	MISSION PLANNING	0.75	0.0
		FLIGHT CONTROL	0.25	0.0
		FLIGHT EVALUATION	0.23	0.0
		FLIGHT SOFTWARE	0.0	0.0
		TOTAL	1.23	0.0
310RE	3A	MISSION PLANNING	0.42	0.0
		FLIGHT CONTROL	0.05	0.0
		FLIGHT EVALUATION	0.10	0.0
		FLIGHT SOFTWARE	0.0	0.0
		TOTAL	0.57	0.0
310 → 310RE	3A	MISSION PLANNING	1.17	0.0
		FLIGHT CONTROL	0.30	0.0
		FLIGHT EVALUATION	0.33	0.0
		FLIGHT SOFTWARE	0.0	0.0
		TOTAL	1.80	0.0

TABLE 6.2.6.3-1 (CONTINUATION)

NON-RECURRING FLIGHT TEST OPERATIONS COST

CONFIG.	OPTION	CATEGORY	FLIGHT TEST COST BEFORE IOC, $M	
			NASA	DOD
320A ↓ 320AE	3A	MISSION PLANNING	1.13	0.0
		FLIGHT CONTROL	0.38	0.0
		FLIGHT EVALUATION	0.34	0.0
		FLIGHT SOFTWARE	0.0	0.0
		TOTAL	1.85	0.0
	3A	MISSION PLANNING	0.27	0.0
		FLIGHT CONTROL	0.03	0.0
		FLIGHT EVALUATION	0.07	0.0
		FLIGHT SOFTWARE	0.0	0.0
		TOTAL	0.37	0.0
320A ↓ 320AE	3A	MISSION PLANNING	1.40	0.0
		FLIGHT CONTROL	0.41	0.0
		FLIGHT EVALUATION	0.41	0.0
		FLIGHT SOFTWARE	0.0	0.0
		TOTAL	2.22	0.0
310 ↓ 310ARE	3B	MISSION PLANNING	0.75	0.0
		FLIGHT CONTROL	0.25	0.0
		FLIGHT EVALUATION	0.23	0.0
		FLIGHT SOFTWARE	0.0	0.0
		TOTAL	1.23	0.0
	3B	MISSION PLANNING	0.44	0.0
		FLIGHT CONTROL	0.06	0.0
		FLIGHT EVALUATION	0.10	0.0
		FLIGHT SOFTWARE	0.0	0.0
		TOTAL	0.60	0.0

TABLE 6.2.6.3-1 (CONTINUATION)

NON-RECURRING FLIGHT TEST OPERATIONS COST

CONFIG.	OPTION	CATEGORY	FLIGHT TEST COST BEFORE IOC, $M	
			NASA	DOD
310 ↓ 310ARE	3B	MISSION PLANNING	1.19	0.0
		FLIGHT CONTROL	0.31	0.0
		FLIGHT EVALUATION	0.33	0.0
		FLIGHT SOFTWARE	0.0	0.0
		TOTAL	1.83	0.0
510A ↓ 510ADE	3B	MISSION PLANNING	0.79	0.0
		FLIGHT CONTROL	0.27	0.0
		FLIGHT EVALUATION	0.24	0.0
		FLIGHT SOFTWARE	0.0	0.0
		TOTAL	1.30	0.0
	3B	MISSION PLANNING	0.57	0.0
		FLIGHT CONTROL	0.07	0.0
		FLIGHT EVALUATION	0.14	0.0
		FLIGHT SOFTWARE	0.0	0.0
		TOTAL	0.78	0.0
510A ↓ 510ADE	3B	MISSION PLANNING	1.36	0.0
		FLIGHT CONTROL	0.34	0.0
		FLIGHT EVALUATION	0.38	0.0
		FLIGHT SOFTWARE	0.0	0.0
		TOTAL	2.08	0.0
		MISSION PLANNING		
		FLIGHT CONTROL		
		FLIGHT EVALUATION		
		FLIGHT SOFTWARE		
		TOTAL		

6.2.6.4 Recurring Flight Operations Cost

Recurring flight operations costs are summarized in Table 6.2.6.4-1 for NASA and DOD separately. The total recurring cost is taken as the sum of post-IOC DDT&E, post-IOC Flight Tests, and standard recurring operations. The average cost per flight is computed by dividing the total recurring cost by the no. of flights. Minimum and maximum average costs per flight are given below.

	MINIMUM			MAXIMUM		
	Config.	Option	Ave. Cost/ Flt $M	Config.	Option	Ave. Cost/ Flt $M
NASA	510A ↓ 510 ADE	3B	0.36	320A 320AE	3A	0.54
DOD	310 ↓ 310 ARE	3B	0.33	320A 320AE	3A	0.54

TABLE 6.2.6.4-1 RECURRING FLIGHT OPERATIONS COST

CONFIG.	OPTION	CATEGORY	RECURRING FLIGHT OPERATIONS COST, $M NASA DDT&E >IOC	NASA FLT TEST >IOC	NASA RECUR OPS	NASA TOTAL RECUR	NASA NO FLTS	NASA AVG PER FLT	DOD DDT&E >IOC	DOD FLT TEST >IOC	DOD RECUR OPS	DOD TOTAL RECUR	DOD NO FLTS	DOD AVG PER FLT
110A	1	MISSION PLANNING	2.90	0.12	6.70	9.72		0.087	1.52	0.0	6.44	7.96		0.075
		FLIGHT CONTROL	0.68	0.034	22.63	23.34		0.21	0.60	0.0	21.71	22.31		0.21
		FLIGHT EVALUATION	0.18	0.020	1.43	1.63		0.015	0.22	0.0	1.38	1.60		0.015
		FLIGHT SOFTWARE	6.96	0.0	8.71	15.67		0.14	0.0	0.0	8.37	8.37		0.079
		TOTAL	10.72	0.17	39.47	50.36	112	0.45	2.34	0.0	37.90	40.24	106	0.38
410AD	2	MISSION PLANNING	5.61	0.22	11.49	17.32		0.13	2.95	0.0	10.49	13.44		0.13
		FLIGHT CONTROL	0.45	0.0	15.02	15.47		0.11	0.41	0.0	13.21	13.62		0.13
		FLIGHT EVALUATION	0.28	0.032	2.05	2.36		0.017	0.35	0.0	1.87	2.22		0.02
		FLIGHT SOFTWARE	11.68	0.0	16.17	27.85		0.20	0.0	0.0	13.55	13.55		0.13
		TOTAL	18.02	0.25	44.73	63.00	138	0.46	3.71	0.0	39.12	42.83	107	0.40
310 ↓	3A	MISSION PLANNING	4.52	0.30	2.13	6.95		0.25	2.22	0.0	2.36	4.58		0.15
		FLIGHT CONTROL	0.65	0.035	3.45	4.14		0.15	0.57	0.0	5.17	5.74		0.19
		FLIGHT EVALUATION	0.17	0.019	0.41	0.60		0.02	0.21	0.0	0.45	0.66		0.02
		FLIGHT SOFTWARE	8.00	0.0	2.46	10.46		0.37	0.0	0.0	2.72	2.72		0.09
		TOTAL	13.34	0.354	8.45	22.15	28	0.79	3.00	0.0	10.70	13.70	31	0.44
310RE	3A	MISSION PLANNING	1.51	0.06	12.33	13.90		0.08	0.48	0.0	9.63	10.11		0.08
		FLIGHT CONTROL	0.12	0.007	18.68	18.81		0.11	0.07	0.0	15.37	15.44		0.12
		FLIGHT EVALUATION	0.07	0.009	2.23	2.31		0.01	0.06	0.0	1.73	1.79		0.01
		FLIGHT SOFTWARE	3.14	0.0	17.25	20.39		0.12	0.0	0.0	13.44	13.44		0.10
		TOTAL	4.84	0.076	50.49	55.41	172	0.32	0.61	0.0	40.17	40.78	129	0.32
310 ↓ 310RE	3A	MISSION PLANNING	6.03	0.36	14.46	20.85		0.10	2.70	0.0	11.99	14.69		0.09
		FLIGHT CONTROL	0.77	0.042	22.08	22.95		0.11	0.64	0.0	20.54	21.18		0.13
		FLIGHT EVALUATION	0.24	0.028	2.64	2.91		0.01	0.27	0.0	2.18	2.45		0.02
		FLIGHT SOFTWARE	11.14	0.0	19.71	30.85		0.15	0.0	0.0	16.16	16.16		0.10
		TOTAL	18.18	0.43	58.94	77.56	200	0.39	3.61	0.0	50.87	54.48	160	0.34

TABLE 6.2.6.4-1 (CONTINUATION) RECURRING FLIGHT OPERATIONS COST

CONFIG.	OPTION	CATEGORY	RECURRING FLIGHT OPERATIONS COST, $M: NASA: DDT&E >IOC	NASA: FLT TEST >IOC	NASA: RECUR OPS	NASA: TOTAL RECUR	NASA: NO FLTS	NASA: AVG PER FLT	DOD: DDT&E >IOC	DOD: FLT TEST >IOC	DOD: RECUR OPS	DOD: TOTAL RECUR	DOD: NO FLTS	DOD: AVG PER FLT
320A	3A	MISSION PLANNING	6.82	0.47	3.27	10.56		0.32	3.93	0.	2.87	6.80		0.24
		FLIGHT CONTROL	0.97	0.05	7.94	8.96		0.27	0.86	0.	6.39	7.25		0.26
		FLIGHT EVALUATION	0.25	0.029	0.65	0.93		0.03	0.39	0.	0.57	0.96		0.03
		FLIGHT SOFTWARE	12.05	0.	4.03	16.08		0.49	0.	0.	3.27	3.27		0.12
		TOTAL	20.09	0.55	15.89	36.53	33	1.11	5.18	0.	13.10	18.28	28	0.65
320AE	3A	MISSION PLANNING	0.99	0.04	12.87	13.90		0.11	0.	0.	10.97	10.97		0.10
		FLIGHT CONTROL	0.08	0.005	17.07	17.16		0.13	0.	0.	14.46	14.46		0.14
		FLIGHT EVALUATION	0.05	0.006	2.29	2.35		0.018	0.	0.	1.93	1.93		0.018
		FLIGHT SOFTWARE	2.05	0.	17.50	19.55		0.15	0.	0.	14.87	14.87		0.14
		TOTAL	3.17	0.051	49.73	52.96	132	0.40	0.	0.	42.23	42.23	107	0.39
320A → 320AE	3A	MISSION PLANNING	7.81	0.51	16.14	24.46		0.15	3.93	0.	13.84	17.77		0.13
		FLIGHT CONTROL	1.05	0.055	25.01	26.12		0.16	0.86	0.	20.85	21.71		0.16
		FLIGHT EVALUATION	0.30	0.035	2.94	3.28		0.02	0.39	0.	2.50	2.89		0.02
		FLIGHT SOFTWARE	14.10	0.	21.53	35.63		0.22	0.	0.	18.14	18.14		0.13
		TOTAL	23.26	0.60	65.62	89.49	165	0.54	5.18	0.	55.33	60.51	135	0.45
310	3B	MISSION PLANNING	4.52	0.30	2.28	7.10		0.24	2.22	0.	2.36	4.58		0.15
		FLIGHT CONTROL	0.65	0.035	5.21	5.90		0.20	0.57	0.	5.17	5.74		0.19
		FLIGHT EVALUATION	0.17	0.019	0.45	0.64		0.022	0.21	0.	0.45	0.66		0.02
		FLIGHT SOFTWARE	7.98	0.	2.63	10.61		0.37	0.	0.	2.72	2.72		0.09
		TOTAL	13.32	0.35	10.57	24.25	29	0.84	3.00	0.	10.70	13.70	31	0.44
310ARE	3B	MISSION PLANNING	1.57	0.06	13.65	15.28		0.09	0.83	0.	10.16	10.99		0.08
		FLIGHT CONTROL	0.13	0.007	18.01	18.15		0.11	0.12	0.	13.44	13.56		0.10
		FLIGHT EVALUATION	0.07	0.009	2.45	2.53		0.015	0.10	0.	1.83	1.93		0.014
		FLIGHT SOFTWARE	3.27	0.	18.73	22.00		0.13	0.	0.	14.16	14.16		0.11
		TOTAL	5.04	0.076	52.84	57.96	171	0.34	1.05	0.	39.59	40.64	134	0.30

TABLE 6.2.6.4-1 (CONTINUATION)

RECURRING FLIGHT OPERATIONS COST

CONFIG.	OPTION	CATEGORY	RECURRING FLIGHT OPERATIONS COST, $M											
			NASA						DOD					
			DDT&E >IOC	FLT TEST >IOC	RECUR OPS	TOTAL RECUR	NO FLTS	AVG PER FLT	DDT&E >IOC	FLT TEST >IOC	RECUR OPS	TOTAL RECUR	NO FLTS	AVG PER FLT
310 ↓ 310ARE	3B	MISSION PLANNING	6.09	0.36	15.93	22.38		0.11	3.05	0.	12.52	15.57		0.094
		FLIGHT CONTROL	0.78	0.042	23.22	24.05		0.12	0.69	0.	18.61	19.30		0.12
		FLIGHT EVALUATION	0.24	0.028	2.90	3.17		0.016	0.31	0.	2.28	2.59		0.016
		FLIGHT SOFTWARE	11.25	0.	21.36	32.61		0.16	0.	0.	16.88	16.88		0.10
		TOTAL	18.36	0.43	63.41	82.21	200	0.41	4.05	0.	50.29	54.34	165	0.33
510A ↓ 510ADE	3B	MISSION PLANNING	4.78	0.33	3.31	3.64		0.087	2.34	0.	2.89	5.73		0.15
		FLIGHT CONTROL	0.68	0.034	7.88	7.91		0.19	0.60	0.	6.39	6.99		0.19
		FLIGHT EVALUATION	0.18	0.020	0.64	0.66		0.016	0.22	0.	0.56	0.78		0.02
		FLIGHT SOFTWARE	8.45	0.	4.09	4.09		0.097	0.	0.	3.53	3.53		0.095
		TOTAL	14.09	0.38	15.92	16.30	42	0.39	3.16	0.	13.37	16.53	37	0.45
510A ↓ 510ADE	3B	MISSION PLANNING	2.07	0.08	12.72	14.87		0.09	1.09	0.	11.11	12.20		0.11
		FLIGHT CONTROL	0.16	0.009	16.68	16.85		0.11	0.15	0.	14.58	14.73		0.13
		FLIGHT EVALUATION	0.10	0.012	2.27	2.38		0.015	0.13	0.	1.98	2.11		0.019
		FLIGHT SOFTWARE	4.30	0.	17.76	22.06		0.14	0.	0.	15.57	15.57		0.14
		TOTAL	6.63	0.101	49.43	56.16	160	0.35	1.37	0.	43.24	44.61	114	0.39
510A ↓ 510ADE	3B	MISSION PLANNING	6.85	0.41	16.03	18.51		0.092	3.43	0.	14.00	17.43		0.12
		FLIGHT CONTROL	0.84	0.043	24.56	24.76		0.12	0.75	0.	20.97	21.72		0.14
		FLIGHT EVALUATION	0.28	0.032	2.91	3.04		0.015	0.35	0.	2.54	2.89		0.019
		FLIGHT SOFTWARE	12.75	0.	21.85	26.15		0.13	0.	0.	19.10	19.10		0.13
		TOTAL	20.72	0.48	65.35	72.46	202	0.36	4.53	0.	56.61	61.14	151	0.40
		MISSION PLANNING												
		FLIGHT CONTROL												
		FLIGHT EVALUATION												
		FLIGHT SOFTWARE												