(NASA-CR-179096) STORABLE SPACE TUG SYSTEMS STUDY DATA DUMP. VOLUME 7: SAFETY AND RELIABILITY (Grumman Aerospace Corp.) 421 p Avail: NTIS

N87-70390

Unclas

00/18 0072694

GRUMMAN

STORABLE SPACE TUG SYSTEMS STUDY

DATA DUMP

VOLUME 7, SAFETY AND RELIABILITY

19 SEPTEMBER 1973

REPORT NO. 300RP-73-010

CONTRACT NO. NAS8-29674

PREPARED FOR

GEORGE C. MARSHALL SPACE FLIGHT CENTER

BY

GRUMMAN AEROSPACE CORPORATION

BETHPAGE, NEW YORK 11714

GRUMMAN

VOL. VII STORABLE TUG

SAFETY AND RELIABILITY

I. INTRODUCTION

II. CONFIGURATION DESIGN ASSESSMENTS

III. SUBSYSTEM DESIGN ASSESSMENTS

IV. OPERATIONS ASSESSMENTS

V. INTERFACE ISSUES

VI. PERTINENT ISSUES

VII. REPORTS

VIII. TASKS FOR NEXT PHASE

GRUMMAN

I. INTRODUCTION

SCOPE

- ALL MISSION PHASES
- TUG-ORBITER INTERFACES AND INTERACTIONS
- SELECTED EMERGENCY CONDITIONS
- SPECIAL STUDIES

GRUMMAN

I. INTRODUCTION

GROUNDRULES AND ASSUMPTIONS

- PRIMARY EMPHASIS THROUGHOUT THE STUDY WAS ON ORBITER CREW/EQUIPMENT SAFETY
- CONTROLLED CATEGORY HAZARDS WILL BE RESOLVED BY GOOD DESIGN PRACTICES
- THE HAZARD ANALYSIS REPORTS AND FAILURE MODES EFFECTS ANALYSIS SHEETS FORM THE PRIMARY SOURCE OF REPORTABLE SAFETY DATA
- INCORPORATION OF SAFETY REQUIREMENTS IN THE TUG REQUIREMENTS DOCUMENT CONSTITUTE ACCEPTABLE HAZARD CLOSEOUT FOR PHASE A

GRUMMAN

STORABLE PROPELLANT TUG SAFETY ASSESSMENT

- ARE THERE ANY "SHOW STOPPERS"?
  - STORABLE PROPELLANT TUGS AND SHUTTLES ARE SPACE ANALOG OF C5A WITH ITS FUELED CARGOES
  - PROBLEM AREAS EXIST, BUT ARE DEEMED SOLVABLE
- WHAT ARE THE CONCERNS? WHAT'S REQUIRED?

CONCERNS	WHAT'S REQUIRED
- DESIGN FOR REUSE	- TESTING, DEMONSTRATIONS NEEDED
- CONTROL OF PROPELLANTS AND RESIDUALS o SERVICING o ABORTS o CRASH o LEAKS	- DETAILED ANALYSES REQUIRED TO ENHANCE CONFIDENCE IN SYSTEM DESIGN
- MISSION MODES o FLEXIBILITY o COMPLEXITIES o EQUIPMENT	- CREW, EQUIPMENT, PUBLIC SAFETY CERTIFICATION THROUGH ANALYSIS REQUIRED
- FEDERAL, STATE AND LOCAL SAFETY REGULATIONS IMPACT TUG CONCEPTS	- EARLY DISCUSSION RECOMMENDED TO PRECLUDE DESIGN/ OPERATIONAL CHANGES DOWNSTREAM

GRUMMAN

SUMMARY OF TUG CHARACTERISTICS

OPTION	1	2	3A				3B			
GEOSYNCH RETRIEVE CAP (LB)	—	3500	—	2200	—	2200	—	3500	—	3500
TUG DESIGNATION	110A-1	410AD-2	310-3A	310RE-3A	320A-3A	320AE-3A	310-3B	310ARE-3B	510A-3B	510ADE-3B
TUG LENGTH, FT	27.92	24.75	24.75		17.06 EACH		24.75		25.0	
BODY DIA, FT	9.92	10.0	10.0		8.16		10.0		10.0	
MAIN PROP. CAPACITY, KLB	56.9	59.5	59.5		32 EACH		59.5		59.5	
MAIN ENGINE										
- OME F=7.5K ISP=	327.2	—	—		—		—		327.2	
- CL. 1 F=12K ISP=	—	338	338		—		338		—	
- CL. 1 (RET.NOZ.) F=12K ISP=	—	—	—		338		—		—	
SUBSYS TECH										
- LOW COST	▭	—	—		—		—		▭	
- HIGH PERF.	—	▭	▭		▭		▭		—	
AUTONOMY LEVEL	IIIA	IIB	IIIA	IIB	IIIA		IIIA	IIB	IIIA	IIB

FIXED WT (KLB)
NASA MISSIONS SHOWN, ADD SECURE COMM FOR DOD MISSIONS

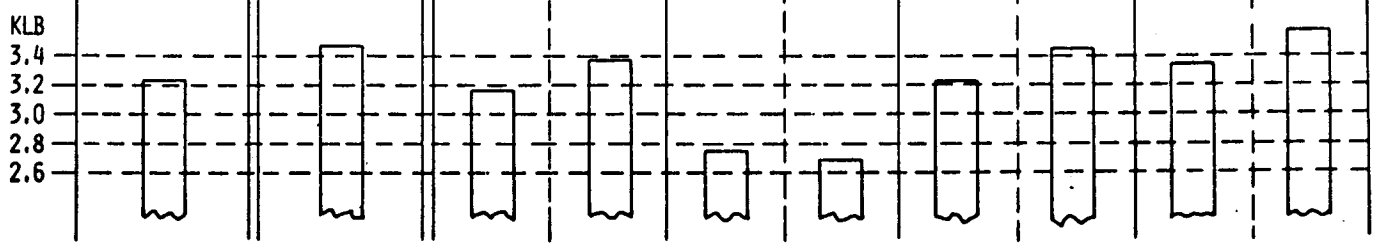

PERFORMANCE SUMMARY

GEOSYNCH PAYLOAD IN LB

OPTION	1	2	3A				3B			
GEOSYNCH RETRIEVE CAP (LB)	—	3500	—	2200	—	2200	—	3500	—	3500
TUG DESIGNATION	110A-1	410AD-2	310-3A	310RE-3A	320A-3A	320AE-3A	310-3B	310ARE-3B	510A-3B	510ADE-3B
SINGLE STAGE	4014	4914 1574 1080	5418	5026 1618 1096	(A)	(A) (A)	5212	4841 1543 1054	3410	3035 805 528 (A)
+KICK STAGES (ALSO USED FOR MULTI DEPLOY) AKS DKS	8207	6021 3920 2646			(B)	(B)		3500	6090	6546 3825 2385
+RETRIEVAL DELAY AKS				3021				2760 2400 3500 2400		
TWO STAGE					5094	5920 3800 2430				
TUG EXPENDED	(C)	(C)	(C)	(C)		(C) (C)	(C)	(C)	(C)	(C)

NOTES - (A) USED FOR LOW ENERGY ORBITS (B) USED FOR PLANETARY (P.L. 1920 & 23) (C) USED FOR EXTREME FAR PLANETARY (P.L. 22 & 24)

PL 19-20-23

SAFETY LOGIC FLOW

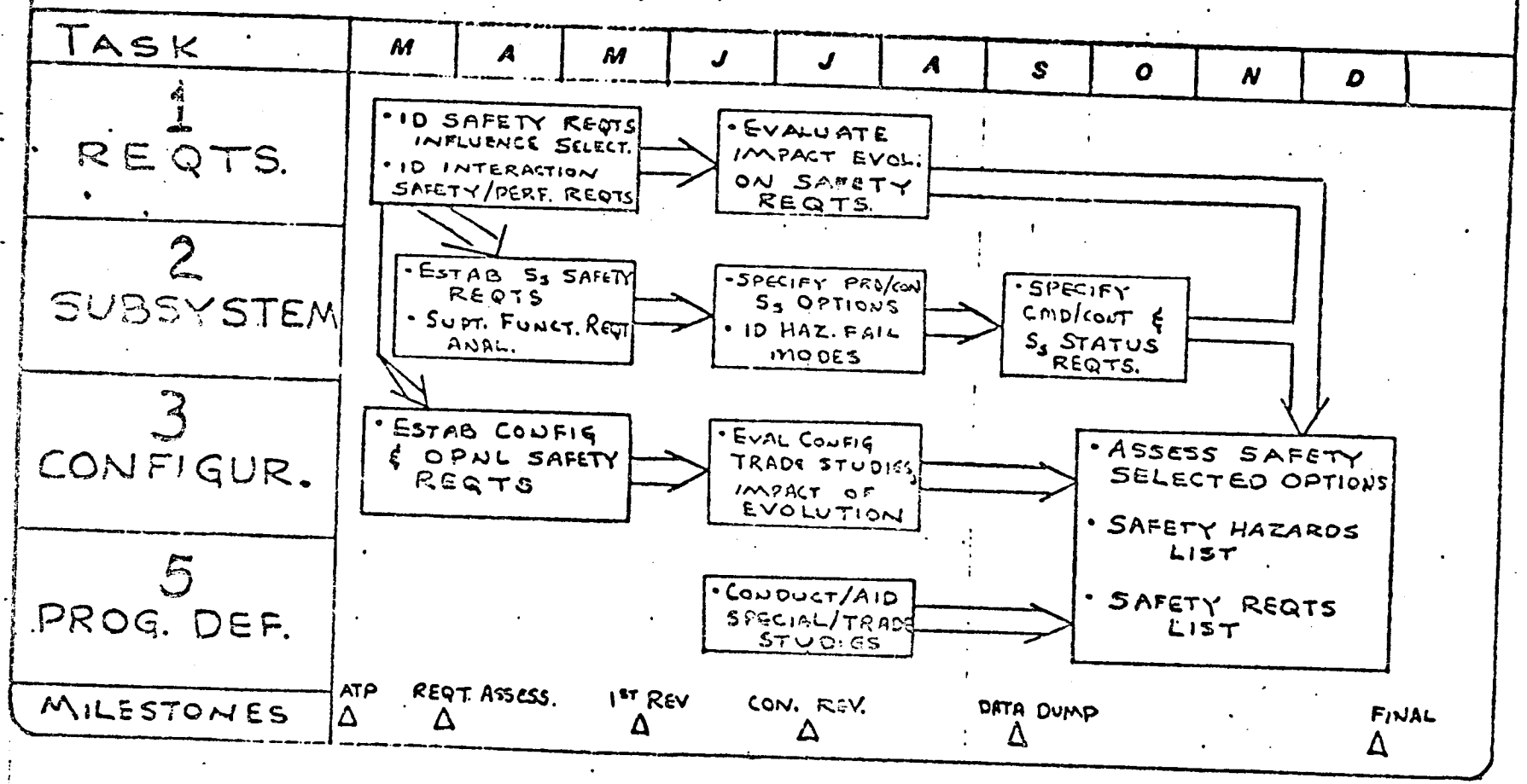

HAZARD IDENTIFICATION METHODS

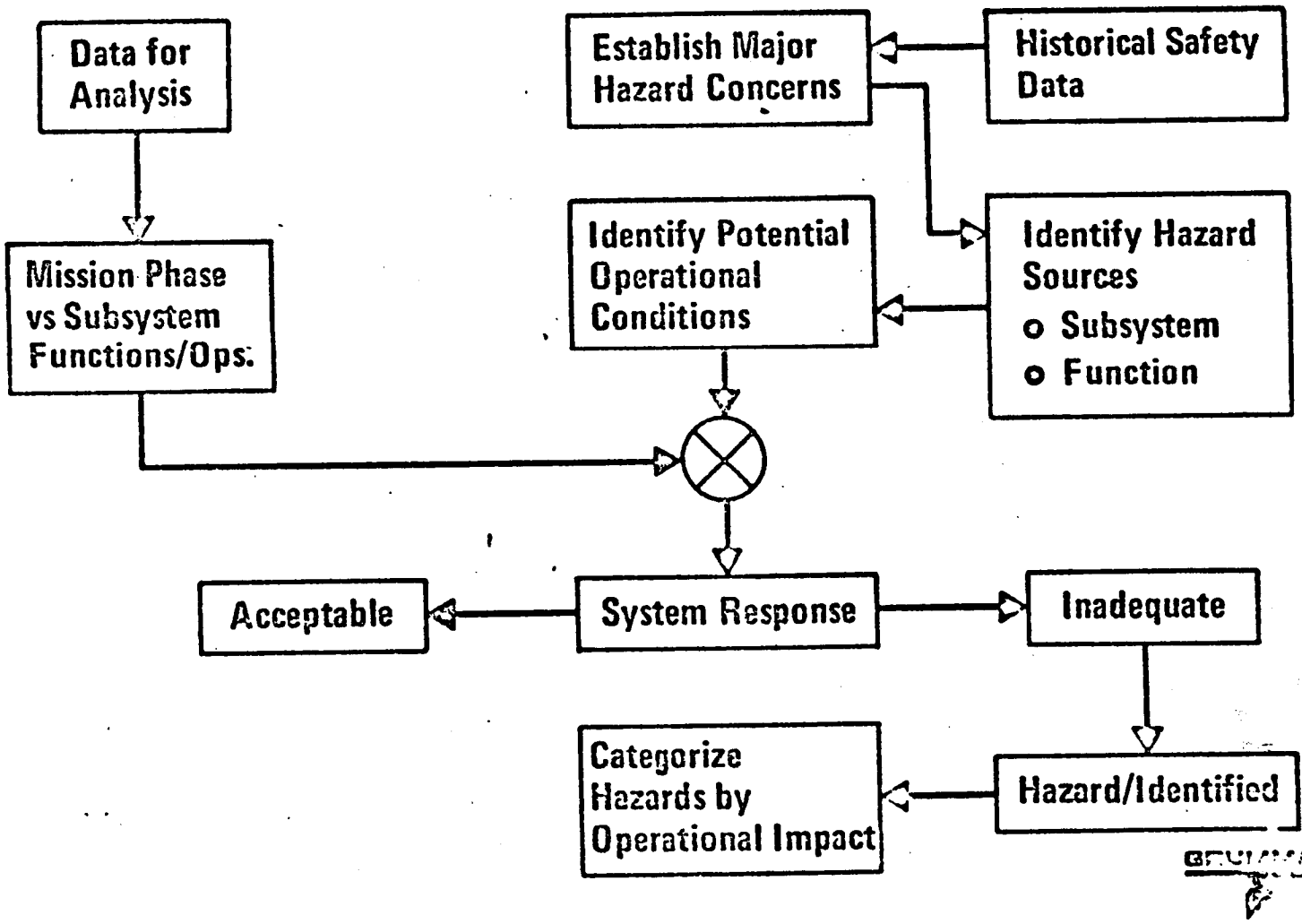

CATASTROPHIC/CRITICAL HAZARD CONTROL

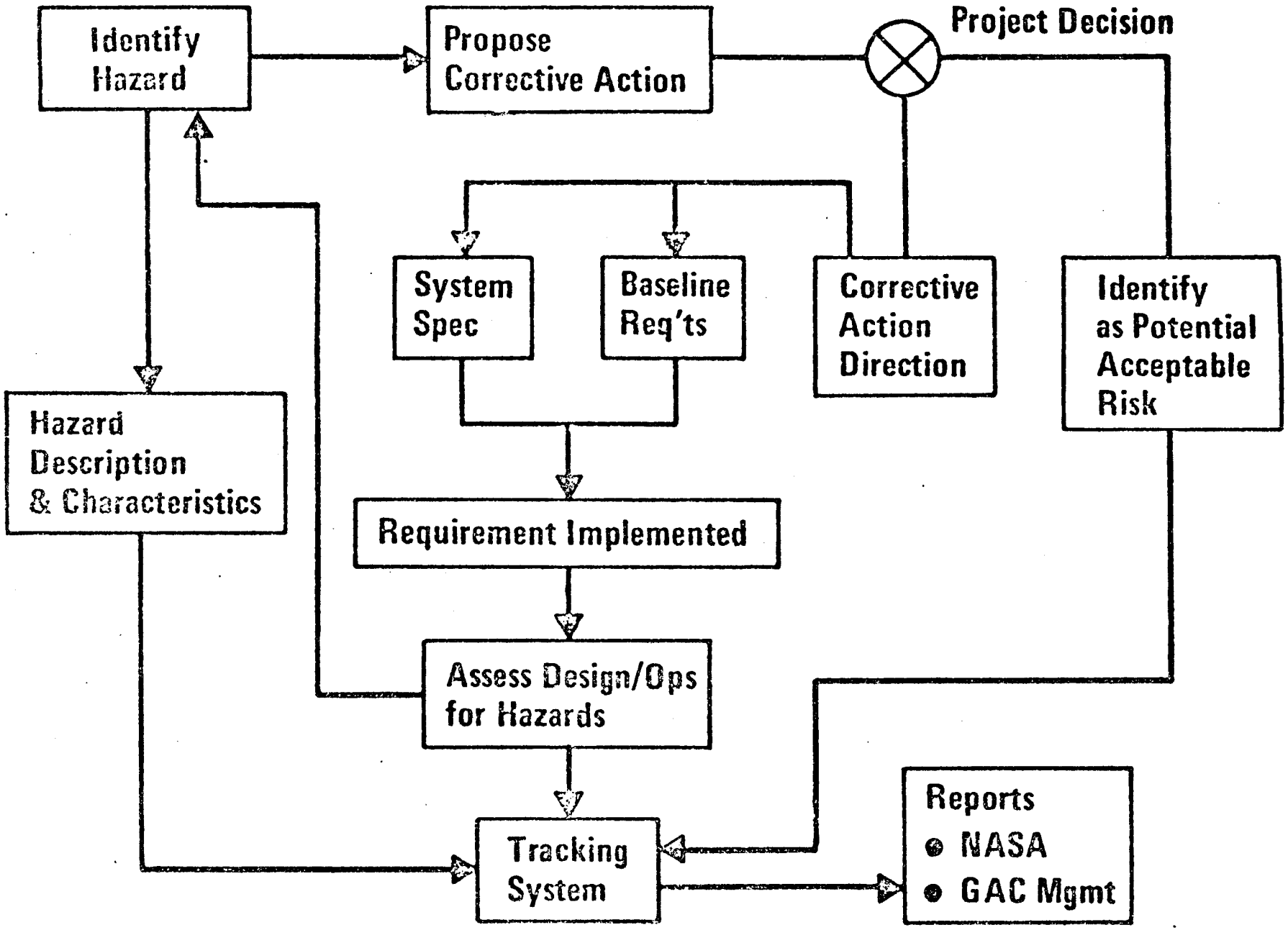

GRUMMAN

RELIABILITY ASSESSMENT TECHNIQUES

- o IDENTIFY RELIABILITY REQUIREMENTS
  - o 0.97 MISSION RELIABILITY
    - 1 WEEK REF MISSION FOR TUG
    - ACTUAL MISSIONS FOR TUG PLUS AUGMENTATION STALLS
  - o FAIL OPERATIONAL/FAIL SAFE FOR AUXILIARY PROPULSION SYSTEM
  - o FAIL OPERATIONAL/FAIL SAFE FOR CRITICAL COMMAND AND CONTROL FACTOR
  - o NO SINGLE FAILURE RESULT IN HAZARD FOR CREW SAFETY
- o SELECT EQUIPMENT AND REDUNDANCY LEVELS TO MEET THE REQUIREMENTS
- o REDUNDANCY SELECTED ON BASIS OF GREATEST INCREASE IN RELIABILITY PER POUND OF REDUNDANT UNIT WEIGHT
- o SAFETY ORIENTED REQUIREMENTS DICTATED REDUNDANCY
  - RECEIVERS
  - APS CONTROL ELECTRONICS
  - APS THRUSTER ISOLATION VALVES
  - APS AND MPS VENT VALVES

GRUMMAN

RELIABILITY ANALYSIS DATA DUMP

THE RELIABILITY ANALYSIS FOR EACH OPTION/VEHICLE IS PRESENTED ON THE FOLLOWING PAGES.

THE DATA SETS, ONE FOR EACH VEHICLE INCLUDES:

- o MISSION RELIABILITY SUMMARY
  - INDICATES THE MISSIONS ASSESSED FOR RELIABILITY, AS A MINIMUM, THE RELIABILITY REFERENCE MISSION, AND THE MOST COMPLEX TUG MISSION INCLUDING AUGMENTATION STAGES (WHERE APPLICABLE).
- o TUG VEHICLE RELIABILITY DATA FOR REFERENCE MISSION
  - INDICATES THE RELIABILITY OF EACH SUBSYSTEM* FOR THE REFERENCE MISSION
- o SUBSYSTEM RELIABILITY SUMMARIES (ONE FOR EACH SUBSYSTEM*)
  - IDENTIFIES ALL EQUIPMENTS INCLUDED IN THE RELIABILITY ANALYSIS (NON-MISSION SUCCESS EQUIPMENT NOT INCLUDED)
  - GENERIC FAILURE RATE** (LAMDA) FOR EACH EQUIPMENT AND SOURCE OF THE FAILURE RATE
  - QUANTITY OF UNITS IN A SIMPLEX SYSTEM
  - EQUIVALENT OPERATING HOURS OF EQUIPMENT (TIME)
  - MISSION RELIABILITY OF EQUIPMENT R_0 - NOT REDUNDANT
    R_1 - REDUNDANT

GRUMMAN

RELIABILITY ANALYSIS DATA DUMP (CONT.)

- RELIABILITY LOGIC DIAGRAM OF THE SUBSYSTEM
- INDICATION OF TYPE OF REDUNDANCY -
  (NOTE - SOME EQUIPMENTS ARE INTERNALLY REDUNDANT (I), OTHERS HAVE FUNCTIONAL BACK-UPS (F))
- SUBSYSTEM RELIABILITY CALCULATED WITH AND WITHOUT REDUNDANCY

* STRUCTURES - INCLUDING INTERFACE EQUIPMENT WAS NOT DETAILED IN THIS ANALYSIS. AN ALLOWANCE, EQUIVALENT TO ONE FAILURE PER 1000 REFERENCE MISSIONS WAS BUDGETED FOR THIS SUBSYSTEM.

** SOME GENERIC/FAILURE RATES AND OPERATING HOURS WERE ADJUSTED TO COMPENSATE FOR NON-EXPERIMENTAL TIME DEPENDENT EQUIPMENTS.

EXAMPLES:

- MAIN ENGINE - BASED ON DISCUSSION WITH THE ENGINE VENDORS, A BASELINE RELIABILITY OF 0.999 WAS ASSUMED FOR A NOMINAL MISSION OF 9 ENGINE STARTS. THIS WAS ADJUSTED BY ± 0.0001 PER ENGINE START DELTA FROM NOMINAL.
- APS THRUSTERS - APS DESIGN ALLOWS LOSS OF ONE THRUSTER, CONSEQUENTLY, RELIABILITY OF THRUSTERS WAS BASED ON 23 OUT OF 24 (OR 15 OUT OF 16) WORKING.
- APS REGULATOR AND SHUT-OFF VALVE ASSY - THE COMBINED RELIABILITY OF THIS "SYSTEM" IS NOT EXPONENTIAL. FAILURE RATES WERE BASED ON AN EQUATION DEVELOPED FOR THIS SYSTEM, $\lambda = (125T + .1564T^2) \times 10^{-12}$

GRUMMAN

APS REGULATOR & SHUT-OFF VALVE ASSEMBLY

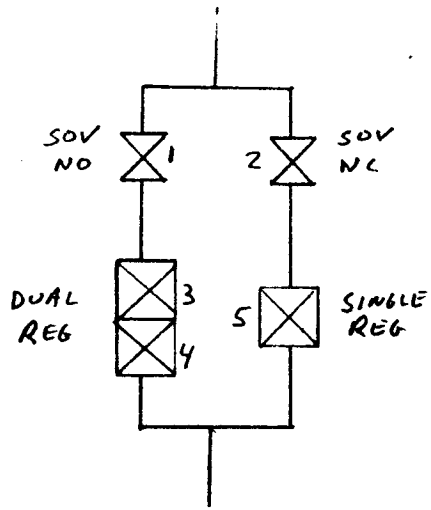

$\lambda_1 = \lambda_2 = 15 \times 10^{-6}$

$\lambda_3 = \lambda_4 = \lambda_5 = 55 \times 10^{-6}$

$\lambda_{1O} = 7.5 \times 10^{-6}$

$\lambda_{1C} = 7.5 \times 10^{-6}$

$\lambda_{3O} = 50 \times 10^{-6}$

$\lambda_{3C} = 5 \times 10^{-6}$

FAILURE PATHS

λ_{1C}	λ_{2O}	λ_{3O}	λ_{3C}	λ_{4O}	λ_{4C}	λ_{5O}	λ_{5C}	
	X		X					$7.5 \times 5 \times t^2 \times 10^{-12}$
	X				X			$7.5 \times 5 \times t^2 \times 10^{-12}$
			X				X	$5 \times 5 \times t^2 \times 10^{-12}$
					X		X	$5 \times 5 \times t^2 \times 10^{-12}$
X		X		X				$7.5 \times 50 \times 50 \times t^3 \times 10^{-18}$
		X		X		X		$50 \times 50 \times 50 \times t^3 \times 10^{-18}$
			X		X		X	$5 \times 5 \times 5 \times t^3 \times 10^{-18}$
		X		X			X	$50 \times 50 \times 5 \times t^3 \times 10^{-18}$

$125 t^2 \times 10^{-12} + .1564 t^3 \times 10^{-18} \div t$

SYSTEM EQUIV λ $= \lambda_S = 125 t + .1564 t^2 \times 10^{-12}$

APS THRUSTERS

- ASSUME 0.9999 RELIABILITY PER THRUSTER FOR REFERENCE MISSION

$$\lambda = .67 \times 10^{-6}$$

FOR 16 THRUSTER CONFIGURATIONS

$$p = e^{-\lambda t}$$

$$R = \binom{16}{15} p^{15}(1-p) + \binom{16}{16} p^{16}$$

FOR 24 THRUSTER CONFIGURATIONS

$$R = \binom{24}{23} p^{23}(1-p) + \binom{24}{24} p^{24}$$

II. CONFIGURATION ASSESSMENTS

A. SAFETY

B. RELIABILITY

GRUMMAN

* Applicable to Concept

HAZARD STATUS SUMMARY REPORT
CONCEPT: 110A-1

HAZARD CODE	HAZARD DESCRIPTION	INITIAL HAZARD LEVEL	PRPS RATIONALE	TRACKING HAZARD LEVEL	STATUS	REMARKS
STRUCTURES 1000						
* 1001	TANKAGE LEAKS INTO ENCLOSED VOLUMES	CRIT	DESIGN	CRIT		LOW:ON ORBIT
1002	LOSS OF N_2O_4 TANK PRESSURE	CRIT	DESIGN	CRIT		LOW:ON ORBIT
* 1003	ADAPTER OVERSTRESSED DURING GROUND MATE	CRIT	PROCDRS	CONT		LOW:MATING
* 1004	PAYLOAD BAY DOORS DON'T OPEN	CRIT	DESIGN	CONT		MOD:DEPLOY
MAIN PROPULSION 2000						
* 2001	TKS,LINES,FITTINGS LK.	CRIT	DESIGN/PCDR	CRIT		LOW:LAUNCH PAD
* 2002	VENT TO P/L BAY	CRIT	DESIGN/PCDR	CRIT		LOW:UP/ON/SAFING
* 2003	OFF DES. ENG. INLET COND.	CRIT	DESIGN	CRIT		LOW:THRUSTING
* 2004	PROP. MIXING DURING LANDING/RE-ENTRY	CAT.	DESIGN/TEST	CAT.		LOW:LANDG/ENTRY
* 2005	PROP. SLOSH DURING DKING	CRIT	SIMULATION	CRIT		MOD:DOCKING
2006	CACHE TK. & CRASH LANDG	CAT	DESIGN	CAT		CONCPT DELETED
2007	MMH TANK IMPLOSION	CAT	DESIGN	CAT		CONCPT CHANGED
* 2008	ENG. BELL BUCKLES UNDER TRANSPORT LOADS	CRIT	DESIGN	CRIT		LOW:GROUND TRANSPORT
* 2009	N_2O_4 TK. VENTS DURING SAFING	CRIT	PCDR	CRIT		MOD:SAFING
2010	MPE NOZZLE WON'T EXTND	CRIT	DESIGN	CRIT		LOW:THRUSTING
* 2011	KICK STAGE RE-ENTERS	CAT	DESIGN	CRIT		LOW:ASCENT
* 2012	INCOMPLETE CONNECTOR HOOKUP VENTS FUME TO PAYLOAD BAY	CRIT	DESIGN	CRIT		LOW:RESTOW
* 2013	TPS TILES LOST FROM N_2O_4 VENT	CRIT	PCDR:DESIGN	CRIT		MOD:ENTRY
APS 3000						
* 3001	INADVERTENT VENT	CRIT	PCDR	CRIT		LOW:ENTRY/LOG
* 3002	LOSS OF PROP. ACQUISITION	CRIT	TEST	CRIT		LOW:RMS DOCKING
3003	LOSS OF RETRV'L DELAY MODULE APS	CRIT	DESIGN	CRIT		LOW:DOCKING
* 3004	ADD-ON APS LOSS	CRIT	DESIGN	CRIT		LOW:ON ORBIT

* Applicable to Concept

HAZARD STATUS SUMMARY REPORT
CONCEPT: 110A-1

HAZARD CODE	HAZARD DESCRIPTION	INITIAL HAZARD LEVEL	HRPS RATIONALE	TRACKING HAZARD LEVEL	STATUS	REMARKS
AVIONICS 4000						
* 4001	CAN'T COMMAND OVERRIDE	CAT	DESIGN	CAT		LOW:NEAR EOS
* 4002	PROP. COMMANDS ABSENT	CAT	DESIGN	CAT		LOW:NEAR EOS
* 4003	ACS ELECTRONICS FAILS	CRIT	DESIGN	CRIT		LOW:NEAR EOS
* 4004	INERTIAL REF. & ATT. DATA DEGRADED	CRIT	PCDR	CRIT		LOW:SEP. FLT.
4005	ADD-ON AVIONICS CAUSES LOSS ATTITUDE CONTROL	CRIT	DESIGN	CRIT		LOW:SEP. FLT.
* 4006	AVIONICS DEGRADED BY HI ENERGY PARTICLES	CRIT	DESIGN	CONT		LOW:SEP. FLT.
4007	SRM FIRES INADVERTNTLY	CAT	DESIGN/PCDR	CRIT		LOW:IN/NEAR EOS
* 4008	LOSS OF SINGLE XMTR	CRIT	DESIGN/PCDR	CRIT		LOW:DEPL/RETRV.
THERMAL CONTROL 500						
* 5001	LOSS OF GND COOLING DURING SOAKBACK	CAT	DESIGN	CAT		MOD:SAFING
5002	LOSS FUEL CELL HEAT REJ.	CRIT	DESIGN/PCDR	CRIT		LOW:SEP. FLT.
ORDNANCE 6000						
* 6001	PYROS INADVERT. INITIATED	CAT	DESIGN	CRIT		LOW:GND C/O
GSE/AGE 7000						
* 7001	CG OFF NOMINAL CAUSE DOOR CONTACT AFTER ABORT	CRIT	DESIGN/PCDR	CRIT		LOW:TUG REMVL
EPS 9000						
9001	VENT REACTANTS STEAM TO PAYLOAD BAY	CRIT	DESIGN/PCDR	CRIT		LOW:UP/ON/SAFING
9002	REACTANT LEAKS TO SADDLE BAGS	CRIT	DESIGN/TEST	CRIT		MOD:ENTRY/LOG
* 9003	EOS POWER TO TUG FAILS OFF	CRIT	DESIGN	CRIT		LOW:ASCENT

RESIDUAL HAZARDS/SFP : 110A-1

SATISFACTORY PROGRESS

HAZARD/SFP	RATIONALE FOR ACCEPTANCE
ABNORMAL LANDING WITH FULL TANKS	ABORT DUMP PREFERRED BY SENSITIVITY STUDY
VENT PROPELLANT FUMES TO PAYLOAD BAY VIA TUG OVERBOARD VENTS (MPS/APS)	EXTREME PAYLOAD BAY TEMPERATURE AND MULTIPLE FAILURES NECESSARY FOR VENTING
JETTISON OF AKS AT PAYLOAD ALTITUDES RESULTING IN PAYLOAD CONTACT	AKS RETAINED WHERE FEASIBLE : IMPACT PROBABILITY CONSIDERED LOW
SFP : VALVES FAIL CLOSED (MISSION SUCCESS) - MPS He ISOLATION - APS QUAD ISOLATION - AKS GN_2 SUPPLY - AKS GN_2 REGULATOR	HIGH RELIABILITY COMPONENTS
SRMS SENSITIVE TO LIQUID PROPELLANT FIRES	IGNITION SOURCES PRECLUDED IN PAYLOAD BAY
LACK OF COMMAND OVERRIDE ON AKS AND POTENTIAL COLLISION WITH TUG	HIGH RELIABILITY COMPONENTS, NOT CREW SAFETY; SRM TVC

GRUMMAN

RESIDUAL HAZARDS AND SINGLE FAILURE POINTS: 110A-1

Those hazards for which design, special procedures and safety or warning devices may not resolve the problem, are considered residual hazards. In addition, where failure of a single hardware element leads to loss of life, vehicle or mission, a single failure point (SFP) is identified. The ones falling into these categories for this concept are shown in this chart.

Simultaneous dumping of propellants in $\sim$302 secs during powered flight enhances Shuttle aborts and satisfies the safety requirement to land with nearly empty tanks.

Although a rationale for acceptance of these situations has been defined for now, additional study effort is required in the next phase to reduce the hazards to the lowest possible levels (controlled category) and/or to eliminate the single failure points.

Additional information on these items is included in Volume VII, Safety and Reliability.

110A-1 SAFETY ASSESSMENT RESULTS

- DATA PACKAGE/ANALYSIS-DERIVED SAFETY REQUIREMENTS USED AS ASSESSMENT TOOL
- ASSESSMENT RESULTS:

REQ'T SOURCE	REQ'T/CONSTRAINT/EXCEPTION	COMMENTS
NASA REQTS	(E) DETECT POTENTIAL TANK FAILURES ON GROUND	FRACTURE MECHANICS PROGRAM USED
VENTING	(C) NEED FLUID GSE DURING GROUND TRANSPORT	CONTAINS AND NEUTRALIZES VAPORS
RESIDUALS	(R) NO ABORT DUMP	TO BE INCORPORATED
	(R) NO MPS DEPLETE	IMPLEMENTATION IS OPEN QUESTION
	(C) "EMPTY" TANKS AT LANDING	SAFEST LANDING CONFIGURATION
COLLISION	(R) (6) SRMs JETTISONED ON PLANETARY P/L 23 MISSIONS	SRMs ACHIEVE ESCAPE VELOCITY
COMMAND/ CONTROL	(C) WITHIN 30 NM OF EOS: OVER GROUND STATION	SATISFACTORY TO SAFETY

GRUMMAN

SAFETY ASSESSMENT RESULTS : 110A-1

An assessment of this configuration was performed to determine whether it satisfied the NASA Safety Requirements specified in the Data Package, Space Tug System Studies, April 1973 and those safety requirements derived through analysis. The first column identifies the source of the safety requirement, NASA Data Package or identified hazard. Items in the next column are labelled (R) for requirement unsatisfied, (C) for an operational constraint or (E) for an exception to the NASA or derived safety requirements. The specific items are summarized. In the comments column, the reasons or reactions to the safety assessment items are stated.

GSE has been identified to enable safe handling of a loaded Tug during ground transport, alone or in the Shuttle. Attached to the EOS-Tug servicing panels, the GSE will accommodate vented fumes, liquid from offloading the MPS tanks and pressure relief.

Command override only exists within the orbiters sphere of influence and when a ground station is in range and tracking the Tug. Most engine burns occur outside these regions. To preclude excess thrust which could propell the Tug into the earth's atmosphere, hardware and software interlocks will be provided to prevent long engine burns. This feature will apply to all concepts for autonomy levels IIIA or IIB.

The checkmark in the upper right corner signifies a satisfactory safety mark for the configuration for Phase A. The completed Safety Evaluation form for this concept is presented in Volume VII.

SAFETY EVALUATION FORM - 1 ✓ Reqt. Satisfied

HAZARD	SAFETY REQUIREMENT	CONFIGURATION/SUBSYSTEM 110A-1
LEAKS	o DETECTION ON GROUND	✓
	o PURGE ON PAD	✓
	o ISOLATE TANKS PRE/POST USE	✓
	o EMERGENCY DETANK HORIZONTAL	✓
	o EMERGENCY DETANK VERTICAL	✓
	o NORMAL HORIZONTAL DRAIN	✓
	o FRACTURE MECHANICS PROGRAM	✓
	o REDUNDANT SEALS	✓
	o ALL WELDED BALL JOINTS	✓
VENTING	o ISOLATE TANKS PRE/POST USE	✓
	o OVERBOARD VENTS UP/DOWN	✓
	o OVERBOARD CRYO VENTS UP/DOWN	NO CRYOS
	o VENTS LIQUID COMPATIBLE	✓
	o REDUNDANT VALVES FOR OVERBOARD VENT PATHS	✓
	o CONDITION BAY POST LANDING	✓
	o VERTICAL VENT	✓
	o HORIZONTAL VENT VIA GSE	✓
	o POST LANDING, HOOKUP VENTS TO GSE	✓
ON-BOARD RESIDUALS	o VENT MPS/APS TANKS TO 20 PSIA	✓
	o VENT EPS TANKS TO 20 PSIA	NO EPS TANKS
	o DEPLETE APS PRE-STOWAGE	✓
	o ABORT DUMP=VERTICAL	NOT INCORPORATED YET.
	o DELETE MPS PRE-STOWAGE	OPEN ISSUE
	o VENT TUG PAYLOADS	✓
	o DUMP MUST BE SHUTTLE COMPATIBLE	DUMP BOTH PROPELLANTS DURING POWERED BURN

FOR NON-RECURRING USE ONLY
Maximum one time reproduction 100 copies. If requirement exceeds 100 copies, authorization must be obtained through Corporate Forms Management.

SAFETY EVALUATION FORM - 2

HAZARD	SAFETY REQUIREMENT	CONFIGURATION/SUBSYSTEM
COLLISION	o MICROMETEROID SHIELD o NO JETTISON OF SOLID DEBRIS AT P/L ALTITUDES	✓ (1) AKS Jettisoned for P/L 23, Planetary mission. (6) achieve escape velocity.
FIRE OR EXPLOSION	o MINIMUM TRAPPED VOLUMES * o SEPARATE TANKS o CONTROL TANKS DELTA-P o INERT TANKS POST USE o PARAMETER READOUT TO EOS o SRM SAFE/ARM o MIN TANK PRESS. PRE-USE o CONTAINMENT OF PYRO DEBRIS o P/L BAY GN_2 DELUGE o GN_2 FREON 1301 FIRE EXTINGUISH o INERT H_2 TANK BAY	✓ ✓ NOT REQUIRED ✓ ✓ ✓ ✓ ✓ ✓ NO CRYOS
THERMAL CONTROL	o AUTO DETECT COOL LOOP FAIL o FO/FS POST FLIGHT SAFING	HEAT PIPE - PASSIVE COOLING. ✓
CRASH	o DESIGN INTACT SURVIVAL o DESIGN RETAIN PAYLOAD o DESIGN KICK STAGES TO NOT SURVIVE ENTRY o DESIGN RETRIEVAL DELAY MODULES TO NOT SURVIVE ENTRY	✓ ✓ ✓ NOT APPLICABLE

* INTERTANK, BASEHEATSHIELD, SADDLE BAGS & LINE TUNNELS, AKS

792 REV. 1
Maximum one time reproduction 100 copies. If requirement exceeds 100 copies authorization must be obtained through Corporate Forms Management.
FOR NON-RECURRING USE ONLY

SAFETY EVALUATION FORM - 3

HAZARD	SAFETY REQUIREMENT	CONFIGURATION/SUBSYSTEM
MECH FAILS	o FAIL SAFE DESIGN	✓
	o LOCATOR PINS FOR FLUID CONNECTOR PANELS	✓
	o PRECLUDE TUG TRANSLATION/ ROTATION DURING GROUND TUG/ ORBITER MATE	✓
	o SUPPORT AND CONSTRAIN ENGINE BELL DURING GROUND HANDLING	✓
	o MAKE MPS NOZZLE EXTEND AND RETRACT MECHANISMS REDUNDANT	NOT APPLICABLE
THRUST ABERRATIONS	o SENSE ENGINE INLET PRESSURE CHANGES	✓
	o ISOLATE APS TANKS	✓
	o SHUT DOWN MPE AUTO	✓
	o RELIEVE PROPULSION PRESSURE	✓
	o PROPULSION SHUTOFF VALVES UPSTREAM OF ENGINE VALVES	✓
	o QUALIFY APS FOR GAS BUBBLES OR DEMONSTRATE ADEQUACY OF PROPELLANT ACQUISITION	✓
	o PRECLUDE INADVERTENT SRM IGNITION	✓
COMMAND & CONTROL	o REDUNDANT SAFETY CRITICAL EQUIPMENT	✓
	o ADEQUATE CREW TRAINING	✓
	o COMMAND OVERRIDE	OVER GROUND STATION; WITHIN 30 NM OF EOS
	o APS SHUTDOWN AFTER RMS ENGAGE	✓
	o MAKE SELECTION OF WIDE/NARROW DEADBAND FOR APS REDUNDANT	✓

FOR NON-RECURRING USE ONLY
Maximum one time reproduction 100 copies. If requirement exceeds 100 copies, authorization must be obtained through Corporate Forms Management.
92 REV. 1

SAFETY EVALUATION FORM - 4

HAZARD	SAFETY REQUIREMENT	CONFIGURATION/SUBSYSTEM
LOSS ATTITUDE CONTROL	o CHANNEL REDUNDANCY o JET FAILURE DETECTION o SLOSH PROTECTION	✓ ✓ ✓
CONTAMINATION	o NO VENT TO PAYLOAD BAY o NO PLUME IMPINGEMENT	✓ ✓

92 REV. 1.
FOR NON-RECURRING USE ONLY
Maximum one time reproduction 100 copies. If requirement exceeds 100 copies, authorization must be obtained through Corporate Forms Management.

SAFETY EVALUATION FORM - 5

HAZARD	SAFETY REQUIREMENT	CONFIGURATION/SUBSYSTEM
GENERAL	o NO CREW SAFETY SFP o APPROPRIATE SAFETY FACTORS O MANNED SF FOR ABORT o PROVIDE SAFETY STATUS o COMMAND OVERRIDE NEAR ORBITER o PROTECTION OF EOS FROM TUG HAZARDS o EMERGENCY MANUAL RELEASE: TUG FROM EOS	✓ ✓ ✓ ✓ ✓ ✓ ✓
STOWAGE IN ORBITER	o PROVIDE SAFETY STATUS o EOS CONTROL CRITICAL TUG FUNCTIONS o NO DESTRUCT CHARGES o PRESSURE RELIEF THROUGH EOS o NO VENT INTO PAYLOAD BAY	✓ ✓ ✓ ✓ ✓
ON ORBIT DEPLOY	o PROVIDE SAFETY STATUS o EOS CONTROL CRITICAL TUG FUNCTIONS o NO SPF YIELDING UNPROGRAMMED MOTION	✓ ✓ ✓

FOR NON-RECURRING USE ONLY
Maximum one time reproduction 100 copies. If requirement exceeds 100 copies, authorization must be obtained through Corporate Forms Management.

SAFETY EVALUATION FORM - 6

HAZARD	SAFETY REQUIREMENT	CONFIGURATION/SUBSYSTEM
ON ORBIT GENERAL	o PROVIDE SAFETY STATUS o ATTITUDE/TRANSLATION CONTROL OF TUG BY EOS o NON-PROPULSIVE VENTING o NO SFP YIELDING UNPROGRAMMED MOTION	✓ ✓ ✓ ✓
ON ORBIT RETRIEVAL	o PROVIDE SAFETY STATUS o EOS CONTROL CRITICAL TUG FUNCTIONS o NO SFP YIELDING UNPROGRAMMED MOTION o PROVIDE FOR STATIC DISCHARGE o REDUCE PROPELLANT/PRESSURANT TO SAFE LEVEL PRIOR TO RETRIEVAL o VERIFY EOS-TUG INTERFACES SECURE o REMOTE EMERGENCY TUG JETTISON	✓ ✓ ✓ TO BE INCORPORATED. ✓ ✓ ✓
ABORT	o DON'T PRECLUDE EOS INTACT ABORT	✓

FOR NON-RECURRING USE ONLY
Maximum one time reproduction 100 copies. If requirement exceeds 100 copies authorization must be obtained through Corporate Forms Management.

SAFETY EVALUATION FORM - 7

HAZARD	SAFETY REQUIREMENT	CONFIGURATION/SUBSYSTEM
STRUCTURES	o FS PER MSFC-HANDBOOK-505 o SATISFY FRACTURE MECHANICS	✓ ✓
PROPULSION	o FAIL SAFE MPS o AUTO RELIEF FOR TANKS o DETECT POTENTIAL TANK FAILURES o ISOLATION VALVES UPSTREAM ALL START VALVES o EMERGENCY OFF-LOADING ON LAUNCH PAD	✓ ✓ ✓ ✓ ✓
APS	o FO/FS DESIGN o ONE COMMAND SHUTDOWN	NOT ON AKS ✓
AVIONICS	o RF LINKS EOS/TUG/PAYLOAD o CRITICAL COMMAND/CONTROL CIRCUITRY FO/FS	✓ IF XMTR FAILS WILL LOSE FEEDBACK. REALTIME DECISION ON TUG RETRIEVAL REQUIRED.
ORDINANCE	o NO SINGLE DETECTABLE OR COMBINATION OF UNDETECTABLE FAILURES CAUSE PREMATURE DETONATION o SAFE UNUSED PYROS o SATISFY PYRO SPECIFICATION REQUIREMENTS	✓ ✓ ✓

FOR NON-RECURRING USE ONLY
Maximum one time reproduction 100 copies. If requirement exceeds 100 copies, authorization must be obtained through Corporate Forms Management.
Forms Management, Plant 30.

MISSION RELIABILITY SUMMARY

OPTION 1

CONFIGURATION 110A-1

MISSION	HOURS		RELIABILITY		
	CORE	ADD-ON	CORE	ADD-ON	MISSION
DEPLOY: SINGLE OR MULTIPLE P/L					
• PLAIN	58	—	.9874	—	.9874
• W/AKS	49	2	.9902	.9987	.9889

NOTE: RELIABILITY > .97 DUE TO REDUNDANCY REQ'D FOR FAIL OP/FAIL SAFE

TUG VEHICLE RELIABILITY DATA
FOR RELIABILITY REFERENCE MISSION

OPTION 1

CONFIGURATION 110A-1

MISSION DEPLOY

SINGLE STAGE RELIABILITY .9874

DESIGN MISSION TIME 58 hrs.

REDUNDANCY LEVEL COMP./SUB COMP.

SUBSYSTEM	RELIABILITY
o STRUCTURE	.99965
o PROPULSION	
- MPS	.99282
- APS	.99979
o AVIONICS	
- GN&C	.99717
- COMM	.99935
- DMS	.99986
- THERMAL	N.A.
- POWER	.99874

NOTE: INTERFACE SYSTEMS INCLUDED IN STRUCTURE.

GRUMMAN

* Applicable to Concept 3

HAZARD STATUS SUMMARY REPORT
CONCEPT 410AD-2

HAZARD CODE	HAZARD DESCRIPTION	INITIAL HAZARD LEVEL	HRPS RATIONALE	TRACKING HAZARD LEVEL	STATUS	REMARKS
STRUCTURES 1000						
* 1001	TANKAGE LEAKS INTO ENCLOSED VOLUMES	CRIT	DESIGN	CRIT		LOW:ON ORBIT
* 1002	LOSS OF N_2O_4 TANK PRESSURE	CRIT	DESIGN	CRIT		LOW:ON ORBIT
* 1003	ADAPTER OVERSTRESSED DURING GROUND MATE	CRIT	PROCDRS	CONT		LOW:MATING
* 1004	PAYLOAD BAY DOORS DON'T OPEN	CRIT	DESIGN	CONT		MOD:DEPLOY
MAIN PROPULSION 2000						
* 2001	TKS,LINES,FITTINGS LK.	CRIT	DESIGN/PCDR	CRIT		LOW:LAUNCH PAD
* 2002	VENT TO P/L BAY	CRIT	DESIGN/PCDR	CRIT		LOW:UP/ON/SAFING
* 2003	OFF DES. ENG. INLET COND.	CRIT	DESIGN	CRIT		LOW:THRUSTING
* 2004	PROP. MIXING DURING LANDING/RE-ENTRY	CAT.	DESIGN/TEST	CAT.		LOW:LANDG/ENTRY
* 2005	PROP. SLOSH DURING DKING	CRIT	SIMULATION	CRIT		MOD:DOCKING
2006	CACHE TK. & CRASH LANDG	CAT	DESIGN	CAT		CONCPT DELETED
2007	MMH TANK IMPLOSION	CAT	DESIGN	CAT		CONCPT CHANGED
* 2008	ENG. BELL BUCKLES UNDER TRANSPORT LOADS	CRIT	DESIGN	CRIT		LOW:GROUND TRANSPORT
* 2009	N_2O_4 TK. VENTS DURING SAFING	CRIT	PCDR	CRIT		MOD:SAFING
2010	MPE NOZZLE WON'T EXTND	CRIT	DESIGN	CRIT		LOW:THRUSTING
* 2011	KICK STAGE RE-ENTERS	CAT	DESIGN	CRIT		LOW:ASCENT
* 2012	INCOMPLETE CONNECTOR HOOKUP VENTS FUME TO PAYLOAD BAY	CRIT	DESIGN	CRIT		LOW:RESTOW
* 2013	TPS TILES LOST FROM N_2O_4 VENT	CRIT	PCDR:DESIGN	CRIT		MOD:ENTRY
APS 3000						
* 3001	INADVERTENT VENT	CRIT	PCDR	CRIT		LOW:ENTRY/LOG
* 3002	LOSS OF PROP. ACQUISITION	CRIT	TEST	CRIT		LOW:RMS DOCKING
3003	LOSS OF RETRV'L DELAY MODULE APS	CRIT	DESIGN	CRIT		LOW:DOCKING
* 3004	ADD-ON APS LOSS	CRIT	DESIGN	CRIT		LOW:ON ORBIT

HAZARD STATUS SUMMARY REPORT
CONCEPT 41OAD-2

HAZARD CODE	HAZARD DESCRIPTION	INITIAL HAZARD LEVEL	HRPS RATIONALE	TRACKING HAZARD LEVEL	STATUS	REMARKS
AVIONICS 4000						
* 4001	CAN'T COMMAND OVERRIDE	CAT	DESIGN	CAT		LOW:NEAR EOS
* 4002	PROP. COMMANDS ABSENT	CAT	DESIGN	CAT		LOW:NEAR EOS
* 4003	ACS ELECTRONICS FAILS	CRIT	DESIGN	CRIT		LOW:NEAR EOS
* 4004	INERTIAL REF. & ATT. DATA DEGRADED	CRIT	PCDR	CRIT		LOW:SEP. FLT.
* 4005	ADD-ON AVIONICS CAUSES LOSS ATTITUDE CONTROL	CRIT	DESIGN	CRIT		LOW:SEP. FLT.
* 4006	AVIONICS DEGRADED BY HI-ENERGY PARTICLES	CRIT	DESIGN	CONT		LOW:SEP. FLT.
* 4007	SRM FIRES INADVERTNTLY	CAT	DESIGN/PCDR	CRIT		LOW:IN/NEAR EOS
4008	LOSS OF SINGLE XMTR	CRIT	DESIGN/PCDR	CRIT		LOW:DEPL/RETRV.
THERMAL CONTROL 500						
* 5001	LOSS OF GND COOLING DURING SOAKBACK	CAT	DESIGN	CAT		MOD:SAFING
* 5002	LOSS FUEL CELL HEAT REJ.	CRIT	DESIGN/PCDR	CRIT		LOW:SEP. FLT.
ORDNANCE 6000						
* 6001	PYROS INADVERT. INITIATED	CAT	DESIGN	CRIT		LOW:GND C/O
GSE/AGE 7000						
* 7001	CG OFF NOMINAL CAUSE DOOR CONTACT AFTER ABORT	CRIT	DESIGN/PCDR	CRIT		LOW:TUG REMVL
EPS 9000						
* 9001	VENT REACTANTS STEAM TO PAYLOAD BAY	CRIT	DESIGN/PCDR	CRIT		LOW:UP/ON/SAFING
* 9002	REACTANT LEAKS TO SADDLE BAGS	CRIT	DESIGN/TEST	CRIT		MOD:ENTRY/LOG
* 9003	EOS POWER TO TUG FAILS OFF	CRIT	DESIGN	CRIT		LOW:ASCENT

RESIDUAL HAZARDS/SFP : 410AD-2

SATISFACTORY PROGRESS

HAZARDS/SFP	RATIONALE FOR ACCEPTANCE
ABNORMAL LANDING WITH FULL TANKS	ABORT DUMP PREFERRED BY SENSITIVITY STUDY
VENT PROPELLANT FUMES TO PAYLOAD BAY VIA TUG OVERBOARD VENTS (MPS/APS)	EXTREME PAYLOAD BAY TEMPERATURE AND MULTIPLE FAILURES NECESSARY FOR VENTING
JETTISON OF AKS SRM CASES AT PAYLOAD ALTITUDES	CONTACT HAZARD CONSIDERED LOW
VENT FUEL CELL WATER TO PAYLOAD BAY DURING CHECKOUT	VENT DIRECTED AWAY FROM EOS
ABORT LANDING WITH FULL FUEL CELL TANKS	TANKAGE AND SUPPORTS DESIGNED FOR CRASH LOADS
SFP : VALVES FAIL CLOSED (MISSION SUCCESS) - MPS He REGULATOR - ENGINE PREVALVE(S) - APS VENT - APS QUAD ISOLATION - DKS GN_2 SHUTOFF	HIGH RELIABILITY COMPONENTS
LACK OF ADKS CMD OVERRIDE	DETECT UNSTABLE TARGET PRIOR TO DOCKING
SRMS SENSITIVE TO LIQ.PROP. FIRES	IGNIT.SOURCES PRECLUDED IN P/L BAY

GRUMMAN

RESIDUAL HAZARDS AND SINGLE FAILURE POINTS: 410AD-2

Those hazards for which design, special procedures and safety or warning devices may not resolve the problem, are considered residual hazards. In addition, where failure of a single hardware element leads to loss of life, vehicle or mission, a single failure point (SFP) is identified. The ones falling into these categories for this concept are shown in this chart.

Checkout of the fuel cells is accomplished while the Tug is in the P/L bay prior to deployment. The water exhaust will directed away from the EOS to protect any temperature sensitive coatings.

Although a rationale for acceptance of these situations has been defined for now, additional study effort is required in the next phase to reduce the hazard to the lowest possible level (controlled category) and/or to eliminate the single failure points.

Additional information on these items is included in Volume VII, Safety and Reliability.

410AD-2 SAFETY ASSESSMENT RESULTS

- DATA PACKAGE/ANALYSIS-DERIVED SAFETY REQUIREMENTS USED AS ASSESSMENT TOOL
- ASSESSMENT RESULTS:

REQ'T SOURCE	REQ'T/CONSTRAINT/EXCEPTION	COMMENTS
NASA REQTS	(E) DETECT POTENTIAL TANK FAILURE ON GROUND	FRACTURE MECHANICS PROGRAM USED
	(E) FUEL CELL VAPOR VENTED TO BAY DURING C/O	VENT DIRECTED AWAY FROM EOS
	(R) NESTED TANKS	SEPARATE TANKS PREFERRED
VENTING	(C) NEED FLUID GSE DURING GROUND TRANSPORT	CONTAINS AND NEUTRALIZED VAPORS
RESIDUALS	(R) NO ABORT DUMP	DUMP RECOMMENDED
	(R) NO MPS DEPLETE	IMPLEMENTATION IS OPEN QUESTION
	(C) "EMPTY" TANKS AT LANDING	SAFEST LANDING CONFIGURATION
COLLISION	(R) (4) SRMs JETTISONED ON ROUND TRIP MISSIONS	68 MISSIONS PLANNED
COMMAND/ CONTROL	(C) WITHIN 30 NM OF EOS: OVER GROUND STATION WHEN TRACKING	SATISFACTORY TO SAFETY

GRUMMAN

SAFETY ASSESSMENT RESULTS: 410AD-2

An assessment of this configuration was performed to determine whether it satisfied the NASA Safety Requirements specified in the Data Package, Space Tug System Studies, April 1973 and those safety requirements derived through analysis. The first column identifies the source of the safety requirement, NASA Data Package or identified hazard. Items in the next column are labelled (R) for requirement unsatisfied, (C) for an operational constraint of (E) for an exception to the NASA or derived safety requirements. The specific items are summarized. In the comments column, the reasons or reactions to the safety assessment items are stated.

Separate tanks were recommended because pressure losses are not safety critical and inspection for damage is easier. Also inflight dump is not constrained by maintaining adequate tank pressure differentials during dump.

The checkmark in the upper right corner signifies a satisfactory/safety mark for the configuration for Phase A. The completed Safety Evaluation form for this concept is presented in Volume VII.

SAFETY EVALUATION FORM - 1 ✓ Reqt. Satisfied

HAZARD	SAFETY REQUIREMENT	CONFIGURATION/SUBSYSTEM 410AD-2
LEAKS	o DETECTION ON GROUND	✓
	o PURGE ON PAD	✓
	o ISOLATE TANKS PRE/POST USE	✓
	o EMERGENCY DETANK HORIZONTAL	✓
	o EMERGENCY DETANK VERTICAL	✓
	o NORMAL HORIZONTAL DRAIN	✓
	o FRACTURE MECHANICS PROGRAM	✓
	o REDUNDANT SEALS	✓
	o ALL WELDED BALL JOINTS	✓
VENTING	o ISOLATE TANKS PRE/POST USE	✓
	o OVERBOARD VENTS UP/DOWN	✓
	o OVERBOARD CRYO VENTS UP/DOWN	✓
	o VENTS LIQUID COMPATIBLE	✓
	o REDUNDANT VALVES FOR OVERBOARD VENT PATHS	✓
	o CONDITION BAY POST LANDING	✓
	o VERTICAL VENT	✓
	o HORIZONTAL VENT VIA GSE	✓
	o POST LANDING, HOOKUP VENTS TO GSE	✓
ON-BOARD RESIDUALS	o VENT MPS/APS TANKS TO 20 PSIA	✓
	o VENT EPS TANKS TO 20 PSIA	✓
	o DEPLETE APS PRE-STOWAGE	✓
	o ABORT DUMP=VERTICAL	NO
	o DELETE MPS PRE-STOWAGE	OPEN QUESTION
	o VENT TUG PAYLOADS	✓
	o DUMP MUST BE SHUTTLE COMPATIBLE	No

FOR NON-RECURRING USE ONLY
Maximum one time reproduction 100 copies. If requirement exceeds 100 copies, authorization must be obtained through Corporate Forms Management.

SAFETY EVALUATION FORM - 2

HAZARD	SAFETY REQUIREMENT	CONFIGURATION/SUBSYSTEM
COLLISION	o MICROMETEROID SHIELD o NO JETTISON OF SOLID DEBRIS AT P/L ALTITUDES	✓ JETTISON (4) SRM CASES FOR ROUND TRIP MISSIONS
FIRE OR EXPLOSION	o MINIMUM TRAPPED VOLUMES o SEPARATE TANKS o CONTROL TANKS DELTA-P o INERT TANKS POST USE o PARAMETER READOUT TO EOS o SRM SAFE/ARM o MIN TANK PRESS, PRE-USE o CONTAINMENT OF PYRO DEBRIS o P/L BAY GN_2 DELUGE o GN_2 FREON 1301 FIRE EXTINGUISH o INERT H_2 TANK BAY	6 NESTED DOMES ✓ ✓ ✓ ✓ ✓ ✓ ✓ ✓ ✓
THERMAL CONTROL	o AUTO DETECT COOL LOOP FAIL o FO/FS POST FLIGHT SAFING	✓ ✓
CRASH	o DESIGN INTACT SURVIVAL o DESIGN RETAIN PAYLOAD o DESIGN KICK STAGES TO NOT SURVIVE ENTRY o DESIGN RETRIEVAL DELAY MODULES TO NOT SURVIVE ENTRY	✓ ✓ ✓ ✓ RDM IS SENSITIVITY STUDY FOR THIS CONCEPT.

FOR NON-RECURRING USE ONLY
Maximum one time reproduction. 100 copies. If requirement exceeds 100 copies ... ization must be obtained through Corporate Forms Management.

SAFETY EVALUATION FORM - 3

HAZARD	SAFETY REQUIREMENT	CONFIGURATION/SUBSYSTEM
MECH FAILS	o FALL SAFE DESIGN o LOCATOR PINS FOR FLUID CONNECTOR PANELS o PRECLUDE TUG TRANSLATION/ ROTATION DURING GROUND TUG/ ORBITER MATE o SUPPORT AND CONSTRAIN ENGINE BELL DURING GROUND HANDLING o MAKE MPS NOZZLE EXTEND AND RETRACT MECHANISMS REDUNDANT	✓ ✓ ✓ ✓ NOT Applicable.
THRUST ABERRATIONS	o SENSE ENGINE INLET PRESSURE CHANGES o ISOLATE APS TANKS o SHUT DOWN MPE AUTO o RELIEVE PROPULSION PRESSURE o PROPULSION SHUTOFF VALVES UPSTREAM OF ENGINE VALVES o QUALIFY APS FOR GAS BUBBLES OR DEMONSTRATE ADEQUACY OF PROPELLANT ACQUISITION o PRECLUDE INADVERTENT SRM IGNITION	✓ ✓ ✓ ✓ ✓ ✓ ✓
COMMAND & CONTROL	o REDUNDANT SAFETY CRITICAL EQUIPMENT o ADEQUATE CREW TRAINING o COMMAND OVERRIDE o APS SHUTDOWN AFTER RMS ENGAGE o MAKE SELECTION OF WIDE/NARROW DEADBAND FOR APS REDUNDANT	✓ ✓ ✓ ✓ ✓ WITHIN 30 NM OF EOS; OVER GROUND STATION WITH STATION TRACKING.

1722 REV. 1
FOR NON-RECURRING USE ONLY
Maximum one time reproduction 100 copies. If requirement exceeds 100 copies, authorization must be obtained through Corporate Forms Management.

SAFETY EVALUATION FORM - 4

HAZARD	SAFETY REQUIREMENT	CONFIGURATION/SUBSYSTEM
LOSS ATTITUDE CONTROL	o CHANNEL REDUNDANCY o JET FAILURE DETECTION o SLOSH PROTECTION	✓ ✓ ✓
CONTAMINATION	o NO VENT TO PAYLOAD BAY o NO PLUME IMPINGEMENT	FUEL CELL WATER ✓

FOR NON-RECURRING USE ONLY

Maximum one-time reproduction 100 copies. If requirement exceeds 100 copies, authorization must be obtained through Corporate Forms Management.

Reproduction, return of original, one copy and report order to Corporate Forms Management, Plant 30.

SAFETY EVALUATION FORM - 5

HAZARD	SAFETY REQUIREMENT	CONFIGURATION/SUBSYSTEM
GENERAL	o NO CREW SAFETY SFP o APPROPRIATE SAFETY FACTORS o MANNED SF FOR ABORT o PROVIDE SAFETY STATUS o COMMAND OVERRIDE NEAR ORBITER o PROTECTION OF EOS FROM TUG HAZARDS o EMERGENCY MANUAL RELEASE: TUG FROM EOS	✓ ✓ ✓ ✓ ✓ ✓ ✓
STOWAGE IN ORBITER	o PROVIDE SAFETY STATUS o EOS CONTROL CRITICAL TUG FUNCTIONS o NO DESTRUCT CHARGES o PRESSURE RELIEF THROUGH EOS o NO VENT INTO PAYLOAD BAY	✓ ✓ ✓ ✓ FUEL CELL WATER DURING CHECKOUT
ON ORBIT DEPLOY	o PROVIDE SAFETY STATUS o EOS CONTROL CRITICAL TUG FUNCTIONS o NO SPF YIELDING UNPROGRAMMED MOTION	✓ ✓ ✓

2792 REV. 1
FOR NON-RECURRING USE ONLY
Maximum one time reproduction 100 copies. If requirement exceeds 100 copies, authorization must be obtained through Corporate Forms Management.

SAFETY EVALUATION FORM - 7

HAZARD	SAFETY REQUIREMENT	CONFIGURATION/SUBSYSTEM
STRUCTURES	o FS PER MSFC-HANDBOOK-505 o SATISFY FRACTURE MECHANICS	✓ ✓
PROPULSION	o FAIL SAFE MPS o AUTO RELIEF FOR TANKS o DETECT POTENTIAL TANK FAILURES o ISOLATION VALVES UPSTREAM ALL START VALVES o EMERGENCY OFF-LOADING ON LAUNCH PAD	✓ ✓ ✓ ✓ ✓
APS	o FO/FS DESIGN o ONE COMMAND SHUTDOWN	✓ OT ON DKS. ✓
AVIONICS	o RF LINKS EOS/TUG/PAYLOAD o CRITICAL COMMAND/CONTROL CIRCUITRY FO/FS	✓ ✓
ORDINANCE	o NO SINGLE DETECTABLE OR COMBINATION OF UNDETECTABLE FAILURES CAUSE PREMATURE DETONATION o SAFE UNUSED PYROS o SATISFY PYRO SPECIFICATION REQUIREMENTS	✓ ✓ ✓

FOR NON-RECURRING USE ONLY
Maximum one time reproduction 100 copies. If requirement exceeds 100 copies, authorization must be obtained through Corporate Forms Management.
NOTE: Reproduction, return original, one copy and repro order to Corporate Forms Management, Plant 30.

MISSION RELIABILITY SUMMARY

OPTION 2

CONFIGURATION 410A~~B~~2

MISSION	HOURS		RELIABILITY		
	CORE	ADD-ON	CORE	ADD-ON	MISSION
RELIABILITY REF.	168	–	.9751	–	.9751
ROUND TRIP W/ADKS	69	73	.9907	.9791	.9700

GRUMMAN

TUG VEHICLE RELIABILITY DATA
FOR RELIABILITY REFERENCE MISSION

OPTION 2

CONFIGURATION 410A-2

MISSION REL REF

SINGLE STAGE RELIABILITY .9751

DESIGN MISSION TIME 168 hrs.

REDUNDANCY LEVEL COMP./SUB COMP

SUBSYSTEM	RELIABILITY
o STRUCTURE	.99900
o PROPULSION	
- MPS	.99249
- APS	.99882
o AVIONICS	
- GN&C	.99405
- COMM	.99912
- DMS	.99936
- THERMAL	.99871
- POWER	.99328

NOTE: INTERFACE SYSTEMS INCLUDED IN STRUCTURE.

GRUMMAN

* Applies to Both
** Applies to 310RE only

HAZARD STATUS SUMMARY REPORT

CONCEPT: 310-3A 310RE-3A

HAZARD CODE	HAZARD DESCRIPTION	INITIAL HAZARD LEVEL	HRPS RATIONALE	TRACKING HAZARD LEVEL	STATUS	REMARKS
STRUCTURES 1000						
* 1001	TANKAGE LEAKS INTO ENCLOSED VOLUMES	CRIT	DESIGN	CRIT		LOW:ON ORBIT
* 1002	LOSS OF N_2O_4 TANK PRESSURE	CRIT	DESIGN	CRIT		LOW:ON ORBIT
* 1003	ADAPTER OVERSTRESSED DURING GROUND MATE	CRIT	PROCDRS	CONT		LOW:MATING
* 1004	PAYLOAD BAY DOORS DON'T OPEN	CRIT	DESIGN	CONT		MOD:DEPLOY
MAIN PROPULSION 2000						
* 2001	TKS,LINES,FITTINGS LK.	CRIT	DESIGN/PCDR	CRIT		LOW:LAUNCH PAD
* 2002	VENT TO P/L BAY	CRIT	DESIGN/PCDR	CRIT		LOW:UP/ON/SAFING
* 2003	OFF DES. ENG. INLET COND.	CRIT	DESIGN	CRIT		LOW:THRUSTING
* 2004	PROP. MIXING DURING LANDING/RE-ENTRY	CAT.	DESIGN/TEST	CAT.		LOW:LANDG/ENTRY
* 2005	PROP. SLOSH DURING DKING	CRIT	SIMULATION	CRIT		MOD:DOCKING
2006	CACHE TK. & CRASH LANDG	CAT	DESIGN	CAT		CONCPT DELETED
2007	MMH TANK IMPLOSION	CAT	DESIGN	CAT		CONCPT CHANGED
* 2008	ENG. BELL BUCKLES UNDER TRANSPORT LOADS	CRIT	DESIGN	CRIT		LOW:GROUND TRANSPORT
* 2009	N_2O_4 TK. VENTS DURING SAFING	CRIT	PCDR	CRIT		MOD:SAFING
2010	MPE NOZZLE WON'T EXTND	CRIT	DESIGN	CRIT		LOW:THRUSTING
2011	KICK STAGE RE-ENTERS	CAT	DESIGN	CRIT		LOW:ASCENT
* 2012	INCOMPLETE CONNECTOR HOOKUP VENTS FUME TO PAYLOAD BAY	CRIT	DESIGN	CRIT		LOW:RESTOW
* 2013	TPS TILES LOST FROM N_2O_4 VENT	CRIT	PCDR:DESIGN	CRIT		MOD:ENTRY
APS 3000						
* 3001	INADVERTENT VENT	CRIT	PCDR	CRIT		LOW:ENTRY/LOG
* 3002	LOSS OF PROP. ACQUISITION	CRIT	TEST	CRIT		LOW:RMS DOCKING
** 3003	LOSS OF RETRV'L DELAY MODULE APS	CRIT	DESIGN	CRIT		LOW:DOCKING
3004	ADD-ON APS LOSS	CRIT	DESIGN	CRIT		LOW:ON ORBIT

* Applies to Both
** Applies to 310RE only

HAZARD STATUS SUMMARY REPORT

CONCEPT: 310-3A 310RE-3A

	HAZARD CODE	HAZARD DESCRIPTION	INITIAL HAZARD LEVEL	HRPS RATIONALE	TRACKING HAZARD LEVEL	STATUS	REMARKS
	AVIONICS 4000						
*	4001	CAN'T COMMAND OVERRIDE	CAT	DESIGN	CAT		LOW:NEAR EOS
*	4002	PROP. COMMANDS ABSENT	CAT	DESIGN	CAT		LOW:NEAR EOS
*	4003	ACS ELECTRONICS FAILS	CRIT	DESIGN	CRIT		LOW:NEAR EOS
*	4004	INERTIAL REF. & ATT. DATA DEGRADED	CRIT	PCDR	CRIT		LOW:SEP. FLT.
**	4005	ADD-ON AVIONICS CAUSES LOSS ATTITUDE CONTROL	CRIT	DESIGN	CRIT		LOW:SEP. FLT.
*	4006	AVIONICS DEGRADED BY HI ENERGY PARTICLES	CRIT	DESIGN	CONT		LOW:SEP. FLT.
	4007	SRM FIRES INADVERTNTLY	CAT	DESIGN/PCDR	CRIT		LOW:IN/NEAR EOS
	4008	LOSS OF SINGLE XMTR	CRIT	DESIGN/PCDR	CRIT		LOW:DEPL/RETRV.
	THERMAL CONTROL 500						
*	5001	LOSS OF GND COOLING DURING SOAKBACK	CAT	DESIGN	CAT		MOD:SAFING
*	5002	LOSS FUEL CELL HEAT REJ.	CRIT	DESIGN/PCDR	CRIT		LOW:SEP. FLT.
	ORDNANCE 6000						
*	6001	PYROS INADVERT. INITIATED	CAT	DESIGN	CRIT		LOW:GND C/O
	GSE/AGE 7000						
*	7001	CG OFF NOMINAL CAUSE DOOR CONTACT AFTER ABORT	CRIT	DESIGN/PCDR	CRIT		LOW:TUG REMVL
	EPS 9000						
*	9001	VENT REACTANTS STEAM TO PAYLOAD BAY	CRIT	DESIGN/PCDR	CRIT		LOW:UP/ON/SAFING
*	9002	REACTANT LEAKS TO SADDLE BAGS	CRIT	DESIGN/TEST	CRIT		MOD:ENTRY/LOG
*	9003	EOS POWER TO TUG FAILS OFF	CRIT	DESIGN	CRIT		LOW:ASCENT

RESIDUAL HAZARDS/SFP : 310-3A/310RE-3A

SATISFACTORY PROGRESS

HAZARDS/SFP	RATIONALE FOR ACCEPTANCE
ABNORMAL LANDING WITH FULL TANKS	ABORT DUMP PREFERRED BY SENSITIVITY STUDY
VENT PROPELLANT FUMES TO PAYLOAD BAY VIA TUG OVERBOARD VENTS (MPS/APS)	EXTREME PAYLOAD BAY TEMPERATURE AND MULTIPLE FAILURES NECESSARY FOR VENTING
LACK OF RDM APS COMMAND OVERRIDE	DETECT UNSTABLE TARGET PRIOR TO DOCKING
VENT FUEL CELL WATER TO PAYLOAD BAY DURING CHECKOUT	VENT DIRECTED AWAY FROM EOS
ABORT LANDING WITH FULL FUEL CELL TANKS	TANKAGE AND SUPPORTS DESIGNED FOR CRASH LOADS
SFP : VALVES FAILED CLOSED (MISSION SUCCESS) - MPS He REGULATOR - ENGINE PREVALVE(S) - APS VENT - APS QUAD ISOLATION - RDM GN_2 SHUTOFF - RDM GN_2 REGULATOR(S)	HIGH RELIABILITY COMPONENTS

GRUMMAN

RESIDUAL HAZARDS AND SINGLE FAILURE POINTS: 310-3A/310RE -3A

Those hazards for which design, special procedures and safety or warning devices may not resolve the problem, are considered residual hazards. In addition, where failure of a single hardware element leads to loss of life, vehicle or mission, a single failure point (SFP) is identified. The ones falling into these categories for this concept are shown in this chart.

If a jet on the Retrieval Delay Module (ROM) fails on, there is no mechanism for shutting it off; early propellant depletion is highly likely. The Tug is protected by its ability to sense unstable targets; however the payload would be lost. The use of high reliability components on the ROM reduces the possibility of this type of failure to a rare event.

Although a rationale for acceptance of these situations has been defined for now, Additional study effort is required in the next phase to reduce the hazard to the lowest possible level (controlled category) and/or to eliminate the single failure points.

Additional information on these items is included in Volume VII, Safety and Reliability.

310- 3A/310RE-3A SAFETY ASSESSMENT RESULTS

- DATA PACKAGE/ANALYSIS-DERIVED SAFETY REQUIREMENTS USED AS ASSESSMENT TOOL
- ASSESSMENT RESULTS:

REQ'T SOURCE	REQ'T/CONSTRAINT/EXCEPTION	COMMENTS
NASA REQTS	(E) DETECT POTENTIAL TANK FAILURES ON GROUND	FRACTURES MECHANICS PROGRAM USED
	(E) FUEL CELL VAPOR VENTED TO BAY DURING C/O	VENT DIRECTED AWAY FROM EOS
	(R) NESTED TANKS	SEPARATE TANKS PREFERRED
VENTING	(C) NEED FLUID GSE DURING GROUND TRANSPORT	CONTAINS AND NEUTRALIZES VAPORS
RESIDUALS	(R) NO ABORT DUMP	TO BE INCORPORATED
	(R) NO MPS DEPLETE	IMPLEMENTATION IS OPEN QUESTION
	(C) "EMPTY" TANKS AT LANDING	SAFEST LANDING CONFIGURATION
COMMAND/ CONTROL	(C) WITHIN 30 NM OF EOS; OVER GROUND STATION WHEN TRACKING	SATISFACTORY TO SAFETY
LOSS OF ATT. CONTROL	(C) RDM DICTATES P/L RADAR REFLECTORS/DOCKING TARGET	SMALL P/L IMPACT

GRUMMAN

SAFETY ASSESSMENT RESULTS: 310-3A/310RE-3A

An assessment of this configuration was performed to determine whether it satisfied the NASA Safety Requirements specified in the Data Package, Space Tug System Studies, April 1973 and those safety requirements derived through analysis. The first column identifies the source of the safety requirement, NASA Data Package or identified hazard. Items in the next column are labelled (R) for requirement unsatisfied, (C) for an operational constraint or (E) for an exception to the NASA or derived safety requirements. The specific items are summarized. In the comments column, the reasons or reactions to the safety assessment items are stated.

The use of an RDM (Retrieval Delay Module) imposes the requirements for radar reflectors and a docking target on the Tug payloads. Reflectors enable detection of a tumbling target; the docking target allows proper orientation of Tug and Payload at docking.

The checkmark in the upper right corner signifies a satisfactory/safety mark for the configuration for Phase A. The completed Safety Evaluation form for this concept is presented in Volume VII.

SAFETY EVALUATION FORM - 1 ✓ Reqt. satisfied 53

HAZARD	SAFETY REQUIREMENT	CONFIGURATION/SUBSYSTEM 310-3A	CONFIGURATION/SUBSYSTEM 310RE-3A
LEAKS	o DETECTION ON GROUND	✓	✓
	o PURGE ON PAD	✓	✓
	o ISOLATE TANKS PRE/POST USE	✓	✓
	o EMERGENCY DETANK HORIZONTAL	✓	✓
	o EMERGENCY DETANK VERTICAL	✓	✓
	o NORMAL HORIZONTAL DRAIN	✓	✓
	o FRACTURE MECHANICS PROGRAM	✓	✓
	o REDUNDANT SEALS	✓	✓
	o ALL WELDED BALL JOINTS	✓	✓
VENTING	o ISOLATE TANKS PRE/POST USE	✓	✓
	o OVERBOARD VENTS UP/DOWN	✓	✓
	o OVERBOARD CRYO VENTS UP/DOWN	✓	✓
	o VENTS LIQUID COMPATIBLE	✓	✓
	o REDUNDANT VALVES FOR OVERBOARD VENT PATHS	✓	✓
	o CONDITION BAY POST LANDING	✓	✓
	o VERTICAL VENT	✓	✓
	o HORIZONTAL VENT VIA GSE	✓	✓
	o POST LANDING, HOOKUP VENTS TO GSE	✓	✓
ON-BOARD RESIDUALS	o VENT MPS/APS TANKS TO 20 PSIA	✓	✓
	o VENT EPS TANKS TO 20 PSIA	✓	✓
	o DEPLETE APS PRE-STOWAGE	✓	✓
	o ABORT DUMP=VERTICAL	NO	NO
	o DELETE MPS PRE-STOWAGE	OPEN QUESTION	OPEN QUESTION
	o VENT TUG PAYLOADS	✓	✓
	o DUMP MUST BE SHUTTLE COMPATIBLE	NO	NO

FOR NON-RECURRING USE ONLY
Maximum one time reproduction 100 copies. If requirement exceeds 100 copies, authorization must be obtained through Corporate Forms Management.

SAFETY EVALUATION FORM - 2

54

HAZARD	SAFETY REQUIREMENT	CONFIGURATION/SUBSYSTEM 310-3A	CONFIGURATION/SUBSYSTEM 310RE-3A
COLLISON	o MICROMETEROID SHIELD	✓	✓
	o NO JETTISON OF SOLID DEBRIS AT P/L ALTITUDES	✓	✓
FIRE OR EXPLOSION	o MINIMUM TRAPPED VOLUMES	5 NESTED DOMES	6 NESTED DOMES
	o SEPARATE TANKS	✓	✓
	o CONTROL TANKS DELTA-P	✓	✓
	o INERT TANKS POST USE	✓	✓
	o PARAMETER READOUT TO EOS	✓	✓
	o SRM SAFE/ARM	NA	NA
	o MIN TANK PRESS. PRE-USE	✓	✓
	o CONTAINMENT OF PYRO DEBRIS	✓	✓
	o P/L BAY GN_2 DELUGE	✓	✓
	o GN_2 FREON 1301 FIRE EXTINGUISH	✓	✓
	o INERT H_2 TANK BAY	✓	✓
THERMAL CONTROL	o AUTO DETECT COOL LOOP FAIL	✓	✓
	o FO/FS POST FLIGHT SAFING	✓	✓
CRASH	o DESIGN INTACT SURVIVAL	✓	✓
	o DESIGN RETAIN PAYLOAD	✓	✓
	o DESIGN KICK STAGES TO NOT SURVIVE ENTRY	NA	NA
	o DESIGN RETRIEVAL DELAY MODULES TO NOT SURVIVE ENTRY	✓	✓

2792 REV. 9

FOR NON-RECURRING USE ONLY

Maximum one time reproduction 100 copies. If requirement exceeds 100 copies, authorization must be obtained through Corporate Forms Management.

192 REV. 1
Maximum one time reproduction 100 copies. If requirement exceeds 100 copies, authorization must be obtained through Corporate Forms Management.
FOR NON-RECURRING USE ONLY

SAFETY EVALUATION FORM - 3

5

HAZARD	SAFETY REQUIREMENT	CONFIGURATION/SUBSYSTEM 310-3A	CONFIGURATION/SUBSYSTEM 310RE-3A
MECH FAILS	o FAIL SAFE DESIGN	✓	✓
	o LOCATOR PINS FOR FLUID CONNECTOR PANELS	✓	✓
	o PRECLUDE TUG TRANSLATION/ ROTATION DURING GROUND TUG/ ORBITER MATE	✓	✓
	o SUPPORT AND CONSTRAIN ENGINE BELL DURING GROUND HANDLING	✓	✓
	o MAKE MPS NOZZLE EXTEND AND RETRACT MECHANISMS REDUNDANT	NA	NA
THRUST ABERRATIONS	o SENSE ENGINE INLET PRESSURE CHANGES	✓	✓
	o ISOLATE APS TANKS	✓	✓
	o SHUT DOWN MPE AUTO	✓	✓
	o RELIEVE PROPULSION PRESSURE	✓	✓
	o PROPULSION SHUTOFF VALVES UPSTREAM OF ENGINE VALVES	✓	✓
	o QUALIFY APS FOR GAS BUBBLES OR DEMONSTRATE ADEQUACY OF PROPELLANT ACQUISITION	✓	✓
	o PRECLUDE INADVERTENT SRM IGNITION	NA	NA
COMMAND & CONTROL	o REDUNDANT SAFETY CRITICAL EQUIPMENT	✓	✓
	o ADEQUATE CREW TRAINING	✓	✓
	o COMMAND OVERRIDE	III A WITHIN 30 NM EOS, OVER GROUND STAT.	II B WITHIN 30 NM EOS; OVER GROUND STATION WITH STATION TRACKING
	o APS SHUTDOWN AFTER RMS ENGAGE	✓	✓
	o MAKE SELECTION OF WIDE/NARROW DEADBAND FOR APS REDUNDANT	✓	✓

SAFETY EVALUATION FORM - 4

HAZARD	SAFETY REQUIREMENT	CONFIGURATION/SUBSYSTEM 310-3A	CONFIGURATION/SUBSYSTEM 310RE-3A
LOSS ATTITUDE CONTROL	o CHANNEL REDUNDANCY o JET FAILURE DETECTION o SLOSH PROTECTION	✓ ✓ ✓	✓ ✓ ✓
CONTAMINATION	o NO VENT TO PAYLOAD BAY o NO PLUME IMPINGEMENT	✓ FUEL CELL WATER DURING C/O ✓	✓
	NOTE: USE OF RDM IMPOSES THESE REQTS. ON P/L: (1) CORNER REFLECTORS FOR RENDEZVOUS (2) DOCKING TARGET FOR ORIENTATION AT ACQUISITION		

FOR NON-RECURRING USE ONLY
Maximum one time reproduction 100 copies. If requirement exceeds 100 copies, authorization must be obtained through Corporate Forms Management.

SAFETY EVALUATION FORM - 5

HAZARD	SAFETY REQUIREMENT	CONFIGURATION/SUBSYSTEM 310-3A	CONFIGURATION/SUBSYSTEM 310RE-3A
GENERAL	o NO CREW SAFETY SFP	✓	✓
	o APPROPRIATE SAFETY FACTORS	✓	✓
	O MANNED SF FOR ABORT	✓	✓
	o PROVIDE SAFETY STATUS	✓	✓
	o COMMAND OVERRIDE NEAR ORBITER	✓	✓
	o PROTECTION OF EOS FROM TUG HAZARDS	✓	✓
	o EMERGENCY MANUAL RELEASE: TUG FROM EOS	✓	✓
STOWAGE IN ORBITER	o PROVIDE SAFETY STATUS	✓	✓
	o EOS CONTROL CRITICAL TUG FUNCTIONS	✓	✓
	o NO DESTRUCT CHARGES	✓	✓
	o PRESSURE RELIEF THROUGH EOS	✓	✓
	o NO VENT INTO PAYLOAD BAY	FUEL CELL WATER DURING CHECKOUT	
ON ORBIT DEPLOY	o PROVIDE SAFETY STATUS	✓	✓
	o EOS CONTROL CRITICAL TUG FUNCTIONS	✓	✓
	o NO SPF YIELDING UNPROGRAMMED MOTION	✓	✓

2792 REV. 1
Maximum one time reproduction 100 copies. If requirement exceeds 100 copies, authorization must be obtained through Corporate Forms Management.
FOR NON-RECURRING USE ONLY

SAFETY EVALUATION FORM - 6

HAZARD	SAFETY REQUIREMENT	CONFIGURATION/SUBSYSTEM 310 - 3A	CONFIGURATION/SUBSYSTEM 310 RE-3A
ON ORBIT GENERAL	o PROVIDE SAFETY STATUS	✓	✓
	o ATTITUDE/TRANSLATION CONTROL OF TUG BY EOS	✓	✓
	o NON-PROPULSIVE VENTING	✓	✓
	o NO SFP YIELDING UNPROGRAMMED MOTION	✓	✓
ON ORBIT RETRIEVAL	o PROVIDE SAFETY STATUS	✓	✓
	o EOS CONTROL CRITICAL TUG FUNCTIONS	✓	✓
	o NO SFP YIELDING UNPROGRAMMED MOTION	✓	✓
	o PROVIDE FOR STATIC DISCHARGE	TO BE INCORPORATED	
	o REDUCE PROPELLANT/PRESSURANT TO SAFE LEVEL PRIOR TO RETRIEVAL	✓	✓
	o VERIFY EOS-TUG INTERFACES SECURE	✓	✓
	o REMOTE EMERGENCY TUG JETTISON	✓	✓
ABORT	o DON'T PRECLUDE EOS INTACT ABORT	✓	✓

AC 8792 REV. 1 1-70
Maximum one time reproduction 100 copies. If requirement exceeds 100 copies authorization must be obtained through Corporate Forms Management.
FOR NON-RECURRING USE ONLY

SAFETY EVALUATION FORM - 7

HAZARD	SAFETY REQUIREMENT	CONFIGURATION/SUBSYSTEM 310-3A	CONFIGURATION/SUBSYSTEM 310RE-3A
STRUCTURES	o FS PER MSFC-HANDBOOK-505	✓	✓
	o SATISFY FRACTURE MECHANICS	✓	✓
PROPULSION	o FAIL SAFE MPS	✓	✓
	o AUTO RELIEF FOR TANKS	✓	✓
	o DETECT POTENTIAL TANK FAILURES	✓	✓
	o ISOLATION VALVES UPSTREAM ALL START VALVES	✓	✓
	o EMERGENCY OFF-LOADING ON LAUNCH PAD	✓	✓
APS	o FO/FS DESIGN	✓	NOT ON RDM
	o ONE COMMAND SHUTDOWN	✓	✓
AVIONICS	o RF LINKS EOS/TUG/PAYLOAD	✓	✓
	o CRITICAL COMMAND/CONTROL CIRCUITRY FO/FS	✓	✓
ORDINANCE	o NO SINGLE DETECTABLE OR COMBINATION OF UNDETECTABLE FAILURES CAUSE PREMATURE DETONATION	✓	✓
	o SAFE UNUSED PYROS	✓	✓
	o SATISFY PYRO SPECIFICATION REQUIREMENTS	✓	✓

FOR NON-RECURRING USE ONLY
Maximum one time reproduction 100 copies. If requirement exceeds 100 copies, authorization must be obtained through Corporate Forms Management.
Reproduction, return original, one copy and repro order to Corporate Forms Management, Plant 30.

MISSION RELIABILITY SUMMARY

OPTION 3A

CONFIGURATION 310-3A

MISSION	HOURS		RELIABILITY		
	CORE	ADD-ON	CORE	ADD-ON	MISSION
RELIABILITY REFERENCE	168	—	.9700	—	.9700
DEPLOY - MULTIPLE P/L	141	—	.9753	—	.9753

GRUMMAN

TUG VEHICLE RELIABILITY DATA
FOR RELIABILITY REFERENCE MISSION

OPTION 3A

CONFIGURATION 310-3A

MISSION REL REF

SINGLE STAGE RELIABILITY .9700

DESIGN MISSION TIME 168 hrs

REDUNDANCY LEVEL COMP./SUB.COMP

SUBSYSTEM	RELIABILITY
o STRUCTURE	.99900
o PROPULSION	
- MPS	.99249
- APS	.99915
o AVIONICS	
- GN&C	.98810
- COMM	.99955
- DMS	.99936
- THERMAL	.99870
- POWER	.99328

NOTE: INTERFACE SYSTEMS INCLUDED IN STRUCTURE.

GRUMMAN

6

MISSION RELIABILITY SUMMARY

OPTION 3A

CONFIGURATION 310RE-3A

MISSION	HOURS		RELIABILITY		
	CORE	ADD-ON	CORE	ADD-ON	MISSION
RELIABILITY REFERENCE	168	–	.9750	–	.9750
RETRIEVE W/RDM	60	336	.9923	.9824	.9748

TUG VEHICLE RELIABILITY DATA

FOR RELIABILITY REFERENCE MISSION

OPTION 3A

CONFIGURATION 310 RE-3A

MISSION REL REF

SINGLE STAGE RELIABILITY .9730

DESIGN MISSION TIME 168 hrs

REDUNDANCY LEVEL COMP/SUB COMP

SUBSYSTEM	RELIABILITY
o STRUCTURE	.99900
o PROPULSION	
- MPC	.99249
- APS	.99882
o AVIONICS	
- GN&C	.99404
- COMM	.99912
- DMS	.99932
- THERMAL	.99870
- POWER	.99328

NOTE: INTERFACE SYSTEMS INCLUDED IN STRUCTURE.

GRUMMAN

* Applicable to Concept

HAZARD STATUS SUMMARY REPORT
CONCEPT 32OA-3A-32OAE-3A

HAZARD CODE	HAZARD DESCRIPTION	INITIAL HAZARD LEVEL	HRPS RATIONALE	TRACKING HAZARD LEVEL	STATUS	REMARKS
STRUCTURES 1000						
* 1001	TANKAGE LEAKS INTO ENCLOSED VOLUMES	CRIT	DESIGN	CRIT		LOW:ON ORBIT
* 1002	LOSS OF N_2O_4 TANK PRESSURE	CRIT	DESIGN	CRIT		LOW:ON ORBIT
* 1003	ADAPTER OVERSTRESSED DURING GROUND MATE	CRIT	PROCDRS	CONT		LOW:MATING
* 1004	PAYLOAD BAY DOORS DON'T OPEN	CRIT	DESIGN	CONT		MOD:DEPLOY
MAIN PROPULSION 2000						
* 2001	TKS,LINES,FITTINGS LK.	CRIT	DESIGN/PCDR	CRIT		LOW:LAUNCH PAD
* 2002	VENT TO P/L BAY	CRIT	DESIGN/PCDR	CRIT		LOW:UP/ON/SAFING
* 2003	OFF DES. ENG. INLET COND.	CRIT	DESIGN	CRIT		LOW:THRUSTING
* 2004	PROP. MIXING DURING LANDING/RE-ENTRY	CAT.	DESIGN/TEST	CAT.		LOW:LANDG/ENTRY
* 2005	PROP. SLOSH DURING DKING	CRIT	SIMULATION	CRIT		MOD:DOCKING
2006	CACHE TK. & CRASH LANDG	CAT	DESIGN	CAT		CONCPT DELETED
2007	MMH TANK IMPLOSION	CAT	DESIGN	CAT		CONCPT CHANGED
2008	ENG. BELL BUCKLES UNDER TRANSPORT LOADS	CRIT	DESIGN	CRIT		LOW:GROUND TRANSPORT
* 2009	N_2O_4 TK. VENTS DURING SAFING	CRIT	PCDR	CRIT		MOD:SAFING
* 2010	MPE NOZZLE WON'T EXTND	CRIT	DESIGN	CRIT		LOW:THRUSTING
* 2011	KICK STAGE RE-ENTERS	CAT	DESIGN	CRIT		LOW:ASCENT
* 2012	INCOMPLETE CONNECTOR HOOKUP VENTS FUME TO PAYLOAD BAY	CRIT	DESIGN	CRIT		LOW:RESTOW
* 2013	TPS TILES LOST FROM N_2O_4 VENT	CRIT	PCDR:DESIGN	CRIT		MOD:ENTRY
APS 3000						
* 3001	INADVERTENT VENT	CRIT	PCDR	CRIT		LOW:ENTRY/LOG
* 3002	LOSS OF PROP. ACQUISITION	CRIT	TEST	CRIT		LOW:RMS DOCKING
3003	LOSS OF RETRV'L DELAY MODULE APS	CRIT	DESIGN	CRIT		LOW:DOCKING
* 3004	ADD-ON APS LOSS	CRIT	DESIGN	CRIT		LOW:ON ORBIT

* Applicable to Concept

HAZARD STATUS SUMMARY REPORT
CONCEPT 320A-3A-320AE-3A

HAZARD CODE	HAZARD DESCRIPTION	INITIAL HAZARD LEVEL	HRPS RATIONALE	TRACKING HAZARD LEVEL	STATUS	REMARKS
AVIONICS 4000						
* 4001	CAN'T COMMAND OVERRIDE	CAT	DESIGN	CAT		LOW:NEAR EOS
* 4002	PROP. COMMANDS ABSENT	CAT	DESIGN	CAT		LOW:NEAR EOS
* 4003	ACS ELECTRONICS FAILS	CRIT	DESIGN	CRIT		LOW:NEAR EOS
* 4004	INERTIAL REF. & ATT. DATA DEGRADED	CRIT	PCDR	CRIT		LOW:SEP. FLT.
4005	ADD-ON AVIONICS CAUSES LOSS ATTITUDE CONTROL	CRIT	DESIGN	CRIT		LOW:SEP. FLT.
* 4006	AVIONICS DEGRADED BY HI ENERGY PARTICLES	CRIT	DESIGN	CONT		LOW:SEP. FLT.
* 4007	SRM FIRES INADVERTNTLY	CAT	DESIGN/PCDR	CRIT		LOW:IN/NEAR EOS
4008	LOSS OF SINGLE XMTR	CRIT	DESIGN/PCDR	CRIT		LOW:DEPL/RETRY.
THERMAL CONTROL 500						
* 5001	LOSS OF GND COOLING DURING SOAKBACK	CAT	DESIGN	CAT		MOD:SAFING
* 5002	LOSS FUEL CELL HEAT REJ.	CRIT	DESIGN/PCDR	CRIT		LOW:SEP. FLT.
ORDNANCE 6000						
* 6001	PYROS INADVERT. INITIATED	CAT	DESIGN	CRIT		LOW:GND C/O
GSE/AGE 7000						
* 7001	CG OFF NOMINAL CAUSE DOOR CONTACT AFTER ABORT	CRIT	DESIGN/PCDR	CRIT		LOW:TUG REMVL
EPS 9000						
* 9001	VENT REACTANTS STEAM TO PAYLOAD BAY	CRIT	DESIGN/PCDR	CRIT		LOW:UP/ON/SAFING
* 9002	REACTANT LEAKS TO SADDLE BAGS	CRIT	DESIGN/TEST	CRIT		MOD:ENTRY/LOG
* 9003	EOS POWER TO TUG FAILS OFF	CRIT	DESIGN	CRIT		LOW:ASCENT

RESIDUAL HAZARDS/SFP : 320-3A/320AE-3A*

ACCEPTABLE PROGRESS

HAZARDS/SFP	RATIONALE FOR ACCEPTANCE
ABNORMAL LANDING WITH FULL TANKS	ABORT DUMP STUDY REQ'D
VENT PROPELLANT FUMES TO PAYLOAD BAY VIA TUG OVERBOARD VENTS (MPS/APS)	EXTREME PAYLOAD BAY TEMPERATURE AND MULTIPLE FAILURES NECESSARY FOR VENTING
SRMs SENSITIVE TO LIQUID PROPELLANT FIRES	IGNITION SOURCES PRECLUDED IN PAYLOAD BAY
VENT FUEL CELL WATER TO PAYLOAD BAY DURING CHECKOUT	VENTS DIRECTED AWAY FROM EOS
ABORT LANDING WITH FULL FUEL CELL TANKS	TANKAGE AND SUPPORTS DESIGNED FOR CRASH LOADS
SFP : VALVES FAILED CLOSED (MISSION SUCCESS) - MPS He REGULATOR(S) - ENGINE PREVALVE(S) - APS VENT(S) - APS QUAD ISOLATION - AKS GN_2 SHUTOFF	HIGH RELIABILITY COMPONENTS

* HAZARD SOURCES DOUBLED

GRUMMAN

RESIDUAL HAZARDS AND SINGLE FAILURE POINTS: 320-3A/320AE-3A

Those hazards for which design, special procedures and safety or warning devices may not resolve the problem, are considered residual hazards. In addition, where failure of a single hardware element leads to loss of life, vehicle or mission, a single failure point (SFP) is identified. The ones falling into these categories for this concept are shown in this chart.

The fact that hazard sources are doubled in this concept is most significant; it adds operational complexity and increases the possibility of a safety hazard occurring. In addition, the ability to abort dump both tugs sequentially or simultaneously needs study; feasibility has been established.

Although a rationale for acceptance of these situations has been defined for now, additional study effort is required in the next phase to reduce the hazard to the lowest possible level (controlled category) and/or to eliminate the single failure points.

Additional information on these items is included in Volume VII, Safety and Reliability.

320-3A/320AE-3A SAFETY ASSESSMENT RESULTS

- DATA PACKAGE/ANALYSIS-DERIVED SAFETY REQUIREMENTS USED AS ASSESSMENT TOOL
- ASSESSMENT RESULTS :

REQ'T SOURCE	REQ'T/CONSTRAINT/EXCEPTION	COMMENTS
NASA REQTS	(E) DETECT POTENTIAL TANK FAILURES ON GROUND	FRACTURE MECHANICS PROGRAM USED
	(E) FUEL CELL VAPORS VENTED TO BAY DURING C/O	VENTS DIRECTED AWAY FROM EOS
	(C) NESTED TANKS	SEPARATE TANKS PREFERRED
VENTING	(C) NEED FLUID GSE DURING GROUND TRANSPORT	CONTAINS AND NEUTRALIZES VAPORS FROM ALL MPS TANKS
RESIDUALS	(R) NO ABORT DUMP	△ STUDY REQ'D
	(R) NO MPS DEPLETE	IMPLEMENTATION IS OPEN QUESTION
	(C) "EMPTY"TANKS AT LANDING	SAFEST LANDING CONFIGURATION
COLLISION	(R) SRMs JETTISONED ON PLANETARY P/L 23 MISSIONS	SRMs ACHIEVE ESCAPE VELOCITY
COMMAND/ CONTROL	(C) WITHIN 30 NM OF EOS; OVER GROUND STATION	SATISFACTORY TO SAFETY

GRUMMAN

SAFETY ASSESSMENT RESULTS: 320-3A/320AE-3A

An assessment of this configuration was performed to determine whether it satisfied the NASA Safety Requirements specified in the Data Package, Space Tug System Studies, April 1973 and those safety requirements derived through analysis. The first column identifies the source of the safety requirement, NASA Data Package or identified hazard. Items in the next column are labelled (R) for requirement unsatisfied, (C) for an operational constraint or (E) for an exception to the NASA or derived safety requirements. The specific items are summarized. In the comments column, the reasons or reactions to the safety assessment items are stated.

For the majority of items mentioned a multiplication factor of two is involved. This fact coupled with the need for an abort dump study and an indepth mission equipment utilization study by safety leads to an uncertainty about the two stage concept.

The checkmark in the upper right corner with the associated question mark signifies this safety uncertainty. The completed Safety Evaluation form for this concept is presented in Volume VII.

SAFETY EVALUATION FORM - 1 ✓ Reqt. Satisfied

HAZARD	SAFETY REQUIREMENT	CONFIGURATION/SUBSYSTEM 320A-3A / 320AE-3A *
LEAKS	o DETECTION ON GROUND	✓ INCREASED COMPLEXITY
	o PURGE ON PAD	✓
	o ISOLATE TANKS PRE/POST USE	✓
	o EMERGENCY DETANK HORIZONTAL	✓ INCREASED COMPLEXITY
	o EMERGENCY DETANK VERTICAL	✓
	o NORMAL HORIZONTAL DRAIN	✓
	o FRACTURE MECHANICS PROGRAM	✓
	o REDUNDANT SEALS	✓
	o ALL WELDED BALL JOINTS	✓
VENTING	o ISOLATE TANKS PRE/POST USE	✓
	o OVERBOARD VENTS UP/DOWN	✓
	o OVERBOARD CRYO VENTS UP/DOWN	✓
	o VENTS LIQUID COMPATIBLE	✓
	o REDUNDANT VALVES FOR OVERBOARD VENT PATHS	✓
	o CONDITION BAY POST LANDING	✓
	o VERTICAL VENT	✓
	o HORIZONTAL VENT VIA GSE	✓ ADDED GSE COMPLEXITY
	o POST LANDING, HOOKUP VENTS TO GSE	✓
ON-BOARD RESIDUALS	o VENT MPS/APS TANKS TO 20 PSIA	✓
	o VENT EPS TANKS TO 20 PSIA	✓
	o DEPLETE APS PRE-STOWAGE	✓
	o ABORT DUMP=VERTICAL	NO
	o DELETE MPS PRE-STOWAGE	OPEN QUESTION
	o VENT TUG PAYLOADS	✓
	o DUMP MUST BE SHUTTLE COMPATIBLE	NO

* SIGNIFICANT SAFETY DIFFERENCES BETWEEN CONFIGS. ARE DEPLOY VS DEPLOY/RETRIEVE AND 16 VS 24 JETS.

FOR NON-RECURRING USE ONLY
Maximum one time reproduction 100 copies. If requirement exceeds 100 copies, authorization must be obtained through Corporate Forms Management.

SAFETY EVALUATION FORM - 2

HAZARD	SAFETY REQUIREMENT	CONFIGURATION/SUBSYSTEM
COLLISON	o MICROMETEROID SHIELD o NO JETTISON OF SOLID DEBRIS AT P/L ALTITUDES	✓ (6) SRMs Jettisoned for planetary P/L 23. They are at escape velocity.
FIRE OR EXPLOSION	o MINIMUM TRAPPED VOLUMES o SEPARATE TANKS o CONTROL TANKS DELTA-P o INERT TANKS POST USE o PARAMETER READOUT TO EOS o SRM SAFE/ARM o MIN TANK PRESS. PRE-USE o CONTAINMENT OF PYRO DEBRIS o P/L BAY GN_2 DELUGE o GN_2 FREON 1301 FIRE EXTINGUISH o INERT H_2 TANK BAYS	11 ✓ NESTED TANKS BOTH TUGS ✓ ✓ ✓ ✓ ✓ ✓ ✓ ✓ ✓
THERMAL CONTROL	o AUTO DETECT COOL LOOP FAIL o FO/FS POST FLIGHT SAFING	✓ ✓
CRASH	o DESIGN INTACT SURVIVAL o DESIGN RETAIN PAYLOAD o DESIGN KICK STAGES TO NOT SURVIVE ENTRY o DESIGN RETRIEVAL DELAY MODULES TO NOT SURVIVE ENTRY	✓ ✓ ✓ NA

FOR NON-RECURRING USE ONLY
Maximum one time reproduction 100 copies. If requirement exceeds 100 copies, authorization must be obtained through Corporate Forms Management.

SAFETY EVALUATION FORM - 3

HAZARD	SAFETY REQUIREMENT	CONFIGURATION/SUBSYSTEM
MECH FAILS	o FAIL SAFE DESIGN	✓
	o LOCATOR PINS FOR FLUID CONNECTOR PANELS	✓ NUMBER OF PANELS DOUBLED.
	o PRECLUDE TUG TRANSLATION/ ROTATION DURING GROUND TUG/ ORBITER MATE	✓
	o SUPPORT AND CONSTRAIN ENGINE BELL DURING GROUND HANDLING	NOT REQ'D.; EXTENDIBLE NOZZLES.
	o MAKE MPS NOZZLE EXTEND AND RETRACT MECHANISMS REDUNDANT	✓
THRUST ABERRATIONS	o SENSE ENGINE INLET PRESSURE CHANGES	✓
	o ISOLATE APS TANKS	✓
	o SHUT DOWN MPE AUTO	✓
	o RELIEVE PROPULSION PRESSURE	✓
	o PROPULSION SHUTOFF VALVES UPSTREAM OF ENGINE VALVES	✓
	o QUALIFY APS FOR GAS BUBBLES OR DEMONSTRATE ADEQUACY OF PROPELLANT ACQUISITION	✓
	o PRECLUDE INADVERTENT SRM IGNITION	✓
COMMAND & CONTROL	o REDUNDANT SAFETY CRITICAL EQUIPMENT	✓
	o ADEQUATE CREW TRAINING	✓
	o COMMAND OVERRIDE	✓ OVER GROUND STATION; WITHIN 30NM OF EOS.
	o APS SHUTDOWN AFTER RMS ENGAGE	✓
	o MAKE SELECTION OF WIDE/NARROW DEADBAND FOR APS REDUNDANT	✓

FOR NON-RECURRING USE ONLY
Maximum one time reproduction 100 copies. If requirement exceeds 100 copies, authorization must be obtained through Corporate Forms Management.

SAFETY EVALUATION FORM - 4

HAZARD	SAFETY REQUIREMENT	CONFIGURATION/SUBSYSTEM
LOSS ATTITUDE CONTROL	o CHANNEL REDUNDANCY o JET FAILURE DETECTION o SLOSH PROTECTION	✓ ✓ NEEDS STUDY
CONTAMINATION	o NO VENT TO PAYLOAD BAY o NO PLUME IMPINGEMENT	FUEL CELL WATER DURING CHECKOUT ✓

1792 REV. 1
Maximum one time reproduction 100 copies. If requirement exceeds 100 copies, authorization must be obtained through Corporate Forms Management.
FOR NON-RECURRING USE ONLY

SAFETY EVALUATION FORM - 5

HAZARD	SAFETY REQUIREMENT	CONFIGURATION/SUBSYSTEM
GENERAL	o NO CREW SAFETY SFP	✓
	o APPROPRIATE SAFETY FACTORS	✓
	O MANNED SF FOR ABORT	✓
	o PROVIDE SAFETY STATUS	✓
	o COMMAND OVERRIDE NEAR ORBITER	✓
	o PROTECTION OF EOS FROM TUG HAZARDS	✓
	o EMERGENCY MANUAL RELEASE: TUG FROM EOS	✓ BOTH TUGS AT ONCE
STOWAGE IN ORBITER	o PROVIDE SAFETY STATUS	✓
	o EOS CONTROL CRITICAL TUG FUNCTIONS	✓
	o NO DESTRUCT CHARGES	✓
	o PRESSURE RELIEF THROUGH EOS	✓ BOTH VENICLES THROUGH EOS INTERFACE
	o NO VENT INTO PAYLOAD BAY	✓
ON ORBIT DEPLOY	o PROVIDE SAFETY STATUS	✓
	o EOS CONTROL CRITICAL TUG FUNCTIONS	✓
	o NO SPF YIELDING UNPROGRAMMED MOTION	✓

FOR NON-RECURRING USE ONLY

Maximum one time reproduction 100 copies. If requirement exceeds 100 cop. authorization must be obtained through Corporate Forms Management.

SAFETY EVALUATION FORM - 6

75

HAZARD	SAFETY REQUIREMENT	CONFIGURATION/SUBSYSTEM
ON ORBIT GENERAL	o PROVIDE SAFETY STATUS o ATTITUDE/TRANSLATION CONTROL OF TUG BY EOS o NON-PROPULSIVE VENTING o NO SFP YIELDING UNPROGRAMMED MOTION	✓ ✓ ✓ ✓
ON ORBIT RETRIEVAL	o PROVIDE SAFETY STATUS o EOS CONTROL CRITICAL TUG FUNCTIONS o NO SFP YIELDING UNPROGRAMMED MOTION o PROVIDE FOR STATIC DISCHARGE o REDUCE PROPELLANT/PRESSURANT TO SAFE LEVEL PRIOR TO RETRIEVAL o VERIFY EOS-TUG INTERFACES SECURE o REMOTE EMERGENCY TUG JETTISON	✓ ✓ ✓ TO BE INCORPORATED ✓ ✓ ✓
ABORT	o DON'T PRECLUDE EOS INTACT ABORT	ABORT DUMP FEASIBLE, Δ STUDY REQUIRED.

FOR NON-RECURRING USE ONLY
Maximum one time reproduction 100 copies. If requirement exceeds 100 copies, authorization must be obtained through Corporate Forms Management.

SAFETY EVALUATION FORM - 7

HAZARD	SAFETY REQUIREMENT	CONFIGURATION/SUBSYSTEM
STRUCTURES	o FS PER MSFC-HANDBOOK-505 o SATISFY FRACTURE MECHANICS	✓ ✓
PROPULSION	o FAIL SAFE MPS o AUTO RELIEF FOR TANKS o DETECT POTENTIAL TANK FAILURES o ISOLATION VALVES UPSTREAM ALL START VALVES o EMERGENCY OFF-LOADING ON LAUNCH PAD	✓ ✓ ✓ ✓ ✓
APS	o FO/FS DESIGN o ONE COMMAND SHUTDOWN	✓ ✓
AVIONICS	o RF LINKS EOS/TUG/PAYLOAD o CRITICAL COMMAND/CONTROL CIRCUITRY FO/FS	✓ ✓
ORDINANCE	o NO SINGLE DETECTABLE OR COMBINATION OF UNDETECTABLE FAILURES CAUSE PREMATURE DETONATION o SAFE UNUSED PYROS o SATISFY PYRO SPECIFICATION REQUIREMENTS	✓ ✓ ✓

FOR NON-RECURRING USE ONLY
Maximum one time reproduction 100 copies. If requirement exceeds 100 copies, authorization must be obtained through Corporate Forms Management.

MISSION RELIABILITY SUMMARY

OPTION 3A

CONFIGURATION 320A-3A

MISSION	HOURS		RELIABILITY		
	CORE	ADD-ON	CORE	ADD-ON	MISSION
RELIABILITY REFERENCE (SINGLE CORE)	168	-	.9768	—	.9768
ROUND TRIP (TWO CORES)	168/54	-	.9768/.9939	—	.9708
DEPLOY MULTIPLE P/L (1CORE) W/AKS	65	2	.9906	.9987	.9893

GRUMMAN

TUG VEHICLE RELIABILITY DATA

FOR RELIABILITY REFERENCE MISSION

OPTION 3A

CONFIGURATION 320A-3A

MISSION REL REF

SINGLE STAGE RELIABILITY .9768

DESIGN MISSION TIME 168 hrs

REDUNDANCY LEVEL COMP/SUB COMP

SUBSYSTEM	RELIABILITY
o STRUCTURE	.99900
o PROPULSION	
- MPS	.99249
- APS	.99899
o AVIONICS	
- GN&C	.99519
- COMM	.99955
- DMS	.99936
- THERMAL	.99870
- POWER	.99328

NOTE: INTERFACE SYSTEMS INCLUDED IN STRUCTURE.

GRUMMAN

MISSION RELIABILITY SUMMARY

OPTION 3A

CONFIGURATION 320AE-3A

MISSION	HOURS		RELIABILITY		
	CORE	ADD-ON	CORE	ADD-ON	MISSION
RELIABILITY REFERENCE (SINGLE CORE)	168	—	.9763	—	.9763
ROUND TRIP (TWO CORES)	169/54	—	.9763/.9936	—	.9701
DEPLOY MULTIPLE P/L (ONE CORE) W/AKS	65	2	.9872	.9987	.9859

GRUMMAN

TUG VEHICLE RELIABILITY DATA

FOR RELIABILITY REFERENCE MISSION

OPTION 3A

CONFIGURATION 320AE-3A

MISSION RELI REF

SINGLE STAGE RELIABILITY .9763

DESIGN MISSION TIME 168 hrs

REDUNDANCY LEVEL COMP/SUBCOMP

SUBSYSTEM	RELIABILITY
o STRUCTURE	.99900
o PROPULSION	
- MPS	.99249
- APS	.99899
o AVIONICS	
- GN&C	.99509
- COMM	.99912
- DMS	.99936
- THERMAL	.99870
- POWER	.99323

NOTE: INTERFACE SYSTEMS INCLUDED IN STRUCTURE.

GRUMMAN

* Applies to Both
** Applies to 310ARE-3B

HAZARD STATUS SUMMARY REPORT

CONCEPT 310-3B 310ARE-3B

HAZARD CODE	HAZARD DESCRIPTION	INITIAL HAZARD LEVEL	PRPS RATIONALE	TRACKING HAZARD LEVEL	STATUS	REMARKS
STRUCTURES 1000						
* 1001	TANKAGE LEAKS INTO ENCLOSED VOLUMES	CRIT	DESIGN	CRIT		LOW:ON ORBIT
* 1002	LOSS OF N_2O_4 TANK PRESSURE	CRIT	DESIGN	CRIT		LOW:ON ORBIT
* 1003	ADAPTER OVERSTRESSED DURING GROUND MATE	CRIT	PROCDRS	CONT		LOW:MATING
* 1004	PAYLOAD BAY DOORS DON'T OPEN	CRIT	DESIGN	CONT		MOD:DEPLOY
MAIN PROPULSION 2000						
* 2001	TKS,LINES,FITTINGS LK.	CRIT	DESIGN/PCDR	CRIT		LOW:LAUNCH PAD
* 2002	VENT TO P/L BAY	CRIT	DESIGN/PCDR	CRIT		LOW:UP/ON/SAFING
* 2003	OFF DES. ENG. INLET COND.	CRIT	DESIGN	CRIT		LOW:THRUSTING
* 2004	PROP. MIXING DURING LANDING/RE-ENTRY	CAT.	DESIGN/TEST	CAT.		LOW:LANDG/ENTRY
* 2005	PROP. SLOSH DURING DKING	CRIT	SIMULATION	CRIT		MOD:DOCKING
2006	CACHE TK. & CRASH LANDG	CAT	DESIGN	CAT		CONCPT DELETED
2007	MMH TANK IMPLOSION	CAT	DESIGN	CAT		CONCPT CHANGED
* 2008	ENG. BELL BUCKLES UNDER TRANSPORT LOADS	CRIT	DESIGN	CRIT		LOW:GROUND TRANSPORT
2009	N_2O_4 TK. VENTS DURING SAFING	CRIT	PCDR	CRIT		MOD:SAFING
2010	MPE NOZZLE WON'T EXTND	CRIT	DESIGN	CRIT		LOW:THRUSTING
** 2011	KICK STAGE RE-ENTERS	CAT	DESIGN	CRIT		LOW:ASCENT
* 2012	INCOMPLETE CONNECTOR HOOKUP VENTS FUME TO PAYLOAD BAY	CRIT	DESIGN	CRIT		LOW:RESTOW
* 2013	TPS TILES LOST FROM N_2O_4 VENT	CRIT	PCDR:DESIGN	CRIT		MOD:ENTRY
APS 3000						
* 3001	INADVERTENT VENT	CRIT	PCDR	CRIT		LOW:ENTRY/LOG
* 3002	LOSS OF PROP. ACQUISITION	CRIT	TEST	CRIT		LOW:RMS DOCKING
** 3003	LOSS OF RETRV'L DELAY MODULE APS	CRIT	DESIGN	CRIT		LOW:DOCKING
** 3004	ADD-ON APS LOSS	CRIT	DESIGN	CRIT		LOW:ON ORBIT

* Applies to Both
** Applies to 310ARE-3B

HAZARD STATUS SUMMARY REPORT

CONCEPT 310-3B 310ARE-3B

	HAZARD CODE	HAZARD DESCRIPTION	INITIAL HAZARD LEVEL	HRPS RATIONALE	TRACKING HAZARD LEVEL	STATUS	REMARKS
	AVIONICS 4000						
*	4001	CAN'T COMMAND OVERRIDE	CAT	DESIGN	CAT		LOW:NEAR EOS
*	4002	PROP. COMMANDS ABSENT	CAT	DESIGN	CAT		LOW:NEAR EOS
*	4003	ACS ELECTRONICS FAILS	CRIT	DESIGN	CRIT		LOW:NEAR EOS
*	4004	INERTIAL REF. & ATT. DATA DEGRADED	CRIT	PCDR	CRIT		LOW:SEP. FLT.
**	4005	ADD-ON AVIONICS CAUSES LOSS ATTITUDE CONTROL	CRIT	DESIGN	CRIT		LOW:SEP. FLT.
*	4006	AVIONICS DEGRADED BY HI ENERGY PARTICLES	CRIT	DESIGN	CONT		LOW:SEP. FLT.
**	4007	SRM FIRES INADVERTNTLY	CAT	DESIGN/PCDR	CRIT		LOW:IN/NEAR EOS
	4008	LOSS OF SINGLE XMTR	CRIT	DESIGN/PCDR	CRIT		LOW:DEPL/RETRY.
	THERMAL CONTROL 500						
*	5001	LOSS OF GND COOLING DURING SOAKBACK	CAT	DESIGN	CAT		MOD:SAFING
*	5002	LOSS FUEL CELL HEAT REJ.	CRIT	DESIGN/PCDR	CRIT		LOW:SEP. FLT.
	ORDNANCE 6000						
*	6001	PYROS INADVERT. INITIATED	CAT	DESIGN	CRIT		LOW:GND C/O
	GSE/AGE 7000						
*	7001	CG OFF NOMINAL CAUSE DOOR CONTACT AFTER ABORT	CRIT	DESIGN/PCDR	CRIT		LOW:TUG REMVL
	EPS 9000						
*	9001	VENT REACTANTS STEAM TO PAYLOAD BAY	CRIT	DESIGN/PCDR	CRIT		LOW:UP/ON/SAFING
*	9002	REACTANT LEAKS TO SADDLE BAGS	CRIT	DESIGN/TEST	CRIT		MOD:ENTRY/LOG
*	9003	EOS POWER TO TUG FAILS OFF	CRIT	DESIGN	CRIT		LOW:ASCENT

RESIDUAL HAZARDS/SFP : 310-3B/310ARE-3B

SATISFACTORY PROGRESS

HAZARDS/SFP	RATIONALE FOR ACCEPTANCE
ABNORMAL LANDING WITH FULL TANKS	ABORT DUMP PREFERRED BY SENSITIVITY STUDY
VENT PROPELLANT FUMES TO PAYLOAD BAY VIA TUG OVERBOARD VENTS (MPS/APS)	EXTREME PAYLOAD BAY TEMPERATURE AND MULTIPLE FAILURES NECESSARY FOR VENTING
SRMS SENSITIVE TO LIQUID PROPELLANT FIRES	IGNITION SOURCES PRECLUDED IN PAYLOAD BAY
VENT FUEL CELL WATER TO PAYLOAD BAY DURING CHECKOUT	VENT DIRECTED AWAY FROM EOS
ABORT LANDING WITH FULL FUEL CELL TANKS	TANKAGE AND SUPPORTS DESIGNED FOR CRASH LOADS
SFP : VALVES FAILED CLOSED (MISSION SUCCESS) - MPS He REGULATOR - ENGINE PREVALVE(S) - APS VENT - APS QUAD ISOLATION - AKS GN_2 SHUTOFF	HIGH RELIABILITY COMPONENTS
LACK OF RDM APS COMMAND OVERRIDE	DETECT UNSTABLE TARGET PRIOR TO DOCKING

GRUMMAN

RESIDUAL HAZARDS AND SINGLE FAILURE POINTS : 310-3B/310ARE-3B

Those hazards for which design, special procedures and safety or warning devices may not resolve the problem, are considered residual hazards. In addition, where failure of a single hardware element leads to loss of life, vehicle or mission, a single failure point (SFP) is identified. The ones falling into these categories for this concept are shown in this chart.

Although a rationale for acceptance of this situation has been defined for now. additional study effort is required in the next phase to reduce the hazard to the lowest possible level (controlled category) and/or to eliminate the single failure point.

Additional information on these items is included in Volume VII, Safety and Reliability.

310-3B/310ARE-3B SAFETY ASSESSMENT RESULTS

SAFETY

- DATA PACKAGE/ANALYSIS-DERIVED SAFETY REQUIREMENTS USED AS ASSESSMENT TOOL
- ASSESSMENT RESULTS :

REQ'T SOURCE	REQ'T/CONSTRAINT/EXCEPTION	COMMENTS
NASA REQTS	(E) DETECT POTENTIAL TANK FAILURE ON GROUND	FRACTURE MECHANICS PROGRAM USED
	(E) FUEL CELL VAPOR VENTED TO BAY DURING C/O	VENT DIRECTED AWAY FROM EOS
	(E) RDM APS NOT FO/FS	NOT CREW SAFETY
	(R) NESTED TANKS	PREFERRED : SEPARATE TANKS
VENTING	(C) NEED FLUID GSE DURING GROUND TRANSPORT	CONTAINS AND NEUTRALIZES VAPORS
RESIDUALS	(R) NO ABORT DUMP	DUMP PREFERRED
	(R) NO MPS DEPLETE	IMPLEMENTATION IS OPEN QUESTION
	(C) "EMPTY" TANKS AT LANDING	SAFEST LANDING CONFIGURATION
COMMAND/ CONTROL	(C) WITHIN 30 NM OF EOS; OVER GROUND STATION WHEN TRACKING	SATISFACTORY TO SAFETY
LOSS OF ATT. CONTROL	(C) RDM DICTATES P/L RADAR REFLECTORS/DOCKING TARGET	SMALL P/L IMPACT

GRUMMAN

SAFETY ASSESSMENT RESULTS: 310-3B/310ARE-3B

An assessment of this configuration was performed to determine whether it satisfied the NASA Safety Requirements specified in the Data Package, Space Tug System Studies, April 1973 and those safety requirements derived through analysis. The first column identifies the source of the safety requirement, NASA Data Package or identified hazard. Items in the next column are labelled (R) for requirement unsatisfied, (C) for an operational constraint or (E) for an exception to the NASA or derived safety requirements. The specific items are summarized. In the comments column, the reasons or reactions to the safety assessment items are stated.

The RDM APS doesn't satisfy the FO/FS requirements as it does not operate near the orbiter and the possibility of failed on/off jets is significantly reduced by use of highly reliable components.

The checkmark in the upper right corner signifies a satisfactory/safety mark for the configuration for Phase A. The completed Safety Evaluation form for this concept is presented in Volume VII.

SAFETY EVALUATION FORM - 1 ✓ Req't Satisfied

HAZARD	SAFETY REQUIREMENT	CONFIGURATION/SUBSYSTEM 310-3B	CONFIGURATION/SUBSYSTEM 310ARE-3B
LEAKS	o DETECTION ON GROUND	✓	✓
	o PURGE ON PAD	✓	✓
	o ISOLATE TANKS PRE/POST USE	✓	✓
	o EMERGENCY DETANK HORIZONTAL	✓	✓
	o EMERGENCY DETANK VERTICAL	✓	✓
	o NORMAL HORIZONTAL DRAIN	✓	✓
	o FRACTURE MECHANICS PROGRAM	✓	✓
	o REDUNDANT SEALS	✓	✓
	o ALL WELDED BALL JOINTS	✓	✓
VENTING	o ISOLATE TANKS PRE/POST USE	✓	✓
	o OVERBOARD VENTS UP/DOWN	✓	✓
	o OVERBOARD CRYO VENTS UP/DOWN	✓	✓
	o VENTS LIQUID COMPATIBLE	✓	✓
	o REDUNDANT VALVES FOR OVERBOARD VENT PATHS	✓	✓
	o CONDITION BAY POST LANDING	✓	✓
	o VERTICAL VENT	✓	✓
	o HORIZONTAL VENT VIA GSE	✓	✓
	o POST LANDING, HOOKUP VENTS TO GSE	✓	✓
ON-BOARD RESIDUALS	o VENT MPS/APS TANKS TO 20 PSIA	✓	✓
	o VENT EPS TANKS TO 20 PSIA	✓	✓
	o DEPLETE APS PRE-STOWAGE	✓	✓
	o ABORT DUMP=VERTICAL	NO	NO
	o DELETE MPS PRE-STOWAGE	OPEN QUESTION	OPEN QUESTION
	o VENT TUG PAYLOADS	✓	✓
	o DUMP MUST BE SHUTTLE COMPATIBLE	NO	NO

FOR NON-RECURRING USE ONLY
Maximum one time reproduction 100 copies. If requirement exceeds 100 copies authorization must be obtained through Corporate Forms Management.

SAFETY EVALUATION FORM - 2

HAZARD	SAFETY REQUIREMENT	CONFIGURATION/SUBSYSTEM 310-3B	CONFIGURATION/SUBSYSTEM 310 ARE-3B
COLLISON	o MICROMETEROID SHIELD	✓	✓
	o NO JETTISON OF SOLID DEBRIS AT P/L ALTITUDES	✓	✓
FIRE OR EXPLOSION	o MINIMUM TRAPPED VOLUMES	5	7
	o SEPARATE TANKS	NESTED TANKS	NESTED TANKS
	o CONTROL TANKS DELTA-P	✓	✓
	o INERT TANKS POST USE	✓	✓
	o PARAMETER READOUT TO EOS	✓	✓
	o SRM SAFE/ARM	NA	✓
	o MIN TANK PRESS. PRE-USE	✓	✓
	o CONTAINMENT OF PYRO DEBRIS	✓	✓
	o P/L BAY GN_2 DELUGE	✓	✓
	o GN_2 FREON 1301 FIRE EXTINGUISH	✓	✓
	o INERT H_2 TANK BAY	✓	✓
THERMAL CONTROL	o AUTO DETECT COOL LOOP FAIL	✓	✓
	o FO/FS POST FLIGHT SAFING	✓	✓
CRASH	o DESIGN INTACT SURVIVAL	✓	✓
	o DESIGN RETAIN PAYLOAD	✓	✓
	o DESIGN KICK STAGES TO NOT SURVIVE ENTRY	NA	✓
	o DESIGN RETRIEVAL DELAY MODULES TO NOT SURVIVE ENTRY	NA	✓

FOR NON-RECURRING USE ONLY
Maximum one time reproduction 100 copies. If requirement exceeds 100 co authorization must be obtained through Corporate Forms Management.

SAFETY EVALUATION FORM - 3

HAZARD	SAFETY REQUIREMENT	CONFIGURATION/SUBSYSTEM 310-3B	CONFIGURATION/SUBSYSTEM 310ARE-3B
MECH FAILS	o FAIL SAFE DESIGN	✓	✓
	o LOCATOR PINS FOR FLUID CONNECTOR PANELS	✓	✓
	o PRECLUDE TUG TRANSLATION/ ROTATION DURING GROUND TUG/ ORBITER MATE	✓	✓
	o SUPPORT AND CONSTRAIN ENGINE BELL DURING GROUND HANDLING	✓	✓
	o MAKE MPS NOZZLE EXTEND AND RETRACT MECHANISMS REDUNDANT	NA	✓
THRUST ABERRATIONS	o SENSE ENGINE INLET PRESSURE CHANGES	✓	✓
	o ISOLATE APS TANKS	✓	✓
	o SHUT DOWN MPE AUTO	✓	✓
	o RELIEVE PROPULSION PRESSURE	✓	✓
	o PROPULSION SHUTOFF VALVES UPSTREAM OF ENGINE VALVES	✓	✓
	o QUALIFY APS FOR GAS BUBBLES OR DEMONSTRATE ADEQUACY OF PROPELLANT ACQUISITION	✓	✓
	o PRECLUDE INADVERTENT SRM IGNITION	NA	✓
COMMAND & CONTROL	o REDUNDANT SAFETY CRITICAL EQUIPMENT	✓	✓
	o ADEQUATE CREW TRAINING	✓	✓
	o COMMAND OVERRIDE	IIIA WITHIN 30 NM EOS OVER GRND. STATION	IIB WITHIN 30 NM EOS OVER GRND STATION
	o APS SHUTDOWN AFTER RMS ENGAGE	-	✓ WITH STATION TRACKING
	o MAKE SELECTION OF WIDE/NARROW DEADBAND FOR APS REDUNDANT	✓	

FOR NON-RECURRING USE ONLY
Maximum one time reproduction 100 copies. If requirement exceeds 100 copies, authorization must be obtained through Corporate Forms Management.

SAFETY EVALUATION FORM - 4

90

HAZARD	SAFETY REQUIREMENT	CONFIGURATION/SUBSYSTEM 310-3B	310AEE-3B
LOSS ATTITUDE CONTROL	o CHANNEL REDUNDANCY o JET FAILURE DETECTION o SLOSH PROTECTION	✓ ✓ ✓	✓ ✓ ✓
CONTAMINATION	o NO VENT TO PAYLOAD BAY o NO PLUME IMPINGEMENT	FUEL CELL WATER TO BAY DURING L/O ✓	✓

FOR NON-RECURRING USE ONLY

Maximum one time reproduction 100 copies. If requirement exceeds 100 copies, authorization must be obtained through Corporate Forms Management.

SAFETY EVALUATION FORM - 5

HAZARD	SAFETY REQUIREMENT	CONFIGURATION/SUBSYSTEM 310-3B	CONFIGURATION/SUBSYSTEM 310ARE-3B
GENERAL	o NO CREW SAFETY SFP	✓	✓
	o APPROPRIATE SAFETY FACTORS	✓	✓
	o MANNED SF FOR ABORT	✓	✓
	o PROVIDE SAFETY STATUS	✓	✓
	o COMMAND OVERRIDE NEAR ORBITER	✓	✓
	o PROTECTION OF EOS FROM TUG HAZARDS	✓	✓
	o EMERGENCY MANUAL RELEASE: TUG FROM EOS	✓	✓
STOWAGE IN ORBITER	o PROVIDE SAFETY STATUS	✓	✓
	o EOS CONTROL CRITICAL TUG FUNCTIONS	✓	✓
	o NO DESTRUCT CHARGES	✓	✓
	o PRESSURE RELIEF THROUGH EOS	✓	✓
	o NO VENT INTO PAYLOAD BAY	FUEL CELL WATER	DURING CHECKOUT
ON ORBIT DEPLOY	o PROVIDE SAFETY STATUS	✓	✓
	o EOS CONTROL CRITICAL TUG FUNCTIONS	✓	✓
	o NO SPF YIELDING UNPROGRAMMED MOTION	✓	✓

FOR NON-RECURRING USE ONLY

Maximum one time reproduction 100 copies. If requirement exceeds 100 copies, authorization must be obtained through Corporate Forms Management.

SAFETY EVALUATION FORM - 6

HAZARD	SAFETY REQUIREMENT	CONFIGURATION/SUBSYSTEM 310-3B	CONFIGURATION/SUBSYSTEM 310ARC-3B
ON ORBIT GENERAL	o PROVIDE SAFETY STATUS	✓	✓
	o ATTITUDE/TRANSLATION CONTROL OF TUG BY EOS	✓	✓
	o NON-PROPULSIVE VENTING	✓	✓
	o NO SFP YIELDING UNPROGRAMMED MOTION	✓	✓
ON ORBIT RETRIEVAL	o PROVIDE SAFETY STATUS	✓	✓
	o EOS CONTROL CRITICAL TUG FUNCTIONS	✓	✓
	o NO SFP YIELDING UNPROGRAMMED MOTION	✓	✓
	o PROVIDE FOR STATIC DISCHARGE	TO BE INCORPORATED	
	o REDUCE PROPELLANT/PRESSURANT TO SAFE LEVEL PRIOR TO RETRIEVAL	✓	✓
	o VERIFY EOS-TUG INTERFACES SECURE	✓	✓
	o REMOTE EMERGENCY TUG JETTISON	✓	✓
ABORT	o DON'T PRECLUDE EOS INTACT ABORT	✓	✓

FOR NON-RECURRING USE ONLY

Maximum one time reproduction 100 copies. If requirement exceeds 100 copies, authorization must be obtained through Corporate Forms Management.

SAFETY EVALUATION FORM - 7

HAZARD	SAFETY REQUIREMENT	CONFIGURATION/SUBSYSTEM 310-3B	CONFIGURATION/SUBSYSTEM 310ARE-3B
STRUCTURES	o FS PER MSFC-HANDBOOK-505 o SATISFY FRACTURE MECHANICS	✓ ✓	✓ ✓
PROPULSION	o FAIL SAFE MPS o AUTO RELIEF FOR TANKS o DETECT POTENTIAL TANK FAILURES o ISOLATION VALVES UPSTREAM ALL START VALVES o EMERGENCY OFF-LOADING ON LAUNCH PAD	✓ ✓ ✓ ✓ ✓	✓ ✓ ✓ ✓ ✓
APS	o FO/FS DESIGN o ONE COMMAND SHUTDOWN	✓ ✓	NOT ON RDM ✓
AVIONICS	o RF LINKS EOS/TUG/PAYLOAD o CRITICAL COMMAND/CONTROL CIRCUITRY FO/FS	✓ ✓	✓ ✓
ORDINANCE	o NO SINGLE DETECTABLE OR COMBINATION OF UNDETECTABLE FAILURES CAUSE PREMATURE DETONATION o SAFE UNUSED PYROS o SATISFY PYRO SPECIFICATION REQUIREMENTS	NA ✓ ✓	✓ ✓ ✓

FOR NON-RECURRING USE ONLY
Maximum one time reproduction 100 copies. If requirement exceeds 100 copies, authorization must be obtained through Corporate Forms Management.

MISSION RELIABILITY SUMMARY

OPTION 3B

CONFIGURATION 310-3B

MISSION	HOURS		RELIABILITY		
	CORE	ADD-ON	CORE	ADD-ON	MISSION
RELIABILITY REFERENCE	168	—	.9700	—	.9700
DEPLOY MULTIPLE P/L	141	—	.9747	—	.9747

TUG VEHICLE RELIABILITY DATA
FOR RELIABILITY REFERENCE MISSION

OPTION 3B

CONFIGURATION 310-3B

MISSION REL. REF.

SINGLE STAGE RELIABILITY .9700

DESIGN MISSION TIME 168 hrs

REDUNDANCY LEVEL COMP./SUB[illegible]

SUBSYSTEM	RELIABILITY
o STRUCTURE	.99900
o PROPULSION	
- MPS	.99259
- APS	.99915
o AVIONICS	
- GN&C	.98810
- COMM	.99955
- DMS	.99936
- THERMAL	.99870
- POWER	.99328

NOTE: INTERFACE SYSTEMS INCLUDED IN STRUCTURE.

MISSION RELIABILITY SUMMARY

OPTION 3B

CONFIGURATION 310ARE-3B

MISSION	HOURS		RELIABILITY		
	CORE	ADD-ON	CORE	ADD-ON	MISSION
RELIABILITY REFERENCE	168	—	.9750	—	.9750
ROUND TRIP WITH AKS & RDM	69	2/336	.9907	.9987/.9824	.9721

GRUMMAN

TUG VEHICLE RELIABILITY DATA

FOR RELIABILITY REFERENCE MISSION

OPTION 3B

CONFIGURATION 310ARE-3B

MISSION REL. REF

SINGLE STAGE RELIABILITY .9750

DESIGN MISSION TIME 168 hrs

REDUNDANCY LEVEL COMP/SUB COMP

SUBSYSTEM	RELIABILITY
o STRUCTURE	.99900
o PROPULSION	
- MPS	.99249
- APS	.99882
o AVIONICS	
- GN&C	.99404
- COMM	.99912
- DMS	.99932
- THERMAL	.99870
- POWER	.99328

NOTE: INTERFACE SYSTEMS INCLUDED IN STRUCTURE.

GRUMMAN

* Applies to Both
** Applies to 510ADE

HAZARD STATUS SUMMARY REPORT

CONCEPT: 510A-3B 510ADE-3B

HAZARD CODE	HAZARD DESCRIPTION	INITIAL HAZARD LEVEL	PRPS RATIONALE	TRACKING HAZARD LEVEL	STATUS	REMARKS
STRUCTURES 1000						
*1001	TANKAGE LEAKS INTO ENCLOSED VOLUMES	CRIT	DESIGN	CRIT		LOW:ON ORBIT
*1002	LOSS OF N_2O_4 TANK PRESSURE	CRIT	DESIGN	CRIT		LOW:ON ORBIT
*1003	ADAPTER OVERSTRESSED DURING GROUND MATE	CRIT	PROCDRS	CONT		LOW:MATING
*1004	PAYLOAD BAY DOORS DON'T OPEN	CRIT	DESIGN	CONT		MOD:DEPLOY
MAIN PROPULSION 2000						
*2001	TKS,LINES,FITTINGS LK.	CRIT	DESIGN/PCDR	CRIT		LOW:LAUNCH PAD
*2002	VENT TO P/L BAY	CRIT	DESIGN/PCDR	CRIT		LOW:UP/ON/SAFING
*2003	OFF DES. ENG. INLET COND.	CRIT	DESIGN	CRIT		LOW:THRUSTING
*2004	PROP. MIXING DURING LANDING/RE-ENTRY	CAT.	DESIGN/TEST	CAT.		LOW:LANDG/ENTRY
*2005	PROP. SLOSH DURING DKING	CRIT	SIMULATION	CRIT		MOD:DOCKING
2006	CACHE TK. & CRASH LANDG	CAT	DESIGN	CAT		CONCPT DELETED
2007	MMH TANK IMPLOSION	CAT	DESIGN	CAT		CONCPT CHANGED
*2008	ENG. BELL BUCKLES UNDER TRANSPORT LOADS	CRIT	DESIGN	CRIT		LOW:GROUND TRANSPORT
*2009	N_2O_4 TK. VENTS DURING SAFING	CRIT	PCDR	CRIT		MOD:SAFING
2010	MPE NOZZLE WON'T EXTND	CRIT	DESIGN	CRIT		LOW:THRUSTING
*2011	KICK STAGE RE-ENTERS	CAT	DESIGN	CRIT		LOW:ASCENT
*2012	INCOMPLETE CONNECTOR HOOKUP VENTS FUME TO PAYLOAD BAY	CRIT	DESIGN	CRIT		LOW:RESTOW
*2013	TPS TILES LOST FROM N_2O_4 VENT	CRIT	PCDR:DESIGN	CRIT		MOD:ENTRY
APS 3000						
*3001	INADVERTENT VENT	CRIT	PCDR	CRIT		LOW:ENTRY/LOG
*3002	LOSS OF PROP. ACQUISITION	CRIT	TEST	CRIT		LOW:RMS DOCKING
3003	LOSS OF RETRV'L DELAY MODULE APS	CRIT	DESIGN	CRIT		LOW:DOCKING
*3004	ADD-ON APS LOSS	CRIT	DESIGN	CRIT		LOW:ON ORBIT

* Applies to Both
** Applies to 510ADE

HAZARD STATUS SUMMARY REPORT

CONCEPT: 510A-3B 510ADE-3B

HAZARD CODE	HAZARD DESCRIPTION	INITIAL HAZARD LEVEL	HRPS RATIONALE	TRACKING HAZARD LEVEL	STATUS	REMARKS
AVIONICS 4000						
* 4001	CAN'T COMMAND OVERRIDE	CAT	DESIGN	CAT		LOW:NEAR EOS
* 4002	PROP. COMMANDS ABSENT	CAT	DESIGN	CAT		LOW:NEAR EOS
* 4003	ACS ELECTRONICS FAILS	CRIT	DESIGN	CRIT		LOW:NEAR EOS
* 4004	INERTIAL REF. & ATT. DATA DEGRADED	CRIT	PCDR	CRIT		LOW:SEP. FLT.
** 4005	ADD-ON AVIONICS CAUSES LOSS ATTITUDE CONTROL	CRIT	DESIGN	CRIT		LOW:SEP. FLT.
* 4006	AVIONICS DEGRADED BY HI-ENERGY PARTICLES	CRIT	DESIGN	CONT		LOW:SEP. FLT.
* 4007	SRM FIRES INADVERTNTLY	CAT	DESIGN/PCDR	CRIT		LOW:IN/NEAR EOS
4008	LOSS OF SINGLE XMTR	CRIT	DESIGN/PCDR	CRIT		LOW:DEPL/RETRY.
THERMAL CONTROL 500						
* 5001	LOSS OF GND COOLING DURING SOAKBACK	CAT	DESIGN	CAT		MOD:SAFING
* 5002	LOSS FUEL CELL HEAT REJ.	CRIT	DESIGN/PCDR	CRIT		LOW:SEP. FLT.
ORDNANCE 6000						
* 6001	PYROS INADVERT. INITIATED	CAT	DESIGN	CRIT		LOW:GND C/O
GSE/AGE 7000						
* 7001	CG OFF NOMINAL CAUSE DOOR CONTACT AFTER ABORT	CRIT	DESIGN/PCDR	CRIT		LOW:TUG REMVL
EPS 9000						
* 9001	VENT REACTANTS STEAM TO PAYLOAD BAY	CRIT	DESIGN/PCDR	CRIT		LOW:UP/ON/SAFING
* 9002	REACTANT LEAKS TO SADDLE BAGS	CRIT	DESIGN/TEST	CRIT		MOD:ENTRY/LOS
* 9003	EOS POWER TO TUG FAILS OFF	CRIT	DESIGN	CRIT		LOW:ASCENT

RESIDUAL HAZARDS/SFP : 510A-3B/510ADE-3B

SATISFACTORY PROGRESS

HAZARDS/SFP	RATIONALE FOR ACCEPTANCE
ABNORMAL LANDING WITH FULL TANKS	ABORT DUMP PREFERRED BY SENSITIVITY STUDY
VENT PROPELLANT FUMES TO PAYLOAD BAY VIA TUG OVERBOARD VENTS (MPS/APS)	EXTREME PAYLOAD BAY TEMPERATURE AND MULTIPLE FAILURES NECESSARY FOR VENTING
JETTISON OF AKS SRM CASES AT PAYLOAD ALTITUDES	CONTACT HAZARD CONSIDERED LOW
VENT FUEL CELL WATER TO PAYLOAD BAY DURING CHECKOUT	VENT DIRECTED AWAY FROM EOS
ABORT LANDING WITH FULL FUEL CELL TANKS	TANKAGE AND SUPPORTS DESIGNED FOR CRASH LOADS
SFP : VALVES FAILED CLOSED (MISSION SUCCESS) - MPS He REGULATOR - ENGINE PREVALVE(S) - APS VENT - APS QUAD ISOLATION - A/DKS GN_2 SHUTOFF - AKS GN_2 REGULATOR	HIGH RELIABILITY COMPONENTS
LACK OF AKS/ADKS COMMAND OVERRIDE	DETECT UNSTABLE TARGET PRIOR TO DOCKING, NOT CREW SAFETY, SRM TVC
SRMS SENSITIVE TO LIQ. PROP. FIRES	IGNITION SOURCES PRECLUDED IN P/L BAY

GRUMMAN

RESIDUAL HAZARDS AND SINGLE FAILURE POINTS: 510A-3B/510ADE-3B

Those hazards for which design, special procedures and safety or warning devices may not resolve the problem, are considered residual hazards. In addition, where failure of a single hardware element leads to loss of life, vehicle or mission, a single failure point (SFP) is identified. The ones falling into these categories for this concept are shown in this chart.

Although a rationale for acceptance of these situations has been defined for now. Additional study effort is required in the next. phase to reduce the hazard to the lowest possible level (controlled category) and/or to eliminate the single failure point.

Additional information on these items is included in Volume VII, Safety and Reliability.

510A-3B/510ADE-3B SAFETY ASSESSMENT RESULTS

SAFETY

- DATA PACKAGE/ANALYSIS-DERIVED SAFETY REQUIREMENTS USED AS ASSESSMENT TOOL
- ASSESSMENT RESULTS :

REQ'T SOURCE	REQ'T/CONSTRAINT/EXCEPTION	COMMENTS
NASA REQTS	(E) DETECT POTENTIAL TANKS FAILURES ON GROUND	FRACTURES MECHANICS PROGRAM USED
	(E) FUEL CELL VAPORS VENTED TO BAY DURING C/O	VENT DIRECTED AWAY FROM EOS
	(R) NESTED TANKS	SEPARATE TANKS PREFERRED
VENTING	(C) NEED FLUID GSE DURING GROUND TRANSPORT	CONTAINS AND NEUTRALIZES VAPORS
RESIDUALS	(R) NO ABORT DUMP	TO BE INCORPORATED
	(R) NO MPS DEPLETE	IMPLEMENTATION IS OPEN QUESTION
	(C) "EMPTY" TANKS AT LANDING	SAFEST LANDING CONFIGURATION
COLLISION	(R) (4) SRMs JETTISONED ON ROUNDTRIP MISSIONS	98 MISSIONS PLANNED
COMMAND/ CONTROL	(C) WITHIN 30 NM OF EOS; OVER GROUND STATION WHEN TRACKING	SATISFACTORY TO SAFETY

GRUMMAN

SAFETY ASSESSMENT RESULTS: 510A-3B/510ADE-3B

Ann assessment of this configuration was performed to determine whether it satisfied the NASA Safety Requirements specified in the Data Package, Space Tug System Studies, April 1973 and those safety requirements derived through analysis. The first column identifies the source of the safety requirement, NASA Data Package or identified hazard. Items in the next column are labelled (R) for requirement unsatisfied, (C) for an operational constraint or (E) for an exception to the NASA or derived safety requirements. The specific items are summarized. In the comments column, the reasons or reactions to the safety assessment items are stated.

On roundtrip missions, four SRM cases are jettisoned to reduce weight and enable mission accomplishment. Of the 98 missions, 50 are to geosynchronous altitudes. As assessment of payload impact probability is needed for this traffic to this altitude to ascertain if a problem exists.

The checkmark in the upper right corner signifies a satisfactory/safety mark for the configuration for Phase A. The completed Safety Evaluation form for this concept is presented in Volume VII.

SAFETY EVALUATION FORM - 1 ✓ Req't. Satisfied

HAZARD	SAFETY REQUIREMENT	CONFIGURATION/SUBSYSTEM 510 A-3B	CONFIGURATION/SUBSYSTEM 510 ADE-3B
LEAKS	o DETECTION ON GROUND	✓	✓
	o PURGE ON PAD	✓	✓
	o ISOLATE TANKS PRE/POST USE	✓	✓
	o EMERGENCY DETANK HORIZONTAL	✓	✓
	o EMERGENCY DETANK VERTICAL	✓	✓
	o NORMAL HORIZONTAL DRAIN	✓	✓
	o FRACTURE MECHANICS PROGRAM	✓	✓
	o REDUNDANT SEALS	✓	✓
	o ALL WELDED BALL JOINTS	✓	✓
VENTING	o ISOLATE TANKS PRE/POST USE	✓	✓
	o OVERBOARD VENTS UP/DOWN	✓	✓
	o OVERBOARD CRYO VENTS UP/DOWN	✓	✓
	o VENTS LIQUID COMPATIBLE	✓	✓
	o REDUNDANT VALVES FOR OVERBOARD VENT PATHS	✓	✓
	o CONDITION BAY POST LANDING	✓	✓
	o VERTICAL VENT		✓
	o HORIZONTAL VENT VIA GSE	✓	
	o POST LANDING, HOOKUP VENTS TO GSE	✓	✓
ON-BOARD RESIDUALS	o VENT MPS/APS TANKS TO 20 PSIA	✓	✓
	o VENT EPS TANKS TO 20 PSIA	✓	✓
	o DEPLETE APS PRE-STOWAGE	✓	✓
	o ABORT DUMP=VERTICAL	NO	NO
	o DELETE MPS PRE-STOWAGE	OPEN QUESTION	OPEN QUESTION
	o VENT TUG PAYLOADS	✓	✓
	o DUMP MUST BE SHUTTLE COMPATIBLE	NO	NO

C 2792 REV. 1-70
FOR NON-RECURRING USE ONLY
Maximum one time reproduction 100 copies. If requirement exceeds 100 copies, authorization must be obtained through Corporate Forms Management.

NOTE: Reproduction, return original, one copy and repro order to Corporate Forms Management, Plant 36.

SAFETY EVALUATION FORM - 2

105

HAZARD	SAFETY REQUIREMENT	CONFIGURATION/SUBSYSTEM 510A-3B	CONFIGURATION/SUBSYSTEM 510ADE-3B
COLLISON	o MICROMETEROID SHIELD o NO JETTISON OF SOLID DEBRIS AT P/L ALTITUDES	✓ (2) SRM's Jettisoned for P/L 23, Planetary. They achieve escape velocity.	✓ 4 SRMs Jettisoned for round trip missions.
FIRE OR EXPLOSION	o MINIMUM TRAPPED VOLUMES o SEPARATE TANKS o CONTROL TANKS DELTA-P o INERT TANKS POST USE o PARAMETER READOUT TO EOS o SRM SAFE/ARM o MIN TANK PRESS. PRE-USE o CONTAINMENT OF PYRO DEBRIS o P/L BAY GN_2 DELUGE o GN_2 FREON 1301 FIRE EXTINGUISH o INERT H_2 TANK BAY	6 NESTED TANKS ✓ ✓ ✓ ✓ ✓ ✓ ✓ ✓ ✓	6 NESTED TANKS ✓ ✓ ✓ ✓ ✓ ✓ ✓ ✓ ✓
THERMAL CONTROL	o AUTO DETECT COOL LOOP FAIL o FO/FS POST FLIGHT SAFING	✓ ✓	✓ ✓
CRASH	o DESIGN INTACT SURVIVAL o DESIGN RETAIN PAYLOAD o DESIGN KICK STAGES TO NOT SURVIVE ENTRY o DESIGN RETRIEVAL DELAY MODULES TO NOT SURVIVE ENTRY	✓ ✓ ✓ NA	✓ ✓ ✓ NA

FOR NON-RECURRING USE ONLY

Maximum one time reproduction 100 copies. If requirement exceeds 100 copies, authorization must be obtained through Corporate Forms Management.

FC 2794 REV. 1

SAFETY EVALUATION FORM - 3

HAZARD	SAFETY REQUIREMENT	CONFIGURATION/SUBSYSTEM 510A-3B	CONFIGURATION/SUBSYSTEM 510ADE-3B
MECH FAILS	o FAIL SAFE DESIGN	✓	✓
	o LOCATOR PINS FOR FLUID CONNECTOR PANELS	✓	✓
	o PRECLUDE TUG TRANSLATION/ ROTATION DURING GROUND TUG/ ORBITER MATE	✓	✓
	o SUPPORT AND CONSTRAIN ENGINE BELL DURING GROUND HANDLING	✓	✓
	o MAKE MPS NOZZLE EXTEND AND RETRACT MECHANISMS REDUNDANT	NA.	NA
THRUST ABERRATIONS	o SENSE ENGINE INLET PRESSURE CHANGES	✓	✓
	o ISOLATE APS TANKS	✓	✓
	o SHUT DOWN MPE AUTO	✓	✓
	o RELIEVE PROPULSION PRESSURE	✓	✓
	o PROPULSION SHUTOFF VALVES UPSTREAM OF ENGINE VALVES	✓	✓
	o QUALIFY APS FOR GAS BUBBLES OR DEMONSTRATE ADEQUACY OF PROPELLANT ACQUISITION	✓	✓
	o PRECLUDE INADVERTENT SRM IGNITION	✓	✓
COMMAND & CONTROL	o REDUNDANT SAFETY CRITICAL EQUIPMENT	✓	✓
	o ADEQUATE CREW TRAINING	✓	✓
	o COMMAND OVERRIDE III A/IIB	WITHIN 30 NM EOS; OVERGROUND STATION	WITHIN 30 NM EOS, OVER GROUND STATION WHEN TRACKING.
	o APS SHUTDOWN AFTER RMS ENGAGE		
	o MAKE SELECTION OF WIDE/NARROW DEADBAND FOR APS REDUNDANT	✓	✓

FOR NON-RECURRING USE ONLY
Maximum one time reproduction 100 copies. If requirement exceeds 100 copies, authorization must be obtained through Corporate Forms Management.

SAFETY EVALUATION FORM - 4

107

HAZARD	SAFETY REQUIREMENT	CONFIGURATION/SUBSYSTEM 510 A-3B	CONFIGURATION/SUBSYSTEM 510ADE-3B
LOSS ATTITUDE CONTROL	o CHANNEL REDUNDANCY o JET FAILURE DETECTION o SLOSH PROTECTION	✓ ✓ ✓	✓ ✓ ✓
CONTAMINATION	o NO VENT TO PAYLOAD BAY o NO PLUME IMPINGEMENT	✓ FUEL CELL H_2O ✓	FUEL CELL H_2O C/O ✓

2792 REV. 1 70

FOR NON-RECURRING USE ONLY

Maximum one time reproduction 100 copies. If requirement exceeds 100 copies authorization must be obtained through Corporate Forms Management.

SAFETY EVALUATION FORM - 5

HAZARD	SAFETY REQUIREMENT	CONFIGURATION/SUBSYSTEM 510A-3B	CONFIGURATION/SUBSYSTEM 510ADE-3B
GENERAL	o NO CREW SAFETY SFP	✓	✓
	o APPROPRIATE SAFETY FACTORS	✓	✓
	o MANNED SF FOR ABORT	✓	✓
	o PROVIDE SAFETY STATUS	✓	✓
	o COMMAND OVERRIDE NEAR ORBITER	✓	✓
	o PROTECTION OF EOS FROM TUG HAZARDS	✓	✓
	o EMERGENCY MANUAL RELEASE: TUG FROM EOS	✓	✓
STOWAGE IN ORBITER	o PROVIDE SAFETY STATUS	✓	✓
	o EOS CONTROL CRITICAL TUG FUNCTIONS	✓	✓
	o NO DESTRUCT CHARGES	✓	✓
	o PRESSURE RELIEF THROUGH EOS	✓	✓
	o NO VENT INTO PAYLOAD BAY	✓ FUEL CELL H_2O @ C/O	FUEL CELL H_2O @ C/O
ON ORBIT DEPLOY	o PROVIDE SAFETY STATUS	✓	✓
	o EOS CONTROL CRITICAL TUG FUNCTIONS	✓	✓
	o NO SPF YIELDING UNPROGRAMMED MOTION	✓	✓

FOR NON-RECURRING USE ONLY

Maximum one time reproduction 100 copies. If requirement exceeds 100 copies, authorization must be obtained through Corporate Forms Management.

SAFETY EVALUATION FORM - 6

100

HAZARD	SAFETY REQUIREMENT	CONFIGURATION/SUBSYSTEM 510 A-3B	CONFIGURATION/SUBSYSTEM 510 ADE-3B
ON ORBIT GENERAL	o PROVIDE SAFETY STATUS	✓	✓
	o ATTITUDE/TRANSLATION CONTROL OF TUG BY EOS	✓	✓
	o NON-PROPULSIVE VENTING	✓	✓
	o NO SFP YIELDING UNPROGRAMMED MOTION	✓	✓
ON ORBIT RETRIEVAL	o PROVIDE SAFETY STATUS	✓	✓
	o EOS CONTROL CRITICAL TUG FUNCTIONS	✓	✓
	o NO SFP YIELDING UNPROGRAMMED MOTION	✓	✓
	o PROVIDE FOR STATIC DISCHARGE	TO BE INCORPORATED	TO BE INCORPORATED
	o REDUCE PROPELLANT/PRESSURANT TO SAFE LEVEL PRIOR TO RETRIEVAL	✓	✓
	o VERIFY EOS-TUG INTERFACES SECURE	✓	✓
	o REMOTE EMERGENCY TUG JETTISON	✓	✓
ABORT	o DON'T PRECLUDE EOS INTACT ABORT	✓	✓

FOR NON-RECURRING USE ONLY

Maximum one time reproduction 100 copies. If requirement exceeds 100 copies, authorization must be obtained through Corporate Forms Management.

SAFETY EVALUATION FORM - 7

110

HAZARD	SAFETY REQUIREMENT	CONFIGURATION/SUBSYSTEM 510 A-3 B	CONFIGURATION/SUBSYSTEM 510 ADE-3B
STRUCTURES	o FS PER MSFC-HANDBOOK-505 o SATISFY FRACTURE MECHANICS	✓ ✓	✓ ✓
PROPULSION	o FAIL SAFE MPS o AUTO RELIEF FOR TANKS o DETECT POTENTIAL TANK FAILURES o ISOLATION VALVES UPSTREAM ALL START VALVES o EMERGENCY OFF-LOADING ON LAUNCH PAD	✓ ✓ ✓ ✓ ✓	✓ ✓ ✓ ✓ ✓
APS	o FO/FS DESIGN o ONE COMMAND SHUTDOWN	✓ NOT ON AKS ✓	NOT ON DKS ✓
AVIONICS	o RF LINKS EOS/TUG/PAYLOAD o CRITICAL COMMAND/CONTROL CIRCUITRY FO/FS	✓ ✓	✓ ✓
ORDINANCE	o NO SINGLE DETECTABLE OR COMBINATION OF UNDETECTABLE FAILURES CAUSE PREMATURE DETONATION o SAFE UNUSED PYROS o SATISFY PYRO SPECIFICATION REQUIREMENTS	✓ ✓ ✓	✓ ✓ ✓

FOR NON-RECURRING USE ONLY
Maximum one time reproduction 100 copies. If requirement exceeds 100 copies, authorization must be obtained through Corporate Forms Management.

MISSION RELIABILITY SUMMARY

OPTION 3B

CONFIGURATION 510A-3B

MISSION	HOURS		RELIABILITY		
	CORE	ADD-ON	CORE	ADD-ON	MISSION
RELIABILITY REFERENCE	168	—	.9700	—	.9700
DEPLOY MULTIPLE P/L WITH AKS	65	2	.9902	.9987	.9889

GRUMMAN

TUG VEHICLE RELIABILITY DATA

FOR RELIABILITY REFERENCE MISSION

OPTION 3B

CONFIGURATION 510A-3B

MISSION REL. REF

SINGLE STAGE RELIABILITY .9700

DESIGN MISSION TIME 168 hrs

REDUNDANCY LEVEL COMP/SUB COMP

SUBSYSTEM	RELIABILITY
o STRUCTURE	.99900
o PROPULSION	
- MPS	.99249
- APS	.99915
o AVIONICS	
- GN&C	.98810
- COMM	.99955
- DMS	.99936
- THERMAL	.99870
- POWER	.99328

NOTE: INTERFACE SYSTEMS INCLUDED IN STRUCTURE.

GRUMMAN

MISSION RELIABILITY SUMMARY

OPTION 3B

CONFIGURATION 510ADE-3B

MISSION	HOURS		RELIABILITY		
	CORE	ADD-ON	CORE	ADD-ON	MISSION
RELIABILITY REFERENCE	168	–	.9750	–	.9750
ROUND TRIP W/ADKS	69	73	.9907	.9791	.9700
RETRIEVE W/DKS	60	73	.9924	.9804	.9729

GRUMMAN

TUG VEHICLE RELIABILITY DATA

FOR RELIABILITY REFERENCE MISSION

OPTION 3B

CONFIGURATION 510ADE-3B

MISSION REL. REF.

SINGLE STAGE RELIABILITY .9750

DESIGN MISSION TIME 168 hrs

REDUNDANCY LEVEL COMP/SUB COMP.

SUBSYSTEM	RELIABILITY
o STRUCTURE	.99400
o PROPULSION	
- MPS	.99249
- APS	.99882
o AVIONICS	
- GN&C	.99404
- COMM	.99919
- DMS	.99932
- THERMAL	.99870
- POWER	.99328

NOTE: INTERFACE SYSTEMS INCLUDED IN STRUCTURE.

GRUMMAN

TUG VEHICLE RELIABILITY DATA

FOR RELIABILITY REFERENCE MISSION

OPTION ADD-ON

CONFIGURATION APOGEE KICK STAGE

MISSION DEPLOY PAYLOADS

SINGLE STAGE RELIABILITY .9987

DESIGN MISSION TIME 2 hrs.

REDUNDANCY LEVEL COMP./SUB COMP.

SUBSYSTEM	RELIABILITY
o STRUCTURE	.99999
o PROPULSION	
- MPS	.99900
- APS	.99988
o AVIONICS	
- GN&C	.99987
- COMM	N.A.
- DMS	N.A.
- THERMAL	N.A.
- POWER	.99958

NOTE: INTERFACE SYSTEMS INCLUDED IN STRUCTURE.

GRUMMAN

TUG VEHICLE RELIABILITY DATA

FOR RELIABILITY REFERENCE MISSION

OPTION ADD-ON

CONFIGURATION APOGEE/DEORBIT KICK STAGE

MISSION DEPLOY & RETRIEVE

SINGLE STAGE RELIABILITY .9791

DESIGN MISSION TIME 73 hr - ACTIVE
5 YR. - INACTIVE

REDUNDANCY LEVEL COMP./SUBCOMP.

SUBSYSTEM	RELIABILITY
o STRUCTURE	.99930
o PROPULSION	
- MPS	.99700
- APS	.99448
o AVIONICS	
- GN&C	.99763
- COMM	.99483
- DMS	.99999
- THERMAL	N.A.
- POWER	.99566

NOTE: INTERFACE SYSTEMS INCLUDED IN STRUCTURE.

GRUMMAN

TUG VEHICLE RELIABILITY DATA

FOR RELIABILITY REFERENCE MISSION

OPTION ADD-ON

CONFIGURATION RETRIEVE DELAY MODULE

MISSION RETRIEVE PAYLOADS

SINGLE STAGE RELIABILITY .9824

DESIGN MISSION TIME 336 hrs.

REDUNDANCY LEVEL COMP./SUBCOMP.

SUBSYSTEM	RELIABILITY
o STRUCTURE	.99966
o PROPULSION	
- MPS	N.A.
- APS	.99705
o AVIONICS	
- GN&C	.99659
- COMM	.99607
- DMS	.99996
- THERMAL	N.A.
- POWER	.99297

NOTE: INTERFACE SYSTEMS INCLUDED IN STRUCTURE.

GRUMMAN

III SUBSYSTEM ASSESSMENTS

- HAR'S IDENTIFY DETAILS
- FMEA'S PROVIDE POTENTIAL FAILURE MODES
- CONCERNED WITH SUBSYSTEM CHANGES SINCE JULY 1973 ONLY

GRUMMAN

SUBSYSTEM ASSESSMENTS

SUBSYSTEM	SIGNIFICANT CHANGES	SAFETY IMPACT
MPS	o HORIZONTAL DRAIN	o ENHANCES OPNL FLEXIBILITY
	o ABORT DUMP	o ENABLES "EMPTY" TANK LDGS.
APS	o 16 JETS ON EARLY VEHICLES	o NO RENDEZVOUS, BUT FS/FS
	o SIDE BY SIDE JETS 320/510	o THERMAL CONTROL PROBLEM
EPS	o ELIMINATED EMERG. BUSS TWO PRIME BUSSES	o EQUIP. PER BUSS CRITICAL
THERMAL CONTROL	o HEAT PIPES	o NO FLUID PUMPED EXTERN.PIPES
DMS	o NONE	
GN&C	o ONE WAY DOPPLER	o ENABLES AUTONOMOUS NAV >2000 NM
	o RATE GYRO B/U IMU	o ASSURES STABLE VEHICLE WITH IMU FAILURE
COMM.	o NONE	

GRUMMAN

TUG RELIABILITY SUMMARY

CONFIGURATION.... 110A-1 DEPLOY
SUBSYSTEM.....MAIN PROP

ITEM	EQUIPMENT NAME	S/S STG	LAMBDA	QTY	TIME	CODE	RO	RI
1	HE ISO VALVE	MPS-COR	0.7500E-05 1 *	1	46.0	1	0.999655	
2	OX PREVALVE	MPS-COR	0.2500E-05 1	1	58.0	1	0.999855	
3	FUEL PREVALVE	MPS-COR	0.2500E-05 1	1	58.0	1	0.999855	
4	MAIN ENGINE	MPS-COR	0.7000E-03 5	1	1.0	2	0.999300	
5	HELIUM TANK	MPS-COR	0.1000E-05 2	2	46.0	2	0.999908	
6	OX F/D OD	MPS-COR	0.2000E-05 3	1	58.0	2	0.999884	
7	FUEL F/D OD	MPS-COR	0.2000E-05 3	1	58.0	2	0.999884	
8	OX F/V OD	MPS-COR	0.2000E-05 3	1	46.0	2	0.999908	
9	FUEL F/V OD	MPS-COR	0.2000E-05 3	1	46.0	2	0.999908	
10	HE F/D OD	MPS-COR	0.2000E-05 3	1	46.0	2	0.999908	
11	OX REGULATOR SINGLE	MPS-COR	0.5500E-04 3	1	46.0	1	0.997473	
12	FUEL REGULATOR SINGLE	MPS-COR	0.5500E-04 3	1	46.0	1	0.997473	
13	OX RELIEF VALVE & DISC	MPS-COR	0.1000E-05 6	1	58.0	2	0.999942	
14	FUEL REL VAL & DISC	MPS-COR	0.1000E-05 6	1	58.0	2	0.999942	
15	OX QUAD CK VALVE	MPS-COR	0.1000E-05 6	1	46.0	2	0.999954 I **	
16	FUEL QUAD CK VALVE	MPS-COR	0.1000E-05 6	1	46.0	2	0.999954 I	
17	OX VENT VALVE	MPS-COR	0.1500E-04 1	1	58.0	4	0.999130 E	0.999999
18	FUEL VENT VALVE	MPS-COR	0.1500E-04 1	1	58.0	4	0.999130 E	0.999999

MISSION TIME... 58.0 HOURS
NUMBER OF REDUNDANT UNITS IS... 2
WEIGHT OF REDUNDANT UNITS IS... 10.0 POUNDS
RELIABILITY OF NON-REDUNDANT SYSTEM IS... 0.991096
SYSTEM RELIABILITY WITH SELECTED REDUNDANCY IS... 0.992821

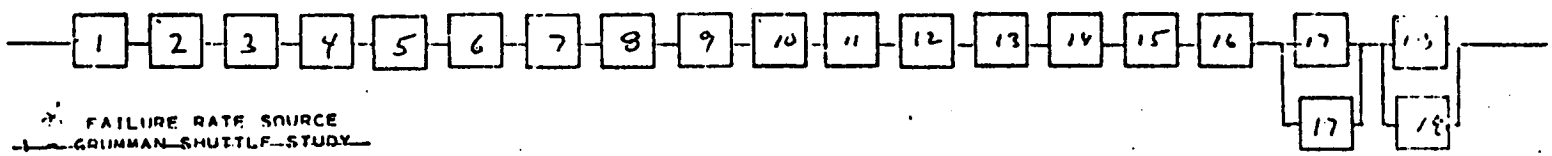

* FAILURE RATE SOURCE
1 - GRUMMAN SHUTTLE STUDY
2 - GRUMMAN LM PROGRAM
3 - MMC FAILURE DATA STUDY
4 - PRC FAILURE DATA STUDY
5 - VENDOR
6 - ESTIMATE

** REDUNDANCY CODE
E - EQUIPMENT
F - FUNCTIONAL
I - INTERNAL

GRUMMAN

TUG RELIABILITY SUMMARY

CONFIGURATION.... 110A-1 DEPLOY
SUBSYSTEM.....AUX PROP

ITEM	EQUIPMENT NAME	S/S STG	LAMBDA	QTY	TIME	CODE	RO	R1
1	VENT VALVE-FUEL	APS-COR	0.1500E-04 1	1	46.0	4	0.999310 E	1.000000
2	THRUSTERS (16)	APS-COR	0.6000E-07 6	1	1.0	2	1.000000 E	
3	HELIUM TANK	APS-COR	0.1000E-05 2	1	46.0	2	0.999954	
4	QUAD CHECK VALVE	APS-COR	0.5000E-06 6	1	46.0	2	0.999977 I	
5	REGULATOR & SOV ASSY	APS-COR	0.5000E-08 6/2	1	34.0	2	1.000000 F	
6	THRUSTER ISO VALVE A	APS-COR	0.1500E-04 1	1	58.0	4	0.999130 E	0.999999
7	THRUSTER ISO VALVE B	APS-COR	0.1500E-04 1	1	58.0	4	0.999130 E	0.999999
8	THRUSTER ISO VALVE C	APS-COR	0.1500E-04 1	1	58.0	4	0.999130 E	0.999999
9	THRUSTER ISO VALVE D	APS-COR	0.1500E-04 1	1	58.0	4	0.999130 E	0.999999
10	FUEL TANK	APS-COR	0.1000E-05 3	2	58.0	2	0.999884	
11	FUEL REL VAL & DISC	APS-COR	0.5000E-06 6	1	46.0	2	0.999977 F	

MISSION TIME.... 58.0 HOURS
NUMBER OF REDUNDANT UNITS IS... 5
WEIGHT OF REDUNDANT UNITS IS... 8.0 POUNDS
RELIABILITY OF NON-REDUNDANT SYSTEM IS... 0.995631
SYSTEM RELIABILITY WITH SELECTED REDUNDANCY IS... 0.999788

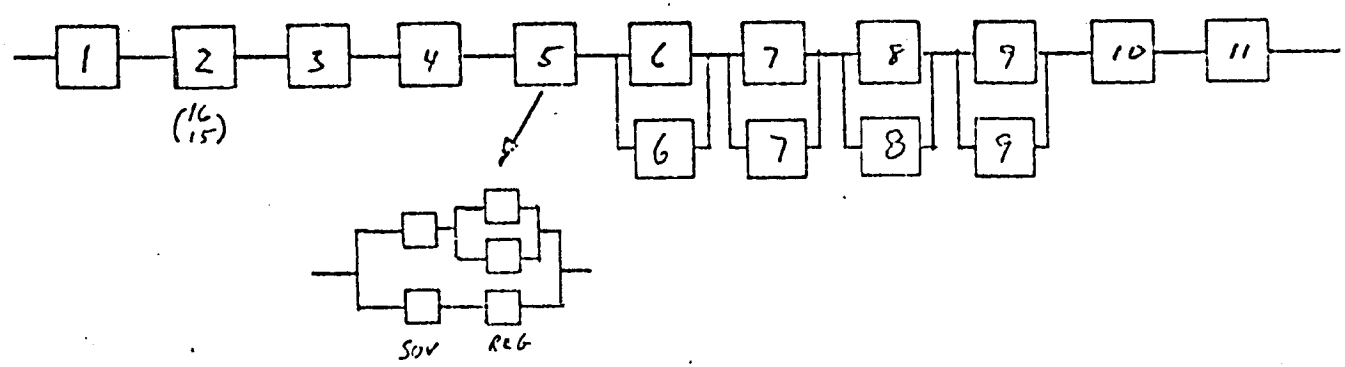

FAILURE RATE SOURCE
1 - GRUMMAN SHUTTLE STUDY
2 - GRUMMAN LM PROGRAM
3 - MMC FAILURE DATA STUDY
4 - PRC FAILURE DATA STUDY
5 - VENDOR
6 - ESTIMATE

REDUNDANCY CODE
E - EQUIPMENT
F - FUNCTIONAL
I - INTERNAL

TUG RELIABILITY SUMMARY

CONFIGURATION.... 110A-1 DEPLOY
SUBSYSTEM.....GUID/NAV

ITEM	EQUIPMENT NAME	S/S STG	LAMBDA	QTY	TIME	CODE	R0	R1
1	APS ELECTRONICS	GNC-COR	0.2000E-04 *	1	34.0	3	0.999320 ** E	1.000000
2	MAIN ENGINE ELECTRONICS	GNC-COR	0.1000E-04	1	1.0	0	0.999990	
3	I M U	GNC-COR	0.5000E-04	1	34.0	1	0.998301	
4	STAR TRACKER	GNC-COR	0.6600E-04	1	17.0	0	0.998879	

MISSION TIME.... 58.0 HOURS
NUMBER OF REDUNDANT UNITS IS.... 1
WEIGHT OF REDUNDANT UNITS IS.... 18.0 POUNDS
RELIABILITY OF NON-REDUNDANT SYSTEM IS.... 0.996494
SYSTEM RELIABILITY WITH SELECTED REDUNDANCY IS.... 0.997172

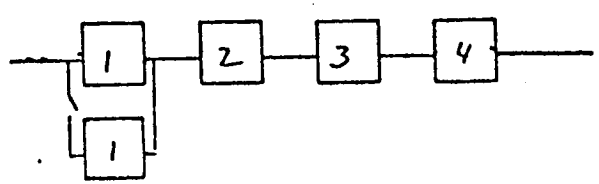

* FAILURE RATE SOURCE
1 - GRUMMAN SHUTTLE STUDY
2 - GRUMMAN LM PROGRAM
3 - MMC FAILURE DATA STUDY
4 - RRC FAILURE DATA STUDY
5 - VENDOR
6 - ESTIMATE

** REDUNDANCY CODE
E - EQUIPMENT
F - FUNCTIONAL
I - INTERNAL

TUG RELIABILITY SUMMARY

CONFIGURATION.... 110A-1 DEPLOY
SUBSYSTEM.....COMMUNICATIONS

ITEM	EQUIPMENT NAME	S/S STG	LAMBDA	QTY	TIME	CODE	R0	R1
1	RECEIVER A DFS	COM-COR	0.1700E-04 1	1	34.0	3	0.999422 E	1.000000
2	RECEIVER B DFS	COM-COR	0.1700E-04 1	1	34.0	3	0.999422 E	1.000000
3	TRANSMITTER DFS	COM-COR	0.1700E-04 1	1	17.0	0	0.999711	
4	POWER AMP-DFS	COM-COR	0.1500E-04 1	1	17.0	0	0.999745	
5	BASE PROCESSOR (RED)	COM-COR	0.1000E-06 6	1	34.0	1	0.999997 I	
6	DIPLEXER (2)	COM-COR	0.1000E-05 6	1	34.0	2	0.999966	
7	OMNI ANTENNA-DFS (2)	COM-COR	0.1000E-05 3	1	34.0	2	0.999966	
8	ANTENNA SWITCH	COM-COR	0.1000E-05 6	1	34.0	2	0.999966	

MISSION TIME.... 58.0 HOURS
NUMBER OF REDUNDANT UNITS IS.... 2
WEIGHT OF REDUNDANT UNITS IS.... 8.0 POUNDS
RELIABILITY OF NON-REDUNDANT SYSTEM IS.... 0.998196
SYSTEM RELIABILITY WITH SELECTED REDUNDANCY IS.... 0.999350

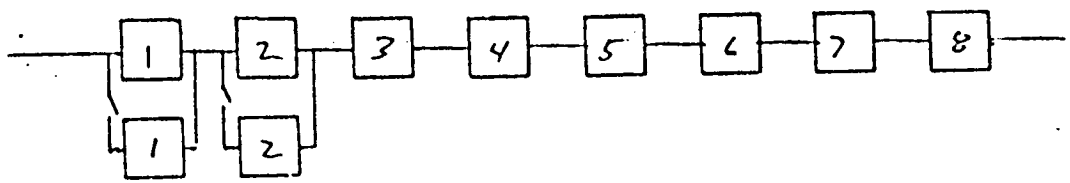

FAILURE RATE SOURCE
1 - GRUMMAN SHUTTLE STUDY
2 - GRUMMAN LM PROGRAM
3 - MMC FAILURE DATA STUDY
4 - PRC FAILURE DATA STUDY
5 - VENDOR
6 - ESTIMATE

REDUNDANCY CODE
E - EQUIPMENT
F - FUNCTIONAL
I - INTERNAL

TUG RELIABILITY SUMMARY

CONFIGURATION.... 110A-1 DEPLOY
SUBSYSTEM.....DATA MGT

ITEM	EQUIPMENT NAME	S/S STG	LAMBDA	QTY	TIME	CODE	R0	R1
1	DAU/SIG COND A	DMT-COR	0.1000E-05 6	1	34.0	1	0.999966 I	
2	DAU/SIG COND B	DMT-COR	0.1000E-05 6	1	34.0	1	0.999966 I	
3	DAU/SIG COND C	DMT-COR	0.1000E-05 6	1	34.0	1	0.999966 I	
4	CENTRAL COMPUTER	DMT-COR	0.5600E-04 5	1	34.0	4	0.998098 E	0.999996
5	DATA BUS CONT/TM FORMAT	DMT-COR	0.1000E-05 6	1	34.0	1	0.999966 I	

MISSION TIME.... 58.0 HOURS
NUMBER OF REDUNDANT UNITS IS... 1
WEIGHT OF REDUNDANT UNITS IS... 13.0 POUNDS
RELIABILITY OF NON-REDUNDANT SYSTEM IS... 0.997962
SYSTEM RELIABILITY WITH SELECTED REDUNDANCY IS... 0.999860

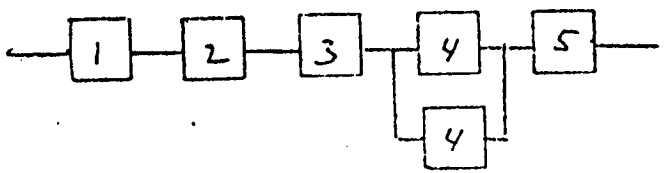

FAILURE RATE SOURCE
1 - GRUMMAN SHUTTLE STUDY
2 - GRUMMAN LM PROGRAM
3 - MMC FAILURE DATA STUDY
4 - PRC FAILURE DATA STUDY
5 - VENDOR
6 - ESTIMATE

REDUNDANCY CODE
E - EQUIPMENT
F - FUNCTIONAL
I - INTERNAL

TUG RELIABILITY SUMMARY

CONFIGURATION.... 110A-1 DEPLOY
SUBSYSTEM.....POWER

ITEM	EQUIPMENT NAME	S/S STG	LAMBDA	QTY	TIME	CODE	R0	R1
1	BATTERY AG-ZN	PWR-COR	0.3300E-04* 1	1	34.0	0	0.998879	
2	BACK-UP BATTERY	PWR-COR	0.2000E-04* 1	1	1.0	0	0.999980	
3	POWER DISTRIBUTION	PWR-COR	0.2000E-05 6	1	58.0	2	0.999884	

MISSION TIME... 58.0 HOURS
NUMBER OF REDUNDANT UNITS IS... 0
WEIGHT OF REDUNDANT UNITS IS... 0.0 POUNDS
RELIABILITY OF NON-REDUNDANT SYSTEM IS... 0.998743
SYSTEM RELIABILITY WITH SELECTED REDUNDANCY IS... 0.998743

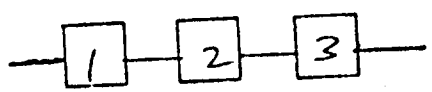

* FAILURE RATE SOURCE
1 - GRUMMAN SHUTTLE STUDY
2 - GRUMMAN LM PROGRAM
3 - MMC FAILURE DATA STUDY
4 - PRC FAILURE DATA STUDY
5 - VENDOR
6 - ESTIMATE

REDUNDANCY CODE
E - EQUIPMENT
F - FUNCTIONAL
I - INTERNAL

TUG RELIABILITY SUMMARY

CONFIGURATION.... 410AD-2
SUBSYSTEM.....MAIN PROP

MISSION TIME... 168.0 HOURS
NUMBER OF REDUNDANT UNITS IS... 3
WEIGHT OF REDUNDANT UNITS IS... 12.0 POUNDS
RELIABILITY OF NON-REDUNDANT SYSTEM IS... 0.986355
SYSTEM RELIABILITY WITH SELECTED REDUNDANCY IS... 0.992486

ITEM	EQUIPMENT NAME	S/S STG	LAMBDA	QTY	TIME	CODE	R0	R1
1	OX REGULATOR DUAL	MPS-COR	0.1000E-04 3*	1	156.0	1	0.998441 I**	
2	FUEL REGULATOR DUAL	MPS-COR	0.1000E-04 3	1	156.0	1	0.998441 I	
3	MAIN ENGINE	MPS-COR	0.1000E-02 5	1	1.0	2	0.999000	
4	HE ISO VALVE	MPS-COR	0.7500E-05 1	1	156.0	4	0.998831 E	0.999999
5	OX PREVALVE	MPS-COR	0.2500E-05 1	1	168.0	1	0.999580	
6	FUEL PREVALVE	MPS-COR	0.2500E-05 1	1	168.0	1	0.999580	
7	HELIUM TANK	MPS-COR	0.1000E-05 2	2	156.0	2	0.999688	
8	OX F/D OD	MPS-COR	0.2000E-05 2	1	168.0	2	0.999664	
9	FUEL F/D OD	MPS-COR	0.2000E-05 2	1	168.0	2	0.999664	
10	OX F/V OD	MPS-COR	0.2000E-05 2	1	156.0	2	0.999688	
11	FUEL F/V OD	MPS-COR	0.2000E-05 2	1	156.0	2	0.999688	
12	HE F/D OD	MPS-COR	0.2000E-05 3	1	156.0	2	0.999688	
13	OX RELIEF VALVE & DISC	MPS-COR	0.1000E-05 6	1	168.0	2	0.999832 F	
14	FUEL REL VAL & DISC	MPS-COR	0.1000E-05 6	1	168.0	2	0.999832 F	
15	OX QUAD CK VALVE	MPS-COR	0.1000E-05 6	1	156.0	2	0.999844 I	
16	FUEL QUAD CK VALVE	MPS-COR	0.1000E-05 6	1	156.0	2	0.999844 I	
17	OX VENT VALVE	MPS-COR	0.1500E-04 1	1	168.0	4	0.997483 E	0.999994
18	FUEL VENT VALVE	MPS-COR	0.1500E-04 1	1	168.0	4	0.997483 E	0.999994

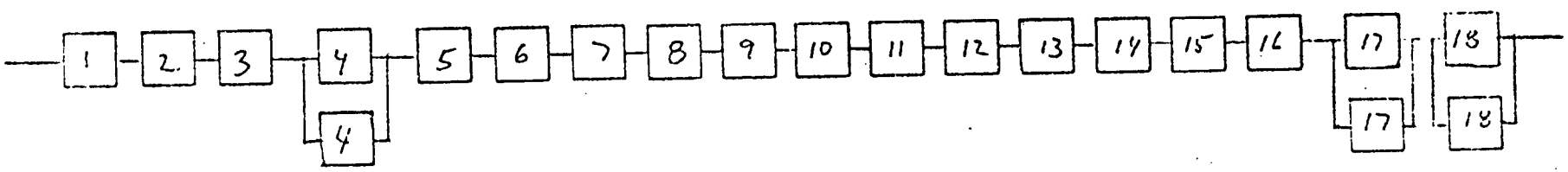

* FAILURE RATE SOURCE
1 - GRUMMAN SHUTTLE STUDY
2 - GRUMMAN LM PROGRAM
3 - MMC FAILURE DATA STUDY
4 - PRC FAILURE DATA STUDY
5 - VENDOR
6 - ESTIMATE

** REDUNDANCY CODE
F - EQUIPMENT
E - FUNCTIONAL
I - INTERNAL

GRUMMAN

TUG RELIABILITY SUMMARY

CONFIGURATION.... 410A-2
SUBSYSTEM.....AUX PROP

ITEM	EQUIPMENT NAME	S/S STG	LAMBDA	QTY	TIME	CODE	R0	R1
1	HELIUM TANK	APS-COR	0.1000E-05 2*	2	156.0	2	0.999688	
2	FUEL TANK	APS-COR	0.1000E-05 3	4	168.0	2	0.999328 **	
3	THRUSTERS (24)	APS-COR	0.2600E-05 6	1	1.0	2	0.999997 E	
4	REGULATOR &SOV ASSY	APS-COR	0.2000E-07 1,2	1	156.0	2	0.999997 F	
5	VENT VALVE-FUEL	APS-COR	0.1500E-04 1	1	156.0	4	0.997663 E	0.999995
6	QUAD CHECK VALVE	APS-COR	0.5000E-06 6	1	156.0	2	0.999922 I	
7	THRUSTER ISO VALVE A	APS-COR	0.1500E-04 1	1	168.0	4	0.997483 E	0.999994
8	THRUSTER ISO VALVE B	APS-COR	0.1500E-04 1	1	168.0	4	0.997483 E	0.999994
9	THRUSTER ISO VALVE C	APS-COR	0.1500E-04 1	1	168.0	4	0.997483 E	0.999994
10	THRUSTER ISO VALVE D	APS-COR	0.1500E-04 1	1	168.0	4	0.997483 E	0.999994
11	FUEL REL VAL & DISC	APS-COR	0.5000E-06 6	1	156.0	2	0.999922 F	

MISSION TIME.....168.0 HOURS
NUMBER OF REDUNDANT UNITS IS... 5
WEIGHT OF REDUNDANT UNITS IS... 8.0 POUNDS
RELIABILITY OF NON-REDUNDANT SYSTEM IS... 0.986526
SYSTEM RELIABILITY WITH SELECTED REDUNDANCY IS... 0.998824

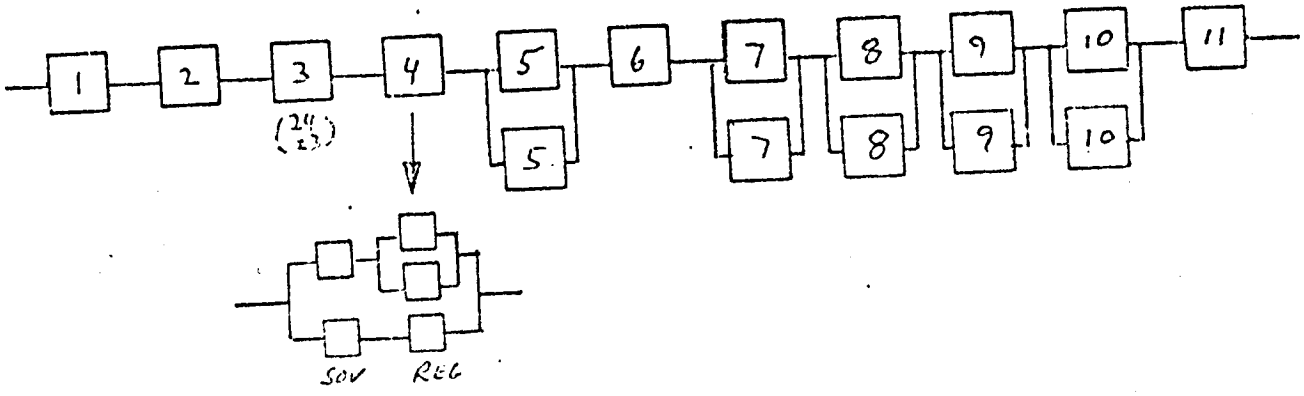

* FAILURE RATE SOURCE
1 - GRUMMAN SHUTTLE STUDY
2 - GRUMMAN LM PROGRAM
3 - MMC FAILURE DATA STUDY
4 - PRC FAILURE DATA STUDY
5 - VENDOR
6 - ESTIMATE

** REDUNDANCY CODE
E - EQUIPMENT
F - FUNCTIONAL
I - INTERNAL

GRUMMAN

TUG RELIABILITY SUMMARY

CONFIGURATION.... 410A-2
SUBSYSTEM.....GUID/NAV

ITEM	EQUIPMENT NAME	S/S STG	LAMBDA	QTY	TIME	CODE	R0	R1
1	I M U	GNC-COR	0.5000E-04 1 *	1	144.0	4	0.992826 E**	0.999949
2	STAR TRACKER	GNC-COR	0.6600E-04 4	1	72.0	0	0.995259	
3	APS ELECTRONICS	GNC-COR	0.2000E-04 1	1	144.0	3	0.997124 E	0.999996
4	MAIN ENGINE ELECTRONICS	GNC-COR	0.1000E-04 1	1	1.0	0	0.999990	
5	SYNC NAV SAT RECVR	GNC-COR	0.1700E-04 6	1	7.2	0	0.999878	
6	DOPPLER RECEIVER	GNC-COR	0.1700E-04 6	1	25.9	0	0.999559	
7	L-BAND ANTENNAS (4)	GNC-COR	0.1000E-05 6	1	168.0	2	0.999832	
8	COMBINER/DOPPLER DET	GNC-COR	0.1500E-04 6	1	21.6	0	0.999676	
9	LASER RADAR	GNC-COR	0.1000E-03 1	1	1.0	0	0.999900	

MISSION TIME... 168.0 HOURS
NUMBER OF REDUNDANT UNITS IS... 2
WEIGHT OF REDUNDANT UNITS IS.....28.0 POUNDS
RELIABILITY OF NON-REDUNDANT SYSTEM IS... 0.984130
SYSTEM RELIABILITY WITH SELECTED REDUNDANCY IS... 0.994045

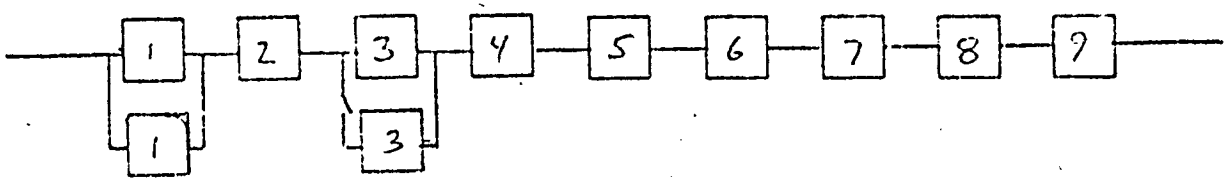

* FAILURE RATE SOURCE
1 - GRUMMAN SHUTTLE STUDY
2 - GRUMMAN LM PROGRAM
3 - MMC FAILURE DATA STUDY
4 - PRC FAILURE DATA STUDY
5 - VENDOR
6 - ESTIMATE

** REDUNDANCY CODE
E - EQUIPMENT
F - FUNCTIONAL
I - INTERNAL

GRUMMAN

TUG RELIABILITY SUMMARY

CONFIGURATION.... 410A-2

SUBSYSTEM.....COMMUNICATIONS

ITEM	EQUIPMENT NAME	S/S STG	LAMBDA	QTY	TIME	CODE	R0	R1
1	RECEIVER A DFS	COM-COR	0.1700E-04 1*	1	144.0	3	0.997555 E**	0.999997
2	RECEIVER B DFS	COM-COR	0.1700E-04 1	1	144.0	3	0.997555 E	0.999997
3	DIPLEXER (2)	COM-COR	0.1000E-05 6	1	144.0	2	0.999856	
4	OMNI ANTENNA-DFS (2)	COM-COR	0.1000E-05 3	1	144.0	2	0.999856	
5	ANTENNA SWITCH	COM-COR	0.1000E-05 6	1	144.0	2	0.999856	
6	TRANSMITTER W/TV DFS	COM-COR	0.1000E-05 1	1	72.0	0	0.999928 F	
7	AUX XMITTER-TV	COM-COR	0.3400E-04 1	1	1.0	0	0.999966	
8	POWER AMP-DFS W/TV	COM-COR	0.1000E-05 1	1	72.0	0	0.999928 F	
9	POWER AMP-TV	COM-COR	0.3000E-04 1	1	1.0	0	0.999970	
10	BASEBAND PROCESSOR W/CSS	COM-COR	0.1000E-05 6	1	144.0	1	0.999856 F	
11	POWER SPLITTER	COM-COR	0.5000E-06 6	1	144.0	2	0.999928	
12	GCTA (TV)	COM-COR	0.2000E-04 4	1	1.0	0	0.999980	

MISSION TIME... 168.0 HOURS

NUMBER OF REDUNDANT UNITS IS... 2

WEIGHT OF REDUNDANT UNITS IS... 8.0 POUNDS

RELIABILITY OF NON-REDUNDANT SYSTEM IS... 0.994244

SYSTEM RELIABILITY WITH SELECTED REDUNDANCY IS... 0.999118

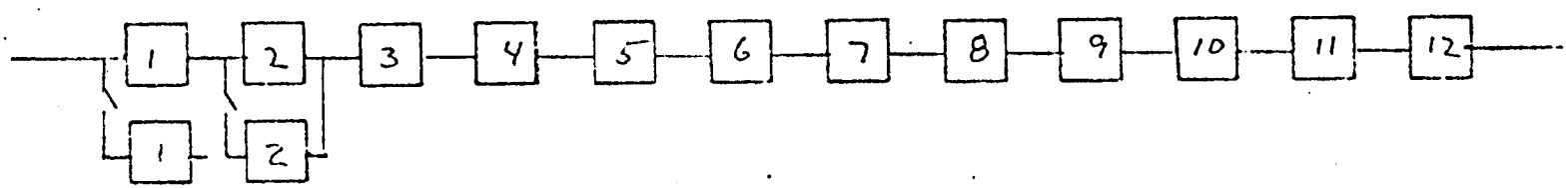

* FAILURE RATE SOURCE

1 - GRUMMAN SHUTTLE STUDY
2 - GRUMMAN LM PROGRAM
3 - MMC FAILURE DATA STUDY
4 - PRC FAILURE DATA STUDY
5 - VENDOR
6 - ESTIMATE

** REDUNDANCY CODE

E - EQUIPMENT
F - FUNCTIONAL
I - INTERNAL

GRUMMAN

TUG RELIABILITY SUMMARY

CONFIGURATION.... 410AD-2
SUBSYSTEM.....DATA MGT

ITEM	EQUIPMENT NAME	S/S STG	LAMBDA	QTY	TIME	CODE	R0	R1
1	DAU/SIG COND A	DMT-COR	0.1000E-05 6*	1	144.0	1	0.999856 I**	
2	DAU/SIG COND B	DMT-COR	0.1000E-05 6	1	144.0	1	0.999856 I	
3	DAU/SIG COND C	DMT-COR	0.1000E-05 6	1	144.0	1	0.999856 I	
4	CENTRAL COMPUTER	DMT-COR	0.5600E-04 5	1	144.0	4	0.991968 E	0.999935
5	DATA BUS CONT/TM FORMAT	DMT-COR	0.1000E-05 6	1	144.0	1	0.999856 I	

MISSION TIME.... 168.0 HOURS
NUMBER OF REDUNDANT UNITS IS.... 1
WEIGHT OF REDUNDANT UNITS IS.... 13.0 POUNDS
RELIABILITY OF NON-REDUNDANT SYSTEM IS.... 0.991397
SYSTEM RELIABILITY WITH SELECTED REDUNDANCY IS.... 0.999360

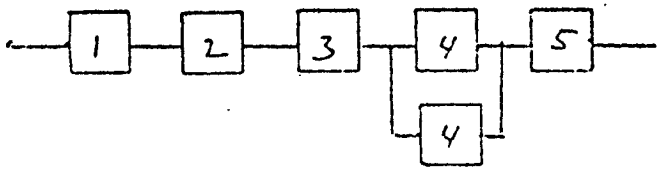

* FAILURE RATE SOURCE
1 - GRUMMAN SHUTTLE STUDY
2 - GRUMMAN LM PROGRAM
3 - MMC FAILURE DATA STUDY
4 - PRC FAILURE DATA STUDY
5 - VENDOR
6 - ESTIMATE

** REDUNDANCY CODE
E - EQUIPMENT
F - FUNCTIONAL
I - INTERNAL

GRUMMAN

TUG RELIABILITY SUMMARY

CONFIGURATION.... 410A-2
SUBSYSTEM.....THERMAL

ITEM	EQUIPMENT NAME	S/S STG	LAMBDA	QTY	TIME	CODE	R0	R1
1	RADIATOR	THM-COR	0.5000E-05 * 1	1	144.0	1	0.999280	
2	ACCUMULATOR	THM-COR	0.4000E-05 3	1	144.0	1	0.999424	

MISSION TIME.... 168.0 HOURS
NUMBER OF REDUNDANT UNITS IS... 0
WEIGHT OF REDUNDANT UNITS IS... 0.0 POUNDS
RELIABILITY OF NON-REDUNDANT SYSTEM IS..... 0.998705
SYSTEM RELIABILITY WITH SELECTED REDUNDANCY IS... 0.998705

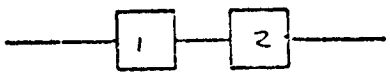

* FAILURE RATE SOURCE
1 - GRUMMAN SHUTTLE STUDY
2 - GRUMMAN LM PROGRAM
3 - MMC FAILURE DATA STUDY
4 - PRC FAILURE DATA STUDY
5 - VENDOR
6 - ESTIMATE

REDUNDANCY CODE
E - EQUIPMENT
F - FUNCTIONAL
I - INTERNAL

GRUMMAN

TUG RELIABILITY SUMMARY

CONFIGURATION.... 410A-2
SUBSYSTEM.....POWER

ITEM	EQUIPMENT NAME	S/S STG	LAMBDA	QTY	TIME	CODE	R0	R1
1	FUEL CELL	PWR-COR	0.4000E-04 5*	1	144.0	0	0.994257	
2	BACK-UP BATTERY	PWR-COR	0.2000E-04 1	1	1.0	0	0.999980	
3	H2 TANK	PWR-COR	0.2000E-05 6	1	156.0	2	0.999688	
4	OX TANK	PWR-COR	0.2000E-05 6	1	156.0	2	0.999688	
5	POWER DISTRIBUTION	PWR-COR	0.2000E-05 6	1	168.0	2	0.999664	

MISSION TIME.... 168.0 HOURS
NUMBER OF REDUNDANT UNITS IS... 0
WEIGHT OF REDUNDANT UNITS IS... 0.0 POUNDS
RELIABILITY OF NON-REDUNDANT SYSTEM IS... 0.993283
SYSTEM RELIABILITY WITH SELECTED REDUNDANCY IS... 0.993283

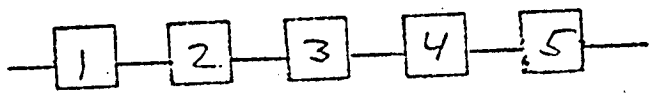

* FAILURE RATE SOURCE
1 - GRUMMAN SHUTTLE STUDY
2 - GRUMMAN LM PROGRAM
3 - MSC FAILURE DATA STUDY
4 - PRC FAILURE DATA STUDY
5 - VENDOR
6 - ESTIMATE

REDUNDANCY CODE
E - EQUIPMENT
F - FUNCTIONAL
I - INTERNAL

GRUMMAN

TUG RELIABILITY SUMMARY

CONFIGURATION.... 310-34
SUBSYSTEM.....MAIN PROP

MISSION TIME... 168.0 HOURS
NUMBER OF REDUNDANT UNITS IS... 3
WEIGHT OF REDUNDANT UNITS IS... 12.0 POUNDS
RELIABILITY OF NON-REDUNDANT SYSTEM IS... 0.986355
SYSTEM RELIABILITY WITH SELECTED REDUNDANCY IS... 0.992486

ITEM	EQUIPMENT NAME	S/S STG	LAMBDA	QTY	TIME	CODE	R0	R1
1	OX REGULATOR DUAL	MPS-COR	0.1000E-04 3*	1	156.0	1	0.998441 I**	
2	FUEL REGULATOR DUAL	MPS-COR	0.1000E-04 3	1	156.0	1	0.998441 I	
3	MAIN ENGINE	MPS-COR	0.1000E-02 5	1	1.0	2	0.999000	
4	HE ISO VALVE	MPS-COR	0.7500E-05 1	1	156.0	4	0.998831 E	0.999999
5	OX. PREVALVE	MPS-COR	0.2500E-05 1	1	168.0	1	0.999580	
6	FUEL PREVALVE	MPS-COR	0.2500E-05 1	1	168.0	1	0.999580	
7	HELIUM TANK	MPS-COR	0.1000E-05 2	2	156.0	2	0.999688	
8	OX F/D OD	MPS-COR	0.2000E-05 2	1	168.0	2	0.999664	
9	FUEL F/D OD	MPS-COR	0.2000E-05 2	1	168.0	2	0.999664	
10	OX F/V OD	MPS-COR	0.2000E-05 2	1	156.0	2	0.999688	
11	FUEL F/V OD	MPS-COR	0.2000E-05 2	1	156.0	2	0.999688	
12	HE F/D OD	MPS-COR	0.2000E-05 3	1	156.0	2	0.999688	
13	OX RELIEF VALVE & DISC	MPS-COR	0.1000E-05 6	1	168.0	2	0.999832 F	
14	FUEL REL. VAL. & DISC	MPS-COR	0.1000E-05 6	1	168.0	2	0.999832 F	
15	OX QUAD CK VALVE	MPS-COR	0.1000E-05 6	1	156.0	2	0.999844 I	
16	FUEL QUAD CK VALVE	MPS-COR	0.1000E-05 6	1	156.0	2	0.999844 I	
17	OX VENT VALVE	MPS-COR	0.1500E-04 1	1	168.0	4	0.997483 E	0.999994
18	FUEL VENT VALVE	MPS-COR	0.1500E-04 1	1	168.0	4	0.997483 E	0.999994

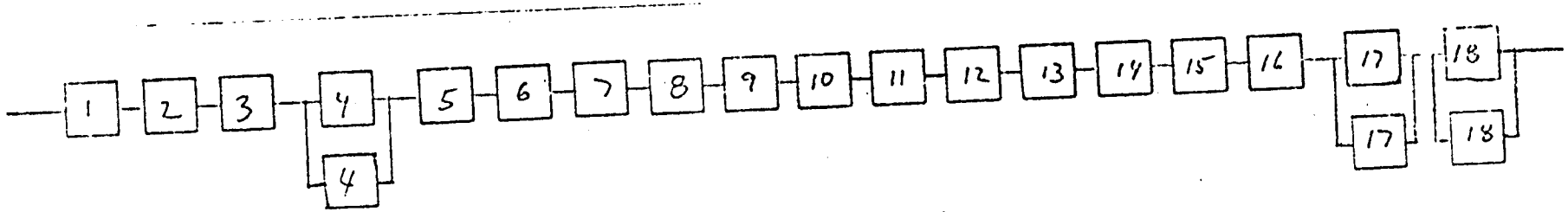

* FAILURE RATE SOURCE
1 - GRUMMAN SHUTTLE STUDY
2 - GRUMMAN LM PROGRAM
3 - MMC FAILURE DATA STUDY
4 - PRC FAILURE DATA STUDY
5 - VENDOR
6 - ESTIMATE

** REDUNDANCY CODE
F - EQUIPMENT
E - FUNCTIONAL
I - INTERNAL

GRUMMAN

TUG RELIABILITY SUMMARY

CONFIGURATION.... 310-3A
SUBSYSTEM.....AUX PROP

ITEM	EQUIPMENT NAME	S/S STG	LAMBDA	QTY	TIME	CODE	RO	R1
1	HELIUM TANK	APS-COR	0.1000E-05 2*	1	156.0	2	0.999844	
2	FUEL TANK	APS-COR	0.1000E-05 3	3	168.0	2	0.999496 **	
3	THRUSTERS (16)	APS-COR	0.1120E-05 6	1	1.0	2	0.999999 E	
4	REGULATOR &SOV ASSY	APS-COR	0.2000E-07 1/2	1	144.0	2	0.999997 F	
5	VENT VALVE-FUEL	APS-COR	0.1500E-04 1	1	156.0	4	0.997663 E	0.999995
6	QUAD CHECK VALVE	APS-COR	0.5000E-06 6	1	156.0	2	0.999922 I	
7	THRUSTER ISO VALVE A	APS-COR	0.1500E-04 1	1	168.0	4	0.997483 E	0.999994
8	THRUSTER ISO VALVE B	APS-COR	0.1500E-04 1	1	168.0	4	0.997483 E	0.999994
9	THRUSTER ISO VALVE C	APS-COR	0.1500E-04 1	1	168.0	4	0.997483 E	0.999994
10	THRUSTER ISO VALVE D	APS-COR	0.1500E-04 1	1	168.0	4	0.997483 E	0.999994
11	FUEL REL VAL & DISC	APS-COR	0.5000E-06 6	1	156.0	2	0.999922 F	

MISSION TIME.... 168.0 HOURS
NUMBER OF REDUNDANT UNITS IS... 5
WEIGHT OF REDUNDANT UNITS IS... 8.0 POUNDS
RELIABILITY OF NON-REDUNDANT SYSTEM IS... 0.986847
SYSTEM RELIABILITY WITH SELECTED REDUNDANCY IS... 0.999149

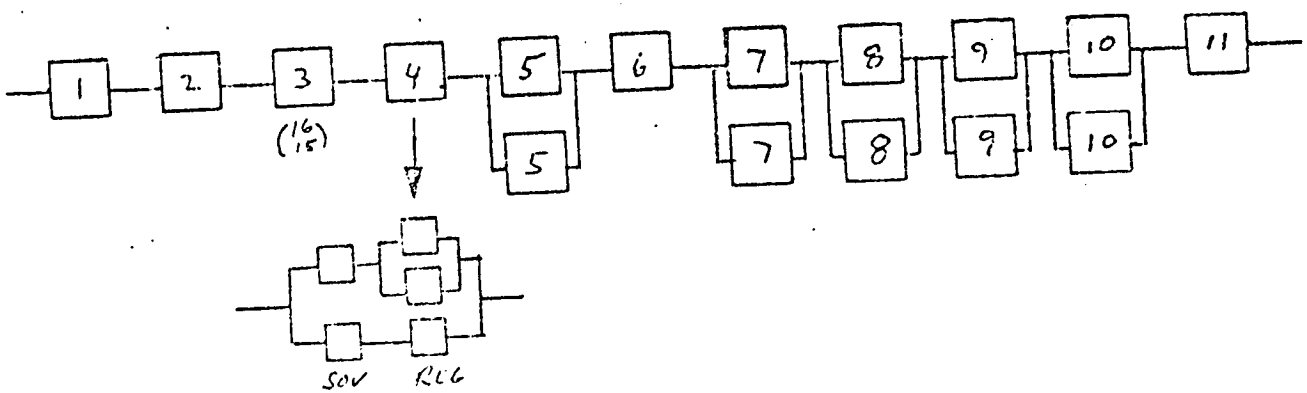

* FAILURE RATE SOURCE
1 - GRUMMAN SHUTTLE STUDY
2 - GRUMMAN LM PROGRAM
3 - MMC FAILURE DATA STUDY
4 - PRC FAILURE DATA STUDY
5 - VENDOR
6 - ESTIMATE

** REDUNDANCY CODE
E - EQUIPMENT
F - FUNCTIONAL
I - INTERNAL

GRUMMAN

TUG RELIABILITY SUMMARY

CONFIGURATION.... 310-3A
SUBSYSTEM.....GUID/NAV

ITEM	EQUIPMENT NAME	S/S STG	LAMBDA	QTY	TIME	CODE	RO	R1
1	I M U	GNC-COR	0.5000E-04 1*	1	144.0	1	0.992826	
2	STAR TRACKER	GNC-COR	0.6600E-04 4	1	72.0	0	0.995259 **	
3	APS ELECTRONICS	GNC-COR	0.2000E-04 1	1	144.0	3	0.997124 E	0.999996
4	MAIN ENGINE ELECTRONICS	GNC-COR	0.1000E-04 1	1	1.0	0	0.999990	

MISSION TIME... 168.0 HOURS
NUMBER OF REDUNDANT UNITS IS... 1
WEIGHT OF REDUNDANT UNITS IS... 18.0 POUNDS
RELIABILITY OF NON-REDUNDANT SYSTEM IS... 0.985267
SYSTEM RELIABILITY WITH SELECTED REDUNDANCY IS... 0.988105

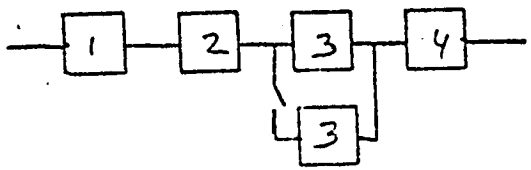

* FAILURE RATE SOURCE
1 - GRUMMAN SHUTTLE STUDY
2 - GRUMMAN LM PROGRAM
3 - MMC FAILURE DATA STUDY
4 - PRC FAILURE DATA STUDY
5 - VENDOR
6 - ESTIMATE

** REDUNDANCY CODE
E - EQUIPMENT
F - FUNCTIONAL
I - INTERNAL

GRUMMAN

TUG RELIABILITY SUMMARY

CONFIGURATION.... 310-3A
SUBSYSTEM.....COMMUNICATIONS

ITEM	EQUIPMENT NAME	S/S STG	LAMBDA	QTY	TIME	CODE	R0	R1
1	RECEIVER A DFS	COM-COR	0.1700E-04 * 1	1	144.0	3	0.997555 E **	0.999997
2	RECEIVER B DFS	COM-COR	0.1700E-04 1	1	144.0	3	0.997555 E	0.999997
3	TRANSMITTER DFS	COM-COR	0.1700E-04 1	1	72.0	3	0.998777 E	0.999999
4	POWER AMP-DFS	COM-COR	0.1500E-04 5	1	72.0	3	0.998921 E	0.999999
5	DIPLEXER (2)	COM-COR	0.1000E-05 2	1	144.0	2	0.999856	
6	OMNI ANTENNA-DFS (2)	COM-COR	0.1000E-05 6	1	144.0	2	0.999856	
7	ANTENNA SWITCH	COM-COR	0.1000E-05 6	1	144.0	1	0.999986 I	
8	BASE PROCESSOR (RED)	COM-COR	0.1000E-06 6	1	144.0			

MISSION TIME.... 168.0 HOURS
NUMBER OF REDUNDANT UNITS IS... 4
WEIGHT OF REDUNDANT UNITS IS... 14.0 POUNDS
RELIABILITY OF NON-REDUNDANT SYSTEM IS.... 0.992382
SYSTEM RELIABILITY WITH SELECTED REDUNDANCY IS... 0.999546

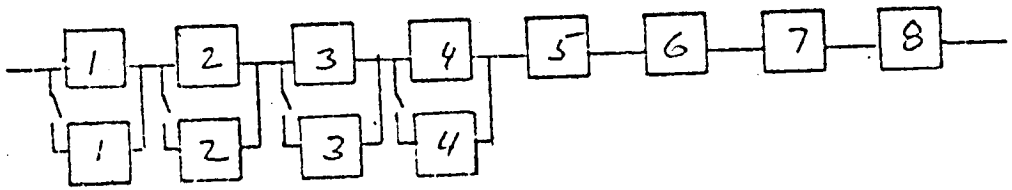

* FAILURE RATE SOURCE
1 - GRUMMAN SHUTTLE STUDY
2 - GRUMMAN LM PROGRAM
3 - MMC FAILURE DATA STUDY
4 - RSC FAILURE DATA STUDY
5 - VENDOR
6 - ESTIMATE

** REDUNDANCY CODE
E - EQUIPMENT
F - FUNCTIONAL
I - INTERNAL

GRUMMAN

TUG RELIABILITY SUMMARY

CONFIGURATION.... 310-3A
SUBSYSTEM.....DATA MGT

ITEM	EQUIPMENT NAME	S/S STG	LAMBDA	QTY	TIME	CODE	R0	R1
1	DAU/SIG COND A	DMT-COR	0.1000E-05 6*	1	144.0	1	0.999856 I**	
2	DAU/SIG COND B	DMT-COR	0.1000E-05 6	1	144.0	1	0.999856 I	
3	DAU/SIG COND C	DMT-COR	0.1000E-05 6	1	144.0	1	0.999856 I	
4	CENTRAL COMPUTER	DMT-COR	0.5600E-04 5	1	144.0	4	0.991968 E	0.999935
5	DATA BUS CONT/TM FORMAT	DMT-COR	0.1000E-05 6	1	144.0	1	0.999856 I	

MISSION TIME.... 168.0 HOURS
NUMBER OF REDUNDANT UNITS IS... 1
WEIGHT OF REDUNDANT UNITS IS... 13.0 POUNDS
RELIABILITY OF NON-REDUNDANT SYSTEM IS.... 0.991397
SYSTEM RELIABILITY WITH SELECTED REDUNDANCY IS... 0.999360

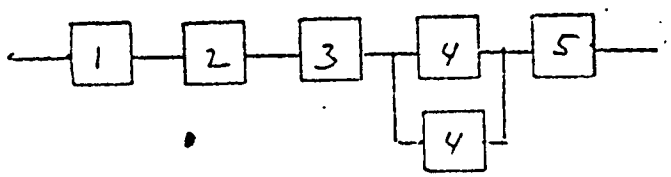

* FAILURE RATE SOURCE
1 - GRUMMAN SHUTTLE STUDY
2 - GRUMMAN LM PROGRAM
3 - MMC FAILURE DATA STUDY
4 - PRC FAILURE DATA STUDY
5 - VENDOR
6 - ESTIMATE

** REDUNDANCY CODE
E - EQUIPMENT
F - FUNCTIONAL
I - INTERNAL

GRUMMAN

TUG RELIABILITY SUMMARY

CONFIGURATION.... 310-3A
SUBSYSTEM.....THERMAL

ITEM	EQUIPMENT NAME	S/S STG	LAMBDA	QTY	TIME	CODE	R0	R1
1	RADIATOR	THM-COR	0.5000E-05 * 1	1	144.0	1	0.999280 **	
2	ACCUMULATOR	THM-COR	0.4000E-05 3	1	144.0	1	0.999424	
3	CONTROL VALVE	THM-COR	0.1500E-04 1	1	144.0	4	0.997842 E	0.999995

MISSION TIME... 168.0 HOURS
NUMBER OF REDUNDANT UNITS IS... 1
WEIGHT OF REDUNDANT UNITS IS... 1.0 POUNDS
RELIABILITY OF NON-REDUNDANT SYSTEM IS... 0.996550
SYSTEM RELIABILITY WITH SELECTED REDUNDANCY IS... 0.998700

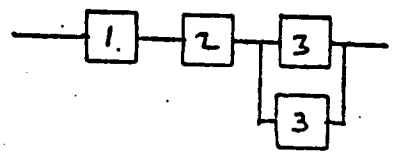

* FAILURE RATE SOURCE
1 - GRUMMAN SHUTTLE STUDY
2 - GRUMMAN LM PROGRAM
3 - MMC FAILURE DATA STUDY
4 - PRC FAILURE DATA STUDY
5 - VENDOR
6 - ESTIMATE

** REDUNDANCY CODE
E - EQUIPMENT
F - FUNCTIONAL
I - INTERNAL

GRUMMAN

TUG RELIABILITY SUMMARY

CONFIGURATION.... 3/0-3A
SUBSYSTEM.....POWER

ITEM	EQUIPMENT NAME	S/S STG	LAMBDA	QTY	TIME	CODE	R0	R1
1	FUEL CELL	PWR-COR	0.4000E-04 5*	1	144.0	0	0.994257	
2	BACK-UP BATTERY	PWR-COR	0.2000E-04 1	1	1.0	0	0.999980	
3	H2 TANK	PWR-COR	0.2000E-05 6	1	156.0	2	0.999688	
4	OX TANK	PWR-COR	0.2000E-05 6	1	156.0	2	0.999688	
5	POWER DISTRIBUTION	PWR-COR	0.2000E-05 6	1	168.0	2	0.999664	

MISSION TIME.... 168.0 HOURS
NUMBER OF REDUNDANT UNITS IS... 0
WEIGHT OF REDUNDANT UNITS IS... 0.0 POUNDS
RELIABILITY OF NON-REDUNDANT SYSTEM IS... 0.993283
SYSTEM RELIABILITY WITH SELECTED REDUNDANCY IS... 0.993283

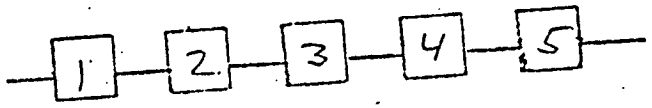

* FAILURE RATE SOURCE
1 - GRUMMAN SHUTTLE STUDY
2 - GRUMMAN LM PROGRAM
3 - MMC FAILURE DATA STUDY
4 - RRC FAILURE DATA STUDY
5 - VENDOR
6 - ESTIMATE

REDUNDANCY CODE
0 - EQUIPMENT
2 - FUNCTIONAL
1 - INTERNAL

GRUMMAN

TUG RELIABILITY SUMMARY

CONFIGURATION.... 310RE-3A
SUBSYSTEM.....MAIN PROP

MISSION TIME... 168.0 HOURS
NUMBER OF REDUNDANT UNITS IS... 3
WEIGHT OF REDUNDANT UNITS IS... 12.0 POUNDS
RELIABILITY OF NON-REDUNDANT SYSTEM IS... 0.986355
SYSTEM RELIABILITY WITH SELECTED REDUNDANCY IS... 0.992486

ITEM	EQUIPMENT NAME	S/S STG	LAMBDA	QTY	TIME	CODE	R0	R1
1	OX REGULATOR DUAL	MPS-COR	0.1000E-04 3*	1	156.0	1	0.998441 I**	
2	FUEL REGULATOR DUAL	MPS-COR	0.1000E-04 3	1	156.0	1	0.998441 I	
3	MAIN ENGINE	MPS-COR	0.1000E-02 5	1	1.0	2	0.999000	
4	HE ISO VALVE	MPS-COR	0.7500E-05 1	1	156.0	4	0.998831 E	0.999999
5	OX PREVALVE	MPS-COR	0.2500E-05 1	1	168.0	1	0.999580	
6	FUEL PREVALVE	MPS-COR	0.2500E-05 1	1	168.0	1	0.999580	
7	HELIUM TANK	MPS-COR	0.1000E-05 2	2	156.0	2	0.999688	
8	OX F/D OD	MPS-COR	0.2000E-05 3	1	168.0	2	0.999664	
9	FUEL F/D OD	MPS-COR	0.2000E-05 3	1	168.0	2	0.999664	
10	OX F/V OD	MPS-COR	0.2000E-05 3	1	156.0	2	0.999688	
11	FUEL F/V OD	MPS-COR	0.2000E-05 3	1	156.0	2	0.999688	
12	HE F/D OD	MPS-COR	0.2000E-05 3	1	156.0	2	0.999688	
13	OX RELIEF VALVE & DISC	MPS-COR	0.1000E-05 6	1	168.0	2	0.999832 F	
14	FUEL REL VAL & DISC	MPS-COR	0.1000E-05 6	1	168.0	2	0.999832 F	
15	OX QUAD CK VALVE	MPS-COR	0.1000E-05 6	1	156.0	2	0.999844 I	
16	FUEL QUAD CK VALVE	MPS-COR	0.1000E-05 6	1	156.0	2	0.999844 I	
17	OX VENT VALVE	MPS-COR	0.1500E-04 1	1	168.0	4	0.997483 E	0.999994
18	FUEL VENT VALVE	MPS-COR	0.1500E-04 1	1	168.0	4	0.997483 E	0.999994

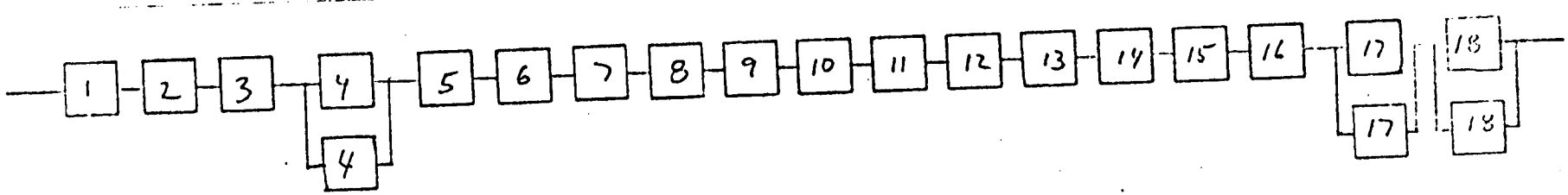

* FAILURE RATE SOURCE
1 - GRUMMAN SHUTTLE STUDY
2 - GRUMMAN LM PROGRAM
3 - MSC FAILURE DATA STUDY
4 - RKC FAILURE DATA STUDY
5 - VENDOR
6 - ESTIMATE

** REDUNDANCY CODE
E - EQUIPMENT
F - FUNCTIONAL
I - INTERNAL

TUG RELIABILITY SUMMARY

CONFIGURATION.... 310RE-3A
SUBSYSTEM.....AUX PROP

ITEM	EQUIPMENT NAME	S/S STG	LAMBDA	QTY	TIME	CODE	R0	R1
1	HELIUM TANK	APS-COR	0.1000E-05 2*	2	156.0	2	0.999688	
2	FUEL TANK	APS-COR	0.1000E-05 3	4	168.0	2	0.999328 **	
3	THRUSTERS (24)	APS-COR	0.2600E-05 6	1	1.0	2	0.999997 E	
4	REGULATOR &SOV ASSY	APS-COR	0.2000E-07 1,2	1	156.0	2	0.999997 F	
5	VENT VALVE-FUEL	APS-COR	0.1500E-04 1	1	156.0	4	0.997663 E	0.999995
6	QUAD CHECK VALVE	APS-COR	0.5000E-06 6	1	156.0	2	0.999922 I	
7	THRUSTER ISO VALVE A	APS-COR	0.1500E-04 1	1	168.0	4	0.997483 E	0.999994
8	THRUSTER ISO VALVE B	APS-COR	0.1500E-04 1	1	168.0	4	0.997483 E	0.999994
9	THRUSTER ISO VALVE C	APS-COR	0.1500E-04 1	1	168.0	4	0.997483 E	0.999994
10	THRUSTER ISO VALVE D	APS-COR	0.1500E-04 1	1	168.0	4	0.997483 E	0.999994
11	FUEL REL VAL & DISC	APS-COR	0.5000E-06 6	1	156.0	2	0.999922 F	

MISSION TIME.....168.0 HOURS
NUMBER OF REDUNDANT UNITS IS... 5
WEIGHT OF REDUNDANT UNITS IS... 8.0 POUNDS
RELIABILITY OF NON-REDUNDANT SYSTEM IS... 0.986526
SYSTEM RELIABILITY WITH SELECTED REDUNDANCY IS... 0.998824

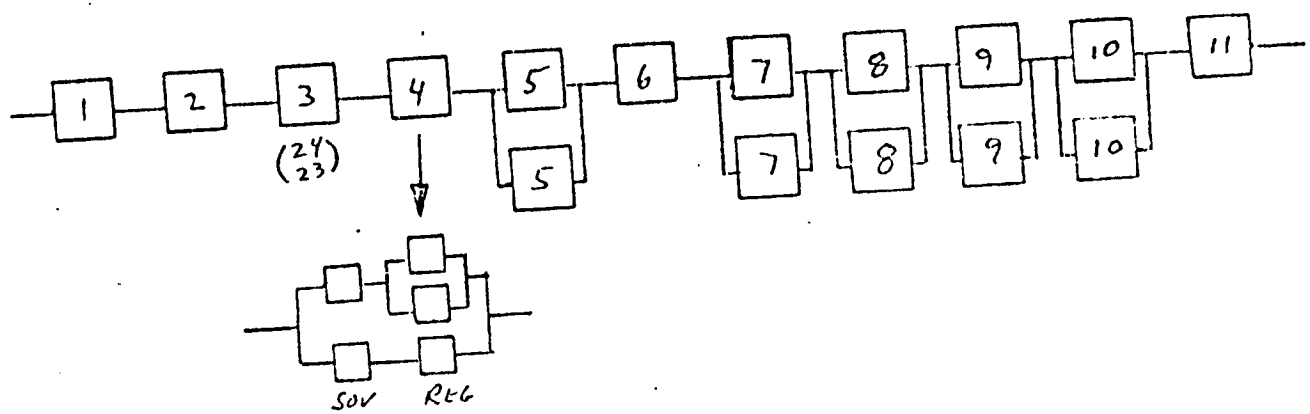

* FAILURE RATE SOURCE
1 - GRUMMAN SHUTTLE STUDY
2 - GRUMMAN LM PROGRAM
3 - MMC FAILURE DATA STUDY
4 - PRC FAILURE DATA STUDY
5 - VENDOR
6 - ESTIMATE

** REDUNDANCY CODE
E - EQUIPMENT
F - FUNCTIONAL
I - INTERNAL

TUG RELIABILITY SUMMARY

CONFIGURATION.... 310RE-3A
SUBSYSTEM.....GUID/NAV

ITEM	EQUIPMENT NAME	S/S STG	LAMBDA	QTY	TIME	CODE	R0	R1
1	I M U	GNC-COR	0.5000E-04 / *	1	144.0	4	0.992826 E**	0.999949
2	STAR TRACKER	GNC-COR	0.6600E-04 4	1	72.0	0	0.995259	
3	APS ELECTRONICS	GNC-COR	0.2000E-04 /	1	144.0	3	0.997124 E	0.999996
4	MAIN ENGINE ELECTRONICS	GNC-COR	0.1000E-04 /	1	1.0	0	0.999990	
5	SYNC NAV SAT RECVR	GNC-COR	0.1700E-04 6	1	7.2	0	0.999878	
6	DOPPLER RECEIVER	GNC-COR	0.1700E-04 6	1	25.9	0	0.999559	
7	L-BAND ANTENNAS (4)	GNC-COR	0.1000E-05 6	1	168.0	2	0.999832	
8	COMBINER/DOPPLER DET	GNC-COR	0.1500E-04 6	1	21.6	0	0.999676	
9	LASER RADAR	GNC-COR	0.1000E-03 /	1	1.0	0	0.999900	

MISSION TIME... 168.0 HOURS
NUMBER OF REDUNDANT UNITS IS... 2
WEIGHT OF REDUNDANT UNITS IS... 28.0 POUNDS
RELIABILITY OF NON-REDUNDANT SYSTEM IS... 0.984130
SYSTEM RELIABILITY WITH SELECTED REDUNDANCY IS... 0.994045

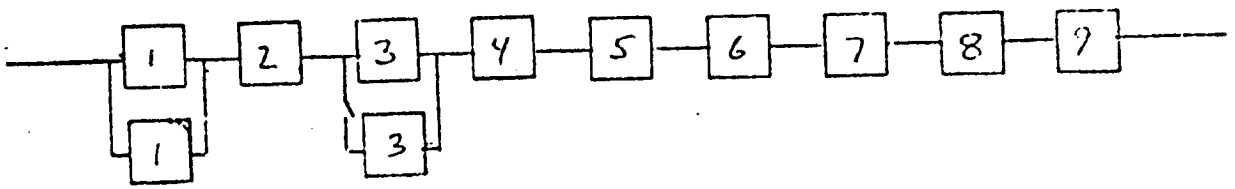

* FAILURE RATE SOURCE
1 - GRUMMAN SHUTTLE STUDY
2 - GRUMMAN LM PROGRAM
3 - MMC FAILURE DATA STUDY
4 - PRC FAILURE DATA STUDY
5 - VENDOR
6 - ESTIMATE

** REDUNDANCY CODE
E - EQUIPMENT
F - FUNCTIONAL
I - INTERNAL

GRUMMAN

TUG RELIABILITY SUMMARY

CONFIGURATION.... 310RE-3A
SUBSYSTEM.....COMMUNICATIONS

ITEM	EQUIPMENT NAME	S/S STG	LAMBDA	QTY	TIME	CODE	R0	R1
1	RECEIVER A DFS	COM-COR	0.1700E-04 1*	1	144.0	3	0.997555 E**	0.999997
2	RECEIVER B DFS	COM-COR	0.1700E-04 1	1	144.0	3	0.997555 E	0.999997
3	DIPLEXER (2)	COM-COR	0.1000E-05 6	1	144.0	2	0.999856	
4	OMNI ANTENNA-DFS (2)	COM-COR	0.1000E-05 3	1	144.0	2	0.999856	
5	ANTENNA SWITCH	COM-COR	0.1000E-05 6	1	144.0	2	0.999856	
6	TRANSMITTER W/TV DFS	COM-COR	0.1000E-05 1	1	72.0	0	0.999928 F	
7	AUX XMITTER-TV	COM-COR	0.3400E-04 1	1	1.0	0	0.999966	
8	POWER AMP-DFS-W/TV	COM-COR	0.1000E-05 1	1	72.0	0	0.999928 F	
9	POWER AMP-TV	COM-COR	0.3000E-04 1	1	1.0	0	0.999970	
10	BASEBAND PROCESSOR W/CSS	COM-COR	0.1000E-05 6	1	144.0	1	0.999856 F	
11	POWER SPLITTER	COM-COR	0.5000E-06 6	1	144.0	2	0.999928	
12	GCTA (TV)	COM-COR	0.2000E-04 4	1	1.0	0	0.999980	

MISSION TIME... 168.0 HOURS
NUMBER OF REDUNDANT UNITS IS... 2
WEIGHT OF REDUNDANT UNITS IS... 8.0 POUNDS
RELIABILITY OF NON-REDUNDANT SYSTEM IS... 0.994244
SYSTEM RELIABILITY WITH SELECTED REDUNDANCY IS... 0.999118

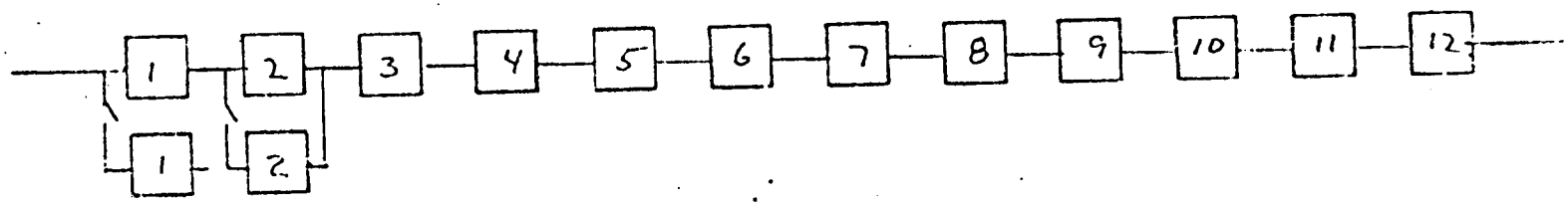

* FAILURE RATE SOURCE
1 - GRUMMAN SHUTTLE STUDY
2 - GRUMMAN LM PROGRAM
3 - MMC FAILURE DATA STUDY
4 - PRC FAILURE DATA STUDY
5 - VENDOR
6 - ESTIMATE

REDUNDANCY CODE
E - EQUIPMENT
F - FUNCTIONAL
I - INTERNAL

GRUMMAN

TUG RELIABILITY SUMMARY

CONFIGURATION.... 310 RE - 3A
SUBSYSTEM.....DATA MGT

ITEM	EQUIPMENT NAME	S/S STG	LAMBDA	QTY	TIME	CODE	R0	R1
1	DAU/SIG COND A	DMT-COR	0.1000E-05 6*	1	144.0	1	0.999856 I**	
2	DAU/SIG COND B	DMT-COR	0.1000E-05 6	1	144.0	1	0.999856 I	
3	DAU/SIG COND C	DMT-COR	0.1000E-05 6	1	144.0	1	0.999856 I	
4	CENTRAL COMPUTER	DMT-COR	0.7100E-04 5	1	144.0	4	0.989828 E	0.999897
5	DATA BUS CONT/TM FORMAT	DMT-COR	0.1000E-05 6	1	144.0	1	0.999856 I	

MISSION TIME.... 168.0 HOURS
NUMBER OF REDUNDANT UNITS IS... 1
WEIGHT OF REDUNDANT UNITS IS... 15.0 POUNDS
RELIABILITY OF NON-REDUNDANT SYSTEM IS... 0.989258
SYSTEM RELIABILITY WITH SELECTED REDUNDANCY IS... 0.999321

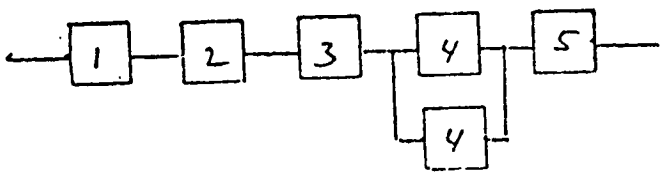

* FAILURE RATE SOURCE
1 - GRUMMAN SHUTTLE STUDY
2 - GRUMMAN LM PROGRAM
3 - MMC FAILURE DATA STUDY
4 - CRC FAILURE DATA STUDY
5 - VENDOR
6 - ESTIMATE

** - REDUNDANCY CODE
E - EQUIPMENT
F - FUNCTIONAL
I - INTERNAL

GRUMMAN

TUG RELIABILITY SUMMARY

CONFIGURATION.... 310 RE-3A
SUBSYSTEM.....THERMAL

ITEM	EQUIPMENT NAME	S/S STG	LAMBDA	QTY	TIME	CODE	R0	R1
1	RADIATOR	THM-COR	0.5000E-05 * 1	1	144.0	1	0.999280	
2	ACCUMULATOR	THM-COR	0.4000E-05 3	1	144.0	1	0.999424	

MISSION TIME.... 168.0 HOURS
NUMBER OF REDUNDANT UNITS IS.... 0
WEIGHT OF REDUNDANT UNITS IS.... 0.0 POUNDS
RELIABILITY OF NON-REDUNDANT SYSTEM IS.... 0.998705
SYSTEM RELIABILITY WITH SELECTED REDUNDANCY IS.... 0.998705

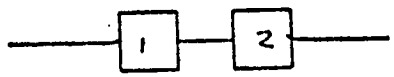

* FAILURE RATE SOURCE
1 - GRUMMAN SHUTTLE STUDY
2 - GRUMMAN LM PROGRAM
3 - MMC FAILURE DATA STUDY
4 - PRC FAILURE DATA STUDY
5 - VENDOR
6 - ESTIMATE

REDUNDANCY CODE
0 - EQUIPMENT
0 - FUNCTIONAL
1 - INTERNAL

GRUMMAN

TUG RELIABILITY SUMMARY

CONFIGURATION.... 310RE-3A
SUBSYSTEM.....POWER

ITEM	EQUIPMENT NAME	S/S STG	LAMBDA	QTY	TIME	CODE	RO	RI
1	FUEL CELL	PWR-COR	0.4000E-04 5*	1	144.0	0	0.994257	
2	BACK-UP BATTERY	PWR-COR	0.2000E-04 1	1	1.0	0	0.999980	
3	H2 TANK	PWR-COR	0.2000E-05 6	1	156.0	2	0.999688	
4	OX TANK	PWR-COR	0.2000E-05 6	1	156.0	2	0.999688	
5	POWER DISTRIBUTION	PWR-COR	0.2000E-05 6	1	168.0	2	0.999664	

MISSION TIME.....168.0 HOURS
NUMBER OF REDUNDANT UNITS IS... 0
WEIGHT OF REDUNDANT UNITS IS... 0.0 POUNDS
RELIABILITY OF NON-REDUNDANT SYSTEM IS... 0.993283
SYSTEM RELIABILITY WITH SELECTED REDUNDANCY IS... 0.993283

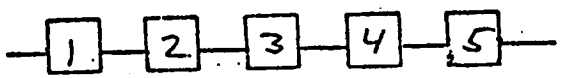

* FAILURE RATE SOURCE
1 - GRUMMAN SHUTTLE STUDY
2 - GRUMMAN LM PROGRAM
3 - MSC FAILURE DATA STUDY
4 - PRC FAILURE DATA STUDY
5 - VENDOR
6 - ESTIMATE

REDUNDANCY CODE
E - EQUIPMENT
F - FUNCTIONAL
I - INTERNAL

GRUMMAN

TUG RELIABILITY SUMMARY

CONFIGURATION.... 320A-3A
SUBSYSTEM.....MAIN PROP

MISSION TIME... 168.0 HOURS
NUMBER OF REDUNDANT UNITS IS... 3
WEIGHT OF REDUNDANT UNITS IS... 12.0 POUNDS
RELIABILITY OF NON-REDUNDANT SYSTEM IS... 0.986355
SYSTEM RELIABILITY WITH SELECTED REDUNDANCY IS... 0.992486

ITEM	EQUIPMENT NAME	S/S STG	LAMBDA	QTY	TIME	CODE	R0	R1
1	OX REGULATOR DUAL	MPS-COR	0.1000E-04 3*	1	156.0	1	0.998441 I**	
2	FUEL REGULATOR DUAL	MPS-COR	0.1000E-04 3	1	156.0	1	0.998441 I	
3	MAIN ENGINE	MPS-COR	0.1000E-02 5	1	1.0	2	0.999000	
4	HE ISO VALVE	MPS-COR	0.7500E-05 1	1	156.0	4	0.998831 E	0.999999
5	OX PREVALVE	MPS-COR	0.2500E-05 1	1	168.0	1	0.999580	
6	FUEL PREVALVE	MPS-COR	0.2500E-05 1	1	168.0	1	0.999580	
7	HELIUM TANK	MPS-COR	0.1000E-05 2	2	156.0	2	0.999688	
8	OX F/D OD	MPS-COR	0.2000E-05 3	1	168.0	2	0.999664	
9	FUEL F/D OD	MPS-COR	0.2000E-05 3	1	168.0	2	0.999664	
10	OX F/V OD	MPS-COR	0.2000E-05 3	1	156.0	2	0.999688	
11	FUEL F/V OD	MPS-COR	0.2000E-05 3	1	156.0	2	0.999688	
12	HE F/D OD	MPS-COR	0.2000E-05 3	1	156.0	2	0.999688	
13	OX RELIEF VALVE & DISC	MPS-COR	0.1000E-05 6	1	168.0	2	0.999832 F	
14	FUEL REL VAL & DISC	MPS-COR	0.1000E-05 6	1	168.0	2	0.999832 F	
15	OX QUAD CK VALVE	MPS-COR	0.1000E-05 6	1	156.0	2	0.999844 I	
16	FUEL QUAD CK VALVE	MPS-COR	0.1000E-05 6	1	156.0	2	0.999844 I	
17	OX VENT VALVE	MPS-COR	0.1500E-04 1	1	168.0	4	0.997483 E	0.999994
18	FUEL VENT VALVE	MPS-COR	0.1500E-04 1	1	168.0	4	0.997483 E	0.999994

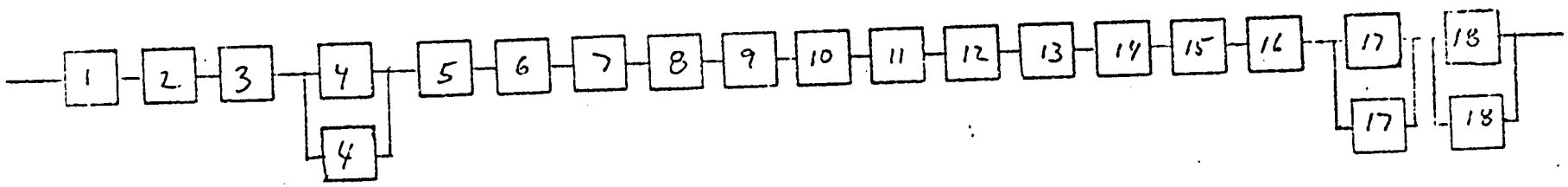

* FAILURE RATE SOURCE
1 - GRUMMAN SHUTTLE STUDY
2 - GRUMMAN LM PROGRAM
3 - MMC FAILURE DATA STUDY
4 - PRC FAILURE DATA STUDY
5 - VENDOR
6 - ESTIMATE

** REDUNDANCY CODE
E - EQUIPMENT
F - FUNCTIONAL
I - INTERNAL

GRUMMAN

TUG RELIABILITY SUMMARY

CONFIGURATION.... 320A-3A
SUBSYSTEM.....AUX PROP

ITEM	EQUIPMENT NAME	S/S STG	LAMBDA	QTY	TIME	CODE	RO	RI
1	THRUSTERS (16)	APS-COR	0.1120E-05 6	1	1.0	2	0.999999 E	
2	VENT-VALVE-FUEL	APS-COR	0.1500E-04 1	1	156.0	4	0.997663 E	0.999995
3	HELIUM TANK	APS-COR	0.1000E-05 2	2	156.0	2	0.999688	
4	QUAD CHECK VALVE	APS-COR	0.5000E-06 6	1	156.0	2	0.999922 I	
5	REGULATOR &SOV ASSY	APS-COR	0.2000E-07 1/2	1	144.0	2	0.999997 E	
6	THRUSTER ISO VALVE A	APS-COR	0.1500E-04 1	1	168.0	4	0.997483 E	0.999994
7	THRUSTER ISO VALVE B	APS-COR	0.1500E-04 1	1	168.0	4	0.997483 E	0.999994
8	THRUSTER ISO VALVE C	APS-COR	0.1500E-04 1	1	168.0	4	0.997483 E	0.999994
9	THRUSTER ISO VALVE D	APS-COR	0.1500E-04 1	1	168.0	4	0.997483 E	0.999994
10	FUEL TANK	APS-COR	0.1000E-05 3	3	168.0	2	0.999496	
11	FUEL REL VAL & DISC	APS-COR	0.5000E-06 6	1	156.0	2	0.999922 E	

MISSION TIME.....168.0 HOURS
NUMBER OF REDUNDANT UNITS IS... 5
WEIGHT OF REDUNDANT UNITS IS... 8.0 POUNDS
RELIABILITY OF NON-REDUNDANT SYSTEM IS... 0.986693
SYSTEM RELIABILITY WITH SELECTED REDUNDANCY IS... 0.998993

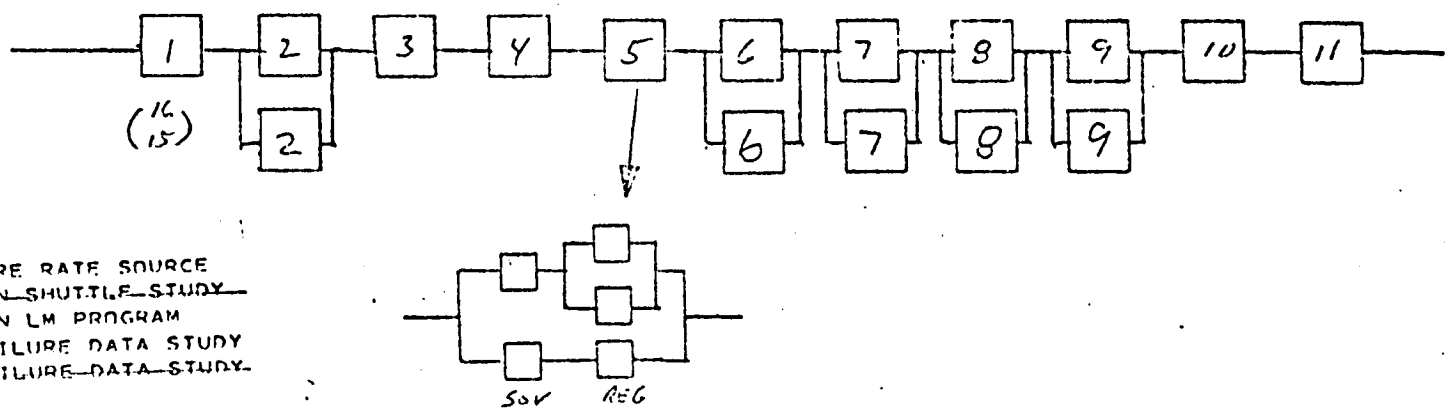

FAILURE RATE SOURCE
1 - GRUMMAN SHUTTLE STUDY
2 - GRUMMAN LM PROGRAM
3 - MMC FAILURE DATA STUDY
4 - PRC FAILURE DATA STUDY
5 - VENDOR
6 - ESTIMATE

REDUNDANCY CODE
E - EQUIPMENT
F - FUNCTIONAL
I - INTERNAL

GRUMMAN

TUG RELIABILITY SUMMARY

CONFIGURATION.... 320A -3A
SUBSYSTEM.....GUID/NAV

ITEM	EQUIPMENT NAME	S/S STG	LAMBDA *	QTY	TIME	CODE	R0 **	R1
1	I M U	GNC-COR	0.5000E-04 1	1	144.0	4	0.992826 E	0.999949
2	STAR TRACKER	GNC-COR	0.6600E-04 4	1	72.0	0	0.995259	
3	APS ELECTRONICS	GNC-COR	0.2000E-04 1	1	144.0	3	0.997124 E	0.999996
4	MAIN ENGINE ELECTRONICS	GNC-COR	0.1000E-04 1	1	1.0	0	0.999990	

MISSION TIME... 168.0 HOURS
NUMBER OF REDUNDANT UNITS IS... 2
WEIGHT OF REDUNDANT UNITS IS... 63.0 POUNDS
RELIABILITY OF NON-REDUNDANT SYSTEM IS... 0.985267
SYSTEM RELIABILITY WITH SELECTED REDUNDANCY IS... 0.995194

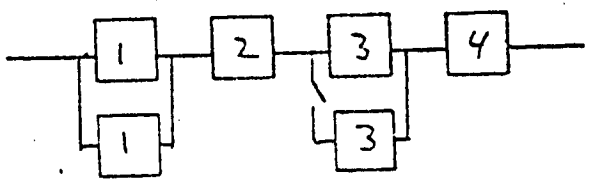

* FAILURE RATE SOURCE
1 - GRUMMAN SHUTTLE STUDY
2 - GRUMMAN LM PROGRAM
3 - MMC FAILURE DATA STUDY
4 - PRC FAILURE DATA STUDY
5 - VENDOR
6 - ESTIMATE

XY REDUNDANCY CODE
E - EQUIPMENT
F - FUNCTIONAL
I - INTERNAL

GRUMMAN

TUG RELIABILITY SUMMARY

CONFIGURATION.... 320A-3A
SUBSYSTEM.....COMMUNICATIONS

ITEM	EQUIPMENT NAME	S/S STG	LAMBDA	QTY	TIME	CODE	R0	R1
1	RECEIVER A DFS	COM-COR	0.1700E-04 1 *	1	144.0	3	0.997555 E **	0.999997
2	RECEIVER B DFS	COM-COR	0.1700E-04 1	1	144.0	3	0.997555 E	0.999997
3	TRANSMITTER DFS	COM-COR	0.1700E-04 1	1	72.0	3	0.998777 E	0.999999
4	POWER AMP-DFS	COM-COR	0.1500E-04 1	1	72.0	3	0.998921 E	0.999999
5	DIPLEXER (2)	COM-COR	0.1000E-05 6	1	144.0	2	0.999856	
6	OMNI ANTENNA-DFS (2)	COM-COR	0.1000E-05 2	1	144.0	2	0.999856	
7	ANTENNA SWITCH	COM-COR	0.1000E-05 6	1	144.0	2	0.999856	
8	BASE PROCESSOR (RED)	COM-COR	0.1000E-06 6	1	144.0	1	0.999986 I	

MISSION TIME.... 168.0 HOURS
NUMBER OF REDUNDANT UNITS IS... 4
WEIGHT OF REDUNDANT UNITS IS... 14.0 POUNDS
RELIABILITY OF NON-REDUNDANT SYSTEM IS... 0.992382
SYSTEM RELIABILITY WITH SELECTED REDUNDANCY IS... 0.999546

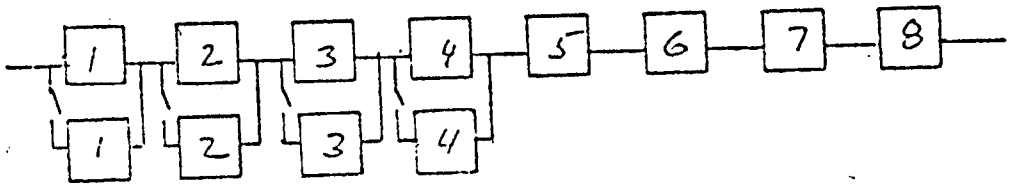

* FAILURE RATE SOURCE
1 - GRUMMAN SHUTTLE STUDY
2 - GRUMMAN LM PROGRAM
3 - MSC FAILURE DATA STUDY
4 - PRC FAILURE DATA STUDY
5 - VENDOR
6 - ESTIMATE

** REDUNDANCY CODE
E - EQUIPMENT
F - FUNCTIONAL
I - INTERNAL

GRUMMAN

TUG RELIABILITY SUMMARY

CONFIGURATION.... 320A-3A
SUBSYSTEM.....DATA MGT

ITEM	EQUIPMENT NAME	S/S STG	LAMBDA	QTY	TIME	CODE	RO	R1
1	DAU/SIG COND A	DMT-COR	0.1000E-05 6*	1	144.0	1	0.999856 I**	
2	DAU/SIG COND B	DMT-COR	0.1000E-05 6	1	144.0	1	0.999856 I	
3	DAU/SIG COND C	DMT-COR	0.1000E-05 6	1	144.0	1	0.999856 I	
4	CENTRAL COMPUTER	DMT-COR	0.5600E-04 5	1	144.0	4	0.991968 E	0.999935
5	DATA BUS CONT/IM FORMAT	DMT-COR	0.1000E-05 6	1	144.0	1	0.999856 I	

MISSION TIME.... 168.0 HOURS
NUMBER OF REDUNDANT UNITS IS... 1
WEIGHT OF REDUNDANT UNITS IS... 13.0 POUNDS
RELIABILITY OF NON-REDUNDANT SYSTEM IS... 0.991397
SYSTEM RELIABILITY WITH SELECTED REDUNDANCY IS... 0.999360

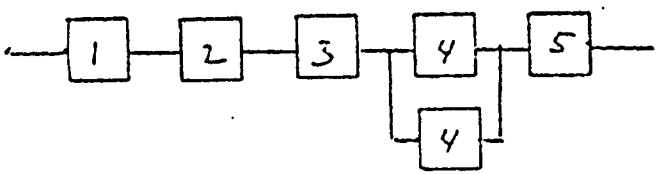

* FAILURE RATE SOURCE
1 - GRUMMAN SHUTTLE STUDY
2 - GRUMMAN LM PROGRAM
3 - MMC FAILURE DATA STUDY
4 - PRC FAILURE DATA STUDY
5 - VENDOR
6 - ESTIMATE

** REDUNDANCY CODE
E - EQUIPMENT
F - FUNCTIONAL
I - INTERNAL

GRUMMAN

TUG RELIABILITY SUMMARY

CONFIGURATION.... 320A-3A
SUBSYSTEM.....THERMAL

ITEM	EQUIPMENT NAME	S/S STG	LAMBDA	QTY	TIME	CODE	R0	R1
1	RADIATOR	THM-COR	0.5000E-05 1	1	144.0	1	0.999280	
2	ACCUMULATOR	THM-COR	0.4000E-05 3	1	144.0	1	0.999424	
3	CONTROL VALVE	THM-COR	0.1500E-04 1	1	144.0	4	0.997842 E	0.999995

MISSION TIME... 168.0 HOURS
NUMBER OF REDUNDANT UNITS IS... 1
WEIGHT OF REDUNDANT UNITS IS... 1.0 POUNDS
RELIABILITY OF NON-REDUNDANT SYSTEM IS... 0.996550
SYSTEM RELIABILITY WITH SELECTED REDUNDANCY IS... 0.998700

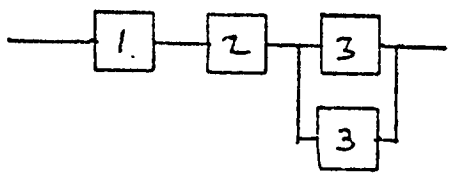

* FAILURE RATE SOURCE
1 - GRUMMAN SHUTTLE STUDY
2 - GRUMMAN LM PROGRAM
3 - MMC FAILURE DATA STUDY
4 - PRC FAILURE DATA STUDY
5 - VENDOR
6 - ESTIMATE

** REDUNDANCY CODE
E - EQUIPMENT
F - FUNCTIONAL
I - INTERNAL

GRUMMAN

TUG RELIABILITY SUMMARY

CONFIGURATION.... 320A-34
SUBSYSTEM.....POWER

ITEM	EQUIPMENT NAME	S/S STG	LAMBDA	QTY	TIME	CODE	R0	R1
1	FUEL CELL	PWR-COR	0.4000E-04 * 5	1	144.0	0	0.994257	
2	H2 TANK	PWR-COR	0.2000E-05 6	1	156.0	2	0.999688	
3	OX TANK	PWR-COR	0.2000E-05 6	1	156.0	2	0.999688	
4	BACKUP BATTERY	PWR-COR	0.2000E-04 7	1	1.0	0	0.999980	
5	POWER DISTRIBUTION	PWR-COR	0.2000E-05 6	1	168.0	2	0.999664	

MISSION TIME.... 168.0 HOURS
NUMBER OF REDUNDANT UNITS IS... 0
WEIGHT OF REDUNDANT UNITS IS... 0.0 POUNDS
RELIABILITY OF NON-REDUNDANT SYSTEM IS... 0.993283
SYSTEM RELIABILITY WITH SELECTED REDUNDANCY IS... 0.993283

* FAILURE RATE SOURCE
1 - GRUMMAN SHUTTLE STUDY
2 - GRUMMAN LM PROGRAM
3 - MMC FAILURE DATA STUDY
4 - PRC FAILURE DATA STUDY
5 - VENDOR
6 - ESTIMATE

** REDUNDANCY CODE
E - EQUIPMENT
F - FUNCTIONAL
I - INTERNAL

GRUMMAN

TUG RELIABILITY SUMMARY

CONFIGURATION.... 320 AE-3A
SUBSYSTEM.....MAIN PROP

MISSION TIME... 168.0 HOURS
NUMBER OF REDUNDANT UNITS IS... 3
WEIGHT OF REDUNDANT UNITS IS... 12.0 POUNDS
RELIABILITY OF NON-REDUNDANT SYSTEM IS... 0.986355
SYSTEM RELIABILITY WITH SELECTED REDUNDANCY IS... 0.992486

ITEM	EQUIPMENT NAME	S/S STG	LAMBDA	QTY	TIME	CODE	R0	R1
1	OX REGULATOR DUAL	MPS-COR	0.1000E-04 3*	1	156.0	1	0.998441 I**	
2	FUEL REGULATOR DUAL	MPS-COR	0.1000E-04 3	1	156.0	1	0.998441 I	
3	MAIN ENGINE	MPS-COR	0.1000E-02 5	1	1.0	2	0.999000	
4	HE ISO VALVE	MPS-COR	0.7500E-05 1	1	156.0	4	0.998831 E	0.999999
5	OX PREVALVE	MPS-COR	0.2500E-05 1	1	168.0	1	0.999580	
6	FUEL PREVALVE	MPS-COR	0.2500E-05 1	1	168.0	1	0.999580	
7	HELIUM TANK	MPS-COR	0.1000E-05 2	2	156.0	2	0.999688	
8	OX F/D OD	MPS-COR	0.2000E-05 3	1	168.0	2	0.999664	
9	FUEL F/D OD	MPS-COR	0.2000E-05 3	1	168.0	2	0.999664	
10	OX F/V OD	MPS-COR	0.2000E-05 3	1	156.0	2	0.999688	
11	FUEL F/V OD	MPS-COR	0.2000E-05 3	1	156.0	2	0.999688	
12	HE F/D OD	MPS-COR	0.2000E-05 3	1	156.0	2	0.999688	
13	OX RELIEF VALVE & DISC	MPS-COR	0.1000E-05 6	1	168.0	2	0.999832 F	
14	FUEL REL VAL & DISC	MPS-COR	0.1000E-05 6	1	168.0	2	0.999832 F	
15	OX QUAD CK VALVE	MPS-COR	0.1000E-05 6	1	156.0	2	0.999844 I	
16	FUEL QUAD CK VALVE	MPS-COR	0.1000E-05 6	1	156.0	2	0.999844 I	
17	OX VENT VALVE	MPS-COR	0.1500E-04 1	1	168.0	4	0.997483 E	0.999994
18	FUEL VENT VALVE	MPS-COR	0.1500E-04 1	1	168.0	4	0.997483 E	0.999994

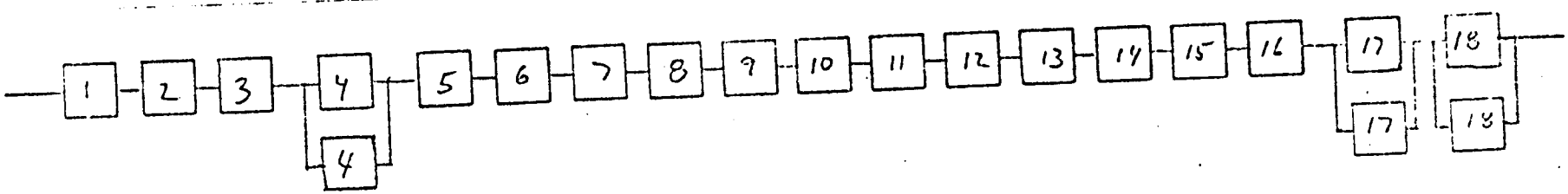

* FAILURE RATE SOURCE
1 - GRUMMAN SHUTTLE STUDY
2 - GRUMMAN LM PROGRAM
3 - MMC FAILURE DATA STUDY
4 - PRC FAILURE DATA STUDY
5 - VENDOR
6 - ESTIMATE

** REDUNDANCY CODE
E - EQUIPMENT
F - FUNCTIONAL
I - INTERNAL

GRUMMAN

TUG RELIABILITY SUMMARY

CONFIGURATION.... 320AE-3A
SUBSYSTEM.....AUX PROP

ITEM	EQUIPMENT NAME	S/S STG	LAMBDA	QTY	TIME	CODE	R0	R1
1	VENT VALVE-FUEL	APS-COR	0.1500E-04 1 *	1	156.0	4	0.997663 E **	0.999995
2	HELIUM TANK	APS-COR	0.1000E-05 2	2	156.0	2	0.999688	
3	REGULATOR &SOV ASSY	APS-COR	0.2000E-07 1/2	1	144.0	2	0.999997 F	
4	QUAD CHECK VALVE	APS-COR	0.5000E-06 6	1	156.0	2	0.999922 E	
5	FUEL REL VAL & DISC	APS-COR	0.5000E-06 6	1	156.0	2	0.999922 E	
6	FUEL TANK	APS-COR	0.1000E-05 3	3	168.0	2	0.999496	
7	THRUSTER ISO VALVE A	APS-COR	0.1500E-04 1	1	168.0	4	0.997483 E	0.999994
8	THRUSTER ISO VALVE B	APS-COR	0.1500E-04 1	1	168.0	4	0.997483 E	0.999994
9	THRUSTER ISO VALVE C	APS-COR	0.1500E-04 1	1	168.0	4	0.997483 E	0.999994
10	THRUSTER ISO VALVE D	APS-COR	0.1500E-04 1	1	168.0	4	0.997483 E	0.999994
11	THRUSTERS (24)	APS-COR	0.2600E-05 6	1	1.0	2	0.999997 E	

MISSION TIME.... 168.0 HOURS
NUMBER OF REDUNDANT UNITS IS... 5
WEIGHT OF REDUNDANT UNITS IS... 8.0 POUNDS
RELIABILITY OF NON-REDUNDANT SYSTEM IS... 0.986691
SYSTEM RELIABILITY WITH SELECTED REDUNDANCY IS... 0.998992

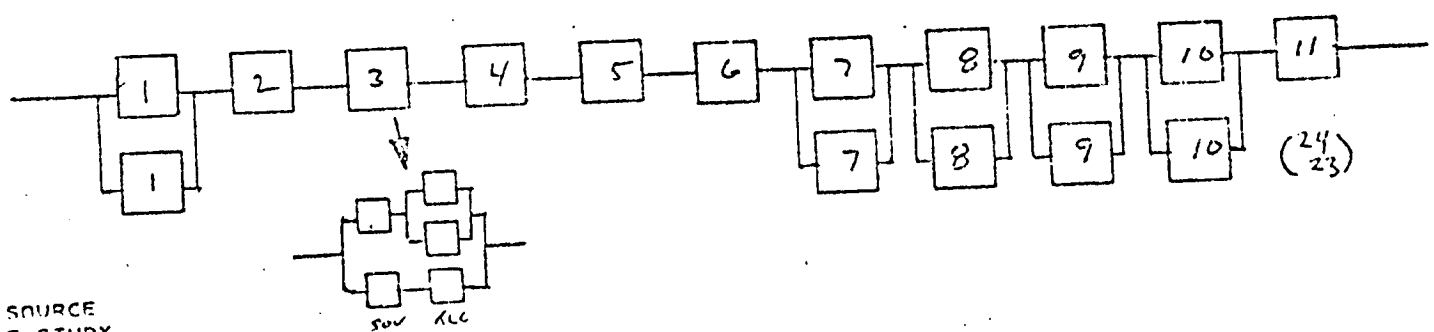

* FAILURE RATE SOURCE
1 - GRUMMAN SHUTTLE STUDY
2 - GRUMMAN LM PROGRAM
3 - MMC FAILURE DATA STUDY
4 - PRC FAILURE DATA STUDY
5 - VENDOR
6 - ESTIMATE

** REDUNDANCY CODE
E - EQUIPMENT
F - FUNCTIONAL
I - INTERNAL

GRUMMAN

TUG RELIABILITY SUMMARY

CONFIGURATION.... 320AE-3A
SUBSYSTEM.....GUID/NAV

ITEM	EQUIPMENT NAME	S/S STG	LAMBDA *	QTY	TIME	CODE	R0 **	R1
1	I M U	GNC-COR	0.5000E-04 1	1	144.0	4	0.992826 E	0.999949
2	STAR TRACKER	GNC-COR	0.6600E-04 4	1	72.0	0	0.995259	
3	LASER RADAR	GNC-COR	0.1000E-03 1	1	1.0	0	0.999900	
4	APS ELECTRONICS	GNC-COR	0.2000E-04 1	1	144.0	3	0.997124 E	0.999996
5	MAIN ENGINE ELECTRONICS	GNC-COR	0.1000E-04 1	1	1.0	0	0.999990	

MISSION TIME.... 168.0 HOURS
NUMBER OF REDUNDANT UNITS IS... 2
WEIGHT OF REDUNDANT UNITS IS... 28.0 POUNDS
RELIABILITY OF NON-REDUNDANT SYSTEM IS... 0.995169
SYSTEM RELIABILITY WITH SELECTED REDUNDANCY IS... 0.995094

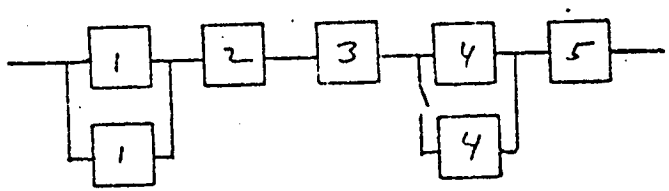

* FAILURE RATE SOURCE
1 - GRUMMAN SHUTTLE STUDY
2 - GRUMMAN LM PROGRAM
3 - MMC FAILURE DATA STUDY
4 - PRC FAILURE DATA STUDY
5 - VENDOR
6 - ESTIMATE

** REDUNDANCY CODE
E - EQUIPMENT
F - FUNCTIONAL
I - INTERNAL

GRUMMAN

TUG RELIABILITY SUMMARY

CONFIGURATION.... 320AE-3A
SUBSYSTEM.....COMMUNICATIONS

ITEM	EQUIPMENT NAME	S/S STG	LAMBDA	QTY	TIME	CODE	R0	R1
1	RECEIVER A DFS	COM-COR	0.1700E-04 1 *	1	144.0	3	0.997555 E **	0.999997
2	RECEIVER B DFS	COM-COR	0.1700E-04 1	1	144.0	3	0.997555 E	0.999997
3	DIPLEXER (2)	COM-COR	0.1000E-05 6	1	144.0	2	0.999856	
4	OMNI ANTENNA-DFS (2)	COM-COR	0.1000E-05 3	1	144.0	2	0.999856	
5	ANTENNA SWITCH	COM-COR	0.1000E-05 6	1	144.0	2	0.999856	
6	TRANSMITTER W/TV DFS	COM-COR	0.1000E-05 1	1	72.0	0	0.999928 F	
7	AUX XMITTER-TV	COM-COR	0.3400E-04 1	1	1.0	0	0.999966	
8	POWER AMP-DFS W/TV	COM-COR	0.1000E-05 1	1	72.0	0	0.999928 F	
9	POWER AMP-TV	COM-COR	0.3000E-04 1	1	1.0	0	0.999970	
10	BASEBAND PROCESSOR W/CSS	COM-COR	0.1000E-05 6	1	144.0	1	0.999856 F	
11	POWER SPLITTER	COM-COR	0.5000E-06 6	1	144.0	2	0.999928	
12	GCTA (TV)	COM-COR	0.2000E-04 4	1	1.0	0	0.999980	

MISSION TIME... 168.0 HOURS
NUMBER OF REDUNDANT UNITS IS... 2
WEIGHT OF REDUNDANT UNITS IS... 8.0 POUNDS
RELIABILITY OF NON-REDUNDANT SYSTEM IS... 0.994244
SYSTEM RELIABILITY WITH SELECTED REDUNDANCY IS... 0.999118

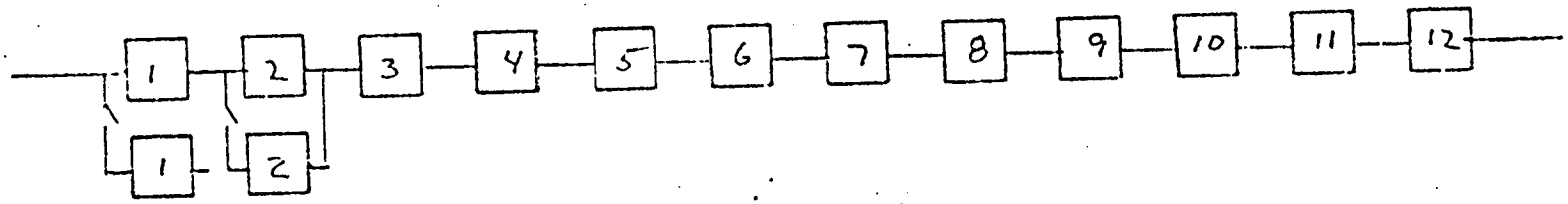

* FAILURE RATE SOURCE
1 - GRUMMAN SHUTTLE STUDY
2 - GRUMMAN LM PROGRAM
3 - MMC FAILURE DATA STUDY
4 - PRC FAILURE DATA STUDY
5 - VENDOR
6 - ESTIMATE

REDUNDANCY CODE
E - EQUIPMENT
F - FUNCTIONAL
I - INTERNAL

GRUMMAN

TUG RELIABILITY SUMMARY

CONFIGURATION.... 320AE-3A
SUBSYSTEM.....DATA MGT

ITEM	EQUIPMENT NAME	S/S STG	LAMBDA	QTY	TIME	CODE	R0	R1
1	DAU/SIG COND A	DMT-COR	0.1000E-05 6*	1	144.0	1	0.999856 I**	
2	DAU/SIG COND B	DMT-COR	0.1000E-05 6	1	144.0	1	0.999856 I	
3	DAU/SIG COND C	DMT-COR	0.1000E-05 6	1	144.0	1	0.999856 I	
4	CENTRAL COMPUTER	DMT-COR	0.5600E-04 5	1	144.0	4	0.991968 E	0.999935
5	DATA BUS CONT/IM FORMAT	DMT-COR	0.1000E-05 6	1	144.0	1	0.999856 I	

MISSION TIME.... 168.0 HOURS
NUMBER OF REDUNDANT UNITS IS... 1
WEIGHT OF REDUNDANT UNITS IS... 13.0 POUNDS
RELIABILITY OF NON-REDUNDANT SYSTEM IS... 0.991397
SYSTEM RELIABILITY WITH SELECTED REDUNDANCY IS... 0.999360

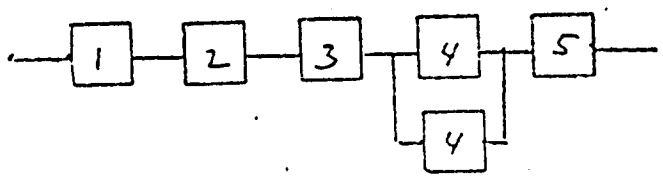

* FAILURE RATE SOURCE
1 - GRUMMAN SHUTTLE STUDY
2 - GRUMMAN LM PROGRAM
3 - MMC FAILURE DATA STUDY
4 - PRC FAILURE DATA STUDY
5 - VENDOR
6 - ESTIMATE

** REDUNDANCY CODE
E - EQUIPMENT
F - FUNCTIONAL
I - INTERNAL

GRUMMAN

TUG RELIABILITY SUMMARY

CONFIGURATION.... 320AE-3A
SUBSYSTEM.....THERMAL

ITEM	EQUIPMENT NAME	S/S STG	LAMBDA	QTY	TIME	CODE	R0	R1
1	RADIATOR	THM-COR	0.5000E-05 * 1	1	144.0	1	0.999280	
2	ACCUMULATOR	THM-COR	0.4000E-05 3	1	144.0	1	0.999424	

MISSION TIME.... 168.0 HOURS
NUMBER OF REDUNDANT UNITS IS... 0
WEIGHT OF REDUNDANT UNITS IS... 0.0 POUNDS
RELIABILITY OF NON-REDUNDANT SYSTEM IS.... 0.998705
SYSTEM RELIABILITY WITH SELECTED REDUNDANCY IS... 0.998705

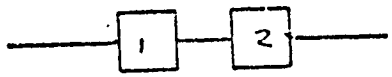

* FAILURE RATE SOURCE
1 - GRUMMAN SHUTTLE STUDY
2 - GRUMMAN LM PROGRAM
3 - MMC FAILURE DATA STUDY
4 - PRC FAILURE DATA STUDY
5 - VENDOR
6 - ESTIMATE

REDUNDANCY CODE
E - EQUIPMENT
F - FUNCTIONAL
I - INTERNAL

GRUMMAN

TUG RELIABILITY SUMMARY

CONFIGURATION.... 320 AE-3A
SUBSYSTEM.....POWER

ITEM	EQUIPMENT NAME	S/S STG	LAMBDA	QTY	TIME	CODE	RO	R1
1	FUEL CELL	PWR-COR	0.4000E-04 * 5	1	144.0	0	0.994257	
2	H2 TANK	PWR-COR	0.2000E-05 6	1	156.0	2	0.999688	
3	OX TANK	PWR-COR	0.2000E-05 4	1	156.0	2	0.999688	
4	BACKUP BATTERY	PWR-COR	0.2000E-04 7	1	1.0	0	0.999980	
5	POWER DISTRIBUTION	PWR-COR	0.2000E-05 4	1	168.0	2	0.999664	

MISSION TIME.....168.0 HOURS
NUMBER OF REDUNDANT UNITS IS... 0
WEIGHT OF REDUNDANT UNITS IS... 0.0 POUNDS
RELIABILITY OF NON-REDUNDANT SYSTEM IS... 0.993283
SYSTEM RELIABILITY WITH SELECTED REDUNDANCY IS... 0.993283

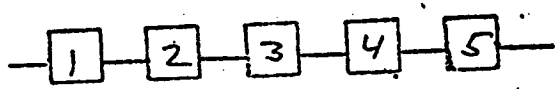

* FAILURE RATE SOURCE
1 - GRUMMAN SHUTTLE STUDY
2 - GRUMMAN LM PROGRAM
3 - MMC FAILURE DATA STUDY
4 - PRC FAILURE DATA STUDY
5 - VENDOR
6 - ESTIMATE

** REDUNDANCY CODE
E - EQUIPMENT
F - FUNCTIONAL
I - INTERNAL

GRUMMAN

TUG RELIABILITY SUMMARY

CONFIGURATION.... 310-38
SUBSYSTEM.....MAIN PROP

MISSION TIME... 168.0 HOURS
NUMBER OF REDUNDANT UNITS IS... 3
WEIGHT OF REDUNDANT UNITS IS... 12.0 POUNDS
RELIABILITY OF NON-REDUNDANT SYSTEM IS... 0.986355
SYSTEM RELIABILITY WITH SELECTED REDUNDANCY IS... 0.992486

ITEM	EQUIPMENT NAME	S/S STG	LAMBDA	QTY	TIME	CODE	R0	R1
1	OX REGULATOR DUAL	MPS-COR	0.1000E-04 3*	1	156.0	1	0.998441 I**	
2	FUEL REGULATOR DUAL	MPS-COR	0.1000E-04 3	1	156.0	1	0.998441 I	
3	MAIN ENGINE	MPS-COR	0.1000E-02 5	1	1.0	2	0.999000	
4	HE ISO VALVE	MPS-COR	0.7500E-05 1	1	156.0	4	0.998831 E	0.999999
5	OX PREVALVE	MPS-COR	0.2500E-05 1	1	168.0	1	0.999580	
6	FUEL PREVALVE	MPS-COR	0.2500E-05 1	1	168.0	1	0.999580	
7	HELIUM TANK	MPS-COR	0.1000E-05 2	2	156.0	2	0.999688	
8	OX F/D OD	MPS-COR	0.2000E-05 3	1	168.0	2	0.999664	
9	FUEL F/D OD	MPS-COR	0.2000E-05 3	1	168.0	2	0.999664	
10	OX F/V OD	MPS-COR	0.2000E-05 3	1	156.0	2	0.999688	
11	FUEL F/V OD	MPS-COR	0.2000E-05 3	1	156.0	2	0.999688	
12	HE F/D OD	MPS-COR	0.2000E-05 3	1	156.0	2	0.999688	
13	OX RELIEF VALVE & DISC	MPS-COR	0.1000E-05 6	1	168.0	2	0.999832 F	
14	FUEL REL VAL & DISC	MPS-COR	0.1000E-05 6	1	168.0	2	0.999832 F	
15	OX QUAD CK VALVE	MPS-COR	0.1000E-05 6	1	156.0	2	0.999844 I	
16	FUEL QUAD CK VALVE	MPS-COR	0.1000E-05 6	1	156.0	2	0.999844 I	
17	OX VENT VALVE	MPS-COR	0.1500E-04 1	1	168.0	4	0.997483 E	0.999994
18	FUEL VENT VALVE	MPS-COR	0.1500E-04 1	1	168.0	4	0.997483 E	0.999994

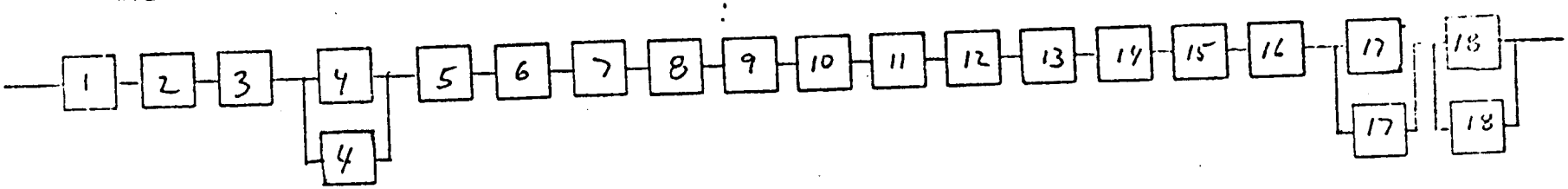

* FAILURE RATE SOURCE
1 - GRUMMAN SHUTTLE STUDY
2 - GRUMMAN LM PROGRAM
3 - MMC FAILURE DATA STUDY
4 - PRC FAILURE DATA STUDY
5 - VENDOR
6 - ESTIMATE

** REDUNDANCY CODE
F - EQUIPMENT
E - FUNCTIONAL
I - INTERNAL

TUG RELIABILITY SUMMARY

CONFIGURATION.... 310-3B
SUBSYSTEM.....AUX PROP

ITEM	EQUIPMENT NAME	S/S STG	LAMBDA	QTY	TIME	CODE	R0	R1
1	HELIUM TANK	APS-COR	0.1000E-05 2*	1	156.0	2	0.999844	
2	FUEL TANK	APS-COR	0.1000E-05 3	3	168.0	2	0.999496 **	
3	THRUSTERS (16)	APS-COR	0.1120E-05 6	1	1.0	2	0.999999 E	
4	REGULATOR &SOV ASSY	APS-COR	0.2000E-07 1/2	1	144.0	2	0.999997 F	
5	VENT VALVE-FUEL	APS-COR	0.1500E-04 1	1	156.0	4	0.997663 E	0.999995
6	QUAD CHECK VALVE	APS-COR	0.5000E-06 6	1	156.0	2	0.999922 I	
7	THRUSTER ISO VALVE A	APS-COR	0.1500E-04 1	1	168.0	4	0.997483 E	0.999994
8	THRUSTER ISO VALVE B	APS-COR	0.1500E-04 1	1	168.0	4	0.997483 E	0.999994
9	THRUSTER ISO VALVE C	APS-COR	0.1500E-04 1	1	168.0	4	0.997483 E	0.999994
10	THRUSTER ISO VALVE D	APS-COR	0.1500E-04 1	1	168.0	4	0.997483 E	0.999994
11	FUEL REL VAL & DISC	APS-COR	0.5000E-06 6	1	156.0	2	0.999922 E	

MISSION TIME.... 168.0 HOURS
NUMBER OF REDUNDANT UNITS IS... 5
WEIGHT OF REDUNDANT UNITS IS... 8.0 POUNDS
RELIABILITY OF NON-REDUNDANT SYSTEM IS... 0.986847
SYSTEM RELIABILITY WITH SELECTED REDUNDANCY IS... 0.999149

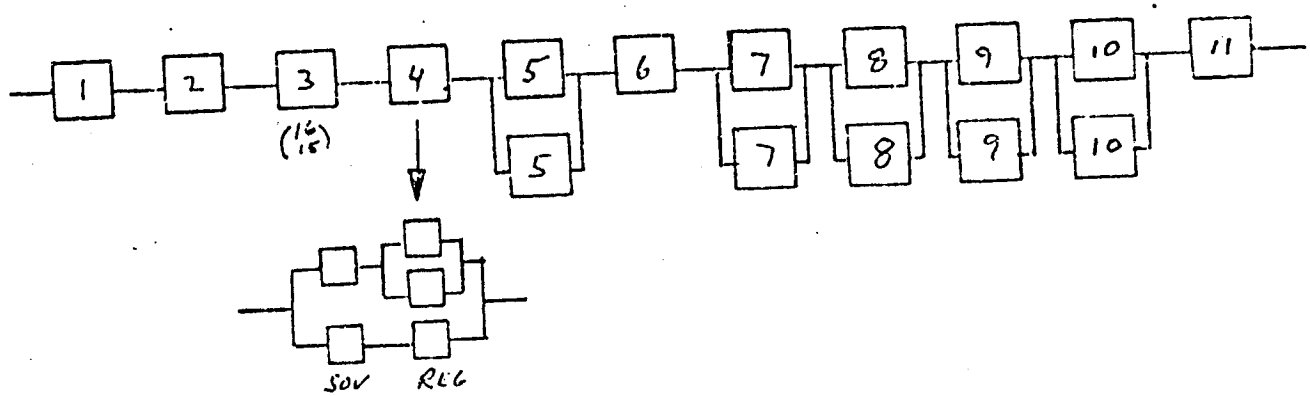

* FAILURE RATE SOURCE
1 - GRUMMAN SHUTTLE STUDY
2 - GRUMMAN LM PROGRAM
3 - MNC FAILURE DATA STUDY
4 - RKC FAILURE DATA STUDY
5 - VENDOR
6 - ESTIMATE

** REDUNDANCY CODE
E - EQUIPMENT
F - FUNCTIONAL
I - INTERNAL

GRUMMAN

TUG RELIABILITY SUMMARY

CONFIGURATION.... 310-3B
SUBSYSTEM.....GUID/NAV

ITEM	EQUIPMENT NAME	S/S STG	LAMBDA	QTY	TIME	CODE	R0	R1
1	I M U	GNC-COR	0.5000E-04 1*	1	144.0	1	0.992826	
2	STAR TRACKER	GNC-COR	0.6600E-04 4	1	72.0	0	0.995259 6	
3	APS ELECTRONICS	GNC-COR	0.2000E-04 1	1	144.0	3	0.997124 E	0.999996
4	MAIN ENGINE ELECTRONICS	GNC-COR	0.1000E-04 1	1	1.0	0	0.999990	

MISSION TIME... 168.0 HOURS
NUMBER OF REDUNDANT UNITS IS... 1
WEIGHT OF REDUNDANT UNITS IS... 18.0 POUNDS
RELIABILITY OF NON-REDUNDANT SYSTEM IS... 0.985267
SYSTEM RELIABILITY WITH SELECTED REDUNDANCY IS... 0.988105

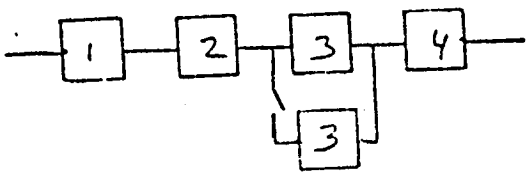

* FAILURE RATE SOURCE
1 - GRUMMAN SHUTTLE STUDY
2 - GRUMMAN LM PROGRAM
3 - MMC FAILURE DATA STUDY
4 - PRC FAILURE DATA STUDY
5 - VENDOR
6 - ESTIMATE

REDUNDANCY CODE
E - EQUIPMENT
F - FUNCTIONAL
I - INTERNAL

TUG RELIABILITY SUMMARY

CONFIGURATION.... 310-3B
SUBSYSTEM.....COMMUNICATIONS

ITEM	EQUIPMENT NAME	S/S STG	LAMBDA	QTY	TIME	CODE	RO	R1
1	RECEIVER A DFS	COM-COR	0.1700E-04 *	1	144.0	3	0.997555 E **	0.999997
2	RECEIVER B DFS	COM-COR	0.1700E-04	1	144.0	3	0.997555 E	0.999997
3	TRANSMITTER DFS	COM-COR	0.1700E-04	1	72.0	3	0.998777 E	0.999999
4	POWER AMP-DFS	COM-COR	0.1500E-04	1	72.0	3	0.998921 E	0.999999
5	DIPLEXER (2)	COM-COR	0.1000E-05	1	144.0	2	0.999856	
6	OMNI ANTENNA-DFS (2)	COM-COR	0.1000E-05	1	144.0	2	0.999856	
7	ANTENNA SWITCH	COM-COR	0.1000E-05	1	144.0	2	0.999856	
8	BASE PROCESSOR (RED)	COM-COR	0.1000E-06	1	144.0	1	0.999986 I	

MISSION TIME.... 168.0 HOURS
NUMBER OF REDUNDANT UNITS IS... 4
WEIGHT OF REDUNDANT UNITS IS... 14.0 POUNDS
RELIABILITY OF NON-REDUNDANT SYSTEM IS... 0.992382
SYSTEM RELIABILITY WITH SELECTED REDUNDANCY IS... 0.999546

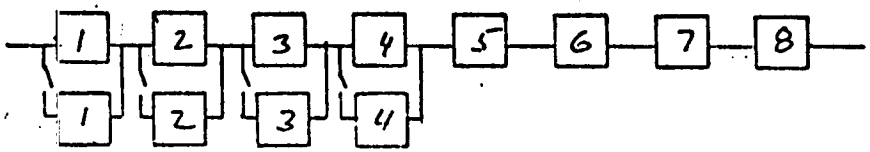

* FAILURE RATE SOURCE
1 - GRUMMAN SHUTTLE STUDY
2 - GRUMMAN LM PROGRAM
3 - MMC FAILURE DATA STUDY
4 - PRC FAILURE DATA STUDY
5 - VENDOR
6 - ESTIMATE

** REDUNDANCY CODE
E - EQUIPMENT
F - FUNCTIONAL
I - INTERNAL

GRUMMAN

TUG RELIABILITY SUMMARY

CONFIGURATION.... 310-3B
SUBSYSTEM.....DATA MGT

ITEM	EQUIPMENT NAME	S/S STG	LAMBDA	QTY	TIME	CODE	R0	R1
1	DAU/SIG COND A	DMT-COR	0.1000E-05 6*	1	144.0	1	0.999856 I**	
2	DAU/SIG COND B	DMT-COR	0.1000E-05 6	1	144.0	1	0.999856 I	
3	DAU/SIG COND C	DMT-COR	0.1000E-05 6	1	144.0	1	0.999856 I	
4	CENTRAL COMPUTER	DMT-COR	0.5600E-04 5	1	144.0	4	0.991968 F	0.999935
5	DATA BUS CONT/IM FORMAT	DMT-COR	0.1000E-05 6	1	144.0	1	0.999856 I	

MISSION TIME.... 168.0 HOURS
NUMBER OF REDUNDANT UNITS IS... 1
WEIGHT OF REDUNDANT UNITS IS... 13.0 POUNDS
RELIABILITY OF NON-REDUNDANT SYSTEM IS... 0.991397
SYSTEM RELIABILITY WITH SELECTED REDUNDANCY IS... 0.999360

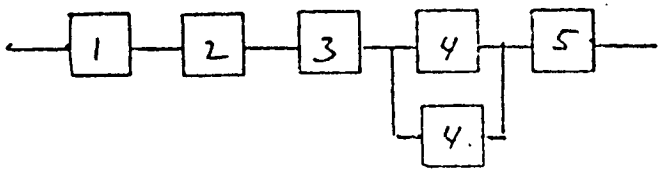

* FAILURE RATE SOURCE
1 - GRUMMAN SHUTTLE STUDY
2 - GRUMMAN LM PROGRAM
3 - MMC FAILURE DATA STUDY
4 - PRC FAILURE DATA STUDY
5 - VENDOR
6 - ESTIMATE

** REDUNDANCY CODE
F - EQUIPMENT
C - FUNCTIONAL
I - INTERNAL

TUG RELIABILITY SUMMARY

CONFIGURATION.... 310-3B
SUBSYSTEM.....THERMAL

ITEM	EQUIPMENT NAME	S/S STG	LAMBDA	QTY	TIME	CODE	R0	R1
1	RADIATOR	THM-COR	0.5000E-05 1	1	144.0	1	0.999280	
2	ACCUMULATOR	THM-COR	0.4000E-05 3	1	144.0	1	0.999424	
3	CONTROL VALVE	THM-COR	0.1500E-04 1	1	144.0	4	0.997842 E	0.999995

MISSION TIME... 168.0 HOURS
NUMBER OF REDUNDANT UNITS IS... 1
WEIGHT OF REDUNDANT UNITS IS... 1.0 POUNDS
RELIABILITY OF NON-REDUNDANT SYSTEM IS... 0.996550
SYSTEM RELIABILITY WITH SELECTED REDUNDANCY IS... 0.998700

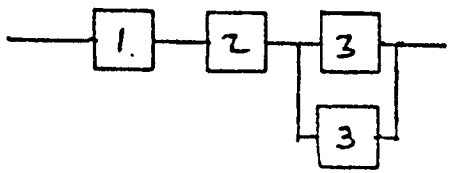

* FAILURE RATE SOURCE
1 - GRUMMAN SHUTTLE STUDY
2 - GRUMMAN LM PROGRAM
3 - MSC FAILURE DATA STUDY
4 - RSC FAILURE DATA STUDY
5 - VENDOR
6 - ESTIMATE

** REDUNDANCY CODE
E - EQUIPMENT
F - FUNCTIONAL
I - INTERNAL

TUG RELIABILITY SUMMARY

CONFIGURATION.... 310-38
SUBSYSTEM.....POWER

ITEM	EQUIPMENT NAME	S/S STG	LAMBDA	QTY	TIME	CODE	RO	R1
1	FUEL CELL	PWR-COR	0.4000E-04 5*	1	144.0	0	0.994257	
2	BACK-UP BATTERY	PWR-COR	0.2000E-04 1	1	1.0	0	0.999980	
3	H2 TANK	PWR-COR	0.2000E-05 6	1	156.0	2	0.999688	
4	OX TANK	PWR-COR	0.2000E-05 6	1	156.0	2	0.999688	
5	POWER DISTRIBUTION	PWR-COR	0.2000E-05 6	1	168.0	2	0.999664	

MISSION TIME.... 168.0 HOURS
NUMBER OF REDUNDANT UNITS IS... 0
WEIGHT OF REDUNDANT UNITS IS... 0.0 POUNDS
RELIABILITY OF NON-REDUNDANT SYSTEM IS... 0.993283
SYSTEM RELIABILITY WITH SELECTED REDUNDANCY IS... 0.993283

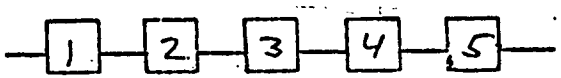

* FAILURE RATE SOURCE
1 - GRUMMAN SHUTTLE STUDY
2 - GRUMMAN LM PROGRAM
3 - MMC FAILURE DATA STUDY
4 - PRC FAILURE DATA STUDY
5 - VENDOR
6 - ESTIMATE

REDUNDANCY CODE
E - EQUIPMENT
F - FUNCTIONAL
I - INTERNAL

GRUMMAN

TUG RELIABILITY SUMMARY

CONFIGURATION.... 310 ARF-3B
SUBSYSTEM.....MAIN PROP

MISSION TIME... 168.0 HOURS
NUMBER OF REDUNDANT UNITS IS... 3
WEIGHT OF REDUNDANT UNITS IS... 12.0 POUNDS
RELIABILITY OF NON-REDUNDANT SYSTEM IS... 0.986355
SYSTEM RELIABILITY WITH SELECTED REDUNDANCY IS... 0.992486

ITEM	EQUIPMENT NAME	S/S STG	LAMBDA	QTY	TIME	CODE	RO	RI
1	OX REGULATOR DUAL	MPS-COR	0.1000E-04 3*	1	156.0	1	0.998441 I**	
2	FUEL REGULATOR DUAL	MPS-COR	0.1000E-04 3	1	156.0	1	0.998441 I	
3	MAIN ENGINE	MPS-COR	0.1000E-02 5	1	1.0	2	0.999000	
4	HE ISO VALVE	MPS-COR	0.7500E-05 1	1	156.0	4	0.998831 E	0.999999
5	OX PREVALVE	MPS-COR	0.2500E-05 1	1	168.0	1	0.999580	
6	FUEL PREVALVE	MPS-COR	0.2500E-05 1	1	168.0	1	0.999580	
7	HELIUM TANK	MPS-COR	0.1000E-05 2	2	156.0	2	0.999688	
8	OX F/D OD	MPS-COR	0.2000E-05 3	1	168.0	2	0.999664	
9	FUEL F/D OD	MPS-COR	0.2000E-05 3	1	168.0	2	0.999664	
10	OX F/V OD	MPS-COR	0.2000E-05 3	1	156.0	2	0.999688	
11	FUEL F/V OD	MPS-COR	0.2000E-05 3	1	156.0	2	0.999688	
12	HE F/D OD	MPS-COR	0.2000E-05 3	1	156.0	2	0.999688	
13	OX RELIEF VALVE & DISC	MPS-COR	0.1000E-05 6	1	168.0	2	0.999832 F	
14	FUEL REL VAL & DISC	MPS-COR	0.1000E-05 6	1	168.0	2	0.999832 F	
15	OX QUAD CK VALVE	MPS-COR	0.1000E-05 6	1	156.0	2	0.999844 I	
16	FUEL QUAD CK VALVE	MPS-COR	0.1000E-05 6	1	156.0	2	0.999844 I	
17	OX VENT VALVE	MPS-COR	0.1500E-04 1	1	168.0	4	0.997483 E	0.999994
18	FUEL VENT VALVE	MPS-COR	0.1500E-04 1	1	168.0	4	0.997483 E	0.999994

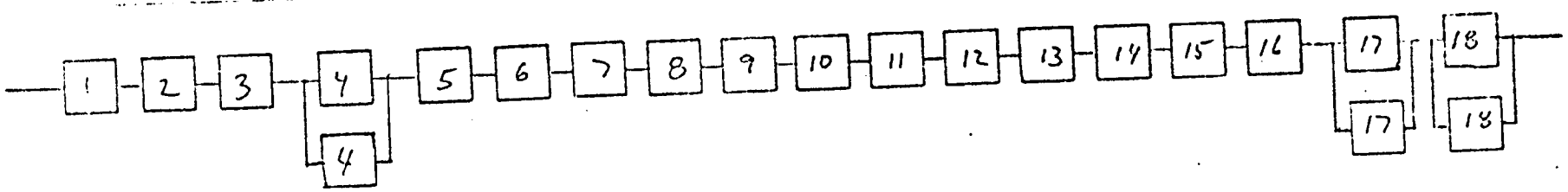

* FAILURE RATE SOURCE
1 - GRUMMAN SHUTTLE STUDY
2 - GRUMMAN LM PROGRAM
3 - MMC FAILURE DATA STUDY
4 - PRC FAILURE DATA STUDY
5 - VENDOR
6 - ESTIMATE

** REDUNDANCY CODE
E - EQUIPMENT
F - FUNCTIONAL
I - INTERNAL

GRUMMAN

TUG RELIABILITY SUMMARY

CONFIGURATION.... 310ARE-3B
SUBSYSTEM.....AUX PROP

ITEM	EQUIPMENT NAME	S/S STG	LAMBDA	QTY	TIME	CODE	R0	R1
1	HELIUM TANK	APS-COR	0.1000E-05 2*	2	156.0	2	0.999688	
2	FUEL-TANK	APS-COR	0.1000E-05 3	4	168.0	2	0.999328 **	
3	THRUSTERS (24)	APS-COR	0.2600E-05 6	1	1.0	2	0.999997 E	
4	REGULATOR &SOV ASSY	APS-COR	0.2000E-07 1,2	1	156.0	2	0.999997 F	
5	VENT VALVE-FUEL	APS-COR	0.1500E-04 1	1	156.0	4	0.997663 E	0.999995
6	QUAD CHECK VALVE	APS-COR	0.5000E-06 6	1	156.0	2	0.999922 F	
7	THRUSTER ISO VALVE A	APS-COR	0.1500E-04 1	1	168.0	4	0.997483 E	0.999994
8	THRUSTER ISO VALVE B	APS-COR	0.1500E-04 1	1	168.0	4	0.997483 E	0.999994
9	THRUSTER ISO VALVE C	APS-COR	0.1500E-04 1	1	168.0	4	0.997483 E	0.999994
10	THRUSTER ISO VALVE D	APS-COR	0.1500E-04 1	1	168.0	4	0.997483 E	0.999994
11	FUEL REL VAL & DISC	APS-COR	0.5000E-06 6	1	156.0	2	0.999922 F	

MISSION TIME.....168.0 HOURS
NUMBER OF REDUNDANT UNITS IS... 5
WEIGHT OF REDUNDANT UNITS IS... 8.0 POUNDS
RELIABILITY OF NON-REDUNDANT SYSTEM IS... 0.986526
SYSTEM RELIABILITY WITH SELECTED REDUNDANCY IS... 0.998824

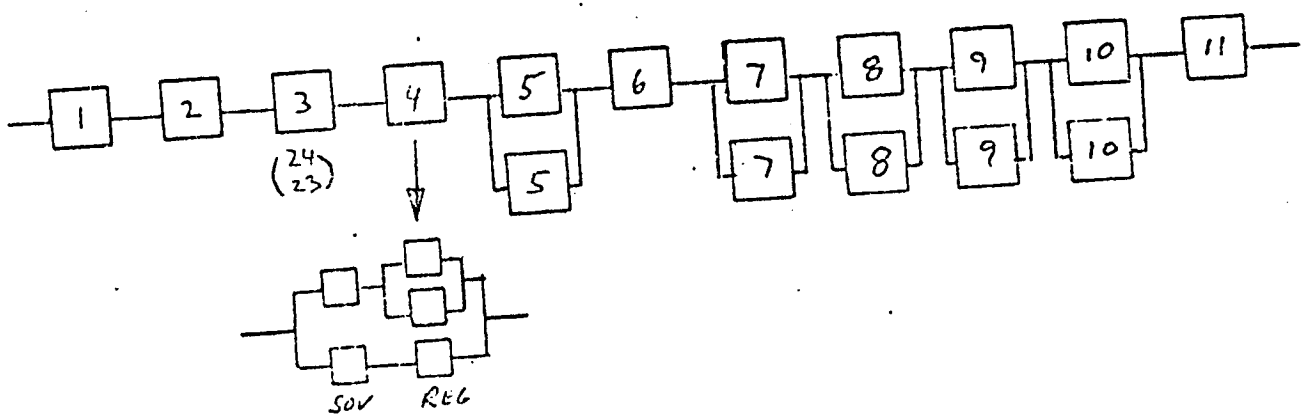

* FAILURE RATE SOURCE
1 - GRUMMAN SHUTTLE STUDY
2 - GRUMMAN LM PROGRAM
3 - MYC FAILURE DATA STUDY
4 - PRC FAILURE DATA STUDY
5 - VENDOR
6 - ESTIMATE

** REDUNDANCY CODE
E - EQUIPMENT
F - FUNCTIONAL
I - INTERNAL

GRUMMAN

TUG RELIABILITY SUMMARY

CONFIGURATION.... 310 ARE-3B
SUBSYSTEM.....GUID/NAV

ITEM	EQUIPMENT NAME	S/S STG	LAMBDA	QTY	TIME	CODE	R0	R1
1	I M U	GNC-COR	0.5000E-04 / *	1	144.0	4	0.992826 E**	0.999949
2	STAR TRACKER	GNC-COR	0.6600E-04 4	1	72.0	0	0.995259	
3	APS ELECTRONICS	GNC-COR	0.2000E-04 /	1	144.0	3	0.997124 E	0.999996
4	MAIN ENGINE ELECTRONICS	GNC-COR	0.1000E-04 /	1	1.0	0	0.999990	
5	SYNC NAV SAT RECVR	GNC-COR	0.1700E-04 6	1	7.2	0	0.999878	
6	DOPPLER RECEIVER	GNC-COR	0.1700E-04 6	1	25.9	0	0.999559	
7	L-BAND ANTENNAS (4)	GNC-COR	0.1000E-05 6	1	168.0	2	0.999832	
8	COMBINER/DOPPLER DET	GNC-COR	0.1500E-04 6	1	21.6	0	0.999676	
9	LASER RADAR	GNC-COR	0.1000E-03 /	1	1.0	0	0.999900	

MISSION TIME... 168.0 HOURS
NUMBER OF REDUNDANT UNITS IS... 2
WEIGHT OF REDUNDANT UNITS IS... 28.0 POUNDS
RELIABILITY OF NON-REDUNDANT SYSTEM IS... 0.984130
SYSTEM RELIABILITY WITH SELECTED REDUNDANCY IS... 0.994045

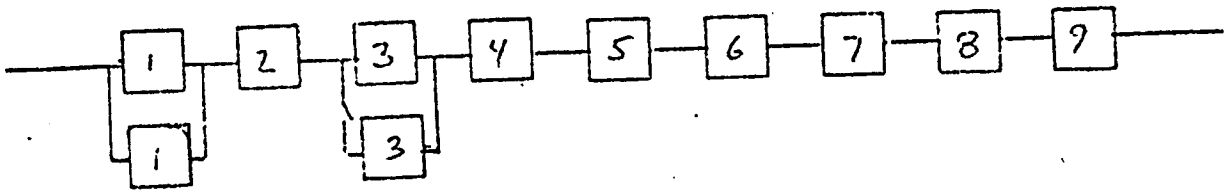

* FAILURE RATE SOURCE
1 - GRUMMAN SHUTTLE STUDY
2 - GRUMMAN LM PROGRAM
3 - MMC FAILURE DATA STUDY
4 - PRC FAILURE DATA STUDY
5 - VENDOR
6 - ESTIMATE

** REDUNDANCY CODE
E - EQUIPMENT
F - FUNCTIONAL
I - INTERNAL

GRUMMAN

TUG RELIABILITY SUMMARY

CONFIGURATION.... 310ARE-3B
SUBSYSTEM.....COMMUNICATIONS

ITEM	EQUIPMENT NAME	S/S STG	LAMBDA	QTY	TIME	CODE	R0	R1
1	RECEIVER A DFS	COM-COR	0.1700E-04 1*	1	144.0	3	0.997555 E**	0.999997
2	RECEIVER B DFS	COM-COR	0.1700E-04 1	1	144.0	3	0.997555 E	0.999997
3	DIPLEXER (2)	COM-COR	0.1000E-05 6	1	144.0	2	0.999856	
4	OMNI ANTENNA-DFS (2)	COM-COR	0.1000E-05 3	1	144.0	2	0.999856	
5	ANTENNA SWITCH	COM-COR	0.1000E-05 6	1	144.0	2	0.999856	
6	TRANSMITTER W/TV DFS	COM-COR	0.1000E-05 1	1	72.0	0	0.999928 F	
7	AUX XMITTER-TV	COM-COR	0.3400E-04 1	1	1.0	0	0.999966	
8	POWER AMP-DFS W/TV	COM-COR	0.1000E-05 1	1	72.0	0	0.999928 F	
9	POWER AMP-TV	COM-COR	0.3000E-04 1	1	1.0	0	0.999970	
10	BASEBAND PROCESSOR W/CSS	COM-COR	0.1000E-05 6	1	144.0	1	0.999856 F	
11	POWER SPLITTER	COM-COR	0.5000E-06 6	1	144.0	2	0.999928	
12	GCTA (TV)	COM-COR	0.2000E-04 4	1	1.0	0	0.999980	

MISSION TIME... 168.0 HOURS
NUMBER OF REDUNDANT UNITS IS... 2
WEIGHT OF REDUNDANT UNITS IS... 8.0 POUNDS
RELIABILITY OF NON-REDUNDANT SYSTEM IS... 0.994244
SYSTEM RELIABILITY WITH SELECTED REDUNDANCY IS... 0.999118

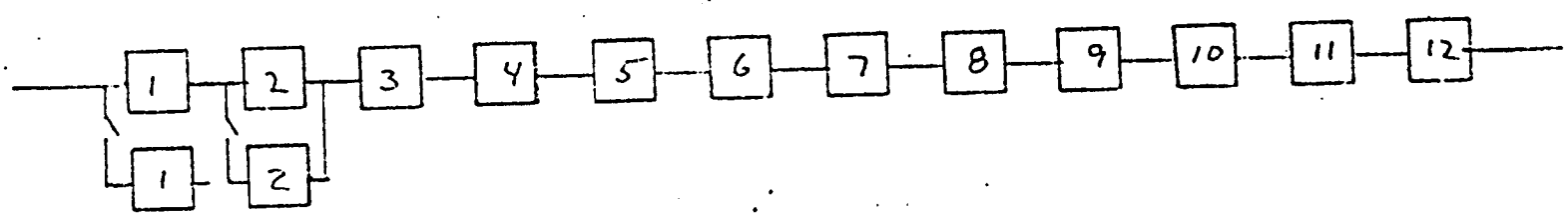

* FAILURE RATE SOURCE
1 - GRUMMAN SHUTTLE STUDY
2 - GRUMMAN LM PROGRAM
3 - MMC FAILURE DATA STUDY
4 - PRC FAILURE DATA STUDY
5 - VENDOR
6 - ESTIMATE

** REDUNDANCY CODE
E - EQUIPMENT
F - FUNCTIONAL
I - INTERNAL

GRUMMAN

TUG RELIABILITY SUMMARY

CONFIGURATION.... 310ARE-3B
SUBSYSTEM.....DATA MGT

ITEM	EQUIPMENT NAME	S/S STG	LAMBDA	QTY	TIME	CODE	R0	R1
1	DAU/SIG COND A	DMT-COR	0.1000E-05 6*	1	144.0	1	0.999856 I**	
2	DAU/SIG COND B	DMT-COR	0.1000E-05 6	1	144.0	1	0.999856 I	
3	DAU/SIG COND C	DMT-COR	0.1000E-05 6	1	144.0	1	0.999856 I	
4	CENTRAL COMPUTER	DMT-COR	0.7100E-04 5	1	144.0	4	0.989828 E	0.999897
5	DATA BUS CONT/TM FORMAT	DMT-COR	0.1000E-05 6	1	144.0	1	0.999855 I	

MISSION TIME.... 168.0 HOURS
NUMBER OF REDUNDANT UNITS IS... 1
WEIGHT OF REDUNDANT UNITS IS... 15.0 POUNDS
RELIABILITY OF NON-REDUNDANT SYSTEM IS... 0.989258
SYSTEM RELIABILITY WITH SELECTED REDUNDANCY IS... 0.999321

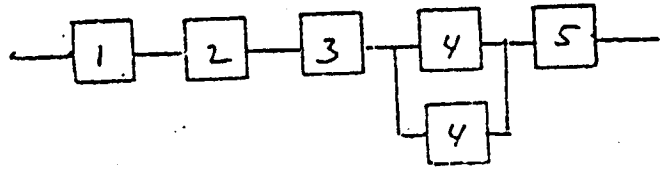

* FAILURE RATE SOURCE
1 - GRUMMAN SHUTTLE STUDY
2 - GRUMMAN LM PROGRAM
3 - MMC FAILURE DATA STUDY
4 - PRC FAILURE DATA STUDY
5 - VENDOR
6 - ESTIMATE

** REDUNDANCY CODE
E - EQUIPMENT
F - FUNCTIONAL
I - INTERNAL

GRUMMAN

TUG RELIABILITY SUMMARY

CONFIGURATION.... 310ARE-3B
SUBSYSTEM.....THERMAL

ITEM	EQUIPMENT NAME	S/S STG	LAMBDA	QTY	TIME	CODE	R0	R1
1	RADIATOR	THM-COR	0.5000E-05 * 1	1	144.0	1	0.999280	
2	ACCUMULATOR	THM-COR	0.4000E-05 3	1	144.0	1	0.999424	

MISSION TIME... 168.0 HOURS
NUMBER OF REDUNDANT UNITS IS... 0
WEIGHT OF REDUNDANT UNITS IS... 0.0 POUNDS
RELIABILITY OF NON-REDUNDANT SYSTEM IS... 0.998705
SYSTEM RELIABILITY WITH SELECTED REDUNDANCY IS... 0.998705

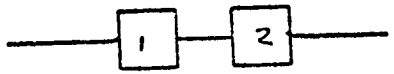

* FAILURE RATE SOURCE
1 - GRUMMAN SHUTTLE STUDY
2 - GRUMMAN LM PROGRAM
3 - MMC FAILURE DATA STUDY
4 - PRC FAILURE DATA STUDY
5 - VENDOR
6 - ESTIMATE

REDUNDANCY CODE
E - EQUIPMENT
F - FUNCTIONAL
I - INTERNAL

GRUMMAN

TUG RELIABILITY SUMMARY

CONFIGURATION.... 310ARE-3B
SUBSYSTEM.....POWER

ITEM	EQUIPMENT NAME	S/S STG	LAMBDA	QTY	TIME	CODE	RO	R1
1	FUEL CELL	PWR-COR	0.4000E-04 5*	1	144.0	0	0.994257	
2	BACK-UP BATTERY	PWR-COR	0.2000E-04 1	1	1.0	0	0.999980	
3	H2 TANK	PWR-COR	0.2000E-05 6	1	156.0	2	0.999688	
4	OX TANK	PWR-COR	0.2000E-05 6	1	156.0	2	0.999688	
5	POWER DISTRIBUTION	PWR-COR	0.2000E-05 6	1	168.0	2	0.999664	

MISSION TIME.... 168.0 HOURS
NUMBER OF REDUNDANT UNITS IS... 0
WEIGHT OF REDUNDANT UNITS IS... 0.0 POUNDS
RELIABILITY OF NON-REDUNDANT SYSTEM IS... 0.993283
SYSTEM RELIABILITY WITH SELECTED REDUNDANCY IS... 0.993283

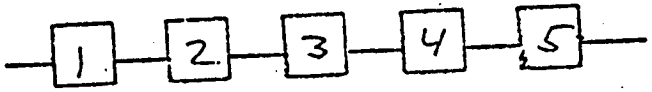

* FAILURE RATE SOURCE
1 - GRUMMAN SHUTTLE STUDY
2 - GRUMMAN LM PROGRAM
3 - MMC FAILURE DATA STUDY
4 - PRC FAILURE DATA STUDY
5 - VENDOR
6 - ESTIMATE

REDUNDANCY CODE
E - EQUIPMENT
F - FUNCTIONAL
I - INTERNAL

GRUMMAN

TUG RELIABILITY SUMMARY

CONFIGURATION.... 510A-3B
SUBSYSTEM.....MAIN PROP

MISSION TIME... 168.0 HOURS
NUMBER OF REDUNDANT UNITS IS... 3
WEIGHT OF REDUNDANT UNITS IS... 12.0 POUNDS
RELIABILITY OF NON-REDUNDANT SYSTEM IS... 0.986355
SYSTEM RELIABILITY WITH SELECTED REDUNDANCY IS... 0.992486

ITEM	EQUIPMENT NAME	S/S STG	LAMBDA	QTY	TIME	CODE	RO	R1
1	OX REGULATOR DUAL	MPS-COR	0.1000E-04 3*	1	156.0	1	0.998441 I**	
2	FUEL REGULATOR DUAL	MPS-COR	0.1000E-04 3	1	156.0	1	0.998441 I	
3	MAIN ENGINE	MPS-COR	0.1000E-02 5	1	1.0	2	0.999000	
4	HE ISO VALVE	MPS-COR	0.7500E-05 1	1	156.0	4	0.998831 E	0.999999
5	OX PREVALVE	MPS-COR	0.2500E-05 1	1	168.0	1	0.999580	
6	FUEL PREVALVE	MPS-COR	0.2500E-05 1	1	168.0	1	0.999580	
7	HELIUM TANK	MPS-COR	0.1000E-05 2	2	156.0	2	0.999688	
8	OX F/D OD	MPS-COR	0.2000E-05 3	1	168.0	2	0.999664	
9	FUEL F/D OD	MPS-COR	0.2000E-05 3	1	168.0	2	0.999664	
10	OX F/V OD	MPS-COR	0.2000E-05 3	1	156.0	2	0.999688	
11	FUEL F/V OD	MPS-COR	0.2000E-05 3	1	156.0	2	0.999688	
12	HE F/D OD	MPS-COR	0.2000E-05 3	1	156.0	2	0.999688	
13	OX RELIEF VALVE & DISC	MPS-COR	0.1000E-05 6	1	168.0	2	0.999832 F	
14	FUEL REL VAL & DISC	MPS-COR	0.1000E-05 6	1	168.0	2	0.999832 F	
15	OX QUAD CK VALVE	MPS-COR	0.1000E-05 6	1	156.0	2	0.999844 I	
16	FUEL QUAD CK VALVE	MPS-COR	0.1000E-05 6	1	156.0	2	0.999844 I	
17	OX VENT VALVE	MPS-COR	0.1500E-04 1	1	168.0	4	0.997483 E	0.999994
18	FUEL VENT VALVE	MPS-COR	0.1500E-04 1	1	168.0	4	0.997483 E	0.999994

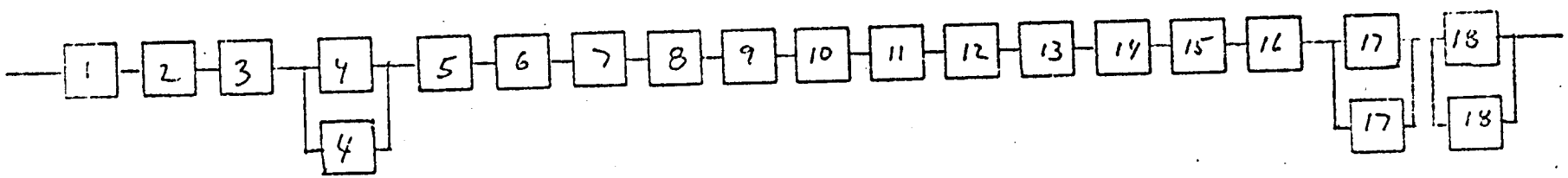

* FAILURE RATE SOURCE
1 - GRUMMAN SHUTTLE STUDY
2 - GRUMMAN LM PROGRAM
3 - MMC FAILURE DATA STUDY
4 - PRC FAILURE DATA STUDY
5 - VENDOR
6 - ESTIMATE

** REDUNDANCY CODE
E - EQUIPMENT
F - FUNCTIONAL
I - INTERNAL

GRUMMAN

TUG RELIABILITY SUMMARY

CONFIGURATION.... 510A-3B
SUBSYSTEM.....AUX PROP

ITEM	EQUIPMENT NAME	S/S STG	LAMBDA	QTY	TIME	CODE	RO	R1
1	HELIUM TANK	APS-COR	0.1000E-05 2*	1	156.0	2	0.999844	
2	FUEL TANK	APS-COR	0.1000E-05 3	3	168.0	2	0.999496 **	
3	THRUSTERS (16)	APS-COR	0.1120E-05 6	1	1.0	2	0.999999 E	
4	REGULATOR &SOV ASSY	APS-COR	0.2000E-07 1/2	1	144.0	2	0.999997 F	
5	VENT VALVE-FUEL	APS-COR	0.1500E-04 1	1	156.0	4	0.997663 E	0.999995
6	QUAD CHECK VALVE	APS-COR	0.5000E-06 6	1	156.0	2	0.999922 I	
7	THRUSTER ISO VALVE A	APS-COR	0.1500E-04 1	1	168.0	4	0.997483 E	0.999994
8	THRUSTER ISO VALVE B	APS-COR	0.1500E-04 1	1	168.0	4	0.997483 E	0.999994
9	THRUSTER ISO VALVE C	APS-COR	0.1500E-04 1	1	168.0	4	0.997483 E	0.999994
10	THRUSTER ISO VALVE D	APS-COR	0.1500E-04 1	1	168.0	4	0.997483 E	0.999994
11	FUEL REL VAL & DISC	APS-COR	0.5000E-06 6	1	156.0	2	0.999922 E	

MISSION TIME.....168.0 HOURS
NUMBER OF REDUNDANT UNITS IS... 5
WEIGHT OF REDUNDANT UNITS IS... 8.0 POUNDS
RELIABILITY OF NON-REDUNDANT SYSTEM IS... 0.986847
SYSTEM RELIABILITY WITH SELECTED REDUNDANCY IS... 0.999149

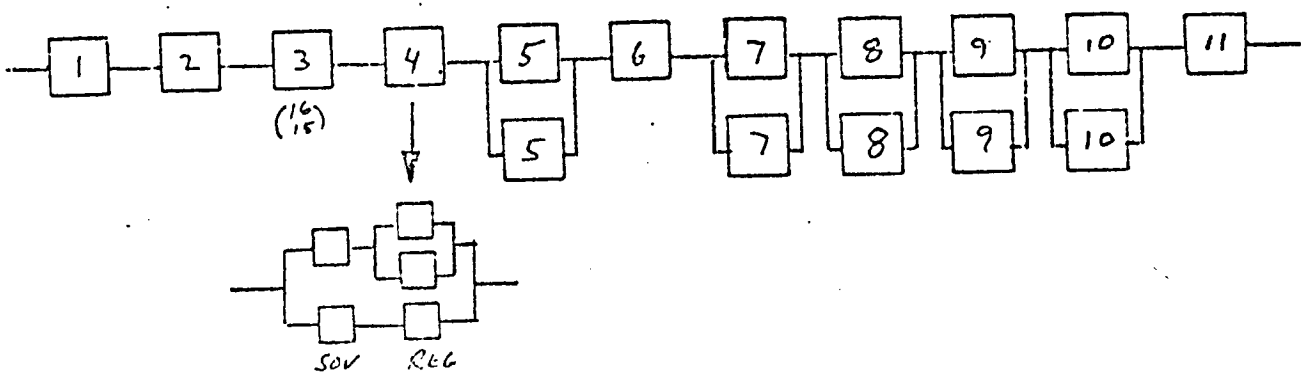

* FAILURE RATE SOURCE
1 - GRUMMAN SHUTTLE STUDY
2 - GRUMMAN LM PROGRAM
3 - MSC FAILURE DATA STUDY
4 - PRC FAILURE DATA STUDY
5 - VENDOR
6 - ESTIMATE

** REDUNDANCY CODE
E - EQUIPMENT
F - FUNCTIONAL
I - INTERNAL

GRUMMAN

TUG RELIABILITY SUMMARY

CONFIGURATION.... 510A-3B
SUBSYSTEM.....GUID/NAV

ITEM	EQUIPMENT NAME	S/S STG	LAMBDA	QTY	TIME	CODE	RO	R1
1	I M U	GNC-COR	0.5000E-04 1*	1	144.0	1	0.992826	
2	STAR TRACKER	GNC-COR	0.6600E-04 4	1	72.0	0	0.995259 **	
3	APS ELECTRONICS	GNC-COR	0.2000E-04 1	1	144.0	3	0.997124 E	0.999996
4	MAIN ENGINE ELECTRONICS	GNC-COR	0.1000E-04 1	1	1.0	0	0.999990	

MISSION TIME... 168.0 HOURS
NUMBER OF REDUNDANT UNITS IS... 1
WEIGHT OF REDUNDANT UNITS IS... 18.0 POUNDS
RELIABILITY OF NON-REDUNDANT SYSTEM IS... 0.985267
SYSTEM RELIABILITY WITH SELECTED REDUNDANCY IS... 0.988105

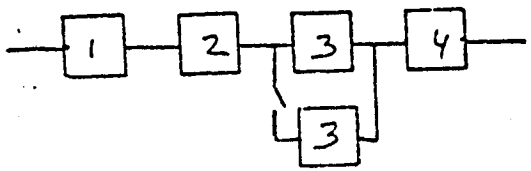

* FAILURE RATE SOURCE
1 - GRUMMAN SHUTTLE STUDY
2 - GRUMMAN LM PROGRAM
3 - MMC FAILURE DATA STUDY
4 - PRC FAILURE DATA STUDY
5 - VENDOR
6 - ESTIMATE

** REDUNDANCY CODE
E - EQUIPMENT
F - FUNCTIONAL
I - INTERNAL

GRUMMAN

TUG RELIABILITY SUMMARY

CONFIGURATION.... 510A-3B
SUBSYSTEM.....COMMUNICATIONS

ITEM	EQUIPMENT NAME	S/S STG	LAMBDA	QTY	TIME	CODE	R0	R1
1	RECEIVER A DFS	COM-COR	0.1700E-04 1 *	1	144.0	3	0.997555 E **	0.999997
2	RECEIVER B DFS	COM-COR	0.1700E-04 1	1	144.0	3	0.997555 E	0.999997
3	TRANSMITTER DFS	COM-COR	0.1700E-04 1	1	72.0	3	0.998777 E	0.999999
4	POWER AMP-DFS	COM-COR	0.1500E-04 5	1	72.0	3	0.998921 E	0.999999
5	DIPLEXER (2)	COM-COR	0.1000E-05 2	1	144.0	2	0.999856	
6	OMNI ANTENNA-DFS (2)	COM-COR	0.1000E-05 6	1	144.0	2	0.999856	
7	ANTENNA SWITCH	COM-COR	0.1000E-05 6	1	144.0	2	0.999856	
8	BASE PROCESSOR (RED)	COM-COR	0.1000E-06 6	1	144.0	1	0.999986 I	

MISSION TIME.... 168.0 HOURS
NUMBER OF REDUNDANT UNITS IS... 4
WEIGHT OF REDUNDANT UNITS IS... 14.0 POUNDS
RELIABILITY OF NON-REDUNDANT SYSTEM IS... 0.992382
SYSTEM RELIABILITY WITH SELECTED REDUNDANCY IS... 0.999546

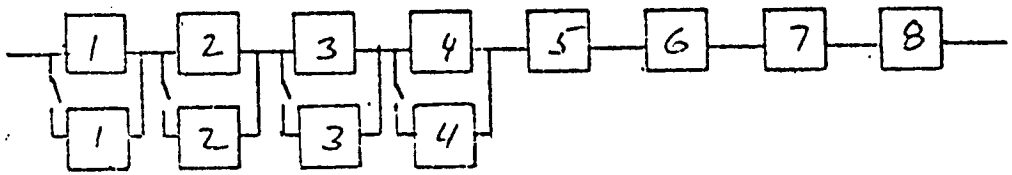

* FAILURE RATE SOURCE
1 - GRUMMAN SHUTTLE STUDY
2 - GRUMMAN LM PROGRAM
3 - MMC FAILURE DATA STUDY
4 - PRC FAILURE DATA STUDY
5 - VENDOR
6 - ESTIMATE

** REDUNDANCY CODE
E - EQUIPMENT
F - FUNCTIONAL
I - INTERNAL

GRUMMAN

TUG RELIABILITY SUMMARY

CONFIGURATION.... 510A-3B
SUBSYSTEM.....DATA MGT

ITEM	EQUIPMENT NAME	S/S STG	LAMBDA	QTY	TIME	CODE	R0	R1
1	DAU/SIG COND A	DMT-COR	0.1000E-05 6*	1	144.0	1	0.999856 I**	
2	DAU/SIG COND B	DMT-COR	0.1000E-05 6	1	144.0	1	0.999856 I	
3	DAU/SIG COND C	DMT-COR	0.1000E-05 6	1	144.0	1	0.999856 I	
4	CENTRAL COMPUTER	DMT-COR	0.5600E-04 5	1	144.0	4	0.991968 E	0.999935
5	DATA BUS CONT/TM FORMAT	DMT-COR	0.1000E-05 6	1	144.0	1	0.999856 I	

MISSION TIME.... 168.0 HOURS
NUMBER OF REDUNDANT UNITS IS... 1
WEIGHT OF REDUNDANT UNITS IS... 13.0 POUNDS
RELIABILITY OF NON-REDUNDANT SYSTEM IS... 0.991397
SYSTEM RELIABILITY WITH SELECTED REDUNDANCY IS... 0.999360

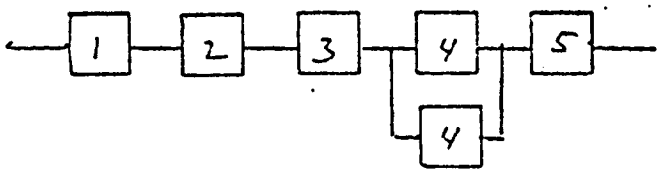

* FAILURE RATE SOURCE
1 - GRUMMAN SHUTTLE STUDY
2 - GRUMMAN LM PROGRAM
3 - MMC FAILURE DATA STUDY
4 - PRC FAILURE DATA STUDY
5 - VENDOR
6 - ESTIMATE

** REDUNDANCY CODE
E - EQUIPMENT
F - FUNCTIONAL
I - INTERNAL

GRUMMAN

TUG RELIABILITY SUMMARY

CONFIGURATION.... 510A-3B
SUBSYSTEM.....THERMAL

ITEM	EQUIPMENT NAME	S/S STG	LAMBDA	QTY	TIME	CODE	R0	R1
1	RADIATOR	THM-COR	0.5000E-05 1	1	144.0	1	0.999280	
2	ACCUMULATOR	THM-COR	0.4000E-05 3	1	144.0	1	0.999424	
3	CONTROL VALVE	THM-COR	0.1500E-04 1	1	144.0	4	0.997842 E	0.999995

MISSION TIME... 168.0 HOURS
NUMBER OF REDUNDANT UNITS IS... 1
WEIGHT OF REDUNDANT UNITS IS... 1.0 POUNDS
RELIABILITY OF NON-REDUNDANT SYSTEM IS... 0.996550
SYSTEM RELIABILITY WITH SELECTED REDUNDANCY IS... 0.998700

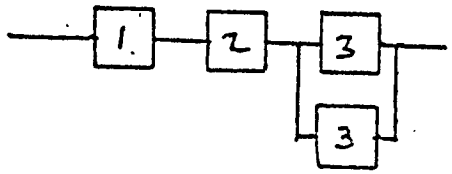

* FAILURE RATE SOURCE
1 - GRUMMAN SHUTTLE STUDY
2 - GRUMMAN LM PROGRAM
3 - MMC FAILURE DATA STUDY
4 - PRC FAILURE DATA STUDY
5 - VENDOR
6 - ESTIMATE

** REDUNDANCY CODE
E - EQUIPMENT
F - FUNCTIONAL
I - INTERNAL

GRUMMAN

TUG RELIABILITY SUMMARY

CONFIGURATION.... 510A-3B
SUBSYSTEM..... POWER

ITEM	EQUIPMENT NAME	S/S STG	LAMBDA	QTY	TIME	CODE	RO	R1
1	FUEL CELL	PWR-COR	0.4000E-04 5*	1	144.0	0	0.994257	
2	BACK-UP BATTERY	PWR-COR	0.2000E-04 1	1	1.0	0	0.999980	
3	H2 TANK	PWR-COR	0.2000E-05 6	1	156.0	2	0.999688	
4	OX TANK	PWR-COR	0.2000E-05 6	1	156.0	2	0.999688	
5	POWER DISTRIBUTION	PWR-COR	0.2000E-05 6	1	168.0	2	0.999664	

MISSION TIME.... 168.0 HOURS
NUMBER OF REDUNDANT UNITS IS... 0
WEIGHT OF REDUNDANT UNITS IS... 0.0 POUNDS
RELIABILITY OF NON-REDUNDANT SYSTEM IS... 0.993283
SYSTEM RELIABILITY WITH SELECTED REDUNDANCY IS... 0.993283

* FAILURE RATE SOURCE
1 - GRUMMAN SHUTTLE STUDY
2 - GRUMMAN LM PROGRAM
3 - MMC FAILURE DATA STUDY
4 - PRC FAILURE DATA STUDY
5 - VENDOR
6 - ESTIMATE

REDUNDANCY CODE
E - EQUIPMENT
F - FUNCTIONAL
I - INTERNAL

GRUMMAN

TUG RELIABILITY SUMMARY

CONFIGURATION.... 510 ADE-3B
SUBSYSTEM.....MAIN PROP

MISSION TIME... 168.0 HOURS
NUMBER OF REDUNDANT UNITS IS... 3
WEIGHT OF REDUNDANT UNITS IS... 12.0 POUNDS
RELIABILITY OF NON-REDUNDANT SYSTEM IS... 0.986355
SYSTEM RELIABILITY WITH SELECTED REDUNDANCY IS... 0.992486

ITEM	EQUIPMENT NAME	S/S STG	LAMBDA	QTY	TIME	CODE	R0	R1
1	OX REGULATOR DUAL	MPS-COR	0.1000E-04 3*	1	156.0	1	0.998441 I**	
2	FUEL REGULATOR DUAL	MPS-COR	0.1000E-04 3	1	156.0	1	0.998441 I	
3	MAIN ENGINE	MPS-COR	0.1000E-02 5	1	1.0	2	0.999000	
4	HE ISO VALVE	MPS-COR	0.7500E-05 1	1	156.0	4	0.998831 E	0.999999
5	OX. PREVALVE	MPS-COR	0.2500E-05 1	1	168.0	1	0.999580	
6	FUEL PREVALVE	MPS-COR	0.2500E-05 1	1	168.0	1	0.999580	
7	HELIUM TANK	MPS-COR	0.1000E-05 2	2	156.0	2	0.999688	
8	OX F/D OD	MPS-COR	0.2000E-05 3	1	168.0	2	0.999664	
9	FUEL F/D OD	MPS-COR	0.2000E-05 3	1	168.0	2	0.999664	
10	OX F/V OD	MPS-COR	0.2000E-05 3	1	156.0	2	0.999688	
11	FUEL F/V OD	MPS-COR	0.2000E-05 3	1	156.0	2	0.999688	
12	HE F/D OD	MPS-COR	0.2000E-05 3	1	156.0	2	0.999688	
13	OX RELIEF VALVE & DISC	MPS-COR	0.1000E-05 6	1	168.0	2	0.999832 F	
14	FUEL REL VAL & DISC	MPS-COR	0.1000E-05 6	1	168.0	2	0.999832 F	
15	OX QUAD CK VALVE	MPS-COR	0.1000E-05 6	1	156.0	2	0.999844 I	
16	FUEL QUAD CK VALVE	MPS-COR	0.1000E-05 6	1	156.0	2	0.999844 I	
17	OX VENT VALVE	MPS-COR	0.1500E-04 1	1	168.0	4	0.997483 E	0.999994
18	FUEL VENT VALVE	MPS-COR	0.1500E-04 1	1	168.0	4	0.997483 E	0.999994

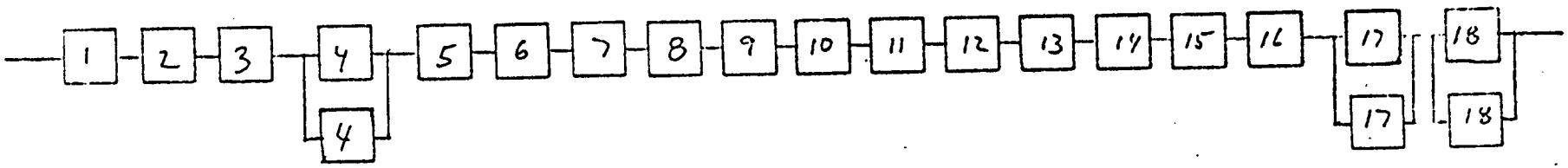

* FAILURE RATE SOURCE
1 - GRUMMAN SHUTTLE STUDY
2 - GRUMMAN LM PROGRAM
3 - MMC FAILURE DATA STUDY
4 - PRC FAILURE DATA STUDY
5 - VENDOR
6 - ESTIMATE

** REDUNDANCY CODE
E - EQUIPMENT
F - FUNCTIONAL
I - INTERNAL

GRUMMAN

TUG RELIABILITY SUMMARY

CONFIGURATION.... 510 ADE-3B
SUBSYSTEM.....AUX PROP

ITEM	EQUIPMENT NAME	S/S STG	LAMBDA	QTY	TIME	CODE	R0	R1
1	HELIUM TANK	APS-COR	0.1000E-05 2*	2	156.0	2	0.999688	
2	FUEL TANK	APS-COR	0.1000E-05 3	4	168.0	2	0.999328 **	
3	THRUSTERS (24)	APS-COR	0.2600E-05 6	1	1.0	2	0.999997 F	
4	REGULATOR &SOV ASSY	APS-COR	0.2000E-07 1,2	1	156.0	2	0.999997 F	
5	VENT VALVE-FUEL	APS-COR	0.1500E-04 1	1	156.0	4	0.997663 E	0.999995
6	QUAD CHECK VALVE	APS-COR	0.5000E-06 6	1	156.0	2	0.999922 I	
7	THRUSTER ISO VALVE A	APS-COR	0.1500E-04 1	1	168.0	4	0.997483 E	0.999994
8	THRUSTER ISO VALVE B	APS-COR	0.1500E-04 1	1	168.0	4	0.997483 E	0.999994
9	THRUSTER ISO VALVE C	APS-COR	0.1500E-04 1	1	168.0	4	0.997483 E	0.999994
10	THRUSTER ISO VALVE D	APS-COR	0.1500E-04 1	1	168.0	4	0.997483 E	0.999994
11	FUEL REL VAL & DISC	APS-COR	0.5000E-06 6	1	156.0	2	0.999922 F	

MISSION TIME.....168.0 HOURS
NUMBER OF REDUNDANT UNITS IS... 5
WEIGHT OF REDUNDANT UNITS IS... 8.0 POUNDS
RELIABILITY OF NON-REDUNDANT SYSTEM IS... 0.986526
SYSTEM RELIABILITY WITH SELECTED REDUNDANCY IS... 0.998824

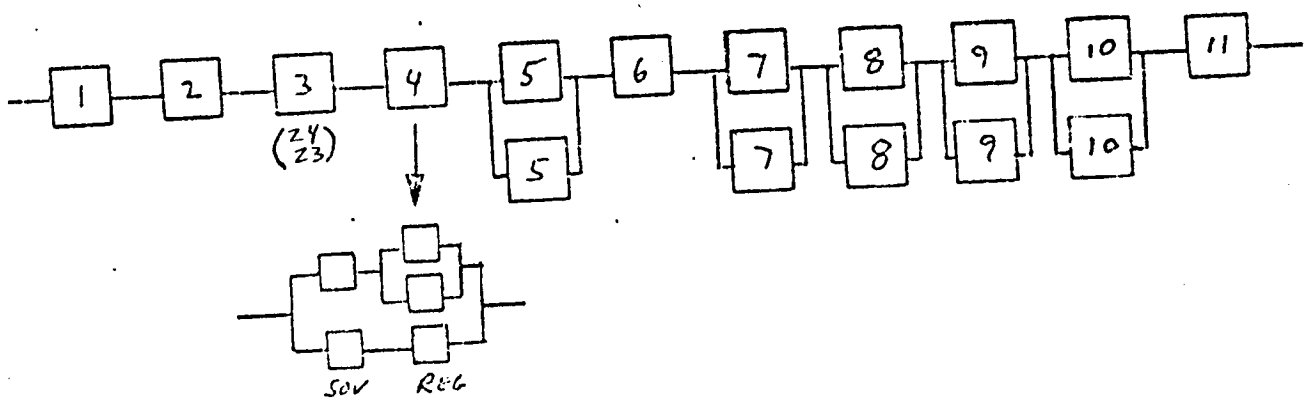

* FAILURE RATE SOURCE
1 - GRUMMAN SHUTTLE STUDY
2 - GRUMMAN LM PROGRAM
3 - MMC FAILURE DATA STUDY
4 - PRC FAILURE DATA STUDY
5 - VENDOR
6 - ESTIMATE

** REDUNDANCY CODE
F - EQUIPMENT
E - FUNCTIONAL
I - INTERNAL

GRUMMAN

TUG RELIABILITY SUMMARY

CONFIGURATION.... 510 ADE-3B
SUBSYSTEM.....GUID/NAV

ITEM	EQUIPMENT NAME	S/S STG	LAMBDA	QTY	TIME	CODE	R0	R1
1	I M U	GNC-COR	0.5000E-04 1 *	1	144.0	4	0.992826 E**	0.999949
2	STAR TRACKER	GNC-COR	0.6600E-04 4	1	72.0	0	0.995259	
3	APS ELECTRONICS	GNC-COR	0.2000E-04 1	1	144.0	3	0.997124 E	0.999996
4	MAIN ENGINE ELECTRONICS	GNC-COR	0.1000E-04 1	1	1.0	0	0.999990	
5	SYNC NAV SAT RECVR	GNC-COR	0.1700E-04 6	1	7.2	0	0.999878	
6	DOPPLER RECEIVER	GNC-COR	0.1700E-04 6	1	25.9	0	0.999559	
7	L-BAND ANTENNAS (4)	GNC-COR	0.1000E-05 6	1	168.0	2	0.999832	
8	COMBINER/DOPPLER DET	GNC-COR	0.1500E-04 6	1	21.6	0	0.999676	
9	LASER RADAR	GNC-COR	0.1000E-03 1	1	1.0	0	0.999900	

MISSION TIME... 168.0 HOURS
NUMBER OF REDUNDANT UNITS IS... 2
WEIGHT OF REDUNDANT UNITS IS.... 28.0 POUNDS
RELIABILITY OF NON-REDUNDANT SYSTEM IS... 0.984130
SYSTEM RELIABILITY WITH SELECTED REDUNDANCY IS... 0.994045

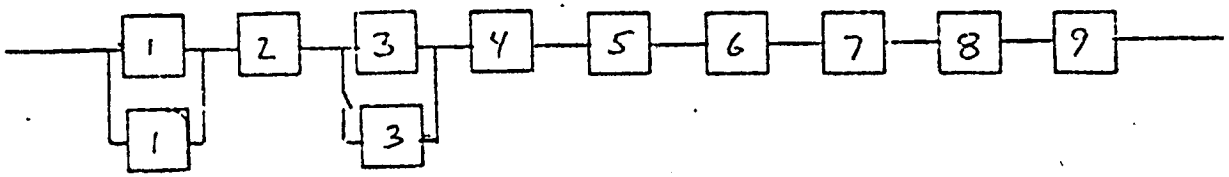

* FAILURE RATE SOURCE
1 - GRUMMAN SHUTTLE STUDY
2 - GRUMMAN LM PROGRAM
3 - MMC FAILURE DATA STUDY
4 - PRC FAILURE DATA STUDY
5 - VENDOR
6 - ESTIMATE

** REDUNDANCY CODE
E - EQUIPMENT
F - FUNCTIONAL
I - INTERNAL

GRUMMAN

TUG RELIABILITY SUMMARY

CONFIGURATION.... 510 ADE-3B
SUBSYSTEM.....COMMUNICATIONS

ITEM	EQUIPMENT NAME	S/S STG	LAMBDA	QTY	TIME	CODE	R0	R1
1	RECEIVER A DFS	COM-COR	0.1700E-04 1*	1	144.0	3	0.997555 E**	0.999997
2	RECEIVER B DFS	COM-COR	0.1700E-04 1	1	144.0	3	0.997555 E	0.999997
3	DIPLEXER (2)	COM-COR	0.1000E-05 6	1	144.0	2	0.999856	
4	OMNI ANTENNA-DFS (2)	COM-COR	0.1000E-05 3	1	144.0	2	0.999856	
5	ANTENNA SWITCH	COM-COR	0.1000E-05 6	1	144.0	2	0.999856	
6	TRANSMITTER W/TV DFS	COM-COR	0.1000E-05 1	1	72.0	0	0.999928 F	
7	AUX XMITTER-TV	COM-COR	0.3400E-04 1	1	1.0	0	0.999966	
8	POWER AMP-DFS W/TV	COM-COR	0.1000E-05 1	1	72.0	0	0.999928 F	
9	POWER AMP-TV	COM-COR	0.3000E-04 1	1	1.0	0	0.999970	
10	BASEBAND PROCESSOR W/CSS	COM-COR	0.1000E-05 6	1	144.0	1	0.999856 F	
11	POWER SPLITTER	COM-COR	0.5000E-06 6	1	144.0	2	0.999928	
12	GCTA (TV)	COM-COR	0.2000E-04 4	1	1.0	0	0.999980	

MISSION TIME... 168.0 HOURS
NUMBER OF REDUNDANT UNITS IS... 2
WEIGHT OF REDUNDANT UNITS IS... 8.0 POUNDS
RELIABILITY OF NON-REDUNDANT SYSTEM IS... 0.994244
SYSTEM RELIABILITY WITH SELECTED REDUNDANCY IS... 0.999118.

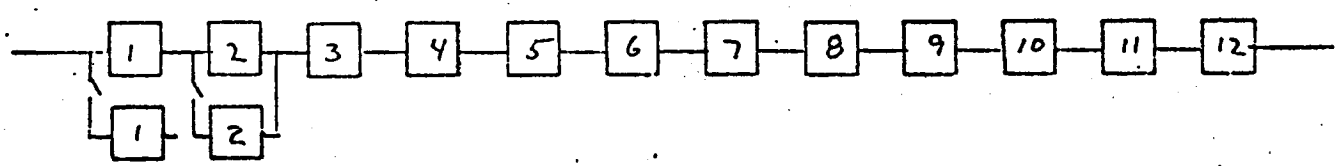

* FAILURE RATE SOURCE
1 - GRUMMAN SHUTTLE STUDY
2 - GRUMMAN LM PROGRAM
3 - MMC FAILURE DATA STUDY
4 - MMC FAILURE DATA STUDY
5 - VENDOR
6 - ESTIMATE

** REDUNDANCY CODE
E - EQUIPMENT
F - FUNCTIONAL
I - INTERNAL

GRUMMAN

TUG RELIABILITY SUMMARY

CONFIGURATION.... 510 ADE-3B
SUBSYSTEM.....DATA MGT

ITEM	EQUIPMENT NAME	S/S STG	LAMBDA	QTY	TIME	CODE	R0	R1
1	DAU/SIG COND A	DMT-COR	0.1000E-05 6*	1	144.0	1	0.999856 I**	
2	DAU/SIG COND B	DMT-COR	0.1000E-05 6	1	144.0	1	0.999856 I	
3	DAU/SIG COND C	DMT-COR	0.1000E-05 6	1	144.0	1	0.999856 I	
4	CENTRAL COMPUTER	DMT-COR	0.7100E-04 5	1	144.0	4	0.989828 E	0.999897
5	DATA BUS CONT/TM FORMAT	DMT-COR	0.1000E-05 6	1	144.0	1	0.999856 I	

MISSION TIME.... 168.0 HOURS
NUMBER OF REDUNDANT UNITS IS... 1
WEIGHT OF REDUNDANT UNITS IS... 15.0 POUNDS
RELIABILITY OF NON-REDUNDANT SYSTEM IS... 0.989258
SYSTEM RELIABILITY WITH SELECTED REDUNDANCY IS... 0.999321

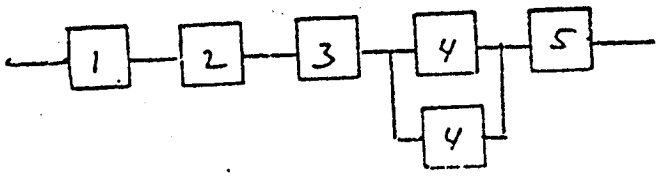

* FAILURE RATE SOURCE
1 - GRUMMAN SHUTTLE STUDY
2 - GRUMMAN LM PROGRAM
3 - MMC FAILURE DATA STUDY
4 - PRC FAILURE DATA STUDY
5 - VENDOR
6 - ESTIMATE

** REDUNDANCY CODE
E - EQUIPMENT
F - FUNCTIONAL
I - INTERNAL

GRUMMAN

TUG RELIABILITY SUMMARY

CONFIGURATION.... 510ADE-3B
SUBSYSTEM.....THERMAL

ITEM	EQUIPMENT NAME	S/S STG	LAMBDA	*	QTY	TIME	CODE	R0	R1
1	RADIATOR	THM-COR	0.5000E-05	1	1	144.0	1	0.999280	
2	ACCUMULATOR	THM-COR	0.4000E-05	3	1	144.0	1	0.999424	

MISSION TIME.... 168.0 HOURS
NUMBER OF REDUNDANT UNITS IS... 0
WEIGHT OF REDUNDANT UNITS IS... 0.0 POUNDS
RELIABILITY OF NON-REDUNDANT SYSTEM IS... 0.998705
SYSTEM RELIABILITY WITH SELECTED REDUNDANCY IS... 0.998705

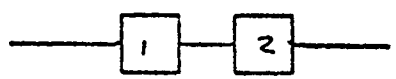

* FAILURE RATE SOURCE
1 - GRUMMAN SHUTTLE STUDY
2 - GRUMMAN LM PROGRAM
3 - MMC FAILURE DATA STUDY
4 - PRC FAILURE DATA STUDY
5 - VENDOR
6 - ESTIMATE

REDUNDANCY CODE
E - EQUIPMENT
F - FUNCTIONAL
I - INTERNAL

GRUMMAN

TUG RELIABILITY SUMMARY

CONFIGURATION.... 510ADE-3B
SUBSYSTEM.....POWER

ITEM	EQUIPMENT NAME	S/S STG	LAMBDA	QTY	TIME	CODE	R0	R1
1	FUEL CELL	PWR-COR	0.4000E-04 5*	1	144.0	0	0.994257	
2	BACK-UP BATTERY	PWR-COR	0.2000E-04 1	1	1.0	0	0.999980	
3	H2 TANK	PWR-COR	0.2000E-05 6	1	156.0	2	0.999688	
4	OX TANK	PWR-COR	0.2000E-05 6	1	156.0	2	0.999688	
5	POWER DISTRIBUTION	PWR-COR	0.2000E-05 6	1	168.0	2	0.999664	

MISSION TIME.... 168.0 HOURS
NUMBER OF REDUNDANT UNITS IS... 0
WEIGHT OF REDUNDANT UNITS IS... 0.0 POUNDS
RELIABILITY OF NON-REDUNDANT SYSTEM IS... 0.993283
SYSTEM RELIABILITY WITH SELECTED REDUNDANCY IS... 0.993283

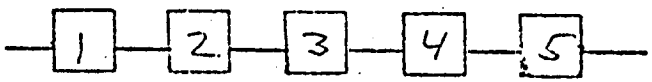

* FAILURE RATE SOURCE
1 - GRUMMAN SHUTTLE STUDY
2 - GRUMMAN LM PROGRAM
3 - MMC FAILURE DATA STUDY
4 - PRC FAILURE DATA STUDY
5 - VENDOR
6 - ESTIMATE

REDUNDANCY CODE
0 - EQUIPMENT
F - FUNCTIONAL
I - INTERNAL

GRUMMAN

TUG RELIABILITY SUMMARY

CONFIGURATION.... APOGEE KICK STAGE
SUBSYSTEM.....STRUCTURE

ITEM	EQUIPMENT NAME	S/S STG	LAMBDA *	QTY	TIME	CODE	R0	R1
1	STRUCTURE	STR-AKS	0.6000E-05 6	1	2.0	2	0.999988	

MISSION TIME... 2.0 HOURS
NUMBER OF REDUNDANT UNITS IS... 0
WEIGHT OF REDUNDANT UNITS IS... 0.0 POUNDS
RELIABILITY OF NON-REDUNDANT SYSTEM IS... 0.999988
SYSTEM RELIABILITY WITH SELECTED REDUNDANCY IS... 0.999988

* FAILURE RATE SOURCE
~~1 - GRUMMAN SHUTTLE STUDY~~
2 - GRUMMAN LM PROGRAM
3 - MMC FAILURE DATA STUDY
~~4 - PRC FAILURE DATA STUDY~~
5 - VENDOR
6 - ESTIMATE

REDUNDANCY CODE
E - EQUIPMENT
~~F - FUNCTIONAL~~
I - INTERNAL

GRUMMAN

TUG RELIABILITY SUMMARY

CONFIGURATION.... APOGEE KICK STAGE
SUBSYSTEM.....MAIN PROP

ITEM	EQUIPMENT NAME	S/S STG	LAMBDA	QTY	TIME	CODE	R0	R1
1	SRM	MPS-AKS	0.1000E-02*	4	1.0	2	0.999000	

MISSION TIME... 2.0 HOURS
NUMBER OF REDUNDANT UNITS IS... 0
WEIGHT OF REDUNDANT UNITS IS... 0.0 POUNDS
RELIABILITY OF NON-REDUNDANT SYSTEM IS... 0.999000
SYSTEM RELIABILITY WITH SELECTED REDUNDANCY IS... 0.999000

* FAILURE RATE SOURCE
1 - GRUMMAN SHUTTLE STUDY
2 - GRUMMAN LM PROGRAM
3 - MMC FAILURE DATA STUDY
4 - PRC FAILURE DATA STUDY
5 - VENDOR
6 - ESTIMATE

REDUNDANCY CODE
E - EQUIPMENT
F - FUNCTIONAL
I - INTERNAL

GRUMMAN

TUG RELIABILITY SUMMARY

CONFIGURATION.... APOGEE KICK STAGE
SUBSYSTEM.....AUX PROP

ITEM	EQUIPMENT NAME	S/S STG	LAMBDA	QTY	TIME	CODE	RO	R1
1	SOLENOID VALVE	APS-AKS	0.7500E-05 * 1	1	2.0	1	0.999985	
2	REGULATOR	APS-AKS	0.1500E-04 1	1	2.0	1	0.999970	
3	THRUSTER VALVES (12)	APS-AKS	0.3600E-04 4	1	2.0	1	0.999928	
4	TANK	APS-AKS	0.1000E-05 2	1	2.0	2	0.999998	

MISSION TIME... 2.0 HOURS
NUMBER OF REDUNDANT UNITS IS... 0
WEIGHT OF REDUNDANT UNITS IS... 0.0 POUNDS
RELIABILITY OF NON-REDUNDANT SYSTEM IS... 0.999881
SYSTEM RELIABILITY WITH SELECTED REDUNDANCY IS... 0.999881

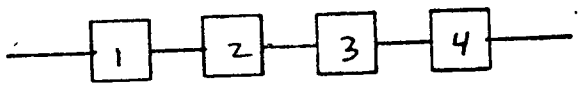

* FAILURE RATE SOURCE
1 - GRUMMAN SHUTTLE STUDY
2 - GRUMMAN LM PROGRAM
3 - MMC FAILURE DATA STUDY
4 - PRC FAILURE DATA STUDY
5 - VENDOR
6 - ESTIMATE

REDUNDANCY CODE
E - EQUIPMENT
F - FUNCTIONAL
I - INTERNAL

GRUMMAN

TUG RELIABILITY SUMMARY

CONFIGURATION.... APOGEE KICK STAGE
SUBSYSTEM.....GUID/NAV

ITEM	EQUIPMENT NAME	S/S STG	LAMBDA	QTY	TIME	CODE	R0	R1
1	ATTITUDE GYRO REF UNIT	GNC-AKS	0.1000E-04 * 1	1	2.0	1	0.999980	
2	VELOCITY METER	GNC-AKS	0.1000E-04 6	1	2.0	1	0.999980	
3	APS CONTROL ELECT	GNC-AKS	0.2000E-04 1	1	2.0	1	0.999960	
4	TIMER CONTROL RELAYS	GNC-AKS	0.1000E-04 6	1	2.0	1	0.999980	
5	SEQUENCER/PROGRAMMER	GNC-AKS	0.1500E-04 6	1	2.0	1	0.999970	

MISSION TIME.... 2.0 HOURS
NUMBER OF REDUNDANT UNITS IS... 0
WEIGHT OF REDUNDANT UNITS IS... 0.0 POUNDS
RELIABILITY OF NON-REDUNDANT SYSTEM IS... 0.999870
SYSTEM RELIABILITY WITH SELECTED REDUNDANCY IS... 0.999870

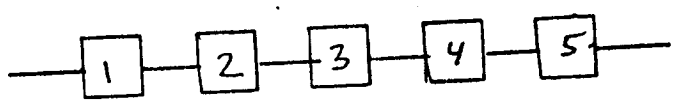

* FAILURE RATE SOURCE
1 - GRUMMAN SHUTTLE STUDY
2 - GRUMMAN LM PROGRAM
3 - MMC FAILURE DATA STUDY
4 - PRC FAILURE DATA STUDY
5 - VENDOR
6 - ESTIMATE

REDUNDANCY CODE
F - EQUIPMENT
F - FUNCTIONAL
I - INTERNAL

GRUMMAN

TUG RELIABILITY SUMMARY

CONFIGURATION.... APOGEE KICK STAGE
SUBSYSTEM.....POWER

ITEM	EQUIPMENT NAME	S/S STG	LAMBDA *	QTY	TIME	CODE	R0	R1
1	BATTERY	PWR-AKS	0.2000E-04 1	1	2.0	0	0.999960	
2	POWER DISTRIBUTION	PWR-AKS	0.1000E-05 6	1	2.0	2	0.999998	

MISSION TIME... 2.0 HOURS
NUMBER OF REDUNDANT UNITS IS... 0
WEIGHT OF REDUNDANT UNITS IS... 0.0 POUNDS
RELIABILITY OF NON-REDUNDANT SYSTEM IS... 0.999958
SYSTEM RELIABILITY WITH SELECTED REDUNDANCY IS... 0.999958

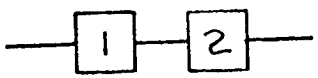

* FAILURE RATE SOURCE
1 - GRUMMAN SHUTTLE STUDY
2 - GRUMMAN LM PROGRAM
3 - MMC FAILURE DATA STUDY
4 - PRC FAILURE DATA STUDY
5 - VENDOR
6 - ESTIMATE

REDUNDANCY CODE
E - EQUIPMENT
F - FUNCTIONAL
I - INTERNAL

GRUMMAN

TUG RELIABILITY SUMMARY

CONFIGURATION....APOGEE/DEORBIT KICK
SUBSYSTEM.....STRUCTURE

ITEM	EQUIPMENT NAME	S/S STG	LAMBDA	QTY	TIME	CODE	RO	R1
1	STRUCTURE	STR-ADK	0.6000E-05 6*	1	117.0	2	0.999298	

MISSION TIME... 73.0 HOURS
NUMBER OF REDUNDANT UNITS IS... 0
WEIGHT OF REDUNDANT UNITS IS... 0.0 POUNDS
RELIABILITY OF NON-REDUNDANT SYSTEM IS... 0.999298
SYSTEM RELIABILITY WITH SELECTED REDUNDANCY IS... 0.999298

1

* FAILURE RATE SOURCE
~~1 - GRUMMAN SHUTTLE STUDY~~
2 - GRUMMAN LM PROGRAM
3 - MMC FAILURE DATA STUDY
~~4 - PRC FAILURE DATA STUDY~~
5 - VENDOR
6 - ESTIMATE

REDUNDANCY CODE
E - EQUIPMENT
~~F - FUNCTIONAL~~
I - INTERNAL

GRUMMAN

TUG RELIABILITY SUMMARY

CONFIGURATION....APOGEE/DEORBIT KICK
SUBSYSTEM.....MAIN PROP

ITEM	EQUIPMENT NAME	S/S STG	LAMBDA	QTY	TIME	CODE	RO	R1
1	SRM - A	MPS-ADK	0.1000E-02 * 6	4	1.0	2	0.999000	
2	SRM - D	MPS-ADK	0.2000E-02 6	2	1.0	2	0.998002	

MISSION TIME... 73.0 HOURS
NUMBER OF REDUNDANT UNITS IS... 0
WEIGHT OF REDUNDANT UNITS IS... 0.0 POUNDS
RELIABILITY OF NON-REDUNDANT SYSTEM IS... 0.997004
SYSTEM RELIABILITY WITH SELECTED REDUNDANCY IS... 0.997004

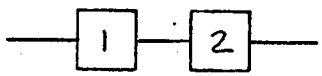

*FAILURE RATE SOURCE
~~1 - GRUMMAN SHUTTLE STUDY~~
2 - GRUMMAN LM PROGRAM
3 - MMC FAILURE DATA STUDY
~~4 - PRC FAILURE DATA STUDY~~
5 - VENDOR
6 - ESTIMATE

REDUNDANCY CODE
E - EQUIPMENT
F - FUNCTIONAL
I - INTERNAL

GRUMMAN

TUG RELIABILITY SUMMARY

CONFIGURATION....APOGEE/DEORBIT KICK
SUBSYSTEM.....AUX PROP

ITEM	EQUIPMENT NAME	S/S STG	LAMBDA	QTY	TIME	CODE	R0	R1
1	TANK-APOGEE	APS-ADK	0.2000E-05 2 *	1	1.0	2	0.999998 **	
2	TANK-DEORBIT	APS-ADK	0.1000E-05 2	2	117.0	2	0.999766	
3	THRUSTER VALVES (12)	APS-ADK	0.3600E-04 4	1	119.0	0	0.995725	
4	SOLENOID VALVE	APS-ADK	0.7500E-05 1	1	119.0	1	0.999108	
5	REGULATOR	APS-ADK	0.1500E-04 1	1	119.0	4	0.998217 E	0.999997
6	SOLIR NC & FILTER D	APS-ADK	0.1000E-05 6	1	117.0	1	0.999883	

MISSION TIME... 73.0 HOURS
NUMBER OF REDUNDANT UNITS IS... 1
WEIGHT OF REDUNDANT UNITS IS... 2.0 POUNDS
RELIABILITY OF NON-REDUNDANT SYSTEM IS... 0.992712
SYSTEM RELIABILITY WITH SELECTED REDUNDANCY IS... 0.994482

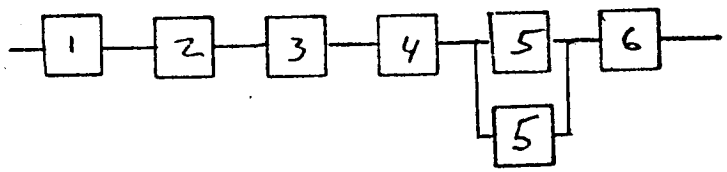

* FAILURE RATE SOURCE
~~1 - GRUMMAN SHUTTLE STUDY~~
2 - GRUMMAN LM PROGRAM
3 - MMC FAILURE DATA STUDY
~~4 - PRC FAILURE DATA STUDY~~
5 - VENDOR
6 - ESTIMATE

* REDUNDANCY CODE
E - EQUIPMENT
~~F - FUNCTIONAL~~
I - INTERNAL

GRUMMAN

196

TUG RELIABILITY SUMMARY

CONFIGURATION....APOGEE/DEORBIT KICK
SUBSYSTEM.....GUID/NAV

ITEM	EQUIPMENT NAME	S/S STG	LAMBDA	QTY.	TIME	CODE	R0	R1
1	STAR TRACKER	GNC-ADK	0.6600E-04 4*	1	80.5	4	0.994701 E**	0.999972
2	ATTITUDE GYRO REF UNIT	GNC-ADK	0.1000E-04 1	1	117.0	4	0.998831 E	0.999999
3	VELOCITY METER	GNC-ADK	0.1000E-04 6	1	117.0	1	0.998831	
4	APS CONTROL ELECT	GNC-ADK	0.2000E-04 1	1	117.0	4	0.997663 E	0.999995
5	TIMER CONTROL RELAYS	GNC-ADK	0.1000E-04 6	1	117.0	1	0.998831	
6	SEQUENCER/PROGRAMMER	GNC-ADK	0.1500E-04 6	1	117.0	4	0.998247 E	0.999997

MISSION TIME... 73.0 HOURS
NUMBER OF REDUNDANT UNITS IS... 4
WEIGHT OF REDUNDANT UNITS IS... 40.0 POUNDS
RELIABILITY OF NON-REDUNDANT SYSTEM IS... 0.987165
SYSTEM RELIABILITY WITH SELECTED REDUNDANCY IS... 0.997625

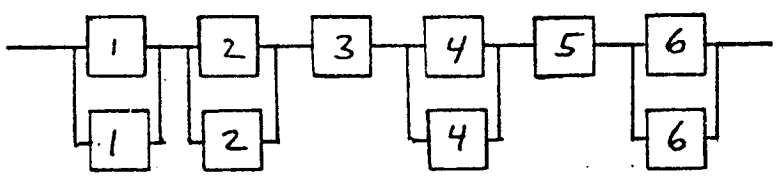

* FAILURE RATE SOURCE
1 - GRUMMAN SHUTTLE STUDY
2 - GRUMMAN LM PROGRAM
3 - MMC FAILURE DATA STUDY
4 - PRC FAILURE DATA STUDY
5 - VENDOR
6 - ESTIMATE

** REDUNDANCY CODE
E - EQUIPMENT
F - FUNCTIONAL
I - INTERNAL

GRUMMAN

TUG RELIABILITY SUMMARY

CONFIGURATION....APOGEE/DEORBIT KICK
SUBSYSTEM.....COMMUNICATIONS

ITEM	EQUIPMENT NAME	S/S STG	LAMBDA *	QTY	TIME	CODE	RO	R1
1	RECEIVER A DFS (5)	COM-ADK	0.1032E-02 1	1	1.0	2	0.998969 (R5) ***	
2	RECEIVER B DFS (5)	COM-ADK	0.1032E-02 1	1	1.0	2	0.998969 (R5) ***	
3	TRANSMITTER DFS	COM-ADK	0.1700E-04 1	1	36.5	0	0.999380	
4	POWER AMP-DFS	COM-ADK	0.1500E-04 1	1	36.5	0	0.999453 **	
5	BASE PROCESSOR (RED)	COM-ADK	0.1000E-06 6	1	43800.0	3	0.995630 E	0.999990
6	DIPLEXER (2)	COM-ADK	0.1000E-05 6	1	43800.0	3	0.957145 E	0.999068
7	OMNI ANTENNA-DFS (2)	COM-ADK	0.1000E-05 3	1	43800.0	3	0.957145 E	0.999068
8	ANTENNA SWITCH	COM-ADK	0.1000E-05 6	1	73.0	2	0.999927	

MISSION TIME.... 73.0 HOURS
NUMBER OF REDUNDANT UNITS IS... 3
WEIGHT OF REDUNDANT UNITS IS... 6.0 POUNDS
RELIABILITY OF NON-REDUNDANT SYSTEM IS... 0.909114
SYSTEM RELIABILITY WITH SELECTED REDUNDANCY IS... 0.994834

***R_0 = 0.47924

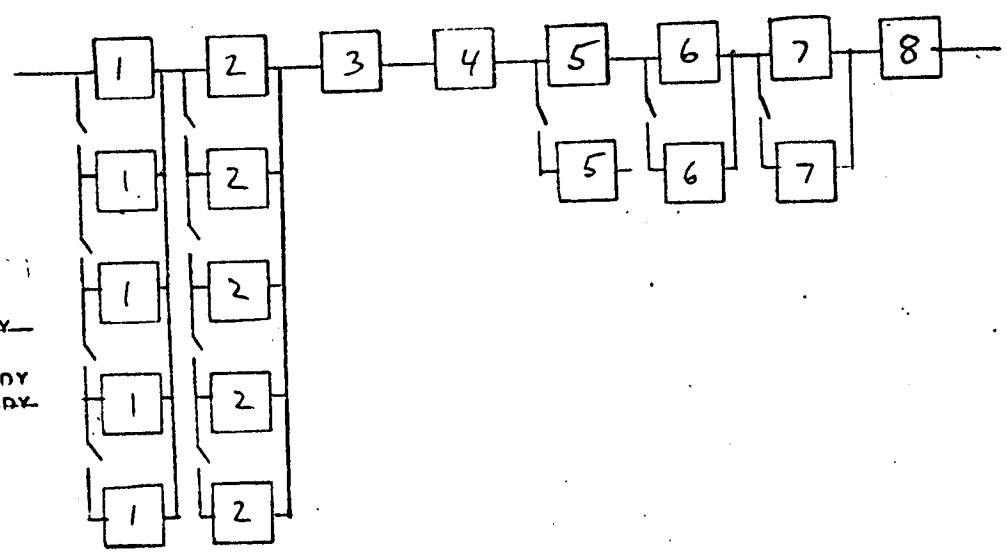

* FAILURE RATE SOURCE
~~1 - GRUMMAN SHUTTLE STUDY~~
2 - GRUMMAN LM PROGRAM
3 - MMC FAILURE DATA STUDY
~~4 - PRC FAILURE DATA STUDY~~
5 - VENDOR
6 - ESTIMATE

** REDUNDANCY CODE
E - EQUIPMENT
~~F - FUNCTIONAL~~
I - INTERNAL

GRUMMAN

TUG RELIABILITY SUMMARY

CONFIGURATION....APOGEE/DEORBIT KICK
SUBSYSTEM.....DATA MGT

ITEM	EQUIPMENT NAME	S/S STG	LAMBDA	QTY	TIME	CODE	R0	R1
1	SIGNAL COND/PCM	DMT-ADK	0.2000E-04 * 6	1	117.0	4	0.997663	0.999995

MISSION TIME... 73.0 HOURS
NUMBER OF REDUNDANT UNITS IS... 1
WEIGHT OF REDUNDANT UNITS IS... 5.0 POUNDS
RELIABILITY OF NON-REDUNDANT SYSTEM IS... 0.997663
SYSTEM RELIABILITY WITH SELECTED REDUNDANCY IS... 0.999995

* FAILURE RATE SOURCE
~~1 - GRUMMAN SHUTTLE STUDY~~
2 - GRUMMAN LM PROGRAM
3 - MMC FAILURE DATA STUDY
~~4 - PRC FAILURE DATA STUDY~~
5 - VENDOR
6 - ESTIMATE

REDUNDANCY CODE
E - EQUIPMENT
~~F - FUNCTIONAL~~
I - INTERNAL

GRUMMAN

TUG RELIABILITY SUMMARY

CONFIGURATION....APOGEE/DEORBIT KICK
SUBSYSTEM.....POWER

ITEM	EQUIPMENT NAME	S/S STG	LAMBDA	QTY	TIME	CODE	R0	R1
1	BATTERY(REM ACT)	PWR-ADK	0.3300E-04 * 1	1	72.0	0 *	0.997627	
2	BATTERY	PWR-ADK	0.2000E-04 1	1	73.0	0	0.998541	
3	SOLAR ARRAY	PWR-ADK	0.1000E-07 6	1	43800.0	1 F	0.999562	
4	POWER DISTRIBUTION	PWR-ADK	0.1000E-05 6	1	73.0	2	0.999927	

MISSION TIME... 73.0 HOURS
NUMBER OF REDUNDANT UNITS IS... 0
WEIGHT OF REDUNDANT UNITS IS... 0.0 POUNDS
RELIABILITY OF NON-REDUNDANT SYSTEM IS... 0.995662
SYSTEM RELIABILITY WITH SELECTED REDUNDANCY IS... 0.995662

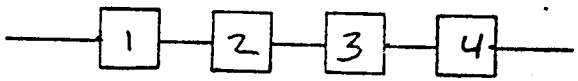

* FAILURE RATE SOURCE
1 - GRUMMAN SHUTTLE STUDY
2 - GRUMMAN LM PROGRAM
3 - MMC FAILURE DATA STUDY
4 - PRC FAILURE DATA STUDY
5 - VENDOR
6 - ESTIMATE

REDUNDANCY CODE
F - EQUIPMENT
F - FUNCTIONAL
I - INTERNAL

GRUMMAN

TUG RELIABILITY SUMMARY

CONFIGURATION.... RETRIEVE DELAY MOD
SUBSYSTEM.....STRUCTURE

ITEM	EQUIPMENT NAME	S/S STG	LAMBDA	QTY	TIME	CODE	R0	R1
1	STRUCTURE	STR-RDM	0.1000E-05 * 6	1	336.0	2	0.999664	

MISSION TIME... 336.0 HOURS
NUMBER OF REDUNDANT UNITS IS... 0
WEIGHT OF REDUNDANT UNITS IS... 0.0 POUNDS
RELIABILITY OF NON-REDUNDANT SYSTEM IS... 0.999664
SYSTEM RELIABILITY WITH SELECTED REDUNDANCY IS... 0.999664

* FAILURE RATE SOURCE
1 - GRUMMAN SHUTTLE STUDY
2 - GRUMMAN LM PROGRAM
3 - MMC FAILURE DATA STUDY
4 - PRC FAILURE DATA STUDY
5 - VENDOR
6 - ESTIMATE

REDUNDANCY CODE
E - EQUIPMENT
F - FUNCTIONAL
I - INTERNAL

GRUMMAN

TUG RELIABILITY SUMMARY

CONFIGURATION.... RETRIEVE DELAY MOD
SUBSYSTEM.....AUX PROP

ITEM	EQUIPMENT NAME	S/S STG	LAMBDA	QTY	TIME	CODE	R0	R1
1	THRUSTER VALVES (12)	APS-RDM	0.3600E-04 4*	1	336.0	3	0.987977 E**	0.999927
2	TANK	APS-RDM	0.1000E-05 2	1	336.0	2	0.999664	
3	REGULATOR	APS-RDM	0.1500E-04 1	1	336.0	4	0.994973 E	0.999975
4	SOLENOID VALVE	APS-RDM	0.7500E-05 1	1	336.0	1	0.997483	

MISSION TIME... 336.0 HOURS
NUMBER OF REDUNDANT UNITS IS... 2
WEIGHT OF REDUNDANT UNITS IS... 11.0 POUNDS
RELIABILITY OF NON-REDUNDANT SYSTEM IS... 0.980206
SYSTEM RELIABILITY WITH SELECTED REDUNDANCY IS... 0.997050

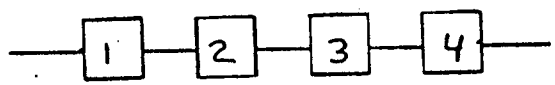

* FAILURE RATE SOURCE
~~1 - GRUMMAN SHUTTLE STUDY~~
2 - GRUMMAN LM PROGRAM
3 - MMC FAILURE DATA STUDY
~~4 - PRC FAILURE DATA STUDY~~
5 - VENDOR
6 - ESTIMATE

** REDUNDANCY CODE
E - EQUIPMENT
~~F - FUNCTIONAL~~
I - INTERNAL

GRUMMAN

TUG RELIABILITY SUMMARY

CONFIGURATION.... RETRIEVE DELAY MOD
SUBSYSTEM.....GUID/NAV

ITEM	EQUIPMENT NAME	S/S STG	LAMBDA *	QTY	TIME	CODE	RO **	R1
1	ATTITUDE GYRO REF UNIT	GNC-RDM	0.1000E-04 1	1	336.0	1	0.996646	
2	APS CONTROL ELECT	GNC-RDM	0.2000E-04 1	1	336.0	4	0.993303 E	0.999955
3	TIMER CONTROL RELAYS	GNC-RDM	0.1000E-04 6	1	336.0	4	0.996646 E	0.999989

MISSION TIME... 336.0 HOURS
NUMBER OF REDUNDANT UNITS IS... 2
WEIGHT OF REDUNDANT UNITS IS... 11.0 POUNDS
RELIABILITY OF NON-REDUNDANT SYSTEM IS... 0.986650
SYSTEM RELIABILITY WITH SELECTED REDUNDANCY IS... 0.996590

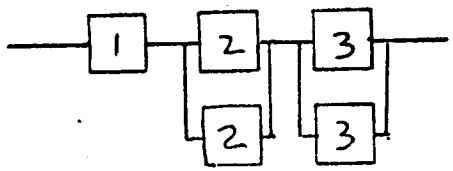

* FAILURE RATE SOURCE
1 - GRUMMAN SHUTTLE STUDY
2 - GRUMMAN LM PROGRAM
3 - MMC FAILURE DATA STUDY
4 - PRC FAILURE DATA STUDY
5 - VENDOR
6 - ESTIMATE

** REDUNDANCY CODE
E - EQUIPMENT
F - FUNCTIONAL
I - INTERNAL

GRUMMAN

TUG RELIABILITY SUMMARY

CONFIGURATION.... RETRIEVE DELAY MOD
SUBSYSTEM.....COMMUNICATIONS

ITEM	EQUIPMENT NAME	S/S STG	LAMBDA *	QTY	TIME	CODE	RO **	R1
1	RECEIVER A DFS	COM-RDM	0.1700E-04 1	1	336.0	3	0.994304 E	0.999984
2	RECEIVER B DFS	COM-RDM	0.1700E-04 1	1	336.0	3	0.994304 E	0.999984
3	TRANSMITTER DFS	COM-RDM	0.1700E-04 1	1	168.0	0	0.997148	
4	POWER AMP-DFS	COM-RDM	0.1500E-04 1	1	168.0	3	0.997483 E	0.999997
5	DIPLEXER (2)	COM-RDM	0.1000E-05 6	1	336.0	2	0.999664	
6	OMNI ANTENNA-DFS (2)	COM-RDM	0.1000E-05 3	1	336.0	2	0.999664	
7	ANTENNA SWITCH	COM-RDM	0.1000E-05 6	1	336.0	2	0.999664	
8	BASE PROCESSOR (RED)	COM-RDM	0.1000E-06 6	1	336.0	1	0.999966 I	

MISSION TIME... 336.0 HOURS
NUMBER OF REDUNDANT UNITS IS... 3
WEIGHT OF REDUNDANT UNITS IS... 9.0 POUNDS
RELIABILITY OF NON-REDUNDANT SYSTEM IS... 0.982316
SYSTEM RELIABILITY WITH SELECTED REDUNDANCY IS... 0.996074

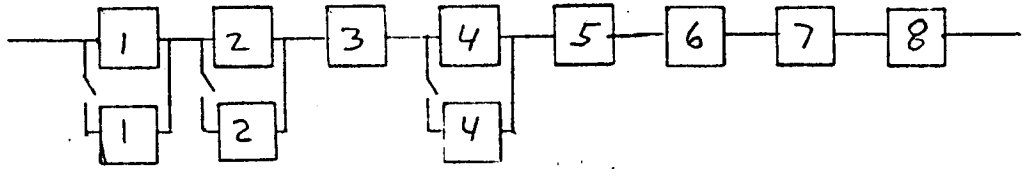

* FAILURE RATE SOURCE
1 - GRUMMAN SHUTTLE STUDY
2 - GRUMMAN LM PROGRAM
3 - MMC FAILURE DATA STUDY
4 - PRC FAILURE DATA STUDY
5 - VENDOR
6 - ESTIMATE

** REDUNDANCY CODE
E - EQUIPMENT
F - FUNCTIONAL
I - INTERNAL

GRUMMAN

TUG RELIABILITY SUMMARY

CONFIGURATION.... RETRIEVE DELAY MOD
SUBSYSTEM.....DATA MGT

ITEM	EQUIPMENT NAME	S/S STG	LAMBDA *	QTY	TIME	CODE	R0	**	R1
1	SIGNAL COND/PCM	DMT-RDM	0.2000E-04 6	1	336.0	4	0.993303	E	0.999955

MISSION TIME... 336.0 HOURS
NUMBER OF REDUNDANT UNITS IS... 1
WEIGHT OF REDUNDANT UNITS IS... 5.0 POUNDS
RELIABILITY OF NON-REDUNDANT SYSTEM IS... 0.993303
SYSTEM RELIABILITY WITH SELECTED REDUNDANCY IS... 0.999955

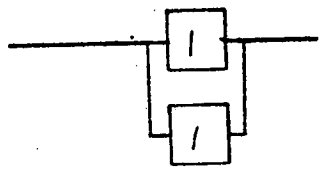

* FAILURE RATE SOURCE
~~1 - GRUMMAN SHUTTLE STUDY~~
2 - GRUMMAN LM PROGRAM
3 - MMC FAILURE DATA STUDY
~~4 - PRC FAILURE DATA STUDY~~
5 - VENDOR
6 - ESTIMATE

** REDUNDANCY CODE
E - EQUIPMENT
~~F - FUNCTIONAL~~
I - INTERNAL

GRUMMAN

TUG RELIABILITY SUMMARY

CONFIGURATION.... RETRIEVE DELAY MOD
SUBSYSTEM.....POWER

ITEM	EQUIPMENT NAME	S/S STG	LAMBDA	QTY	TIME	CODE	RO	R1
1	BATTERY	PWR-RDM	0.2000E-04 * 1	1	336.0	2	0.993303	
2	POWER DISTRUBUTION	PWR-RDM	0.1000E-05 6	1	336.0	2	0.999664	

MISSION TIME... 336.0 HOURS
NUMBER OF REDUNDANT UNITS IS... 0
WEIGHT OF REDUNDANT UNITS IS... 0.0 POUNDS
RELIABILITY OF NON-REDUNDANT SYSTEM IS... 0.992969
SYSTEM RELIABILITY WITH SELECTED REDUNDANCY IS... 0.992969

* FAILURE RATE SOURCE
1 - GRUMMAN SHUTTLE STUDY
2 - GRUMMAN LM PROGRAM
3 - MMC FAILURE DATA STUDY
4 - PRC FAILURE DATA STUDY
5 - VENDOR
6 - ESTIMATE

REDUNDANCY CODE
E - EQUIPMENT
F - FUNCTIONAL
I - INTERNAL

GRUMMAN

IV SAFETY ASSESSMENT OF GROUND OPERATIONS

TASK DESCRIPTIONS AND MAN LOADING

STORABLE SPACE TUG

Manloading for Ground Operations to Level III Funtional Tasks

In assessing and allocating manpower for the ground turnaround functions, no attempt was made to optimize manpower; rather the crew was sized to minimize calendar time for the turnaround operations. While this approach desensitizes the Tug concepts to the Traffic Model, it does emphasize the operational complexity, of the various options by the deltas in manpower.

The first section takes the basic Tug, and briefly describes the functional tasks to Level III. Following this, the AGE/GSE required for these functions and the manpower, by discipline, is defined. Similarly, the Auxiliary Stages are handled in Appendices to the basic functional requirements; therefore for configuration 110 & 310 only the basic volume is required for configuration 110A & 510A use basic plus appendix D 115 use basic plus appendix E. 210N, 310NE, 610N & 710N use basic plus appendix B, 215N & 715N basic plus appendices E &B, 410C & 610CE basic plus appendix A 410AD & 510ADE basic plus appendix C, and finally 415AN basic plus B, D & E.

Safety has been folded into these operational sequences. To highlight Safety critical or sensitive operations, individual steps have been asterixed. Hazard Analysis Reports have been generated to show the safety critical or catastrophic hazards and how they were resolved.

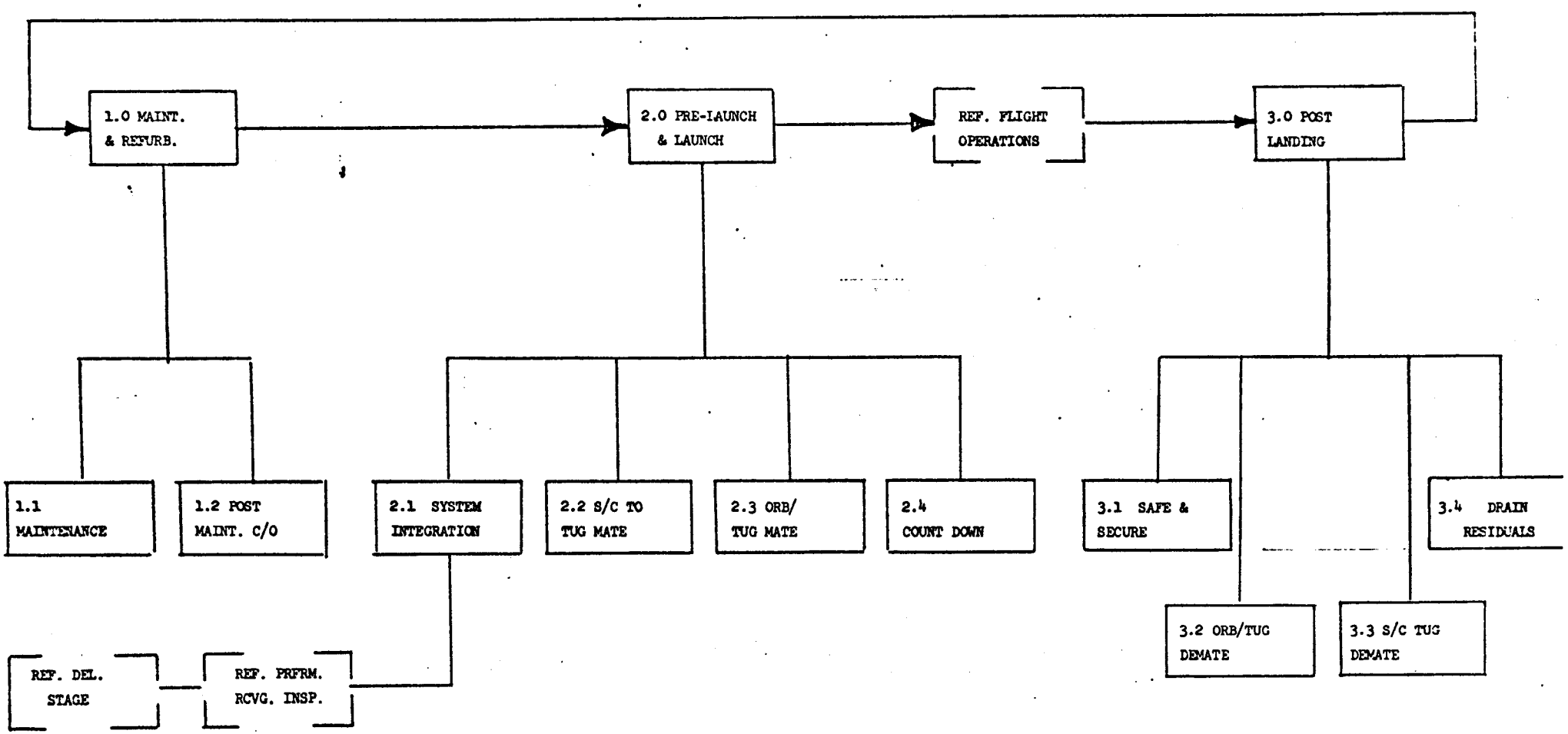

FUNCTIONAL FLOW STORABLE TUG

3.0 Post Landing Operations * Safety Significant/Critical

3.1 Safe and Secure : Assumes time criticality of vehicle is known at landing.

* 3.1.1 Emplace Tug Transporter/Mobilizer for Tug/Transporter mate. Connect all ground interface AGE/GSE.

* 3.1.1.1 Connect fuel drain and vent AGE/GSE lines.

* 3.1.1.2 Connect oxidizer drain and vent AGE/GSE lines.

* 3.1.1.3 Connect fuel cell oxygen fill and vent AGE/GSE lines.

* 3.1.1.4 Connect fuel cell hydrogen fill and vent AGE/GSE lines.

* 3.1.1.5 Connect pressurant AGE/GSE line.

3.1.2 Vent pressurants

3.1.2.1 Vent MPS pressurant to pad pressure.

3.1.2.2 Vent APS pressurant to pad pressure.

3.1.3 Purge Reactants

* 3.1.3.1 Purge fuel cell hydrogen system with GHe to safe level. Apply pad pressure.

* 3.1.3.2 Purge fuel cell oxygen system with GHe Apply pad pressure.

3.1.4 Verify Power-off

3.1.4.1 Verify Tug power systems off. Verify Orb./Tug power off.

* 3.1.4.2 Verify Tug circuit breaker out.

3.1.4.3 Verify cargo bay atmosphere is acceptable.

3.2 Orbiter/Tug Demate

3.2.1 Connect hoisting AGE/GSE

3.2.1.1 Verify Orbiter cargo bay doors open and secure.

3.2.1.1 Verify hoisting equipment (including Auxiliary Crane Control) ready.

3.2.1.2 Connect hoist fittings to Tug hoist points

3.2.2 Release Interface Connections

* 3.2.2.1 Release fuel fill and vent Q.Ds

* 3.2.2.2 Release oxidizer fill and vent QDs

3.0 Post Landing Operations (continued)

* 3.2.2.3 Release fuel cell oxygen fill and vent QDs

* 3.2.2.4 Release fuel cell hydrogen fill and vent QDs

3.2.2.5 Disconnect EPS electrical connector

* 3.2.2.6 Verify proper load on hoisting sling. (read TBD pounds on Aux. Crane Control).

3.2.2.7 Release Structural ties between Orb/Tug

3.2.2 Hoist Tug/SC clear of Cargo bay.

3.2.2.1 Move Tug/SC up to clear mechanical/structural attachments using Aux. Crane Control.

3.2.2.2 Hoist Tug/SC clear of cargo bay using crane "inching" control.

3.2.2.3 Hoist clear of orbiter

3.2.3 Position Tug/SC to mate Transporter/Mobilizer

3.2.3.1 Transfer facility crane to position Tug/SC at mate position.

3.2.3.2 Lower Tug/SC to within two (2.0) inches of mate points.

3.2.3.3 Using Aux. Crane Control lower to mate points

3.2.4 Mate to Transporter and Verify

3.2.4.1 Verify proper Tug/SC Transporter alignment

3.2.4.2 Make mechanical/structural attachment

3.2.4.3 Mate temp. Maintenance Unit (TMU) to Tug AGE/GSE connector.

3.2.5 Emplace protective caps

3.2.5.1 Emplace main engine cover

3.2.5.2 Cap all APS thrusters

3.2.5.3 Emplace protective cover over the Star Tracker.

3.0 Post Landing Operations (continued)

3.3 S/C Tug Demate (retrieve missions only)

S/C responsibility)3.3.1 Position S/C Transporter

3.3.2 Attach Removal AGE/GSE

3.3.3 Release Tug/SC at interface

3.3.3.1 Release Tug/SC mechanical attachment

3.3.3.2 Verify TBD interface connection clear

3.3.4 Demate Tug/SC

3.3.4.1 Translate SC clear of Tug

3.3.5 Install S/C cover

3.3.6 Verify ready to transport S/C

3.3.7 Transport to S/C facility

Note: For DOD missions, area will be secured to cleared personnel only.

3.4 Drain Residuals: OPTION EXISTS FOR HOROZONTAL OR VERTICAL DRAIN OF VEHICLE

3.4.1 Verticalize Tug

3.4.1.1 Configure AGE/GSE for rotation

3.4.1.2 Verify ready to rotate

3.4.1.3 Rotate to vertical

3.4.2 Connect AGE/GSE lines

* 3.4.2.1 Connect fuel drain and pressure lines

Note: If flight data indicates out of tolerance conditions, system must be purged to allow entry.

* 3.4.2.2 Connect oxidizer drain and pressure lines

* 3.4.2.3 Connect injector purge line (fuel)

* 3.4.2.4 Connect injector purge line (oxidizer)

* 3.4.2.5 Pressurize oxidizer tank to (TBD) PSI

* 3.4.2.6 Pressurize fuel tank to (TBD) PSI

3.0 Post Landing Operations (continued)

* 3.4.2.7 Drain residual fuel

* 3.4.2.8 Drain residual oxidizer

* 3.4.2.9 Purge injector (fuel side) with hot GN_2

* 3.4.2.10 Purge injector (oxidizer side) with hot GN_2

3.2.2.11 Disconnect and stow all AGE/GSE lines.

3.4.3 Prepare to move to Tug Maintenance and Checkout Facility (TMCF)

3.4.3.1 Verify ready to rotate

3.4.3.2 Rotate to horizontal

3.4.3.3 Engage horizontal lock.

3.4.3.4 Verify pad pressure on tanks through the Pressure Maintenance Unit (PMU)

3.4.4 Move to TMCF

3.4.4.1 Connect tow vehicle

3.4.4.2 Move to TMCF

1.0 Maintenance and Checkout

1.1 Maintenance

1.1.1 Mechanical and Structural: emplace all work stands and and access platforms. Connect all facility vent lines.

1.1.1.1 Remove all access panels and covers.

1.1.1.2 Visually inspect all available areas of the fuel tank; check inspection tapes for indication of leakage.

1.1.1.3 Visually inspect all available areas of the oxidizer tank; check inspection tapes for indication of leakage.

Note: Further investigation may indicate the neccessity of removing all meteoriod shielding for a complete inspection of the tanks

1.1.1.4 Inspect the forward skirt for indications of structural damage.

1.1.1.5 Inspect aft skirt for indications of structural damage

1.1.1.6 Inspect docking mechanism for indications of binding.

1.1.1.7 Visually inspect all accessible body structure for indications of structural damage.

1.1.1.8 Visually inspect all meteoroid shielding for evidence of penetration or other damage.

1.1.1.9 Replace all access panels and covers.

1.1 Maintenance (continued)

1.1.2 Main Propulsion: connect AGE/GSE and verify: Examine flight data for indication of failure or system degradation.

1.1.2.1 Visually inspect engine nozzle and injector.

1.1.2.2 Perform engine pump torque checks.

1.1.2.3 Perform engine systems functional check

1.1.2.4 Inspect engine feed system for evidence of leaks. (detection tape)

1.1.3 Auxilliary Propulsion: examine flight data for indication of failure or system degradation connect AGE/GSE and verify.

1.1.3.1 Visually inspect engine thrust chambers.

1.1.3.2 Perform system functional checks.

1.1.3.3 Inspect feed system for signs of leaks. (detection tape)

1.1.4 Electrical Power Subsystem Examine flight data for evidence of failure or degradation.

1.1.4.1 Verify indication of failure or degradation. Fuel cell will be removed for level II maintenance after five missions.

1.1.4.2 Verify from flight data condition of reactants system. Re-evacuate if required.

1.1.4.3 Remove and replace battery after each mission.

1.1.5 Guidance Navigation and Control: Examine flight data for evidence of failure or system degradation. Verify proper sub-routine in mini-computer.

1.1.5.1 Verify failed or degraded IMU if verified remove and replace.

1.1.5.2 Verify failed or degraded Star Tracker using star simulator; if verified remove and replace. Clean lens, replace lens cover.

1.1.5.3 Verify failed or degraded laser Radar using Target simulator; if verified remove and replace. Boresight Radar every TBD mission.

1.1.5.4 Verify failed or degraded APS electronics; if verified remove and replace.

1.1.6 Communications System; Examine flight data for evidence of failure or system degradation. Emplace antenna hats. Verify proper sub-routine in mini-computer.

1.1.6.1 Verify failed or degraded Transceiver; if verified remove and replace. Verify redundant paths.

1.1.6.2 Verify failed or degraded Power Amplifier; if verified remove and replace.

1.1.6.3 Verify failed or degraded Signal Processor; if verified remove and replace.

1.1.6.4 Visually inspect Diplexer for evidence of damage if damage exists remove and replace unit.

1.1.6.5 Visually inspect the Antennas for evidence of damage.

1.1.7 Data Management and OFI: Examine flight data for evidence of failure or system degradation. Verify proper sub-routine in mini-computer.

1.1.7.1 Verify failure or system degradation of the computer; if verified remove and replace.

1.1.7.2 Verify failure or system degradation of the Data Bus Control; if verified remove and replace.

1.1.7.3 Verify failure or system degradation of the Tape Recorder; if verified remove and replace. Nominally remove for tape change after TBD mission.

1.1.7.4 Verify failure or system degradation of the DACU; if verified remove an replace.

1.1.7.5 Verify failure or system degradation of the OFI sensors. Remove and replace as required if verified.

1.2 Post Maintenance Checkout

1.2.1 Guidance Navigation and Control. Verify completion of all Maintenance activities. Verify proper sub-routine in mini-computer. Apply ground power through AGE/GSE connector.

*1.2.1.1 Verify ability to power up IMU. Switch from TMU to vehicle temperature control - verify the following over temp. discretes "off" verify operations using earth g and ω Compare IMU 1 to IMU 2.

1.2.1.2 Remove Star Tracker lens cover activate, verify lens closed verify self check fail discretes "off" emplace star simulator, verify operation, close shutter and deactivate, replace cover.

1.2.1.3 Emplace Laser Radar target simulator, activate radar verify fail discretes "off" verify outputs from laser feedback, deactivate, remove target.

1.2.1.4 Apply 5 volts to APS drivers - perform logic check and opposing jet logic, secure.

1.2.2 Communications System Verify completion of all maintenance actions. Verify proper sub-routine in mini-computer, Activate Communication System.

1.2.2.1 Verify RF power level and frequency; verify receiver sensitivity; verify up link commands. Verify down link. Secure for check.

1.2.3 Data Management and OFI System: Verify all maintenance actions complete. Verify proper sub-routine in mini-computer.

1.2.3.1 Verify computer on; Auto check DMS; sum and parity noise check; dump previous mission software: load on-coming software and verify.

1.2.3.2 Activate DACU BIT. self test the following each DACU Tape recorder FSI control. obtain ambient readout of all measurements. Secure.

2.0 Prelaunch and Launch

2.1 System Integration: Verify all post maintenance checkouts are complete; verify LPS ready to support; verify proper routine called up.

2.1.1 Combined Systems Test.

2.1.1.1 Power up Tug systems

2.1.1.2 Perform prelaunch checks.

2.1.1.3 Perform passive phase checks

2.1.1.4 Perform in orbit activation

2.1.1.5 Simulate deploy and separation.

2.1.1.6 Perform mission simulation; verify primary and redundant paths (ambient check)

2.1.1.7 Simulate S/C separation. Verify comm link between auxiliary stage and Tug.

2.1.1.8 Simulate rendezvous and docking deactivate Tug systems.

2.1.1.9 Power down and secure from test.

2.1.1.10 Prep Tug for move to service area.

2.1.2 Prep for Load.

2.1.2.1 Move to service area

2.1.2.2 Configure transporter for rotation.

2.1.2.3 Attach rotating AGE/GSE to Tug. Verify TBD pounds Aux. Crane Control.

2.1.2.4 Verify forward attach latch open

2.1.2.5 Rotate to vertical

2.1.2.6 Route and attach fuel and oxidizer service lines; attach pressurant lines.

* 2.1.3 Load Oxidizer

2.1.3.1 Circulate oxidizer stabilizer temperature

2.1.3.2 Load oxidizer and withdraw ullage.

2.1.3.3 Leak check

* 2.1.4 Load Fuel

2.1.4.1 Circulate fuel stabilize temperature

2.1.4.2 Load fuel and withdraw ullage.

2.1.4.3 Leak check

* 2.1.5 Load APS

2.1.5.1 Circulate fuel stabilize temperature

2.1.5.2 Load fuel and withdraw ullage

2.1.5.3 Leak check

* 2.1.6 Load Pressurant

2.1.6.1 Pressurize GHe tank to flight pressure

2.1.6.2 Monitor for leakage

2.1.7 Secure from Loading

* 2.1.7.1 Disconnect all lines and stow

2.1.7.2 Verify forward latch open. Rotate to horizontal. Engage forward latch.

2.1.7.3 Disconnect all rotating AGE/GSE

2.1.8 Prep to Move to Orbiter Airlock

2.1.8.1 Verify Transporter/Mobilizer ready for move.

* 2.1.8.2 Move to Airlock and position for cleaning.

2.1.9 Clean Tug

2.1.9.1 Wipe down Tug surfaces using clean soft cloth and TBD cleaning agent.

2.1.9.2 Where require vacuum to collect any debris.

2.1.9.3 Spot check emissivity coating with emmisometer.

2.2.1 Position Tug for Mating

2.2.1.1 Move to mate position and verify mobilizer locked

2.2.1.2 Verify Tug docking mechanism ready for mate.

2.2.1.3 Prep for mate

2.2.2 Position S/C for mate.

(S/C responsibility) 2.2.2.1 Verify S/C docking mechanism ready for mate

2.2.2.2 Verify functional interface ready for mate.

2.2.2.3 Position for mating.

2.2.3 Mate S/C and Tug

2.2.3.1 Engage locking mechanism and verify proper lockup

2.2.3.2 Verify functional interface properly engaged.

2.2.3.3 Position Transporter extension to support S/C.

2.2.4 Verify Interface

2.2.4.1 Apply ground power

2.2.4.2 Verify correct functions across interface.

2.2.5 Secure from Mating Operations

2.2.5.1 Remove any mating AGE/GSE

2.2.5.2 Prepare for Orbiter Mate.

2.3.1 Position Tug for Orbiter Mating

* 2.3.1.1 Move Tug/SC to mate position

2.3.1.2 Verify structural attach points ready to mate

2.3.1.3 Prepare for mating operation.

2.3.2 Attach Hoisting AGE/GSE

2.3.2.1 Position facility crane to pick up hoisting fixture and Aux Crane Control.

2.3.2.2 Attach hoisting combination to crane verify proper C.G. on fixture.

2.3.2.3 Hoist fixture and position crane to attach slings.

2.3.2.4 Attach slings to tug.

2.3.3 Disconnect from Transporter

2.3.3.1 Verify proper load on Aux. Crane Control

2.3.3.2 Release Tug/SC attach points

* 2.3.3.3 Using Aux. Crane Control move clear of Transporter.

2.3.4 Hoist and Position Over Cargo Bay

2.3.4.1 Using crane "inching" control raise Tug/SC TBD inches continue at normal hoist speed to clear cargo bay doors.

2.3.4.2 Translate crane over cargo bay

2.3.4.3 Verify all interfaces ready to mate

2.3.5 Mate Tug/SC to Orbiter

2.3.5.1 Lower to within two (2.0) inches of mate points

2.3.5.2 Using Aux. Crane Control lower to mate points

2.3.5.3 Latch structural attach mechanism.

* 2.3.5.4 Mate fuel fill and vent QDs

* 2.3.5.5 Mate oxidizer fill and vent QDs

* 2.3.5.6 Mate fuel cell oxygen fill and vent QDs

* 2.3.5.7 Mate fuel cell hydrogen fill and vent QDs

2.3.5.7 Mate electrical umbilical(s)

2.3.6 Verify Interface

2.3.6.1 Verify structural interface properly mated.

2.3.6.2 Verify all functional interfaces properly mated.

2.3.7 Secure From Mate

2.3.7.1 Disconnect AGE/GSE and return to stowage

2.3.7.2 Verify cargo bay condition satisfactory.

2.4 Pre-count and Count down

2.4.1 Monitor tug functions (3 shift operation)

2.4.1.1 Monitor MPS fuel pressure and temperature

2.4.1.2 Monitor MPS oxidizer pressure and temperature

2.4.1.3 Monitor MPS pressurant

2.4.1.4 Monitor APS fuel pressure and temperature

2.4.1.5 Monitor APS pressurant

* 2.4.2 Load Cryogenics

2.4.2.1 Verify clear to load

2.4.2.2 Chill down oxygen lines and tank

2.4.2.3 Chill down hydrogen lines and tank.

2.4.2.4 Simultaneously load oxygen and hydrogen

2.4.2.5 Monitor cryo pressures through lift-off.

3.0 Post Landing Operation AGE/GSE and Manpower Requirements

3.1 Safe & Secure

AGE/GSE

Hose Set, MPS
Hose Set, APS
Hose Set, Fuel Cell
} Ground to Orbiter

Detector, Toxic Vapor

Transporter/Mobilizer

Personnel

Prop Techs	8
Mech/Struct	4
Safety	2
QC	4
Total	18

Elapsed time 4 hrs.

3.2 Orbiter Tug Demate

AGE/GSE

Sling and cable set, hoisting

Lift fixture, Tug with Payload

Cover, MPS nozzle

Covers, APS thrusters

Auxiliary Crane Control

Personnel

Prop Techs	8
Mech/Struct.	8
Safety	2
QC	4
Total	22

Base Support
Crane Operator

Elapsed Time 6 hrs.

3.3 S/C Tug Demate (retrieve mission only)

S/C handling equip.

Personnel (does not include S/C) same as 3.2 minus 8 prop
Elapsed time 2 hrs.

3.4 Drain Residuals

Hoisting fixture, Tug rotate

Hose Set MPS
Hose Set APS
} Ground to Tug

Hose Set, Fuel Cell

3.0 (continued)

GN_2 conditioning cart

Personnel		Second Shift	Base Support
Prop. Techs	10	10	Crane Operator
Mech Struct.	6	6	Tow operator
Safety	2	2	
QC	5	5	
Total	23	23	

elapsed time 24 hrs.

1.0 Maintenance and Checkout

1.1 Maintenance

AGE/GSE
RF Front End/Formatter
Mini-computer (LPS Link)
Control Keyboard/CRT
Cable set, checkout
Hat's, Antenna Coupling
5 Volt power supply
Star simulator
Target, Laser Radar
Workstand set
Checkout Cart, Prop. Sys.
Load Bank EPS
S-Band Up Link Monitor

Personnel Requirements		Second Shift	Base Support
Avionics Techs	14	6	as required
Propulsion Techs	16	7	
Mech/Structural	12	5	
Safety	2	2	
QC	10	4	
Total	54	24	

Elapsed time 40 hrs.

1.0 (continued)

1.2 Post Maintenance C/O

AGE/GSE

same as 1.1 except delete Prop C/O cart.

Personnel

Avionics Techs	14
Propulsion Techs	4
Mech/Struct.	4
Safety	2
QC	6
Total	30
Eng.	5
Grand Total	35

Elapsed Time 8 hrs.

2.0 Prelaunch & Launch

2.1 System Integration

2.1.1 Combined Systems Test

AGE/GSE

Same as 1.2 plus EPS Load Bank

Personnel Requirements

Avionic Techs	14
Propulsion Techs	4
Safety	2
Q.C.	6
Total	26
Eng.	8
	34

Elapsed Time 8 hrs.

2.1.2 Prep for Load

AGE/GSE

Hoisting fixture, tug rotate

Hose Set MPS

Hose Set APS

Personnel Requirements

Prop Techs	6
Mech/Struct.	6
Safety	2
QC	5
	19

Base Support

Crane Oper.

Tow Oper.

Elapsed Time 8 hrs.

2.1.3 Load Oxidizer (MPS)

AGE/GSE

Same as 2.1.2 plus

Propellant Load Control assy., oxidizer

Propellant Cond. assy, oxidizer

Personnel

Prop Techs	10
Safety	2
Q.C.	3
Total	15
Eng.	2
Grand Total	17

Elapsed Time 2 hrs.

2.1.4 Load Fuel (MPS)

AGE/GSE

Propellant Load Control Assy, Fuel

Propellant Cond. Assy, Fuel

Personnel

same as 2.1.3

2.1.5 Load Fuel (APS)

Propellant Load Control Assy, N_2H_4

Propellant Cond. Assy, N_2H_4

2.1.5 (continued)

Personnel

Prop Techs	8
Safety	2
Q.C.	3
Total	13
Eng	2
Grand Total	15

Elapsed Time .75 hrs.

2.1.6 Load Pressurant (MPS)

AGE/GSE

Prop Sys. He Distribution Assy.

Personnel

Prop Techs	4
Safety	2
Q.C.	2
Total	8
Eng	2
Grand Total	10

Elapsed Time 1 hr.

2.1.7 Secure from Load

Personnel

Prop Techs	4
Struct/Mech	4
Safety	1
QC	1
Total	10

Base Support

Crane Operator

Elapsed Time 9 hrs.

2.1.8 Prep to move

AGE/GSE

No additions

Personnel

Mech/Struct.	4
Safety	1
QC	1
Total	6

Base Support

Tow Operator

Elapsed Time 4 hrs.

2.1.9 Clean Tug

AGE/GSE

Stands, portable; Tug access

Vacuum Cleaner

Personnel

Mech/Struct	6
Safety	2
QC	4
Total	12

Elapsed time 8 hrs.

2.2 S/C to Tug Mate

2.2.1 Position Tug for mate

AGE/GSE

No additions

Personnel

Mech/Struct	4
Safety	1
Q.C.	1
Total	6

Elapsed Time 4 hrs.

Base Support
Tow Oper.

2.2.2 Position S/C for Mate

AGE/GSE

S/C handling equip

Personnel

(S/C responsibility)

2.2.3 Mate Tug/SC

AGE/GSE

Transporter extension

Personnel

Mech/Struct	8
Avionic Tech	2
Safety	2
Q.C.	2
Total	14

Elapsed Time 8 hrs.

2.3.5 Mate Orbiter

AGE/GSE

Sling and cable set, hoisting

Lift fixture, Tug with payload

Personnel

Avionic Techs	6	Base Support
Prop. Techs	8	Crane Oper.
Mech/Struct	8	
Safety	2	
Q.C.	4	
Total	28	

Elapsed Time 16 hrs.

2.4.1 Monitor Tug Functions

AGE/GSE

Console, LCC

Personnel (per shift)

Avionics	2
Prop	2
Safety	1
Q.C.	2
Total	7

Elapsed Time (see shuttle time line)

2.4.2 Load Cryogenics

AGE/GSE

Same as 2.4.1

Personnel

Same as 2.4.1 plus 1 Safety

Elapsed Time 1 hr.

APPENDIX B

NUDGE KIT

1.0 Maintenance and Checkout (Ref.)

1.1 Maintenance

1.1.1 Mechanical and Structural: emplace all work stands and access platforms. Connect all facility vent liner. Demate nudge mode kit and position on maintenance stand.

1.1.8 Nudge mode kit maintenance

1.1.8.1 Remove all access panels and covers

1.1.8.2 Visually inspect all latches for evidence of binding.

1.1.8.3 Visually inspect all structure and supports for evidence of damage.

1.1.8.4 Remove and replace battery after each mission.

1.1.8.5 Verify failed or degraded performance of the Guidance and Control system; if verified remove and replace.
-1 Attitude reference gyro package
-2 APS control electronics
-3 Timer/Control relay plackage

1.1.8.6 Verify failed or degraded performance of the OFI system; if verified remove and replace.
-1 PCM
-2 Signal Conditioner
-3 Sensors

1.1.8.7 Verified failed or degraded performance in the Communications system; if verified remove and replace.
-1 RF Switch
-2 Antenna
-3 Diplexer
-4 Transceiver
-5 Base band, processor

1.1.8.8 Visually inspect the APS thrusters and feed system. Perform APS functional tests.

1.1.8.9 Replace all covers and panels

1.2.8 Nudge mode kit post maint. C/O

1.2.8.1 Verify all maintenance actions complete on Guidance and Control System. Perform system functional test.

1.2.8.2 Verify all maintenance actions complete on the OFI system. Perform system functional test.

1.2.8.3 Verify all maintenance actions complete on the Communications system. Perform functional test.

1.2.8.4 Secure from test; prep to support Tug Combined Systems test (Functional Block 2.1.1.).

Note: Nudge mod kit will be mated to Tug in functional block 2.2.1.

1.1.8 Nudge Kit Maintenance

AGE/GSE

RF Front End/Formatter

Mini-computer (LPS Link)

Control Keyboard/CRT

Cable set, checkout

5 Volt power supply

Workstand set

S-Band Up Link Monitor

Personnel Requirements		Base Support
Avionics Techs	4	as required
Propulsion Techs	6	
Mech/Structural	4	
Safety	Share with Tug	
QC	Share with Tug	
Total	14	

Elapsed Time 16 hours

1.2.8 Post Maint. C/O

AGE/GSE

RF Front End/Formatter

Mini-Computer (LPS Link)

Control Keyboard/CRT

Cable Set, checkout

Hat's, Antenna Coupling

5 Volt power supply

Workstand set

S-Band Up Link Monitor

Personnel Requirements		Base Support
Avionics Techs	4	as required
Propulsion Techs	3	
Safety	Share with Tug	
QC	Share with Tug	
Eng.	3	
	10	

Elapsed Time 8 hours

APPENDIX C

APOGEE & DEORBIT KIT

1.0 Maintenance and Checkout (Ref.)

1.1 Maintenance

1.1.1 Mechanical and Structural: emplace all work stands and access platforms. Connect all facility vent liner. Demate Apogee & Deorbit Kick Stage (AKS & DKS)

1.1.10 AKS & DKS maintenance

1.1.10.1 Remove expended deorbit motors from the stage.

1.1.10.2 Remove all access panels and covers

1.1.10.3 Visually inspect all latches for evidence of binding

1.1.10.4 Visually inspect all structure and supports for evidence of damage.

1.1.10.5 Remove and replace battery and solar array after each mission.

1.1.10.6 Verify failed or degraded performance of the Guidance and Control System; if verified remove and replace.
-1 Attitude reference gyro package
-2 APS control electronics
-3 Timer/Control relay package
-4 Sequencer
-5 Star Tracker

1.1.10.7 Verify failed or degraded performance of the OFI system; if verified remove and replace
-1 PCM
-2 Signal conditioner
-3 Sensors

1.1.10.8 Replace all covers and panels

1.1.10.9 Verified failed or degraded performance in the Communications system; if verified remove and replace.
-1 RF switch
-2 Antenna
-3 Diplexer
-4 Transceiver
-5 Base band, processor

1.1.10.10 Visually inspect the APS thrusters and feed system. Perform APS functional tests

1.1.10.11 Install Kick Motors per mission requirement.

1.1.10.12 Replace all access panels and covers

1.2.10 AKS & DKS post maint. C/O

1.2.10.1 Verify all maintenance actions complete on Guidance and Control System. Perform system functional test.

1.2.10.2 Verify all maintenance actions complete on the OFI system. Perform system functional test.

1.2.10.3 Verify all maintenance actions complete on the Communications system. Perform functional test.

1.2.10.4 Secure from test; prep to support Tug combined systems test (Functional Block 2.1.1).

Note: AKS & DKS will be mated to Tug in functional block 2.2.1.

1.1.10 AKS & DKS Maintenance

AGE/GSE

RF Front End/Formatter

Mini-Computer (LPS Link)

Control Keyboard/CRT

Cable set, checkout

Hat's, Antenna Coupling

5 Volt power supply

Star simulator

Target, Laser Radar

Workstand set

Load Bank EPS

S-Band Up Link Monitor

Personnel Requirements		Base Support
Avionics Techs	5	as required
Propulsion Techs	8	
Mech/Structural	5	
Safety	Share with Tug	
QC	Share with Tug	
Total	18	

Elapsed Time 24 hours

1.2.10 Post Maint. C/O

AGE/GSE

RF Front End/Formatter

Mini-computer (LPS Link)

Control Keyboard/CRT

Cable set, checkout

Hat's, Antenna Coupling

5 Volt power supply

Star simulator

Target, Laser Radar

Workstand set

Load Bank EPS

S-Band Up Link Monitor

Personnel Requirements		Base Support
Avionics Techs	5	as required
Propulsion Techs	4	
Safety	Share with Tug	
QC	Share with Tug	

Eng.	4
Total	13

Elapsed Time 10 hours

APPENDIX D

APOGEE KICK STAGE

A.0 Receiving Apogee Kick Stage

A.1 Perform receiving inspection

A.1.1 Visual inspection of stage

A.1.1.1 Remove access covers and panels

A.1.1.2 Visually inspect structure for evidence of shipping damage

A.1.1.3 Visually inspect APS thrusters and feed system for evidence of damage.

A.1.2 Perform all Design Specification Compliance Tasks (DSCT)

* A.1.2.1 Install Apogee kick motor(s)

A.1.2.2 Install flight battery

A.2.1 Perform systems tests

A.2.1.1 Verify all DSCT complete

A.2.1.2 Perform combined systems test.

A.2.1.3 Secure from test prep to Support Tug combined systems test (2.1.1)

Note: Apogee kick stage will be mated in functional block 2.2.1.

A.1.1 Visual Inspect of Apogee Kick Stage

A.1.2 Perform all Design Specification Tasks

Personnel requirements

Propulsion Techs	4
Mech/Structural	3
Q.C.	Shared with Tug
	7

Elapsed Time 8 hours

A.2.1 Perform Systems Test

AGE/GSE

RF Front End/Formatter

Mini-computer (LPS Link)

Control Keyboard/CRT

Cable set, checkout

5 Volt power supply

Personnel Requirements

Avionics Techs	3	Base Support as required
Propulsion Techs	5	
Mech/Structural		
Safety	Share with Tug	
QC	Share with Tug	
Total	54	

Elapsed Time 40 hours.

V SAFETY CRITICAL INTERFACES

- o DEFINITION
- o IDENTIFICATION AND RATIONALE

GRUMMAN

WHAT IS A SAFETY CRITICAL INTERFACE?

- o GROUND OR FLIGHT CREW SAFETY IS INVOLVED
- o SPACECRAFT EQUIPMENT DAMAGE IS POSSIBLE
- o LAUNCH ESSENTIAL GSE/FACILITIES ARE IMPACTED

GRUMMAN

SAFETY CRITICAL INTERFACES

ITEM	CRITICAL PHASES	FUNCTION PERFORMED	CRITICALITY RATIONALE
MPS	LAUNCH PAD	N_2O_4 FILL/DRAIN	• ENABLES EMERGENCY DRAIN
	DEPLOY	MMH FILL/DRAIN N_2O_4 FILL/VENT	• RELIEVES TANK OVER PRESSURES • PRECLUDES VENTING INTO P/L BAY
	STOW	MMH FILL/VENT	• PRECLUDES VENTING TO ATMOSPHERE WITH GSE ATTACHED
	SAFING	GHE VENT N_2O_4 SERVICE PANEL CONNECT MMH SERVICE PANEL CONNECT	• ENABLES OVERBOARD VENTING DURING DESCENT/SAFING
	ASCENT	INFLATABLE RUBBER NOZZLE SUPPORT	• PROTECTS ENGINE BELL FROM IMPACT LOADS.
	LANDING	LEAK DETECTION SENSORS	• ALERTS CREWS TO LEAKS
DMS (IIB & IIIA)	ASCENT	AKS C & W	• STATUS DATA
	ASCENT	AKS - ORBITER COMMANDS	• SAFE - ARM
	ASCENT	DKS C & W	• STATUS DATA
	ASCENT/DEORBIT	DKS - EOS - GROUND COMMANDS	• SAFE - ARM
	ASCENT/DESCENT	CORE VEHICLE C & W	• STATUS DATA
GN & C	DEPLOY	READINESS SIGNALS TO ORBITER	• VERIFIES E.G THRUST ATTITUDE APPROPRIATE.
	DEPLOY/DEORBIT	STATE VECTOR UPDATE	• PROTECTS ORBITER FROM TUG MISTARGETING
COMMUNICATION	ENTIRE MISSION	COMMAND DATA/STATUS	• PROVIDES COMMAND OVER RIDE • PROVIDES STATUS DATA OF CRITICAL SYSTEMS/FUNCTIONS
THERMEL	LAUNCH	GN_2 GROUND PURGE	• INERTS P/L BAY ATMOSPHERE IN CASE OF LEAKS.
	SAFING	P/L BAY AIR CONDITIONING	• LIMITS TEMPERATURE IN BAY AND PRECLUDES N_2O_4 VENTING.
	ON ORBIT FLIGHT	SYSTEM MATERIAL OUTGASSING & /OR PROPELLANT DISCHARGES	• PREVENTS P/L CONTAMINATION
EPS (FUEL CELLS)	PRELAUNCH	H_2 FILL/DRAIN O_2 FILL/DRAIN	• REACTANT VOLATILITY
	ENTIRE MISSION	H_2 VENT O_2 VENT	• PRESSURE RELIEF
EPS (BATTERIES)	DEPLOY/RESTOW	ORBITER POWER TO TUG	• SYSTEM DEGRADATION IF POWER TO TUG LOST.
PROCEDURAL	SERVICING/SAFING	PROPELLANT/REACTANT LINE CONNECT/DISCONNECT	• SYSTEMS ARE "WET"

	SYSTEM PRESSURIZATIONS	. TRANSITORY PRESSURE STRESS CONDITIONS
	PROPELLANT/REACTANT/PRESSURANT DRAIN AND/OR LOAD	. HAZARDOUS FLUID TRANSFER AND TRANSITORY PRESSURE STRESS CONDITIONS
TRANSPORT	LOADED TUG GROUND MOVEMENT	. TRANSPORT OF HAZARDOUS FLUIDS.
HOISTING	MATING OF LOADED TUG TO PAYLOAD OR ORBITER	. TRANSPORT OF HAZARDOUS FLUIDS & HEAVY WEIGHT
TUG DEPLY/STOW	COORDINATE MANIPULATOR AND ADAPTER MOVEMENTS DURING TUG DEPLOY/STOW	. ORBITER STRUCTURAL DAMAGE POTENTIAL
	MANIPUTATOR POSITONS TUG FOR SEPARATION/STOW	. ORBITER STRUCTURAL DAMAGE POTENTIAL
	APS ACTIVATION/COLD FIRE CHECK	. CONTAMINATION POTENTIAL
	APS VENT TO 20 PSIA	. ORBITER CONTAMINATION POTENTIAL

VI PERTINENT ISSUES

- BEAR ON SAFETY OF SYSTEM
- SUPPORT SYSTEM CONCEPT DEFINITION AND REFINEMENT
- HIGHLIGHT POTENTIAL SAFETY HAZARDS

GRUMMAN

SEPARATE VS NESTED TANKS

- STATEMENT OF THE PROBLEM
  - EVALUATE THE RELATIVE MERITS OF SEPARATE/NESTED TANKS
- ANALYSIS APPROACH
  - HAZARD IDENTIFICATION
  - ASSESSMENT OF SAFETY REQUIREMENT IMPACTS
  - LENGTH/WEIGHT COMPARISON
  - FRACTURE MECHANICS EVALUATION
  - PRESSURE CONTROL CONSIDERATIONS
  - MANUFACTURING CONSIDERATIONS
  - OPERATIONS EVALUATION
- RESULTS
- CONCLUSIONS AND RECOMMENDATIONS

GRUMMAN

POTENTIAL TANKAGE HAZARDS/IMPACT

HAZARD	SEPARATE	NESTED
LOSS OF MMH PRESSURE	NOT A TANKAGE PROBLEM	
LOSS OF N_2O_4 PRESSURE	NOT A TANKAGE PROBLEM	VENT MMH TANK
VENT FAILS CLOSED	PROVIDE REDUNDANT VENTS	
EITHER TANK LEAKS	VENT, DRAIN "OTHER" TANK CLEAN UP REQUIRED CONTROL MATERIALS FOR COMPATIBILITY	
BOTH TANKS LEAK	PROVIDE VENT AREA THAT PRECLUDES PRESSURE BUILDUP	LIMITED VENT VOLUME MESH CAUSES TIME DELAY IN MIXING
N_2O_4 IN LINES FREEZE	INSULATE LINES	
INADEQUATE TANK DAMAGE DETECTION	ENTIRE TANK ACCESSIBLE	LIMITED TANK ACCESS WITHOUT DISASSEMBLY

GRUMMAN

SEPARATE TANKS VS NESTED TANKS

SAFETY CONSIDERATION	SEPARATE TANKS	NESTED TANKS
A. FORCED VENTILATION BETWEEN BULKHEADS ON GROUND	PURGE VOLUME BETWEEN TANKS, 194 FT^3, SAMPLE GAS FOR LEAKS	PURGE VOLUME BETWEEN MEMBRANES, 1.5 FT^3, SAMPLE GAS FOR LEAKS
* B. SEPARATE PROPELLANTS TO PRECLUDE MIXING IF SIMULTANEOUS RUPTURE	RUPTURE OF BOTH BULKHEADS CATASTROPHIC	RUPTURE OF N_2O_4 MEMBRANE CATASTROPHIC: RUPTURE OF MMH MEMBRANE ONLY NOT A SAFETY PROBLEM
C. PREVENT EXCESSIVE INTERNAL PRESSURE BY POSITIVE MEANS	OPERATING PRESS. / VENT PRESS. N_2O_4 30-33 PSIA / 33-36 PSIA MMH 18-21 PSIA / 21-24 PSIA	OPERATING PRESS / VENT PRESS. N_2O_4 30- PSIA / 33-36 PSIA MMH 18-24 PSIA / 21-24 PSIA
D. PREVENT PRESSURE RISE MORE THAN 10% OVER NORMAL SYSTEM PRESSURE	10% OPER. PRESS. / VENT. PRESS. N_2O_4 (.1) 33 = 3.3 / 0-3 PSI MMH (.1)(21) = 2.1 / 0-3 PSI	10% OPER. PRESS. / VENT. PRESS. N_2O_4 (.1) 33 = 3.3 / 0-3 PSI MMH (.1) 21 = 2.1 / 0-3 PSI
E. ROUTE LINES WITHIN OWN TANK TO MINIMIZE EFFECTS OF LEAKAGE. IF NECESSARY ROUTE LINES THROUGH INCOMPATIBLES VIA CONTINUOUS CONDUIT, VENTILATE CONDUIT.	LINE FROM FORWARD TANK TO ENGINE, EXTERNAL TO AFT TANK.	LINE FROM FORWARD TANK TO ENGINE IS EXTERNAL TO AFT TANK
F. AVOID LOCATING PROPULSION SYSTEM COMPONENTS IN AREAS WHERE SINGLE FAILURE CAN CAUSE IGNITION	INLET TO ENGINE CRITICAL AREA	INLET TO ENGINE CRITICAL AREA.
G. DRAIN & VENTILATE AREAS INTO WHICH LEAKAGE OR VAPOR MAY SEEP	DRAIN PROVIDED FOR GROUND SAFING OF INTER-TANK VOLUME. CLEANUP REQUIRES FLUSH & PURGE	CLEANUP OF INTER-MEMBRANE VOLUME REQUIRES VEHICLE ROTATE AND HOT GAS PURGE
H. DESIGN VENT SYSTEM TO MINIMIZE EXCESSIVE LIQUID FLOW THROUGH MISUSE OR MALFUNCTION	OPERATIONAL PROCEDURES PRECLUDE EXCESSIVE LIQUID VENTING	OPERATIONAL PROCEDURES PRECLUDE EXCESSIVE LIQUID VENTING

* SIGNIFICANT

GRUMMAN

SEPARATE TANKS VS NESTED TANKS - CONT'D

SAFETY CONSIDERATION	SEPARATE TANKS	NESTED TANKS
I. HYPERS SEPARATED BY SINGLE WELD (MSC 00134 #61)	TWO BULKHEADS	TWO BULKHEADS
*J. STRUCTURAL CREVICES WHERE DEBRIS CAN CAUSE LOCAL STRESS CONCENTRATIONS IN TANK SKINS (MSC 00134 #80)	FOUR CREVICES IN VOLUME BETWEEN TANKS	TWO EXTREMELY SMALL CREVICES IN VOLUME BETWEEN TANKS
K. INTERIOR INSPECTION FOR CONTAMINATION OR CORROSION (MSC 00134 #82)	MANHOLES PROVIDED IN EACH TANK	MANHOLES PROVIDED IN EACH TANK
L. PROTECTION OF TANKS FROM DROPPED TOOLS ET AL. (MSC 00134 #138)	ACCESS BETWEEN TANKS POSSIBLE. TETHERED TOOLS USED.	ACCESS LIMITED NORMALLY TO EXTERNAL SURFACE OF TANKS, NO ACCESS TO VOLUME BETWEEN TANKS.
*M. CONTAINMENT AND DISPOSAL OF DANGEROUS FLUIDS (MSC 00134 #239)	VOLUME BETWEEN TANKS VENTED AND DRAINED. DRAIN REQUIRES G FIELD	VOLUME BETWEEN TANKS VENTED. IMPACT OF FULL INTERTANK VOLUME CONSIDERED ONLY A CLEANUP PROBLEM.

GRUMMAN

LENGTH/WEIGHT COMPARISON - SEPARATE TANK CONFIGURATION STUDY

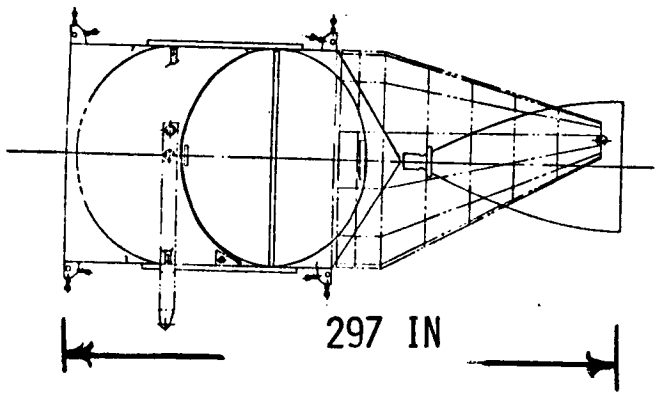

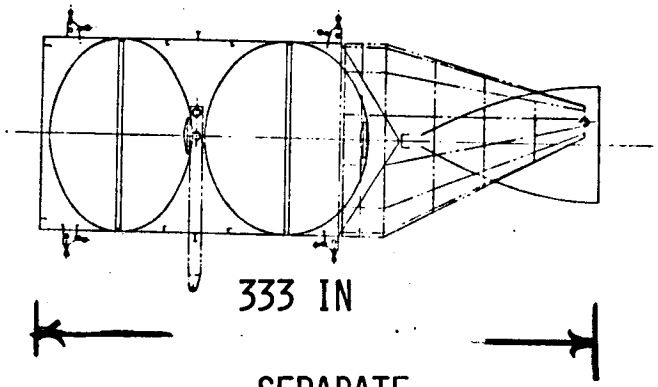

	NESTED	SEPARATE
STRUCTURE		
MAIN PROP TANKS	419	321
BODY STRUCTURE	493	629
THRUST STRUCTURE	88	102
EQUIP MTG.	112	112
METERORITE	26	23
INTERFACES/UMBIL.	88	88
THERMAL CONTROL	89	97
ASTRIONICS	663	664
PROPULSION	697	703
CONTINGENCY	268	274
DRY WEIGHT	2943	3013

GRUMMAN

FRACTURE MECHANICS EVALUATION OF VARIOUS TANKAGE MATERIALS

DESIGN DATA:

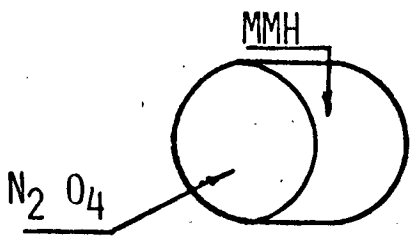

- o MAXIMUM DESIGN OPERATING PRESSURES
  N_2O_4 35 PSI; MMH 20 PSI
- o NUMBER OF MISSIONS: REQUIRED 20
  DESIGN GOAL 100
- o ASSUMED NUMBER OF PRESSURE CYCLES PER MISSION
  - PREFLIGHT: ONE PRESSURE CYCLE MDOP
  - SPACE OPS: ONE PRESSURE CYCLE MDOP
- o ASSUMED SCATTER FACTOR FOR THIS ANALYSIS 4.0
- o DESIGN LIFE: 160 PRESSURE CYCLES FOR 20 MISSIONS
  800 PRESSURE CYCLES FOR 100 MISSIONS
- o ASSUMED INITIAL FLAW SIZE, $a_i = t/4$

GRUMMAN

TANK LIFE EVALUATION

MATERIAL	t IN.	OPERATING KSI	K_{IC} KSI IN	K_{TH} KIC	"A" FLAW SIZE - INCHES INITIAL	AFTER 160 CYCLES	AFTER 800 CYCLES
Titanium 6AL-4V STA	0.016	75	44	.70	.008	.0085	.0145
Aluminum 2219-T87	0.039	30.8	36	.70	.0098	.011	.034

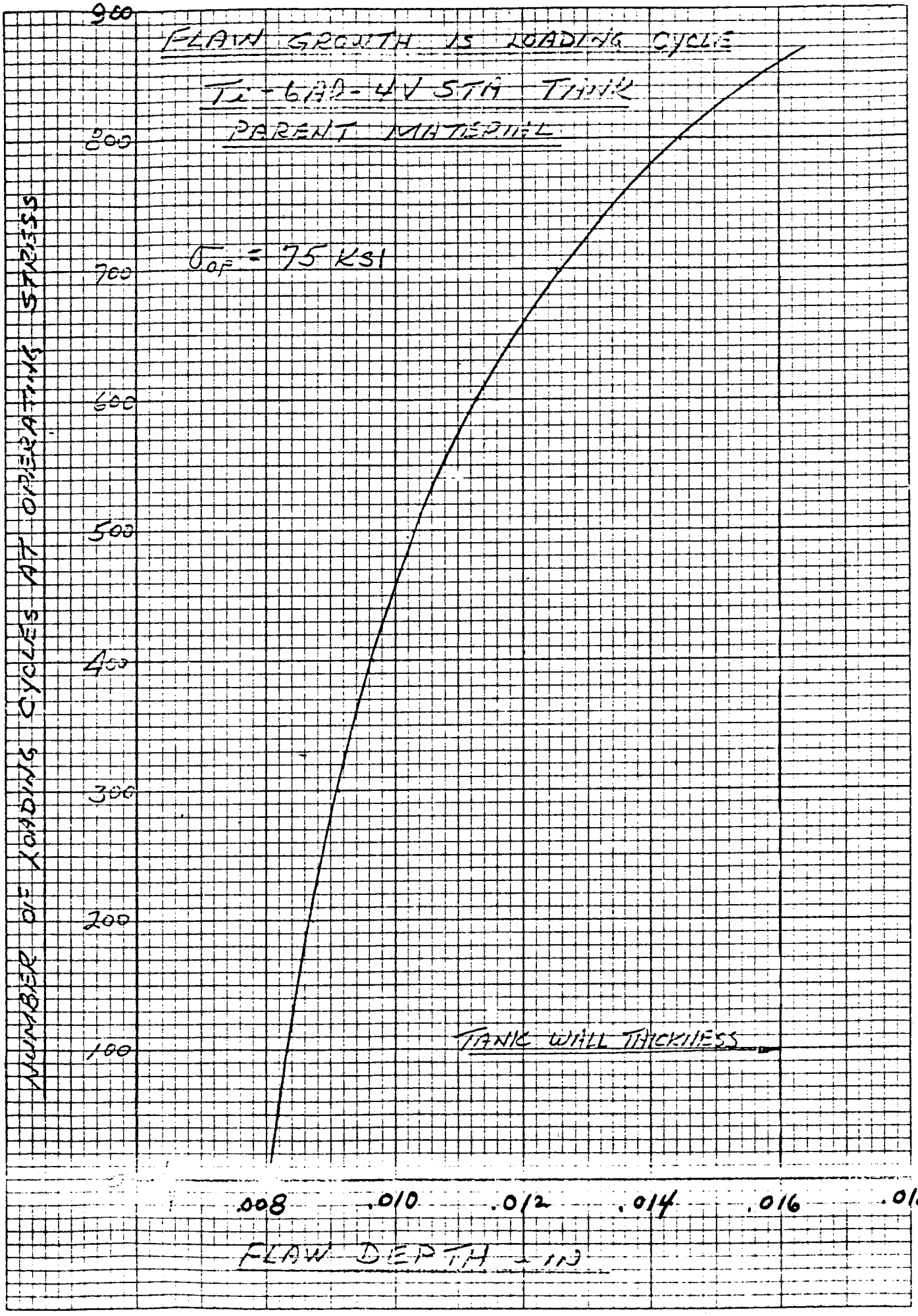

EUGENE DIETZGEN CO.
MADE IN U. S. A.
NO. 340R-10 DIETZGEN GRAPH PAPER
10 X 10 PER INCH

APPLIED STRESS VS. FLAW DEPTH

TITANIUM 6AL-4V (STA) TANK

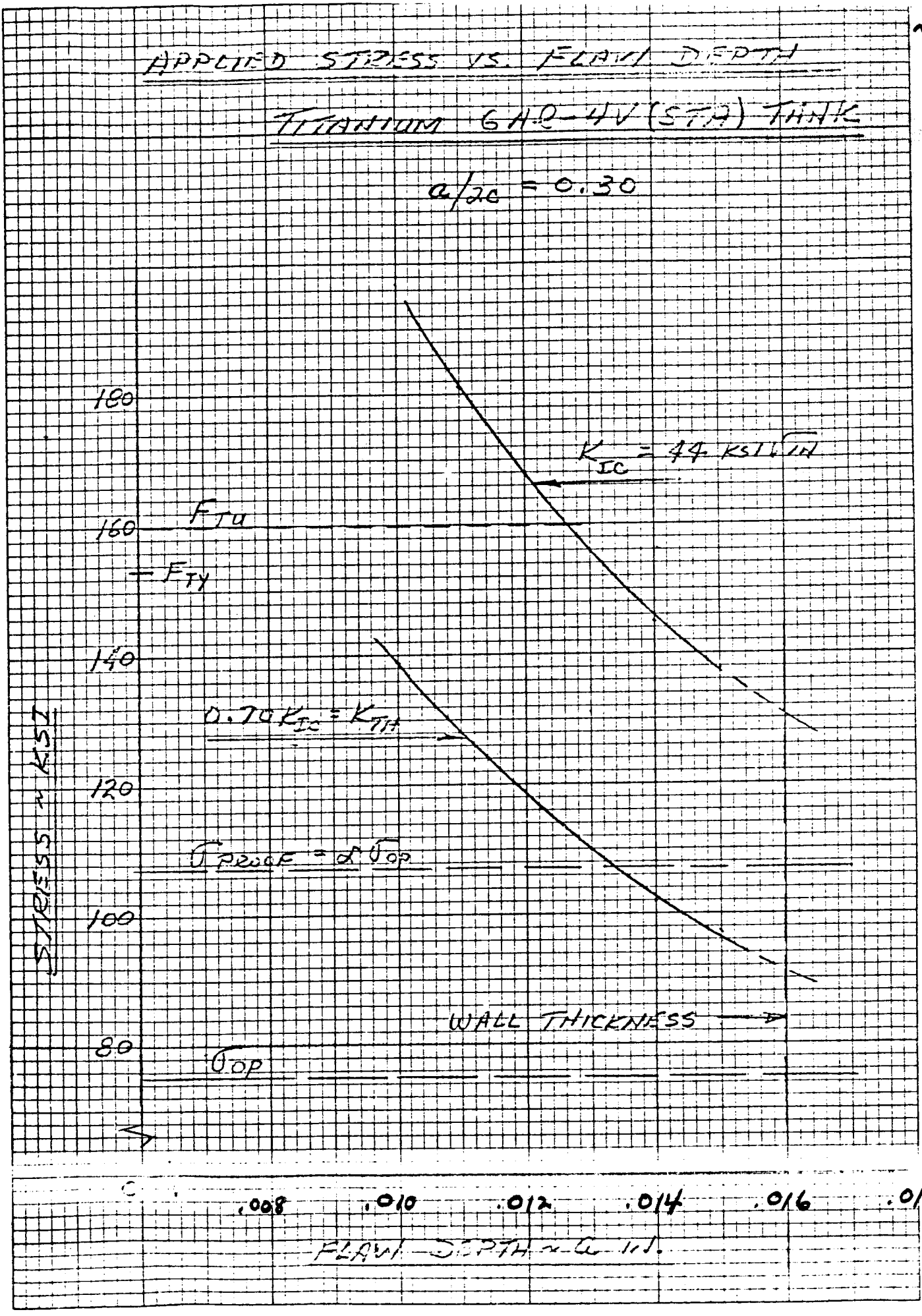

EUGENE DIETZGEN CO.
MADE IN U. S. A.
NO. 340R-10 DIETZGEN GRAPH PAPER
10 X 10 PER INCH

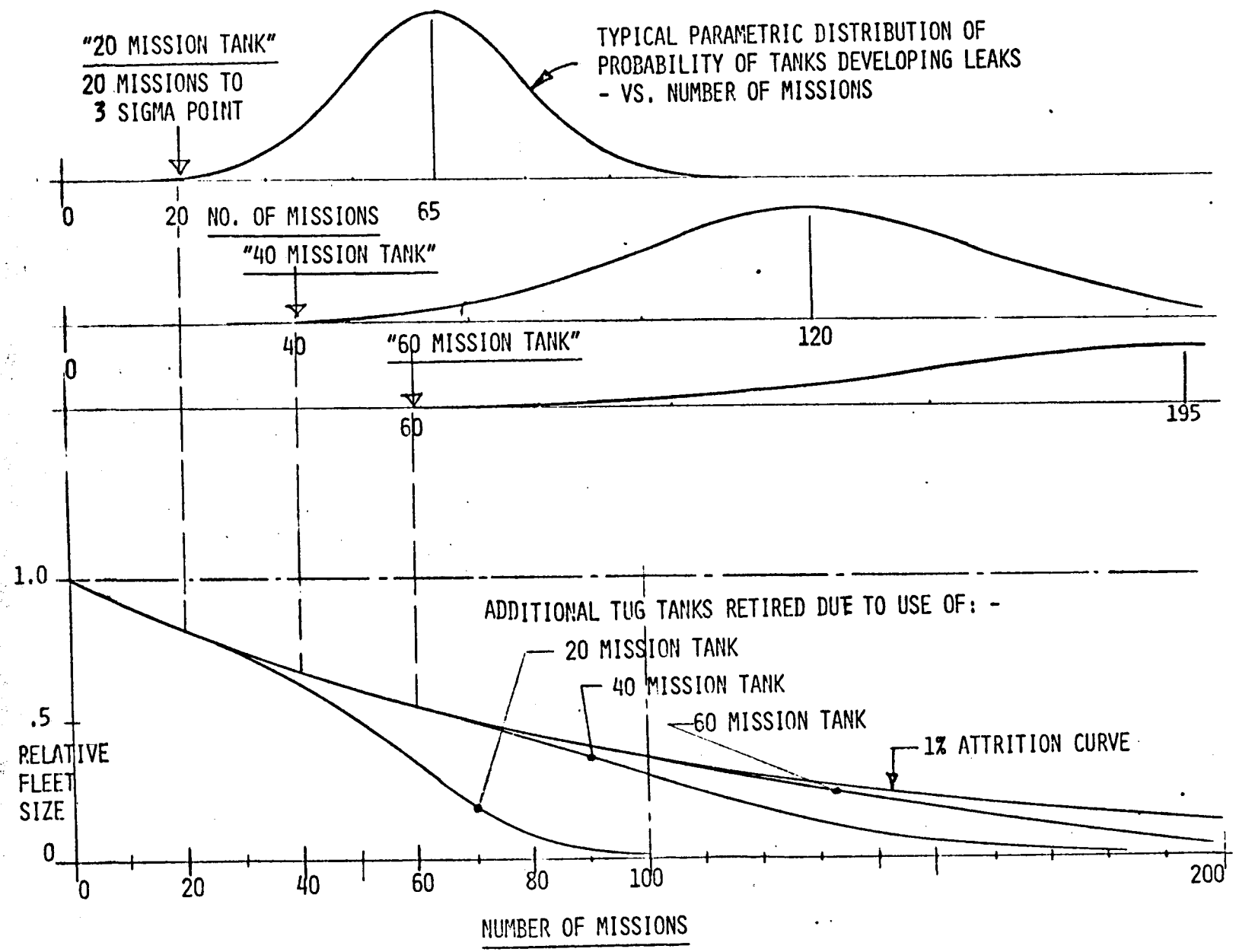
"20 MISSION TANK"
20 MISSIONS TO
3 SIGMA POINT
TYPICAL PARAMETRIC DISTRIBUTION OF
PROBABILITY OF TANKS DEVELOPING LEAKS
- VS. NUMBER OF MISSIONS
0
20
NO. OF MISSIONS
65
"40 MISSION TANK"
40
120
0
"60 MISSION TANK"
60
195
1.0
ADDITIONAL TUG TANKS RETIRED DUE TO USE OF: -
20 MISSION TANK
40 MISSION TANK
60 MISSION TANK
1% ATTRITION CURVE
.5
RELATIVE
FLEET
SIZE
0
0
20
40
60
80
100
200
NUMBER OF MISSIONS

FRACTURE MECHANICS EVALUATION

CONCLUSIONS:

- o ALUMINUM, TITANIUM, INDICATE LEAKAGE FAILURE MODE RATHER THAN RUPTURE
- o BASED ON AVAILABLE MATERIALS DATA ALL MATERIALS ARE CAPABLE OF SURVIVING 100 MISSIONS FOR AN ASSUMED INITIAL FLAW OF 25% OF THICKNESS
- o ADDITIONAL FRACTURE MECHANICS ANALYSES AND MORE MATERIALS DATA ARE REQUIRED
- o FRACTURE CONTROL PLAN NECESSARY

GRUMMAN

MPS SCHEMATIC

110A-1

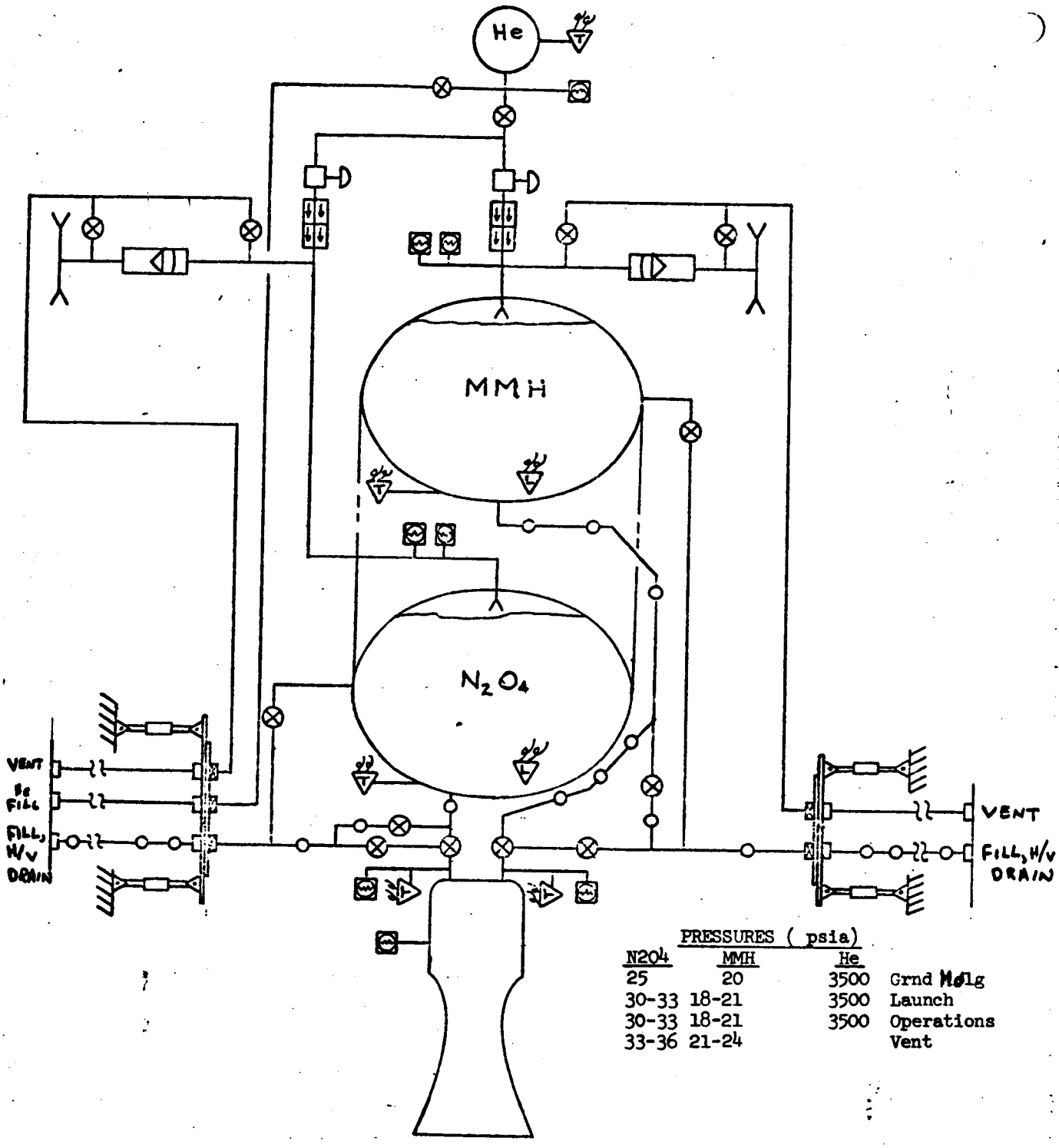

PRESSURES (psia)

N2O4	MMH	He	
25	20	3500	Grnd Mølg
30-33	18-21	3500	Launch
30-33	18-21	3500	Operations
33-36	21-24		Vent

	N_2O_4	MMH	He
Hdlg.	25	20	3500
Launch	30-33	18-21	3500
Ops.	30-33	18-21	3500
Vent	33-36	21-24	

MPS SCHEMATIC

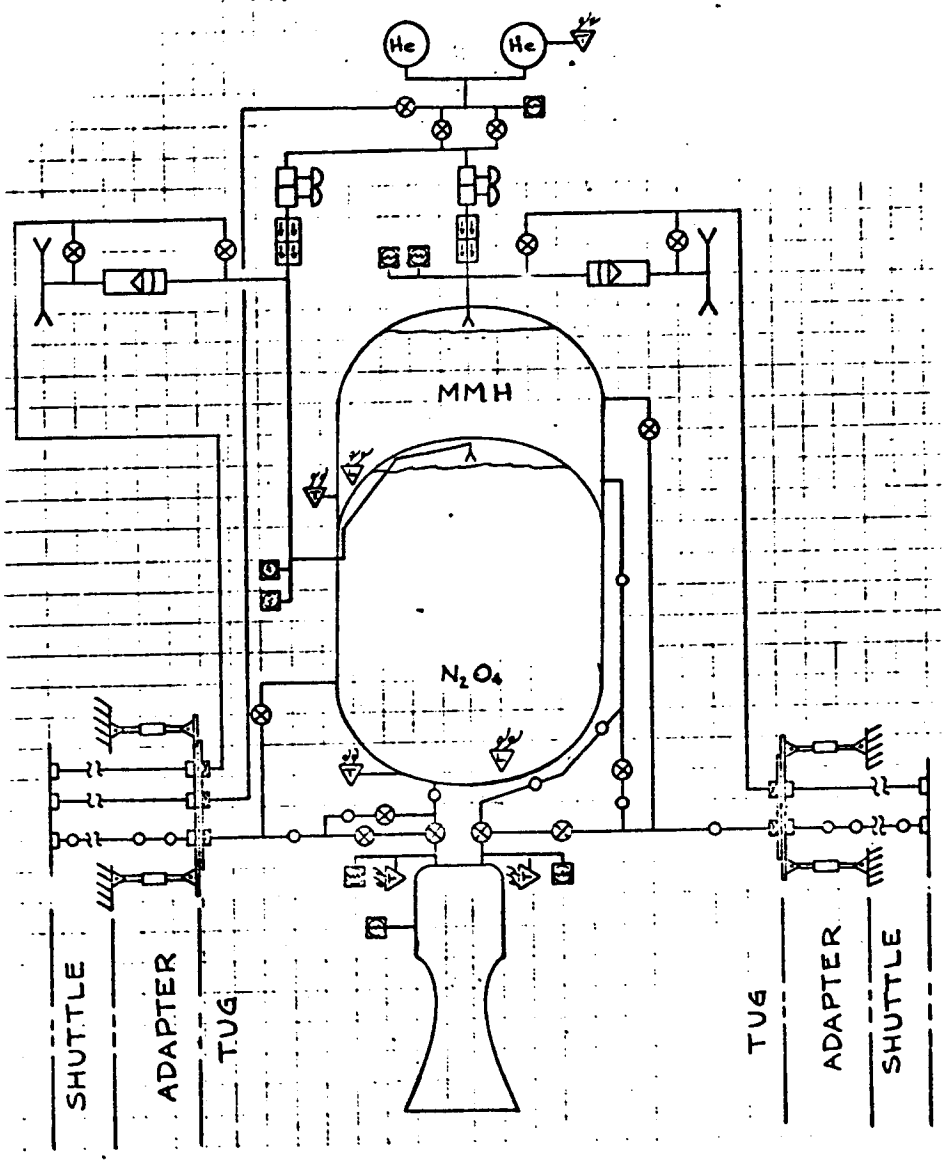

NESTED DOME TANKS VS. SEPARATE TANKS

MANUFACTURING

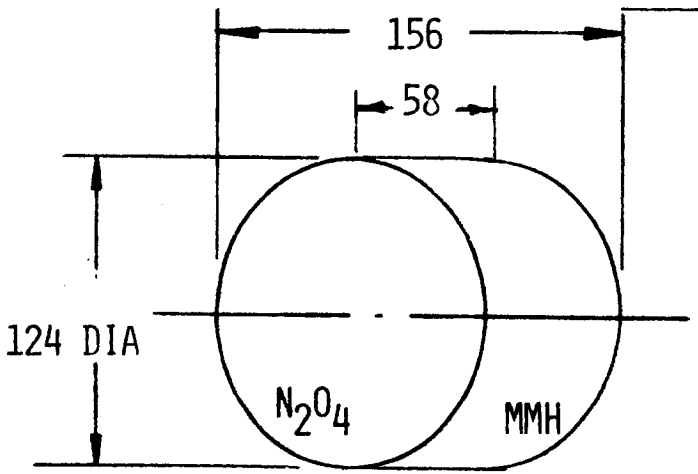

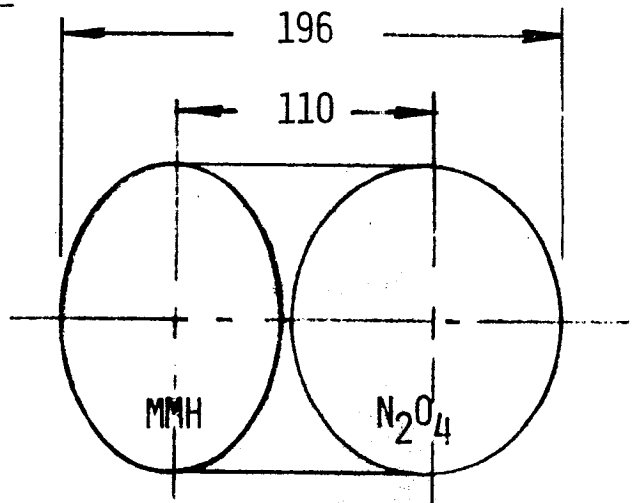

10′ DIA X 13′	NOM. SIZE	10′ DIA X 16′ OVERALL
6-4 STA TITANIUM	MATERIAL	6-4 STA TITANIUM
826 FT^3	VOLUME	826 FT^3
419 LB	WEIGHT	321 LB
561 FT^2	WETTED AREA	539 FT^2
.016/.016	GAGES (BASIC))	.016/.016
(1) .016 HEMI -63R	LINER	N.A.
	MFG. METHODS	
(4) WELDED GORE	DOME	(2/2) WELDED GORE
WELDED/BONDED STIFFENERS	CYLINDER	N.A.
2″ DIA X 10′(INCL. LINER)	FEEDLINES	2″ DIA X 18′
ROLL FORGE/MACHINE	RINGS	ROLL FORGE/MACHINE
MLI - 420FT^2	INSULATION	MLI - 540 FT^2
232′	LENGTH OF WELD	178′

GRUMMAN

MANUFACTURE OF SEPARATE VS. NESTED TANKS

FACTORS	NESTED	SEPARATE
o LEAK DETECTION o INSPECTION o REPAIR	o INTERIOR ACCESSIBLE o LEAK LOCATION AND DAMAGE REPAIR o REQUIRES DISASSEMBLY	o ENTIRE SURFACE ACCESSIBLE TO LOCATE LEAKS OR STRUCTURAL DAMAGE AND TO MAKE REPAIRS
o REPLACEMENT	o SIMPLE	o SIMPLE
o HANDLING	o SUSCEPTIBLE TO DAMAGE	o LIGHTER, LESS BULKY TANK HANDLING
o PARALLEL FLOW & SCHEDULE RISK	o SEPARATE MANUFACTURE o FIXTURE REQ'D FOR TESTING o LONGER FLOW TIME	o ASSEMBLE/TEST SEPARATELY o 25% FLOW SAVINGS o INTERCHANGE TKS IF PROBLEMS
o ASSEMBLY AND INSTALLATION	o MECHANICAL FASTENERS o LINE INSTALL FROM OUTSIDE TANK	o MECHANICAL FASTENERS o LINE INSTALL FROM OUTSIDE TANK

GRUMMAN

OPERATIONS CONSIDERATIONS

	NESTED	SEPARATE
o VENTING - GROUND - IN FLIGHT	o THROUGH GSE o MAINTAIN DELTA-P	o THROUGH GSE o INDIVIDUAL VENTING
o PROPELLANT LOADING (VERTICAL)	o OXIDIZER LOADED FIRST	o EITHER LOADED FIRST
o PROPELLANT DRAIN	o MMH FIRST	o EITHER
o IN FLIGHT DUMP	o IF BOTH, MMH FIRST o IF ONE, N_2O_4 o MAINTAIN DELTA-P	o NO CONSTRAINTS
o FIRST MISSION SYSTEM PRESSURIZATION	o SAFE DISTANCE FROM ORBITER	

GRUMMAN

NESTED VS. SEPARATE TANKS

SUMMARY

CONSIDERATIONS	NESTED	SEPARATE
HAZARDS	−	+
SAFETY REQUIREMENT IMPACT	−	+
LENGTH/WEIGHT	+	−
FRACTURE MECHANICS	+	+
PRESSURE CONTROL	−	+
MANUFACTURING	−	+
OPERATIONS	+	+

GRUMMAN

LEAK DETECTION

STATEMENT OF PROBLEM

- IDENTIFY WHEN, WHAT AND HOW LEAK DETECTION IS REQUIRED
- DEFINE BACKOUT PROCEDURES

ANALYSIS APPROACH

- IDENTIFY WORSE CASE LEAK SITUATIONS
- DETERMINE WHAT COMMERICAL LEAK DETECTION EQUIPMENT IS AVAILABLE AND APPLICABLE
- RECOMMEND DETECTION APPROACH
- SPECIFY PROCEDURES TO SAFE LEAKS

RESULTS

CONCLUSIONS AND RECOMMENDATIONS

"WE ARE DEALING WITH WEEPERS, NOT GUSHERS"

GRUMMAN

LEAK CONSIDERATIONS

ITEM	RANGE		
VEHICLE ORIENTATION	(1) HORIZONTAL	(2) VERTICAL	
TUG LOCATION	(1) ALONE	(2) IN ORBITER	
P/L BAY ATMOSPHERE	(1) VACUUM	(2) INERT	(3) AIR
P/L BAY TEMPERATURE	(1) SPACE COLD	(2) STP	(3) "HOT" (200°F)
TANK LOAD	(1) "EMPTY"	(2) RESIDUALS	(3) FULL
TANK PRESSURE	(1) OPERATING	(2) "PAD"	(3) OTHER
TANK CONTENTS	(1) N_2O_4	(2) MMH	(3) N_2H_4
	(4) He	(5) O_2	(6) H_2
ALLOWABLE LEVELS	(1) ACCEPTABLE	(2) TOXIC	(3) VEHICLE IMPACT

GRUMMAN

PERTINENT ENCLOSED VOLUMES

INTERTANK VOLUME:

NESTED TANKS 1.5 FT^3 SEPARATE TANKS 194 FT^3

SADDLE BAGS: 80 FT^3

TROUGHS (TUNNELS):

FUEL FEED/VENT 20 FT^3

OX. DRAIN/VENT AND FUEL DRAIN 18 FT^3

AFT TANK - BASE HEAT SHIELD: 12 FT^3

PAYLOAD BAY = 10,600 FT^3

TUG PAYLOAD VOLUMES: UNKNOWN

GRUMMAN

POTENTIAL LEAK MODES

- o LEAK SOURCES
  - CONNECTORS
  - SEALS
  - FASTENERS
  - BALL JOINTS
  - TANK FLAWS
  - DUMP/VENT VALVES
- o MISSION PHASE VS. LEAK RESULTS

(EXAMPLE)

- POST LANDING
- TRANSPORT
- MATING TO EOS
- MATING TO ET
- LAUNCH PAD
- ASCENT
- ON ORBIT IN EOS
- ON ORBIT ALONE
- DESCENT
- LANDING

- FIRE
- CORROSION
- TOXIC ATMOSPHERE
- MATERIAL DEGRADATION
- CONTAMINATION
- FROZEN PROPELLANT DEPOSITS

GRUMMAN

RECOMMENDED LEAK DETECTION

PHILOSOPHY

- o ON ORBIT LEAKS
  - USE PRESSURE DECAY OVER TIME AT CONSTANT CONDITIONS
- o IN THE ATMOSPHERE LEAKS
  - USE ORBITER LEAK DETECTORS
- o ON THE GROUND LEAKS
  - USE PURGE/SNIFF LEAK DETECTION

SAFING

- o ON ORBIT OR IN FLIGHT
  - VENT/DUMP TANKS; WARN GROUND
- o ON GROUND
  - VENT/DRAIN TANKS TO GSE/AGE
  - INERT PERTINANT VOLUMES
  - USE WATER IN QUANTITY
  - FIRE EXTINGUISH (FREON 1301) IF NECESSARY

GRUMMAN

LEAK DETECTION EQUIPMENT

COMPANY	NAME	SENSOR	PURPOSE
GRUMMAN	LEAK STRIPS	REACTANT	JOINT LEAKS
MINE SAFETY	BILLIONAIRE	ION CHAMBER	PARTICULATE/ AEROSOL DETECTION
TELEDYNE	OLFACTRON	ELECTROCHEMICAL	CONTAMINANT DETECTION
CGLESCO	N/A	N/A	CONTAMINANT DETECTION
HONEYWELL	TVD	ION SOURCE	LIQUID PROPELLANT LEAK DETECTION

GRUMMAN

HIGH REUSE SYSTEMS SAFETY

- o PROBLEM:

  HOW TO ASSURE THAT THE TUG FOR EACH MISSION IS MAINTAINING AN ACCEPTABLE MISSION READINESS

- o ANALYSIS APPROACH

  - IDENTIFY SUBSYSTEMS SUBJECT TO DEGRADATION/MISSION
  - ESTABLISH DESIGN FEATURES AND CHECKOUT PROCEDURES THAT MINIMIZE DEGRADATION AND ASSURE MISSION READINESS
  - PROPOSE COMPENSATING DESIGN AND OPERATIONS REQUIREMENTS
  - GENERATE A REUSE CONTROL PLAN

- o RESULTS

- o CONCLUSIONS AND RECOMMENDATIONS

GRUMMAN

REUSE & SAFETY

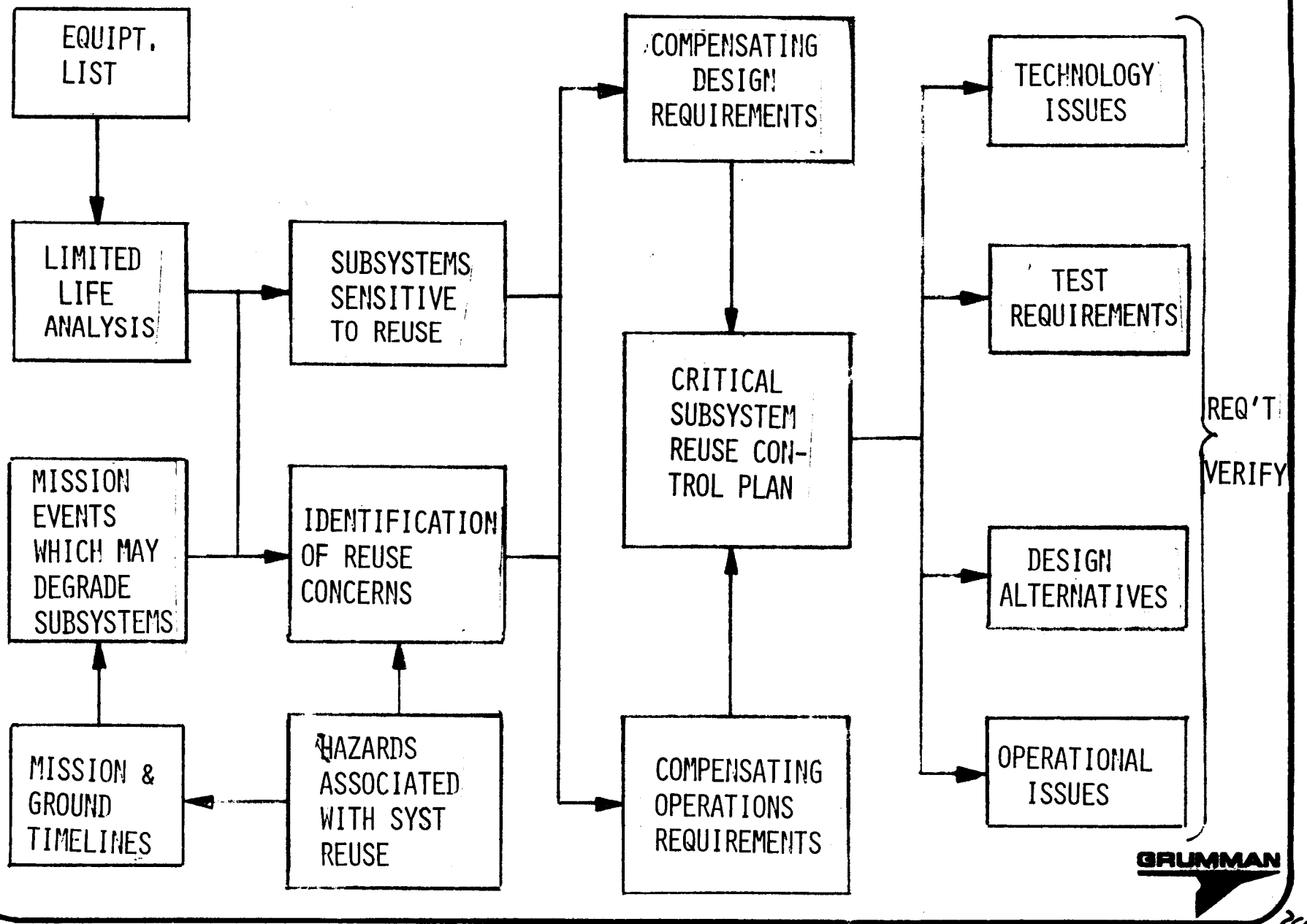

GRUMMAN

HAZARDS AND SYSTEM REUSE

HAZARDS	SOURCE
o LEAKAGE AND VENTING	o CONNECTION/UNMATING FLUID CONNECTORS o EXCEEDING ALLOWABLE TANK PRESSURIZATIONS INDUCES FLAW GROWTH AND SEEPAGE o SEEPAGE INDUCES CORROSION
o THERMAL CONTROL	o PROPELLANT DUMP/VENT DEGRADES TUG THERMAL COATINGS
o THRUST ABERRATIONS	o THROAT EROSIONS: MPS, APS
o COMMAND AND CONTROL	o RELAY FAILURES
o CONTAMINATION	o LEAKAGE FROM PROPELLANT CONNECTOR OPERATIONS

GRUMMAN

MISSION EVENTS WHICH MAY DEGRADE SUBSYSTEMS

MISSON PHASE	EVENT	EVENT IMPACT
POST LANDING	DRAIN/VENT CONNECT	SEALS DEGRADE
	FUEL CELL PURGE	CELL CONTAMINATION
	PROPELLANT DRAIN	SENSOR/BAFFLE DAMAGE DURING ERECTION
	TANK PRESSURE FOR DRAIN	FLAW GROTH IN TANK
	CLEAN STAR TRACKER LENS	OPTICAL DEGRADATION
PRELAUNCH	PROPELLANT LOAD	MATERIAL DEGRADES FROM SPILLS
		SEALS DEGRADE
	MATE FLUID TUG/EOS LINES	SEALS DEGRADE
DEPLOY	CONNECT RMS TO TUG	SHIELDING DAMAGE
	TUG ORBITER SEPARATE	SHIELDING OF TUG DEGRADES FROM EOS RCS PLUME
PAYLOAD PLACEMENT	PRESSURE MPS	TANK FLAW GROWTH
	METEOROID HIT	INSULATION DEGRADED

MISSION PHASE	EVENT	EVENT IMPACT
PAYLOAD DEPLOY	TUG/PAYLOAD SEPARATE	MECHANICAL DAMAGE
		STRUCTURAL DAMAGE
DOCKING TUG/ORBITER	VENT MPS & CRYO	VALVE FAILURE
	RECONNECT FLUID LINES	CONNECTOR DAMAGE
		ADAPTER PANEL MECHANICAL DAMAGE
		SEALS DEGRADE
PAYLOAD DOCKING	HARD DOCK	MECHANICAL DAMAGE
	VENT PAYLOAD CONSUMMABLES	SURFACE DEGRADATION
PROPULSION SAFING	DUMP OF RESIDUALS	THERMAL SHIELDING MLI DEGRADES
		METALLIC CORROSION

GRUMMAN

LIMITED LIFE SURVEY

SUMMARY

- SHELF LIFE LIMITED

SEALS : FUEL CELL, CRYO TANKS, LATCHING SOLENOID (He) QUAD CHECK VALVE, FUEL RELIEF VALVE, MAIN ENGINE PREVALVE QD'S, He ISOLATION VALVE, PROPELLANT RELIEF VALVE, QUAD CHECK VALVE, VENT VALVE.

(FREQUENCY/YR : 1 TO 10)

BATTERY	(1 YEAR)
IMU CALIBRATION	(60 DAYS)
TV TUBE	(6 MONTHS)
ACS BLADDERS	(35 - 40 DAYS)

GRUMMAN

LIMITED LIFE SURVEY

SUMMARY (CONTINUED)

ON VEHICLE MAINTENANCE/MISSION

SUBSYSTEM	EQUIPMENT	CALIBRATE	CHECK	TEST	REPLACE
DMS	MASS MEMORY				TAPE
	TAPE RECORDER				TAPE
	HI PRESS SENSORS	RECALIB.			
PWR	FUEL CELL			N_2 PURGE	
	BATTERY		VOLTAGE	CURRENT	
	TANKS			DEWAR VACUUM	
	DISTRIB.		SW. CONTINUITY		
G N & C	IMU	GYRO/ACCEL.			
	HORO. SCAN.			PERFORM	
	LASAR	CALIB.			
	STAR TRACKER			PERFORM	

GRUMMAN

LIMITED LIFE SURVEY

SUMMARY (CONTINUED)

BENCH CHECKS

FUEL CELL	CHECK VOLTS, CURRENT, PRESSURE, TEMP. (EVERY OTHER MISSION)
CRYO TANKS	EVACUATE DEWAR (EVERY TENTH MISSION)
ACS THRUSTER	INSPECT CATALYST (TBD)
ACS HELIUM REG.	ADJUST (EVERY MISSION)

OVERHAUL

FUEL CELLS	5 MISSIONS
LASAR RADAR	TBD
ACS THRUSTER	REPLACE CATALYST : TBD MISSIONS

GRUMMAN

LIMITED LIFE SURVEY

SUMMARY (CONTINUED)

FOR REUSE BEYOND 20 MISSIONS

SUBSYSTEM	OTHER	BENCH CHECK	OVERHAUL
DMS			MEMORY, RECORDER
PWR		PDS, RADIATOR	RADIATOR
G N & C		IMU, SCANNER MP5/APS ELECTRONICS LASAR, TRACKER SYNC, NAV. SAT, RCVR.	IMU, LASAR TRACKER
ACS	TANK PROOF SEAL REPLACE BLADDER INSPECT		THRUSTER
MPS *	TANK PROOF	ALL COMPONENTS	
COMM		ALL COMPONENTS	

(*) MPE GOOD FOR ONE REUSE ONLY

GRUMMAN

LIMITED LIFE SURVEY SUMMARY

SUBSYSTEM/EQUIPMENT	SHELF LIFE LIMIT	Freq/Yrs	ON-VEHICLE MAINTENANCE	Freq	BENCH MAINTENANCE	Freq	DEPOT MAINTENANCE	Freq	REUSE BEYOND 20 MISSIONS: Bench Check	Overhaul	Other	REMARKS
DATA MGT												
Computer												
Mass Memory			Replace Tape	1						Check and/ or Replace Bearings		
Tape Recorder			Replace Tape	1						Check and/ or Replace Bearings		
Data Bus/Formatter												
DAU/Sig Cond												
Hi-Press Sensors			Recalibrate	5								
PCM/Sig Cond									X			
POWER												
Fuel Cell	Seals	10	Nitrogen Purge	1	Yes	2	Yes	5	X	X		Overhaul every 30 Missions
Battery		1										
Cryo Tanks	Seals	10	Check Dewer Vacuum	1	Evacuate Dewer	10						
GN&C												
IMU	Recalibrate	60 days	Recalibrate	1					X	As Req.		
Horizon Scanner	Test	1							X			
MPS Elect									X			
APS Elect									X			
Laser Radar	TBD	TBD	Calibrate	1			TBD	TBD				
Star Tracker		8	Test	1					X	As Req.		
Sync Nav Sat Rcvr									X			
Doppler Receiver									X			
Doppler Detector									X			
Rate Gyro Assy	TBD								X	As Req.		
APS												
Thruster					Catalyst Insp	TBD	Catalyst Repl	TBD		X		
Helium Tank											X	Proof Test
He Latch Solenoid	Seals	2								X		
Shut-Off Valves										X		
Helium Regulator					Adjust	As Req.			X			
Quad Check Valve	Seals	2								X		
Vent Valve										X		
Burst Disc									X			
Relief Valve	Seals	2								X		
Isolation Valve										X		
Fuel Tank (w/bladder)	Bladder	2									X	Inspect Bladder

SUBSYSTEM/EQUIPMENT	SHELF LIFE LIMIT	Freq/Yrs	ON-VEHICLE MAINTENANCE	Freq	BENCH MAINTENANCE	Freq	DEPOT MAINTENACE	Freq	REUSE BEYOND 20 MISSIONS Bench Check	Overhaul	Other	REMARKS
MPS												
Engine	Seals	2							X			
Helium Tank											X	Proof Test
Pre-Valves	Seals	2							X			
Quick Disconnects									X			
He Iso Valve	Seals	2							X			
Regulators									X			
Relief Valves	Seals	2							X			
Burst Disc									X			
Quad Check Valve	Seals	2							X			
Vent Valve	Seals	2							X			
COMMUNICATIONS												
Receiver									X			
Transmitter									X			
Filter									X			
Filter Control									X			
Diplexer									X			
Ant Transfer Sw									X			
Power Amplifier									X			
Power Splitter									X			
Baseband Processor									X			
Omni Antenna									X			
TV									X			Replace at TBD Life
Aux Transmitter-TV									X			
Power Amp-TV									X			
THERMO												
Multilayer Insulation												Experience (on test) will determine life capability
Thermo Coatings			Recoat	10								
Heat Pipe Radiator												
Fuel Cell Radiation System							X	TBD				

GRUMMAN AEROSPACE SPACE TUG

LIMITED LIFE SURVEY

Subsystem _____ Date _____
Equipment _____

Does this equipment have shelf life limitations?

☐ No
☐ Yes - If yes, describe _____
Frequency _____

Does this equipment require any periodic test, adjustment, calibration or maintenance while installed on the Tug?

☐ No
☐ Yes - if Yes, describe periodic task(s) _____
_____
Frequency of task (number of missions) _____

Does this equipment require any periodic bench test, calibration, adjustment or maintenance?

☐ No
☐ Yes - if Yes, describe _____
Frequency _____

Does this equipment require periodic overhaul?

☐ No
☐ Yes - if yes, at what frequency? _____

If the Tug is designed for 20 missions, can we plan on removing this equipment for reinstallation on a new Tug for 20 more missions?

☐ No
☐ Yes - if Yes, what would you recommend to be done between removal and reinstallation?

☐ Bench Check
☐ Overhaul
☐ Other - describe _____

How many times can it be reused? _____

REMARKS: _____

CONCLUSIONS

GENERATE REUSE CONTROL PLAN

GRUMMAN

PROPULSION DRAIN AND DUMP

STATEMENT OF PROBLEM

- IS HORIZONTAL DRAIN AND ABORT DUMP REQUIRED

APPROACH

- IDENTIFY PROPULSION DRAIN AND DUMP REQUIREMENTS THROUGH OPERATIONS ANALYSIS
- ESTABLISH DRAIN DESIGN REQUIREMENTS
- ANALYZE ABORT MODES TO IDENTIFY ABORT DUMP POSSIBILITES
- EVALUATE ALTERNATIVE DUMP SCHEMES
- RECOMMEND SELECTED DUMP SCHEME

RESULTS

RECOMMENDATIONS

ASSUMPTION: LANDING SAFETY ≈ EMPTY TANKS

GRUMMAN

PROPULSION REQUIREMENTS

	TUG MAINT & CHECKOUT FACILITY	ORBITER MAINT & C/O FACILITY	VAB	LAUNCH PAD	IN FLIGHT			SAFING AREA
					IN SHUTTLE		SEPARATE	
HORIZONTAL		✓	✓					✓
VERTICAL	✓		✓	✓				
FILL	YES			** POSSIBLE	NORM	ABORT		
DRAIN	YES	** GUIDELINE	GUIDELINE/ YES	YES				GUIDELINE*
VENT	YES	YES	YES YES	YES	YES	YES	YES	YES
DUMP						GUIDE-LINE*	CAPABIL-ITY POSSIBLE	

** NASA GUIDELINE

* SAFETY CONSIDERS THIS, A MANDATORY REQUIREMENT.

GRUMMAN

CONDITIONS REQUIRING PROPULSION DRAIN

- ABORT, CRASH, OR SUBSYSTEM MALFUNCTION
  - INTOLERABLE LEAKS
  - NESTED TANK Δ P GOING BAD
  - TUG SUPPORT BINDING
  - SHUTTLE DISTORTED BY ABNORMAL LOADS
  - TRANSPORTER PROBLEM DELAYS FULL TUG DELIVERY
- MISSION CHANGES
  - CHANGES IN MISSION Δ V REQUIREMENTS
  - PAYLOAD CHANGEOUT REQUIRED

GRUMMAN

HORIZONTAL DRAIN ANALYSIS

SITE	CONDITION	SHUTTLE	TUG TANKS	DRAIN REQUIREMENTS RATIONALE
Safing Area	Normal	Normal	Empty*	None
		Malfunction	Empty	None
	Alt. Site	Normal	Empty	None
		Malfunction	Empty	None
	Abort	Malfunction	Full	Intolerable leak, ΔP going bad, Tug Support Binding Shuttle Distorted (by Landing or Abnormal loading)
	Crash	Malfunction	Empty	None
			Full	Same as "Abort-Full"
Tug Maint & Checkout Facility	Post Flt. Deservice	NA	Empty	None
		(aborted flt)	Full	With proper safeguards, drain is optional;
	Prop. Loading	NA	Empty	None
			Full	Offloading for Mission Changes; performed upright
Orbiter M&C Facility	Tug-Orbiter Mate	Normal	Full/Empty	None
	Tug-Orbiter Demate	Shuttle Problem	Full	Same as "Abort-Full" Mission Changes
VAB	Shuttle-ET Mate	Normal	Full	Intolerable leak, ΔP going bad
	Shuttle-ET Mate	Normal	Empty	None
Launch Pad	Normal	Normal	Full	Intolerable leak, ΔP going bad
	P/L changeout	Normal	Full	Intolerable leak, ΔP going bad

* Empty to the extent possible.

HORIZONTAL DRAIN DESIGN SAFETY REQUIREMENTS

- o DRAIN CONNECTORS FOR EACH TANK SHOULD BE READILY ACCESSIBLE WITH PAYLOAD BAY DOORS CLOSED
- o CONNECTOR OPERATION SHOULD BE COMPATIBLE WITH THE LIMITATIONS OF A MAN IN PROTECTIVE CLOTHING
- o CONTROL OF DRAIN OPERATIONS (START AND STOP) SHOULD BE AVAILABLE AT THE DRAIN CONNECTORS LOCATION. EXTERNAL TO SHUTTLE ELECTRICAL POWER AND A PLUG-IN CONTROL PANEL SHOULD BE CONSIDERED

GRUMMAN

DUMP ANALYSIS

REFERENCES: (a) REP. ABORT POWERED FLYBACK TRAJECTORIES BASED ON RIC/MDAC ANAL, JUNE 1973

(b) SSP-393-400-73-097 INTACT ABORT-3A

GUIDELINES

A. START/COMPLETE DUMP AT h > 110,000 FT.

B. DON'T INITIATE DUMP ± 30 SECONDS EXT. TANK SEPARATION

C. DUMP CAN BE SEQUENTIAL OR SIMULTANEOUS

D. DUMP CAN BE INITIATED DURING MPE BURN

E. IDENTIFY Δ FOR DUMPING DURING COAST

F. USE MANUAL INITIATION AND AUTOMATIC PROCESS FOR DUMP

G. DESIGN DUMP SYSTEM TO FAIL SAFE

H. DESIGN DUMP FOR MINIMUM THRUST, WITHIN RCS ATTITUDE HOLD CAPABILITY

J. SHUTTLE LANDING GOAL 32K LB FOR PAYLOADS

ABORT MODE	ASCENT TIME	SHUTTLE ACTIONS	TUG DUMP	POWERED TIME TO DUMP	WHEN	SHUTTLE ATTITUDE	COAST TIME TO DUMP	DUMP OPTIONS					
									DURING MPE BURN			MPE BURN AND COAST	
I CONTINUE ASCENT	0-36 SECS	CONTINUE TO MODE IV	(A)			DURING MPE BURN, ± X° OF VERTICAL							
II GLIDE RETURN TO RUNWAY	36-86 SECS	CONTINUE TO MODE IV	(A)			DURING MPE BURN ± Y° OF VERTICAL							
III POWERED FLT TO GLIDE RETURN TO RUNWAY	80-253 SECS	SEPARATE SRB, CONTINUE ASCENT, PITCH CHANGE, SEP. TANK, GLIDE	YES	RANGE IS 302 TO 512 SECS	DURING T+ ABORT TO T+ MPE END	PITCH TO RETRO-THRUST ATTITUDE	RANGE IS 134 TO 211 SECONDS	DON'T DUMP	DUMP 36K LBS N_2O_4 ONLY	DUMP 16K LBS N_2O_4 20 K LBS MMH ONLY	DUMP SEQUENTIAL N_2O_4 → MMH TO "EMPTY"	DUMP TOGETHER TO "EMPTY"	DUMP SEQUENTIAL MMH → N_2O_4 TO "EMPTY"
IV ABORT ONCE AROUND	253 TO 330 SECS	FREE RETURN ORBIT	YES	AT MOST 105 MIN (-12 MIN)	DURING T+ ABORT TO T+ MPE OUT	ORIENT FOR FREE RETURN ORBIT INSERTION		SAME	SAME	SAME	SAME	SAME	SAME
V ABORT TO ORBIT	N/A	N/A TO 3A (LOW OMS LOADING)						SAME	SAME	SAME	SAME	SAME	SAME
VI CONTINUE MISSION	≈ 330 TO INSERTION	CONTINUE ASCENT; REVISE THRUST INPUT TO GUIDANCE	YES		DURING T+ ABORT TO T+ MPE OUT								
VII TUG RESIDUALS CONTROL	N/A	N/A	YES	15 MIN (GUESS)	PRIOR TO RESTOW		N/A	DON'T DUMP	DUMP SEQUENTIAL	DUMP TOGETHER	DUMP AFTER ECS RESTOW		

FIGURE 3

NO. 340A-10½ DIETZGEN GRAPH PAPER
10 X 10 PER HALF INCH

EUGENE DIETZGEN CO.
MADE IN U. S. A.

DUMP OPTIONS

FIGURE 4

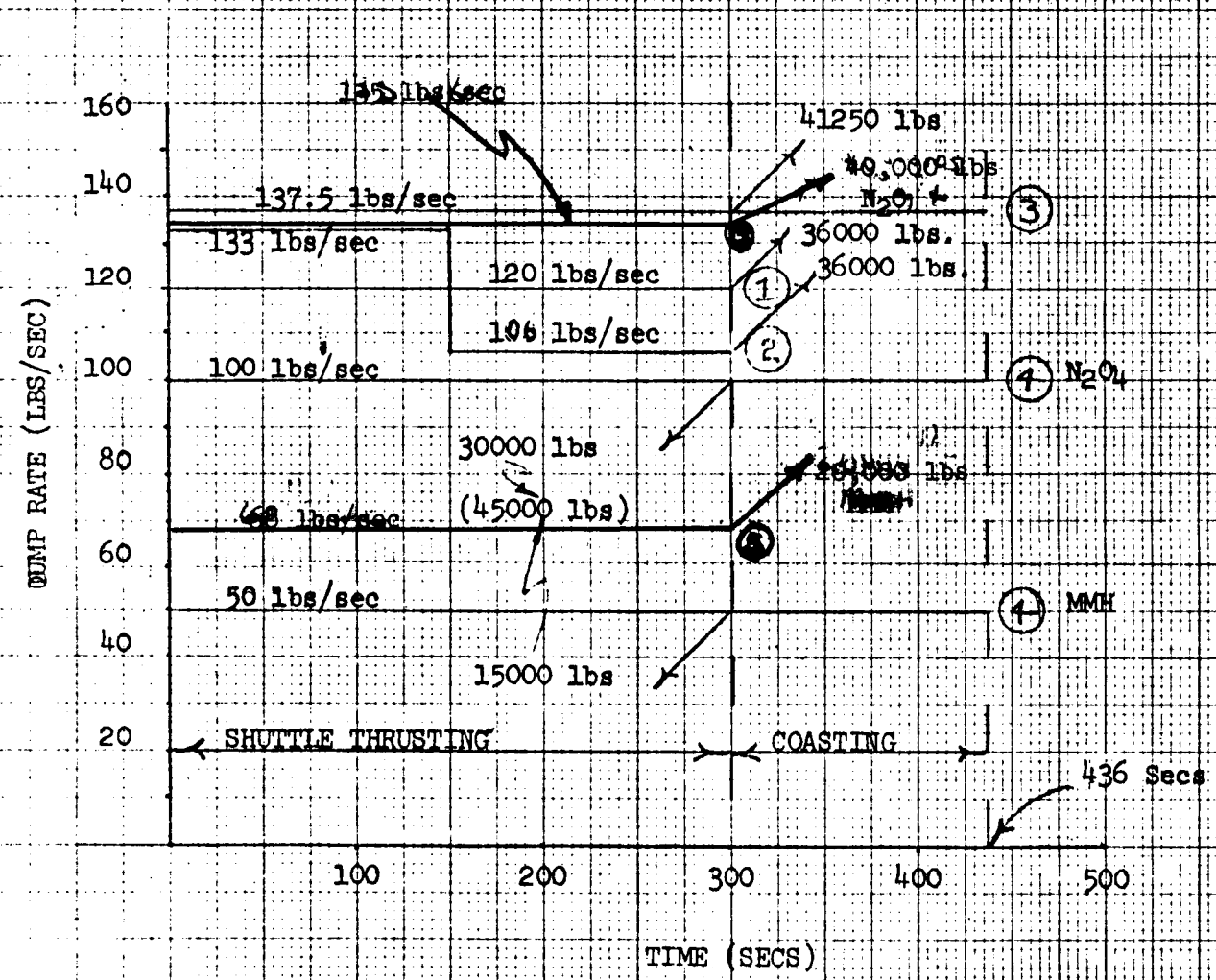

1 36 Klbs N_2O_4

2 20 Klbs MMH
16 Klbs N_2O_4
Sequential

3 20 Klbs MMH
40Klbs N_2O_4
Sequential

4 20 Klbs MMH
40 Klbs N_2O_4
Simultaneous

5 20,000 lbs MMH
40,000 lbs N_2O_4
Simultaneous

NOTE

Does not include any propellant from Payload delivered by Tug.

TABLE 1

TUG ABORT DUMP: LANDING SAFETY ≅ EMPTY TANKS

OPTION PROS & CONS	DON'T DUMP	DUMP DURING MPE BURN ONLY DUMP 36KLBS N_2O_4	SEQUENT. DUMP 16KLBS N_2O_4 20KLBS MMH only	SEQUENT DUMP N_2O_4 then MMH to "Empty"	DUMP DURING MPE BURN AND COAST SEQUENTIAL DUMP MMH then N_2O_4 to "Empty"	SIMULTANEOUS DUMP To "Empty"
ADVANTAGES	o N_2O_4 won't Vent o Minimum Complexity	o Enhances Orbiter Flight Control o Only one Fluid to Dump o Reduces landing hazard	o Enhances Orbiter Flight Control o Reduces Landing Hazard	o Minimum Hazard at Landing o Potential Forward CG Control advantage f (P/L wt.)	o Minimum Hazard at Landing o Potential AFT CG Control advantage f (P.L wt.)	o Minimum Hazard at Landing o Simple Control System
DISADVANTAGES	o Lands with full tanks	o Lands with full MMH tank	o Lands with 24Klbs N_2O_4 in tank o Requires two lines to dump	o Complex Operational control o Potential ΔP control problem o Requires two lines to dump	o Complex Operational control o Requires two lines to dump	o Constrained to Dump above 110000 feet o Requires two lines to dump

INFLIGHT PROPELLANT DUMP

- o LANDING SAFETY ≈ EMPTY TANKS
- o TIME TO DUMP (MODE III ABORTS)
  - DURING POWERED BURNS 302-512 SECS.
  - DURING COASTING FLIGHT ABOVE 110,000 FEET 134-211 SECS.
- o TIME TO DUMP (ONCE AROUND ABORT)
  - 24 MINUTES AT _____ G'S
- o RECOMMENDATIONS
  - SIMULTANEOUS DUMP
  - h> 110,000 FT (<5 MMHG PRESSURE)
  - DURING POWERED BURN
  - ALL MAIN PROPELLANTS
  - VIA AFT DUMP LINES

GRUMMAN

COMMON PRESSURANT SYSTEM FOR MPS

POTENTIAL PROBLEMS

- o PROPELLANT VAPORS MIGRATE INTO PRESSURIZATION SYSTEM
- o INDIVIDUAL VAPORS MAY ATTACK COMPONENT MATERIALS
- o HYPERGOLIC VAPORS MAY REACT WITH EACH OTHER
- o REACTION PRODUCTS MAY ATTACK COMPONENT MATERIALS

REQUIREMENT

- o MINIMIZE THE POSSIBILITY AND EFFECTS OF VAPOR MIGRATION

GRUMMAN

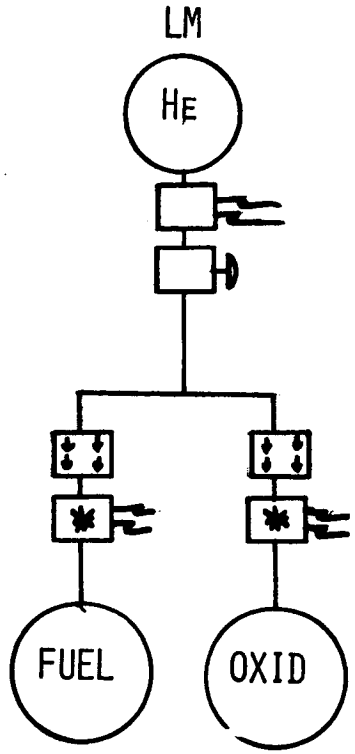

ONE SHOT VEHICLE COULD USE SQUIB VALVES FOR POSITIVE ISOLATION

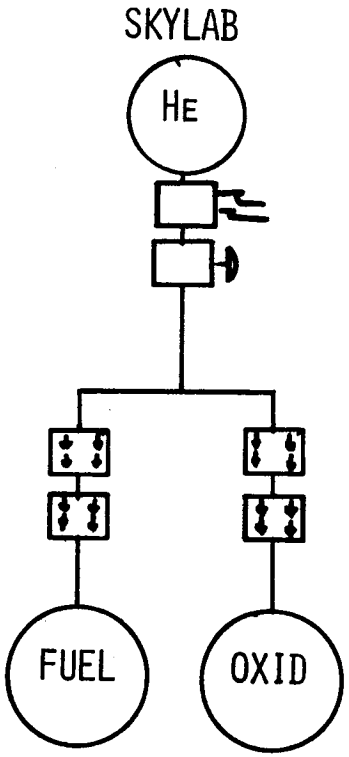

SPS (LONG TERM): ADDED REDUNDANT QUAD CHECK VALVES

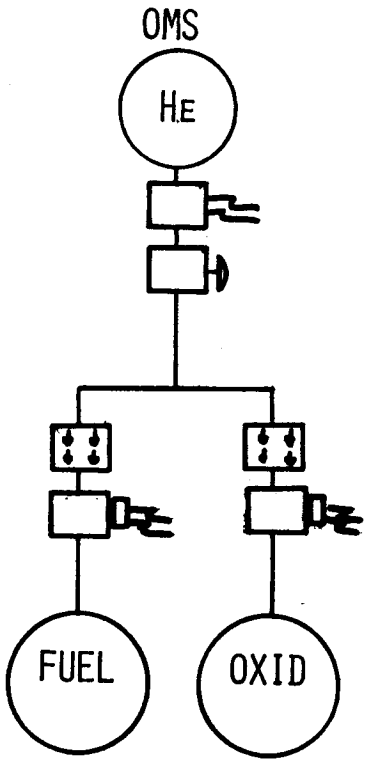

OMS: PROBABLY USE SOLENOID SHUTOFF VALVES, BUT WITH TEFLON SEAT CHECK VALVES (NOTORIOUS LEAKERS)

WHAT HAS BEEN DONE

GRUMMAN

SPACE TUG

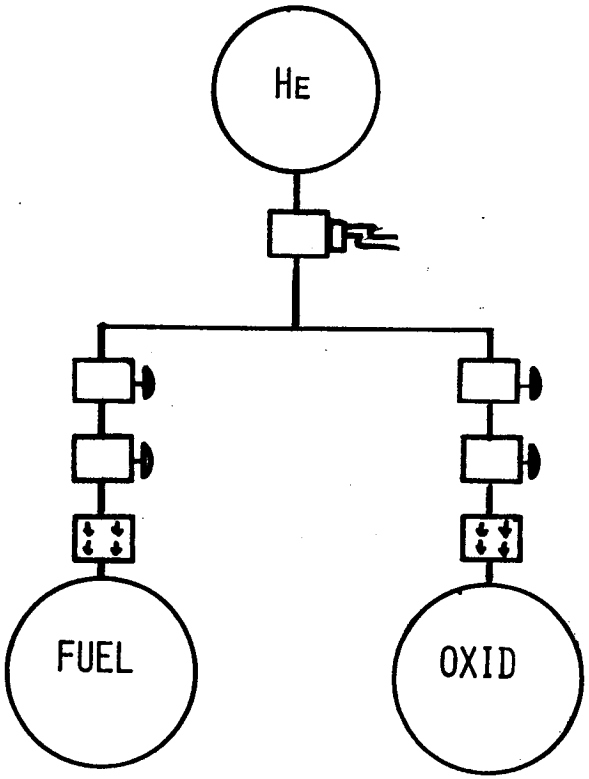

- SEPARATE REGULATORS (DIFFERENT TANK PRESSURES REQUIRED), SEPARATE FUEL AND OXIDIZER
- SOFT SEAT CHECK VALVES WITH HIGH SEAT LOADS PROVIDE ADEQUATE PROTECTION
- VOLUME UPSTREAM REGULATORS HELD TO A MINIMUM

GRUMMAN

SEPARATE HELIUM TANKS

- SEPARATE TANKS PROVIDE POSITIVE PROTECTION AGAINST HYPERGOLIC REACTIONS BUT DO NOTHING AGAINST VAPOR COMPATIBILITY PROBLEMS
- TANK DEVELOPMENT COSTS WOULD DOUBLE
- PROBABILITY OF TANK FAILURE WOULD DOUBLE (SINGLE POINT FAILURE)
- SEPARATE TANKS NOT RECOMMENDED

GRUMMAN

ABORT DUMP & PUBLIC SAFETY

STATEMENT OF THE PROBLEM:

DOES DUMPING OF HYPERGOLICS INTO THE ATMOSPHERE CONSTITUTE A PUBLIC SAFETY HAZARD.

APPROACH:

DETERMINE THE CHEMISTRY INVOLVED WITH DUMPING AT VARIOUS ALTITUDES.

IDENTIFY TOXIC LEVELS OF ELEMENTS IN AIR.

DEVELOP COMPARABLE ANALOG : SHUTTLE.

COMPARE TUG TO SHUTTLE.

RESULTS:

CONCLUSIONS & RECOMMENDATIONS.

GRUMMAN

ABORT DUMP & PUBLIC SAFETY

° CHEMISTRY VS. ALTITUDE

- LOW ALTITUDE <5000 FT.
  - = MMH OXIDIZES WITH O_2 IN AIR
  - = SPARK OR "HOT" MMH WILL IGNITE MIXTURE
  - = $N_2O_4 \rightleftarrows 2\ NO_2$;

    $3N_2O_4 + 2H_2O \rightarrow 4H\ NO_3 + 2NO$
- MODERATE ALTITUDE < 110,000 FT ≈ 5 TORR PRESSURE
  - = MMH WILL VAPORIZE, FREEZE AND/OR LIQUIFY
  - = SPARK OR "HOT" MMH WILL IGNITE MMH/ATMOSPHERIC O_2
  - = IF NO O_2, MMH WILL STAY MMH
  - = N_2O_4 WILL FREEZE (T < 12°F) OR REACT AS ABOVE.
- HIGH ALTITUDE
  - = NO REACTIONS
  - = PROPELLANTS PROBABLY FREEZE INITIALLY

    N_2O_4 (T < 12°F)

    MMH (T < -62.5°F)
  - = STAY TIME AT ALTITUDE UNKNOWN, BUT CONSIDERED TO BE YEARS.

GRUMMAN

CONTAMINANT EXPOSURE EFFECTS

GASEOUS TOXIC CONTAMINANT	EFFECTS
CARBON MONOXIDE (CAUTION LEVEL : 750 PPM FOR 10 MINUTES)	° LETHAL DOSE > 5,000 PPM FOR SECONDS EXCEEDING CAUTION LEVEL CAUSES: - HEADACHES - FATIGUE - DIZZINESS - DISTURBANCE OF COORDINATION, JUDGMENT, AND VISUAL ACUITY.
NITRIC OXIDE (CAUTION LEVEL : 25 PPM FOR 5 MINUTES)	° LETHAL DOSE > 60 - 150 PPM FOR SECONDS EXCEEDING CAUTION LEVEL CAUSES: - THROAT AND NOSE IRRITATION - FOLLOWED BY SHORTNESS OF BREATH - LOSS OF CONSCIOUSNESS - ULTIMATELY, DEATH

GRUMMAN

CONTAMINANT EXPOSURE EFFECTS (CONT'D)

LIQUID TOXIC CONTAMINANT	EFFECTS
MMH (CAUTION LEVEL : < 0.5 PPM)	° LETHAL DOSE UNKNOWN EXCEEDING CAUTION LEVEL CAUSES: - LOCAL DAMAGE AND BURNS - IRRITATION OF RESPIRATORY TRACT - ANEMIA
N_2O_4 (CAUTION LEVEL : 2.5 PPM)	° LETHAL DOSE UNKNOWN EXCEEDING CAUTION LEVEL CAUSES: - SEVERE BURNS - PULMONARY EDEMA (FLUID FILLED LUNGS) - NOSE/MOUTH SORES

GRUMMAN

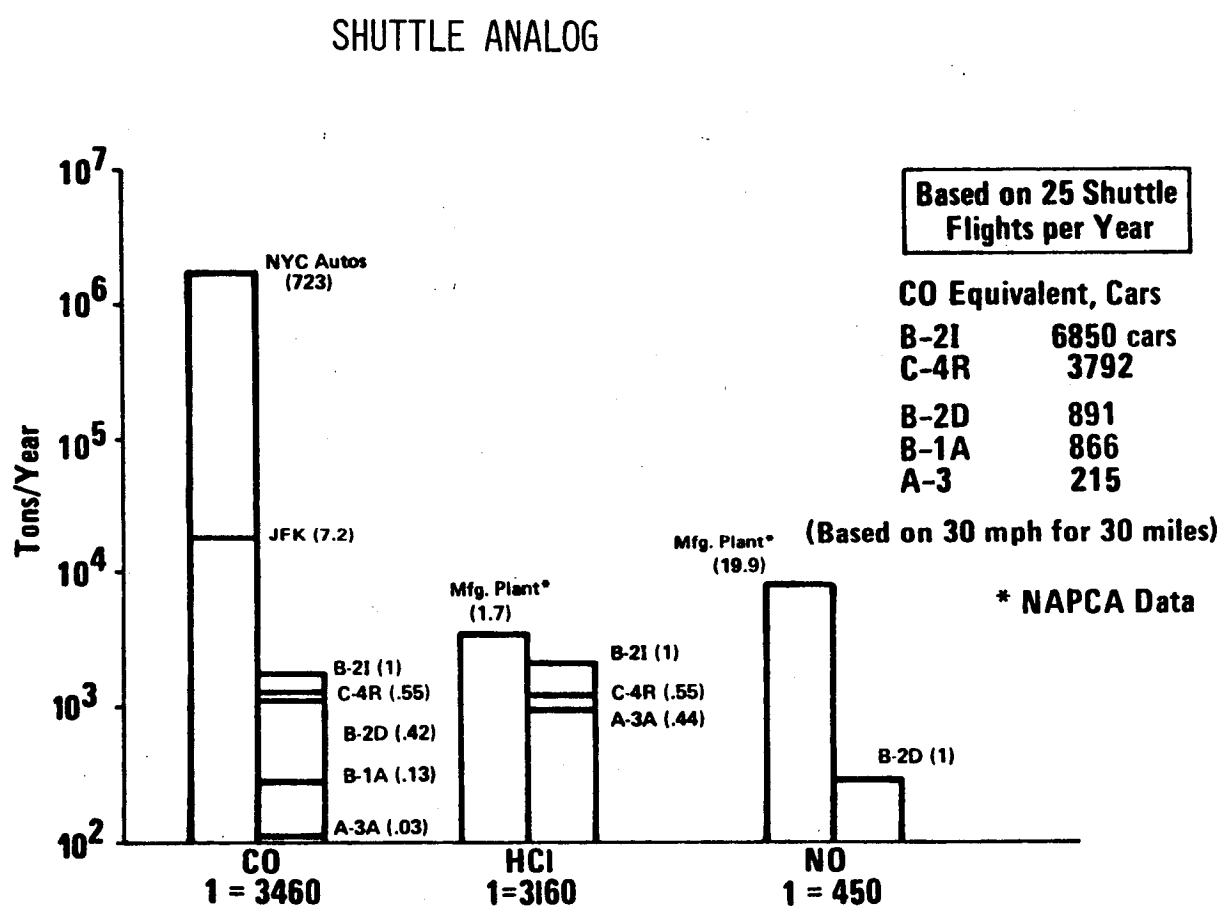

Figure J-6. Total Contaminant Products (Tons/Year)

GRUMMAN

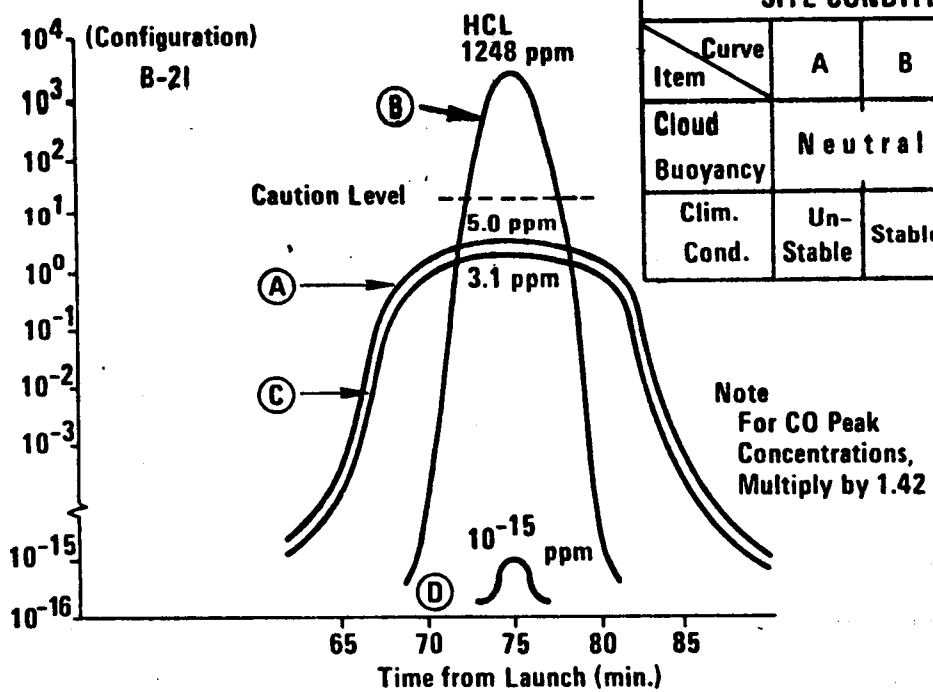

SITE CONDITIONS				
Item \ Curve	A	B	C	D
Cloud Buoyancy	Neutral		Positive	
Clim. Cond.	Un-Stable	Stable	Un-Stable	Stable

Figure J-7. Contaminant Concentration 20 KM Downwind

CONTAMINANT GENERATED IN FIRST 34 SECS. OF FLIGHT

GRUMMAN

298

TABLE J-3. CONTAMINANT PEAK CONCENTRATIONS CONFIG. COMPARISON, 20 KM DOWNWIND SITE CONDITIONS

Item	A	B	C	D	Comment
Cloud Buoyancy	NEUTRAL		POSITIVE		Cloud Rise 0 Neutral 500m Pos
Conditions Climatic	Unstable	Stable	Unstable	Stable	Unstable Implies Turbulence
A-3A					*Above
HCI	1.58 ppm	391.2*ppm	0.983 ppm	10^{-15} ppm	Caution
CO	2.24	555.8	1.40	10^{-15} ppm	Level
C-4R					*Above
HCI	2.78	689*	1.74	10^{-15}	Caution
CO	3.95	980*	2.47	10^{-15}	Levels
B-2D					*Above
CO	4.2	1045*	2.65	10^{-14}	Caution
NO	0.90	224*	.57	10^{-14}	Levels

GRUMMAN

CONCLUSIONS FOR SHUTTLE

- PEAK EXHAUST PRODUCTS COULD HAVE ADVERSE EFFECT ON GENERAL POPULATION UNDER SELECT METEROLOGICAL CONDITIONS
- ADVERSE METEROLOGICAL CONDITIONS EXIST AT KSC AND WTR
  - KSC - MOST FREQUENTLY IN JANUARY - FEBRUARY
  - WTR - MOST FREQUENTLY IN SUMMER
- SRM'S PROPELLANTS PRODUCE MOST SEVERE TOXIC EFFECTS
- OPERATIONAL RESTRICTIONS ARE REQUIRED FOR SRM'S AND STORABLES
  - MUST CONSIDER RAIN, THERMAL GRADIENTS, AND WIND VELOCITY/DIRECTION (GEMINI EMPLOYED SIMILAR RESTRICTIONS)

GRUMMAN

CONCLUSIONS FOR TUG

- PUBLIC SAFETY NOT AN ISSUE
  - WE DUMP ABOVE 110,000 FT. ALTITUDE
  - DUMP IS RARE OCCURRENCE COMPARED TO SHUTTLE LAUNCHES
- ECOLOGICAL IMPACT NOT AN ISSUE
  - NO ATMOSPHERIC DUMP
  - DUMP IS RARE OCCURRENCE
  - QUANTITY DUMPED CONSIDERED SMALL
  - BENEFITS OF TUG OUTWEIGH ANY OF SMALL ENVIRONMENTAL COSTS.

GRUMMAN

KICK STAGE DISPOSAL

- o STATEMENT OF PROBLEM
  - IDENTIFY ANY PUBLIC OR EQUIPMENT SAFETY PROBLEMS ASSOCIATED WITH APOGEE KICK STAGE DISPOSAL
- o APPROACH
  - DETERMINE MINIMUM ALTITUDE AT WHICH STAY TIMES ARE "LONG"
  - IDENTIFY MODES THAT WILL NOT SATISFY THE ALTITUDE REQUIREMENT
  - IDENTIFY CONDITIONS THAT INTRODUCE EQUIPMENT SAFETY PROBLEMS
  - ESTABLISH COMPENSATING REQUIREMENTS
  - DETERMINE COSTS/PENALTIES OF IMPLEMENTING REQUIREMENTS
- o RESULTS
- o CONCLUSIONS AND RECOMMENDATIONS

GRUMMAN

KICK STAGE DISPOSAL MODES*

MODE	NOMINAL/FAILURE	HAZARD POTENTIAL	LIKELIHOOD
SRM CASE JETTISON** IN CIRCULAR ORBIT	NOMINAL FOR ADKS AND AKS	PAYLOAD IMPACTED	VERY LOW
SRM CASE JETTISON IN ELLIPTICAL ORBIT	NOMINAL FOR ADKS AND AKS	PAYLOAD IMPACTED	VERY LOW
SRM THRUST FAILURE DURING TRANSFER ORBIT	FAILURE	P/L PLUS AKS ENTERS ATMOSPHERE, SURVIVES ENTRY	LOW
LOSS OF ATTITUDE CONTROL DURING BURN: GIMBAL OR APS	FAILURE	P/L PLUS AKS ENTERS ATMOSPHERE, SURVIVES ENTRY	LOW
SRM FAILS TO LIGHT; TUG CAN'T RETRIEVE	FAILURE	P/L PLUS AKS ENTERS ATMOSPHERE, GRAIN IS IGNITED	MODERATELY LOW

* ASSUMES JETTISON IS MANDATORY TO SATISFY PERFORMANCE REQUIREMENTS. WHERE SATELLITE CAN ACCOMMODATE AKS WEIGHT WITH MINIMUM IMPACT, IT IS RECOMMENDED THE AKS BE RETAINED.

** ASSUMES SEPARATION SYSTEM FOR SRM CASE AND 2ND SEPARATION SYSTEM FOR TOTAL STAGE.

GRUMMAN

COMPENSATING REQUIREMENTS

NOTE 1: THOUGH STAY TIMES ON ORBIT MAY BE LONG, RE-ENTRY IS POSSIBLE FOR FAILURE MODES IDENTIFIED.

o DESIGN KICK STAGE NOT TO SURVIVE RE-ENTRY

- SRM CASE: FIBERGLASS
- PRIME STRUCTURE: ALUMINUM
- ALUMINUM FITTINGS
- LIGHT WEIGHT METALLIC ENGINE THROAT
- MINIMUM AVIONICS COMPONENTS OF HIGH TEMPERATURE METALLICS

NOTE 2: THE POSSIBILITY OF KICK STAGE - PAYLOAD CONTACT AFTER JETTISON IS CONSIDERED SMALL, BUT FINITE

o PROVIDE EXTRA Δ V ON KICK STAGE TO DEORBIT IT

GRUMMAN

FIGURE 6

ELIPTICAL ORBITS WHICH GIVE 2 YR LIFE

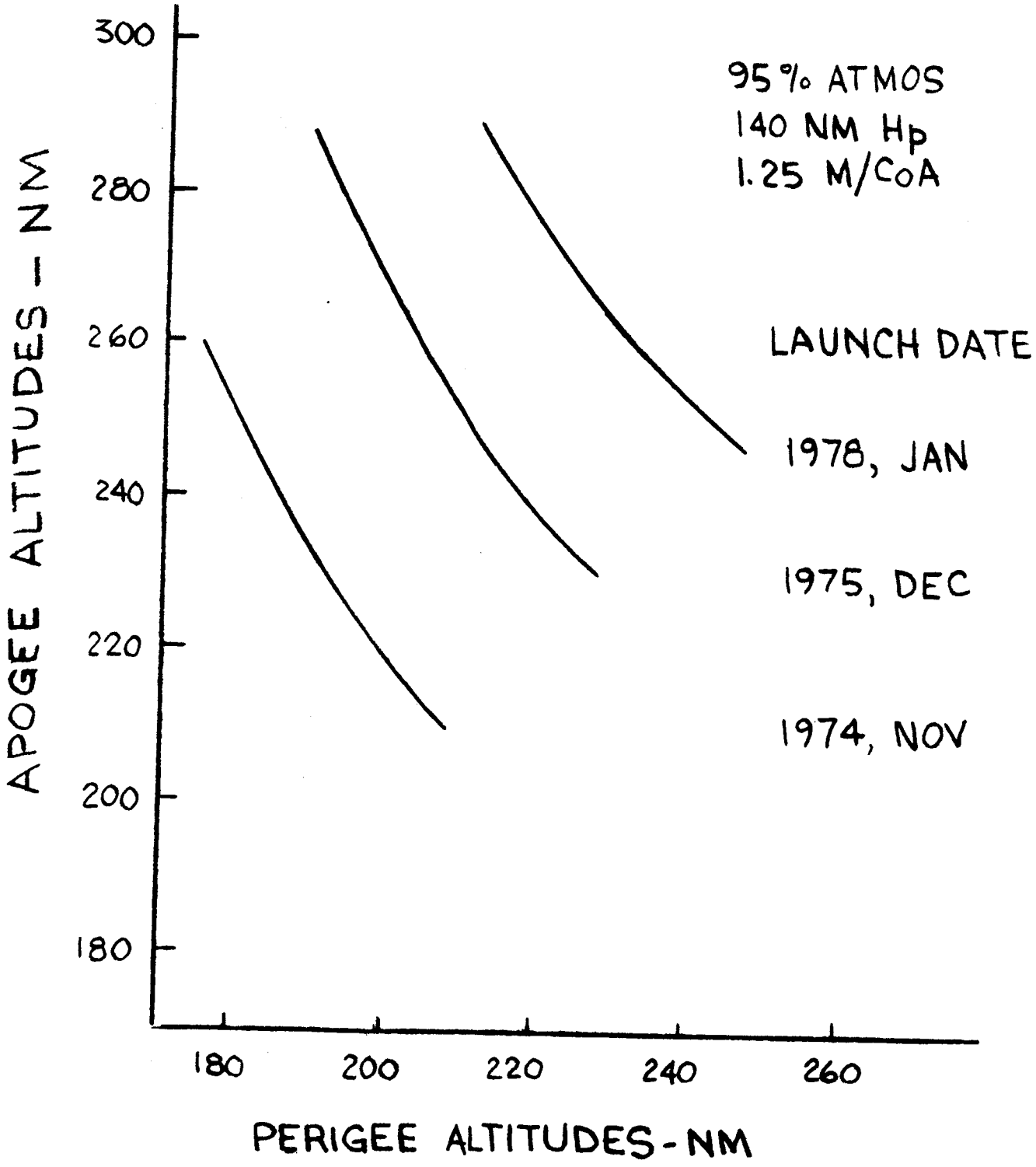

DEORBIT AKS

COST/PENALTIES

- WEIGHT IMPACT ESTIMATE

SRM	1500.0
AVIONICS (ASSUMES DKS TYPE FOR DEORBIT)	195.2 LBS
ACPS Δ V PROPELLANT	4.3
	1699.5 LBS

- COST ESTIMATE (MILLIONS DOLLARS)

	Δ DDT&E	+	(NO. OF FLTS)	(ADKS - AKS COSTS)	=	TOTAL PROGRAM COST
110A	13.921	+	(5)	(.906)	=	16.541
501A	13.921	+	(26)	(.906)	=	39.477

GRUMMAN

CONCLUSIONS

WHERE FEASIBLE, RETAIN ALL KICK STAGE HARDWARE!

GRUMMAN

PROPELLANT LOADING SITE IMPLICATIONS

STATEMENT OF PROBLEM

- WHICH PROPELLANT LOADING SITE PROVIDES THE MOST SAFETY FOR GROUND CREWS AND FLIGHT EQUIPMENT:
  - (A) ON THE LAUNCH PAD
  - (B) AT A SPECIALIZED REMOTE SITE

APPROACH

- COMPARE OPERATIONS/TIMELINES/ACTIVITIES
- IDENTIFY HAZARDS OF EACH SITE
- ESTABLISH SAFETY REQUIREMENTS
- ASSESS RELATIVE RESIDUAL HAZARDS

RESULTS

CONCLUSIONS AND RECOMMENDATIONS

ASSUMPTION: PROPELLANT LOADING IS MOST LIKELY MODE FOR PROPELLANT LEAKS, SPILLS AND VENTING

GRUMMAN

TIMELINE COMPARISON

PROPELLANT SERVICING FACILITY (PSF)

- MOVE TO PSF
- LOAD OXIDIZER, FUEL, PRESSURANT
- MOVE TO ORBITER MAINTENANCE AND CHECKOUT FACILITY AIRLOCK
- MOVE INTO M&CF
- MATE PAYLOAD TO TUG
- MATE PAYLOAD/TUG TO ORBITER
- MOVE TO VAB
- MATE ORBITER TO TANK
- MOVE TO PAD

LAUNCH PAD

- MOVE TO ORBITER MAINTENANCE AND CHECKOUT FACILITY AIRLOCK
- MOVE INTO M&CF
- MATE PAYLOAD TO TUG
- MATE PAYLOAD/TUG TO ORBITER
- MOVE TO VAB
- MATE ORBITER TO TANK
- MOVE TO PAD
- LOAD OXIDIZER, FUEL, PRESSURANT

GRUMMAN

HAZARD COMPARISON IMPACTS

HAZARD	PSF	LAUNCH PAD
o LEAKS DURING SERVICING	o TUG EFFECTED	o ORBITER, PAYLOAD, TUG, PAD EFFECTED
o LEAKS DURING TRANSPORT	o PURGE/SNIFFING REQUIRED	o NOT APPLICABLE
o VENTING DURING TRANSPORT	o GSE REQUIRED TO CONTAIN/DISSIPATE GASES	o NOT APPLICABLE
o SPILLS DURING LOADING	o CONTAMINATES TUG; FACILITY CONTAINS EFFECTS	o CONTAMINATES ORBITER, PAYLOAD, TUG AND POSSIBLY LAUNCH PAD. SYSTEM VERIFICATION ONLY ON BOARD EOS
o TRAPPED FLUIDS	o NONE OUTSIDE TUG	o FILL LINE BETWEEN TUG - ORBITER FULL; DRAIN NECESSARY NOT 100% EFFECTIVE
o INADVERTENT VENT/DUMP COMMAND DURING TRANSPORT	o GSE HOOKED UP TO CONTAIN	o NOT APPLICABLE

GRUMMAN

HAZARD COMPARISON IMPACTS (CONTINUED)

HAZARD	PSF	LAUNCH PAD
o FAILURE HI PRESSURE PRESS TK. DURING TRANSPORT	o BAY OVERPRESSURE ESTIMATE - FRACTION OF A PSI	o NOT APPLICABLE
o CAN'T SAFE LEAK IN TIMELY FASHION	o COMPLETE ACCESS DURING PROPELLANT LOADING	o SEVERELY LIMITED ACCESS DURING LOADING
o VEHICLE DAMAGED BY GROUND CREW DURING BAY ACCESS	o NO ACCESS REQUIRED; PROBABILITY REDUCED BY SYSTEM VERIFICATION	o NO ACCESS REQUIRED

GRUMMAN

SAFETY REQUIREMENT COMPARISON

PSF	HAZARD	LAUNCH PAD
o CLOSED VOLUME PURGE/SNIFF	o LEAKS	o SEQUENTIAL LOADING o LINE INTEGRITY VERIFICATION MANDATORY o SCUPPERS REQ'D AT DISCONNECTS o FULL BAY INERT REQUIRED
o FACILITY WATER FLUSH	o SPILLS	o P/L BAY WATER FLUSH REQUIRED
o COMMAND INTERLOCKS/ INHIBITS	o VENTING	o COMMAND INTERLOCKS/INHIBITS o THERMAL CONTROL OF BAY
o DRAIN LINES BETWEEN VALVES & TUG MOLD LINE	o TRAPPED FLUIDS	o DRAIN LINES BETWEEN TUG AND ORBITER MOLD LINES
o COMMAND INTERLOCKS/ INHIBITS	o INADVERTENT COMMANDS	o COMMAND INTERLOCKS/INHIBITS
o ACCESS STANDS TO LIKELY LEAK POINTS	o TIMELY SAFING	o P/L BAY DRAINS FOR FLUID o INERT OF BAY RAPIDLY o ACCESS PLATFORMS TO DISCONNECTS
o GUARD RAILS ON WORK STANDS	o CREW DAMAGE	o PRECLUDE ACCESS ON LAUNCH PAD UNLESS MANDATORY

GRUMMAN

ASSESSMENT

PROPELLANT LOADING AT REMOTE FACILITY ATTRACTIVE

- VERIFIES TUG PROPELLANT SYSTEM IS SAFE BEFORE PAYLOAD AND ORBITER MATING
- PROTECTS TUG FROM GROUND PERSONNEL ERRORS
- REDUCES PERSONNEL ON PAD EXPOSED TO HAZARDS
- USES APPROACH SIMILAR TO OMS/RCS PODS

GRUMMAN

GROUND TRANSPORT OF LOADED TUG

- FEDERAL, STATE AND LOCAL SAFETY REQUIREMENTS MUST GE SATISFIED BY LAW E.G.

  OSHA - PROTECT EMPLOYEES

  DOT - MOVEMENT OVER THE ROAD

- WHAT IS THE IMPACT ON TUG DESIGN AND OPERATIONS?

- NATIONAL FIRE PROTECTION ASSOCIATION STANDARD #385, TANK VEHICLES FOR FLAMMABLE AND COMBUSTIBLE LIQUIDS, APPLIES

GRUMMAN

GROUND TRANSPORT OF LOADED TUG

AGENCY/REQUIREMENTS INVOLVED	TRANSPORTER	TUG	HOISTS
NASA (MSFC/KSC)	YES	YES	YES
OSHA	NO	YES	YES
DOT	YES	NO	NO
STATE OF CALIFORNIA	YES	YES	YES
STATE OF FLORIDA	YES	YES	YES
USAF			
ETR	YES	YES	NO
WTR	YES	YES	YES

GRUMMAN

NFPA CODE IMPACTS

- INCREASE TANK WALL THICKNESS FROM (STAINLESS STEEL) 0.009" TO 0.1046" (1662 LBS WT. PENALTY)
- ADD 80%-OF-AREA BAFFLE IN N_2O_4 TANK WITH THICKNESS EQUAL TO 0.1046 (122 LBS WT. PENALTY)
- PROVIDE DRAINAGE CAPABILITY FOR GAP BETWEEN N_2O_4 AND MMH TANKS
- PROVIDE VENT SET AT

  1 PSIG NORMAL VENT

  5 PSIG EMERGENCY VENT
- GAIN APPROVAL OF ALL AGENCIES AND PUBLIC ENTITIES INVOLVED:

  NASA, OSHA, DOT, FLORIDA, CALIFORNIA ET AL.

GRUMMAN

PRECEDENTS

- GEMINI GT6
  - STORABLE PROPELLANTS
  - DESTACKED LOADED
  - MOVED VEHICLE LOADED FROM PAD 19 TO CRYO 1 FACILITY BACK TO PAD 19; HOIST TO ATOP STACK

GRUMMAN

RECOMMENDATIONS

- o EVALUATE IMPACT ON STRUCTURAL DESIGN OF INCORPORATING GROUND HANDLING LOADS

- o SPELL OUT OPERATIONAL IMPACTS AND COSTS OF LOADING PROPELLANT ON THE PAD
  - (A) AT KSC
  - (B) AT WTR

- o ESTABLISH INFORMAL DIALOGUE WITH OSHA, DOT, CALIFORNIA AND FLORIDA STATE OFFICIALS TO IDENTIFY PROBLEMS AND POSSIBLE RESOLUTION

GRUMMAN

DESIGN LIFE SENSITIVITY

FACTORS

- o VEHICLE STRUCTURE
  - o TANK FRACTURE MECHANICS
  - o TANK REPLACEMENT
- o VEHICLE EQUIPMENT
  - o LIMITED LIFE
    - - FUEL CELL
    - - MAIN ENGINE
    - - THERMO COATINGS/INSULATION
- o MISSION RELIABILITY
  - o EXPECTED NUMBER OF FLIGHTS
- o TRAFFIC MODEL
  - o EXPENDABLE MISSIONS

GRUMMAN

DESIGN LIFE SENSITIVITY (CONTINUED)

VEHICLE STRUCTURE

- o TANK FRACTURE MECHANICS
  - o FLAW GROWTH

    50% FLAW (.008) DOES NOT RUPTURE AT 800 CYCLES
    (EQUIVALENT TO 100 MISSIONS - SCATTER FACTOR - (4))

  - o FLAW DETECTABILITY

    STATE OF ART CAPABILITY -

    0.002 - 0.004 FLAWS USING RADIOGRAPHIC TECHNIQUES -
    (10% SENSITIVITY)

- o TANK REPLACEABILITY

  TANK REPLACEMENT COSTS

$300K	- TANK (410AD-2 TITANIUM)
430K	- INSTALLATION AND CERTIFICATION
$730K	TOTAL

  - o 6 - 8 MONTHS FACTORY FLOW

GRUMMAN

TANK LIFE EVALUATION

MATERIAL	t IN.	OPERATING KSI	K_{IC} KSI IN	K_{TH} KIC	"A" FLAW SIZE - INCHES INITIAL	AFTER 160 CYCLES	AFTER 800 CYCLES
Titanium 6AL-4V STA	0.016	75	44	.70	.008	.0085	.0145
Aluminum 2219-T87	0.039	30.8	36	.70	.0098	.011	.034

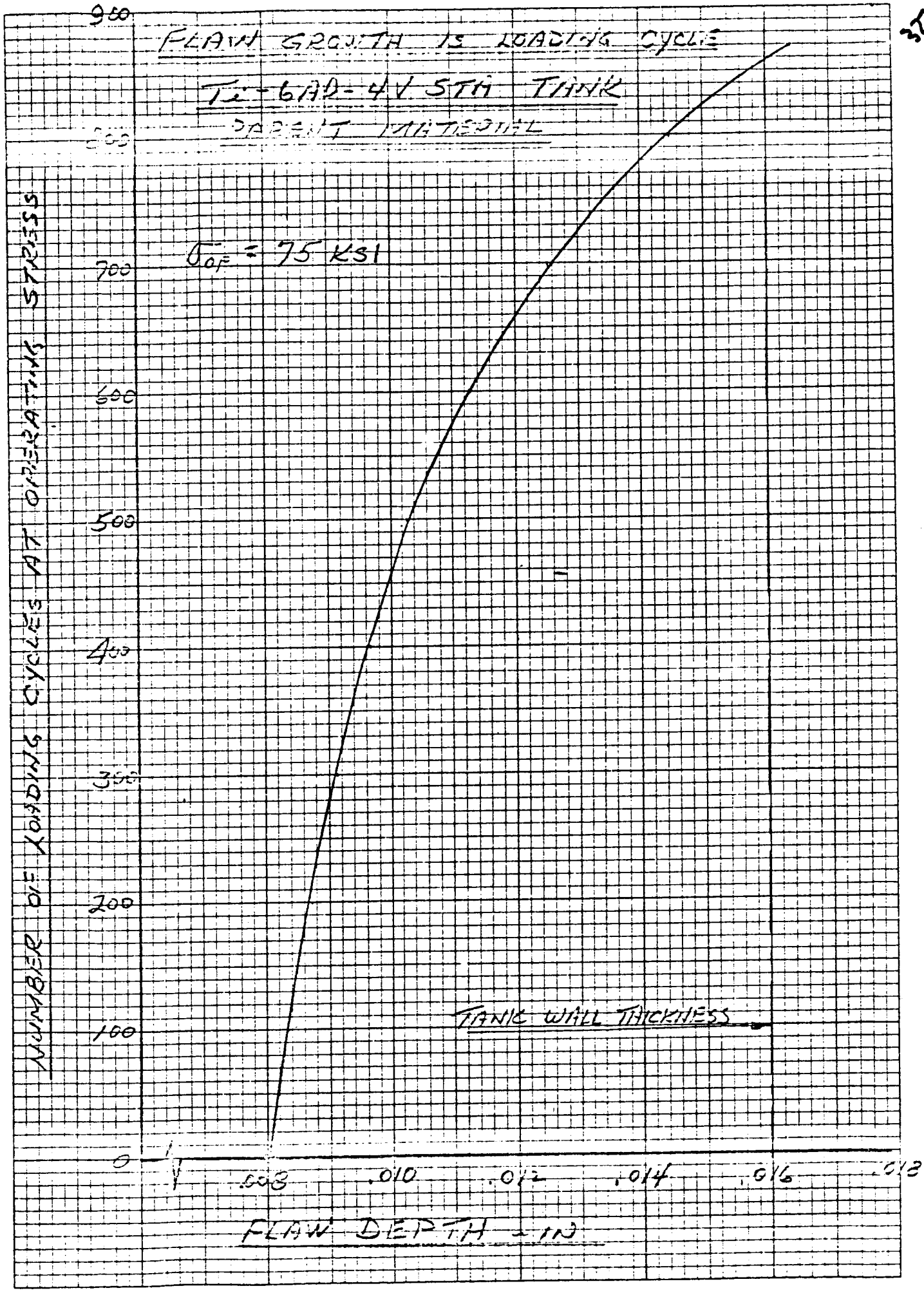

EUGENE DIETZGEN CO.
MADE IN U. S. A.
NO. 340R-10 DIETZGEN GRAPH PAPER
10 X 10 PER INCH

APPLIED STRESS VS. FLAW DEPTH

TITANIUM 6Al-4V (STA) TANK

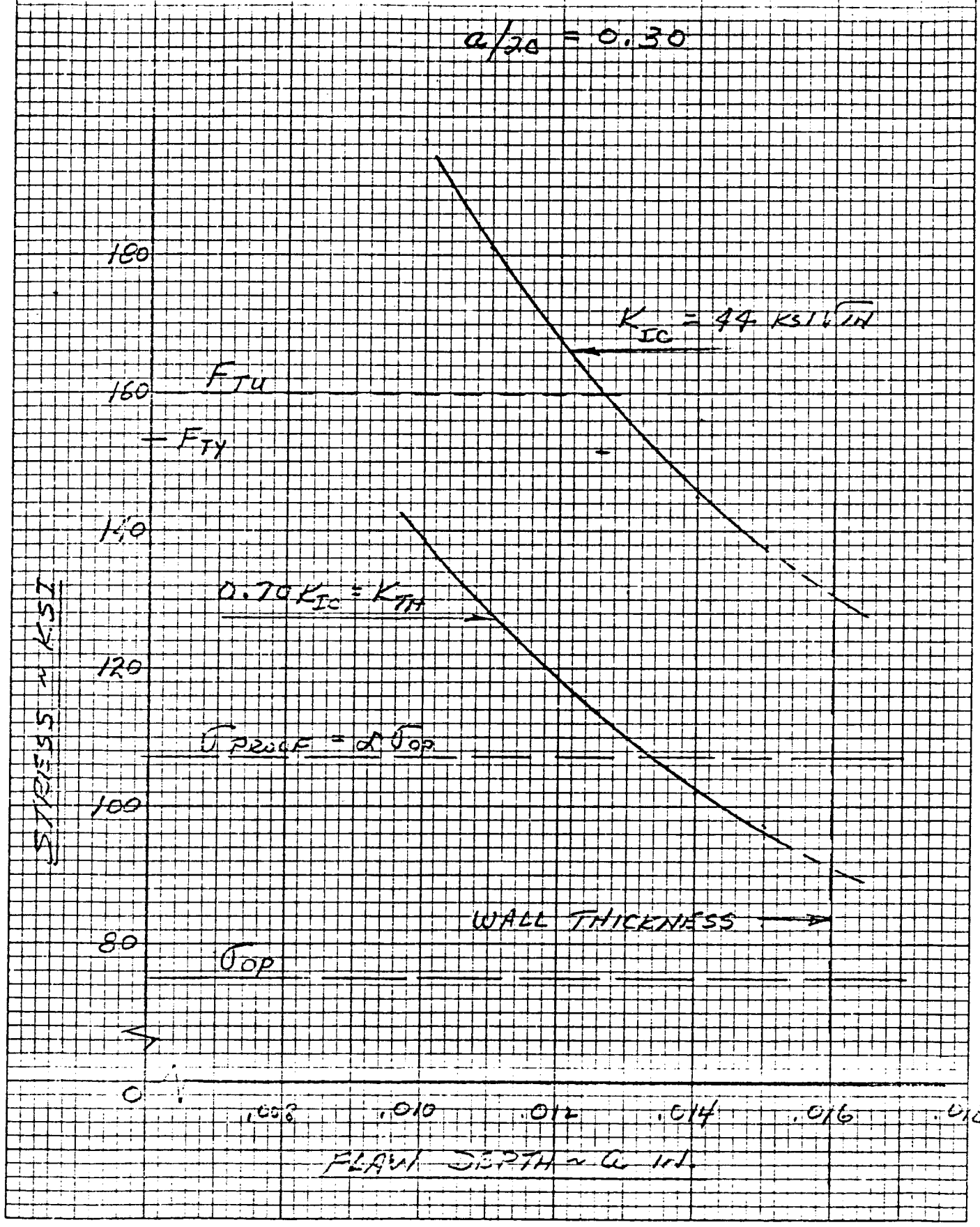

EUGENE DIETZGEN CO.
MADE IN U. S. A.
NO. 340R-10 DIETZGEN GRAPH PAPER
10 X 10 PER INCH

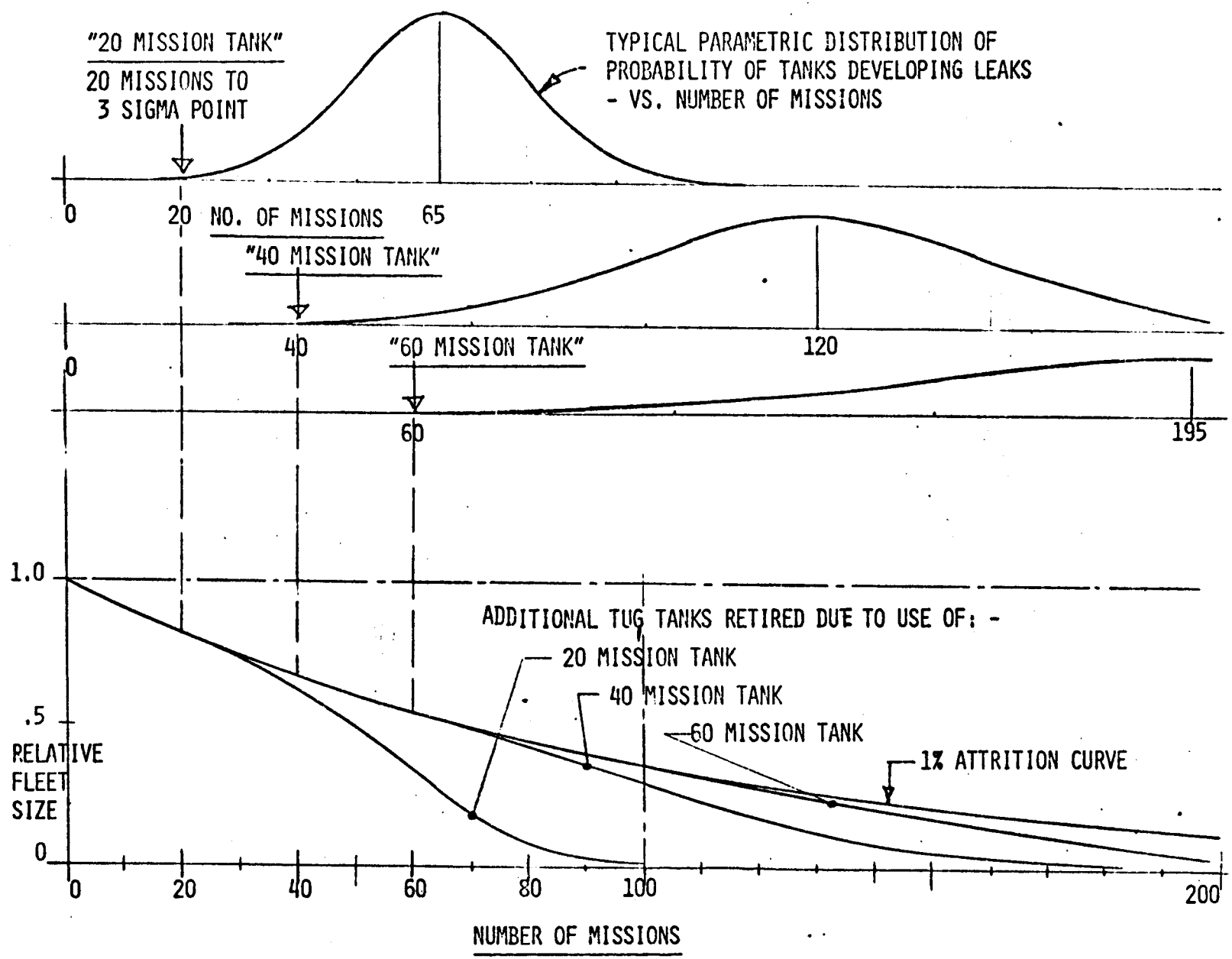
"20 MISSION TANK"
20 MISSIONS TO
3 SIGMA POINT
TYPICAL PARAMETRIC DISTRIBUTION OF
PROBABILITY OF TANKS DEVELOPING LEAKS
- VS. NUMBER OF MISSIONS
0
20
NO. OF MISSIONS
65
"40 MISSION TANK"
40
120
"60 MISSION TANK"
0
60
195
1.0
ADDITIONAL TUG TANKS RETIRED DUE TO USE OF: -
20 MISSION TANK
40 MISSION TANK
60 MISSION TANK
1% ATTRITION CURVE
.5
RELATIVE
FLEET
SIZE
0
0
20
40
60
80
100
200
NUMBER OF MISSIONS

DESIGN LIFE SENSITIVITY (CONTINUED)

VEHICLE EQUIPMENT

LIMITED LIFE -

- o SURVEY INDICATES THAT MOST EQUIPMENTS CAN BE REUSED UP TO 100 MISSIONS WITH CERTAIN PERIODIC TESTS AND/OR OVERHAUL

- o MAJOR LIFE LIMITED EQUIPMENTS

  - FUEL CELL - 30 MISSIONS (EXTENDED TO 100 WITH PERIODIC OVERHAUL)

  - MAIN ENGINE - DESIGN GOAL - 20 MISSIONS WITH 100 MISSION DESIGN LIFE WITH OVERHAULS

  - THERMO COATINGS AND MULTI-LAYER INSULATION

    10 MISSIONS (PREDICTED) - EXPERIENCE AND/OR TEST WILL DETERMINE ACTUAL REQUIREMENTS

GRUMMAN

LIMITED LIFE SURVEY SUMMARY

SUBSYSTEM/EQUIPMENT	SHELF LIFE LIMIT	Freq/Yrs	ON-VEHICLE MAINTENANCE	Freq	BENCH MAINTENANCE	Freq	DEPOT MAINTENANCE	Freq	REUSE BEYOND 20 MISSIONS: Bench Check	Overhaul	Other	REMARKS
DATA MGT												
Computer												
Mass Memory			Replace Tape	1						Check and/ or Replace Bearings		
Tape Recorder			Replace Tape	1						Check and/ or Replace Bearings		
Data Bus/Formatter												
DAU/Sig Cond												
Hi-Press Sensors			Recalibrate	5								
PCM/Sig Cond									X			
POWER												
Fuel Cell	Seals	10	Nitrogen Purge	1	Yes	2	Yes	5	X	X		Overhaul every 30 Missions
Battery		1										
Cryo Tanks	Seals	10	Check Dewer Vacuum	1	Evacuate Dewer	10						
GN&C												
IMU	Recalibrate	60 days	Recalibrate	1					X	As Req.		
Horizon Scanner	Test	1							X			
MPS Elect									X			
APS Elect									X			
Laser Radar	TBD	TBD	Calibrate	1			TBD	TBD				
Star Tracker		8	Test	1					X	As Req.		
Sync Nav Sat Rcvr									X			
Doppler Receiver									X			
Doppler Detector									X			
Rate Gyro Assy	TBD								X	As Req.		
APS												
Thruster					Catalyst Insp	TBD	Catalyst Repl	TBD		X		
Helium Tank											X	Proof Test
He Latch Solenoid	Seals	2								X		
Shut-Off Valves										X		
Helium Regulator					Adjust	As Req.			X			
Qual Check Valve	Seals	2								X		
Vent Valve										X		
Burst Disc									X			
Relief Valve	Seals	2								X		
Isolation Valve										X		
Fuel Tank (w/bladder)	Bladder	2									X	Inspect Bladder

SUBSYSTEM/EQUIPMENT	SHELF LIFE LIMIT	Freq/Yrs	ON-VEHICLE MAINTENANCE	Freq	BENCH MAINTENANCE	Freq	DEPOT MAINTENACE	Freq	REUSE BEYOND 20 MISSIONS Bench Check	Overhaul	Other	REMARKS
MPS												
Engine	Seals	2							X			
Helium Tank											X	Proof Test
Pre-Valves	Seals	2							X			
Quick Disconnects									X			
He Iso Valve	Seals	2							X			
Regulators									X			
Relief Valves	Seals	2							X			
Burst Disc									X			
Quad Check Valve	Seals	2							X			
Vent Valve	Seals	2							X			
COMMUNICATIONS												
Receiver									X			
Transmitter									X			
Filter									X			
Filter Control									X			
Diplexer									X			
Ant Transfer Sw									X			
Power Amplifier									X			
Power Splitter									X			
Baseband Processor									X			
Omni Antenna									X			
TV									X			Replace at TBD Life
Aux Transmitter-TV									X			
Power Amp-TV									X			
THERMO												
Multilayer Insulation												Experience (on test) will determine life capability
Thermo Coatings			Recoat	10								
Heat Pipe Radiator												
Fuel Cell Radiation System							X	TBD				

GRUMMAN AEROSPACE SPACE TUG

LIMITED LIFE SURVEY

8-29-73

TYPICAL FORM

Subsystem GNC

Equipment STAR TRACKER

Date 7/3/73

Does this equipment have shelf life limitations?

☐ No

☒ Yes - If yes, describe 50000 Hrs.

Frequency

Does this equipment require any periodic test, adjustment, calibration or maintenance while installed on the Tug?

☐ No

☒ Yes - if Yes, describe periodic task(s) STAR TRACKER PERFORMANCE TEST

Frequency of task (number of missions)

Does this equipment require any periodic bench test, calibration, adjustment or maintenance?

☒ No

☐ Yes - if Yes, describe

Frequency

Does this equipment require periodic overhaul?

☒ No

☐ Yes - if yes, at what frequency?

If the Tug is designed for 20 missions, can we plan on removing this equipment for reinstallation on a new Tug for 20 more missions?

☐ No

☒ Yes - if Yes, what would you recommend to be done between removal and reinstallation?

☒ Bench Check

☒ Overhaul (IF REQUIRED)

☐ Other - describe

How many times can it be reused? AT LEAST 4

REMARKS:

DESIGN LIFE SENSITIVITY (CONT'D)

MISSION RELIABILITY

- EXPECTED NUMBER OF MISSIONS PER TUG IS A FUNCTION OF DESIGN LIFE AND RELIABILITY

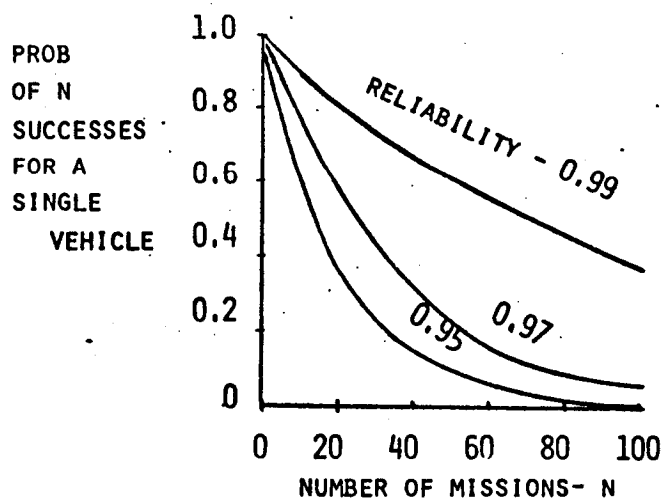

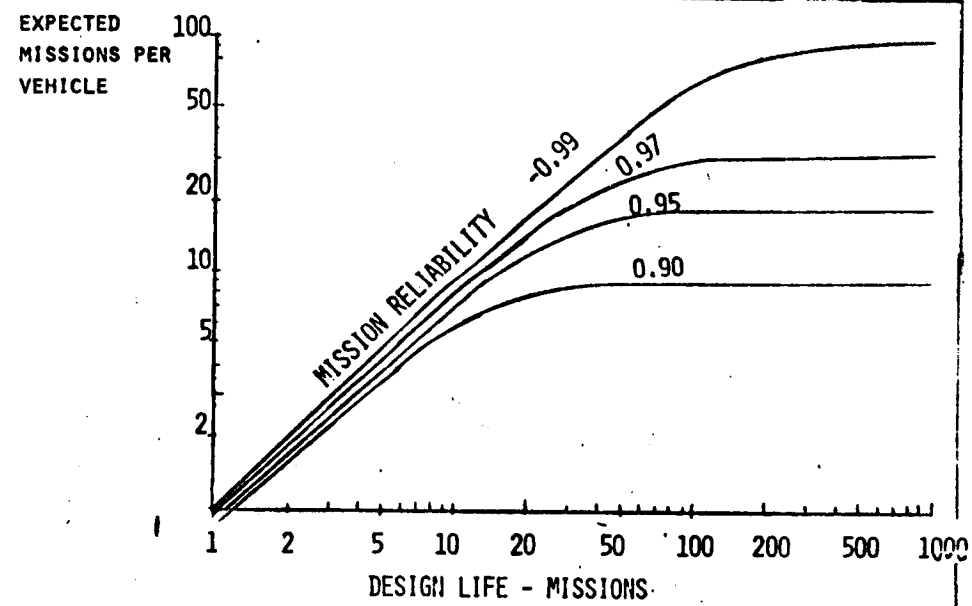

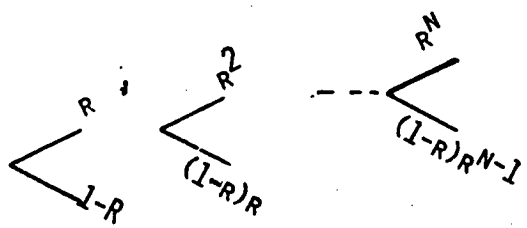

$$EM = \frac{R - R^{(N+1)}}{1-R}$$

$$= \frac{1}{1-R} - 1$$

$N \to \infty$

GRUMMAN

DESIGN LIFE SENSITIVITY (CONTINUED)

TRAFFIC MODEL

VEHICLES REQUIRED AS A FUNCTION OF DESIGN LIFE VS. EXPENDABLE MISSIONS

- 310 → 310RE-3A 351 MISSIONS (17 EXPENDABLE)
- EQUIVALENT TO 310 → 310ARE-3B (10 EXPENDABLE)
- ASSUME ONE LOSS PER 100 FLIGHTS

		DESIGN LIFE		
		20	50	100
NUMBER OF EXPENDABLES	17	24	23	23
	10	23	17	16

GRUMMAN

20 MISSION LIFE (17 EXPENDED)

	79	80	81	82	83	84	85	86	87	88	89	90	TOTAL
310-3A/310RE-3A													
TOTAL FLIGHTS		3	12	17	27	32	42	46	43	40	42	47	351
(PRE BREAK-UP)													
EXPEND				2		4		4	3		3	1	17
VEHICLE 1		2	6	6E									14
2		1	6	7E									14
3				4	15	1E							20
4					12	1E							13
5						14E							14
6						15E							15
7						1	17	2E					20
8							17	3E					20
9							8	12E					20
10								17E					17
11								12	8E				20
12									17E				17
13									17E				17
14									1	17	2E		20
15										17	3E		20
16										6	14E		20
17							1				17	3E	20
18											6	14R	20
19												17	17
20												13	13
21R													
22R													
23R													
24R													

G.116 REV 2
6 72 2000P

GRUMMAN

UNLIMITED LIFE (17 EXPENDED)

	79	80	81	82	83	84	85	86	87	88	89	90	TOTAL
310-34 / 310RE-34													
TOTAL FLIGHTS		3	12	17	27	32	42	46	43	40	42	47	351
(INC. BUILD-UP)													
EXPEND				2		4		4	3		3	1	17
VEHICLE 1		2	6	6E									14
2		1	6	7E									14
3				4	17	1E							22
4					10	1E							11
5						14E							14
6						15E							15
7						1	17	1E					19
8							17	6E					23
9							8	17E					25
10								17E					17
11								5	15E				20
12									17E				17
13									10E				10
14									1	17	4E		22
15										17	4E		21
16										6	17E		23
17							1				17	17E	34
18												17	17
19												13	13
20 R													
21 R													
22 R													
23 R													

G316 REV. 2
8 72 2000P

GRUMMAN

20 MISSION LIFE (10 EXPENDED)

	79	80	81	82	83	84	85	86	87	88	89	90	TOTAL
310-3A / 310RE-3A													
TOTAL FLIGHTS		3	12	17	27	32	42	46	43	40	42	47	317
(PAN AM BUILD.)													
EXPEND				2		2		1	1		3	1	10
VEHICLE 1		2	6	6E									14
2		1	6	7E									14
3				4	15	1E							20
4					12	8E							20
5						17	3 R						20
6						6	14 R						20
7							17	3E					20
8							8	12R					20
9								17	3 E				20
10								14	6 R				20
11									17	3 R			20
12									17	3 R			20
13										17	3 E		20
14										17	3 E		20
15											17 E		17
16											17	3 E	20
17							1				2	17	19
18												17	17
19												10	10
20 R													
21 R													
22 R													
23 R													

G316 REV 2
8 72 20000

GRUMMAN

50 MISSION LIFE (10 EXPANDED)

	79	80	81	82	83	84	85	86	87	88	89	90	TOTAL
310-3A / 310RB-3A													
TOTAL FLIGHTS		3	12	17	27	32	42	46	43	40	42	47	357
(PROG. BUILD-UP)													
EXPAND				2		2		1	1		3	1	10
VEHICLE 1		2	6	6 E									14
2		1	6	7 E									14
3				4	17	15 E							36
4					10	17 E							27
5							17	17 E	~~16~~				34
6							17	17	16 E				50
7							8	12	17	13 R			50
8									10	17	17 E		44
9										10	17 E		27
10											8 E		8
11												17 E	17
12												17	17
13												13	13
14 R													
15 R													
16 R													
17 R							1						

0316 REV. 2
8 72 2000P

GRUMMAN

100 MISSION LIFE (10 EXPANDED)

	79	80	81	82	83	84	85	86	87	88	89	90	TOTAL
310-3A / 310RE-3A													
TOTAL FLIGHTS		3	12	17	27	32	42	46	43	40	42	47	351
(INCL. GROUND-UP)													
EXPAND				2		2		1	1		3	1	10
VEHICLE 1		2	6	6E									14
2		1	6	7E									14
3				4	15	15E							34
4					12	16E							28
5						1	17	17E					35
6							17	17	17E				51
7							8	12	9	17	17E		63
8									17	17	17E		51
9										6	8E		14
10												17E	17
11												17	17
12												13	13
13R													
14R													
15R													
16R													
							1						

G316 REV. 2
8 72 2000P

GRUMMAN

DESIGN LIFE SENSITIVITY

CONCLUSIONS

COST

TECH - N/A

DDT&E - N/A

FIRST UNIT - N/A

TOTAL PRODUCTION	3A	3B	
20 REUSES -	$ 177M	170M	
50 REUSES -	$ 170M	135M	
100 REUSES -	$ 170M	128M	(BASELINE)

VEHICLE DESIGN

INERT WEIGHT - N/A

P/L Δ WEIGHT - N/A

DEVELOPMENT RISK - ANALYSIS SHOWS THAT SELECTED MINIMUM GUAGE TANK CAPABLE OF 100 MISSIONS

CRITICAL TECH AREAS - PERFORM TESTS TO VALIDATE ANALYSIS

GRUMMAN

RELIABILITY SENSITIVITY - 30 DAY MISSION

(410AD-2)

	168 HRS	720 HRS
STRUCTURE	.99900	.99569
PROPULSION		
- MPS	.99133	.96445
- APS	.99882	.99071
AVIONICS		
- GN&C	.99405	.97108
- COMM	.99912	.99596
- DMS	.99936	.99576
- THERMO	.99871	.99376
- POWER	.99238	.96838
TOTAL	.9730	.8817

GRUMMAN

RELIABILITY/REDUNDANCY SENSITIVITY ANALYSIS

OBJECTIVE

I. DETERMINE THE IMPACT ON REDUNDANCY REQUIREMENTS OF A .97 RELIABILITY LEVEL FOR RETRIEVE AND DEPLOY MISSIONS OF 72 AND 36 HOURS.

II. DETERMINE IF PROGRAMMATIC COST SAVINGS CAN BE REALIZED BY ALTERING THE .97 RELIABILITY/REDUNDANCY LEVEL.

GRUMMAN

I. REDUNDANCY SENSITIVITY TO MISSION

ASSUMPTIONS

- o RELIABILITY REFERENCE MISSION OF 168 HOURS (144 TUG + 24 ORBITER) IS THE BASELINE FOR ESTABLISHING REDUNDANCY REQUIREMENTS.

- o TO ACHIEVE .97 FOR THE 410AD-2 CONFIGURATION, 67 LBS OF REDUNDANCY IS INCLUDED

  - IMU
  - OX VENT VALVE
  - APS VENT VALVE
  - FUEL VENT VALVE
  - COMPUTER
  - APS ELECTRONICS
  - 2 RECEIVERS
  - 4 THRUSTER ISOLATION VALVES

- o ALL ABOVE REDUNDANCY IS SAFETY ESSENTIAL EXCEPT THE IMU

GRUMMAN

APPROACH

- o REMOVE REDUNDANCY IN A WEIGHT-EFFECTIVE MANNER TO MEET SAFETY OR .97 RELIABILITY GOAL.

- o MEASURE COST AND WEIGHT SAVINGS IF SAFETY CONSTRAINT WERE LIFTED.

GRUMMAN

RESULTS

- IF SAFETY CONSTRAINT RETAINED, A REDUNDANT 10 LB IMU CAN BE REMOVED FOR BOTH MISSIONS WITH A TEN TUG COST SAVINGS OF $2.2 MILLION. RELIABILITY IS .9902 AND .9825 FOR RETRIEVE AND DEPLOY MISSIONS - WELL ABOVE .97 RELIABILITY TARGET.

- IF SAFETY CONSTRAINT WERE LIFTED:

  DEPLOY MISSION (36 HRS)

  - ALL REDUNDANCY CAN BE REMOVED
  - WEIGHT SAVINGS OF 67 LBS PER VEHICLE
  - TEN TUG COST SAVINGS OF $12.3 MILLION
  - RELIABILITY OF .9803

  RETRIEVE MISSION (72 HRS)

  - ALL REDUNDANCY EXCEPT 4 THRUSTER ISOLATION VALVES CAN BE REMOVED
  - WEIGHT SAVINGS OF 61 LBS PER VEHICLE
  - TEN TUG COST SAVINGS OF $11.8 MILLION
  - RELIABILITY OF .9707

GRUMMAN

II. PROGRAMMATIC COST SENSTIVITY TO REDUNDANCY/RELIABILITY

ASSUMPTIONS

- BASELINE CONFIGURATION IS 410AD-2 WITH REDUNDANCY REQUIRED TO PROVIDE .97 RELIABILITY FOR 168 HR (144 TUG + 24 ORBITER) MISSION.

- TUG CARRYING COSTS FOR ADDITIONAL WEIGHT
  - $100,000 $/LB FOR MINIMUM DDT&E LOWER PERFORMANCE VEHICLES
  - $400,000 $/LB FOR HIGH PERFORMANCE VEHICLES

GRUMMAN

APPROACH

- o COMPARE THE PROGRAMMATIC COST DELTA's DUE TO INCREASING OR DECREASING THE REDUNDANCY/RELIABILITY LEVEL.
  - MISSION OPERATIONAL AND LOST TUG COSTS
    = Δ UNRELIABILITY X NUMBER MISSION X (TUG + OPERATIONAL COSTS/FLT)
    (243) ($15M)
  - REDUNDANT HARDWARE COSTS
    = HARDWARE COST X NUMBER OF VEHICLES IN FLEET
    (10)
  - TRANSPORTATION COSTS
    = WEIGHT OF REDUNDANT HARDWARE X CARRYING COST PER LB.
    ($100,000 TO $400,000)

GRUMMAN

PROGRAMMATIC COST VARIATION WITH RELIABILITY LEVEL

o $100,000/LB CARRYING COSTS

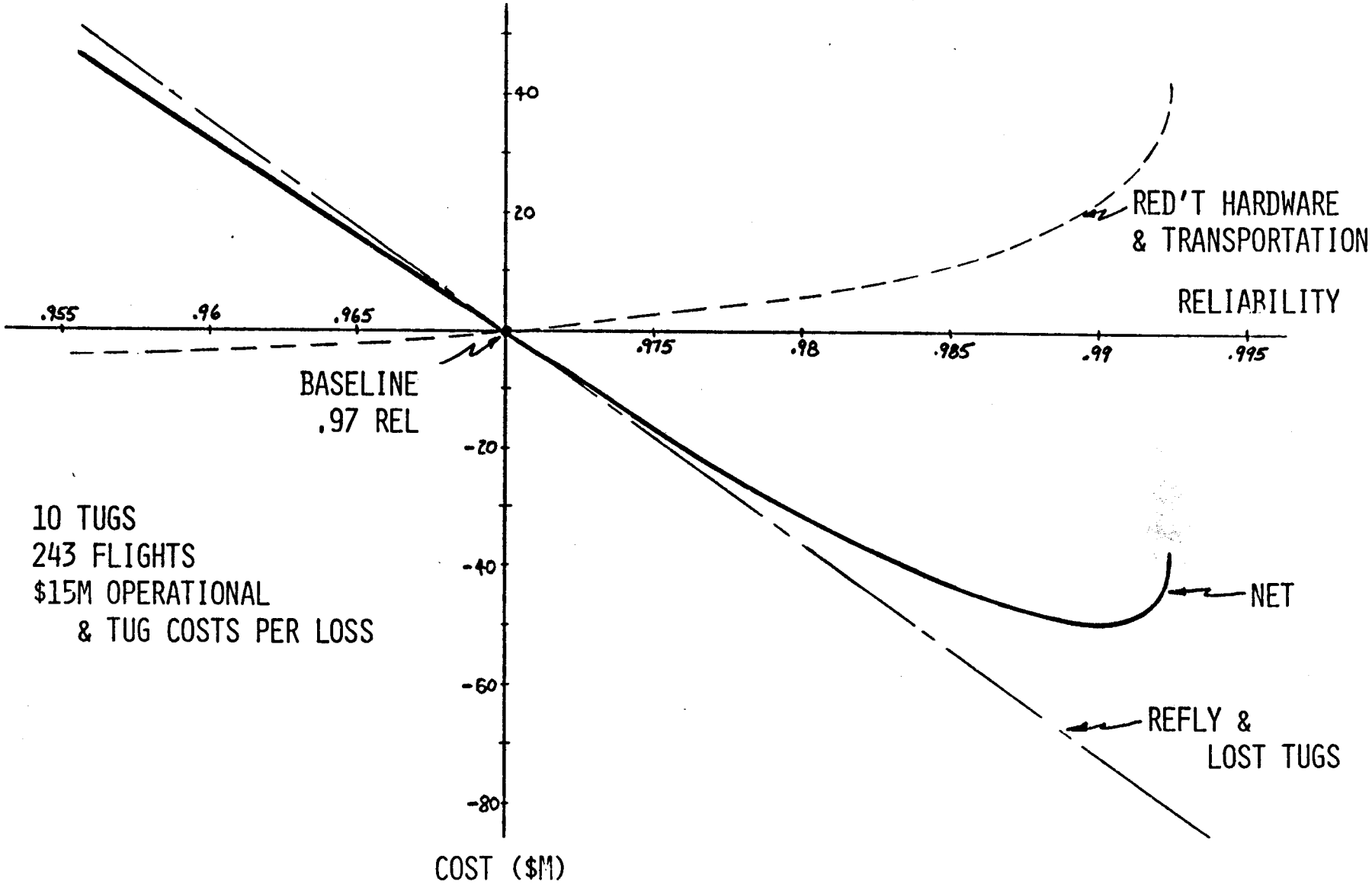

10 TUGS
243 FLIGHTS
$15M OPERATIONAL
& TUG COSTS PER LOSS

SAVINGS OF $55M WITH ADDITIONAL REDUNDANCY AT .991 RELIABILITY

GRUMMAN

PROGRAMMATIC COST VARIATION WITH RELIABILITY LEVEL

o $400,000/LB CARRYING COSTS

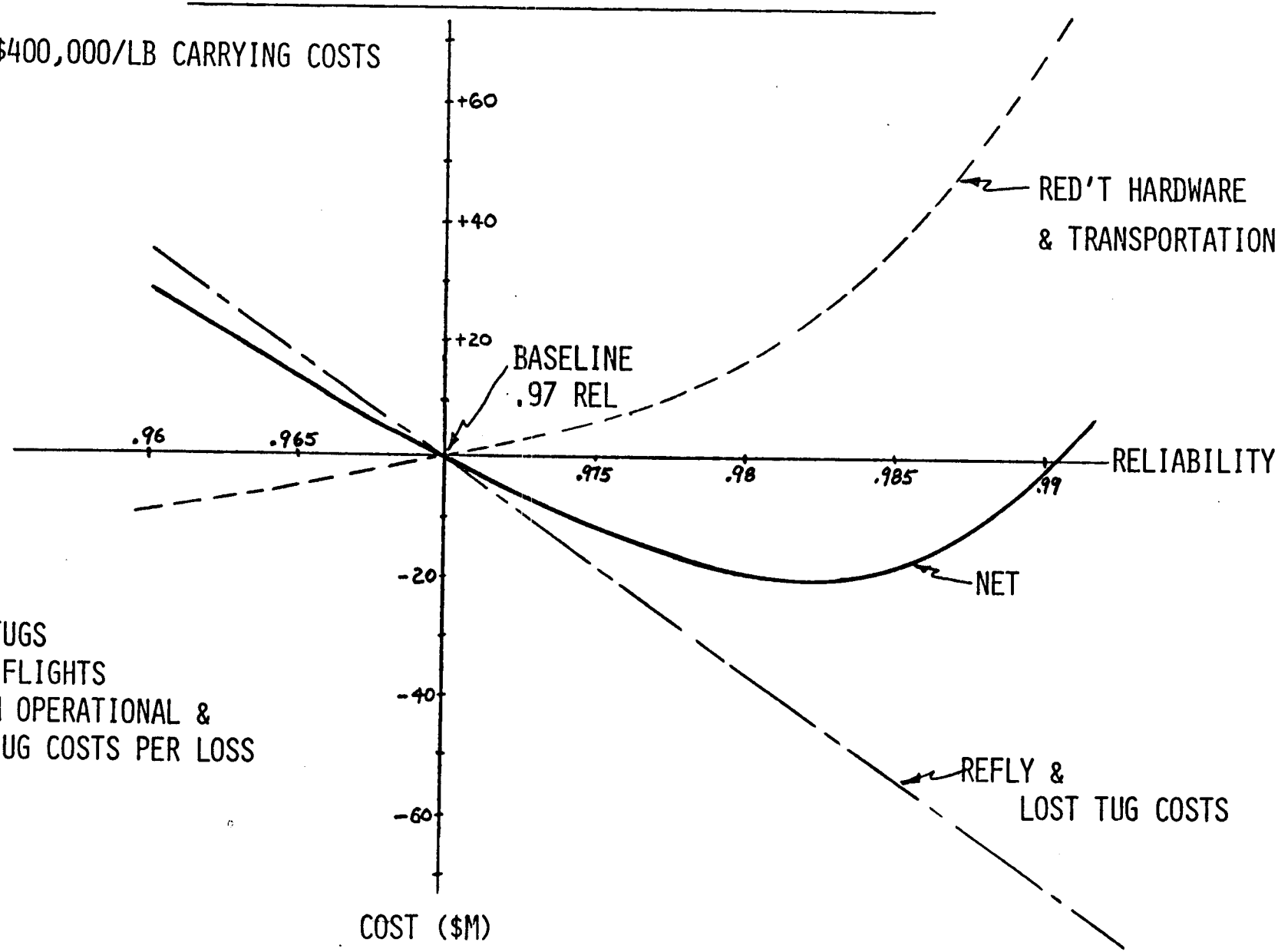

10 TUGS
243 FLIGHTS
$15M OPERATIONAL &
TUG COSTS PER LOSS

SAVINGS OF $20M WITH ADDITIONAL REDUNDANCY AT .982 RELIABILITY

GRUMMAN

RELIABILITY GOAL BASED ON PROGRAMMATIC COST

BASELINE - 410A-2 CONFIGURATION

.97 RELIABILITY

TRANSPORTATION COSTS

A- $400,000/LB

B- $100,000/LB

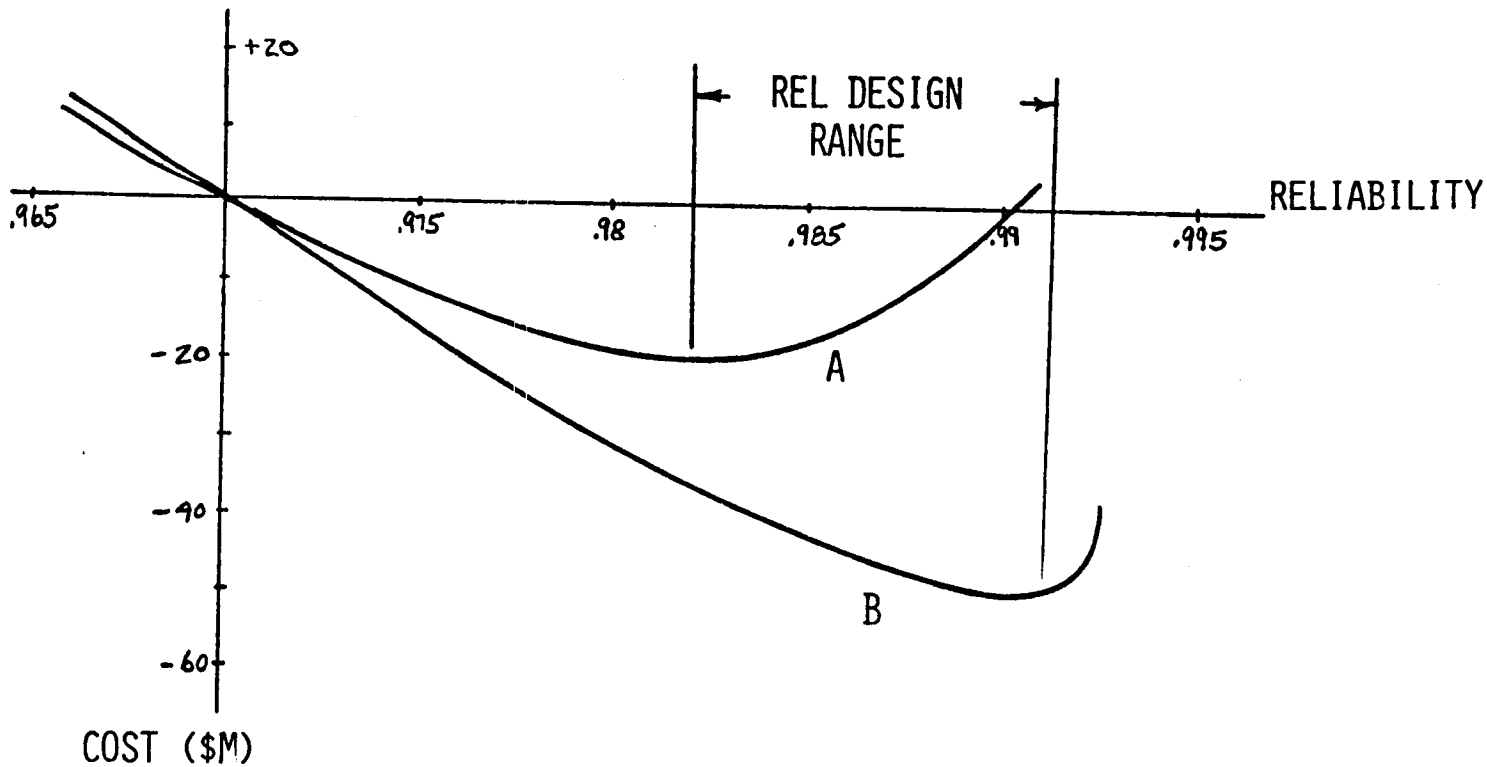

COST-EFFECTIVE RELIABILITY RANGE .982 - .991

GRUMMAN

EQUIPMENT REDUNDANCY ANALYSIS

- THE SYSTEM LEVEL ANALYSIS CAN BE PERFORMED ON AN INDIVIDUAL EQUIPMENT BASIS WITH COMPARABLE RESULTS.

- INDIVIDUAL COST-EFFECTIVE EQUIPMENT REDUNDANCY LEVELS CAN THUS BE DEFINED AS EACH INDIVIDUAL DESIGN IS HARDENED WHILE OTHER DESIGNS ARE STILL SOFT.

- ECONOMIC REDUNDANCY SELECTION CRITERION
  - ADD REDUNDANCY IF

$$\Delta \text{ UNRELIABILITY} > \frac{\$ \text{ REDUNDANT HARDWARE} + \$ \text{ TRANSPORTATION}}{\$ \text{ MISSION AND } \$ \text{ LOST TUG}}$$

GRUMMAN

ILLUSTRATION OF EQUIPMENT LEVEL ANALYSIS ON STAR TRACKER

HARDWARE COST =	81K
WEIGHT =	17 LBS
NUMBER OF VEHICLES =	10
NUMBER OF FLIGHTS =	243
COST OF MISSION & TUG LOST =	$15M
COST PER LB =	$100K TO $400K

FOR $100K PER LB

$$\Delta \text{ UNREL.} > \frac{\$81K \times 10 + 17 \times \$100K}{243 \times \$15\ M}$$

$$> .0007$$

FOR $400K PER LB.

$$\Delta \text{ UNREL.} > \frac{\$81K \times 10 + 17 \times \$400K}{243 \times \$15M}$$

$$> .0021$$

ADD ONE ORDER OF REDUNDANCY TO STAR TRACKER SINCE

$$\Delta \text{ UNREL.} = .0047$$

GRUMMAN

EQUIPMENT REDUNDANCY NOMOGRAPH

- A NOMOGRAPH HAS BEEN DEVELOPED TO PERFORM "TABLE TOP" ANALYSES, AND IS CONTAINED IN THE NEXT CHART.

- THE STAR TRACKER IS ILLUSTRATED FOR THE TWO TRANSPORTATION COST EXTREMES OF $100K AND $400K.

- DECISION CONFIDENCE CAN BE EASILY ASSESSED BY DETERMINING THE EQUIPMENT PARAMETER (FAILURE RATE, COST, OPERATING TIME, ETC.) RANGES OVER WHICH THE REDUNDANCY LEVEL DOES NOT VARY.

GRUMMAN

TUG REDUNDANCY SELECTOR

EXAMPLE - STAR TRACKER
$\lambda = 66 \times 10^{-6}$
Kt = 72 hrs
WEIGHT = 17 lbs
Cost = 81 K

Cost per loss = $15 M
OF MISSIONS = 243
$/LB = 100K (400K)

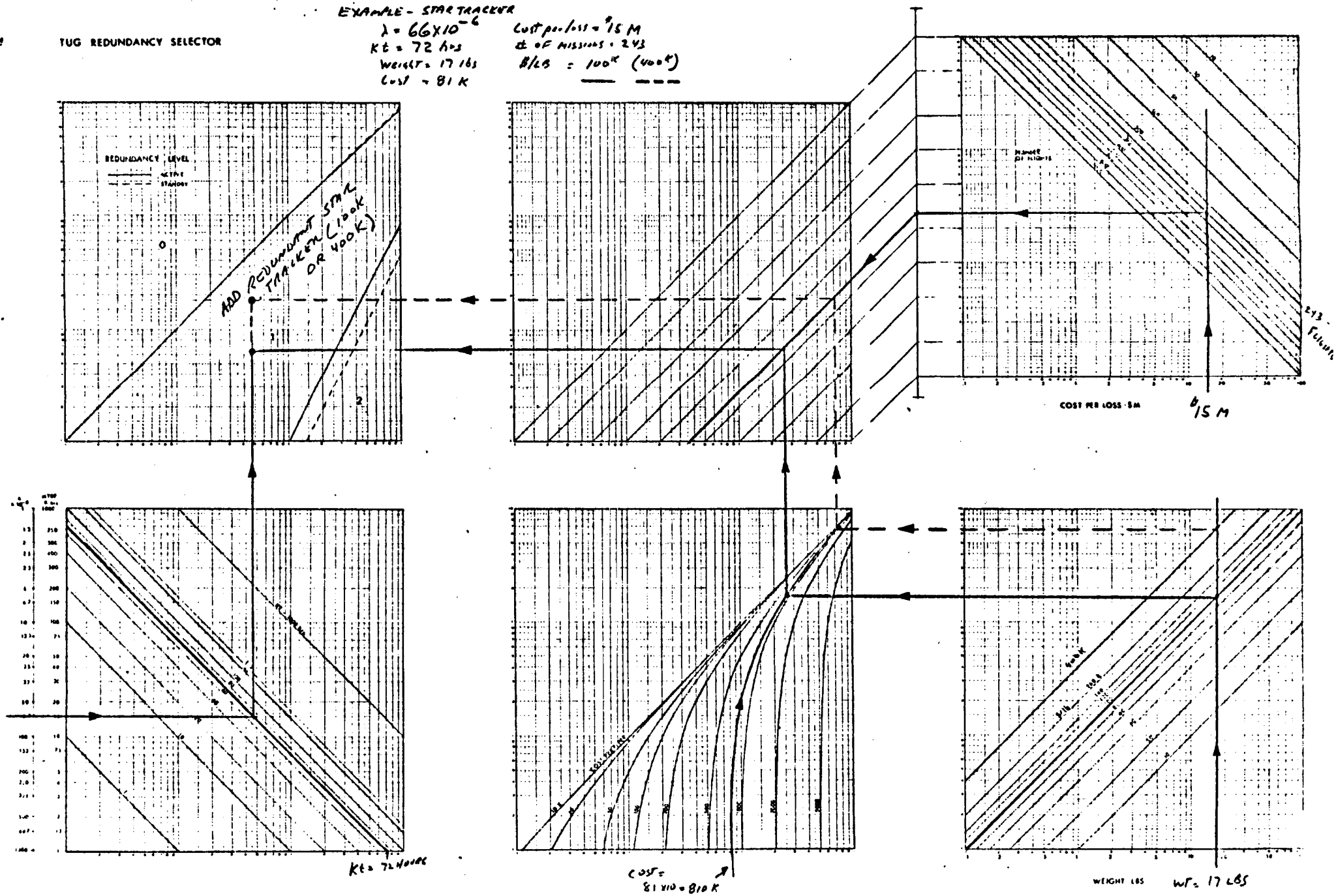

CONCLUSIONS

- o PROGRAMMATIC COST SAVINGS OF $20M TO $55M RELIAZABLE IF ADDITIONAL REDUNDANCY INCORPORATED.

- o COST EFFECTIVE RELIABILITY DESIGNS RANGE BETWEEN .982 AND .991 FOR 168 HR. REFERENCE MISSION

  - MINIMUM DDT&E TUGS - 0.991
  - HIGH PERFORMANCE TUGS - 0.981

RECOMMENDATIONS:

- o FURTHER STUDY TO DEFINE OPTIMUM RELIABILITY/REDUNDANCY FOR EACH CONFIGURATION USING APPROPRIATE MIX OF DEPLOY, RETRIEVE AND ROUND TRIP MISSIONS.

GRUMMAN

VII REPORTS

- HAZARD ANALYSIS REPORTS
- SAFETY REQUIREMENTS
- FAILURE MODE EFFECTS ANALYSIS

GRUMMAN AEROSPACE CORPORATION

HAZARD ANALYSIS RECORD

VEHICLE/ELEMENT	CODE
SPACE TUG (ALL CONCEPTS)	1001

SYSTEM/SUBSYSTEM	STATUS
Tankage	[X] OPEN [ ] CLOSED [ ] RESIDUAL
EVENT/MISSION PHASE	**HAZARD CLASSIFICATION**
On orbit	[ ] CATASTROPHIC [X] CRITICAL [ ] CONTROLLED

HAZARD DESCRIPTION

Tankage leaks into enclosed volumes (weeper not gusher):

- o Intertank Volume
- o Troughs (Tunnels)
- o Aft Tank - Base Heat Shield Volume
- o Tug Payload Volumes
- o Saddle Bags
- o Payload Bay
- o Interstage (320 A-3A and 320 AE-3A)

CAUSE AND EFFECT

- o Connector mismated
- o Fastener failure
- o Tank flaw
- o Seal leaks
- o Ball joint leaks
- o Dump Valves leak(5)

METHOD OF DETECTION AND RESPONSE TIME

None until in atmosphere.

COMPENSATING PROVISION AND/OR CORRECTIVE ACTION

- o Locator pins in connector panel
- o Fracture Mechanics
- o Redundant Seals
- o All welded ball joint
- o Double failure for dump valves
- o If time permits, pressure decay is indicator

REFERENCE DOCUMENT

REMARKS

Considered potential low level risk

	NAME	EXT.	PLT. & GROUP NO.	DATE	
PREPARED BY	H. Wolf	1491	25/481	8/22/73	PAGE OF
APPROVED					

GAC 3787
8-72

GRUMMAN AEROSPACE CORPORATION

HAZARD ANALYSIS RECORD

VEHICLE/ELEMENT: SPACE TUG: ALL CONCEPTS EXCEPT 110A-1	CODE: 1002
SYSTEM/SUBSYSTEM: MAIN TANKS	STATUS: [X] OPEN [ ] CLOSED [ ] RESIDUAL
EVENT/MISSION PHASE: ON ORBIT	HAZARD CLASSIFICATION: [ ] CATASTROPHIC [X] CRITICAL [ ] CONTROLLED

HAZARD DESCRIPTION

Nested dome N_2O_4 bulkhead can't sustain MMH tank pressure and oilcans.

CAUSE AND EFFECT

Loss of N_2O_4 pressure.

METHOD OF DETECTION AND RESPONSE TIME

COMPENSATING PROVISION AND/OR CORRECTIVE ACTION

- Sense tank pressures; vent MMH tank if N_2O_4 pressure $\leq$ MMH pressure.

REFERENCE DOCUMENT

REMARKS

	NAME	EXT.	PLT. & GROUP NO.		DATE
PREPARED BY	H. Wolf	1492	25	481	9/9/73
APPROVED					

PAGE OF

*GAC 3767
8-72

GRUMMAN AEROSPACE CORPORATION

HAZARD ANALYSIS RECORD

35K

VEHICLE/ELEMENT: SPACE TUG: ALL CONCEPTS	CODE: 1003
SYSTEM/SUBSYSTEM: ADAPTER	STATUS: ☒ OPEN ☐ CLOSED ☐ RESIDUAL
EVENT/MISSION PHASE: TUG-ORBITER MATE ON GRND	HAZARD CLASSIFICATION: ☐ CATASTROPHIC ☒ CRITICAL ☐ CONTROLLED

HAZARD DESCRIPTION

(1) Adapter structure fails during Tug installation in Payload Bay. (Adapter used as guide for installation).

(2) Actuators damaged.

CAUSE AND EFFECT

- Allowable lateral movement of Tug exceeded.
- Allowable fore/aft movement of Tug exceeded.
- Rotational rate excessive.

METHOD OF DETECTION AND RESPONSE TIME

Visual

COMPENSATING PROVISION AND/OR CORRECTIVE ACTION

- Disconnect Electrical/Hydraulic Lines to Adapter during installation.
- Use manned Guy wires to preclude Tug movement laterally or fore/aft during Tug installation.

REFERENCE DOCUMENT

REMARKS

	NAME	EXT.	PLT. & GROUP NO.		DATE	
PREPARED BY	H. Wolf	1492	25	481	8/7/73	PAGE OF
APPROVED						

GAC 3767
8-72

GRUMMAN AEROSPACE CORPORATION

HAZARD ANALYSIS RECORD

35

VEHICLE/ELEMENT: SPACE TUG: ALL CONCEPTS	CODE: 1004
SYSTEM/SUBSYSTEM: SHUTTLE INTERFACE	STATUS: [X] OPEN [ ] CLOSED [ ] RESIDUAL
EVENT/MISSION PHASE: DEPLOYMENT	HAZARD CLASSIFICATION: [ ] CATASTROPHIC [ ] CRITICAL [X] CONTROLLED

HAZARD DESCRIPTION

Shuttle payload bay doors don't open or only open partially, causing N_2O_4 (MPS & APS), O_2 and H_2 tanks to vent. Under mission environment. (Temp 150°F)

CAUSE AND EFFECT

Mechanical Failure

METHOD OF DETECTION AND RESPONSE TIME

COMPENSATING PROVISION AND/OR CORRECTIVE ACTION

Overboard vents are provided.

REFERENCE DOCUMENT

REMARKS

	NAME	EXT.	PLT. & GROUP NO.		DATE	
PREPARED BY	H. Wolf	1492	25	481	7/27/73	PAGE OF
APPROVED						

GAC 2767
8-72

GRUMMAN AEROSPACE CORPORATION

HAZARD ANALYSIS RECORD

VEHICLE/ELEMENT: SPACE TUG: ALL CONCEPTS	CODE: 2001
SYSTEM/SUBSYSTEM: MPS, APS	STATUS: ☐ OPEN ☐ CLOSED ☐ RESIDUAL
EVENT/MISSION PHASE: a) LAUNCH PAD b) INFLIGHT	HAZARD CLASSIFICATION: ☐ CATASTROPHIC ☒ CRITICAL ☐ CONTROLLED

HAZARD DESCRIPTION

Tanks, Lines or Fittings Leak Propellants

CAUSE AND EFFECT

1. Vibration failure
2. Used up available structural life
3. Human Error

METHOD OF DETECTION AND RESPONSE TIME

a) Sampling of purge gas in ____ seconds.

b) Pressure decay in TBD.

c) Color leak detection tape; post flight inspection.

COMPENSATING PROVISION AND/OR CORRECTIVE ACTION

- o Sample payload bay atmosphere continuously on pad
- o Provide detank capability on pad.
- o Purge critical Tug bays on pad.
- o Provide GN_2 payload bay deluge on pad
- o Provide GN_2/Freon 1301 fire extinguishing on pad.
- o Isolate propellant tanks from engine(s) and pressurant tanks before and after use.
- o Redundant valves on all overboard leak paths.

REFERENCE DOCUMENT

B83M048-73006 Hazardous Vapor Control

REMARKS

	NAME	EXT.	PLT. & GROUP NO.		DATE	
PREPARED BY	H. Wolf	1492	25	481	6/73	PAGE OF
APPROVED	M. H. Dandridge					

GAC 3767
8-72

GRUMMAN AEROSPACE CORPORATION

HAZARD ANALYSIS RECORD

VEHICLE/ELEMENT: SPACE TUG: ALL CONCEPTS	CODE: 2002
SYSTEM/SUBSYSTEM: MPS	STATUS: ☐ OPEN ☐ CLOSED ☐ RESIDUAL
EVENT/MISSION PHASE: ASCENT, DESCENT, SAFING	HAZARD CLASSIFICATION: ☐ CATASTROPHIC ☒ CRITICAL ☐ CONTROLLED

HAZARD DESCRIPTION

- o Propellant vapors are vented to payload bay.
- o Propellant vented to payload bay.

CAUSE AND EFFECT

- o Payload bay temp > 100°F
- o Vent system malfunction
- o Inadvertent vent command
- o Full tanks and vehicle horizontal

} leads to

- Corrosion
- Contamination
- Material Degradation

METHOD OF DETECTION AND RESPONSE TIME

- o Ground - Leak detectors in TBD seconds.
- o In-flight - Pressure decay in TBD.
- o Vent valve position indicators when in the orbiter

COMPENSATING PROVISION AND/OR CORRECTIVE ACTION

- o Isolate tanks before and after use.
- o Provide overboard vent during entry.
- o Air condition bay immediately after landing.
- o Reconnect vent line after stow in P/L bay.
- o Orbiter mold line vents liquid compatible.

REFERENCE DOCUMENT

B83M048-73007 Propellant Tank Safing

REMARKS

	NAME	EXT.	PLT. & GROUP NO.		DATE	
PREPARED BY	H. Wolf	1492	25	481	6/13/73	PAGE OF
APPROVED	W. H. Hardwick					

GAC 3767 8-72

GRUMMAN AEROSPACE CORPORATION

HAZARD ANALYSIS RECORD

VEHICLE/ELEMENT: SPACE TUG: ALL CONCEPTS	CODE: 2003
SYSTEM/SUBSYSTEM: MPS	STATUS: ☐ OPEN ☐ CLOSED ☐ RESIDUAL
EVENT/MISSION PHASE: MPS THRUSTING	HAZARD CLASSIFICATION: ☐ CATASTROPHIC ☒ CRITICAL ☐ CONTROLLED

HAZARD DESCRIPTION

Off Design Engine Inlet Conditions.

CAUSE AND EFFECT

- o Engine Prevalve Fails Closed
- o Helium Regulator Fails Closed
- o Helium Tank Shut Off Valve Fails Closed

METHOD OF DETECTION AND RESPONSE TIME

Helium & Engine inlet pressures sensed. Immediate response possible.

COMPENSATING PROVISION AND/OR CORRECTIVE ACTION

- o Shut Engine Down Automatically
- o Relieve Helium Pressure On Pressurized Propellant.

REFERENCE DOCUMENT

REMARKS

	NAME	EXT.	PLT. & GROUP NO.		DATE	
PREPARED BY	H. Wolf	1492	25	481	6/14/73	PAGE OF
APPROVED	W. W. Sandridge					

GAC 3767
8-72

GRUMMAN AEROSPACE CORPORATION

HAZARD ANALYSIS RECORD

35

VEHICLE/ELEMENT	CODE
SPACE TUG: ALL CONCEPTS	2004

SYSTEM/SUBSYSTEM	STATUS
MPS	[X] OPEN [ ] CLOSED [ ] RESIDUAL
EVENT/MISSION PHASE	**HAZARD CLASSIFICATION**
LANDING/REENTRY	[X] CATASTROPHIC [ ] CRITICAL [ ] CONTROLLED

HAZARD DESCRIPTION

(a) Shuttle Support for Tug Fails

(b) Common Pressure Bulkhead Fails

(c) Fittings at Engines Fail

Result in Propellant Mixing = Fire/Explosion

CAUSE AND EFFECT

(a) Exceed allowable 3g loads with Full Tanks

(b) Lose Control of ΔP Across Bulkhead

(c) Temp/Vibration Regime

METHOD OF DETECTION AND RESPONSE TIME

Timely Detection Unavailable

COMPENSATING PROVISION AND/OR CORRECTIVE ACTION

(a) Increase design load requirements to cover entry with full tanks.

(b) Sense tank pressure; if ΔP ($N_2O_4 \leq$ MMH) vent MMH tank.

(c) NDE Techniques

(d) Vent tanks to 20 psia.

REFERENCE DOCUMENT

B83M048-73007 Propellant Tank Safing

REMARKS

	NAME	EXT.	PLT. & GROUP NO.		DATE	
PREPARED BY	H. Wolf	1492	25	481	6/13/73	PAGE OF
APPROVED	M. N. Dandridge					

*GAC 3767
6-72

GRUMMAN AEROSPACE CORPORATION

HAZARD ANALYSIS RECORD

7/9/73 360

VEHICLE/ELEMENT: SPACE TUG: ALL CONCEPTS	CODE: 2005
SYSTEM/SUBSYSTEM: MPS	STATUS: [X] OPEN [ ] CLOSED [ ] RESIDUAL
EVENT/MISSION PHASE: DOCKING TO PAYLOAD	HAZARD CLASSIFICATION: [ ] CATASTROPHIC [X] CRITICAL [ ] CONTROLLED

HAZARD DESCRIPTION

Tug impacts payload or RMS.

CAUSE AND EFFECT

Amplification of Attitude Commands by fuel slosh.

METHOD OF DETECTION AND RESPONSE TIME

IMU and attitude rate gyro reference unit will sense abnormal rates and via DMS issue corrective commands in > 10 seconds.

COMPENSATING PROVISION AND/OR CORRECTIVE ACTION

Add tank baffles if subsequent docking analysis and simulations (in Phase B/C/D) verify that sloshing fuel causes Tug to impact payload or RMS.

REFERENCE DOCUMENT

REMARKS

	NAME	EXT.	PLT. & GROUP NO.		DATE
PREPARED BY	H. Wolf	1491	25	481	7/9/73
APPROVED	H. H. Dardudge				

PAGE OF

GAC 3767
8-72

GRUMMAN AEROSPACE CORPORATION

HAZARD ANALYSIS RECORD

VEHICLE/ELEMENT: SPACE TUG	CODE: 2006
SYSTEM/SUBSYSTEM: CACHE TANK	STATUS: [X] OPEN [ ] CLOSED [ ] RESIDUAL
EVENT/MISSION PHASE: LANDING	HAZARD CLASSIFICATION: [X] CATASTROPHIC [ ] CRITICAL [ ] CONTROLLED

HAZARD DESCRIPTION

a) Cache tank support on Tug fails.

b) Fittings at Tank-Tug interface fail.

CAUSE AND EFFECT

Crash landing after an abort with full tanks.

METHOD OF DETECTION AND RESPONSE TIME

None

COMPENSATING PROVISION AND/OR CORRECTIVE ACTION

For this study crash after abort is groundruled out.

REFERENCE DOCUMENT

REMARKS

Cache tank concept deleted.

	NAME	EXT.	PLT. & GROUP NO.		DATE	
PREPARED BY	H. Wolf	1492	25	481	7/9/73	PAGE OF
APPROVED	M. N. Dandridge					

*GAC 3787
8-72

GRUMMAN AEROSPACE CORPORATION

HAZARD ANALYSIS RECORD

362

VEHICLE/ELEMENT	CODE
SPACE TUG	2007

SYSTEM/SUBSYSTEM	STATUS
MPS	[X] OPEN [ ] CLOSED [ ] RESIDUAL

EVENT/MISSION PHASE	HAZARD CLASSIFICATION
REENTRY	[X] CATASTROPHIC [ ] CRITICAL [ ] CONTROLLED

HAZARD DESCRIPTION

MMH tank implodes. At end of mission, tank contains ~10 psia. During reentry, when external pressure exceeds 10 psia, MMH tank implodes.

CAUSE AND EFFECT

Helium regulator fails closed on tanks used for MMH tank repressurization/back fill.

METHOD OF DETECTION AND RESPONSE TIME

COMPENSATING PROVISION AND/OR CORRECTIVE ACTION

Put Helium regulators in parallel with individual shut-off valves.

REFERENCE DOCUMENT

REMARKS

Design concept changed.

	NAME	EXT.	PLT. & GROUP NO.		DATE	
PREPARED BY	H. Wolf	1492	25	481	7/10/73	PAGE OF
APPROVED	M. H. Dandridge					

GAC 3787
8-72

GRUMMAN AEROSPACE CORPORATION

HAZARD ANALYSIS RECORD

363

VEHICLE/ELEMENT	CODE
SPACE TUG : ALL CONCEPTS EXCEPT 320A-3A/320AE-3A	2008

SYSTEM/SUBSYSTEM	STATUS
PROPULSION	[X] OPEN [ ] CLOSED [ ] RESIDUAL
EVENT/MISSION PHASE	**HAZARD CLASSIFICATION**
GROUND TRANSPORT/LANDING	[ ] CATASTROPHIC [X] CRITICAL [ ] CONTROLLED

HAZARD DESCRIPTION

Engine bell buckles during transport or at landing.

CAUSE AND EFFECT

Bell collapses from ground handling loads during transport because it is unsupported.
Bell collapses from landing loads because it is unsupported.

METHOD OF DETECTION AND RESPONSE TIME

COMPENSATING PROVISION AND/OR CORRECTIVE ACTION

Support and constrain bell during ground handling.
Provide support and constraint at landing, eg air bag.

REFERENCE DOCUMENT

REMARKS

	NAME	EXT.	PLT. & GROUP NO.		DATE	
PREPARED BY	H. Wolf	x1492	25	481	9/4/73	PAGE OF
APPROVED						

*GAC 3767
8-72

GRUMMAN AEROSPACE CORPORATION

HAZARD ANALYSIS RECORD

364

VEHICLE/ELEMENT: SPACE TUG : ALL CONCEPTS	CODE: 2009
SYSTEM/SUBSYSTEM: PROPULSION	STATUS: [X] OPEN [ ] CLOSED [ ] RESIDUAL
EVENT/MISSION PHASE: POST LANDING - SAFING	HAZARD CLASSIFICATION: [ ] CATASTROPHIC [X] CRITICAL [ ] CONTROLLED

HAZARD DESCRIPTION

N_2O_4 Tank vents during tank safing operation. Cloud generated moves toward personnel.

CAUSE AND EFFECT

Excess P/L Bay temperature

METHOD OF DETECTION AND RESPONSE TIME

Visual, immediate.

COMPENSATING PROVISION AND/OR CORRECTIVE ACTION

Connect GSE/AGE lines to fuel and oxidizer vents. Direct any exhaust to appropriate holding tanks. Scape operation.

REFERENCE DOCUMENT

REMARKS

	NAME	EXT.	PLT. & GROUP NO.		DATE	
PREPARED BY	H. Wolf	1491	25	481	8/6/73	PAGE OF
APPROVED						

*GAC 3767
8-72

GRUMMAN AEROSPACE CORPORATION

HAZARD ANALYSIS RECORD

365

VEHICLE/ELEMENT: SPACE TUG : 320A-3A, 320AE-3A	CODE: 2010
SYSTEM/SUBSYSTEM: MAIN ENGINE	STATUS: [x] OPEN [ ] CLOSED [ ] RESIDUAL
EVENT/MISSION PHASE: MPE BURNS	HAZARD CLASSIFICATION: [ ] CATASTROPHIC [x] CRITICAL [ ] CONTROLLED

HAZARD DESCRIPTION

Nozzle won't extend.

CAUSE AND EFFECT

- Mechanical failure.
- Command/Control failure.

METHOD OF DETECTION AND RESPONSE TIME

COMPENSATING PROVISION AND/OR CORRECTIVE ACTION

- Design extend/retract systems fail safe.
- Make Command/Control system redundant.

REFERENCE DOCUMENT

REMARKS

	NAME	EXT.	PLT. & GROUP NO.		DATE
PREPARED BY	H. Wolf	1492	25	481	8/7/73
APPROVED					

PAGE OF

*GAC 3767
8-72

GRUMMAN AEROSPACE CORPORATION

HAZARD ANALYSIS RECORD

366

VEHICLE/ELEMENT: SPACE TUG*	CODE: 2011
SYSTEM/SUBSYSTEM: KICK STAGES	STATUS: [X] OPEN [ ] CLOSED [ ] RESIDUAL
EVENT/MISSION PHASE: ASCENT	HAZARD CLASSIFICATION: [X] CATASTROPHIC [ ] CRITICAL [ ] CONTROLLED

HAZARD DESCRIPTION

Kick Stage alone or with its payload reenters atmosphere, survives entry and impacts aland mass.

* Applies to 110A-1, 410AD-Z, 320A-3A, 320AE-3A, 310ARE-3B, 510-A-3B and 510ADE-3B.

CAUSE AND EFFECT

a) Perigee less than 800 NM

b) SRM fails to light; Tug cant redock/retrieve

c) Loss of attitude control during SRM burn: Gimbal or APS

METHOD OF DETECTION AND RESPONSE TIME

COMPENSATING PROVISION AND/OR CORRECTIVE ACTION

Minimum nominal mission perigees for satellites using AKS are $>$ 800 nm. Transfer orbits eg 182 x 19000 nm require failure of SRM to satisfy $<$ 800 nm threshold. SRM has case made of fiberglass, aluminum fittings, metallic throat. Prime structure is aluminum. Little will survive entry. For avionics, switches, relays and gyro rotor may survive.

REFERENCE DOCUMENT

REMARKS

	NAME	EXT.	PLT. & GROUP NO.		DATE
PREPARED BY	H. Wolf	1491	25	481	8/1/73
APPROVED					

PAGE OF

*GAC 3767
8-72

GRUMMAN AEROSPACE CORPORATION

HAZARD ANALYSIS RECORD

367

VEHICLE/ELEMENT: SPACE TUG: ALL CONCEPTS	CODE: 2012
SYSTEM/SUBSYSTEM: SHUTTLE - TUG INTERFACES	STATUS: [X] OPEN [ ] CLOSED [ ] RESIDUAL
EVENT/MISSION PHASE: RESTOW & ENTRY	HAZARD CLASSIFICATION: [ ] CATASTROPHIC [X] CRITICAL [ ] CONTROLLED

HAZARD DESCRIPTION

Reconnection of fill, drain and vent lines at the Shuttle-Tug adapter during restow incomplete; allows propellant vapor into cargo bay.

CAUSE AND EFFECT

- Mechanical failure of adapter
- Interfacing valve(s) not completely engaged.

METHOD OF DETECTION AND RESPONSE TIME

P/L Bay Leak Detection

COMPENSATING PROVISION AND/OR CORRECTIVE ACTION

- Provide signal to orbiter, connection is incomplete.
- Provide remote manual operation of adapter plate to Tug. Several connection attempts must be allowable.

REFERENCE DOCUMENT

REMARKS

	NAME	EXT.	PLT.	GROUP NO.	DATE
PREPARED BY	H. Wolf	1492	25	481	8/16/73
APPROVED					

PAGE OF

*GAC 3767
6-72

GRUMMAN AEROSPACE CORPORATION

HAZARD ANALYSIS RECORD

368

VEHICLE/ELEMENT: SPACE TUG: ALL CONCEPTS	CODE: 2013
SYSTEM/SUBSYSTEM: N_2O_4 TANKAGE	STATUS: [x] OPEN [ ] CLOSED [ ] RESIDUAL
EVENT/MISSION PHASE: REENTRY	HAZARD CLASSIFICATION: [ ] CATASTROPHIC [x] CRITICAL [ ] CONTROLLED

HAZARD DESCRIPTION

N_2O_4 tank vents gas/liquid during abort (once around) during shuttle atmospheric flight. Shuttle TPS Tiles lost when gas/liquid degrades adhesive.

CAUSE AND EFFECT

- High P/L Bay Temperatures

METHOD OF DETECTION AND RESPONSE TIME

COMPENSATING PROVISION AND/OR CORRECTIVE ACTION

- Dump N_2O_4 in abort.

REFERENCE DOCUMENT

REMARKS

Assumes gas venting will have little effect on TPS bond line.

	NAME	EXT.	PLT. & GROUP NO.		DATE	
PREPARED BY	H. Wolf	1491	25	481	8/17/73	PAGE OF
APPROVED						

*GAC 3767
8-72

GRUMMAN AEROSPACE CORPORATION

HAZARD ANALYSIS RECORD

369

VEHICLE/ELEMENT: SPACE TUG	CODE: 2014
SYSTEM/SUBSYSTEM: MPS	STATUS: ☐ OPEN ☐ CLOSED ☐ RESIDUAL
EVENT/MISSION PHASE: DEORBIT BURNS	HAZARD CLASSIFICATION: ☐ CATASTROPHIC ☑ CRITICAL ☐ CONTROLLED

HAZARD DESCRIPTION

MPS burns too long for vehicles with Level IIB autonomy.

CAUSE AND EFFECT

Engine valves fail open

Engine on command fails on

METHOD OF DETECTION AND RESPONSE TIME

Accelerometers/computer

COMPENSATING PROVISION AND/OR CORRECTIVE ACTION

Provide backup engine shutdown program in computer

Hard wire engine shutdown signals to engine prevalves

REFERENCE DOCUMENT

REMARKS

Ground override is possible if burn occurs over ground station and burn is monitored.

	NAME	EXT.	PLT. & GROUP NO.		DATE	
PREPARED BY	H. Wolf	1492	25	482	9/6/73	PAGE OF
APPROVED						

*GAC 2787
5-72

GRUMMAN AEROSPACE CORPORATION

HAZARD ANALYSIS RECORD

370

VEHICLE/ELEMENT: SPACE TUG: ALL CONCEPTS	CODE: 3001
SYSTEM/SUBSYSTEM: APS	STATUS: ☐ OPEN ☐ CLOSED ☐ RESIDUAL
EVENT/MISSION PHASE: ENTRY, LANDING	HAZARD CLASSIFICATION: ☐ CATASTROPHIC ☒ CRITICAL ☐ CONTROLLED

HAZARD DESCRIPTION

Inadvertent vent of propellant vapors to cargo bay

CAUSE AND EFFECT

In correct command or failed burst disc causes cargo bay contamination, material degradation, fire potential.

METHOD OF DETECTION AND RESPONSE TIME

COMPENSATING PROVISION AND/OR CORRECTIVE ACTION

- Crew Training
- Two actions to issue vent commands
- Isolate tanks from engines and pressure source before and after use.
- Fire APS Jets on a no net torque, net force, plume impingement basis to APS depletion.prior to Tug stowage in P/L Bay.

REFERENCE DOCUMENT

REMARKS

	NAME	EXT.	PLT. & GROUP NO.		DATE	
PREPARED BY	H. Wolf H. Wolf	1492	25	481	6/14/73	PAGE OF
APPROVED	H. N. Dandridge					

GAC 3767 8-72

GRUMMAN AEROSPACE CORPORATION

HAZARD ANALYSIS RECORD

31

VEHICLE/ELEMENT: SPACE TUG: ALL CONCEPTS	CODE: 3002
SYSTEM/SUBSYSTEM: APS	STATUS: ☐ OPEN ☐ CLOSED ☐ RESIDUAL
EVENT/MISSION PHASE: RMS DOCKING	HAZARD CLASSIFICATION: ☐ CATASTROPHIC ☒ CRITICAL ☐ CONTROLLED

HAZARD DESCRIPTION

o Loss of propellant acquisition

CAUSE AND EFFECT

o Bladder fails

or

o Screen blocked by gas bubbles

METHOD OF DETECTION AND RESPONSE TIME

COMPENSATING PROVISION AND/OR CORRECTIVE ACTION

Qualify thrusters to accept gas bubbles or demonstrate adequacy of bladders or screens in qualificatior tests.

REFERENCE DOCUMENT

REMARKS

	NAME	EXT.	PLT.	GROUP NO.	DATE
PREPARED BY	H. Wolf H. Wolf	1492	25	481	6/14/73
APPROVED	M. N. Dandridge				

PAGE OF

GAC 3767
9-72

GRUMMAN AEROSPACE CORPORATION

HAZARD ANALYSIS RECORD

372

VEHICLE/ELEMENT	CODE
SPACE TUG : 310RE-3A, 310ARE-3B	3003

SYSTEM/SUBSYSTEM	STATUS
RETRIEVAL DELAY MODUEL	[X] OPEN [ ] CLOSED [ ] RESIDUAL
EVENT/MISSION PHASE	**HAZARD CLASSIFICATION**
DOCKING TO TUG	[ ] CATASTROPHIC [X] CRITICAL [ ] CONTROLLED

HAZARD DESCRIPTION

Depletion of attitude control propellant

CAUSE AND EFFECT

- o Jet fails on.
- o Exceed mission time limits.

METHOD OF DETECTION AND RESPONSE TIME

Attitude gyro reference unit.

COMPENSATING PROVISION AND/OR CORRECTIVE ACTION

Valve failure rate (0.000003) sufficiently low to make risk acceptable.

REFERENCE DOCUMENT

REMARKS

	NAME	EXT.	PLT. & GROUP NO.		DATE	
PREPARED BY	H. Wolf H. Wolf	1492	25	481	7/9/73	PAGE OF
APPROVED	M. N. Dandridge					

GAC 3767
8-72

373

GRUMMAN AEROSPACE CORPORATION

HAZARD ANALYSIS RECORD

VEHICLE/ELEMENT: SPACE TUG: *	CODE: 3004
SYSTEM/SUBSYSTEM: ADD ON APS ON CACHE TANK, AKS & DKS	STATUS: [X] OPEN [ ] CLOSED [ ] RESIDUAL
EVENT/MISSION PHASE: SEPARATE ON ORBIT FLIGHT	HAZARD CLASSIFICATION: [ ] CATASTROPHIC [X] CRITICAL [ ] CONTROLLED

HAZARD DESCRIPTION

Loss of attitude control.

* Applies to 110A-1, 410AD-2, 320A-3A, 320AE-3A, 310ARE-3B, 510A-3B and 510ADE-3B.

CAUSE AND EFFECT

- Check valve fails open depleting propellant.
- Regulator fails closed.

METHOD OF DETECTION AND RESPONSE TIME

Propellant pressure/temperature data.

COMPENSATING PROVISION AND/OR CORRECTIVE ACTION

High reliability components used.

REFERENCE DOCUMENT

REMARKS

	NAME	EXT.	PLT. & GROUP NO.		DATE	
PREPARED BY	H. Wolf	1492	25	481	7/10/73	PAGE OF
APPROVED	H. V. Dandridge					

GAC 3787
8-72

GRUMMAN AEROSPACE CORPORATION

HAZARD ANALYSIS RECORD

374

VEHICLE/ELEMENT: SPACE TUG : ALL CONCEPTS	CODE: 4001
SYSTEM/SUBSYSTEM: AVIONICS	STATUS: ☐ OPEN ☐ CLOSED ☐ RESIDUAL
EVENT/MISSION PHASE: WITHIN ORBITER SPHERE	HAZARD CLASSIFICATION: ☒ CATASTROPHIC ☐ CRITICAL ☐ CONTROLLED

HAZARD DESCRIPTION

Ground/Orbiter Cannot Override Function

- MPS Shutdown
- APS Jet Isolation

CAUSE AND EFFECT

- o Comm System malfunction: Ground, Orbiter, Tug
- o IMS malfunction: computer, DACU, memory
- o Mechanical Switch Failure

METHOD OF DETECTION AND RESPONSE TIME

N.A.

COMPENSATING PROVISION AND/OR CORRECTIVE ACTION

- o Make Safety Critical Equipment Redundant

REFERENCE DOCUMENT

REMARKS

	NAME	EXT.	PLT. & GROUP NO.		DATE	
PREPARED BY	H. Wolf HWolf	1492	25	481	6/15/73	PAGE OF
APPROVED	M. N. Dandridge					

*GAC 3767
8-72

GRUMMAN AEROSPACE CORPORATION

HAZARD ANALYSIS RECORD

375

VEHICLE/ELEMENT	CODE
SPACE TUG: ALL CONCEPTS	4002

SYSTEM/SUBSYSTEM	STATUS
AVIONICS	☐ OPEN ☐ CLOSED ☐ RESIDUAL
EVENT/MISSION PHASE	**HAZARD CLASSIFICATION**
RENDEZVOUS, DOCKING, SEPARAT.	☒ CATASTROPHIC ☐ CRITICAL ☐ CONTROLLED

HAZARD DESCRIPTION

Critical Propulsion commands absent when required eg. APS shutdown after RMS engage.

CAUSE AND EFFECT

- Comm System malfunction: Ground, Orbiter or Tug
- DMS malfunction: computer, DACU, memory
- Human error: Orbiter, Ground Crew
- Mechanical Switch Failure

METHOD OF DETECTION AND RESPONSE TIME

- Catastrophic items - Immediately by DMS
- Critical Items - TBD

COMPENSATING PROVISION AND/OR CORRECTIVE ACTION

- Make Safety Critical equipt. redundant
- Train Crews to prevent inadvertent commands

REFERENCE DOCUMENT

REMARKS

	NAME	EXT.	PLT. & GROUP NO.		DATE	
PREPARED BY	H. Wolf	1492	25	481	6/15/73	PAGE OF
APPROVED	M. W. Daudridge					

GAC 3767
8-72

GRUMMAN AEROSPACE CORPORATION

HAZARD ANALYSIS RECORD

376

VEHICLE/ELEMENT: SPACE TUG: ALL CONCEPTS	CODE: 4003
SYSTEM/SUBSYSTEM: AVIONICS	STATUS: ☐ OPEN ☐ CLOSED ☐ RESIDUAL
EVENT/MISSION PHASE: EOS DOCKING/SEPARATION	HAZARD CLASSIFICATION: ☐ CATASTROPHIC ☒ CRITICAL ☐ CONTROLLED

HAZARD DESCRIPTION

Attitude Control Electronics Fails When Tug Nears Orbiter

CAUSE AND EFFECT

Single Channel of Command Control Electronics Commands Jet Full On

METHOD OF DETECTION AND RESPONSE TIME

Jet Failure Detection Logic

COMPENSATING PROVISION AND/OR CORRECTIVE ACTION.

Provide Channel Redundancy And Jet Failure Detection Logic Which Isolates Jet.

REFERENCE DOCUMENT

REMARKS

	NAME	EXT.	PLT. & GROUP NO.		DATE	
PREPARED BY	H. Wolf H. Wolf	1492	25	481	6/15/73	PAGE OF
APPROVED	M. W. Dandridge					

GAC 3767
5-72

GRUMMAN AEROSPACE CORPORATION

HAZARD ANALYSIS RECORD

377

VEHICLE/ELEMENT: SPACE TUG: ALL CONCEPTS	CODE: 4004
SYSTEM/SUBSYSTEM: GN&C	STATUS: [X] OPEN [ ] CLOSED [ ] RESIDUAL
EVENT/MISSION PHASE: ON ORBIT	HAZARD CLASSIFICATION: [ ] CATASTROPHIC [X] CRITICAL [ ] CONTROLLED

HAZARD DESCRIPTION

Inertial reference and attitude data degraded significantly.

CAUSE AND EFFECT

- Loss of shims between NAV Base and prime structure.
- Attach point fitting for NAV Base improperly torqued.

METHOD OF DETECTION AND RESPONSE TIME

None in flight. Requires ground tracking data.

COMPENSATING PROVISION AND/OR CORRECTIVE ACTION

Proper maintenance procedures, precautions and inspections

REFERENCE DOCUMENT

REMARKS

	NAME	EXT.	PLT. & GROUP NO.		DATE	
PREPARED BY	H. Wolf	1492	25	481	7/10/73	PAGE OF
APPROVED	H. N. Deardorff					

GAC 3767
8-72

GRUMMAN AEROSPACE CORPORATION

HAZARD ANALYSIS RECORD

378

VEHICLE/ELEMENT: SPACE TUG: *	CODE: 4005
SYSTEM/SUBSYSTEM: ADD ON AVIONICS ON CACHE TANK, DKS, ROM	STATUS: [X] OPEN [ ] CLOSED [ ] RESIDUAL
EVENT/MISSION PHASE: SEPARATE ON ORBIT FLIGHT	HAZARD CLASSIFICATION: [ ] CATASTROPHIC [X] CRITICAL [ ] CONTROLLED

HAZARD DESCRIPTION

Loss of attitude control.

* Applies to 410AD-2, 310RE-3A, 310ARE-3B and 510ADE-3B.

CAUSE AND EFFECT

Can't switch to wide deadband on APS after separation. Results in premature propellant depletion.

METHOD OF DETECTION AND RESPONSE TIME

Propellant pressure/temperature data.

COMPENSATING PROVISION AND/OR CORRECTIVE ACTION

Communications system equipment is redundant. Other subsystems equipment will be made redundant as dictated by reliability analysis to achieve 0.97 mission success, and safety requirements.

REFERENCE DOCUMENT

REMARKS

	NAME	EXT.	PLT. & GROUP NO.		DATE	
PREPARED BY	H. Wolf	1492	25	481		PAGE OF
APPROVED	M. H. Sandridge					

GAC 3767
8-72

GRUMMAN AEROSPACE CORPORATION

HAZARD ANALYSIS RECORD

379

VEHICLE/ELEMENT: SPACE TUG : ALL CONCEPTS	CODE: 4006
SYSTEM/SUBSYSTEM: AVIONICS	STATUS: [X] OPEN [ ] CLOSED [ ] RESIDUAL
EVENT/MISSION PHASE: ON ORBIT	HAZARD CLASSIFICATION: [ ] CATASTROPHIC [ ] CRITICAL [X] CONTROLLED

HAZARD DESCRIPTION

Electronics degraded by high energy particles.

CAUSE AND EFFECT

Solar Flare, degrades sensors, power transitors and solar cells. Failure is not complete or catastrophic but degrades components below spec. value therby effecting the reliability of the system.

METHOD OF DETECTION AND RESPONSE TIME

IMP Satellite; via radiation detectors on board the Tug. Response time is in the order of several hours.

COMPENSATING PROVISION AND/OR CORRECTIVE ACTION

MSCM 8080 DS 55
indicates design conditions/requirements.

REFERENCE DOCUMENT

REMARKS

	NAME	EXT.	PLT. & GROUP NO.		DATE	
PREPARED BY	H. Wolf	1492	25	481	6/28/73	PAGE OF
APPROVED						

*GAC 3767
8-72

GRUMMAN AEROSPACE CORPORATION

HAZARD ANALYSIS RECORD

360

VEHICLE/ELEMENT	CODE
SPACE TUG: ALL KICK STAGE CONCEPTS	4007

SYSTEM/SUBSYSTEM	STATUS
SRM SAFE/ARM	[X] OPEN [ ] CLOSED [ ] RESIDUAL
EVENT/MISSION PHASE	**HAZARD CLASSIFICATION**
ON ORBIT	[X] CATASTROPHIC [ ] CRITICAL [ ] CONTROLLED

HAZARD DESCRIPTION

Command/control of SRM Safe/Arm causes SRM to fire inadvertently.

CAUSE AND EFFECT

- Foreign external command
- Sequencer started early
- Sequencer for AKS continues into DKS commands

METHOD OF DETECTION AND RESPONSE TIME

COMPENSATING PROVISION AND/OR CORRECTIVE ACTION

- Address and code commands
- Command "Verify" before initiation
- Use two step safe/arm procedure, initiated by orbiter crew only.
- Inhibit SRM commands within TBD nm of EOS.
- For AKS/DKS mode provide redundant inhibit between sequences.
- "Secure" comm gear provided to prevent foreign signals interference.

REFERENCE DOCUMENT

REMARKS

	NAME	EXT.	PLT. & GROUP NO.		DATE	
PREPARED BY	H. Wolf	1492	25	481	7/27/73	PAGE OF
APPROVED						

*GAC 3767
8-72

GRUMMAN AEROSPACE CORPORATION

HAZARD ANALYSIS RECORD

381

VEHICLE/ELEMENT: SPACE TUG : 110A1	CODE: 4008
ITEM/SUBSYSTEM: XMITER (110A1)	STATUS: ☒ OPEN ☐ CLOSED ☐ RESIDUAL
EVENT/MISSION PHASE: DEPLOYMENT/RETRIEVE	HAZARD CLASSIFICATION: ☐ CATASTROPHIC ☒ CRITICAL ☐ CONTROLLED

HAZARD DESCRIPTION

Loss of Transmitter at point of RMS (release / acquisition) of Tug.

CAUSE AND EFFECT

Power Amplier fails open
Power output lost
Oscillator fails off

METHOD OF DETECTION AND RESPONSE TIME

No status information to orbiter

COMPENSATING PROVISION AND/OR CORRECTIVE ACTION

1.) Continue deploy mission after release

2.) After acquisition real time decision required

- accept risk of limited Tug status info during stowage in P/L bay
- release Tug; monitor Tug at safe distance: reacquire or Tug lost

REFERENCE DOCUMENT

REMARKS

Assumes status of vehicle was O.K. until failure.

Also only one transmitter assumed and safety critical data hard lined to EOS when Tug in orbiter.

	NAME	EXT.	PLT.	GROUP NO.	DATE	
PREPARED BY	H. Wolf	1492	25	481	9/9/73	PAGE OF
APPROVED						

*GAC 3767
5-72

GRUMMAN AEROSPACE CORPORATION

HAZARD ANALYSIS RECORD

382

VEHICLE/ELEMENT: SPACE TUG: ALL CONCEPTS	CODE: 5001
SYSTEM/SUBSYSTEM: THERMAL CONTROL	STATUS: ☐ OPEN ☐ CLOSED ☐ RESIDUAL
EVENT/MISSION PHASE: SAFING POST LANDING	HAZARD CLASSIFICATION: ☒ CATASTROPHIC ☐ CRITICAL ☐ CONTROLLED

HAZARD DESCRIPTION

Loss of Ground Cooling During Soakback

CAUSE AND EFFECT

- Unable to Hookup A/C Equipt to EOS
- A/C Equipt. Fails Off

METHOD OF DETECTION AND RESPONSE TIME

COMPENSATING PROVISION AND/OR CORRECTIVE ACTION

Make A/C Equipt FO/FS. Provide Redundant A/C Connection Points on EOS.

REFERENCE DOCUMENT

REMARKS

	NAME	EXT.	PLT. & GROUP NO.		DATE	
PREPARED BY	H. Wolf H. Wolf	1492	25	481		PAGE OF
APPROVED	H. H. Deadrige					

*GAC 3787
8-72

GRUMMAN AEROSPACE CORPORATION

HAZARD ANALYSIS RECORD

VEHICLE/ELEMENT: SPACE TUG: ALL CONCEPTS EXCEPT 110A-1	CODE: 5002
SYSTEM/SUBSYSTEM: THERMAL CONTROL	STATUS: ☐ OPEN ☐ CLOSED ☐ RESIDUAL
EVENT/MISSION PHASE: IN FLIGHT	HAZARD CLASSIFICATION: ☐ CATASTROPHIC ☒ CRITICAL ☐ CONTROLLED

HAZARD DESCRIPTION

Loss Of Fuel Cell Heat Rejection Capability.

CAUSE AND EFFECT

Radiator Fails Depleting Coolant.

METHOD OF DETECTION AND RESPONSE TIME

Pressure Loss and Temperature Gain in TBD Seconds.

COMPENSATING PROVISION AND/OR CORRECTIVE ACTION

- Auto Detect, Shutdown, Switch to Backup Power.
- Orient Vehicle Saddle Bags Away from Sun.
- Determine Time Available Before IMU & PA Degrades Excessively

REFERENCE DOCUMENT

REMARKS

	NAME	EXT.	PLT. & GROUP NO.		DATE	
PREPARED BY	H. Wolf H. Wolf	1492	25	481	6/15/73	PAGE OF
APPROVED	M. N. Davidge					

*GAC 2767
8-72

GRUMMAN AEROSPACE CORPORATION

HAZARD ANALYSIS RECORD

38

VEHICLE/ELEMENT: SPACE TUG: ALL CONCEPTS	CODE: 6001
SYSTEM/SUBSYSTEM: ORDNANCE	STATUS: [X] OPEN [ ] CLOSED [ ] RESIDUAL
EVENT/MISSION PHASE: GROUND CHECKOUT AND INFLIGHT	HAZARD CLASSIFICATION: [X] CATASTROPHIC [ ] CRITICAL [ ] CONTROLLED

HAZARD DESCRIPTION

Any of the following Pyros inadvertently initiated:

- Tug-Adapter Emergency Separation
- AKS SRM Separation
- APS on DKS Tank Isolation
- AKS and DKS Igniters

CAUSE AND EFFECT

- Sneak Circuit
- EMI
- Stray Voltage

METHOD OF DETECTION AND RESPONSE TIME

COMPENSATING PROVISION AND/OR CORRECTIVE ACTION

Provide housing, interlocks, redundancy grounding, isolation and safety devices so that no single failure or combination of undetectable failures cause premature initiation.

REFERENCE DOCUMENT

MDC G4481 SOAR II Vol. XI Page 50

REMARKS

	NAME	EXT.	PLT. & GROUP NO.		DATE
PREPARED BY	H. Wolf	1491	25	481	8/3/73
APPROVED					

PAGE OF

*GAC 3767
8-72

GRUMMAN AEROSPACE CORPORATION

HAZARD ANALYSIS RECORD

VEHICLE/ELEMENT: SPACE TUG	CODE: 7001
SYSTEM/SUBSYSTEM: CRANE	STATUS: [X] OPEN [ ] CLOSED [ ] RESIDUAL
EVENT/MISSION PHASE: TUG REMOVAL AFTER ABORT	HAZARD CLASSIFICATION: [ ] CATASTROPHIC [X] CRITICAL [ ] CONTROLLED

HAZARD DESCRIPTION

Vehicle shifts position and contacts orbiter doors during removal from cargo bay.

CAUSE AND EFFECT

- CG misjudged as one tank has been emptied.
- Sling slips or is improperly positioned.

METHOD OF DETECTION AND RESPONSE TIME

COMPENSATING PROVISION AND/OR CORRECTIVE ACTION

- Design lifting sling to accommodate any Tug/PL CG location.
- Prevent Tug/PL rotation by use of manually controlled guy wires.

REFERENCE DOCUMENT

REMARKS

	NAME	EXT.	PLT. & GROUP NO.		DATE	
PREPARED BY	H. Wolf	1491	25	481	8/17/73	PAGE OF
APPROVED						

GAC 3767
8-72

GRUMMAN AEROSPACE CORPORATION

HAZARD ANALYSIS RECORD

VEHICLE/ELEMENT	CODE
SPACE TUG: ALL CONCEPTS EXCEPT 110A-1	9001

SYSTEM/SUBSYSTEM	STATUS
EPS	☐ OPEN ☐ CLOSED ☐ RESIDUAL
EVENT/MISSION PHASE	**HAZARD CLASSIFICATION**
ASCENT, DESCENT, SAFING	☐ CATASTROPHIC ☒ CRITICAL ☐ CONTROLLED

HAZARD DESCRIPTION

Vent Reactants and STEAM in to Payload Bay Causing

- o Fire Potential
- o Sensitive surface contamination and degradation

CAUSE AND EFFECT

Reactants

- o Loss of thermal control
- o Vent malfunction
- o Inadventent command

Steam

- o Normal system operation

METHOD OF DETECTION AND RESPONSE TIME

- o Pressure change in TBD
- o Visual Inspection

COMPENSATING PROVISION AND/OR CORRECTIVE ACTION

- o Provide vents to Shuttle skin
- o Vent/dump reactants prior to stowage in P/L bay
- o Inert hydroge tank bay prior to landing

REFERENCE DOCUMENT

REMARKS

	NAME	EXT.	PLT. & GROUP NO.		DATE	
PREPARED BY	H. Wolf H. Wolf	1492	25	481	6/13/73	PAGE OF
APPROVED	N. N. Dandridge					

GAC 3767
8-72

GRUMMAN AEROSPACE CORPORATION

HAZARD ANALYSIS RECORD

37

VEHICLE/ELEMENT	CODE
SPACE TUG: ALL CONCEPTS EXCEPT 110A-1	9002

SYSTEM/SUBSYSTEM	STATUS
EPS	☐ OPEN ☐ CLOSED ☐ RESIDUAL
EVENT/MISSION PHASE	**HAZARD CLASSIFICATION**
ENTRY, LANDING	☐ CATASTROPHIC ☐ CRITICAL ☐ CONTROLLED

HAZARD DESCRIPTION

Fuel Cell Reactant Leaks Into Saddle Bag/Panier Volume

CAUSE AND EFFECT

- Line or fitting failure from excess G.

METHOD OF DETECTION AND RESPONSE TIME

H_2 and O_2 detectors

COMPENSATING PROVISION AND/OR CORRECTIVE ACTION

- Fuel cell reactant lines and fittings will be qualified to demonstrate adequate safety factors after fatigue testing to simulate life cycle vibratory/loading conditions.
- Vent tanks to minimum pressure
- Inert volume around H_2 tank

REFERENCE DOCUMENT

REMARKS

	NAME	EXT.	PLT. & GROUP NO.		DATE	
PREPARED BY	H. Wolf	1492	25	481	6/15/73	PAGE OF
APPROVED	W. H. Dandridge					

GAC 3767
8-72

GRUMMAN AEROSPACE CORPORATION

HAZARD ANALYSIS RECORD

VEHICLE/ELEMENT	CODE
SPACE TUG: ALL CONCEPTS	9003

SYSTEM/SUBSYSTEM	STATUS
ELECTRICAL POWER	[X] OPEN [ ] CLOSED [ ] RESIDUAL
EVENT/MISSION PHASE	**HAZARD CLASSIFICATION**
ASCENT	[ ] CATASTROPHIC [X] CRITICAL [ ] CONTROLLED

HAZARD DESCRIPTION

Shuttle power supply to Tug fails off.

CAUSE AND EFFECT

C.B. Fails Open

METHOD OF DETECTION AND RESPONSE TIME

Tug power monitor

COMPENSATING PROVISION AND/OR CORRECTIVE ACTION

Backup power automatically provides buss power. Time in excess of 240 minutes at partial load 125 watts will deplete battery. Results in no power backup on mission or duing stowing.

REFERENCE DOCUMENT

REMARKS

	NAME	EXT.	PLT. & GROUP NO.		DATE
PREPARED BY	H. Wolf	1492	25	481	9/9/73
APPROVED					

PAGE OF

*GAC 3767
8-72

Order in Corporate Forms Control, Plant 30.

	REQUIREMENT	STATUS	SOURCE
3.0	SYSTEM REQUIREMENTS		
3.1	SAFETY		
3.1.1	The Tug will be capable of safely venting any evolved gasses.	1	A/4.7/12
3.1.2	In a Tug abort mode, after separation from the Orbiter, the Tug will provide an indication to the Orbiter or ground which indicates its safety condition relative to a recovery by the Orbiter or another Tug.	2	
3.1.3	The Tug must be capable of providing a safe mission operation while passively contained within the Orbiter cargo bay and have provisions for relaying immediately to the Orbiter crew, while it is attached to Orbiter, any emergency conditions originating in the Tug.	1	B/II.A.1.f(2)/20
3.1.4	While in the Orbiter cargo bay on the launch pad or during ascent retrieval, re-entry and landing the Tug shall provide a readout of parameters critical to Shuttle system and range safety operations.	1	B/II.A.1.f(3)/21
3.1.5	As a goal, no single Tug failure shall result in a hazard which jeopardizes the flight or ground crews.	1	B/V.B.1.a/69
3.1.6	Appropriate safety factors shall be used where necessary to minimize the possibility of failures which might affect manned safety (i.e., structures, pressure vessels, etc.).	1	B/V.B.1.b/69
3.1.7	Manned factors of safety will be maintained under abort load conditions	1	B/V.B.1.c/69
3.1.8	The Tug shall provide to the Orbiter such information concerning the status or condition of the Tug as is necessary to insure safety of the Orbiter and crew.	1	B/V.B.1.d/69
3.1.9	Provision for command override of critical Tug functions by the Orbiter crew shall be provided during stowage, deployment and retrieval operations.	1	B/V.B.1.e/69
3.1.10	Tug elements shall have self contained protective devices or provisions against Tug generated hazards while mounted to the Orbiter. Hazards generated by Orbiter-Tug interactions during load, transport, deploy and retrieval	1	B/V.B.1.f/69

MAXIMUM ONE TIME REPRODUCTION 100 COPIES. APPROVAL OF ADDITIONAL DUPLICATION MUST BE OBTAINED THROUGH CORPORATE FORMS

REQUIREMENT	STATUS	SOURCE
3.0 SYSTEM REQUIREMENTS (continued)		
3.1.10 (continued) activities shall be identified and mutually resolved.		
3.1.11 Provisions shall be provided for emergency manual release of Tug to Orbiter connections.	1	B/V.B1.g/70
3.1.12 Destruct charges shall not be incorporated in the Tug when launched in the Orbiter.	1	B/V.B.2.a(3)/70
3.1.13 A pressure relief capability shall be provided for the Tug tanks which automatically limits the maximum pressure. Venting shall be through the Tug/Orbiter interface when tug is in the Orbiter payload bay.	1	B/V.B.2.a(4)/70
3.1.14 No single failure shall result in unprogrammed motion of the Tug.	1	B/V.B.2.b(3)/71
3.1.15 Provisions shall be provided for remote emergency jettisoning of Tug deployable equipment as necessary to complete retrieval and stowage operations.	1	B/V.B.2.d.(7)/72
3.1.16 Deleted		REV 2
3.1.17 RF communication capability shall be available between the Orbiter and the Tug and payload for command and control functions.	1	B/V.B.4.a/73
3.1.18 The critical command and control circuitry shall be designed to be fail-operational/fail-safe as a minimum.	1	B/V.B.4.b/73
3.1.19 Safety design features such as interlocks, redundance, grounding and isolation devices shall be incorporated so that no single detectable failure or combination of undetectable failures shall result in premature detonation of explosive devices.	1	B/V.B.5.a/73
3.1.20 Unused explosive devices aboard the Tug and payload must be safed on command and safing verification sent to the Orbiter prior to retrieval.	1	B/V.B.5.b/73

MAXIMUM ONE TIME REPRODUCTION 100 COPIES. APPROVAL OF ADDITIONAL DUPLICATION MUST BE OBTAINED THROUGH CORPORATE FORMS CONTROL.

Order to Corporate Forms Control, Plant 30.

REQUIREMENT	STATUS	SOURCE
3.1.21 Design shall be in accordance with Space Shuttle Pyrotechnic Specification MJ 072-0005.	1	B/V.B.5.c/73
3.1.22 Toxic or other chemically hazardous gases, liquids, or particles shall not be vented into the Orbiter payload compartment, and shall be isolated from the Orbiter EC System.	1	B/V.2.a.(5)/70

39

MAXIMUM ONE TIME REPRODUCTION 100 COPIES. APPROVAL OF ADDITIONAL DUPLICATION MUST BE OBTAINED THROUGH CORPORATE FORMS CONTROL.

Reproduced in order to Conserve

	REQUIREMENT	STATUS	SOURCE
3.1.23	Add main propellant tank baffles if subsequent docking analysis and simulations (in Phase B/C/D) verify that sloshing fuel causes Tug to impact payload or RMS.	2	HAR 2005
3.1.24	All pressurized tankage in the tug will be vented to 20 psia after restow in the orbiter and prior to shuttle landing, unless required during descent and landing.	2	HAR 2004
3.1.25	Main propellant tanks must be isolated before and after mission use. from the pressurant tanks and the main engine.	2	HAR 2002, HAR 2001
3.1.26	All enclosed tug volumes into which toxic or flammable vapors/liquids could enter must be purged or inerted with an inert gas and the volume's atmosphere sampled while the vehicle is on the gorund.	2	HAR 2001
3.1.27	Provide redundant valves on all lines which can become leaks paths overboard	2	HAR 2001

392

2792

FOR INTERNAL NON-RECURRING USE ONLY

MAXIMUM ONE TIME REPRODUCTION 100 COPIES. APPROVAL OF ADDITIONAL DUPLICATION MUST BE OBTAINED THROUGH CORPORATE FORMS CONTROL.

GRUMMAN

FAILURE MODE AND EFFECTS ANALYSIS

SPACE TUG

EQUIPMENT AND PROGRAM

DATA MANAGEMENT SUBSYSTEM (DMS)

PREPARED BY T. NEWMAN

DATE 7/28/72 PAGE 1 OF 2

FUNCTION	FAILURE MODE	EFFECT ON SUBSYSTEM / MISSION	COMPENSATION PROVISIONS	FAILURE DETECTION	FAILURES PER 10^6 HOURS	MAINT FACTOR	DUTY CYCLE	EFFECTIVE FAILURE RATE - FAILURES PER 10^6 HOURS W/O REDUNDANCY	W/REDUNDANCY	CREW SAFETY	COMMENTS
COMPUTER	FAILURE TO OPERATE	LOSE ABILITY TO COMPARE COMPUTER OUTPUTS FOR ERROR DETECTION	RECONFIGURE TO USE REDUNDANT COMPUTER ONLY.	VIA COMPUTER BIT (BUILT IN TEST)	56	10	144	56	.5	.25	
	COMPUTER ERROR.	TEMPORARY LOSS OF COMPUTER SERVICE TILL ERROR IS FOUND.	COMPARE ANS. WITH ANS FROM REDUNDANT UNIT. USE S/W DIAGNOSTIC TO DETERMINE WHICH COMPUTER HAS MALFUNCTIONED.	VIA COMPUTER COMPARISON WITH REDUNDANT COMPUTER							
TAPE RECORDER	FAILURE TO OPERATE	LOSS OF MAINTENANCE DATA.	NONE	VIA TAPE RECORDER BIT	NOT	MISSION	SUCCESS				
MASS MEMORY	FAILURE TO OPERATE	LOSS OF REDUNDANT MASS MEMORY	RECONFIGURE TO USE REDUNDANT MASS MEMORY ONLY	VIA MASS MEMORY BIT	LEVEL I AUTONOMY ONLY 40	10	144	40	.2	.1	

GRUMMAN

FAILURE MODE AND EFFECTS ANALYSIS

SPACE TUG

SYSTEM SUBSYSTEM EQUIPMENT AND PROGRAM: DATA MANAGEMENT SUBSYSTEM (DMS)

PREPARED BY: T. NORIAN

DATE: 9/20/73 PAGE 1 OF 2

FUNCTION	FAILURE MODE	EFFECT ON SUBSYSTEM / MISSION	COMPENSATION PROVISIONS	FAILURE DETECTION	FAILURES PER 10^6 HOURS	MAINT FACTOR	DUTY CYCLE	EFFECTIVE FAILURE RATE FAILURES PER 10^6 HOURS W/O REDUNDANCY	W/ REDUNDANCY	CREW SAFETY	COMMENTS
FSI CONTROLLER/ TLM FORMATTER	FAILURE REDUNDANT CHANNEL TO OPERATE	LOSE REDUNDANT CHANNEL	RECONFIGURE TO USE GOOD CHANNEL ONLY	VIA BIT	1.	10	144	1.	INHERENTLY REDUNDANT		
DATA ACQUISITION CONTROL UNIT (DACU)	FAILURE OF SIGNAL CONDITIONING CHANNEL	LOSS OF DATA FROM THIS CHANNEL	ROUTE CRITICAL FNS. THRU ALTERNATE SIG. COND. CHANNEL	VIA BIT	1.	10	144	1	INHERENTLY REDUNDANT		
	FAILURE OF REDUNDANT CHANNEL	LOSE REDUNDANT CHANNEL	RECONFIGURE TO USE GOOD CHANNEL ONLY	VIA BIT							
SENSORS	FAILURE OF SENSOR	LOSS OF DATA OR ERRONEOUS DATA	USE REDUNDANT SENSORS FOR CRITICAL FNS.	VIA RECEIPT OF OUT OF TOLERANCE DATA	NOT INCLUDED IN RELIABILITY MODEL (ASSUME REDUNDANT SENSORS FOR CRITICAL FUNCTIONS)						

FAILURE MODE AND EFFECTS ANALYSIS

SPACE TUG 410AD (CORE VEHICLE)

X FLIGHT GSE

EQUIPMENT AND PROGRAM

COMMUNICATIONS

PREPARED BY L. OTTENBERG

DATE 8-14-73 PAGE 1 OF 4

FUNCTION	FAILURE MODE	EFFECT ON SUBSYSTEM / MISSION	COMPENSATION PROVISIONS	FAILURE DETECTION	FAILURES PER 10^6 HOURS	MAINT FACTOR	DUTY CYCLE	EFFECTIVE FAILURE RATE FAILURES PER 10^6 HOURS W/O REDUNDANCY	W/ REDUNDANCY	CREW SAFETY	COMMENTS
DFS ANTENNA	Fails to receive/transmit	Lose 50% of all attitude coverage / -	None	None	1	10	144	1.	—		Passive assembly
DFS DIPLEXER	Fails to receive	Lose 50% of all attitude coverage for CMD.	None	None	1.	10	144	1.	—		Passive assembly
	Fails to transmit	Lose 50% of all attitude coverage for TLM/TV	None	None							
POWER SPLITTER	Fails to pass low power	Loss of TLM	None	None	5.	10	144	5.	—	—	passive assembly
	Fails to pass high power	Loss of TV	None	None							
5 Watt Power Amp.	Loss of R.F. power	Loss of down link TLM.	AUX. X'MTR/20 Watt P.A. switches in	Loss of R.F. power after turn on.	30.	10	72.	15.	BACKUP BY TV PA		
20 Watt Power Amp.	Loss of R.F. Power	Loss of TV Loss of backup for downlink TLM	None	None	30	10	1.0	.2	—	—	

395

GRUMMAN

FAILURE MODE AND EFFECTS ANALYSIS

X VEHICLE ___ GSE

SYSTEM / SUBSYSTEM / SUPPORT EQUIPMENT AND PROGRAM

SPACE TUG 410AD (CORE VEHICLE)

COMMUNICATIONS

PREPARED BY L. OTTENBERG

DATE 8-14-73 PAGE 2 OF 4

FUNCTION	FAILURE MODE	EFFECT ON SUBSYSTEM / MISSION	COMPENSATION PROVISIONS	FAILURE DETECTION	FAILURES PER 10^6 HOURS	MAINT FACTOR	DUTY CYCLE	EFFECTIVE FAILURE RATE FAILURES PER 10^6 HOURS W/O REDUNDANCY	W/ REDUNDANCY	CREW SAFETY	COMMENTS
ANTENNA TRANSFER SWITCH	Fails open	Loss of TLM+TV	Redundant diode is used	None	1.0	10	144	1.0	—	—	Redundant solid state design.
	Fails closed	Lose 50% of all attitude coverage for TLM+TV	Redundant diode is used.	None							
DFS Receiver	Fails to receive	Lose 50% of all attitude coverage for CMD.	Redundant receiver switches in	Loss of critical circuits - eg. power supply, Local oscillator, etc.	17.	10	144	17	.02	.02	
DFS Transmitter	Loss of R.F. Power	Loss of downlink TLM	AUX X'MTR/20W PA switches in	Loss of R.F. power after turn on.	17.	10	72	8.5	Backed up by AUX XMITTER		
DFS Auxiliary Transmitter	Loss of R.F. power	Loss of TV Loss of backup for downlink TLM	None	None	17	10	1	.001	—		
Baseband Processor (DFS Functions)	Fails to process TLM	Loss of downlink TLM	Redundant circuit switches in	Loss of circuit eg. Modulator	1.0	10	144	1.	Backed up by CSS BB		The DFS uses the CSS TLM modulator + cmd demodulator
	Fails to process CMD's	Loss of CMD's	Redundant circuit switches in	Loss of circuit eg. demodulator							
	Fails to process TV	Loss of TV	None	None							

FAILURE MODE AND EFFECTS ANALYSIS

SPACE TUG 410AD (CORE VEHICLE)

COMMUNICATIONS

PREPARED BY: L. OTTENBERG

DATE: 8-15-73 PAGE 3 OF 4

FUNCTION	FAILURE MODE	EFFECT ON SUBSYSTEM / MISSION	COMPENSATION PROVISIONS	FAILURE DETECTION	FAILURES PER 10^6 HOURS	MAINT FACTOR	DUTY CYCLE	EFFECTIVE FAILURE RATE FAILURES PER 10^6 HOURS W/O REDUNDANCY	W/REDUNDANCY	CREW SAFETY	COMMENTS
CSS ANTENNA	Fails to receive/transmit	Lose 50% of all attitude coverage	None	None	NOT	MISSION	SUCCESS				Passive Assembly
~~DFS~~ DIPLEXER CSS	Fails to receive	Lose 50% of all attitude coverage for CMD from orbiter or TLM from payload	For Tug/orbiter Comm use DFS.	None							Passive Assembly
	Fails to transmit	Lose 50% of all attitude coverage for CMD to payload or TLM to orbiter	For Tug/payload Comm reduced performance available via ground station	None							
~~DFS~~ Receiver CSS	Fails to receive	Lose 50% of all attitude coverage for CMD from orbiter or TLM from payload	For tug/orbiter Comm use DFS For tug/payload Comm. reduced performance available via ground station	None							
~~DFS~~ TRANSMITTER CSS	Loss of R.F. Power	Lose CMD link to payload or TLM link to orbiter	For tug/orbiter comm use DFS. For tug/payload Comm. reduced performance available via ground station	None							

GRUMMAN

FAILURE MODE AND EFFECTS ANALYSIS

SPACE TUG

COMMUNICATIONS

PREPARED BY

DATE 8-14-73 PAGE 4-4

FUNCTION	FAILURE MODE	EFFECT ON SUBSYSTEM / MISSION	COMPENSATION PROVISIONS	FAILURE DETECTION	FAILURES PER 10^6 HOURS	MAINT FACTOR	DUTY CYCLE	EFFECTIVE FAILURE RATE FAILURES PER 10^6 HOURS W/O REDUNDANCY	W/ REDUNDANCY	CREW SAFETY	COMMENTS
BASEBAND PROCESSOR (CSS FUNCTIONS)	Fails to process TLM	Loss of TLM from payload.	For tug/orbiter comm use DFS	None	NOT	MISSION		SUCCESS			
		Loss of TLM to orbiter	For tug/payload comm. reduced performance available via ground station								
	Fails to process CMD'S	Loss of CMD'S to payload									
		Loss of CMD'S from orbiter									
		Loss of backup for DFS functions									

FAILURE MODE AND EFFECTS ANALYSIS

SPACE TUG – AUXILIARY PROPULSION SYSTEM

SHEET 1 OF 2

PREPARED BY

PAGE OF

FUNCTION	FAILURE MODE	EFFECT ON SUBSYSTEM / MISSION	COMPENSATION PROVISIONS	FAILURE DETECTION	FAILURES PER 10^6 HOURS	MAINT FACTOR	DUTY CYCLE	EFFECTIVE FAILURE RATE FAILURES PER 10^6 HOURS W/O REDUNDANCY	W/ REDUNDANCY	CREW SAFETY	COMMENTS
PRIMARY REGULATOR ISOLATION VALVE	FAILURE TO OPEN AT PRESCRIBED TIME	PROPELLANT TANKS CAN'T BE PRESSURIZED	SECONDARY REGULATOR ISOLATION VALVE IS OPENED	DECAYING REG. OUTLET PRESSURE							
	FAILURE TO CLOSE AT PRESCRIBED TIME	PROPELLANT TANKS OVER PRESSURIZE AND BURST DISC BLOWS, LOSE ALL HELIUM	TWO REGULATOR OPEN FAILURES WOULD HAVE HAD TO OCCUR FOR THIS VALVE TO BE COMMANDED CLOSED	INCREASING REGULATOR OUTLET PRESSURE							
SECONDARY REGULATOR ISOLATION VALVE	FAILURE TO OPEN AT PRESCRIBED TIME	PROPELLANT TANKS CAN'T BE PRESSURIZED	OPERATE SYSTEM IN BLOWDOWN MODE TO PROVIDE ATTITUDE CONTROL CAPABILITY	DECAYING REGULATOR OUTLET PRESSURE	1.	20	156	1.			
PRIMARY REGULATOR LEG – UPSTREAM REG.	FAILS OPEN DURING OPERATION	PROPELLANT TANKS OVERPRESSURIZE, BURST DISC BLOWS, LOSE ALL HELIUM	REDUNDANT SERIES REGULATOR CONTROLS	INCREASING REGULATOR OUTLET PRESSURE							
	FAILS CLOSED DURING OPERATION	PROPELLANT TANKS CAN'T BE PRESSURIZED	OPEN SECONDARY REGULATOR ISOLATION VALVE.	DECAYING REG. OUTLET PRESS.							
PRIMARY REGULATOR LEG – DOWNSTREAM REG	FAILS OPEN DURING OPERATION	PROP TANKS OVERPRESS, BURST DISC BLOWS, LOSE ALL HELIUM	CLOSE PRIM. REG ISOL. VLV., OPEN SEC. REG. ISOL. VLV. *	INCREASING REG. OUTLET PRESS. *							
	FAILS CLOSED DURING OPERATION	PROP TANKS CAN'T BE PRESSURIZED	OPEN SECONDARY REG. ISOL. VLV.	DECAYING REG OUTLET PRESSURE.							
SECONDARY REGULATOR	FAILS OPEN DURING OP.	PROP TANKS OVERPRESS, BURST DISC BLOWS, LOSE ALL HELIUM	CLOSE SECONDARY REG. ISOL. VLV.	INCREASING REG OUTLET PRESS.							
TWO CHECK VALVE	TWO PARALLEL ELEMENTS FAIL CLOSED	PROPELLANT TANKS CAN'T BE PRESSURIZED	OPERATE SYSTEM IN BLOWDOWN MODE	DECAYING REG. OUTLET PRESSURE.	1.0	10					
	ONE ELEMENT FAILS CLOSED	NO EFFECT	—	—							
	ANY OPEN FAILURE	POTENTIAL REGULATOR CONTAMINATION	—	—							

* ASSUMES FIRST REG FAILURE HAS OCCURRED.

GRUMMAN

FAILURE MODE AND EFFECTS ANALYSIS

Check one: ☑ VEHICLE ☐ GSE

SUBSYSTEM/GROUND SUPPORT EQUIPMENT AND PROGRAM

SPACE TUG - AUXILIARY PROPULSION SYSTEM

SHEET 2 OF 2

PREPARED BY

DATE

PAGE OF

FUNCTION	FAILURE MODE	EFFECT ON SUBSYSTEM / MISSION	COMPENSATION PROVISIONS	FAILURE DETECTION	FAILURES PER 10^6 HOURS	MAINT FACTOR	DUTY CYCLE	EFFECTIVE FAILURE RATE - FAILURES PER 10^6 HOURS: W/O REDUNDANCY	W/ REDUNDANCY	CREW SAFETY	COMMENTS
VENT VALVE (ONE NORMALLY CLOSED TWO NORMALLY OPEN)	FAILURE TO OPEN AT PRESCRIBED TIME	APS CAN'T BE VENTED TO SAFE LEVEL (20 PSI)	FIRE OPPOSING THRUSTERS WHILE HELD IN SHUTTLE MANIPULATOR ARMS UNTIL PRESS. IS REDUCED	REG OUTLET PRESSURE DOES NOT DECAY.	15.	10.	.156				
	FAILURE TO CLOSE AFTER VENT.	TANKS COULD IMPLODE UPON RE-ENTRY	CLOSE ONE OF TWO BACKUP VENT VALVES. THESE VALVES WOULD BE COMMANDED CLOSED AT THE SAME TIME.	CEJ. OUTLET PRESSURE WILL CONFIRM THAT AT LEAST ONE OF THREE CLOSES.							
RELIEF VALVE	FAILS TO CLOSE	INABILITY TO PRESSURIZE PROP. TANKS	CLOSE VENT VALVE UPSTREAM OF BURST DISC.	DECAYING REG OUTLET PRESSURE	.5 w/o burst disc						
	FAILS TO OPEN	POSSIBLE TANK RUPTURE	OPEN VENT VALVES	REG OUTLET PRESSURE							
SHUDDER	RUPTURES	GAS INGESTION INTO THRUSTERS	THRUSTER DESIGNED TO ACCEPT GAS	SPONGINESS IN VEHICLE RESPONSE.	1.0	50					
THRUSTER ISOLATION VALVE (NORMALLY OPEN)	FAILURE TO CLOSE AT PRESCRIBED TIME	PROPELLANT LEAKS THROUGH FAILED OPEN THRUSTER.	SERIES REDUNDANT ISOLATION VALVE IS CLOSED. IF IT FAILS TO CLOSE, OPPOSING THRUSTER IS FIRED TO MAINTAIN STABLE ATTITUDE	P_c SWITCH ON THRUSTER INDICATES UNCOMMANDED FIRING.	15.	10	.168	15.			
THRUSTER VALVE	FAILS TO OPEN AT PRESCRIBED TIME	ATTITUDE NOT MAINTAINED	BACKUP THRUSTER IS FIRED	UNDESIRED VEHICLE MOTION NOT CORRECTED	.67 per cut per mission ~~hour~~	50	.144	—	2.6/mission	.018	23/24 RCS per mission success. λ based on λ=.5999 per engine per (mission)
	FAILS TO CLOSE AT PRESCRIBED TIME	LOSS OF PROPELLANT	CLOSE THRUSTER ISOLATION VALVES.	P_c SWITCH ON INDICATES UNCOMMANDED FIRING							
THRUSTER ISOLATOR	FAILS TO OPERATE	THRUSTER LIFE IS DEGRADED	THRUSTER CAN BE USED, THEN CHECKED AFTER LANDING	THRUSTER TEMPERATURE	N/A						

400

GRUMMAN

FAILURE MODE AND EFFECTS ANALYSIS

SPACE TUG - ELECTRICAL POWER SUBSYSTEM
410 AD-1 CORE VEHICLE

EPS

PREPARED BY H.S. SIEGEL

DATE 8-23-73 PAGE 1 OF 3

FUNCTION	FAILURE MODE	EFFECT ON SUBSYSTEM / MISSION	COMPENSATION PROVISIONS	FAILURE DETECTION	FAILURES PER 10^6 HOURS	MAINT FACTOR	DUTY CYCLE	EFFECTIVE FAILURE RATE FAILURES PER 10^6 HOURS W/O REDUNDANCY	W/ REDUNDANCY	CREW SAFETY	COMMENTS
[illegible] FUEL CELL ASSEMBLY	LOSS OF H_2 OR O_2 REQMNT SUPPLY	LOSE USE OF PRIMARY POWER SOURCE	USE EMERGENCY BATTERY DURING LAST 0.5 HR OF MISSION	FUEL CELL PRESSURE TRANSDUCERS; STORAGE TANK PRESSURE	40.	5	144	40.	—	BATTERY BACK-UP	
	LOSS OF PRESSURE WITHIN ASSEMBLY	LOSE USE OF PRIMARY POWER SOURCE	"	"							
	LOSS OF COOLANT LOOP ie PUMP FAILURE	LOSE USE OF PRIMARY POWER SOURCE	"	COOLANT LOOP PRESSURE & TEMP, FUEL CELL TEMP							
	LOSS OF PRODUCT WATER REMOVAL LOOP	GRADUAL LOSS OF POWER OUTPUT	REMOVE REDUNDANT EQUIP TO REDUCE POWER REQMNT; SWITCH TO EMERG. BATTERY WHEN FUEL CELL FAILS	VOLTAGE, CURRENT OUTPUT; WATER TEMP							
	O_2 OR H_2 PURGE VALVE FAILS TO OPEN	GRADUAL LOSS OF POWER OUTPUT	"	VOLTAGE, CURRENT OUTPUT VALVE POSITION READOUT							
	O_2 OR H_2 PURGE VALVE FAILS TO CLOSE	GRADUAL LOSS OF POWER OUTPUT	"	"							
	ELECTRODE/ ELECTROLYTE FAILURE	GRADUAL LOSS OF POWER OUTPUT	"	VOLTAGE, CURRENT OUTPUT; TEMP.							
	INTERNAL ELECTRICAL SHORT	LOSS OF POWER	USE EMERG BATTERY FOR LAST 0.5 HR OF MISSION	"							

GRUMMAN

FAILURE MODE AND EFFECTS ANALYSIS

SPACE TUG

EPS

PREPARED BY: H.S. SIEGEL

DATE: 8-28-73

FUNCTION	FAILURE MODE	EFFECT SUBSYSTEM / MISSION	COMPENSATION PROVISIONS	FAILURE DETECTION	FAILURES PER 10^6 HOURS	MAINT FACTOR	DUTY CYCLE	EFFECTIVE FAILURE RATE FAILURES PER 10^6 HOURS W/O REDUNDANCY	W/ REDUNDANCY	CREW SAFETY	COMMENTS
OXYGEN / HYDROGEN CRYO STORAGE TANK ASSEMBLY	RELIEF VALVE FAILS TO OPEN FOR VENTING	POSSIBLE BURST DISC ACTIVATION, LOSS OF REACTANTS	HIGHER FUEL CELL OUTPUT COULD REDUCE INTERNAL PRESSURE; GO ON EMERG. BATTERY	TANK PRESSURE & QUANTITY READINGS	2	10	1%	2.		1.	
	RELIEF VALVE REMAINS IN OPEN POS.	GRADUAL LOSS OF REQUIRED REACTANTS	REDUCE POWER REQMNTS VIA REDUNDANCY LOGIC OR SHORTEN MISSION TIME OR GO ON EMERG. BATT.	TANK PRESSURE & QUANTITY READINGS							
	HEATER PRESSURIZATION MODE REMAINS ON	PRESSURE BUILDUP, BURST DISC ACTIVATION LOSS OF REACTANTS	GO ON EMERG. BATTERY DURING LAST 0.5 HR.	TANK PRESSURE							
	HEATER FAILS TO GO ON	LOSE SINGLE PHASE STORAGE; HIGH PRESSURE SURGES IN LINES	REDUCE POWER REQMNTS; GO ON EMERG. BATTERY	TANK PRESSURE, TEMP.							
	PRESSURE REGULATOR FAILS IN CLOSED POSITION	LOSS OF REACTANT SUPPLY TO FUEL CELL	GO ON EMERG BATTERY FOR LAST 0.5HR	FUEL CELL H_2 & O_2 PRESSURE							
	PRESSURE REGULATOR BELOW 100 PSI	DEGRADED FUEL CELL OUTPUT	REDUCE POWER REQMNTS, SHORTEN MISSION	FUEL CELL VOLT & CURRENT OUTPUT; PRESSURE							

402

GRUMMAN

FAILURE MODE AND EFFECTS ANALYSIS

SPACE TUG

Check one: ☑ VEHICLE ☐ GSE

SUBSYSTEM/GROUND SUPPORT EQUIPMENT AND PROGRAM: EPS

PREPARED BY: H.S. SIEGEL

DATE: 8-28-73 PAGE 3 OF 3

FUNCTION	FAILURE MODE	EFFECT ON SUBSYSTEM / MISSION	COMPENSATION PROVISIONS	FAILURE DETECTION	FAILURES PER 10^6 HOURS	MAINT FACTOR	DUTY CYCLE	EFFECTIVE FAILURE RATE FAILURES PER 10^6 HOURS W/O REDUNDANCY	W/ REDUNDANCY	CREW SAFETY	COMMENTS
EMERGENCY BATTERY	INTERNAL SHORT	LOSS OF BACKUP POWER SOURCE FOR LAST 0.5 HR OF MISSION	REMOVE BATTERY FROM BUSS; CONTINUE ON PRIME SOURCE	BATTERY TEMP, VOLTAGE	20	10	1.	.14	—		
	LOSS OF ELECTROLYTE	"	"	"							
	SEPARATOR DETERIORATION	GRADUAL LOSS OF POWER	USE IN ABSOLUTE EMERG. WHEN ESTIMATED CAPACITY REMAINING WILL MEET REQMNTS	BATTERY TEMP, VOLTAGE							
	SILVER ELECTRODE PLATING	GRADUAL LOSS OF POWER	"	"							
SHUTTLE / TUG POWER INTERFACE CONNECTION	CONNECTOR SHORT	LOSS OF TUG & PAYLOAD SUPPORT	USE EMERG. BATTERY TO SUPPORT ESSENTIAL TUG EQUIP (i.e. IMU)	MAIN BUSS VOLTAGE, CURRENT							
REMOTE CONTROL CIRCUIT BREAKER	FAILS IN OPEN POSITION	LOSS OF SPECIFIC EQUIP. UNDER CONTROL	REDUNDANT EQUIP WHERE APPLICABLE	EQUIP. OFF LINE							
	FAILS IN CLOSE POSITION	CANNOT REMOVE EQUIP. OFF BUSS	ENERGY DRAIN WILL SHORTEN MISSION TIME	BUSS CONTROL							

403

FAILURE MODE AND EFFECTS ANALYSIS

SPACE TUG 410AD-1

LEVEL IIB AUTONOMY

GUIDANCE CONTROL

PREPARED BY W.P. WEAVER

DATE 3-30-73 PAGE 1 OF

FUNCTION	FAILURE MODE	EFFECTS SUBSYSTEM / MISSION	COMPENSATION PROVISIONS	FAILURE DETECTION	FAILURES PER 10^6 HOURS	MAINT FACTOR	DUTY CYCLE	EFFECTIVE FAILURE RATE FAILURES PER 10^6 HOURS W/O REDUNDANCY	W/REDUNDANCY	CREW SAFETY	COMMENTS
[illegible]	NO ACCEL. OUTPUTS	CANNOT MAKE ENGINE OR APS TRANSLATION BURNS	NONE	TELEMETRY AND OBC	50	10	144	50.	.35	.002	
	LOSS OF ATTITUDE RATE INFO	NO ATTITUDE CONTROL	RATE GYRO UNIT WILL PROVIDE INFO. TO STABILIZE VEHICLE	TELEMETRY, OBC							
STAR TRACKER	FAILS TO TRACK STAR	CANNOT REALIGN PLATFORM. DEGRADED PERF.	NONE	TELEMETRY, OBC	66	10	72	33	—	—	
LASER RENDEZVOUS RADAR	FAILS TO TRACK TARGET	CANNOT PERFORM REND. OR DOCK	NONE	TELEMETRY, OBC	100	10	1	.7	—		
APS CONTROL ELECTRONICS	FAILS TO DRIVE ALL THRUSTERS	LOSS OF ATTITUDE CONTROL	NONE	TELEMETRY OBC	20	10	144	20	.04	.02	
	FAILS TO DRIVE ANY 2 THRUSTERS	DEGRADED ATTITUDE CONTROL	NONE	TELEMETRY OBC							
MOTOR CONTROL ELECTRONICS	LOSS OF OUTPUTS	CANNOT CONTROL MAIN ENGINE.	NONE	TELEMETRY, OBC	10	10	1.	.07	—	—	
Doppler Receiver	Loss of OUTPUTS	Lose Capability for State vector Update	None	OBC	17	10	26.	3.	—	—	Hemispheric Coverage remains
Combiner/Doppler Interface	Loss of Outputs	Lose Capability for State Vector Update	None	OBC	15	10	22.	2.3	—	—	Hemispheric Coverage remains
L-Band Antennas	Loss of output	Lose Capability for State state vector update	None	None	1.	10	144	[illegible]	—	—	Hemispheric Coverage remains

404

GRUMMAN

FAILURE MODE AND EFFECTS ANALYSIS

SPACE TUG

Main Propulsion

PREPARED BY F. Dick

DATE 9/7/73 PAGE 1 OF 1

FUNCTION	FAILURE MODE	EFFECT ON SUBSYSTEM / MISSION	COMPENSATION PROVISIONS	FAILURE DETECTION	FAILURES PER 10^6 HOURS	MAINT FACTOR	DUTY CYCLE	EFFECTIVE FAILURE RATE FAILURES PER 10^6 HOURS W/O REDUNDANCY	W/ REDUNDANCY	CREW SAFETY	COMMENTS
① Pre-valve	Failure to open at prescribed time.	Engine cannot fire; loss of mission.	Dual-coil solenoid valves on pneumatic actuator, redundant wiring to valves	Valve position indicator, engine inlet press.	2.5	[illegible]	1.	.02	—	—	
	Failure to close at prescribed time.	Cannot drain engine propellants between engine burns (req'd. for long coast periods only).	Same as above	Same as above							
	Failure closed during operation	Engine shuts down; loss of mission.	Same as above	Same as above							
② Fill & Drain QD's	Failure to open at prescribed time	Cannot fill or drain propellant/He tanks	Ground ops only, replace failed unit	Cannot mate ground half of Q.D., low level sensor	2.	10	168	2	—	—	
	Failure to close at prescribed time	Loss of propellant/He	Redundant fill & drain shutoff valve	Propellant/He flow when ground half of QD is disconnected							
③ Fill & Vent QD's	Failure to open at prescribed time.	On ground - cannot fill or drain propellant tanks In-flight - cannot vent Ox tank overpressure while Tug is in cargo bay	Ground Ops, replace failed unit Burst disc/relief valve assy vents press. into cargo bay.	Tank pressure Tank pressure	2.	10	150	2	—	—	
	Failure to close at prescribed time	Loss of propellant/He	Redundant fill & vent shutoff valve	Tank pressure decay							
④ Fill & Drain Shutoff Valves	Failure to open at prescribed time	Cannot fill or drain propellant/He tanks	Dual-coil solenoid valves on pneumatic actuator, redundant wiring to valves	Valve position indicator, Tank pressure	Ground operation						
	Failure to close at prescribed time	Loss of propellant/He	Redundant fill & drain QD's.	Same as above							

405

GRUMMAN

FAILURE MODE AND EFFECTS ANALYSIS

SPACE TUG

ITEM: Main Propulsion

PREPARED BY: F. Dick

DATE: 7/7/73 PAGE 2 OF 4

FUNCTION	FAILURE MODE	EFFECT ON SUBSYSTEM / MISSION	COMPENSATION PROVISIONS	FAILURE DETECTION	FAILURES PER 10^6 HOURS	MAINT FACTOR	DUTY CYCLE	EFFECTIVE FAILURE RATE FAILURES PER 10^6 HOURS W/O REDUNDANCY	W/ REDUNDANCY	CREW SAFETY	COMMENTS
Fill & Vent Shutoff Valves	Failure to open at prescribed time	On ground - cannot fill or drain propellant tanks. In-flight - cannot vent propellant tanks to safe level; can not vent Ox tank overpressure while Tug is in cargo bay	Dual-coil solenoids, redundant wiring to valves. Same as above and burst disc/relief valve assy vents press. into cargo bay (Min. hazard)	Valve position indicator, tank press. Same as above	[illegible]	[illegible]	[illegible]				
	Failure to close at prescribed time	Loss of propellant/He	Redundant fill & vent QD's	Valve position indicator, tank press. decay							
He Isolation Valve	Failure to open at prescribed time	Loss of mission	Redundant isolation valve	Valve position indicator, tank pressure.	7.5	[illegible]	156	7.5	.007		
Regulator Assys.	Failure to open at prescribed time	Loss of mission	None	Tank press.	55	10	156	110	10	—	
	Failure to close at prescribed time	Propellant tank overpressure; loss of mission	Redundant regulator, He isolation valve, burst disc/relief valve assy	Tank press. rise							
Burst Disc/Relief Valve Assy	Failure to open at prescribed time	Loss of mission	Vent shutoff valves bypass	Tank press. rise	1.0	10	165	1.0	Functions [illegible]		
	Failure to close at prescribed time	Loss of mission	None - double failure req'd.	Tank press. decay							

GRUMMAN

FAILURE MODE AND EFFECTS ANALYSIS

SPACE TUG

SYSTEM / SUBSYSTEM / EQUIPMENT AND PROGRAM: Main Propulsion

PREPARED BY: F. Dick

DATE: 9/2/73 PAGE 3 OF 4

FUNCTION	FAILURE MODE	EFFECT ON SUBSYSTEM / MISSION	COMPENSATION PROVISIONS	FAILURE DETECTION	FAILURES PER 10^6 HOURS	MAINT FACTOR	DUTY CYCLE	EFFECTIVE FAILURE RATE FAILURES PER 10^6 HOURS W/O REDUNDANCY	W/ REDUNDANCY	CREW SAFETY	COMMENTS
9 Check Valve	Failure to open at prescribed time	Can not pressurize propellant tank; loss of mission	Quad redundant valve design	Tank press.	1.0	10	156	1.0	Quad redundant		
	Failure to close at prescribed time	Increased possibility of propellant vapors migrating to common press. manifold; possible hazardous reaction on next engine start	Same as above	Tank press.							
10 Engine Drain Valve	Failure to open at prescribed time	Can not drain propellants between pre-valves & engine shutoff valves; for long coast times, heat soak back causes hazardous condition in pumps	Drain one propellant through operating drain valve, then open engine shutoff valves to drain second propellant	Valve position indicator, engine inlet pressure	—						
	Failure to close at prescribed time	Engine is filled with propellant during tank filling operations	Ground Ops only; replace failed unit	Valve position indicator, engine inlet pressure							
11 Horizontal Drain Valve	Failure to open at prescribed time	Can not drain propellants in horizontal position	Ground Ops only; Drain propellants in vertical position then replace failed unit	Valve position indicator	—						
	Failure to close at prescribed time	Propellant vapors escape overboard	Ground Ops only; redundant sealing QD's	Same as above							
12 Helium Tank	Excessive leakage	Loss of helium pressurant; loss of mission	"Leak before burst" design	He. Tank press. decay	1.0	10	156	1.0	—		

GRUMMAN

FAILURE MODE AND EFFECTS ANALYSIS

SPACE TUG

CATEGORY: X VEHICLE ___ BASE

SUBSYSTEM/GROUND SUPPORT EQUIPMENT AND PROGRAM: Main Propulsion

PREPARED BY: F. Dick

DATE: 9/4/73 | PAGE 4 OF 4

FUNCTION	FAILURE MODE	EFFECT SUBSYSTEM / MISSION	COMPENSATION PROVISIONS	FAILURE DETECTION	FAILURES PER 10^6 HOURS	MAINT FACTOR	DUTY CYCLE	EFFECTIVE FAILURE RATE FAILURES PER 10^6 HOURS W/O REDUNDANCY	W/ REDUNDANCY	CREW SAFETY	COMMENTS	CRITICALITY
B) Main Engine	Failure to start at prescribed time	Loss of mission, possible loss of Tug	Dual-coil solenoid start valves, redundant wiring to valves	Vehicle accelerometers, chamber press.	1000	2	1.	7.0	—	—		
	Failure to shutdown at prescribed time	Loss of mission, possible loss of Tug	Same as above and pre-valves	Same as above								
	Premature shutdown	Same as above	Same as above	Same as above								
11. Gimbal Actuators	Failure to extend/retract at prescribed time	Loss of vehicle control; loss of mission	Redundant actuator design	Vehicle gyros & actuator position indicator	—				—	—		
3. Service Panel Actuators	Failure to retract at prescribed time	Can not disconnect propellant/He lines at Tug/Adapter interface; loss of mission	Redundant actuator design	Actuator position indicator	—							
	Failure to extent at prescribed time	On Ground - can not mate Tug/Adapter propellant/He lines; replace failed actuator. In-flight - can not remate Tug/Adapter propellant/He lines following retrieval; can not vent ox tank overpressure overboard	Redundant actuator design & burstdisc/relief valve assy vents press. into cargo bay (Min. hazard)	Actuator position indicator								

VIII. TASKS FOR NEXT PHASE

SAFETY TASKS FOR NEXT PERIOD

- o UPDATE DATA DUMP
- o DESIGN FOR REUSE
  - REFINE OPERATIONS HAZARD ANALYSIS TO FURTHER IDENTIFY REUSE CONCERNS
  - ESTABLISH DESIGN/OPERATIONS REQUIREMENTS
- o CONTROL OF PROPELLANTS AND RESIDUALS
  - PERFORM MORE DETAILED ANALYSIS OF SERVICING, ABORTS, CRASH AND LEAK POTENTIALS TO IDENTIFY HAZARDS AND ESTABLISH COMPENSATING REQUIREMENTS
  - ADDRESS: MPS DEPLETION AFTER MISSION
    TWO STAGE ABORT DUMP
    NESTED VS. SEPARATE TANKS
    SHUTTLE - TUG - FACILITY UMBILICALS
- o MISSION MODES
  - ANALYZE FOR SAFETY HAZARDS, MISSION OPERATIONS, TUG UTILIZATION, AND RDM AND KICK STAGE APPLICATIONS. FLIGHT MODE DESCRIPTIONS (VOL. VI 6.1.3) ARE SOURCE DATA
  - ESTABLISH FLIGHT OPERATIONS CONSTRAINTS AND TIMELINE SAFETY INPUTS
- o SHUTTLE/TUG/PAYLOAD/FACILITY/GSE INTERFACES
  - REFINE CRITICAL SAFETY INTERFACE LIST
  - ESTABLISH SAFETY REQUIREMENTS

GRUMMAN

RELIABILITY/MAINTAINABILITY TASKS

FOR NEXT PERIOD

- UPDATE DATA DUMP (AS REQUIRED)
  - REDUNDANCY ALLOCATION
  - RELIABILITY ASSESSMENT
  - FMEA'S
  - LIMITED LIFE
  - SENSITIVITY STUDIES
    - DESIGN LIFE
    - 0.97 RELIABILITY
    - 30 DAY MISSION
    - AUTONOMY
- PERFORM MAINTAINABILITY ANALYSIS TO DETERMINE DESIGN REQUIREMENTS AND TO ESTIMATE MAINTENANCE MAN HOURS AND ELAPSED TIME PER TUG TURNAROUND

GRUMMAN