13
P 308

REPORT NO. CASD-NAS73-033
CONTRACT NAS 8-29676

SPACE TUG SYSTEMS STUDY (CRYOGENIC)

FINAL REPORT

VOLUME II • COMPENDIUM

GENERAL DYNAMICS
Convair Aerospace Division

(NASA-CR-179117) SPACE TUG SYSTEMS STUDY (CRYOGENIC). VOLUME 2: COMPENDIUM Final Report (General Dynamics/Convair) 297 p Avail: NTIS

N87-70404

Unclas
00/18 0074242

SPACE TUG SYSTEMS STUDY
(CRYOGENIC)

FINAL REPORT

VOLUME I ✦ FINAL BRIEFING
VOLUME II ✦ COMPENDIUM
VOLUME III ✦ EXECUTIVE SUMMARY

REPORT NO. CASD-NAS73-033

SPACE TUG SYSTEMS STUDY (CRYOGENIC)

FINAL REPORT

VOLUME II • COMPENDIUM

January 1974

Prepared Under
Contract NAS8-29676

Prepared for
National Aeronautics and Space Administration
GEORGE C. MARSHALL SPACE FLIGHT CENTER
Huntsville, Alabama
and
United States Air Force
Space and Missile Systems Organization
El Segundo, California

Prepared by
GENERAL DYNAMICS CONVAIR AEROSPACE DIVISION
San Diego, California

CASD-NAS73-033

VOLUME II

C. J. Cohan
Study Manager

C. F. Peters
OOS/Tug Chief Engineer

D. J. Jones
OOS/Tug Program Manager

FOREWORD

This final report on the Space Tug Systems Study (Cryogenic) was prepared by General Dynamics, Convair Aerospace Division for the National Aeronautics and Space Administration's George C. Marshall Space Flight Center and the United States Air Force Space and Missile Systems Organization (SAMSO) in accordance with Contract NAS8-29676. The study was conducted under the direction of NASA Study Manager, Mr. Thomas W. Barrett. The SAMSO Study Monitor was Captain Robert Probst. The Aerospace Corporation Study Monitor was Mr. Allen Goldstein. The General Dynamics Study Managers were Mr. Carl F. Peters and Mr. Christopher J. Cohan.

The study was conducted during the period from March 1973 to December 1973.

ACKNOWLEDGEMENTS

Due to the broad scope of this study many individuals were involved in providing technical support.

Convair Aerospace Division personnel who contributed significantly to the study include:

C. Peters	Study Manager
C. Cohan	Study Manager
J. Adams	Performance
F. Bennett	Thermal Analysis
L. Bolt	Economic Analysis
C. Braun	Thermal Analysis
D. Browning	Structures
C. Crone	Development Schedules
R. Eidson	Propulsion & Fluids
R. Harris	Flight Operations
F. Jarlett	Programmatics
M. Male	Testing
F. Merino	Fluids
A. Nelson	Subsystem Integration
R. Parsons	Ground Operations
M. Raaberg	Astrionics
C. Richards	Design
A. Ryan	Missions
E. Seiden	Mass Properties
J. Streetman	Propulsion & Fluids
N. Tipton	Safety & Reliability

The following subcontractors contributed to the study in the areas indicated.

Chrysler Corporation/Space Division – Testing, Manufacturing, Facilities, Ground Operations and Parametric Performance

GE Space Division – Payload Interface

Honeywell Inc. – Guidance & Navigation

TABLE OF CONTENTS

Section		Page
1	INTRODUCTION	1-1
1.1	OBJECTIVES	1-1
1.2	STUDY PLAN	1-2
2	SYNOPSIS OF ANALYSES	2-1
2.1	REQUIREMENTS	2-1
2.1.1	General Requirements and Guidelines	2-1
2.1.2	Payload Requirements	2-2
2.1.3	Mission Requirements	2-2
2.1.4	Subsystem Driving Requirements	2-7
2.1.5	Mission Model Summaries	2-11
2.2	SUBSYSTEMS	2-14
2.2.1	Structure	2-14
2.2.2	Thermal Control	2-25
2.2.3	Astrionics	2-30
2.2.4	Propulsion	2-47
2.2.5	Orbiter and Payload Interface	2-60
2.2.6	Kick Stages	2-63
2.3	CONFIGURATION CONCEPTS	2-67
2.3.1	Approach	2-68
2.3.2	Evaluation Criteria and Methodology	2-69
2.3.3	Capability Options	2-71
2.3.4	Concept Summary and Recommendations (GDCA)	2-101
2.3.5	Selected Concepts (Government)	2-105
2.4	PROGRAM DEFINITIONS	2-106
2.4.1	Program 1	2-107
2.4.2	Program 2	2-139
2.4.3	Program 3	2-172
2.5	SPECIAL EMPHASIS	2-204
2.5.1	Safety	2-204
2.5.2	Operations	2-211
2.5.3	Orbiter Interface	2-221
2.5.4	Other Sensitivity Studies	2-230
2.6	SUPPORTING RESEARCH AND TECHNOLOGY	2-235

TABLE OF CONTENTS, Contd

Section			Page
3	ADDITIONAL ANALYSES		3-1
	3.1	DEVELOPMENT SCHEDULE OPTIMIZATION	3-1
	3.2	SAFE TUG RETRIEVAL	3-2
	3.2.1	Operations Analysis for Tug/Orbiter Docking	3-2
	3.2.2	Tug/Orbiter Retrieval Hazard Analysis	3-4
	3.3	ABORT	3-4
	3.3.1	Requirements	3-8
	3.3.2	Abort Dump Time	3-8
	3.3.3	Dump System Sizing	3-11
	3.3.4	Low Thrust/Weight Dumping	3-12
	3.3.5	Summary of Dump System Performance for Selected Modes of Operation	3-13
4	CONCLUSIONS AND RECOMMENDATIONS		4-1
	4.1	ASSESSMENT	4-1
	4.2	LIMITATIONS	4-2
	4.3	CONCLUSIONS	4-3
	4.4	RECOMMENDATIONS FOR FURTHER STUDY	4-5
	4.5	RECOMMENDATIONS FOR PHASE B EFFORT	4-6
5	REFERENCES		5-1

LIST OF FIGURES

Figure		Page
1-1	Study Schedule	1-3
1-2	Study Logic	1-4
2-1	Orbiter Payload Capability	2-2
2-2	Synchronous Equatorial Deployment Mission R-1D, Outbound	2-6
2-3	Synchronous Equatorial Deployment Mission R-1D, Inbound	2-6
2-4	Candidate Tank/Body Combinations	2-15
2-5	Baseline Fuel Tank and Supports	2-15
2-6	Oxidizer Tank and Supports — Baseline Configurations	2-18
2-7	Body Structure Envelope/Subdivision Evolution	2-20
2-8	Thrust Structure Option/Characteristics Summary	2-23
2-9	Meteoroid Shield Sizing Analysis	2-24
2-10	Heat Flux as a Function of Time from Launch	2-27
2-11	Astrionics Module, Program 1, Layout of Thermally Significant Components	2-29
2-12	Data Management Subsystem Task Summary	2-31
2-13	Data Management Reliability Considerations	2-33
2-14	Three Fault Tolerant Computer Systems are Candidates	2-34
2-15	Recommended Options for Data Management Subsystem	2-35
2-16	Guidance and Navigation Subsystem Task Summary	2-36
2-17	Weights and Costs for Recommended Navigation Configurations	2-37
2-18	Guidance Update Effects Tasks	2-37
2-19	Guidance Update Subsystem Task Summary	2-38
2-20	Flight Control Subsystem	2-40
2-21	Rendezvous and Docking Subsystem Task Summary	2-41
2-22	Laser Radar Range Performance	2-41
2-23	DOD Communications Subsystem Characteristics	2-45
2-24	NASA Communications Subsystem Characteristics	2-45
2-25	Electrical Power Subsystem Task Summary	2-46
2-26	Fuel Cell Subsystem Characteristics	2-46
2-27	Power Distribution and Control Subsystem Characteristics	2-47
2-28	Instrumentation Subsystem Characteristics	2-48
2-29	Engine Thrust Level Optimization	2-49
2-30	Planetary Mission Thrust Level Effects	2-49
2-31	RL-10 Cat I Mixture Ratio Optimization	2-50
2-32	Area Ratio Optimization	2-51

LIST OF FIGURES, Contd

Figure		Page
2-33	ACPS Weight Versus Total Impulse	2-58
2-34	N_2H_4 ACPS Schematic	2-60
2-35	Tug/Orbiter Mechanical Interface Options	2-61
2-36	Pivot Location Evolution	2-62
2-37	Tug/Payload Latching and Docking Options	2-62
2-38	2560 lb (1161 kg) Kick Stage	2-64
2-39	1600 lb (726 kg) Kick Stage	2-64
2-40	Kick Stage Installation	2-65
2-41	Configuration Selection Approach	2-68
2-42	Reliability/Cost Optimization	2-72
2-43	Reference Configuration – 1	2-73
2-44	Program Cost Data – 1	2-75
2-45	Program Cost – 2	2-80
2-46	Reference Configuration –	2-82
2-47	Program Cost – 3	2-84
2-48	Reference Configuration – 4	2-86
2-49	Program Cost – 4	2-88
2-50	Reference Configuration – 5	2-91
2-51	Program Cost – 5	2-92
2-52	Program Cost – 6	2-96
2-53	Program Cost – 7	2-100
2-54	Performance and Mission Capture Characteristics	2-103
2-55	Program Cost Comparison	2-104
2-56	Selected Configurations	2-106
2-57	Inboard Profile of Program 1 Tug	2-109
2-58	Structural Characteristics of Program 1 Tug	2-111
2-59	Insulation and Thermal Control for Program 1 Tug	2-113
2-60	Program 1 Tug Astrionics System Functional Block Diagram	2-113
2-61	Main Propulsion System for Program 1 Tug	2-115
2-62	Kick Stage Configuration for Program 1 Tug	2-118
2-63	Program 1 Baseline Tug Longitudinal Centers of Gravity	2-120
2-64	Program 1 Tug Performance, Payload Capability Versus Delta Velocity	2-122
2-65	Typical Flight Development Test for Program 1 Tug	2-129
2-66	Program 1 Schedule	2-132
2-67	Program 1 Annual Funding Requirements	2-135
2-68	Program 1 Risk Assessment	2-136
2-69	Program 1 IOC Variation Impact on Annual Funding	2-137

LIST OF FIGURES, Contd

Figure		Page
2-70	Inboard Profile of Program Tug 2	2-141
2-71	Structural Characteristics of Program 2 Tug	2-143
2-72	Insulation and Thermal Control for Program 2 Tug	2-145
2-73	Functional Block Diagram of Astrionics System for Program 2 Tug	2-145
2-74	Main Propulsion for Program 2 Tug	2-147
2-75	Kick Stage Configuration for Program 2 Tug	2-149
2-76	Program 2 Baseline Tug Longitudinal Centers of Gravity	2-151
2-77	Program 2 Performance Capability, Payload Capability Versus Delta Velocity	2-152
2-78	Program 2 Manufacturing Sequence and Assembly Flow	2-160
2-79	Program 2 Schedule, NASA Format	2-161
2-80	Program 2 Schedule, DOD Format	2-163
2-81	Program 2 Annual Funding Requirements	2-165
2-82	Program 2 Risk Assessment	2-165
2-83	Program 2 Accelerated Development Schedule	2-167
2-84	Program 2 Costs with Advanced Engines	2-168
2-85	Service Mission	2-169
2-86	Service Mission Performance	2-170
2-87	Service Mission Reliability	2-170
2-88	Service Mission Characteristics	2-170
2-89	Inboard Profile Drawing of Program 3 Tug	2-173
2-90	Program 3 Tug Structure and Mechanism Characteristics	2-175
2-91	Program 3 Tug Insulation and Thermal Control	2-176
2-92	Astrionics Functional System for Program 3 Tug	2-176
2-93	Program 3 Tug Performance Capability, Payload Capability Versus Delta Velocity	2-184
2-94	Program 3 Schedule, NASA Format	2-195
2-95	Program 3 Annual Funding	2-198
2-96	Program 3 Initial Risk Assessment	2-199
2-97	Program 3 Final Risk Assessment	2-199
2-98	Program 3 Extended Development Schedule	2-200
2-99	Extended Program 3 Funding Spread	2-201
2-100	Alternate Program 3 Costs	2-202
2-101	Fault Tree	2-206
2-102	Propellant Safety Features	2-206
2-103	Mission Phases/Time Line	2-207
2-104	Flight Operation Cost Elements	2-213

LIST OF FIGURES, Contd

Figure		Page
2-105	Ground Turnaround Operations	2-218
2-106	Turnaround Sequence for VAB and Launch Pad Payload Installation	2-219
2-107	Refurbishment and Maintenance Concept	2-220
2-108	Tug Physical Interfaces	2-222
2-109	Tug Baseline Support System and Loads on Orbiter	2-222
2-110	Tug/Orbiter Support Adapter	2-224
2-111	Fluid Interfaces	2-224
2-112	Orbiter/Support Adapter Fluids Interface	2-225
2-113	Tug Electrical Interface Functional Block Diagram	2-226
2-114	Tug Monitor and Control System	2-227
2-115	Reliability Versus Mission Duration	2-231
2-116	Ground Turnaround Time Sensitivity	2-233
2-117	Supporting Research and Technology Tasks and Schedules	2-235
3-1	Program 1 DDT&E Cost Versus IOC	3-1
3-2	Program 1 Annual Funding Versus IOC	3-2
3-3	RTLS Abort Trajectory	3-9
3-4	Combustibility Limits for H_2-O_2 Mixture	3-10
3-5	H_2 Concentration in Payload Bay at Lower Ignition Threshold	3-10
3-6	Payload Bay Pressurization to Prevent H_2 or O_2 Infiltration	3-11
3-7	Dump System Configuration	3-11
3-8	LH_2 Dump System Optimization	3-12
3-9	LO_2 Dump System Optimization	3-12
4-1	Program Definition Options	4-2

LIST OF TABLES

Table		Page
2-1	Driving Payload Requirements	2-3
2-2	Reference Missions	2-5
2-3	Synchronous Equatorial Orbit – Deployment Mission — Representative Mission R-1D	2-7
2-4	Summary of Major Mission Derived Design Requirements	2-8
2-5	Delta V for Mission Model	2-12
2-6	Applicability of Reference Missions to NASA Missions	2-12
2-7	Applicability of Reference Mission to DOD Missions	2-13
2-8	Fuel Tank Materials Evaluation	2-17
2-9	Oxidizer Tank Materials Evaluation	2-19
2-10	Evaluation of Sidewall Construction Candidates	2-21
2-11	Candidate MLI Systems	2-26
2-12	Astrionics Module, Program 1, Component Parameters and Predicted Space Coast Equilibrium Temperatures	2-29
2-13	Software Requirements Summary Level I Autonomy	2-32
2-14	Autonomy Effect on Software Requirements	2-32
2-15	Data Management System Comparison	2-35
2-16	Guidance Accuracy Results Summary	2-38
2-17	Guidance Update Options Summary	2-39
2-18	Effect of Altitude Uncertainty on Payload Acquisition	2-42
2-19	Rendezvous and Docking Subsystem Summary	2-42
2-20	DOD Communication Requirements	2-43
2-21	NASA Communication Requirements	2-44
2-22	Mixture Ratio Trade Summary	2-50
2-23	Payload Benefit for Adding Tank Head Idle Mode (THIM)	2-52
2-24	Comparison of Boost Pump and Two-Phase Pumping Systems	2-53
2-25	Residual Analysis for Open Loop Propellant Management	2-54
2-26	Summary of Boost Pump Versus Helium/Autogenous Pressurization Trade Study	2-55
2-27	ACPS Impulse and Propellant Requirements	2-56
2-28	ACPS Weight Summary	2-58
2-29	ACPS Comparison Summary	2-59
2-30	Kick Stage Sequence of Events	2-66
2-31	Concept Selection Capability Options	2-67
2-32	Payload Impact Considerations	2-70

LIST OF TABLES, Contd

Table		Page
2-33	Subsystem Candidates – 1	2-72
2-34	Configuration Options – 1	2-74
2-35	Mission Performance – 1	2-74
2-36	Configuration/Program Summary Comparison – 1	2-76
2-37	Ranking and Selection Rationale – 1	2-77
2-38	Subsystem Candidates – 2	2-77
2-39	Configuration Options – 2	2-78
2-40	Mission Performance – 2	2-79
2-41	Configuration/Program Summary Comparison – 2	2-80
2-42	Ranking and Selection Rationale – 2	2-81
2-43	Subsystem Candidates – 3	2-81
2-44	Configuration Options – 3	2-83
2-45	Mission Performance – 3	2-83
2-46	Configuration/Program Summary Comparison	2-84
2-47	Ranking and Selection Rationale – 3	2-85
2-48	Subsystem Candidates – 4	2-86
2-49	Configuration Options – 4	2-87
2-50	Mission Performance – 4	2-88
2-51	Configuration/Program Summary Comparison – 4	2-89
2-52	Ranking and Selection Rationale – 4	2-89
2-53	Subsystem Candidates – 5	2-90
2-54	Configuration Options – 5	2-91
2-55	Mission Performance – 5	2-92
2-56	Configuration/Program Summary Comparison – 5	2-93
2-57	Ranking and Selection Rationale – 5	2-94
2-58	Subsystem Candidates – 6	2-94
2-59	Configuration Options – 6	2-95
2-60	Mission Performance – 6	2-96
2-61	Configuration/Program Summary Comparison – 6	2-97
2-62	Ranking and Selection Rationale – 6	2-97
2-63	Subsystem Candidates – 7	2-98
2-64	Configuration Options – 7	2-99
2-65	Mission Performance – 7	2-99
2-66	Configuration/Program Summary Comparison	2-101
2-67	Ranking and Selection Rationale – 7	2-101
2-68	Recommended Configuration Options	2-102
2-69	Recommended Option Comparison	2-104
2-70	Astrionics System Characteristics	2-114
2-71	Program 1 Baseline Tug Weight Summary (Synch. Eq. Max. Payload Deployment Mission)	2-119

LIST OF TABLES, Contd

Table		Page
2-72	Program 1 Baseline Tug Centers of Gravity and Moments of Inertia	2-120
2-73	Program 1 Redundancy Summary	2-121
2-74	Program 1 Tug Synchronous Equatorial Mission Performance Summary	2-122
2-75	Mission Model Flight Summary for Program 1	2-123
2-76	Program 1 NASA Mission Accomplishment	2-125
2-77	Program 1 DOD Mission Accomplishment	2-125
2-78	Program 1 Cost of Autonomy	2-126
2-79	Program 1 Flight Operations Cost	2-126
2-80	Program 1 Tug Crew Size and Minimum Active Fleet Size	2-127
2-81	Program 1 Fleet Requirement and Utilization	2-127
2-82	Ground Test Program for Program 1 Tug	2-129
2-83	Flight Test Program Comparison	2-130
2-84	Program 1 Tug Cost Summary	2-134
2-85	Program 1 Tug Vehicle Development Cost	2-134
2-86	Program 1 Cost Per Flight	2-135
2-87	Configuration Changes, Program 1 Update	2-138
2-88	Program 1 Baseline Tug Update Weight Summary	2-138
2-89	Astrionics System Characteristics for Program 2 Tug	2-146
2-90	Program 2 Baseline Tug Weight Summary (Synch. Eq. Max. Payload Retrieval Missions)	2-150
2-91	Program 2 Centers of Gravity and Moments of Inertia	2-151
2-92	Program 2 Redundancy Summary	2-152
2-93	Program 2 Synchronous Equatorial Mission Performance Summary	2-153
2-94	Program 2 Mission Model Flight Summary	2-154
2-95	Program 2 NASA Mission Accomplishment	2-154
2-96	Program 2 DOD Mission Accomplishment	2-155
2-97	Program 2 Cost of Autonomy	2-156
2-98	Program 2 Flight Operations Cost Summary	2-156
2-99	Program 2 Crew Size and Minimum Active Fleet Size	2-158
2-100	Program 2 Fleet Requirement and Utilization	2-158
2-101	Program 2 Ground Test Summary	2-159
2-102	Program 2 Tug Cost Summary	2-163
2-103	Program 2 Tug Vehicle DDT&E Cost	2-164
2-104	Program 2 Cost Per Flight	2-164
2-105	Advanced Engine Comparison	2-167

LIST OF TABLES, Contd

Table		Page
2-106	Configuration Changes for Program 2 Update	2-171
2-107	Program 2 Baseline Tug Updated Weight Summary	2-171
2-108	Program 3 Tug Astrionics System Characteristics	2-177
2-109	Program 31 Baseline Tug Weight Summary (Synch. Eq. Max. Payload Deployment Mission)	2-180
2-110	Program 3F Baseline Tug Weight Summary (Synch. Eq. Max. Payload Retrieval Mission)	2-181
2-111	Program 3I Baseline Tug Centers of Gravity and Moments of Inertia	2-182
2-112	Program 3F Baseline Tug Centers of Gravity and Moments of Inertia	2-182
2-113	Program 3 Initial Redundancy Summary	2-183
2-114	Program 3 Final Redundancy Summary	2-183
2-115	Program 3 Tug Synchronous Equatorial Mission Performance	2-185
2-116	Program 3 Tug Mission Model Flight Summary	2-185
2-117	Program 3 Tug Mission Accomplishment of NASA Missions	2-186
2-118	Program 3 Tug Mission Accomplishment of DOD Missions	2-187
2-119	Program 3I Cost of Autonomy	2-188
2-120	Program 3F Cost of Autonomy	2-188
2-121	Program 3I Flight Operations Cost Summary	2-188
2-122	Program 3F Flight Operations Cost Summary	2-189
2-123	Program 3 Tug Crew Size and Minimum Active Fleet Size Versus Annual Launch Rate	2-190
2-124	Program 3 Tug Fleet Requirement and Utilization	2-191
2-125	Program 3 Ground Test Program	2-192
2-126	Program 3 Flight Test Program	2-193
2-127	Program 3 Initial/Final Tug Cost Summary	2-196
2-128	Program 3 Tug Vehicle DDT&E Cost	2-197
2-129	Program 3 Cost Per Flight	2-197
2-130	Performance Level Sensitivity Comparison	2-201
2-131	Configuration Changes for Program 3 Update	2-203
2-132	Program 3 Baseline Tug Update Weight Summary	2-203
2-133	Residual Hazard Summary	2-208
2-134	Tug Safety Criteria, Ad Hoc Tug Group	2-211
2-135	Designed-in Safety	2-212
2-136	NASA Network Coverage Summary	2-213

LIST OF TABLES, Contd

Table		Page
2-137	Velocity Package Sizing Results, Maximum Thrust and Burn Time	2-215
2-138	Recommended Velocity Packages for Planetary Mission	2-216
2-139	Cryogenic Tug Fluid Interface Requirements	2-225
2-140	TMACS Orbiter Comparison	2-228
2-141	Physical Characteristics of Tug Monitor and Control System	2-228
2-142	Payload/Ground Interface Requirements Summary	2-229
2-143	Autonomy Sensitivity Deltas Referenced From Autonomy Level I	2-232
2-144	Other Sensitivity Results	2-234
3-1	Tug/Orbiter Docking Sequence of Events	3-3
3-2	Tug Retrieval Hazards Analysis	3-5
3-3	Shuttle Abort Modes	3-7
3-4	Assumptions for Payload Bay Contamination Analysis	3-10
3-5	Characteristics of Selected Dump Systems	3-12
3-6	Abort Dump Performance at Available Acceleration Levels	3-13
3-7	Summary of Abort System Performance in all Abort Modes	3-13
4-1	Summary Program Characteristics	4-3

SUMMARY

The Space Transportation System includes an upper stage that is carried into low earth orbit by the Space Shuttle. The purpose of this upper stage is to provide for missions beyond the capability of the Shuttle. This study, which was directed at new cryogenic upper stages (Tugs), was one of a number of concurrent government-sponsored studies covering all upper stage concepts. The overall objective of this study was to prepare a credible data base from which various Space Tug configuration/program options could be established. Included as part of this overall objective was the identification and definition of Tug configuration/program options for two basic development approaches. These approaches are direct development of the Tug and phased development in which the Tug evolves to some final capability.

The study was accomplished in a systematic manner starting with mission/payload requirements. These requirements were analyzed and converted into vehicle and subsystem requirements. Candidate subsystems were then analyzed to determine their characteristics and ability to meet the requirements. The resulting information was assembled into a catalog of subsystem data. Criteria such as performance and cost were used to select subsystems from the various candidates for incorporation into configuration/programs.

The third major study task was a configuration analyses task. The purpose of this task was to define, compare, and evaluate configuration concepts that met the requirements of government-specified capability options. There were seven capability options with the major variables being performance capability, development approach (phased or direct), and IOC date. More than 70 configuration/program concepts were defined. Configuration variables included structural concept, structural materials, main engine, ACPS, and avionics system. The candidate concepts within each capability option were compared on the basis of cost, performance, operational complexity, and other criteria and a recommended configuration was selected for each capability option at a concept evaluation and selection meeting.

The government reviewed the recommendations and selected three programs for more detailed analyses in the program definition task.

The major requirements for Program 1 were that it be a minimum development cost, direct developed Tug having 3500 lb (1588 kg) synchronous deploy payload capability and be available in late 1979. The configuration selected to meet these requirements uses conventional aluminum structure and an existing engine, i.e., RL-10 Cat I. To minimize costs maximum use was made of Centaur components such as astrionics and main engine support components. The resulting configuration has a payload of 5111 lb (2318 kg) and a development cost of $193M.

The major requirements for Program 2 were that it be a total program cost effective, direct developed Tug having 3500 lb (1588 kg) synchronous retrieval payload capability and be available in late 1983. The increased performance was obtained by using an RL-10 Cat IIB engine, a composite sandwich body structural shell, and more advanced astrionics. The resulting configuration has a retrieval payload capability of 4982 lb (2260 kg) and a development cost of $291M. The average Tug cost per flight in the the resuable mode is $0.8M and the average cost per payload including Shuttle launch costs is $6.3M. This value is less than the Shuttle launch cost due to the significant multiple payload capability.

Program 3 is a phased program in which the emphasis was on minimum development cost for the initial vehicle and low total program cost for the final vehicle. The initial vehicle must have 3500 lb (1588 kg) synchronous deploy capability and be available in late 1979. The final vehicle must have 2200 lb (998 kg) synchronous retrieval capability and be available in late 1983. The initial configuration uses a conventional structure and the RL-10 Cat I engine like Program 1. It differs from Program 1 in that it is sized for the final retrieval mission, has a more advanced astrionics system and a higher performance insulation system. The major configuration phasing to the final configuration is from a low cost astrionics system to an advanced lightweight system with rendezvous and docking capability. The initial vehicle has a development cost of $215M. The final vehicle has a retrieval payload of 2704 lb (1227 kg) and an incremental development cost of $48M.

Supporting research and technology areas have been identified that should be pursued to enhance the eventual Tug development effort in terms of risk and data available for decision making. In addition to these technology efforts it is recommended that the Tug/Shuttle interface area be studied in time to impact the Shuttle development, which is currently underway. Other recommended areas of study are mission/payload requirements and payload transition.

The study has shown that cryogenic Tugs can be made safe and that high performance is inherent with cryogenic Tugs, using engines based on present day technology (i.e., RL-10 Category I engine). This inherent high performance produces a number of benefits. There are no performance-related requirements that drive towards advanced state-of-the-art subsystems. The high performance afforded by the engine allows the use of other existing technology subsystems, and also allows the implementation of

redundancy without dropping the performance below the desired level. The high performance also yields significant multiple payload capability and provide a performance margin for both the Tug and the Shuttle.

The study results will support future Tug activities in two ways. The subsystem data and initial program definition data will be quite significant in supporting future Tug design efforts since they provide good subsystem descriptions and also show the effects of incorporating these subsystems into configurations/programs. These data can be used as a basis for generating new Tug configurations to satisfy new requirements that may arise. The three detailed program definitions provide baseline systems/ programs that can be used in support of other activities such as interface studies and supporting research and technology.

SECTION 1

INTRODUCTION

The Space Transportation System (STS) includes an upper stage that is carried into low earth orbit by the Space Shuttle. The primary function of this upper stage or Tug is to extend the STS operating regime beyond the Shuttle capabilities including plane changes, higher orbits, geosynchronous orbits, and planetary flight injections. A Tug is required at Shuttle initial operational capability (IOC) to provide the maximum benefits of the STS.

Space Tug concepts have been extensively studied since the initiation of the STS in 1969. Until this Space Tug Systems Study (STSS) the concepts considered had been either high capability, all new systems, or existing expendable stages modified for use with the Shuttle. The IOC dates were always coincident with the Shuttle, i.e., late 1979.

With funding limitations preventing the simultaneous development of both the Shuttle and the full capability Tug the Space Tug Systems Studies were initiated to investigate two alternative approaches:

a. A phased Tug development program in which a low development cost, reusable reduced capability Tug is available at or about Shuttle IOC, which then is evolved to a greater capability Tug at a later date.

b. The direct development of the full capability Tug but with IOC delayed between two and four years after Shuttle IOC.

The STSS conducted by General Dynamics Convair Aerospace Division and described in this document was directed at cryogenic propellant Tugs that met the requirement of these two approaches.

1.1 OBJECTIVES

The initial overall objective of this study was to prepare a credible data base from which various Space Tug configuration/program options could be established. Included as part of this overall objective was the identification and definition of Tug configuration/program options for the two basic development approaches being considered.

It was jointly sponsored NASA/DOD Phase A study consisting of engineering and planning analyses conducted over a nine-month period. This study was one of a number of government sponsored systems studies covering all Tug concepts including

current expendables and growth stages. All of these studies were directed at providing the necessary data to support a government assessment of Tug concepts scheduled for December 1973.

The study had five major tasks:

TASK 1 — MISSION REQUIREMENTS/OBJECTIVES

TASK 2 — SUBSYSTEM ANALYSIS

TASK 3 — CONFIGURATION & SUPPORT SYSTEMS

TASK 4 — PROGRAMMATICS & COSTING

TASK 5 — PROGRAM DEFINITION

With the exception of Task 4, which was a continual supporting task, the other four tasks generally corresponded with consecutive study phases each of which concluded with a government review as shown in Figure 1-1. These tasks had the following objectives:

Task 1 — The basic objective of this task was to translate mission and payload requirements and objectives into system/subsystem requirements.

Task 2 — The objective of the subsystem analysis task was to define the candidate subsystems with capabilities necessary to meet the mission and payload requirements.

Task 3 — The objective of this task was to generate and compare configurations and support systems options for both interim Tugs and direct developed Tugs.

Task 4 — The objective of this task was to provide the programmatic and cost data to support the objectives of the other tasks.

Task 5 — The objective of Task 5 was to prepare detailed program definitions of the configurations/programs selected at the concept evaluation and selection meeting.

1.2 STUDY PLAN

The Convair Aerospace Division plan for accomplishing this study is presented in Reference 1. The study logic for implementing these tasks and accomplishing the objectives is shown in Figure 1-2. The five major tasks are organized vertically. Program review meetings are listed chronologically across the chart. Major tasks are divided into subtasks to better define the flow of logic as the study progresses. The study itself was divided into major phases corresponding to major program review milestones. Study effort was sequentially focused on four of the five major tasks as the study progressed, with Task 4, Supporting Programmatic and Costing Analysis, supporting the other tasks throughout the study.

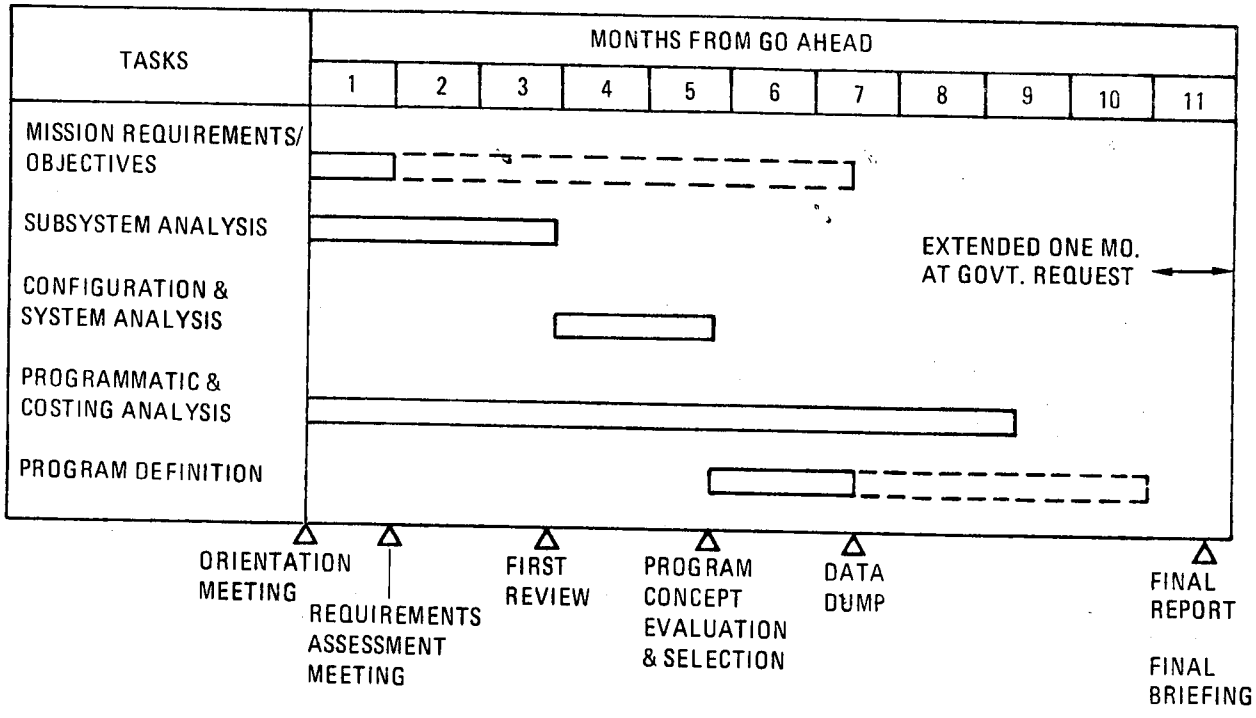

Figure 1-1. Study Schedule

During the first month of the study (Requirements Study Phase), study effort was focused on Task 1, Mission Requirements/Objectives Analysis, and Task 2, Subsystem Analyses. The major output of this phase was the recommended mission and subsystem requirements presented at the Requirements Assessment Meeting. During the Subsystem Analysis phase, study effort was focused on Task 2. The major output of this task was a catalog of subsystem data identifying subsystem characteristics, interactive effects, sensitivities, operations, and cost presented at the First Review Meeting. Configuration Analysis was the next phase, with study effort concentrated on Task 3, Space Tug Configuration and Supporting System Analyses, during this period. Major output of this phase was to be the six family options recommended for detailed program definition, at the Concept Evaluation and Selection Meeting.

Major study phase, Task 5, was divided into two parts: Initial and Final Program Definition. The Initial Program Definition phase ended with the 6-1/2 month data dump. At this time, Major Program Definition data for the selected Tug configurations/programs was presented for review. Following the data dump, Program Definition results were updated during the final Program Definition phase to reflect direction received at the data dump.

During the course of the study there were two major directions from the government, which influenced the implementation of this study plan. At the start of Task 3, configuration analysis, the government specified seven capability options for which

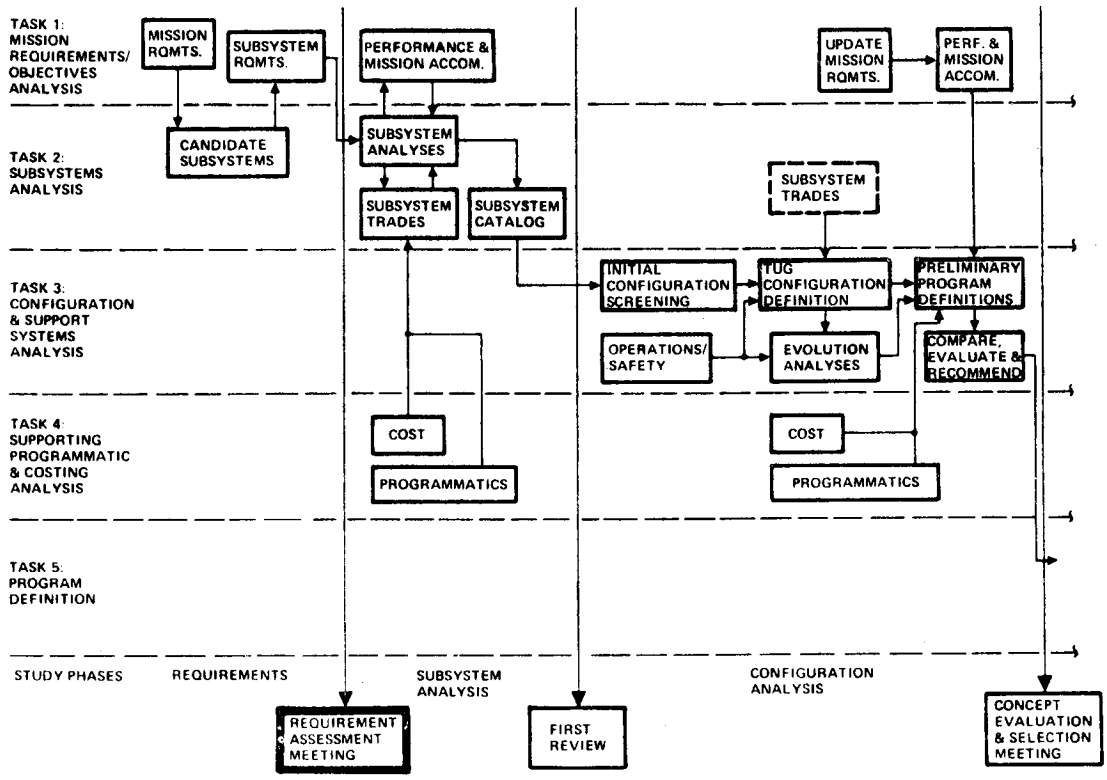

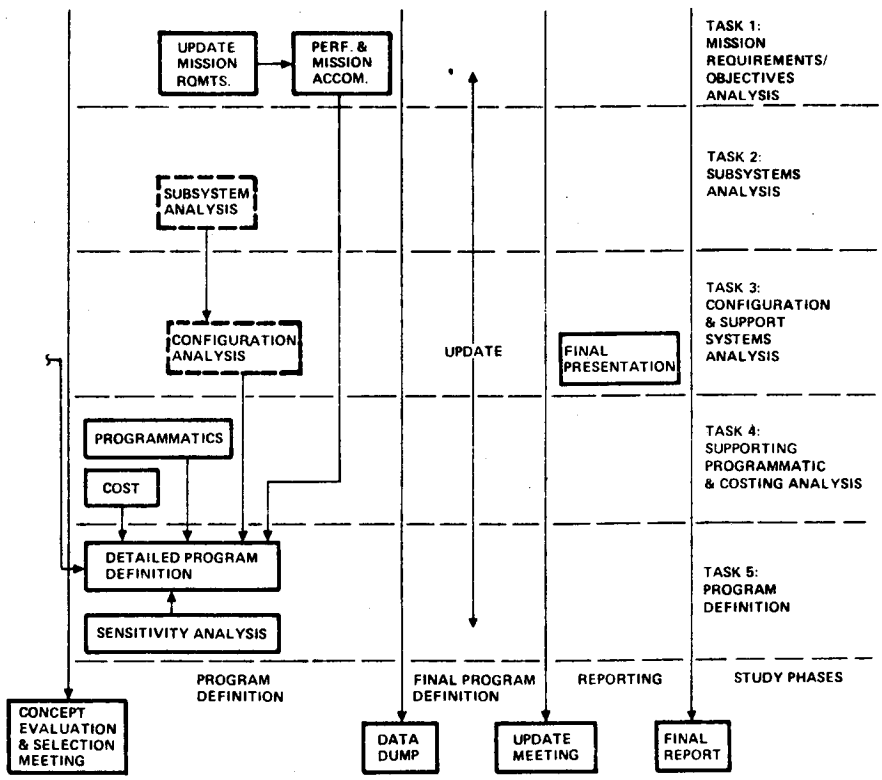

Figure 1-2. Study Logic

configurations/programs options were to be specified. As a result of the concept evaluation and selection meeting the government selected three programs for detailed definition analyses.

After initiation of the study the data dump at the 6-1/2 month point became the critical milestone since this was the key point for data to be used in the government assessment of Tug concepts. The data presented at this milestone became the major study output.

Throughout the study special emphasis was given to the areas of Safety, Operations, and Tug/Orbiter interface. Safety is a critical area because of manned safety considerations with respect to the Tug operating in and near the Orbiter. The Tug/Orbiter interface is important since the Orbiter is under development. Tug operations are critical since they directly affect STS operations cost and the primary goal of the STS is the reduction of space operations costs.

This document, which is Volume II of the final report, is a chronological synopsis of the study tasks. Sections 2.1 to 2.4 present the results of the four study tasks. The other sections summarize the results of the special emphasis analyses, the additional analyses conducted after the data dump, and the study conclusions and recommendations. References 1 through 6, which include the presentation and review material produced through the study, contain the detailed information summarized in this volume.

SECTION 2

SYNOPSIS OF ANALYSES

2.1 REQUIREMENTS

The study was initiated with a requirements analyses task with the primary objective of translating mission and payload requirements into system/subsystem requirements. In addition to the analyses at the start of the study, the requirements were periodically updated as necessary throughout the study. More detailed information on requirements can be found in Reference 2 and Volume 1 of Reference 4.

This section summarizes the requirements that drive the configuration, design, and operations of the three cryogenic Tug options. Requirements have been derived from government supplied documents such as the statement of work, the Space Tug System Studies Data Package, the TOPSS study results; direction provided during the course of the study; and analysis of Tug requirements.

2.1.1 GENERAL REQUIREMENTS AND GUIDELINES. The Space Tug is a reusable cryogenic (LO_2/LH_2) propulsive stage carried into low earth orbit by the Space Shuttle Orbiter. This does not preclude operation of the Tug in an expendable mode. The more significant general requirements and guidelines are summarized below.

The combined gross weight of the Tug, Tug payload, and Tug installation hardware shall not exceed 65,000 pounds (29,484 kg). Early in the program a Space Shuttle decision was made that gave the Orbiter the weight penalty for the fluid and electrical lines between the payload bay walls and the outer umbilicals. The Tug and its interface equipment shall not exceed 35 ft (10.66m) in length and shall be dimensionally compatible with the Orbiter cargo bay clear volume of 15 ft (4.7m) diameter by 60 ft (18.29m) length. The Tug alone or in combination with its payload shall have a center of gravity consistent with the Orbiter limits as specified for the Shuttle.

The Tug shall be consistent with the safety implications of operation in the vicinity of manned vehicles. Throughout the study specific guidelines were introduced that were applied to the designs under consideration. The topic of safety was a special emphasis area discussed in Section 2.5.1.

The Tug and its subsystems shall be capable of withstanding the environments induced while the Tug is stowed within the Shuttle Orbiter cargo bay. The Tug shall be compatible with all Shuttle abort modes and procedures and shall not preclude the Shuttle from intact abort. The mission reliability goal was 0.97.

The Tug shall be compatible with the Orbiter payload capability as shown in Figure 2-1. The Tug is delivered to a 160 n. mi. (296 km) circular orbit and recovered from a

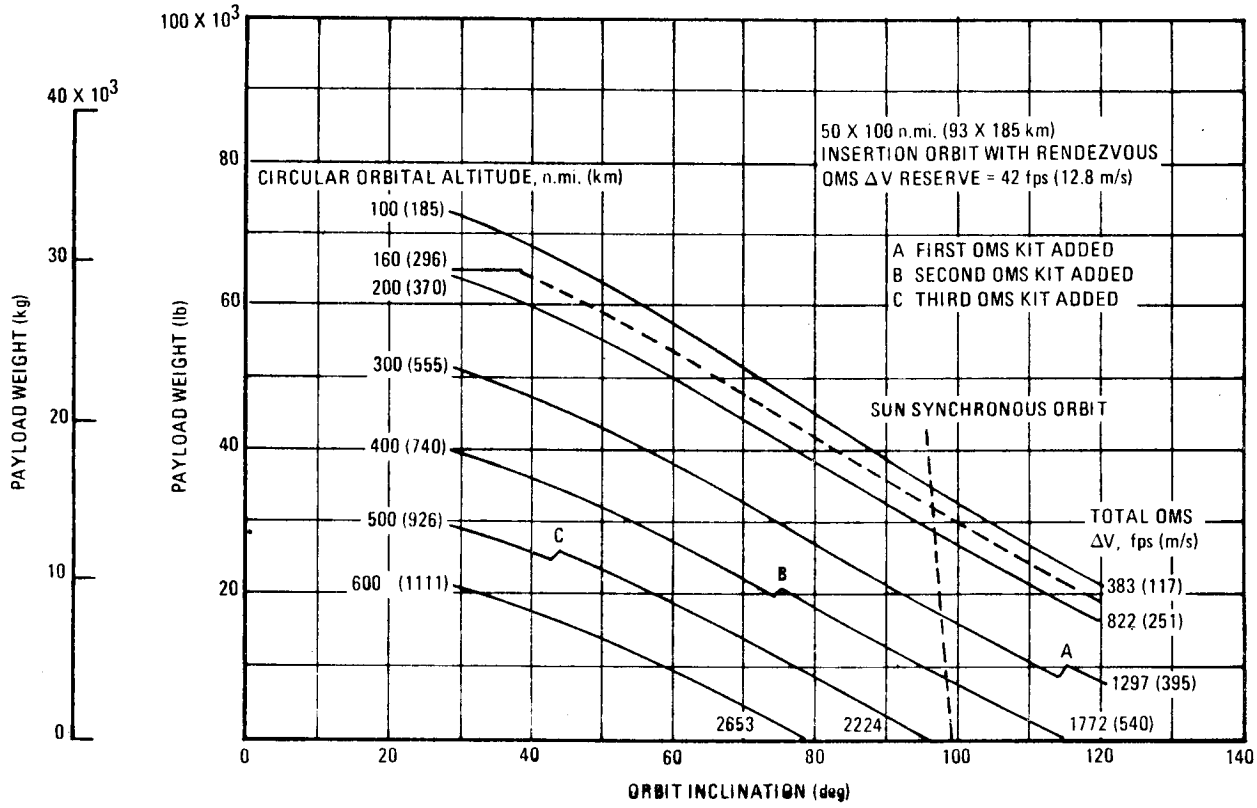

Figure 2-1. Orbiter Payload Capability

179 n. mi. (385 km) circular orbit by the Orbiter. The Orbiter is the active partner during Orbiter-to-Tug docking and rendezvous.

The Tug weights shall include a 10% weight contingency on all dry weights. A flight performance reserve (FPR) of 2% was used on all performance computations through the Concept Selection and Evaluation meeting. Tug flight performance reserves for the program definitions provided at the data dump were 1.73% for deployment missions, 1.41% for retrieval missions, and 1.74% for roundtrip missions. The performance computations assumed that this FPR was expended uniformly throughout the mission.

2.1.2 PAYLOAD REQUIREMENTS. A general analysis of payload requirements was made early in the study. The driving requirements imposed on the Tug by payloads are summarized in Table 2-1.

2.1.3 MISSION REQUIREMENTS. Missions are in the general classes of low earth orbit (mostly high-inclination orbits), synchronous and other high delta-velocity missions, and planetay mission. The basic types of mission to be accomplished by the Tug options are:

a. Deployment — In the basic mode the Tug carries the payload from the Shuttle Orbiter to the payload orbit, deploys the payloads, and then the Tug returns to the Orbiter

Table 2-1. Driving Payload Requirements

Requirement		Primary System/ Subsystem Impact
Description	Value	
1. Payload Weight	500 to 9,500 lb (227 to 4309 kg)	Structure
2. Payload Length	3 to 25 ft (0.9 to 7.6m)	Structure
3. Payload Diameter	3 to 15 ft (0.9 to 4.57m)	Structure
4. Payload Interface	Minimize changes	Structure
5. Separation		
• Max. Velocity	5 fps (1.52 m/s)	Structure, Astrionics
• Max. Angular Rate	0.1°/sec (0.0017 rad/s)	Structure, Astrionics
6. Payload Spin-up	10-100 (10.5-105 rad/s)	Structure, Astrionics
7. Multiple Placement	Up to 3	Structure
8. Retrieval (Docking)	—	Structure, Astrionics
9. Payload Despin	10-100 rpm (10.5-105 rad/s)	Structure, Astrionics
10. Adapter Instrumentation & Separation Commands	—	Astrionics
11. Data Management		
• Commands (Hardwire & RF to P/L)	1.0 kbps	Astrionics
• Telemetry (Hardwire & RF to P/L)	16 kbps	Astrionics
• Status (Hardwire to P/L**)	16 kbps	Astrionics
• Commands (Hardwire to P/L**)	2 kbps	Astrionics
• Status (Hardwire from P/L**)	16 kbps	Astrionics
• Secure Data (Hardwire from P/L**)	256 kbps	Astrionics
• FM/FM Irig (Hardwire from P/L**)	ch.h	Astrionics
• Secure Commands to P/L (RF**)	2 kbps	Astrionics
• Secure TLM from P/L (RF**)	16 kbps	Astrionics
12. Placement Accuracy		
• Tangential Vel. Error	20 fps (6.1 m/s) 3σ	G & N
• Normal Velocity Error	50 fps (15.2 m/s) 3σ	G & N
• Radial Velocity Error	70 fps (21.3 m/s) 3σ	G & N
13. Loiter Mode Capability		G & N
14. Payload Orientation During C/O		
• Attitude	±0.5° (0.0087 rad)	Astrionics, Prop.
• Rate	±0.1°/sec (0.0017 rad/s)	Astrionics, Prop.
15. Rendezvous & Docking		
• Capability	—	Astr., Prop., Struc.
• Laser Radar to Track P/L	—	Astrionics
16. Communications to/from P/L	—	Astrionics
17. No Direct Impingement of Exhaust Product on Payload	—	Prop., Elec.
18. Electrical Power (28 Vdc)	300W	Elec.
19. Contamination Control	—	Prop., Elec.
20. Environmental on P/L	Not to exceed shuttle by more than 10-20%	

**DOD Payloads Only

for return to Earth. Extremely high-energy planetary missions may require that the Tug be expended (injected into orbit with the payload). Where cost effective a velocity package (kick stage) may be expended, with the Tug reusable.

b. Retrieval — The Tug transfers from the Shuttle to the vicinity of the payload, rendezvous and docks with the payload, and returns the payload to the Orbiter for return to Earth.

c. Round Trip — The Tug carries a payload to the required orbit where the payload is deployed; the Tug then rendezvous and docks with another payload, which is returned to the Orbiter with the Tug for return to Earth.

In addition to these three basic mission types, the following two desirable mission types were considered:

a. On-Orbit Servicing — The Tug carries a service kit to orbit, where the Tug rendezvous with a payload, and on-orbit servicing is performed with the kit. The kit and returnable payload components are returned with the Tug to the Orbiter for return to Earth.

b. Sortie — The payload is carried to orbit by the Tug and remains attached to the Tug during its on-orbit operational period; the payload is then returned by the Tug to the Orbiter for earth return.

The Tug will be capable of multiple payload delivery with one, two, or three payloads deployed during a single Tug flight. Only single payloads are deployed on planetary missions. DOD and NASA payloads must not be mixed on the same flight.

An analysis of the mission model provided at the start of the study led to the selection of 12 reference missions summarized in Table 2-2. A detailed discussion of reference mission parameters is given in Volume I of Reference 4. A description of the synchronous equatorial (single payload) deployment mission, R-1D, typical of those to be found in Reference 4, is presented below.

The synchronous equatorial payload deployment flight schematic for the outbound phase is shown in Figure 2-2. The return phase is illustrated in Figure 2-3. The total elapsed time for the mission is about 47 hours.

The Orbiter is launched due east from the eastern test range (ETR) and delivers the Tug plus payload to a 160 n. mi. (296 km) orbit. It is assumed that the payload placement longitude is such that a worst case phasing requirement of about 14.0 hours exists. This requirement can be met by various combinations of phasing orbit period and the number of phasing orbit revolutions. The selected combination involved keeping the Tug in the 160 n. mi. (296 km) orbit for eight revolutions, followed by a single revolution in a 1.92 hour period phasing orbit. A total plane change angle of 2.2 degrees (0.038 rad) at the 160 n. mi. (296 km) altitude is distributed between the phasing orbit insertion and transfer orbit insertion burns such that no additional delta-V is incurred as a result of the

Table 2-2. Reference Missions

Reference Mission No.	Mission	Mission Orbit $Y_A \times Y_A$, Inclination n. mi. × n. mi., deg (km × km, rad)		Deploy-D	Retrieve-R	Rnd-trip-RT	Multi-P/L-M Service
R-1	Sync. Equatorial	19,323 × 19,323 (35,786 × 35,786	0 0)	x	x	x	
R-2	High Energy, Elliptical	16,000 × 30,000 (29,632 × 55,560	29 0.51)	x	x	x	
R-3	High Inclin., Elliptical	300 × 3,000 (556 × 5556	90 1.57)	x	x	x	
R-4	High Inclin., Circular	500 × 500 (926 × 926	99.2 1.73)	x	x	x	
R-5	Planetary (Tug Retnd.)	ΔV = 13,000 (3962	FPS m/s)	x			
R-6	Planetary (Tug/ΔV)	ΔV = 16,500 (5029	FPS m/s)	x			
R-8	Planetary (2 × Tug/ΔV)	ΔV = 24,000 (7315	FPS m/s)	x			
D-4	High Energy, 24-Hr	25,020 × 13,630 (46,337 × 25,243	60 1.05)	x	x	x	
D-7	High Energy, Elliptical	850 × 20,960 (1574 × 38,818	63.4 1.11)	x	x	x	
D-8	High Altitude	58,000 × 58,000 (107,416 × 107,416	0 0)	x			
D-9	Servicing	19,323 × 19,323 (35,786 × 35,786	0 0)				x

phasing orbit. The remainder of the 28.5 degree (0.497 rad) plane change is incorporated in the mission orbit insertion maneuver at apogee of the transfer orbit.

The return phase is initiated after 11.15 hours in the mission orbit, which includes payload deployment. This corresponds to the first opportunity for the return transfer orbit insertion. The flight profile for the return phase is similar to that of the out-

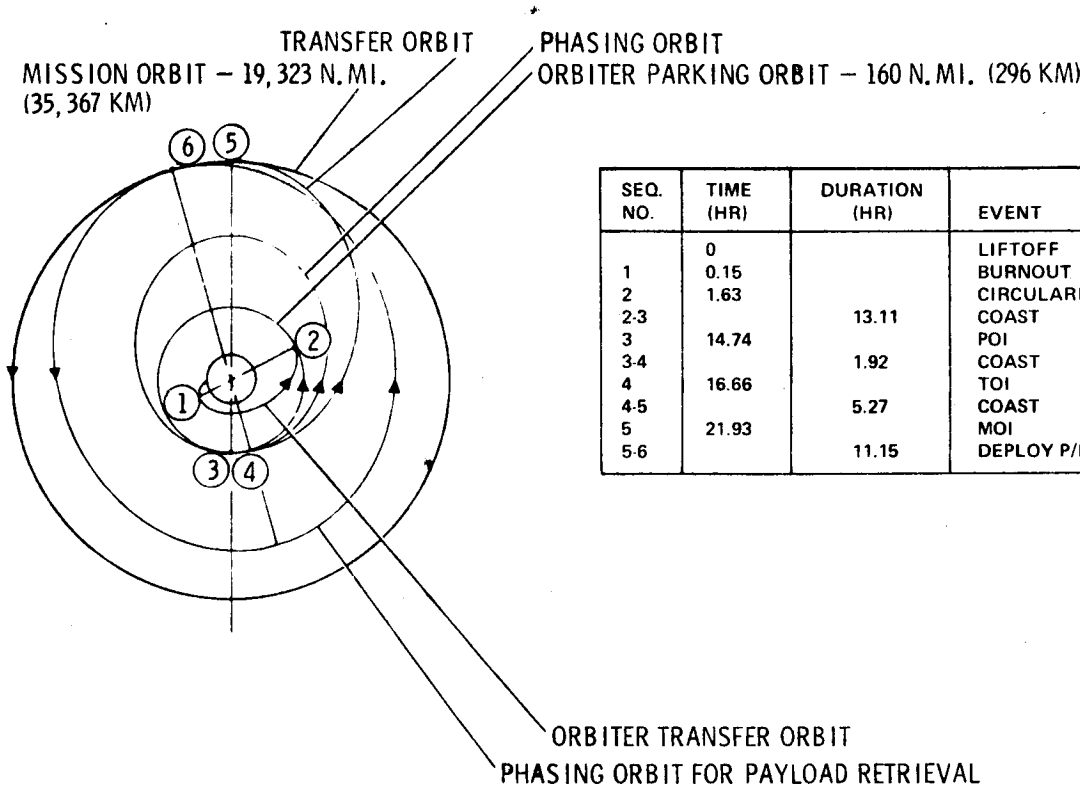

SEQ. NO.	TIME (HR)	DURATION (HR)	EVENT
	0		LIFTOFF
1	0.15		BURNOUT
2	1.63		CIRCULARIZE
2-3		13.11	COAST
3	14.74		POI
3-4		1.92	COAST
4	16.66		TOI
4-5		5.27	COAST
5	21.93		MOI
5-6		11.15	DEPLOY P/L

Figure 2-2. Synchronous Equatorial Deployment Mission R-1D, Outbound

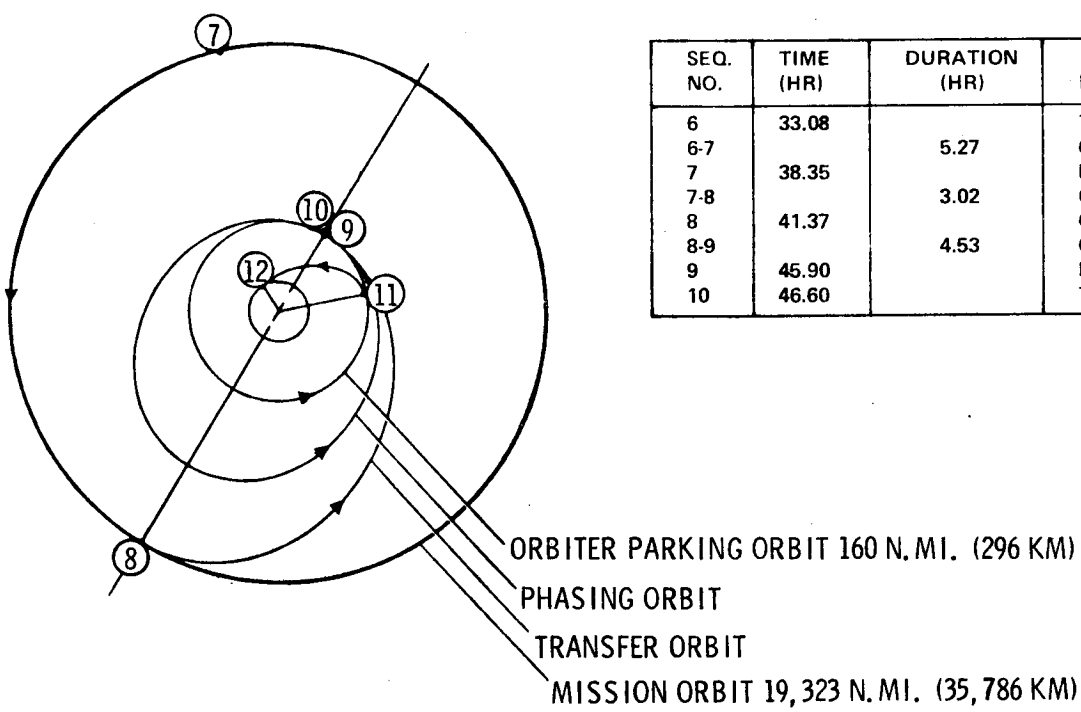

SEQ. NO.	TIME (HR)	DURATION (HR)	EVENT
6	33.08		TOI
6-7		5.27	COAST
7	38.35		POI
7-8		3.02	COAST
8	41.37		CIRCULARIZE
8-9		4.53	COAST
9	45.90		DEORBIT
10	46.60		TOUCHDOWN

Figure 2-3. Synchronous Equatorial Deployment Mission R-1D, Inbound

bound phase, consisting of a 180 degree (3.14 rad) transfer from the mission orbit altitude to the Orbiter orbit altitude, followed by one revolution in a phasing orbit. The maximum time required in the phasing orbit is twice the period of the Orbiter orbit, or about 3.02 hours. About six hours of phasing is required prior to deorbit to allow the launch site to rotate into the plane of the Orbiter. Table 2-3 shows the mission sequence of events and the mission velocity budget.

2.1.4 SUBSYSTEM DRIVING REQUIREMENTS. An analysis was made to determine how the missions affected the Tug subsystems. The subsystem driving requirements derived from the reference missions are summarized in Table 2-4.

Table 2-3. Synchronous Equatorial Orbit — Deployment Mission — Representative Mission R-1D

Event	Seq. No.	Time (hr)		Tug Main Engine					ACS ΔV FPS (m/s)
				Full Thrust ΔV, FPS (m/s)			Burn Time (2) (min)	Idle Mode ΔV, FPS (m/s)	
		Δ	Total	Ideal	Grav. Loss (1)	Total			
Shuttle Liftoff			0						
Shuttle Burnout	1		0.14						
Coast to 100 n. mi. (185 km)	1-2a	0.73							
Shuttle Insert	2a		0.87						
Coast to 160 n. mi. (296 km)	2a-2	0.76							
Circularize	2		1.63						
Tug Deploy & Coast	2-3	13.11							
Phasing Orbit Insert	3		14.74	1824 (556)	47 (14)	1871 (570)	4.1		10 (3)
Coast to TOI	3-4	1.92							
Transfer Orbit Insert	4		16.66	6222 (1896)	160 (49)	6382 (1945)	9.9		
Coast to Sync. Orbit	4-5	5.27						50(3) (15)	
Mission Orbit Insert	5		21.93	5849 (1783)	10 (3)	5849 (1786)	6.1		
Deploy Payload	5-6	11.15							40(4) (12)
Transfer Orbit Insert	6		33.08	5844 (1781)	5 (2)	5851 (1783)	2.8		
Coast to POI	6-7	5.27						50(3) (15)	
Phasing Orbit Insert	7		38.35	3720 (1134)	10	3730 (1137)	1.3		
Coast	7-8	3.02							
Circularize for Rend.	8		41.37	4309 (1313)	7 (3)	4319 (1316)	1.1		
Shuttle Rend.& Coast	8-9	4.53							
Shuttle Deorbit	9		45.90						
Touchdown	10		46.60						

(1) Based on 15,000 lb (66,723 N) thrust engine.

(2) Burn time — 15,000 lb (66,723 N) main engine.

(3) Midcourse correction.

(4) 10 fps (3 m/s) for deployment and 30 fps (9 m/s) for stationkeeping.

Table 2-4. Summary of Major Mission Derived Design Requirements

Subsystem	Driver Mission(s)	Driver(s)	Effect on Design
A. Propulsion			
1. Main Engine	Planetary	Velocity (gravity losses)	Drives recommended THRUST LEVEL to 18,000 lb (80,000 N), which is slightly greater than the optimum for the orbit-to-orbit missions.
	Deployment & Round Trip	Velocities & coast times	Tank volumes and stage mixture ratio are optimized for the retrieval mission. Off-loading is required for deployment and round trip missions. Off-loading permits the engines to operate close to the peak ISP mixture ratio, which differs from the optimum stage mixture ratio for the retrieval mission. The requirement is for an engine MIXTURE RATIO RANGE OF 5.5-6.7.
	All	Low delta velocity maneuvers	Requires a low thrust (MANEUVER THRUST) of 5-25% of full thrust.
2. Feed, Fill Drain & P.U.	Not significantly driven by missions	Residuals	A propellant utilization system maximizes payload.
3. Vent System	High Energy (R-2)	1st coast time	A ZERO-G VENT system is required.
4. Pressurization	None	(Driver is two-phase pumping capability for engines)	
5. Propellant Acquisition	Round Trip R-1, R-3, & R-4	Propellant required between settling burns	Establishes ACQUISITION DEVICE VOLUME and ACQUISITION SYSTEM WEIGHT requirements.
6. ACPS	Retrieval	Rate requirements for docking per NASA data package	Sizes — THRUSTERS at 25 lbf (111N) each.
	R-1 Multi Deploy	Attitude control total impulse of 153,000 lb/sec (69,401 kg) & 163 hr mission time	Sizes — HYDRAZINE & HELIUM TANKAGE, establishes the maximum DUTY CYCLE of thrusters per flight.
B. Thermal Protection			
1. Main Tank Insulation	R-1 Multi Deploy	163 hr mission time	Requirement for INSULATION THICKNESS ZERO-G VENT.
2. Other Thermal Control	R-4 Round Trip	Max heating rate	Requirements for insulation and thermal control surfaces (coatings).
	(Tug orientation driven)	Max heating rate	Requirements for heaters, insulation and thermal coatings and utilize heat conduction techniques to maintain subsystems at acceptable temperature levels.

Table 2-4. Summary of Major Mission Derived Design Requirements, Contd

Subsystem	Driver Mission(s)	Driver(s)	Effect on Design
C. Structures			
1. Tanks & Supports			
Tanks	R-1R	Mission ΔV	Deterime TANK VOLUMES.
	R-1M	Pressure vs time	With boost head pressure, determines TANK WALL THICKNESS.
	R-2RT (Pressurization sub-system driven) R-1M	1. No. of eng. burns 2. No. of vent cycles 3. Duration of sustained pressure	Determines cyclic and sustained FLAW GROWTH CHARACTERISTICS — governs tank SAFE LIFE ANALYSIS.
	R-1R	Mission ΔV	Determines propellant weights and hence tank Δweight for SUPPORT INTERFACE PROVISIONS.
	R-2RT	No. of engine burns	Determines CYCLIC LOAD HISTORY for SUPPORT INTERFACES AND THRUST STRUCTURE INTERFACE.
	164 hr mission	Power requirements	Determines TANK ΔVOLUME & ΔWEIGHT for fuel cell reactants.
Supports	R-1R	Mission ΔV	Determines propellant weights, which in turn determines STRUT LOADS and WEIGHTS.
	R-1M	Duration	Determines MATERIAL SELECTION for support struts to minimize heat conduction to tank (and avoid degradation due to outgassing in vacuum environments).
2. Body Structure	D-7	P/L/ weight P/L CG location	Sizes FORWARD BODY SHELL. Sizes FORWARD ORBITER SUPPORT FRAME. Contributes to INTERTANK & AFT BODY sizing.
		Mission ΔV	Determines propellant weight, which in turn determines body Δweight for TANK SUPPORT INTERFACE FITTINGS and TANK SUPPORT FRAME and contributes to INTERTANK & AFT BODY SIZING.
	R-2RT	No. of engine burns	Determines cyclic load history for SUPPORT INTERFACES.
	R-1M	ACPS ΔV	Determines Δweight for SUPPORT FITTINGS & SIDEWALL REINFORCEMENT if ACPS propellant is body mounted.
3. Thrust Structure	R-1M	Duration	Determines THERMAL CONTROL COATING requirements & MATERIAL SELECTION to minimize heat conduction to tank.
	R-2RT	No. of engine burns	Determines cyclic load history for basic THRUST STRUCTURE & TVC INTERFACE FITTINGS/FRAME.

Table 2-4. Summary of Major Mission Derived Design Requirements, Contd

Subsystem	Driver Mission(s)	Driver(s)	Effect on Design
C. Structures (contd)			
4. Meteoriod Shield	R-1M D-8	Duration Altitude	Determines Δthickness of BUMPER (body skin/purge bag/insulation support fairing) & inner wall (tank).
5. Orbiter Interface	D-7	P/L weight P/L CG location	Contributes to DEPLOYMENT ADAPTER sizing.
	R-1R	Mission ΔV	Determines propellant weight, and hence SHEAR LAG PROVISION weight, LATCH LONGERON weight & LATCH WEIGHT in both the DEPLOYMENT ADAPTER and TUG AFT BODY.
6. Payload Interface	D-7	P/L weight P/L CG location	Determines SEPARATION FITTING weight & ASTRONICS MODULE Δweight for longerons and frame reinforcement.
	R-1R	P/L weight	Determines DOCKING MECHANISM & LATCHING MECHANISM and ASTRONICS MODULE Δweight for local attachment fittings and reinforcement.
D. Astrionics			
1. Data Management Computer Requirements		Detailed mission operations	Detailed mission operations become SOFTWARE REQUIREMENTS (software modules are identified by generic function). These requirements size the computer memory initially. Execution avg. per mission phase: 160 KOPS/sec.
Redundancy	164 hr	Reliability requirements of 0.97	Requires a minimum of DUAL REDUNDANCY IN DMS with coverage equal to or above 0.90.
	48 hr	Reliability requirements of 0.97	Simplex computer will not meet reliability goal. Requires minimum of DUAL REDUNDANCY IN DMS.
Tape Recorder	R-4 High Inclination Circular Maximum time between ground communication contacts at 160 n. mi. (296 kg)	Status data storage — minimum record time	Require TAPE RECORDER to store status information during gaps in communications to ground.
2. Guidance and Navigation Accuracy	R-1D	Payload placement accuracy and time from launch	Refines guidance accuracy requirement for payload development.
	All	Envelope for Tug retrieval by Shuttle	Defines mission guidance accuracy and update requirements.

Table 2-4. Summary of Major Mission Derived Design Requirements, Contd

Subsystem	Driver Mission(s)	Driver(s)	Effect on Design
D. Astrionics (contd)	Payload Retrieval	Payload rendezvous envelope: • Position (3σ) from payload of less than 30 n. mi. (55 km) • Velocity (3σ) of less than 25 ft/sec (7.6 m/s)	Defines rendezvous sensor range and capability requirements and navigation requirements to rendezvous envelope.
2. Guidance and Navigation (contd) Accuracy (contd)			
Redundancy	164 hr	Reliability of requirement of 0.97	Requires a minimum of DUAL REDUNDANCY.
3. Flight Control Altitude Control	All	Operational Modes Attitude (all axes): Coarse Mode ±5.0 deg (0.087 rad/s); Fine Mode ±0.5 deg (0.0087 rad/s) Rate (all axes): Coarse Mode ±1.0 deg/sec (0.017 rad/s); Fine Mode ±0.1 deg/sec (0.0017 rad/s)	Defines attitude and attitude rate accuracy requirements and sizes minimum impulse bit.
	All	Attitude Hold for Tug Deployment & Retrieval Tug velocities (residual) Longitudinal: 0.1 to 1.0 ft/sec (0.03 to 0.3 m/s) Lateral: 0.5 ft/sec (0.15 m/s) Angular: 1.0 deg/sec (0.017 rad/s) Angular misalignment: ±1.0 deg (0.017 rad)	Establishes attitude control loop requirements after completing mission & inhibiting critical safety functions.
	Retrieval	Payload Docking Values represent limits at time of Tug/Payload docking. Longitudinal control: 0.1 to 1.0 ft/sec (0.03 to 0.3 m/s) Lateral control: 0.3 ft/sec (0.09 m/s) Angular control: ±2.4 deg/sec (0.042 rad/s)	Defines attitude control jet configuration & thrust sizing and software digital autopilot requirements.
Thrust Vector Control	All	Powered Phase Control Stability requirements	Defines thrust vector control loop - powered phase digital autopilot requirements.

2.1.5 MISSION MODEL SUMMARY. Several different mission models were provided by the government during the course of the study for use in the different study phases. The mission models for the Program Definition task are defined in NASA/MSFC memo PD-TUG-M (316-73). The one-way delta velocities above the 160 n. mi. (296 km) Orbiter delivery orbit for the Program Definition mission model are shown in Table 2-5. The applicability of the reference missions to the NASA and DOD missions defined in this mission model are shown in Tables 2-6 and 2-7.

Table 2-5. Delta V for Mission Model

PAYLOAD NUMBER	SHUTTLE INCLINATION (DEG)	ONE-WAY ΔV (FPS)	ONE-WAY ΔV (M/S)	PAYLOAD NUMBER	SHUTTLE INCLINATION (DEG)	ONE-WAY ΔV (FPS)	ONE-WAY ΔV (M/S)
1 TO 8	28.5	13,976	4260	2, 3b, 15,	28.5	13,976	4260
9	28.5	14,490	4417	17,12b,6,4a	28.5	13,976	4260
10	28.5	12,966	3952				
11	29.0	13,089	3990	3a	38.0	12,600	3840
				4b	38.0	10,500	3200
12	90.0	2,298	700	10	38.0	10,500	3200
13	90.0	8,555	2608	8	46.0	12,500	3810
14	90.0	3,595	1096				
15	100.0	1,700	518	11a	28.5	14,030	4276
16	99.2	1,110	338	11b	30.0	13,700	4176
				11c	38.0	13,950	4252
17 & 18	28.5	13,465	4104				
19	28.5	16,700	5090	5	90.0	1,850	564
20	28.5	23,800	7254	16	98.3	800	244
22	28.5	24,300	7407	12a	104.0	465	142
23	28.5	18,600	5669				
24	28.5	22,300	6797				

Table 2-6. Applicability of Reference Missions to NASA Missions

Reference Mission	NASA Mission Numbers																							
	Sync. Eq.								Other Orbits							Planetary								
	1	2	3	4	5	6	7	8	10	11	12	13	14	15	16	9	17	18	19	20	21	22	23	24
R-1	x	x	x	x	x	x	x	x																
R-2										x														
R-3											x		x											
R-4														x	x									
R-5																x	x	x						
R-6																			x	x	x		x	x
R-7																						x		
R-8																						x		
D-7									x			x												

Table 2-7. Applicability of Reference Mission to DOD Missions

Reference Mission	Unclassified DOD Mission Code																		
	Sync. Eq.									Other Orbits									
	2	9	3b	15	17	12b	6	4a		12a	16	5	10	8	4b	3a	11a	11b	11c
R-1	x	x	x	x	x	x	x	x						x					
R-4										x	x	x							
D-4																x			
D-7													x		x				
D-8																	x	x	x
D-9	x	x	x	x	x	x	x	x											

2.2 SUBSYSTEMS

The objective of the subsystems analysis task, Task 2 of the study, was to define candidate subsystems with capabilities to meet the mission and payload requirements as well as the general Tug requirements. The results of this task included a definition of recommended subsystems for use in the configuration and program definition tasks. This section summarizes the results of the subsystem analysis task plus the results of certain other subsystem analyses conducted in support of the configuration and program definition tasks. The detailed information is contained in Reference 4 (Subsystem Catalog), the presentation material of References 2 and 3, and Volume 5 of Reference 6.

2.2.1 STRUCTURE. The data presented in this section is arranged as shown below. The primary prupose is to define the significant characteristic options considered for each subsystem and to summarize their evaluation.

Subsystem	Section
Fuel Tank and Supports	2.2.1.1
Oxidizer Tank and Supports	2.2.1.2
Body Structure	2.2.1.3
Thrust Structure	2.2.1.4
Meteoroid Shield	2.2.1.5

Loads — The external quasi-static load conditions and factors used in preliminary design and analysis of the Tug structure were taken from the 1973 Payload Accommodations Document (JSC 07700, Volume XIV). Since simultaneous dumping of both propellants during powered flight is the option selected for propellant disposal in the event of Shuttle abort, the main propellant tanks were considered empty during exposure to the following load conditions: entry, flyback, landing and braking, and crash. Applied loads at the Tug/payload interface were based on a 9500 lb (4309 kg) NASA low-cost design payload with its center of gravity 108 in. (2.743m) forward of the interface.

Safety Factors — All margin-of-safety calculations included manned-vehicle safety factors of 1.10 (yield) or 1.40 (ultimate) as specified in MSFC-HDBK-505. A trade study was performed to determine the effects on weight and cost of higher structure safety factors. Increasing the safety factor results in higher weights and lower performance with no identifiable cost reductions.

2.2.1.1 Fuel Tank and Supports. The major subsystem characteristics investigated during the study were tank body integration, structural design, materials, bulkhead contour and construction, and weight/tolerance control.

Tank/Body Integration — Figure 2-4 illustrates the four tank/body combinations originally considered. Both deleted candidates offered reduced overall tankage length, but they were penalized by the noted disadvantages and were eliminated when initial engine/vehicle length trade studies showed the length advantage to be unnecessary.

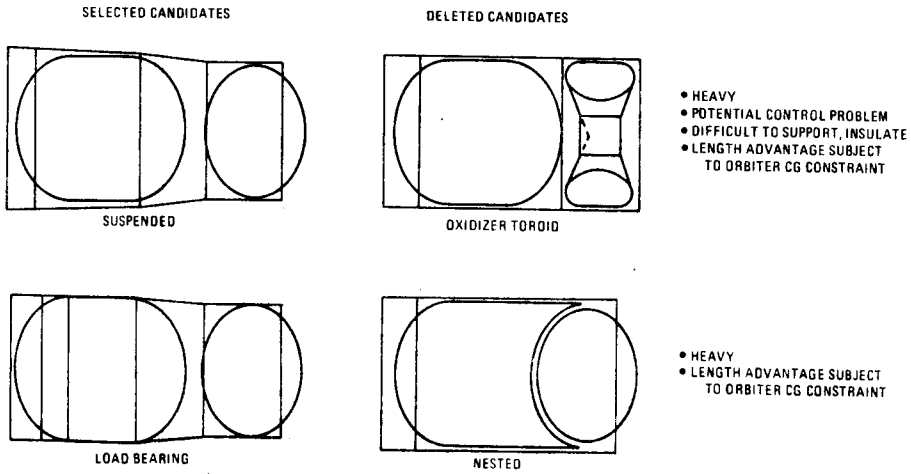

Figure 2-4. Candidate Tank/Body Combinations

Structural Design — A representative baseline tank configuration (Figure 2-5) was adopted for detailed preliminary analysis and design of the suspended and load bearing systems. It was sized for a propellant quantity representative of a typical synchronous retrieval mission. The suspended tank system was of monocoque construction with membrane thicknesses based on maximum differential pressure due to ullage pressure plus propellant axial inertia. The design ullage pressure was revised from an initial value of 24 psid (165.5 kN/m^2) to 20 psid (137.9 kN/m^2) as the requirements/effects of main engine operation, propellant tanking density, abort dump time, and vent/relief valve deadbands were established.

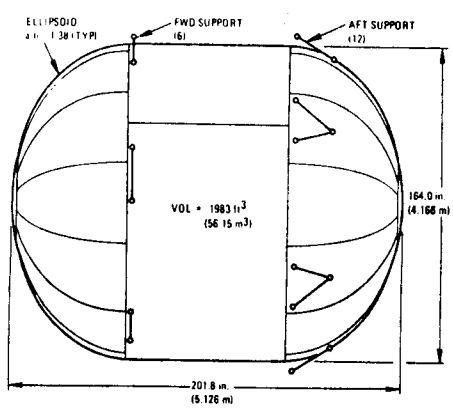

Figure 2-5. Baseline Fuel Tank and Supports

The load-bearing system incorporated an integrally stiffened sidewall and monocoque bulkheads. Sidewall sizing was governed by entry and landing loads with empty tanks and an assumed loss of fuel tank pressure.

Although the weight of the skin (and sidewall stiffening) accounts for a majority of the total tank weight, all non-optimum items and systems/interface provisions necessary in a complete tank system were investigated to provide credible weight estimates.

All permanent tank joints were fusion buttwelded and included weld lands based on a conservative heat affected zone width. Circumferential joints included additional allowance for discontinuities due to abrupt changes in thickness and/or curvature.

A 32 in. (0.813m) diameter access opening in the forward bulkhead provided clearance for personnel plus work platforms and permitted mounting of a zero-g vent mixer package directly on the door.

Primary tank support was provided by thermal isolation struts consisting of fiberglas/epoxy tubes and titanium end fittings.

The load-bearing tank system used forward and aft arrays of 24 struts (12 pairs) each. All strut pair apexes were located on the tank at the dome/cylinder intersections. Local pads were provided at each apex to permit bracket attachments.

The suspended tank system initially used a single aft array of 12 struts (6 pairs) but subsequent analysis showed that this system was not sufficiently stiff to maintain adequate tank/body clearance, and a planar array of six struts was added at the forward end of the tank. The aft bulkhead was reinforced with an integral belly-band that acted as a ring beam to distribute local loads to the membrane.

A total of 20 lb (9.1 kg) was allocated to all tanks to provide for baffles and support provisions for tank-mounted subsystems. The requirement for anti-slosh baffles has not been established but anti-vortex and pull-through prevention provisions above the boost pump inlet were required.

Comparison of the suspended and load-bearing systems resulted in the following observations and conclusions. Although the load bearing configuration eliminated the need for a significant portion of body structure, it nevertheless required an auxiliary external membrane to provide insulation system purge containment and to act as a meteoroid bumper. Specific tradeoffs conducted in Task 3 between complete vehicles utilizing the two systems (with appropriate body structure and purge bag but all other subsystems identical) indicated a payload and cost benefit in favor of the suspended system of approximately 200 lb (90.7 kg) and $8.7M, identified in each of two independent comparisons. Accordingly, the suspended tank system was chosen at the Concept Selection meeting as the preferred configuration for all subsequent Tug vehicles.

Materials — The weight and characteristics evaluation of the candidate fuel tank materials is summarized in Table 2-8.

The selection of 2219-T87 was based on minimum weight for all candidate materials with extensive usage experience plus a "straight-A" rating in all other materials characteristics. Although initially selected for low weight and good material characteristics, 6Al-4V was subsequently deleted based on the possibility of embrittlement due to titanium hydride formation on the tank inner surface.

Table 2-8. Fuel Tank Materials Evaluation

CANDIDATE	EVALUATION CRITERIA					RECOMMENDED CANDIDATES	
	MATERIALS CHARACTERISTICS						
	WEIGHT (LB.)	FRACTURE TOUGHNESS	STRESS CORROSION RESISTANCE	WELDABILITY	USAGE EXPERIENCE	INTERIM	DIRECT DEVEL.
2219-T87	603	A	A	A	A	X	X
2014-T6	607	B	C	C	A		
2021-T81	638	B	A	B	D		
2219-T81	619	A	A	A	A		
7007-T6	527	B	D	C	D		
7039-T64	591	B	D	B	D		
Ti-5Al-2.5 Sn ELI, ANL	615	B		A	A		
Ti-6Al-4V ELI, ANL	500	B		A	B		X
301 ½H, XFH	784	A		A	A		
718, COND. STA	702	B		A	B		
718, 20% CW + AGE	608	B		A	D		
MP35N, 50% CW	597	C		B	D		

A & B : ACCEPTABLE BASED ON PRIOR CONVAIR EXPERIENCE

Recent fracture mechanics data indicates that the cryogenic fracture toughness of 2219-T87 exceeds the room temperature toughness in such a way that a room temperature proof test will screen smaller initial flaws than a cryogenic proof test. Furthermore, the difference in "screenable" flaw size may be sufficient to permit tank membrane thickness sizing based on cryogenic design allowables.

Bulkhead Contour and Construction — Candidate bulkhead meridian contours were ellipses, constant N_θ/N_ϕ, and Cassinian. The constant N_θ/N_ϕ family avoids the undesirable hoop compression present in ellipses with $a/b \geq \sqrt{2}$ and in Cassinians but requires increased thickness in the apex region due to flatness. As vehicle sizing progressed, it became clear that very low-height tank bulkheads would not be required to meet the vehicle length constraint. In addition, a trade study of the effect of bulkhead ratio on performance indicated an optimum ratio of $a/b \cong \sqrt{2}$. An elliptical contour with $a/b = 1.38$ was then selected based on its reasonably low height, avoidance of hoop-compression, and its common usage.

Two alternative methods were considered for bulkhead construction: conventional stretch-formed and butt welded gores, and one-piece spin-forming. Gore construction is a conventional, low-cost option that requires little, if any, development, assuring minimum schedule risk. Spin-forming offered a slight weight advantage but required special raw stock sizes and development to achieve acceptable final material condition. The gore construction option was selected due to its low cost and low risk in spite of a minor weight penalty.

Weight/Tolerance Control — Membrane thicknesses computed based on pressure and maximum allowable material stress represent minimum permissible values. The actual average material thickness exceeds the minimum by some Δt, which, in a conventionally

fabricated tank, is contributed to by initial raw stock thickness tolerance, thinning due to stretch-forming (if applicable), and the tolerance due to material removal operations to control/reduce thickness (machining or chem-etching). This Δt ranges from 0.0075 in. to 0.0085 in. (0.191 mm to 0.216 mm) for the fuel tank and results in a Δ weight of 93.0 lb (42.2 kg). Utilization of a chem-sizing process in place of conventional chem-milling eliminates all tolerance except that on the sizing process itself. The resulting weight, assuming an average of Δt of 0.0015 in. (0.052 mm), would be 17.2 lb (7.8 kg) representing a saving of 75.8 lb (34.4 kg). The added cost of this process for a complete fuel tank is estimated at $16k, making it a very cost-effective option for performance improvement.

2.2.1.2 Oxidizer Tank and Supports. The major subsystem characteristics investigated during the study were structural design, materials, contour and construction of forward and aft bulkheads, and weight/tolerance control.

Structural Design — The baseline tank geometry initially adopted for detailed preliminary analysis and design is shown in configuration 1 of Figure 2-6. Tank membrane thicknesses were based on a maximum ullage pressure of 24.0 psi (165.5 kN/m^2) plus propellant inertia effects. As in the fuel tank, all non-optimum items and systems/interface provisions necessary in a complete tank system were investigated to provide credible weight estimates. All permanent tank joints were fusion buttwelded and included weld lands based on a conservative heat affected zone width. An access opening similar to that in the fuel tank was provided in the aft bulkhead. Primary tank support was provided by 48 struts (24 pairs) similar in concept and orientation to those in the fuel tank aft array. A 20 lb (9.1 kg) allowance for baffles and support provisions for tank mounted systems was also included.

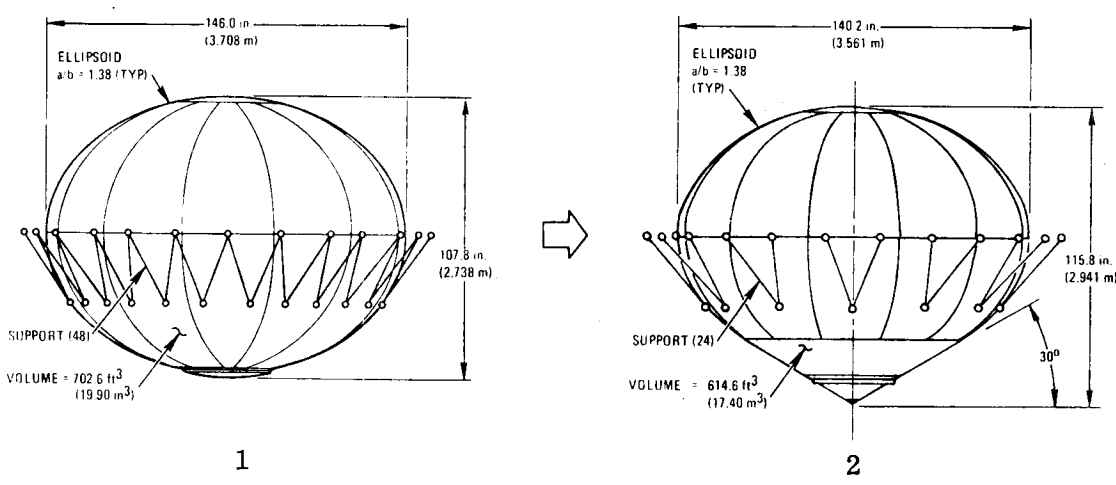

Figure 2-6. Oxidizer Tank and Supports — Baseline Configurations

The tank was initially considered full during exposure to those flight conditions characterized by high lateral (Y, Z) load factors. Membrane stiffening was therefore required over a significant region to preclude buckling due to compressive stresses produced by propellant lateral inertia. With the adoption of the abort dump ground rule, the lateral loads on the tank wall and supports were greatly reduced. This permitted deletion of all compression stabilization material and reduction in the number of supports to 24, resulting in an 81.1 lb (36.8 kg) weight saving.

Later in the study the baseline tank geometry was revised as shown in configuration 2 of Figure 2-6 and the ullage pressure was revised first to 20 psi (137.9 kN/m^2) and then to 23 psi (158.6 kN/m^2) as the requirement/effects of main engine operation, propellant tanking density, abort dump time, and vent/relief valve deadbands were established.

Materials — The same materials considered for the fuel tank were also considered for the oxidizer tank except the titanium alloys, which were unacceptable due to their reactivity with liquid oxygen. The results of the weight and materials characteristics evaluation are summarized in Table 2-9. Weights were computed using baseline configuration 1. As in the fuel tank, 2219-T87 aluminum was the selected material.

Table 2-9. Oxidizer Tank Materials Evaluation

CANDIDATES	EVALUATION CRITERIA					RECOMMENDED CANDIDATES	
	MATERIALS CHARACTERISTICS						
	WEIGHT (LB.)	FRACTURE TOUGHNESS	STRESS CORROSION RESISTANCE	WELDABILITY	USAGE EXPERIENCE	INTERIM	DIRECT DEVEL.
2219-T87	404	A	A	A	A	X	X
2014-T6	402	B	C	C	A		
2021-T81	405	B	A	B	D		
2219-T81	418	A	A	A	A		
7007-T6	368	B	D	C	D		
7039-T64	401	B	D	B	D		
301 ½H, XFG	638	A		A	A		
718, COND STR.	526	B		A	B		
718, 20% CHANGED	478	B		A	D		
MP35N, 50% C	466	C		B	D		

A & B : ACCEPTABLE BASED ON PRIOR CONVAIR EXPERIENCE

Bulkhead Shape and Construction — The same candidate bulkhead meridian contours evaluated for the fuel tank were considered for use in the oxidizer tank, and the elliptical contour with a/b = 1.38 was selected for both bulkheads. The aft bulkhead was later revised to an ellipticonic contour as a result of the thrust structure studies discussed in Section 2.2.1.4.

The same dome construction alternatives (multiple gore and one-piece spun) considered for the fuel tank were assessed for the oxidizer tank. Gore construction was also selected for the oxidizer tank.

Weight/Tolerance Control — The Δt due to tolerance for a conventionally fabricated oxidizer tank ranges from 0.0075 in. to 0.0093 in. (0.191 mm to 0.236 mm) and results in a Δ weight of 42.3 lb (19.2 kg). Utilization of a chem-sizing process with an average Δt of 0.0015 in. (0.038 mm) in place of conventional chem-milling results in a Δweight of 7.8 lb (3.5 kg), representing a saving of 34.5 lb (15.6 kg). The added cost of this process for a complete oxidizer tank is estimated at $7k, again making it a very cost-effective option for performance improvement.

2.2.1.3 Body Structure. The major subsystem characteristics investigated during the study were body envelope and subdivision, structural design, and Orbiter support interface arrangement. The latter item is discussed in Section 2.5.3.

Body Envelope and Subdivision — The evolution of the baseline body structure envelope and its modular subdivision is shown in Figure 2-7.

Concept ① represents the original body structure configuration. Field joints were incorporated to provide a separate astrionics module and straight line structural assemblies for ease of manufacture of the other three modules. The separate intertank module permitted independent installation of ACPS components and improved access to the oxidizer tank forward bulkhead.

As Tug configuration definition continued, the cylinder-cone-cylinder body configuration was found unnecessary and a continuous conical intertank/oxidizer tank section contour was chosen. Partitioning this region into two assemblies, as previously, was unnecessary and accordingly concept ② incorporating a separate cylindrical astrionics module, a cylindrical forward module, and a conical aft module was adopted.

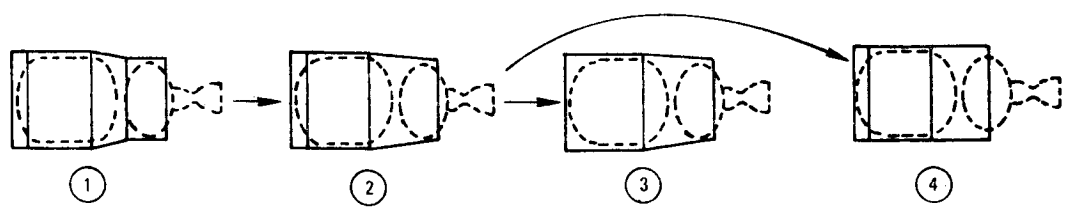

	1	2	3	4
MODULES	4	3	2	3
FIELD JOINTS	3	2	1	2
LENGTH, IN. (M)	302 (7.67)	302 (7.67)	302 (7.67)	274-286 (6.96-7.26)
DIAMETER, IN.	176/162	176/162	176/162	174/176

Figure 2-7. Body Structure Envelope/Subdivision Evolution

Concept ③ was a possible simplification of concept ② consisting of two modules and a single field joint, which still permitted independent installation/removal of the propellant tanks and insulation system blankets. Each module consisted of a structural assembly made up of straight-line longitudinal elements, but this concept did not permit installation and checkout of the primary astrionics system equipment independent of corresponding activities for the tank and insulation systems, however. This limitation required an increased schedule allowance for these tasks and also precluded astrionics system replacement on a total module basis. To provide flexibility in build-up, test, scheduling, and maintenance, a separate astrionics module appeared desirable, eliminating concept ③.

Concept ④ eliminated the aft body taper and shortened the total body by moving the aft interface forward into a common station plane with the oxidizer tank equator. This was permissible since final oxidizer tank volume requirements resulted in tank diameters of less than 146 in. (3.708m). The resulting tank/body radial gap was sufficient to incorporate a deep frame capable of accommodating integral Tug/adapter umbilical panels, providing adequate Tug/adapter clearance, providing support for the 12 interface latch fittings, and reacting the oxidizer tank support loads.

Structural Design — The characteristics of the four candidate concepts for body structure sidewall construction are shown in Table 2-10. Concept ② in Figure 2-7 was the

Table 2-10. Evaluation of Sidewall Construction Candidates

CONCEPT	CHARACTERISTICS			SELECTED
	MATERIAL	WEIGHT LB (KG)	DDT&E COST (M$)	
SKIN-STRINGER 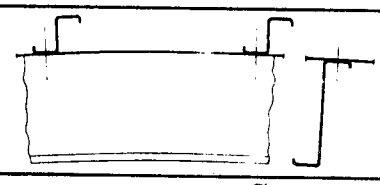	ALUMINUM	1290.3 (585.3)	18.4	✓
ISOGRID 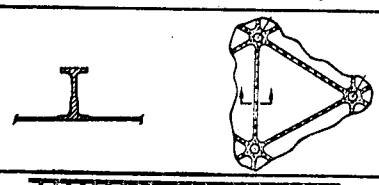	ALUMINUM	1473.7 (668.5)	22.1	
SANDWICH 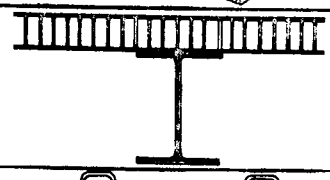	GRAPHITE/ EPOXY	982.1 (445.5)	24.9	✓
SKIN-LINER 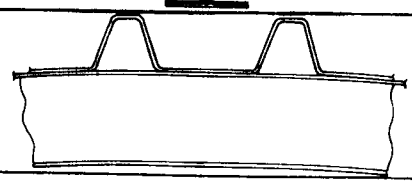	GRAPHITE/ EPOXY	1035.3 (469.6)	26.0	

baseline configuration for comparison of the four systems. Subsystem weights have since been updated to represent the concept ④ final baseline for the selected configurations. The four candidates were subjected to loads derived from a rigid-body loads program, which considered all load conditions discussed in paragraph 2.2.1 with three combinations of payload and propellant quantity: tanks full, no payload; tanks full, with payload; and tanks empty, with payload.

The skin-stringer design utilized nominal 0.020 in. (0.51 mm) skin gage, reinforced locally to accommodate concentrated loads, and sheet metal lipped-zee stringers for axial stiffening. The stringers were sized as continuous beam columns subject to distributed inward loading from the tension field skin and margin of safety calculations included allowances for forced crippling due to skin shear buckling. Intermediate frames, sized to preclude general instability, were 3 in. (7.6 cm) deep with gage increasing toward the aft end.

The flanged-isogrid design incorporated both skinned and open panels at various locations on the shell. The portion of the body aft of the oxidizer tank support frame was configured as skin-stringer for compatibility with the tank support longerons. To provide meteoroid protection in the regions utilizing open grid construction, Beta cloth was bonded to the grid surface. The skin flange sizes were constant but the opposite flange was varied in width and thickness for weight control. The penalities due to typical fillet and corner radii and machining mismatch and tolerance were also included in the weight calculations. Major frames were identical for both the skin-stringer and isogrid concepts.

The frame-stabilized-sandwich design utilized graphite/epoxy face sheets bonded to 5.5 lb/ft^3 (88 kg/m^3) HRP core. Face sheet thickness varied from 0.009 in. (0.23 mm) in the forward module to 0.016 in. (0.41 mm) in the aft module to accommodate axial load variations. Core depth was constant at 0.25 in. (0.64 mm). The circumference was divided into four quadrants to facilitate panel manufacture and to permit circumferential face sheet thickness variation. Stabilization frames were 2.5 in. (6.4 cm) deep I-sections of co-cured graphite-epoxy. To provide a realistic weight for the system, skin tolerances, edge treatments at panel perimeter joints, and an allowance for potting of discrete attachments were included.

The graphite-epoxy skin-liner concept utilized 0.020 in. (0.51 mm) thick skin bonded to a trapezoidally corrugated liner of varying thickness. Major frames and intermediate stability framing were the same for both composite concepts.

Weight and cost comparisons among the candidate concepts dictated the selection of aluminum skin stringer construction for low cost Tugs and graphite/epoxy sandwich for maximum performance Tugs.

2.2.1.4 Thrust Structure. The characteristics of the three candidate thrust structure options are summarized in Figure 2-8. The key characteristic in the evaluation of the candidates was the location of the support interface and its effect on weight, cost, complexity, and ease of integration with other structural subsystems.

The body-mounted concept supported the engine from the Tug/adapter interface frame, permitted thermal isolation of the oxidizer tank, and acted as both meteoroid shield and purge enclosure. The structure consisted of a 120-degree cone made in two sections with a field joint allowing access to the oxidizer tank.

The nonintegral tank-mounted concept supported the engine from the access door attach flange on the aft bulkhead of the oxidizer tank. The structure consisted of a cylinder, attached to the tank, supporting a cone with the engine gimbal block fitting at its apex. Radially spaced struts of low thermal conductivity projected from the cone/cylinder junction to intersect tangentially with the tank wall to alleviate anticipated softness in the aft bulkhead when subjected to engine gimbal forces. The resulting redundant tank interface represented a more complex analytical problem, however.

Initial weights analyses indicated no significant difference between the two preceding concepts when allowances for meteoroid shielding and purge containment were added to the nonintegral tank-mounted configuration.

As program definition progressed, the tank-mounted configuration became increasingly attractive (in spite of its evolution into a rather complex hybrid structural system) since sufficient radial gap existed between the oxidizer tank equator and the body structure sidewall to incorporate a major frame that could serve as the Tug/adapter interface, effectively shortening the flight vehicle body structure. The new frame station was incompatible with a body-mounted thrust structure. In addition it was

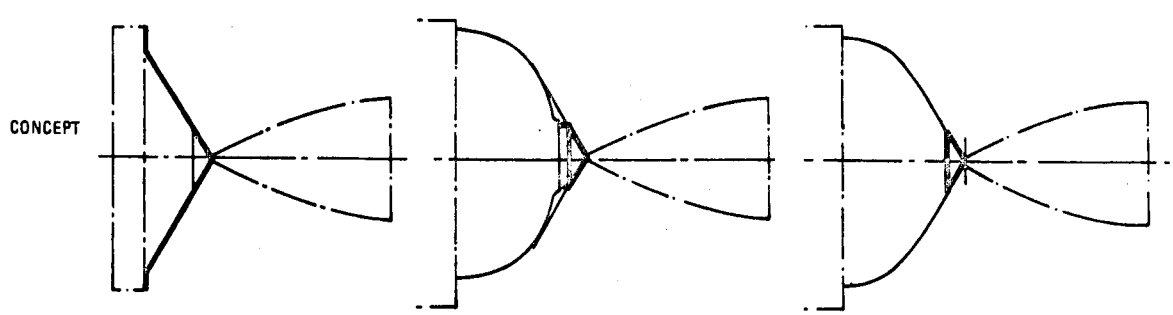

SUPPORT INTERFACE	BODY	TANK (NOT INTEGRAL)	TANK (INTEGRAL)
ELEMENT	CONE FRUSTUM	CONE CYLINDER	CONE
CONSTRUCTION	SKIN/STGR SANDWICH	SANDWICH MONOCOQUE	1 PIECE (MACHINED FORGING)
MATERIAL	GRAPHITE/EPOXY	GRAPHITE/EPOXY	ALUMINUM
WEIGHT	77.2	28.9	23.9

Figure 2-8. Thrust Structure Option/Characteristics Summary

observed that the gimbal assembly operates at cryogenic temperature during engine firing since it is integral with the propellant injector manifold. Hence the original functional requirement to provide thermal isolation of the oxidizer tank from the main engine was eliminated.

The integral thrust cone provided a simple configuration concept that remedied all the basic objections to the original tank-mounted concept. By recontouring the oxidizer tank aft bulkhead, a stiff in-line load path from the thrust cone to the tank membrane was achieved. In addition, the multipiece strut-stabilized system was replaced by a single-piece integrally stiffened cone machined from an aluminum forging, which also acted as a door/sump and incorporated integral provisions for boost pump and pull-through plate attachment. Accordingly, the integral thrust cone was selected as the preferred thrust structure concept for all Tugs in the Program Definition task.

2.2.1.5 Meteoroid Shield. No additional shield material is required beyond that inherently provided by the tank membranes plus body structure skin or purge bag. This conclusion is based on the highly conservative analysis summarized in Figure 2-9.

The Tug was idealized as a circular cylinder whose total surface area, including ends, was 1590 ft^2 (147.72 m^2). It was assumed to be exposed to the meteoroid environment at synchronous altitude for a full six-day on-orbit mission duration. No allowances were made for variations in the Earth defocussing and body-shielding factors as a function of altitude during periods of ascent to and descent from the mission orbit.

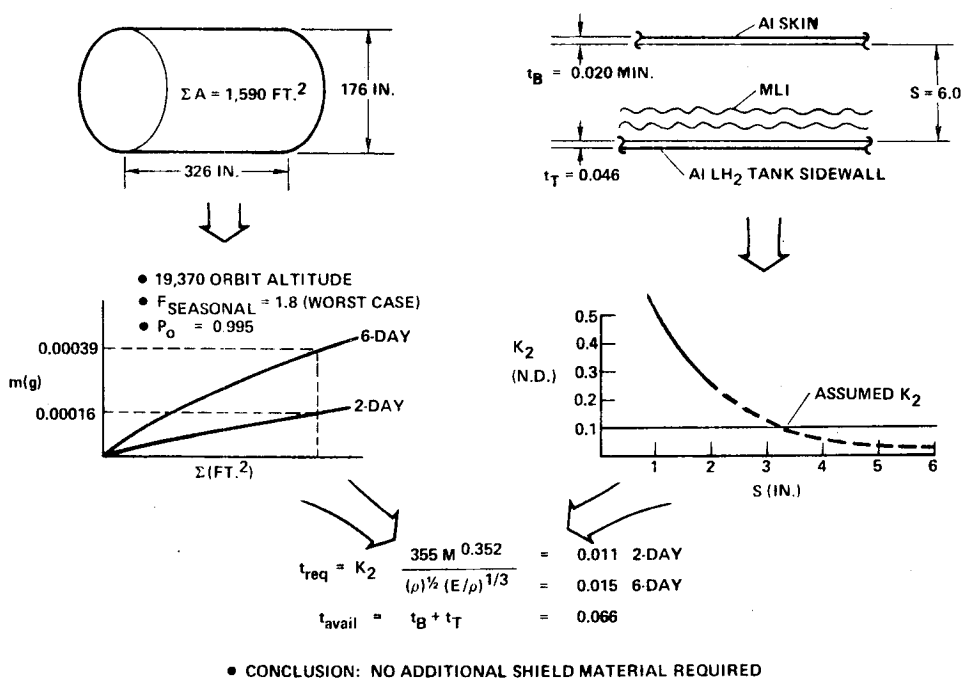

Figure 2-9. Meteoroid Shield Sizing Analysis

The seasonal distribution factor (1.8) represents the worst monthly factor per NASA TM-X-64627. The no-mission-failure probability of 0.995 specified in the Tug Study data package was assumed to mean no penetration of the tanks for purposes of this analysis. Based on the above, a meteoroid design mass of 0.00039g was calculated.

The total barrier system was assumed to consist of a single 0.020 in. (0.51 mm) body structure skin, multilayer insulation (MLI), and a 0.046 in. (1.17 mm) tank sidewall. The effect of the MLI was ignored.

A conservative value of the factor K_2 for use in the total thickness equation was assumed from extrapolation of the standard published factors. Computation of the total required thickness (bumper plus tank) resulted in a value of 0.015 in. (0.38 mm) for the six-day mission. Since the available thickness exceeded this value by a factor of four, no additional shield material was necessary.

2.2.2 THERMAL CONTROL. The thermal control subsystem has two major subsystem elements. These are the cryogenic insulation system, which reduces boiloff and eliminates cryopumping, and the thermal control system, which protects systems from the environment, rejects heat where necessary (e.g., astrionics), and adds heat where necessary (e.g., ACPS bottles).

2.2.2.1 Cryogenic Insulation Systems. Purged, high-performance multilayer insulation (MLI) was selected for insulating the liquid hydrogen and liquid oxygen propellant tanks. Other principal candidates included MLI/foam composites, MLI in conjunction with evacuated double-wall tanks and MLI incased in an impermeable bag (self-evacuating MLI). Although they offer potentially higher thermal performance due to reduced prelaunch heat flux, these three systems were rejected due to comparatively high weight and/or high development cost and risk. Candidate MLI systems are shown in Table 2-11. Data is presented for aluminized Mylar systems since it is more readily available than goldized Kapton data. The systems shown cover the full spectrum of multilayer insulation types; flat, crinkled, and embossed radiation shields with integral and nonintegral spacers, and net, paper, foam, tuft, and dimpled spacers. Although the data shown are for aluminized Mylar polyester shields, aluminized and goldized Kapton polyimide radiation shields can be substituted with little change in the magnitudes of the numbers.

Two systems were selected as representative of the generic category of MLI systems for consideration in the configuration and program definition tasks. Where minimum development effort is paramount and reduced performance acceptable, system 10, known commercially as "Dimplar," was selected. Dimplar has been applied to advanced versions of the high-energy upper stage Centaur launch vehicle. Thus this system will provide adequate thermal performance with minimum development cost and risk. System 12 (Table 2-11), referred to as "Superfloc," was selected for use with configurations where performance was more important. Superfloc has been subjected to considerable subscale thermal and structural testing. Recently a two-blanket,

Table 2-11. Candidate MLI Systems

NO.	RADIATION SHIELD	SPACER	LAYER DENSITY LAY./IN.	LAYER DENSITY LAY./CM	BULK DENSITY LB/FT^3	BULK DENSITY KG/M^3	THERMAL CONDUCTIVITY BTU/HR-FT-F	THERMAL CONDUCTIVITY μW/M-K
1	DAM	SILK NET	72	28	4.1	66	2.4×10^{-5}	42
2	DAM	NYLON NET	80	31	3.4	54	1.7	29
3	DAM	DACRON NET	66	26	2.6	42	1.0	17
4	DAM	TISSUGLAS	100	39	3.2	52	1.4	24
5	CRINKLED DAM	TISSUGLAS	60	24	1.9	31	3.9	67
6	DAM	DEXIGLAS	60	24	3.7	59	2.8	48
7	DAM	POLY. FOAM	21	8	1.7	27	6.0	100
8	CRINKLED SAM	–	40	16	0.9	15	2.6	45
9	EMBOSSED SAM	–	45	18	0.9	15	4.0	69
10	DIMPLED SAM	FLAT DAM	21	8	1.0	16	8.0	138
11	EMBOSSED SAM	–	128	50	2.8	45	3.3	57
12	DAM	DACRON TUFTS	30	12	0.7	10	2.7	47

NOTES: CONDUCTIVITY FOR 540 TO 140R (300 to 78K)
DAM, DOUBLY ALUMINIZED MYLAR
SAM, SINGLY ALUMINIZED MYLAR

doubly goldized Kapton system complete with purge system and purge bag was mounted on an 87 in. (2.2m) diameter oblate spheroid tank and subjected to repeated pressure and temperature cycling (up to 350F [450K]) simulating a Space Tug life cycle. Superfloc possesses excellent interstitial gas venting characteristics and offers maximum thermal performance for a given number of layers.

The cryogenic insulation subsystem consists of a leakage containment membrane (LCM) on the tank surface, MLI blanket(s), and an external purge bag with associated purge hardware. The composite LCM provides a secondary barrier to channel tank leakage to a location where it can be safely dumped overboard, and the LCM prevents gas from entering and thermally degrading the MLI. A single MLI blanket consists of 11 Dimplar layer pairs or 23 Superfloc layers, each blanket approximately 0.75 in. (1.9 cm) thick. The radiation shield material for both systems can be either aluminized or goldized Kapton. Face sheets of Kapton/Dacron scrim composite are placed on each side of the insulation blanket to protect the relatively fragile MLI during handling and to carry flight loads. The blankets, made in gore sections for bulkheads and rectangular sections for the cylindrical sidewall, are interconnected with Lexan polycarbonate twin- and tri-pin fasteners and are attached to the tank by Lexan support pins.

The external composite purge bag effectively seals the MLI between the bag and the LCM. The bag permits preconditioning of the MLI to remove absorbed constituents

that may outgas and degrade system performance in space, purging of the system prior to tanking to remove condensible vapors, and repressurization during entry to prevent contamination from the ambient environment. The sealed bag protects the MLI at all times from contamination by water vapor, salt spray, dust, etc. Although additional analysis is necessary, the sealed purge bag would probably eliminate the requirement for expensive gold-coating of the MLI radiation shields.

Both MLI systems provide adequate performance for the particular vehicle configurations to which they are applied. The systems were analyzed transiently from steady-state prelaunch conditions through final space equilibrium. At prelaunch, forced nitrogen gas convection external to the vehicle skin and natural helium convection inside the bag and MLI were assumed. For space residency a constant average solar heat flux of 141 Btu/hr-ft^2 (444 W/m^2), equivalent to: solar constant/π, was assumed incident on the vehicle skin. Liquid hydrogen tank prelaunch heat flux levels for the 11-layer pair Dimplar system and the 23-layer Superfloc system were 127 and 111 Btu/hr-ft^2 (400 and 350 W/m^2), respectively. Corresponding liquid oxygen tank values were 73 and 64 Btu/hr-ft^2 (230 and 200 W/m^2), respectively. In space the final LH_2 tank equilibrium values for the Dimplar and Superflock systems, including the effect of penetrations, were 0.39 and 0.19 Btu/hr-ft^2 (1.2 and 0.6 W/m^2), respectively. Corresponding values for the oxidizer tank were 0.43 and 0.25 Btu/hr-ft^2 (1.4 and 0.8 W/m^2), respectively.

Transient performance of the cryogenic insulation system, and total integrated heat flow, is dependent upon the mission profile. Figure 2-10 shows a typical heat flux

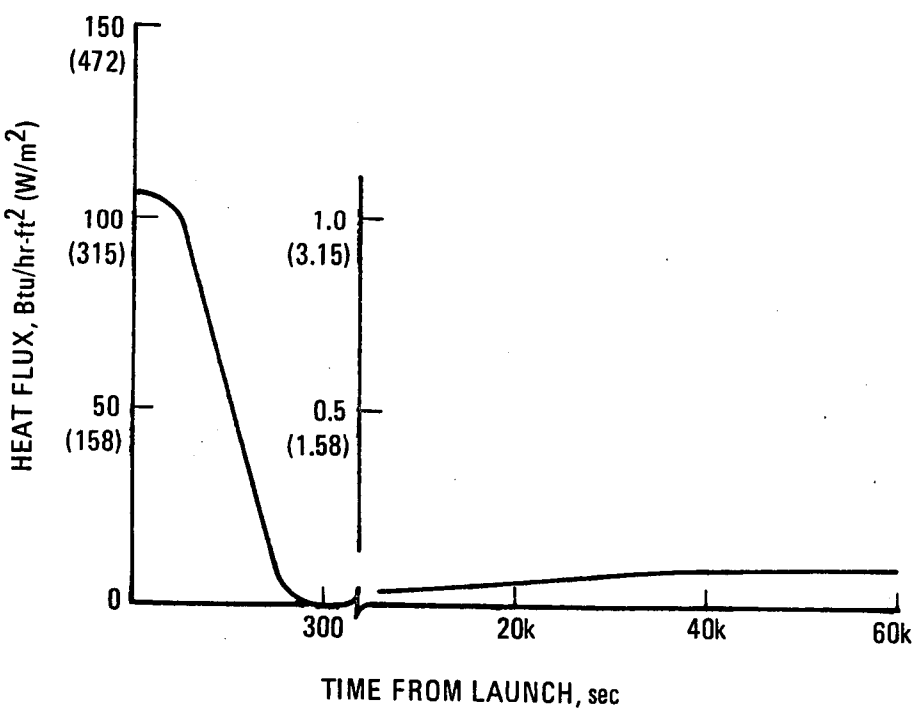

Figure 2-10. Heat Flux as a Function of Time from Launch

profile for the Program 2 LH_2 tank as a function of time. The system was at equilibrium before launch and remained inside the Shuttle with the bay doors closed until t = 7200 sec. At this time the doors were opened and the vehicle erected. Heat flux falls rapidly as interstitial gas vents from the MLI. The layers are subcooled with respect to the final space equilibrium condition, which accounts for the bucket in the curve.

2.2.2.2 Thermal Control Systems. The function of the Tug thermal control system is to provide acceptable temperatures for all components throughout the mission. Major areas are temperature control of the astrionics module, storable ACPS propellant heating, and fuel cell waste heat rejection. Space radiator was selected for the fuel cell waste heat rejection and electrical power for ACPS propellant heating as required. The thermal control of the astrionics module is discussed in the following paragraphs.

Consistent with the general Tug program objectives of low development cost, low operational cost, high reliability and adequate performance, a passive thermal control system has been selected for the astrionics module. An enclosed compartment, or module, is preferred over an open mounting platform to minimize solar heating perturbations and to better distribute the component internally generated waste heat. A compartment thus provides moderation of component temperature extremes. Due to the requirement that the Tug be non-selectively oriented relative to the sun, the system was designed to minimize the solar heating effect by incorporating a low solar absorptance coating for the module outer surface. To radiate to space the waste heat generated by the astrionics electronic components while maintaining moderate sidewall temperatures, the sidewall surface must have a moderate-to-high emittance. Thus, the module surface coating has a low absorptance/emittance ratio. Without an active heat distribution system, component locations must be chosen so that the high heat dissipating components are dispersed among the lower heat dissipating components. This provides further moderation of all component temperatures.

The astrionics module sidewall, which provides the area for radiating internally generated waste heat to space, is approximately 112 ft^2 (10.4 m^2). The majority of the astrionics components are mounted on a heavy aluminum structural ring that is in turn attached to the inner circumference of the module. The highest heat dissipating components, computers, are mounted directly to the module sidewall. All surfaces internal to the module were assigned a high emittance (0.85), characteristic of white paint. Figure 2-11 shows a typical layout of components in the astrionics module. The external surface of the module is insulated with MLI over 28 ft^2 (2.6 m^2) of the available surface, with the remaining 84 ft^2 (7.8 m^2) coated with silver-backed teflon ($\alpha_s = 0.07$, $\epsilon = 0.45$).

An analytical computer model was used to predict temperatures of the individual astrionics components. The computer solutions are for the space equilibrium condition with and without solar heating. The results of the analysis are shown in Table 2-12. The predicted temperatures are within the acceptable range for all components, thus eliminating a need for module component active thermal control.

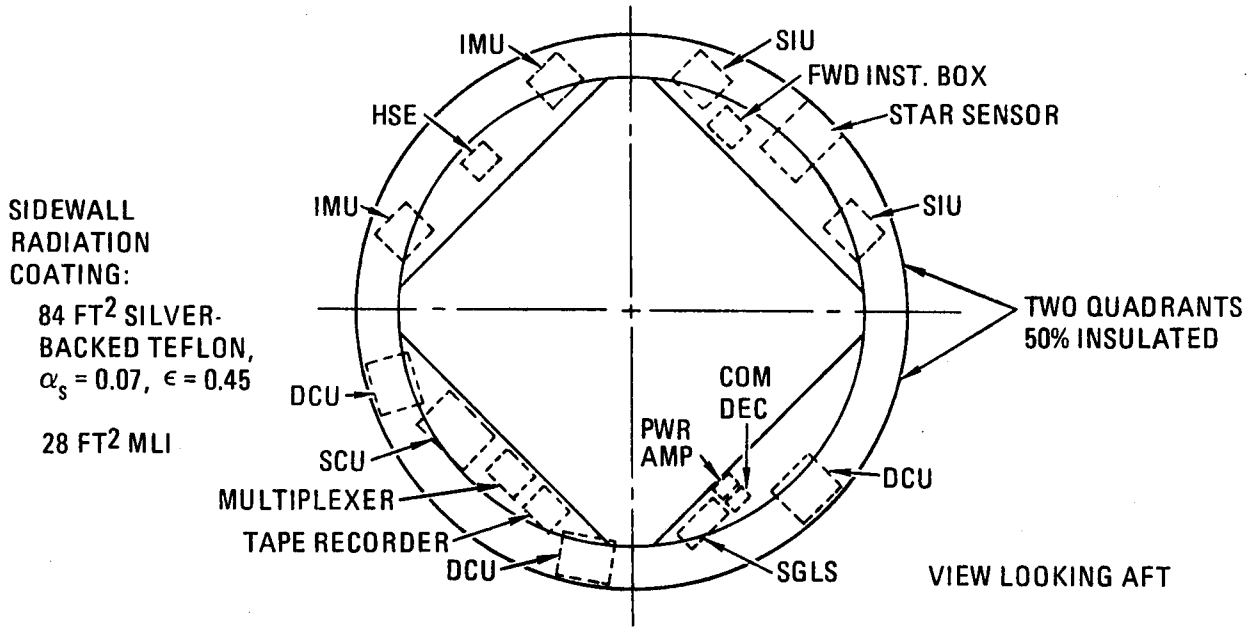

Figure 2-11. Astrionics Module, Program 1, Layout of Thermally Significant Components

Table 2-12. Astrionics Module, Program 1, Component Parameters and Predicted Space Coast Equilibrium Temperatures

COMPONENT	DIMENSIONS INCHES H	L	W	POWER WATTS	ALLOWABLE TEMPERATURES DEGREES F MINIMUM	MAXIMUM	PREDICTED TEMPERATURES DEGREES F MINIMUM	MAXIMUM
DIGITAL COMPUTER (3)	10	14	16	165 EA.	45	168	68	121
REMOTE MULTIPLEXER	6	10	12	15	0	120	46	88
SEQUENCE CONTROL UNIT	8	17	10	40	-60	120	48	90
TAPE RECORDER	7	10	12	20	0	120	65	91
INERTIAL MEAS. UNIT (2)	6	12	12	120 EA.	-30	160	88	133
STAR SENSOR	9	DIA.	21	20	10	140	54	64
HORIZON SENSOR ELECT.	7	10	12	38	-35	165	51	93
SERVO INVERTER UNIT (2)	6.4	12.5	17.3	70 EA.	-55	154	75	87
SGLS	8	6	13	24	32	118	51	64
POWER AMPLIFIER	0.5	4.5	3	1	32	118	47	60
COMMAND DECODER	3	3.5	5	4	-30	70	47	60
FWD. INSTRUMENT BOX	6	12	12	2	0	120	54	64

2.2.3 ASTRIONICS. The objective of the astrionics subsystem task was to determine the characteristics of a broad spectrum of options and then select options representing classes of components, levels of technology, or levels of capabilities. A secondary objective was establishing levels of redundancy that would contribute to the Tug reliability goal of 0.97.

The analyses were initiated by converting mission payload and vehicle requirements into astrionics functional requirements. Candidate configurations were then established for the subsystem equipment. Analyses and trade studies were performed to ensure that the candidate can meet the functional requirements. Total astrionics systems were then synthesized from the subsystem candidates. Astrionics systems were synthesized for various levels of autonomy.

Cost data in the form of Engineering Design & Development (ED&D) costs and TFU costs were developed at the component level for consideration in the selection of subsystem elements. This cost data is presented in this section and represents relative costs. Because of subsequent system refinements, these costs may not correspond to the final costs used in the Task 5 program definitions.

The nine subsystems for which configurations were developed and which will be discussed below are:

a. Data management.

b. Guidance and navigation.

c. Guidance update.

d. Flight control.

e. Rendezvous and docking.

f. Communications.

g. Electrical power.

h. Power distribution and control.

i. Instrumentation.

2.2.3.1 Data Management Subsystem. The data management subsystem tasks illustrated in Figure 2-12 showed that reliability considerations established a need for redundant computers and that triple redundant central processors and dual redundant central processors were the configurations recommended for final consideration.

Analyses of the TUG computer software established a need for a computer with a 65k memory to provide a capacity for future growth. The software analysis is summarized in Table 2-13.

TASK 2

- ESTIMATED SOFTWARE FOR COMPUTER SIZING
- DEVISED 3 PROCESSOR INTEGRATION CONCEPTS
  - CENTRAL
  - CENTRAL PLUS DEDICATED
  - FEDERATED
- SURVEYED 9 COMPUTERS REPRESENTING
  - TTL
  - MSI TECHNOLOGIES
  - LSI
- INVESTIGATED ADVANCED TECHNOLOGY PROCESSORS
- EXPLORED REDUNDANCY SCHEMES
  - DUAL - INCLUDING COVERAGE
  - TRIPLE - INCLUDING VOTERS
  - GENERAL SPARING

TASK 3

SELECTION CRITERIA -

- RELIABILITY
- DEVELOP. COST
- SOFTWARE COST
- INTEGRATION COST
- OPERATIONS COST
- RISK
- WEIGHT

TRIPLE CENTRAL PROCESSORS & DUAL CENTRAL PROCESSORS

Figure 2-12. Data Management Subsystem Task Summary

Table 2-13. Software Requirements Summary Level I Autonomy

PROGRAM MODULE	MEMORY (32 BIT WORDS)	EXECUTION (KOPS/SEC)			
		MAIN BURN	COAST	RENDEZVOUS	DOCKING
EXECUTIVE	3400	18	18	18	18
ATTITUDE CONTROL	1600		17	17	17
COMMUNICATIONS	7300	4	4	4	4
DOCKING	1400				32
GUIDANCE	7000	25	25	25	25
GUIDANCE UPDATE	8000		20		
NAVIGATION	5000	70	70	70	70
ON-BOARD CHECKOUT	5600	6	6	6	6
RENDEZVOUS	1500			7	
SEQUENCING	5000	5	5	5	5
THRUST VECTOR CONTROL	2000	10			
	47,800	138	165	152	177

Since the level of autonomy was found to have a significant effect on development costs and the distribution of total program costs, the relationship of software requirements to autonomy level was analyzed. The result are summarized in Table 2-14.

Table 2-14. Autonomy Effect on Software Requirements

AUTONOMY LEVEL	REQUIRED MEMORY WITH RENDEZVOUS AND DOCKING	REQUIRED MEMORY WITHOUT RENDEZVOUS AND DOCKING
I	47,800	44,900
II	45,800	42,900
III	42,600	40,900
IV	31,800	31,600

NOTE: TRIPLE GIMBALED IMUs REDUCE REQUIREMENT BY 1000 WORDS

A DATA MANAGEMENT SUBSYSTEM WITH DUAL REDUNDANT COMPUTERS REQUIRES 4000 ADDITIONAL WORDS FOR COVERAGE SOFTWARE

The need for redundant computers was established by apportioning the vehicle reliability requirement (0.97 for all missions) down to the subsystem level. This apportionment was done parametrically in two steps:

a. The astrionics system reliability was apportioned among the vehicle systems on the basis of each one's relative contribution to the vehicle's unreliability. For instance, astrionics may be one of three, four, or five vehicle systems that account for the total vehicle unreliability. Assuming an equal contribution from each system, the astrionics system reliability requirement would be 0.9899, 0.9924, or 0.9939 for three, four, or five systems respectively as shown in Figure 2-13.

b. In a like manner, each of the above astrionics system reliability requirements were apportioned parametrically to the astrionics subsystems. Assuming that each subsystem might contribute anywhere from one-half to one-sixth of the astrionics system unreliability, then the reliability values for any subsystem would be those shown by the line plotted from the three system requirements.

The shaded area in Figure 2-13 bounds the expected subsystem reliability requirement range. Therefore, the value 0.9965 was used for the subsystem reliability requirements, which ultimately supports the vehicle reliability of 0.97. For a single computer to meet that goal would require that its MTBF be equal to or greater than 48,300 hours for a 164-hour mission. A computer with a 65k memory would possibly

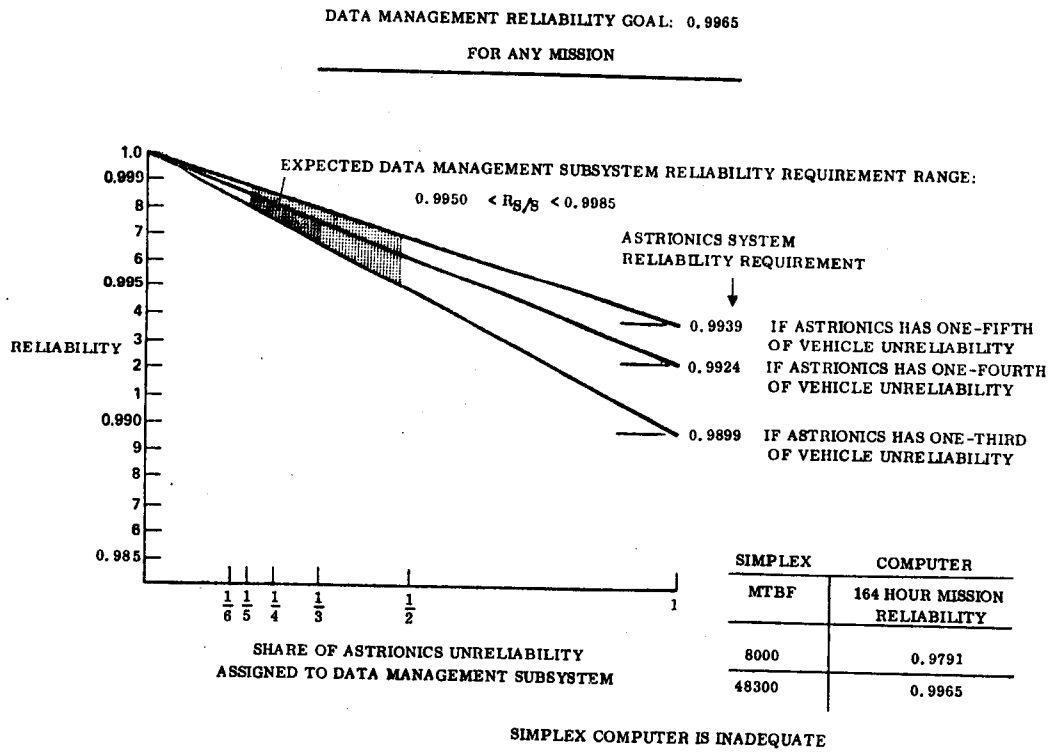

Figure 2-13. Data Management Reliability Considerations

have an MTBF as high as 8000 hours. To overcome the large difference between the reliability capability and requirement, redundant computers are necessary in the data management subsystem (DMS).

Figure 2-14 shows the three fault tolerant techniques by which redundancy can be implemented in the DMS. All three techniques were analyzed as candidate options for the DMS integration approach.

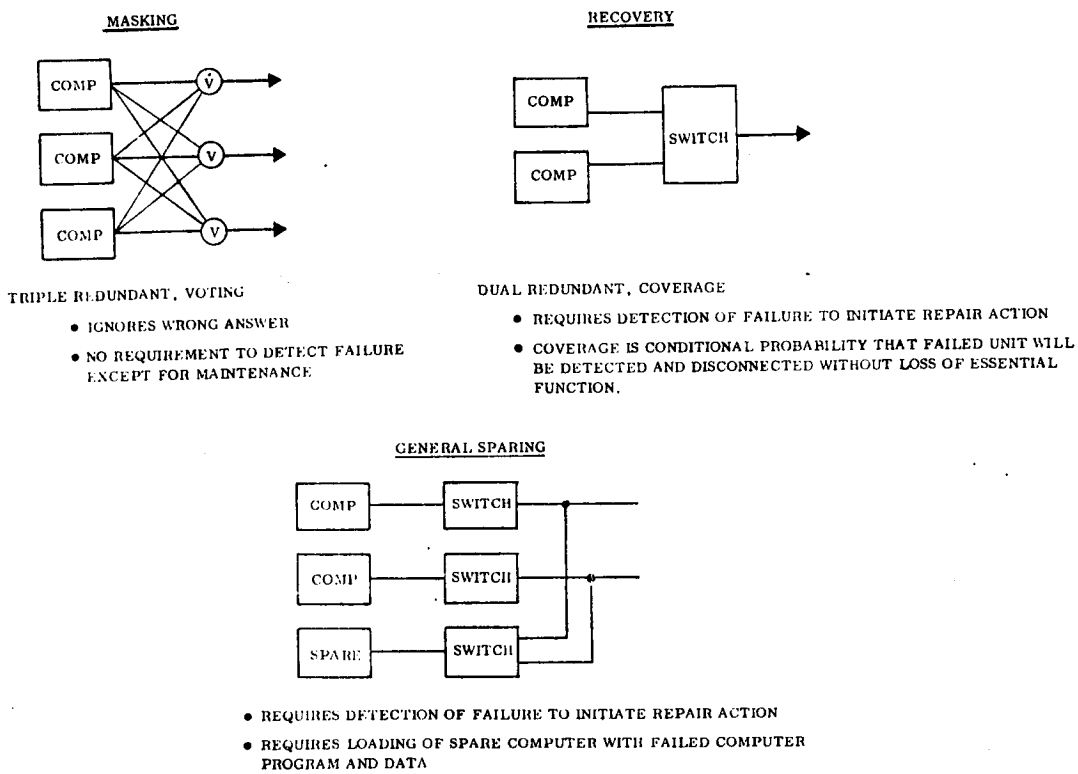

Figure 2-14. Three Fault Tolerant Computer Systems Are Candidates

Table 2-15 shows the technical and cost factors used as criteria for evaluating the redundant computer system candidates for the DMS.

Where low cost and early availability are major considerations, the triple redundant central computer is the recommended subsystem option. When low weight or low operating cost is the basis for choice, the dual redundant central computer configuration is recommended for a 1983 IOC. Block diagrams and relevant weight and cost information for these recommended subsystem options are shown in Figure 2-15. The configuration of federated computers with a general spare computer is heavier and costs more than the other options and it represents a high technical risk.

Table 2-15. Data Management System Comparison

REDUNDANT CONFIGURATION	TECHNICAL			COSTS IN MILLIONS OF DOLLARS					
	AVAILABILITY	RISK	WEIGHT	HARDWARE DEVELOPMENT	SOFTWARE DEVELOPMENT	D D T & E	INVESTMENT	OPERATIONS	PROGRAM
TRIPLE CENTRAL	79	LO	165	9	8	20	25	4	49
TRIPLE CENTRAL & DEDICATED	79	LO	195	9	8	20	30	5	55
TRIPLE FEDERATED	79	LO	256	9	8	21	35	5	61
DUAL CENTRAL	83	MOD	124	13	12	27	23	3	53
DUAL CENTRAL & DEDICATED	83	MOD	160	14	11	28	28	3	59
DUAL FEDERATED		HI	196	9	16	28	29	3	60
FEDERATED WITH GENERAL SPARING	83	HI	200	17	16	36	34	4	74

TRIPLE CENTRAL OPTION

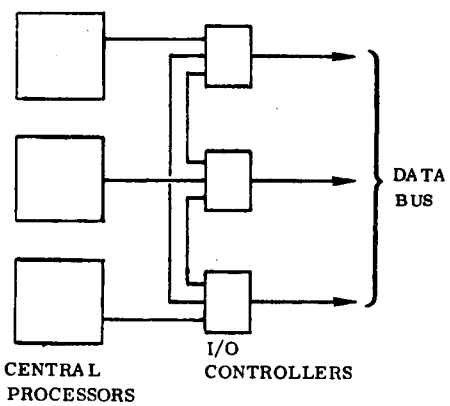

DUAL CENTRAL OPTION

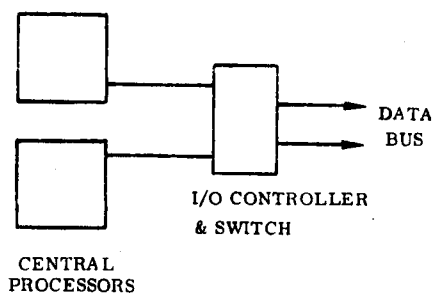

DATA MANAGEMENT	WEIGHT (LBS)	ED&D ($M)	TFU ($M)
Triple Central	165	8.9	2.46
Dual Central	124	13.4	2.27

Figure 2-15. Recommended Options for Data Management Subsystem

2.2.3.2 Guidance and Navigation Subsystem. The guidance and navigation subsystem tasks illustrated in Figure 2-16 showed that both strapdown IMUs and gimbaled IMUs were investigated for existing and advanced technology. Due to the reliability requirement for the vehicle, redundant equipment was needed. The configurations recommended for final consideration were a triple redundant, gimbaled IMU, a dual redundant strapdown IMU, and a dual redundant electrostatic gyroscope navigation system.

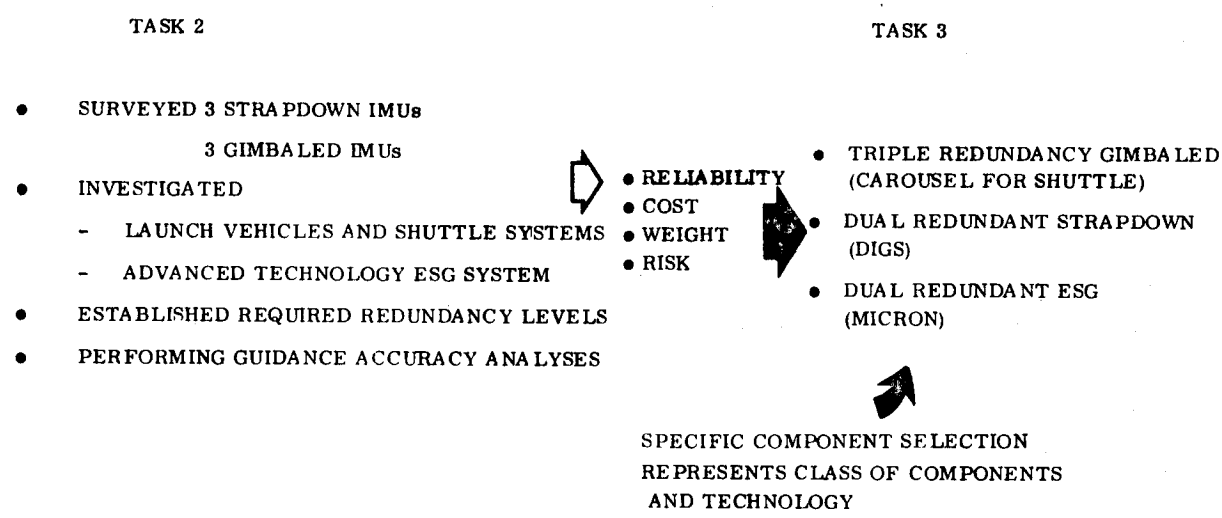

Figure 2-16. Guidance and Navigation Subsystem Task Summary

The weights and costs developed for the configurations recommended for final consideration are shown in Figure 2-17 with symbolic block diagrams. The triple redundant gimbaled IMU was the configuration selected for low development cost astrionics systems. The dual ESG IMU configuration was selected for low weight astrionics systems.

An analysis of mission accuracy was made, which showed that the ability to meet the specified accuracy requirements depended on update system accuracy and the points in the mission where updates were made. Figure 2-18 summarizes the tasks undertaken to assess the effects of guidance update on the navigation accuracy. Both the synchronous equatorial and polar missions were considered.

A typical summary of guidance accuracy results is shown for the synchronous mission in Table 2-16. The results show that guidance update is required for payload deployment and that position, velocity, and attitude must be updated to meet the required attitude envelope for shuttle rendezvous, which is ±17.5 n.mi. for the largest allowable altitude error.

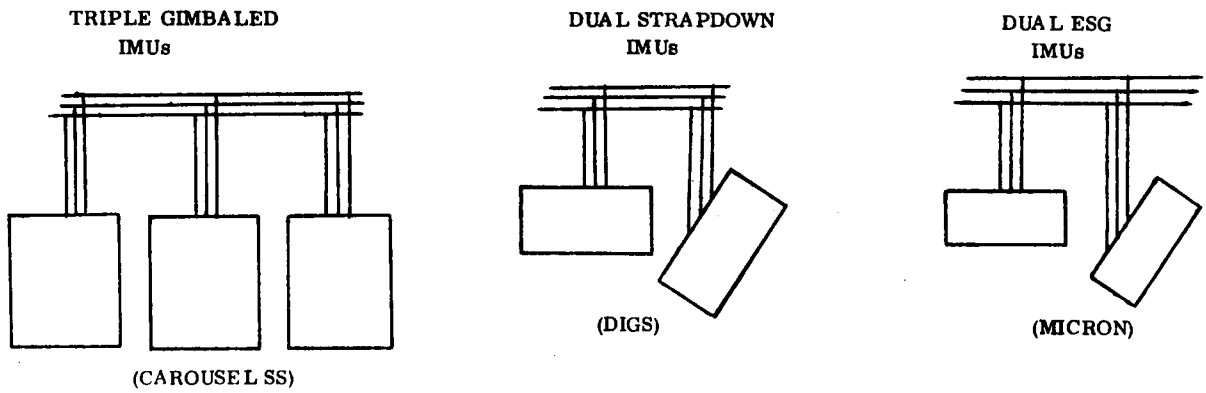

GUIDANCE & NAVIGATION	WEIGHT (LBS)	ED&D ($M)	TFU ($M)
Triple Gimbaled	135	4.2	1.68
Dual Strapdown	78	7.9	1.20
Dual ESG	30	5.5	0.30

Figure 2-17. Weights and Costs for Recommended Navigation Configurations

- ANALIZE FOUR CONFIGURATIONS FOR TWO TUG MISSIONS
  - HAMILTON-STANDARD (DIGS)
  - HONEYWELL (H-448)
  - HONEYWELL (IMPROVED CENTAUR)
  - CAROUSEL (VB)
  - SYNC. EQ.
  - POLAR
- DETERMINE BASELINE GUIDANCE ERRORS
  - NON-UPDATE CASE
  - ERROR DATA (TNR COORDINATES) AT EACH BURN
- DETERMINE EFFECT OF PREDEPLOYMENT GUIDANCE UPDATE
- DETERMINE EFFECT OF PRERENDEZVOUS GUIDANCE UPDATE
  - POSITION, VELOCITY, AND ATTITUDE
  - POSITION AND VELOCITY ONLY

Figure 2-18. Guidance Update Effects Tasks

Table 2-16. Guidance Accuracy Results Summary

- PAYLOAD DEPLOYMENT ERRORS

	POSITION NM RSS (1σ)	ALTITUDE NM (1σ)	VELOCITY FT/SEC RSS (1σ)
WITHOUT UPDATE	100.22	38.67	66.68
UPDATE AT MES 1	73.23	21.95	49.55
UPDATE AT MES 3	0.25	0.15	5.20
REQUIREMENT	31.67	23.33	29.33

- SHUTTLE RENDEZVOUS ERRORS

	POSITION NM RSS (1σ)	ALTITUDE NM RSS (1σ)	INCLINATION DEG (1σ)
WITHOUT UPDATE	2691.29	273.5	0.28
UPDATE AT MES 1	1658.3	88.5	0.51
UPDATE AT MES 5 POSITION & VELOCITY ONLY	182.0	20.9	0.45
UPDATE AT MES 5 POSITION, VELOCITY & ATTITUDE	13.0	1.6	0.014

2.2.3.3 Guidance Update Subsystem. The tasks related to the guidance update subsystem summarized in Figure 2-19 showed that autonomy is closely related to the update technique. Three update configurations were investigated and each represented a different autonomy level.

TASK 2

- INVESTIGATED 3 UPDATE TECHNIQUES:

  AUTONOMY LEVEL I - HORIZON SENSOR/STARSENSOR

  II - HORIZON SENSOR/SUNSENSOR

  III & IV - HORIZON SENSOR/SUNSENSOR WITH GROUND TRACKING

- SURVEYED 6 HORIZON SENSORS

  8 STARSENSORS

  1 SUNSENSOR

  NAV SAT RECEIVERS

  → SELECTED SPECIFIC COMPONENTS TO REPRESENT CLASSES OF COMPONENTS

- ESTABLISHED UPDATE ACCURACIES
- DETERMINED SIMPLEX REDUNDANCY ADEQUACY
- EXPLORED GUIDANCE ACCURACY IMPROVEMENTS FROM FROM UPDATE SCHEMES

TASK 3

→ ALL THREE UPDATE SCHEMES WERE OPTIONS FOR TRADES AND ANALYSES

Figure 2-19. Guidance Update Subsystem Task Summary

The components selected for three autonomy categories are summarized in Table 2-17 together with cost and weight data. For high autonomy/low development cost astrionics systems, the star scanner is recommended. For low autonomy/low development cost systems, the ground tracking configuration is recommended. Weight is not a significant factor between these two choices.

Table 2-17. Guidance Update Options Summary

AUTONOMY LEVELS		
III & IV	II	I
HORIZON SENSOR AND SUN SENSOR (FOR ATTITUDE UPDATE) GROUND TRACKING (FOR POSITION & VELOCITY UPDATE)	HORIZON SENSOR AND SUN SENSOR (FOR ATTITUDE UPDATE) NAVIGATION SATELLITE RECEIVERS/ANT (FOR POSITION & VELOCITY UPDATE)	HORIZON SENSOR AND STAR SENSOR WITH STAR CATALOG SOFTWARE (FOR ATTITUDE, POSITION AND VELOCITY UPDATE)

GUIDANCE UPDATE	WEIGHT (LBS)	ED&D ($M)	TFU ($M)
Autonomy Level III & IV	48	6.5	0.43
Autonomy Level II	74	7.0	.58
Autonomy Level I:			
Star Scanner	51	7.5	0.55
Star Tracker	65	7.6	0.7

2.2.3.4 Flight Control Subsystem. The flight control functions are implemented by a subsystem that provides thrust vector control through either a triple redundant electromechanical actuator or a high pressure hydraulic pump serving the servo actuators for engine gimbaling. The high pressure hydraulic pump is engine driven. An electric-motor-driven, low pressure pump is used to circulate hydraulic fluid for thermal conditioning and for prepositioning the engines to the neutral position for start. The hydraulic system is preferred until the extended mission time makes it difficult to achieve the thermal conditioning required to prevent the hydraulic system from becoming too cold to function properly.

The central computer of the data management subsystem provides the timing and sequence of operational commands. As shown in Figure 2-20, the commands are transmitted to the main engine gimbal actuator through the servo controller and to the reaction control jets through the sequence controller. The movement and control of

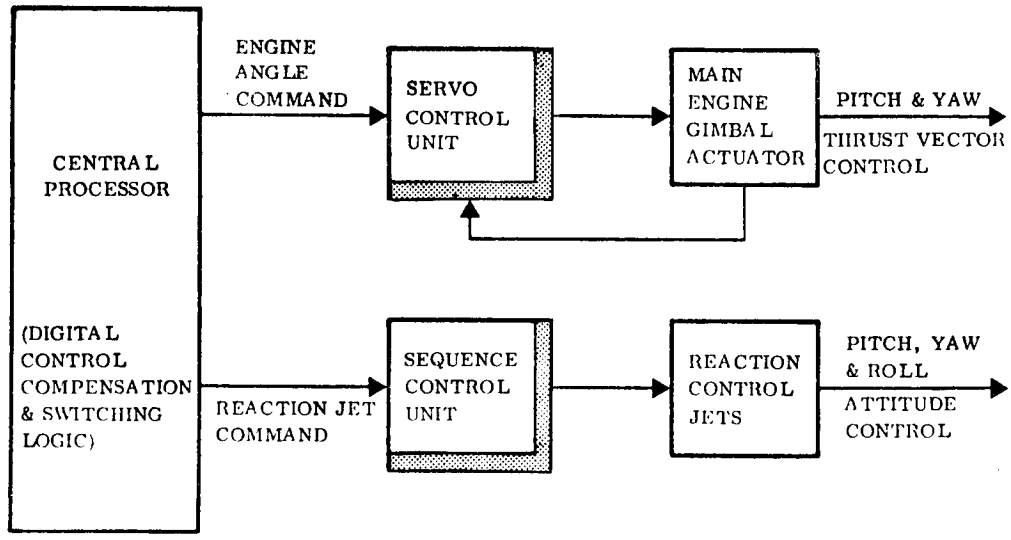

	WEIGHT (LBS)	ED&D ($M)	TFU ($M)
FLIGHT CONTROL	50	6.6	0.22

Figure 2-20. Flight Control Subsystem

the position of the main engines is accomplished by a redundant servoamplifier in the servo control unit in response to position commands obtained from the computers in the data management subsystem.

2.2.3.5 Rendezvous and Docking Subsystem. The summary of tasks related to the rendezvous and docking subsystem in Figure 2-21 shows that the laser radar is the recommended sensor for use with the payload. The use of television to assist with docking is a possibility. Only rendezvous with the Shuttle is required, implying navigation to the vicinity of the Shuttle. When the Tug is in the vicinity of the Shuttle, the Shuttle assumes active control of the relative maneuvering and docking actions.

The expected range of the laser radar is 30 n.mi. with 125 watts input power operating with a skin target on a noncooperative payload. The relationship between the range of the sensor and the altitude difference between the Tug and the payload is shown in Figure 2-22. Table 2-18 shows the effect of altitude uncertainty on the limits for sensor field of view. The guidance update techniques are capable of meeting altitude uncertainty limits to assure that the payload is within the ±15-degree field of view.

TASK 2

- SURVEYED 4 RENDEZVOUS SENSORS:
  - LASER RADAR
  - MICROWAVE RADAR
  - TELEVISION
  - RF RANGING SYSTEMS
    - TACAN
    - AROD
    - CR 100
- INCORPORATED DUAL LASER RADARS FOR REQUIRED RELIABILITY

DELETED MICROWAVE RADAR
LACKS SHORT RANGE
LIMITED SKIN TRACK RANGE
DELETED RF RANGING SYSTEMS
- EQUIVALENT OF GROUND TRANSPONDER ON TUG
- COMPLEX ANTENNA, HEAVY

TASK 3

FOR SHUTTLE RENDEZVOUS
- NAVIGATE TO VICINITY
- USE COMMUNICATIONS SUB-SYSTEM FOR RANGING
- SHUTTLE SUPPLIED BEARING INFORMATION

FOR PAYLOAD RENDEZVOUS & DOCKING
- NAVIGATE TO VICINITY WITHIN RANGE OF LASER RADAR
- USE LASER RADAR WITH OR WITHOUT TV FOR DOCKING SENSOR

Figure 2-21. Rendezvous and Docking Subsystem Task Summary

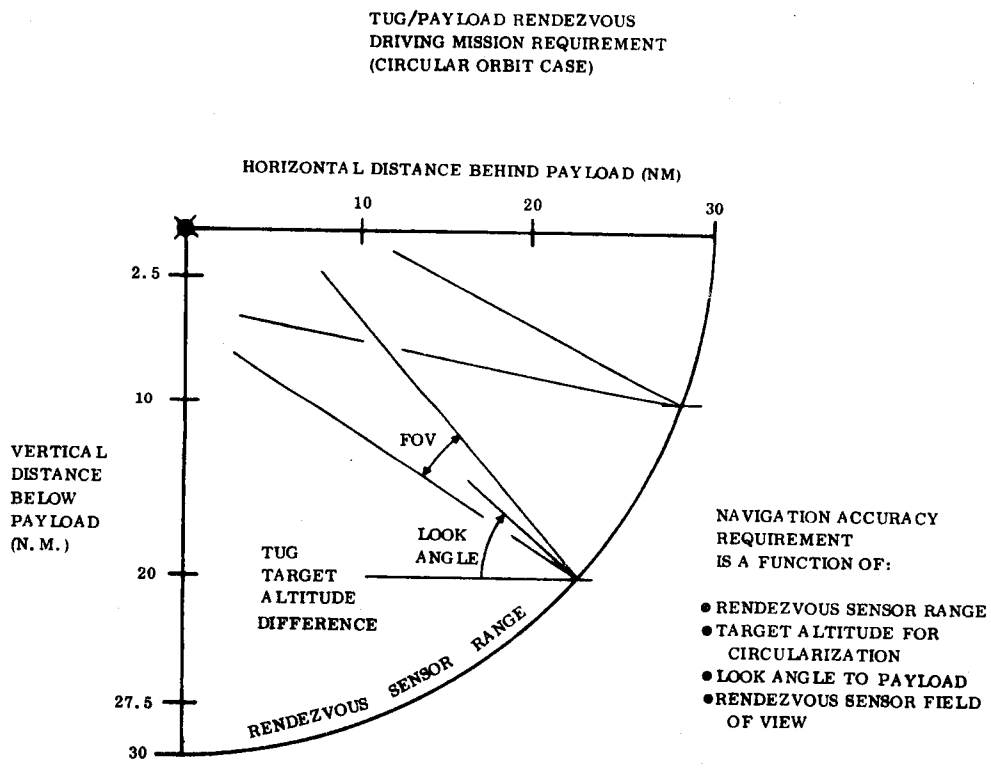

Figure 2-22. Laser Radar Range Performance

Table 2-18. Effect of Altitude Uncertainty on Payload Acquisition

TARGET ALTITUDE BELOW P/L	LOOK ANGLE	FOR PAYLOAD WITHIN ±15 DEG FOV ALTITUDE UNCERTAINTY	FOR ALTITUDE UNCERTAINTY OF ±5 N.MI. PAYLOAD WILL BE WITHIN
10 N.M.	19.4 DEG	±7.5 N.M.	±10.5 DEG FOV
15 N.M.	30 DEG	+7 N.M -6.5 N.M.	±11.5 DEG FOV
20 N.M.	41.6 DEG	+6.5 N.M. -5 N.M.	±14.5 DEG FOV

The autonomy level is related to the choice of TV for assistance with payload docking. The TV system requires ground support, which not only affects the weight of the on-board equipment but also the subsystem development costs. For astrionics system configurations that require payload rendezvous and docking, the autonomous subsystem is recommended. The rendezvous and docking subsystem characteristics are summarized in Table 2-19.

Table 2-19. Rendezvous and Docking Subsystem Summary

AUTONOMY LEVELS I & II	AUTONOMY LEVELS III & IV
AUTONOMOUS	GROUND SUPPORT
• DUAL REDUNDANT LASER RADAR	• DUAL REDUNDANT LASER RADAR • TV SYSTEM • FM TRANSMITTER & POWER AMPLIFIER

	WEIGHT (LBS)	ED&D ($M)	TFU ($M)
RENDEZVOUS & DOCKING			
Autonomous	60	8.4	1.88
Ground Support	98	10.2	2.32

2.2.3.6 Communications Subsystem. The development of the communications subsystem involved the following tasks:

- DESIGNED 2 COMMUNICATIONS SUBSYSTEMS:
  (NASA) USB COMPATIBLE } TUG/GROUND/SHUTTLE LINK
  (DOD) SGLS COMPATIBLE } TUG/PAYLOAD LINK
- INCORPORATED DUAL REDUNDANCY IN TUG/GROUND/SHUTTLE LINK.
- ESTABLISHED COMMON INTERFACES FOR INTERCHANGE OF USB AND SGLS SYSTEMS.

The main consideration in the equipment design was the transmitter power required to transmit from the Tug to the ground and to the payload. As shown in Table 2-20, DOD has missions that require a transmission range of 58,000 n.mi. at 16 kbps. This radio range requires a transmitter power of 11.0 watts. This power gives a Tug-to-Orbiter range of 110 n.mi. A standard transmitter rating is 10 watts; consequently, this was the transmitter rating recommended.

Table 2-20. DOD Communication Requirements

20,000 N.M. OR LESS	160 MISSIONS	75% OF MISSION MODEL
25,000 N.M.	28 MISSIONS	12.5% OF MISSION MODEL
58,000 N.M.	27 MISSIONS	12.5% "

	LINK	RANGE	DATA RATE	TRANSMITTER POWER
1	TUG TO GROUND	58 K.N.M.	16 KBPS	11.0 WATTS
2	TUG TO ORBITER	110 N.M.	16 KBPS	11.0 WATTS
	ORBITER TO TUG	110 N.M.	2 KBPS	ERP = 49.1 dbm
3	TUG TO PAYLOAD	40 N.M.	2 KBPS	10 WATTS
	PAYLOAD TO TUG	40 N.M.	16 KBPS	ERP = 28.4 DBM

Table 2-21 summarizes the NASA mission radio transmission requirements and capability. Due to the large ground receiving antennas, the power required for data transmission is 0.25 watts. A 10-watt transmitter is installed to provide commonality with the DOD subsystem and to provide a 35 n. mi. range from the Tug to the payload.

Table 2-21. NASA Communication Requirements

20,000 N.M. OR LESS	229 MISSIONS	97% OF MISSION MODEL
30,000 N.M.	6 "	3% "

	LINK	RANGE	DATA RATE	TRANSMITTER POWER
1	TUG TO GROUND	30 K.N.M.	16 KBPS TV	.25 WATTS **66.1 WATTS
2	TUG TO ORBITER	93.3 N.M.	16 KBPS	10 WATTS
	ORBITER TO TUG	93.3 N.M.	*8 KBPS	ERP = 46.5 dbm
3	TUG TO PAYLOAD	35 N.M.	*8 KBPS	10 WATTS
	PAYLOAD TO TUG	35 N.M.	16 KBPS	ERP = 28.3 dbm

*CODED

**TV POWER REQ. @ 20,000 N.M. = 15 WATTS

Figures 2-23 and 2-24 show the communication subsystem block diagrams, weights, and costs for the DOD and NASA missions respectively.

2.2.3.7 Electrical Power Subsystem. The tasks related to the development of the electrical power subsystem are summarized in Figure 2-25. Fuel cells were selected as the candidates for the electrical power source because of the weight of batteries needed to meet the load requirements. Batteries were reconsidered in Task 5 for the low development cost, short mission duration Program 1; however, it was found that the dry weight of the battery system exceeded the fuel cell system by over 700 lb (318 kg), resulting in a deployment payload loss of about 2000 lb (907 kg).

DOD TUG /GROUND/SHUTTLE LINK

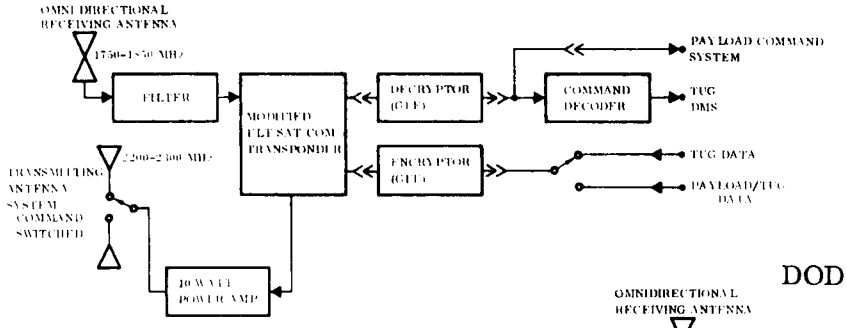

DOD TUG/PAYLOAD LINK

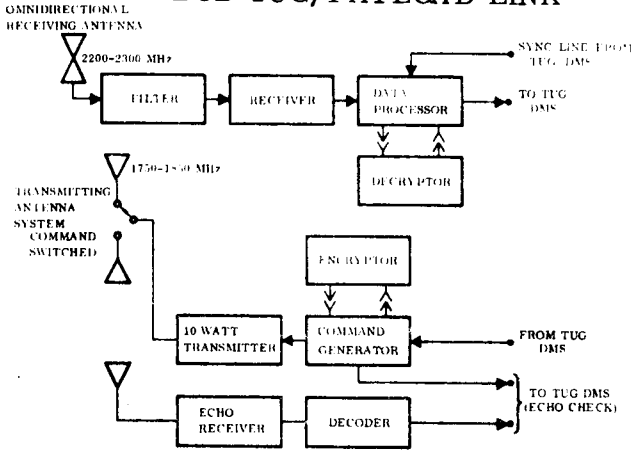

	WEIGHT (LBS)	ED&D * ($M)	TFU * ($M)
DOD SGLS	86	12.1	1.09

* TOTALS FOR BOTH USB & SGLS

Figure 2-23. DOD Communications Subsystem Characteristics

NASA TUG/GROUND/SHUTTLE LINK

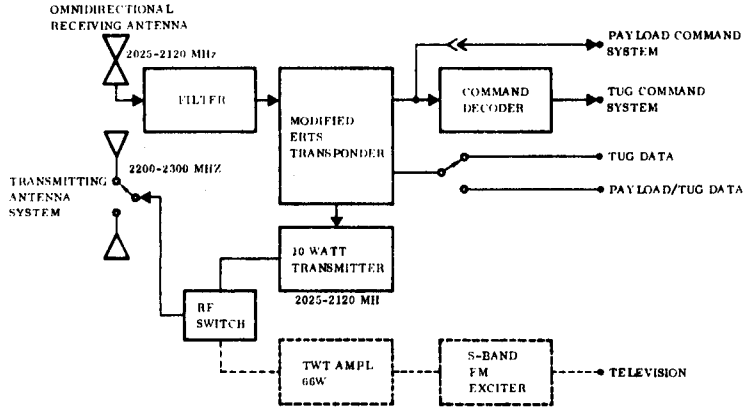

NASA TUG/PAYLOAD LINK

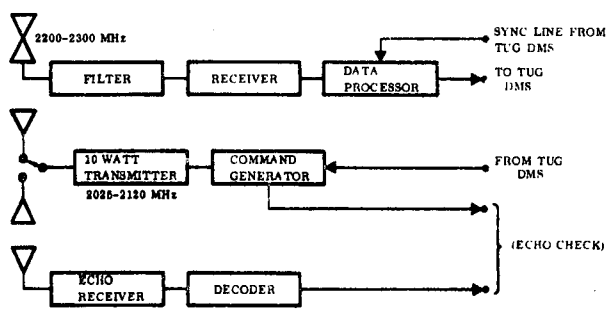

	WEIGHT (LBS)	ED&D * ($M)	TFU * ($M)
NASA USB	61	12.1	1.09

* TOTALS FOR BOTH USB & SGLS

Figure 2-24. NASA Communications Subsystem Characteristics

TASK 2

- SURVEYED 3 FUEL CELLS REPRESENTING
  - SHUTTLE TECHNOLOGY
  - ADVANCED TECHNOLOGY (LIGHTWEIGHT)
- SURVEYED 3 TYPES OF BATTERIES
  - SILVER OXIDE-ZINC
  - NICKEL CADMIUM
  - ADVANCED TECHNOLOGY-LITHIUM

TASK 3

SELECTED BOTH SHUTTLE AND ADVANCED TECHNOLOGY FUEL CELLS FOR SYSTEM CANDIDATES (PRATT & WHITNEY UNITS)

BATTERIES DELETED AS PRIME SOURCE

- HIGH POWER USAGE - 1.5 TO 2.2 KW

PRATT & WHITNEY UNITS IDENTIFIED

- BETTER PERFORMANCE AT LOW REACTANT PRESSURES
- FEWER CELLS
- LOWER HEAT REJECTION

Figure 2-25. Electrical Power Subsystem Task Summary

Figure 2-26 shows a schematic block diagram of the interface of redundant fuel cells and the costs and weights associated with two versions of fuel cells being developed.

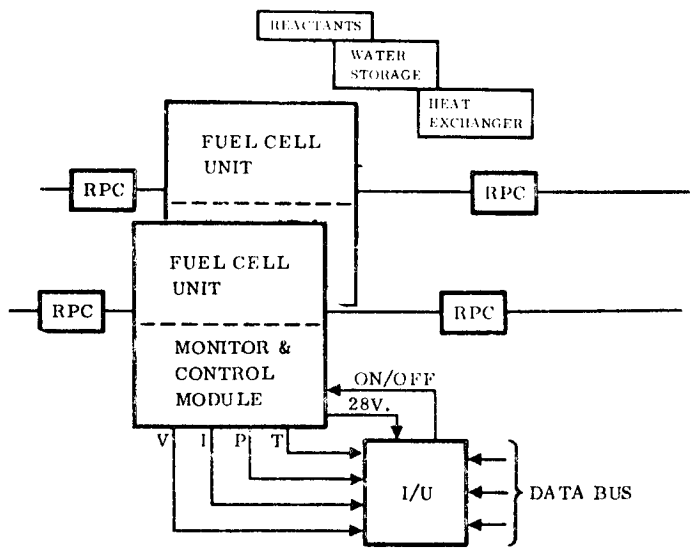

POWER	WEIGHT (LBS)	ED&D ($M)	TFU ($M)
Modified Shuttle	336	5.3	1.40
New Advanced	141	9.4	1.12

Figure 2-26. Fuel Cell Subsystem Characteristics

The modified Shuttle unit is recommended for low development cost astrionics systems, but the new advanced unit is recommended for low weight astrionics systems.

2.2.3.8 Power Distribution and Control Subsystem. The block diagram of the power distribution and control subsystem, and the corresponding weight and costs, are shown in Figure 2-27. A power control unit is installed at each end of the vehicle. The remote power controller (RPC) performs the switching function in response to commands over the data bus from the data management subsystem computers.

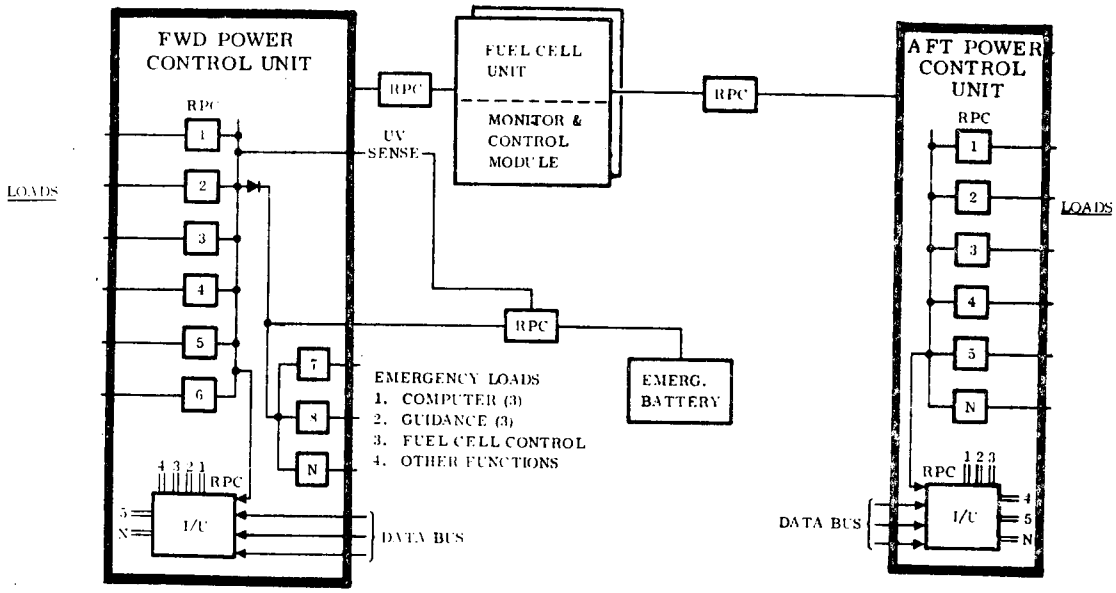

	WEIGHT (LBS)	ED&D ($M)	TFU ($M)
DISTRIBUTION & CONTROL	176	4.8	0.25

Figure 2-27. Power Distribution and Control Subsystem Characteristics

2.2.3.9 Instrumentation Subsystem. A minimum of operational flight instrumentation is provided to meet the requirements shown in Figure 2-28. The instrumentation subsystem weight and cost characteristics are also shown in Figure 2-28. There is a requirement for additional analyses in the instrumentation area to relate in more detail the maintenance and refurbishment approach to the required flight instrumentation.

2.2.4 PROPULSION

2.2.4.1 Main Propulsion. The candidate main engines considered in the Tug Systems Study were the RL-10 Cat I, RL-10 Cat II, RL-10 Cat IV, Advanced Space Engine

- REQUIREMENTS FOR SAFETY &/OR CONTROL

STRUCTURE	
TANKS	PRESSURES - TEMPS
PROPULSION	
MAIN ENGINE	TEMP-PRESS-SPEED-POSITION
PRESSURIZATION	TEMPS - POSITION
ACS	TEMPS
FILL/DRAIN	PRESS

- REQUIREMENT FOR FLIGHT DATA

PROPULSION AND THERMAL SYSTEM POST-FLIGHT EVALUATION

	WEIGHT (LBS)	ED&D ($M)	TFU ($M)
INSTRUMENTATION	60	1.0	0.24

Figure 2-28. Instrumentation Subsystem Characteristics

(ASE), and the Aerospike. Results of major trade studies and analyses conducted to establish optimum main engine and main propulsion subsystem characteristics are summarized in this section.

Thrust Level – The results of a trade study conducted to determine the optimum thrust level for the advanced Tug engines are summarized in Figures 2-29 and 2-30. Figure 2-29 shows the incremental effect of thrust level on retrieval payload for both one and two perigee burn missions. Figure 2-30 shows the effect of thrust level on retrieval and planetary payloads and thrust/weight for the ASE.

These data indicate that the peak retrieval payload for the RL-10 Cat IV and the ASE occurs for a thrust of about 14,000 lb (62,204N) with a single perigee burn and about 9000 lb (39,989N) for two perigee burns. The Aerospike performance peaks at about 20,000 lb (88,864N). Planetary performance is much more sensitive to thrust level with the peak occurring above 25,000 lb (111,080N) and falling off rapidly for thrusts below 20,000 lb (88,864N). With thrust levels above 20,000 (88,864N) the load factor exceeds 3.3g.

At the end of the subsystem analyses task the recommended thrust levels were 15,000 lb (66,684N) for the RL-10 Cat IV and 20,000 lb (88,864N) for the ASE and Aerospike. These recommendations were acceptable and used in the program definition analyses. In the configuration analyses, task 3, an ASE thrust of 15,000 lb was used.

Mixture Ratio – Mixture ratio optimization studies were made for all candidate engines. The trade is between the loss of performance due to decreasing Isp with

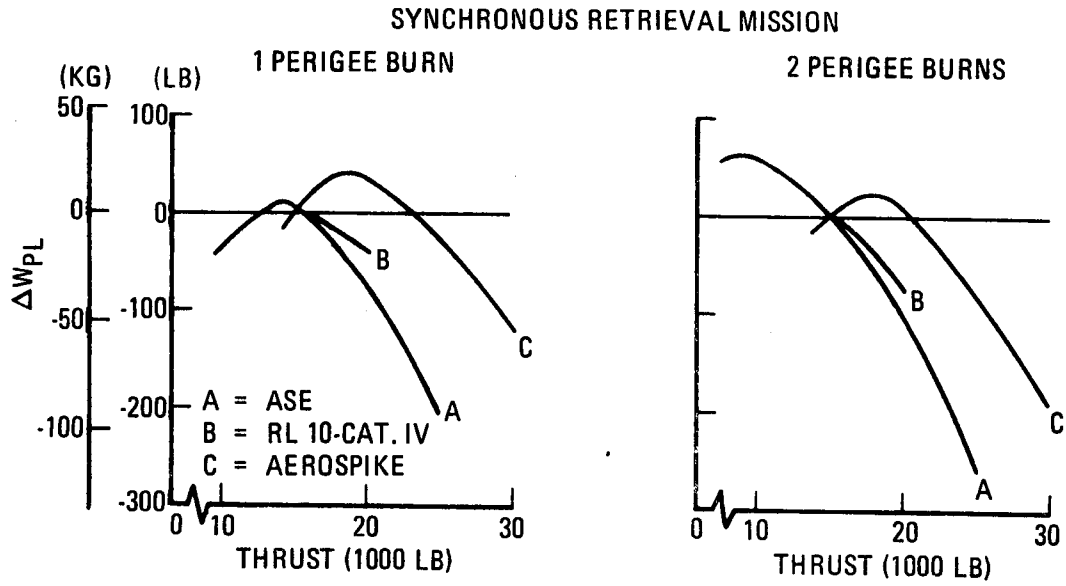

Figure 2-29. Engine Thrust Level Optimization

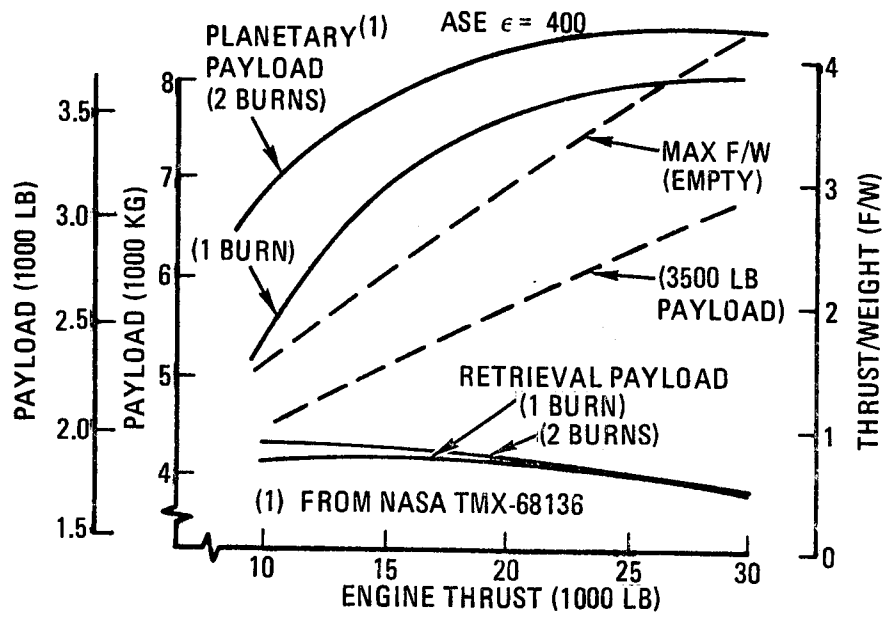

Figure 2-30. Planetary Mission Thrust Level Effects

increasing mixture ratio and the decrease in inert weight (increasing performance) and length with increasing propellant bulk density. Since the trade results are somewhat configuration dependent, the trade was conducted prior to both task 3 and 5. A typical plot of the results from the trade conducted in support of the program definition task is presented in Figure 2-31. A constraint that must be introduced when using the results is that the stage length is less than 420 in/35 ft (10.68m). Results for all the engines are presented in Table 2-22.

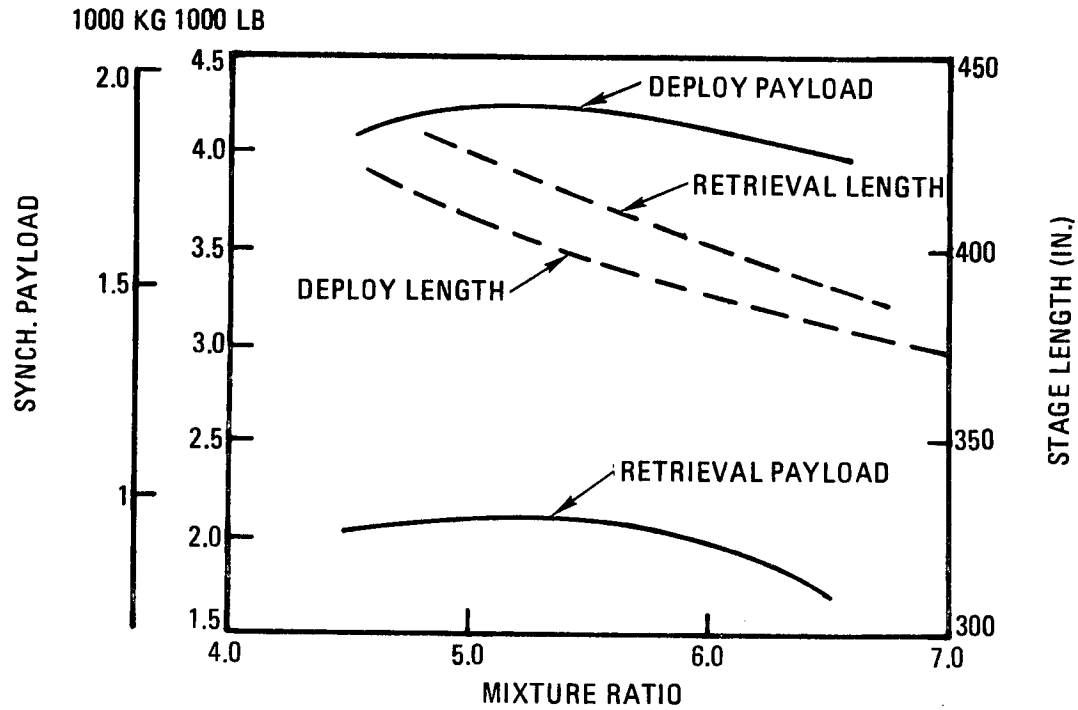

Figure 2-31. RL-10 Cat I Mixture Ratio Optimization

Table 2-22. Mixture Ratio Trade Summary

ENGINE	MIXTURE RATIO FOR PEAK ISP	MIXTURE RATIO FOR PEAK PAYLOAD	420" STAGE DEPLOY	420" STAGE RETRIEVE
CATEGORY I	<4.5	5.1	4.6	5.2
CATEGORY IIB	5.1	5.3	–	5.4
CATEGORY IV	5.3	5.3	–	4.95
ASE	5.3	6.4	–	5.1
AEROSPIKE	5.0	5.6	–	–

The data shows that peak performance is obtained at mixture ratios greater than the peak Isp value. For the Cat I and IIB engines, a mixture ratio greater than that for peak performance is required to meet the stage length constraint.

Many of the Tug missions (including deployment missions for Programs 2 and 3) require off-loading of propellant to meet the stage gross weight constraint, since the tanks are sized for the retrieval mission (no payload aboard at launch). When off-loading, maximum performance is obtained by off-loading so as to decrease MR toward or to the value for peak Isp (more LO_2 off-loaded than LH_2).

Nozzle Expansion Area Ratio – The results of area ratio trade studies for RL-10 Cat II, Cat IV, and ASE are summarized in Figure 2-32. The tradeoff in area ratio is between increasing performance (Isp) and increasing weight and nozzle size with increasing area ratio. This data shows that payload is still increasing at the highest area ratios considered for all three engines. No area ratio studies were made for Aerospike since the NASA supplied data was for the highest area ratio consistent with the cooling limits.

Tank Head Idle Mode (THIM) – All of the advanced engines have as an option the capability of operating on vehicle supplied pressure (tank head) without running the engine turbopumps, producing 1/2 to 1% thrust with relatively high Isp (≈400 sec) (3922.6N-sec/m). THIM can be used to replace the overboard dump cooldown required for Cat I engines, nearly eliminating losses due to cooldown, and can be used for small vehicle ΔV maneuvers of 3 to 100 ft/sec (0.914 to 30.5 m/sec). Table 2-23 shows the payload benefits obtained with THIM for a typical synchronous equatorial mission with six main engine burns (cooldowns) and a sum of 300 ft/sec (91.4 m/sec) in low ΔV of 50 to 200 ft/sec (15.24 to 60.96 m/sec) maneuvers. Use of THIM increases payload 462 lb (209.5 kg), 178 lb (80.74 kg) in cooldown and 284 lb (128.8 kg) maneuver ΔV savings.

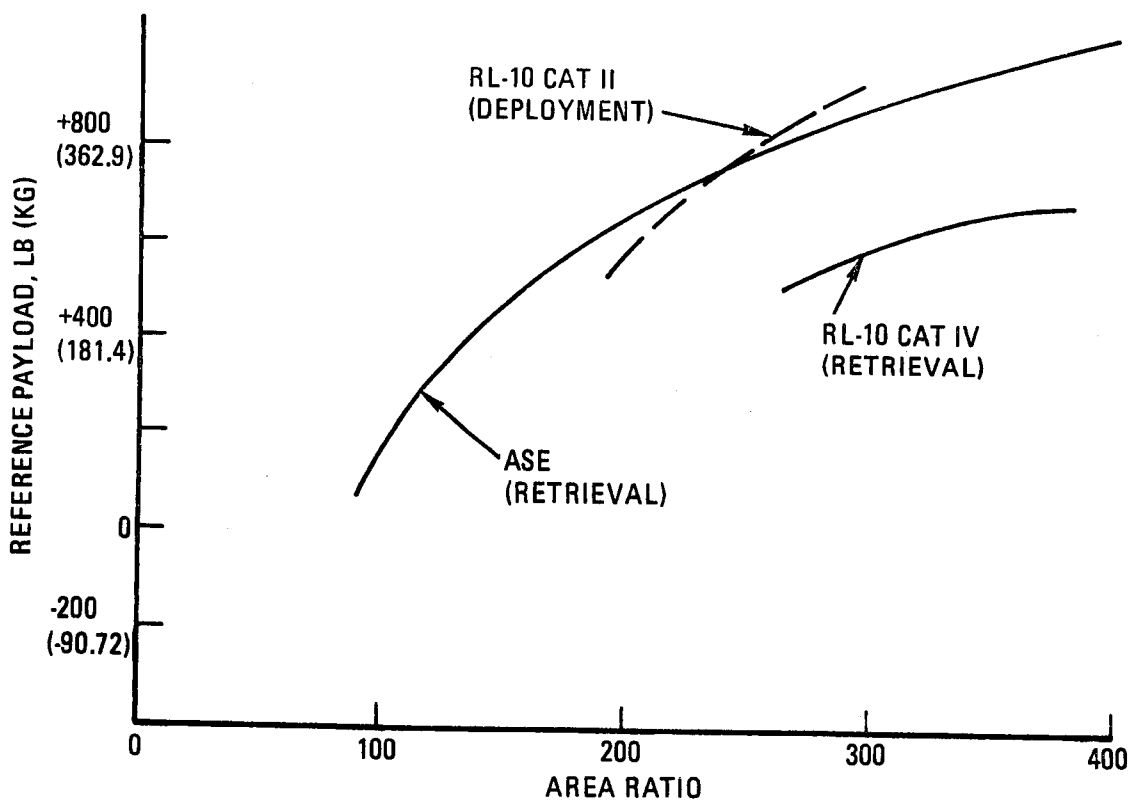

Figure 2-32. Area Ratio Optimization

Table 2-23. Payload Benefit for Adding Tank Head Idle Mode (THIM)

	NO THIM	WITH THIM
COOLDOWN/SETTLING		
MAIN PROPELLANT WEIGHT, LB (KG)	148 (67.13)	116 (52.6)
MAIN ΔV, FT/SEC (M/SEC)	0	70 (21.34)
ΔPL, LB (KG)	-89 (-40.37)	-10 (-4.53)
ACPS PROPELLANT WEIGHT, LB (KG)	125 (56.7)	0
ΔV, FT/SEC (M/SEC)	36 (10.98)	0
ΔPL, LB (KG)	-89 (-40.37)	0
LOW ΔV MANEUVERS		
SYSTEM	ACPS	MAIN THIM
PROPELLANT, LB(KG)	941 (426.83)	554 (251.3)
ΔV, FT/SEC (M/SEC)	300 (91.44)	300 (91.44)
ΔPL, LB (KG)	-517 (-234.5)	-223 (-101.15)
TOTAL ΔPL, LB (KG)	-695 (-315.25)	-233 (-105.69)
PAYLOAD BENEFIT FOR THIM, LB (KG)	–	+462 (209.56)

Two Phase Pumping (Zero Tank NPSP) — All of the advanced engines offer this option in which the engine is designed to operate in the Tug with "zero tank NPSP," i.e., the propellant tanks are self pressurized as in Centaur, but boost pumps are not required. To replace the boost pump, the engine is equipped with large diameter, low speed (except in Cat IIB LH_2 pump) inducers upstream of the main pumps, designed to pump mixed-phase propellants with up to 40% vapor (typically) by volume.

Boost pumps and two-phase pumping system weights are compared in Table 2-24. With self pressurization, tank pressure equals the propellant vapor pressure, which decays during engine firings due to boiloff into the increasing ullage volume. To meet the engine minimum inlet pressure constraint of 16.0 psia (10.93 N/cm^2) the two-phase system tank pressures must be higher than for the boost pump system, where the 16.0 psia (10.93 N/cm^2) is supplied in part by the boost pumps. The increase in engine inducer, tank, feed line, and residual weights for the two phase system is only in part off-set by the boost pump drive and power supply, resulting in a 111 lb (50.35 kg) advantage for the latter. Since the boost pump system is lighter and is state-of-the-art (used on all Centaurs) while a complete two-phase system (vehicle plus engine) has never been demonstrated, the two-phase option was not recommended for Tug.

Table 2-24. Comparison of Boost Pump and Two-Phase Pumping Systems

	BOOST PUMPS	TWO-PHASE PUMPING
MINIMUM ENGINE INLET PRESSURE (PSIA)	16.0/16.0	16.0/16.0
MIN. INITIAL P_V (PSIA)	16.0/16.0	22/17.5
TANK DESIGN PRESSURE (PSIA)	20.0/20.0	26/21.5
FEED LINE DIA. (IN.)	2.5/2.5	3.2/4.6
WEIGHT PENALTY (LB)		
RESIDUALS H_2/O_2	0	40/17
TANK		
H_2	0	110
O_2	0	13
FEED LINES	0	36
BOOST PUMP SYSTEM		
PUMPS & MOTORS	25	0
INVERTERS	55	0
BATTERY	48	0
ENGINE (INDUCERS)	0	23
TOTAL, LB (KG)	128 (58.06)	239 (108.41)
ΔWEIGHT	0	+111 (50.35)
ADVANCED TECHNOLOGY REQUIREMENTS	NO	YES

Propellant Management – Analyses were made to compare open and closed loop propellant utilization (PU) control for a typical eight-burn Tug mission. Results for the open loop case, summarized in Table 2-25, show that with optimum fuel biasing, 3σ residuals are 316 lb (143 kg) or 0.56% of loaded propellant. Use of a closed loop PU system of 0.25% accuracy (residuals 0.25% of loaded propellant) would reduce 3σ residuals 175 lb (79.38 kg) and increase deployment payload 845 lb (383.3 kg) and retrieval payload 500 lb (226.8 kg). Atlas and Centaur closed loop PU systems are currently achieving accuracies substantially better than the assumed 0.25%. Continuous propellant mass sensing probes supplemented by overfill and depletion point sensors are required for propellant loading, since different missions require widely varying degrees of off-loading, some as low as 15% capacity (85% off-loaded). These probes are required for PLIS. The Tug has an onboard computer and the engine mixture ratio control capability; therefore, the essential elements of a closed loop PU system are available, requiring only the addition of software in the computer for implementation. Thus, closed loop PU control was selected for all Tugs.

Table 2-25. Residual Analysis for Open Loop Propellant Management

			EQUIVALENT LO_2 ERROR, LB (KG)
ENGINE MIXTURE RATIO			
FULL THRUST OPERATION			± 950 (430.92)
IDLE MODE OPERATION			± 49 (22.23)
PROPELLANT TANKING			± 537 (243.5)
VEHICLE BOILOFF			± 126 (57.15)
ENGINE CHILL USE			± 100 (45.36)
TANK PRESSURE USE			± 34 (15.42)
	RSS TOTAL	=	± 1105 EQ. LO_2 (501.23)
	EQ. FUEL	=	± 184 (83.46)
	FUEL BIAS	=	132 (59.86)
	3σ RESIDUAL	=	316 (143.34) [0.56%]

Boost Pumps Versus Pressurization Trade Study – A trade study was made to compare performance of Tugs using boost pumps and gaseous pressurization systems. Basic system configuration assumptions were:

a. Boost Pumps – A state-of-the-art system (similar to S-II and S-IVB recirculation systems) using electric-motor-driven pumps supplied with ac power from a battery and inverters.

b. Pressurization – An advanced state-of-the-art system, the lowest in weight of all pressurization systems for the multiple-start Tug mission. Helium stored in high-pressure bottles in the LH_2 tanks is preheated in a helium/water heat exchanger for LH_2 tank ullage prepressurization. After engine start, the LH_2 tank is pressurized autogenously with GH_2 bled from the engine. Cryogenic helium is injected as bubbles into the bottom of the LO_2 tank, causing LO_2 boiloff (to obtain proper partial pressure balance in the bubbles), so that the tank is pressurized by a helium/GO_2 mixture. A regulation band of ±0.5 psi (0.342 N/cm^2) was assumed.

For both the boost pump and pressurization systems, a relief valve with a band of ±1.0 psi (0.6835 N/cm^2) was assumed with the bottom of the band at the highest tank operation pressure.

Results of the study are summarized in Table 2-26. The study was performed for two different vehicles, one using a Cat I and one the Cat IIB RL-10 engine. The Cat IIB engine has a lower prestart pump inlet pressure requirement, a major driver in

Table 2-26. Summary of Boost Pump Versus Helium/Autogenous Pressurization Trade Study

	CATEGORY I ENGINE				CATEGORY IIB ENGINE			
	BOOST PUMPS		PRESSURIZATION		BOOST PUMPS		PRESSURIZATION	
	LO_2	LH_2	LO_2	LH_2	LO_2	LH_2	LO_2	LH_2
ENGINE REQUIREMENTS								
NOMINAL NPSP (PSI)	3.63	0.43	3.63	0.43	3.63	0.43	3.63	0.43
AT FLOW (LB/SEC)	28.15	5.63	28.15	5.63	28.15	5.63	28.15	5.63
MINIMUM PRESTART PRESS. (PSIA)	21.0	22.0	21.0	22.0	16.0	16.0	16.0	16.0
AT FLOW (LB/SEC)	1.2	1.0	1.2	1.0	1.2	1.0	1.2	1.0
VEHICLE DATA								
LOCKUP TANK PRESSURE (PSIA)	16.0	16.0	18.0	28.0	16.0	16.0	16.0	17.3
MAX. OPERATING PRESSURE (PSIA)	16.2	16.0	22.0	30.0	16.2	16.0	17.5	19.0
MAX. DESIGN PRESSURE (PSIA)	18.2	18.0	25.0	33.0	18.2	18.0	20.5	22.0
FEED LINE DIA. (IN.)	2.5	2.5	3.5	3.5	2.5	2.5	3.5	3.5
WEIGHT COMPARISON (LB)								
GASEOUS RESIDUALS	127	181	224	235	149	196	220	178
BOOST PUMP SYSTEM								
BOOST PUMPS	12	13			12	13		
BATTERIES	50				50			
INVERTERS	55				55			
SUMP	10	10			10	10		
HELIUM SYSTEM								
HELIUM								
BOTTLES			15				13	
LINES & VALVES			19				17	
HEAT EXCHANGER			36.5				36.5	
INSTALLATION			26				0	
FEED LINES			19.3				13.3	
TANK WEIGHT	20	40	33	49	20	40	33	49
HELIUM RESIDUAL	0	0	55	276.5	0	0	18.6	73.9
START BASKET	–	–	1.9		–	–	1.9	
TOTAL, LB (KG)	–	–	–	–	14	26	–	–
ΔWEIGHT, LB (KG)	518 (235)		989 (448.6)		595 (269.9)		654 (296.7)	
ΔPAYLOAD (DEPLOYMENT), LB (KG)	0		+472 (214.1)		0		+59 (26.8)	
	0		-1273 (577.4)		0		-159.3 (72.3)	

determining tank pressure and boost pump head rise requirements. Feedline diameters used are 2.5 in. (6.35 cm) diameter for boost pumps, for Centaur commonality, and 3.5 in. (8.89 cm) diameter for pressurization, the optimum (minimum weight) size. It can be seen that the boost pump system is the lowest in weight for both the Cat I and the Cat IIB comparisons. The boost pump system was selected for a Tug vehicle for:

a. Minimum weight – lowest in weight and highest in performance of all systems considered or envisioned.

b. Mission insensitive – No mission-to-mission changes are required. Additional engine firings would require additional helium system capacity with pressurization.

c. A state-of-the-art proven system – used on Centaur (similar pumps used on Saturn S-IVB and S-II).

d. Cost – Although program cost trades were not made, it is anticipated that the boost pump system costs will be lowest. Vendor ROM DDT&E cost indicates in any case that cost is not a major driver in the selection.

2.2.4.2 Attitude Control Propulsion System (ACPS). The ACPS is required for Tug attitude control and translation plus rotation for rendezvous and docking. Optional requirements include -X axis ΔV in increments up to 50 ft/sec (153 m/sec), and axial thrust for propellant settling prior to main engine burns.

Attitude, rate, and acceleration criteria for rotational control during coast phases and docking are per the Tug System Studies Data Package. Acceleration rates assumed as minimum levels provide ample control capability in all axes and allow turnaround of the Tug in three minutes after payload separation on a planetary mission to minimize payload penalties due to delay in post-separation engine burn.

The results of a trade study between various ACPS candidates is summarized below.

ACPS Candidates – Candidate auxiliary propulsion systems for Tug include N_2H_4 monopropellant, a typical storable amine bipropellant (N_2O_4/MMH), and a cryogenic O_2/H_2 system.

All systems are designed to maintain operational capability with failure of any single component and provide safe conditions with two component failures. Tankage and feed lines are excluded from the fail operational/fail safe criteria.

Impulse and propellant requirements for a synchronous equatorial mission with a Cat I RL-10, which were used in the comparison, are presented in Table 2-27.

For all system candidates, four modules of four thrusters each are required. Isolation valves allow shutoff of individual thrusters in case of a failed open engine valve to prevent depletion of propellant. Module isolation valves are also provided to meet the fail safe criteria and prevent loss of control or propellant depletion in case of a dual failure of engine valve and engine isolation valve. Rotational control can still be maintained with isolation of a complete module though docking with a payload cannot be accomplished.

Table 2-27. ACPS Impulse and Propellant Requirements

	IMPULSE	PROPELLANT REQUIREMENTS, LB (KG)		
	LB/SEC (N/SEC)	N_2H_4	N_2O_4/MMH	O_2/H_2
ATTITUDE CONTROL	36,800 (160,000)	170 (770)	141 (638)	103 (466)
AXIAL ΔV	198,000 (886,000)	862 (3900)	700 (3170)	555 (2510)
PROPELLANT SETTLING	34,800 (156,000)	151 (684)	123 (557)	95 (431)
GRAND TOTAL	269,600 (1,202,000)	1183 (5354)	964 (4365)	753 (3407)

The N_2H_4 APS utilizes a qualified propellant tank available from the USAF P-95 satellite program. The tank has a 200 lb (90.5 kg) propellant capacity and has a 6Al-4V-Ti shell with a EPT-10 positive expulsion diaphragm.

The pressurization subsystem utilizes two 15.5 in. (39.4 cm) inside diameter storage spheres manufactured by PSI, Inc. and qualified for manned spaceflight application. The bottles are charged to 3500 psig (2390 N/cm^2) during prelaunch operations from a ground source through a Tug/orbiter disconnect and isolation valve.

Dual pressure regulators with primary and secondary operating levels in each regulator are utilized to allow failure of a regulator in the closed or open position with one leg remaining operative. Isolation valves are provided to allow shutoff of a failed regulator. Modifications of pressure regulators manufactured by Fairchild Stratos Corp. and used on the Apollo command and service module RCS are utilized for minimum development cost.

The second type of APS considered, N_2H_4/MMH storable bipropellant, has individual helium pressurant sources for each propellant based on previous experience with storable propellants. Bellows tankage was selected for the bipropellant system for maximum confidence in providing reliable operation for the 40 to 50 expulsion cycles required to meet ground checkout and flight requirements.

An alternative tankage type utilizes a capillary screen retention system, which is attractive from the viewpoint of minimum maintenance and low susceptibility to mechanical failure or damage; however, these have not been flight proven for use with ACPS engines where pulsating flow over a wide frequency range occurs. Once feasibility for ACPS use is proven, the screen device would be recommended over bellows tankage.

The cryogenic O_2/H_2 APS considered is similar to that evaluated in previous point design Tug studies; it is a system utilizing liquid O_2 and H_2, which is pumped to a high pressure, thermally conditioned in a heat exchanger, and provided in gaseous form to the APS thrusters. The O_2 and H_2 propellant storage is contained within the main propellant tanks and uses a screen-type propellant acquisition device to provide liquid propellants to the system turbopumps under zero-g conditions during coast phases. The storage containers, which are refilled during main engine burns, are sized to meet the maximum consumption during the longest period between main engine burns.

The propellant conditioning loop includes zero NPSP centrifugal pumps driven by hot gas turbines operating on the exhaust products of an O_2/H_2 gas generator. The turbine exhaust is ducted to a thermal conditioner where the liquid propellants from the turbopump discharge are gasified and heated. The gaseous propellants flow into an accumulator where they are stored and used on demand by thrusters or for optional fuel cell and pressurant requirements.

ACPS Weights – Table 2-28 presents weight summaries for the ACPS configurations considered at the impulse requirements given in Table 2-27. Figure 2-33 presents the variation of system weight as a function of total impulse.

Table 2-28. ACPS Weight Summary

	N_2H_4 APS		N_2O_4/MMH APS		O_2/H_2 APS	
	LB	(KG)	LB	(KG)	LB	(KG)
PRESSURIZATION & PURGE	120	(54.5)	131	(59.5)	–	–
PROPELLANT STORAGE	149	(67.5)	239	(108)	58	(26.3)
PROPELLANT CONDITIONING (O_2/H_2APS)	–	–	–	–	174	(78.8)
FEED & FILL	34	(15.4)	107	(48.5)	91	(41.2)
ENGINE MODULES & THERMAL PROTECTION	87	(39.4)	94	(42.6)	300	(136)
USABLE PROPELLANT	1183	(547)	964	(447)	753	(341)
RESIDUAL PROPELLANT	18	(8.2)	14	(6.3)	28	(12.7)
USABLE HELIUM	3	(1.4	2	(0.9)	–	
RESIDUAL HELIUM	1	(0.5)	0.7	(0.3)	–	
TOTAL INERT WEIGHT	409	(185.5)	588	(266)	651	(295)
TOTAL WET WEIGHT	1595	(734)	1554	(705)	1404	(637)

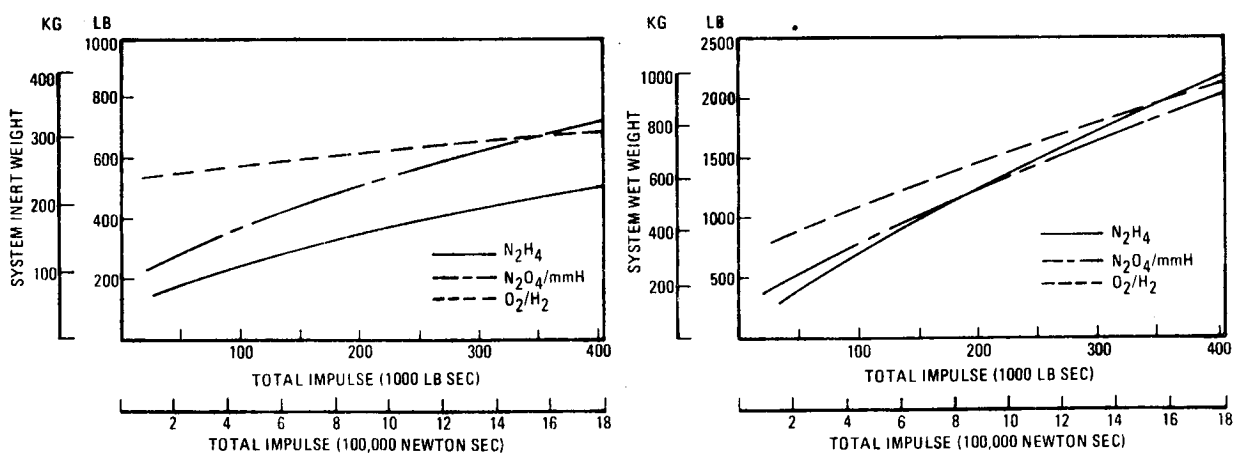

Figure 2-33. ACPS Weight Versus Total Impulse

Comparison of monopropellant and bipropellant inert weights show the monopropellant lighter over the range of total impulse considered. When wet weight is considered, little difference between the two is seen, with the bipropellant becoming lighter weight at approximately 185,000 lb/sec (822,917 N/sec) total impulse. The O_2/H_2 system is the heaviest of the three candidates for both inert and total weight over nearly the entire impulse range.

Other factors influencing the trade between candidate ACPS configurations are summarized in Table 2-29.

Table 2-29. ACPS Comparison Summary

	N_2H_4	N_2O_4/MMH	O_2/H_2
SYSTEM DEVELOPMENT COST	LOWEST	+75%	+425%
ENGINE DEVELOPMENT COST	LOWEST	+45%	HIGHEST
COMPLEXITY	55 COMPONENTS	92 COMPONENTS	COMPLEX TURBOMACHINERY
RELIABILITY	HIGHEST	30% LOWER	55% LOWER
SAFETY	BEST-ONE PROPELLANT	LOWER-TWO PROPELLANTS	LOWEST-HOT GAS SYSTEMS
MAINTAINABILITY	SIMPLEST SYSTEM		COMPLEX COMPONENTS
THERMAL CONTROL	HEATERS REQUIRED	HEATERS REQUIRED	
REUSABILITY	CATALYST LIMITATIONS	CORROSION & SLUDGING	CLEAN PROPELLANT
DEVELOPMENT RISK	MINIMUM	LOW	HIGH – TURBOMACHINERY AND THERMAL CYCLIC PROBLEMS
PAYLOAD CONTAMINATION	NEGLIGIBLE	SIGNIFICANT PROBLEM	NEGLIGIBLE
DEVELOPED HDWR. AVAILABLE	YES	YES	NO

ACPS Selection – The O_2/H_2 ACPS was eliminated as a viable candidate early in the Tug study due to an extremely high development cost and risk compared to monopropellant or bipropellant systems and the fact that it offered no performance improvement.

An evaluation of costs for development of the ACPS shows systems costs, exclusive of engine development, to be 75% higher for bipropellant than for monopropellant. Considering engine development, monopropellant engines are 45% lower cost. A potential cost reduction for bipropellant ACPS could be achieved by use of the vernier bipropellant RCS engine planned for the Orbiter. Even considering this possibility, the cost of developing the bipropellant system and adapting the Orbiter engine is approximately 30% higher than the monopropellant system plus engine development cost.

Other factors considered including potential for payload contamination, reliability, and the various operational and reuse aspects also favor the monopropellant system.

It is concluded that the N_2H_4 monopropellant ACPS is the system type best suited to Tug application with the primary driver being lower development cost. A schematic of this ACPS is shown in Figure 2-34.

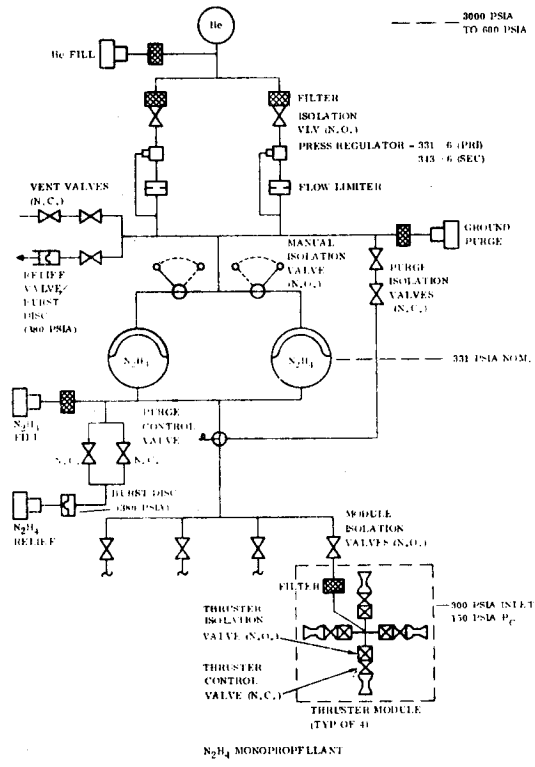

Figure 2-34. N_2H_4 ACPS Schematic

2.2.5 ORBITER AND PAYLOAD INTERFACE. The subject of Tug/Orbiter interface is particularly important since the Orbiter is currently under development. For this reason the subject became a special emphasis area and is discussed in detail in Section 2.5.3. This section is limited to summaries of the options which were considered for implementing the physical interfaces between the Tug and the Orbiter and payload.

2.2.5.1 Orbiter Interface. Figure 2-35 summarizes the assessment of candidate options for the functional mechanical interfaces.

In addition to the subsystem option assessment, trade studies were also conducted to select a preferred location for the support adapter pivot. Figure 2-36 summarizes the evolution of the final pivot location. With the initial system there was a 6.0-inch gap between the engine and payload envelope. (The payload/envelope gap refers to the front-end gap required between the payload and the envelope to permit rotation of a 15-foot-diameter payload.) It was found that the initial pivot location resulted in a 4.56 inch envelope violation by the engine during rotation. This was eliminated by

moving the pivot forward as shown in the improved version. The final version uses the new baseline payload attachment locations and combines the pivot with the X and Z attachment points.

2.2.5.2 Payload Interface. Figure 2-37 presents the Tug/payload latching and docking options which were considered.

• FUNCTION • OPTION		SELECTED	COMMENTS
• DEPLOYMENT • LINEAR • ROTARY	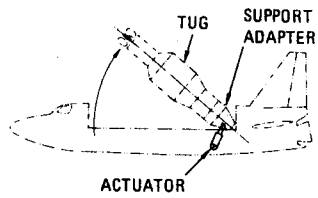	√	• SIMPLE INTEGRATION • REQUIRES ADDITIONAL SUPPORTS ON ORBITER • DIFFICULT TO INTEGRATE INTO LOAD-CARRYING PIVOT
• LATCHING • PIN	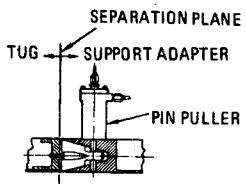		• SIMPLE • LIGHT • SENSITIVE TO STRUCTURAL MISALIGNMENT • EMERGENCY MANUAL OPERATION DIFFICULT
• HOOK	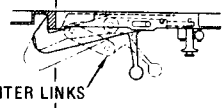	√	• MEDIUM WEIGHT • LESS SENSITIVE TO STRUCTURAL MISALIGNMENT DUE TO CINCH-DOWN CAPABILITY • BEST ADAPTABILITY TO EMERGENCY MANUAL OPERATION
• TURNBOLT	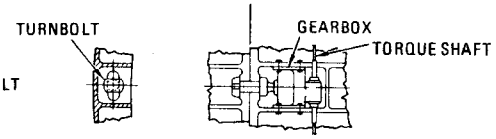		• HEAVY • REQUIRES COMPLEX DRIVE SYSTEM WITH HIGH-RATIO REDUCTION GEARBOXES AND HIGH-SPEED SHAFTING • FURTHER COMPLEXITY REQUIRED TO PERMIT EMERGENCY MANUAL OPERATION

• DOCKING
• ROLLER/LEVER
	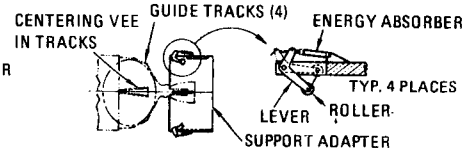		• MAY IMPROVE PERFORMANCE (SHORTER BODY, LONGER ADAPTER)
			• REQUIRES TANK INTERFACE:
			  • INCREASES TANK WEIGHT
			  • APPLIES LOAD TO TANK MEMBRANE
			  • HIGH DAMAGE RISK FOR OUT-OF-SPEC DOCKING CHARACTERISTICS

• PROBE/DROGUE	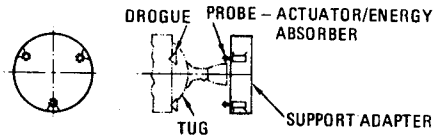	√	• ELIMINATES TANK INTERFACE • GOOD CAPABILITY TO CORRECT ANGULAR RATE/MISALIGNMENT • EASILY ACCOMMODATED BY AVAILABLE TANK/BODY RADIAL GAP
• ENGINE BELL	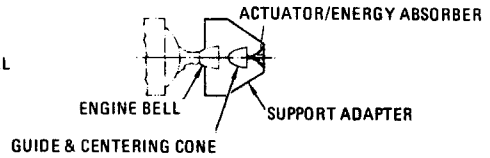		• REQUIRES AUXILIARY ADAPTER STRUCTURE TO SUPPORT DOCKING DEVICE • MAY MOVE ENGINE EXIT-PLANE FORWARD • MUST BE DEVELOPED WITH ENGINE • LOW CAPABILITY TO CORRECT ANGULAR RATE/MISALIGNMENT • NO WEIGHT PENALTY ON TUG

Figure 2-35. Tug/Orbiter Mechanical Interface Options

CHARACTERISTIC	ENVELOPE VIOLATION		
CONFIGURATION	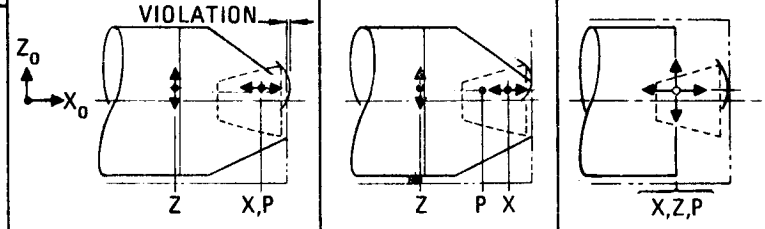		
	INITIAL	IMPROVED	FINAL
ORBITER SUPPORT SYSTEM	JSC 07700	JSC 07700	ROCKWELL
SPECIFIC SUPPORT CONCEPT	GDCA 6-PT	GDCA 6-PT	NASA 4-PT
COORDINATES: (X_0/Z_0)			
X – AXIAL REACTIONS	1274/414	1274/414	1246/414
Z – AFT PITCH REACTIONS	1135/414	1135/414	1246/414
P – PIVOT	1274/414	1251/414	1246/414
ENGINE EXIT DIAMETER	76.00	76.00	68.00
ENGINE/ENVELOPE GAP	6.00	6.00	4.08
ENVELOPE VIOLATION	4.56	0.00	0.00
PAYLOAD/ENVELOPE GAP	7.56	7.82	7.73
LENGTH: TUG + PAYLOAD	706.44	706.18	708.19

Figure 2-36. Pivot Location Evolution

• FUNCTION • OPTION		COMMENTS	SELECTED
• LATCHING • PIN	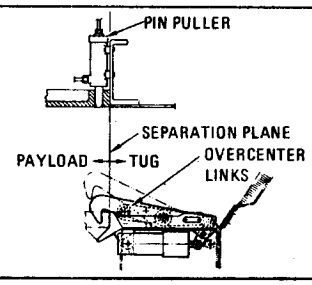	• SIMPLE • LIGHT • ACCOMMODATES EXISTING PYRO DEVICES FOR DEPLOY • SENSITIVE TO STRUCTURAL MISALIGNMENT	✓
• HOOK		• HEAVIER • MORE COMPLICATED MECHANISM • LESS SENSITIVE TO STRUCTURAL MISALIGNMENT DUE TO CINCH-DOWN CAPABILITY	
• DOCKING • SQUARE FRAME	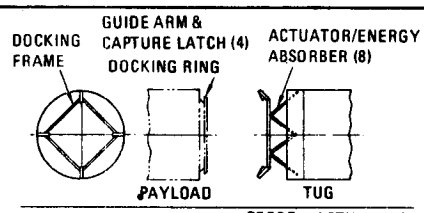	• EXCELLENT ALIGNMENT, CAPTURE, ENERGY ATTENUATION • REQUIRES MORE FUNCTIONAL COMPONENTS • ADAPTABLE TO VARIATION IN PAYLOAD SIZE • CAN ACCOMMODATE SPINNING PAYLOADS	✓
• PROBE & DROGUE	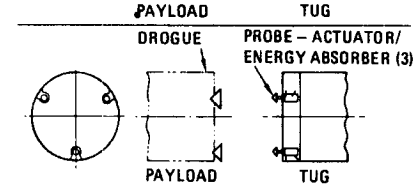	• MAY BE LIGHTER • RELOCATION REQUIRED TO ACCOMMODATE PAYLOAD SIZE VARIATION • DIFFICULT TO ADAPT TO SPINNING PAYLOADS	

Figure 2-37. Tug/Payload Latching and Docking Options

2.2.6 KICK STAGES. During the configuration analysis phase (Task 3) it was found that a kick stage (velocity package) was required to permit accomplishing a few high energy missions without expending the Tug. The kick stage selected during this phase, and used with all configurations as required, was the Burner II with a gross weight of 1800 lb and 1440 lb of propellant.

In the program definition phase (Task 5) a different mission model was used; however, there was still a requirement for a kick stage when launching NASA planetary payloads numbers 19 and 20 with the Tug reusable. In addition, a requirement limiting the payload acceleration to 3.6g was established, which eliminated the current technology Burner II as a candidate. A trade study, summarized in Section 2.5.2.1, resulted in the selection of two sizes of kick stages; a stage with a 2560 lb (1161 kg) gross weight for program option 1 and 3 Tugs and a 1600 lb (726 kg) gross weight stage for program option 2.

The 2560 lb (1161 kg) kick stage shown in Figure 2-38 is spin stabilized. It consists of a solid rocket motor, a payload adapter and separation system, despin rockets, and the necessary batteries and sequencing equipment for ignition, despin, and separation. The avionics equipment is located in the payload adapter and the despin rockets located aft on the stage to minimize plume impingement. The Thiokol TE-M-364-11 motor case is used with a slow burning grain to limit g-loads applied to the payload to less than 3.6g.

Preburn aiming and spin-up is accomplished by the Tug; the kick stage has no guidance system. Injection errors are cancelled by mid-course corrections performed by the payload. Except for the low thrust rocket motor, the stage hardware and function is similar to the Delta third stage and is typical of the present state of the art.

The 1600 lb (1726 kg) kick stage is shown in Figure 2-39. This stage is a shorter, lighter version of the 2560 lb (1161 kg) stage. The larger rocket motor is replaced with a smaller version of the same motor, but all other equipment is identical. The stage is sized around the Thiokol TE-M-364-2 motor case. This motor has a spherical case, while the -11 motor has a short cylindrical section added to increase propellant capacity. Again, a slow burning grain is used to limit thrust level.

Figure 2-40 shows the installation of NASA payloads 19 and 20 in the Shuttle payload bay. The payload is attached directly to the Tug by a payload adapter and separation system. The kick stage is supported at the base of the payload. The Tug's spin-up kit is used to provide payload spin-up.

MASS PROPERTIES		
TOTAL WEIGHT	2560 LB	(1161 KG)
PROPELLANT WEIGHT	2300 LB	(1043 KG)
MASS FRACTION	0.9	
SIZE		
LENGTH	74.4 IN.	(189 CM)
DIAMETER	38.0 IN.	(96.5 CM)
PROPULSION	SOLID	
THRUST	4800 LB MAX.	(21,351 NEWTON)
ATTITUDE CONTROL	SPIN STABILIZED	
AVIONICS		
POWER	BATTERY	
SEQUENCER	EVENT TIMER	
TELEMETRY	NONE	
GUIDANCE	NONE	
DESPIN	DESPIN ROCKETS	

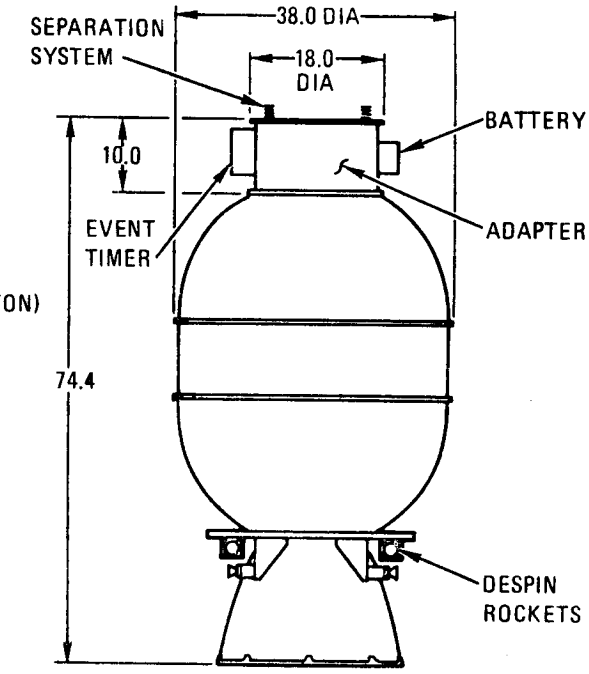

Figure 2-38. 2560 lb (1161 kg) Kick Stage

CHARACTERISTICS		
MASS PROPERTIES		
TOTAL WEIGHT	1600 LB	(726 KG)
PROPELLANT WEIGHT	1440 LB	(653 KG)
MASS FRACTION	0.9	
SIZE		
LENGTH	62.5 IN.	(159 CM)
DIAMETER	38.0 IN.	(96.5 CM)
PROPULSION	SOLID	
THRUST	2940 LB MAX.	(13,078 NEWTON)
ATTITUDE CONTROL	SPIN STABILIZED	
AVIONICS		
POWER	BATTERY	
SEQUENCER	EVENT TIMER	
TELEMETRY	NONE	
GUIDANCE	NONE	
DESPIN	DESPIN ROCKETS	

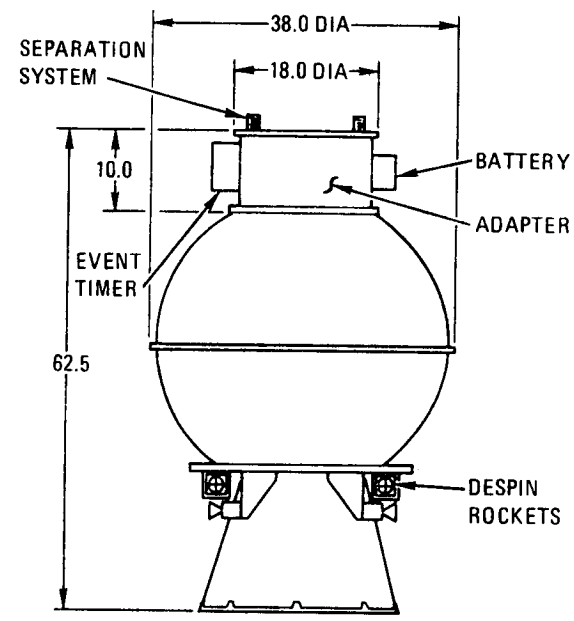

Figure 2-39. 1600 lb (726 kg) Kick Stage

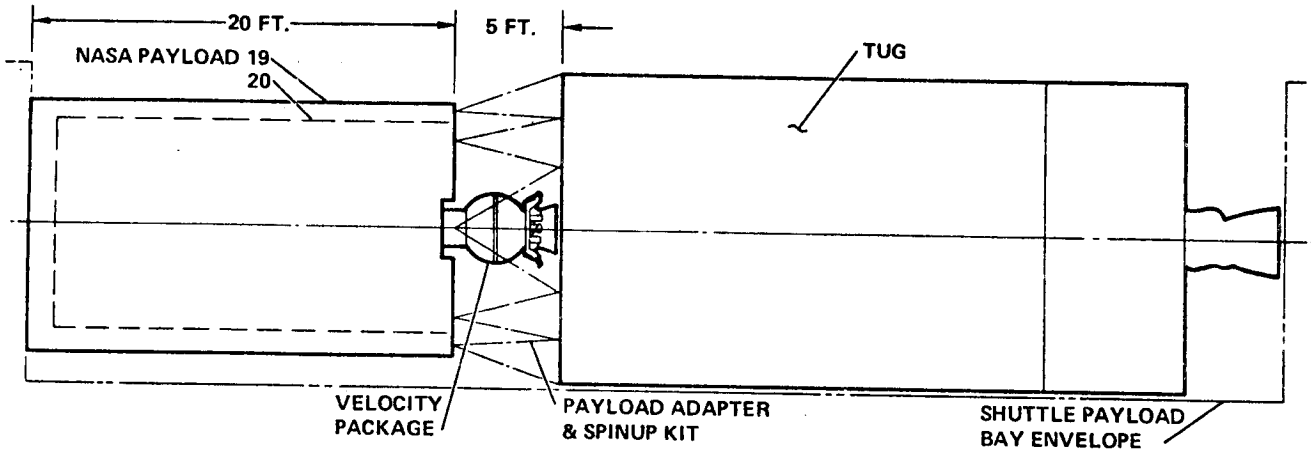

Figure 2-40. Kick Stage Installation

Payload 19 is the larger of the two payloads. When placed at the forward end of the payload bay, the 20 ft (6.096m) payload length allows 5 ft (1.524m) kick stage installation between the payload and Tug assuming the Tug takes the full 35 ft (10.7m). This length is inadequate for the 2560 lb (1161 kg) package and barely adequate for the 1600 lb (726 kg) package. To use the -11 case and minimize motor development on Programs 1 and 3, it is necessary to recess the kick stage interface about 18 in. (0.457m) into the payload envelope.

A typical sequence of events is shown in Table 2-30. Both Tug and the kick stage are checked out in low earth orbit. The kick stage is then powered down and remains passive during Tug operations. At the completion of the final Tug burn, the Tug maneuvers to orient the kick stage for its burn. The programmer is started and the payload/kick stage is spun up and separated. The kick stage coasts until the Tug has maneuvered an adequate distance to prevent contamination or other detrimental effects caused by plume impingement. After approximately 10 minutes of coast, a separation distance of about 1/2 n.mi. (0.93 km) will be reached and the kick stage motor is ignited. At the completion of the burn, the payload kick stage is despun using the despin rockets and the payload separated. The total kick stage operational time is less than 30 minutes.

Table 2-30. Kick Stage Sequence of Events

TUG OPERATION	KICK STAGE STATUS	TIME (MIN)
CHECKOUT	CHECKOUT	LEO*
BEGIN FINAL OUTBOUND BURN	STANDBY	0
COMPLETE BURN		10
ORIENT FOR KICK STAGE BURN	START PROGRAMMER	11
SPIN PAYLOAD/KICK STAGE		11-12
SEPARATE PAYLOAD/KICK STAGE		13
RETRO, REORIENT FOR RETURN AND COAST		13-TBD
	MOTOR BURN	23-25
	DESPIN	26
	SEPARATE PAYLOAD	27

* LOW-EARTH-ORBIT

2.3 CONFIGURATION CONCEPTS

The basic objective of this task, which was Task 3 of the study, was to develop configuration/program options based on the requirements and recommended subsystems defined in earlier tasks and summarized in Sections 2.1 and 2.2. The options were to be reported at the Concept Selection meeting and up to six options recommended for detailed analyses in Task 5, Program Definition.

At the start of Task 3, the government redirected the study somewhat by specifying seven capability options for which configurations/programs were to be developed, and by specifying the selection criteria to be used in ranking and selecting a recommended configuration for each capability option.

The seven capability options are presented in Table 2-31. The variables are the mission mode (deployment or retrieval), the payload level, the development approach (direct or phased) and the IOC date. The specified evaluation criteria are listed below in the order of priority:

1. Cost
2. Performance and Capabilities
3. Operational Complexity
4. Risk (Cost, Technical, and Schedule)
5. Payload Impacts
6. Evolutionary and Growth Capability

Table 2-31. Concept Selection Capability Options

CAPABILITY OPTIONS (INITIAL/FINAL)	DEVELOPMENT APPROACH	MINIMUM GEOSYNCHRONOUS PAYLOAD PERFORMANCE, LB (KG)		IOC
		DEPLOYMENT	RETRIEVAL	
1. INTERIM (WITHOUT RENDEZVOUS & DOCK)	DIRECT	3,500 (1,588)	N.A.	DEC. 1979
2. INTERIM (WITH RENDEZVOUS & DOCK)	DIRECT	3,500 (1,588)	2,200 (998)	DEC. 1979
3. INTERIM (WITHOUT RENDEZVOUS & DOCK) INTERIM (WITH RENDEZVOUS & DOCK)	PHASED	3,500 (1,588) 3,500 (1,588)	N.A. 2,200 (998)	DEC. 1979/ DEC. 1983
4. FULL CAPABILITY	DIRECT	–	3,500 (1,588)	DEC. 1983
5. INTERIM (WITHOUT RENDEZVOUS & DOCK)/ FULL CAPABILITY	PHASED	3,500 (1,588) –	N.A. 3,500 (1,588)	DEC. 1979 DEC. 1983
6. INTERIM (WITH RENDEZVOUS & DOCK)/ FULL CAPABILITY	PHASED	3,500 (1,588) –	2,200 (998) 3,500 (1,588)	DEC. 1979 DEC. 1983
7. INTERIM (WITH RENDEZVOUS & DOCK)	DIRECT	3,500 (1,588)	2,200 (998)	DEC. 1983

The following sections summarize the basic approach, the evaluation criteria methodology, the candidate configuration concepts, and the recommended configuration options. The detailed information on this task is contained in Reference 5.

2.3.1 APPROACH. A major problem in identifying the configuration candidates for the seven capability options was the problem of limiting the configurations to a reasonable number. Having defined a configuration as a set of compatible subsystems, it was obviously impossible to consider all combinations of compatible subsystems defined and selected in the subsystem analysis phase. Sufficient candidates were selected to show the impact of all major subsystem options.

Figure 2-41 illustrates the approach used in this phase of the study. The configurations selected for evaluation in each of the capability options were derived beginning with the data base provided by the subsystem catalog developed during the subsystem analysis phase of the study. These subsystems were sorted into the appropriate option primarily by applying the specific performance, mission mode, and IOC requirement of each option modified by specific drivers selected for the option. For example, low DDT&E was a prime criterion of option 1. Consequently, low DDT&E subsystems meeting the specific subsystem functional requirements of that option were selected. These subsystem functional requirements were previously derived from the specified missions (e.g., ACPS total impulse requirements as a function of mission). In addition, the subsystem and systems had to meet the general Tug requirements as dictated by the Tug data package and other appropriate documents. These subsystems and systems were then synthesized into configurations in each option and performance, programmatic, and cost data was developed in sufficient depth to provide the necessary assessment data. The resulting Tug programs were then evaluated against the specified criteria and a single recommendation made in each option. From these recommended options, Tug programs that are prime candidates for further definition were identified.

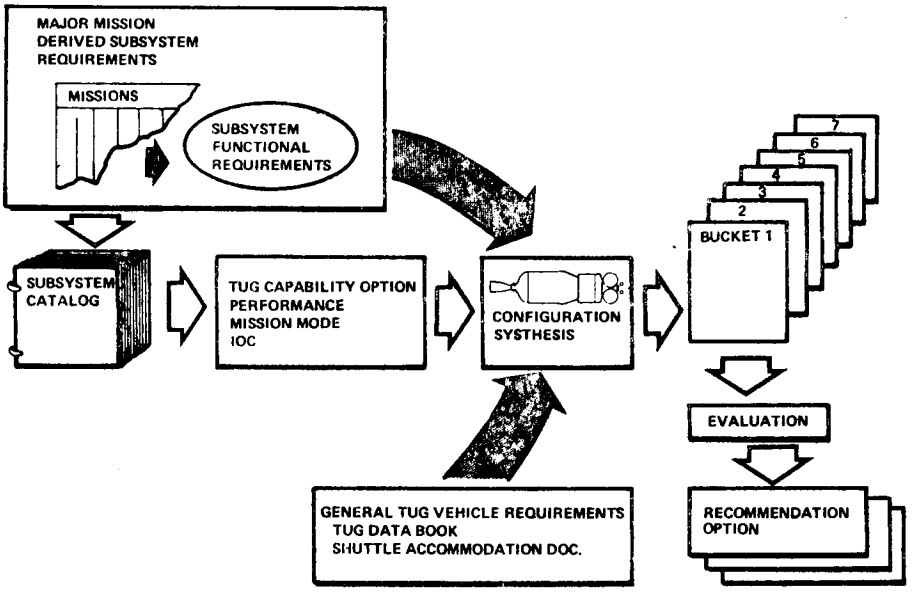

Figure 2-41. Configuration Selection Approach

2.3.2 EVALUATION CRITERIA AND METHODOLOGY. The government specified the basic evaluation criteria and their order of priority as presented above. The factors considered in these basic criteria and the methodology of developing and applying the data will be discussed below.

2.3.2.1 Cost. Cost was the major evaluation criteria; however, cost can be divided into many elements. Cost includes total program cost, peak year cost, and cost/flight considerations. Total program cost includes DDT&E, investment, and operations costs.

The Convair Aerospace Space Tug Cost Model was utilized to compile total system costs in the WBS format. Thirty-two percent of these costs were developed from parametric-type cost estimating relationships (CERs) and 55% from detailed estimates. Thirteen percent was government provided.

The cost model computes structure, propulsion (less engines), and some elements of avionics using input characteristics to CERs. Avionics costs were primarily derived from detailed component cost build-ups. GSE, facilities, and test and operational (manpower) costs were derived from detailed estimates. Spares and ground test hardware inputs generate initial and operational spares and test hardware costs. Mission capture and reliability assessments determine fleet size, which is a model input driving Tug production costs.

A funding spread model uses schedule data and WBS oriented cost data as inputs to develop fiscal year funding requirements. This model uses the NASA MF003M fund spread methodology.

2.3.2.2 Performance and Capabilities. This criterion includes performance in various applicable mission modes as measured by mission capture as well as certain other capabilities such as autonomy, abort capability, and reliability.

For each candidate Tug there are certain missions from the mission model, which cannot be accomplished in a single reusable Tug mode. In this phase of the study, the three alternate flight modes were considered for these missions: addition of a velocity package (kick stage), two-Tug operation with Tug-to-Tug on-orbit assembly, and two-Tug operation with a velocity package.

In addition to determining single payload capability, the potential for multiple payload missions was considered. Multiple payload possibilities were screened for dimensional, orbital, and Tug performance compatibility within the constraint of not mixing DOD payloads with non-DOD payloads. The advantage of multiple payload capability is that it reduces the number of Shuttle flights and the cost to the user.

2.3.2.3 Operational Complexity. Operational complexity is a relative measure of complexity viewed both on the ground and in flight. The selection of high (level I)

autonomy for all Tug candidates based on the recommendations of the subsystem analysis essentially eliminated ground operational complexity as a discriminator. The selected parameter was a flight operations parameter — number of critical mission events/payload delivered or retrieved. The critical mission events are deployment/separation, rendezvous, docking, and placement. This subject is discussed in more detail in Section 2.5.2.1.

2.3.2.4 Risk. This criterion is used to measure the uncertainty in achieving program goals encompassing performance, cost, and schedule. Risk in general is a non-quantifiable criterion; however, broad categories or scales of confidence can be defined based on such things as the state of the art. Another approach to risk evaluation is a functional risk analysis. In this approach a relative risk ranking (inherent risk) is assigned to all of the functions that must be performed by the operational vehicle. The development program, and in particular the test program, should be based on reducing this inherent risk. Since the risk cannot be reduced to zero, all programs end up with some value of residual risk. This residual risk factor, a relative term, was selected as the risk evaluation parameter. When used in a comparison this parameter can indicate the effectiveness of the development programs and DDT&E cost in reducing the risk.

2.3.2.5 Payload Impacts. Eight Tug characteristics were considered in assessing the overall payload impact of the candidate Tugs. These eight characteristics and their impact effect are presented in Table 2-32.

Table 2-32. Payload Impact Considerations

INTERFACE AREA	COMMENTS
• PAYLOAD WEIGHT	• ADDITIONAL PAYLOAD WEIGHT IS GOOD
• AVAILABLE PAYLOAD LENGTH	• ADDITIONAL LENGTH (VOLUME) IS GOOD
• POWER	• POWER REQUIRED FOR PAYLOAD THERMAL CONTROL
• ATTITUDE	• ATTITUDE FREEDOM FOR PAYLOAD IS DESIRED (FUNCTION OF GUIDANCE SYSTEM)
• COMPUTER MEMORY	• CAPABILITY TO SUPPORT PAYLOAD REQUIREMENTS
• ENGINE THRUST	• AFFECTS DESIGN OF APPENDAGES DEPLOYED DURING TUG BURNS
• CONTAMINATION	• PROPULSION GASES & MATERIAL OUTGASSING SHOULD NOT AFFECT PAYLOAD
• PHYSICAL & FUNCTIONAL INTERFACES	• MINIMUM CHANGE DURING PHASED PROGRAM IS DESIRED

2.3.2.6 Evolutionary and Growth Capability. For direct developed Tugs this criterion is a relative measure of the ease of obtaining improved performance and/or operational capability. For a phased Tug program it is a relative measure of the ease with which evolution can be carried forward.

2.3.3 CAPABILITY OPTIONS. The general approach described above was used to define and analyze configuration concepts for each of the capability options. Prior to discussing the candidates within each option there are certain general characteristics to be considered that were applicable to all configurations.

Tug safety was a major concern. Fault tree and hazards analyses were performed to identify the potential hazards and to determine the appropriate design features to eliminate or minimize the hazard. Safety design features involving about 250 lb (113 kg) additional weight were added to all Tug configurations. One of the main safety features is independent purge bags for propellant tank. Tug safety is discussed in more detail in Section 2.5.1.

The approach and provisions for abort was another area that was common to all Tugs. Abort refers to Shuttle abort, and the major issue is the disposal of the Tug propellants. The selected approach was to dump all propellants while the Orbiter was above 165,000 ft (50.4 km) altitude. The required dump line sizes were incorporated in the Tugs, and the necessary helium was provided in the adapter.

Mission reliability was another factor which was applicable to all Tugs. A 0.97 mission reliability goal was established; however, a reliability/cost optimization study was conducted to test the effectiveness of this goal, and to establish the redundancy levels required to attain the optimum reliability.

Figure 2-42a shows the additional program costs (in terms of Tug losses, payload losses, and reflight costs) as a function of Tug reliability. Figure 2-42b presents the results from a reliability/program cost optimization. Redundancy is systematically added to Tug subsystems such that each addition of redundancy is achieved with the minimum total program cost penalty. This is accomplished by measuring the ratio of the incremental change in reliability to the incremental change in cost for each redundancy candidate. The candidate having the highest ratio is the first one selected. This process is continued until the desired reliability is reached. Subsystems or components that cannot practically be made redundant, such as main engines, are of course excluded from the process. The results of the redundancy implementation study indicate that once the most unreliable components have been made redundant, the ratio of reliability increase to cost increase tends to decrease sharply.

When the reliability/cost sensitivity and the redundancy implementation data are plotted on the Reliability/Cost Optimization chart, Figure 2-42c, and the two costs are summed; the resultant is a lowest cost figure that occurs at about 0.97 reliability — the basic reliability goal.

2.3.3.1 Capability Option 1. The primary driver for this option was low DDT&E cost consistent with the basic requirements in Table 2-31. The subsystem candidates were selected in compliance with this driver and are presented in Table 2-33. Thus, the main engines are lower performance modifications of the existing RL-10 engine. The

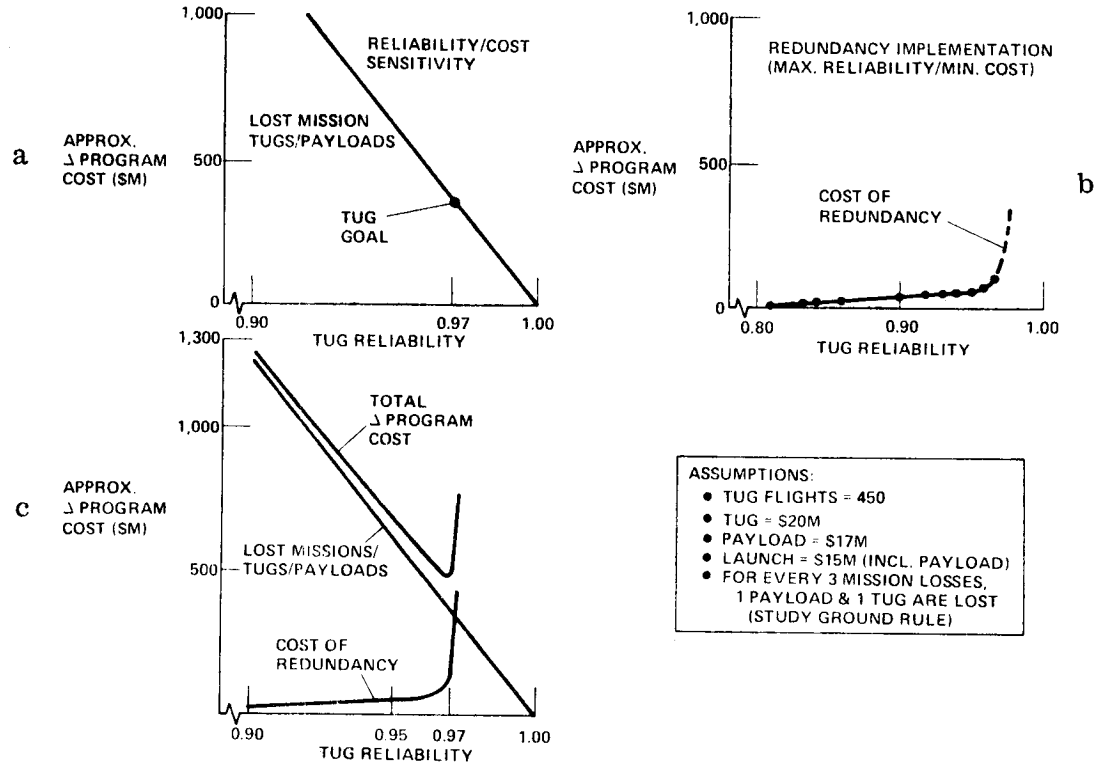

Figure 2-42. Reliability/Cost Optimization

Table 2-33. Subsystem Candidates — 1

DRIVER - LOW DDT&E

PROPULSION	
MAIN ENGINE	— RL-10 CATEGORY I WITH BOOST PUMPS
	— RL-10 CATEGORY I WITHOUT BOOST PUMPS
	— RL-10 CATEGORY IIB
ACPS	— N_2H_4 MONOPROPELLANT
STRUCTURE	
BODY SHELL	— ALUMINUM SKIN-STRINGER
THRUST STRUCTURE	— ALUMINUM
TANKS	— SUSPENDED ALUMINUM, ROOM-TEMP. ALLOWABLES
	— LOW COST (NO CHEM. SIZING) VERSION OF ABOVE
THERMAL CONTROL	
INSULATION	— 20 LAYERS OF KAPTON MLI
PURGE	— NOMINAL THICKNESS PURGE BAG
AVIONICS	— LOW DDT&E, LOW AUTONOMY SYSTEM
	— LOW DDT&E, HIGH AUTONOMY SYSTEM

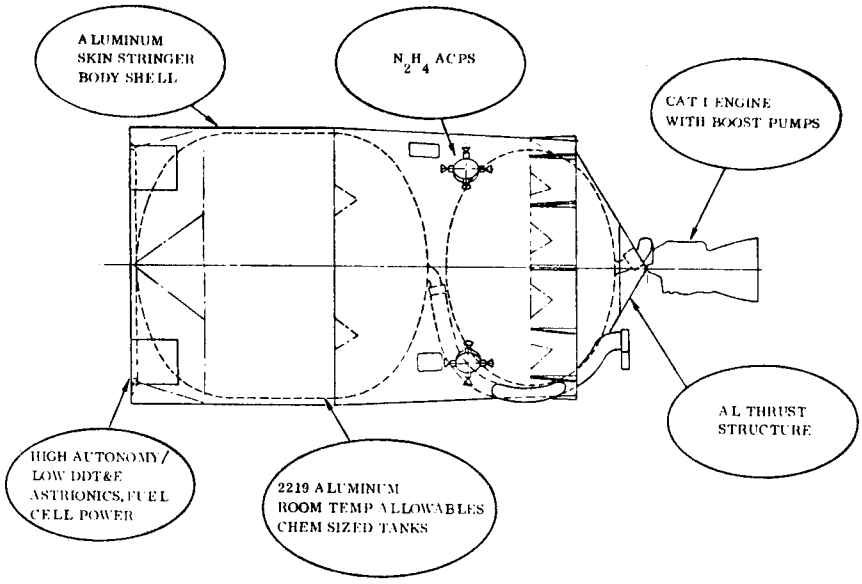

Figure 2-43. Reference Configuration — 1

ACPS is monopropellant hydrazine. Metallic body structure elements with room temperature design allowables for tank design again support low DDT&E. The insulation is of minimum DDT&E design while the avionics subsystems were assembled from candidates emphasizing the same low DDT&E. The choice of autonomy was left to be traded within this option.

The reference configuration for the capability option is shown in Figure 2-43. It was not a baseline but merely the point of departure for defining the other configurations. The major subsystems are indicated, and it was these major subsystems that were generally varied in defining other configuration candidates.

Table 2-34 presents the configuration options considered along with the resulting geosynchronous deployment payload. These configurations represent variations in main engine, propellant tank construction, astrionics system, and electrical power source. With the exception of configuration 1-1, which has 1650 lb (749 kg) of batteries, all the configurations meet the 3500 lb (1588 kg) deploy payload requirement. Eliminating the boost pumps from the RL-10 Cat I engine results in lower performance due to the increase in tank weight associated with the higher tank pressures. The low cost tanks are heavier and result in a Tug with lower performance. The RL-10 Cat IIB engine has significantly higher performance than the RL-10 Cat I.

The mission performance characteristics for these configurations are presented in Table 2-35. The average number of payloads carried per Tug flight is about 1.2 for all configurations except 1-1. The average number of payload per flight is 1.0 for configuration 1-1 since multiple payload deployment is precluded by the 48 hour on-orbit capability of this configuration. The other configurations are capable of deploying multiple payloads giving an average payload/flight greater than 1.0.

Table 2-34. Configuration Options — 1

SUBSYSTEM	OPTION								
	1-5	1-8	1-10	1-6	1-1	1-7			
PROPULSION									
MAIN ENGINE	CAT. I WBP	CAT. I WBP	CAT. I WBP	CAT.I W/O BP	CAT. I WBP	CAT. IIB			
PRESSURIZATION	SELF	SELF	SELF	He	SELF	He			
ACPS	N_2H_4	N_2H_4	N_2H_4	N_2H_4	N_2H_4	N_2H_4			
STRUCTURE									
TANKS	Al (RT)	Al (SIMPLE)	Al (RT)	Al (RT)	Al (RT)	Al (RT)			
BODY	Al S/S	Al S/S	Al S/S	Al S/S	Al S/S	Al S/S			
THRUST STRUCTURE	Al	Al	Al	Al	Al	Al			
INSULATION									
PURGE BAG	NOM.	NOM.	NOM.	NOM.	NOM.	NOM.			
ASTRIONICS									
POWER	SHUTTLE FUEL CELL	SHUTTLE FUEL CELL	SHUTTLE FUEL CELL	SHUTTLE FUEL CELL		SHUTTLE FUEL CELL			
AUTONOMY	HIGH	HIGH	LOW	HIGH	BATTERIES HIGH	HIGH			
WEIGHT									
DDT&E	LOW	LOW	LOW	LOW	LOW	LOW			
PAYLOAD (SYNC. EQ.) DEPLOY, LB (KG) RETRIEVE, LB (KG)	4,915 (2,229)	4,370 (1,982)	4,412 (2,006)	4,367 (1,981)	1,715 (778)	6,018 (2,730)			

Table 2-35. Mission Performance — 1

CONFIGURATION	MISSION CAPTURE (%)		AVG. NO. OF PAYLOADS/FLIGHT	ON-ORBIT ASSEMBLIES	VELOCITY PACKAGES
	DEPLOY MISSIONS	DEPLOY & RETRIEVE MISSIONS			
1-5	100	64	1.2	20	46
1-8	100	64	1.2	20	46
1-10	100	64	1.2	20	46
1-6	100	64	1.2	20	46
1-1	75	48	1.0	NA	81
1-7	100	64	1.2	20	5

All configurations (except 1-1) accomplish 100% of the payload deployments. Mission accomplishment drops to 64% when retrieval missions are considered. The comparable values for configuration 1-1 are 75% for deployment only and 48% mission accomplishment when considering the total model of 642 deployment and retrieval missions.

Twenty-one on-orbit assemblies are used with all configurations, except for 1-1. Configuration 1-1 is limited to 48 hours on-orbit, which precludes on-orbit assemblies.

The maximum number of velocity packages (81) is associated with configuration 1-1, which has the least payload-to-orbit capability. Configuration 7 is the maximum payload-to-orbit configuration and uses the least number (six) of velocity packages. The other configurations use 46 velocity packages over the total 1980-90 mission model. The velocity package used for mission capture analysis was the Burner II with a gross weight of 1800 lb (815 kg) and 1440 lb (654 kg) of propellant.

The program cost data for the configuration candidates is presented in Figure 2-44. DDT&E, production, operations, and cost/flight data are shown for each configuration. A funding spread typical for capability option 1 is also shown. The funding spread data indicates that the peak year funding occurs in 1978 and is a combination of DDT&E and production costs.

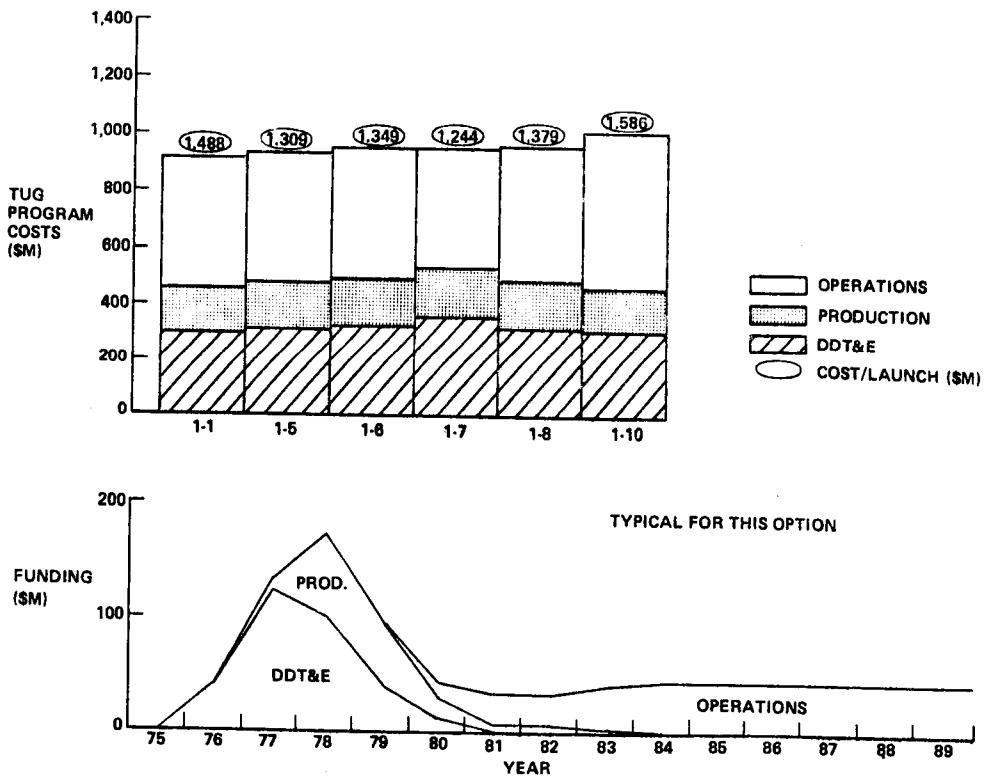

Figure 2-44. Program Cost Data — 1

The DDT&E costs are all greater than $300M. The low total program cost for configuration 1-1 is misleading since this configuration is performance limited and does not capture all the missions.

Table 2-36 presents the major evaluation data for the configuration options in capability option 1. All of the data is quantified except payload impact and growth, which are qualitative. Although the payload impact has a wide range of rating, it is basically the evaluation of the differences above an acceptable level except for configuration 1-1, which utilizes batteries. Configuration 1-1 is unacceptable since it can not accomplish all of the deployment missions. This is the reason the Tug flights and hence the total program cost are low for configuration 1-1. Configuration 1-7 has the highest DDT&E cost since it employs an RL-10 Cat IIB engine and is really a higher capability Tug than is required for this capability option. The other four options are reasonably close and are considered for selection.

Table 2-37 presents the Convair Aerospace ranking of the other four configuration candidates. Configuration 1-5 was selected as the recommended configuration in capability option 1 since it has the lowest total program cost and highest performance of the four candidates, while costing only $6M more than the lowest DDT&E configuration, 1-10. This configuration also provides the lowest total program cost per payload deployed.

Table 2-36. Configuration/Program Summary Comparison — 1

OPTION	COST ($ MILLION)					PERFORMANCE		OPNS. COMPLEX.	RISK	PAYLOAD IMPACT	GROWTH
	TOTAL PROG.	DDT&E	TUG COST/ FLIGHT	TOTAL PROG. COST/PL	PEAK YR. FUNDING	PAYLOAD DEP. (LB.) (KG)	TUG FLIGHTS	CRITICAL EVENTS/ PAYLOAD	RESID. RISK		
1-5	4,553	317	1.31	11.02	172(78)	4,915 (2,229)	413	4.62	18	GOOD	GOOD
1-8	4,580	320	1.38	11.09	173(78)	4,370 (1,982)	413	4.66	17	FAIR	GOOD
1-10	4,636	311	1.59	11.23	167(78)	4,423 (2,006)	413	4.66	17	GOOD	GOOD
1-6	4,574	326	1.35	11.05	174(78)	4,367 (1,981)	413	4.66	19	FAIR	GOOD
1-1	4,166	308	1.49	13.48	162(78)	1,715 (778)	309	5.25	19	POOR	POOR
1-7	4,541	363	1.24	11.0	183(78)	6,018 (2,730)	413	4.54	21	VERY GOOD	FAIR

Table 2-37. Ranking and Selection Rationale – 1

	ADVANTAGES	DISADVANTAGES
1-5 ①	•LOWEST TOTAL PROGRAM COST •HIGHEST PERFORMANCE •LOWEST OPERATIONAL COMPLEXITY •LOWEST TOTAL COST/PAYLOAD	• SLIGHTLY HIGHER RESIDUAL RISK
1-10 ②	•LOWEST DDT&E •LOWEST RESIDUAL RISK	•HIGHEST TOTAL PROGRAM COST •HIGHEST TOTAL COST/PAYLOAD
1-8 ③	•LOW RESIDUAL RISK MEDIUM TOTAL PROGRAM COST MEDIUM TOTAL COST/PAYLOAD	•LOW PERFORMANCE
1-6 ④	•LOW RESIDUAL RISK MEDIUM TOTAL PROGRAM COST MEDIUM TOTAL COST/PAYLOAD	•HIGHEST DDT&E •LOW PERFORMANCE

2.3.3.2 Capability Option 2. This is a direct developed, medium retrieval capability Tug, with a December 1979 IOC. The primary subsystem drivers for this option were low DDT&E cost and retrieval capability. The subsystem candidates considered are presented in Table 2-38. In this option, body structural shell concepts and materials were compared.

Table 2-38. Subsystem Candidates — 2

DRIVERS-
MINIMUM DDT&E,
RETRIEVAL

PROPULSION		
MAIN ENGINE	–	RL-10 CATEGORY I WITH BOOST PUMPS
	–	RL-10 CATEGORY IIA, IIB
ACPS	–	N_2H_4 MONOPROPELLANT
STRUCTURE		
BODY SHELL	–	ALUMINUM SKIN-STRINGER
	–	ALUMINUM ISOGRID
	–	COMPOSITE SANDWICH
THRUST STR.	–	ALUMINUM
TANKS	–	SUSPENDED ALUMINUM, ROOM-TEMP. ALLOWABLES
	–	LOW COST (NO CHEM. SIZING) VERSION OF ABOVE
THERMAL CONTROL		
INSULATION	–	20 LAYERS OF KAPTON MLI
	–	NOMINAL THICKNESS PURGE BAG
AVIONICS	–	LOW DDT&E, LOW AUTONOMY SYSTEM
	–	LOW DDT&E, HIGH AUTONOMY SYSTEM
	–	LOW WEIGHT, HIGH AUTONOMY SYSTEM

The reference configuration for this option is similar in type to the reference configuration for capability option 1 shown in Figure 2-43 except for a main engine change to the RL-10 Cat IIA and a different astrionics system.

Table 2-39 presents the configuration options considered along with the geosynchronous deploy and retrieval payload capability. The nine options represent variations in main engine, propellant tankage, body shell, and astrionics. All the configurations meet the retrieval payload requirement of 2200 lb (998 kg). The RL-10 Cat I configurations have lower performance than the Cat II configurations due to the lower Isp. The aluminum skin stringer construction is lighter than the aluminum isogrid and yields higher performance. Use of a composite body shell results in a significant performance increase. Use of the lightweight, advanced fuel cell also shows a significant performance increase.

The mission performance characteristics of these configurations are presented in Table 2-40. All of the configurations capture 100% of the deployment missions and over 90% of the total model. All configurations have multiple payload capability. The on-orbit assemblies are slightly greater than for capability option 1 due to their use on retrieval missions; however, the number of velocity packages, a function of the performance level, is reduced significantly from option 1.

Table 2-39. Configuration Options — 2

SUBSYSTEM	OPTION								
	2-3	2-1	2-2	2-4	2-6	2-7	2-8	2-5	2-9
PROPULSION									
MAIN ENGINE	CAT. IIA	CAT. IIA	CAT. IIA	CAT. IIA	CAT. I WBP	CAT. I WBP	CAT. I WBP	CAT. I	CAT. IIB (BP)
PRESSURIZATION	SELF	SELF	SELF	SELF	SELF	SELF	SELF	SELF	SELF
ACPS	N_2H_4	N_2H_4	N_2H_4	N_2H_4	N_2H_4	N_2H_4	N_2H_4	N_2H_4	N_2H_4
STRUCTURE									
TANKS	Al (RT)	Al (RT)	Al (SIMPLE)	Al (RT)	Al (RT)	Al (RT)	Al (RT)	Al (RT)	Al (RT)
BODY	Al S/S	Al ISO	Al ISO	COMP. SAND	Al S/S	Al S/S	Al S/S	COMP. SAND	Al S/S
THRUST STRUCTURE	Al	Al	Al	Al	Al	Al	Al	Al	Al
INSULATION									
PURGE BAG	NOM.	NOM.	NOM.	NOM.	NOM.	NOM.	NOM.	NOM.	NOM.
ASTRIONICS									
POWER	SHUTTLE FUEL CELL	SHUTTLE FUEL CELL	SHUTTLE FUEL CELL	SHUTTLE FUEL CELL	SHUTTLE FUEL CELL	ADV. FUEL CELL	SHUTTLE FUEL CELL	SHUTTLE FUEL CELL	SHUTTLE FUEL CELL
AUTONOMY	HIGH	HIGH	HIGH	HIGH	HIGH	HIGH	LOW	HIGH	HIGH
WEIGHT						LOW			
DDT&E	LOW	LOW	LOW	LOW	LOW		LOW	LOW	LOW
PAYLOAD (SYNC. EQ.)									
DEPLOY, LB (KG)									
RETRIEVE, LB (KG)	340 (1578)	3249 (1473)	2972 (1348)	4080 (1849)	2205 (1000)	2736 (1241)	2237 (1015)	2730 (1238)	3613 (1639)

Table 2-40. Mission Performance — 2

CONFIGURATION	MISSION CAPTURE (%) DEPLOY MISSIONS	DEPLOY & RETRIEVE MISSIONS	AVG. NO. OF PAYLOADS/FLIGHT	ON-ORBIT ASSEMBLIES	VELOCITY PACKAGES
2-3	100	93	1.35	24	8
2-1	100	92	1.32	24	15
2-2	100	92	1.26	24	29
2-4	100	95	1.46	21	6
2-6	100	90	1.2	26	45
2-7	100	91	1.32	24	15
2-8	100	90	1.2	26	45
2-5	100	91	1.32	24	15
2-9	100	93	1.35	24	8

The program cost data is presented in Figure 2-45, which shows the breakdown of Tug program cost into DDT&E, production, and operations costs. A typical funding spread, based on authority to proceed in October 1975, is also shown. The overlap of DDT&E and production result in peak year fundings approaching $200M in 1978.

The DDT&E costs are above $360M for all configurations except those using the RL-10 Cat I engines. The total Tug program costs are significantly higher than capability option 1 due to the addition of the retrieval missions.

The major evaluation data for the configurations in capability option 2 are presented in Table 2-41.

These data show that configurations 2-8 and 2-6 have essentially no performance margin and hence would be high risk programs. For this reason these configurations have been deleted from selection. Configurations 2-1 through 2-4 employ the RL-10 Cat IIA engine and have the highest development cost and are also deleted. High performance, if desired, can be obtained for lower development cost with the RL-10 Cat IIB engine. Configurations 2-7, 2-5, and 2-9 are retained for consideration for selection.

Table 2-42 presents the ranking of these three configurations. Configuration 2-7 was selected as the recommended configuration due to its low DDT&E and adequate performance margin. Configuration 2-5, while also having a low DDT&E, has over $60M total program cost compared to 2-7. Configuration 2-9, while providing good performance and low total program cost, requires $22M more in early year DDT&E and does not show a significant advantage in total mission capture. In addition, it has a slightly higher program risk.

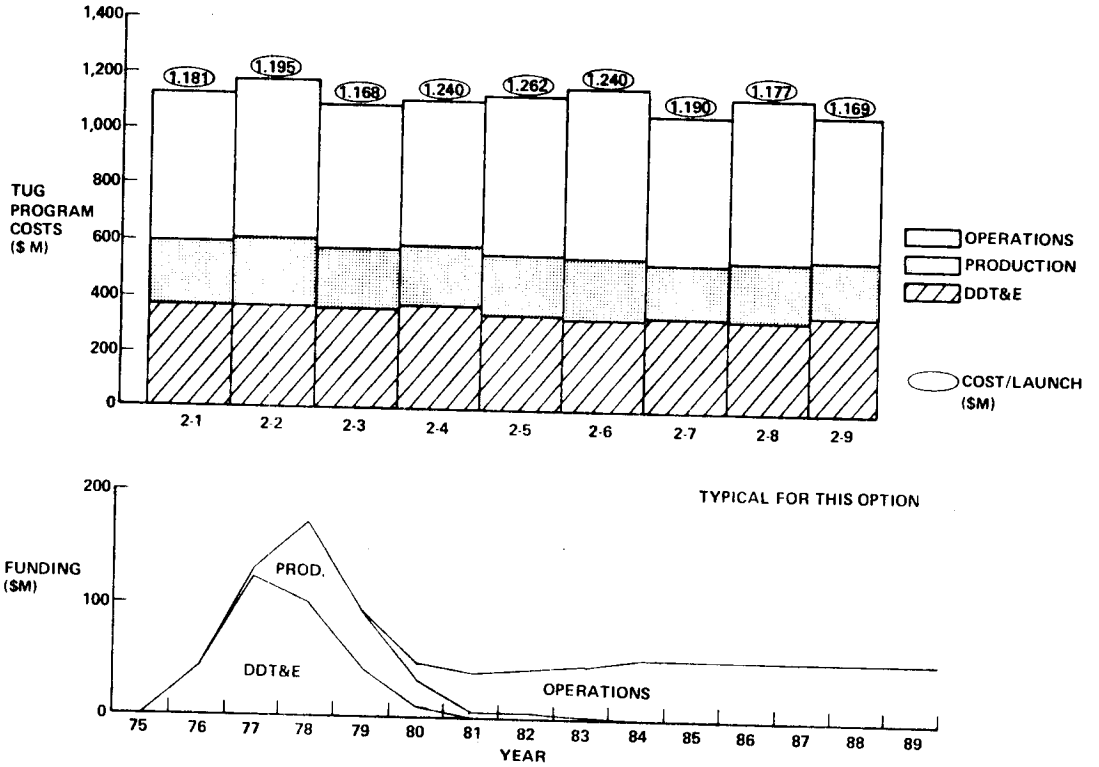

Figure 2-45. Program Cost — 2

Table 2-41. Configuration/Program Summary Comparison — 2

OPTION	COST ($ MILLION)					PERFORMANCE		OPNS. COMPLEX.	RISK	PAYLOAD IMPACT	GROWTH
	TOTAL PROG.	DDT&E	TUG COST/ FLIGHT	TOTAL PROG. COST/PL	PEAK YR. FUNDING	PAYLOAD RET. LB (KG)	TUG FLIGHTS	CRITICAL EVENTS/ PAYLOAD	RESID. RISK		
2-3	5,724	370	1.17	9.66	194(78)	3480 (1578)	441	4.29	24	GOOD	FAIR
2-1	5,887	375	1.18	9.96	207(78)	3249 (1473)	452	4.37	26	GOOD	FAIR
2-2	6,133	377	1.19	10.4	213 (78)	2972 (1348)	471	4.49	24	GOOD	FAIR
2-4	5,521	380	1.24	9.08	205 (78)	4080 (1849)	419	4.11	28	VERY GOOD	POOR
2-6	6,288	333	1.24	10.8	201 (78)	2205 (1000)	487	4.64	20	FAIR	GOOD
2-7	5,826	341	1.19	9.88	190 (78)	2736 (1241)	452	4.37	23	GOOD	GOOD
2-8	6,252	330	1.17	10.77	199 (78)	2237 (1015)	487	4.64	19	FAIR	GOOD
2-5	5,894	340	1.26	9.98	206 (78)	2730 (1238)	452	4.37	23	GOOD	GOOD
2-9	5,717	363	1.17	9.65	186 (78)	3613 (1639)	441	4.29	24	GOOD	FAIR

Table 2-42. Ranking and Selection Rationale — 2

	ADVANTAGES	DISADVANTAGES
2-7 ①	•LOW DDT&E •LOW RESIDUAL RISK MEDIUM TOTAL PROGRAM COST MEDIUM TOTAL PROGRAM COST/PAYLOAD	•HIGH OPERATIONAL COMPLEXITY
2-5 ②	•LOWEST DDT&E •LOW RESIDUAL RISK	•HIGHEST TOTAL PROGRAM COST •HIGH OPERATIONAL COMPLEXITY •HIGHEST TOTAL PROGRAM COST/P/L
2-9 ③	•HIGHEST PERFORMANCE •LOWEST TOTAL PROGRAM COST •LEAST TUG FLIGHTS •LEAST OPERATIONAL COMPLEXITY •LOWEST TOTAL PROGRAM COST/P/L	•HIGHEST DDT&E •HIGHEST RESIDUAL RISK

2.3.3.3 Capability Option 3. This is a phased program option in which the initial and final versions have performance and IOC requirements consistent with capability options 1 and 2 respectively. The primary subsystem drivers were low DDT&E cost for the initial vehicle and medium performance with retrieval for the final vehicle. The subsystem candidates are presented in Table 2-43 . Subsystem phasing was considered for main engines, thermal control, and astrionics. The thermal control phasing was a phasing to a lightweight purge bag.

Table 2-43. Subsystem Candidates — 3

LOW INITIAL DDT&E
FINAL MEDIUM PERFORMANCE

PROPULSION	
MAIN ENGINE	— RL-10 CATEGORY I WBP → RL-10 CAT. IIA
	RL-10 CATEGORY I WBP → RL-10 CAT. IIB
	— RL-10 CATEGORY IIA
ACPS	— N_2H_4 MONOPROPELLANT
STRUCTURE	
BODY SHELL	— ALUMINUM SKIN STRINGER
	— ALUMINUM ISOGRID
THRUST STRUCTURE	— ALUMINUM
TANKS	— SUSPENDED ALUMINUM, ROOM-TEMP. ALLOWABLES
THERMAL CONTROL	
INSULATION	— 20 LAYERS OF KAPTON MLI
	— NOMINAL THICKNESS → LIGHTWEIGHT PURGE BAG
AVIONICS	— LOW DDT&E, HIGH AUTONOMY SYSTEM → LOW DDT&E, HIGH AUTONOMY SYSTEM (WITH R&D)
	— LOW DDT&E, HIGH AUTONOMY SYSTEM → LOW WEIGHT, HIGH AUTONOMY SYSTEM

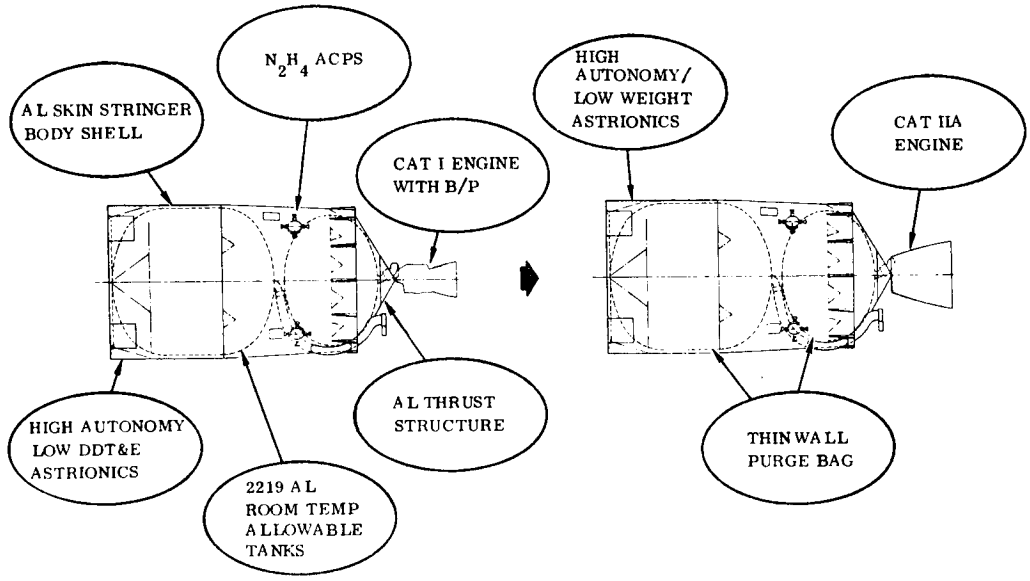

Figure 2-46. Reference Configuration — 3

The reference configuration for this option is presented in Figure 2-46, which indicates the major subsystems. Those subsystems not called out on the final configuration remain unchanged from the initial configuration.

In a phased program such as this the assumption has been made that the propellant tankage is sized for the requirements of the final vehicle. The initial vehicle flying deployment missions is offloaded.

The configuration options considered and their resulting geosynchronous payload are presented in Table 2-44. Variations in main engine, body structure, and astrionics were considered. The effects on performance of the subsystem variations are similar to those obtained in capability options 1 and 2. Phasing to an RL-10 Cat II type engine yields performance well in excess of the 2200 lb (998 kg) retrieval payload requirement.

Table 2-45 presents the mission performance characteristics. All the configurations accomplish 100% of the deploy missions and 88 to 90% of the entire mission model. Since retrieval is not introduced until 1983 the earlier retrieval missions from the model cannot be accomplished. Configuration 3-2, which has an RL-10 Cat II engine in the initial vehicle, has the lowest number of on-orbit assemblies and velocity packages due to having the highest performance.

Figure 2-47 presents the program cost data for this capability option including a typical funding spread assuming an ATP for the initial vehicle in October 1975. The development costs continue until 1984 because of the phasing to the final configuration. The cost bar charts show the cost breakdown for the initial vehicle program on the left

Table 2-44. Configuration Options — 3

SUBSYSTEM	OPTION					
	3-7	3-1	3-8	3-6	3-2	3-9
PROPULSION						
MAIN ENGINE	CAT. I/CAT. IIA	CAT. I/CAT. IIA	CAT. I/CAT. IIA	CAT. I	CAT. IIA	CAT. I/CAT. IIB
ACPS	N_2H_4	N_2H_4	N_2H_4	N_2H_4	N_2H_4	N_2H_4
STRUCTURE						
TANKS	Al (RM TEMP.)	Al (RM TEMP.)	Al (RM TEMP.)	Al (RM TEMP.)	Al (RM TEMP.)	Al (RM TEMP.)
BODY	Al S/S	Al ISO.	Al S/S	Al S/S	Al ISO.	Al S/S
THRUST STRUCTURE	Al	Al	Al	Al	Al	Al
INSULATION						
PURGE BAG	NOM. /THIN	NOM./THIN	NOM./THIN	NOM./THIN	NOM./THIN	NOM./THIN
ASTRIONICS						
POWER	SHUTTLE F.C./ ADV FUEL CELL	SHUTTLE F.C./ ADV FUEL CELL	SHUTTLE FUEL CELL	SHUTTLE F.C./ ADV FUEL CELL	SHUTTLE F.C./ ADV FUEL CELL	SHUTTLE F.C./ ADV FUEL CELL
AUTONOMY	HIGH	HIGH	HIGH	HIGH	HIGH	HIGH
WEIGHT	LOW → LOW	LOW → LOW		LOW → LOW	LOW → LOW	LOW → LOW
DDT&E			LOW			
PAYLOAD (SYNC. EQ.)						
DEPLOY – INITIAL, LB (KG)	4343 (1971)	3920 (1779)	4373 (1984)	4513 (2047)	5646 (2561)	4492 (2038)
RETRIEVE – FINAL, LB (KG)	4212 (1910)	3959 (1795)	3680 (1669)	2880 (1306)	3959 (1795)	4345 (1971)

Table 2-45. Mission Performance — 3

CONFIGURATION	MISSION CAPTURE (%) DEPLOY MISSIONS	MISSION CAPTURE (%) DEPLOY & RETRIEVE MISSIONS	AVG. NO. OF PAYLOADS/FLIGHT	ON-ORBIT ASSEMBLIES	VELOCITY PACKAGES
3-7	100	90	1.36	26	27
3-1	100	90	1.33	26	30
3-8	100	89	1.32	26	27
3-6	100	88	1.29	26	29
3-2	100	90	1.39	21	6
3-9	100	90	1.36	26	27

and the total program on the right. The development costs of the initial vehicle range from about $315M for those vehicles with RL-10 Cat I type engines to about $360M million for configuration 3-2, which has a Cat IIA engine.

Table 2-46 presents the major evaluation data for the configuration options in capability option 3. Where there are two numbers indicated, the first number represents the initial Tug and the second number the final Tug. Configuration 3-2, which uses an RL-10 Cat II in the initial Tug, has a high initial development cost and is deleted.

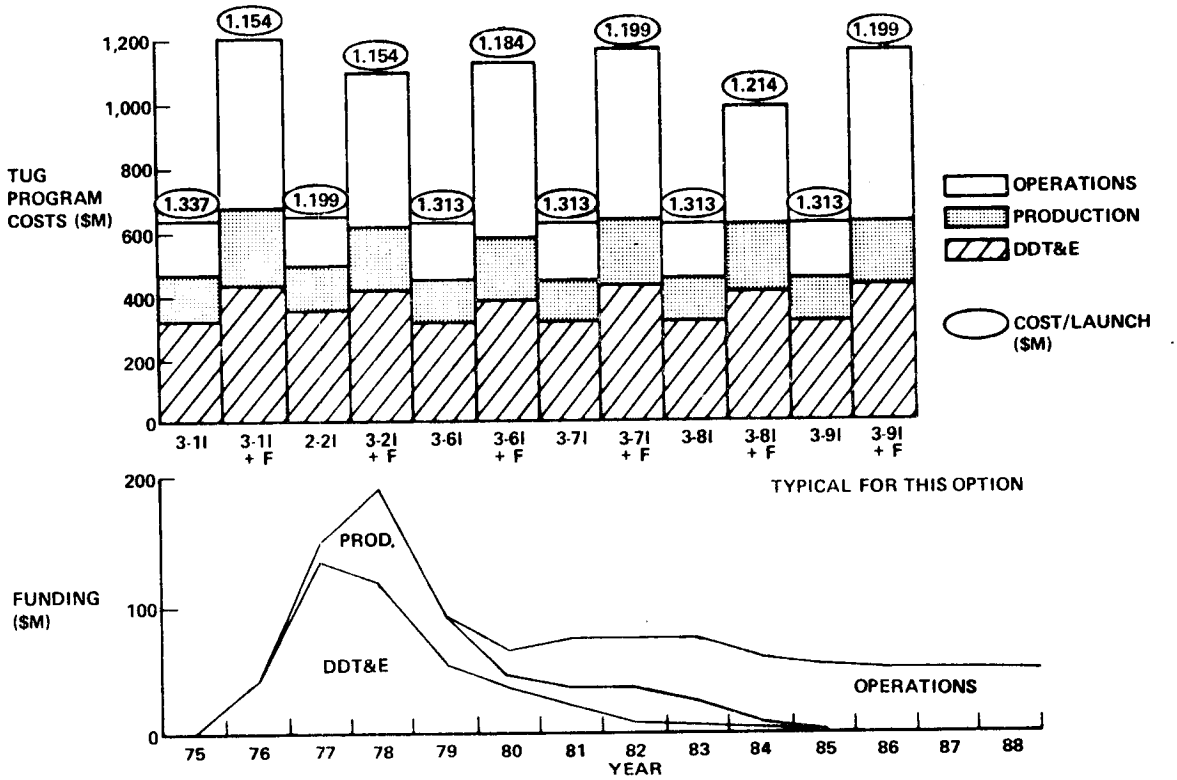

Figure 2-47. Program Cost — 3

Table 2-46. Configuration/Program Summary Comparison

OPTION	COST ($ MILLION)					PERFORMANCE			OPNS. COMPLEX.	RISK	PAYLOAD IMPACT	GROWTH
	TOTAL PROG.	DDT&E	TUG COST/ FLIGHT	TOTAL PROG. COST/PL	PEAK YR. FUNDING	INITIAL DEP. LB (KG)	FINAL RET. LB (KG)	TUG FLIGHTS	CRITICAL EVENTS/ PAYLOAD	RESID. RISK		
3-7	5,704	316/ 431	1.31/ 12	9.84	196 (78)	4343 (1971)	4212 (1910)	428	4.31	19/9	GOOD	GOOD
3-1	5,769	319/ 435	1.34/ 1.15	10.03	201 (78)	3920 (1779)	3959 (1795)	431	4.35	19/9	GOOD	GOOD
3-8	5,740	316/ 406	1.31/ 1.21	10.06	196 (78)	4373 (1984)	3680 (1669)	433	4.31	19/9	FAIR	GOOD
3-6	5,662	314/ 385	1.31/ 1.18	10.01	176 (78)	4513 (2047)	2880 (1306)	439	4.44	19/7	FAIR	VERY GOOD
3-9	5,694	316/ 424	1.31/ 1.2	9.78	193 (78)	4492 (2038)	4345 (1971)	428	4.31	19/9	GOOD	GOOD
3-2	5,456	357/ 413	1.2/ 1.15	9.51	188 (78)	5646 (2561)	3959 (1795)	414	4.21	21/7	VERY GOOD	VERY GOOD

Configuration 3-1 which was an aluminum isogrid is deleted since it has poorer performance at higher cost than configuration 3-7, which is the same concept except for using an aluminum skin-stringer shell. The other options are retained for consideration for selection.

Table 2-47 presents the ranking of these four configurations along with the advantages and disadvantages as determined from the data in Table 2-46. Configuration/program 3-9 was selected on the basis of low DDT&E combined with better than average characteristics in the other evaluation criteria. However, in this capability option all the candidate options cluster closely in overall evaluation.

Table 2-47. Ranking and Selection Rationale – 3

	ADVANTAGES	DISADVANTAGES
3-9 ①	•LOW INITIAL DDT&E •2ND LOWEST TOTAL PROGRAM COST •LOWEST OPS. COMPLEXITY •GOOD EASE OF EVOLUTION •LOWEST TOTAL PROGRAM COST/P/L	
	MEDIUM TOTAL PROGRAM COST	
3-6 ②	•LOW INITIAL DDT&E •LOWEST TOTAL PROGRAM COST •EXCELLENT EASE OF EVOLUTION	•HIGHEST OPS. COMPLEXITY •LOWEST PERFORMANCE •LOWEST MISSION CAPTURE
3-8 ③	•LOW INITIAL DDT&E •GOOD EASE OF EVOLUTION	•HIGHEST TOTAL PROGRAM COST •HIGHEST TOTAL COST/P/L •2ND LOWEST MISSION CAPTURE
3-7 ④	•LOW TOTAL PROGRAM COST/P/L	•2ND HIGHEST TOTAL PROGRAM COST •LEAST EASE OF EVOLUTION

2.3.3.4 Capability Option 4. The configurations in this option are directly developed full capability Tugs with IOC in December 1983. They have payload retrieval capability and payload servicing capability; however, the latter is not a driver. All requirements from the government supplied data package were applied.

Table 2-48 presents the subsystem candidates chosen from the subsystems catalog in compliance with the primary drivers of high performance with payload retrieval capability. In this capability option the advanced propulsion systems are compared, and the hydrazine ACPS is compared with a hydrogen/oxygen ACPS system. Several advanced structural concepts are compared, and tank options such as cryogenic allowables and a load bearing hydrogen tank are compared. A lightweight insulation purge bag is introduced, and several options to low weight avionics systems are included.

Figure 2-48 presents the reference configuration used as the point of departure for developing other configurations by changing the indicated subsystems.

Table 2-48. Subsystem Candidates — 4

HIGH PERFORMANCE, RETRIEVAL	PROPULSION	
	MAIN ENGINE	— RL-10 CATEGORY IV
		— ADVANCED SPACE ENGINE
		— AEROSPIKE
	ACPS	— N_2H_4 MONOPROPELLANT
		— H_2-O_2 BIPROPELLANT
	STRUCTURE	
	BODY SHELL	— COMPOSITE SANDWICH
		— COMPOSITE SKIN-STRINGER
	THRUST STRUCTURE	— COMPOSITE
	TANKS	— SUSPENDED ALUMINUM, CRYOGENIC ALLOWABLES
		— SUSPENDED ALUMINUM, ROOM-TEMP. ALLOWABLES
		— LOAD-BEARING ALUMINUM
	THERMAL CONTROL	
	INSULATION	— 20 LAYERS OF KAPTON MLI
		— LIGHTWEIGHT PURGE BAG
	AVIONICS	— LOW DDT&E, HIGH AUTONOMY SYSTEM
		— LOW WEIGHT, HIGH AUTONOMY SYSTEM
		— LOW WEIGHT, HIGH AUTONOMY DUAL CENTRAL SYSTEM

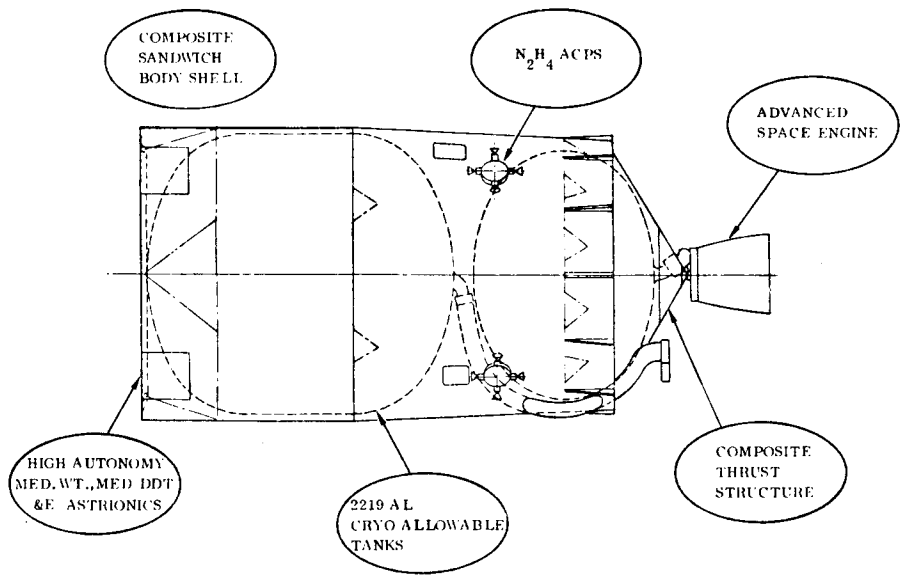

Figure 2-48. Reference Configuration — 4

Table 2-49 shows the configurations considered in capability option 4 and the resulting geosynchronous retrieval payloads. The major subsystem variations considered were main engine, ACPS, propellant tankage, body structure, and astrionics. All of the options greatly exceeded the minimum payload requirements of 3500 lb (1588 kg). The ASE yields the highest performance. The Aerospike engine has the lowest performance of the three advanced engines. This is a result of the fact that the performance optimizes at a lower mixture ratio, which yields a larger hydrogen tank and hence a heavier structure. The H_2/O_2 ACPS has significantly less performance than the hydrazine system due to a much larger inert weight. In the impulse range required,

the higher Isp of H_2/O_2 does not offset the inert weight effect. The composite skin-stringer body shell is significantly heavier than the composite sandwich with a resulting payload loss. The use of room temperature allowables on the propellant tanks results in heavier tanks with approximately a 200 lb (91 kg) payload loss.

Table 2-49. Configuration Options — 4

SUBSYSTEM	OPTION								
	4-2	4-3	4-4	4-1	4-9	4-10	4-6	4-7	4-8
PROPULSION									
MAIN ENGINE	ASE	ASE	ASE	ASE	ASE	ASE	A/S	CAT. IV	CAT. IV
PRESSURIZATION	SELF	SELF	SELF	AUTOG.	SELF	SELF	SELF	SELF	SELF
ACPS	N_2H_4	N_2H_4	N_2H_4	H_2O_2	N_2H_4	N_2H_4	N_2H_4	N_2H_4	N_2H_4
STRUCTURE									
TANKS	Al (CRYO)	Al (CRYO)	LOAD BRG.	Al (CRYO)	Al (CRYO)	Al (CRYO)	Al (CRYO)	Al CRYO)	Al (RT)
BODY	COMP. SAND	COMP. S/S	COMP. SAND	COMP. SAND	COMP. SAND	COMP. SAND	COMP. SAND	COMP. SAND	COMP. SAND
THRUST STRUCTURE	COMP.	COMP.	COMP.	COMP.	COMP.	COMP.	COMP.	COMP.	COMP.
INSULATION									
PURGE BAG	THIN	THIN	THIN	THIN	THIN	THIN	THIN	THIN	THIN
ASTRIONICS									
POWER	ADV. FUEL CELL	ADV. FUEL CELL	ADV. FUEL CELL	ADV. FUEL CELL	ADV. FUEL CELL	SHUTTLE FUEL CELL	ADV. FUEL CELL	ADV. FUEL CELL	ADV. FUEL CELL
AUTONOMY	HIGH	HIGH	HIGH	HIGH	HIGH	HIGH	HIGH	HIGH	HIGH
WEIGHT	MED.	MED.	MED.	MED.	LOW		MED.	MED.	MED.
DDT&E	MED.	MED.	MED.	MED.		LOW	MED.	MED.	MED.
PAYLOAD (SYNC. EQ.)									
DEPLOY, LB (KG)									
RETRIEVE, LB (KG)	6456 (2928)	6009 (2725)	6223 (2822)	5833 (2645)	6528 (2961)	5925 (2687)	5988 (2716)	6114 (2773)	5924 (2687)

The mission performance characteristics are summarized in Table 2-50. Mission accomplishment in the years after IOC is 100% for all the configurations. The high performance of the configurations in this option yields an average number of payloads per flight greater than 1.5. Tug-to-Tug on-orbit assembly is still used for some of the planetary missions; however, only two configurations use any velocity packages.

The program and cost data is presented in Figure 2-49. The development costs range from $450M to about $540M primarily as a function of the main and attitude control propulsion systems. The lowest development costs are associated with the RL-10 Cat IV main engine.

A typical funding spread is also shown in Figure 2-49. The Tug vehicle ATP can be in April 1978 to support the late 1983 IOC; however, the advanced engines require an earlier engine ATP. This is the reason for the break in the funding curve in 1978. The peak funding levels are in the area of $150 to $170M with the peak year being 1982 where there is an overlap of DDT&E and production.

Table 2-50. Mission Performance — 4

CONFIGURATION	MISSION CAPTURE (%) * DEPLOY MISSIONS	DEPLOY & RETRIEVE MISSIONS	AVG. NO. OF PAYLOADS/FLIGHT	ON-ORBIT ASSEMBLIES	VELOCITY PACKAGES
4-2	100	100	1.58	11	4
4.3	100	100	1.56	15	0
4-4	100	100	1.56	15	0
4-1	100	100	1.56	15	0
4-9	100	100	1.58	11	4
4-10	100	100	1.56	15	0
4-6	100	100	1.56	15	0
4-7	100	100	1.56	15	0
4-8	100	100	1.56	15	0

*MISSION MODEL YEARS 1984-1990.

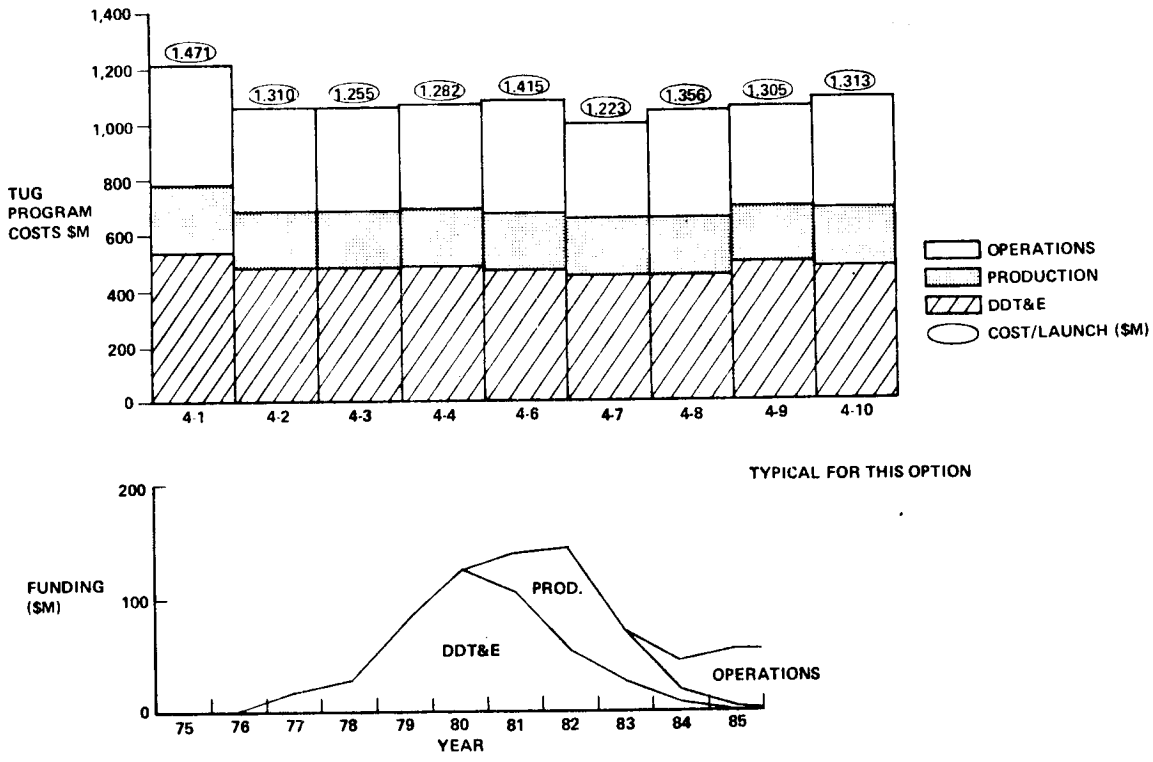

Figure 2-49. Program Cost — 4

The major evaluation data for the configurations in this option are presented in Table 2-51. Configurations 4-1 (H_2/O_2 ACPS), 4-3 (composite skin-stringer) and 4-4 (load-bearing tanks) are deleted from consideration for selection since they have less performance with more total program cost than the reference configuration 4-1, which is the same except for the subsystem variations listed above. All of the other configuration options remain as candidates for selection and are ranked in Table 2-52.

Table 2-51. Configuration/Program Summary Comparison — 4

OPTION	COST ($ MILLION)					PERFORMANCE		OPNS. COMPLEX.	RISK		
	TOTAL PROG.	DDT&E	TUG COST/ FLIGHT	TOTAL PROG. COST/PL	PEAK YR. FUNDING	PAYLOAD RET. LB (KG)	TUG FLIGHTS	CRITICAL EVENTS/ PAYLOAD	RESID. RISK	PAYLOAD IMPACT	GROWTH
4-2	4,130	488	1.31	9.0	150 (82)	6456 (2928)	291	3.92	32	GOOD	FAIR
4-3	4,160	490	1.26	9.08	149 (82)	6009 (2725)	295	4.03	32	GOOD	FAIR
4-4	4,171	490	1.28	9.10	150 (82)	6223 (2822)	295	3.95	33	VERY GOOD	FAIR
4-1	4,321	544	1.47	9.43	175 (82)	5833 (2645)	295	3.95	36	GOOD	GOOD
4-9	4,136	499	1.31	9.02	143 (82)	6528 (2961)	291	3.92	32	VERY GOOD	FAIR
4-10	4,189	478	1.313	9.14	160 (82)	5925 (2687)	295	3.95	31	GOOD	FAIR
4-6	4,192	473	1.42	9.15	149 (82)	5988 (2716)	295	4.03	32	GOOD	FAIR
4-7	4,110	451	1.22	8.96	147 (82)	6114 (2773)	295	3.95	30	GOOD	FAIR
4-8	4,152	453	1.36	9.05	148 (82)	5924 (2687)	295	3.95	29	GOOD	FAIR

Table 2-52. Ranking and Selection Rationale — 4

	ADVANTAGES	DISADVANTAGES
4-7 ①	•LOWEST TOTAL PROGRAM COST •LOWEST DDT&E •LOWEST TOTAL COST/PAYLOAD •LOW RESIDUAL RISK MEDIUM PERFORMANCE	
4-8 ②	•SLIGHT PERFORMANCE LOSS WITH ROOM-TEMPERATURE ALLOWABLES; HIGHER DDT&E & TOTAL PROGRAMCOSTS	
4-2 ③	•LOW TOTAL PROGRAM COST •HIGH PERFORMANCE	
4-9 ④	•HIGHEST PERFORMANCE •LOW TOTAL PROGRAM COST	•HIGHEST DDT&E
4-10 ⑤	•LOW RESIDUAL RISK	•2ND HIGHEST TOTAL PROGRAM COST •HIGHEST OPERATIONAL COMPLEXITY
4-6	•LOW DDT&E	•HIGHEST TOTAL PROGRAM COST

All Tugs considered had 100% mission capture during the time they are in operation. Consequently, the main selection criteria become lowest total program costs and lowest DDT&E, which result in configuration 4-7 being selected. In addition, 4-7 has low residual risk.

A comparable configuration with the ASE is configuration 4-2. This configuration has higher performance than the RL-10 Cat IV but with the given mission model the slight reduction in Tug flights does not offset the DDT&E and operations costs of this engine.

2.3.3.5 Capability Option 5. This option encompasses phased Tug programs in which the initial and final vehicles have performance and IOC requirements consistent with the requirements for the direct developed capability options 1 and 4 respectively. The subsystem candidates shown in Table 2-53 were selected from the subsystem catalog in compliance with the drivers of low DDT&E cost for the initial vehicle and high performance with retrieval for the final vehicle. Subsystem phasing is indicated by the arrows.

Table 2-53. Subsystem Candidates — 5

PROPULSION	
MAIN ENGINE	– RL-10 CATEGORY IIA → RL-10 CAT. IV
	– RL-10 CATEGORY I WBP → RL-10 CAT. IV
	– RL-10 CATEGORY I WBP → ADV. SP. ENGINE
ACPS	– N_2H_4 MONOPROPELLANT
STRUCTURE	
BODY SHELL	– ALUMINUM ISOGRID → COMPOSITE SANDWICH
	– COMPOSITE SANDWICH
	– ALUMINUM SKIN STRINGER
THRUST STRUCTURE	– ALUMINUM → COMPOSITE
	– ALUMINUM
THERMAL CONTROL	
INSULATION	– 20 LAYERS KAPTON MLI
	– NOMINAL THICKNESS → LIGHTWEIGHT PURGE BAG
AVIONICS	– LOW DDT&E, HIGH AUTONOMY SYSTEM → LOW DDT&E, HIGH AUTONOMY SYSTEM (WITH R&D)
	– LOW DDT&E, HIGH AUTONOMY SYSTEM → LOW WEIGHT, HIGH AUTONOMY SYSTEM

The reference initial and final configurations are presented in Figure 2-50. Table 2-54 shows the configuration options that were considered and the resulting geosynchronous payload performance. The subsystem option variations were initial main engine, body structure, and astrionics. With the exception of configuration 5-4, all initial Tug configurations were sized based on the requirements for the final Tug. In configuration 5-4 the initial vehicle was sized for the development mission and the final vehicle was a completely new vehicle sized for the retrieval mission. The performance variations obtained with the subsystem variations in the different options are similar to those found for the direct developed Tugs in configuration options 1 and 4. All of the options exceed the minimum payload requirements.

The mission performance characteristics are summarized in Table 2-55. All the configurations capture 100% of the deployment missions. Considering both deployment and retrieval the mission capture varies from 93% (configuration 5-6) to 98% (configuration 5-1). Configurations 5-4, 5-5, and 5-6, which have the lowest performance, require the greatest number of velocity packages.

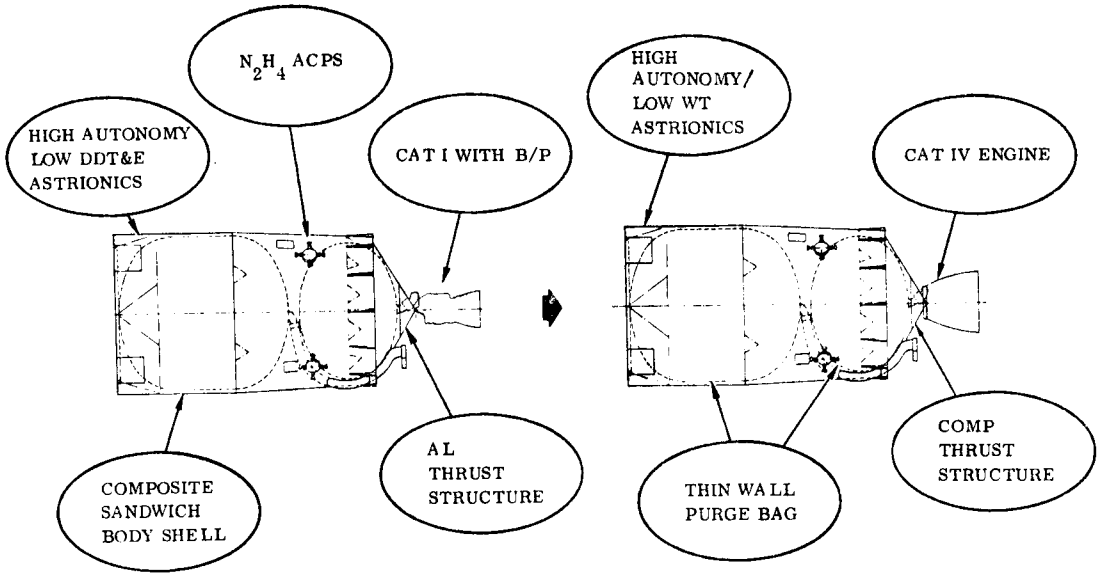

Figure 2-50. Reference Configuration — 5

Table 2-54. Configuration Options — 5

SUBSYSTEM	OPTION					
	5-2	5-3	5-4	5-5	5-6	5-1
PROPULSION						
MAIN ENGINE	CAT. I/CAT. IV	CAT. I/ASE	CAT. I/CAT. IV	CAT. I/CAT IV	CAT. I/CAT. IV	CAT. IIA/CAT. IV
ACPS	N_2H_4	N_2H_4	N_2H_4	N_2H_4	N_2H_4	N_2H_4
STRUCTURE						
TANKS	Al (RM TEMP.)	AL (RM TEMP.)	Al (RT)/Al (CRYO)	Al (RM TEMP.)	Al (RM TEMP.)	Al (RM TEMP.)
BODY	COMP. SAND	COMP. SAND	Al ISO/COMP. SAND	Al S/S	Al S/S	COMP. SAND.
THRUST STRUCTURE	Al/COMP.	Al/COMP.	Al/COMP.	Al	Al	Al/COMP.
INSULATION						
PURGE BAG	NOM./THIN	NOM./THIN	NOM./THIN	NOM./THIN	NOM./THIN	NON./THIN
ASTRIONICS						
POWER	SHUTTLE F.C. / ADV F.C.	SHUTTLE F.C. / ADV F.C.	SHUTTLE F.C. / ADV F.C.	SHUTTLE F.C. / ADV F.C.	SHUTTLE FUEL CELL	SHUTTLE F.C. / ADV F.C.
AUTONOMY	HIGH	HIGH	HIGH	HIGH	HIGH	HIGH
WEIGHT	LOW → LOW	LOW → LOW	LOW → LOW	LOW → LOW		LOW → LOW
DDT&E					LOW	
PAYLOAD (SYNC. EQ.)						
DEPLOY – INITIAL, LB (KG)	5263 (2388)	5250 (2382)	4384 (1989)	4189 (1900)	4414 (2003)	7096 (3219)
RETRIEVE – FINAL, LB (KG)	5929 (2689)	6267 (2842)	6114 (2773)	5351 (2426)	4820 (2186)	5929 (2689)

The program cost data is presented in Figure 2-51. The cost breakdown data is presented in bar chart form with the initial program costs on the left and total program costs on the right. The difference represents the costs of the final Tug. The development costs for the initial vehicles are in the range of $310M to $320M for those configurations having the RL-10 Cat I type engine. The incremental development cost for the final configurations range from about $170M to over $200M. A typical funding spread is also presented in Figure 2-51, which shows that the peak year funding occurs in 1978.

Table 2-55. Mission Performance — 5

CONFIGURATION	MISSION CAPTURE (%) DEPLOY MISSIONS	MISSION CAPTURE (%) DEPLOY & RETRIEVE MISSIONS	AVG. NO. OF PAYLOADS/FLIGHT	ON-ORBIT ASSEMBLIES	VELOCITY PACKAGES
5-2	100	95	1.42	25	5
5-3	100	95	1.45	21	9
5-4	100	95	1.42	26	23
5-5	100	95	1.42	26	23
5-6	100	93	1.4	26	27
5-1	100	98	1.47	21	3

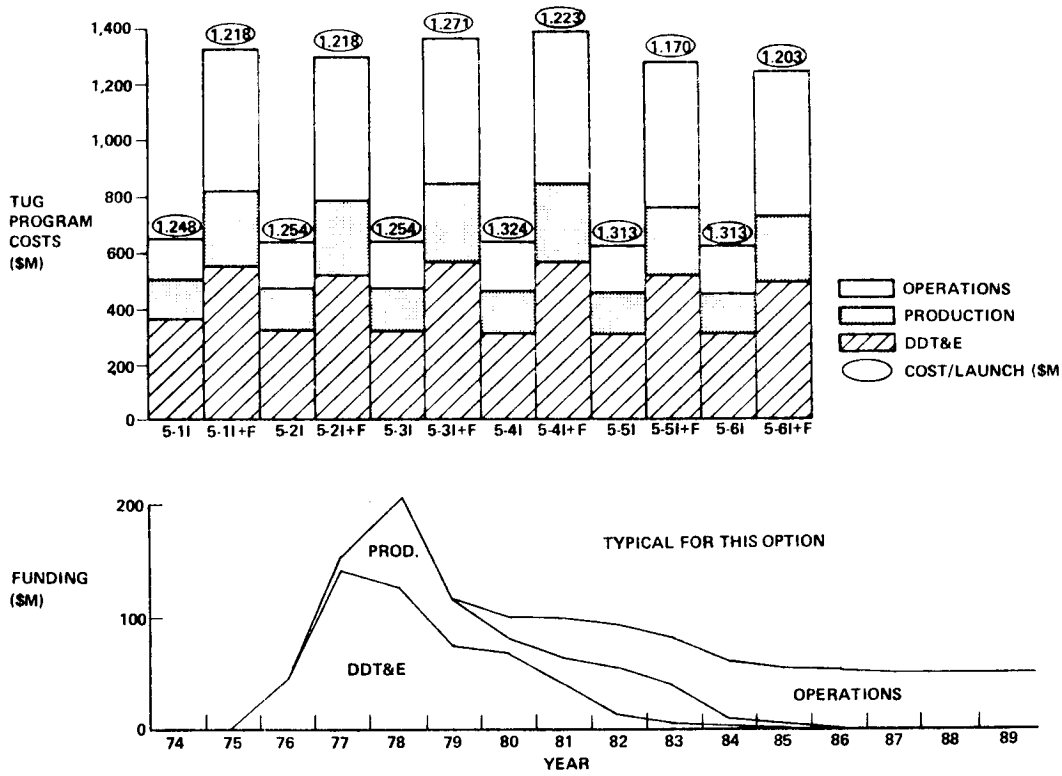

Figure 2-51. Program Cost — 5

Table 2-56. Configuration/Program Summary Comparison — 5

OPTION	COST ($ MILLION)					PERFORMANCE			OPNS. COMPLEX.	RISK		
	TOTAL PROG.	DDT&E	TUG COST/ FLIGHT	TOTAL PROG. COST/PL	PEAK YR. FUNDING	INITIAL DEP. LB (KG)[1]	FINAL RET. LB (KG)	TUG FLIGHTS	CRITICAL EVENTS/ PAYLOAD	RESID. RISK	PAYLOAD IMPACT	GROWTH
5-2	5,784	322/ 517	1.25/ 1.22	9.51	205 (78)	5263 (2388)	5929 (2689)	424	4.14	22/18	GOOD	GOOD
5-3	5,812	322/ 571	1.25/ 1.27	9.56	224 (78)	5250 (2382)	6267 (2842)	420	4.11	22/21	GOOD	GOOD
5-4	5,925	311/ 577	1.32/ 122	9.75	200 (78)	4384 (1989)	6114 (2773)	428	4.19	22/18	FAIR	POOR
5-5	5,828	310/ 515	1.31/ 1.17	9.59	195 (78)	4189 (1900)	5351 (2426)	429	4.20	20/17	FAIR	GOOD
5-6	5,799	310/ 489	1.31/ 1.2	9.7	195 (78)	4414 (2003)	4820 (2186)	429	4.26	20/17	FAIR	VERY GOOD
5-1	5,670	360/ 555	1.25/ 1.22	8.9	211 (78)	7096 (3219)	5929 (2689)	412	398	25/15	VERY GOOD	GOOD

A summary comparison of the major evaluation data for the configurations in this capability option is shown in Table 2-56.

Configuration 5-1 is deleted since it has high DDT&E cost. The initial performance of 5-1 is the highest but is probably not worth the investment. Configuration 5-4, which involves completely different initial and final vehicles, has the highest development and operations cost and is deleted. The other configurations, which all have RL-10 Cat I engine phasing to RL-10 Cat IV engines, are retained for consideration for selection.

The ranking of these four configurations along with the advantages and disadvantages is presented in Table 2-57. Program 5-2 was selected on the basis of low total program cost and high performance. Although 5-6 has $5M lower total program cost, its performance is considerably lower in both the interim and the final configurations. Program 5-3, with slightly higher performance, has $28M more total program cost. Program 5-5, although having lowest DDT&E, has the highest total program costs.

2.3.3.6 Capability Option 6. This is a phased Tug program option in which the initial and final vehicles have performance and IOC requirements consistent with the definitions for the direct developed capability options 2 and 4. Both the initial and final vehicles have retrieval capability. The candidate subsystem shown in Table 2-58 were selected based on the drivers of medium performance and low development cost

for the initial vehicle and high performance for the final vehicle. Subsystem phasing is indicated by the arrows in Table 2-58. All advanced engines were considered in this capability option including use of PFC versions for the initial configuration.

Table 2-57. Ranking and Selection Rationale – 5

5-2 ①	•LOW TOTAL PROGRAM COST •LOW OPERATIONAL COMPLEXITY •LOWEST TOTAL COST/PAYLOAD •HIGH PERFORMANCE	
5-6 ②	•LOWEST INITIAL DDT&E •LOWEST TOTAL PROGRAM COST •GOOD EASE OF EVOLUTION	•HIGH OPERATIONAL COMPLEXITY •LOWEST PERFORMANCE •LOWEST MISSION CAPTURE
5-3 ③	•HIGH PERFORMANCE •LOW OPERATIONAL COMPLEXITY •LOWEST NUMBER OF TUG FLIGHTS	•HIGHER TOTAL PROGRAM COST
5-5 ④	•LOWEST INITIAL DDT&E	•HIGHEST TOTAL PROGRAM COST •HIGH OPERATIONAL COMPLEXITY

Table 2-58. Subsystem Candidates — 6

	PROPULSION		
	MAIN ENGINE	— PFC AEROSPIKE	→ AEROSPIKE
		— PFC ADV. SP. ENGINE	→ ADV. SP. ENGINE
		— RL-10 CAT. IIA	→ RL-10 CAT. IV
		— RL-10 CAT. IIA	→ AEROSPIKE
		— RL-10 CAT. IIA	→ ADV. SP. ENGINE
		— RL-10 CAT. IWBP	→ RL-10 CAT. IV
	ACPS	— N_2H_4 MONOPROPELLANT	→ H_2-O_2 BIPROPELLANT
INITIAL MEDIUM CAPABILITY		— N_2H_4 MONOPROPELLANT	
	STRUCTURE		
FINAL HIGH CAPABILITY	BODY SHELL	— ALUMINUM ISOGRID	→ COMPOSITE SANDWICH
		— ALUMINUM SKIN-STRINGER	
		— COMPOSITE SANDWICH	
	THRUST STRUCTURE	— ALUMINUM	→ COMPOSITE
		— ALUMINUM	
	THERMAL CONTROL		
	INSULATION	— 20 LAYERS OF KAPTON MLI	
		— NOMINAL THICKNESS	→ LIGHTWEIGHT PURGE BAG
	AVIONICS	— LOW DDT&E, HIGH AUTONOMY SYSTEM	→ LOW WEIGHT, HIGH AUTONOMY SYSTEM
		— MEDIUM WEIGHT, HIGH AUTONOMY SYSTEM	→ LOWER WEIGHT, HIGH AUTONOMY SYSTEM

Table 2-59. Configuration Options — 6

SUBSYSTEM	OPTION									
	6-3	6-6	6-8	6-12	6-4	6-5	6-9	6-10	6-1	6-11
PROPULSION										
MAIN ENGINE	CAT. II/CAT. IV	CAT. IIA/CAT. IV	CAT. IIA/CAT. IV	CAT. IIA/CAT. IV	CAT. IIA/A-S	CAT. IIA/ASE	CAT. I/CAT. IV	PFC A-S/A-S	PFC A-S/A-S	PFC-ASE/ASE
ACPS	N_2H_4	N_2H_4	N_2H_4	N_2H_4	N_2H_4	N_2H_4	N_2H_4	N_2H_4	H_2O_2	N_2H_4
STRUCTURE										
TANKS	Al (RM TEMP.)	Al (RM TEMP.)	Al (RM TEMP.)	Al (RM TEMP.)	Al (RM TEMP.)	Al (RM TEMP.)	Al (RM TEMP.)	Al (RM TEMP.)	Al (RM TEMP.)	Al (RM TEMP.)
BODY	COMP. SAND	AL ISO/COMPS.	Al S/S	COMP. SAND	COMP. SAND	COMP. SAND	Al S/S	COMP. SAND	COMP. SAND	COMP. SAND
THRUST STRUCTURE	Al/COMP.	Al/COMP.	Al	Al/COMP.	Al/COMP.	Al/COMP.	Al	Al/COMP.	Al/COMP.	Al/COMP.
INSULATION										
PURGE BAG	NOM./THIN	NOM./THIN	NOM./THIN	NOM./THIN	NOM./THIN	NOM./THIN	NOM./THIN	NOM./THIN	NOM./THIN	NOM./THIN
ASTRIONICS										
POWER	SHUT./ADV. F.C./F.C.	SHUT./ADV. F.C./F.C.	SHUT./ADV. F.C./F.C.	SHUT./ADV. F.C./F.C.	SHUT./ADV. F.C./F.C.	SHUT./ADV. F.C./F.C.	SHUT./ADV. F.C./F.C.	SHUT./ADV. F.C./F.C.	SHUT./ADV. F.C./F.C.	SHUT./ADV. F.C./F.C.
AUTONOMY	HIGH	HIGH	HIGH	HIGH	HIGH	HIGH	HIGH	HIGH	HIGH	HIGH
WEIGHT	LOW → LOW	LOW → LOW	LOW → LOW	MED.	LOW → LOW	LOW → LOW	LOW → LOW	LOW → LOW	LOW → LOW	LOW → LOW
DDT&E										
PAYLOAD (SYNC. EQ.)										
RETRIEVE - INITIAL, LB (KG)	3985 (1807)	3206 (1453)	3295 (1494)	4089 (1854)	3836 (1739)	3976 (1803)	2119 (961)	4575 (1975)	4680 (2123)	5062 (2296)
RETRIEVE - FINAL, LB (KG)	5929 (2689)	5929 (2689)	5351 (2427)	5834 (2646	5794 (2628)	6267 (2842)	5351 (2427)	5793 (2627	5343 (2423)	6266 (2842)

Table 2-59 presents the configuration options considered and the reference geosynchronous payloads for both the initial and final vehicles. The subsystem variations considered were main engines, ACPS, body structure, and astrionics. As in the other phased options, i.e., options 3 and 5, the initial configurations were sized based on the requirements for the final retrieval mission. All configurations greatly exceed the minimum required performance in both the initial and final configurations. The effects of the subsystem variations are similar to those found in the other capability options. The use of PFC versions of the Aerospike and ASE engines for the initial configurations results in a significant performance increase over use of the RL-10 Cat II as shown by comparing configurations 6-4 and 6-5 with configurations 6-10 and 6-11. The PFC engines cannot meet the December 1979 IOC, however. The initial configuration 6-9, which uses the RL-10 Cat I, has marginal performance.

The mission performance characteristics are summarized in Table 2-60. All of the configurations except those with the PFC engines can capture 100% of the mission model. The reduced mission of the PFC engines is a result of the delayed IOC, March 1981 for the PFC Aerospike and October 1981 for the PFC ASE.

The program cost data is presented in Figure 2-52 for the initial vehicles and the total program. Those configurations using the PFC engines initially have development costs greater than $450M compared with about $375M for configurations using an RL-10 Cat II engine initially. The typical funding occurs in 1978 and is a combination of DDT&E and production costs.

Table 2-61 presents a summary comparison of the configurations in capability option 6. Configurations 6-1, 6-10, and 6-11, which use PFC versions of the Aerospike and ASE, are deleted since they do not meet the 1979 IOC. Configuration 6-9, which uses an RL-10 Cat I engine, has marginal performance and is deleted. Configurations 6-4 and 6-6 are deleted since they have low performance and either high initial development or high total program costs. The other configurations are retained for consideration for selection.

Table 2-60. Mission Performance — 6

CONFIGURATION	MISSION CAPTURE (%) DEPLOY MISSIONS	DEPLOY & RETRIEVE MISSIONS	AVG. NO. OF PAYLOADS/FLIGHT	ON-ORBIT ASSEMBLIES	VELOCITY PACKAGES
6-3	100	99	1.53	21	3
6-6	100	99	1.48	24	4
6-8	100	99	1.47	24	4
6-12	100	99	1.53	21	3
6-4	100	99	1.52	22	3
6-5	100	99	1.54	17	7
6-9	100	99	1.43	25	14
6-10	100	92	1.55	20	2
6-1	100	91	1.54	20	2
6-11	100	89	1.57	13	5

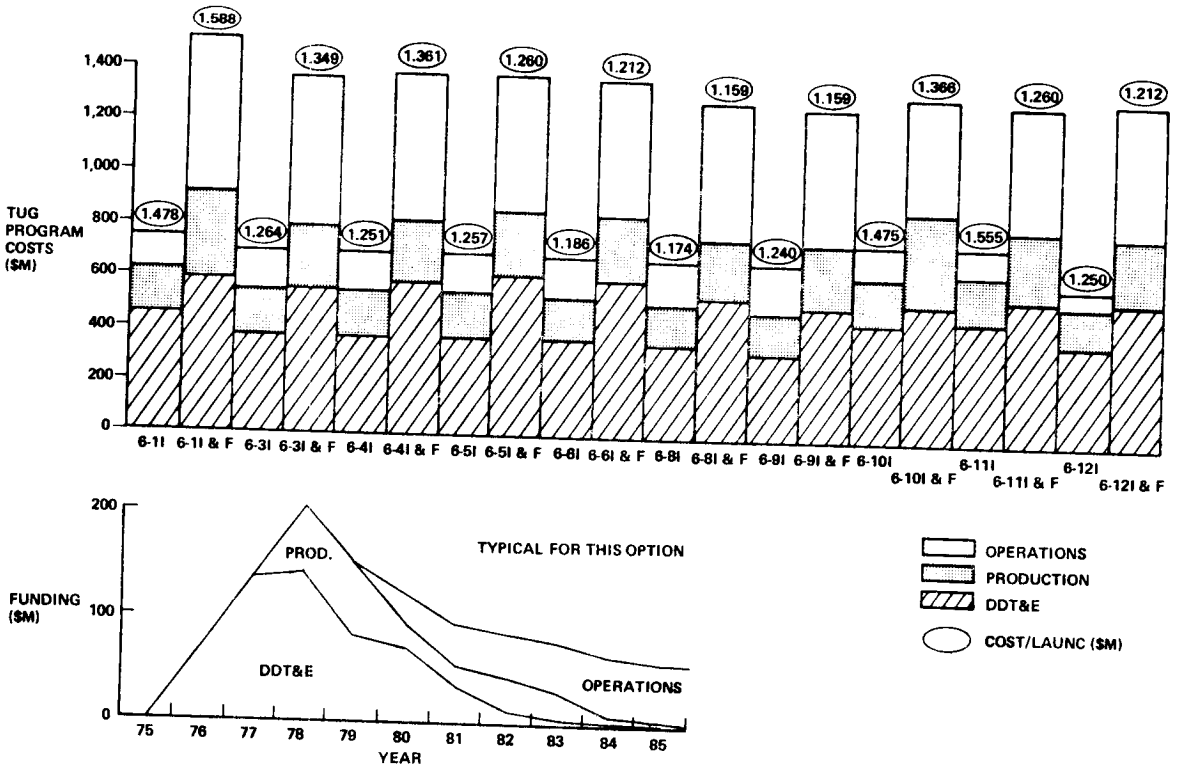

Figure 2-52. Program Cost — 6

Table 2-61. Configuration/Program Summary Comparison — 6

OPTION	COST ($ MILLION) TOTAL PROG.	DDT&E	TUG COST/ FLIGHT	TOTAL PROG. COST/PL	PEAK YR. FUNDING	PERFORMANCE INITIAL DEP. LB (KG)	FINAL RET. LB (KG)	TUG FLIGHTS	OPNS. COMPLEX. CRITICAL EVENTS/ PAYLOAD	RISK RESID. RISK	PAYLOAD IMPACT	GROWTH
6-3	5,775	378/ 552	1.26/ 1.35	9.04	205 (78)	3985 (1807)	5929 (2689)	419	4.0	25/15	GOOD	GOOD
6-6	5,929	369/ 601	1.19/ 1.21	9.31	201 (78)	3206 (1453)	5929 (2689)	432	4.16	31/17	GOOD	FAIR
6-8	5,857	367/ 551	1.17/ 1.16	9.21	195 (78)	3295 (1494)	5351 (2427)	433	4.09	30/15	GOOD	GOOD
6-12	5,748	379/ 563	1.25/ 1.21	9.0	208 (78)	4089 (1854)	5834 (2646)	419	4.0	25/16	GOOD	GOOD
6-4	5,822	379/ 575	1.25/ 1.36	9.13	218 (78)	3836 (1739)	5794 (2628)	421	4.0	25/23	FAIR	GOOD
6-5	5,760	378/ 605	1.26/ 1.36	9.04	224 (78)	3975 (1803)	6267 (2842)	415	3.98	25/20	GOOD	GOOD
6-9	5,992	329/ 513	1.24/ 1.16	9.4	200 (78)	2119 (961)	5351 (2427)	446	4.17	25/17	GOOD	GOOD
6-10	5,437	455/ 537	1.48/ 1.37	9.25	188 (78)	4575 (1975)	5793 (2627)	380	3.97	31/9	VERY GOOD	VERY GOOD
6-1	5,524	4 61/ 589	1.48/ 1.59	9.44	185 (78)	4680 (2123)	5343 (2423)	381	3.99	31/9	GOOD	POOR
6-11	5,115	465/ 551	1.56/ 1.26	9.0	183 (78)	5062 (2296)	6266 (2842)	362	3.93	33/9	VERY GOOD	VERY GOOD

Table 2-62. Ranking and Selection Rationale – 6

	ADVANTAGES	DISADVANTAGES
6-3 ①	•LOWEST DDT&E •LOWEST RESIDUAL RISK	•HIGHEST TOTAL PROGRAM COST
6-12 ②	•LOWEST TOTAL PROGRAM COST •LOWEST TOTAL COST/PAYLOAD	•HIGHEST DDT&E
6-5 ③	•LOWEST TUG FLIGHTS •LOWEST OPS. COMPLEXITY	•HIGHEST RESIDUAL RISK
6-8 ④	•LOWEST DDT&E	•LOW PERFORMANCE •HIGH TOTAL PROGRAM COST

Table 2-62 presents the ranking of the remaining four configurations along with the advantages and disadvantages as determined from the evaluation data in Table 2-61. All other programs have 100% the same mission capture. Program 6-3 was selected on the basis of lowest total DDT&E and slightly lower residual risk. Programs 6-3 and 6-12 are quite close in evaluation. Program 6-5 although having DDT&E comparable

to 6-3, has approximately $80M higher total program cost with reduced performance in both the initial and final configurations.

2.3.3.7 Capability Option 7. This is a direct developed option with retrieval that has the same requirements as capability option 2 except that the IOC is December 1983. The later IOC allows more advanced subsystems to be considered since peak funding occurs after the Shuttle peak funding. The candidate subsystems in Table 2-63 were selected considering the drivers of medium performance and a 1983 IOC.

Table 2-63. Subsystem Candidates — 7

MEDIUM PERFORMANCE, RETRIEVAL, 1983 IOC

PROPULSION	
MAIN ENGINE	– RL-10 CATEGORY I WITH BOOST PUMPS
	– RL-10 CATEGORY IIA
ACPS	– N_2H_4 MONOPROPELLANT
STRUCTURE	
BODY SHELL	– ALUMINUM SKIN-STRINGER
	– COMPOSITE SANDWICH
THRUST STRUCTURE	– ALUMINUM
	– COMPOSITE
TANKS	– SUSPENDED ALUMINUM, ROOM-TEMP. ALLOWABLES
	– SUSPENDED ALUMINUM, CRYOGENIC ALLOWABLES
	– LOAD-BEARING ALUMINUM
THERMAL CONTROL	
INSULATION	– 20 LAYERS OF KAPTON MLI
	– NOMINAL THICKNESS PURGE BAG
	– LIGHTWEIGHT PURGE BAG
AVIONICS	– LOW DDT&E, HIGH AUTONOMY SYSTEM
	– LOW WEIGHT, HIGH AUTONOMY SYSTEM
	– LOW WEIGHT, HIGH AUTONOMY, DUAL CENTRAL SYSTEM

Conceptually, the reference configuration is similar to the reference configuration in option 1 (Figure 2-43) except that it is sized for a retrieval mission, uses an RL-10 Cat IIA engine, and has a different astrionics system.

Table 2-64 shows the configurations considered in option 7 and the resulting geosynchronous retrieval payload. The variations considered were in main engine, structural concept, tankage, body structure, and astrionics. All configurations met the 2200 lb (998 kg) retrieval payload capability. The load-bearing tank vehicles were slightly heavier than the suspended tank vehicles, which resulted in a loss of payload capability of about 200 lb (91 kg). The performance variations with the other subsystem variations were similar to those discussed in capability option 2.

The mission performance characteristics are summarized in Table 2-65. All payloads are deployed, following IOC in December 1983. Mission capture over the years 1984-90 is in the 90 to 98% range. The Tug-to-Tug on-orbit assemblies are constant at 15 for all configurations. A small number of velocity packages is required.

Table 2-64. Configuration Options — 7

SUBSYSTEM	OPTION								
	7-5	7-2	7-6	7-7	7-1	7-4			
PROPULSION									
MAIN ENGINE	CAT. IIA	CAT. IIA	CAT. IIA	CAT. IIA	CAT. IIA	CAT I WBP			
PRESSURIZATION	SELF	SELF	SELF	SELF	SELF	SELF			
ACPS	N_2H_4	N_2H_4	N_2H_4	N_2H_4	N_2H_4	N_2H_4			
STRUCTURE									
TANKS	Al (RT)	Al (CRYO)	Al (RT)	Al (RT)	LOAD BRG	Al (RT)			
BODY	Al S/S	COMP. SAND	Al S/S	Al S/S	COMP. SAND	COMP. SAND			
THRUST STRUCTURE	Al	COMP.	Al	Al	COMP.	Al			
INSULATION									
PURGE BAG	NOM.	THIN	NOM.	NOM.	THIN	NOM.			
ASTRIONICS									
POWER	ADV. FUEL CELL	ADV. FUEL CELL	ADV. FUEL CELL	SHUTTLE FUEL CELL	ADV. FUEL CELL	ADV. FUEL CELL			
AUTONOMY	HIGH	HIGH	HIGH	HIGH	HIGH	HIGH			
WEIGHT	MED.	MED.	LOW		MED.	MED.			
DDT&E	MED.	MED.		LOW	MED.	MED.			
PAYLOAD (SYNC. EQ.)									
DEPLOY, LB (KG)									
RETRIEVE, LB (KG)	4011 (1819)	4948 (2244)	4083 (1852)	3480 (1578)	4760 (1259)	3279 (1487)			

Table 2-65. Mission Performance — 7

CONFIGURATION	MISSION CAPTURE (%)*		AVG. NO. OF PAYLOADS/FLIGHT	ON-ORBIT ASSEMBLIES	VELOCITY PACKAGES
	DEPLOY MISSIONS	DEPLOY & RETRIEVE MISSIONS			
7-5	100	92	1.43	15	4
7-2	100	98	1.5	15	4
7-6	100	94	1.45	15	4
7-7	100	90	1.35	15	6
7-1	100	98	1.5	15	4
7-4	100	92	1.43	15	4

*MISSION MODEL YEARS 1984-1990.

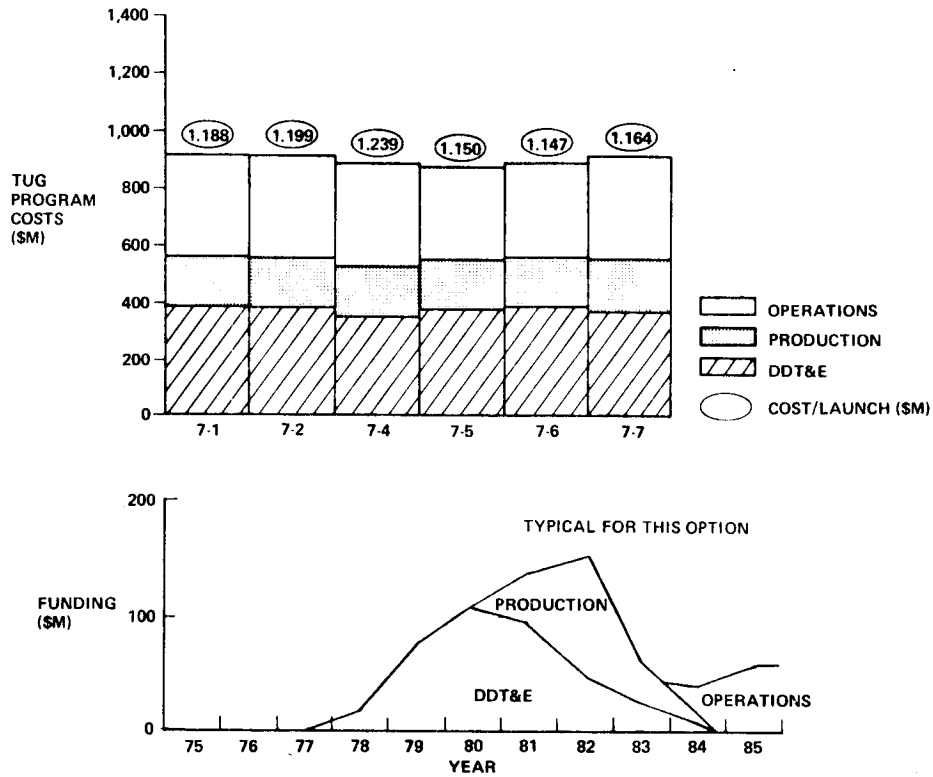

Figure 2-53. Program Cost — 7

Figure 2-53 presents the program cost data and a typical funding spread, which shows the peak year funding occurring in 1982. The development costs are in the range of $350M to $390M. Total Tug program costs are lower than some of the other options because the 1983 IOC eliminates the early flights.

A summary comparison of the major evaluation data for the configurations in Option 7 is shown in Table 2-66. Configuration 7-7 has the highest total program cost and cost per flight and is deleted. Configuration 7-4, which utilizes an RL-10 Cat I engine, has the lowest development cost but it also has a significantly lower payload. Since performance and total program cost rather than development cost are probably the major drivers for a 1983 IOC Tug, this configuration is deleted from consideration for selection. The remaining four configurations were retained for selection and are ranked in Table 2-67.

Configuration 7-5 was selected on the basis of lowest DDT&E, and low total program cost. In addition its performance margin was sufficiently high to preclude performance risk concern for this capability option. Configurations 7-1 and 7-2, while having relatively high total program cost and higher DDT&E costs, have sufficiently high performance to be considered as candidates for capability option 4.

Table 2-66. Configuration/Program Summary Comparison

OPTION	COST ($ MILLION)					PERFORMANCE		OPNS. COMPLEX.	RISK		
	TOTAL PROG.	DDT&E	TUG COST/ FLIGHT	TOTAL PROG. COST/PL	PEAK YR. FUNDING	PAYLOAD RET. LB (KG)	TUG FLIGHTS	CRITICAL EVENTS/ PAYLOAD	RESID. RISK	PAYLOAD IMPACT	GROWTH
7-5	4,000	378	1.15	9.44	140 (82)	4011 (1819)	296	4.13	23	GOOD	FAIR
7-2	4,034	385	1.20	9.0	146 (82)	4948 (2244)	296	4.01	19	VERY GOOD	FAIR
7-6	3,996	389	1.15	9.28	126 (82)	4083 (1852)	296	4.09	26	GOOD	FAIR
7-7	4,132	369	1.16	10.00	150 (82)	3480 (1578)	306	4.26	24	FAIR	FAIR
7-1	4,034	387	1.19	9.0	147 (82)	4760 (1259)	296	4.02	18	VERY GOOD	FAIR
7-4	4,010	348	1.24	9.48	159 (82)	3279 (1487)	296	4.13	21	GOOD	GOOD

Table 2-67. Ranking and Selection Rationale – 7

	TOTAL PROGRAM COST WITHIN 38 MILLION FOR REMAINING OPTIONS	
	ADVANTAGES	DISADVANTAGES
7-5 ①	•2ND LOWEST TOTAL PROGRAM COST •LOWEST DDT&E	•HIGHEST CRITICAL EVENTS •HIGHEST TOTAL PROGRAM COST/PAYLOAD •LOWEST PERFORMANCE
	MEDIUM RESIDUAL RISK	
7-6 ②	•LOWEST TOTAL PROGRAM COST •2ND LOWEST DDT&E	•HIGHEST DDT&E
7-2 ③	•HIGH PERFORMANCE (CANDIDATE FOR BUCKET 4)	•HIGH TOTAL PROGRAM COST •HIGH DDT&E
7-1 ④	•HIGH PERFORMANCE (CANDIDATE FOR BUCKET 4)	•HIGH TOTAL PROGRAM COST •HIGH DDT&E

2.3.4 CONCEPT SUMMARY AND RECOMMENDATIONS (GDCA). As discussed above, recommended configurations were selected in each of the seven capability options. The next step in Task 3 was selecting up to four configurations/programs from the seven for recommendation to the government for program definition analyses in Task 5.

Table 2-68 summarizes the major subsystem features of the recommended configurations in each option. The recommended main engines are all RL-10 derivatives. An N_2H_4 ACPS system is recommended for each configuration. The structure subsystem varies depending on capability level and IOC. There are only three basic astrionics systems. The system in configuration 1-5 is identical with the system for the initial

Table 2-68. Recommended Configuration Options

SUBSYSTEM	OPTIONS						
	1-5	2-7	7-5	4-7	3-9	5-2	6-3
PROPULSION							
MAIN ENGINE	CAT. I WBP	CAT. I WBP	CAT. IIA	CAT. IIA	CAT. I WBP CAT. IIB	CAT. I WBP CAT. IV	CAT. IIA/ CAT. IV
ACPS	N_2H_4	N_2H_4	N_2H_4	N_2H_4	N_2H_4	N_2H_4	N_2H_4
STRUCTURE							
TANKS	Al (RT)	Al (RT)	Al (RT)	Al (CRYO)	Al (RT)	Al (RT)	Al (RT)
BODY	Al S/S	Al S/S	Al S/S	COMP. SAND	Al S/S	COMP. SAND	COMP. SAND
THRUST STRUCT.	Al	Al	Al	COMP.	Al	Al/COMP.	Al/COMP.
INSULATION							
PURGE BAG	NOM.	NOM.	NOM.	THIN	NOM./THIN	NOM./THIN	NOM./THIN
ASTRIONICS							
POWER	SHUTTLE FUEL CELL	ADV. FUEL CELL	ADV. FUEL CELL	ADV. FUEL CELL	SHUT/ADV. F.C./F.C.	SHUT/ADV. F.C./F.C.	SHUT/ADV. F.C./F.C.
AUTONOMY	HIGH	HIGH	HIGH	HIGH	HIGH	HIGH	HIGH
WEIGHT		LOW	MED.	MED.	LOW	LOW	LOW
DDT&E	LOW		MED.	MED.	LOW	LOW	LOW
MISSION REQUIREMENT	DEPLOY	RETRIEVE	RETRIEVE	RETRIEVE	DEP/RET	DEP/RET	RET/RET

vehicle in options 3 (3-9I) and 5 (5-2I). The system for configuration 2-7 is the same as the system for the initial Tug in option 6 (6-3I). Configurations 4-7 and 7-5 have identical astrionics systems, which are the same as the final vehicles in options 3 (3-9F), 5 (5-2F), and 6 (6-3F).

The performance and mission capture characteristics are presented in Figure 2-54. The geosynchronous deployment performance ranges from 4500 lb (2041 kg) for the option 1 configuration to almost 10,000 lb (4536 kg) for the Option 4 configuration. Retrieval performance ranges from 2700 lbs for option 2 to 6300 lb (2858 kg) for the option 4 configuration. All the Tug configurations can accomplish 100% of the deployment missions during their operational time period. However, when considering both deployment and retrieval opportunities mission capture is less than 100% for all options except for 4-7, which is 100% following the Tug IOC in December 1983, but drops to 71% over the full mission model span from 1980 to 1990. Mission capture based on deployment and retrieval is 64% for option 1-5, which has no retrieval capability. The other options have intermediate levels of mission capture reflecting their payload-to-orbit capability and Tug IOC.

The average number of payloads per Tug flight reflects the performance capability of the recommended options. Option 1-5 has the lowest payload-to-orbit capability and cannot retrieve payloads; the average number of payloads per flight for this option is 1.2. At the other extreme, option 4-7 has the maximum performance capability and carries, on the average, 1.56 payloads per Tug flight. The other Tug options fall in between these extremes.

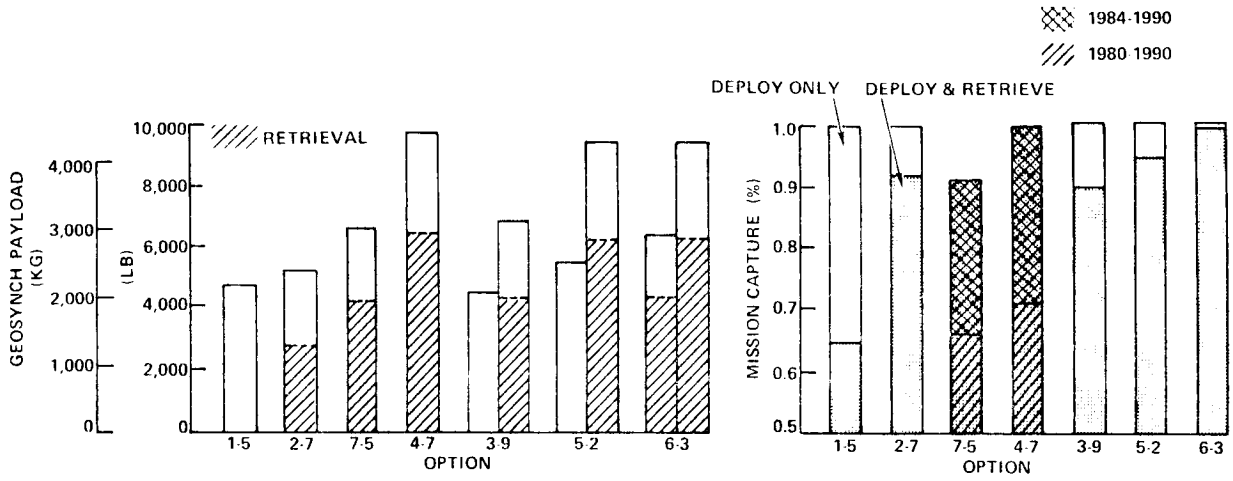

Figure 2-54. Performance and Mission Capture Characteristics

A Tug program cost comparison is presented in Figure 2-55. DDT&E costs for direct developed options range from $317M for option 1 to about $450M for option 4. The phased programs have initial DDT&E costs in the range of $315M to about $380M with total DDT&E costs between $420M and about $550M. In comparing total Tug program costs it is important to consider that options 4 and 7 only operate after 1983 and that option 1 and the initial configurations in options 3 and 5 do not have retrieval capability and hence cannot do a lot of the missions.

Table 2-69 compares the recommended configurations in each capability option on the basis of cost and performance criteria. The options are arranged in the order of increasing capability for direct developed and phased programs. Option 1 has the lowest development cost and the lowest total program cost for programs having a 1979 IOC. However, without retrieval capability it only captures 64% of the mission model. The low total program cost for options 7 and 4 arises from the fact that they have a 1983 IOC and hence less flights. The full capability vehicle 4-7 and the final vehicles in options 5 and 6 have almost the same performance capability. As expected in the direct developed programs, increasing capability requires higher development cost. In the phased programs increased capability requires higher development cost. However, the total program cost is lower for option 6 (early retrieval) than for option 5 (retrieval in 1983). This occurs since the higher performance capability in option 6 yields fewer Tug flights to accomplish more of the mission model. The Tug program cost per payload delivered or retrieved is also the lowest in option 6.

It is interesting to note that except for option 1 all the options have a total program cost per payload delivered or retrieved less than the $10.5M Shuttle launch cost. This is due to the high performance capability of these cryogenic Tugs, which permits significant multiple payload missions.

At the time of the concept selection meeting four capability options and their respective configurations were recommended for further analysis. These were options 5, 4, 7, and 2.

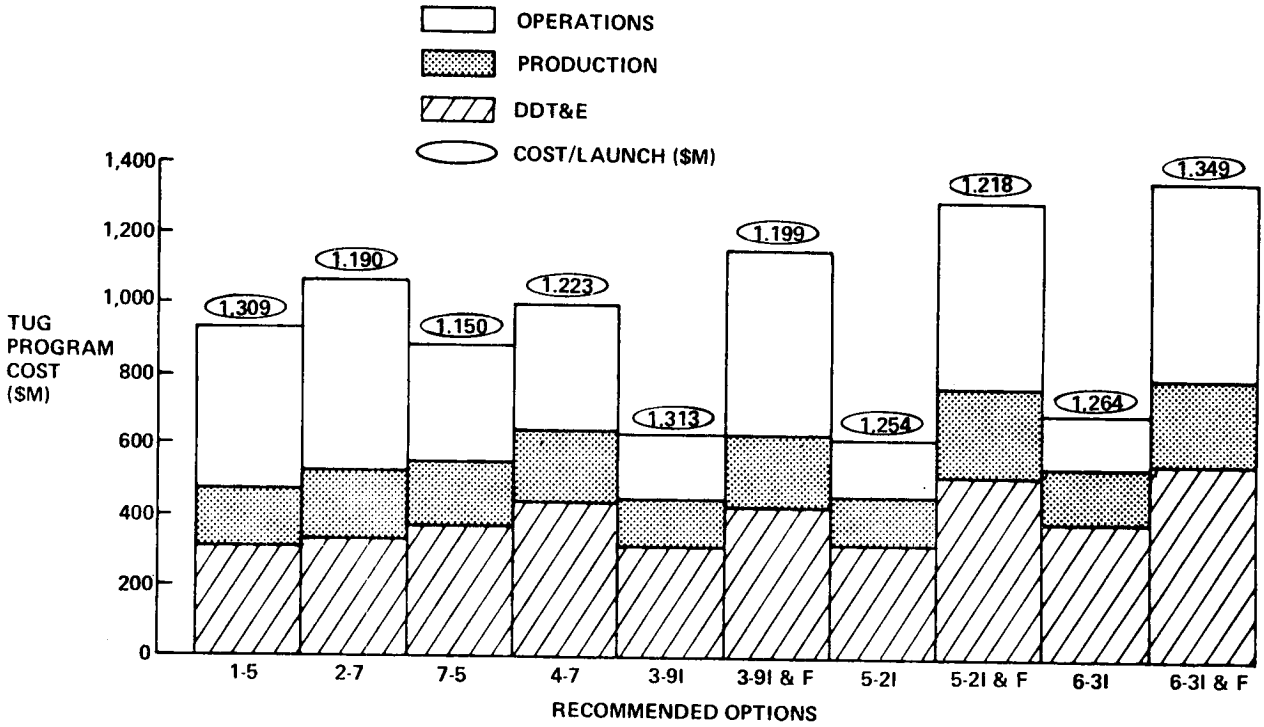

Figure 2-55. Program Cost Comparison

Table 2-69. Recommended Option Comparison

PROGRAM TYPE	BUCKET	RECOMM. CONFIG.	COST ($M)			PERFORMANCE		
			TOTAL PROG.	DDT&E	TOTAL PROG. COST/ PAYLOAD	GEOSYNC. PAYLOAD DEPLOY (LB.)	GEOSYNC. PAYLOAD RETRIEVE (LB.)	MISSION* ACCOMP. (%)
DIRECT	1	1-5	4553	317	11.02	4915 (2229)		64%
	2	2-7	5826	341	9.88		2736 (1241)	92%
	7	7-5	4000	378	9.44		4011 (1819)	92% (65%)
	4	4-7	4110	451	8.96		6114 (2773)	100% (71%)
PHASED	3	3-9	5694	316/424	9.78	4492 (2028)	4345 (1971)	90%
	5	5-2	5784	322/517	9.51	5263 (2388)	5929 (2689)	95%
	6	6-3	5775	378/552	9.04		3985/5929 (1807)/(2689)	99%

*ALL TUGS ACCOMPLISH 100% OF DEPLOYMENT MISSIONS

( ) MISSION ACCOMPLISHMENT OVER ENTIRE MODEL YEARS

Option 5 was selected since it gave early deployment capability for low initial DDT&E costs and had the capability to phase into the high performance retrieval capability Tug. From the seven options considered in the systems study, it offered the best solution to the problems of Tug requirements and funding limitations.

The second recommended option was option 4, configuration 4-7, a direct developed full capability Tug with a 1983 IOC. This option provides a full capability Tug and avoids the early year funding problems. With this options some type of interim Tug is required prior to the 1983 IOC in order to accomplish the Shuttle mission model.

The third recommended option was option 7, configuration 7-5. Like option 4, this is a direct developed Tug with payload retrieval capability and a 1983 IOC. It differs from option 4 in that it has a lower retrieval payload capability and hence has lower development cost.

The fourth recommended option was option 2, configuration 2-7, a direct developed Tug with moderate retrieval capability available in 1979. It would provide an early retrieval capability at moderate DDT&E cost.

2.3.5 SELECTED CONCEPTS (GOVERNMENT). The configuration/program data generated in Task 3 and summarized above was presented to the government at the Concept Evaluation and Selection meeting. The government reviewed the data and recommendations of General Dynamics/Convair Aerospace Division and the other Space Tug System Study contractors and selected three programs for analyses in the Program Definition phase, Task 5. The government selected programs are as follows:

a. Program 1 — Program 1 is a direct development Tug with an IOC of December 31, 1979. It has a minimum performance requirement of 3500 lb (1588 kg) payload placement in a synchronous equatorial orbit. It has minimum development cost and is designed without growth capability and without payload rendezvous and docking capability. The maximum on orbit mission duration is 36 hours.

b. Program 2 — Program 2 is a direct development Tug with an IOC of December 31, 1979. It has rendezvous and docking capability and has a minimum performance requirement of 3500 lb (1588 kg) payload retrieval from a synchronous equatorial orbit. The emphasis in this program was on total program cost effectiveness for low DDT&E costs.

c. Program 3 — Program 3 is a phased development program with the initial vehicle available on December 31, 1983. The initial vehicle has deploy only capability with a minimum performance requirement of 3500 lb (1588 kg) placement to synchronous equatorial. The final vehicle has payload retrieval capability with a minimum performance requirement of 2200 lb (998 kg) retrieval from synchronous equatorial. The emphasis on this program was minimum DDT&E cost for the initial configuration phasing to a configuration which emphasized low total program cost.

Section 2.4 will present a summary of the program definitions which were developed in Task 5 to satisfy these three program concept options.

2.4 PROGRAM DEFINITIONS

The major objective of the program definition task was to develop detailed definition data for the three programs selected by the government at the Concept Evaluation and Selection Meeting. The emphasis in generating the data was on the programmatic aspects. The technical aspects were covered to the extent necessary to yield credible programmatic and cost data.

In addition to developing data on the baseline programs it was also the objective of this task to determine certain configuration and programmatic sensitivites. The major sensitivities included IOC, performance level, servicing mission, and the use of advanced engines.

The program definition data was required at the data dump to be available for the government assessment. The time after the data dump was used in further analysis of the options with a limited amount of updating.

The selected configurations for the three programs are shown in Figure 2-56 along with the basic program requirements.

The emphasis in Program 1 was on minimum DDT&E cost. The selected configuration uses conventional structure and an existing engine. To minimize costs, maximum use has been made of Centaur components such as astrionics and engine support components.

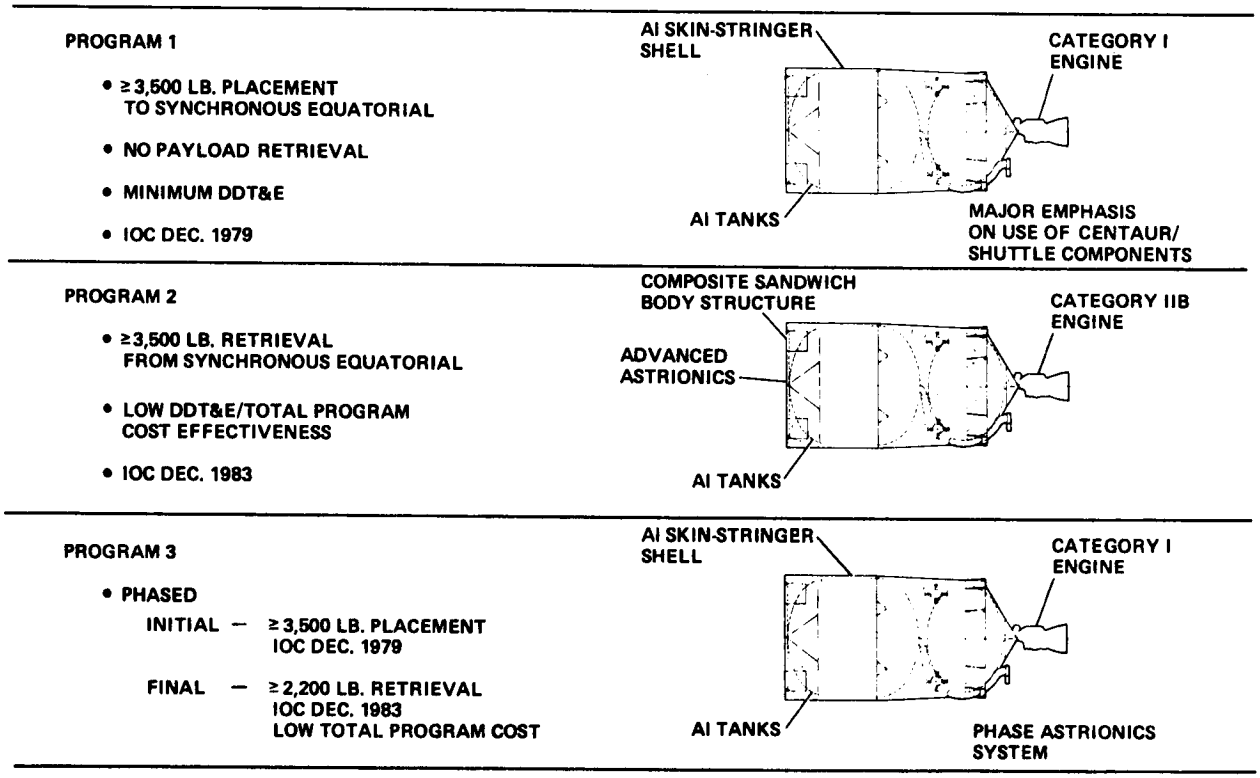

Figure 2-56. Selected Configurations

The emphasis in Program 2 was more on total program cost effectiveness, which is reflected in the higher performance requirement. The increased performance was obtained by using a RL-10 Cat IIB engine, a composite sandwich shell, and more advanced astrionics.

Program 3 is a phased program in which the emphasis for the initial vehicle is on minimizing DDT&E cost while for the final vehicle the emphasis is more on low total program cost. The major configuration phasing in this program is from a low cost astrionics system to an advanced lightweight system with rendezvous and docking capability.

The three sections that follow summarize the program definitions. With the exception of the last section under each program, which presents the program update since the data dump, the program data represents the definition at the time of the data dump.

2.4.1 PROGRAM 1

2.4.1.1 Configuration. The inboard profile drawing of the Program 1 Tug is shown in Figure 2-57. The stage is sized for maximum deployment capability to a synchronous equatorial orbit. With primary emphasis in this program being low DDT&E cost, the subsystems have been chosen with this in mind. The main engine is the RL-10 Cat I operating at a mixture ratio of 5:1. The tankage is 2219-T87 aluminum alloy. Elliptical dome bulkheads of welded gores offer lower cost at a negligible weight penalty. The shell is aluminum with skin-stringer construction. A zero-g vent system is installed on each tank. The ACPS is hydrazine monopropellant with helium pressurized positive explusion tanks. Line and tank heaters have been included to condition the hydrazine. Sixteen ACPS engines in four clusters of four provide all axis maneuver capability and fail-operational/fail-safe redundancy.

The avionics suit relies heavily on Centaur-developed components. The computer is the Centaur computer with increased memory capacity. The IMU is the DIGS strapdown, which has been integrated with a similar computer. The TVC is hydraulic with an engine driven pump identical with the Centaur. Most of the instrumentation and communications subsystems are revised Centaur components. A fuel cell is utilized for power in preference to batteries because of the excessive weight of a battery system. The avionics is made redundant by utilizing three computers, two IMUs, two communications systems, three safety instrumentation systems, a backup emergency battery, etc. Level 1 autonomy has been retained and the necessary update equipment (horizon and star sensors) included.

The insulation system is similar to that used on the Centaur, consisting of 11 layers of dimpled, doubly aluminized Kapton film. The astrionics module sidewall is utilized to radiate component generated heat to space. Portions of this sidewall (about 25%) are insulated to prevent excessive cooldown. A radiator is located in the intertank area to reject fuel cell waste heat.

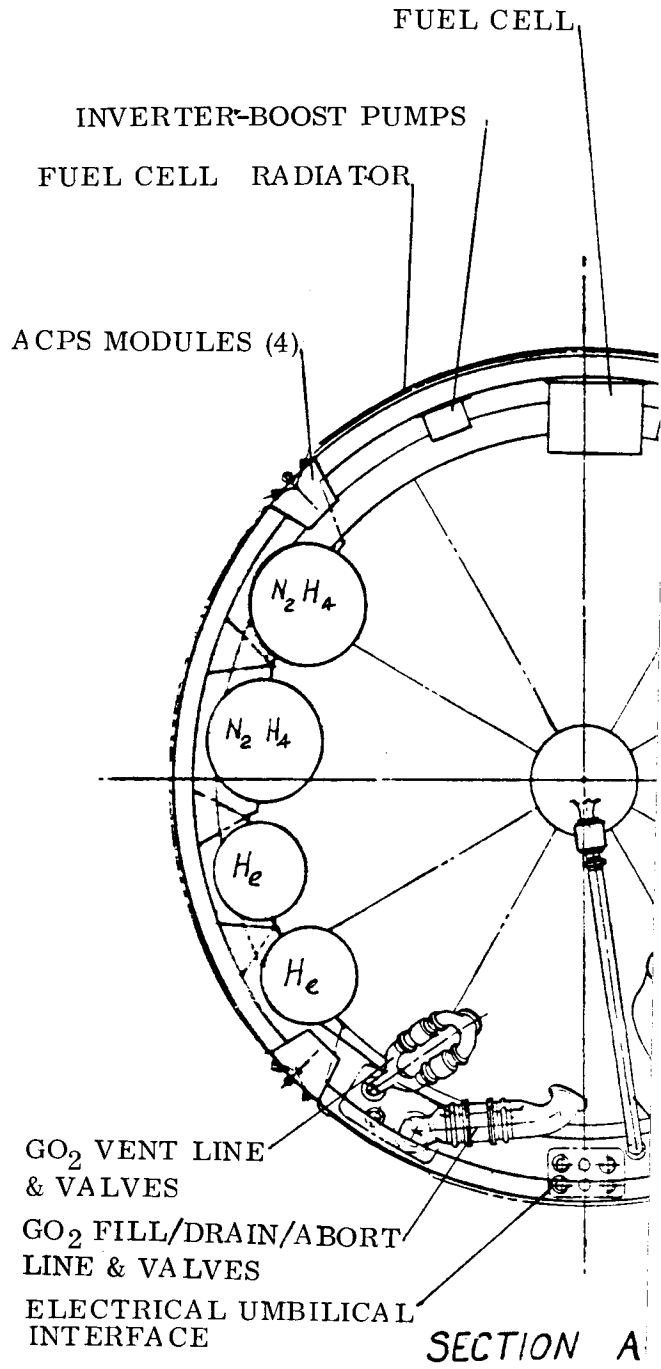
FUEL CELL
INVERTER-BOOST PUMPS
FUEL CELL RADIATOR
ACPS MODULES (4)
N_2H_4
N_2H_4
H_e
H_e
GO_2 VENT LINE & VALVES
GO_2 FILL/DRAIN/ABORT LINE & VALVES
ELECTRICAL UMBILICAL INTERFACE
SECTION A

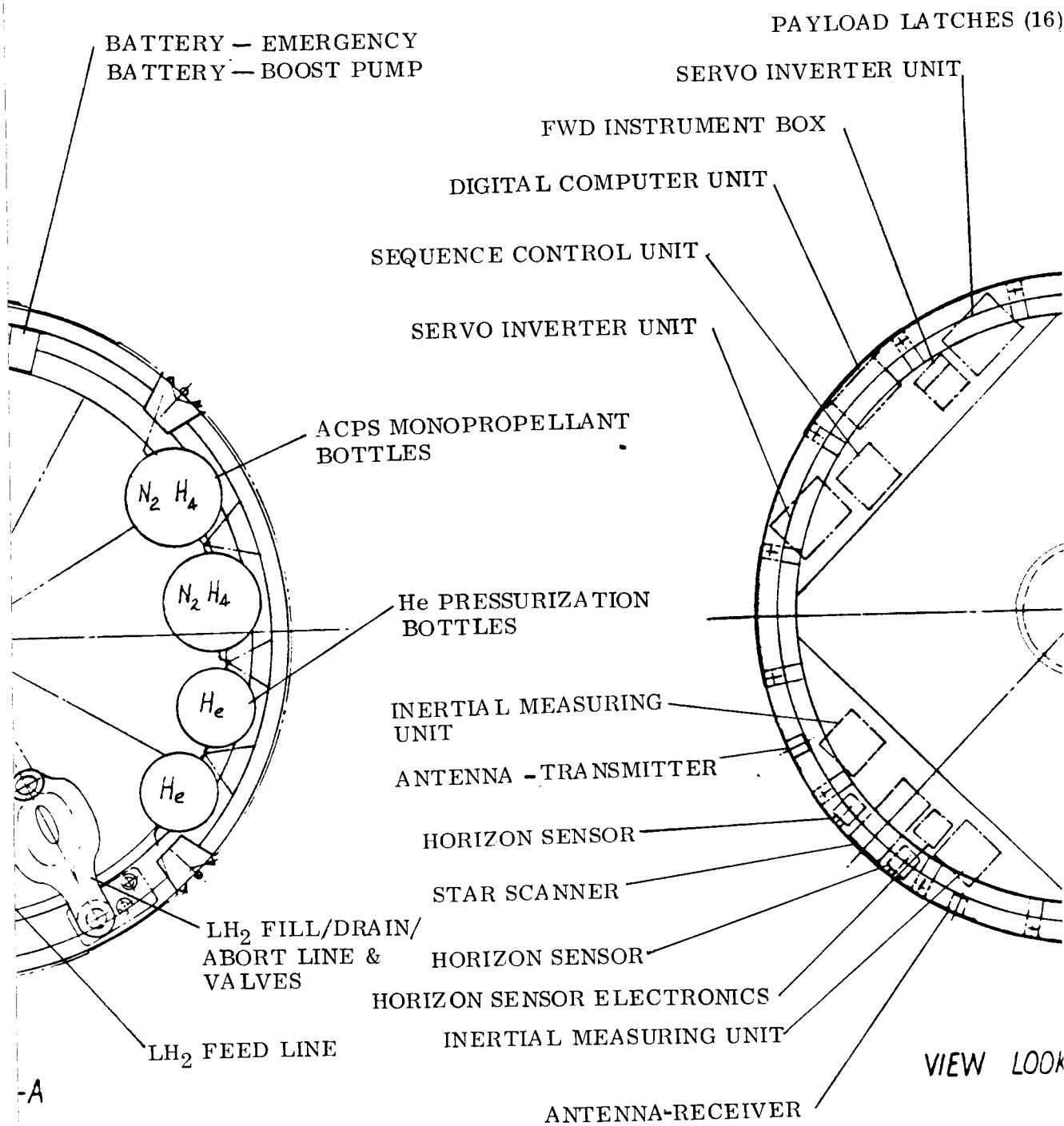
BATTERY — EMERGENCY
BATTERY — BOOST PUMP
PAYLOAD LATCHES (16)
SERVO INVERTER UNIT
FWD INSTRUMENT BOX
DIGITAL COMPUTER UNIT
SEQUENCE CONTROL UNIT
SERVO INVERTER UNIT
ACPS MONOPROPELLANT BOTTLES
N_2H_4
N_2H_4
He PRESSURIZATION BOTTLES
He
He
INERTIAL MEASURING UNIT
ANTENNA - TRANSMITTER
HORIZON SENSOR
STAR SCANNER
LH_2 FILL/DRAIN/ ABORT LINE & VALVES
HORIZON SENSOR
HORIZON SENSOR ELECTRONICS
INERTIAL MEASURING UNIT
LH_2 FEED LINE
ANTENNA-RECEIVER
VIEW LOOK
-A

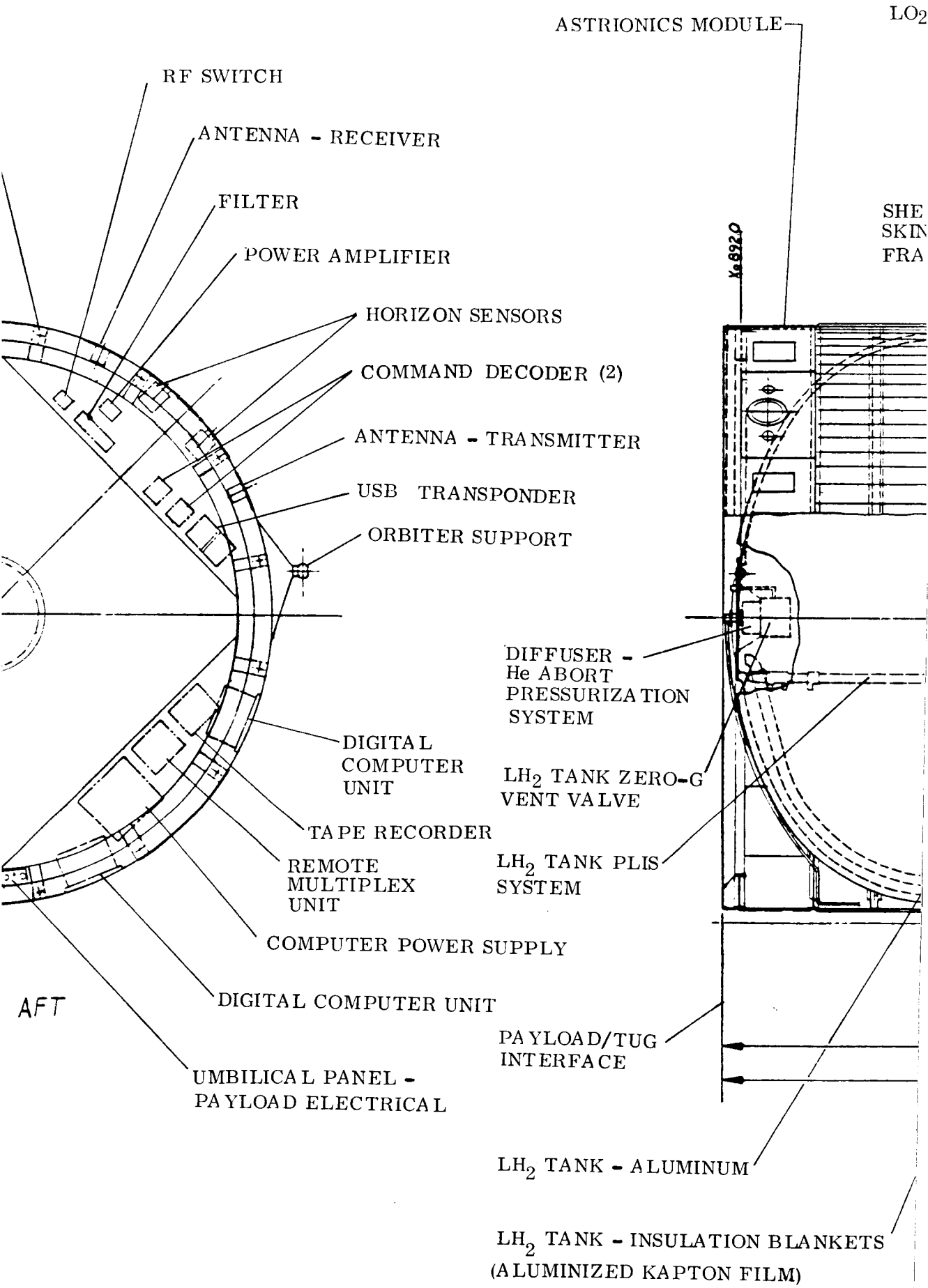
ASTRIONICS MODULE
LO2
RF SWITCH
ANTENNA - RECEIVER
FILTER
POWER AMPLIFIER
HORIZON SENSORS
COMMAND DECODER (2)
ANTENNA - TRANSMITTER
USB TRANSPONDER
ORBITER SUPPORT
SHE
SKIN
FRA
Xa 892.0
DIFFUSER - He ABORT PRESSURIZATION SYSTEM
DIGITAL COMPUTER UNIT
LH2 TANK ZERO-G VENT VALVE
TAPE RECORDER
LH2 TANK PLIS SYSTEM
REMOTE MULTIPLEX UNIT
COMPUTER POWER SUPPLY
AFT
DIGITAL COMPUTER UNIT
PAYLOAD/TUG INTERFACE
UMBILICAL PANEL - PAYLOAD ELECTRICAL
LH2 TANK - ALUMINUM
LH2 TANK - INSULATION BLANKETS (ALUMINIZED KAPTON FILM)

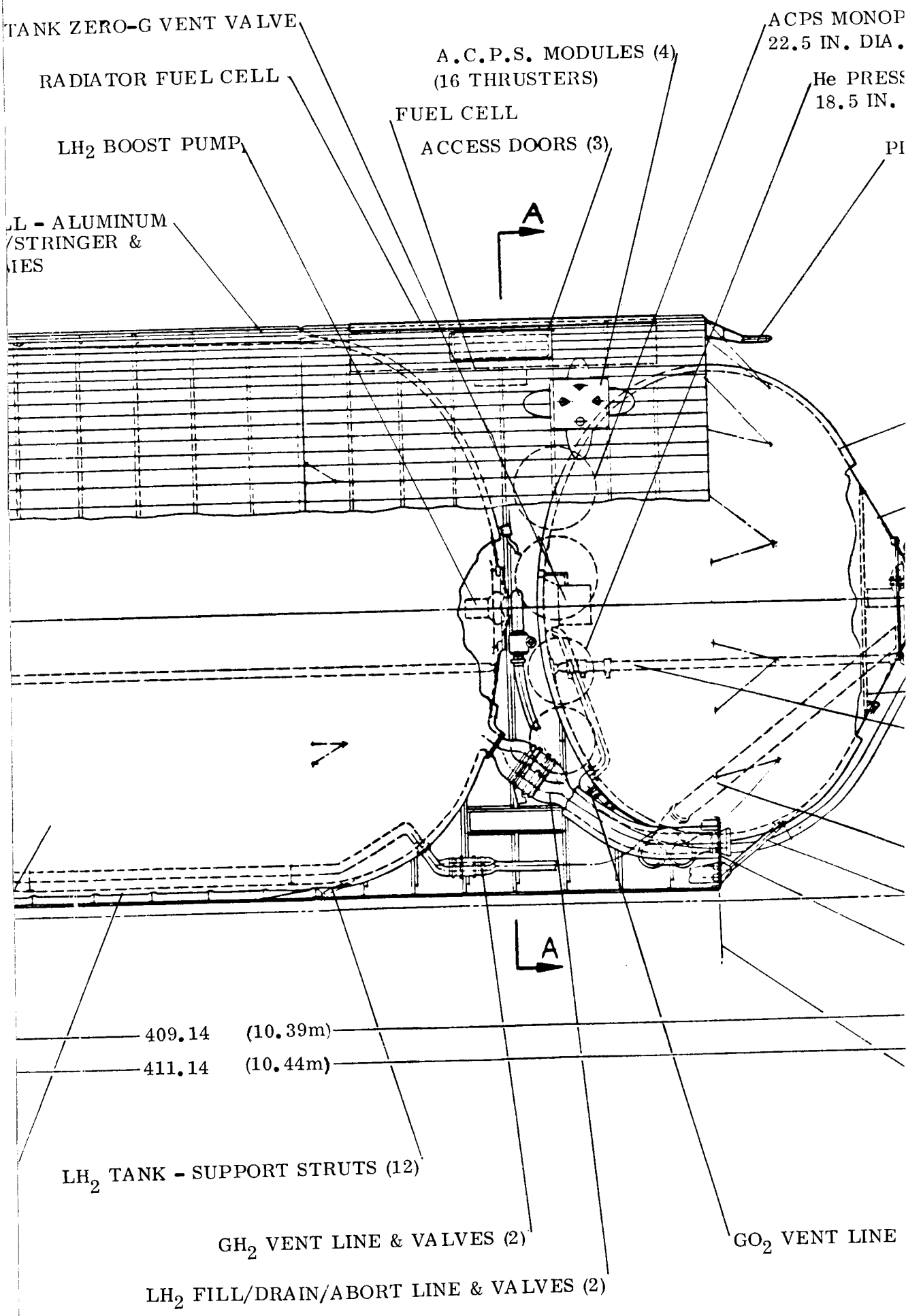
TANK ZERO-G VENT VALVE
RADIATOR FUEL CELL
LH2 BOOST PUMP
LL - ALUMINUM
/STRINGER &
IES
A.C.P.S. MODULES (4)
(16 THRUSTERS)
FUEL CELL
ACCESS DOORS (3)
ACPS MONOP
22.5 IN. DIA.
He PRESS
18.5 IN.
PI
A
A
409.14 (10.39m)
411.14 (10.44m)
LH2 TANK - SUPPORT STRUTS (12)
GH2 VENT LINE & VALVES (2)
LH2 FILL/DRAIN/ABORT LINE & VALVES (2)
GO2 VENT LINE

NOTES

1 ENGINE : RL10 CAT. I
MR 5:1
HEIGHT 70.0 IN
EXIT DIA 40.0 IN

2 PROPELLANT TANKS
LH_2 CAPACITY - 2040.60 FT^3
DIA: 164.00 IN
LENGTH 206.54 IN
BULKHEAD RATIO 1.38
MATERIAL : AL ALLOY

LO_2 CAPACITY - 611.93 FT^3
DIA. 140.22 IN
LENGTH: 115.60 IN
BULKHEAD RATIO. 1.38
MATERIAL : AL ALLOY

3. ACS
N_2H_4 MONOPROPELLANT

4. STRUCTURE
ALUMINUM SKIN/STRINGER

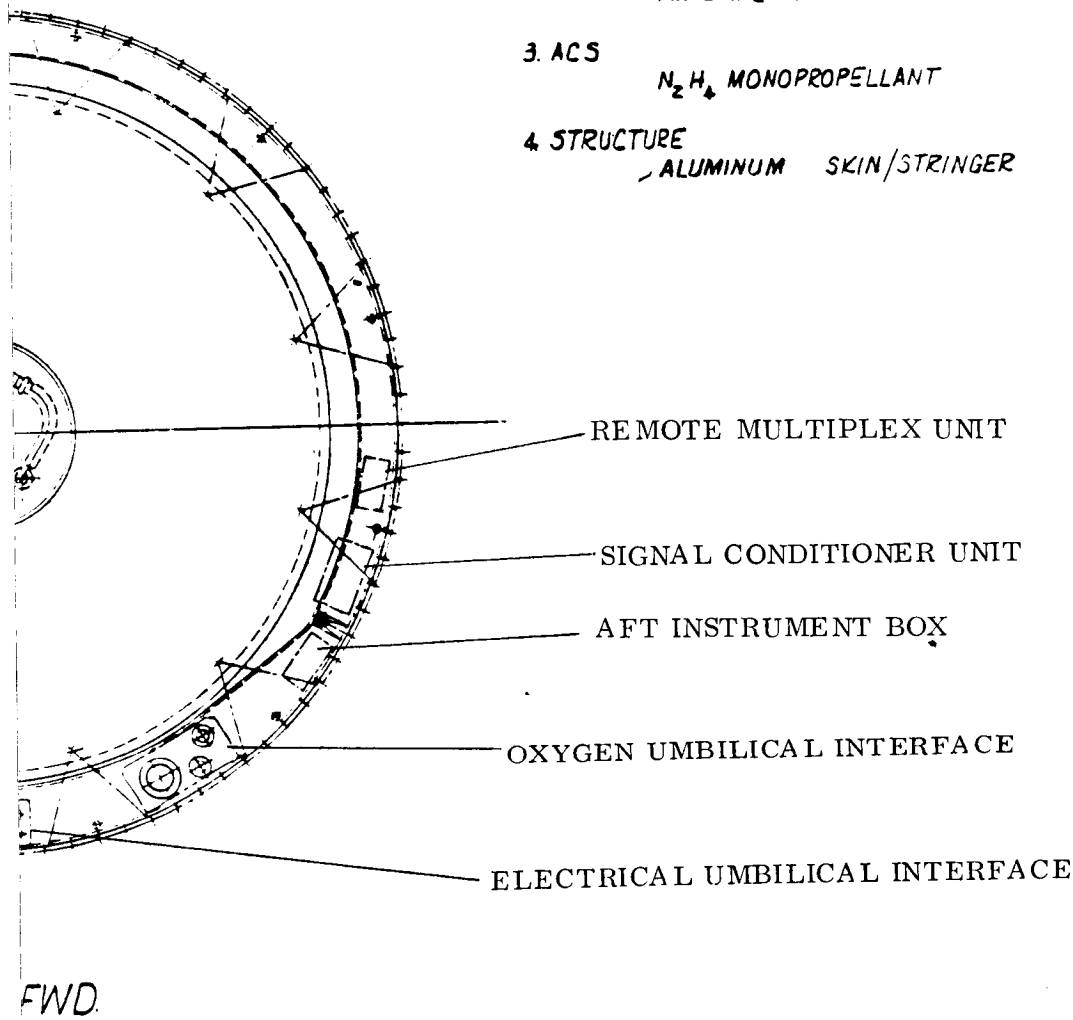

FWD.

Figure 2-57. Inboard Profile of Program 1 Tug

2.4.1.2 Subsystems

Structure and Mechanisms — The selected characteristics and the supporting selection rationale for the structural/mechanical subsystems are summarized in Figure 2-58.

The combination of suspended monocoque fuel tank and full-length body structure is lighter and less expensive than the option featuring an integrally stiffened, load-bearing tank with less body structure. Suspension of both tanks with discrete thermal isolation struts reduces heat input and resultant propellant boiloff.

Grade 2219-T87 aluminum was selected as the preferred tank material from among 12 candidates. Its frequent recent use has permitted detailed characterization in key categories of fracture toughness, stress-corrosion resistance, and weldability, where it is unsurpassed by other aluminum alloys. In addition, it results in one of the lightest tank systems.

Ellipsoidal bulkheads with a/b = 1.38 avoid compressive hoop stresses and provide tank lengths compatible with the total vehicle length constraint. Gore construction is used in preference to the one-piece, spin-formed option due to lesser development, higher strength, and a negligible, 4 lb (1.8 kg), weight penalty.

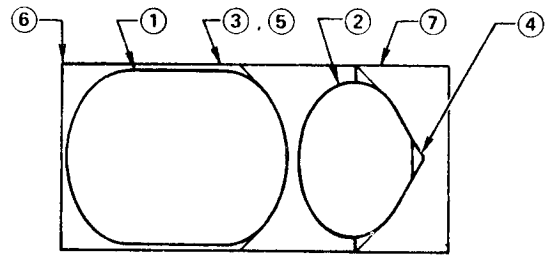

SUBSYSTEM	CHARACTERISTICS	RATIONALE
①, ② PROPELLANT TANKS	• MONOCOQUE; SUSPENDED FROM BODY • 2219-T87 ALUMINUM • ELLIPSOIDAL GORE BULKHEADS	• LOW COST; LOW WT; LOW HEAT INPUT • EXISTING; STRONG; TOUGH; GOOD WELD • LOW HEIGHT; MIN DEVEL (LOW COST, RISK)
③ BODY STRUCTURE	• 3 SEGMENTS • ALUMINUM SKIN-STRINGER	• EASE OF MAINT/REFURB • CONVENTIONAL (LOW COST, RISK); MED WT
④ THRUST STRUCTURE	• 1 PC ALUMINUM CONE • OXID TANK AFT CLOSURE (BOLT-ON)	• LOW COST; LOW WT • BI-FUNCTIONAL
⑤ METEOROID SHIELD	• PROVIDED BY BODY STRUCT SKIN	• EXCESS t FOR 6-DAY, SYNC MISSION
⑥ PAYLOAD INTERFACE	• DISCRETE PYROTECHNIC LATCHES	• FLIGHT-QUALIFIED; DEPLOY ONLY
⑦ ORBITER INTERFACE	• ALUMINUM SKIN-STRINGER ADAPTER • ELECT. LINEAR BALL-SCREWS FOR DEPLOY, DOCK, LATCH, UMBIL MECHANISMS	• CONVENTIONAL; MED WT • EXISTING HARDWARE

Figure 2-58. Structural Characteristics of Program 1 Tug

The body structure is partitioned into three segments (astrionics, forward module, and aft module) for ease of both initial fabrication/subsystems attachment and subsequent maintenance and refurbishment. Conventional aluminum skin-stringer construction was selected in preference to metallic isogrid or various composite systems for low cost and minimum development.

The integral tank-mounted thrust structure concept is preferred over either the non-integral tank-mounted or body-mounted options since it provides stiff, low weight, in-line load path into the oxidizer tank aft bulkhead, and also functions as a sump and tank access closure. Its one-piece construction assures low cost and minimum risk.

The 0.020-inch body structure skin exceeds the minimum meteoroid bumper thickness required for a six-day on-orbit synchronous mission during the interval of greatest seasonal meteoroid activity.

Discrete one-shot pyrotechnic latches are provided for payload separation since there is no requirement for payload reattachment. Use of flight qualified hardware assures low cost and risk.

Aluminum skin-stringer construction is selected for the support/deployment adapter for compatibility with the body structure. All mechanisms in the Orbiter interface subsystem are actuated by multiple electrically powered linear ballscrews based on existing hardware designs.

Thermal Control — The insulation and thermal control systems are shown in Figure 2-59. The cryogenic insulation system consists of a tank leakage containment membrane (LCM) located next to the tank surface, a Dimplar multilayer insulation (MLI) blanket, and a purge bag distribution system. The Dimplar system was selected in that it provides adequate thermal performance for the two-day mission with minimum development cost. The combination of LCM and purge bag provides double containment and channeling of any gases that may leak from the propellant tanks. Thermal control systems remove excess heat from fuel cells and the astrionics module sidewall area is utilized to radiate component-generated heat to space. The remaining 25% of the sidewall area is insulated to prevent excessively low module temperatures. A space radiator plate of about 50 ft^2 (4.6 m^2) is used to reject fuel cell waste heat to space. The ACPS heaters require about 250 watts of electrical power.

Astrionics — A low DDT&E cost astrionics configuration was selected for the Program 1 vehicle. The configuration is based on a maximum utilization of existing Centaur equipment design to achieve level I autonomy and minimum required vehicle performance. Redundancy is added selectively to meet reliability and safety requirements. A functional block diagram of the astrionics system is shown in Figure 2-60. The system characteristics are summarized in Table 2-70. Centaur equipment that must be modified to meet new requirements is marked as revised.

Table 2-70. Astrionics System Characteristics

SUBSYSTEM	REDUNDANCY	DEVELOPMENT STATUS	CHARACTERISTICS
DATA MANAGEMENT	TRIPLE SINGLE	CENTAUR (MOD.) IN DEVELOPMENT	48K MEMORY, NO DATA BUS TAPE RECORDERS
GUIDANCE & NAV.	DUAL	IN PRODUCTION	DIGS STRAPDOWN IMU
FLIGHT CONTROL	SINGLE DUAL	CENTAUR (MOD.) CENTAUR (MOD.)	SCU SIU
GUIDANCE UPDATE	SINGLE	IN DEVELOPMENT	LEVEL I AUTONOMY. STAR SENSOR & HORIZON SENSOR
COMMUNICATIONS	DUAL	ERTS (MOD.) FLTSATCOM (MOD.)	USB (NASA), NO RF COMMUNICATIONS WITH PAYLOAD SGLS (DOD), SECURE, NO RF COMMUNICATIONS WITH PAYLOAD
INSTRUMENTATION	TRIPLE FOR SAFETY CRITICAL	CENTAUR (MOD.)	REMOTE MULTIPLEXING
ELECTRICAL POWER	SINGLE	SHUTTLE (MOD.)	FUEL CELL, EMERGENCY BATTERY, BOOST PUMP BATTERY
POWER DISTRIBUTION & CONTROL	DUAL FOR SAFETY	CENTAUR (MOD.)	BOOST PUMP INVERTERS

The data management subsystem consists of triple-redundant, modified Centaur computer units and a new tape recorder in development for the High Energy Astronomical Observatory program. The tape recorder stores formatted telemetry data to be communicated to the ground and can be used to store data required at preplanned times during the mission. Guidance and navigation is achieved with dual strapdown inertial measurement units (SDIMU) that provide navigation and attitude reference data. Horizon and star sensor units that have been built and tested are used to update the SDIMU data for accuracy on long-duration missions. The flight control interfaces with the central computer are handled by the sequence control unit and the servo inverter units, which are modified Centaur equipment. The dual redundant rf communications units provide for Shuttle or ground communications. The main element is a modified ERTS transponder for NASA missions and two modified FLTSATCOM transponders for DOD missions. The Centaur instrumentation system is used unmodified except where triple-redundant, safety-critical instrumentation is needed. The primary source of electrical power is a modified Shuttle fuel cell resized to meet Tug power requirements. The fuel cell was selected over batteries since the weight of the batteries resulted in a marginal payload capability with respect to the 3500 lb (1588 kg) requirement. An emergency battery provides short-term backup to maintain safety-critical functions if the primary electrical source is lost. A boost pump battery is a separate power source for electrical boost pumps that require high power levels that are not closely regulared for short periods of time. New inverters are added to convert the boost

pump battery power to ac. The electrical power distribution and control subsystem is a modification of the existing Centaur subsystem.

Propulsion — The propulsion system for the Program 1 Tug consists of the main propulsion system, used for all axial ΔV requirements above 100 ft/sec (30.5 m/sec), and the attitude control propulsion system (ACPS), used for attitude maneuvers and axial ΔVs below 100 ft/sec (30.5 m/sec).

Main Propulsion — The main propulsion system is shown in Figure 2-61. The RL-10 Cat I engine was selected since it has the lowest development cost. Electric-motor-driven boost pumps are used to satisfy the engine prestart and running NPSP requirements. This selection was made on the basis of a trade study summarized in Section 2.2.4.1. The LH_2 boost pump is designed to meet both the prestart and run requirements with a 2.2 bhp (1.64 kW) minimum power requirement. For the LO_2 boost pump, the design specific speed was selected for equal power requirements at prestart and run conditions, with the 0.77 bhp (0.575 kW) design point at the run condition. Power is supplied by a dedicated battery and inverter. The main engine is gimbaled for pitch and yaw control using one-half of the Centaur hydraulic gimbal system. Feed lines for both LO_2 and LH_2 are derived directly from Centaur. The lines, made of 321 grade stainless steel (cres), are articulated using four Centaur flex (gimbal) joints to provide flexibility for engine gimbaling. Feed line insulation is a combination of foam and MLI similar to Centaur D-1T.

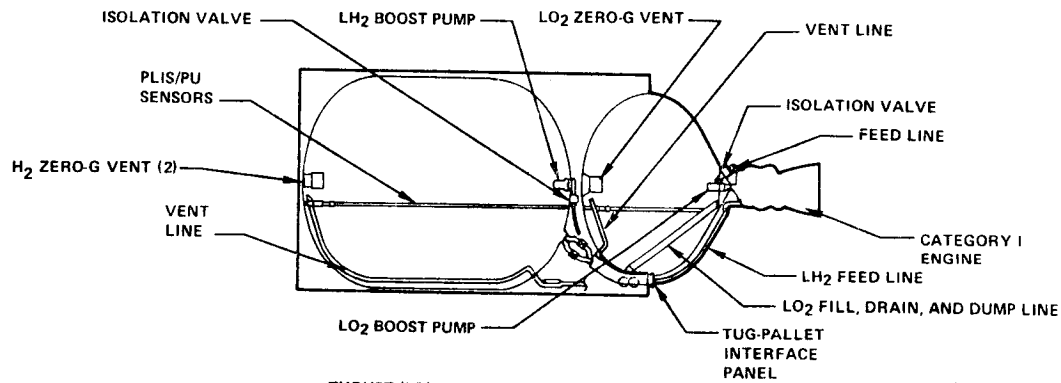

CENTAUR RL10A-3-3 REQUALIFIED FOR TUG
LOWER INLET PRESSURES
TUG FEED SYSTEM COMPATABILITY
MODIFIED COOLDOWN SEQUENCE

THRUST (LB)	15,000
ISP (SEC)	444
ϵ	57
P_C (PSIA)	400
MIXTURE RATIO	5.0
NPSP (FT)	
LO_2	7.5
LH_2	14
WEIGHT (LB)	293
PRESSURIZATION-ELECTRIC BOOST PUMPS	
LIFE (HR)	5.0
(STARTS)	190
COST (M$)	
DDT&E	13.0
TFU	0.7
SCHEDULE (MONTHS FROM ATP)	
PFC	–
FFC	24

SELECTED FOR MINIMUM DDT&E COST

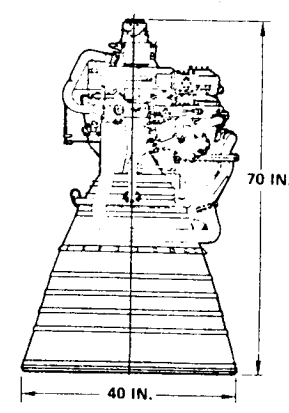

Figure 2-61. Main Propulsion System for Program 1 Tug

A self-pressurization system using boost pumps to meet engine requirements, functionally similar to the Centaur system, is used. During normal operation, the propellant tanks are never pressurized from an external source, but are automatically maintained at the vapor pressure of the propellants, which are saturated during all phases of the mission. Tank pressures vary from mission to mission, and during a given mission, primarily as a function of engine firing duration and time between firings.

The PLIS uses near-full length capacitance probes derived from Centaur. Continuous probes supplemented by overfill and depletion point sensors are required for propellant loading, since different missions require widely varying degrees of off-loading, some as low as 15% capacity (55% off-loaded). A closed loop PU control was selected since with this PLIS, the Tug computer and the engine having mixture ratio control capability, all the essential elements were available.

Propellant settling for main engine cooldown and starting is accomplished using the ACPS system. Zero-g venting of both propellants is accomplished using a bulk heater exchanger device incorporating tank bulk mixer. This selection was made on the basis of lowest weight, development cost, and risk.

ACPS — A hydrazine (N_2H_4) ACPS system is used on the Program 1 Tug. The selected engine is a modified MR-3A Transtage engine. This engine configuration was selected on the basis of minimum development cost and maximum usage of developed hardware. The modifications involve the valve, nozzle expansion ratio, catalyst bed, and engine thermal standoff. It is anticipated that the modified engine will be capable of a minimum of 10 to 12 missions before requiring replacement of the catalyst. The cost of engine refurbishment is estimated to be approximately 15 to 20% of the cost of a new engine.

Four ACPS engine modules, each containing four 25 lbf (112N) thrusters, are used to provide a fail operational/fail safe capability. The thrusters are canted at 25 deg (0.435 rad) to reduce impingement on the intertank skirt.

ACPS support includes pressurant storage, control, and supply; propellant storage; and propellant feed, fill, and drain. The primary design criterion influencing system weight, complexity, and cost is the requirement for fail operation/fail safe design.

The N_2H_4 tankage selected for Program 1 consists of four spherical tanks each with a storage capacity of 200 lb (90.7 kg). A hemispherical diaphragm, fabricated of EPT-10, is utilized for gas-free, positive explusion of the N_2H_4. The selected tankage is currently utilized in the USAF P95 satellite program and the Viking 75 program for N_2H_4 storage.

The quantity gaging method proposed for Tug ACPS is a PVT system similar to that used on Apollo and represents a minimum cost and weight system.

A system schematic for this ACPS system is presented in Section 2.2.4.2.

Interfaces — The Tug is supported in the Shuttle at four point. Three points are located on the support adapter; one on each side reacts Z and X loads, and one on the lower centerline reacts Y loads. The remaining support is located on the forward left side of the Tug and reacts Z loads only. Overcenter type latches and a docking mechanism comprise the mechanical interface between the Tug and support adapter. Three probe/drogue units provide guidance and alignment for Tug to support adapter docking. The body structure sidewall incorporates attachment sockets for the Orbiter remote manipulator used for Tug maneuvering during separation and docking. Dual linear actuators control deployment/stowage positioners of the Tug in the Orbiter cargo bay.

The payload is separated from the Tug by actuation of pyro pin puller type latches.

Fluids, gases, and electrical services are supplied to the Tug/payload from the launch umbilical panels on each side of the Shuttle. Lines and harnesses route through the Shuttle to service panels located on the payload bay aft bulkhead then to umbilical panels located at the Tug/support adapter separation plane.

An electrical umbilical panel is located at the separation plane between the Tug and payload. This panel makes connections with the payload for payload condition signal and control. The Tug monitoring and control system (TMACS) is located at the Orbiter mission specialist station and also makes electrical interface connections at the service panel.

A more detailed description of the Tug/Orbiter interface is presented in Section 2.5.3.

Kick Stage — The kick stage configuration used with the Program 1 Tug for certin planetary missions is shown in Figure 2-62 along with the major stage characteristics. Gross weight of the kick stage is 2560 lb (1161 kg) and a Thiokol TE-M-364-11 motor is used. A payload adapter and separation system is mounted between payload and Tug. Despin rockets and the necessary batteries and sequencing equipment for ignition, despin, and separation are mounted on the motor or the small adapter between the motor case and payload. No guidance is provided; preburn aiming and spin-up are accomplished by the Tug.

2.4.1.3 Mass Properties. Weights for the Program 1 baseline Tug are presented in Table 2-71. The weights are for a geosynchronous equatorial payload delivery mission. Maximum payload capability for this mission is 5352 lb (2427.7 kg). Total installed weight of the Tug in the Shuttle, including all Tug/Shuttle interface accomodations, is 65,000 lb (29,484 kg).

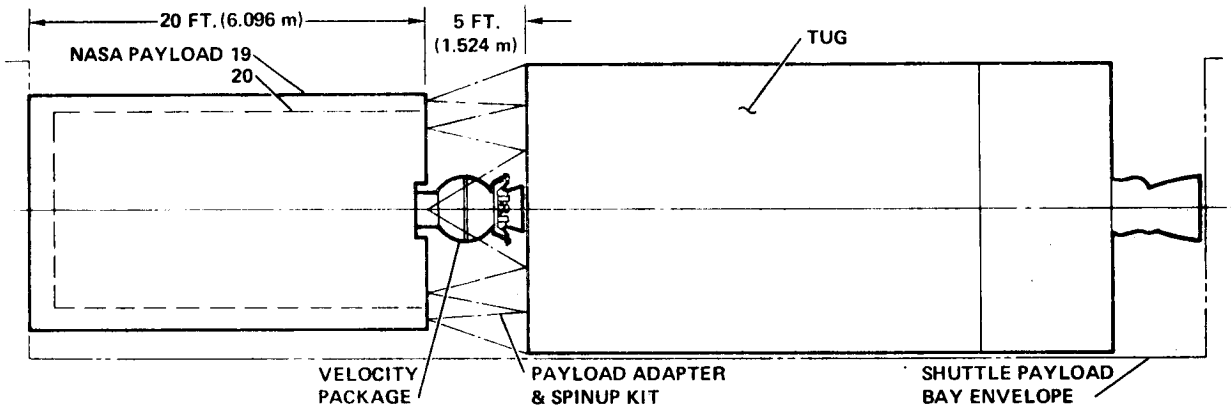

CHARACTERISTICS

MASS PROPERTIES		ATTITUDE CONTROL	SPIN STABILIZED
TOTAL WEIGHT	2,560 LB. (1,161 KG)	AVIONICS	
PROPELLANT WT.	2,300 LB. (1,043 KG)	POWER	BATTERY
MASS FRACTION	0.9	SEQUENCER	EVENT TIMER
SIZE		TELEMETRY	NONE
LENGTH	75 IN. (1.905 m)	GUIDANCE	NONE
DIAMETER	38 IN. (0.965 m)	DESPIN	DESPIN ROCKETS
PROPULSION	SLOW-BURNING SOLID		

Figure 2-62. Kick Stage Configuration for Program 1 Tug

Vehicle cg and moment of inertia data for selected flight conditions specified by NASA are presented in Table 2-72. Longitudinal centers of gravity are plotted versus Tug-chargeable gross weights in Figure 2-63. Since propellant is dumped during powered flight for an abort, there appears to be no problem staying within the Shuttle Xcg envelope.

2.4.1.4 Reliability. In accordance with the results of a redundancy/cost optimization analysis, discussed in Section 2.3.1, redundancy was designed into the Program 1 Tug to allow attainment of a mission reliability of 0.97 for a baseline mission of 47 hours. The redundancy levels for each of the major subsystems and the resulting reliablilty are summarized in Table 2-73. As indicated in this table, all subsystems are essentially dual redundant. The exceptions are the data management subsystem, which is triply redundant, and the APS subsystem, which is fail-operational/fail-operational in several modes. The resulting reliability for the Program 1 Tug is 0.976 (without kick stage). For kick stage missions, the Tug operates for only 24 hours. The Tug reliability for this short mission is approximately 0.99. When the reliability of the kick stage is coupled with the Tug reliability, the overall kick stage mission reliability is approximately 0.97.

Table 2-71. Program 1 Baseline Tug Weight Summary (Synch. Eq. Max. Payload Deployment Mission)

	lb	kg
Structures	(2339)	(1060.9)
Body Structure	1204	546.1
Fuel Tank & Supports	527	239.0
Oxidizer Tank & Supports	328	153.3
Thrust Structure	24	10.9
Equipment Mounting Structures	90	40.8
Meteoroid Structure	--	---
Interface for P/L & Shuttle	123	55.8
Umbilicals	33	15.0
Propulsion	(1332)	(604.2)
Main Engine (ME) Assembly	293	132.9
ME Actuation & Support	82	37.2
ACPS & Support	370	167.8
Pressurization	--	---
Fill, Vent & Drain (incl. Feed)	509	230.9
Purge System	20	9.1
Propellant Management	58	26.3
Thermal Control	(427)	(193.7)
Fuel Tank Insulation	103	46.7
Oxidizer Tank Insulation	46	20.9
Purge System	196	88.9
Radiators, (Incl. Fluid Loop, Heaters, Coatings)	82	37.2
Avionics	(1198)	(543.4)
Rendezvous & Docking	--	---
Data Management	189	85.7
Flight Controls	178	80.7
Guidance & Navigation	64	29.0
Guidance Update	51	23.1
Power	274	124.3
Power Conversion & Distribution	300	136.1
Instrumentation	100	45.4
Communication	42	19.1
STAGE DRY WEIGHT	5296	2402.2
Contingency	530	240.4
TOTAL DRY WEIGHT	5826	2642.6
NON-USABLE FLUIDS	(753)	(341.6)
Trapped Propellants - Main	91	41.3
Trapped Propellants - ACPS	19	8.6
Trapped Gases	298	135.2
Trapped Helium	4	1.8
Propellant Leakage	--	---
Propellant Reserves - Main	261	118.4
Propellant Reserves - ACPS	73	33.1
Propellant Utilization	--	---
Trapped Water	7	3.2
BURNOUT WEIGHT	6579	2984.2

	lb	kg
NON-IMPULSIVE EXPENDABLES	(477)	(216.4)
ME Chilldown	144	65.3
ME Leakage	--	---
ME Shutdown	114	51.7
Pressurants - Main	--	---
Pressurants - ACPS	--	---
Fuel Cell Reactants	73	33.1
Fuel Line Chilldown	16	7.3
Gas Generator	--	---
Thermal Control Fluids	--	---
Boiloff Vented	130	59.0
PROPELLANTS	(50442)	(22880.5)
*Main Engine	(49715)	(22550.7)
Main Propellant - Fuel	8286	3758.5
Main Propellant - Oxidizer	41429	18792.2
Attitude Control Propellants	727	329.8
*FIRST IGNITION WEIGHT	57498	26081.1
SHUTTLE INTERFACE ACCOMMODATIONS	(2150)	(975.2)
Adapter Structure		
Supports	567	257.2
Attachment Fittings	104	47.2
Deployment Mechanism	206	93.4
Propellant Lines, Umbilicals, Tankage		
Fill, Drain, Dump	178	80.7
Dump Pressurization System	625	283.5
Avionics Interface		
Shuttle/Payload In Bay	160	72.6
Mission Specialist Station	310	140.6
Bay Purge (In Dump Pressurization)		
Gases	--	---
Bottles	--	---
Payload Auxiliary Support	--	---
STAGE PAYLOAD (MAX. CAPABILITY)	(5352)	(2427.7)
Payload	5352	2427.7
Payload Adapter (Part of Payload)	--	---
AUXILIARY STAGE	(--)	(---)
TOTAL WEIGHT IN SHUTTLE	65000	29484.0

$$*\text{Mass Fraction} = \frac{\text{Main Engine Propellants}}{\text{First Ignition Weight}} = 0.865$$

Table 2-72. Program 1 Baseline Tug Centers of Gravity and Moments of Inertia

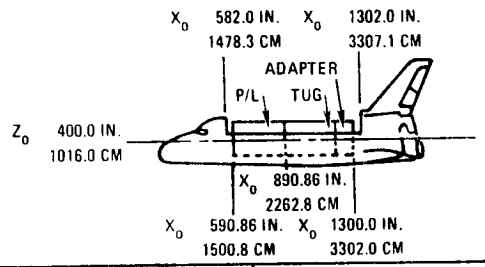

NOTE: RIGHT SIDE LOOKING FORWARD IS Y+

CONDITION	WEIGHT LB (KG) W	CENTER OF GRAVITY SHUTTLE STATIONS INCH (CM) X	Y	Z	MOMENT OF INERTIA SLUG-FT^2 (KG-METER^2) I_{XX}	I_{YY}	I_{ZZ}
WITHOUT PAYLOAD:							
VEHICLE FULL OF PROPELLANT	59648	1130.0	0.3	400.4	10415	120665	120073
INSIDE SHUTTLE PAYLOAD BAY	(27056)	(2870.2)	(0.8)	(1017.0)	(14121)	(163600)	(162797)
VEHICLE FULL OF PROPELLANT	57498	1130.4	0.0	400.1	7668	91909	91525
SEPARATED FROM SHUTTLE	(26081)	(2871.2)	(0.0)	(1016.3)	(10396)	(124612)	(124091)
VEHICLE EMPTY OF PROPELLANTS	8729	1078.6	2.1	400.7	9670	51731	50638
INSIDE SHUTTLE	(3960)	(2739.6)	(5.3)	(1017.8)	(13111)	(70138)	(68656)
WITH 3500 LB (1578.6 KG) PAYLOAD:							
VEHICLE FULL OF PROPELLANT	63148	1108.4	0.3	400.4	13475	235835	235835
INSIDE SHUTTLE PAYLOAD BAY	(28644)	(2815.3)	(0.8)	(1017.0)	(18270)	(319750)	(319750)
VEHICLE FULL OF PROPELLANT	60998	1108.0	0.0	400.1	10727	207067	206683
SEPARATED FROM SHUTTLE	(27669)	(2814.3)	(0.0)	(1016.3)	(14544)	(280746)	(280225)
VEHICLE EMPTY OF PROPELLANTS	12229	982.0	1.5	400.5	12733	120401	119310
INSIDE SHUTTLE	(5547)	(2491.3)	(3.8)	(1017.3)	(17264)	(163242)	(161763)

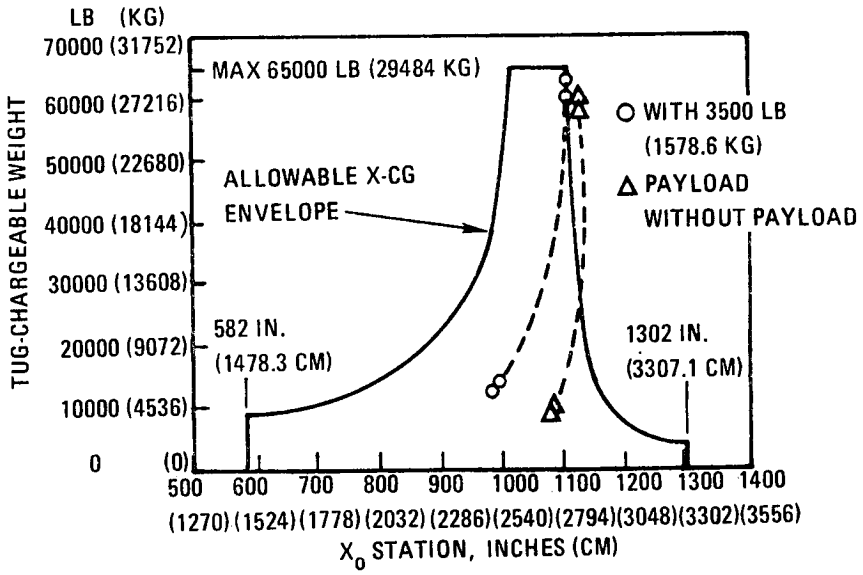

Figure 2-63. Program 1 Baseline Tug Longitudinal Centers of Gravity

Table 2-73. Program 1 Redundancy Summary

SUBSYSTEM/COMPONENT	REDUNDANCY	ΔWEIGHT/LB
DATA MANAGEMENT		
COMPUTER	TRIPLE	116
GUIDANCE & NAVIGATION		
INERTIAL MEASUREMENT UNIT (STRAPDOWN)	DUAL	32
FLIGHT CONTROL		
SERVO-INVERTER	DUAL	50
GUIDANCE UPDATE		
HORIZON SENSOR	TWO OUT OF FOUR	14
COMMUNICATIONS		
COMMAND DECODER	DUAL	*
ANTENNAS	DUAL	*
RECEIVER/TRANSMITTER	DUAL	*
MAIN ENGINE SUPPORT		
VENT VALVES	DUAL	*
FILL & DRAIN VALVES	DUAL	*
ATTITUDE CONTROL PROPULSION SYSTEM		
ENGINE MODULES	THREE OUT OF FOUR	19
ACPS SUPPORT	DUAL/QUAD	70
PREDICTED RELIABILITY (47 HR. BASELINE MISSION) = 0.9759		301

*INCLUDED IN SAFETY WEIGHTS

2.4.1.5 Performance. Figure 2-64 shows the Program 1 Tug payload weight capability, for each applicable mission mode. The curves are all based on a due-east Shuttle launch, except for the deployment curve labeled polar. The Shuttle is assumed to have a payload weight capability of 65,000 lb (29,492 kg) due east and 36,000 lb (16,334 kg) polar, to the nominal 160 n.mi. (296 km) Tug staging orbit. The curves are based on a six-burn flight profile such as the synchronous equatorial deployment or sortie mission, except for the expendable Tug curve, which is based on three burns. The performance exceeds the 3500 lb (1588 kg) synchronous deployment requirement.

For illustration, planetary missions that require a velocity package and an expended Tug, respectively, appear on the graphs. All of the missions in the mission model can be done by this Tug, in one of the flight modes shown on the chart.

The synchronous equatorial mission performance is summarized in Table 2-74. The sensitivity of payload capability to burnout weight and specific impulse variations is also shown. These derivatives are based on a fixed-size Tug.

2.4.1.6 Mission Accomplishment. Mission accomplishment was analyzed for the Government supplied mission model. Tug flights for deployment, retrieval, and round trip missions are identified for each year for the total model in Table 2-75.

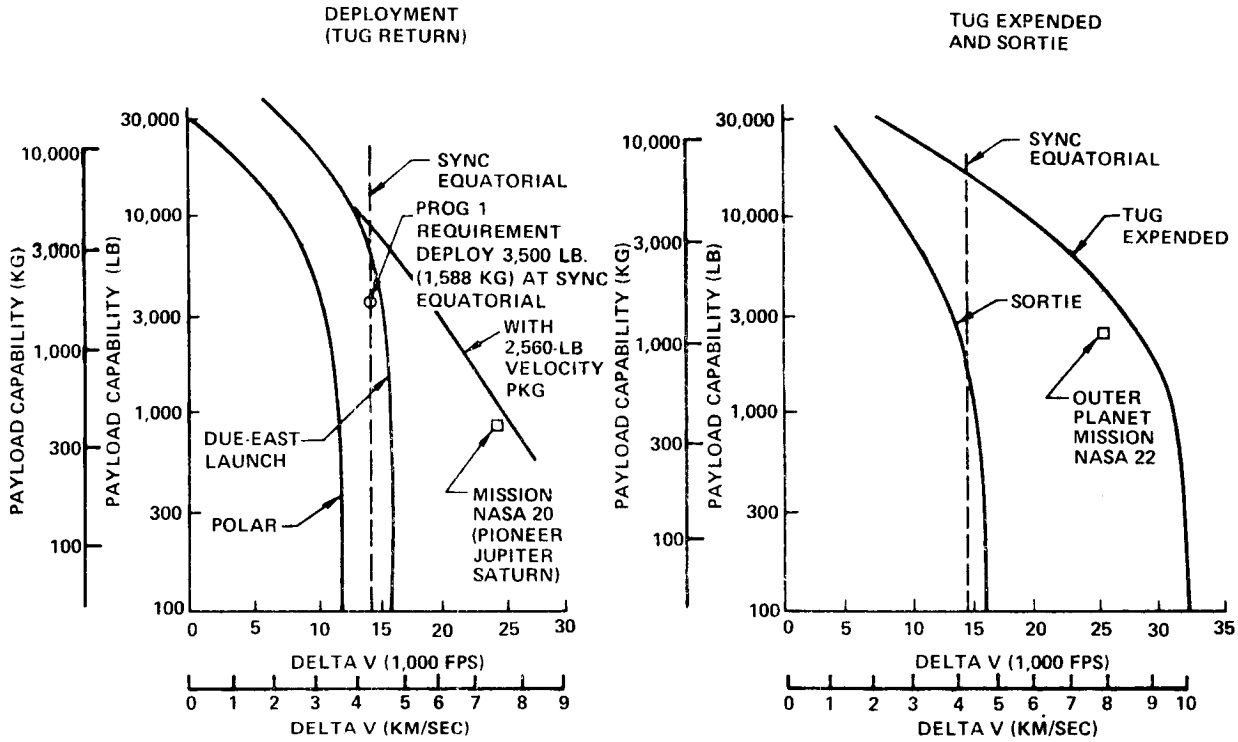

Figure 2-64. Program 1 Tug Performance, Payload Capability Versus Delta Velocity

Table 2-74. Program 1 Tug Synchronous Equatorial Mission Performance Summary

	DEPLOY	ROUND TRIP	EXPEND
PAYLOAD, LB (KG)	5352 (2428)	1920 (871)	16540 (7503)
$\frac{\partial(\text{PAYLOAD})}{\partial(\text{BURNOUT INT})}$	-2.7	-1.0	
$\frac{\partial(\text{PAYLOAD})}{\partial(I_{sp})}$	92	37	

Table 2-75. Mission Model Flight Summary for Program 1

TUG FLIGHT MODE	NUMBER OF TUG FLIGHTS DURING YEAR											TOTAL
	80	81	82	83	84	85	86	87	88	89	90	
DEPLOYMENT												
1 PAYLOAD WITH TUG RETURN	3	9	9	12	12	11	9	11	10	13	12	111
2 PAYLOADS WITH TUG RETURN	0	1	5	10	6	5	5	7	6	7	6	58
3 PAYLOADS WITH TUG RETURN	0	4	1	4	2	4	3	4	3	3	2	30
TUG RETURN + VEL. PACKAGE*	0	0	2	0	2	0	1	2	0	0	0	7
EXPENDED TUG	0	0	0	0	2	0	3	1	0	3	1	10
TOTAL	3	14	17	26	24	20	21	25	19	26	21	216
RETRIEVAL (0 PAYLOAD UP – 1 PAYLOAD DN)	0	0	0	0	0	0	0	0	0	0	0	0
ROUND TRIP												
1 PAYLOAD UP/1 PAYLOAD DN	0	0	0	1	0	1	0	1	0	1	0	4
2 PAYLOADS UP/1 PAYLOAD DN	0	0	0	0	0	0	0	0	0	0	0	0
TOTAL	0	0	0	1	0	1	0	1	0	1	0	4
TOTAL TUG/SHUTTLE FLIGHTS	3	14	17	27	24	21	21	26	19	27	21	220

*2,560-LB (1161 KG) VELOCITY PACKAGE (EXPENDED)

Tug flights are subdivided into deployment flight modes: deployment of 1, 2, or 3 payloads during a single flight of a reusable Tug, deployment of a single (planetary) payload with an expended velocity package and a reusable Tug flight, and deployment of a single, planetary payload by an expended Tug. Only a single retrieval flight mode is possible, no payloads up/one down — it is not used with Program 1. The only type of round trip mission used with Program 1 is a sortie type, where a single payload is carried to orbit by the Tug, remains attached to the Tug during its on-orbit operational period, and returns with the Tug to the Shuttle Orbiter.

Over the total mission model, 216 Tug flights are used to deploy payloads; 111 of these are single payload flights by a reusable Tug, on 58 Tug flights two payloads are deployed, and there are 30 flights where three payloads are deployed on a single reusable Tug flight. Seven flights are accomplished with velocity packages, and 10 expended Tug flights are required. There are no retrieval missions and four sortie missions are accomplished.

The entire mission model (338 deployment payloads, 4 sortie payloads) is accomplished using 220 Tug and Shuttle flights. Since no Tug-to-Tug or velocity package-to-Tug on-orbit assemblies are required, the number of Tug and Shuttle flights is identical. The flight summary reflects the Shuttle availability for Tug flights of three in 1980 and a maximum of 21 during 1981.

Tables 2-76 and 2-77 show the mission accomplishment capability of the Program 1 Tug for NASA and DOD payloads, respectively. The figures show Tug traffic by mission destination (synchronous equatorial, other ETR launch orbits, and planetary) and launch site (ETR and WTR) and payload traffic by launch site and deployment/retrieval. Traffic by the year and for the total model is shown.

2.4.1.7 Operations. Operations, both ground and flight, were a special emphasis and are summarized in Section 2.5.2 and discussed in detail in Volume 6 of Reference 6. This section presents the major operational characteristics that vary between programs.

Flight Operations — Flight operations is a significant area since it has been a major operational cost driver in current space programs. To achieve the goal of low operations cost for the Space Transportation System the Tug flight operations costs must be reduced.

Flight operations is concerned with those activities and procedures involved in accomplishing the actual Tug flight. With respect to cost it includes the flight monitor and control accomplished from the ground or the Orbiter, necessary preflight mission planning and post-flight evaluation, and all required software both ground and airborne.

An autonomy level trade, which is summarized in Table 2-78, indicated that the selected level I autonomy was the lowest cost approach both from a development and operations cost standpoint.

The flight operations cost for Program 1 are summarized in Table 2-79. The DDT&E cost for flight support software is the development cost for the ground and airborne (Tug and Orbiter) software for the synchronous equatorial mission. The Tug software consists of nine modules and a total of 43,900 words. The software costs in operations consists of the changes required for nonsynchronous missions (6200 words per mission) and the changes required for each flight (450 words). These costs are separated by the user agency with NASA having 15 nonsynchronous missions and a total of 116 flights and DOD having seven nonsynchronous missions and a total of 104 flights. The DOD operations costs are lower since DOD has a higher number of flights per mission.

Ground Operations — Ground operations encompasses those Tug vehicle related tasks accomplished after Orbiter landing to make the Tug ready for liftoff again. Ground operations analyses of the Program 1 Tug indicated a turnaround cycle of 265.5 working hours for a NASA Tug and 276.5 hours for a DOD Tug with secure communications. As launch rates increase, particularly at KSC, two, and sometimes three Tugs at a time will be undergoing different phases of the ground turnaround cycle concurrently. To accommodate these concurrent operations, the basic ground turnaround crew of 107 will be augmented with additional direct support, engineering, and administrative personnel resulting in the crew sizes shown in Table 2-80. Launch rates at WTR never increase to the point where crew augmentation is required.

Table 2-76. Program 1 NASA Mission Accomplishment

ITEM	YEAR 80	81	82	83	84	85	86	87	88	89	90	TOTAL
SYNC. EQ. TUG SHUTTLE/FLIGHTS	3	6	5	9	4	7	4	7	6	7	5	63
ETR OTHER ORBIT FLIGHTS	0	2	1	1	2	1	2	2	1	1	3	16
PLANETARY TUG SHUTTLE/FLIGHTS	0	0	2	0	6	0	4	3	0	5	1	21
ETR TUG/SHUTTLE FLIGHTS	3	8	8	10	12	8	10	12	7	13	9	100
WTR TUG/SHUTTLE FLIGHTS	–	–	–	3	1	3	1	2	1	4	1	16
TOTAL TUG/SHUTTLE FLIGHTS	3	8	8	13	13	11	11	14	8	17	10	116
VELOCITY PKG. EXPENDED } ETR	0	0	2	0	2	0	1	2	0	0	0	7
TUGS EXPENDED } ONLY	0	0	0	0	2	0	3	1	0	3	1	10
ETR P/L DEPLOYED	3	16	12	15	15	14	14	20	14	16	13	152
WTR P/L DEPLOYED	–	–	–	8	2	8	2	4	2	10	2	38
TOTAL P/L DEPLOYED	3	16	12	23	17	22	16	24	16	26	15	190
ETR P/L RETRIEVED	–	–	–	–	–	–	–	–	–	–	–	–
WTR P/L RETRIEVED	–	–	–	–	–	–	–	–	–	–	–	–
TOTAL P/L RETRIEVED	–	–	–	–	–	–	–	–	–	–	–	–
ETR P/L DEPLOYED AND RETRIEVED	3	16	12	15	15	14	14	20	14	16	13	152
WTR P/L DEPLOYED AND RETRIEVED	–	–	–	8	2	8	2	4	2	10	2	38
TOTAL P/L DEPLOYED AND RETRIEVED	3	16	12	23	17	22	16	24	16	26	15	190

Table 2-77. Program 1 DOD Mission Accomplishment

ITEM	YEAR 80	81	82	83	84	85	86	87	88	89	90	TOTAL
SYNC. EQ. TUG SHUTTLE/FLIGHTS	0	3	3	4	6	4	3	6	4	4	6	43
ETR OTHER ORBIT FLIGHTS	0	3	6	6	4	4	5	4	6	3	4	45
PLANETARY TUG SHUTTLE/FLIGHTS	–	–	–	–	–	–	–	–	–	–	–	–
ETR TUG/SHUTTLE FLIGHTS	0	6	9	10	10	8	8	10	10	7	10	88
WTR TUG/SHUTTLE FLIGHTS	–	–	–	4	1	2	2	2	1	3	1	16
TOTAL TUG/SHUTTLE FLIGHTS	0	6	9	14	11	10	10	12	11	10	11	104
VELOCITY PKG. EXPENDED } ETR	–	–	–	–	–	–	–	–	–	–	–	–
TUGS EXPENDED } ONLY	–	–	–	–	–	–	–	–	–	–	–	–
ETR P/L DEPLOYED	0	7	12	14	14	9	11	13	13	8	13	114
WTR P/L DEPLOYED	–	–	–	8	3	3	5	4	2	6	3	34
TOTAL P/L DEPLOYED	0	7	12	22	17	12	16	17	15	14	16	148
ETR P/L RETRIEVED	–	–	–	–	–	–	–	–	–	–	–	–
WTR P/L RETRIEVED (SORTIE)	–	–	–	1	–	1	–	1	–	1	–	4
TOTAL P/L RETRIEVED	–	–	–	1	–	1	–	1	–	1	–	4
ETR P/L DEPLOYED AND RETRIEVED	0	7	12	14	14	9	11	13	13	8	13	114
WTR P/L DEPLOYED AND RETRIEVED	–	–	–	9	3	4	5	5	2	7	3	38
TOTAL P/L DEPLOYED AND RETRIEVED	0	7	12	23	17	13	16	18	15	15	16	152

Table 2-78. Program 1 Cost of Autonomy

AUTONOMY LEVEL CHANGES	ΔWEIGHT LB(KG)	ΔCOST ($M)			
		DDT&E	PRODUCTION	OPERATIONS	TOTAL
LEVEL I TO LEVEL II	+23 (10.4)	+1.6	+0.4	0.0	+2.0
LEVEL I TO LEVEL III	-3 (1.4)	+2.1	-1.5	+5.0*	+5.6*
LEVEL I TO LEVEL IV	-3 (1.4)	+3.4	-1.5	+9.9*	+11.8*

*NETWORK COSTS ARE IN ADDITION TO THESE COSTS.

Table 2-79. Program 1 Flight Operations Cost

	DDT&E		OPERATIONS		
	COST ($M)	EQUIVALENT MAN-YR.	COST ($M)	EQUIVALENT MAN-YR.	
NASA					
MISSION PLANNING			4.8	120	$382,000/FLT OR ~100 MEN/YR.
FLIGHT CONTROL			17.7	441	
FLIGHT EVALUATION			0.9	23	
FLIGHT SUPPORT SOFTWARE	18.5	463	20.9	523	
TOTAL	18.5	463	44.3	1,105	
DOD					
MISSION PLANNING			4.4	111	$294,000/FLT. OR ~70 MEN/YR.
FLIGHT CONTROL			12.4	309	
FLIGHT EVALUATION			0.8	21	
FLIGHT SUPPORT SOFTWARE			13.0	325	
TOTAL			30.6	766	

Minimum active fleet size is also a direct function of launch rates. In an ongoing mature operating system, a single Tug can make a complete launch-flight-ground turnaround-launch cycle in approximately 24 calendar days, or slightly over 12 launches per year maximum. Thus, the minimum active fleet size for each launch site is established as shown in Table 2-80. At KSC, there are also a total of 10 expendable missions as shown, which makes a total requirement of 13 Tugs. In addition, attrition losses at 1% of the total missions must be accounted for. This adds three additional vehicles, resulting in a total fleet buy of 16 Tugs for this program.

Once total fleet buy requirements have been established at 16 Tugs, fleet delivery requirements, disposition, and utilization can be examined as shown in Table 2-81. Tugs are delivered to KSC unless noted with WTR in the Tug Number column. Need dates are initially based on site activation and/or test flight requirements for the first two vehicles at KSC and the first vehicle at WTR. After that, need dates are derived from a production schedule of two per year.

Table 2-80. Program 1 Tug Crew Size and Minimum Active Fleet Size

		ANNUAL TRAFFIC											
		80	81	82	83	84	85	86	87	88	89	90	TOTAL
CENTAUR FLIGHTS	KSC*	3	14	17	20	22	16	18	22	17	20	19	188
	WTR				7	2	5	3	4	2	7	2	32
	TOTAL	3	14	17	27	24	21	21	26	19	27	21	220
	*EXPENDABLE FLIGHTS					(2)		(3)	(1)		(3)	(1)	(10)
GROUND TURN-AROUND CREW	KSC	107	107	107	113	113	107	107	113	107	113	113	
	WTR				63	63	63	63	63	63	63	63	
	TOTAL	107	107	107	176	176	170	170	176	170	176	176	
MINIMUM ACTIVE FLEET REQMT.	MINIMUM ACTIVE FLEET												
	KSC, TURNAROUND	1	1	2	2	2	2	2	2	2	2	2	2
	KSC, EXP. VEHICLES					2		3	1		3	1	10
	WTR, TURNAROUND				1	1	1	1	1	1	1	1	1
	SUBTOTAL	1	1	2	3	5	3	6	4	3	6	4	
	ATTRITION	1	1	1	1	1	1	1	1	1	1	1	
	MINIMUM ACTIVE FLEET	2	2	3	4	6	4	7	5	4	7	5	

Table 2-81. Program 1 Fleet Requirement and Utilization

VEHICLE SCHEDULING				CALENDAR YEAR											TOTAL FLIGHTS
TUG NO.	NEED DATE	DELIVERY DATE	DISPOSITION	80	81	82	83	84	85	86	87	88	89	90	
1 (F-1)	SEP. 78	SEP. 78	EXPENDED	1	3	4	3	2*							13
2 (F-2)	APR. 79	DEC. 78	EXPENDED	1	3	4	3	2*							13
3	JUN. 80	JUN. 80	EXPENDED	1	3	3	3	3	2	1*					16
4	DEC. 80	DEC. 80	EXPENDED		3	3	3	3	2	1*					15
5	JUN. 81	JUN. 81	EXPENDED		2	3	3	3	2	1*					14
6 WTR	JAN. 82	DEC. 81	EXPENDED				4	1	2	2	1*KSC				10
7 WTR	JUN. 82	JUN. 82	INVENTORY				3	1	3	1	2	1	3		14
8	JAN. 83	DEC. 82	EXPENDED				3	3	2	2	3	2	1*		16
9	JUN. 83	JUN. 83	EXPENDED				2	3	2	2	3	2	1*		15
10	JAN. 84	DEC. 83	EXPENDED					2	2	2	3	2	3*		14
11	JUN. 84	JUN. 84	EXPENDED					1	2	2	3	2	3	1*	14
12	JAN. 85	DEC. 84	INVENTORY						1	2	3	2	3	4	15
13	JUL. 85	JUN. 85	INVENTORY						1	2	3	2	3	4	15
14	JAN. 86	DEC. 85	INVENTORY							2	3	2	3	4	14
15	JUL. 86	JUN. 86	INVENTORY							1	1	3	3	6	14
16 WTR	JAN. 87	DEC. 86	INVENTORY								1	1	4	2	8
TOTAL FLIGHTS				3	14	17	27	24	21	21	26	19	27	21	220
ACTIVE, FLEET				3	5	5(2W)	9	11(2E)	11	13(3E)	11(1E)	10	10(3E)	7(1E)	

* YEAR EXPENDED
→ TRANSFER LAUNCH SITE
S STORAGE

As vehicles are delivered to the launch sites, they are phased into the active fleet to obtain relatively even usage on all vehicles as indicated by the total flights per Tug shown in the last column. Expendable Tugs thus accumulate a number of flights before being expended in the years indicated. For the utilization plan shown here for Program 1, Tug 6 is delivered to WTR, flies nine missions there and is then transferred to KSC for an expendable mission in 1987.

The maintenance facility proposed for Program 1 is existing Hangar J at KSC to reduce development cost. Hangar J has sufficient floor area to accommodate a two-bay Tug maintenance stand. The mezzanine area is adequate for administration and engineering offices. First floor area may also be used for adapter and main engine service areas. Level II shops are assumed to be common with Orbiter and/or existing base facilities.

2.4.1.8 Program Plans. This section summarizes the test, manufacture, and facility plans for Program 1 Tug. This section also shows the major activities and key dates and the integrated schedule for the development, procurement, and operational phases of the program.

Ground and Flight Test Plans — The primary objective of the ground test program is to ensure that Tug goals in Shuttle safety, critical technologies, and performance are adequately demonstrated so that there will be a high confidence of success in the first flight. Table 2-82 shows a summary of all major ground tests including test activity, test site, and test articles; test costs are also shown for each activity for procurement under both NASA and DOD guidelines. These costs are for laboratory, development, and qualification testing of all components and all major subsystem/system test articles. These costs include all test hardware, test personnel, test equipment, and test fixtures. The same number and type of test articles are used in both NASA and DOD programs. The only significant difference comes from the DOD requirement for formally demonstrating Space Tug reuse capabilities. An additional three months of test time is required for propulsion testing to demonstrate a refurbishment cycle on the engine system and a refurbishment/reusability demonstration in conjunction with thermal/vacuum testing.

The objective of the flight test program is to show that the mission reliability goal of >0.97, Tug attrition goal of >0.99 and multi-mission/economics/reuse goals of the Tug program are attainable. Flight testing will demonstrate the validity of ground test environments, loads, and tests as well as imposing the effects of zero-g and other effects not satisfactorily demonstrated in ground testing. Each flight test mission will be divided into phases, during which various Space Tug operating modes are tested as shown in Figure 2-65. The difference in NASA and DOD procurement approaches to flight test are summarized in Table 2-83. In the NASA approach, it appears to be cost effective, technically feasible, and relatively low risk to place operational payloads into low performance orbits on the initial Tug flights. The remaining vehicle performance is utilized for developmental flight testing into progressively higher risk

Table 2-82. Ground Test Program for Program 1 Tug

TEST ACTIVITY	TEST SITE	TEST ARTICLE	TOTAL COST ($M) (INCLUDING TEST ARTICLE)		REMARKS
			NASA	DOD	
COMPONENT TESTS	CONVAIR & VENDOR LABS	PREPRODUCTION COMPONENTS	13.8	13.8	SAMPLE SIZE OF 2 REQ. FOR QUALIFICATION
PROPULSION TESTS	P&W (E6)	ENGINE & FEED SYS. HARDWARE	3.5	4.0	ENGINE RETURNED TO INVENTORY
STRUCTURAL TESTS	MSFC (4550)	STV	4.4	4.4	INCL. FUNCT. TESTS OF INSULATION, PROP. LOADING, DRAIN & VENT SYSTEMS
LIFE CYCLE TESTS	MSFC (4557)	FTV	5.8	5.8	
DEPLOYMENT ADAPTER	CONVAIR	ORBITER INTERFACE HARDWARE	1.7	1.7	DEMONSTRATES FUNCT. CAPABILITY
ASTRIONICS SYSTEMS	CONVAIR JSC KSC	ASTRIONICS MODULE	6.4	6.4	HARDWARE, SOFTWARE & AGE INTEGRATION
THERMAL VACUUM	LeRC (B2)	F-2 FLT. ART.	1.0	1.0	CRYO CONDITIONS REQ. MENTS
REUSABILITY EVALUATION	LeRC (B2)	F-2 FLT. ART.	—	1.5	EXT. OF THERMAL-VACUUM TEST
LAUNCH SITE VALIDATION	ETR WTR	F-1 FLT. ART. F-X FLT. ART.	2.6 2.6	2.6 2.6	
TOTAL GROUND TEST COST ($M)			41.8	43.8	

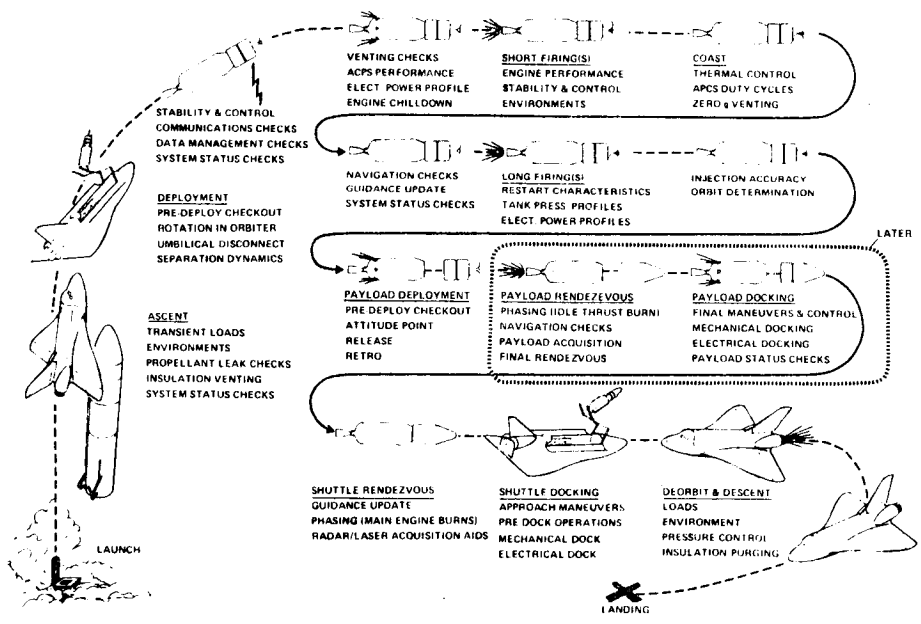

Figure 2-65. Typical Flight Development Test for Program 1 Tug

Table 2-83. Flight Test Program Comparison

NASA PROCUREMENT APPROACH	DOD PROCUREMENT APPROACH
• NO "DEDICATED" FLIGHT TEST VEHICLE	• TWO PROTOTYPE FLIGHT TEST VEHICLES REQUIRED
• R&D INSTRUMENTATION OF FIRST FLIGHT VEHICLE	/ DDT&E VEHICLE WITH R&D INSTRUMENTATION (F-2)
• OPERATIONAL MISSION ACCOMPLISHED WITH FIRST FLIGHT	/ OT&E VEHICLE WITHOUT R&D INSTRUMENTATION (F-1)
/ CONSERVATIVE FLIGHT ENVELOPE TO PAYLOAD DEPLOYMENT	• FLIGHT TEST 1 (DDT&E FLIGHT USING (F-1)
/ TUG SYSTEM SIMILAR TO EXISTING CENTAUR SYSTEMS	/ DEMONSTRATES DEPLOYMENT MODE CAPABILITY
/ ADEQUATE GROUND TEST SUPPORT AVAILABLE	/ POSTFLIGHT REFURB. CYCLE DEMONSTRATED AFTER FLIGHT
• ENGINEERING DATA "PIGGYBACKED"	• FLIGHT TEST 2 (IOT&E FLIGHT USING F-1)
/ "TESTING" PERFORMED AFTER PAYLOAD DEPLOYMENT	/ INITIAL OPERATIONAL TEST & EVALUATION
/ REFINES OPERATING & PERFORMANCE PREDICTIONS IN "HIGHER RISK" REGIMES	/ DIRECTED BY OPERATING AGENCY
• ADDITIONAL FLIGHTS WITH R&D INSTRUMENTATION	• FLIGHT TEST 3 (DT&E FLIGHT USING F-2)
/ FURTHER DATA OBTAINED USING SAME VEHICLE ON AT LEAST 6 ADDITIONAL FLIGHTS	/ DEMONSTRATES REUSABILITY
/ OBTAINS DATA WITH DIFFERING PAYLOADS & MISSION REQUIREMENTS	⇩ DSARC III (CONSTRAINED BY FLIGHTS 1 THROUGH 3) ⇩
	• OT&E PROGRAM (OT&E FLIGHTS USING F-1 & F-2)
	/ CONTINUED OPERATIONAL TEST & EVALUATION
	/ APPROX. 9-MONTH PROGRAM (16 FLIGHTS)

operating regimes. This approach reduces overall DDT&E costs and permits early operational usage. Under the DOD fly-before-buy concept, performance and reusability must be demonstrated prior to a production decision (DSARC III milestone); Initial Operational Test and Evaluation (IOT&E) should also be performed by the planned user agency prior to DSARC III. Two prototype flight test vehicles are required to satisfy these requirements — one with R&D instrumentation to support IOT&E. Following the additional OT&E flights, the two flight test articles would be refurbished/updated and released into the operational fleet inventory.

Manufacturing Plan — The manufacturing plan provides for the orderly development of tooling, fabrication of detail hardware, subassembly, test, and checkout of the test and flight hardware. The necessity for a low-cost development program established the basic parameters around which the Tug manufacturing plan was created: 1) existing industry capability be utilized as much as possible for the fabrication of components, thereby minimizing in-house facility and tooling requirements, 2) all welding and assembly of critical components and structures be performed in-house to provide for maximum process control and quality assurance.

The manufacturing plan includes general manufacturing indentures required to achieve the progressive build-up from the component level. The assembly sequence brings together subassemblies that result in major modules. The factors considered in

developing this plan are producibility, use of existing techniques, ease of accessibility, handling methods, installation of components and subsystems at earliest levels of assembly, and minimizing special tooling requirements. A major program element is procurement of raw materials for both vehicle components and tooling. Early authorization for ordering certain long-lead raw materials may be mandatory. Based on proven tooling and manufacturing schedules, the structural test article would be available in 25 months, the dynamic test article in 27 months, and the first flight vehicle in 35 months from program go-ahead.

Test and Manufacturing Facilities — In concert with the low development cost approach of Program 1, emphasis was on existing operating facilities for manufacturing and testing. No size, weight, or material limitations exist that preclude the use of existing private or government-owned industrial facilities. For test facilities, the only question is the most cost effective use of them; important factors are the operating costs of competing facilities versus the cost of reactivating facilities that have been "mothballed."

Program Schedule — Figure 2-66 shows the summary program schedule for Program 1. It shows go-ahead in September 1975, a 4-1/4 year development phase, and initial operational capability (IOC) at first flight in December 1979. There are two major ground test vehicles for the DDT&E phase, i.e., the structural test vehicle (STV) for structural loads testing and the dynamic test vehicle (DTV) for life-cycle evaluations including cryogenic tanking tests. These vehicles will be ready to start testing by late 1977 and testing will be complete by late 1978/early 1979. Flight vehicles 1 and 2 (F-1 and F-2), the first production vehicles, are assembled in parallel with the structural testing program; however, these tests are complete prior to initiation of preflight testing. Any updates as a result of these tests would have to be accomplished on each of the vehicles prior to their initial flights.

The initial production vehicle (F-1) is delivered to the flight site some 15 months prior to first flight. During this period it will verify vehicle/facility functional compatibility, procedures, and operations required for the initial flight. It also serves as continued training for vehicle post-flight safing, refurbishment, and servicing operations. This Tug would then be updated as required and be ready to support flights subsequent to IOC. The second production vehicle is scheduled for the initial flight (IOC), but will undergo environmental testing in a thermal vacuum chamber prior to the delivery to the flight site. The initial post-flight turnaround activities are scheduled for three months to ensure adequate contingency time as may be needed for these activities. The combined turnaround and preflight activity will reduce to a nominal period of 3.2 weeks after approximately 12 flights.

The third production vehicle would be delivered six months after IOC with the remaining Tugs produced on six-month centers, which will adequately support the Tug flight model including expended and attrition vehicle requirements. A total of 16 Tugs is required in the operational vehicle inventory to satisfy the Tug flight mission model.

The first two of these vehicles support pre-IOC checkout and flight site integration as discussed above.

The principal pacing activity in the schedule is software development and vehicle integration. A prototype flight software program would have to be used for factory checkout and vehicle/site integration. Final flight software would be checked out with these early Tugs at the flight site prior to their preflight activities.

The DOD approach to Tug program procurement (reference AFSCP 800-3 and DOD Dir. 5000.3) differs from that shown in Figure 2-66 in the following areas. Vehicle integration ground testing is expanded to include extended mission simulations and to attain initial hardware and system reuse data under operational environments. Two Tugs are initially designated as development flight articles and will perform a minimum of three test flights to evaluate performance and demonstrate refurbishment, reusability, and initial OT&E testing. These flight tests complete the Full-Scale Development Phase and are followed by a DSARC Review that will constrain a "Production Release" decision (fly-before-buy concept). Material and other long-lead procurements are started during the DT&E phase. OT&E flight operations are continued beyond the full-scale development phase for user agency familiarization and to satisfy the requirements of the mission model. The IOC milestone, as shown in the NASA schedule, is replaced by two other milestones: "Full-Scale Development Complete" and "First Production Flight."

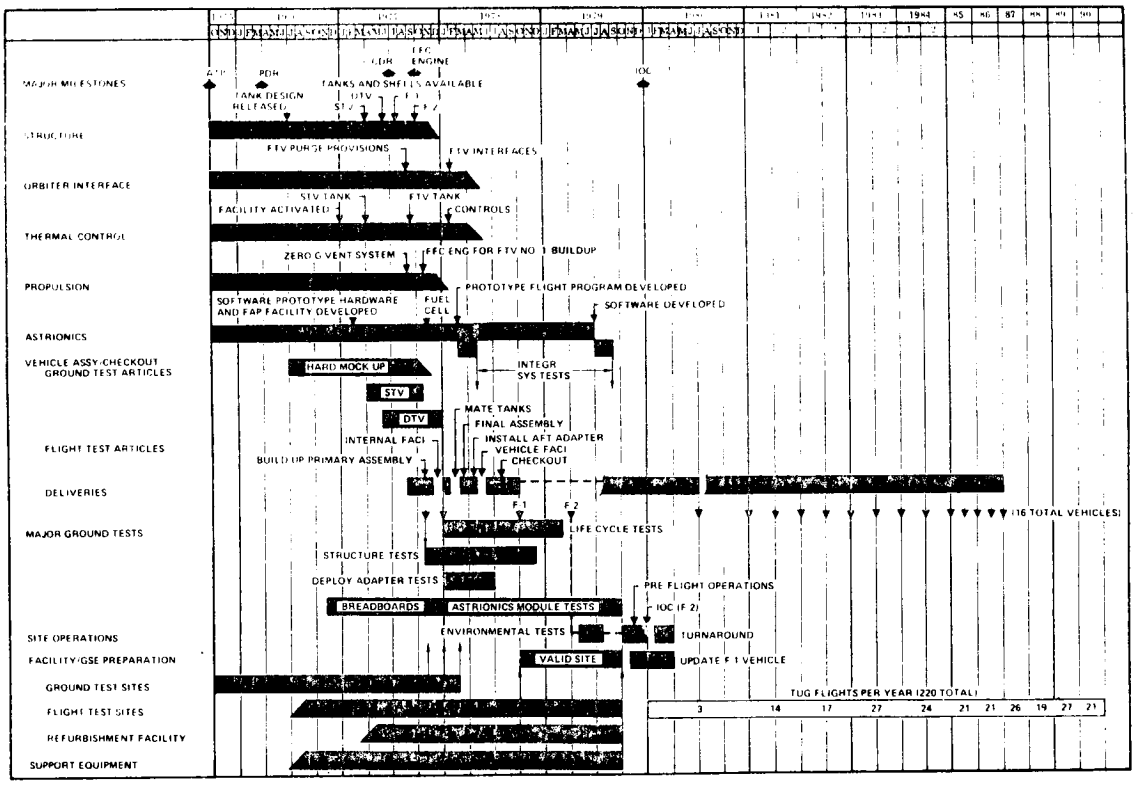

Figure 2-66. Program 1 Schedule

2.4.1.9 Program Cost. Cost data was developed according to the NASA provided Space Tug Systems Studies Work Breakdown Structure and Dictionary. Cost estimates were predicated on the following ground rules and assumptions:

a. Costs presented are for budgetary and planning purposes only. Costs presented represent the estimated total program cost to the government at program completion. As such they include estimated allowances for cost growth over the program life cycle, which are normally not included in bid-type estimates. Also, some estimates were developed by the government as noted below. Therefore they do not represent an offer, bid, or commitment on the part of General Dynamics Corporation or the associated Tug study companies.

b. Costs are expressed in 1973 dollars, without prime contractor fee/profit.

c. Costs represent the total cost to the government (less prime contractor fee). Cost estimates are predicated on making maximum use of a number of existing government and contractor facilities and equipment.

d. Program management and integration cost estimates are based on Centaur historical cost data and, therefore, are representative of existing management and NASA/customer relationships.

e. Cost estimates for the following items were provided by NASA:

   1. Main engine development and unit production.

   2. Auxiliary stage solid rocket motor recurring unit cost per launch.

The overall total Tug Program cost summary is shown in Table 2-84. DDT&E cost is of particular importance, and the Tug vehicle represents the major DDT&E cost area. Therefore Tug vehicle DDT&E cost details are summarized in Table 2-85. The Tug vehicle portion is slightly over $100M. This low cost is obtained through extensive use of existing components and techniques particularly those from the Centaur program. The table illustrates the major subsystem areas where existing components are used. The structure is the only subsystem category that does not use at least some existing components. The theoretical first unit (TFU) cost of this vehicle is $11.4M, not including the Orbiter interface equipment required for each Shuttle/Tug flight. The operational average cost-per-flight for the reusable, expendable, and velocity package modes is shown in Table 2-86. The "expended hardware" item in the table consists of the expendable stage or velocity package costs as appropriate for the mode.

Program funding requirements are shown in Figure 2-67. Peak year funding for the Program 1 Tug occurs in 1977, with 1978 nearly as high. This is due to the relatively compressed development time, which requires heavy development activity. Vehicle production requirements to meet early heavy launch schedules (e.g., 14 in 1981) keep funding requirements above $45M through 1982.

Table 2-84. Program 1 Tug Cost Summary

WORK BREAKDOWN STRUCTURE	NASA PROGRAM COSTS*				DOD PROGRAM COSTS*			
	DDT&E	INVESTMENT	OPERATIONS	LIFE CYCLE	DDT&E	INVESTMENT	OPERATIONS	LIFE CYCLE
01 PROJECT MANAGEMENT	5.7	4.0	0.3	10.0	7.4	3.4	0.3	11.1
02 SYSTEMS ENGINEERING & INTEGRATION	11.6	25.2	2.2	39.0	15.2	21.5	2.2	38.9
03 VEHICLE								
TUG	101.2	164.6	13.5	279.3	135.2	139.8	13.5	288.5
ORBITER INTERFACE	7.6	6.4	2.4	16.4	7.6	6.4	2.4	16.4
04 AUXILIARY STAGE	1.7	–	1.9	3.6	1.7		1.9	3.6
05 LOGISTICS	4.6	2.3	10.0	16.9	4.6	2.2	10.0	16.8
06 FACILITIES	0.6	4.6	3.9	9.1	0.6	4.6	3.9	9.1
07 GROUND SUPPORT EQUIPMENT	24.9	9.7	3.5	38.1	24.9	9.7	3.5	38.1
08 VEHICLE TEST	16.7	–	–	16.7	28.2			28.2
09 LAUNCH OPERATIONS – WTR	–	–	15.8	15.8			15.8	15.8
10 LAUNCH OPERATIONS – ETR	–	–	34.4	34.4			34.4	34.4
11 FLIGHT OPERATIONS – NASA	18.6	–	44.3	62.9			44.3	44.3
12 FLIGHT OPERATIONS – DOD	–	–	30.6	30.6	18.6		30.6	49.2
13 REFURBISHMENT & INTEGRATION – WTR	–	–	4.3	4.3			4.3	4.3
14 REFURBISHMENT & INTEGRATION – ETR	–	–	20.2	20.2			20.2	20.2
TOTAL	193.2	216.8	187.3	597.3	244.0	187.6	187.3	618.9

* MILLIONS OF 1973 DOLLARS.

Table 2-85. Program 1 Tug Vehicle Development Cost

	DDT&E ($M)	COMMENT
STRUCTURES	28.9	LOW-COST APPROACH
MAIN ENGINE	13.0	EXISTING ENGINE
MAIN ENGINE SUPPORT	10.5	CENTAUR-PROVEN TECHNIQUES/COMPONENTS
ACPS SYSTEM	7.3	EXISTING COMPONENTS USED
PROPULSION	30.8	
DATA MANAGEMENT	5.9	MODIFIED CENTAUR
GN&C	8.9	CENTAUR & OTHER EXISTING COMPONENTS
COMMUNICATIONS	3.9	MODIFIED EXISTING COMPONENTS
INSTRUMENTATION	1.6	MODIFIED CENTAUR
ELECTRICAL POWER	4.5	MODIFIED SHUTTLE FUEL CELL
POWER DISTR. & CONTROL	4.4	MODIFIED CENTAUR COMPONENTS
ASTRIONICS	29.2	
INSULATION	1.9	CENTAUR TYPE
CONTROL	1.3	
THERMAL CONTROL	3.2	
INST. ASSEMBLY & CHECKOUT	9.1	
TOTAL VEHICLE	101.2	

LOW COST OBTAINED THROUGH EXTENSIVE USE OF EXISTING COMPONENTS & DEVELOPED TECHNIQUES

Table 2-86. Program 1 Cost Per Flight

	COST ($MILLION) MODE 1	2	3
LAUNCH OPERATIONS	0.23	0.23	0.23
MAINTENANCE & REFURBISHMENT	0.18	0.18	0.18
GROUND OPERATIONS TOTAL	0.41	0.41	0.41
FLIGHT OPERATIONS	0.38	0.38	0.38
OPERATIONS SUPPORT	0.09	0.09	0.09
EXPENDED HARDWARE	0	10.71	0.27
TOTAL AVERAGE COST/FLIGHT	0.88	11.59	1.15

MODE 1 REUSABLE TUG

MODE 2 EXPENDABLE TUG

MODE 3 REUSABLE TUG & VELOCITY PACKAGE

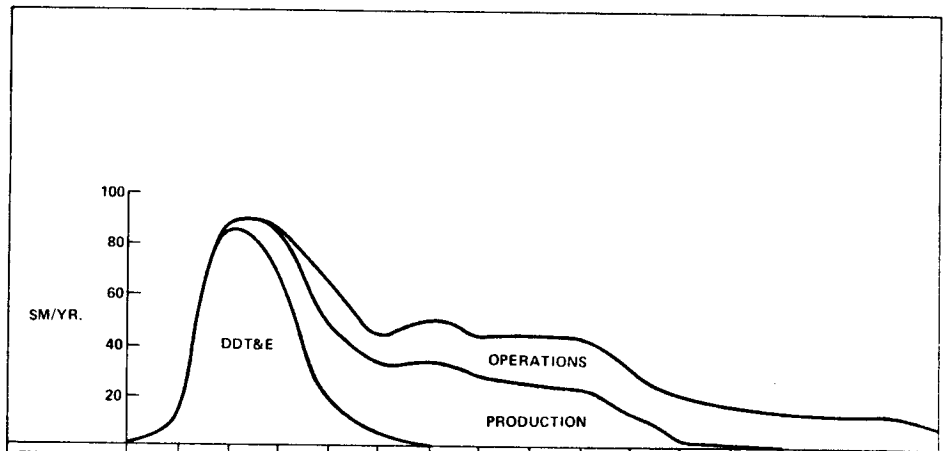

FY	76	77	78	79	80	81	82	83	84	85	86	87	88	89	90	91
DDT&E	16.6	85.6	65.9	19.6	5.4											
PRODUCTION		3.0	18.0	27.2	30.9	37.2	30.3	27.0	24.1	15.3	3.4	0.3				
OPERATION					9.4	15.5	15.7	17.4	18.6	18.5	18.5	17.5	16.2	16.2	16.0	7.9
TOTAL	16.6	88.6	83.9	46.8	45.7	52.7	46.0	44.4	42.7	33.9	21.9	17.8	16.2	16.2	16.0	7.9

Figure 2-67. Program 1 Annual Funding Requirements

2.4.1.10 Program Risk. The purpose of the risk assessment is to identify those areas that could degrade Tug performance or programmatics/cost if predicted values are not attained. Risk assessment is concerned with the residual risks in the configuration and program as defined and as assessed at this point in time. Risk and program/configuration definition is an iterative process and many of the risk areas identified could be changed by suitable modifications to designs, test programs, etc.

Areas of concern are listed on the left side of Figure 2-68. These are arranged in decreasing order of concern, i.e., safety is the issue of greatest concern followed by cost, schedule, etc. The horizontal bars show the relative risk on a scale of 0 to 10. These risk ratings are based on the MF-003M rating for cost confidence. The zero (low risk) value is used for off-the-shelf items, where familiar procedures are used, where detailed analysis has been made, in general when there is high confidence that the technical/programmatic/cost predictions will be attained easily. The 10 (high risk) value relates to advanced technology subsystems that have no hardware basis, where major development is required, where adequate analyses have not been made, where the program is overconstrained by cost, performance, and schedule requirements.

For Program 1 the schedule is considered to be the most vulnerable item followed by ground operations, structure, and cost. The items of least concern are subsystem weights and propulsion performance because of large margins and off-the-shelf propulsion systems. Safety is also rated a low risk because potential hazards have been overcome by designing-in adequate solutions, absorbing the associated weight penalties, and structuring the ground test program to verify these solutions.

In general the risks associated with Program 1 are extremely small and much less than is usually associated with an advanced space program in its Phase A development status.

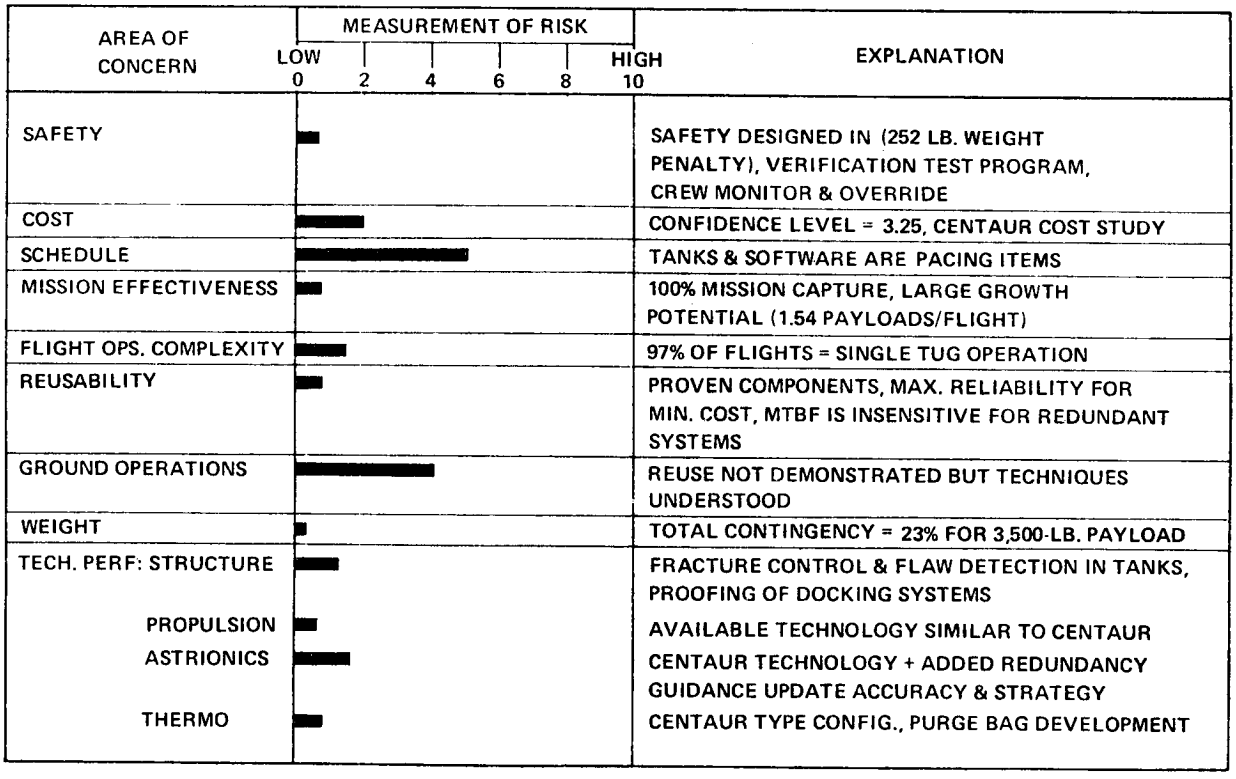

Figure 2-68. Program 1 Risk Assessment

2.4.1.11 Sensitivity Studies. The major programmatic sensitivity conducted on Program 1 was an IOC sensitivity to a two-year extension of the IOC date (from 12/79 to 12/81) while maintaining the same ATP. The funding spread associated with this IOC variation is compared with the baseline in Figure 2-69. Such an extension greatly reduces the potential of any schedule risk with the 12/79 IOC. Ample contingency time would be available for critical event evaluations before proceeding too far with activities that should be constrained by such events. The IOC delay reduces the peak funding from $89 million in 1977 for the baseline to $57 million in 1979 and 1980.

Other sensitivity data relating to various capability features, which is generally applicable to all of the programs is presented in Section 2.5.4.

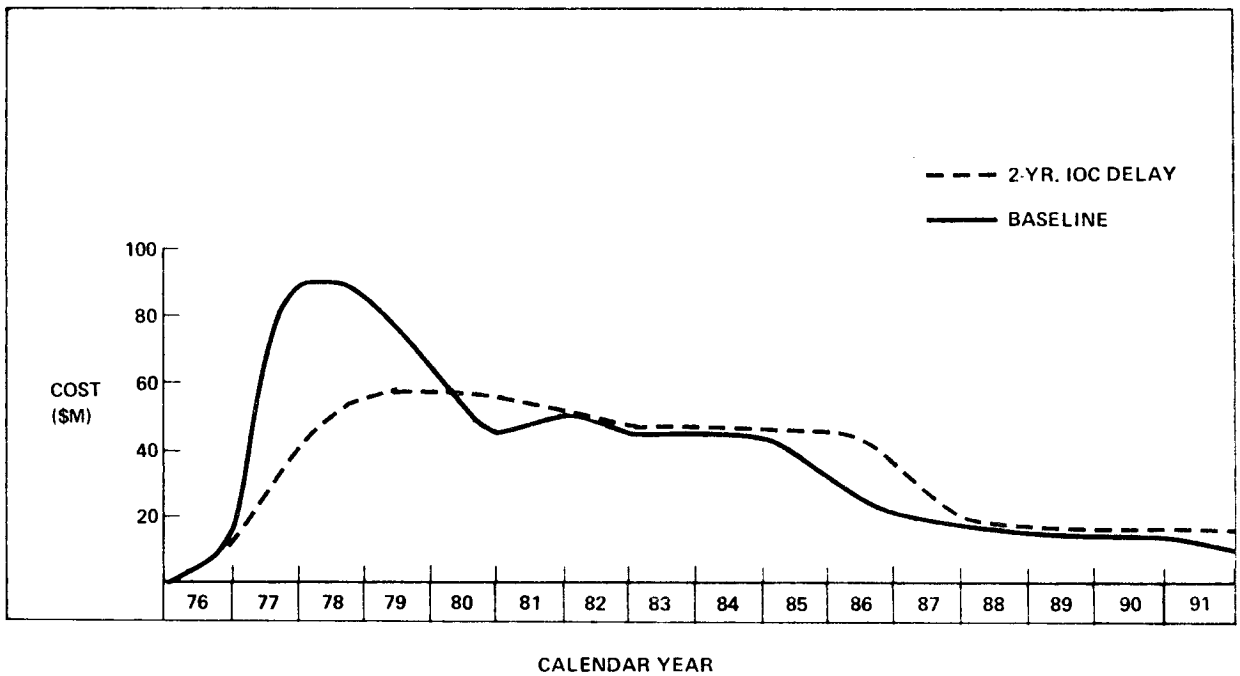

Figure 2-69. Program 1 IOC Variation Impact on Annual Funding

2.4.1.12 Program Update. Subsequent to the data dump the Program 1 configuration was updated. The changes made in the update included incorporating the results of additional analyses and recommendations made by the government.

Table 2-87 identifies the changes incorporated and the rationale for the change. The weight increment from the baseline Program 1 configuration is also identified. The configuration incorporating these changes was resized and the performance computed. Table 2-88 presents a summary weight statement and performance characteristics for the resized configuration. The geosynchronous deploy payload of 5111 lb (2318 kg) represents a 241 lb (109 kg) payload decrease over the baseline Tug.

The programmatic characteristics of this updated configuration would be essentially identical with the baseline. A re-examination of the program costs showed that the changes in cost were negligible. For example, the DDT&E cost of Program 1 would change by less than $100,000.

Table 2-87. Configuration Changes, Program 1 Update

CHANGE	RATIONALE	ΔWT LB (KG)
DRY WEIGHT		
INCREASE BODY SKIN THICKNESS	PROVIDE INCREASE STIFFNESS	20 (9.1)
INCREASE LH_2 TANK THICKNESS	DESIGN PRESSURE INCREASE FOR ABORT DUMP	54 (24)
USE 2 ACPS He BOTTLES (WAS 4)	CORRECT DISCREPANCY	-56 (-25)
INCREASE ABORT PRESSURIZATION PLUMBING	DETAILED ABORT DUMP ANALYSIS	10 (4.5)
ADD ADDITIONAL HEATERS	UPDATED THERMAL CONTROL REQUIREMENTS	10 (4.5)
CHANGE PURGE BAG TO TEFLON COATED KAPTON	SAFETY – ELIMINATE FIRE HAZARD	-27 (-12)
INCREASE FILL & DRAIN LINE SIZE	DETAILED ABORT DUMP ANALYSIS	18 (8)
REVISE CERTAIN ASTRIONICS SYSTEM COMPONENTS	ADDITIONAL ANALYSIS	90 (41)
NON USABLE FLUIDS		
DELETE 10% FPR ON ACPS PROPELLANT	NO REQUIREMENT SPECIFIED	-73 (-33)
DELETE PU LH_2 BIAS	INCLUDED IN FPR	-57 (-26)
NON IMPULSE EXPENDABLES		
MAIN ENGINE LEAKAGE	REVISED MAIN ENGINE DATA	22 (10)
REVISE START AND STOP LOSSES	REVISED MAIN ENGINE DATA	-48 (-22)
REVISE FUEL CELL REACTANTS	UPDATED POWER REQUIREMENTS ANALYSIS	-26 (-12)
SHUTTLE INTERFACE ACCOMMODATIONS		
INCREASE ADAPTOR STRUCTURE AND ORBITER ATTACH FITTINGS	UPDATED STRUCTURAL DESIGN ANALYSIS	163 (74)
ADD DUAL DUMP VALVES AND DUAL VENT VALVES ON ADAPTOR	SAFETY – PRECLUDE AIR IN H_2 TANK	148 (67)
INCREASE FILL & DRAIN LINE SIZE ON ADAPTOR	DETAILED ABORT DUMP ANALYSIS	322 (146)

Table 2-88. Program 1 Baseline Tug Update Weight Summary

	LB	(KG)
STRUCTURE	2402	(1089.6)
PROPULSION	1303	(591.0)
THERMAL CONTROL	408	(185.1)
AVIONICS	1286	(583.3)
CONTINGENCY	540	(244.9)
TOTAL DRY WEIGHT	5939	(2693.9)
NONUSABLE FLUIDS	362	(164.2)
MAIN PROPELLANT FPR	256	(116.1)
BURNOUT WEIGHT	6557	(2974.2)
NON-IMPULSE EXPENDABLES	425	(192.8)
USABLE MAIN PROPELLANTS	49397	(22406.5)
USABLE ACPS PROPELLANTS	727	(329.8)
FIRST IGNITION WEIGHT	57106	(25903.3)
SHUTTLE INTERFACE ACCOMMODATIONS	2783	(1262.4)
MAX. PAYLOAD (DEPLOYMENT MISSION)	5111	(2318.3)
TOTAL WEIGHT IN SHUTTLE	65000	(29484.0)
MASS FRACTION = 0.865		

2.4.2 PROGRAM 2

2.4.2.1 Configuration. The inboard profile drawing of the Program 2 Tug is shown in Figure 2-70 . This stage is sized for maximum retrieval capability from a synchronous equatorial orbit. The emphasis in this program is high performance, i.e., retrieval of 3500 lb (1588 kg) with low operating cost. The DDT&E cost is to be low, consistent with these constraints. The main engine chosen for this Tug is the RL-10 Cat IIB operating at a mixture ratio of 5.4:1. The two-position nozzle provides a greater expansion ratio and, hence, greater I_{sp}. Boost pumps are utilized to provide proper inlet conditions. The structure is a composite sandwich shell. The tanks are 2219-T87 aluminum alloy with welded, gore-formed elliptic domes. A zero-g vent system will be installed in each tank. The ACPS is hydrazine monopropellant with helium-pressurized, positive-expulsion tanks. Line and tank heaters have been included to condition the hydrazine. Sixteen ACPS engines in four clusters of four provide all axis maneuver capability and fail-operational/fail-safe redundancy.

The avionics suit is chosen to be lightweight and to include the components necessary for payload rendezvous. The computer and IMU are advanced design, lightweight components, typical of 1973 technology items. Level I autonomy has been retained and the necessary guidance update equipment (horizon and star sensors) included. The communications subsystems have been delineated to handle operation with SGLS and USB. Fuel cells are utilized for Tug power generation. Sufficient redundancy is included to provide reliable operation for the six-day mission.

The insulation system is 20 layers of aluminized Kapton Superfloc with an inner leakage containment membrane and an outer purge bag. Each tank is separately contained. The astrionics module sidewall is utilized to radiate component-generated heat to space. Portions of this sidewall (about 25%) are insulated to prevent excessive cooldown. A radiator is located in the intertank area to reject fuel cell waste heat.

2.4.2.2 Subsystems

Structure and Mechanisms — The selected characteristics and the supporting selection rationale for the structural/mechanical subsystems are summarized in Figure 2-71.

The combination of suspended monocoque fuel tank and full-length body structure is lighter and less expensive than the option featuring an integrally stiffened, load-bearing tank with less body structure. Suspension of both tanks with discrete thermal isolation struts reduces heat input and resultant propellant boiloff.

Grade 2219-T87 aluminum was selected as the preferred tank material from among 12 candidates. Its frequent recent use has permitted detailed characterization in the key categories of fracture toughness, stress-corrosion resistance, and weldability where it is unsurpassed by other candidate aluminum alloys. In addition, it results in one of the lightest tanks systems.

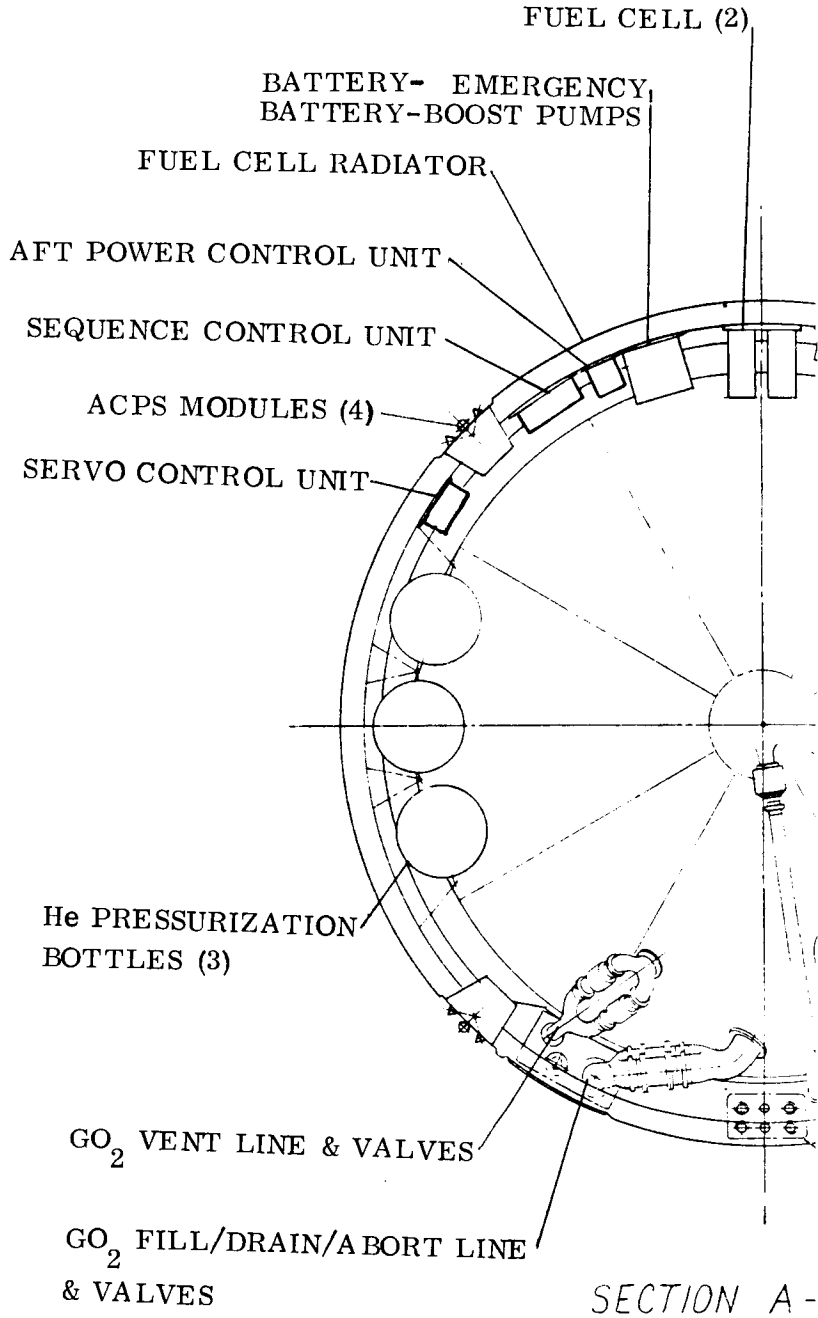
FUEL CELL (2)
BATTERY- EMERGENCY,
BATTERY-BOOST PUMPS
FUEL CELL RADIATOR
AFT POWER CONTROL UNIT
SEQUENCE CONTROL UNIT
ACPS MODULES (4)
SERVO CONTROL UNIT
He PRESSURIZATION
BOTTLES (3)
GO_2 VENT LINE & VALVES
GO_2 FILL/DRAIN/ABORT LINE
& VALVES
SECTION A-

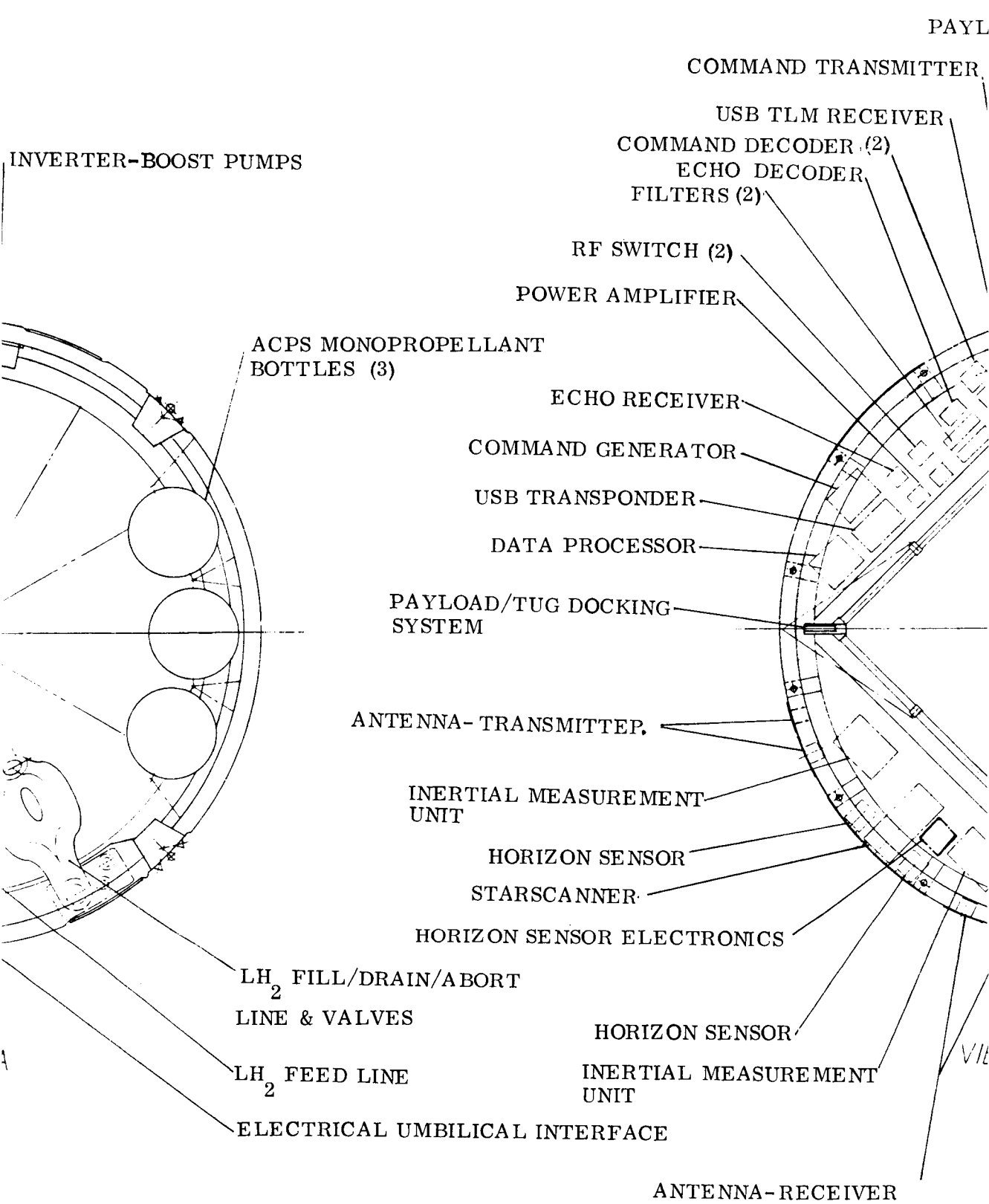
PAYL
COMMAND TRANSMITTER
USB TLM RECEIVER
COMMAND DECODER (2)
ECHO DECODER
FILTERS (2)
INVERTER-BOOST PUMPS
RF SWITCH (2)
POWER AMPLIFIER
ACPS MONOPROPELLANT BOTTLES (3)
ECHO RECEIVER
COMMAND GENERATOR
USB TRANSPONDER
DATA PROCESSOR
PAYLOAD/TUG DOCKING SYSTEM
ANTENNA-TRANSMITTER
INERTIAL MEASUREMENT UNIT
HORIZON SENSOR
STARSCANNER
HORIZON SENSOR ELECTRONICS
LH_2 FILL/DRAIN/ABORT LINE & VALVES
HORIZON SENSOR
LH_2 FEED LINE
INERTIAL MEASUREMENT UNIT
ELECTRICAL UMBILICAL INTERFACE
ANTENNA-RECEIVER

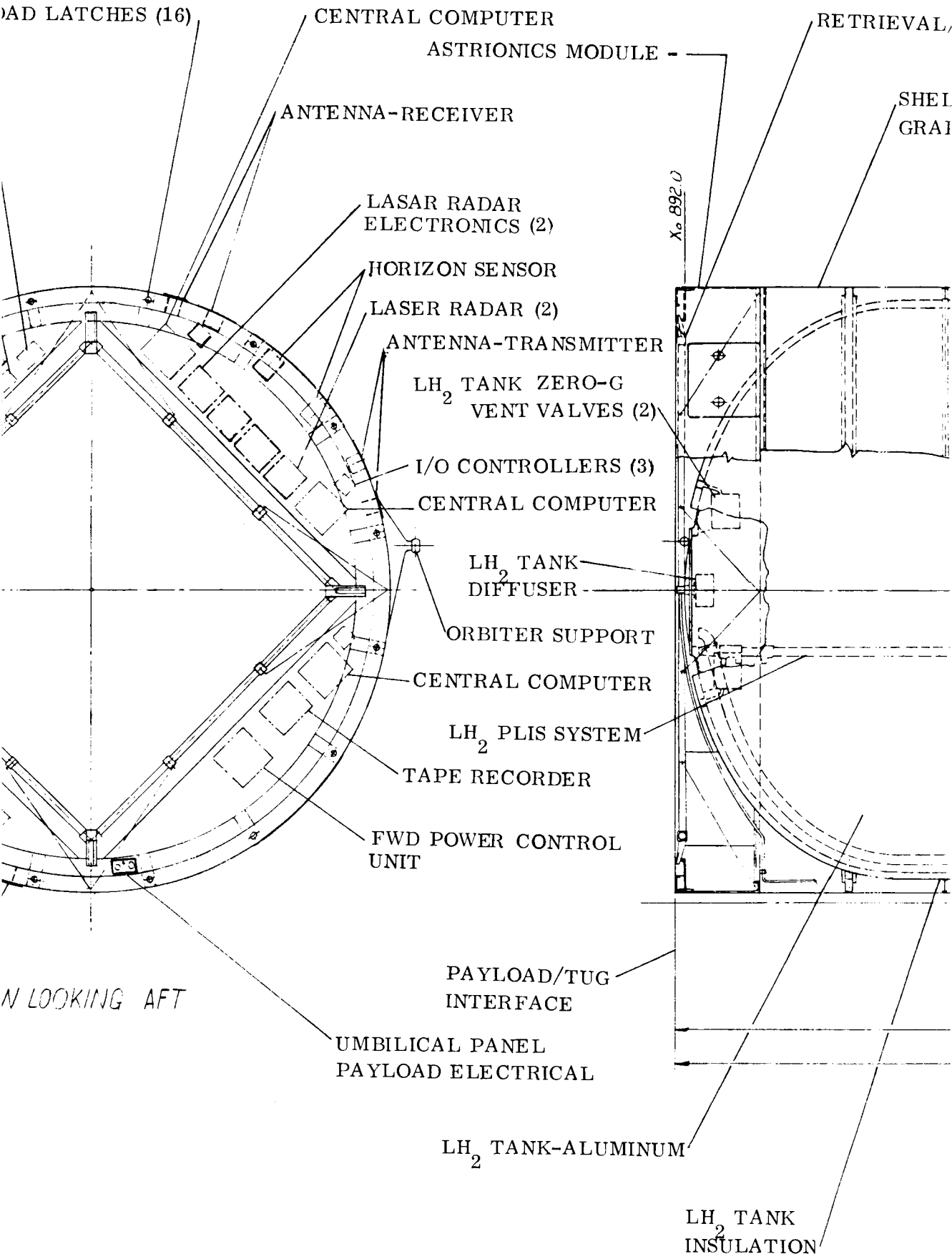
)AD LATCHES (16)
CENTRAL COMPUTER
ASTRIONICS MODULE
RETRIEVAL/
SHEI
GRAI
ANTENNA-RECEIVER
LASAR RADAR ELECTRONICS (2)
HORIZON SENSOR
LASER RADAR (2)
ANTENNA-TRANSMITTER
LH2 TANK ZERO-G VENT VALVES (2)
I/O CONTROLLERS (3)
CENTRAL COMPUTER
LH2 TANK DIFFUSER
ORBITER SUPPORT
CENTRAL COMPUTER
LH2 PLIS SYSTEM
TAPE RECORDER
FWD POWER CONTROL UNIT
N LOOKING AFT
PAYLOAD/TUG INTERFACE
UMBILICAL PANEL PAYLOAD ELECTRICAL
LH2 TANK-ALUMINUM
LH2 TANK INSULATION
Xo 892.0

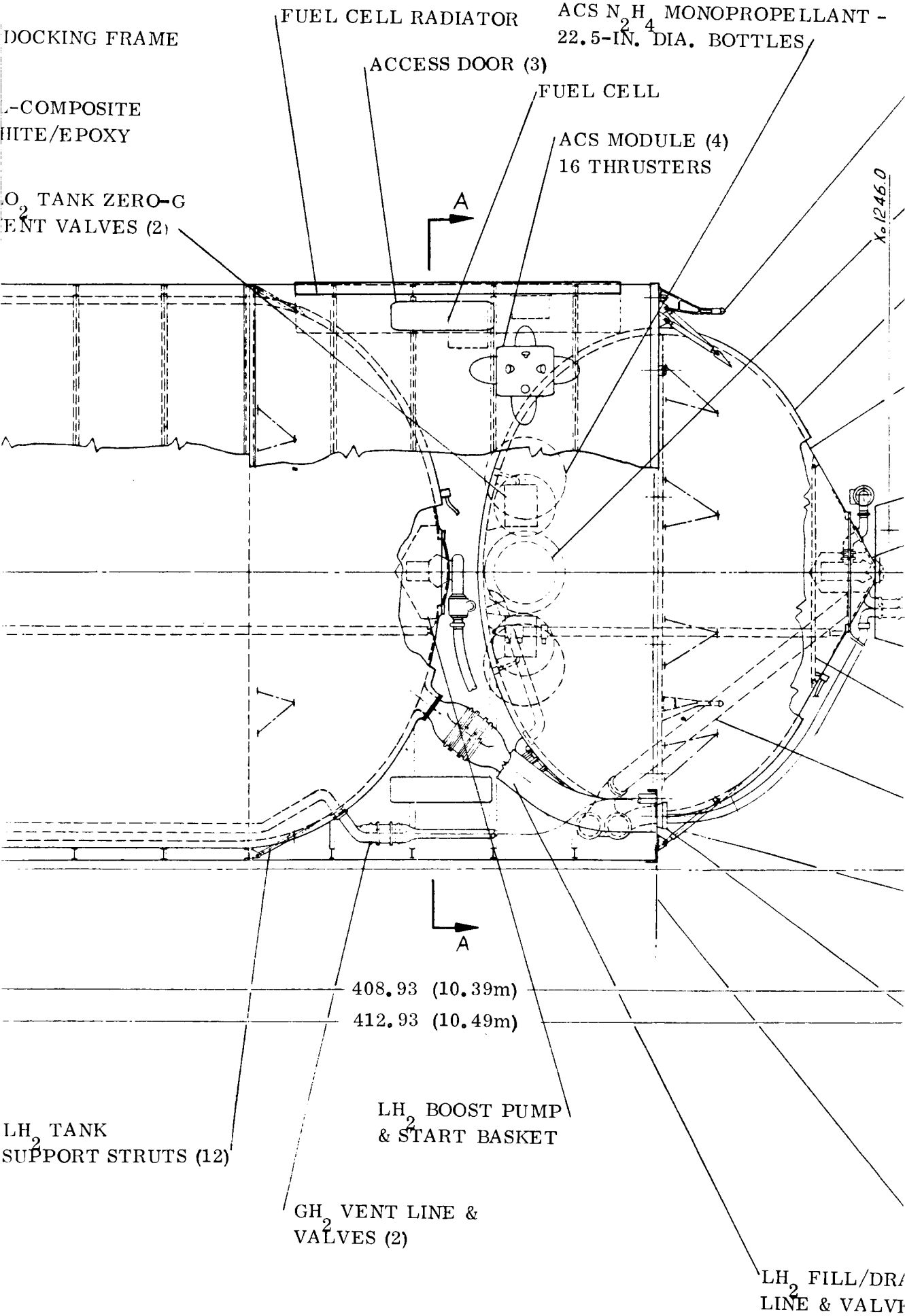
DOCKING FRAME
-COMPOSITE
HITE/EPOXY
O_2 TANK ZERO-G
ENT VALVES (2)
FUEL CELL RADIATOR
ACCESS DOOR (3)
FUEL CELL
ACS MODULE (4)
16 THRUSTERS
ACS N_2H_4 MONOPROPELLANT -
22.5-IN. DIA. BOTTLES
A
A
X=1246.0
408.93 (10.39m)
412.93 (10.49m)
LH_2 TANK
SUPPORT STRUTS (12)
LH_2 BOOST PUMP
& START BASKET
GH_2 VENT LINE &
VALVES (2)
LH_2 FILL/DRA
LINE & VALVE

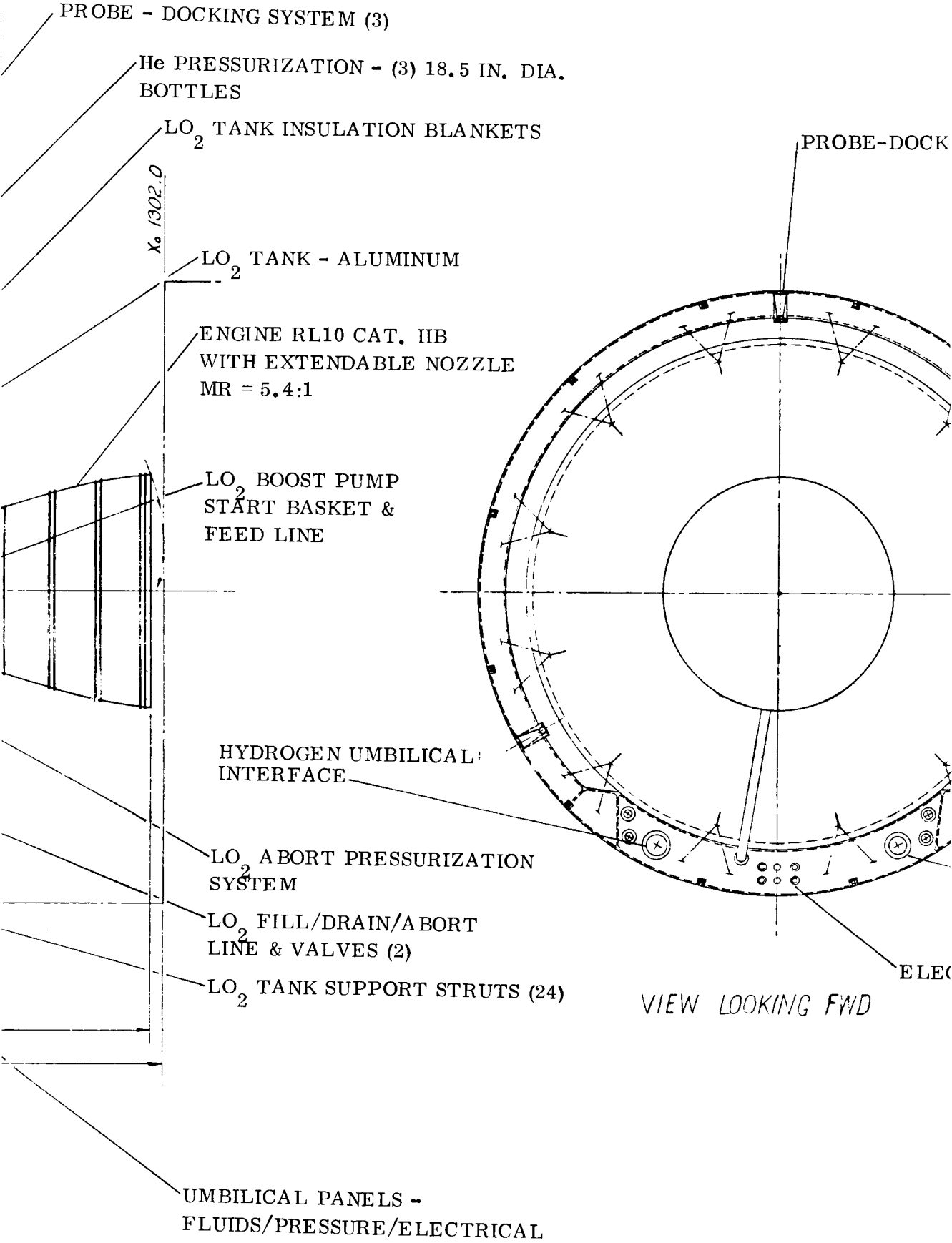

TUG/ADAPTER INTERFACE

N/ABORT
(2)

NG SYSTEM (3)

TUG/ADAPTER LATCHES (12)

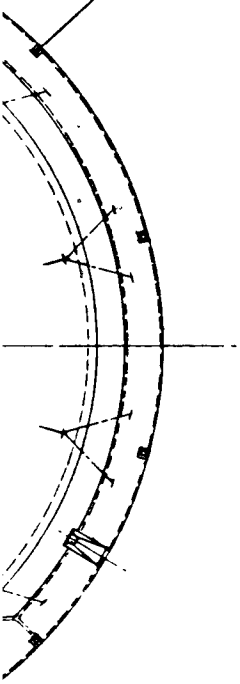

OXYGEN UMBILICAL INTERFACE

TRICAL UMBILICAL INTERFACE

NOTES:
1. ENGINE – RL 10 CAT IIB
   MR. 5.4 : 1
   HEIGHT 55.00 IN.
   EXIT DIA 67.50 IN.
2. PROPELLANT TANKS —
   LH_2 CAPACITY – 2195.5 FT^3
   DIA. 164.00 IN.
   LENGTH – 215.12 IN.
   BULKHEAD RATIO 1.38
   MTL. - AL ALLOY (CRIO. ALLOWABLES)
   LO_2 CAPACITY – 699.6 FT^3
   DIA. – 145.00 IN.
   LENGTH – 121.80 (INCL. CONICAL SECT. & 2.10 IN CYL. SECT.)
   BULKHEAD RATIO – 1.38
   MTL. – AL ALLOY (CRIO. ALLOWABLES)
3. A.C.S. —
   N_2H_4 MONOPROPELLANT
4. STRUCTURE —
   COMPOSITE SANDWICH SHELL

Figure 2-70. Inboard Profile of Program Tug 2

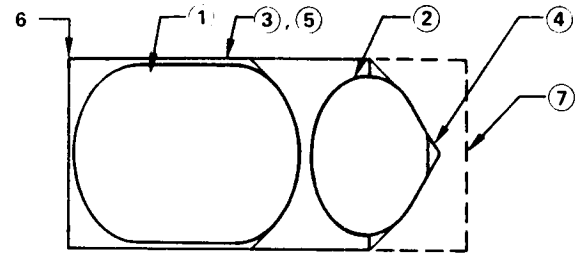

SUBSYSTEM	CHARACTERISTICS	RATIONALE
1, 2 PROPELLANT TANKS	• MONOCOQUE; SUSPENDED FROM BODY • 2219-T87 ALUMINUM • ELLIPSOIDAL GORE BULKHEADS • CLOSE TOL CHEM-SIZED	• LOW WT; LOW HEAT INPUT • EXISTING; STRONG; TOUGH; GOOD WELD • LOW HEIGHT; MIN DEVEL (LOW COST) • MIN WT BY THICKNESS TOL CONTROL
3 BODY STRUCTURE	• 3 SEGMENTS • COMPOSITE SANDWICH	• EASE OF MAINT/REFURB • MIN WT
4 THRUST STRUCTURE	• 1-PC ALUMINUM CONE • OXIDIZER TANK AFT CLOSURE (BOLT-ON)	• LOW WT • BI-FUNCTIONAL
5 METEOROID SHIELD	• PROVIDED BY BODY STRUCT SKIN	• EXCESS t FOR 6-DAY SYNC MISSION
6 PAYLOAD INTERFACE	• SQUARE FRAME DOCKING SYSTEM • HYDRAULIC ACTUATORS FOR FRAME, LATCHES	• LOW WT; BEST P/L COMPATIBILITY • REVERSIBLE; SIMULTANEOUS ACTUATION
7 ORBITER INTERFACE	• LONGERON STIFFENED COMPOSITE ADAPT • ELECT. LINEAR BALL-SCREWS FOR DEPLOY, DOCK, LATCH, UMBIL MECHANISMS	• MIN WT • EXISTING HARDWARE

Figure 2-71. Structural Characteristics of Program 2 Tug

Ellipsoidal bulkheads with a/b = 1.38 avoid compressive hoop stresses and provide tank lengths compatible with the total vehicle length constraint. Gore construction is used in preference to the one-piece spin-formed option due to lesser development, higher strength, and a negligible (4 lb) weight penalty.

The body structure is partitioned into three segments (astrionics, forward module, and aft module) for ease of both initial fabrication/subsystems attachment and subsequent maintenance and refurbishment. Frame reinforced graphite-epoxy composite sandwich construction was selected in preference to metallic systems for minimum weight.

The integral tank-mounted thrust structure concept is preferred over either the non-integral tank-mounted or body-mounted options since it provides a stiff, low-weight, in-line load path into the oxidizer tank aft bulkhead, and also functions as a sump and tank access closure. Its one-piece construction assures low cost and minimum risk.

The body-structure sandwich panel skin exceeds minimum meteoroid bumper thickness required for a six-day on-orbit synchronous mission during the interval of greatest seasonal meteoroid activity.

Discrete two-position latches, square-frame docking structure, and a hydraulic power system for latch and frame position control permit deployment and retrieval of spacecraft at the payload interface.

Composite skin-stringer construction is selected for the support/deployment adapter for compatibility with the body structure. All mechanisms in the Orbiter interface subsystem are actuated by multiple electrically powered linear ballscrews based on existing hardware designs.

Thermal Control — The Program 2 insulation and thermal control systems are shown in Figure 2-72. It is the same as the Program 1 system described in Section 2.4.1.2 except for the multilayer insulation. Superfloc was selected in that it provides excellent thermal performance for the six-day missions of Program 2 over all stages of the mission.

Astrionics — A lightweight, relatively low DDT&E cost astrionics system was selected for Program 2 based on maximum utilization of existing equipment or equipment currently in development. The vehicle has level I autonomy and meets the full performance requirements. Redundancy is added selectively to meet reliability and safety requirements. A functional block diagram of the astrionics system is shown in Figure 2-73.

The characteristics of the astrionics system are summarized in Table 2-89. The data management subsystem consists of triple redundant computer units that are in development, a triple redundant data bus, and a tape recorder that is in development for the High Energy Astronomical Observatory program. The tape recorder stores formatted telemetry data to be communicated to the ground and can store data required at preplanned times during the missions. Guidance and navigation functions are accomplished with a dual redundant electrostatic gyro configuration. For guidance update, horizon and star-sensor units are used to update inertial measurement unit data to improve navigation accuracy. The triple redundant electromechnaical flight control system interfaces with the central computer through the data bus, the servo controller, and the sequence controller. Rendezvous and docking utilizes dual laser radars that are in development for the Tug program to provide an independent operation capability. The dual redundant rf communications subsystem provides Shuttle, ground and payload communications with modified ERTS transponder for NASA missions and two modified FLT SAT COM transponders for DOD missions. Triple redundant instrumentation is a new design for safety-certified functions. Instrumentation signals are transferred through the sequence and servo controller units. The primary source of electrical power is a dual redundant installation of a new, lightweight fuel cell that is being developed. An emergency battery provides short-term backup for the maintenance of safety-critical functions in the event of loss of the primary electrical power. A boost pump battery supplies separate, unregulated electrical power to electrical boost pumps. New inverters convert the battery power to ac for the boost pumps. The forward and aft power control units provide electrical power distribution and switching with a new design utilizing sold state and hybrid technology.

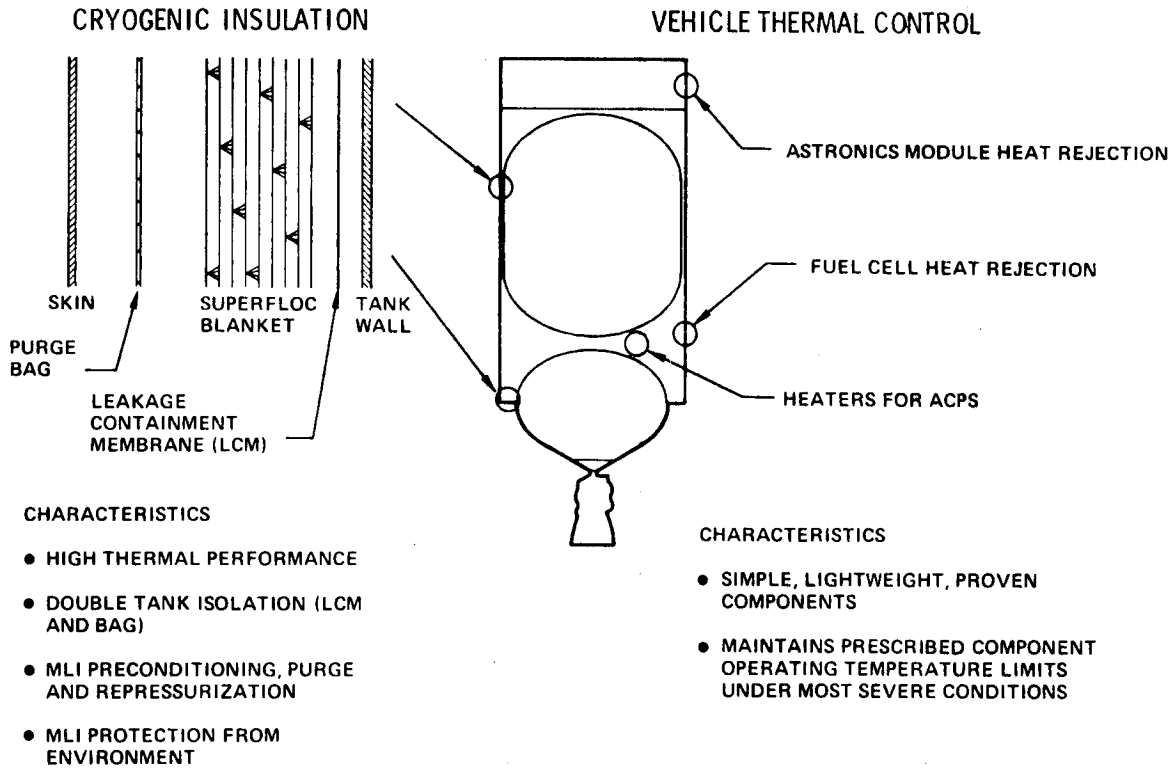

Figure 2-72. Insulation and Thermal Control for Program 2 Tug

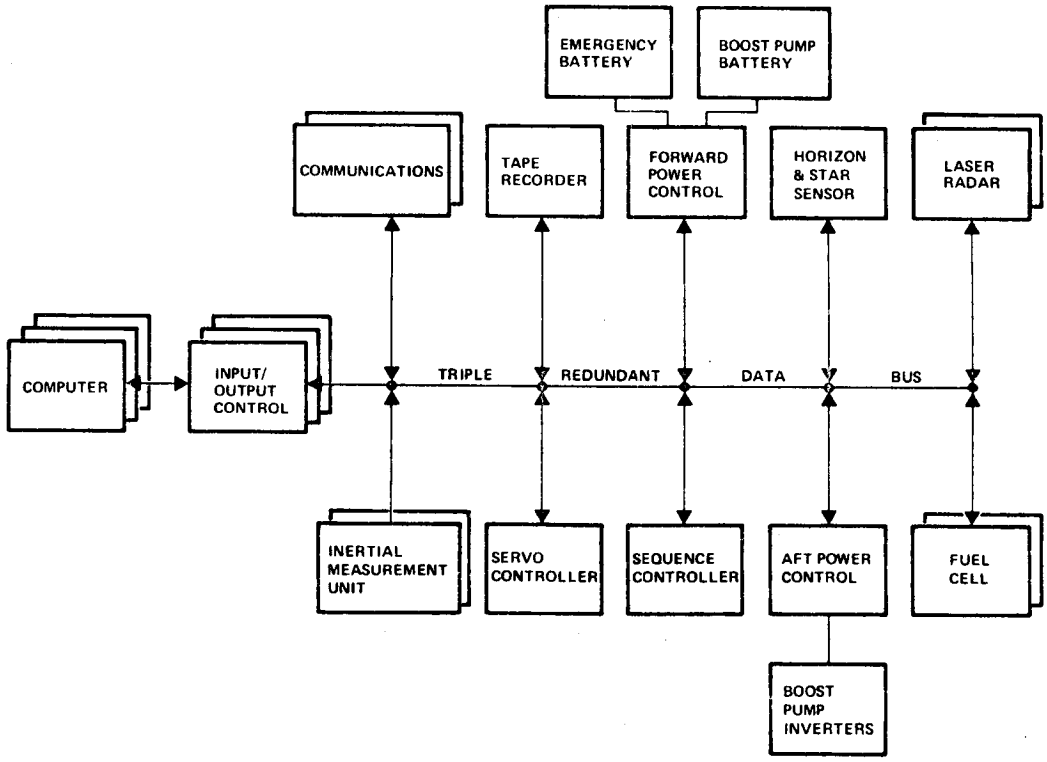

Figure 2-73. Functional Block Diagram of Astrionics System for Program 2 Tug

Table 2-89. Astrionics System Characteristics for Program 2 Tug

SUBSYSTEM	REDUNDANCY	DEVELOPMENT STATUS	CHARACTERISTICS
DATA MANAGEMENT	TRIPLE SINGLE	IN DEVELOPMENT IN DEVELOPMENT	65K MEMORY, DATA BUS TAPE RECORDER
GUIDANCE & NAV.	DUAL	IN DEVELOPMENT	ELECTROSTATIC GYRO
FLIGHT CONTROL	TRIPLE	NEW	ELECTRO-MECHANICAL
GUIDANCE UPDATE	SINGLE	IN DEVELOPMENT	LEVEL I AUTONOMY STAR SENSOR & HORIZON SENSOR
RENDEZVOUS & DOCKING	DUAL	IN DEVELOPMENT	LASER RADAR
COMMUNICATIONS	DUAL	ERTS (MOD.) FLTSATCOM (MOD.)	USB (NASA), TUG/GROUND, TUG/PAYLOAD SGLS (DOD), SECURE, TUG/GROUND, TUG/PAYLOAD
INSTRUMENTATION	TRIPLE FOR SAFETY	NEW	USES DATA BUS
ELECTRICAL POWER	DUAL FOR SAFETY CRITICAL	NEW	EMERGENCY BATTERY, BOOST PUMP BATTERY
POWER DISTRIBUTION & CONTROL	DUAL FOR SAFETY CRITICAL	NEW	SOLID STATE & HYBRID, BOOST PUMP INVERTERS

Propulsion — The propulsion system for the Program 2 Tug consists of the main propulsion system, used for all axial ΔV requirements above 1.0 ft/sec (3.04 m/sec), and the attitude control propulsion system (ACPS), for attitude maneuvers and axial ΔVs below 10 ft/sec (3.04 m/sec).

Main Propulsion — The four main engine alternatives considered for Program 2 were the RL-10 Cat II, the RL-10 Cat IV, the Advanced Space Engine (ASE), and the Aerospike. RL-10 Cat IIB was selected for Program 2 based on lowest DDT&E cost, ability to meet minimum payload requirements, and availability of the same low-thrust options offered by the higher cost engines. Additional detail on engine selection rationale is included in Section 2.4.2.11. The main propulsion system is shown in Figure 2-74.

The Cat IIB engine is a Pratt & Whitney RL-10A-3-3 engine modified to best satisfy the varied Tug operating requirements by incorporating the following additional (compared to Cat I) concepts:

a. Two-position nozzle for minimum stage length.

b. Tank head idle mode for minimum cooldown loss and provision of axial ΔVs from 10ft/sec (3.04 m/sec) to 50 ft/sec (15.2 m/sec).

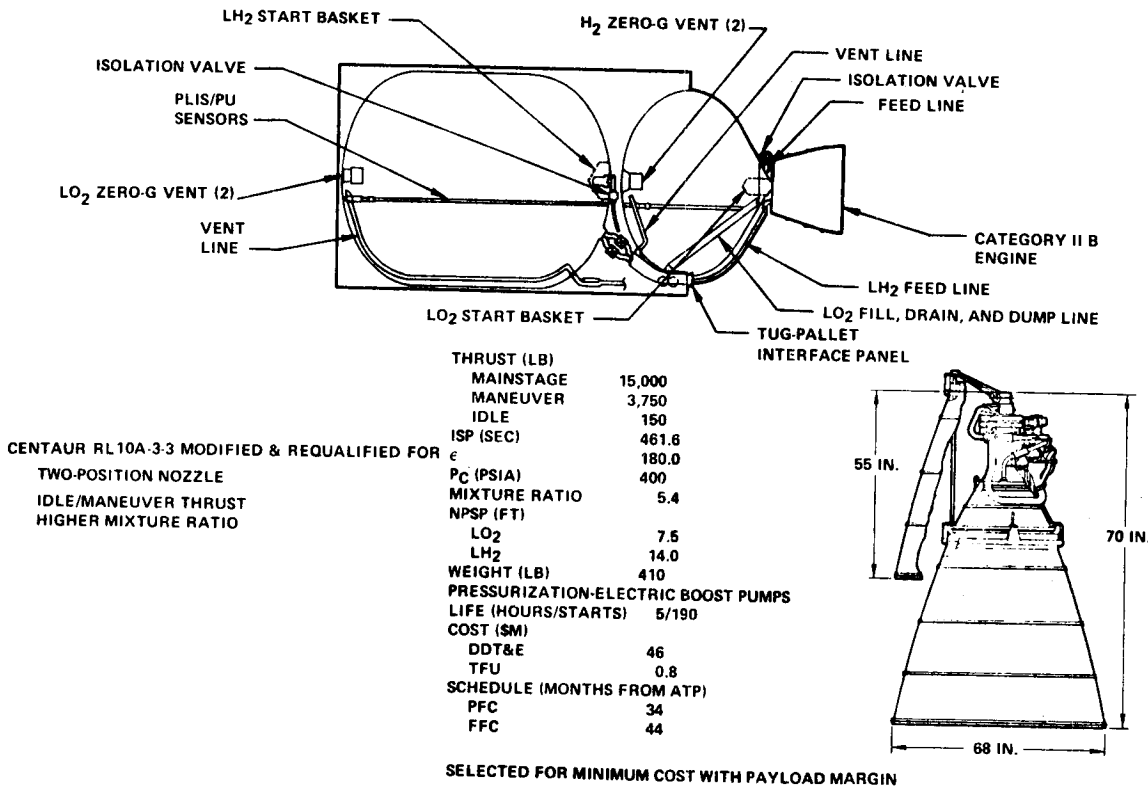

Figure 2-74. Main Propulsion for Program 2 Tug

c. Maneuver thrust for provision of axial ΔVs from 50 ft/sec (15.2 m/sec) to 400 ft/sec (122 m/sec).

The Cat IIB engine is otherwise similar to the Cat I engine and must also be qualified for lower inlet pressures (16 psia minimum for both pumps), modified cooldown sequence and feed system compatibility, discussed under Program 1.

Main Engine Support — Subsystems included under main engine support are identical to those for Program 1 (Section 2.4.1) with the following exceptions:

a. LH_2 boost pump bhp = 1.2 (Program 1 = 2.2)

b. LH_2 inverter = 1500 VA (Program 1 = 2300)

c. Zero-g venting — redundant zero-g vents identical to the single Program 1 units are used to meet reliability requirements for the longer coast periods.

d. Electromechanical instead of hydraulic gimbal system for gimbaling of main engines during tank head idle mode.

e. Zero-g propellant settling using tank head idle mode (THIM) — the boost pumps must operate during THIM to meet the engine inlet pressure constraints; consequently, a surface tension (screen) start basket is used for initial propellant acquisition.

ACPS — A hydrazine ACPS system is used on the Program 2 Tug. It is essentially identical with the system used on the Program 1 Tug and described in Section 2.4.1.2. The only difference between the Program 1 and Program 2 systems is the removal of one N_2H_4 bottle due to the reduction in ACPS axial impulse for ΔV and elimination of propellant settling impulse with the RL-10 Cat IIB operating in a low-thrust tank head idle mode to accomplish those functions. A system schematic for this hydrazine ACPS is presented in Section 2.2.4.2.

Interfaces — The Tug/Orbiter and Tug/payload interface characteristics for the Program 2 Tug have the same general characteristics as the Program 1 Tug described in Section 2.4.1.2. The only significant difference is in the Tug/payload physical interface. For payload deploy and recovery, a square frame docking mechanism aligns the payload with the Tug and provides velocity attenuation. Latches between Tug and payload are pin type, hydraulic actuated with disengage/engage capability. A more detailed discussion of the Tug/Orbiter interface is presented in Section 2.5.3.

Kick Stage — The kick stage configuration used with the Program 2 Tug for certain planetary missions is shown in Figure 2-75 along with the major stage characteristics. Gross weight of the kick stage is 1600 lb (726 kg), and a Thiokol TE-M-364-2 motor is used. A payload adapter and separation system is mounted between payload and Tug. Despin rockets and the necessary batteries and sequencing equipment for ignition, despin, and separation are mounted on the motor or the small adapter between the motor case and payload. No guidance is provided; preburn aiming and spin up are accomplished by the Tug.

2.4.2.3 Mass Properties. Weights for the Program 2 baseline Tug are summarized in Table 2-90. The weights are for a geosynchronous equatorial payload retrieval mission. The maximum payload capability for this mission is 5204 lb (2360.5 kg). Total installed weight of the Tug in the Shuttle, including all Tug/Shuttle interface accomodations, is 65,000 lb (29,484 kg). Propellants are off-loaded when launched with a payload on board.

Vehicle cg and moment of inertia data for the selected flight conditions specified by NASA are presented in Table 2-91. Longitudinal centers of gravity are plotted versus Tug-chargeable gross weights in Figure 2-76. The appears to be no problem staying within the Shuttle Xcg envelope since propellants are dumped during Orbiter powered flight in an abort.

2.4.2.4 Reliability. In accordance with the results of a redundancy/cost optimization analysis discussed in Section 2.3.1, redundancy was designed into the Program 2 Tug to allow attainment of a mission reliability of 0.97 for a baseline mission of 164 hours. The redundancy levels for each of the major subsystems, and the resulting reliability, are summarized in Table 2-92. As indicated in this table, all subsystems are essentially dual redundant. The exceptions are the data management subsystem, which is triply redundant, and the APS sysbsystem, which is fail-operational/fail-operational in several

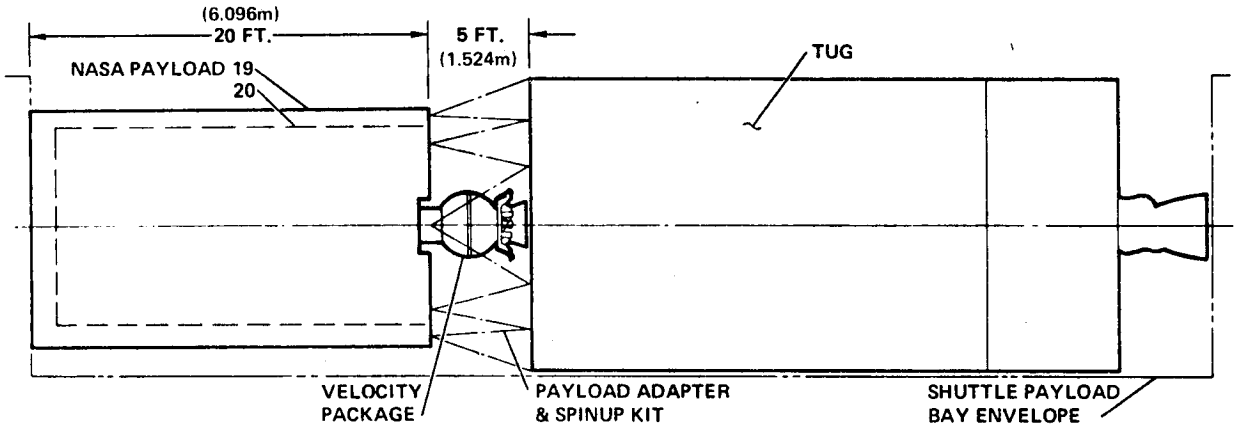

CHARACTERISTICS

MASS PROPERTIES		ATTITUDE CONTROL	SPIN-STABILIZED
TOTAL WEIGHT	1,600 LB. (726 KG)	AVIONICS	
PROPELLANT WT.	1,440 LB. (653 KG)	POWER	BATTERY
MASS FRACTION	0.9	SEQUENCER	EVENT TIMER
SIZE		TELEMETRY	NONE
LENGTH	63 IN. (1.600m)	GUIDANCE	NONE
DIAMETER	38 IN. (0.965m)	DESPIN	DESPIN ROCKETS
PROPULSION	SLOW-BURNING SOLID		

Figure 2-75. Kick Stage Configuration for Program 2 Tug

modes. The resulting reliability for the Program 2 Tug is 0.967 (without kick stage). For kick stage missions, the Tug operates for only 24 hours. The Tug reliability for this short mission is > 0.99. When the reliability of the kick stage is coupled with the Tug reliability, the overall kick stage mission reliability is > 0.97.

2.4.2.5 Performance. Figure 2-77 shows the Program 2 Tug payload weight capability for each applicable mission mode. The curves are all based on a due-east Shuttle launch, except for the deployment curve labeled polar. The Shuttle is assumed to have a payload weight capability of 65,000 lb (29,492 kg) due east and 36,000 lb (16,334 kg) polar, to the nominal 160 n.mi. (296 km) Tug staging orbit. The curves are based on a six-burn flight profile such as the synchronous equatorial deployment or sortie mission, except for the expendable Tug curve, which is based on three burns. The performance exceeds the 3500 lb (1588 kg) synchronous retrieval payload capability.

For illustration, planetary missions that require a velocity package and an expended Tug, respectively, appear on the graphs. All of the mission model can be done by this Tug, in one of the flight modes shown on the chart.

The synchronous equatorial mission performance is summarized in Table 2-93. The sensitivity of payload weight to burnout weight and specific impluse is also shown. These derivatives are based on a fixed-size Tug.

Table 2-90. Program 2 Baseline Tug Weight Summary (Synch. Eq. Max. Payload Retrieval Missions)

	lb	kg
Structures	(2094)	(949.8)
Body Structure	984	446.3
Fuel Tank & Supports	468	212.3
Oxidizer Tank & Supports	295	133.8
Thrust Structure	24	10.9
Equipment Mounting Structures	90	40.8
Meteroid Structure	—	—
Interface for P/L & Shuttle	200	90.7
Umbilicals	33	15.0
Propulsion	(1466)	(665.0)
Main Engine (ME) Assembly	410	186.0
ME Actuation & Support	88	39.9
ACPS & Support	319	144.7
Pressurization	—	—
Fill, Vent & Drain (Incl. Feed)	571	259.0
Purge System	20	9.1
Propellant Management	58	26.3
Thermal Control	(416)	(188.7)
Fuel Tank Insulation	86	39.0
Oxidizer Tank Insulation	41	18.6
Purge System	203	92.1
Radiators (Incl. Fluid Loop Heaters, Coatings)	86	39.0
Avionics	(984)	(446.3)
Rendezvous & Docking	60	27.2
Data Management	165	74.8
Flight Controls	50	22.7
Guidance & Navigation	30	13.6
Guidance Update	51	23.1
Power	216	98.0
Power Conversion & Distribution	266	120.7
Instrumentation	60	27.2
Communication	86	39.0
STAGE DRY WEIGHT	4960	2249.8
Contingency	496	225.0
TOTAL DRY WEIGHT	5456	2474.8
NON-USABLE FLUIDS	(775)	(351.6)
Trapped Propellants - Main	115	52.2
Trapped Propellants - ACPS	17	7.7
Trapped Gases	331	150.1
Trapped Helium	4	1.8
Propellant Leakage	—	—
Propellant Reserves - Main	279	126.6
Propellant Reserves - ACPS	22	10.0
Propellant Utilization	—	—
Trapped Water	7	3.2
BURNOUT WEIGHT	6231	2826.4

	lb	kg
NON-IMPULSIVE EXPENDABLES	(294)	(133.4)
ME Chilldown	—	—
ME Leakage	—	—
ME Shutdown	77	34.9
Pressurants - Main	—	—
Pressurants - ACPS	—	—
Fuel Cell Reactants	87	39.5
Fuel Line Chilldown	—	—
Gas Generator	—	—
Thermal Control Fluids	—	—
Boiloff Vented	130	59.0
PROPELLANTS	(56520)	(25637.4)
*Main Engine	(56303)	(25539.0)
Main Propellant - Fuel	8797	3990.3
Main Propellant - Oxidizer	47506	21548.7
Attitude Control Propellants	217	98.4
*FIRST IGNITION WEIGHT	63045	28597.2
SHUTTLE INTERFACE ACCOMMODATIONS	(1955)	(886.8)
Adapter Structure		
Supports	372	168.8
Attachment Fittings	104	47.2
Deployment Mechanism	206	93.4
Propellant Lines, Umbicals, Tankage		
Fill, Drain, Dump	178	80.7
Dump Pressurization System	625	283.5
Avionics Interface		
Shuttle/Payload in Bay	160	72.6
Mission Specialist Station	310	140.6
Bay Purge (In Dump Pressurization)		
Gases	—	—
Bottles	—	—
Payload Auxiliary Support	—	—
**STAGE PAYLOAD (MAX. CAPABILITY)	(5205)	(2360.5)
Payload	5204	2360.5
Payload Adapter (Part of Payload)	—	—
AUXILIARY STAGE	(—)	(—)
TOTAL WEIGHT IN SHUTTLE	65000	29484.0

$$*\text{Mass Fraction} = \frac{\text{Main Engine Propellants}}{\text{First Ignition Weight}} = 0.893$$

**Non-add (Retrieval payload)

Table 2-91. Program 2 Centers of Gravity and Moments of Inertia

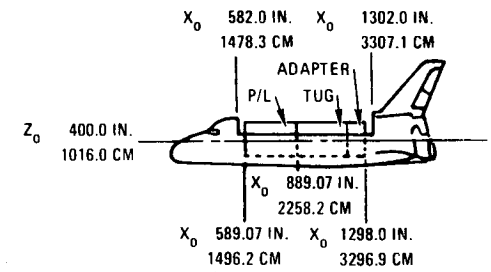

NOTE: RIGHT SIDE LOOKING FORWARD IS Y+

CONDITION	WEIGHT LB (KG) W	CENTER OF GRAVITY SHUTTLE STATIONS INCH (CM) X	Y	Z	MOMENT OF INERTIA SLUG-FT^2 (KG-METER^2) I_{XX}	I_{YY}	I_{ZZ}
WITHOUT PAYLOAD:							
VEHICLE FULL OF PROPELLANT	65000	1144.5	0.0	400.1	9077	133127	132362
INSIDE SHUTTLE PAYLOAD BAY	(29484)	(2907.0)	(0.0)	(1016.3)	(12307)	(180496)	(179459)
VEHICLE FULL OF PROPELLANT	63045	1145.5	-0.3	599.9	6617	104616	104058
SEPARATED FROM SHUTTLE	(28597)	(2909.6)	(-0.8)	(1015.7)	(8971)	(141840)	(141084)
VEHICLE EMPTY OF PROPELLANTS	8186	1086.8	1.6	401.0	8827	51560	50643
INSIDE SHUTTLE	(3713)	(2760.5)	(4.1)	(1018.5)	(11968)	(69906)	(68663)
WITH 3500 LB (1578.6 KG) PAYLOAD:							
VEHICLE FULL OF PROPELLANT	65000	1124.3	0.0	400.1	12137	242125	251360
INSIDE SHUTTLE PAYLOAD BAY	(29484)	(2855.7)	(0.0)	(1016.3)	(16456)	(341836)	(340800)
VEHICLE FULL OF PROPELLANT	65045	1124.7	-0.3	399.9	9676	224015	223458
SEPARATED FROM SHUTTLE	(28597)	(2856.7)	(-0.8)	1015.7)	(13119)	(303724)	(302969)
VEHICLE EMPTY OF PROPELLANT	11686	982.6	1.1	400.7	11889	122750	121834
INSIDE SHUTTLE	(5301)	(2495.8)	(2.8)	(1017.8)	(16119)	(166427	(165185)

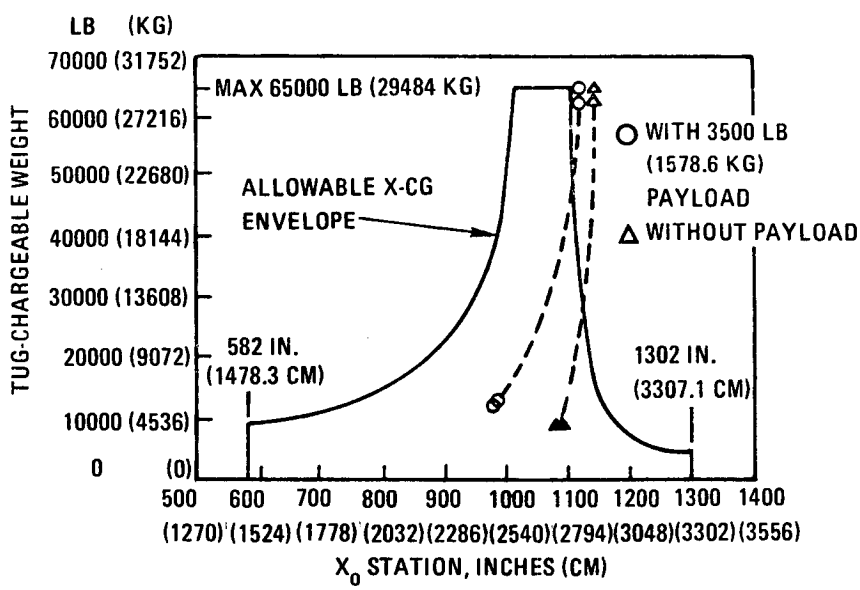

Figure 2-76. Program 2 Baseline Tug Longitudinal Centers of Gravity

Table 2-92. Program 2 Redundancy Summary

SUBSYSTEM/COMPONENT	REDUNDANCY LEVEL	Δ WEIGHT/LB
DATA MANAGEMENT		
COMPUTER	TRIPLE	60
I/O CONTROLLER	TRIPLE	8
GUIDANCE & NAVIGATION		
INERTIAL MEASUREMENT UNIT (STRAPDOWN)	DUAL	15
GUIDANCE UPDATE		
HORIZON SENSOR	TWO OUT OF FOUR	14
ELECTRICAL POWER		
FUEL CELL	DUAL	35
RENDEZVOUS & DOCKING		
LASER RADAR	DUAL	30
COMMUNICATIONS		
ANTENNAS	DUAL	*
COMMAND DECODER	DUAL	*
RECEIVER/TRANSMITTER	DUAL	*
MAIN ENGINE SUPPORT		
VENT VALVES	DUAL	*
FILL & DRAIN (DUMP) VALVES	DUAL	*
TVC SUPPORT	TRIPLE	20
ZERO G VENT SUBSYSTEM	DUAL	20
ATTITUDE CONTROL PROPULSION SYSTEM		
ENGINE MODULES	THREE OUT OF FOUR	19
ACPS SUPPORT	DUAL/QUAD	70
PREDICTED RELIABILITY (164 HR. BASELINE MISSION) = 0.9669		291

* INCLUDED IN SAFETY WEIGHTS

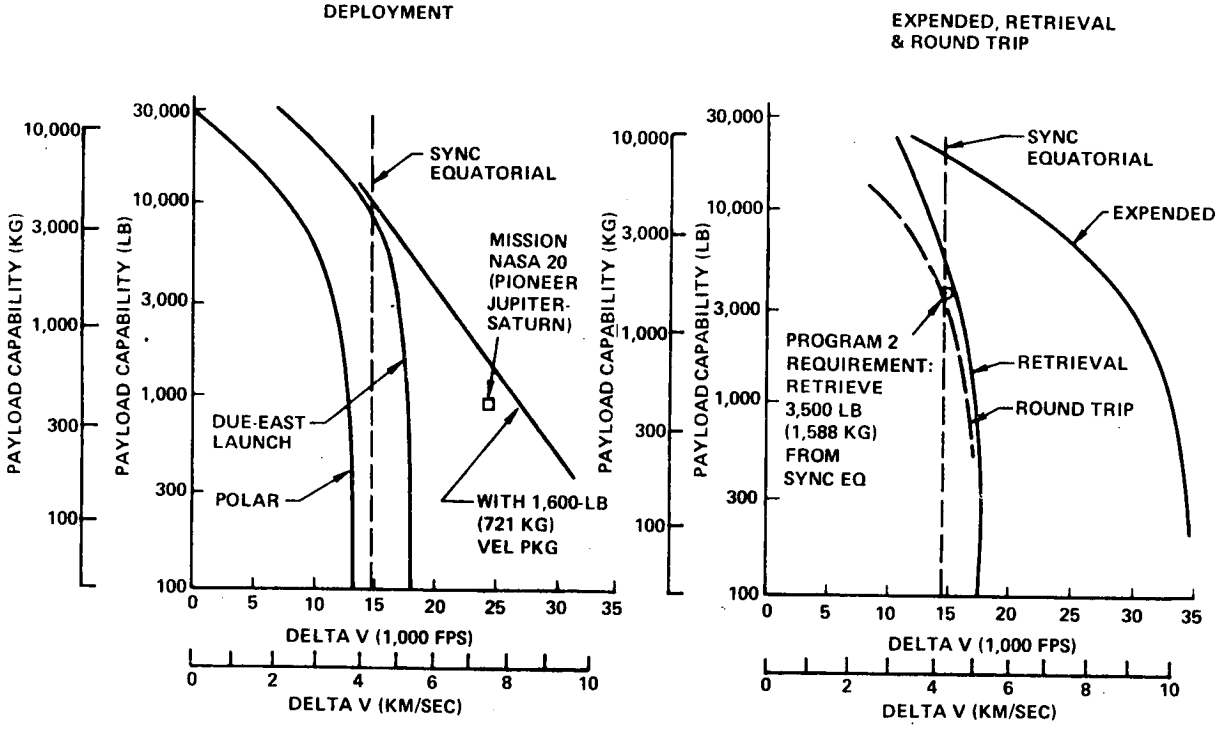

Figure 2-77. Program 2 Performance Capability, Payload Capability Versus Delta Velocity

Table 2-93. Program 2 Synchronous Equatorial Mission Performance Summary

	DEPLOY	RETRIEVE	ROUND TRIP	EXPEND
PAYLOAD, LB (KG)	8276 (3754)	5204 (2361)	3149 (1428)	18055 (8190)
$\frac{\partial(\text{PAYLOAD})}{\partial(\text{BURNOUT WT})}$	-2.6	-1.6	-1.0	
$\frac{\partial(\text{PAYLOAD})}{\partial(I_{sp})}$	84	67	38	

2.4.2.6 Mission Accomplishment. Tug flights for deployment, retrieval, and round trip missions are identified for each year and for the total model in Table 2-94. Tug flights are subdivided into deployment flight modes: deployment of 1, 2, or 3 payloads during a single flight of a reusable Tug; deployment of a single (planetary payload with an expended velocity package and a reusable Tug; deployment of a single, planetary payload by an expended Tug. Only a single retrieval flight mode is possible, no payload up/one payload down. Two types of round trip flight modes are used with Program 2: one payload up/one payload down, and two payloads up/one payload down.

Over the total mission model, 64 Tug flights are used to deploy payloads; 27 of these are single payload flights by a reusable Tug, on 9 Tug flights two payloads are deployed, and there are 13 flights where three payloads are deployed on a single reusable Tug flight. Five flights are accomplished with velocity packages, and 10 expended Tug flights are required. There are 31 retrieval missions and 148 round trip Tug flights. One-hundred thirty-seven of the round trip flights carry one payload/up one payload down, and 11 round trip flights carry two payloads up/one payload down.

The entire mission model (258 deployment payloads, 179 retrieval payloads) is accomplished using 243 Tug and Shuttle flights. Since no Tug-to-Tug or velocity package-to-Tug on-orbit assemblies are required, the number of Tug and Shuttle flights is identical.

Tables 2-95 and 2-96 show the mission accomplishment capability of the Program 2 Tug for NASA and DOD payloads, respectively. The figures show Tug traffic by mission destination (synchronous equatorial, other ETR launch orbits, and planetary) and launch site (ETR and WTR), and payload traffic by launch site and deployment/retrieval. Traffic by the year and for the total model is shown.

Table 2-94. Program 2 Mission Model Flight Summary

TUG FLIGHT MODE	NUMBER OF TUG FLIGHTS DURING YEAR											TOTAL
	80	81	82	83	84	85	86	87	88	89	90	
DEPLOYMENT												
1 PAYLOAD WITH TUG RETURN					6	2	3	5	2	4	5	27
2 PAYLOADS WITH TUG RETURN					1	1	0	4	0	3	0	9
3 PAYLOADS WITH TUG RETURN					2	1	1	2	3	2	2	13
TUG RETURN + VEL. PACKAGE*					2	0	1	2	0	0	0	5
EXPENDED TUG					2	0	3	1	0	3	1	10
TOTAL					13	4	8	14	5	12	8	64
RETRIEVAL (0 PAYLOAD UP – 1 PAYLOAD DN)					8	0	6	6	4	1	6	31
ROUND TRIP												
1 PAYLOAD UP/1 PAYLOAD DN					19	26	22	15	19	14	22	137
2 PAYLOADS UP/1 PAYLOAD DN					0	2	0	2	2	5	0	11
TOTAL					19	28	22	17	21	19	22	148
TOTAL TUG/SHUTTLE FLIGHTS					40	32	36	37	30	32	36	243

* 1,600-LB. VELOCITY PACKAGE (EXPENDED)

Table 2-95. Program 2 NASA Mission Accomplishment

ITEM	YEAR											TOTAL
	80	81	82	83	84	85	86	87	88	89	90	
SYNC. EQ. TUG SHUTTLE/FLIGHTS					10	13	8	9	7	7	9	63
ETR OTHER ORBIT FLIGHTS					2	1	3	2	2	1	4	15
PLANETARY TUG SHUTTLE/FLIGHTS					6	0	4	3	0	5	1	19
ETR TUG/SHUTTLE FLIGHTS					18	14	15	14	9	13	14	97
WTR TUG/SHUTTLE FLIGHTS					4	6	4	6	4	5	4	33
TOTAL TUG/SHUTTLE FLIGHTS					22	20	19	20	13	18	18	130
VELOCITY PKG. * EXPENDED } ETR					2	0	1	2	0	0	0	5
TUGS EXPENDED } ONLY					2	0	3	1	0	3	1	10
ETR P/L DEPLOYED					15	14	14	20	14	16	13	106
WTR P/L DEPLOYED					2	8	2	4	2	10	2	30
TOTAL P/L DEPLOYED					17	22	16	24	16	26	15	136
ETR P/L RETRIEVED					10	14	9	4	6	7	10	60
WTR P/L RETRIEVED					4	6	4	6	4	2	4	30
TOTAL P/L RETRIEVED					14	20	13	10	10	9	14	90
ETR P/L DEPLOYED AND RETRIEVED					25	28	23	24	20	23	23	166
WTR P/L DEPLOYED AND RETRIEVED					6	14	6	10	6	12	6	60
TOTAL P/L DEPLOYED AND RETRIEVED					31	42	29	34	26	35	29	226

* 1600 LB (726 KG) SLOW BURN GRAIN, μ = 0.9, SPIN-STABILIZED

Table 2-96. Program 2 DOD Mission Accomplishment

ITEM	YEAR											TOTAL
	80	81	82	83	84	85	86	87	88	89	90	
SYNC. EQ. TUG SHUTTLE/FLIGHTS					9	5	4	9	5	6	10	48
ETR OTHER ORBIT FLIGHTS					8	5	8	6	10	4	7	48
PLANETARY TUG SHUTTLE/FLIGHTS					–	–	–	–	–	–	–	–
ETR TUG/SHUTTLE FLIGHTS					17	10	12	15	15	10	17	96
WTR TUG/SHUTTLE FLIGHTS					1	2	5	2	2	4	1	17
TOTAL TUG/SHUTTLE FLIGHTS					18	12	17	17	17	14	18	113
VELOCITY PKG. EXPENDED } ETR					–	–	–	–	–	–	–	–
TUGS EXPENDED } ONLY					–	–	–	–	–	–	–	–
ETR P/L DEPLOYED					17	12	11	13	16	11	16	96
WTR P/L DEPLOYED					3	3	5	4	2	6	3	26
TOTAL P/L DEPLOYED					20	15	16	17	18	17	19	122
ETR P/L RETRIEVED					13	7	11	12	13	8	14	78
WTR P/L RETRIEVED					0	1	4	1	2	3	0	11
TOTAL P/L RETRIEVED					13	8	15	13	15	11	14	89
ETR P/L DEPLOYED AND RETRIEVED					30	19	22	25	29	19	30	174
WTR P/L DEPLOYED AND RETRIEVED					3	4	9	5	4	9	3	37
TOTAL P/L DEPLOYED AND RETRIEVED					33	23	31	30	33	28	33	211

2.4.2.7. Operations. Operations, both ground and flight, were a special emphasis and are summarized in Section 2.5.2 and discussed in detail in Volume 6 of Reference 6. This section presents the major operational characteristics which vary between programs.

Flight Operations — Flight operations is a significant area since it has been a major operational cost driver in current space programs. To acheive the goal of low operations cost for the Space Transportation System, the Tug flight operations costs must be reduced.

Flight operations is concerned with those activities and procedures involved in accomplishing the actual Tug flight. With respect to cost it includes the flight monitor and control accomplished from the ground or the Orbiter, necessary preflight mission planning and post-flight evaluation, and all required software both ground and airborne.

An autonomy level trade, which is summarized in Table 2-97 indicated that the selected level I autonomy was the lowest cost approach both from a development and operations cost standpoint.

The flight operations cost for Program 1 is summarized in Table 2-98. The DDT&E cost for flight support software is the development cost for the ground and airborne (Tug and Orbiter) software for the synchronous equatorial mission. The Tug software

Table 2-97. Program 2 Cost of Autonomy

AUTONOMY LEVEL CHANGES	ΔWEIGHT LB (KG)	ΔCOST ($M)			
		DDT&E	PRODUCTION	OPERATIONS	TOTAL
LEVEL I TO LEVEL II	+23 (10.4)	+1.6	+0.4	0.0	+2.0
LEVEL I TO LEVEL III	+35 (15.9)	+10.1	+2.7	+5.5*	+18.3*
LEVEL I TO LEVEL IV	+35 (15.9)	+12.0	+2.7	+8.6*	+23.3*

*NETWORK COSTS ARE IN ADDITION TO THESE COSTS.

Table 2-98. Program 2 Flight Operations Cost Summary

	DDT&E		OPERATIONS		
	COST ($M)	EQUIVALENT MAN-YR.	COST ($M)	EQUIVALENT MAN-YR.	
NASA					
MISSION PLANNING			4.8	119	$368,000/FLT OR ~171 MEN/YR.
FLIGHT CONTROL			18.3	458	
FLIGHT EVALUATION			1.0	26	
FLIGHT SUPPORT SOFTWARE	19.8	495	23.7	592	
TOTAL	19.8	495	47.8	1,195	
DOD					
MISSION PLANNING			4.2	106	$331,000/FLT. OR ~134 MEN/YR.
FLIGHT CONTROL			14.4	361	
FLIGHT EVALUATION			0.9	23	
FLIGHT SUPPORT SOFTWARE			17.9	447	
TOTAL			37.4	937	

consists of 12 modules and a total of 50,300 words. The software costs in operations consist of the changes required for nonsynchronous missions (6200 words per mission) and the changes required for each flight (550 words). These costs are separated by the user agency with NASA having 15 nonsynchronous missions and a total of 130 flights and DOD having 10 nonsynchronous missions and a total of 113 flights. The DOD operations costs are lower since DOD has a higher number of flights per mission.

Ground Operations — Ground operations encompasses those Tug vehicle related tasks accomplished after Orbiter landing to make the Tug ready for liftoff again. Ground operations analyses of the Program 2 Tug indicated a turnaround cycle of 271 working hours for a NASA Tug and 282 hours for a DOD Tug with secure communications. As launch rates increase, particularly at KSC, two, and sometimes three Tugs at a time will be undergoing different phases of the ground turnaround cycle concurrently. To

accommodate these concurrent operations, the basic ground turnaround crew of 107 will be augmented with additional direct support, engineering, and administrative personnel resulting in the crew sizes shown in Table 2-99. Launch rates at WTR never increase to the point where crew augmentation is required.

Minimum active fleet size is also a direct function of launch rates. In an ongoing mature operating system, a single Tug can make a complete launch-flight-ground turnaround-launch cycle in approximately 28 calendar days, or 12 launches per year maximum. Thus, the minimum active fleet size for each launch site is established as shown in Table 2-99. At KSC, there is also a total of 10 expendable missions as shown, which make a total requirement of 14 Tugs. In addition, attrition losses at 1% of the total missions must be accounted for. This adds three additional vehicles, resulting in a total fleet buy of 17 Tugs for this program.

Once total fleet buy requirements have been established at 17 Tugs, fleet delivery requirements, disposition, and utilization can be examined as shown in Table 2-100. Tugs are delivered to KSC unless noted with WTR in the Tug Number column. Need dates are initially based on site activation and/or test flight requirements for the first two vehicles at KSC and the first vehicle at WTR. After that, need dates are derived from a production schedule of two per year.

As vehicles are delivered to the launch sites they are phased into the active fleet to obtain relatively even usage on all vehicles as indicated by the total flights per Tug shown in the last column. Expendable Tugs thus accumulate a number of flights before being expended in the years indicated. For the utilization plan shown here for Program 2, Tug 3 is delivered to WTR, flies 14 missions there, and is then transferred to KSC for one expendable mission in 1987. The maintenance facility proposed for Program 2 is the all-new Tug Maintenance Facility (TMF) that has been proposed by KSC.

2.4.2.8 Program Plans. This section summarizes the test, manufacture, and facility plans for Program 2 Tug. The general approach is similar to that discussed in Section 2.4.1.8 for Program 1. This section also shows the major activities and key dates and the integrated schedule for the development, procurement, and operational phases of the program.

Ground and Flight Test Plans — Table 2-101 shows a summary of all major ground tests including test activity, test site, and test articles; test costs are also shown for each activity for procurement under both NASA and DOD guidelines. The same number and type of test articles are used in both NASA and DOD programs. The only significant difference comes from the DOD requirement for formally demonstrating Space Tug reuse capabilities. Additional test time is required for propulsion testing to demonstrate a refurbishment cycle on the engine system and a refurbishment/reusability demonstration in conjunction with simulated mission (thermal/vacuum) testing.

Table 2-99. Program 2 Crew Size and Minimum Active Fleet Size

		CALENDAR YEAR							TOTAL
		84	85	86	87	88	89	90	
TUG FLIGHTS	KSC*	35	24	27	29	24	23	31	193
	WTR	5	8	9	8	6	9	5	50
	TOTAL	40	32	36	37	30	32	36	243
	*EXPENDABLE FLIGHTS	(2)		(3)	(1)		(3)	(1)	(10)
GROUND TURN-AROUND CREW	KSC	129	126	126	126	126	126	121	126
	WTR	63	63	63	63	63	63	63	63
	TOTAL	189	189	189	189	189	189	189	189
ACTIVE FLEET REQMT.	MINIMUM ACTIVE FLEET								
	KSC	3	3	3	3	3	3	3	3
	KSC EXP.	2		3	1		3	1	10
	WTR	1	1	1	1	1	1	1	1
	SUBTOTAL	6	4	7	5	4	7	5	14
	ATTRITION								3
	TOTAL BUY								17

Table 2-100. Program 2 Fleet Requirement and Utilization

VEHICLE SCHEDULING				CALENDAR YEAR											TOTAL FLIGHTS
TUG NO.	NEED DATE	DELIVERY DATE	DISPOSITION	80	81	82	83	84	85	86	87	88	89	90	
1	NOV 82	SEP 82	EXPENDED					7*							7
2	JAN. 83	JAN. 83	EXPENDED					8*							8
3 WTR	APR. 83	APR. 83	EXPENDED					5	4	4	2 (*KSC →				15
4	OCT. 83	JUL. 83	EXPENDED					5	3	3*					11
5	NOV. 83	OCT. 83	EXPENDED					4	3	6*					13
6	JAN. 84	JAN. 84	EXPENDED					4	4	6*					14
7	MAY 84	MAY 84	EXPENDED					4	4	2	2	2	1*		15
8	SEP. 84	SEP 84	EXPENDED					3	4	2	2	3	1*		15
9	JAN 85	JAN. 85	EXPENDED						4	2	3	2	4*		15
10 WTR	JUN. 85	MAY 85	INVENTORY						4	3	3	2	3	2	17
11	SEP. 85	SEP. 85	EXPENDED						2	3	5	2	3	3*	18
12	JAN. 86	JAN. 86	INVENTORY							2	5	3	3	6	19
13	MAY 86	MAY 86	INVENTORY							2	3	1	3	3	12
14 WTR	SEP. 86	SEP. 86	INVENTORY							1	4	4	3	6	18
15	JAN. 87	JAN. 87	INVENTORY								3	4	4	6	17
16	MAY 87	MAY 87	INVENTORY								4	4	4	5	17
17 WTR	SEP. 87	SEP. 87	INVENTORY								1	3	3	5 KSC →	12
TOTAL FLIGHTS								40	32	36	37	30	32	36	243
ACTIVE, FLEET								8(2E)	9	12(3E)	12(1E)	11	11(3E)	8(1E)	

* YEAR EXPENDED
→ TRANSFER LAUNCH SITE
S STORAGE

Table 2-101. Program 2 Ground Test Summary

TEST ACTIVITY	TEST SITE	TEST ARTICLE	TOTAL COST ($M) (INCLUDING TEST ARTICLE)		REMARKS
			NASA	DOD	
COMPONENT TESTS	CONVAIR & VENDOR LABS	PREPRODUCTION COMPONENTS	12.6	13.8	SAMPLE SIZE OF 2 REQ. FOR QUALIFICATION
PROPULSION TESTS	AEDC (J3)	ENGINE & FEED SYS. HARDWARE	4.7	5.3	ALTITUDE CHAMBER REQ. FOR CATEGORY IIB
STRUCTURAL TESTS	MSFC (4550)	STV	5.2	5.2	COMPOSITE BODY STRUCT. INCREASES TEST COSTS
LIFE CYCLE TESTS	MSFC (4557)	FTV	6.8	6.8	
DEPLOYMENT ADAPTER	CONVAIR	ORBITER INTERFACE HARDWARE	1.6	1.6	DEMONSTRATES FUNCT. CAPABILITY
ASTRIONICS SYSTEMS	CONVAIR JSC KSC	ASTRIONICS MODULE	6.3	6.3	RENDEZVOUS & DOCK HARDWARE/SOFTWARE INCORPORATED
THERMAL VACUUM	LeRC (B2)	F-2 FLT. ART.	1.0	1.0	CRYO CONDITIONS REQUIREMENTS
REUSABILITY EVALUATION	LeRC (B2)	F-2 FLT. ART.	—	1.5	EXT. OF THERMAL-VACUUM TEST
LAUNCH SITE VALIDATION	ETR	F-1 FLT. ART.	2.6	2.6	
	WTR	F-X FLT. ART.	2.6	2.6	
TOTAL GROUND TEST COST ($M)			43.4	46.7	

The primary objective of the flight test program is to show that the mission reliability goal of > 0.97, Tug attrition goal of > 0.99, and multi-mission/economics/reuse goals of the Tug program are attainable. Each flight test mission will be divided into phases, during which various Space Tug operating modes are tested such as shown for Program 1 in Figure 2-65. The differences in NASA and DOD procurement approaches to flight test are the same as shown for in Program 1 in Table 2-83. In the NASA approach, it appears to be cost effective, technically feasible, and relatively low risk to place operational payloads into low performance orbits on the initial Tug flights. The remaining vehicle performance is utilized for developmental flight testing into progressively higher risk operating regimes. Under the DOD fly-before-buy concept, two prototype flight test vehicles must be flown prior to a production decision to demonstrate performance and reusability.

Manufacturing Plan — The manufacturing plan shown in Figure 2-78 includes general manufacturing indentures required to achieve the progressive build-up from the component level. The assembly sequence brings together subassemblies that result in major modules. The factors considered in developing this plan are producibility, use of existing techniques, ease of accesibility, handling methods, installation of components and subsystems at earliest levels of assembly, and minimizing special tooling requirements. Based on proven tooling and manufacturing schedules, the structural

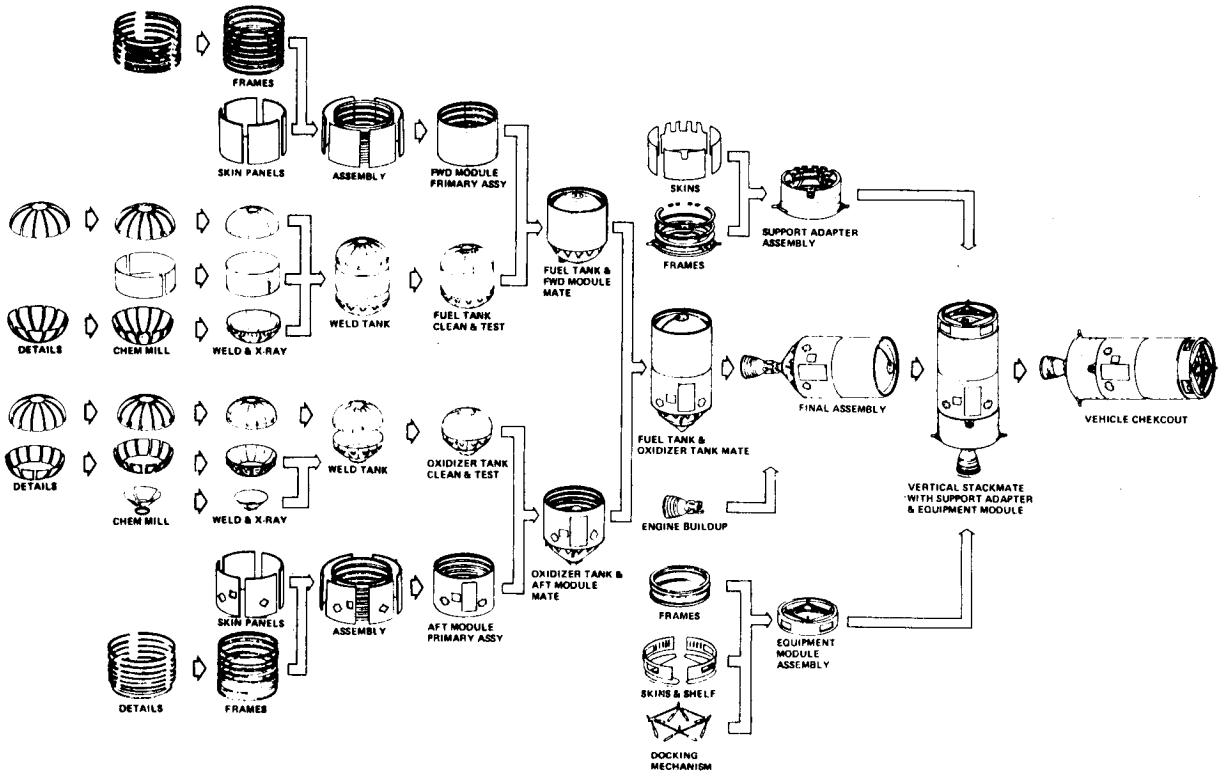

Figure 2-78. Program 2 Manufacturing Sequence and Assembly Flow

test article would be available at 32 months, the dynamic test article at 35 months, and the first flight vehicle at 46 months after program go-ahead.

Test and Manufacturing Facilities — In concert with the low-development-cost approach, emphasis was on existing and operating facilities for manufacturing and testing. No size, weight, or material limitations exist that preclude the use of existing private or government-owned industrial facilities. For test facilities, the only question is the most cost effective use of them; important factors are the operating costs of competing facilities versus the cost of reactivating facilities that have been "mothballed."

Program Schedule — Figure 2-79 shows the summary program schedule for Program 2. It shows go-ahead in December 1978, a five-year development phase, and initial operational capability (IOC) at first flight in December 1983. There are two major ground test vehicles for the DDT&E phase, i.e., the structural test vehicle (STV) for structural loads testing and the dynamic test vehicle (DTV) for life-cycle evaluations including cryogenic tanking tests. These vehicles will be ready to start testing by late 1981 and testing will be complete by late 1982. Flight vehicles 1 and 2 (F-1 and F-2), the first production vehicles, are assembled in parallel with the structural testing program; however, these tests are complete prior to initiation of preflight testing. Any updates as a result of these tests would have to be accomplished on each of the vehicles prior to their initial flights.

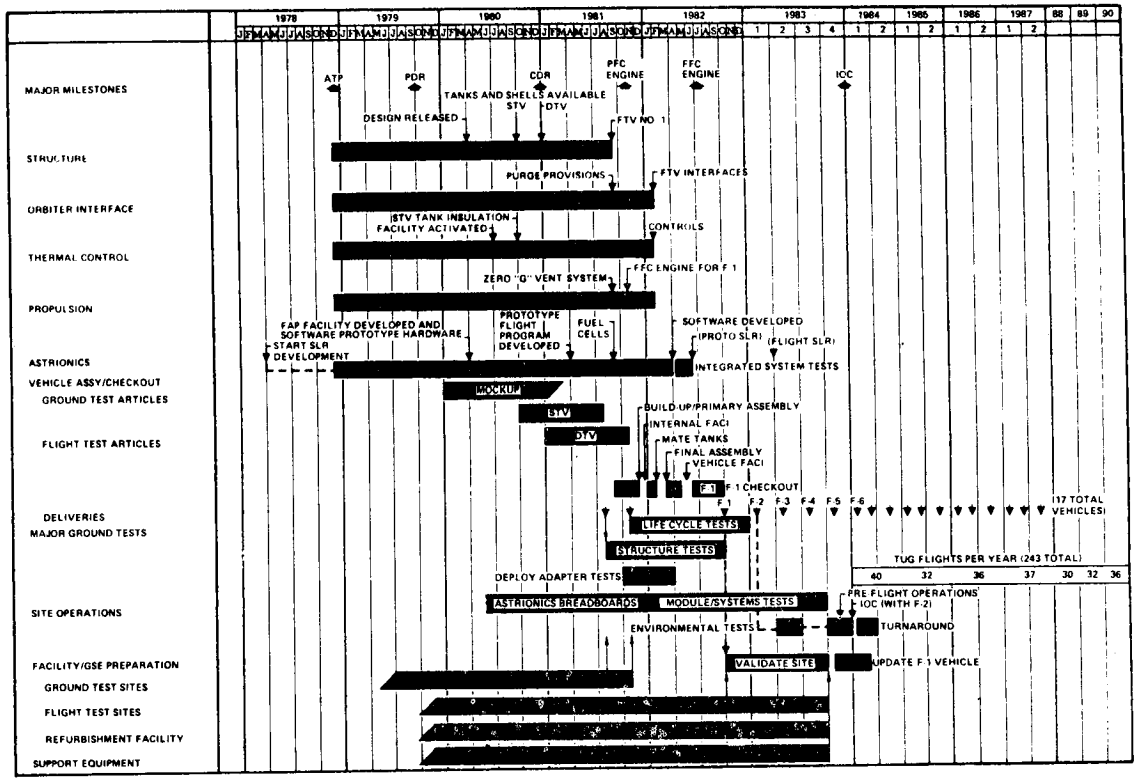

Figure 2-79. Program 2 Schedule, NASA Format

The initial production vehicle (F-1) is delivered to the flight site some 15 months prior to first flight. During this period it will verify vehicle/facility functional compatibility, procedures, and operations required for the initial flight. It also serves as continued training for vehicle post-flight safing, refurbishment, and servicing operations. This Tug would then be updated as required and be ready to support flights subsequent to IOC. The second production vehicle is scheduled for the initial flight (IOC), but will undergo environmental testing in a thermal vacuum chamber prior to the delivery to the flight site. The initial post-flight turnaround activities are scheduled for three months to ensure adequate contingency time as may be needed for these activities. The combined turnaround and preflight activity will reduce to a nominal period of 3.2 weeks after approximately 12 flights.

The third, fourth, and fifth production vehicles would be delivered before IOC, and the remaining Tugs produced on approximately four-month centers, to adequately support the mission model including expended and attrition vehicles. A total of 17 Tugs is required in the operational vehicle inventory to satisfy the Tug flight mission model. The first two of these vehicles support pre-IOC checkout and flight site integration as discussed above.

The principal pacing activity in the schedule is laser radar development, software development, and vehicle integration.

The DOD approach to Tug program procurement (refer to AFSCP 800-3 and DOD Dir. 5000.3) is shown in Figure 2-80. It differs from that shown in Figure 2-79 in the following areas.

The Full-Scale Development (FSD) phase includes extended ground tests and three flight test, followed by a period of continued Operational Test and Evaluation (OT&E) testing. The FSD phase is followed by a DSARC (III) Review prior to a formal production release, which constrains fabrication of all Tug production hardware. Seventeen Tugs are produced to meet the full inventory requirement, with 12 Tugs as full production vehicles, 2 as initial flight test vehicles and 3 more as preproduction type vehicles. These latter three vehicles are not required for FSD but are built during the DT&E phase to back up the OT&E flight phase and to meet the early year flight requirements until the full-production vehicles are available. The five pre-production vehicles are consumed on early expendable-Tug flight missions rather than updated or converted to full production status. The pacing elements of development in this program approach are the SLR rendezvous and docking assist and vehicle assembly, site integration, and flight testing sequence of activities.

2.4.2.9 Program Cost. Program 2 cost estimates were developed according to the NASA Work Breakdown Structure and the ground rules and assumptions previously stated for Program 1 in Section 2.4.1.9. A total program cost summary is shown in Table 2-102. Because DDT&E costs are particularly important (due to their early funding requirements) and because Tug vehicle costs represent the largest portion of DDT&E, a Tug vehicle DDT&E cost summary is shown in Table 2-103. This Tug vehicle has a theoretical first unit (TFU) cost of $11.8M, not including the Orbiter interface equipment required for each Shuttle/Tug flight. A breakdown of the average Tug cost-per-flight is shown in Table 2-104 for each flight mode (reusable, expendable, reusable with velocity package). The costs of the three modes differ very little, except for the hardware expended (kick stage or expended Tug). The primary reusable Tug mode cost-per-light is $0.8M.

Program 2 funding requirements are shown in Figure 2-81. Peak year funding of $145M occurs in 1981 where there is a slight overlap of production with the development cost peak. This early production is required to have sufficient Tug vehicles for the early year launch rates (e.g., 40 launches in 1984).

2.4.2.10 Program Risk. The purpose of the risk assessment is to identify those areas that could degrade Tug performance or programmatics/cost if predicted values are not attained. Risk assessment is concerned with the residual risks in the configuration and program as defined and as assessed at this point in time. Risk and program/configuration definition is an iterative process and many of the risk areas identified could be changed by suitable modifications to designs, test programs, etc.

Areas of concern are listed on the left side of Figure 2-82. These are arranged in decreasing order of concern, i.e., safety is the issue of greatest concern followed by

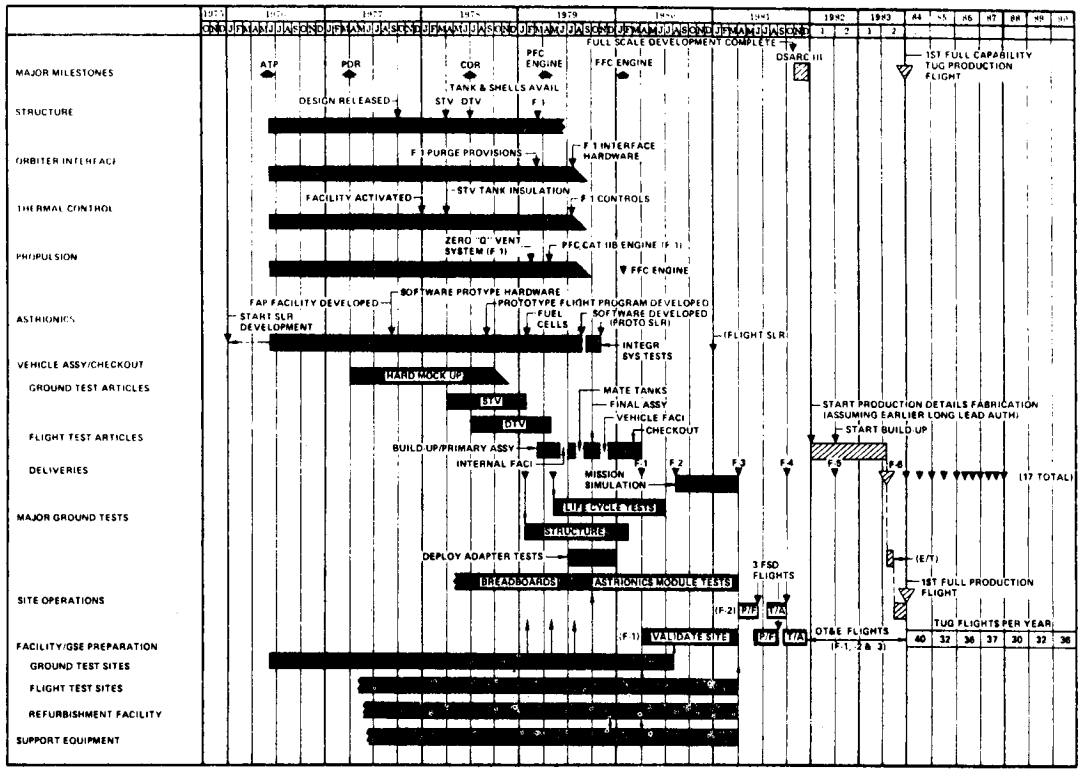

Figure 2-80. Program 2 Schedule, DOD Format

Table 2-102. Program 2 Tug Cost Summary

WORK BREAKDOWN STRUCTURE	NASA PROGRAM COSTS *				DOD PROGRAM COSTS *			
	DDT&E	INVESTMENT	OPERATIONS	LIFE CYCLE	DDT&E	INVESTMENT	OPERATIONS	LIFE CYCLE
01 PROJECT MANAGEMENT	7.6	4.3	0.5	12.4	10.3	3.3	0.5	14.1
02 SYSTEMS ENGINEERING & INTEGRATION	15.6	27.3	3.3	46.2	21.2	21.0	3.3	45.5
03 VEHICLE								
TUG	182.4	179.2	20.7	382.3	241.1	137.0	20.7	398.8
ORBITER INTERFACE	7.4	7.2	2.6	17.2	7.4	7.2	2.6	17.2
04 AUXILIARY STAGE	1.6		1.5	3.1	1.6		1.5	3.1
05 LOGISTICS	4.8	2.4	7.4	14.6	5.0	2.2	7.4	14.6
06 FACILITIES	9.4	4.1	3.9	17.4	9.4	4.1	3.9	17.4
07 GROUND SUPPORT EQUIPMENT	24.9	9.7	2.7	37.3	24.9	9.7	2.7	37.3
08 VEHICLE TEST	17.1			17.1	29.9			29.9
09 LAUNCH OPERATIONS – WTR			14.0	14.0			14.0	14.0
10 LAUNCH OPERATIONS – ETR			25.3	25.3			25.3	25.3
11 FLIGHT OPERATIONS – NASA	20.0		47.7	67.7			47.7	47.7
12 FLIGHT OPERATIONS – DOD			38.4	38.4	20.0		38.4	58.4
13 REFURBISHMENT & INTEGRATION – WTR			4.8	4.8			4.8	4.8
14 REFURBISHMENT & INTEGRATION – ETR			17.5	17.5			17.5	17.5
TOTAL	290.8	234.2	190.3	715.3	370.8	184.5	190.3	745.6

* MILLIONS OF 1973 DOLLARS.

Table 2-103. Program 2 Tug Vehicle DDT&E Cost

WBS ELEMENT	DDT&E ($M)
STRUCTURE	32.3
MAIN ENGINE	46.0
MAIN ENGINE SUPPORT	14.1
ACPS SYSTEM	6.8
PROPULSION	66.9
DATA MANAGEMENT	9.3
GN&C	21.8
COMMUNICATIONS	12.0
INSTRUMENTATION	1.5
ELECTRICAL POWER SOURCE	6.2
POWER DISTR. & CONTROL	6.9
AVIONICS	57.7
INSULATION	9.7
CONTROL	1.3
THERMAL CONTROL	11.0
INST. ASSEMBLY AND CHECKOUT	14.5
TOTAL VEHICLE	182.4

Table 2-104. Program 2 Cost Per Flight

	COST ($MILLION)		
	MODE		
	1	2	3
LAUNCH OPERATIONS	0.16	0.16	0.16
MAINTENANCE & REFURBISHMENT	0.19	0.19	0.19
GROUND OPERATIONS TOTAL	0.35	0.35	0.35
FLIGHT OPERATIONS	0.37	0.37	0.37
OPERATIONS SUPPORT	0.07	0.07	0.07
EXPENDED HARDWARE	0	10.92	0.30
TOTAL AVERAGE COST/FLIGHT	0.79	11.71	1.09

MODE 1 REUSABLE TUG

MODE 2 EXPENDABLE TUG

MODE 3 REUSABLE TUG & VELOCITY PACKAGE

cost, schedule, etc. The horizontal bars show the relative risk on a scale of 0 to 10. These risk ratings are based on the MF-003M rating for cost confidence. The zero (low risk) value is used for off-the-shelf items, where familiar procedures are used, where detailed analyses have been made, in general when there is high confidence that the technical/programmatic/cost predictions will be attained easily. The 10 (high risk) value related to advanced technology subsystems that have no hardware basis, where

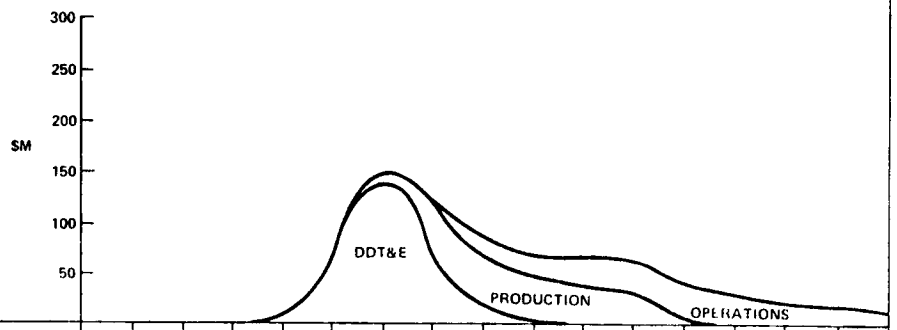

FY	76	77	78	79	80	81	82	83	84	85	86	87	88	89	90	91
DDT&E				5.6	61.4	134.6	68.8	15.9	4.6							
PRODUCTION						10.6	45.6	48.2	43.8	41.7	34.5	9.4	0.4			
OPERATION									20.5	29.6	29.6	29.5	24.6	22.9	22.6	11.1
TOTAL				5.6	61.4	145.2	114.4	64.1	68.9	71.3	64.1	38.9	25.0	22.9	22.6	11.1

Figure 2-81. Program 2 Annual Funding Requirements

AREA OF CONCERN	MEASUREMENT OF RISK (LOW 0 – 2 – 4 – 6 – 8 – HIGH 10)	EXPLANATION
SAFETY		SAFETY DESIGNED IN (252 LB. WEIGHT) PENALTY), VERIFICATION TEST PROGRAM, CREW MONITOR & OVERRIDE
COST		CONFIDENCE LEVEL = 2.67, CENTAUR COST STUDY
SCHEDULE		RENDEZVOUS & DOCKING SYSTEM IS PACING ITEM
MISSION EFFECTIVENESS		100% MISSION CAPTURE, LARGE GROWTH POTENTIAL (1.80 PAYLOADS/FLIGHT)
FLIGHT OPS. COMPLEXITY		98% OF FLIGHTS = SINGLE TUG OPERATION
REUSABILITY		MAXIMUM RELIABILITY FOR MINIMUM COST, MTBF IS INSENSITIVE FOR REDUNDANT SYSTEMS
GROUND OPERATIONS		REUSE NOT DEMONSTRATED BUT TECHNIQUES UNDERSTOOD
WEIGHT		TOTAL CONTINGENCY = 32% FOR 3,500-LB. PAYLOAD
TECH. PERF: STRUCTURE		FRACTURE CONTROL & FLAW DETECTION IN TANKS, PRODUCIBILITY OF COMPOSITE SHELL, PROOFING DOCKING SYSTEMS
PROPULSION		ENGINE IDLE MODE, ZERO-g ACQUISITION, RETRACTABLE NOZZLE
ASTRIONICS		REND. & DOCKING STRATEGY, IMPLEMENTATION, HARDWARE, ETC. GUIDANCE UPDATE ACCURACY & STRATEGY
THERMO		FLIGHT QUALIFICATION NEEDED, PURGE BAG DEVEL.

Figure 2-82. Program 2 Risk Assessment

major development is required, where adequate analyses have not been made, where the program is overconstrained by cost, performance, and schedule requirements. The right column shows a brief explanation of why the risk for each area of concern is so rated on the 0 to 10 scale.

For Program 2, the most vulnerable items are the technical performance of astrionics and structure systems, the ground turnaround operations, and cost. The items of least concern are subsystem weights and propulsion performance because of large margins and off-the-shelf propulsion systems. Safety is also rated a low risk because potential hazards have been overcome by designing-in adequate solutions, absorbing the associated weight penalties, and structuring the ground test program to verify these solutions.

2.4.2.11 Sensitivities Studies. The major sensitivity studies conducted on Program 2 were: the effect of a two-year-earlier IOC, the effect of advanced engines, and the effect of the servicing mission.

IOC Sensitivity — The effect on program costs of advancing the IOC date by two years, from 12/83 to 12/81, was investigated. The resulting development schedule is shown in Figure 2-83 along with the baseline schedule. The ATP date was also advanced by two years since a three-year development span would be impractical for a full capability Tug with retrieval. The pacing item on the development schedule is the laser radar required for rendezvous and docking. With the earlier IOC, development of the laser radar would have to be initiated in early 1976. Since the IOC variation was accomplished by shifting the entire development program by two years, the funding spread would have the same shape as the baseline program shown in Figure 2-81 with the peak funding of $145M moving from 1981 to 1979.

Advanced Engine Sensitivity — The use of advanced engines, i.e., RL-10 Cat IV, Aerospike, and Advanced Space Engine (ASE), was considered as a sensitivity study in Program 2. The sensitivity study was performed by replacing the RL-10 Cat IIB engine of the baseline with the particular engine being considered. The configurations were not resized; however, the weight was adjusted to account for engine weight and feed system weight differences. The advanced engines were assumed to operate at the 5.4 to 1 mixture ratio of the baseline, which was not far off the optimum point.

The engine performance characteristics, configuration weights, and synchronous performance are summarized in Table 2-105. A mission capture analyses showed that all three of the advanced engines had the same mission capture capability. The only difference between the advanced engines mission capture and the baseline Program 2 vehicle mission capture is in the number of velocity packages and expendable stages. The baseline requires five velocity packages and expends 10 Tugs, while the advanced engines use 11 velocity packages and expend only four Tugs.

The vehicle development programs with the advanced engines would be the same as the baseline except for the engine development. The Aerospike and RL-10 Cat IV require an additional 14 months of development and the ASE requires an additional 20 months, which means engine ATPs in 1977 for a 1983 IOC.

The program cost data for the advanced engines and the baseline is presented in Figure 2-84. Both the development costs and total program costs are higher with the

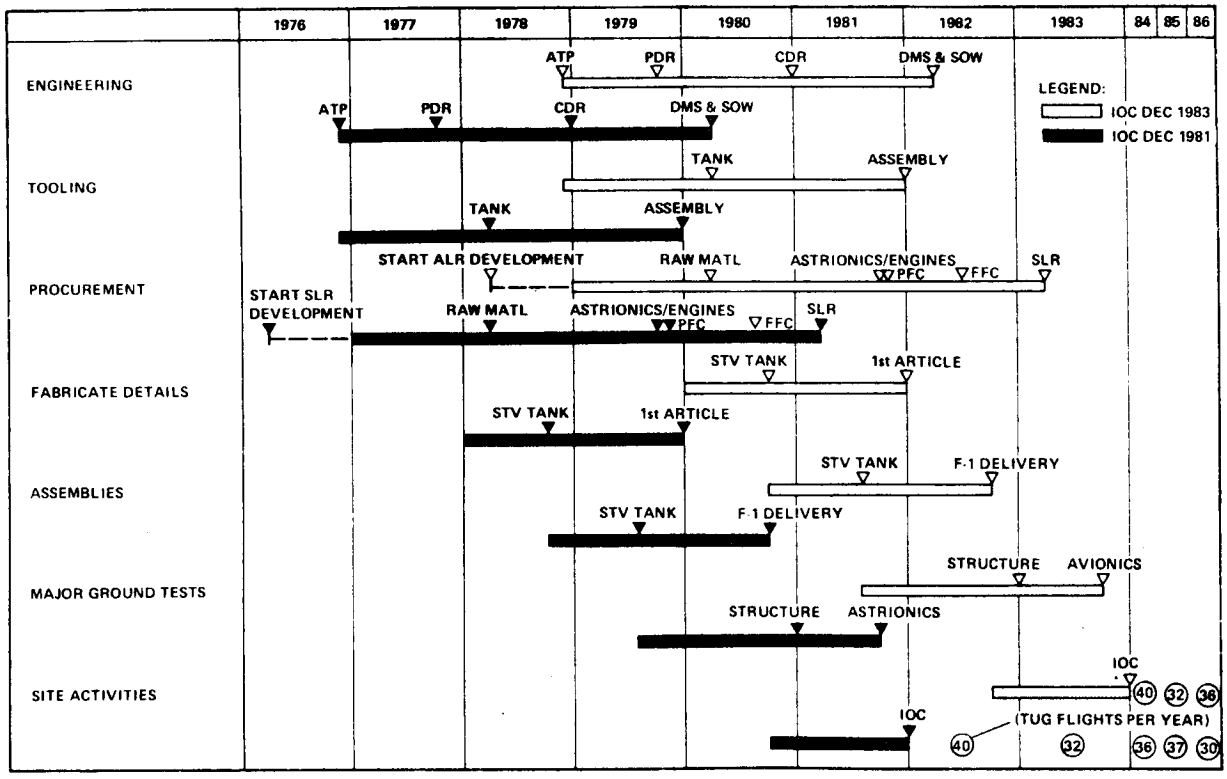

Figure 2-83. Program 2 Accelerated Development Schedule

Table 2-105. Advanced Engine Comparison

	BASELINE	AEROSPIKE	RL10-CAT1V	ASE
THRUST, LB (N)	15000 (66600)	20000 (88800)	15000 (66600)	20000 (88800)
I_{sp}, SEC	461.6	468	474	471.5
ϵ	180	188	380	400
STRUCTURE WEIGHT, LB (KG)	2094 (950)	2094 (950)	2094 (950)	2094 (950)
PROPULSION WEIGHT, LB (KG)	1466 (665)	1371 (622)	1457 (661)	1438 (652)
ASTRIONICS WEIGHT, LB (KG)	984 (446)	984 (446)	984 (446)	984 (446)
THERMAL CONTROL WEIGHT, LB (KG)	416 (189)	416 (189)	416 (189)	416 (189)
GROSS DRY WEIGHT, LB (KG)	5456 (2475)	5351 (2427)	5446 (2470)	5425 (2461)
BURNOUT WEIGHT, LB (KG)	6231 (2826	6126 (2779)	6221 (2822)	6200 (2812)
SHUTDOWN LOSSES, LB (KG)	77 (35)	27 (12)	18 (8)	16 (7)
OTHER LOSSES, LB (KG)	217 (98)	217 (98)	217 (98)	217 (98)
USABLE ACPS PROP., LB (KG)	217 (98)	217 (98)	217 (98)	217 (98)
USABLE MAIN PROP., LB (KG)	56303 (25539)	56353 (25562)	56362 (25566)	56364 (25567)
TUG GROSS WEIGHT, LB (KG)	63045 (28597)	62940 (28550)	63035 (28593)	63014 (28583)
DEPLOY PAYLOAD, LB (KG)	8276 (3754)	9181 (4165)	9377 (4253)	9284 (4211)
RETRIEVE PAYLOAD, LB (KG)	5204 (2361)	5873 (2664)	6138 (2784)	6027 (2734)
ROUND TRIP PAYLOAD, LB (KG)	3149 (1428)	3478 (1578)	3595 (1631)	3543 (1607)

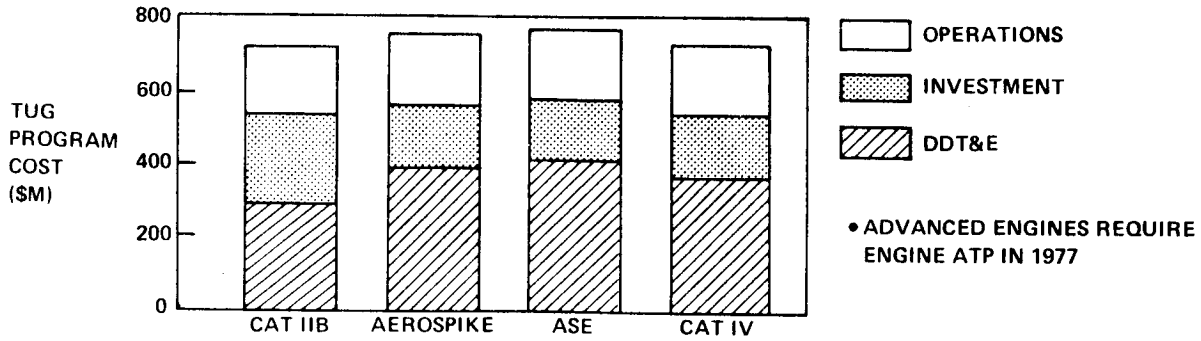

Figure 2-84. Program 2 Costs with Advanced Engines

advanced engines. The advanced engines yield higher performance; however, there is a significant development cost increase. With the given mission model, the increased performance does not lower the operations cost sufficiently to reduce total program cost. The reduction in the number of expended Tugs would decrease the cost per flight for high energy missions.

Service Mission — The service mission is a Tug operational mode that provides servicing of four geosynchronous orbit satellites using a Tug service unit and space replacable units (SRU). The Tug service unit weights approximately 500 lb (226.8 kg). The SRU are modules taken up in space to replace expended or malfunctioning satellite units. It is assumed that these satellites are located at the longitudinal positions shown in Figure 2-85.

Two different service modes were investigated. Service Mode I expends all replaced SRUs at each spacecraft serviced. The Tug returns with only 500 lb (226.8 kg) service unit. Service Mode II exchanges SRUs, thus it carries payload throughout the mission.

It is assumed the guidance and navigation errors that occur during the transfer orbits between satellites are removed by the application of 50 fps ΔV from the Tug, which allows for docking with the satellite. A period of two hours is spent transferring new and failed modules and may also involve limited testing of the satellite to ensure satisfactory operation after servicing. The total time used for rendezvous, docking, and servicing each satellite is 14 hours.

The time required to accomplish the service mission is a function of the number of phasing orbits used to rendevous with the satellites, which also affects the total ΔV requirements for the mission. As the mission duration increases, the ΔV for phasing decreases, but propellant losses such as boiloff and fuel cell reactants increase.

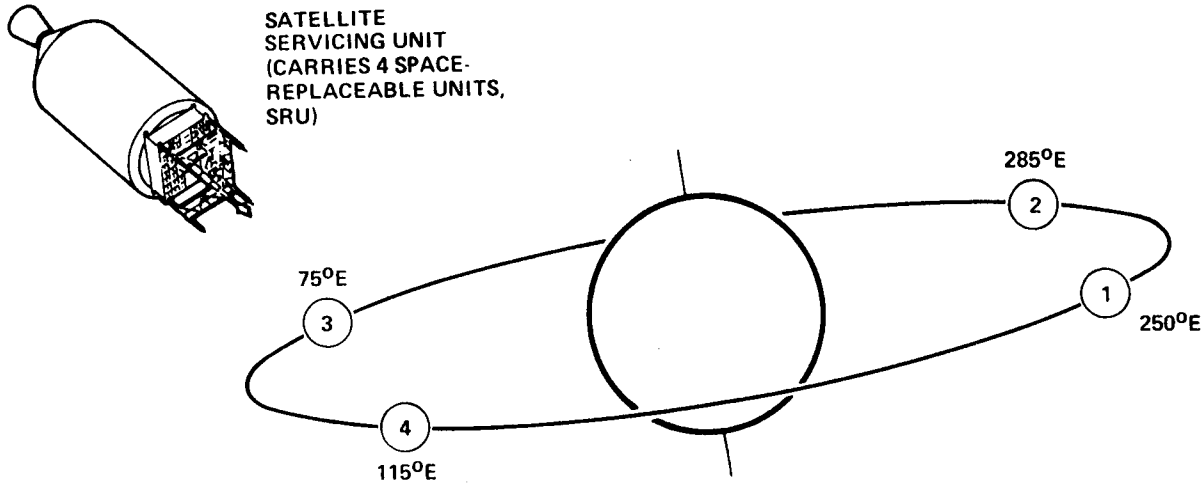

Figure 2-85. Service Mission

For up to 14 days, the ΔV variation is the predominant effect, causing a net increase in performance as total mission duration is extended as shown in Figure 2-86. The SRU weight/unit represents the weight of a single unit, assuming that the Tug payload is four of these units plus a 500 lb (226.8 kg) service unit. Data is shown for both the baseline condition where the 50 ft/sec (15.24 m/sec) maneuvers prior to servicing are split in half between main engine idle mode and the ACPS, and where the total 50 ft/sec (15.2 m/sec) maneuver is provided by the attitude control system. Data for a 20-day Mode II mission shows that the propellant losses are offsetting the ΔV reduction with increasing time.

The effect of mission duration on reliability is shown in Figure 2-87. Since the number of main engine burns has a significant effect on reliability, the data is shown for the two approaches to accomplishing the 50 ft/sec (15.2 m/sec) maneuver. Since the ACPS is essentially a fail-operational/fail-operational system, there is no additional unreliability assigned to it for the increased duty cycle for accomplishing all the docking maneuvers.

The performance and reliability data for Figures 2-86 and 2-87 is cross plotted in Figure 2-88.

2.4.2.12 Program Update. Subsequent to the data dump the Program 2 configuration was updated. The changes made in the update included incorporating the results of additional analyses and recommendations made by the government.

Table 2-106 identifies the changes incorporated and the rationale for the change. The weight increment from the baseline Program 2 configuration is also identified. The configuration incorporating these changes was resized and the performance computed. Table 2-107 presents a summary weight statement and performance characteristics for the resized configuration. The geosynchronous retrieval payload of 4982 lb (2260 kg) represents a 222 lb (101 kg) payload decrease over the baseline Tug.

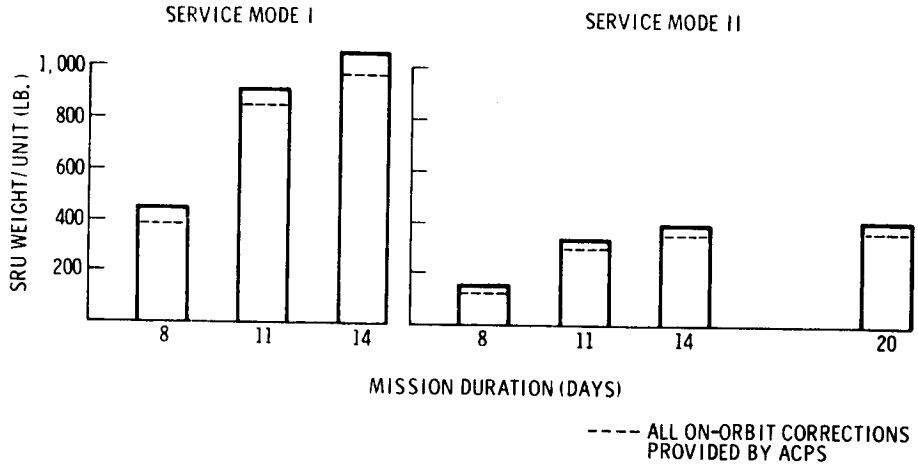

Figure 2-86. Service Mission Performance

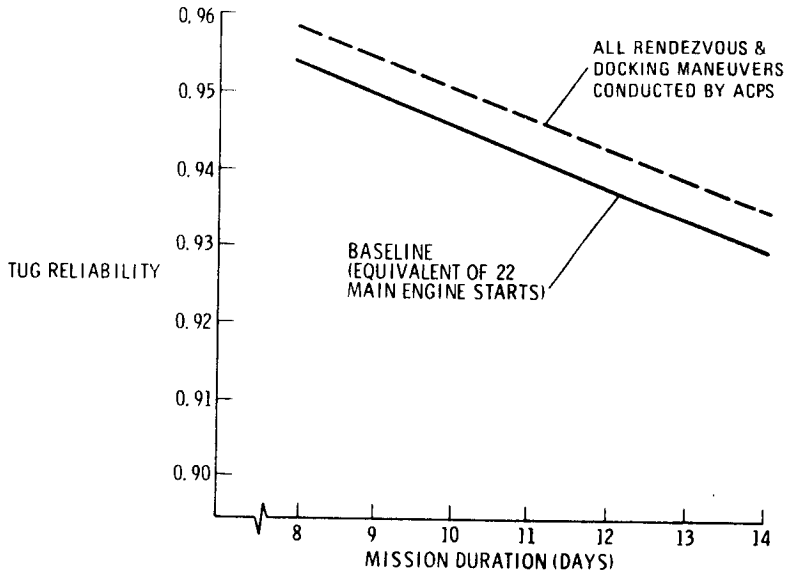

Figure 2-87. Service Mission Reliability

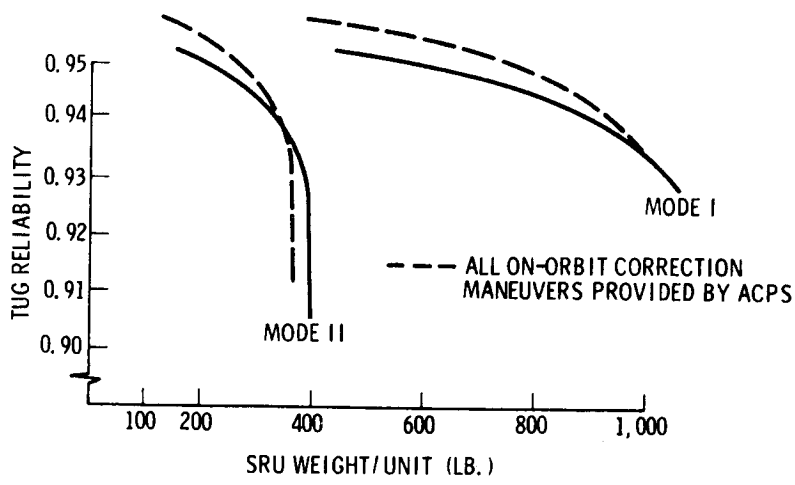

Figure 2-88. Service Mission Characteristics

The programmatic characteristics of this updated configuration would be essentially identical with the baseline. With the exception of the elimination of the propellant acquisition device, the effect of the configuration changes on program costs is negligible. The deletion of the propellant acquisition device reduces the DDT&E cost by $1.9M and the total production cost by $1.7M. The change was incorporated based on these cost benefits.

Table 2-106. Configuration Changes for Program 2 Update

CHANGE	RATIONALE	ΔWT LB (KG)
DRY WEIGHT		
INCREASE LH_2 TANK THICKNESS	DESIGN PRESSURE INCREASE FOR ABORT DUMP	20 (9.1)
USE 2 ACPS He BOTTLES	CORRECT DISCREPANCY	-27 (-12)
ADD ADDITIONAL ACPS PROPELLANT TANK	COST BENEFIT – USE ACPS FOR SETTLING	25 (11)
INCREASE ABORT PRESSURIZATION PLUMBING	DETAILED ABORT DUMP ANALYSIS	10 (4.5)
ADD ADDITIONAL HEATERS	UPDATED THERMAL CONTROL REQUIREMENTS	10 (4.5)
PROVIDE ADDITIONAL INSTRUMENTATION TRANSDUCERS	PROVIDE ADDITIONAL DATA FOR REFURBISHMENT	30 (14)
REVISE TUG/PAYLOAD INTERFACE WEIGHT	MORE DETAILED ANALYSES	27 (12)
CHANGE PURGE BAG TO TEFLON COATED KAPTON	SAFETY – ELIMINATE FIRE HAZARD	-29 (-13)
ELIMINATE PROPELLANT AQUISITION DEVICE	COST BENEFIT – USE ACPS FOR SETTLING	-40 (-18)
INCREASE FILL & DRAIN LINE SIZE	DETAILED ABORT DUMP ANALYSIS	34 (15)
NON USABLE FLUIDS		
DELETE PU LH_2 BIAS	INCLUDED IN FPR	-72 (-33)
DELETE 10% FPR ON ACPS PROPELLANT	NO REQUIREMENT SPECIFIED	-22 (-10)
REDUCE TRAPPED ACPS PROPELLANT	ADDITIONAL ANALYSES	-7 (3.2)
INCREASE GASEOUS RESIDUALS	ADDITIONAL ANALYSES	19 (8.6)
NON IMPULSE EXPENDABLES		
ADJUST MAIN ENGINE LEAKAGE	REVISED MAIN ENGINE DATA	22 (10)
REVISE START & STOP LOSSES	REVISED MAIN ENGINE DATA	33 (15)
REVISE FUEL CELL REACTANTS	UPDATED POWER REQUIREMENTS ANALYSIS	-50 (-23)
SHUTTLE INTERFACE ACCOMMODATIONS		
INCREASE ADAPTOR STRUCTURE & ORBITER ATTACH FITTINGS	UPDATED STRUCTURAL DESIGN ANALYSIS	180 (82)
ADD DUEL DUMP VALVES & DUAL VENT VALVES ON SUPPORT ADAPTOR	SAFETY – PRECLUDE AIR IN H_2 TANK	148 (67)
INCREASE FILL & DRAIN LINE SIZE ON ADAPTOR	DETAILED ABORT DUMP ANALYSIS	320 (145)

Table 2-107. Program 2 Baseline Tug Updated Weight Summary

	LB	(KG)
STRUCTURE	2127	(964.8)
PROPULSION	1465	(664.5)
THERMAL CONTROL	394	(178.7)
AVIONICS	1012	(459.1)
CONTINGENCY	500	(226.8)
TOTAL DRY WEIGHT	5498	(2493.9)
NON-USABLE FLUIDS	414	(187.8)
MAIN PROPELLANT FPR	271	(122.9)
BURNOUT WEIGHT	6183	(2804.6)
NON-IMPULSE EXPENDABLES	299	(135.6)
USABLE MAIN PROPELLANTS	55535	(25190.7)
USABLE ACPS PROPELLANTS	380	(172.4)
FIRST IGNITION WEIHT	62397	28303.3
SHUTTLE INTERFACE ACCOMMODATIONS	2603	(1180.7)
TOTAL WEIGHT IN SHUTTLE	65000	(29484.0)
MAX. PAYLOAD (RETRIEVAL MISSION)	4982	(2259.8)
MASS FRACTION = 0.890		

2.4.3 PROGRAM 3

2.4.3.1 Configuration. The inboard profile drawing of the initial Program 3 Tug is shown in Figure 2-89. Primary emphasis in this phase of Program 3 is on low DDT&E. Therefore, this configuration is very similar to the Program 1 Tug. The main engine is the RL-10 Cat I. The tanks are sized for the retrieval mission at a 5.4:1 mixture ratio. For the deployment missions, the oxidizer tank is off-loaded to operate the engine at a 5.0:1 mixture ratio, which is near optimum. The structure is aluminum skin/stringer construction with suspended 2219-T87 aluminum alloy tanks with welded gore formed elliptical domes. A zero-g vent system is included in each tank. The ACPS is hydrazine monopropellant with helium pressurized positive expulsion tanks. Line and tank heaters have been included to condition the hydrazine. Sixteen ACPS engines in four clusters of four provide all axis maneuver capability and fail-operational/fail-safe redundancy.

The avionics suit includes a 1973 technology computer with Shuttle IMUs. The TVC is hydraulic with an engine driven pump, identical with Centaur. Level I autonomy has been retained and the necessary guidance update equipment (horizon and star sensors) included. Two communications subsystems have been delineated to handle operation with SGLS and USB. Modified Shuttle fuel cells are assumed.

The insulation system consists of 20 layers of Superfloc MLI with an inner leakage containment membrane and an outer purge bag. Each tank is separately contained. The astrionics module sidewall will be utilized to radiate component generated heat to space. Portions of this sidewall (about 25%) will be insulated to prevent excessive cooldown. A radiator will be located in the intertank area to reject fuel cell waste heat.

The configuration and subsystem arrangement for the final Program 3 is the same as the initial vehicle. Major changes between the initial and final versions include the addition of the docking adapter and the avionics components required to fly the retrieval missions. To improve performance the modified Shuttle cells are replaced with two advanced development, lightweight fuel cells. An advanced IMU is substituted for the Shuttle IMU and additional payload communication equipment is added. The longer mission duration also triggers a change to dual electromechanical TVC actuators. The main engine requires minor adjustments to operate at a new mixture ratio and new software modules must be written and inserted in the computer.

2.4.3.2 Subsystems

Structure and Mechanisms — The selected characteristics and the supporting selection rationale for the structural/mechanical subsystems for the Program 3 Tugs are summarized in Figure 2-90. The structure is the same as the Program 1 Tug described in Section 2.4.1.2. There is no difference in structure between the initial and final vehicles. There are differences in the payload interface.

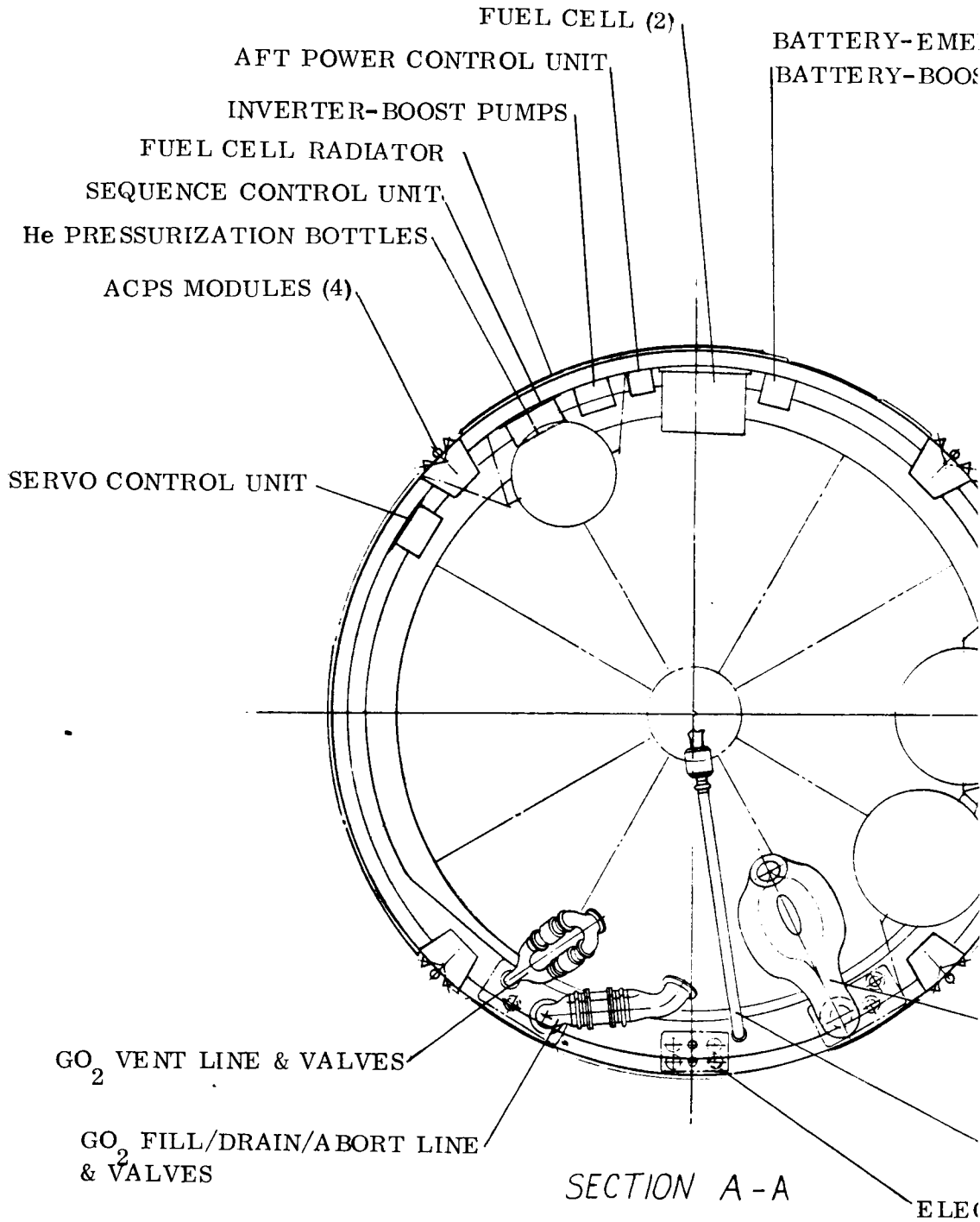
FUEL CELL (2)
AFT POWER CONTROL UNIT
INVERTER-BOOST PUMPS
FUEL CELL RADIATOR
SEQUENCE CONTROL UNIT
He PRESSURIZATION BOTTLES
ACPS MODULES (4)
SERVO CONTROL UNIT
GO2 VENT LINE & VALVES
GO2 FILL/DRAIN/ABORT LINE & VALVES
SECTION A-A

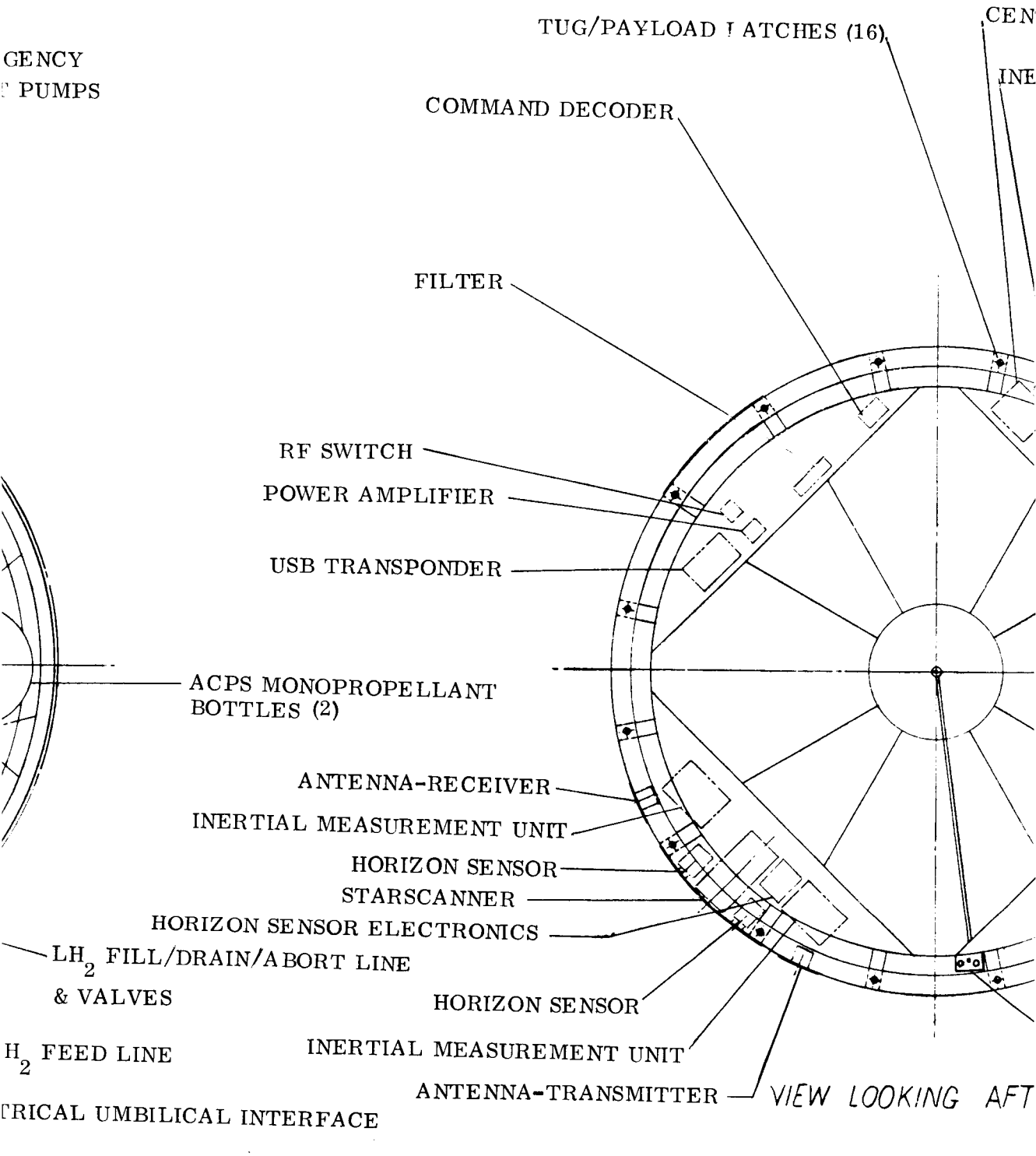
GENCY
PUMPS
TUG/PAYLOAD LATCHES (16)
CEN
INE
COMMAND DECODER
FILTER
RF SWITCH
POWER AMPLIFIER
USB TRANSPONDER
ACPS MONOPROPELLANT BOTTLES (2)
ANTENNA-RECEIVER
INERTIAL MEASUREMENT UNIT
HORIZON SENSOR
STARSCANNER
HORIZON SENSOR ELECTRONICS
LH2 FILL/DRAIN/ABORT LINE & VALVES
HORIZON SENSOR
H2 FEED LINE
INERTIAL MEASUREMENT UNIT
ANTENNA-TRANSMITTER
VIEW LOOKING AFT
TRICAL UMBILICAL INTERFACE

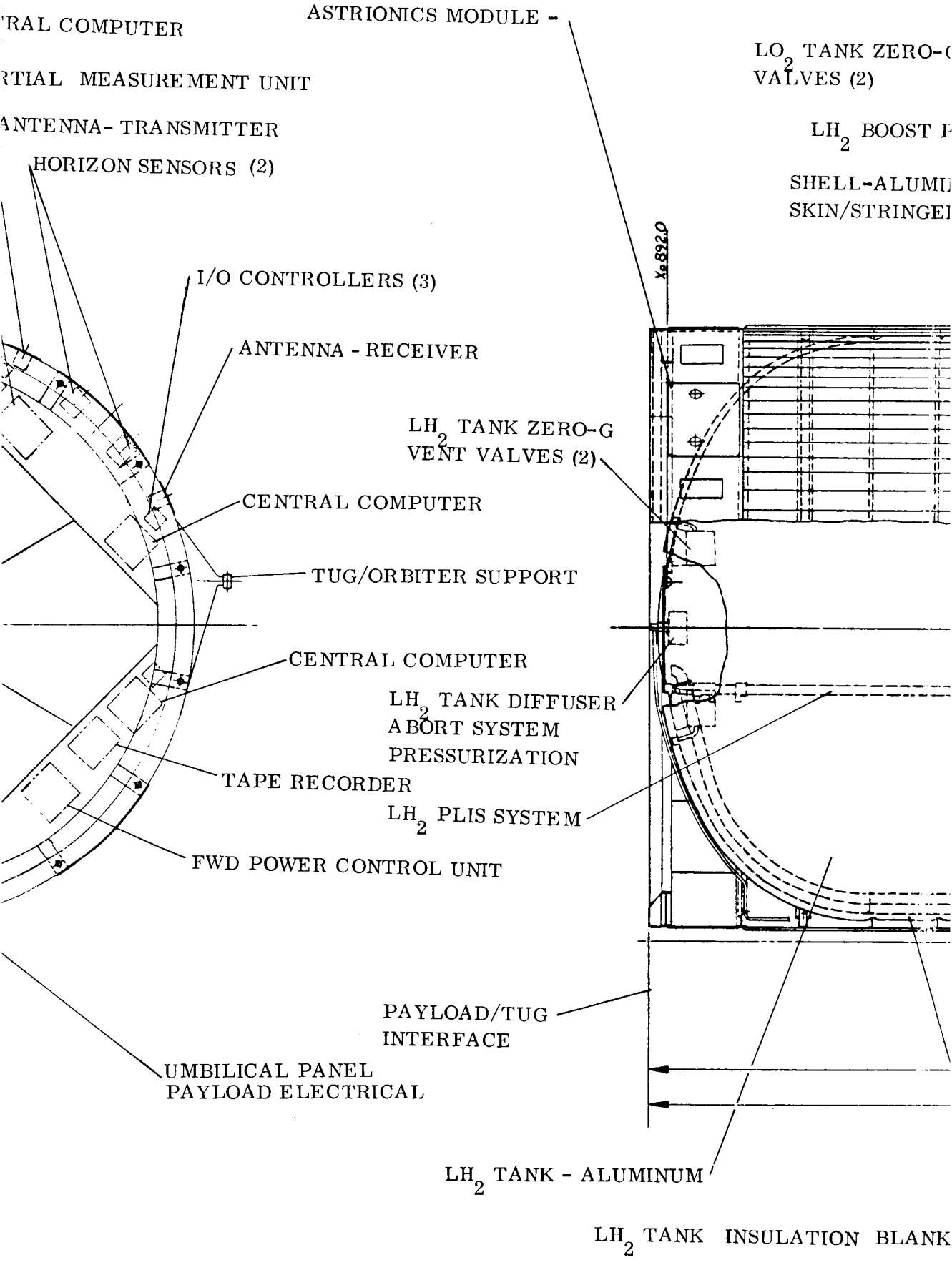
RAL COMPUTER
RTIAL MEASUREMENT UNIT
ANTENNA- TRANSMITTER
HORIZON SENSORS (2)
I/O CONTROLLERS (3)
ANTENNA - RECEIVER
CENTRAL COMPUTER
TUG/ORBITER SUPPORT
CENTRAL COMPUTER
TAPE RECORDER
FWD POWER CONTROL UNIT
UMBILICAL PANEL
PAYLOAD ELECTRICAL
ASTRIONICS MODULE -
LO2 TANK ZERO-G
VALVES (2)
LH2 BOOST P
SHELL-ALUMI
SKIN/STRINGE
X=892.0
LH2 TANK ZERO-G
VENT VALVES (2)
LH2 TANK DIFFUSER
ABORT SYSTEM
PRESSURIZATION
LH2 PLIS SYSTEM
PAYLOAD/TUG
INTERFACE
LH2 TANK - ALUMINUM
LH2 TANK INSULATION BLANK

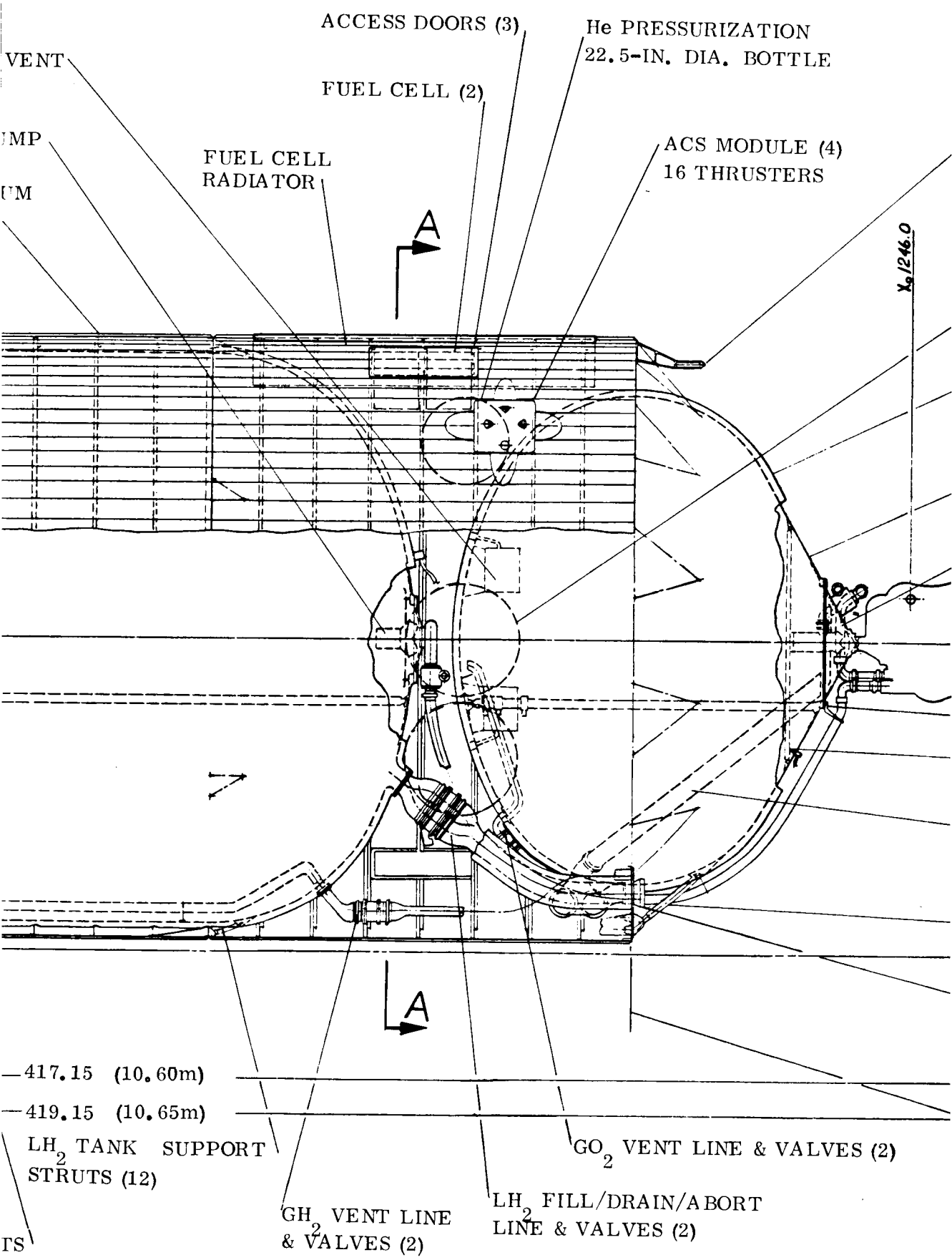
ACCESS DOORS (3)
He PRESSURIZATION
22.5-IN. DIA. BOTTLE
VENT
FUEL CELL (2)
MP
UM
FUEL CELL
RADIATOR
ACS MODULE (4)
16 THRUSTERS
A
X_0 1246.0
A
417.15 (10.60m)
419.15 (10.65m)
LH_2 TANK SUPPORT
STRUTS (12)
GO_2 VENT LINE & VALVES (2)
GH_2 VENT LINE
& VALVES (2)
LH_2 FILL/DRAIN/ABORT
LINE & VALVES (2)
TS

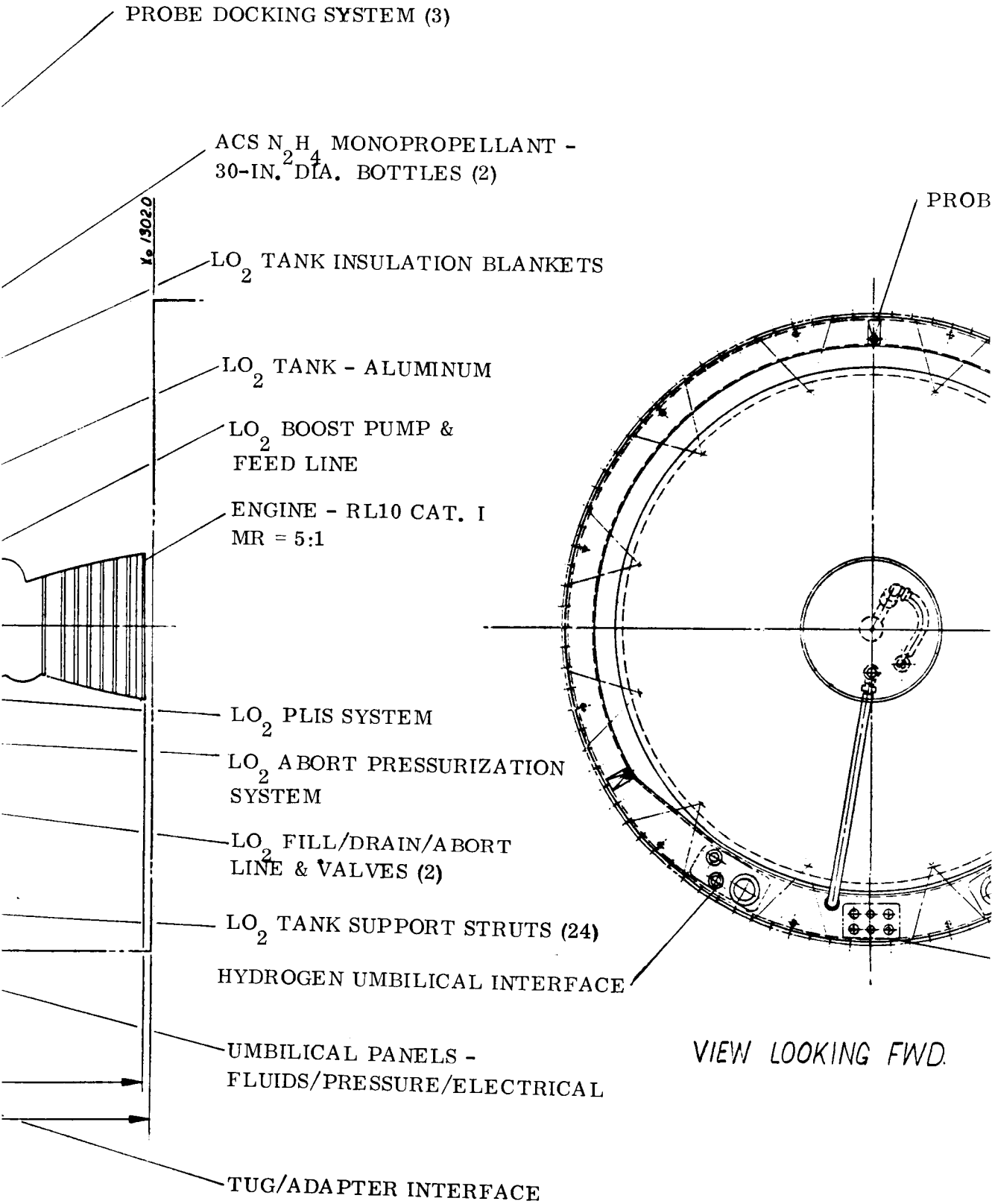
PROBE DOCKING SYSTEM (3)
ACS N_2H_4 MONOPROPELLANT - 30-IN. DIA. BOTTLES (2)
Xo 1302.0
LO_2 TANK INSULATION BLANKETS
LO_2 TANK - ALUMINUM
LO_2 BOOST PUMP & FEED LINE
ENGINE - RL10 CAT. I MR = 5:1
LO_2 PLIS SYSTEM
LO_2 ABORT PRESSURIZATION SYSTEM
LO_2 FILL/DRAIN/ABORT LINE & VALVES (2)
LO_2 TANK SUPPORT STRUTS (24)
HYDROGEN UMBILICAL INTERFACE
UMBILICAL PANELS - FLUIDS/PRESSURE/ELECTRICAL
TUG/ADAPTER INTERFACE
PROB
VIEW LOOKING FWD.

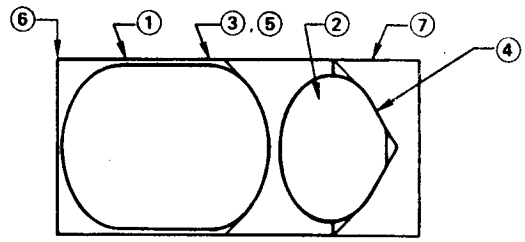

SUBSYSTEM	CHARACTERISTICS	RATIONALE
①,② PROPELLANT TANKS	• MONOCOQUE; SUSPENDED FROM BODY • 2219-T87 ALUMINUM • ELLIPSOIDAL GORE BULKHEADS	• LOW COST; LOW WT; LOW HEAT INPUT • EXISTING; STRONG; TOUGH; GOOD WELD • LOW HEIGHT; MIN DEVEL (LOW COST, RISK)
③ BODY STRUCTURE	• 3 SEGMENTS • ALUMINUM SKIN-STRINGER	• EASE OF MAINT/REFURB • CONVENTIONAL (LOW COST, RISK); MED WT
④ THRUST STRUCTURE	• 1 PC ALUMINUM CONE • OXID TANK AFT CLOSURE (BOLT-ON)	• LOW COST; LOW WT • BI-FUNCTIONAL
⑤ METEOROID SHIELD	• PROVIDED BY BODY STRUCT SKIN	• EXCESS t FOR 6-DAY, SYNC MISSION
⑥ PAYLOAD INTERFACE	• DISCRETE PYROTECHNIC LATCHES • SQUARE FRAME DOCKING SYSTEM • HYDRAULIC ACTUATORS FOR FRAME, LATCHES	• FLIGHT-QUALIFIED; DEPLOY ONLY • LOW WT; BEST P/L COMPATIBILITY • REVERSIBLE; SIMULTANEOUS ACTUATION
⑦ ORBITER INTERFACE	• ALUMINUM SKIN-STRINGER ADAPTER • ELECT. LINEAR BALL-SCREWS FOR DEPLOY, DOCK, LATCH, UMBIL MECHANISMS	• CONVENTIONAL; MED WT • EXISTING HARDWARE

Figure 2-90. Program 3 Tug Structure and Mechanism Characteristics

Discrete one-shot pyrotechnic latches are provided for payload separation in the initial program since there is no requirement for payload reattachment. For the final program these are replaced by two-position latches, a square frame docking structure, and a hydraulic power system for latch and frame position control.

Thermal Control — The thermal control and insulation systems are shown in Figure 2-91. They are identical with the Program 2 Tug. Rather than evolving the insulation, high performance Superfloc MLI was selected for both the initial and final vehicles.

Astrionics — The astrionics configuration for the Program 3 vehicle is a phased program with an objective of low DDT&E cost for an initial minimum performance system for IOC in 1979 and low conversion cost to a final maximum performance system with IOC in 1983. The initial and final vehicles have level I autonomy for guidance update. Redundancy is added selectively to meet reliability and safety requirements. A functional block diagram of the astrionics system is shown in Figure 2-92.

The characteristics of the astrionics system are summarized in Table 2-108. Three computer units and three input/output controller units communicate with the other astrionics units over a triple redundant data bus. The dual redundant rf

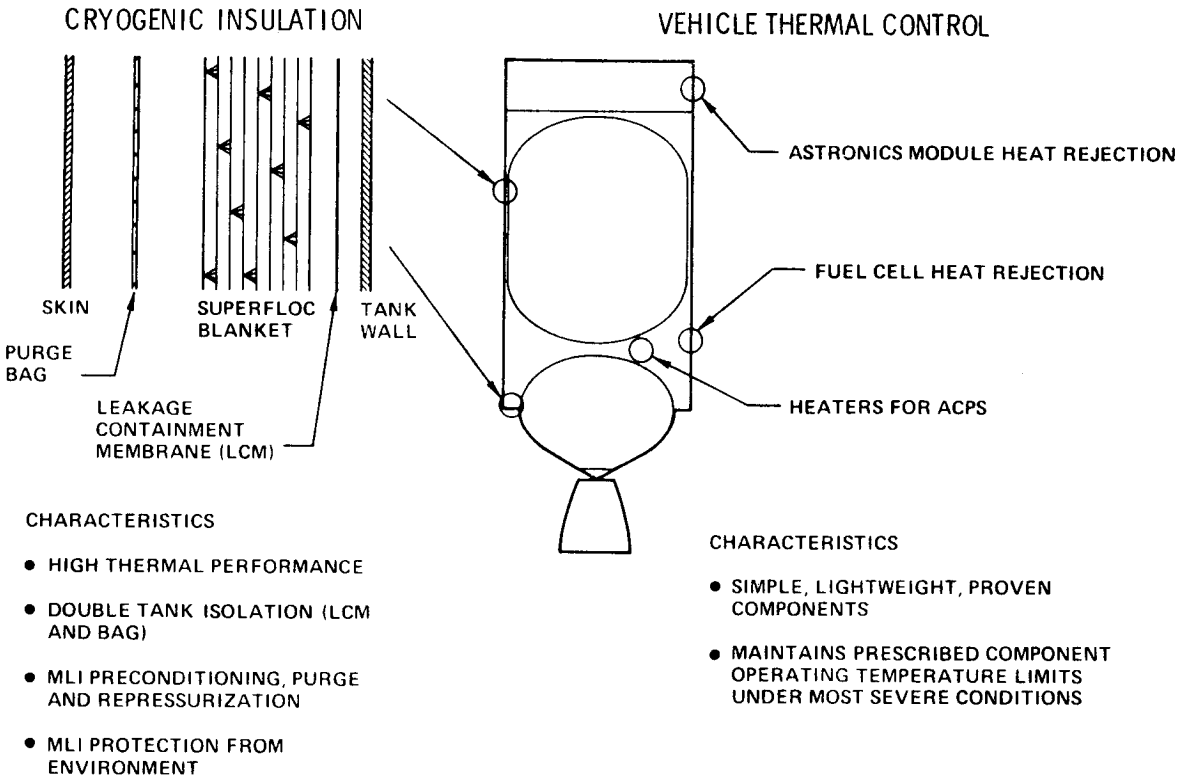

Figure 2-91. Program 3 Tug Insulation and Thermal Control

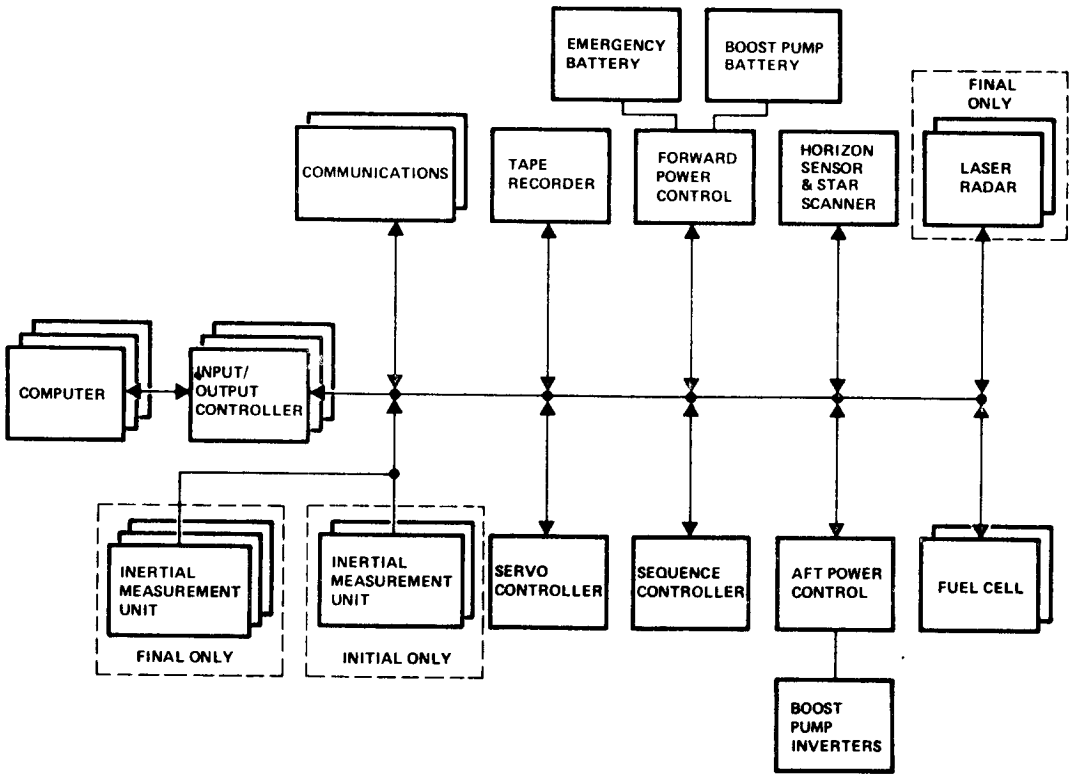

Figure 2-92. Astrionics Functional System for Program 3 Tug

Table 2-108. Program 3 Tug Astrionics System Characteristics

SUBSYSTEM	REDUNDANCY	DEVELOPMENT STATUS	CHARACTERISTICS
DATA MANAGEMENT	TRIPLE SIMPLEX	IN DEVELOPMENT IN DEVELOPMENT	65K MEMORY, DATA BUS TAPE RECORDER
GUIDANCE & NAVIGATION	TRIPLE (INITIAL) DUAL (FINAL)	SPACE SHUTTLE IN DEVELOPMENT	CAROUSEL SS GIMBALED IMU ELECTROSTATIC GYRO
FLIGHT CONTROL	DUAL	NEW	HYDRAULIC
GUIDANCE UPDATE	DUAL	IN DEVELOPMENT	LEVEL I AUTONOMY STAR SENSOR & HORIZON SENSOR
RENDEZVOUS & DOCKING (FINAL ONLY)	DUAL	IN DEVELOPMENT	LASER RADAR
COMMUNICATIONS	DUAL	MOD. ERTS FLTSATCOM (MOD.)	USB (NASA), TUG/GROUND, TUG/PAYLOAD SGLS (DOD) SECURE, TUG/GROUND, TUG/PAYLOAD
INSTRUMENTATION	TRIPLE FOR SAFETY CRITICAL	NEW	USES DATA BUS
ELECTRICAL POWER	DUAL FOR SAFETY CRITICAL	MOD. SHUTTLE (INITIAL) NEW (FINAL)	FUEL CELL, EMERGENCY BATTERY, BOOST PUMP BATTERY
POWER DISTRIBUTION & CONTROL	DUAL FOR SAFETY CRITICAL	NEW	SOLID STATE & HYBRID, BOOST PUMP INVERTERS

communications units provide for Tug/Shuttle or ground communications for the initial vehicle. The final vehicle also has communications equipment to provide a Tug/payload rf communications link. The tape recorder unit stores formatted telemetry data to be communicated to the ground and can also be used to store data required at preplanned times during the mission. The forward and aft power control units provide for electrical power distribution and switching. They also provide the interface with the emergency battery, the boost pump battery, and the boost pump inverters. Horizon and star sensor units are used to update the inertial measurement unit data for long-term accuracy. Dual redundant laser radar units used on only the final vehicle provide a capability for autonomous payload rendezvous and docking. The fuel cell is the primary source of electrical power for the vehicle. The sequence control unit and the servo control unit provide the interface for command and control outputs from the central computer to the vehicle systems. They also provide an interface for instrumentation data required as an input to the computer. The inertial measurement unit for the initial vehicle is a triple redundant configuration of gimbaled units. The final vehicle has dual redundant strapdown inertial measurement units. The IMU phasing provides a lower astrionics weight, thereby increasing performance.

Propulsion — The propulsion system for Program 3 consists of a main propulsion system used for all axial ΔV requirements above 100 ft/sec (30.5 m/sec) and the

attitude control propulsion system (ACPS) used for attitude maneuvers and axial ΔVs below 100 ft/sec (30.5 m/sec).

Main Propulsion — The main propulsion system is similar to the Program 1 main propulsion system shown in Figure 2-61. The RL-10 Cat I engine was selected since it has the lowest DDT&E cost and could meet the performance requirements for both initial and final vehicles. The Cat I engine is a Centaur Pratt & Whitney RL-10A-3-3 engine requalified for the Tug operating and life requirements, including the following:

a. Lower engine inlet pressures during cooldown and engine starting.

b. Modified cooldown sequence and conditions.

c. Tug feed system compatibility. Demonstrate that the engines perform to specifications with the Tug propellant feed system including feed ducts, and boost pumps.

d. Increased mixture ratio — the tank mixture ratio must be 5.4 or higher to meet the Tug length constraint for the retrieval mission; consequently, the engines used in Program 3 final must operate at MR = 5.4. The initial Tugs will be off-loaded to MR = 5.0 for increased performance (higher Isp).

ACPS — The hydrazine ACPS for Program 3 is different from Programs 1 and 2 only in the areas of pressurization and propellant storage. Due to the requirement to perform all axial ΔV for the final vehicle retrieval mission with the ACPS, since RL-10 Cat I engines have no idle mode capability, the increase in N_2H_4 storage capacity from 800 lb to more than 1300 lb resulted in the selection of a large N_2H_4 bottle size to reduce the number required. A modification of the bottle used on the Transtage was utilized for both the initial and final vehicles. The initial vehicles use two bottles with a total capacity approximately 30% in excess of the estimated requirement. For the final vehicle a third bottle is added, which yields a 25% excess capability. A single 3.8 ft^3 helium bottle is adequate for both vehicles. A general system schematic for the hydrazine ACPS is presented in Section 2.2.4.2.

Interfaces — The Program 3 Tugs have the same general characteristics as the Program 1 and 2 Tugs previously described. In the initial Tug the payload is separated by actuation of pyro pin puller type latches. In the final Tug a square frame docking mechanism and two-position latches are phased in to permit payload retrieval.

A more detailed discussion of the Tug/Orbiter interface is presented in Section 2.5.3.

Kick Stage — The kick stage configuration used with the Program 3 Tugs for certain planetary missions is identical with the Program 1 kick stage shown in Figure 2-62.

2.4.3.3 Mass Properties. Weights for the initial Program 3 Tug are presented in Table 2-109 and weights for the final vehicle in Table 2-110. The weight statements are for synchronous equatorial missions, deployment for the initial vehicle and retrieval for the final vehicle. The configuration was sized for the final retrieval mission and is off-loaded for the initial deployment mission.

The maximum synchronous deployment capability for the initial vehicle is 5183 lb (2351 kg), which is 1683 lb (763.4 kg) over the 3500 lb (1588 kg) minimum requirement. The final vehicle has a maximum synchronous retrieval capability of 2514 lb (1140 kg), which exceeds the minimum requirement of 2200 lb (998 kg).

Weights, centers of gravity, and moment of inertia data for several flight conditions are presented in Table 2-111 for the initial vehicle and Table 2-112 for the final vehicle. Since propellants are dumped during orbiter powered flight, the longitudinal centers of gravity are within the orbiter limit for unpowered atmospheric flight.

2.4.3.4 Reliability. Redundancy was designed into the Program 3 Tug to allow attainment of a mission reliability of 0.97 for a baseline mission of 117 hours. The redundancy levels for each of the major subsystems and the resulting reliability are summarized in Table 2-113 for the initial vehicle and in Table 2-114 for the final vehicle. As indicated in these tables, all subsystems are essentially dual redundant. The exceptions are the data management subsystem, which is triply redundant, and the APS subsystem, which is fail/operational/fail-operational in several modes. Note that in Program 3I triply redundant IMUs are also used. This was due to the relatively low MTBFs associated with gimbaled IMUs. Program 3F utilizes strapdown IMUs, which are considered to be inherently more reliable than the gimbaled systems. The resulting reliabilities (without kick stage) are 0.973 for Program 3I and 0.971 for Program 3F. For kick stage missions, the Tug operates for only 24 hours. The reliability for Tugs 3I and 3F for this short mission is >0.99. When the reliability of the kick stage is coupled with Tug reliability, the overall kick stage mission is >0.97 for both Programs 3I and 3F. (The kick stage package is a non-complex system similar to that used on the Pioneer G mission.)

2.4.3.5 Performance. Figure 2-93 shows the payload weight capability for the Program 3 Tugs for each applicable mission mode. The curves are all based on a due-east Shuttle launch, except for the deployment curve labeled polar. The Shuttle is assumed to have a payload weight capability of 65,000 lb (29,492 kg) due east and 36,000 lb (16,334 kg) polar, to the nominal 160 n.mi. (296 km) Tug staging orbit. The curves are based on a six-burn flight profile such as the synchronous equatorial deployment or sortie mission, except for the expendable Tug curve, which is based on three burns. The performance of both the initial and final vehicles exceeds the requirements.

Table 2-109. Program 3I Baseline Tug Weight Summary (Synch. Eq. Max. Payload Deployment Mission)

	LB	KG
Structures	(2375)	(1077.3)
Body Structure	1216	551.6
Fuel Tank & Supports	535	242.7
Oxidizer Tank & Supports	354	160.6
Thrust Structure	24	10.9
Equipment Mounting Structures	90	40.8
Meteoroid Structure	--	----
Interface for P/L & Shuttle	123	55.7
Umbilicals	33	15.0
Propulsion	(1376)	(624.2)
Main Engine (ME) Assembly	293	132.9
ME Actuation & Support	82	37.2
ACPS & Support	392	177.8
Pressurization	--	---
Fill, Vent & Drain (Incl. Feed)	531	240.9
Purge System	20	9.1
Propellant Management	58	26.3
Thermal Control	(407)	(184.6)
Fuel Tank Insulation	85	38.6
Oxidizer Tank Insulation	40	18.1
Purge System	200	90.7
Radiators (Incl. Fluid Loop, Heaters, Coatings)	82	37.2
Avionics	(1171)	(531.1)
Rendezvous & Docking	--	---
Data Management	165	74.8
Flight Controls	50	22.7
Guidance & Navigation	135	61.2
Guidance Update	51	23.1
Power	402	182.3
Power Conversion & Distribution	266	120.7
Instrumentation	60	27.2
Communication	42	19.1
STAGE DRY WEIGHT	5329	2417.2
Contingency	533	241.8
TOTAL DRY WEIGHT	5862	2659.0
NON-USABLE FLUIDS	(781)	(354.3)
Trapped Propellants - Main	98	44.5
Trapped Propellants - ACPS	19	8.6
Trapped Gases	318	144.2
Trapped Helium	4	1.8
Propellant Leakage	--	---
Propellant Reserves - Main	262	118.9
Propellant Reserves - ACPS	73	33.1
Propellant Utilization	--	---
Trapped Water	7	3.2
BURNOUT WEIGHT	6643	3013.3

	LB	KG
NON-IMPULSIVE EXPENDABLES	(477)	(216.4)
ME Chilldown	144	65.3
ME Leakage	--	---
ME Shutdown	144	51.7
Pressurants - Main	--	---
Pressurants - ACPS	--	---
Fuel Cell Reactants	73	33.1
Fuel Line Chilldown	16	7.3
Gas Generator	--	---
Thermal Control Fluids	--	---
Boiloff Vented	130	59.0
PROPELLANTS	(50547)	(22928.1)
*Main Engine	(49820)	(22598.3)
Main Propellant - Fuel	8303	3766.2
Main Propellant - Oxidizer	41517	18832.1
Attitude Control Propellants	727	329.8
*FIRST IGNITION WEIGHT	57667	26157.8
SHUTTLE INTERFACE ACCOMMODATIONS	(2150)	(975.2)
Adapter Structure		
Supports	567	257.2
Attachment Fittings	104	47.2
Deployment Mechanism	206	93.4
Propellant Lines, Umbilicals, Tankage Fill, Drain, Dump	178	80.7
Dump Pressurization System	625	283.5
Avionics Interface		
Shuttle/Payload In Bay	160	73.6
Mission Specialist Station	310	140.6
Bay Purge (In Dump Pressurization)		
Gases	--	---
Bottles	--	---
Payload Auxiliary Support	--	---
STAGE PAYLOAD (MAX. CAPABILITY)	(5183)	(2351.0)
Payload	5183	2351.0
Payload Adapter (Part of Payload)	---	---
AUXILIARY STAGE	(---)	(---)
TOTAL WEIGHT IN SHUTTLE	65000	29484.0

$$*\text{Mass Fraction} = \frac{\text{Main Engine Propellants}}{\text{First Ignition Weight}} = 0.864$$

Table 2-110. Program 3F Baseline Tug Weight Summary (Synch. Eq. Max. Payload Retrieval Mission)

	LB	KG
Structures	(2452)	(1112.3)
Body Structure	1216	551.6
Fuel Tank & Supports	535	242.7
Oxidizer Tank & Supports	354	160.6
Thrust Structure	24	10.9
Equipment Mounting Structures	90	40.8
Meteoroid Structure	--	---
Interface for P/L & Shuttle	200	90.7
Umbilicals	33	15.0
Propulsion	(1588)	(720.3)
Main Engine (ME) Assembly	293	132.9
ME Actuation & Support	88	39.9
ACPS & Support	598	271.2
Pressurization	--	---
Fill, Vent & Drain (Incl. Feed)	531	240.9
Purge System	20	9.1
Propellant Management	58	26.3
Thermal Control	(411)	(186.4)
Fuel Tank Insulation	85	38.6
Oxidizer Tank Insulation	40	18.1
Purge System	200	90.7
Radiators (Incl. Fluid Loop, Heaters, Coatings)	86	39.0
Avionics	(984)	(446.3)
Rendezvous & Docking	60	27.2
Data Management	165	74.8
Flight Controls	50	22.7
Guidance & Navigation	30	13.6
Guidance Update	51	23.1
Power	216	98.0
Power Conversion & Distribution	266	120.7
Instrumentation	60	27.2
Communication	86	39.0
STAGE DRY WEIGHT	5435	2465.3
Contingency	543	246.3
TOTAL DRY WEIGHT	5978	2711.6
NON-USABLE FLUIDS	(834)	(378.3)
Trapped Propellants - Main	98	44.5
Trapped Propellants - ACPS	32	14.5
Trapped Gases	318	144.2
Trapped Helium	8	3.6
Propellant Leakage	--	---
Propellant Reserves - Main	252	114.3
Propellant Reserves - ACPS	119	54.0
Propellant Utilization	--	---
Trapped Water	7	3.2
BURNOUT WEIGHT	6812	3089.9

	LB	KG
NON-IMPULSIVE EXPENDABLES	(481)	(218.2)
ME Chilldown	144	65.3
ME Leakage	--	---
ME Shutdown	114	51.7
Pressurants - Main	--	---
Pressurants - ACPS	--	---
Fuel Cell Reactants	77	34.9
Fuel Line Chilldown	16	7.3
Gas Generator	--	---
Thermal Control Fluids	--	---
Boiloff Vented	130	59.0
PROPELLANTS	(55557)	(25200.7)
*Main Engine	(54364)	(24659.5)
Main Propellant - Fuel	8494	3852.9
Main Propellant - Oxidizer	45870	20806.6
Attitude Control Propellants	1193	541.2
*FIRST IGNITION WEIGHT	62850	28508.8
SHUTTLE INTERFACE ACCOMMODATIONS	(2150)	(975.2)
Adpater Structure Supports	567	257.2
Attachment Fittings	104	47.2
Deployment Mechanism	206	93.4
Propellant Lines, Umbilicals, Tankage Fill, Drain, Dump	178	80.7
Dump Pressurization System	625	283.5
Avionics Interface Shuttle/Payload in Bay	160	72.6
Mission Specialist Station	310	140.6
Bay Purge (In Dump Pressurization) Gases	--	---
Bottles	--	---
Payload Auxiliary Support	--	---
**STAGE PAYLOAD (MAX. CAPABILITY)	(2514)	(1140.4)
Payload	2514	1140.4
Payload Adapter (Part of Payload)	---	---
AUXILIARY STAGE	(---)	(---)
TOTAL WEIGHT IN SHUTTLE	65000	29484.0

$$*\text{Mass Fraction} = \frac{\text{Main Engine Propellants}}{\text{First Ignition Weight}} = 0.865$$

** Non-add (Retrieval payload)

Table 2-111. Program 3I Baseline Tug Centers of Gravity and Moments of Inertia

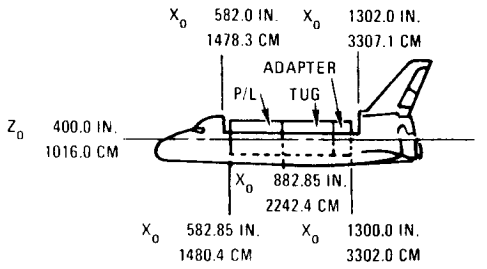

NOTE: RIGHT SIDE LOOKING FORWARD IS Y+

CONDITION	WEIGHT LB (KG) W	CENTER OF GRAVITY SHUTTLE STATIONS INCH (CM) X	Y	Z	MOMENT OF INERTIA SLUG-FT^2 (KG-METER^2) I_{XX}	I_{YY}	I_{ZZ}
WITHOUT PAYLOAD:							
VEHICLE FULL OF PROPELLANT	64355	1129.8	1.2	400.4	10498	125781	124890
INSIDE SHUTTLE PAYLOAD BAY	(29191)	(2860.7)	(3.0)	(1017.0)	(14023)	(168021)	(166831)
VEHICLE FULL OF PROPELLANT	62205	1130.2	1.0	400.4	7757	97053	96375
SEPARATED FROM SHUTTLE	(28216)	(2870.7)	(2.5)	(1017.0)	(10362)	(129645)	(128740)
VEHICLE EMPTY OF PROPELLANTS	8795	1080.0	3.8	402.9	9782	51442	50170
INSIDE SHUTTLE	(3989)	(2743.2)	(9.7)	(1023.4)	(13067)	(68717)	(67018)
WITH 3500 LB (1578.6 KG) PAYLOAD:							
VEHICLE FULL OF PROPELLANT	64355	1110.4	1.2	400.4	13558	240305	239414
INSIDE SHUTTLE PAYLOAD BAY	(29191)	(2820.4)	(3.0)	(1017.0)	(18111)	(321004)	(319814)
VEHICLE FULL OF PROPELLANT	62205	1110.0	1.0	400.1	10816	211590	210912
SEPARATED FROM SHUTTLE	(28216)	(2819.4)	(2.5)	(1016.3)	(14448)	(282646)	(281740)
VEHICLE EMPTY OF PROPELLANTS	12293	981.2	2.7	402.1	12851	125702	12433
INSIDE SHUTTLE	(5576)	(2192.2)	(6.9)	(1021.3)	(17171)	(165214)	(163518)

Table 2-112. Program 3F Baseline Tug Centers of Gravity and Moments of Inertia

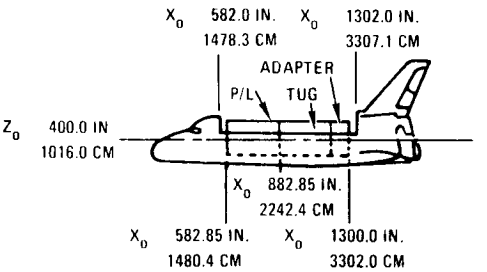

NOTE: RIGHT SIDE LOOKING FORWARD IS Y+

CONDITION	WEIGHT LB (KG) W	CENTER OF GRAVITY SHUTTLE STATIONS INCH (CM) X	Y	Z	MOMENT OF INERTIA SLUG-FT^2 (KG-METER^2) I_{XX}	I_{YY}	I_{ZZ}
WITHOUT PAYLOAD:							
VEHICLE FULL OF PROPELLANT	65000	1128.8	0.5	400.4	11155	134900	134593
INSIDE SHUTTLE PAYLOAD BAY	(29184)	(2867.2)	(1.3)	(1017.0)	(15124)	(182900)	(182484)
VEHICLE FULL OF PROPELLANT	62850	1129.1	0.3	400.1	8408	106180	106084
SEPARATED FROM SHUTTLE	(28509)	(2867.9)	(0.8)	(1016.3)	(11400)	(143961)	(143831)
VEHICLE EMPTY OF PROPELLANTS	8962	1075.0	2.0	402.5	9948	59225	58298
INSIDE SHUTTLE	(4065)	(2730.5)	(5.1)	(1022.4)	(13188)	(80298)	(79012)
WITH 3500 LB (1578.6 KG) PAYLOAD:							
VEHICLE FULL OF PROPELLANT	65000	1109.5	0.5	400.4	14214	219230	248924
INSIDE SHUTTLE PAYLOAD BAY	(29484)	(2818.1)	(1.3)	(1017.0)	(19272)	(337911)	(337496)
VEHICLE FULL OF PROPELLANT	62850	1109.1	0.5	400.1	11108	220506	220410
SEPARATED FROM SHUTTLE	(28500)	(2817.1)	(0.8)	(1016.3)	(15549)	(298966)	(298836)
VEHICLE EMPTY OF PROPELLANTS	12462	978.9	1.5	401.8	13013	129919	129021
INSIDE SHUTTLE	(5653)	(2486.4)	(3.8)	(1020.6)	(17643)	(176187)	(171929)

Table 2-113. Program 3 Initial Redundancy Summary

SUBSYSTEM/COMPONENT	REDUNDANCY LEVEL	Δ WEIGHT/LB
DATA MANAGEMENT		
COMPUTER	TRIPLE	60
I/O CONTROLLER	TRIPLE	8
GUIDANCE & NAVIGATION		
INERTIAL MEASUREMENT UNIT (GIMBALED)	TRIPLE	90
GUIDANCE UPDATE		
HORIZON SENSOR	TWO OUT OF FOUR	14
ELECTRICAL POWER		
FUEL CELL	DUAL	128
COMMUNICATIONS		
ANTENNAS	DUAL	*
COMMAND DECODER	DUAL	*
RECEIVER/TRANSMITTER	DUAL	*
MAIN ENGINE SUPPORT		
VENT VALVES	DUAL	*
FILL & DRAIN	DUAL	*
ZERO G VENT SUBSYSTEM	DUAL	20
ATTITUDE CONTROL PROPULSION		
ENGINE MODULES	THREE OUT OF FOUR	19
ACPS SUPPORT	DUAL/QUAD	70
PREDICTED RELIABILITY (117 HR. BASELINE MISSION) = 0.9730		409

* INCLUDED IN SAFETY WEIGHTS

Table 2-114. Program 3 Final Redundancy Summary

SUBSYSTEM/COMPONENT	REDUNDANCY LEVEL	Δ WEIGHT/LB
DATA MANAGEMENT		
COMPUTER	TRIPLE	60
I/O CONTROLLER	TRIPLE	8
GUIDANCE & NAVIGATION		
INERTIAL MEASUREMENT UNIT (STRAPDOWN)	DUAL	15
GUIDANCE UPDATE		
HORIZON SENSOR HEAD	TWO OUT OF FOUR	14
ELECTRICAL POWER		
FUEL CELL	DUAL	35
COMMUNICATIONS		
ANTENNAS	DUAL	*
COMMAND DECODER	DUAL	*
RECEIVER/TRANSMITTER	DUAL	*
MAIN ENGINE SUPPORT		
VENT VALVES	DUAL	*
FILL & DRAIN VALVES	DUAL	*
ZERO G VENT SUBSYSTEM	DUAL	20
ATTITUDE CONTROL PROPULSION		
ENGINE MODULES	THREE OUT OF FOUR	19
ACPS SUPPORT	DUAL/QUAD	70
PREDICTED RELIABILITY (117 HR. BASELINE MISSION) = 0.9710		241

* INCLUDED IN SAFETY WEIGHTS

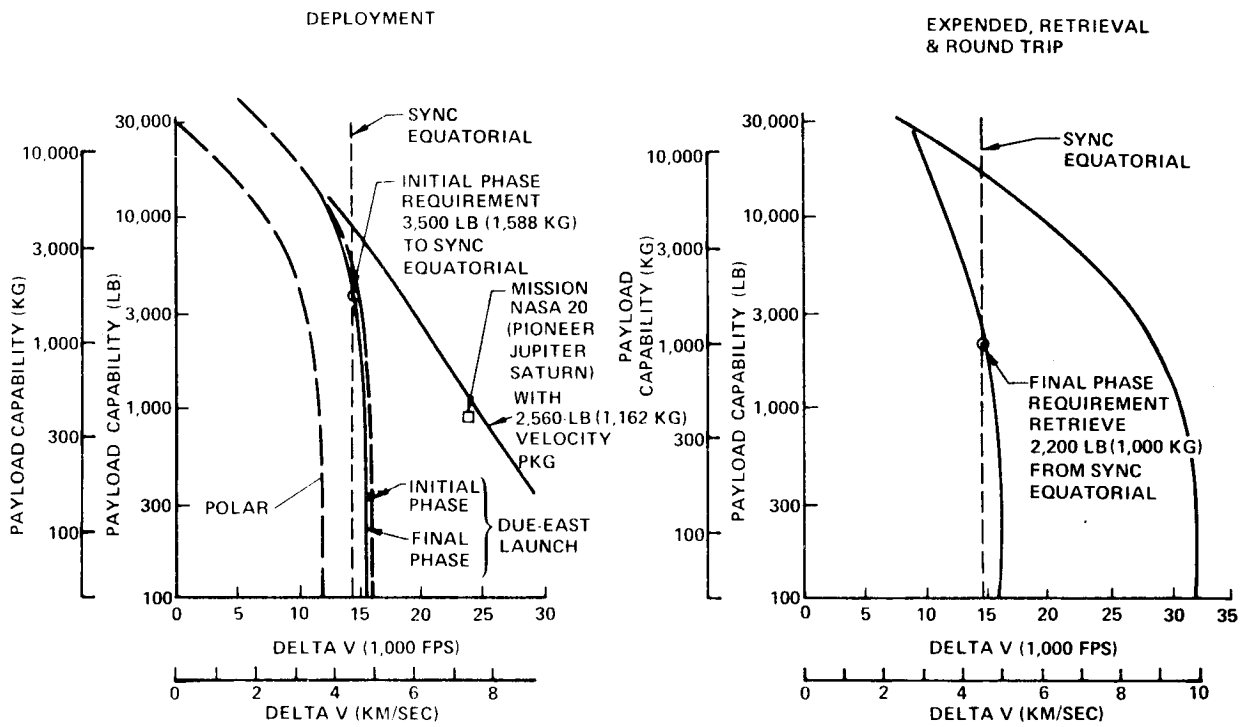

Figure 2-93. Program 3 Tug Performance Capability, Payload Capability Versus Delta Velocity

For illustration, planetary missions that require a velocity package and an extended Tug, respectively, appear on the graphs. All of the missions in the mission model can be done by this Tug, in one of the flight modes shown on the chart.

The synchronous equatorial mission performance is summarized in Table 2-115. The sensitivity of payload weight to burnout weight and specific impulse is also shown. These derivatives are based on a fixed-size Tug.

2.4.3.6 Mission Accomplishment. Tug flights for deployment, retrieval, and round trip missions are identified for each year and for the total model in Table 2-116. Tug flights are subdivided into deployment flight modes: deployment of 1, 2, or 3 payloads during a single flight of a reusable Tug; deployment of a single (planetary) payload with an expended velocity package and a reusable Tug flight; and deployment of a single, planetary payload by an expended Tug. Only a single retrieval flight mode is possible, no payloads up/one payload down. Two types of round trip flight modes are used with Program 3: one payload up/one payload down and two payloads up/one payload down.

Table 2-115. Program 3 Tug Synchronous Equatorial Mission Performance

	DEPLOY		RETRIEVE		ROUND TRIP	
	INITIAL	FINAL	INITIAL	FINAL	INITIAL	FINAL
PAYLOAD, LB (KG)	5183 (2351)	4668 (2117)	–	2514 (1140)	1820 (826)	1502 (681)
$\frac{\partial \text{(PAYLOAD)}}{\partial \text{(BURNOUT WT)}}$	-2.7	-2.7	–	-1.6	-1.0	-1.0
$\frac{\partial \text{(PAYLOAD)}}{\partial (I_{sp})}$	91	92	–	61	37	37

Table 2-116. Program 3 Tug Mission Model Flight Summary

TUG FLIGHT MODE	NUMBER OF TUG FLIGHTS DURING YEAR											TOTAL
	80	81	82	83	84	85	86	87	88	89	90	
DEPLOYMENT												
1 PAYLOAD WITH TUG RETURN	3	9	10	13	11	8	7	11	7	10	11	100
2 PAYLOADS WITH TUG RETURN	0	4	6	14	1	4	1	5	4	5	1	45
3 PAYLOADS WITH TUG RETURN	0	2	0	2	2	1	1	1	1	2	2	14
TUG RETURN + VEL. PACKAGE*	0	0	2	0	2	0	1	2	0	0	0	7
EXPENDED TUG	0	0	0	0	2	0	3	1	0	3	1	10
TOTAL	3	15	18	29	18	13	13	20	12	20	15	176
RETRIEVAL (0 PAYLOAD UP – 1 PAYLOAD DN)	0	0	0	0	11	9	12	9	9	8	12	70
ROUND TRIP												
1 PAYLOAD UP/1 PAYLOAD DN	0	0	0	1	14	14	16	10	16	10	14	95
2 PAYLOADS UP/1 PAYLOAD DN	0	0	0	0	0	2	0	2	0	2	0	6
TOTAL	0	0	0	1	14	16	16	12	16	12	14	101
TOTAL TUG/SHUTTLE FLIGHTS	3	15	18	30	43	38	41	41	37	40	41	347

* 2,560-LB (1161 KG) VELOCITY PACKAGE (EXPENDED)

Over the total mission model, 176 Tug flights are used to deploy payloads; 100 of these are single payload flights by a reusable Tug, on 45 Tug flights two payloads are deployed, and there are 14 flights where three payloads are deployed on a single reusable Tug flight. Seven flights are accomplished with velocity packages, and 10 expended Tug flights are required. There are 70 retrieval missions and 101 round trip Tug flights. Ninety-five of the round trips carry one payload up/one payload down, and six round trip flights carry two payloads up/one payload down.

The entire mission model (356 deployment payloads, 171 retrieval payloads) is accomplished using 347 Tug and Shuttle flights. Since no Tug-to-Tug or velocity package-to-Tug on-orbit assemblies are required, the number of Tug and Shuttle flights is identical. The flight summary reflects the Shuttle availability for Tug flights of three in 1980 and a maximum of 21 during 1981.

Tables 2-117 and 2-118 show the mission accomplishment capability of the Program 3 Tug for NASA and DOD payloads, respectively. These tables show Tug traffic by mission destination (synchronous equatorial, other ETR launch orbits, and planetary) and launch site (ETR and WTR), and payloads traffic by launch site and deployment/retrieval. Traffic by the year and for the total model is shown.

Table 2-117. Program 3 Tug Mission Accomplishment of NASA Missions

ITEM	YEAR											TOTAL
	80	81	82	83	84	85	86	87	88	89	90	
SYNC. EQ. TUG SHUTTLE/FLIGHTS	3	7	6	10	13	18	12	13	12	13	13	120
ETR OTHER ORBIT FLIGHTS	0	2	1	1	2	1	3	2	2	1	4	19
PLANETARY TUG SHUTTLE/FLIGHTS	0	0	2	0	6	0	4	3	0	5	1	21
ETR TUG/SHUTTLE FLIGHTS	3	9	9	11	21	19	19	18	14	19	18	160
WTR TUG/SHUTTLE FLIGHTS	–	–	–	4	4	6	4	6	4	5	4	37
TOTAL TUG/SHUTTLE FLIGHTS	3	9	9	15	25	25	23	24	18	24	22	197
VELOCITY PKG.*EXPENDED } ETR	0	0	2	0	2	0	1	0	0	0	0	7
TUGS EXPENDED } ONLY	0	0	0	0	2	0	3	1	0	3	1	10
ETR P/L DEPLOYED	3	16	12	15	15	14	14	20	14	16	13	152
WTR P/L DEPLOYED	–	–	–	8	2	8	2	4	2	10	2	38
TOTAL P/L DEPLOYED	3	16	12	23	17	22	16	24	16	26	15	190
ETR P/L RETRIEVED	–	–	–	–	10	11	9	4	6	7	10	57
WTR P/L RETRIEVED	–	–	–	–	4	6	4	6	4	2	4	30
TOTAL P/L RETRIEVED	–	–	–	–	14	17	13	10	10	9	14	87
ETR P/L DEPLOYED AND RETRIEVED	3	16	12	15	25	25	23	24	20	23	23	209
WTR P/L DEPLOYED AND RETRIEVED	–	–	–	8	6	14	6	10	6	12	6	68
TOTAL P/L DEPLOYED AND RETRIEVED	3	16	12	23	31	39	29	34	26	35	29	277

* 2560 LB (1161 KG) SLOW BURN GRAIN, μ = 0.9, SPIN STABILIZED

Table 2-118. Program 3 Tug Mission Accomplishment of DOD Missions

ITEM	YEAR 80	81	82	83	84	85	86	87	88	89	90	TOTAL
SYNC. EQ. TUG SHUTTLE/FLIGHTS	0	3	3	4	9	6	5	9	7	8	11	65
ETR OTHER ORBIT FLIGHTS	0	3	6	7	8	5	8	6	10	4	7	64
PLANETARY TUG SHUTTLE/FLIGHTS	–	–	–	–	–	–	–	–	–	–	–	–
ETR TUG/SHUTTLE FLIGHTS	0	6	9	11	17	11	13	15	17	12	18	129
WTR TUG/SHUTTLE FLIGHTS	–	–	–	4	1	2	5	2	2	4	1	21
TOTAL TUG/SHUTTLE FLIGHTS	0	6	9	15	18	13	18	17	19	16	19	150
VELOCITY PKG. EXPENDED } ETR	–	–	–	–	–	–	–	–	–	–	–	–
TUGS EXPENDED } ONLY	–	–	–	–	–	–	–	–	–	–	–	–
ETR P/L DEPLOYED	0	7	12	17	17	12	11	13	16	11	16	132
WTR P/L DEPLOYED	–	–	–	8	3	3	5	4	2	6	3	34
TOTAL P/L DEPLOYED	0	7	12	25	20	15	16	17	18	17	19	166
ETR P/L RETRIEVED	–	–	–	0	11	7	11	10	13	8	12	72
WTR P/L RETRIEVED	–	–	–	1	0	1	4	1	2	3	0	12
TOTAL P/L RETRIEVED	–	–	–	1	11	8	15	11	15	11	12	84
ETR P/L DEPLOYED AND RETRIEVED	0	7	12	17	28	19	22	23	29	19	28	204
WTR P/L DEPLOYED AND RETRIEVED	–	–	–	9	3	4	9	5	4	9	3	46
TOTAL P/L DEPLOYED AND RETRIEVED	0	7	12	26	31	23	31	28	33	28	31	250

2.4.3.7 Operations. Operations, both ground and flight, were a special emphasis area and are summarized in Section 2.5.2 and discussed in detail in Volume 6 of Reference 6. This section presents the major operational characteristics that vary between programs.

Flight Operations — Flight operations is a significant area since it has been a major operational cost driver in current space programs. To achieve the goal of low operations cost for the Space Transportation System, the Tug flight operations costs must be reduced.

Flight operations is concerned with those activities and procedures involved in accomplishing the actual Tug flight. With respect to cost it includes the flight monitor and control accomplished from the ground or the Orbiter, necessary preflight mission planning and post-flight evaluation, and all required software both ground and airborne.

An autonomy level trade, summarized in Tables 2-119 and 2-120, indicated that the selected level I autonomy was the lowest cost approach both from a development and operations cost standpoint.

The flight operations cost for Program 3 are summarized in Tables 2-121 and 2-122. The DDT&E cost for flight support software is the development cost for the ground and

Table 2-119. Program 3I Cost of Autonomy

AUTONOMY LEVEL CHANGES	ΔWEIGHT LB (KG)	ΔCOST ($M)			
		DDT&E	PRODUCTION	OPERATIONS	TOTAL
LEVEL I TO LEVEL II	+23 (10.4)	+1.6	+0.4	0.0	+2.0
LEVEL I TO LEVEL III	-3 (1.4)	+2.1	-1.5	+1.8*	+2.4*
LEVEL I TO LEVEL IV	-3 (1.4)	+3.4	-1.5	+3.6*	+5.5*

*NETWORK COSTS ARE IN ADDITION TO THESE COSTS.

Table 2-120. Program 3F Cost of Autonomy

AUTONOMY LEVEL CHANGES	ΔWEIGHT LB (KG)	ΔCOST ($M)			
		DDT&E	PRODUCTION	OPERATIONS	TOTAL
LEVEL II (INTERIM) TO LEVEL II (FINAL)	0	0.0	0.0	0.0	0.0
LEVEL III (INTERIM) TO LEVEL IV (FINAL)	+35 (15.9)	+8.0	+4.2	+3.5*	+15.7*
LEVEL IV (INTERIM) TO LEVEL IV (FINAL)	+35 (15.9)	8.0	+4.2	+5.5*	+17.7*

*NETWORK COSTS ARE IN ADDITION TO THESE COSTS.

Table 2-121. Program 3I Flight Operations Cost Summary

	DDT&E		OPERATIONS		
	COST ($M)	EQUIVALENT MAN-YR.	COST ($M)	EQUIVALENT MAN-YR.	
NASA					
MISSION PLANNING			1.6	40	$613,000/FLT OR ~ 138 MEN/YR.
FLIGHT CONTROL			8.9	220	
FLIGHT EVALUATION			0.3	8	
FLIGHT SUPPORT SOFTWARE	18.8	470	11.3	283	
TOTAL	18.8	470	22.1	553	
DOD					
MISSION PLANNING			1.4	35	$706,000/FLT OR ~ 133 MEN/YR.
FLIGHT CONTROL			8.7	218	
FLIGHT EVALUATION			0.2	5	
FLIGHT SUPPORT SOFTWARE			10.9	272	
TOTAL			21.2	530	

Table 2-122. Program 3F Flight Operations Cost Summary

	DDT&E		OPERATIONS		
	COST ($M)	EQUIVALENT MAN-YR.	COST ($M)	EQUIVALENT MAN-YR.	
NASA					
MISSION PLANNING			5.7	142	$237,000/FLT. OR ~136 MEN/YR.
FLIGHT CONTROL			14.0	350	
FLIGHT EVALUATION			1.3	33	
FLIGHT SUPPORT SOFTWARE	1.9	48	17.2	430	
TOTAL	1.9	48	38.2	955	
DOD					
MISSION PLANNING			4.4	110	$198,000/FLT. OR ~85 MEN/YR.
FLIGHT CONTROL			8.9	222	
FLIGHT EVALUATION			1.0	25	
FLIGHT SUPPORT SOFTWARE			9.5	238	
TOTAL			23.8	595	

airborne (Tug and Orbiter) software for the synchronous equatorial mission. The Tug software developed during DDT&E consists of 10 modules with a total of 46,400 words for the initial vehicle and three additional modules with a total of 7900 words for the final vehicle. The software costs in operations consist of the changes required for nonsynchronous missions (6200 words per mission) and the changes required for each flight (550 words). DOD must develop 10 mission packages during the initial program and no mission packages during the final program. NASA must develop 10 mission packages during the initial program and five mission packages during the final program. The number of flight packages required, based on the Program 3 mission capture data, is 36 (initial) and 161 (final) for NASA and 30 (initial) and 120 (final) for DOD.

The flight operations cost per flight for the final vehicle is significantly less than for the initial vehicle since most of the mission packages are developed for the initial vehicle.

Ground Operations — Ground operations encompass those Tug vehicle-related tasks accomplished after Orbiter landing to make the Tug ready for liftoff again. Ground operations analyses of the Program 3 Tugs indicated a turnaround cycle of 265.5 working hours for the initial NASA Tug and 271 hours for the final NASA Tug. DOD Tugs using secure communications require an additional 11 working hours. As launch rates increase, particularly at KSC, two, and sometimes three Tugs at a time will be undergoing different phases of the ground turnaround cycle concurrently. To accommodate these concurrent operations, the ground turnaround crew will be augmented with additional direct support, engineering, and administrative personnel, resulting in the crew sizes shown in Table 2-123. Launch rates at WTR never increase to the point where crew augmentation is required.

Minimum active fleet size is also a direct function of launch rates. In an ongoing mature operating system, a single Tug can make a complete launch-flight-ground turnaround-launch cycle in approximately 24 calendar days during Program 3I and 28 calendar days during Program 3F, or 12 launches per year maximum. Thus, the minimum active fleet size for each launch site is established as shown in Table 2-123. At KSC, there is also a total of 10 expendable missions as shown, which makes a total requirement of 15 Tugs. In addition, attrition losses at 1% of the total missions must be accounted for. This adds three additional vehicles, resulting in a total fleet buy of 18 Tugs for this program.

Table 2-123. Program 3 Tug Crew Size and Minimum Active Fleet Size Versus Annual Launch Rate

		CALENDAR YEAR											TOTAL
		80	81	82	83	84	85	86	87	88	89	90	
TUG FLIGHTS	KSC*	3	15	17	22	38	30	32	33	31	31	36	289
	WTR				8	5	8	9	8	6	9	5	58
	TOTAL	3	15	18	30	43	38	41	41	37	40	41	347
	*EXPENDABLE FLIGHTS					(2)		(3)	(1)		(3)	(1)	(10)
GROUND TURN-AROUND CREW	KSC	107	107	113	113	139	129	129	129	129	129	129	
	WTR				63	63	63	63	63	63	63	63	
	TOTAL	107	107	113	176	202	192	192	192	192	192	192	
ACTIVE FLEET REQMT.	MINIMUM ACTIVE FLEET												
	KSC	1	2	2	2	4	3	3	3	3	3	3	4
	KSC EXP.					2		3	1		3	1	10
	WTR				1	1	1	2	1	1	1	1	1
	SUBTOTAL	1	2	2	3	7	4	7	5	4	7	5	15
	ATTRITION												3
	TOTAL BUY												18

Once total fleet buy requirements have been established at 18 Tugs, fleet delivery requirements, disposition, and utilization can be examined as shown in Table 2-124. Tugs are delivered to KSC unless noted with WTR in the Tug Number column. Need dates are initially based on site activation and/or test flight requirements for the first two vehicles at KSC and the first vehicle at WTR. After that, need dates are derived from delivery capability on a reasonable production schedule with Tug completions set at six-month centers for Program 3I Tugs, and then four-month centers for Program 3F.

As vehicles are delivered to the launch sites they are phased into the active fleet to obtain relatively even usage on all vehicles as indicated by the total flights per Tug shown in the last column. Expendable Tugs thus accumulate a number of flights before being expended in the years indicated. For the utilization plan shown here for Program 3, Tug 3I is delivered to KSC, flies 17 missions, and is then put in storage two years before being used on an expendable mission in 1986. The initial Tugs, 1I through 4I are used for the early expendable missions since they have adequate capability and this precludes the requirement to expend final version Tugs with little or no usage.

Table 2-124. Program 3 Tug Fleet Requirement and Utilization

VEHICLE SCHEDULING				CALENDAR YEAR											TOTAL FLIGHTS
TUG NO.	NEED DATE	DELIVERY DATE	DISPOSITION	80	81	82	83	84	85	86	87	88	89	90	
1I	SEP. 78	SEP. 78	EXPENDED	1	4	5	8	1*							19
2I	JAN. 79	JAN. 79	EXPENDED	1	4	5	7	1*							18
3I	JUN. 80	JUN. 80	EXPENDED	1	4	5	7	S	S	1*					18
4I (WTR83)	DEC. 80	DEC. 80	EXPENDED		3	3	8 WTR	S	S	1*					15
5F	JUN. 82	JAN. 82	EXPENDED			→		7	7	5*					19
6F	SEP. 82	AUG. 82	EXPENDED					7	6	5	2*				20
7F WTR	DEC. 82	DEC. 82	EXPENDED					5	3	4	2	1	4*		19
8F	APR. 83	APR. 83	EXPENDED					6	3	2	3	3	3*		20
9F	AUG. 83	AUG. 83	EXPENDED					5	3	3	4	4	1*		20
10F	DEC. 83	DEC. 83	EXPENDED					5	3	2	3	3	1	3*	20
11F	APR. 84	APR. 84	INVENTORY					4	3	2	3	3	2	4	21
12F	AUG. 84	AUG. 84	INVENTORY					4	2	2	3	2	4	3	20
13F WTR	DEC. 84	DEC. 84	INVENTORY						5	3	3	3	3	1	18
14F	APR. 85	APR. 85	INVENTORY						2	3	4	4	3	6	22
15F	AUG. 85	AUG. 85	INVENTORY						1	3	3	4	5	6	22
16F	DEC. 85	DEC. 85	INVENTORY							2	4	4	4	7	21
17F WTR	APR. 86	APR. 86	INVENTORY							2	3	2	6	4	17
18F	AUG. 86	AUG. 86	INVENTORY							1	4	4	4	7	20
TOTAL FLIGHTS				3	15	18	30	43	38	41	41	37	40	41	347
ACTIVE, FLEET				3	4	4	4	9(2E)	11	16(3E)	13(1E)	12	12(3E)	9(1E)	

* YEAR EXPENDED
→ TRANSFER LAUNCH SITE
S STORAGE

The maintenance facility proposed for Program 3 is existing Hangar J at KSC to eliminate the high development cost of an all-new facility. Hangar J has sufficient floor space to accommodate a two-bay Tug maintenance stand. The mezzanine area is adequate for administration and engineering offices. First floor area may also be used for adapter and main engine service areas. Level II shops are assumed to be common with Orbiter and for existing base facilities.

2.4.3.8 Program Plans. This section summarizes the test, manufacture, and facility plans for Program 3 Tug. The general approach is similar to that previously discussed for Programs 1 and 2. This section also shows the major activities, key dates, and the integrated schedule for the development, procurement, and operational phases of the program.

Ground and Flight Test Plans — Table 2-125 shows a summary of all major ground tests including test activity, test site, and test articles; test costs are also shown for each activity for procurement under both NASA and DOD guidelines. These costs are for laboratory, development, and qualification testing of all components and all major subsystem/system test articles. These costs include all test hardware, test personnel, test equipment, and test fixtures. The same number and type of test articles are used

Table 2-125. Program 3 Ground Test Program

TEST ACTIVITY	TEST SITE	TEST ARTICLE	TOTAL COST ($M) (INCLUDING TEST ARTICLE)		REMARKS
			NASA	DOD	
INTERIM CONFIGURATION					
COMPONENT TESTS	CONVAIR LABS	PREPRODUCTION	11.8	13.1	
PROPULSION TESTS	P&W (E-6)	ENG. FEED SYS.	3.5	4.0	
STRUCTURAL TESTS	MSFC (4550)	STV	4.5	4.5	ALTITUDE CHAMBER REQ. INCL. FUNCTIONAL TESTS
LIFE CYCLE TESTS	MSFC (4557)	FTV	5.9	5.9	
DEPLOYMENT ADAPTER	CONVAIR	PROTOTYPE	1.7	1.7	
ASTRIONICS SYSTEMS	CONVAIR, JSC, KSC	ASTRIONICS MODULE	5.4	5.5	
THERMAL VACUUM	LeRC (B2)	F-2 FLT. ART.	1.0	1.0	
REUSABILITY EVALUATION	LeRC (B2)	F-2 FLT. ART.		1.5	EXT. OF THERMAL-VACUUM
LAUNCH SITE VALIDATION	ETR	F-1 FLT. ART.	2.6	2.6	
	WTR	F-X FLT.ART.	2.6	2.6	
TOTAL GROUND TEST COST – INTERIM ($M)			39.0	42.4	
FINAL CONFIGURATION					
COMPONENT TESTS			3.6	3.6	
PROPULSION TESTS	P&W (E-6)		1.4	1.6	
LIFE CYCLE	MSFC (4557)	FTV	1.0	1.0	REVISED INSULATION TESTED
ASTRIONICS SYSTEMS	CONVAIR, JSC, KSC	ASTRIONICS MODULE	5.0	5.0	UPDATED ASTRIONICS
THERMAL VACUUM			1.0	0.1	ASTRIONICS MOD. ONLY FOR DOD
LAUNCH SITE REVALIDATION	ETR	F-1 FLT. ART.	0.6	0.6	
	WTR	F-X FLT. ART.	0.6	0.6	
TOTAL GROUND TEST COST – FINAL ($M)			13.2	12.5	
GRAND TOTAL GROUND TEST COST ($M)			52.2	54.9	

in both NASA and DOD programs. The significant differences for DOD are greater emphasis on formal demonstration of refurbishment/reuse for the interim configuration, and an astrionics module only test for the final configuration (for NASA, a thermal vacuum test is performed on a new vehicle since this maximizes mission accomplishment; for DOD a Tug is removed from service and retrofitted with the final configuration astrionics module after the module has been through thermal vacuum testing).

The objective of the flight test program is to show that the mission reliability goal of >0.97, Tug attrition goal of >0.99, and multi-mission/economics/reuse goals of the Tug program are attainable. Flight testing will demonstrate the validity of ground test environments, loads, and tests as well as imposing the effects of zero-g and other effects not satisfactorily demonstrated in ground testing. Each flight test mission will be divided into phases, during which various Space Tug operating modes are tested. The differences in NASA and DOD procurement approaches to flight test are summarized in Table 2-126. In the NASA approach, it appears to be cost effective, technically feasible, and relatively low risk to place operational payloads into low performance orbits on the initial Tug flights. The remaining vehicle performance is utilized for developmental flight testing into progressively higher risk operating regimes. Under the DOD fly-before-buy concept, performance and reusability must

Table 2-126. Program 3 Flight Test Program

NASA PROCUREMENT APPROACH	DOD PROCUREMENT APPROACH
INTERIM CONFIGURATION	

• NO "DEDICATED" FLIGHT TEST VEHICLE
• R&D INSTRUMENTATION OF FIRST FLIGHT VEHICLE
• OPERATIONAL MISSION ACCOMPLISHED WITH FIRST FLIGHT
• ENGINEERING DATA "PIGGYBACKED"
• ADDITIONAL FLIGHTS WITH R&D INSTRUMENTATION
	• TWO PROTOTYPE FLIGHT TEST VEHICLES REQUIRED
	  • DDT&E VEHICLE WITH R&D INSTRUMENTATION (F-2)
	  • OT&E VEHICLE – NO R&D INSTRUMENTATION (F-1)
	• FLIGHT TEST 1 (DDT&E FLT. USING F-1)
	• FLIGHT TEST 2 (IOT&E FLT. USING F-1)
	• FLIGHT TEST 3 (DDT&E FLT. USING F-2)
	⇩
	DSARC III (INTERIM CONFIG.)
	⇩
	• OT&E PROGRAM (OT&E FLT. USING F-1 & F-2)
	  • CONTINUED OPERATIONAL TEST & EVALUATION
	  • APPROX. 9-MO. PROGRAM (16 FLIGHTS)

FINAL CONFIGURATION	

• SAME APPROACH AS FOR INTERIM
  • PERFORM PAYLOAD RETRIEVAL FIRST MISSION WITH CONSERVATIVE ENVELOPE
	• ONE PROTOTYPE FLT. TEST VEHICLE REQUIRED
	• F-2 INTERIM FLT. TEST VEHICLE CONVERTED TO FINAL CONF.
	  • REPLACE ASTRIONICS MODULE
	  • REPLACE INSULATION
	  • MODIFY ENGINES
	• FLIGHT TEST 1 (DDT&E FLIGHT)
	  • DEMONSTRATES RETRIEVAL MODE
	• FLIGHT TEST 2 (IOT&E FLIGHT)
	⇩
	DSARC III (FINAL CONFIG.)
	• OT&E PROGRAM USING F-2 VEHICLE

be demonstrated prior to a production decision (DSARC III milestone); Initial Operational Test and Evaluation (IOT&E) should also be performed by the planned user agency prior to DSARC III. Two prototype flight test vehicles are required to satisfy these requirements — one with R&D instrumentation to support Development Test and Evaluation (DT&E), and one in operational configuration to support IOT&E. Following the OT&E flights, the two flight test vehicles would be refurbished/updated and released into the operational fleet inventory. The operational configuration is also used for the flight test program of the final configurations.

Manufacturing Plan — The manufacturing plan provides for the orderly development of tooling, fabrication of detail hardware, subassembly, and test and checkout of the test and flight hardware. The plan and assembly flow sequence are generally similar to those for Programs 1 and 2.

The manufacturing plan includes general manufacturing indentures required to achieve the progressive build-up from the component level. Based on proven tooling and manufacturing schedules, the structural test article would be available at 25 months, the dynamic test article at 27 months, and the first flight vehicle at 35 months after program go-ahead for the interim configuration. Tooling changes between interim and final configuration are relatively minor.

Test and Manufacturing Facilities — In concert with the low development cost approach of Program 3, emphasis is on existing and operating facilities for manufacturing and testing. No size, weight or material limitations exist that preclude the use of existing private or government-owned industrial facilities. For test facilities, the only question is the most cost effective use of them; important factors are the operating costs of competing facilities versus the cost of reactivating facilities that have been mothballed or are deactivated between the interim and final configuration.

Program Schedule — Figure 2-94 shows the summary program schedule for Program 3. The interim configuration shows go-ahead in September 1975, a 4-1/4 year development phase, and initial operational capability (IOC) at first flight in December 1979. The final configuration shows IOC in December 1983. There are two major ground test vehicles for the DDT&E phase of the interim configuration, i.e., the structural test vehicle (STV) for structural loads testing and the dynamic test vehicle (DTV) for life-cycle evaluations including cryogenic tanking tests. These tests will be ready to start testing by late 1977, and testing will be complete by late 1978/early 1979. Flight vehicles 1 and 2 (F-1 and F-2), the first production vehicles, are assembled in parallel with the structural testing program; however, these tests are complete prior to initiation of preflight testing. Any updates as a result of these tests would have to be accomplished on each of the vehicles prior to first flight.

The first production vehicle of the interim configuration (F-1) is delivered to the flight site some 15 months prior to first flight. During this period it will verify vehicle/facility functional compatibility, procedures, and operations required for the initial

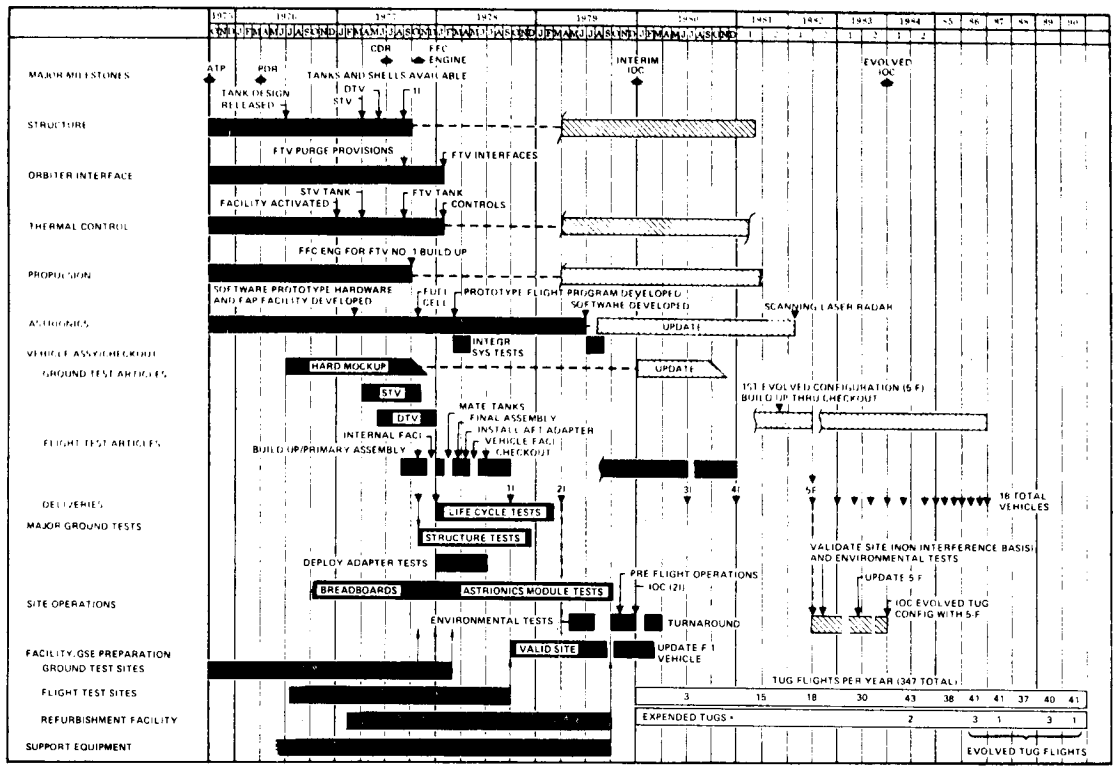

Figure 2-94. Program 3 Schedule, NASA Format

flight. It also serves as continued training for vehicle post-flight safing, refurbishment, and servicing operations. This Tug would then be updated as required and be ready to support flights subsequent to IOC. The second production vehicle is scheduled for the initial flight (IOC) but will undergo environmental testing in a thermal vacuum chamber prior to the delivery to the flight site. The initial post-flight turnaround activities are scheduled for three months to ensure adequate contingency time as may be needed for these activities. The combined turnaround and preflight activity will reduce to a nominal period of 3.2 weeks after approximately 12 flights.

The third and fourth interim configurations would be delivered six months and one year after IOC to support the Tug mission model including expended and attrition vehicle requirements. A total of four interim Tugs is required in the operational vehicle inventory to satisfy the Tug flight mission model from 1979 through 1983.

The first of the final configurations (5F) is completed in mid-1982, and after completing site validation and environmental testing, its IOC is December 1983. Fourteen final configurations are produced on approximate four-month centers.

In the DOD approach to procurement, the basic development of the interim configuration is the same as the DOD approach described under Program 1. The development

approach for the evolved configuration differs from that used in the DOD Program 2, inasmuch as one of the interim flight test vehicles is modified to the final Tug configuration and used in two development flights to demonstrate performance, reuse, and refurbishment of the evolved Tug. The full-scale development (FSD) program is completed in an interim and final phase, followed by a DSARC Review after each phase. The initial DSARC and subsequent production release would constrain initial fabrication of the interim Tug hardware. The latter DSARC need only constrain the start of vehicle primary assembly since the evolved subsystems do not impact vehicle assembly prior to this point. Eighteen Tugs are produced to meet the inventory requirements and satisfy the Tug flight model as shown. There are 13 full-capability production vehicles, two interim production vehicles, two interim flight test vehicles, and one interim pre-production type Tug built during DT&E to support OT&E flights and assure fulfillment of the Tug flight model prior to the full production capability in late 1983. These interim vehicles will be consumed on early expendable-Tug flight missions rather than be updated to full-Tug capability. The pacing elements of interim Tug development are the same as for Program 1, while for the evolved Tug they are similar but less critical than that described under Program 2.

2.4.3.9 Program Cost. Program 3 cost estimates were developed according to the NASA Work Breakdown Structure and the ground rules and assumptions previously stated in Section 2.4.1.9. A total program cost summary is shown in Table 2-127.

Table 2-127. Program 3 Initial/Final Tug Cost Summary

WORK BREAKDOWN STRUCTURE	NASA PROGRAM COSTS *				DOD PROGRAM COSTS *			
	DDT&E	INVESTMENT	OPERATIONS	LIFE CYCLE	DDT&E	INVESTMENT	OPERATIONS	LIFE CYCLE
01 PROJECT MANAGEMENT	6.5/1.6	1.4/3.4	0.1/0.6	8.0/5.6	8.1/2.0	1.0/3.2	0.1/0.6	9.2/5.8
02 SYSTEMS ENGINEERING & INTEGRATION	13.2/3.4	8.8/21.5	0.7/3.8	22.7/28.7	16.6/4.1	6.2/20.2	0.7/3.8	23.5/28.1
03 VEHICLE								
TUG	120.4/35.9	57.4/140.0	4.0/22.8	181.8/198.7	152.2/35.9	39.2/131.4	4.0/22.8	195.4/190.1
ORBITER INTERFACE	7.6/	4.4/3.5	0.7/3.1	12.7/6.6	7.6/	4.4/3.5	0.7/3.1	12.7/6.6
04 AUXILIARY STAGE	1.7/		0.7/1.7	2.4/1.7	1.7/		0.7/1.7	2.4/1.7
05 LOGISTICS	4.8/	1.8/0.7	3.6/7.4	10.2/8.1	4.9/	1.8/0.7	3.6/7.4	10.3/8.1
06 FACILITIES	0.6/	4.1/0.5	1.0/2.8	5.7/3.3	0.6/	4.1/0.5	1.0/2.8	5.7/3.3
07 GROUND SUPPORT EQUIPMENT	24.9/0.4	9.7/	1.0/2.8	35.6/3.2	24.9/0.4	9.7/	1.0/2.8	35.6/3.2
08 VEHICLE TEST	16.7/4.8			16.7/4.8	28.2/13.4			28.2/13.4
09 LAUNCH OPERATIONS – WTR			2.0/14.0	2.0/14.0			2.0/14.0	2.0/14.0
10 LAUNCH OPERATIONS – ETR			13.9/24.9	13.9/24.9			13.9/24.9	13.9/24.9
11 FLIGHT OPERATIONS – NASA	19.0/1.9		22.1/38.3	41.1/40.2			22.1/38.3	22.1/38.3
12 FLIGHT OPERATIONS – DOD			21.2/23.8	21.2/23.8	19.0/1.9		21.2/23.8	40.2/25.7
13 REFURBISHMENT & INTEGRATION – WTR			0.7/5.3	0.7/5.3			0.7/5.3	0.7/5.3
14 REFURBISHMENT & INTEGRATION – ETR			7.2/21.1	7.2/21.1			7.2/21.1	7.2/21.1
TOTAL	215.4/48.0	87.6/169.6	78.9/172.4	381.9/390.0	263.8/57.7	66.4/159.5	78.9/172.4	409.1/389.6

* MILLIONS OF 1973 DOLLARS.

Table 2-128. Program 3 Tug Vehicle DDT&E Cost

WBS ELEMENT	DDT&E COST ($M) INTERIM	FINAL
STRUCTURE	29.1	2.9
MAIN ENGINE	13.0	0.1
MAIN ENGINE SUPPORT	10.6	–
ACPS SYSTEM	7.5	1.0
PROPULSION	31.1	1.1
DATA MANAGEMENT	9.3	1.7
GN&C	11.6	14.9
COMMUNICATIONS	3.9	8.1
INSTRUMENTATION	1.5	0.1
ELECTRICAL POWER SOURCE	4.7	4.5
POWER DISTR. & CONTROL	6.9	1.0
AVIONICS	37.9	30.3
INSULATION	9.7	0.2
CONTROL	1.2	0.1
THERMAL CONTROL	10.9	0.3
INST. ASSEMBLY AND CHECKOUT	11.4	1.3
TOTAL VEHICLE	120.4	35.9

Because DDT&E costs are particularly important (due to their early funding requirements) and because Tug vehicle costs represent the largest portion of DDT&E, a Tug vehicle DDT&E cost summary is shown in Table 2-128. This Tug vehicle has a theoretical first unit (TFU) cost of $10.6M for the interim stage and $11.8M for the final version, not including the Orbiter interface equipment required for each Shuttle/Tug flight. A breakdown of the average Tug cost-per-flight is shown in Table 2-129 for each flight mode (reusable, expendable, and reusable with velocity package). The costs of the three modes differ very little except for the hardware expended (kick stages or expended Tug). The cost-per-flight for the initial vehicle is higher than the final vehicle primarily because of the mission peculiar software that is developed during the interim operation and is therefore averaged over fewer flights.

Figure 2-95 shows the annual funding requirements for Program 3. The DDT&E, production, and development costs are indicated for both the initial and final vehicles.

Table 2-129. Program 3 Cost Per Flight

	COST ($MILLION)					
	MODE			MODE		
	1	2	3	1	2	3
LAUNCH OPERATIONS	0.24		0.14	0.14	0.14	0.14
MAINTENANCE & REFURBISHMENT	0.19		0.19	0.18	0.18	0.18
GROUND OPERATIONS TOTAL	0.43		0.43	0.32	0.32	0.32
FLIGHT OPERATION	0.61		0.61	0.24	0.24	0.24
OPERATIONS SUPPORT	0.10		0.10	0.06	0.06	0.06
EXPENDED HARDWARE	0		0.34	0	11.22	0.34
TOTAL AVERAGE COST/FLIGHT	1.14		1.49	0.62	11.84	0.96
	3I			3F		

MODE 1 – REUSABLE TUG ONLY

MODE 2 – EXPENDABLE TUG

MODE 3 – REUSABLE TUG & VELOCITY PACKAGE

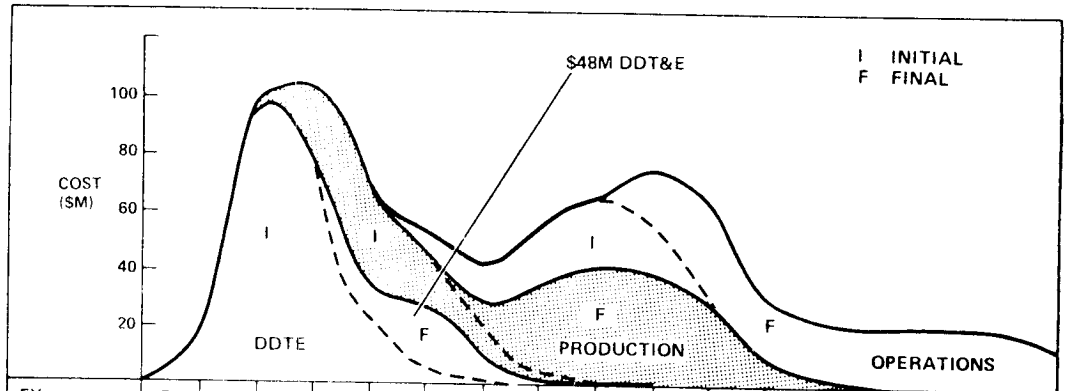

FY	76	77	78	79	80	81	82	83	84	85	86	87	88	89	90	91
DDT&E	19.0	94.7	74.1	22.1	5.5											
		0.1	3.1	11.2	22.6	6.9	1.1	2.2	0.8							
PRODUCTION		4.1	25.6	28.4	16.7	9.9	2.8									
						11.9	33.6	40.6	39.8	31.7	9.8	2.1				
OPERATION					10.4	18.2	19.1	20.4	10.8							
									23.7	34.2	21.0	21.0	20.7	20.6	20.6	10.3
TOTAL	19.0	98.8	99.7	50.5	32.6	28.1	21.9	20.4	10.8							
		0.1	3.1	11.2	22.6	18.8	34.7	42.8	64.3	65.9	30.8	23.1	20.7	20.6	20.6	10.3

Figure 2-95. Program 3 Annual Funding

There are two major peaks in the phased program. The first occurs in 1978 with the development and production overlap for the initial vehicle. The second peak occurs in 1985 due to a similar overlap for the final vehicle.

2.4.3.10 Program Risk. A risk assessment was accomplished for both the initial and final Program 3 vehicles. The approach was identical to that used for Programs 1 and 2 and discussed in Sections 2.4.1.10 and 2.4.2.10. The results are presented in Figures 2-96 and 2-97 for the initial and final vehicles respectively.

For Program 3 Initial, schedule is considered to be the most vulnerable item — followed by ground operations, structures, astrionics, and cost. The items of least concern are subsystem weights and propulsion performance because of large margins and off-the-shelf propulsion systems. Safety is also rated a low risk because potential hazards have been overcome by designing-in adequate solutions. For Program 3 Final, there are no items of major concern since most of them will be proven in the initial program. There are only two items of any consequence — weight confidence and the technical performance of the rendezvous and docking astrionics system, and excess payload capability provides a reasonable weight growth for all subsystems.

2.4.3.11 Sensitivity Studies. The major sensitivity studies conducted on Program 3 were IOC date and performance level of the final Tug.

IOC Sensitivity — The effect of a two-year extension of the Interim and Final IOC dates without an accompanying delay or slippage in the program start date (ATP at

AREA OF CONCERN	MEASUREMENT OF RISK (LOW 0 – 2 – 4 – 6 – 8 – HIGH 10)	EXPLANATION
SAFETY		SAFETY DESIGNED IN (252 LB. WEIGHT PENALTY), VERIFICATION TEST PROGRAM, CREW MONITOR & OVERRIDE
COST		CONFIDENCE LEVEL = 3.25, CENTAUR COST STUDY
SCHEDULE		TANKS & SOFTWARE ARE PACING ITEMS
MISSION EFFECTIVENESS		100% MISSION CAPTURE, LARGE GROWTH POTENTIAL (1.54 PAYLOADS/FLIGHT)
FLIGHT OPS. COMPLEXITY		97% OF FLIGHTS = SINGLE TUG OPERATION
REUSABILITY		PROVEN COMPONENTS, MAX. RELIABILITY FOR MIN. COST, MTBF IS INSENSITIVE FOR REDUNDANT SYSTEMS
GROUND OPERATIONS		REUSE NOT DEMONSTRATED BUT TECHNIQUES UNDERSTOOD
WEIGHT		TOTAL CONTINGENCY = 23% FOR 3,500-LB. PAYLOAD
TECH. PERF: STRUCTURE		FRACTURE CONTROL & FLAW DETECTION IN TANKS, PROOFING OF DOCKING SYSTEMS
PROPULSION		AVAILABLE TECHNOLOGY SIMILAR TO CENTAUR
ASTRIONICS		CURRENT TECHNOLOGY + ADDED REDUNDANCY GUIDANCE UPDATE ACCURACY & STRATEGY
THERMO		FLIGHT QUAL NEEDED, PURGE BAG DEVELOPMENT

Figure 2-96. Program 3 Initial Risk Assessment

AREA OF CONCERN	MEASUREMENT OF RISK (LOW 0 – 2 – 4 – 6 – 8 – HIGH 10)	EXPLANATION
SAFETY		PROVEN ON INITIAL PROGRAM
COST		CONFIDENCE LEVEL = 2.90, CENTAUR COST STUDY
SCHEDULE		LASER RADAR IS PACING ITEM
MISSION EFFECTIVENESS		100% MISSION CAPTURE, LARGE GROWTH POTENTIAL (1.54 PAYLOADS/FLIGHT)
FLIGHT OPS. COMPLEXITY		98% OF FLIGHTS = SINGLE TUG OPERATION
RELIABILITY		PROVEN ON INITIAL PROGRAM
GROUND OPERATIONS		PROVEN ON INITIAL PROGRAM
WEIGHT		TOTAL CONTINGENCY = 16% FOR 3,500-LB. PAYLOAD
TECH. PERF: STRUCTURE		PROVEN ON INITIAL PROGRAM S,
PROPULSION		PROVEN ON INITIAL PROGRAM
ASTRIONICS		RENDEZVOUS & DOCK STRATEGY, IMPLEMENTATION, HARDWARE, ETC.
THERMO		PROVEN ON INITIAL PROGRAM

Figure 2-97. Program 3 Final Risk Assessment

10/75) was investigated. The schedule impact of this IOC option is shown in Figure 2-98. This type of program would greatly reduce the potential of schedule risk with the interim IOC attainment. Ample contingency time would be provided for critical event evaluations before proceeding too far with activities that should be constrained by such events.

This program extension would also reduce the early years funding requirements as reflected by a later PDR and start of detail fabrication and tend to lower the total program peak funding rate. Manufacturing and tooling activities would function on a one-shift basis. Start of initial tooling and material and hardware procurement could be initiated after PDR rather than before. Another feature not enjoyed on the shorter baseline program is the availability of astrionics and software integration prior to the initial interim flight vehicle delivery.

The funding spread for this delayed IOC program is shown in Figure 2-99 along with the baseline. With the same ATP date, delaying the IOC two years reduces the initial peak from $103M in 1978 to $72M in 1980 and reduces the second peak from $74M in 1984 to $57M in 1986.

Performance Level – A major sensitivity study that was performed on Program 3 was defining the configuration and programmatic impacts of obtaining at least 3500 lb retrieval capability in the final vehicle. This is a 1000 lb retrieval payload increase over the baseline final vehicle capability. This increase could not be obtained with structural design or material changes; consequently, the selected approach was to use an RL-10 Cat IIB engine for the final vehicle. This engine has an I_{sp} of 461 at a

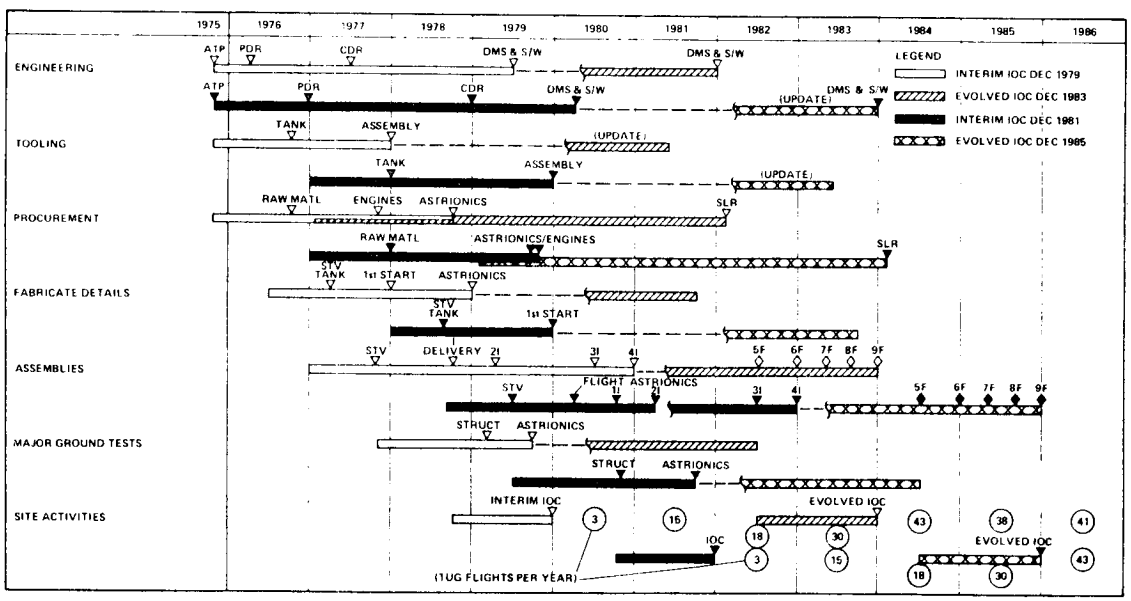

Figure 2-98. Program 3 Extended Development Schedule

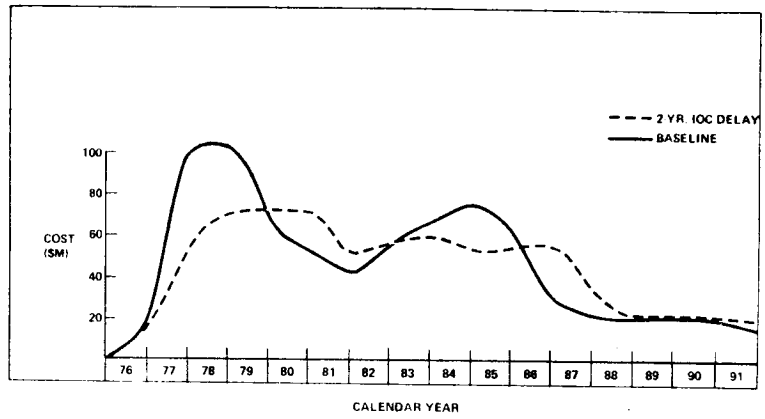

Figure 2-99. Extended Program 3 Funding Spread

mixture ratio of 5.4:1. In addition to the higher I_{sp} the Cat IIB engine has idle mode thrust that was used for certain low-thrust maneuvers, e.g., midcourse corrections, thus reducing the ACS propellant requirements.

The vehicle was resized for the new engine yielding the weights and performance as shown in Table 2-130 in comparison with the baseline. The main propellant quantity is increased, resulting in slight increases in structure and thermal subsystem weights. The increased propellant is a result of the lower dry weight and decreases in ACS propellant and engine related losses. Since the initial vehicle of the phased program is sized to the final vehicle size, the initial vehicle of this alternate program is different than the initial vehicle of the baseline program.

The program schedule for the initial vehicle in this alternate program is the same as the initial baseline since the vehicles are identical except for a small difference in size. The development program for the final vehicle is the same as the baseline except for the main engine development. In the baseline there is no engine development associated with the final vehicle while in the alternate program, the RL-10 Cat IIB engine must be developed.

Table 2-130. Performance Level Sensitivity Comparison

ITEM, LB (KG)	BASELINE		ALTERNATE	
	INITIAL	FINAL	INITIAL	FINAL
STRUCTURE	2375 (1077)	2452 (1112)	2395 (1086)	2472 (1121)
PROPULSION	1376 (624)	1588 (720)	1376 (624)	1500 (680)
THERMAL CONT	407 (185)	411 (186)	410 (186)	415 (188)
ASTRIONICS	1171 (531)	984 (446)	1171 (531)	984 (446)
GROSS DRY WEIGHT	5862 (2659)	5978 (2712)	5888 (2671)	5908 (2680)
BURNOUT WEIGHT	6643 (3013)	6812 (3090)	6695 (3037)	6676 (3028)
USABLE PROPELLANT	49820 (22598)	54364 (24659	49905 (22637)	55701 (25266)
DEPLOY PAYLOAD	5183 (2351)	4668 (2117)	5046 (2289)	7049 (3197)
RETRIEVAL PAYLOAD	–	2514 (1140)	–	4435 (2012)

The program cost characteristics are presented in Figure 2-100. The development costs of the initial vehicles in both the baseline and alternate program are essentially the same since the vehicles differ only in slight difference in tankage size. The greater phasing development cost of the alternate program is a result primarily of the different engine.

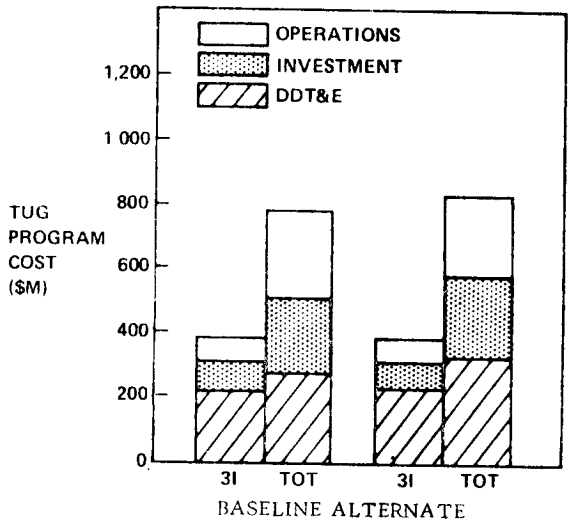

Figure 2-100. Alternate Program 3 Costs

2.4.3.12 Program Update. Subsequent to the data dump the Program 3 configurations were updated. The changes made in the update included incorporating the results of additional analyses and recommendations made by the government.

Table 2-131 identifies the changes incorporated and the rationale for the change. If the initial or final configuration is not identified, then the change applies to both configurations. The weight increment from the baseline Program 3 configurations is also identified. The configurations incorporating these changes were resized and the performance computed. Table 2-132 presents a summary weight statement and performance characteristics for the resizes configurations. The geosynchronous deploy payload of 4974 lb (2256 kg) for the initial configuration represents a 209 lb (95 kg) payload decrease over the baseline Tug. The retrieval performance of 2704 lb (1227 kg) for the final configuration is a 190 lb (86 kg) increase over the baseline.

The programmatic characteristics of these updated configurations would be essentially identical with the baseline. A re-examination of the program costs showed that the changes in cost were negligible. For example, the DDT&E cost of the initial configuration would change by less than $100,000.

Table 2-131. Configuration Changes for Program 3 Update

CHANGE	RATIONALE	ΔWT LB (KG)
DRY WEIGHT		
INCREASE BODY SKIN THICKNESS	PROVIDE INCREASED STIFFNESS	20 (9.1)
INCREASE LH_2 TANK THICKNESS	DESIGN PRESSURE INCREASE FOR ABORT DUMP	54 (24)
REVISE ACPS He INSTALLATION	ADDITIONAL ANALYSES	8 (3.6)
USE 1 ACPS He BOTTLES – (3F)	CORRECT DISCREPANCY	-138 (-63)
USE 2 ACPS HYDRAZINE BOTTLES – (3I)	REVISED VENDOR DATA	-35 (-16)
USE 3 ACPS HYDRAZINE BOTTLES – (3F)	REVISED VENDOR DATA	-72 (-33)
INCREASE ABORT PRESSURIZATION PLUMBING	DETAILED ABORT DUMP ANALYSIS	10 (4.5)
ADD ADDITIONAL HEATERS	UPDATED THERMAL CONTROL REQUIREMENTS	10 (4.5)
PROVIDE ADDITIONAL INSTRUMENTATION TRANDUCERS	PROVIDE ADDITIONAL DATA FOR REFURBISHMENT	30 (14)
INCREASE FILL & DRAIN LINE SIZE	DETAILED ABORT DUMP ANALYSIS	34 (16)
CHANGE PURGE BAG TO TEFLON COATED KAPTON	SAFETY – ELIMINATE FIRE HAZARD	-29 (-13)
REVISE TUG/PAYLOAD INTERFACE WEIGHT – (3F)	MORE DETALED ANALYSIS	27 (12)
NON USABLE FLUIDS		
DELETE PU LH_2 BIAS	INCLUDED IN FPR	-55 (-25)
DELETE 10% FPR ON ACPS PROPELLANTS – (3I)	NO REQUIREMENT SPECIFIED	-73 (-33)
DELETE 10% FPR ON ACPS PROPELLANTS – (3F)	NO REQUIREMENT SPECIFIED	-119 (-54)
REDUCE TRAPPED ACPS PROPELLANTS	ADDITIONAL ANALYSES	5 (2.3)
NON IMPULSE EXPENDABLES		
ADJUST MAIN ENGINE LEAKAGE	REVISED MAIN ENGINE DATA	22 (10)
REVISE START & STOP LOSSES	REVISED MAIN ENGINE DATA	-48 (-22)
REVISE FUEL CELL REACTANTS	UPDATED POWER REQUIREMENTS ANALYSIS	-26 (-12)
REVISE FUEL CELL REACTANTS	UPDATED POWER REQUIREMENTS ANALYSIS	-37 (-17)
SHUTTLE INTERFACE ACCOMMODATIONS		
INCREASE ADAPTOR STRUCTURE & ORBITER ATTACH FITTINGS	UPDATED STRUCTURAL DESIGN ANALYSIS	169 (76)
ADD DUAL DUMP VALVES & DUAL VENT VALVES ON ADAPTOR	SAFETY – PRECLUDE AIR IN H_2 TANK	148 (67)
INCREASE FILL & DRAIN LINE SIZE ON ADAPTOR	DETAILED ABORT DUMP ANALYSIS	322 (146)

Table 2-132. Program 3 Baseline Tug Update Weight Summary

	INITIAL (3I)		FINAL (3F)	
	LB	(KG)	LB	(KG)
STRUCTURE	2438	(1105.9)	2542	(1153.1)
PROPULSION	1391	(630.9)	1426	(646.8)
THERMAL CONTROL	386	(175.1)	390	(176.9)
AVIONICS	1200	(544.3)	1013	(459.5)
CONTINGENCY	541	(245.4)	537	(243.6)
TOTAL DRY WEIGHT	5956	(2701.6)	5908	(2679.9)
NON-USABLE FLUIDS	395	(179.2)	401	(181.9)
MAIN PROPELLANT-FPR	257	(116.6)	245	(111.6)
BURNOUT WEIGHT	6608	(2997.4)	6555	(2973.4)
NON-IMPULSE EXPENDABLES	426	(193.2)	420	(190.5)
USABLE MAIN PROPELLANTS	49476	(22442.3)	54044	(24514.4)
USABLE ACPS PROPELLANTS	727	(329.8)	1193	(541.1)
FIRST IGNITION WEIGHT	57237	(25962.7)	62211	(28218.9)
SHUTTLE INTERFACE ACCOMMODATIONS	2789	(1265.1)	2789	(1265.1)
MAX. PAYLOAD (DEPLOYMENT MISSION)	4974	(2256.2)	–	–
TOTAL WEIGHT IN SHUTTLE	65000	(29484.0)	65000	(29484.0)
MAX. PAYLOAD (RETRIEVAL MISSION)	–	–	2704	(1226.5)
MASS FRACTION	3I = 0.864		3F = 0.869	

2.5 SPECIAL EMPHASIS

2.5.1 SAFETY. Safety is a major consideration for any reusable upper stage for the Shuttle. Safety merits special consideration from the time the stage is installed in the Shuttle until it has separated far enough from the Shuttle to preclude imposing a safety hazard. During this study, a detailed safety analysis was conducted to identify design, operational, and interface hazards associated with Tug vehicle operations. This safety analysis was used to systematically identify potential hazards and to implement design solutions that will eliminate those hazards. The result has been development of Program 1, 2, and 3 Tug designs that are considered to be fully compatible with manned Shuttle operations.

2.5.1.1 Safety Criteria and Approach. To provide a fundamental set of safety requirements for use in this study, the following general safety criteria were used:

a. No single component failure in the Tug or Tug peripheral equipment shall cause the loss of the Orbiter or its crew.

b. Structural elements, tanks, and lines are excluded from redundancy requirements. Sufficient margins of safety are used in these cases to reduce their probability of failure to negligible levels. MIL HDBK 505 safety factors used by the Shuttle are imposed on the Tug while in the Shuttle vicinity, and load factors and safety margins established for use on the Tug while it is in or near the Shuttle are consistent with these requirements.

c. Provisions shall be made for Orbiter crew command override capability of Tug safety critical functions.

d. The Tug shall not preclude Orbiter from intact abort.

The following specific Shuttle payload/Tug safety criteria were also used in the safety assessment:

a. MSFC — "Data Package - Space Tug System Studies, Section V, Safety Criteria," dated April 1973.

b. JSC — "Preliminary Hazard Analysis, Space Shuttle Payloads and Payload Interfaces," dated October 1972.

c. Ad Hoc Tug Safety Group — "NASA memo PD-TUG-E (74-46)," dated August 1973.

In addition to the implementation of safety criteria, the safety approach has included a disciplined and systematic analysis of potential hazards, the identification of design alternatives that will eliminate/control those hazards, and the actual implementation of those design approaches into Tug designs (including the consequent cost and performance penalties) as a condition of continued consideration of any Tug candidate. The principal analytical tools used in conducting the safety analyses were the fault tree analysis, the mission phase hazard analysis, and the safety criteria checklist.

2.5.1.2 Fault Tree Analysis. A fault tree analysis was developed early in the Space Tug Systems Study to systematically identify those hazards associated with the use of cryogenic propellants in a manned environment. The fault tree used in the identification of cryogenic propellant hazards is presented in Figure 2-101. The OR gates in the fault tree suggest high hazard potential since any one of several lower tier events can result in a catastrophic event. AND gates, on the other hand, indicate that all events below the gate must occur before a catastrophic event can occur. AND gates, therefore, suggest a lower probability of occurrence.

The design features implemented to counter each of the propellant hazards identified in the fault tree are described in Figure 2-102. The tank outlet valves illustrated in this figure are used to maintain the propellant lines in an empty condition during the entire time that the Tug is in the Orbiter payload bay. The outlet valves are not opened until a safe Tug/Orbiter separation distance has been achieved. Prior to recovery of the Tug, the outlet valves are closed and the main engine valves are opened. Propellants in the main propellant lines are allowed to dissipate into space before Orbiter/Tug engagement. This maintaining of the propellant lines in an empty condition eliminates the chance of leaking propellant lines/fittings during the time that the Tug is in the payload bay. Each of the main propellant tanks, and its outlet valve, is individually enclosed in a purge bag. The purge bags are purged with helium and are individually vented external to the Orbiter. Thus, if a leak should develop in a propellant tank, the leaking propellant will gassify and will be safely carried overboard. Hydrogen and oxygen sensors are installed in the vent outlets to provide an indication of a propellant leak. Dual redundant dump valves are installed on each of the propellant tanks to assure propellant dump capability in event of an aborted flight. Each of the dump line segments on the adapter also incorporate parallel dump valves. The result is a series-parallel dump valve arrangement that protects the Tug against dump valve fail open and fail closed modes. The oxygen and hydrogen vent valves are arranged in a similar fashion to assure that the tank venting function is continuously available.

The fuel and oxidizer disconnect panels are physically separated. The fuel and oxidizer lines passing through these panels incorporate triple seals at the disconnect points. As a further backup to the seals, the disconnect panels are continuously purged with helium during atmospheric flight. The purge gases are vented externally to the Orbiter via the purge bag vent lines.

To assure that hazards associated with propellant leakage are controlled, even in the presence of multiple failures, the following design/operational modifications were developed:

a. The Orbiter payload bay will be continually purged with GSE nitrogen starting with propellant tanking and continuing through Shuttle lift-off. Consequently, if multiple failures should result in a propellant leak during ground or upflight operations, the propellant will leak into an inert payload bay atmosphere. Hydrazine, hydrogen, and oxygen leak detectors are installed in the payload bay to detect any propellant leaks.

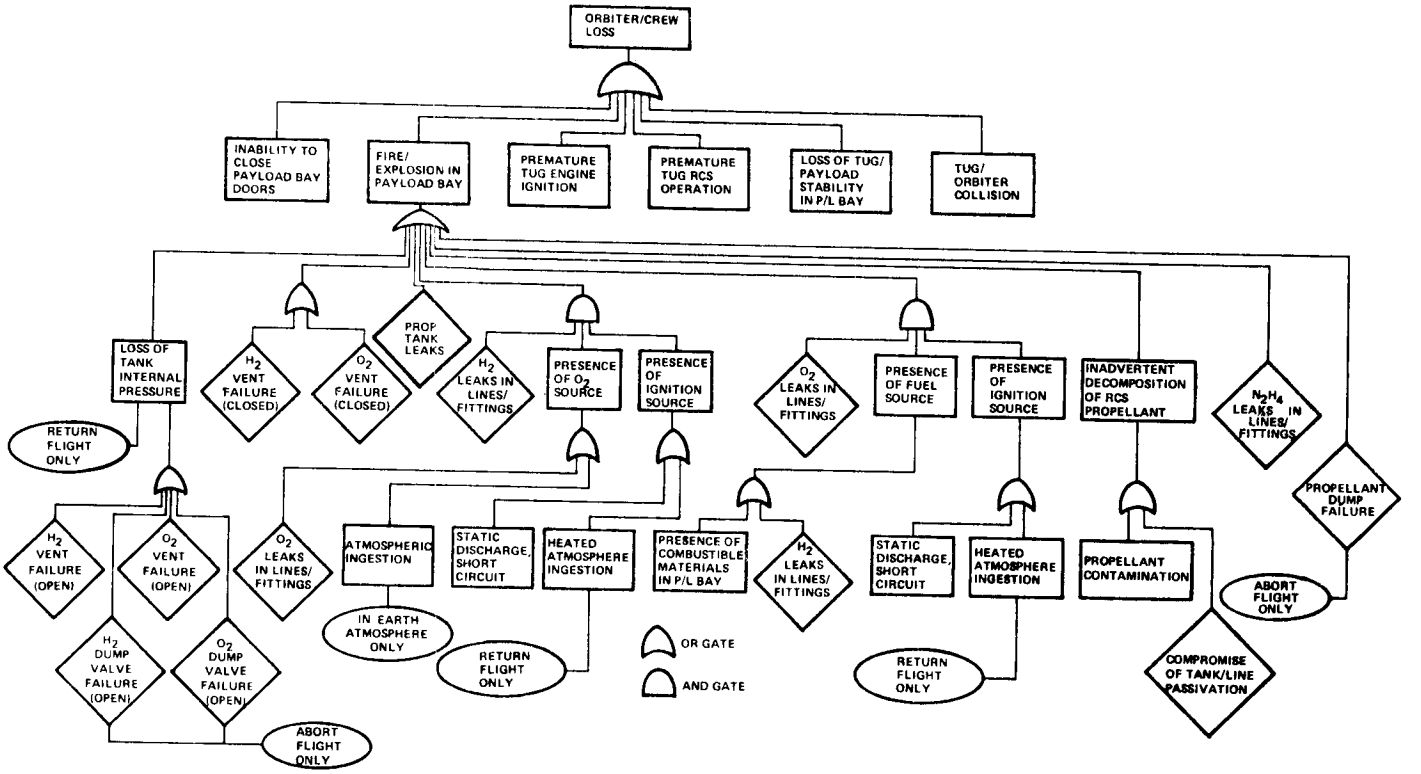

Figure 2-101. Fault Tree

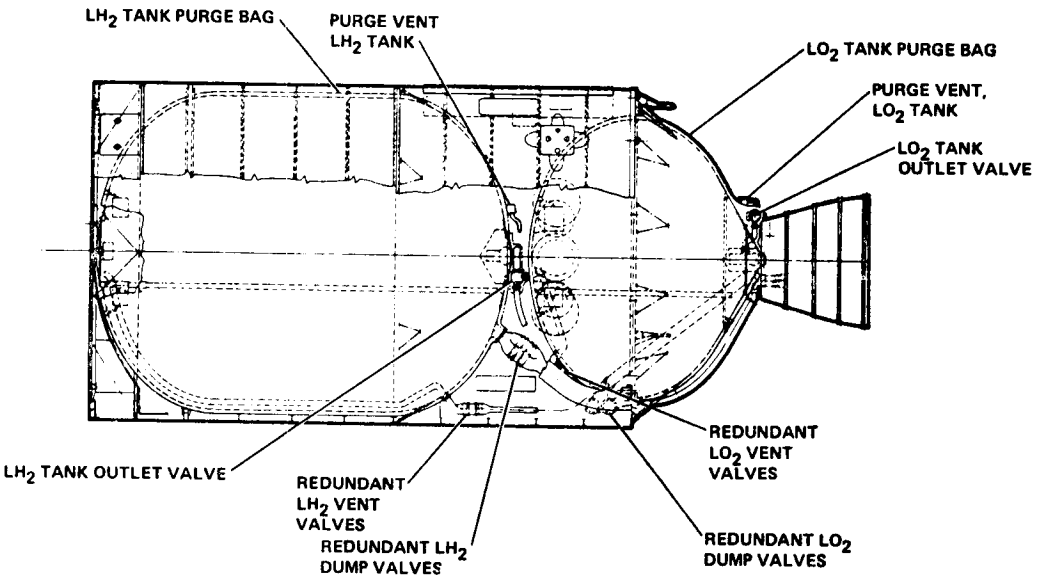

H_2 & O_2 TANK PURGE BAGS PROVIDE COMPLETE ISOLATION OF PROPELLANT TANKS

TANK OUTLET VALVES RESULT IN EMPTY PROPELLANT LINES DURING ENTIRE TIME TUG IS IN ORBITER PAYLOAD BAY

EACH TANK OUTLET VALVE IS ENCLOSED WITHIN ITS RESPECTIVE PURGE BAG

MULTIPLE FAILURES NECESSARY BEFORE CREW SAFETY IS COMPROMISED

Figure 2-102. Propellant Safety Features

b. No ignition source is present in any Tug equipment exposed to the payload bay environment.

c. Hydrogen and oxygen fill and drain lines are purged with helium after each use.

d. All components used in the helium purge system are at least dual redundant.

e. On Tug retrieval by the Orbiter, the helium contained in the adapter helium bottles is used to purge the hydrogen tank. This same source is used to repressurize the main propellant tanks prior to entry.

f. The APS hydrazine storage tanks incorporate a burst disk/vent line at the tank outlet to provide a vent path if propellant decomposition should take place.

2.5.1.3 Mission Hazard Analysis. The mission hazard analysis was conducted to identify the major hazards associated with each of the principal mission phases, and identify suitable design features, procedures, operational constraints etc. that will serve to eliminate or control each of the identified hazards. A summary time line of the mission phases is shown in Figure 2-103.

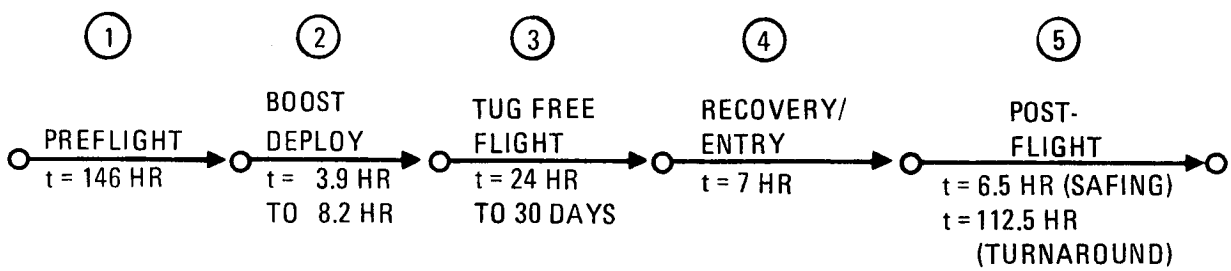

Figure 2-103. Mission Phases/Time Line

The results of the hazard analysis are contained in Volume 7 of Reference 6. A list of residual hazards, and the rationale for their acceptance, is contained in Table 2-133. Residual hazards are defined per NHB 5300.4 (1D) as, "hazards for which safety or warning devices and/or special procedures have not been developed or provided for counteracting the hazard." Since virtually all of the hazards identified in the hazard analysis do, in fact, have suitable controls and countermeasures available, they are not technically classed as residual hazards. Some hazardous materials, components, operations, etc., may, however, be judged to retain a certain inherent danger even when design and operational controls have been implemented. Included in this group would be hazards associated with critical flight maneuvers, propellant handling, use of pyrotechnic devices, etc. The residual hazard summary is intended to reflect these kinds of hazards.

Each of the residual hazards is classified according to NASA Specification NHB 5300.4 (1D). The "Level" column refers to the hazard level once the described design, procedural, etc., controls have been implemented. The hazard levels and the corresponding hazard categories are defined in 5300.4(1D) as follows:

Table 2-133. Residual Hazard Summary

Mission Phases	Hazard	Level*	Hazard Resolution/ Control Actions	Rationale For Retention
1 2 3 4	Propellant leak into payload bay resulting in fire/explosive potential.	CN	Most likely cause of propellant leaks is failure of lines/fittings. Propellant tank outlet valves are used to isolate main propellant lines. A failure of a tank outlet valve and the structural failure of the main propellant lines would be required before a leak into the payload bay would occur. Purge bags that form completely independent enclosures for each of the propellant tanks and lines are continuously purged with helium gas during atmospheric flight.	Multiple redundant seals, GN_2 purge of payload bay, complete isolation of propellant tanks/lines, and remote operations reduce the likelihood of occurrence to acceptable levels.
1 5	Tug/Orbiter handling damage during mating/ handling operations, due to ground equipment failure or, more likely, human error.	CN	There are no propellants in Tug during mating/handling operations. Handling damage due to ground equipment failure or human error must be minimized through implementation of detailed handling procedures, training and certification of ground personnel.	Potential for handling handling damage to Tug is inherent in turnaround operations. Magnitude of hazard is greatly minimized because Tug propellant tanks are empty.
1 2 4 5	The presence of payload propellants will require interfaces with the Tug or Orbiter (vent lines, dump lines, etc.) In either case, there is the potential for leakage and the resulting hazards to the Tug and Orbiter.	CA	This problem requires resolution by NASA, to define the payload propellant safety requirements with respect to Tug/Shuttle safety requirements.	Requires AF/NASA/contractor coordinated resolution to assure that payload safety requirements are consistent with overall Tug/Shuttle safety requirements.
1	Compromise of Tug and Orbiter components as a result of spilled hydrazine during loading operations.	CN	In event of hydrazine spills, it would be prudent to terminate the countdown and check all exposed payload/Tug/Orbiter components for possible damage. Decontamination of payload bay would also be required.	Dual and triple seals for all fittings and a prefill leak check reduce the likelihood of occurrence to acceptable levels.
1 5	Exposure of ground personnel to caustic materials and toxic fumes due to spills/leaks during N_2H_4 loading/unloading operations.	CN	Storable propellants are loaded into Tug while Tug is on pad. Lines/tanks pressure checked prior to fueling. Hydrazine sensors are installed in payload bay to detect leaks. Protective clothing (including breathing apparatus) is used by ground crew.	Dual and triple seals for all fittings, a prefill leak check, and the comparatively small quantity of fluid involved reduce this likelihood of occurrence to acceptable levels.
1 2 3 4 5	Inadvertent operation of ordnance units caused by static discharge, EMI, lightning, exposure to laser beam, human error.	CN	The only ordnance devices presently anticipated for use on the GD/CA Tug are the solid rocket motor velocity packages and payload pyrotechnic pin pullers. The ordnance will have all pins shorted to ground during all ground operations. All connectors will be checked to assure no voltage prior to mating. Twisted, shielded pairs shall be used to minimize chance of induced voltage. An arm/safe switch, normally operable only by the flight crew, will be used to interlock the ordnance circuit.	Solid rocket motor and pin-puller safing are considered to be state of the art for manned space operations. Tug payloads must incorporate similar safeguards.

*Hazard levels are defined in the text.

Table 2-133. Residual Hazard Summary, Contd

Mission Phases	Hazard	Level*	Hazard Resolution/ Control Actions	Rationale For Retention
1 5	Fire around Tug or in payload bay due to multiple failures in fuel/oxidizer/ hydraulic systems. Most likely to occur as a result of human error during relatively nonroutine activity.	CN	Tug cryogenic propellants will be drained prior to payload changeout. Ground crew will have capability to switch off all Tug electrical power. Water flush and cold gas deluge must be available to isolate and control pad fires.	Sufficient safeguards are available, in terms of safe Tug design and operational procedures, to reduce the likelihood of occurrence of this hazard to acceptable levels.
2 4	Meteoroid penetration of the Tug while in payload bay.	CN	The Orbiter and Tug structure and propellant insulation form effective meteoroid shields. If meteoroid should penetrate through main propellant tanks (which represent the greatest target), the propellants will harmlessly dissipate into space.	Chance of meteoroid penetration of any Tug element is considered to be remote.
2	Tug/Orbiter collision due to tip-off effect at moment Tug is released from adapter.	CN	On raising of Tug to pre-deployment position, the Tug will be engaged by the Orbiter manipulator(s). When Tug is separated from Orbiter, manipulator(s) will act as an energy buffer.	Manipulator operation makes likelihood of occurrence sufficiently low as to make this an acceptable hazard.
3	Orbiter damage due to fragmentation of Tug engine turbopumps/boost pumps. Fragmentation of turbopumps/boost pumps will cause Tug loss.	CN (Orbiter) CA (Tug)	Tug main engine cannot be started until the engine start sequence is enabled by direct command from the Orbiter crew (via rf link). Orbiter will thus be at a safe separation distance if turbo machinery should fail.	Probability of occurrence is considered to be sufficiently remote as to be an acceptable Tug hazard. Orbiter will not be affected by this failure mode due to Tug/Orbiter separation prior to starting Tug engine.
4	Tug enters collision course with Orbiter at Tug return (due to Tug guidance navigation error; human error).	CN	Tug return profile places Tug at an orbit > one-half mile above that of Orbiter. When possible, Tug should be tracked by ground or Orbiter or both, to assure that Tug return flight is along pre-determined path. This will allow Orbiter to modify its orbit to avoid a possible collision.	This hazard is inherent in recoverable Tug operations. Sufficient tracking of Tug return trajectory must be accomplished to assure a non-collision course.
2 4	Tug perturbation due to plume impingement from Orbiter RCS motor (could cause rotation of Tug into Orbiter during critical deployment or retrieval maneuver).	CN	Tug APS system will be activated just after release of Tug from Orbiter and is deactivated just prior to engagement of manipulator. If Tug is subjected to Orbiter plume impingement, Tug APS will have the capability of holding the Tug in a steady attitude.	Fail-operational/fail-safe APS system is sufficiently reliable to assure Tug attitude hold even if perturbed by Orbiter RCS plume impingement.
4	Payload propellants may require dumping, before return of the Tug and payload to the Orbiter, to preclude leakage into the payload bay and possible hazards to the Tug and Orbiter	CA	This problem will require NASA to establish requirements and procedures for handling of payload propellants. Prior to return of the Tug and payload to the Orbiter, it must be possible for the Orbiter to verify payload propellant status (via the rf link).	Requires AF/NASA/contractor coordinated resolution to assure that payload safety requirements are consistent with overall Tug/ Shuttle safety requirements.

*Hazard levels are defined in text.

Table 2-133. Residual Hazard Summary, Contd

Mission Phase	Hazard	Level*	Hazard Resolution/ Control Actions	Rationale For Retention
2 4	Ingestion of dumped propellants into payload bay or Orbiter surface and TPS damage due to contact with dumped propellants (occurs during abort flight only).	CN	Propellant dump of both main propellants is accomplished above 220k ft (60.1 km). These propellants will not burn at these altitudes and can be safely dumped simultaneously. Any hydrogen that should enter the payload bay at altitudes above 220k ft (60.1 km) cannot form a combustible mixture (Ref. para 3.3.2). Two APS propellants will not be dumped during an abort.	Active and passive means available to prevent a combustible mixture in the payload bay. Contact of Orbiter surface with O_2 or H_2 gas at altitudes above 110 k ft (33.5 km) will not harm Orbiter.
4	Damage to manipulator and/or Orbiter due to use of manipulator to accelerate Tug at excessive rates. Kinetic energy of Tug and Tug residual propellant could cause loss of Tug control.	Open	Retraction of Tug into payload bay (as well as deployment of Tug from payload bay) must be done very slowly to avoid imparting undue kinetic energy to the Tug/Tug propellants. It may be necessary to employ a rate limiter.	Orbiter requirements should be expanded to include a rate limiter on the manipulator(s). The capability of a single manipulator arm to retract the Tug into the Orbiter should also be verified.

*Hazard levels are defined in the text.

"Hazard Levels — A hazard whereby environment, personnel error, design characteristics, procedural deficiencies, or subsystem malfunction may result in loss of personnel capability or loss of system shall be categorized as follows:

a. Catastrophic (CA) - No time or means are available for corrective action.

b. Critical (CR) - May be counteracted by emergency action performed in a timely manner.

c. Controlled (CN) - Has been counteracted by appropriate design, safety devices, alarm/caution and warning devices, or special automatic/manual procedures."

2.5.1.4 Safety Criteria Checklists. All safety criteria contained in Tug Requirements Document dated April 1973, and those derived from the Ad Hoc Safety Group, have been complied with insofar as it is possible to determine during Phase A design.

In addition to the above safety criteria, criteria from the JSC safety criteria for Orbiter payloads were also used in evaluating Tug designs. The complete MSFC, JSC and Ad Hoc safety criteria, and resolutions to each criterion, are contained in Volume 7 of Reference 6. Table 2-134 presents the applicable Ad Hoc safety criteria and their resolutions.

Table 2-134. Tug Safety Criteria, Ad Hoc Tug Group

CRITERION	RESOLUTION
Common bulkhead design implementation should be selected or rejected on the basis of sensitivity trades.	Common bulkhead designs are not used on any of the GD/CA STSS Tug candidates.
Crash landing load factors must be applied to all Tug systems that can generate a hazard to the Orbiter.	Tug structure, main tanks, latches, attach fittings, etc. have been sized to take all flight loads up to and including crash landing.
Drain capability should be based on a sensitivity trade relative to dump times (30-minute nominal desired) with the Orbiter on the launch pad or on its landing gear. Any Tug stages that may have propellants on board while in the horizontal position during any mission phase (abort, pre-launch, post-launch, etc.) should have horizontal dump capability.	Tug main propellant fill and drain lines have sufficient capacity to allow propellant drain within 30 minutes. Main propellants are never present on board while the Orbiter is on its landing gear. APS propellants may be dumped in either the horizontal or vertical attitude.
Common pressurization source for storable bipropellant tanks should be selected or rejected on the basis of sensitivity trades.	The only storable propellant carried is the monopropellant hydrazine used in the APS.
Pressure stabilized tanks may be used for Tugs only if it can be demonstrated that loss of pressurization will not present a hazard to the Orbiter.	Pressure stabilized tanks are not used in any of the GD/CA STSS Tug designs.

2.5.1.5 Safety Summary. The main thrust of the GD/CA safety effort has been the assurance of Tug manned compatibility with the Space Shuttle. Table 2-135 summarizes the principal design features that have been incorporated into the STSS Tug designs. The basis for each of the safety features has been the systematic evaluation of potential hazards through fault tree analyses, mission hazard analyses, and implementation of Shuttle safety criteria.

As indicated in Table 2-135, each of the identified flight hazards has been countered by a specific design feature. The additional weight required to incorporate these safety features is also listed. The Tug weight increase for safety implementation is about 223 pounds. The resulting Tug designs are considered to be fully compatible with manned Shuttle operations.

2.5.2 OPERATIONS. Flight and ground operations received special emphasis during the study since it is in those areas that costs must be reduced to meet the Space Transportation System goal of low operating costs. This section will discuss the general operations characteristics as well as certain selected trade study results. A detailed discussion of operations is included in Volume 6 of Reference 6.

Table 2-135. Designed-in Safety

FLIGHT HAZARDS (FROM FAULT TREE ANALYSIS)	DESIGN FEATURES (ALL TUG CANDIDATES)	ΔWEIGHT (LB.)
• PROPELLANT LEAKS -PROPELLANT TANK LEAKS -LEAKS IN LINES/FITTINGS	• INDEPENDENT CONTAINMENT OF PROPELLANT • PURGE BAGS INDEPENDENTLY VENTED • BACKUP CONTAINMENT FITTINGS ON ALL TUG/ORBITER INTERFACES	27 20 20
• VENT SYSTEM FAILURE - VENT VALVES FAIL CLOSED - VENT VALVES FAIL OPEN	• QUAD VENT VALVES USED FOR EACH PROPELLANT TANK (NO VENT VALVE FAILURE IN-OPEN OR CLOSED MODE WILL COMPROMISE ORBITER SAFETY)	43*
• PREMATURE MAIN ENGINE OPERATION TUG/ORBITER COLLISION	• TANK OUTLET VALVES (INDEPENDENT ENGINE ISOLATION & SHUTDOWN CAPABILITY; NO PROPELLANTS IN LINES DURING ORBITER FLIGHT) • DUAL COMMUNICATION SYSTEMS	18 14
• PREMATURE ACPS OPERATION • TUG/ORBITER COLLISION • INADVERTENT DECOMPOSITION OF RCS PROPELLANT	• ACPS ISOLATION VALVES (INDEPENDENT ACPS ENGINE ISOLATION & SHUTDOWN CAPABILITY) • OVERBOARD VENT VALVES AT HYDRAZINE TANK OUTLET	5 4
• LOSS OF TUG STABILITY IN PAYLOAD BAY • INABILITY TO CLOSE PAYLOAD BAY DOORS	• 14 OF 16 LATCHES WILL SECURE TUG THROUGH CRASH LANDING LOADS • EMERGENCY MANUAL RELEASE (EVA) AVAILABLE IF TUG HANGS UP IN PARTLY DEPLOYED POSITION	20
• PROPELLANT ABORT DUMP FAILURE	• QUAD DUMP VALVES FOR BOTH HYDROGEN & OXYGEN TANKS	52*

*TUG WEIGHT ONLY

2.5.2.1 Flight Operations. Flight operations encompasses the procedures and activities involved in accomplishing a Tug flight and includes any necessary preflight mission planning and post-flight evaluation. The flight operations cost elements are indicated in Figure 2-104.

From liftoff until the Tug is enabled outside the Orbiter, the mission specialist in the Orbiter is in control using the Tug monitor and control system. The flight controller on the ground is available to support the mission specialist during this time as communications permit. The remainder of the Tug flight to mission orbit and back to the Shuttle rendezvous orbit is monitored by the ground flight controller. Control is then transferred back to the mission specialist for docking and system safing and return to the launch site.

This assignment of responsibility is based on Orbiter safety requirements and the level I autonomy selected as the lowest cost option for the Tug. The mission specialist's primary function is to assure the safety of the Orbiter and crew during combined Shuttle/Tug operations. The selection of level 1 autonomy results in the ground flight controller monitoring Tug/mission status; the communications link is therefore primarily for information transfer down. Onboard contingency planning for reasonable payload alternative action limits the ground uplink to initiation of a pre-programmed alternative mission

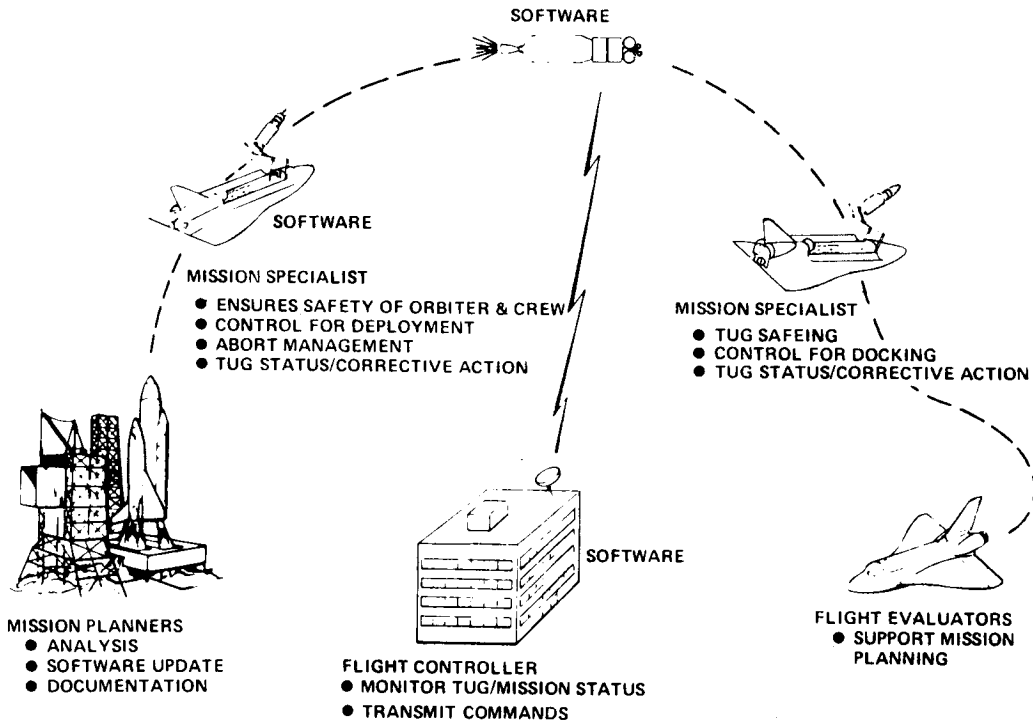

Figure 2-104. Flight Operation Cost Elements

or mission termination. Communication coverage support for NASA missions is shown in Table 2-136. Maintenance data is recorded onboard the Tug for playback following landing in support of ground turnaround activity.

Table 2-136. NASA Network Coverage Summary

MISSION	COVERAGE (%)	MEAN GAP (MIN)	MAXIMUM GAP (MIN)
HIGH INCLINATION CIRCULAR	20.4	37.5	118.7
HIGH INCLINATION NONCIRCULAR	62.7	25.4	76.6
SYNCHRONOUS EQUATORIAL MISSION	86.1	7.8	71.5
REFERENCE MISSION D-4	81.7	21.3	147.43

Flight operations nonrecurring costs are for the development of the software on board the Tug, on the Orbiter to support the Tug, and for the ground flight control console. Software development includes analysis of requirements, coding, verification, and documentation required to provide the Tug with the capability to perform synchronous equatorial missions for DOD and NASA. Recurring flight operations consist of mission planning, flight control, flight evaluation, and flight support software for NASA and DOD. The software charged against recurring cost is the flight peculiar and nonsynchronous mission peculiar software.

When the Tug is in or near the Orbiter the mission specialist uses the Tug Monitor and Control System (TMACS) to ensure the safety of the Shuttle and crew, verify Tug status for mission readiness, and control and monitor operations including Tug mission preparation, deployment, separation, docking, safing, and abort.

The baseline TMACS design includes all hardware functions necessary to perform these functions. The actual mechanization of these requirements may involve integrating the capabilities of the Orbiter, mission specialist station, payload specialist station, and special-purpose Tug supplied hardware and software. To ensure the safety of the crew and Shuttle, the TMACS continuously monitors and displays Tug critical safety functions and provides automatic corrective action sequences and abort sequences when necessary. A more detailed summary of the TMACS is presented in Section 2.5.3.3.

The Air Force will be the executive agent and missions operating agency for the DOD and the launch agency at VAFB. NASA will be the executive agent and mission operating agency for all users other than DOD and the launch agency at KSC. NASA and DOD each use both launch sites with vehicle control assumed by the mission operating agency at start of flight operations regardless of the launch site. The NASA flight operations controller is located at the JSC Houston Operations Management Center (OMC) and utilizes the SDTN; the DOD flight operations controller is located at Sunnyvale STC OMC and utilizes the Air Force SCF network.

Two major flight operations trade studies were conducted involving kick stage sizing and Tug-to-Tug on-orbit assembly versus expending Tugs. The results are summarized below.

Kick Stage Requirements Analysis — A study was conducted to identify and recommend solid-grain kick stages for use with planetary missions. The mission models for the program definition task eliminated the need for kick stages except for planetary missions, and ground rules limit the maximum payload load factor to 3.6g. This load factor limit precludes the use of current technology (CT) solid-grain velocity packages for many of the planetary missions. Slow burn (SB) grains that will extend burn times by a factor of three to four times that of current technology grains are under development. Thrust levels will be decreased by corresponding factors.

Kick stages at two mass fractions were investigated: a mass fraction of 0.85 representative of three-axis stabilized stages, and a mass of 0.90 representative of spin-stabilized stages. An Isp = 290 second was assumed in both cases. Kick stage sizes were determined for three levels of Tug synchronous equatorial delivery capability (with Tug return): 3500 lb (1587 kg), 6500 lb (2948 kg) and 9500 lb (4309 kg). Kick stages with total weights up to 12,000 lb (5443 kg) were assumed to be viable candidates. The sizing results are listed in Table 2-137 along with maximum allowable thrust levels and the minimum burn times.

Table 2-137. Velocity Package Sizing Results, Maximum Thrust and Burn Time

	PAYLOAD		TUG SYNC EQ CAPABILITY								
			3500 LB (1587 KG)			6500 LB (2948 KG)			9500 LB (4309 KG)		
MASS FRACTION	NASA NO.	WEIGHT LB (KG)	WEIGHT LB (KG)	MAX. (1) THRUST 1000 LB (KG)	MIN. BURN TIME SEC	WEIGHT LB (KG)	MAX. (1) THRUST 1000 LB (KG)	MIN. BURN TIME SEC	WEIGHT LB (KG)	MAX. (1) THRUST 1000 LB (KG)	MIN. BURN TIME SEC
0.85	19	5500 (2495)	5000 (2268)	22.5 (10206)	54.8	2840 (1288)	21.2 (9662)	32.8	1820 (826)	20.8 (9435)	21.6
	20	900 (408)	4000 (1814)	5.4 (2449)	182.6	2840 (1288)	4.8 (2177)	146.7	1820 (826)	4.2 (905)	106.3
	22	2500 (1134)	F	–	–	F	–	–	F	–	–
	23	5000 (2268)	F	–	–	6000 (2722)	21.2 (9616)	69.6	4000 (1814)	20.2 (9163)	48.9
	24	3300 (1497)	F	–	–	F	–	–	12000 (5443)	18.4 (8246)	161.1
0.90	19	5500 (2495)	4000 (1814)	21.2 (9616)	49.2	1600 (726)	20.4 (9707)	20.5	1600 (726)	20.4 (9253)	20.5
	20	900 (408)	2560 (1161)	4.2 (1905)	160.0	1600 (726)	3.8 (1724)	109.1	1600 (726)	3.8 (1724)	109.1
	22	2500 (1134)	F	–	–	F	–	–	8000 (3629)	11.9 (5398)	175.6
	23	5000 (2268)	9000 (4536)	21.2 (9616)	110.7	6000 (2722	20.2 (916.3	77.7	4000 (1814)	19.4 (9800)	53.7
	24	3300 (1497)	F	–	–	12000 (5443)	16.2 (7348)	193.2	6000 (2722)	14.0 (6350)	111.6

F = Failed – Insufficient Performance Capability
(1) Based on 3.6g Maximum Load Factor

To minimize stage weight and hardware complexity the 0.90 mass fraction spin-stabilized configuration was selected. A burn-time screen was then defined to eliminate the specification of slow burn grains that would require technology advances beyond those currently visualized and under development. Current technology grain burn times are in the 45 to 50 second area and grain burn times should be increased by three to four times with slow burn grains. The cutoff for the burn time screen was set at 150 seconds. In addition, the development of a large slow burn grain for the two payload No. 23 missions was not considered to be cost effective.

The velocity packages that remained after the above considerations and their applicability to individual NASA payload numbers are shown in Table 2-138. The results have been interpolated to include a 4500 lb (2041 kg) synchronous equatorial capability Tug. Programs 1 and 3 with 5352 lb (2428 kg) and 5183 lb (2351 kg) (interim)/4668 lb (2117 kg) (final) payload to synchronous equatorial orbit use the 2560 lb SB velocity packages. Program 2 with 8276 lb (3754 kg) of payload to synchronous equatorial orbit uses the 1600 lb (726 kg) SB velocity package. If the 3.6g longitudinal acceleration limit is raised for NASA payload 20, then a CT velocity can be used. An alternative is to have NASA payloads 19 and 20 incorporate the required ΔV into the payload design. This would eliminate the need for the Tug program to carry a velocity package development in DDT&E.

Table 2-138. Recommended Velocity Packages for Planetary Mission

PAYLOAD		TUG SYNC EQ CAPABILITY							
		3500 LB (1587 KG)		4500 LB (2041 KG)		6500 LB (2948 KG)		9500 LB (4309 KG)	
NO.	WEIGHT LB (KG)	WEIGHT LB (KG)	TYPE	WEIGHT LB (KG)	TYPE	WEIGHT LB (KG)	TYPE	WEIGHT LB (KG)	TYPE
19	5500 (2495)	4000 (1814)	CT	2560 (1161)	CT	1600 (726)	CT	1600 (726)	CT
20	900 (408)	NONE*	–	2560 (1161)	SB	1600 (726)	SB	1600 (726)	SB
22	2500 1134	NONE	–	NONE	–	NONE	–	NONE	–
23	5000 (2208)	NONE	–	NONE	–	NONE	–	6000 (2722)	SB
24	3300 (1497)	NONE	–	NONE	–	NONE	–	6000 (2722)	SB

CT = Current Technology Grain (TE 364 Series of Grains)
SB = Slow Burn Grain (Approximately 3 Times Burn Time of Current Technology Grains)
* = No Velocity Package used but Tug Expended

Expend Tug Versus On Orbit Assembly — Tug-to-Tug on-orbit assembly was used as a flight mode for high energy missions in the Task 3 mission capture analysis. The high operational complexity of on-orbit assembly suggested the need to evaluate expending the Tug to get required performance with low operational complexity. Program costs associated with high energy missions using Tug on-orbit assembly and expended Tug

flight modes were developed. An interim Tug and a full capability Tug were chosen to represent options covering the range of Tug capabilities. Costs were evaluated for the Concept Selection Meeting mission capture data. Twenty-one on-orbit assemblies or expended Tugs were required with the interim Tug and 15 for the full capability Tug. Cost elements included in the analysis are:

Shuttle Flights — The number of Shuttle flights are identified and costed at the rate of $10.5M per flight. This is the most significant cost penalty for the on-orbit assembly flight mode.

Tug Flights — Costs are divided into ground and flight operations and support, and refurbishment. Tug life is amortized over an expected life of 40 flights. Expended Tugs are charged as though they were expended midway through their expected life. The rendezvous and docking electronics are removed from the full capability expended Tug reducing the unit cost by $1.6M. Reductions in production costs resulting from learning effects are included. The cost for expending Tugs is the most significant cost penalty for the Tug expended flight mode.

Tug-Tug Adapter — On-orbit assembly has DDT&E and investment costs for Tug-Tug adapter.

Velocity Packages — Are required by the interim Tug for the on-orbit assembly flight mode; both investment and operations costs are included.

Tug Failures — Shuttle and Tug costs for flying missions aborted by Tug failures (at the rate of 3 failures per 100 flights) are charged to both flight techniques. Tug losses of 1 per 100 flights are charged as lost with 50% of their life remaining.

Program costs are $173.7M less for the Tug expended flight mode with the interim Tug. The full capability program costs are $123M less for the Tug expended flight mode. The Tug expended mode was selected for the high energy missions during the program definition task since both program cost and flight operations complexity favor this mode over on-orbit assembly.

2.5.2.2 Ground Operations. A top level ground operations functional flow is shown in Figure 2-105. Only the maintenance and checkout tasks are Tug configuration sensitive and these have only a minor impact on turnaround time, ground crew size, and facility and GSE requirements. A basic turnaround support crew can accomplish turnaround of any cryogenic Tug configuration within approximately 270 to 285 working hours. The basic crew size at KSC with two shift operation is 107 while at WTR with a lower launch rate it is 63. At launch rates over about 20 per year, the KSC crew must be augmented slightly to accommodate concurrent operations on more than one Tug.

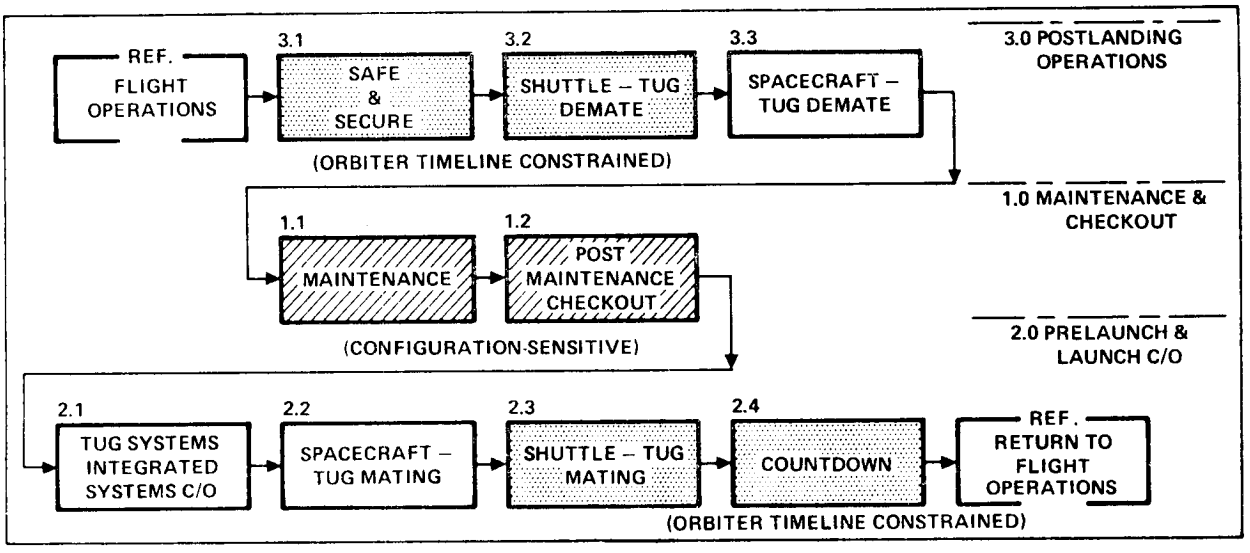

Figure 2-105. Ground Turnaround Operations

As indicated in Figure 2-105, there are several functions constrained by the Orbiter timeline. These amount to 154 working hours of the total turnaround time of about 270 hours. A significant portion of this time, 95 hours, is a result of the off-pad loading of the Tug in the Orbiter and is the time between installing the Tug in the Orbiter and installing the Shuttle on the pad.

A trade study on the sensitivity of program costs to ground turnaround time was conducted; the results are summarized in Section 2.5.4. The results of a trade study to investigate the feasibility and advantages of installing the Tug at the launch pad are summarized below.

There is a Shuttle program requirement to provide payload changeout capability at the launch pad and to accomplish that changeout within 10 working hours at any time up to T-2 standby condition. Since this capability exists, and the equipment requirements for contingency changeout and routine installation are essentially the same, it seems logical to examine using that equipment on a routine basis. The study considered a number of factors such as:

a. Payload support (host) time in the Orbiter.

b. Impact on Orbiter timelines.

c. Total Tug processing time.

d. Impact on personnel and fleet size.

Impact on Orbiter timelines was minor. Installation at the pad would require approximately one to two hours additional pad time for the Orbiter, but would eliminate

approximately eight hours installation time during the Orbiter MCF cycle. The most dramatic change can be seen in Orbiter host time and resulting reduction in Tug total processing time as shown in Figure 2-106. Host time is reduced from 140 hours to 32 hours, which results in a 109 working hour savings in total Tug processing time. This means the Tug and mated spacecraft can be installed in the Oribter just over one day prior to launch rather than 9 to 13 days prior to launch, which could be a major advantage to some payloads such as those containing biospecimens or RTG power sources.

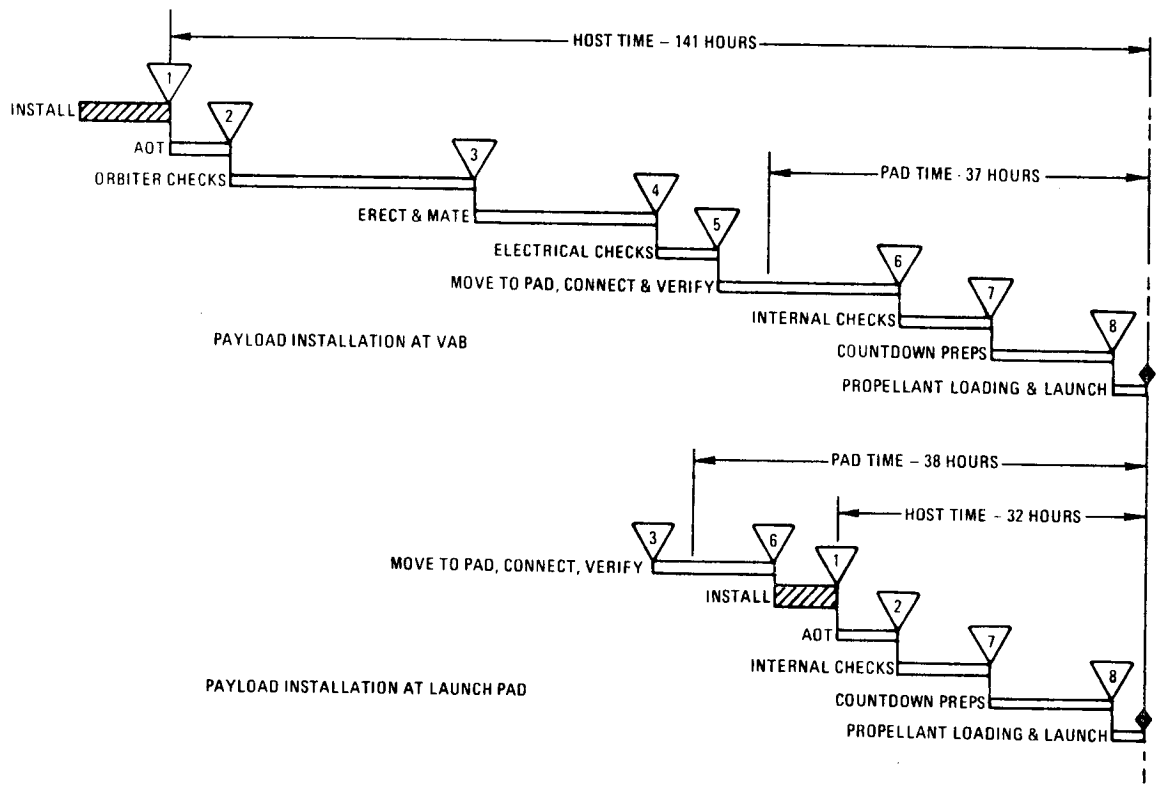

Figure 2-106. Turnaround Sequence for VAB and Launch Pad Payload Installation

The time savings in the Tug timeline could result in a reduction of vehicles in the active fleet, but probably would not result in a reduction of the total fleet buy due to expendable Tugs and attrition. The major advantage gained would be the opportunity to consider reductions in the Tug turnaround crew size to take advantage of extra time available to accomplish turnaround maintenance.

Based on these findings, it is recommended that baseline Shuttle operations plans be changed from the current horizontal Tug installation in the MCF to vertical installation at the launch pad concept.

The Tug refurbishment and maintenance concept is shown in Figure 2-107. Its objective is to restore returning Tugs to the required levels of safety and reliability at a practical cost. The approach to achieve this objective is the use of CMM_{PF} (Condition Monitored Maintenance with pre-flight test). This approach requires considerable on-board performance monitoring capability, which results in reliable, fast, and low cost turnaround.

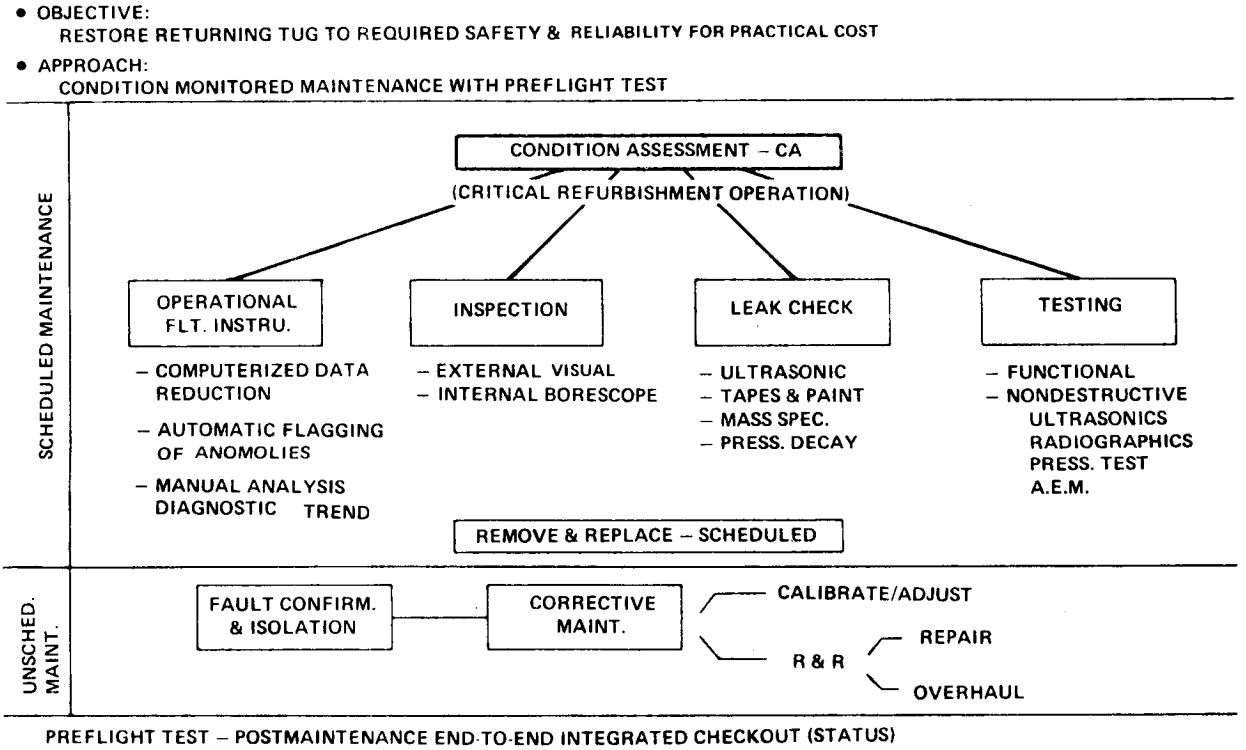

Figure 2-107. Refurbishment and Maintenance Concept

Condition assessment has been identified as the critical refurbishment operation. Once the condition of a returning Tug has been accurately determined and deficiencies identified, the tasks required to restore the vehicle are known, and work can proceed with confidence. A major contributor to high confidence and reduced manhours for the condition assessment operation is the operational flight instrumentation (OFI). This is based on the fact that the "best test" of any system, subsystem, or component is the last flight, provided that sufficient data is returned for maintenance analysis.

Computerized data processing and manual analysis of operational flight instrumentation (OFI) will be used as the primary method to assess the condition of a Tug returning from a mission. External and internal visual inspections, leak checks, and other tests as shown will be made as part of the CA process. This condition assessment process will lead to either verification that subsystems are operationally intact or that a requirement exists to remove and replace a component or perform some servicing.

Components with known life requirements will be replaced on a scheduled basis. Unscheduled maintenance will be performed on components determined to be in need of replacement by the CA process.

After the scheduled and unscheduled tasks have been performed, the Tug will receive a post maintenance end-to-end integrated checkout to determine the status of various subsystems.

2.5.3 ORBITER INTERFACE. The Tug-Orbiter interface is a major area of interest and concern. It is important since they are both key elements of the STS. It is particularly important at this time since the Orbiter is already under development. The Tug designs being considered must incorporate the definite constraints imposed by the Orbiter while at the same time the Orbiter must incorporate those features required to support a useful Tug system. Only in this way will the STS meet its goals of being a useful, low cost system.

The subject of Tug-Orbiter interface encompasses:

a. Physical
    1. Structural
    2. Mechanical
    3. Fluid
    4. Electrical
b. Functional
    1. Ground Operations
    2. Flight Operations
    3. Safety
c. Environmental

2.5.3.1 Physical Interfaces. The physical interfaces are illustrated in Figure 2-108. All the Tug programs considered along with their structural support ancillary equipment fit within the aft 35 ft (10.7m) of the Orbiter payload bay.

During the course of the study a structural support system trade was conducted, which investigated several statically determinate attachment schemes. It was found that the minimum payload impact occurs by taking the aft reaction through the support adapter rather than the Tug and using side rather than keel fittings to react the vertical (z) loads. The selected baseline support system, which conforms with the NASA four-point determinate concept, is shown, along with the maximum loads, in Figure 2-109.

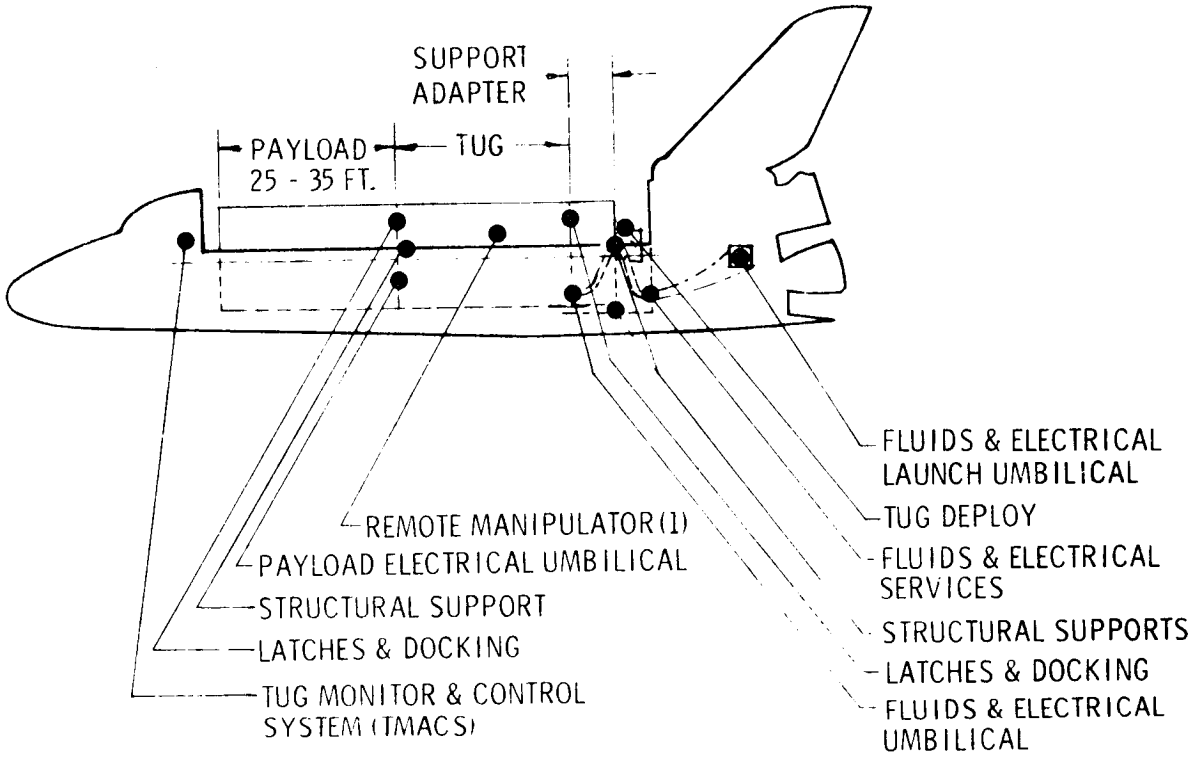

Figure 2-108. Tug Physical Interfaces

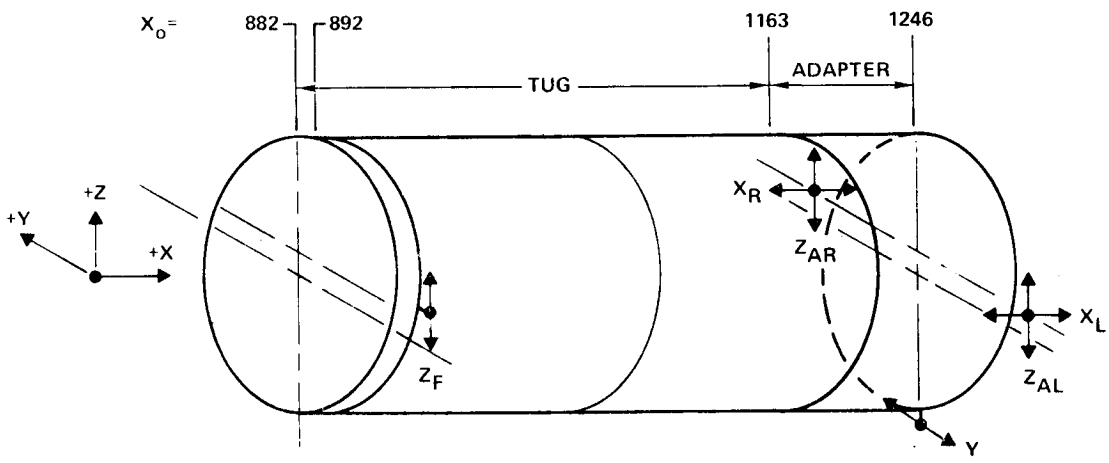

LOC.	MAXIMUM ULTIMATE REACTIONS MAGNITUDE (LB.)	LOAD CONDITION
X_R	-86,873/+165,226	CRASH/ORBITER END BURN
X_L	-86,873/+165,226	CRASH/ORBITER END BURN
Y	±40,540	SIDE DRIFT LANDING
Z_{AR}	-16,536/+46,900	ENTRY/SIDE DRIFT LANDING
Z_{AL}	-54,485/+50,069	SIDE DRIFT LDG/LIFT-OFF
Z_F	-75,206/+33,426	CRASH/CRASH

Figure 2-109. Tug Baseline Support System and Loads on Orbiter

If it were acceptable to the Orbiter, a redundant support system that adds an additional keel fitting for vertical loads to reduce Tug torsion would offer a 65 lb (29.4 kg) payload increase.

The support adapter is the key structural element of the Tug/Orbiter interface. The general configuration is shown in Figure 2-110. The support adapter structure consists of a cylindrical section the same diameter as the Tug body with the sidewall of similar construction to the body structure. The adapter mounts the action portion of the docking and latching mechanisms. Twelve power-operated, overcenter-type latches provide structural continuity between the adapter and the Tug. Three probe and drogue units for guidance and velocity attenuation are provided for berthing the Tug to the support adapter.

Fluid feed, fill, vent and drain lines are routed through the support adapter from the Orbiter service panels to the Tug umbilical panels. Each line contains a rotary joint to allow Tug rotation with the lines connected. Three moveable umbilical panels are located at the separation plane between the Tug and support adapter. The panels mount the fluid and electrical disconnects and are actuated electrically by linear ball screw actuators.

Two linear ball screw actuators, one on each side of the Tug, provide rotation. Dual actuators are used for redundancy, either of which will rotate the Tug with the other inoperative. Attachment provisions will be required on the Orbiter payload bay longerons for these actuators.

The support adapter also contains spherical bottles that store gaseous helium for abort dump pressurization of propellants, insulation, and tank purge.

It is seen from the preceding description that most of the active mechanical interfaces take place between the Tug and its support adapter. The exceptions are the rotation mechanism, the Z-support release, and the manipulator arm attachment.

The eight fluid functions required by the Tug and their general grouping and routing through the Orbiter are shown in Figure 2-111. The use of the rotary joint allows these lines (and the electrical lines) to remain engaged throughout the deployment rotation and immediately after recapture. This approach extends the hardline control of the Orbiter over the Tug and eliminates a second set of retractable umbilicals (Orbiter to support adapter).

The fluid line size and pressure requirements for the support adapter to Orbiter interface are shown in Table 2-139. The main propellant fill, drain and dump line sizes are based on dumping of both propellants during powered flight in the event of a Shuttle abort. Typical arrangements for the two aft bulkhead interface panels are shown in Figure 2-112. Current Orbiter data indicates that these panels are located near the

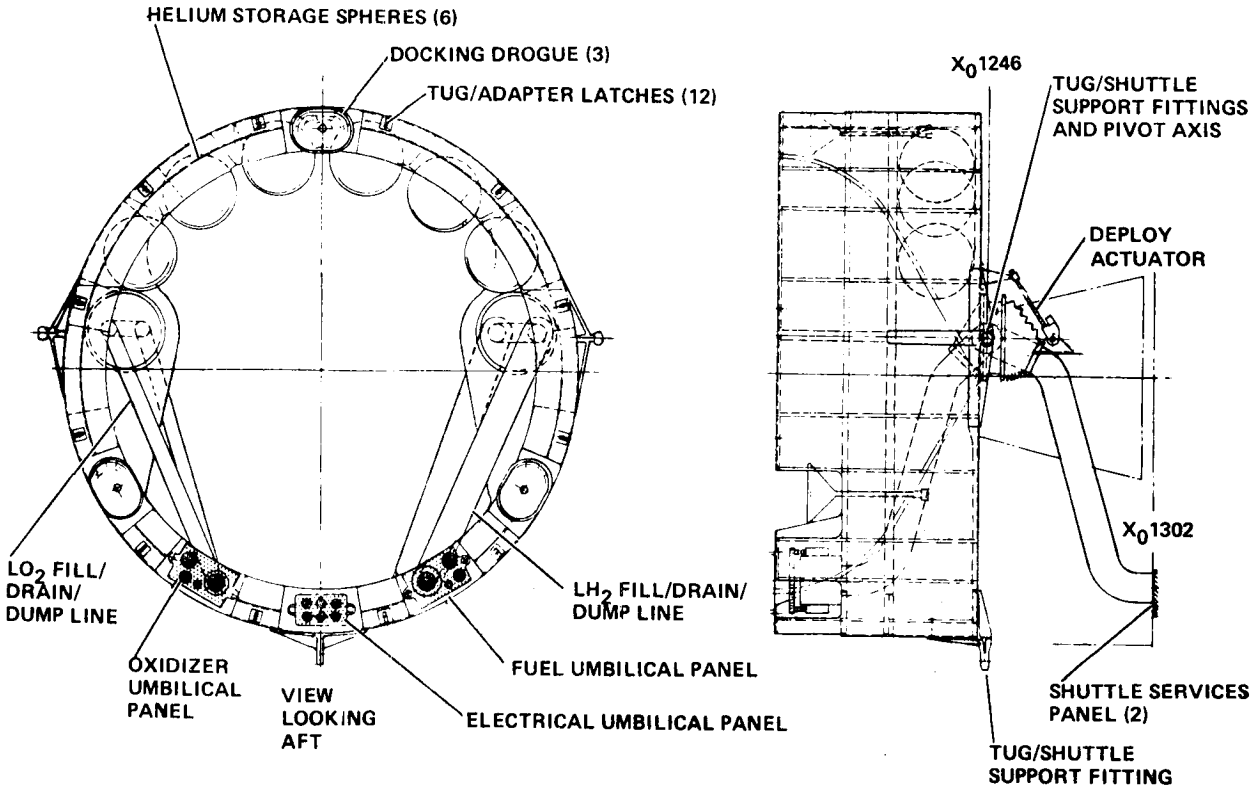

Figure 2-110. Tug/Orbiter Support Adapter

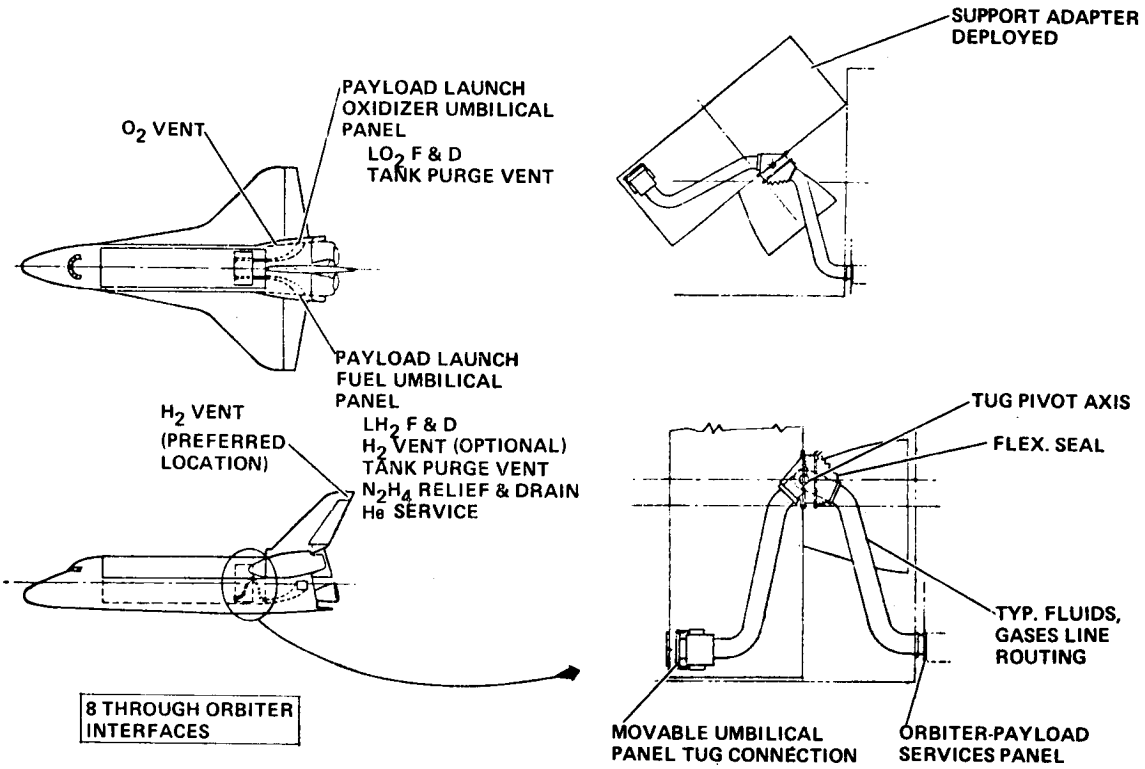

Figure 2-111. Fluid Interfaces

Table 2-139. Cryogenic Tug Fluid Interface Requirements

	TUG INTERFACE	LINE DIA. (INCHES)	PRESSURE (PSIA)	ORBITER INTERFACE
OXIDIZER PANEL	LO_2 FILL, DRAIN & DUMP	5.0	45 MAX	LO_2 FILL, DRAIN & DUMP
	GO_2 VENT	3.0	23 MAX	GO_2 VENT
	LO_2 TANK PURGE VENT	1.5	15 MAX	LO_2 TANK PURGE VENT
	He PURGE	0.5	3500 MAX	—
FUEL PANEL	LH_2 FILL, DRAIN & DUMP	6.0	22 MAX	LH_2 FILL, DRAIN & DUMP
	GH_2 VENT	3.0	20 MAX	GH_2 VENT
	LH_2 TANK PURGE VENT	1.5	15 MAX	LH_2 TANK PURGE VENT
	N_2H_4 RELIEF & DRAIN	1.0	350 MAX	N_2H_4 RELIEF & DRAIN
	He FILL	0.5	3500 MAX	He SERVICE

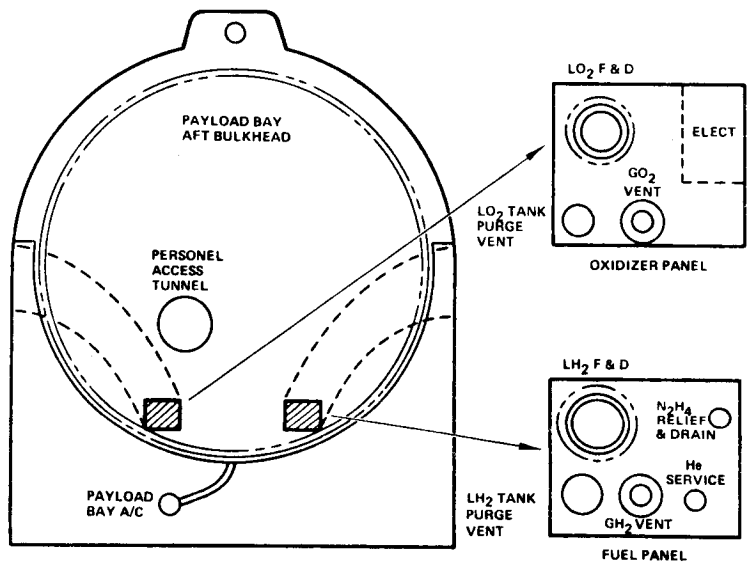

Figure 2-112. Orbiter/Support Adapter Fluids Interface

bottom of the payload bay aft bulkhead. This location results in poor accessibility for Tug mating during installation, leak checks, and payload changeout.

All Tug related electrical interfaces pass through the Tug support adapter. Figure 2-113 shows schematically how this interface is accomplished. The interface unit represents the bulk of the adapter electronics in terms of complexity because it contains the logic and multiplexer capability to interface with both the Tug Monitor and Control System (TMACS) and ground GSE in addition to providing a control and monitor interface with the Tug vehicle and adapter functions.

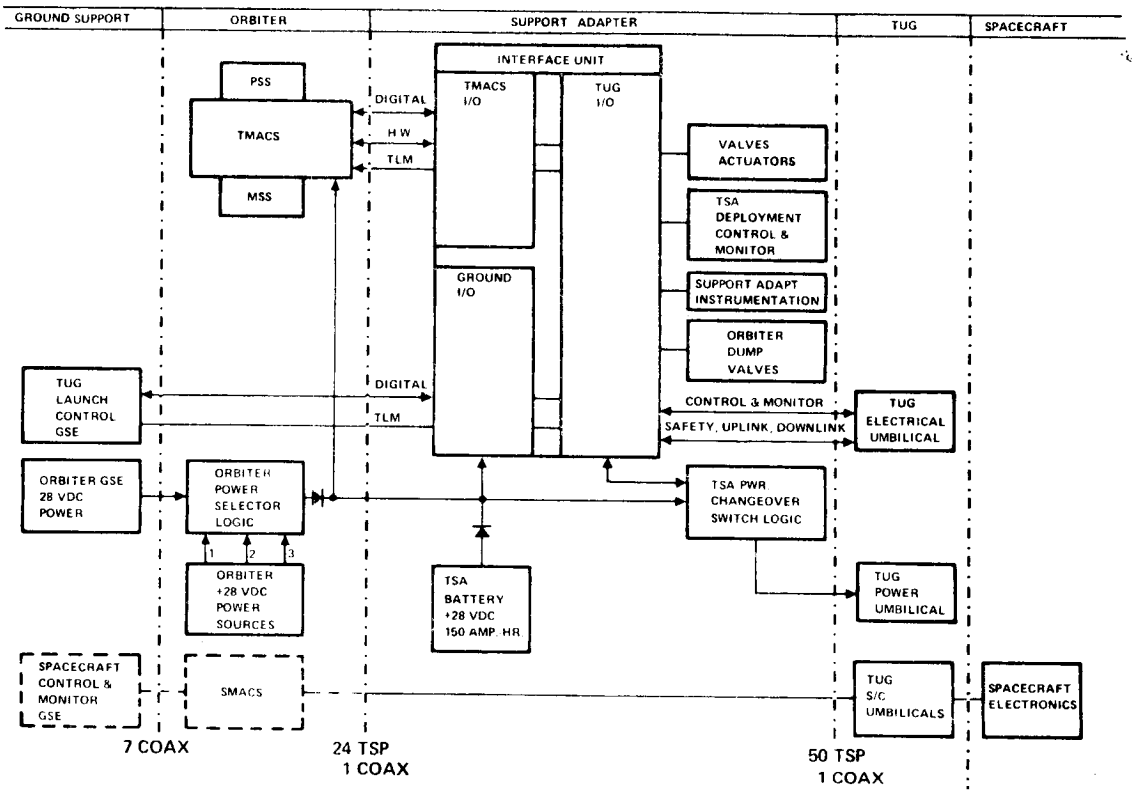

Figure 2-113. Tug Electrical Interface Functional Block Diagram

The TMACS is located in the Shuttle Orbiter crew compartment and incorporates a combination of Tug-supplied, payload-peculiar equipment and Orbiter-supplied, standard equipment. TMACS provides the necessary communication and logic to monitor safety functions, provide status verification prior to deployment, and provide the subfunctions necessary to assure overriding control from the Orbiter during ascent, deployment, abort, and retrieval. The major TMACS functions and equipment are indicated in Figure 2-114.

The baseline TMACS design includes all hardware necessary to perform these functions. The actual mechanization of these requirements involves integrating the capabilities of the Orbiter, mission specialist station, payload specialist station, and special-purpose Tug-supplied hardware and software.

As indicated in Figure 2-114, several TMACS implementation concepts were investigated. The recommended concept is one in which the mission specialist has TMACS with the payload specialist having the spacecraft.

TMACS ensures the safety of the Shuttle and crew by continuously monitoring and displaying data related to out-of-tolerance conditions for safety-critical functions, by providing an alert to the crew when a safety-critical function approaches a limit, and by automatically executing corrective action sequences when directed by the crew. TMACS verifies Tug operational readiness by monitoring the status of Tug systems and by permitting a crew member to initiate a sequence of tests for Tug subsystems.

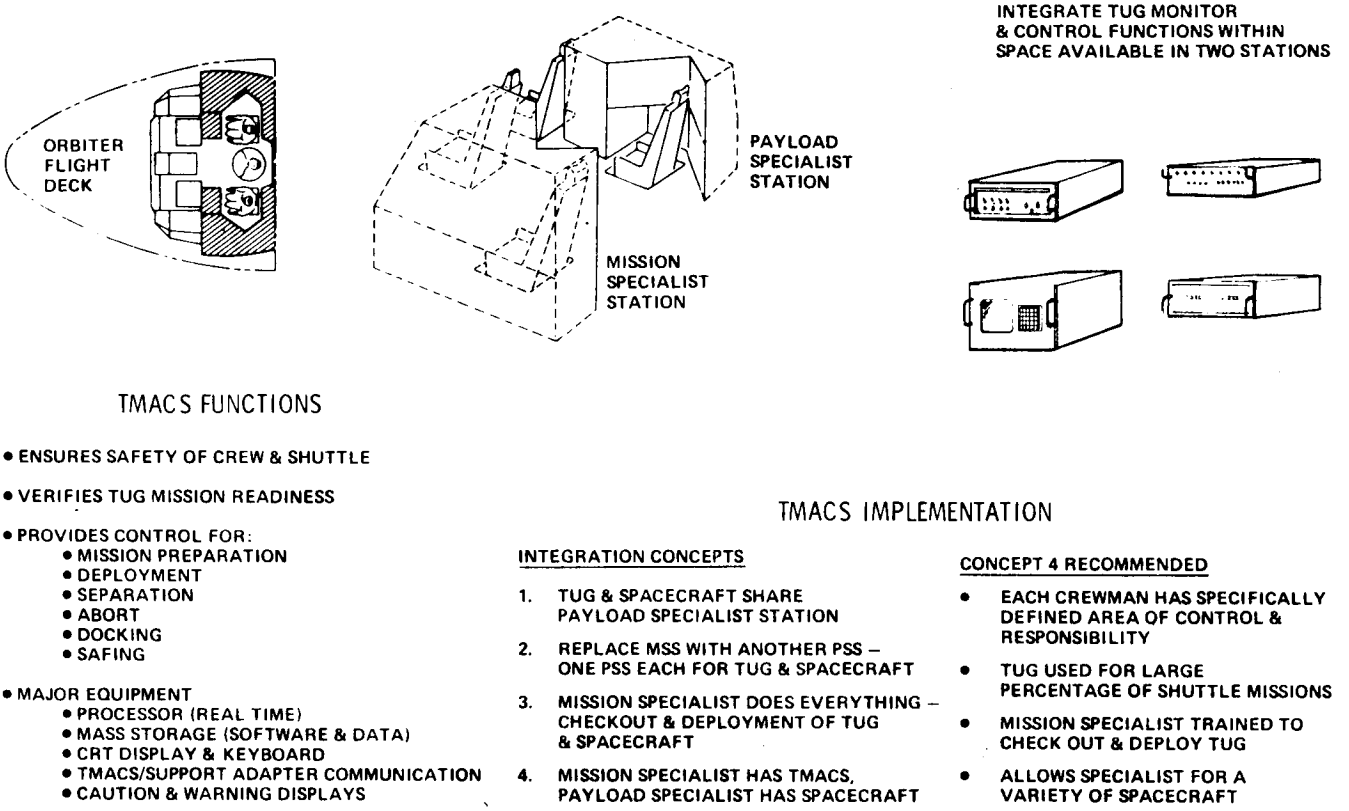

Figure 2-114. Tug Monitor and Control System

The division of TMACS functions between Orbiter-supplied equipment and Tug-supplied equipment in the crew compartment must be determined by comparing required capabilities with those available on the Orbiter. A comparison of these requirements with the capabilities as known in September 1973 is shown in Table 2-140. Possible problems occur with regard to sharing a computer and the detailed communication interface requirements. More detailed analysis is required in this area.

The physical characteristics of the TMACS are shown in Table 2-141. Elements identified as GFE are those required Orbiter-supplied capabilities that are independent of, but interface with, the TMACS. The summary totals are in two forms; one includes all elements and the other includes just those elements supplied by the payload contractor.

The emphasis has been on the Tug-related physical interfaces between Tug and Orbiter. The Tug payload (spacecraft) will have an impact since from the standpoint of the Orbiter both the Tug and spacecraft are considered Orbiter payloads. A brief analysis was made by General Electric of the requirements that Tug payloads might impose on the Orbiter interface.

While in the payload bay prior to liftoff the spacecraft may require both fluid and electrical interfaces through the Orbiter to the ground. The range of interface requirements as derived from the available data on Tug spacecraft in the June 1973 NASA

Table 2-140. TMACS Orbiter Comparison

CAPABILITIES	MACS	MISSION SPECIALIST STA.*	PAYLOAD SPECIALIST STA.*
DATA CONTROL			
• PROCESSOR	YES – DEDICATED	YES – NOT DEDICATED	NO – PAYLOAD SUPPLIED
REAL TIME	YES – 16K, 16 BIT WORD	YES – 48K, 16 BIT WORD	NO – PAYLOAD SUPPLIED
PCM DECOM	YES – 16 KBPS	YES – PCM – DECODER, 25 KBPS	
I/O	YES – A/D, D/A, DMA, MUX.	YES – TMACS TO ORBITER INTERFACE	
• SOFTWARE			
TIME SHARE	YES – EXECUTIVE + 2 TENANTS	YES – P/L ALLOWED 10K CORE IN ORBITER COMPUTER	NO – PAYLOAD SUPPLIED
PROGRAM SIZE	3K TO 8K PER PROGRAM	ORBITER P/L S/W VALIDATION PROB.	
PROGRAM SPEED	2 KADS TO 70 KADS		
• DATA STORAGE	YES – DRUM, DISC OR MEMORY	YES – MASS STORAGE ASSOCIATED WITH ORBITER COMPUTER, DATA TAPES	NO – PAYLOAD SUPPLIED
SOFTWARE	100K WORDS		MAYBE – ORBITER TAPE UNITS MAY BE AVAILABLE
DATA LOGGING	1.5M BITS		
CREW INTERFACE			NO – PAYLOAD SUPPLIED
• C&W DISPLAY	YES – 7 LIGHTS & SWITCHES	YES – ORBITER SUPPLIED	NO – PAYLOAD SUPPLIED
• CONTROLS & SWITCHES	YES – CONTROL PANEL	YES – ORBITER FUNCTIONS	NO – PAYLOAD SUPPLIED
• CRT & KEYBOARD	YES – 1 EACH	YES – ORBITER SUPPLIED	NO – SAME AS ORBITER
COMMUNICATORS			
• COMMAND UPLINK • MONITOR DOWNLINK	YES – TRI-PLEX REDUNDANT LINK	YES – 2 KBPS	NO – PAYLOAD SUPPLIED
• RF UPLINK	YES – 2 KBPS	YES – 2 KBPS	NO – VIA MSS
• PCM DOWNLINK	YES – 16 KBPS	YES – 256 KBPS/25 KBPS	NO – VIA MSS
POWER	YES – 28 VDC, 575 WATTS	YES – 28 VDC	YES – 28 VDC
PAYLOAD SPACE	12 FT.^{3}, 8 FT.^{2} (1,154 IN.^{2})	LIMITED TO ORBITER SUPPLIED FUNCTIONS	YES – RACK, 20 FT.^{3} 17 FT.^{2} (2,445 IN.^{2})

Table 2-141. Physical Characteristics of Tug Monitor and Control System

CMACS REQUIREMENTS	SUPPLIED BY PAYLOAD	POWER (WATTS)	WEIGHT (LBS)	VOLUME (FT^3)	PANEL SPACE (IN^2)
DATA CONTROL					
PROCESSOR	X	150	50	1.0	140
INPUT/OUTPUT	X	65	55	4.0	224
PCM DECOM	X	25	20	0.7	84
PCM INTERLEAVE	GFE	15	5	0.5	
DATA STORAGE					
- SOFTWARE	X	100	75	2.0	162
- DATA LOGGING	GFE	100	75	2.0	162
CREW INTERFACE					
C&W DISPLAY	X & GFE	10	20	0.1	48
CONTROL & SWITCHES	X		10	0.5	180
CRT & KEYBOARD	X	60	60	0.5	64
COMMUNICATIONS					
TMACS/TSA LINK	X	10	10	0.5	54
RF UPLINK	GFE	30	10	0.1	
TLM DOWNLINK	X	10	10	0.1	36
TOTALS (BASELINE - NO ORBITER SUPPORT CAPABILITY)	X & GFE	575 WATTS	400 LBS	12 FT^3	1154 IN^2 (8 FT^2)
TOTALS (LOW ORBITER SUPPORT CAPABILITY)	X ONLY	430 WATTS	310 LBS	9.4 FT^3	7 FT^2

mission model is shown in Table 2-142. A key assumption in deriving these requirements was that the primary testing of the spacecraft was performed prior to installation in the Orbiter. These interfaces must be accommodated through the three available Orbiter umbilical panels along with the Tug requirements.

All Tug spacecraft will require some type of Spacecraft Monitor and Control System (SMACS) located in the Orbiter crew compartment. In terms of functions the SMACS would be similar to TMACS in that it would be involved with safety status, subsystem status, and pre-separation checkout. The implementation of SMACS and how much existing Orbiter capability might be used is an open issue. The major point is that separate monitor and control systems will be required for the Tug and its spacecraft. The problem of multiple payload delivery of different type payloads makes the monitor and control problem much more complex.

It is recommended that additional studies be made in this area of Tug spacecraft/ Orbiter interface requirements.

2.5.3.2 Functional Interfaces. The major functional interfaces between the Tug and Shuttle are ground and flight operations, and safety. Safety has been discussed separately in Section 2.5.1, and abort, which is part of flight operations, is discussed in Section 3.1.

Table 2-142. Payload/Ground Interface Requirements Summary

TYPE OF LINE	SMALL, SIMPLE SPACECRAFT	LARGE, COMPLEX SPACECRAFT
NONCRYOGENIC FLUID	1 TO 3 LINES, 1/4-TO 3/8-IN. DIAMETER	4 TO 14 LINES, 1/4- TO 5/8-IN. DIAMETER
CRYOGENIC FLUIDS	0 TO 2 LINES, 3/4- AND 1/4-IN. DIAMETER	0 TO 4 LINES, 2 AT 1/4-IN. DIAMETER AND 2 AT 3/4-IN. DIAMETER
ELECTRICAL POWER	6 LINES, NO. 14 OR 16 GAUGE	8 TO 14 LINES, NO. 8 TO 16 GAUGE
CONTROL/STATUS (INCLUDES C/W)	45 TO 60 LINE PAIRS, NO. 20 TO 22 GAUGE	50 TO 125 LINE PAIRS, NO. 20 TO 22 GAUGE
RF DATA	3 TO 4 LINES, 2 AT 1/2-IN. COAXIAL CABLE AND 1 TO 2 AT 1-1/2- TO 2-IN. SEMIRIGID/ RIGID WAVEGUIDE	4 TO 6 LINES, 2 TO 3 AT 1/2-IN. COAXIAL CABLE AND 2 TO 4 AT 1-1/2- TO 2-IN. SEMIRIGID/ RIGID WAVEGUIDE

The major issue when considering ground and flight operations functional interfaces is that the operational procedure and equipment proposed for the Tug be consistent with the Space Shuttle operations and procedures. This has been done within the level of available Shuttle operational definition. There are still several open issues. During post-flight operations there is an issue regarding the time and location of demate and the possibility of various concurrent operations. In the prelaunch phase the Tug/Spacecraft installation time/location and the changeout operations are not clearly defined. With respect to flight operations there is not a clear definition of the Orbiter timelines for Tug deployment and retrieval.

2.5.3.3 Environmental. The Tug is required to meet the environmental conditions imposed by the Shuttle. These include payload bay temperatures, acceleration levels, acoustic levels, and vibration levels. To the level of definition of this study the Tugs can meet these environmental conditions. One area requiring more analysis is the effect of the loaded Tug on the payload bay temperature prior to launch.

2.5.3.4 Summary. The Orbiter interface accommodations are generally acceptable for cryogenic Tugs. There are certain minor changes that would improve the interface such as higher umbilical panels in the aft bulkhead and allowing two forward Z-structural supports to reduce Tug torsion.

It is strongly recommended that the Tug/Shuttle interface be continuously studied since the Shuttle is already under development. Only in this way can it be assured that Tug requirements are incorporated in the Shuttle design. In addition, the Tug payload/Shuttle interface should be studied.

2.5.4 SPECIAL SENSITIVITY STUDIES. As part of the program definition task, sensitivity studies were conducted for various capability features. In general these sensitivity results are applicable to all of the programs.

2.5.4.1 Reliability and Mission Duration. The sensitivity of Tug reliability to mission duration is described in Figure 2-115. The mission reliabilities for Programs 1, 2, and 3 were first established for the baseline missions associated with each of these programs. The mission durations were then varied for each of the programs in accordance with the sensitivity analysis ground rules. As indicated in this chart, the rates of reliability change with respect to time are 0.009 per day for Program 1, 0.005 per day for Program 2, and 0.004 per day for Program 3. Program 1 reliability, therefore, is significantly more sensitive to variations in mission duration than Programs 2 and 3. The principal reason is that Program 1 redundancy levels were based on achieving a reliability of 0.97 for a baseline mission of only 47 hours. When an attempt is made to extend the mission duration, the reliability falls relatively sharply. On the other hand, Programs 2 and 3 are designed to attain a 0.97 reliability for approximately six- and five-day missions. A greater degree of redundancy was consequently built into these designs, and the sensitivity of their reliability to mission duration is comparatively small.

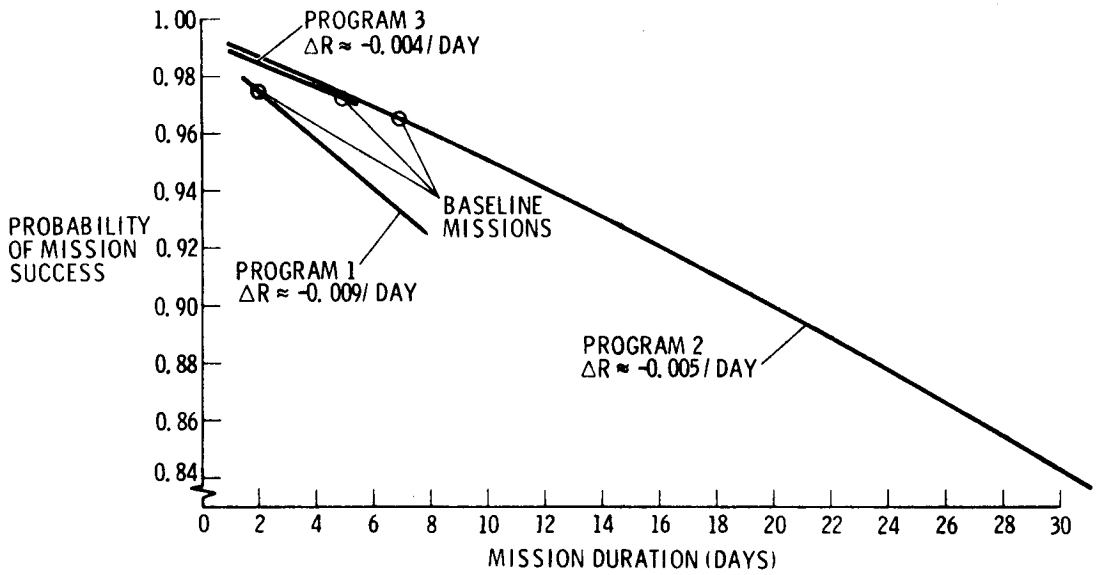

Figure 2-115. Reliability Versus Mission Duration

2.5.4.2 Autonomy. The question of Tug autonomy level was a major issue during the study. The cost of autonomy was analyzed for Programs 1, 2, and 3, and the results are shown in Table 2-143. The analysis of cost and weight differences was referenced to autonomy level I because Programs 1, 2, and 3 have autonomy level I implementation in the guidance update and rendezvous and docking subsystems. In terms of equipment, this means a horizon sensor and a star sensor for guidance update and dual laser radars for automatic rendezvous and docking. The weight differences for level II is the result of removing the star sensor and adding a sun sensor and navigation satellite user equipment; for level III, removal of the star sensor and the addition of the sun sensor and, in the case of Program 2 and 3 final, the addition of television and its associated communications equipment. The same is true of level IV.

Cost differences involve the costs of the previously mentioned hardware changes plus considerations of software variations, ground support hardware, software and operations personnel, and their training. The data shows that autonomy level I has the lowest DDT&E, operations, and total program cost for all three programs.

2.5.4.3 Design Life. The Tug vehicle has been designed to be reusable but no attempt has been made to limit the number of reuses for which the vehicle would be designed. Conversely, very little additional DDT&E effort has been included to extend the life of components. The design was allowed to progress in a normal manner and component life was checked after the design met the specified strength, accuracy etc. The only components found to have a mean time between overhaul or design life less than 100 missions are the RL-10 Cat I engines, the ACPS thrusters, the MLI, and the fuel cell.

Table 2-143. Autonomy Sensitivity Deltas Referenced From Autonomy Level I

	PROGRAM 1			PROGRAM 2			PROGRAM 3I			PROGRAM 3F		
	AUTONOMY LEVELS			AUTONOMY LEVELS			AUTONOMY LEVELS					
Δ COST ($M)	II	III	IV	II	III	IV	II	III	IV	II	III	IV
Δ WEIGHT	+23	-3	-3	+23	+35	+35	+23	-3	-3	–	+35	+35
DDT&E	+1.6	+2.1	+3.4	+1.6	+10.1	+11.9	+1.6	+2.1	+3.4	–	+8	+8
PRODUCTION & SPARES	+0.4	-1.5	-1.5	+0.4	+2.7	+2.7	+0.4	-1.5	-1.5	–	+4.2	+4.2
OPERATIONS	0	+5	+9.9	0	+5.5	+8.6	0	+1.8	+3.6	–	+3.5	+5.5
PROGRAM	+2.0	+5.6	+11.8	+2.0	+18.3	+23.2	+2.0	+2.4	+5.5	–	+15.7	+17.7

AUTONOMY LEVEL I HAS:

- LOW DDT&E COST
- LOW OPERATIONS COST
- LOW TOTAL PROGRAM COST

These systems will be overhauled and replaced; in the case of the MLI and fuel cell at the appropriate times, which are between 10 and 20 missions depending on the system. All other systems have a life far in excess of the 100 missions equivalent and will be subject to random failure replacement. The cyclic testing required would increase to show this increased life, but the major cost of the test is the test setup and the test specimen. The additional time required to test to a larger number of cycles is generally small.

2.5.4.4 Ground Turnaround Time. The effect of ground turnaround time on program costs was investigated for Program 1; however, the conclusions would be applicable to the other programs. The parameters that vary with turnaround time are the manpower, i.e., number of shifts and the fleet size required to perform the mission. In performing an analysis the basic assumption derived from the operations analyses was that regardless of crew size, Tug turnaround serial time is constant at 270 hours. Of this time, 154 hours are constrained by the Orbiter timeline while the Tug is in the cargo bay. Thus, the variation in the number of shifts assigned (and resultant total crew size impact) can be applied only to the 116 hours when the Tug is outside the cargo bay.

The minimum active fleet size was determined assuming an average two-day flight, even launch centers, and a maximum annual launch rate at KSC of 22 flights. It was found that extending the ground turnaround time to the point where a total one-shift operation at KSC could be used would require an additional vehicle in the active fleet

inventory as long as the Tug is installed in the cargo bay while the Orbiter is in the MCF. Converting the crew size variations and additional vehicles to equivalent total program dollars we obtain the curves in Figure 2-116. Here we see that going to three shifts to reduce turnaround time does not reduce the number of vehicles required but does reduce manpower costs. Conversely, reducing to one shift would save manpower dollars but would add one vehicle to the active fleet requirements. While this would appear to save total program dollars, it reduces operational flexibility by reducing manpower to the level where it is all but impossible to accommodate the uneven launch center cases. On the other hand, pad installation of the Tug would permit reducing to one shift and still accommodate uneven launch center cases.

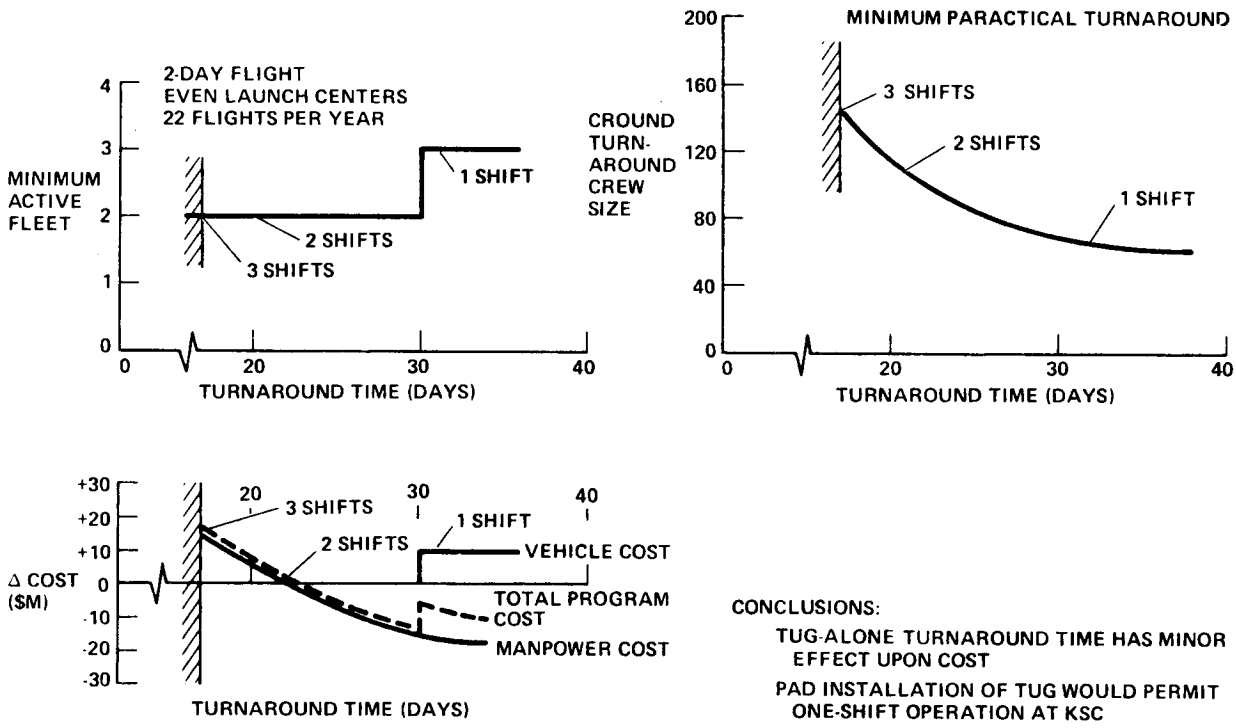

Figure 2-116. Ground Turnaround Time Sensitivity

2.5.4.5 Other Sensitivities. Several other special sensitivity studies were performed, which involved defining the vehicle changes associated with certain features and the resultant payload and development cost impact. The results are summarized in Table 2-144.

Providing 300W of payload power in Program 1 does not affect the weight or cost but merely requires a slight increase in fuel cell reactants. The addition of rendezvous and docking capability requires adding a 77 lb (35 kg) docking frame and 60 lb (27.2 kg) laser radar plus software changes. Payload spin or despin capability requires a spin kit plus software changes and an increase in ACPS propellant.

There are three sensitivities under DOD communications. Increasing the communication rate requires three antennas. SCF communication requires adding Tug-to-ground SGLS equipment, which includes the 10 lb (4.5 kg) for the secure communications encryptor and decryptor.

The addition of payload service capability requires software changes for the modes when the payload is attached to the Tug. Payload communication, when the payload is detached, requires a Tug-payload rf link.

The performance increment associated with these capability features is presented in Table 2-144. The rendezvous and docking payload is the total payload and not the increment. One of the reasons this retrieval payload is low is that the Program 1 Tug is sized for the deployment mission and only has a propellant capacity of about 50,000 lb (22,660 kg).

Table 2-144. Other Sensitivity Results

SENSITIVITY AREA	REQUIRED CHANGES	ΔINERT WEIGHT LB (KG)	ΔDDT&E ($M)	ΔSYNCH. PAYLOAD LB (KG)	
				DEPLOY	RETRIEVE
PAYLOAD POWER (300W)	INCREASE FUEL CELL REACTANTS (3 LB)	–	–	-3 (-1.4)	
RENDEZVOUS & DOCKING	ADD DOCKING FRAME, LASER RADAR, SOFTWARE	137 (62)	13.2	NA	1720 (780)
PAYLOAD SPINUP	INCREASE ACPS PROPELLANT (7 LB) ADD SPIN/DESPIN KIT, SOFTWARE	87 (39.5)	~1.0	-264 (-120)	-160 (-73)
DOD COMMUNICATIONS					
256 KBPS	ADD 3 ANTENNAS	10 (4.5)	0.4	-29 (-13)	-18 (-8.2)
SFC COMM.	ADD TUG/GROUND SGLS EQUIPMENT	42 (19)	1.8	-123 (-55)	-73 (-33)
SECURE COMM.	ADD ENCRYPT. & DECRYPTER	10 (4.5)	–	-29 (-13)	-18 (-8.2)
PAYLOAD SERVICES	SOFTWARE, TUG/PAYLOAD RF LINK	44 (20)	6.3	-128 (-58)	-77 (-35)

2.6 SUPPORTING RESEARCH AND TECHNOLOGY

As a result of the analyses conducted during the study, certain areas where research and technology efforts should be applied were identified. The identified items are not really technical breakthroughs as much as they are advances or specializations of the current state of the art. In this context many of them could be postponed until the beginning of a hardware development phase. This would not be at all desirable, however, since they are aimed at developing the data with which to make decisions concerning alternate implementations. The costs and schedules associated with each area of technology reflect the same thing. They are estimates of the cost and calendar time required to develop the data necessary to make a decision about which of alternate techniques should be chosen. Sufficient data would be developed to allow reasonable requirements to be specified and to guide the choice of appropriate design allowables. Thus, the tasks and their associated costs and schedules do not reflect development into an actual product, but rather the development to the point where the data to determine applicability and risk are sufficient.

Since the results of the configuration and program definition tasks have shown that the given mission models can be accomplished with a RL-10 Cat I or Cat II main engine, there is no technology effort identified for advanced engines, i.e., RL-10 Cat IV, ASE, or Aerospace. If the government feels that there are undefined missions that would justify the cost of a significantly higher performance Tug, then technology efforts in the advanced engines, particularly the RL-10 Cat IV, should be continued.

Figure 2-117 summarizes the cost and schedule requirements for the identified technology areas. The schedule represents the duration of effort and does not mean that all efforts should start simultaneously. In most cases the tasks should be initiated such that the significant results would be available for incorporation during the Phase B effort. The following paragraphs summarize these technology items. Included for each item is the status, justification, objectives, resources required, and applicable programs.

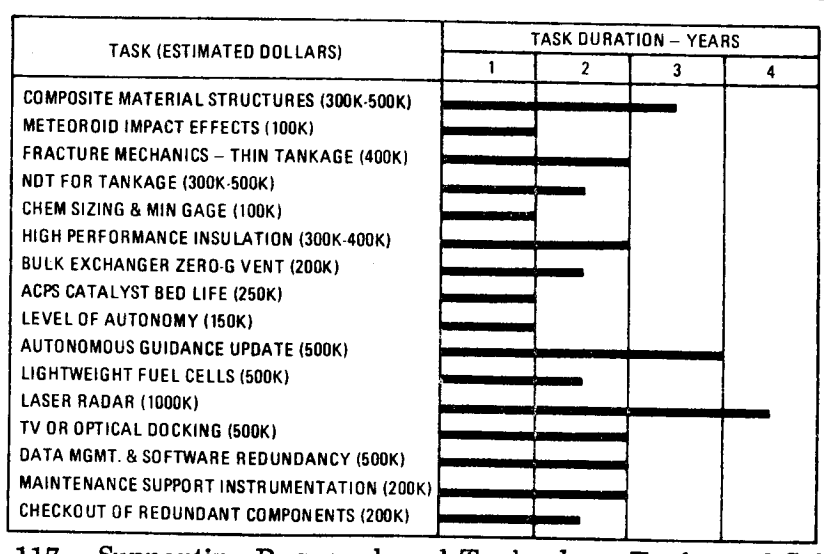

Figure 2-117. Supporting Research and Technology Tasks and Schedules

TITLE: COMPOSITE MATERIAL STRUCTURES

STATUS: Filamentary composite materials such as graphite/epoxy, boron/epoxy, and boron/aluminum have been fabricated into structural assemblies and significant weight savings demonstrated. Development of material properties data for thin gage face sheet material is insufficient for design implementation. Effects of meteoroid impact, acoustics, and vibration have not been determined.

JUSTIFICATION: Tug performance requirements dictate a lightweight structure as desirable. Composites offer the potential to minimize weight but this potential must be demonstrated. The cost associated with the use of composites must be investigated.

OBJECTIVES: To determine realistic weights and costs of Tug structure utilizing composite materials. To develop material properties and design allowables for thin gage composite materials applicable to Tug design. To evaluate the effects of the Tug environment on the composite materials.

RESOURCES REQUIRED: The use of the NASA hypervelocity impact facility and acoustic facility would be required. This would require $350k to $500k expenditure over a two-and-a-half-year time period.

APPLICABLE PROGRAM: 2

TITLE: METEOROID IMPACT EFFECTS ON COMPOSITE MATERIALS AND PRESSURIZED TANKAGE

STATUS: No damage criteria for meteoroid impact effects have been established for composite structures and metallic tankage with the configurations and in the gages proposed for Tug. No current testing had specimens under pressure.

JUSTIFICATION: Current designs for advanced Tugs utilize a composite body structure to serve, secondarily, as a meteoroid barrier for tank wall protection. The effectiveness of composites for this and their strength retention after impact, plus the acceptable limits for cratering and spalling of a tank wall under pressure, are all areas requiring investigation to achieve a reliable, minimum weight Tug.

OBJECTIVES: To establish damage criteria and material selection data for the Tug. To determine damage limits for candidate tank walls (maximum acceptable cratering, etc.) and for composite body structure for several types of construction (monocoque, stiffened, sandwich).

RESOURCES REQUIRED: The use of the NASA hypervelocity impact facilities and contractor static testing will be required. This would be a one year duration effort requiring $100k.

APPLICABLE PROGRAMS: All

TITLE: FRACTURE MECHANICS FOR THIN GAGE TANKAGE

STATUS: Fracture toughness data is available for thick materials (plane strain) but not for the thin gages expected to be utilized on the Tug (plane stress or mixed mode). Since plane strain data is the minimum toughness value, use of such data for thin materials is overly conservative. The critical fracture condition is likely to be under conditions of sustained loads where there is little data.

JUSTIFICATION: The requirements of NASA SP 8040 are not readily applied to thin wall pressure vessels that will leak-before-break (which is desirable). A proof test criterion to guarantee that leaks will not develop after the conclusion of the proof test must be developed.

OBJECTIVES: To establish a data base for thin gage 2219 aluminum alloy suitable for inclusion in a fracture control program for the Tug. To develop a fracture control plan using the proof test criteria developed specifically for Tug. Two tempers of 2219 will be evaluated: T87 (stronger) and T81 (tougher).

RESOURCES REQUIRED: This would be a two year program and would require approximately $400k.

APPLICABLE PROGRAMS: All

TITLE: NONDESTRUCTIVE CONDITION ASSESSMENT TECHNIQUES FOR TANKAGE

STATUS: Requirements to assure structural integrity of lightweight, highly stressed, dynamically loaded tankage for multiple reuse are currently evolving from other on-going programs. Very little practical experience has been obtained to date. Acoustic emission monitoring techniques offer promise as a tool for life monitoring.

JUSTIFICATION: Current methods of testing (proof pressure, X-ray, etc.) would be very costly and time-consuming if applied before each flight. The need for detection and definition of flaw growth as an essential element in fracture-controlled designs is obvious.

OBJECTIVES: To develop nondestructive methods and techniques for condition assessment monitoring of tankage to detect and characterize flaw growth, to detect leakage, and to evaluate and assess damage. This will be accomplished by producing sub-soak specimens that contain controlled geometry flaws and simulate access limitations representative of these expected for the Tug tankage. To assess the methods of acoustic emission monitoring, remotely directed ultrasonics, thermal detection, leak tests, etc., and their applicability to the Tug requirements.

RESOURCES REQUIRED: Some specialized test equipment is required. This would require a total of $300k to $500k expended over an 18-month period.

APPLICABLE PROGRAMS: All

TITLE: CHEMICAL SIZING TOLERANCE AND MINIMUM GAGE CONSTRAINT DETERMINATION

STATUS: The technology to fabricate thin gage tankage is within the current state of the art but requires development effort to reduce techniques to practice. Chemical sizing is still an art particularly for close tolerances in 2219 aluminum alloy. Improved process controls will be required to achieve the desired tolerances.

JUSTIFICATION: The performance required from the Tug would dictate thin gages, particularly if economical process can be developed. The ability to consistently fabricate tanks of thin gages and close tolerances must be verified early in the program.

OBJECTIVES: To develop techniques to chemically size bulkheads and tank barrel parts to thin gages and close tolerances. (Subscale parts are adequate for this.) To establish the minimum gage constraint to be applied based on tolerance control, surface finish, and handling.

RESOURCES REQUIRED: No specialized facilities are required to perform the gage mapping and selective chemical milling to reduce the tolerance of the formed parts to the target tolerance of ±0.005 inches. It is anticipated that this verification would cost approximately $100k and requires one to one-and-a-half years.

APPLICABLE PROGRAMS: All

TITLE: HIGH PERFORMANCE INSULATION FOR CRYOGENIC TANKAGE

STATUS: The performance of several multilayer insulation systems has been evaluated on test tanks. Additional effort is required to demonstrate the capability to install, inspect, purge, repair, and evaluate mission performance and assess degradation.

JUSTIFICATION: The cryogenic Tug requires an insulation system that will keep boiloff at an acceptable level for the mission duration and the cyclic operation of a reusable vehicle. The insulation system must withstand the environment of launch, entry, and ground operations. Demonstration of the capability of the insulation to withstand this environment, and evaluation of the degradation to be expected as well as determination of the associated weight of the system early in the program are desirable.

OBJECTIVES: To demonstrate the capability of cryogenic tank insulation systems to meet the performance requirements, to withstand the environment, and to evaluate the operational functions of performance monitoring, repair and, refurbishment.

RESOURCES REQUIRED: The use of the NASA hypervelocity impact facility and acoustic facility would be required. This would require $300k to $400k expenditure over a two-year time period.

APPLICABLE PROGRAMS: All

TITLE: BULK EXCHANGER ZERO-G VENT

STATUS: Prototype testing of bulk exchanges and mixers has been accomplished. Development of flight weight units leading to simulated orbital tests is the next step in their development. A distributed exchanger in lieu of the mixer should continue to be investigated.

JUSTIFICATION: Tank lockup, screen containment, and thrust settling are the alternates to this system, and each would present more severe weight penalties and/or safety hazards to the Tug. Development of a bulk exchanger zero-g vent system is required for long-term space residency.

OBJECTIVES: To verify the weights and powers of units developed for both LH_2 and LO_2 tanks. To develop flight weight prototypes that could be tested in an orbital flight and to test them in simulated orbital conditions of heat transfer. To investigate the distributed exchanger concept as an alternate to the powered mixers.

RESOURCES REQUIRED: A flight type tank and insulation system for each fluid would be required. This, plus the testing, would cost about $200k and require one to one-and-one-half years.

APPLICABLE PROGRAMS: All

TITLE: ACPS N_2H_4 THRUSTER CATALYST BED LIFE

STATUS: Current design monopropellant N_2H_4 thrusters in the thrust range desired for ACPS use have demonstrated adequate life in terms of on-off cycles and total on time. However, cycling through a number of burns followed by an exposure to vibration and atmosphere for the equivalent of 20 to 50 Tug flight profiles has not been accomplished.

JUSTIFICATION: The Tug, because of the reusability, places new environmental requirements on the ACPS thrusters. The catalyst bed may be vulnerable to repeated exposure to vibration and acoustics and to atmospheric contaminations. Demonstration of the life of a unit in the Tug environment is required to establish replacement/refurbishment guidelines.

OBJECTIVES: To demonstrate the potential reusability of the ACPS thrusters. To determine the feasibility of replacing the catalyst bed, if necessary, without replacing the entire engine.

RESOURCES REQUIRED: The test must be performed in a simulated space environment chamber with controlled pressure and with the capability to vibrate the engine for simulated flight sequences. This would require $250k expenditure over a one-year period.

APPLICABLE PROGRAMS: All

TITLE: LEVEL OF AUTONOMY OPTIMIZATION

STATUS: Initial studies by the various Tug contractors came to different conclusions as to the optimum level of autonomy to apply to the Tug. The difference between autonomy levels were, in general, small. Minor ground rule differences could account for the variation in results. A more thorough investigation to a set of mutually agreed upon ground rules is necessary to determine the optimum level of autonomy.

JUSTIFICATION: Although the current studies show little difference in cost between the levels of autonomy for DDT&E, the choice of a level vastly affects the overall Tug avionics suit as well as the flight and ground operations. The effect of choosing each level should be investigated in more depth before a level is chosen and this must be accomplished early in the Tug program.

OBJECTIVES: To determine the optimal level of autonomy for the Tug and the sensitivity to minor changes in the ground rules of costing and operations.

RESOURCES REQUIRED: This study would require one year and the expenditure of $150k.

APPLICABLE PROGRAMS: All

TITLE: AUTONOMOUS GUIDANCE UPDATE SYSTEM ACCURACY

STATUS: For completely autonomous guidance and navigation, star trackers and horizon sensors appear to be the best candidates. Landmark tracking has limitations at high altitude. Star trackers require little development but horizon sensors are marginal both in accuracy (horizon variance) and dynamic range (100 n.mi. to 60,000 n.mi. altitudes).

JUSTIFICATION: Improved sensor accuracy would improve Tug performance both in ΔV correction required and placement accuracies as well as reduce the Shuttle rendezvous requirements.

OBJECTIVES: To develop more accurate horizon model and to develop horizon sensor with sufficient dynamic range and accuracy. To investigate unknown landmark tracking as a supplement to horizon and star sensors. To develop the digital computer programs necessary to implement the guidance update (recursive filtering, altitude damping, etc.) and to evaluate overall accuracy.

RESOURCES REQUIRED: This would be a program that would require approximately three years of effort and the expending of about $500k.

APPLICABLE PROGRAMS: All

TITLE: LIGHTWEIGHT FUEL CELL DEVELOPMENT

STATUS: Previous manned space programs demonstrated the practicality of electrical power generation by fuel cell. The R&D for Shuttle-sized fuel cells currently being studied will provide the technology but not in the power range required for the Tug.

JUSTIFICATION: The Shuttle fuel cells could be utilized but they weigh more and, at low power output, regulation is poor. Advanced lightweight fuel cells offer a significant weight advantage for reasonable cost if developed as repackaged Shuttle stacks reduced to the Tug power requirements. Fuel cells offer considerable mission flexibility for longer duration mission (greater than 48 hours).

OBJECTIVES: To develop a rugged, reliable, inherently stable, low weight fuel cell capable of reliable, high performance for numerous missions requiring a wide range of power with good voltage regulation.

RESOURCES REQUIRED: The requirement is to adapt and repackage a Shuttle-type fuel cell which would require 18 months and $500k technology funding prior to contract to ensure feasibility.

APPLICABLE PROGRAMS: 2 and 3 Final

TITLE: LASER RADAR

STATUS: Presently available lasers have a questionable range capability. Those with sufficient power (e.g., CO_2) have long pulse width making them good at long range but not capable of handling docking, while those with short pulse widths (YAG, for example) do not have sufficient power. Attitude sensing is just now being studied.

JUSTIFICATION: The laser radar is the only sensor with the potential of providing both rendezvous and docking information. Increased power and resolution are required. Target attitude information is also required for automatic docking.

OBJECTIVES: To determine whether a single laser radar for use in rendezvous and docking is feasible. To develop the optimal combination/configuration of laser radars to solve the rendezvous, docking, and attitude sensor needs.

RESOURCES REQUIRED: The feasibility of single laser coverage is a 2-1/2 year, $700k task. The development of a sensor configuration for attitude sensing, etc., is an additional $300k task of one year duration.

APPLICABLE PROGRAMS: 2 and 3 Final

TITLE: TV OR OPTICAL PATTERN RECOGNITION FOR DOCKING

STATUS: Remotely controlled docking via television is presently under study. Little or no effort is currently being expended in the use of TV or optical devices for automatic docking. Pattern recognition techniques have been developed but not applied to this task.

JUSTIFICATION: As an alternate to use of lasers, this technique should be investigated. By keeping all computations on board the Tug, a completely autonomous rendezvous and docking can be accomplished. Ground aid as an option can be provided or remotely controlled docking could be used in some situations.

OBJECTIVES: To develop an alternate to laser radars. To determine the computer requirements for onboard pattern recognition processing and any lighting limitations that might be imposed. To verify that remote docking via TV is feasible with time delays in the loop.

RESOURCES REQUIRED: This study, including a simulation of the TV link with delays, would be a two-year task and would require approximately $500k funding over that time period.

APPLICABLE PROGRAMS: 2 and 3 Final

TITLE: DATA MANAGEMENT AND SOFTWARE REDUNDANCY TECHNIQUES

STATUS: Hardware implementation of redundancy (voting) has been developed. The practical redundancy when three or more computers are to vote and the internal redundancy within the computer are just now receiving attention. Software redundancy techniques are also receiving some attention but more work is necessary to evaluate them.

JUSTIFICATION: The computer and software configuration and the redundancy technique will have a profound effect on the overall avionics for the Tug and effect the Tug reliability and versatility as well as cost.

OBJECTIVES: To develop practical redundancy implementations for digital computers including the number of computers, their interconnection, and method of sharing the computation load. To develop the software architecture and outline the subroutine format to the level necessary to compare implementations. To determine the optimal redundancy technique for the Tug mission.

REQUIRED RESOURCES: This is a task that will require two years and the expenditure of approximately $500k.

APPLICABLE PROGRAMS: All

TITLE: MAINTENANCE SUPPORT INSTRUMENTATION

STATUS: Built-in test equipment (BITE) is currently well developed for avionic and mechanical control equipment. Extension of this capability to structure, tankage, insulation, and other passive subsystems of a Tug is desirable.

JUSTIFICATION: To lower turnaround time and cost, efficient, reliable instrumentation is required for all Tug subsystems. Reusability extends the need for BITE type equipment to many areas not tested except at time of manufacture.

OBJECTIVES: To develop nondestructive test techniques to the point where lightweight, reliable sensors may be permanently attached to the Tug (if feasible) to exploit the condition monitored maintenance (CMM) concept. To determine alternates to repeated proof tests and complete exercising of subsystems to verify performance.

REQUIRED RESOURCES: This is a two year effort with $200k to be expended over that period. The end result would be a list of desirable maintenance instrumentation, some of which might require further development.

APPLICABLE PROGRAMS: All

TITLE: CHECKOUT TECHNIQUES APPLICABLE TO REDUNDANT COMPONENTS

STATUS: Current built-in test equipment (BITE) usually requires externally introduced or simulated faults to verify operation of all channels. Testing of rotors and other critical elements is time consuming and the test equipment and signal injection equipment degrades reliability.

JUSTIFICATION: Tug will contain a large number of redundant subsystems, probably reconfigurable by computer control. Checkout techniques for this type of complex system needs improvement to allow checkout to be accomplished swiftly and with high confidence.

OBJECTIVES: To develop checkout techniques applicable to a complex system with many redundant components reconfigurable under software control. Determine whether current BITE equipment is adequate or additional equipment is required. Determine the optimum checkout complex configuration for a Tug type vehicle.

RESOURCES REQUIRED: This task will require $200k to be spent over an 18-month time period.

APPLICABLE PROGRAMS: All

SECTION 3

ADDITIONAL ANALYSES

As a result of questions and issues raised at the data dump some more detailed analyses were conducted in certain areas. This section summarizes the results of three of the more significant analyses. These are development schedule optimization, safe Tug retrieval, and abort.

3.1 DEVELOPMENT SCHEDULE OPTIMIZATION

The IOC variation considered for each of the programs as previously discussed in Section 2.4 covered only the funding spread impact assuming a constant DDT&E cost. The issue was raised regarding whether or not there was an optimum development time in terms of DDT&E costs.

An analysis of the effect of development time span was performed for Program 1 considering the detailed program tasks and schedules. The DDT&E cost as a function of development time span is shown in Figure 3-1. It is seen that there is an optimum point for Program 1 that occurs about 63 months after ATP. The baseline program, which has a development span of 51 months, has a $15 million higher DDT&E. The increase in DDT&E costs as the schedule is compressed beyond the optimum point results from such things as the requirement for more two-shift operations and additional hardware to support parallel testing. As the development span is increased beyond the optimum, the cost tends to increase due to the necessity of maintaining a sustaining effort in certain areas.

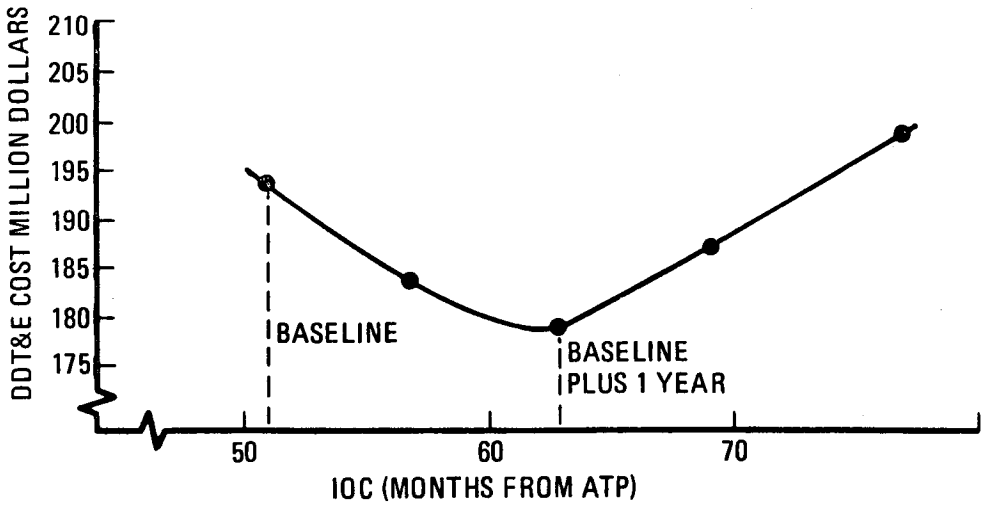

Figure 3-1. Program 1 DDT&E Cost Versus IOC

The funding spread characteristics for several development time spans are shown in Figure 3-2. A one-year extension from the baseline has a large impact on peak funding. However, a two-year extension gives only a slightly greater funding improvement and further extensions show little improvement.

Although the analysis was conducted for Program 1, it is expected that both Program 2 and 3 would also show an optimum development span in terms of DDT&E cost.

3.2 SAFE TUG RETRIEVAL

A detailed analysis of the Tug/Orbiter retrieval operation was performed to determine the safety considerations of this operation. The operations from the time the Tug is in its rendezvous orbit until it is safe inside the Orbiter bay were analyzed to determine the most desirable sequence of events and corresponding Tug subsystem status during these events. This sequence of events was then subjected to a detailed hazard analysis to identify the major hazards associated with each operation and to identify suitable design features or sequence of events changes that will eliminate each hazard. These results were then compared to the Program 2 Tug vehicle to determine any changes or additions required. The results are applicable to Program 1 and 3 as well.

3.2.1 OPERATIONS ANALYSIS FOR TUG/ORBITER DOCKING. An operations analysis defining the functional requirements for getting the Tug back into the Orbiter was performed. The results are summarized as the sequence of events and corresponding subsystem activation status shown in Table 3-1. The analysis was started with the

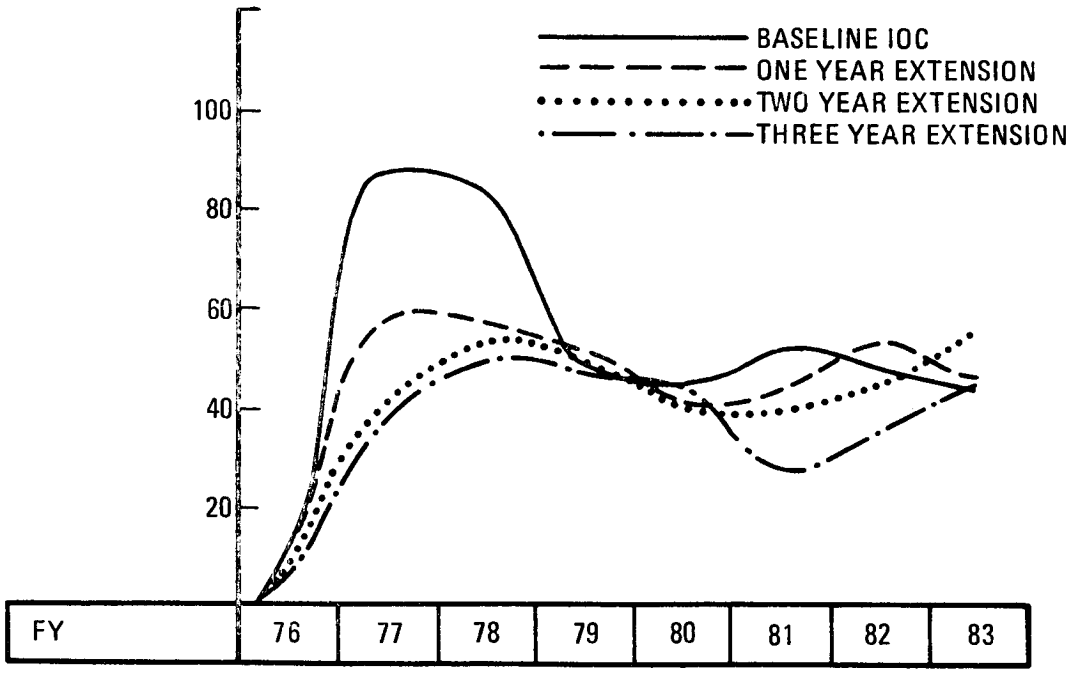

Figure 3-2. Program 1 Annual Funding Versus IOC

Table 3-1. Tug/Orbiter Docking Sequence of Events

EVENT SEQUENCE	TUG SUBSYSTEMS ACTIVE									
INITIAL CONDITION – TUG IN RENDEZVOUS ORBIT – ORBITER MOVED WITHIN DOCKING REGION	DMS	GN&C	GUID. UPDATE	COMMUNICATION	INSTRU.	ELEC. POWER	POWER DIS.& CONT.	MAIN ENGINE	MAIN ENGINE SUPPORT	ACPS	ORBITER INTERFACE
1. ORBITER ESTABLISH COMMUNICATION LINK WITH TUG	↓	↓		↓	↓	↓	↓		↓	↓	↓
2. TRANSFER TUG FLIGHT CONTROL TO ORBITER	↓	↓		↓	↓	↓	↓		↓	↓	↓
3. SAFE MAIN PROPELLANT LINES	↓	↓		↓	↓	↓	↓		↓	↓	↓
4. VERIFY TUG SAFE FOR DOCKING	↓	↓		↓	↓	↓	↓		↓	↓	↓
5. ORBITER READY CARGO BAY AND MANIPULATOR	↓	↓		↓	↓	↓	↓		↓	↓	↓
6. COMMAND TUG TO PREFERRED DOCKING ATTITUDE	↓	↓		↓	↓	↓	↓		↓	↓	↓
7. ORBITER MANEUVER TO FINAL DOCKING STATION	↓	↓		↓	↓	↓	↓		↓	↓	↓
8. INHIBIT TUG APS THRUSTERS	↓	↓		↓	↓	↓	↓		↓	↓	↓
9. ATTACH MANIPULATOR TO TUG	↓	↓		↓	↓	↓	↓		↓	↓	↓
10. RETRACT TUG TO CARGO BAY	↓	↓		↓	↓	↓	↓		↓	↓	↓
11. MATE AND LATCH TUG TO ADAPTER	↓	↓		↓	↓	↓	↓		↓	↓	↓
12. CONNECT UMBILICALS	↓	↓		↓	↓	↓	↓		↓	↓	↓
13. ROTATE INTO CARGO BAY AND LATCH FORWARD STRUCTURAL SUPPORT	↓	↓		↓	↓	↓	↓		↓	↓	↓
14. SHUT DOWN GN&C AND COMMUNICATION	↓	↓		↓	↓	↓	↓		↓	↓	↓
15. SWITCH TO ORBITER POWER, SHUT DOWN FUEL CELL	↓	↓		↓	↓	↓	↓		↓	↓	↓
16. DUMP MAIN PROPELLANT RESIDUALS THROUGH ABORT DUMP SYSTEM	↓	↓		↓	↓	↓	↓		↓	↓	↓
17. PURGE LH_2 TANK WITH HELIUM	↓	↓		↓	↓	↓	↓		↓	↓	↓
18. PRESSURIZE MAIN PROPELLANT TANKS AND LINES WITH HELIUM	↓	↓		↓	↓	↓	↓		↓	↓	↓

Tug in the nominal 170-n.mi. retrieval orbit and the Orb ter in the same orbit at a safe distance. The first required event is for the Orbiter to establish a communications link with the Tug. The sequence then defines the events through completion of event 18 when the Tug is ready for reentry.

The communication link established between the Tug and Orbiter is dual redundant to provide continuity of Tug control. Control of the Tug by the Orbiter allows the mission specialist to override and control the Tug subsystems using the Tug monitor and control system (TMACS). Transfer of Tug flight control to the mission specialist allows continuation of the Tug position hold mode with a capability of manual override to move the Tug.

The main propellant lines are safed by closing the tank outlet valves and venting the lines through the main engine valves. The ACPS position hold mode will be used to counter the forces produced by this venting. This activity is carried out at a safe distance from the Orbiter; the Orbiter can now move closer. The Tug is statused using the TMACS and visually inspected to assure it is safe for docking. The Orbiter manipulator arm and cargo bay are readied for docking. The Tug is placed in the proper docking attitude using the TMACS, and the Orbiter is then maneuvered into final docking position with the manipulator arm placed near the Tug attach point. The Tug ACPS is inhibited from firing, followed directly by manipulator attachment to the Tug. The

Tug is slowly retracted into the cargo bay by the manipulator arm and lined up with the Tug adapter, which is rotated to its deploy position. Following mating and latching of the Tug to the adapter, the umbilicals are connected. At any time up to this point the Tug can be released and maneuvered by its ACPS through the TMACS. The Tug is rotated into its normal stored position and the forward attachment link is engaged. GN&C, communications, and fuel cells are now shut down and the Tug is transferred to Orbiter power. The main propellants residuals are dumped through the abort dump system, followed by a purge of the LH_2 tank and pressurization of the main propellant tanks and lines by helium stored on the Shuttle-mounted adapter.

3.2.2 TUG/ORBITER RETRIEVAL HAZARD ANALYSIS. An expanded hazard analysis of the retrieval operations was conducted to identify the major hazards associated with Tug/Orbiter retrieval operations, and identify suitable design features, procedures, and operational constraints that will serve to eliminate or control each of the identified hazards. The hazards analysis results are summarized in Table 3-2.

Each hazard is classified according to NASA Specification NHB 5300.4 (ID). The "Hazard Severity" column refers to the consequences of the hazard if it should occur. The "Resulting Hazard Level" column refers to the hazard level once the appropriate design, procedural, etc. controls have been implemented. The hazard levels and the corresponding hazard categories as defined in 5300.4 (ID) are described in Section 2.5.1. The "Hazard Resolution/Control Actions" column contains the designs, procedures, operational constraints, etc. required to eliminate or control the hazard. The "Constraints/Impacts" column identifies those organizations that are influenced by, and must implement, hazard controls.

As indicated in the hazard analysis, each of the identified hazards associated with Tug/Orbiter retrieval has suitable controls incorporated in the Tug or Orbiter that eliminate or minimize the hazard. This analysis must, of course, be continually updated to reflect increased depth of design/operational data for both the Tug and the Orbiter.

3.3 ABORT

The Space Shuttle has a requirement of intact abort. There are several abort modes depending on the time in the mission when abort occurs. These modes are indicated in Table 3-3. The first abort mode is the Return to Launch Site (RTLS) mode which starts at solid rocket booster (SRB) staging. For abort prior to SRB staging the Shuttle continues under power until SRB staging and then initiates the RLTS abort mode.

The RTLS mode involves an attitude change by the Shuttle such that the main engine thrust is used to decelerate the vehicle in the down range direction. After the down range velocity reaches zero, the Shuttle is accelerated to a velocity from which it can glide to the launch site.

Table 3-2. Tug Retrieval Hazards Analysis

Event No.	Hazard	Hazard Severity	Hazard Resolution/ Control Actions	Con-straints/ Impacts	Resulting Hazard Level
0	Tug enters collision course with Orbiter at Tug return due to Tug guidance navigation error or human error.	CA (Tug) CA (Orbiter)	Tug return profile places Tug in an orbit ≥ 1/2 mile above that of Orbiter. Tug has dual communications links to ensure safe remote Tug engine shutdown capability.	Design/ Orbiter/ Operations	CN (Tug) CN (Orbiter)
1	Failure to establish communication can result in: (1) inability of crew to obtain control of safety critical functions (2) inability of crew to status Tug safety critical equipment.	CA (Tug) CN (Orbiter)	Tug design incorporates dual redundant communication links, either of which will allow the Orbiter crew to status the Tug and to obtain control of safety critical functions.	Design	CN (Tug) CN (Orbiter)
2	Inability of Orbiter crew to obtain control of Tug flight control system will result in inability to command Tug to preferred docking attitude and inability to override Tug unprogrammed motion.	CA (Tug) CA (Orbiter)	Tug design incorporates triple data management systems, dual IMUs, fail operational/fail safe ACPS and dual communication links. This design provides a backup for all safety critical command and control functions.	Design	CN (Tug) CN (Orbiter)
3	Inadvertent activation of main propulsion system while Tug is in vicinity of Orbiter or in payload bay.	CA (Tug) CA (Orbiter)	Tank outlet valves, in series with the main engine valves, are closed via rf link. Main engine valves are then sequentially opened to vent the main propellant lines.	Design/ Operations	CN (Tug) CN (Orbiter)
4	Status of unexpended pyrotechnics, hazardous payloads and safety critical components.	CA (Tug) CA (Orbiter)	Dual redundant communications used. All safety critical components statused prior to approach to Tug. Adequacy of ACPS propellant quantity verified.	Design	CN (Tug) CN (Orbiter)
6	Contamination of Orbiter due to Tug dumped ACPS propellants.	CR	ACPS propellants are not dumped.	Design/ Operations	CN
7	Tug/Orbiter collision (due to failed Tug ACPS, failed Tug data management, failed Tug guidance).	CA (Tug) CA (Orbiter)	Tug ACPS incorporates dual redundant astrionics system and propellant isolation valves that are controlled by the Orbiter crew via rf link. ACPS is fail operational/fail safe.	Design, Operations	CN (Tug) CN (Orbiter)

Table 3-2. Tug Retrieval Hazards Analysis, Contd

Event No.	Hazard	Hazard Severity	Hazard Resolution/ Control Actions	Constraints/ Impacts	Resulting Hazard Level
7	Tug perturbation due to plume impingement from Orbiter RCS thruster could cause rotation of Tug into Orbiter during critical retrieval maneuver.	CA (Tug) CA (Orbiter)	Tug ACPS system will remain activated until just prior to manipulator engagement. Tug ACPS will have the capability of holding the Tug in a steady attitude.	Design/ Orbiter/ Operations	CN (Tug) CN (Orbiter)
7	Tug/Orbiter collision. Due to energy imparted to Tug from propellant venting.	CR	All the Tug vents are nonpropulsive. Any minor perturbations due to venting will be cancelled by action of ACPS.	Design/ Orbiter/ Operations	CN
8	If ACPS is not inhibited until after manipulator engagement, Orbiter and Tug ACPS may begin to "fight" each other.	CR (Tug) CR (Orbiter)	Tug ACPS is inhibited just prior to engagement by Orbiter manipulator. Dual communication links are used to assure receipt of ACPS inhibit command.	Design, Orbiter	CN (Tug) CN (Orbiter)
9	Puncture of a main propellant tank with the manipulator arm can cause loss of Tug. Puncture of a high pressure bottle can cause damage to the Orbiter.	CA (Tug) CA (Orbiter)	Tug will incorporate a reinforced buffer shield around the manipulator attachment area. The Tug bottles are located in the protected intertank area.	Design/ Operations Orbiter	CN (Tug) CN (Orbiter)
10	Damage to manipulator and/ or Orbiter due to use of manipulator to accelerate Tug at excessive rates.	CA (Tug) CA (Orbiter)	Retraction of Tug into payload bay must be done very slowly. It may be necessary to employ a rate limiter on the manipulator.	Orbiter, Operations	OPEN (Requires Orbiter action)
11	Inability to engage Tug latches/umbilicals will result in a potentially hazardous situation as there will be no monitoring and override control of Tug safety critical functions.	CA (Tug) CA (Orbiter)	Redundant electrical power sources are used to operate Tug/Adapter latches. Additionally, manual latch and umbilical engagement capability is available if normal latching is unsuccessful.	Design/ Orbiter	CN (Tug) CN (Orbiter)
11	High voltage arcing/burning at electrical disconnects could preclude reconnection.	CA (Tug) CN (Orbiter)	No high voltage will be present at Tug/Orbiter umbilicals during docking.	Design	CN (Tug) CN (Orbiter)
13	Failure of retraction mechanism to rotate Tug/adapter to stowed position resulting in inability to close payload bay doors.	CA (Tug) CA (Orbiter)	Retraction mechanism command and control is dual redundant. Both Tug and adapter can also be remotely or manually disengaged from Orbiter.	Design, Operations	CA (Tug) CN (Orbiter)

Table 3-2. Tug Retrieval Hazards Analysis, Contd

Event No.	Hazard	Hazard Severity	Hazard Resolution/ Control Actions	Constraints/ Impacts	Resulting Hazard Level
13	Tug/payload instability due to failure of forward attachment link to engage.	CA (Tug) CA (Orbiter)	Forward attachment link can be engaged manually (EVA). If this is unsuccessful, it may be necessary to jettison the Tug/payload prior to Orbiter return.	Design/ Orbiter	CN (Tug) CN (Orbiter)
14 15	Loss of Tug power due to inability to shift to Orbiter power will result in loss of capability to perform safety critical monitoring and override functions.	CA (Tug) CA (Orbiter)	Emergency battery on the adapter can be used to supply power for all Tug safety critical functions during return flight.	Design, Operations, Orbiter	CN (Tug) CN (Orbiter)
16	Failure to achieve dump of residual main propellants will not, in itself, present a hazard to the Orbiter or Tug. It is, however, considered to be good safety practice to dump the residuals and to use the abort helium to purge the hydrogen tank.	CR (Orbiter)	Series/parallel dump valves are used to assure dump capability for both propellant tanks. This arrangement also assures that dump lines can be reclosed prior to purging and entry operations.	Design, Orbiter	CN (Tug) CN (Orbiter)
17 18	Main propellant tanks/lines that are emptied must be repressurized prior to entry to preclude crushing.	CA (Tug) CA (Orbiter)	The abort helium system is used to purge the hydrogen tank and lines. Both hydrogen and oxygen tanks and lines are then pressurized with helium to approximately 20 psi (14061 kg/m^2).	Design, Operations	CN (Tug) CN (Orbiter)

Table 3-3. Shuttle Abort Modes

ABORT MODE	MODE LIMITS TIME FROM LAUNCH (SEC)	MIN SSME BURN TIME (SEC)	MIN OMS BURN TIME (SEC)	0-g TIME (SEC)
RETURN TO LAUNCH SITE (RTLS)	125-240	325	–	–
ABORT ONCE AROUND (AOA)	220-400	105	100	3720
ABORT TO ORBIT (ATO)	247-306	235	240	15000
ABORT FROM ORBIT (AFO)	–	–	120	24000

The Tug has a requirement that it not preclude the Shuttle from intact abort. The major abort issue with respect to the Tug is what to do with the Tug propellants. The basic options are either to land with full propellant tanks or to dump propellant. Dumping options include dumping all or part of both propellants. Landing with propellants requires a horizontal vent capability and some additional structural weight in the case of landing with LO_2. When landing with either or both propellants there is the additional option of either draining the propellants or allowing them to boil off. Propellant draining on the ground requires the addition of horizontal drain capability.

Analyses conducted subsequent to the data dump showed that the least weight penalty for abort was associated with inflight LO_2 dump and landing with H_2 which was then allowed to boiloff. Draining the LH_2 after landing increases the weight penalty. Landing with LO_2 increases the weight penalty even more. Dumping both propellants inflight had the highest weight penalty.

Inflight dumping of both propellants was selected, however, since it was the most conservative and it is believed to be the best from operational and safety considerations. The critical abort mode for propellant dump is the RTLS mode since it has the minimum time available prior to landing. This section will discuss the results of the abort dump analyses.

3.3.1 REQUIREMENTS. The following requirements were imposed in conducting the propellant dump analyses.

a. Orbiter safety must not be degraded.

b. During Orbiter atmospheric glide the cg of the Tug and its payload must be within the prescribed Orbiter envelope. (See Figures 2-63 and 2-76.)

c. Avoid combustion of dumped propellants outside the Orbiter — constrains LH_2 dump to altitudes above 110,000 feet.

d. Avoid hazardous contamination of the payload bay and other Orbiter compartments by reingestion of dumped propellants.

The cg requirement dictated that over 50% of the LO_2 be dumped prior to initiation of atmospheric glide. This fact plus the weight penalties associated with the plumbing required to handle the unfavorable propellant orientations during atmospheric glide were the basis for a decision to dump under powered flight. Dumping during SSME powered flight for the critical RTLS abort mode allows use of the normal fill and drain plumbing, appropriately oversized to meet the dump time constraints.

3.3.2 ABORT DUMP TIME. The abort dump analysis was made for the worst case (last abort opportunity) RTLS abort profile shown in Figure 3-3. With the Orbiter "flying backwards," dumped propellant could enshroud the vehicle (along with SSME exhaust gases) and infiltrate into the payload bay and other Orbiter compartments.

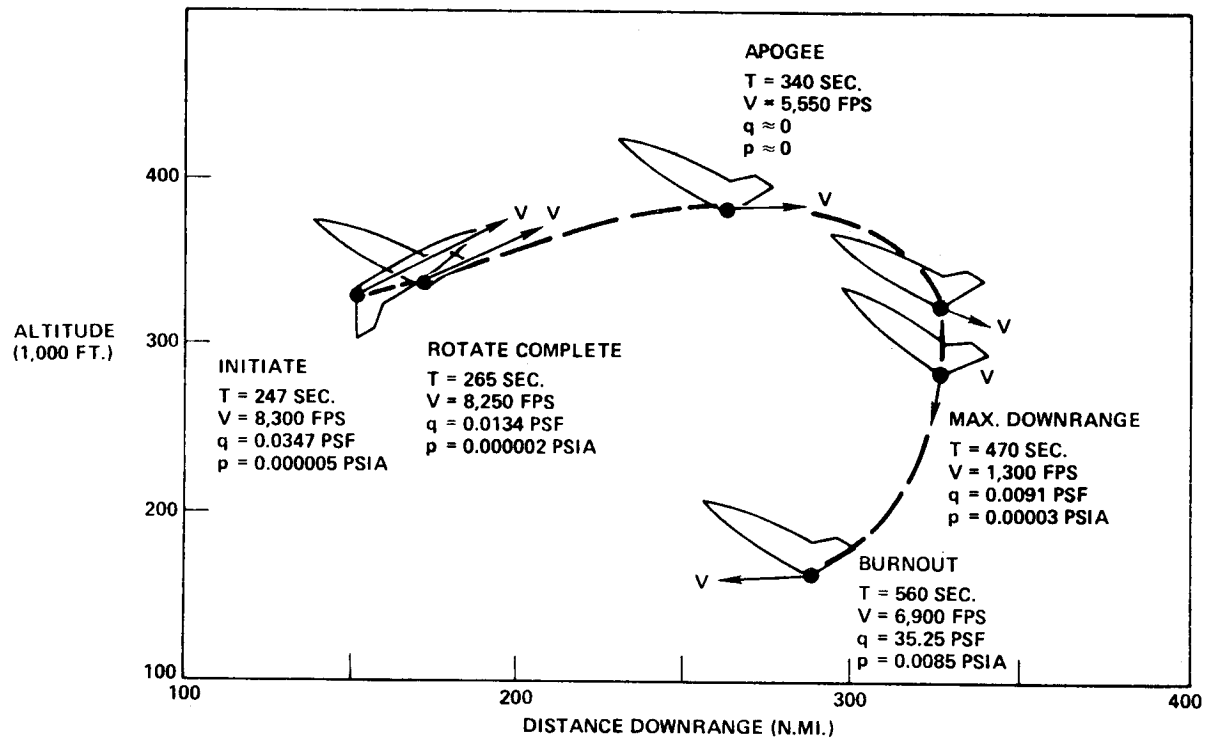

Figure 3-3. RTLS Abort Trajectory

Figure 3-4 defines the combustibility limits for H_2-O_2 mixture at low pressures (from Reference 1). No mixture will ignite at pressures below 0.1 psia (14.4 psia) and mixtures leaner than 7% H_2 by volume would not ignite at up to 1.0 psia. A worse case analysis using the assumptions of Table 3-4 was made to assess the magnitude of the H_2 contamination problem. The results are shown in Figure 3-5.

Combustible mixtures can be avoided in all Orbiter compartments by completing dump in approximately 260 seconds, where the altitude is 220,000 feet. To preclude all possibility of any degree of H_2 contamination, Orbiter compartments could be purged with helium. Figure 3-6 shows the results of a worst case analysis of helium pressurization requirements for the payload bay, assuming pressurization during the entire dump period. If the dump is limited to 270 seconds, helium required is 4 pounds and helium system weight is 50 pounds.

Simultaneous dump of LH_2 and LO_2 is not a problem at altitudes above 110,000 ft (33.5 km) since with a 300 in. (762 cm) dump port separation distance the pressure at the intersection of the dump plumes is less than 0.1 psia (0.69 kN/m^2) and will not support combustion as indicated in Figure 3-4.

The selected dump approach for the RTLS abort mode was simultaneous dump of both propellants in 250 seconds. This precludes a hazardous H_2 concentration in the payload bay and would be compatible with a relatively low weight payload bay pressurization if introduced at a later date.

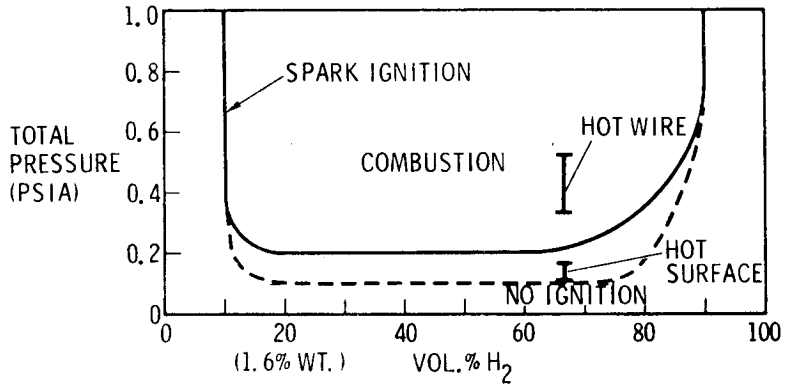

Figure 3-4. Combustibility Limits for H_2-O_2 Mixture

Table 3-4. Assumptions for Payload Bay Contamination Analysis

1.	PURE H_2 IN BAY AT END OF DUMP
	PRESSURE = STATIC + DYNAMIC
	TEMPERATURE = = PARAMETRIC (≈500°R EXPECTED)
2.	COMPLETE MIXING OF AIR & H_2 DURING ENTRY
	AIR TEMPERATURE – 520 TO 900 R (WORST CASE – HOTTEST)
3.	MINIMUM OPEN PAYLOAD BAY VOLUME (2500 FT^2)
4.	H_2 CONCENTRATION CALCULATED AT PAYLOAD BAY PRESSURE OF 0.1 PSIA
	ADIABATIC MIXED TEMPERATURE ASSUMED
5.	PRESSURE THRESHOLD FOR IGNITION – 0.1 PSIA
6.	H_2 CONCENTRATION THRESHOLD FOR IGNITION – 1.6% BY WEIGHT AT 0.1 PSIA

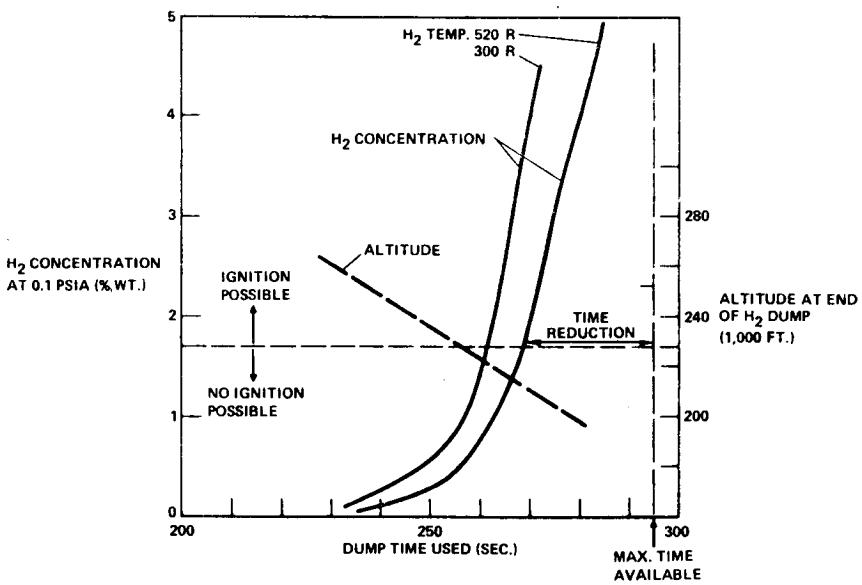

Figure 3-5. H_2 Concentration in Payload Bay at Lower Ignition Threshold

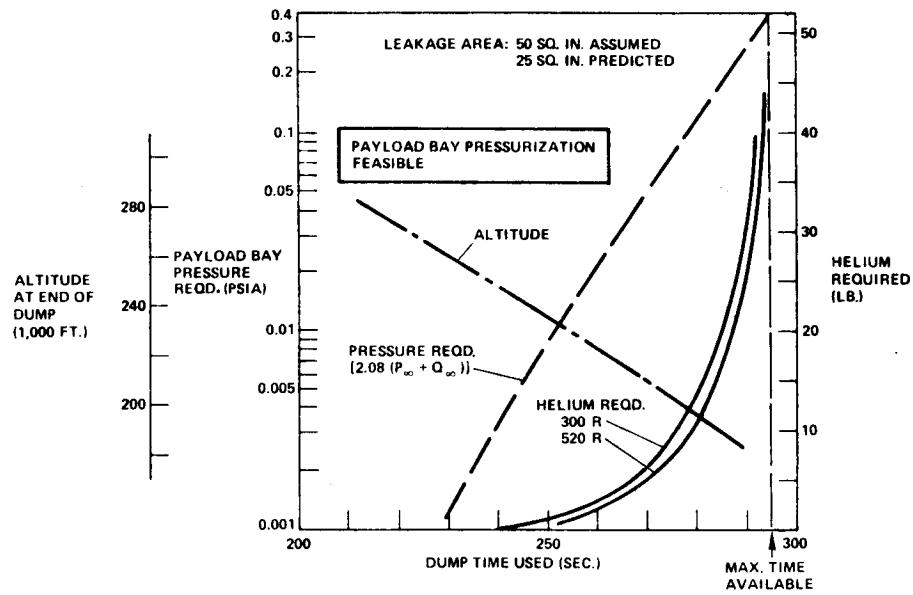

Figure 3-6. Payload Bay Pressurization to Prevent H_2 or O_2 Infiltration

3.3.3 DUMP SYSTEM SIZING. The dump system configuration, including a portion assumed for the Orbiter, is shown in Figure 3-7. Quad redundant dump valves are provided to meet Orbiter safety requirements. A study was made to determine the optimum combination of line diameter and tank dump pressure for LO_2 and LH_2 for the selected 250-second dump time. Results are summarized in Figures 3-8 and 3-9. Both the total weight and total effective Tug weight [Tug weight plus adapter weight (0.137)] are lowest at the lowest practicable tank pressures. Characteristics of the selected dump systems are summarized in Table 3-5.

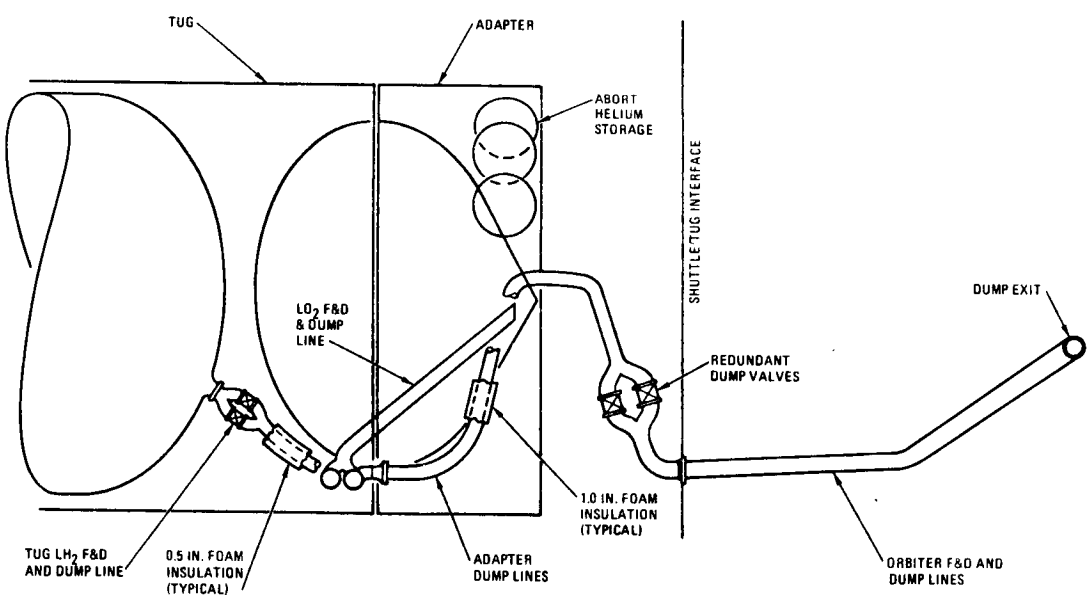

Figure 3-7. Dump System Configuration

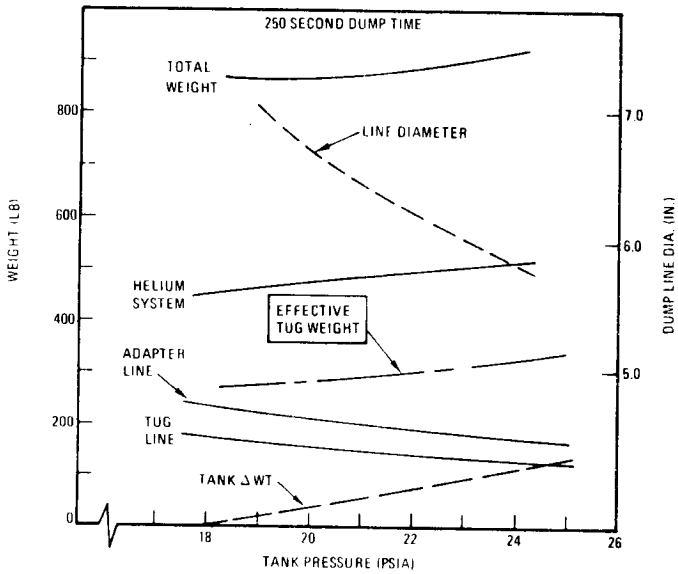

Figure 3-8. LH_2 Dump System Optimization

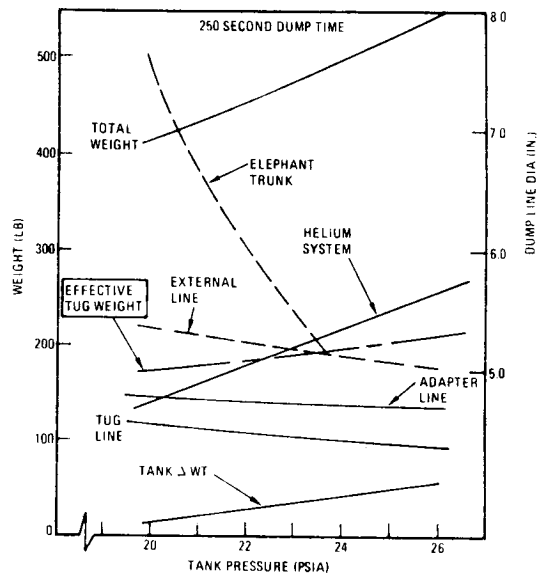

Figure 3-9. LO_2 Dump System Optimization

3.3.4 LOW THRUST/WEIGHT DUMPING. The dump system was sized for the most critical RTLS abort mode as described in the previous section. It must be compatible with the other abort modes defined in Table 3-3. From Table 3-3 it can be seen that all of the other abort modes may require dumping after SSME operation is complete, since the minimum SSME burn times are less than the required 250-second dump time. Other thrust sources, i.e., OMS, RCS, or dump thrust, yield low F/W, which has two major effects on dump system performance: dump flow rate is reduced since acceleration head pressure is lower, and residuals are higher because lower F/W causes drop-out (pullthrough) at higher liquid levels.

Table 3-5. Characteristics of Selected Dump Systems

	LO_2	LH_2
DUMP TIME (SEC)	250	250
TANK PRESSURE (PSIA)	20	20
LINE DIAMETER (IN.)	5.34	6.65
WEIGHTS, LB (KG)		
TUG LINE	116.7	151.0
ADAPTER LINE	145.9	203.6
HELIUM	11.0	37.2
HELIUM SYSTEM	128.2	433.4
TANK ΔWEIGHT	16.1	36.8
TOTAL	417.9 (189.6)	862.0 (391)

Table 3-6 summarizes dump system performance at all available acceleration levels. Dump times are substantially longer, especially LO_2, and residuals are higher for the low thrust modes. LO_2 dump times are in general longer than the sum of available OMS (100 sec) and ACPS (462 sec) operation times, which means that thrust must be obtained from the dumped propellants to achieve 100% dump. Thrust from the dumped propellants averages 600 pounds and 450 pounds for LH_2 and LO_2, respectively, giving a F/W of 0.0043g if dump ports face aft. Dump times are reasonable at this F/W, but residuals are high. The residuals can be reduced by completing the dump under OMS thrust.

3.3.5 SUMMARY OF DUMP SYSTEM PERFORMANCE FOR SELECTED MODES OF OPERATION. Dump system performance for all abort modes is summarized in Table 3-7. The design mode is RTLS, as discussed in Section 3.3.3. When AOA and ATO aborts occur earlier than 295 seconds, propellants are dumped under SSME acceleration, just as in RTLS. For later aborts, dumping is delayed until after SSME shutdown and ET staging, initiating dump under either OMS or ACPS thrust, and completing dump under OMS thrust (last 15 seconds). Thrust produced by the dumped propellants is used during middle of the burn.

Table 3-6. Abort Dump Performance at Available Acceleration Levels

THRUST FROM	MODE	F/W	DUMP TIME(3) (SEC)		PULLTHROUGH RESIDUALS (LB)	
			LO_2	LH_2	LO_2	LH_2
SSME	RTLS	2.25(1)	250	250	46	9
OMS	OTHER	0.0517	673	307	106	87
RCS	OTHER	0.0172(2)	713	309	269	141
DUMP	OTHER	0.0043	723	310	540	240

(1) AT END OF NORMAL ABORT DUMP
(2) FOUR THRUSTERS
(3) 100 PERCENT DUMP

Table 3-7. Summary of Abort System Performance in All Abort Modes

MODE	TIME FROM LAUNCH (SEC)	SETTLING BY	DUMP TIME (SEC)	
			LO_2	LH_2
RTLS	ALL	SSME	250	250
AOA	220-295	SSME	250	250
	295-400	OMS/DUMP/OMS	715	307
ATO	247-295	SSME	250	250
	295-306	RCS/DUMP/OMS	715	307
AFO	–	RCS/DUMP/OMS	715	307

SECTION 4

CONCLUSIONS AND RECOMMENDATIONS

4.1 ASSESSMENT

The Space Tug Systems Study has provided a broad data base of information regarding cryogenic Tugs. The data has been generated in a systematic manner starting with mission and payload requirements, which were converted into subsystem requirements. The subsystem requirements supported an analysis of various subsystem candidates leading to subsystem recommendations for configuration analysis. A large number of configuration concepts incorporating all of the recommended subsystems were analyzed. The results of these initial configuration definition analyses indicated what combinations of subsystems best met certain criteria such as cost and performance. Finally, more detailed program definitions were prepared on these programs.

The study results should be useful in support of future Tug activities in two ways. The subsystem data (Reference 4) and initial program definition data (Reference 5) will be quite significant in supporting future Tug design efforts since they provide good subsystem descriptions and also show the effects of incorporating these subsystems into configurations/programs. These data can be used as a basis for generating new Tug configurations to satisfy new requirements that may arise.

The detailed program definitions in Reference 6 provide baseline systems/programs that can be used in support of other activities such as interface studies and supporting research and technology. The program requirements for the three final programs are summarized in Figure 4-1 along with the design solution.

The emphasis in Program 1 was on minimum DDT&E cost. The selected configuration uses conventional structure and an existing engine. To minimize costs, maximum use has been made of Centaur components such as astrionics and engine support components.

The emphasis in Program 2 was more on total program cost effectiveness, which is reflected in the higher performance requirement. The increased performance was obtained by using a RL-10 Cat IIB engine, a composite sandwich shell, and more advanced astrionics.

Program 3 is a phased program in which the emphasis for the initial vehicle is on minimizing DDT&E cost while for the final vehicle the emphasis is more on low total program cost. The major configuration phasing in this program is from a low cost astrionics system to an advanced lightweight system with rendezvous and docking capability.

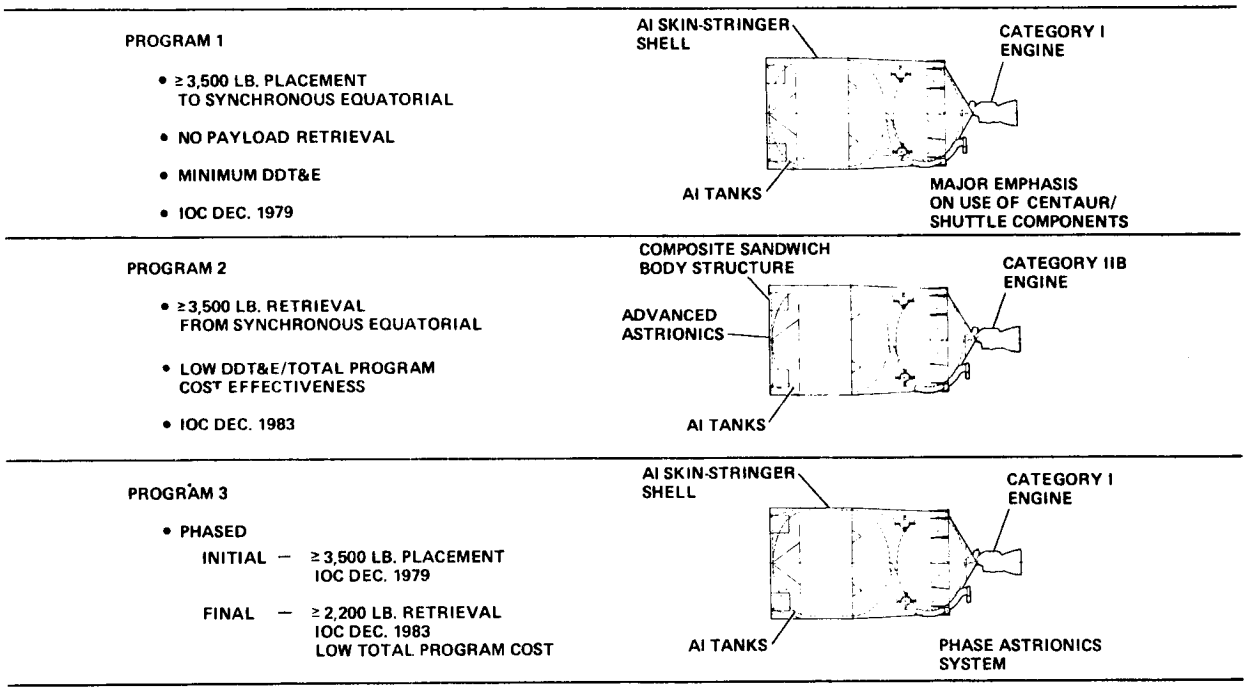

Figure 4-1. Program Definition Options

Table 4-1 summarizes the payload and cost data for the three programs. The development cost and peak year funding data are consistent and can be compared. The total Tug program cost and total operations cost per payload cannot be compared since the IOC dates are different and the mission models are different. The parameter of total operations cost per payload is less than the Shuttle launch cost because of the multi-deployment capability.

A single recommended configuration can not be selected from these programs since they represent only three of the various upper stage development approaches that were being considered concurrently with the cryogenic Space Tug Systems Study. It is felt that to the Phase A study level these three configurations represent the best solutions to the given program requirements they were to meet.

4.2 LIMITATIONS

As in any study there are certain limitations on the study results and conclusions. These limitations must be recognized when using the study data.

The most significant limitations imposed on the study were the various mission/payload models provided by the government. These are significant since they drive the performance requirements and geometry in the case of excess payload length, which can have a significant effect on design and cost. For example, none of the mission/payload models showed any significant advantage for advanced engines. Future mission model

Table 4-1. Summary Program Characteristics

	PAYLOAD, LB (KG)	COSTS ($ MILLIONS)			
		DDT&E	TOTAL TUG PROGRAM	TOTAL OPS.* COST/PL	PEAK-YEAR FUNDING
PROGRAM 1	5352 (2428) (DEP)	193	597	7.3	89 (77)
PROGRAM 2	5204 (2361) (RET)	291	716	6.3	145 (81)
PROGRAM 3					
INITIAL	5183 (2351) (DEP)	215	382	7.1	103 (78)
FINAL	2514 (1140) (RET)	48	390		66 (85)

EACH PROGRAM HAS A DIFFERENT MISSION MODEL

*INCLUDES SHUTTLE LAUNCH COST AT $10.5-M

revisions with heavier or higher energy payloads could show a need for an advanced engine.

A second significant limitation was the available Shuttle interface information applicable to the physical, functional, and operational Tug/Shuttle interface analyses. In some areas such as operations this data was poorly defined and in other areas it was undergoing change.

These are the major limitations on the study results. As additional or revised data becomes available in these areas the study results and conclusions should be reexamined.

4.3 CONCLUSIONS

The study has yielded general conclusions applicable to cryogenic Tugs and certain program conclusions. The general conclusions will be discussed first.

a. Cryogenic Tugs can be made safe by designing-in safety features, the most important of which is the use of purge bags to isolate the tanks and lines.

b. High performance is inherent with cryogenic Tugs, using engines based on present day technology (i.e., RL-10 Cat I engine). This inherent high performance produces a number of benefits. There are no performance-related requirements that drive towards advanced state-of-the-art subsystems. The high performance afforded by the engine allows the use of other existing technology subsystems, and also allows

the implementation of redundancy without dropping the performance below the desired level. The high performance also provides a performance margin for both the Tug and the Shuttle.

c. The high performance gives significant multipayload mission capability, which reduces the operations cost per payload and yields a good potential for payload effects benefits.

d. The operational complexity of cryogenic Tugs is relatively low since there are no two-Tug operations.

e. A reliability of 0.97 yields the lowest total program cost when considering the cost of attrition as well as the cost of implementing the reliability.

f. Level I autonomy yielded the lowest DDT&E and operations costs.

g. The use of advanced structures provides a high performance/cost ratio.

h. An integrated hydrogen/oxygen ACPS offers operational flexibility, but at a significant cost and payload penalty.

The major conclusions regarding the three programs are:

a. The analyses of Program 1 have shown that a reusable cryogenic Tug with over 5000 lb (2268 kg) payload synchronous deploy capability can be developed for less than $200M by making maximum use of Centaur and other existing components. Development costs can also be reduced by modifying existing KSC facilities for use in Tug maintenance and refurbishment rather than building new facilities.

b. The analyses of Program 2 have shown that a reusable cryogenic Tug with more than 5000 lb (2268 kg) of synchronous retrieval payload capability can be developed for approximately $300M. With the given mission model, advanced engines are not justified on a total program cost basis. The Program 2 configuration has a roundtrip capability of 2050 lb (930 kg) for a 14-day servicing mission.

c. The analyses of Program 3, which is a phased program, show that the initial vehicle of a phased program should be sized for the final vehicle retrieval mission since it is not cost effective to develop two different structures. The initial vehicle can be developed for slightly over $200M with the phasing costs to the final vehicle ranging from $48M to $100M depending on the final vehicle retrieval payload requirements.

4.4 RECOMMENDATIONS FOR FURTHER STUDY

At this time it appears that the development of the Tug will be delayed for several years since an Air Force developed initial upper stage will be used with the Shuttle for the first few years. Even with a delay there are the following areas that should be studied prior to a Tug Phase B.

a. Shuttle and Payload Interfaces.

b. Mission/Payload Requirements.

c. Technology and Design.

d. Programmatics.

The area of interfaces, particularly Shuttle interfaces, is most critical since the Shuttle and its half of the interfaces are being developed at the present time. In fact, the current Orbiter schedule shows a ΔPDR (preliminary design review) in December 1974 at which time it is the intent to define the Orbiter payload interfaces. With this schedule it is important that Tug/Shuttle interface activities be conducted during calendar year 1974 to prevent either the Tug from being over constrained by prior developments or the situation of having to remove Orbiters from operations for a Tug retrofit. Areas to be covered should include operational as well as physical interfaces.

The payload interface problem should also be investigated since in the time period of the next few years preliminary design and development of Shuttle upper stage payloads will be initiated. Since many of these payloads will have to fly on both the initial upper stage and the Tug it is important that the potential Tug interfaces be considered.

There is a third interface area that also should be studied. This is the area of payload transition, which is concerned with the technical and programmatic issues involved in payloads switching from expendable launch systems to the initial upper stage and then to the Tug. Related to this is the possible problem of the need for a backup launch capability for some payloads, e.g., national security payloads.

Tug missions and payloads are constantly being updated. Studies should be conducted to convert the mission and payload model into updated Tug requirements. This is important since it is possible that the Tug requirements might be changed sufficiently to require different configuration concepts and supporting research and technology efforts.

The supporting research and technology areas that should be pursued in support of these programs defined in this study have been described in Section 2.6. These technology items should be studied on a schedule that would allow the incorporation of the results into the Phase B Tug studies. In addition to these major technology areas there are other areas listed below where, if possible, the laboratories concerned should pursue activities.

a. Maintenance and refurbishment instrumentation and techniques.

b. Lightweight inertial measurement unit.

c. Horizon sensor improvement.

d. Zero-g vent devices.

e. Feed duct thermal protection.

f. Electromechanical TVC approaches.

g. Operational software development.

h. Payload retrieval techniques.

Finally, it is felt that it is important to maintain a technical and programmatic baseline Tug. A baseline is required to support the interface studies, support impact analyses of mission/payload requirements, and provide a basis for the supporting technology studies.

4.5 RECOMMENDATIONS FOR PHASE B EFFORT

A Phase B study is generally considered as a definition phase. The output includes the configuration definition, the programmatic definition, and the costs in sufficient depth to allow the government to make decisions regarding proceeding into development. The initial period of a Phase B study usually consists of converting requirements into a baseline and then performing trade studies. The results of the trade studies are then incorporated into a revised baseline for which the detailed definition is prepared. In addition to accomplishing the more detailed analyses that are required in all areas during a Phase B study, the following major trade studies should be performed. Some of these trades were performed during this study but should be investigated again in more depth during a Phase B.

a. Load-bearing versus suspended fuel tank.

b. Tug and adaptor structural concepts.

c. Determinate versus redundant support systems.

d. Actuation schemes for deployment, latching, and docking.

e. High-performance, multilayer insulation concepts.

f. Guidance update and alignment techniques.

g. On-board versus ground checkout.

h. Astrionics redundancy management.

i. Main engine optimization.

j. Boost pumps versus two-phase pumping versus pressurized tanks.

k. Individual versus combined Tug and Orbiter maintenance facility.

l. Centralized versus separate maintenance facilities at each site.

m. Level of autonomy.

n. Flight operations support locations.

o. Payload rendezvous and docking.

SECTION 5

REFERENCES

1. Space Tug Systems Study Plan, April 1973
2. Requirements Assessment Meeting for the Space Tug System Study, April 1973
3. Space Tug Systems Study First Review Overview, May 1973
4. Space Tug Systems Study Subsystem Data Book, June 1973
5. Space Tug Systems Study Concept Selection Overview, July 1973
6. Space Tug Systems Study Data Dump, September 1973
   - Volume 1, Summary, Program Option 1
   - Volume 2, Summary, Program Option 2
   - Volume 3, Summary, Program Option 3
   - Volume 4, Mission Accomplishment
   - Volume 5, Systems
   - Volume 6, Operations
   - Volume 7, Safety
   - Volume 8, Programmatics and Cost

NASA—MSFC