GEORGE C. MARSHALL SPACE FLIGHT CENTER
HUNTSVILLE, ALABAMA

July 19, 1973
Marshall Space Flight Center

# Data Package

# Space Tug Systems Study (Storable)

(NASA-CR-179099) SPACE TUG SYSTEMS STUDY (STORABLE) Data Package (Martin Marietta Aerospace) 219 p Avail: NTIS

N87-70407

Unclas
00/18 0074246

MARTIN MARIETTA

CONTRACT NAS8-29675

## FOREWORD

This document contains preliminary configuration data for the Space Tug vehicle candidates and their associated subsystems.

This document is included as part of the July 19, 1973 Space Tug Systems Study (Storable) Program Concept Evaluation Presentation.

SPACE TUG SYSTEMS STUDY (STORABLE)

CONFIGURATION DATA PACKAGE

## TABLE OF CONTENTS


| | PAGE |
|---|---|
| FOREWORD | i |
| TABLE OF CONTENTS | ii |
| RECOMMENDED CAPABILITY OPTION SELECTIONS | I-1 THRU I-52 |
| SUMMARY DESCRIPTION OF CAPABILITY OPTIONS | II-1 THRU II-9 |
| SPACE TUG CONFIGURATION SUMMARY | III-1 THRU III-40 |
| KICK STAGE CONFIGURATION SUMMARY | IV-1 THRU IV-18 |
| SPACE TUG THERMAL CONTROL | V-1 THRU V-12 |
| SPACE TUG AVIONICS | VI-1 THRU VI-52 |
| SPACE TUG PROPULSION | VII-1 THRU VII-28 |
| ORBITER INTERFACE | VIII-1 THRU VIII-5 |

# SECTION I

## RECOMMENDED CAPABILITY OPTION SELECTIONS

## CAPABILITY OPTION 1

DEPLOY - CONFIGURATION 1A2-8

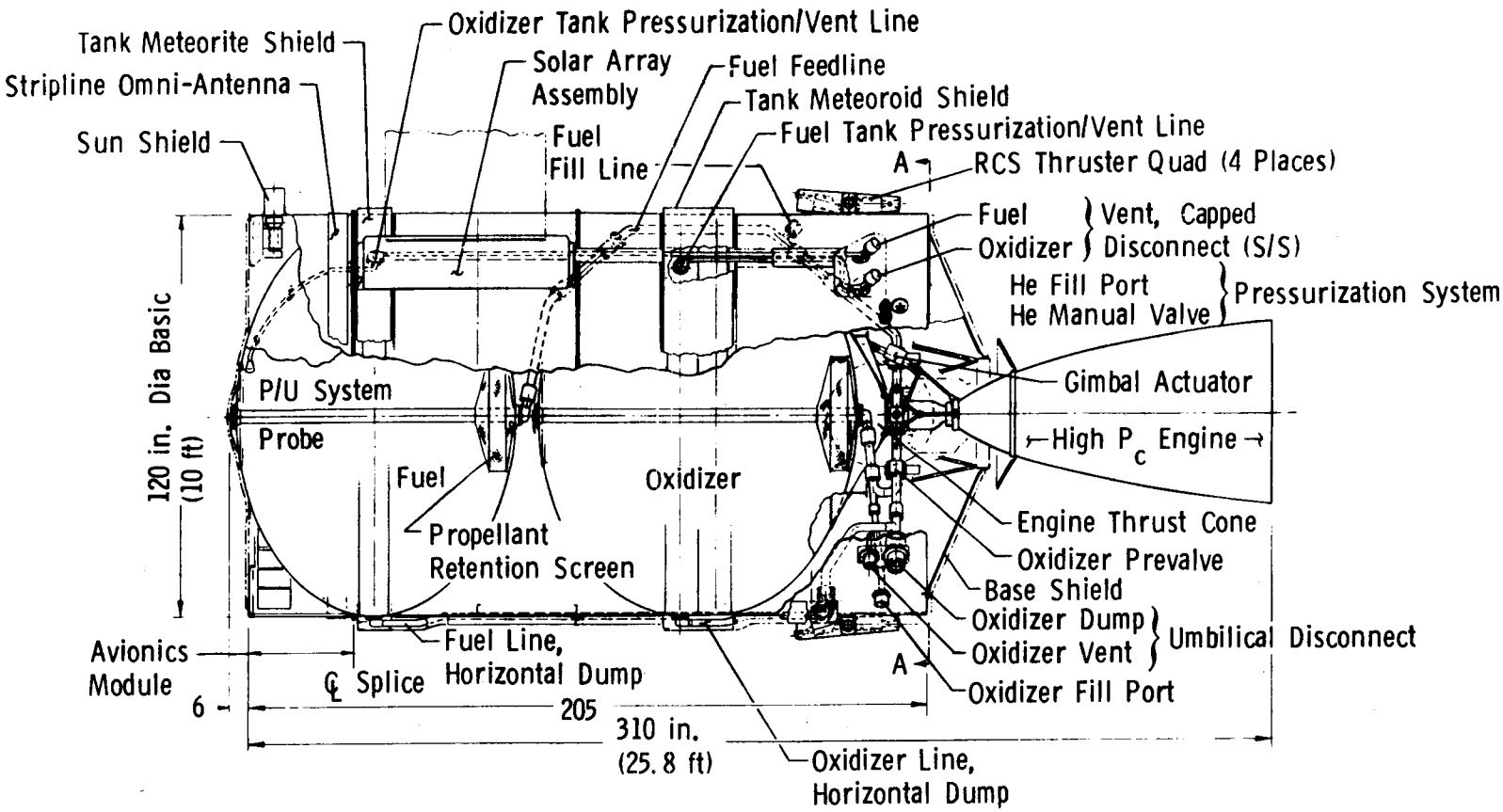


Section B-B

STORABLE SPACE TUG, SINGLE STAGE, SEPARATE TANKS, CONFIGURATION IA2

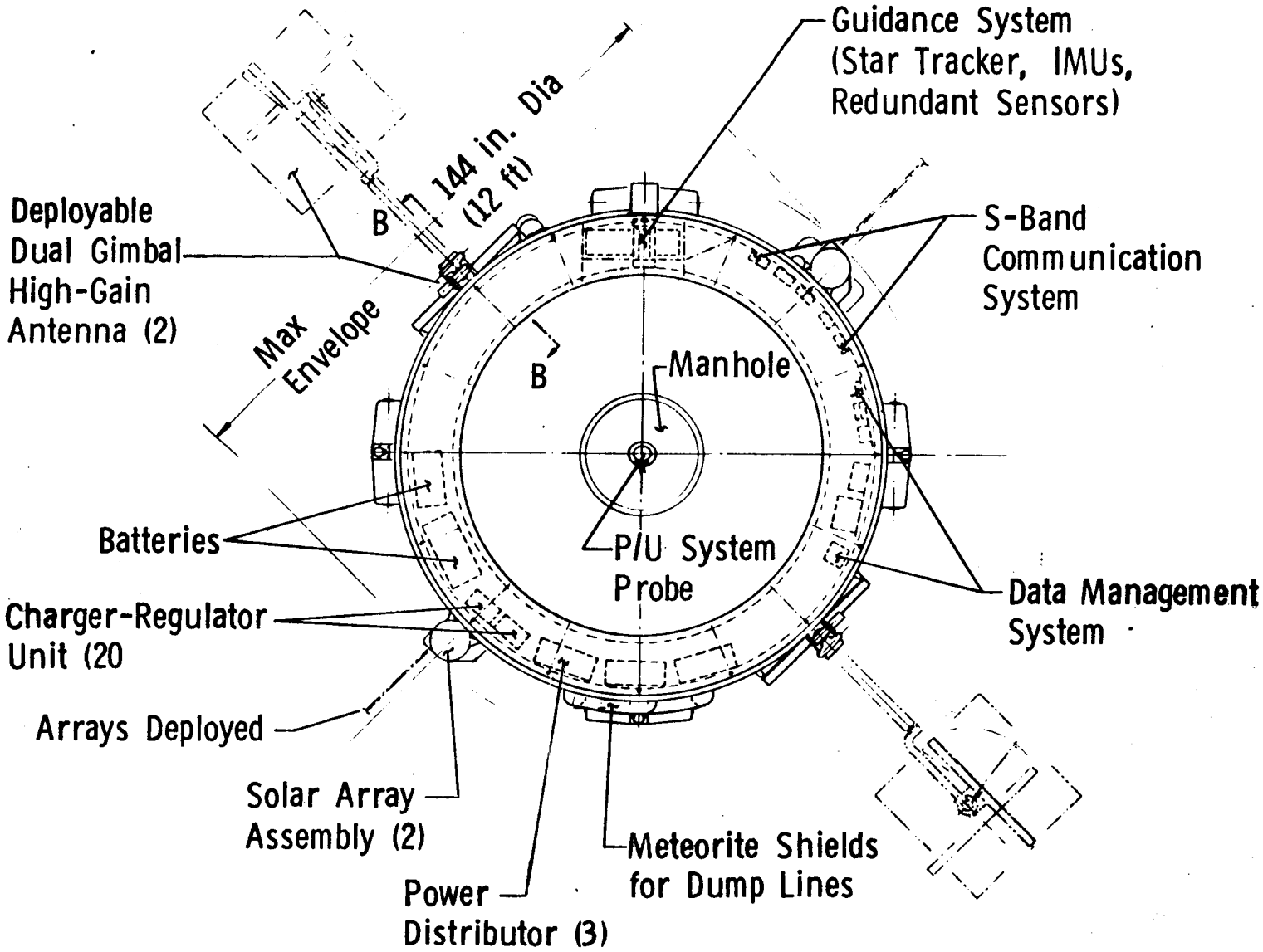


STORABLE SPACE TUG, SINGLE STAGE, SEPARATE TANKS, CONFIGURATION IA-2

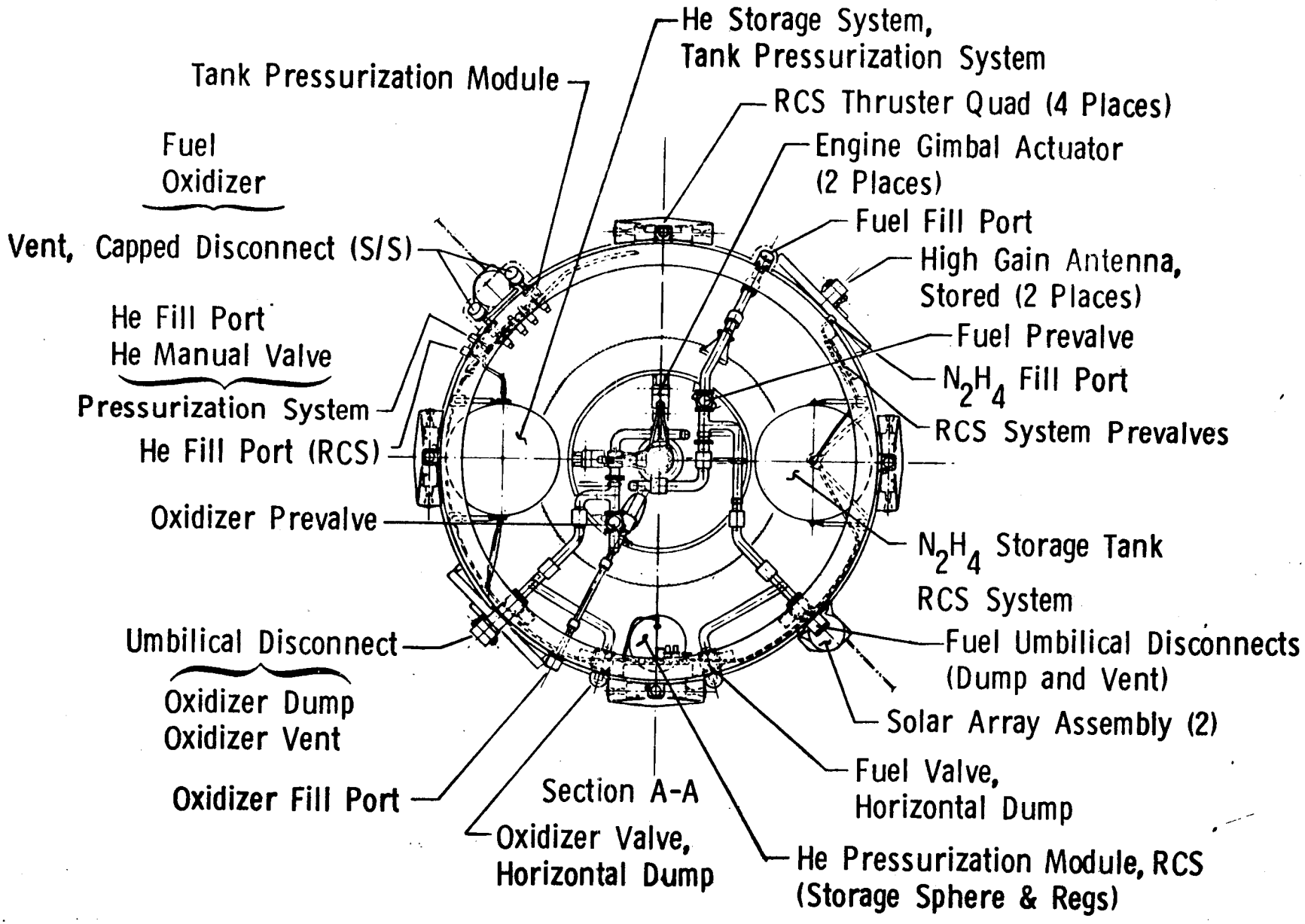


STORABLE SPACE TUG, SINGLE STAGE, SEPARATE TANKS, CONFIGURATION IA2

## CONFIGURATION PROFILE SKETCH

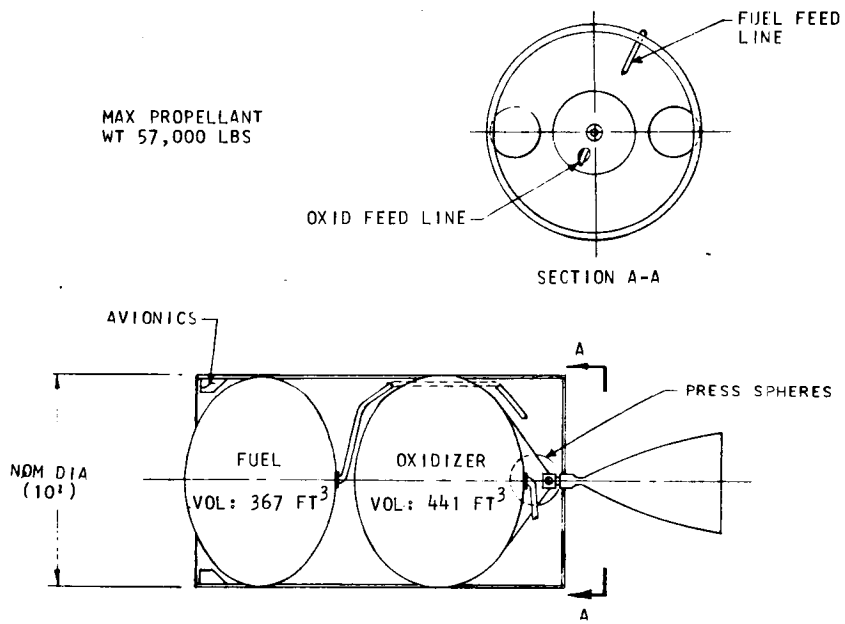


## SPACE TUG VEHICLE SUBSYSTEM DEFINITION

| WBS NO. 320-03 | NOMENCLATURE | WT. | SUBSYSTEM CONFIG ① |
|---|---|---|---|
| | SPACE TUG VEH MAIN STG | 2328 | DRY WT +10% CONTINGENCY |
| 01 | STRUCTURES | (671) | |
| 01 | FUEL TANK & SUPPORT | 94 | AS INDICATED (TITANIUM) |
| 02 | OX TANK & SUPPORT | 160 | AS INDICATED (TITANIUM) |
| 03 | BODY STRUCTURE | 311 | AS INDICATED (COMPOSITE) |
| 04 | THRUST STRUCTURE | 20 | AS INDICATED (COMPOSITE) |
| 05 | METEOROID SHIELD | 45 | |
| 06 | PAYLOAD INTERFACE | 41 | |
| | | | |
| 02 | THERMAL CONTROL | (111) | TH-1 M |
| 01 | FUEL TANK INSULATION | 81 | MLI(INCLUDES ALL MAIN STG MLI) |
| 02 | OX TANK INSULATION | | |
| 03 | PURGE SYSTEM | - | N/A |
| 04 | THERMAL CONTROL SYSTEM | 30 | HTRS,PAINT,ACPS RADIATION SHLD |
| | | | |
| 03 | AVIONICS | (534) | AV-1 |
| 01 | DATA MANAGEMENT | 60 | FLEXIBLE SIGNAL INTERFACE(FSI) |
| 02 | GN&C | | |
| | GUID & NAV | 70 | IMUS & STAR TRACKERS |
| | CONTROLS | 20 | TANDEM INT ACT PLUS ACPS CNTLS |
| | DOCKING SYSTEM | - | N/A |
| 03 | COMMUNICATIONS | 34 | S-BAND |
| 04 | INSTRUMENTATION | -- | WT INCLUDED WITH DATA MGMT |
| 05 | ELECTRICAL POWER | 350 | SOLAR ARRAY |
| 06 | POWER DIST & CONTROL | | 2 WIRE POS, STRUCT RETURN |
| | | | |
| 04 | PROPULSION | (800) | |
| 01 | MAIN ENGINE (GFE) | 410 | PR-1(2),E332 ENGINE |
| 02 | MAIN ENGINE SUPPORT | 307 | PR-1(2) |
| 03 | ACPS ENGINE | 60 | ACPS-2 (8) |
| 04 | ACPS ENGINE SUPPORT | 123 | ACPS-2 (8) |
| | | | |
| 05 | ORBITER INTERFACE | (1650) | EXCLUDED FROM MAIN STG WT |
| 01 | STRUCTURES | | TBD |
| 02 | INTERFACE PANELS | | TBD |
| 03 | PURGE PROVISIONS | | TBD |
| 04 | ABORT PROVISIONS | | TBD |
| | | | |
| 06 | DROP TANKS | — | N/A |
| 01 | STRUCTURES | | |
| 02 | THERMAL INSULATION | | |
| 03 | PROPELLANT SUPPORT SYS | | |

**SIGNIFICANT DESIGN PARAMETERS:**

MAIN ENGINE: PROPELLANT MMH/$N_2O_4$ THRUST 12K

M.R. 2:1 $I_{SP}$ 332

PLANNED OPERATIONAL SPAN-FROM ___ TO ___

PROPELLANT LOAD FACTOR ( λ ) ___

DESIGN LIFE ___ MISSIONS

AUTONOMY LEVEL 2

**NOTES:**

① SUBSYSTEM(S) CONFIG MAY BE DESIGNATED BY A CODE WITH DETAILS ON SUPPL CONFIG DATA SHEETS

**PLANNED EVOLUTION:**

CO1 IA2-8 (79D)
CO2 IA2-8 (79D) TO IA2-7 (79R)
CO3 IA2-8 (79D) TO IA2-4 (83D) TO IA2-3 (83R)
CO3 IA2-8 (79D TO 83D) TO IA2-7 (83R)
CO5 IA2-8 (79D) TO IA2-4 (83D) TO IA2-3 (83R)
CO6 IA2-8 (79D) TO IA2-7 (79R) TO IA2-4 (83D) TO IA2-3 (83R)

CONFIGURATION SUMMARY SHEET
SPACE TUG SYSTEM STUDY

CONFIG NO. IA2-8, SINGLE STAGE

NASA CO NO. 1,2,3,5 & 6

DATE 7-9-73, REV 1

MARTIN MARIETTA

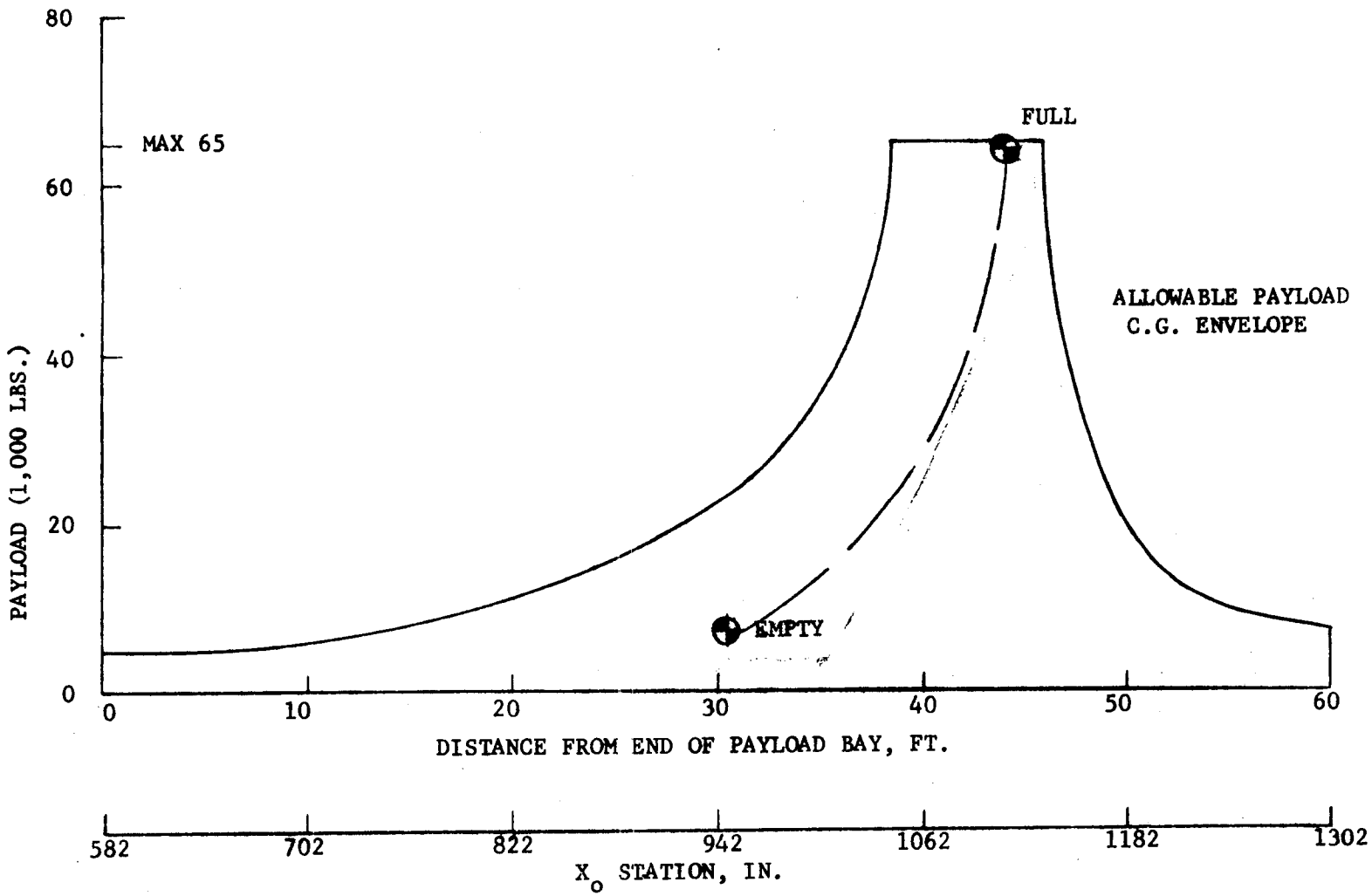


NOTE: NASA PAYLOAD NO. 8 (LCD) 4,000 LB.,
25 FT. LONG.
COMMON TO ALL 1A2 CONFIGURATION TUGS

LONGITUDINAL C.G. TRAVEL - FULL LOADED PROPELLANT TANKS TO EMPTY TANKS

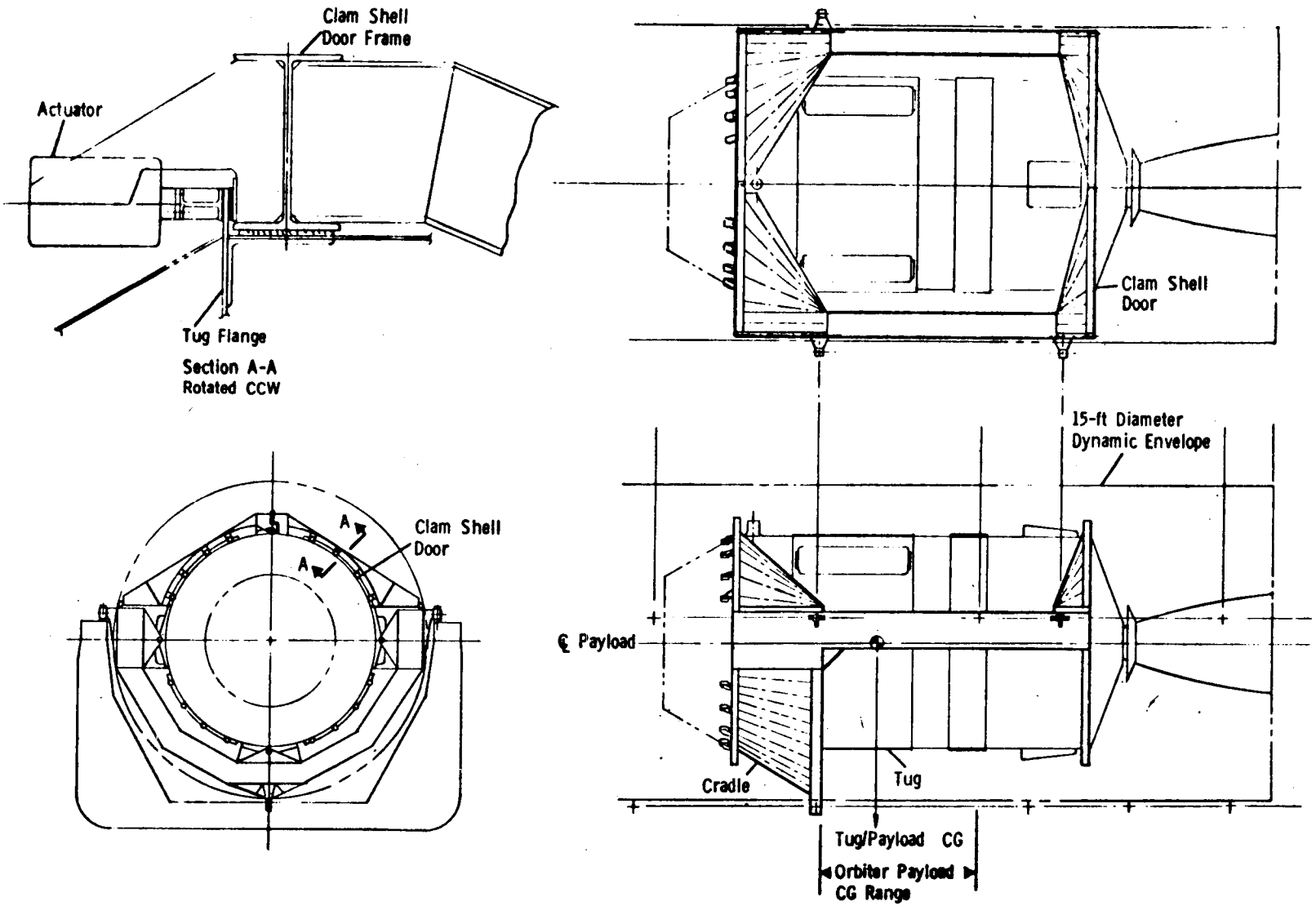


TUG CONFIGURATION 1A(2) CRADLE CONCEPT

# TUG SUMMARY SCHEDULE - CAPABILITY OPTION 1

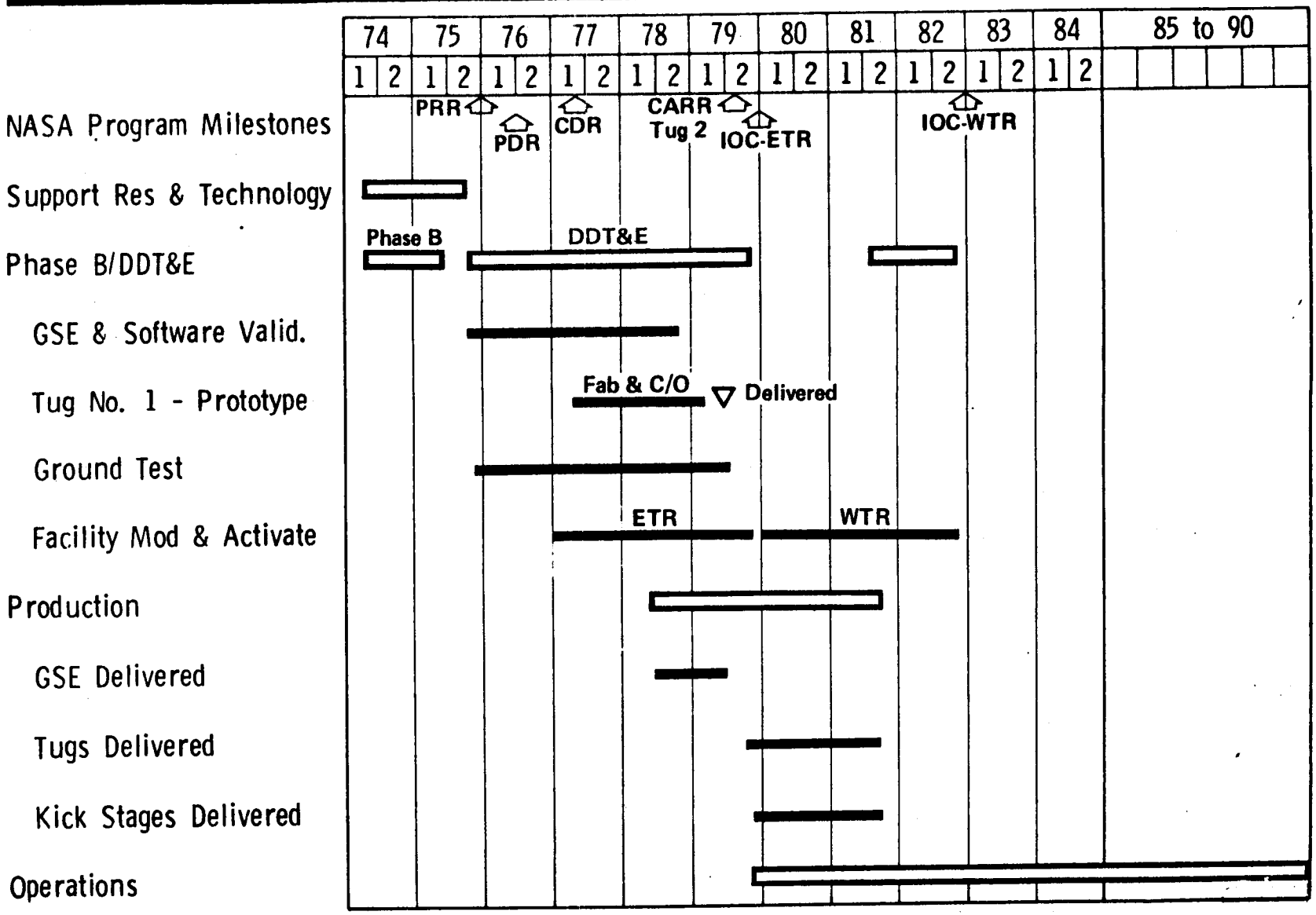

## PRELIMINARY RELIABILITY PREDICTION SUMMARY

Capability Option Number One (1)

Configuration Number 1A2-8

Mission Type(s)/Duration(s) Geosync. Deploy/3 Day

| Subsystem | Reliability Prediction |
|---|---|
| Structure | 1- |
| Avionics - AV-1 | |
| Electrical Power | .99927 |
| Communications | .99999 |
| Controls | .99499 |
| Data Management | .99999 |
| Guidance & Navigation | .99974 |
| OME Engine | .99830 |
| Main Engine Support - PR-1(2) | .99892 |
| Hydrazine Attitude Control System | .99825 |
| Vehicle Reliability (without Kick Stage) | .98948 |
| Kick Stage (Prediction TBS) | .99700 (Allocation) |
| Vehicle Reliability (with Kick Stage) | .98651 |

## STORABLE TUG TECHNOLOGY STATUS

## SUPPORTING TECHNOLOGY REQUIREMENTS

CAPABILITY OPTION 1, CONFIGURATION 1A2-8

STRUCTURES & MATERIALS

- o Development of composites for non-tank structures (skirts, etc.)
- o High pressure vessel development
- o Improved weld technology
- o Develop fracture mechanics technology for thin gauge materials
- o Satellite docking mechanism development

MAIN PROPULSION AND ACPS

None

KICK STAGES

Continue development of technology of low burning rate for solid propellant motors.

AVIONICS (AV-1)

GUIDANCE & CONTROL

- o Update procedures and algorithms
- o Interferometer landmark tracking applications
- o Star availability
- o ACS optical impingement

DATA MANAGEMENT SYSTEM - Flexible Signal Interface

- o Develop and demonstrate application of circuits and interface technology

ELECTRICAL POWER SUBSYSTEM

- o Light weight, low volume packaging of $H_2O_2$ fuel cell and battery with provisions for refurbishment of critical components.
- o Evaluation of life and degradation characteristics of new high efficiency cells developed by COMSAT.
- o Light weight design of rollout Solar Array and empirical verification of extraction/retraction capability of up to 1,000 cycles.
- o Development of high energy density, long cycle life metal-gas battery systems such as $ZN-O_2$ and $AG-H_2$.
- o Development of multiplexed electrical power distribution and control system using solid state power controllers specifically for Tug application.

THERMAL CONTROL

None

## CAPABILITY OPTION 2

DEPLOY - CONFIGURATION 1A2-8

RETRIEVE - CONFIGURATION 1A2-7

(CONFIGURATION IA2-7 SHOWN)

## CONFIGURATION PROFILE SKETCH

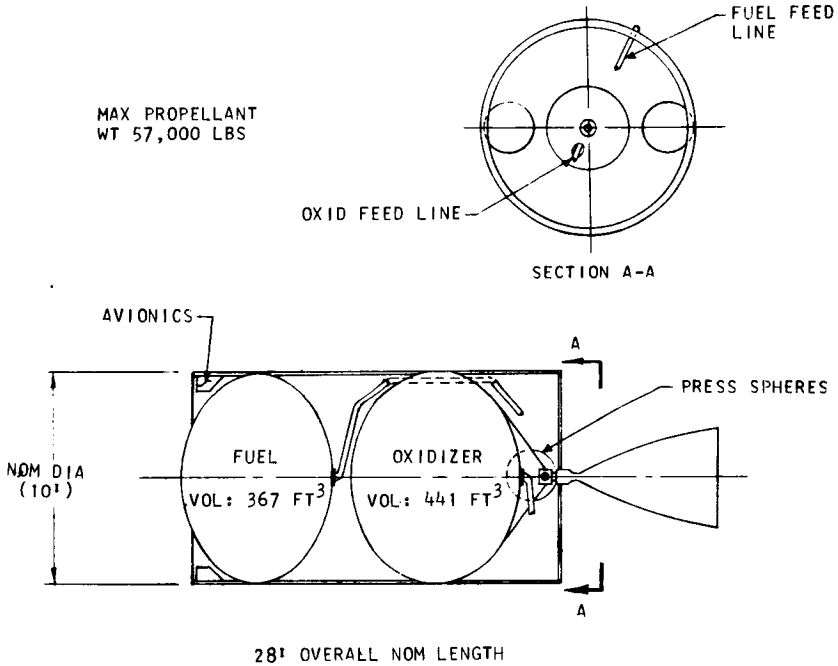


## SPACE TUG VEHICLE SUBSYSTEM DEFINITION

| WBS NO. 320-03 | NOMENCLATURE | WT. | SUBSYSTEM CONFIG ① |
|---|---|---|---|
| | SPACE TUG VEH MAIN STG | 2754 | DRY WT +10% CONTINGENCY |
| 01 | STRUCTURES | (721) | |
| 01 | FUEL TANK & SUPPORT | 94 | AS INDICATED (TITANIUM) |
| 02 | OX TANK & SUPPORT | 160 | AS INDICATED (TITANIUM) |
| 03 | BODY STRUCTURE | 311 | AS INDICATED (COMPOSITE) |
| 04 | THRUST STRUCTURE | 20 | AS INDICATED (COMPOSITE) |
| 05 | METEOROID SHIELD | 45 | |
| 06 | PAYLOAD INTERFACE | 91 | |
| | | | |
| 02 | THERMAL CONTROL | (111) | TH-1 |
| 01 | FUEL TANK INSULATION | 81 | MLI (INCLUDES ALL MAIN STG MLI) |
| 02 | OX TANK INSULATION | | |
| 03 | PURGE SYSTEM | - | N/A |
| 04 | THERMAL CONTROL SYSTEM | 30 | HTRS, PAINT, ACPS RADIATION SHLD |
| | | | |
| 03 | AVIONICS | (872) | AV-4 |
| 01 | DATA MANAGEMENT | 60 | FLEXIBLE SIGNAL INTERFACE (FSI) |
| 02 | GN&C | | |
| | GUID & NAV | 258 | IMUS, STAR TRACKERS, RF RADAR |
| | CONTROLS | 20 | TANDEM INT ACT PLUS ACPS CNTLS |
| | DOCKING SYSTEM | 150 | DOCKING HARDWARE |
| 03 | COMMUNICATIONS | 34 | S-BAND |
| 04 | INSTRUMENTATION | - | WT INCLUDED WITH DATA MGMT |
| 05 | ELECTRICAL POWER | 350 | SOLAR ARRAY |
| 06 | POWER DIST & CONTROL | | 2 WIRE POS, STRUCT RETURN |
| | | | |
| 04 | PROPULSION | (800) | |
| 01 | MAIN ENGINE (GFE) | 410 | PR-1(2), E332 ENGINE |
| 02 | MAIN ENGINE SUPPORT | 307 | PR-1(2) |
| 03 | ACPS ENGINE | 60 | ACPS-2 (8) |
| 04 | ACPS ENGINE SUPPORT | 123 | ACPS-2 (8) |
| | | | |
| 05 | ORBITER INTERFACE | (1650) | EXCLUDED FROM MAIN STG WT |
| 01 | STRUCTURES | | TBD |
| 02 | INTERFACE PANELS | | TBD |
| 03 | PURGE PROVISIONS | | TBD |
| 04 | ABORT PROVISIONS | | TBD |
| | | | |
| 06 | DROP TANKS | - | N/A |
| 01 | STRUCTURES | | |
| 02 | THERMAL INSULATION | | |
| 03 | PROPELLANT SUPPORT SYS | | |

**SIGNIFICANT DESIGN PARAMETERS:**

MAIN ENGINE: PROPELLANT MMH/$N_2O_4$ THRUST 12K

M.R. 2:1 $I_{SP}$ 332

PLANNED OPERATIONAL SPAN-FROM ___ TO ___

PROPELLANT LOAD FACTOR ( $\lambda$ ) ___

DESIGN LIFE ___ MISSIONS

AUTONOMY LEVEL 2

**NOTES:**

① SUBSYSTEM(S) CONFIG MAY BE DESIGNATED BY A CODE WITH DETAILS ON SUPPL CONFIG DATA SHEETS

**PLANNED EVOLUTION:**

C02 IA2-8 (79D) TO IA2-7 (79R)
C03 IA2-8 (79D) TO (83D) TO IA2-7 (83R)
C06 IA2-8 (79D) TO IA2-7 (79R) TO IA2-4 (83D) TO IA2-3 (83R)

CONFIGURATION SUMMARY SHEET
SPACE TUG SYSTEM STUDY

CONFIG NO. IA2-7, SINGLE STG
NASA CO NO. 2,3, & 6
DATE 7-9-73, REV 1

MARTIN MARIETTA

## PRELIMINARY RELIABILITY PREDICTION SUMMARY

Capability Option Number Two (2)

Configuration Number(s) 1A2-7 and 1A2-8

Mission Type(s)/Duration(s) 1A2-7 Geosync. Round Trip/7 days
1A2-8 Geosync. Deploy/3 days

### 1A2-7

| Subsystem | Reliability |
|---|---|
| Structure | 1- |
| Avionics AV-4 | |
| Electrical Power | .99841 |
| Communications | .99999 |
| Controls | .99499 |
| Data Management | .99993 |
| Guidance & Navigation | .99830 |
| Docking (TBS) | .99800 (Allocation) |
| OME Engine PR-1(2) | .99783 |
| Main Engine Support PR-1(2) | .99841 |
| Hydrazine Attitude Control System | .99701 |
| Total Vehicle Reliability (without Kick Stage) | .98298 |
| (Kick Stage Prediction - TBS) | |
| Total Vehicle Reliability (with Kick Stage) | .98003 |

### 1A2-8

Same prediction as in Capability Option Number One (1).

| | |
|---|---|
| Total Vehicle Reliability (without Kick Stage) | .98948 |
| (Kick Stage Prediction - TBS) | |
| Total Vehicle Reliability (with Kick Stage) | .98651 |

## TUG SUMMARY SCHEDULE - CAPABILITY OPTION 2 - CONFIGURATION IA2-7,8

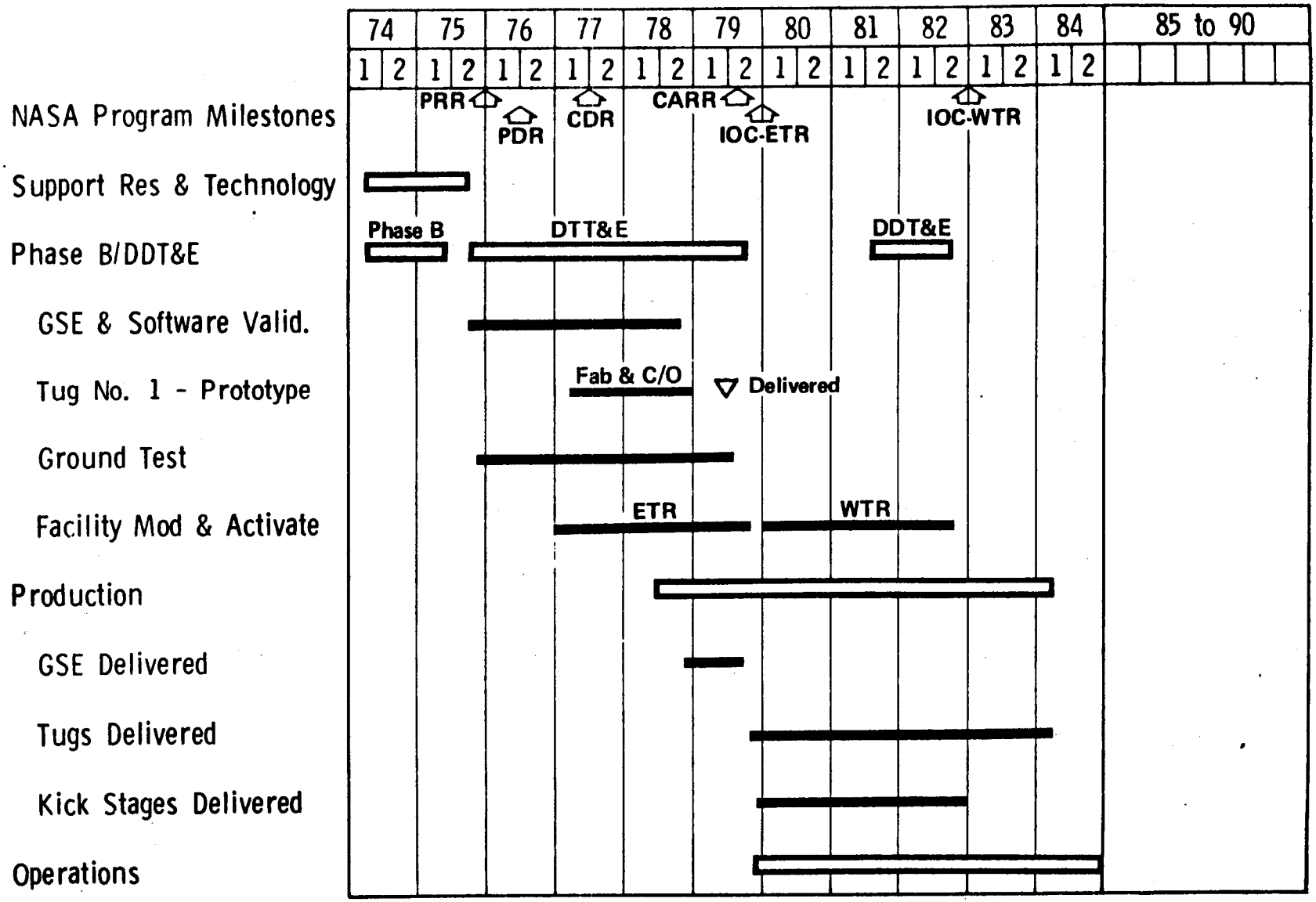

## STORABLE TUG TECHNOLOGY STATUS

## SUPPORTING TECHNOLOGY REQUIREMENTS

CAPABILITY OPTION 2, CONFIGURATION 1A2-7,8

STRUCTURES & MATERIALS

- o Development of composites for non-tank structures (skirts, etc.)
- o High pressure vessel development
- o Improved weld technology
- o Develop fracture mechanics technology for thin gauge materials
- o Satellite docking mechanism development

MAIN PROPULSION AND ACPS

None

KICK STAGES

Continue development of technology of low burning rate for solid propellant motors.

AVIONICS (AV-1, AV-4)

GUIDANCE & CONTROL

- o Update procedures and algorithms
- o Interferometer landmark tracking applications
- o Star availability
- o ACS optical impingement
- o Man-in-loop rendezvous and docking
- o Blind rendezvous and docking
- o Acceptable information degradation and delay for closed loop docking
- o Development and simulation of rendezvous logic (6 DOF)
- o Artificial intelligence applied to rotating vehicle docking
- o RF target signatures
- o Target vehicle signatures as Star Tracker targets
- o Capture of a precessing, nutating satellite

DATA MANAGEMENT SYSTEM - Flexible Signal Interface

- o Develop and demonstrate application of circuits and interface technology

ELECTRICAL POWER SUBSYSTEM

- o Light weight, low volume packaging of $H_2O_2$ fuel cell and battery, with provisions for refurbishment of critical components.

CAPABILITY OPTION 2, CONFIGURATION 1A2-7,8 (Continued)

ELECTRICAL POWER SUBSYSTEM (Continued)

- Evaluation of life and degradation characteristics of new high efficiency cells developed by COMSAT.
- Light weight design of rollout Solar Array and empirical verification of extraction/retraction capability of up to 1,000 cycles.
- Development of high energy density, long cycle life metal-gas battery systems such as $ZN-O_2$ and $AG-H_2$.
- Development of multiplexed electrical power distribution and control system using solid state power controllers specifically for Tug application.

THERMAL CONTROL

None

## CAPABILITY OPTION 3

DEPLOY - CONFIGURATION 1A2-8

DEPLOY - CONFIGURATION 1A2-4

RETRIEVE - CONFIGURATION 1A2-3

(CONFIGURATION IA2-4 SHOWN)

CONFIGURATION PROFILE SKETCH

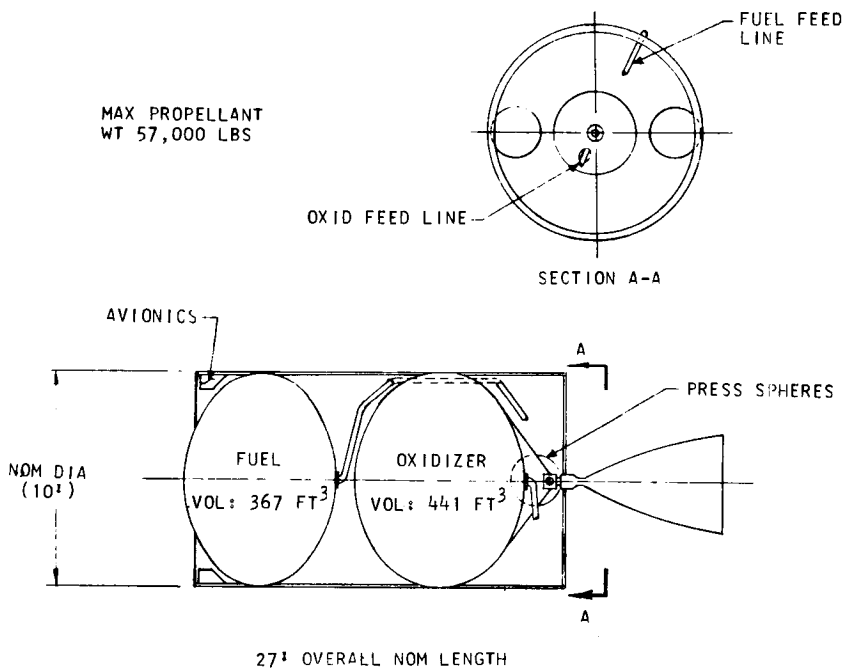


SPACE TUG VEHICLE SUBSYSTEM DEFINITION

| WBS NO. 320-03 | NOMENCLATURE | WT. | SUBSYSTEM CONFIG ① |
|---|---|---|---|
| | SPACE TUG VEH MAIN STG | 2238 | DRY WT +10% CONTINGENCY |
| 01 | STRUCTURES | (671) | |
| 01 | FUEL TANK & SUPPORT | 94 | AS INDICATED (TITANIUM) |
| 02 | OX TANK & SUPPORT | 160 | AS INDICATED (TITANIUM) |
| 03 | BODY STRUCTURE | 311 | AS INDICATED (COMPOSITE) |
| 04 | THRUST STRUCTURE | 20 | AS INDICATED (COMPOSITE) |
| 05 | METEOROID SHIELD | 45 | |
| 06 | PAYLOAD INTERFACE | 41 | |
| | | | |
| 02 | THERMAL CONTROL | (111) | TH-1 |
| 01 | FUEL TANK INSULATION | 81 | MLI (INCLUDES ALL MAIN STG MLI) |
| 02 | OX TANK INSULATION | | |
| 03 | PURGE SYSTEM | -- | N/A |
| 04 | THERMAL CONTROL SYSTEM | 30 | HTRS, PAINT, ACPS RADIATION SHLD |
| | | | |
| 03 | AVIONICS | (504) | AV-3 |
| 01 | DATA MANAGEMENT | 60 | FLEXIBLE SIGNAL INTERFACE (FSI) |
| 02 | GN&C | | |
| | GUID & NAV | 40 | IMUS & STAR TRACKERS |
| | CONTROLS | 20 | TANDEM INT ACT PLUS ACPS CNTLS |
| | DOCKING SYSTEM | - | N/A |
| 03 | COMMUNICATIONS | 34 | S-BAND |
| 04 | INSTRUMENTATION | - | WT INCLUDED WITH DATA MGMT |
| 05 | ELECTRICAL POWER | 350 | SOLAR ARRAY |
| 06 | POWER DIST & CONTROL | | 2 WIRE POS, STRUCT RETURN |
| | | | |
| 04 | PROPULSION | (758) | |
| 01 | MAIN ENGINE (GFE) | 268 | PR-1(2), E338 ENGINE |
| 02 | MAIN ENGINE SUPPORT | 307 | PR-1(2) |
| 03 | ACPS ENGINE | 60 | ACPS-2 (8) |
| 04 | ACPS ENGINE SUPPORT | 123 | ACPS-2 (8) |
| | | | |
| 05 | ORBITER INTERFACE | (1650) | EXCLUDED FROM MAIN STG WT |
| 01 | STRUCTURES | | TBD |
| 02 | INTERFACE PANELS | | TBD |
| 03 | PURGE PROVISIONS | | TBD |
| 04 | ABORT PROVISIONS | | TBD |
| | | | |
| 06 | DROP TANKS | - | N/A |
| 01 | STRUCTURES | | |
| 02 | THERMAL INSULATION | | |
| 03 | PROPELLANT SUPPORT SYS | | |

SIGNIFICANT DESIGN PARAMETERS:

MAIN ENGINE: PROPELLANT $MMH/N_2O_4$ THRUST 12K

M.R. 2:1 $I_{SP}$ 338.1

PLANNED OPERATIONAL SPAN-FROM ___ TO ___

PROPELLANT LOAD FACTOR ( $\lambda$ ) ___

DESIGN LIFE ___ MISSIONS

AUTONOMY LEVEL 2

NOTES:

① SUBSYSTEM(S) CONFIG MAY BE DESIGNATED BY A CODE WITH DETAILS ON SUPPL CONFIG DATA SHEETS

PLANNED EVOLUTION:

C03 IA2-8 (79D) TO IA2-4 (83D) TO IA2-3 (83R)
C04 IA2-4 (83D) TO IA2-3 (83R)
C05 IA2-8 (79D) TO IA2-4 (79R) TO IA2-3 (83R)
C06 IA2-8 (79D) TO IA2-7 (79R) TO IA2-4 (83D) TO IA2-3 (83R)
C07 IA2-4 (83D) TO IA2-3 (83R)

CONFIGURATION SUMMARY SHEET
SPACE TUG SYSTEM STUDY

CONFIG NO. IA2-4, SINGLE STG

NASA CO NO. 3,4,5,6 & 7

DATE 7-9-73, REV 1

MARTIN MARIETTA

## PRELIMINARY RELIABILITY PREDICTION SUMMARY

Capability Option Number Three (3)

Configuration Number(s) 1A2-8, 1A2-4, 1A2-3

Mission Type(s)/Duration(s) 1A2-8 Deploy/3 Day; 1A2-4 Deploy/3 Day; 1A2-3 Round Trip/7 Day

### 1A2-8

Same Prediction as in Capability Option Number One (1)

| | |
|---|---|
| Vehicle Reliability (without Kick Stage) | .98948 |
| Vehicle Reliability (with Kick Stage) | .98651 |

### 1A2-4

| Subsystem | Reliability |
|---|---|
| Structure | 1- |
| Avionics AV-3 | |
| Electrical Power | .99927 |
| Communications | .99999+ |
| Controls | .99678 |
| Data Management | .99999 |
| Guidance & Navigation | .99988 |
| High Pc Engine | .99832 |
| Main Engine Support PR-1(2) | .99892 |
| Hydrazine ACS | .99825 |
| Vehicle Reliability (without Kick Stage) | .99143 |
| Vehicle Reliability (with Kick Stage) | .98845 |

### 1A2-3

| Subsystem | Reliability |
|---|---|
| Structure | 1- |
| Avionics AV-2 | |
| Electrical Power | .99841 |
| Communications | .99999 |
| Controls | .99678 |
| Data Management | .99993 |
| Guidance & Navigation | .99967 |
| Docking (TBS) | .99700 |
| High Pc Engine | .99785 |
| Main Engine Support PR-1(2) | .99841 |
| Hydrazine ACS | .99701 |
| Vehicle Reliability (without Kick Stage) | .98514 |
| Vehicle Reliability (with Kick Stage) | .98218 |

# TUG SUMMARY SCHEDULE - CAPABILITY OPTION 3 & 5, CONFIGURATION IA2-8/-3, 4

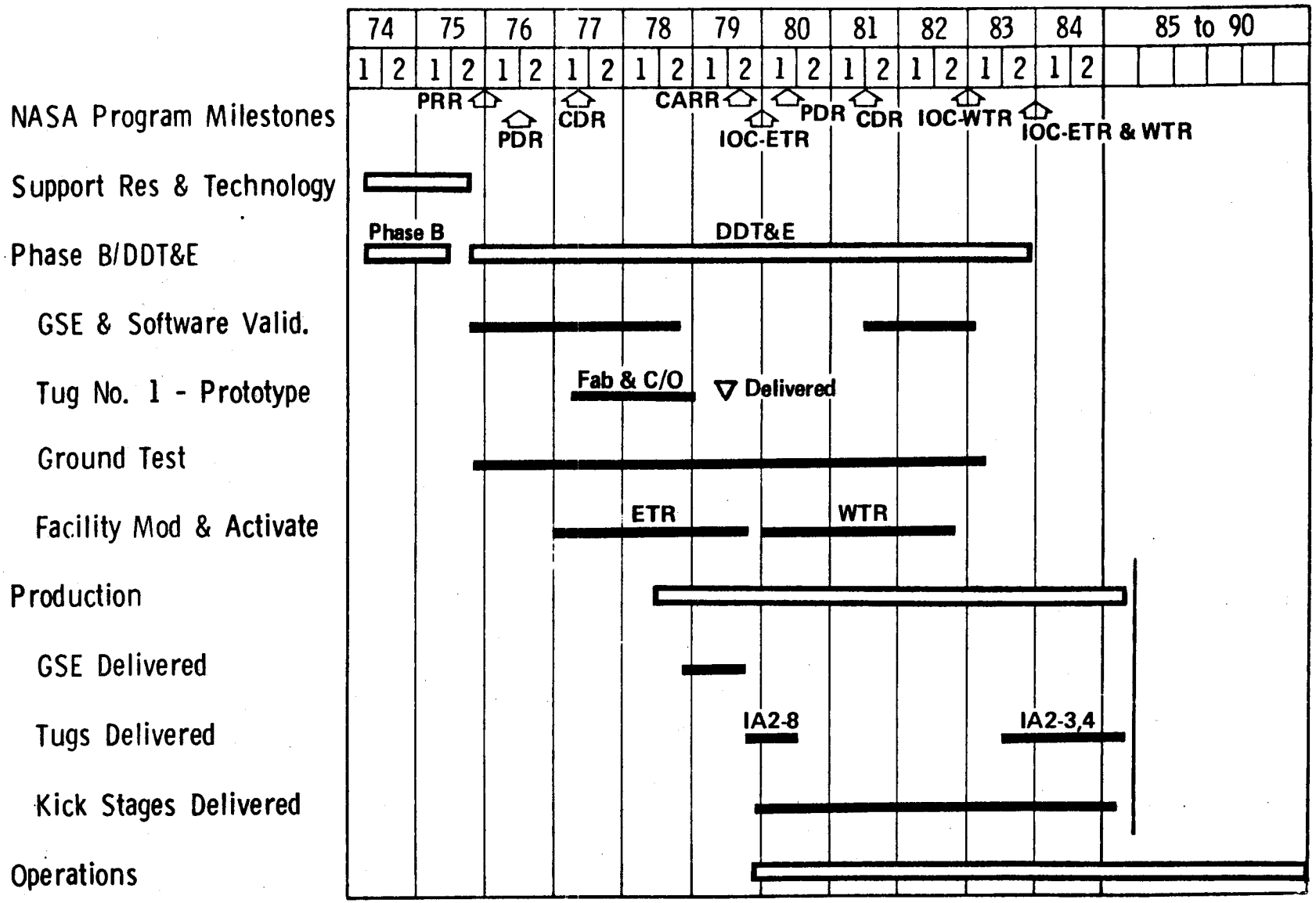

## STORABLE TUG TECHNOLOGY STATUS

## SUPPORTING TECHNOLOGY REQUIREMENTS

CAPABILITY OPTION 3, CONFIGURATION 1A2-8 to 3,4

STRUCTURES & MATERIALS

- o Development of composite for non-tank structures (skirts, etc.)
- o High pressure vessel development
- o Improved weld technology
- o Develop fracture mechanics technology for thin gauge materials
- o Satellite docking mechanism development

MAIN PROPULSION AND ACPS

None

KICK STAGES

Continue development of technology of low burning rate for solid propellant motors.

AVIONICS (AV-1, AV-2, AV-3)

GUIDANCE & CONTROL

- o Update procedures and algorithms
- o Interferometer landmark tracking applications
- o Star availability
- o ACS optical impingement
- o Man-in-loop rendezvous and docking
- o Blind rendezvous and docking
- o Acceptable information degradation and delay for closed loop docking
- o Development and simulation of rendezvous logic (6 DOF)
- o Artificial intelligence applied to rotating vehicle docking
- o RF target signatures
- o Target vehicle signatures as Star Tracker targets
- o Capture of a precessing, nutating satellite
- o SLR receiver application as Star Tracker

DATA MANAGEMENT SYSTEM - Flexible Signal Interface

- o Develop and demonstrate application of circuits and interface technology.

CAPABILITY OPTION 3, CONFIGURATION 1A2-8 to 3,4 (Continued)

ELECTRICAL POWER SUBSYSTEM

- Light weight, low volume packaging of $H_2O_2$ fuel cell and battery with provisions for refurbishment of critical components.
- Evaluation of life and degradation characteristics of new high efficiency cells developed by COMSAT.
- Light weight design of rollout Solar Array and empirical verification of extraction/retraction capability of up to 1,000 cycles.
- Development of high energy density, long cycle life metal-gas battery systems such as $ZN-O_2$ and $AG-H_2$.
- Development of multiplexed electrical power distribution and control system using solid state power controllers specifically for Tug application.

THERMAL CONTROL

None

## CAPABILITY OPTION 4

DEPLOY - CONFIGURATION 1A2-4

RETRIEVE - CONFIGURATION 1A2-3

(CONFIGURATION IA2-3 SHOWN)

CONFIGURATION PROFILE SKETCH

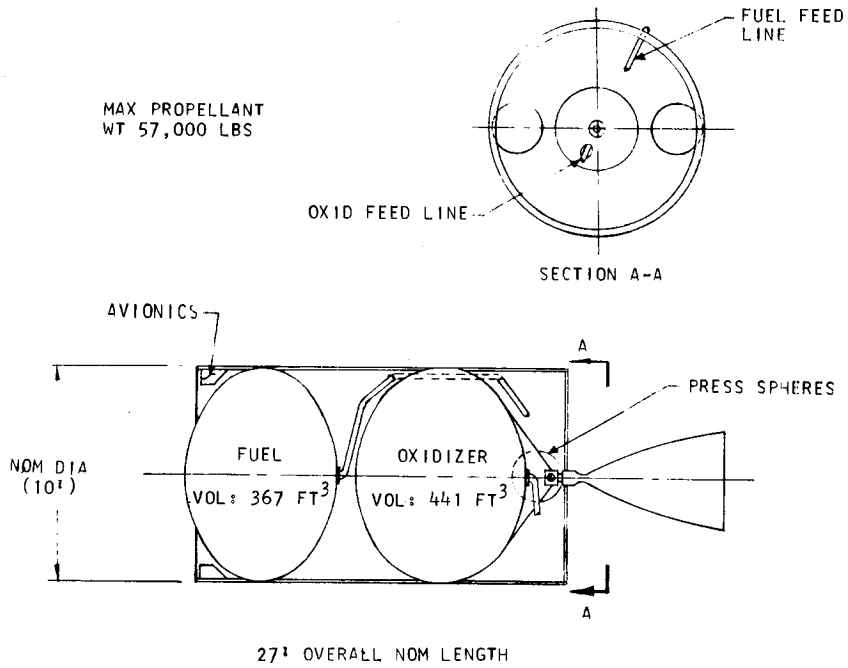


SPACE TUG VEHICLE SUBSYSTEM DEFINITION

| WBS NO. 320-03 | NOMENCLATURE | WT. | SUBSYSTEM CONFIG ① |
|---|---|---|---|
| | SPACE TUG VEH MAIN STG | 2461 | DRY WT +10% CONTINGENCY |
| 01 | STRUCTURES | (721) | |
| 01 | FUEL TANK & SUPPORT | 94 | AS INDICATED (TITANIUM) |
| 02 | OX TANK & SUPPORT | 160 | AS INDICATED (TITANIUM) |
| 03 | BODY STRUCTURE | 311 | AS INDICATED (COMPOSITE) |
| 04 | THRUST STRUCTURE | 20 | AS INDICATED (COMPOSITE) |
| 05 | METEOROID SHIELD | 45 | |
| 06 | PAYLOAD INTERFACE | 91 | |
| | | | |
| 02 | THERMAL CONTROL | (111) | TH-1 |
| 01 | FUEL TANK INSULATION | 81 | MLI (INCLUDES ALL MAIN STG MLI) |
| 02 | OX TANK INSULATION | | |
| 03 | PURGE SYSTEM | - | N/A |
| 04 | THERMAL CONTROL SYSTEM | 30 | HTRS, PAINT, ACPS RADIATION SHLD |
| | | | |
| 03 | AVIONICS | (647) | AV-2 |
| 01 | DATA MANAGEMENT | 60 | FLEXIBLE SIGNAL INTERFACE (FSI) |
| 02 | GN&C | | |
| | GUID & NAV | 93 | IMUS & STAR TRACKERS, SLR |
| | CONTROLS | 20 | TANDEM INT ACT PLUS ACPS CNTLS |
| | DOCKING SYSTEM | 90 | DOCKING HARDWARE |
| 03 | COMMUNICATIONS | 34 | S-BAND |
| 04 | INSTRUMENTATION | - | WT INCLUDED WITH DATA MGMT |
| 05 | ELECTRICAL POWER | 350 | SOLAR ARRAY |
| 06 | POWER DIST & CONTROL | | 2 WIRE POS, STRUCT RETURN |
| | | | |
| 04 | PROPULSION | (763) | |
| 01 | MAIN ENGINE (GFE) | 273 | PR-1(2), E338 ENGINE |
| 02 | MAIN ENGINE SUPPORT | 307 | PR-1(2) |
| 03 | ACPS ENGINE | 60 | ACPS-2 (8) |
| 04 | ACPS ENGINE SUPPORT | 123 | ACPS-2 (8) |
| | | | |
| 05 | ORBITER INTERFACE | (1650) | EXCLUDED FROM MAIN STG WT TD |
| 01 | STRUCTURES | | TBD |
| 02 | INTERFACE PANELS | | TBD |
| 03 | PURGE PROVISIONS | | TBD |
| 04 | ABORT PROVISIONS | | TBD |
| | | | |
| 06 | DROP TANKS | – | N/A |
| 01 | STRUCTURES | | |
| 02 | THERMAL INSULATION | | |
| 03 | PROPELLANT SUPPORT SYS | | |

SIGNIFICANT DESIGN PARAMETERS:

MAIN ENGINE: PROPELLANT MMH/$N_2O_4$ THRUST 12K

M.R. 2:1 $I_{SP}$ 338.1

PLANNED OPERATIONAL SPAN-FROM ___ TO ___

PROPELLANT LOAD FACTOR ( $\lambda$ ) ___

DESIGN LIFE ___ MISSIONS

AUTONOMY LEVEL 2

NOTES:

① SUBSYSTEM(S) CONFIG MAY BE DESIGNATED BY A CODE WITH DETAILS ON SUPPL CONFIG DATA SHEETS

PLANNED EVOLUTION:

C03 IA2-8 (79D) TO IA2-4 (83R) TO IA2-3 (83R)
C04 IA2-4 (83D) TO IA2-3 (83R)
C05 IA2-8 (79D) TO IA2-4 (83D) TO IA2-3 (83R)
C06 IA2-8 (79D) TO IA2-7 (79R) TO IA2-4 (83D) TO IA2-3 (83R)
C07 IA2-4 (83D) TO IA2-3 (83R)

CONFIGURATION SUMMARY SHEET
SPACE TUG SYSTEM STUDY

CONFIG NO. IA2-3, SINGLE STG

NASA CO NO. 3,4,5,6 & 7

DATE 7-9-73, REV 1

MARTIN MARIETTA

## PRELIMINARY RELIABILITY PREDICTION SUMMARY

Capability Option Number Four (4) and Seven (7)

Configuration Number(s) 1A2-3 and 1A2-4

Mission Type(s)/Duration(s) 1A2-3 Round Trip/7 Day; 1A2-4 Deploy/3 Day

| 1A2-4 | | 1A2-3 | |
|---|---|---|---|
| Same prediction as in Capability Option Number Three (3), IE: | | Same prediction as in Capability Option Number Three (3), IE: | |
| Vehicle Reliability (without Kick Stage) | .99143 | Vehicle Reliability (without Kick Stage) | .98514 |
| Vehicle Reliability (with Kick Stage) | .98845 | Vehicle Reliability (with Kick Stage) | .98218 |

## TUG SUMMARY SCHEDULE - CAPABILITY OPTION 4 & 7, CONFIGURATION IA2-3,4

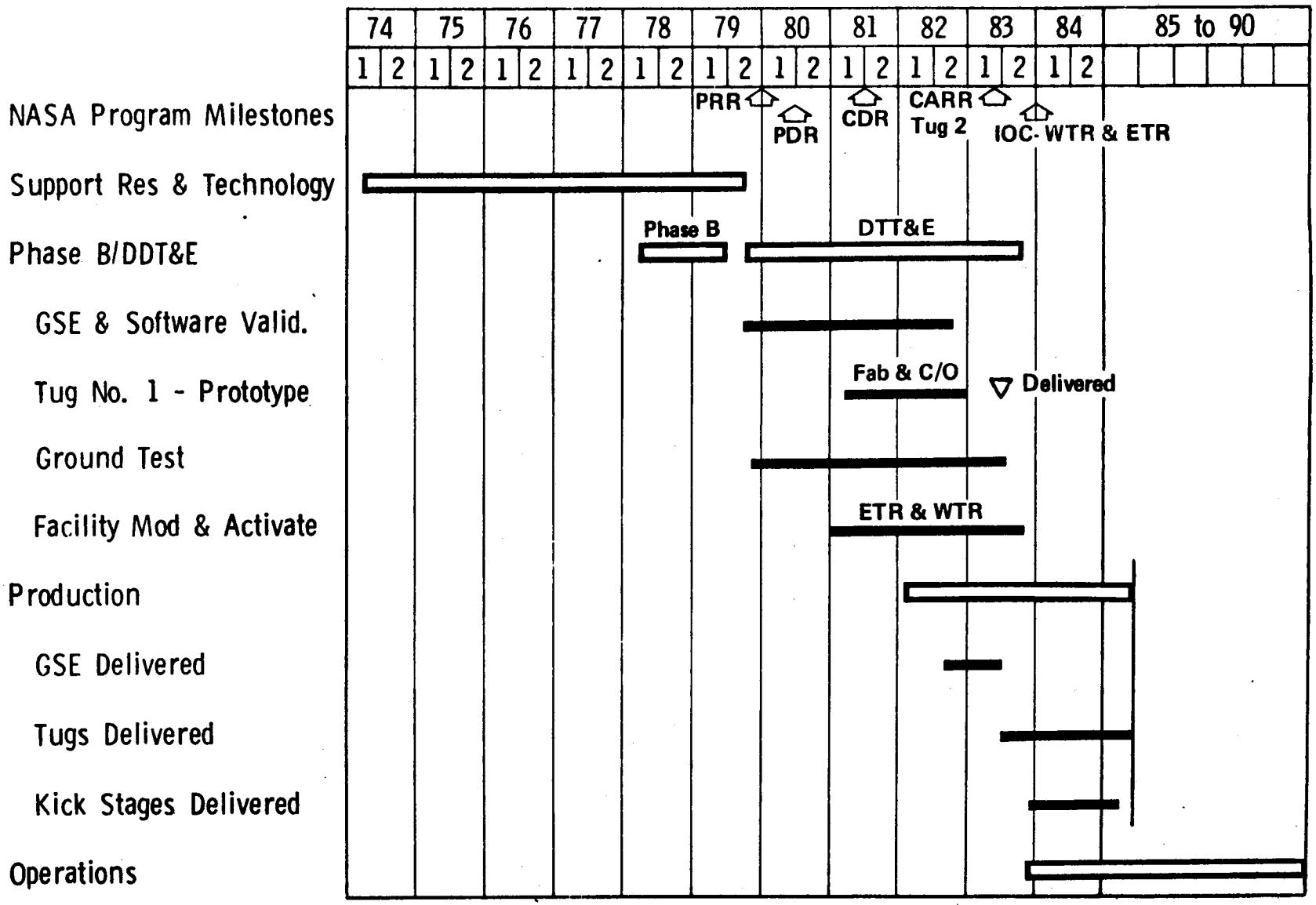

## TUG SUMMARY SCHEDULE - CAPABILITY OPTION 4 - EXCEPT IOC 1981, CONFIGURATION IA2-3, 4

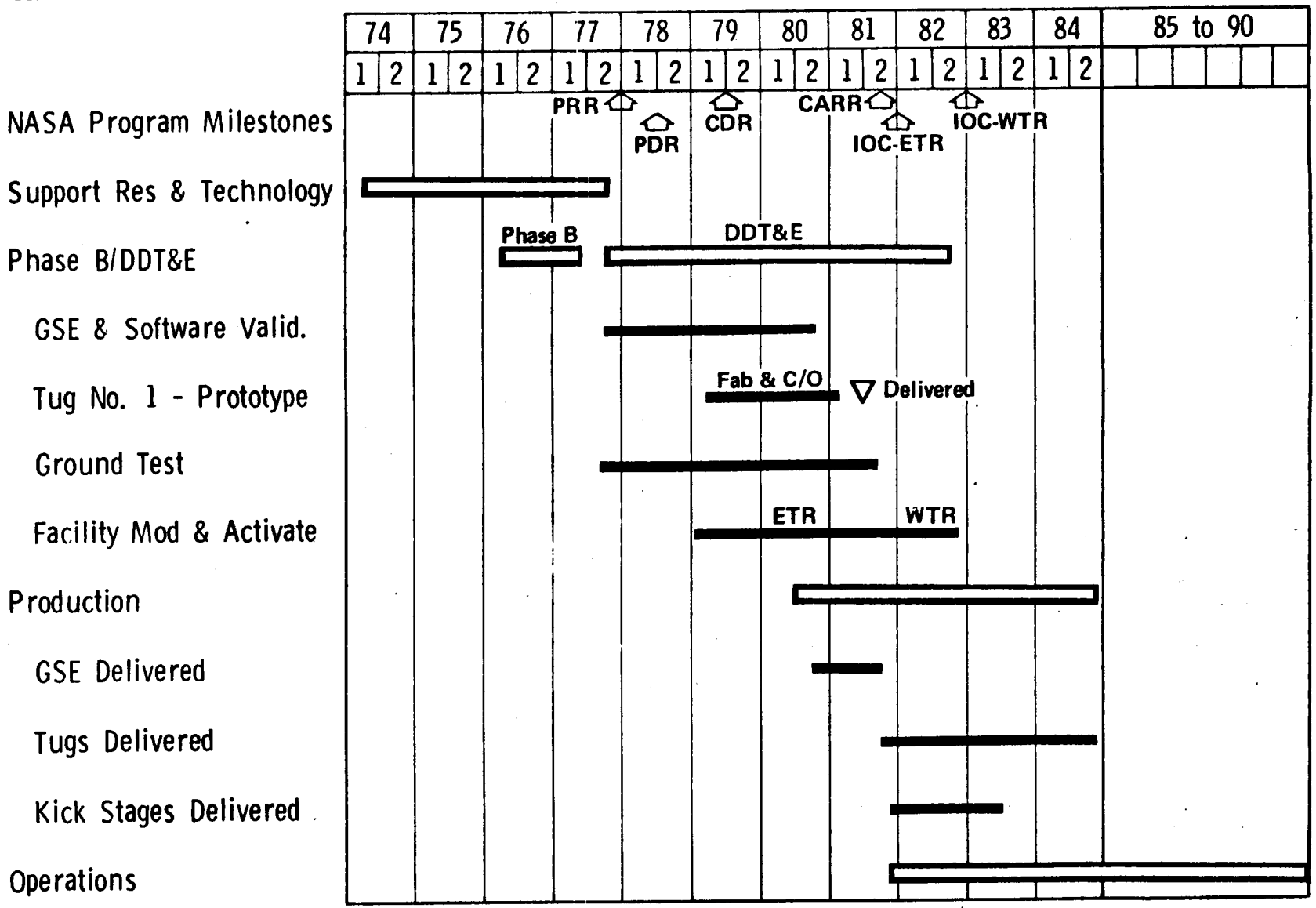

## STORABLE TUG TECHNOLOGY STATUS

## SUPPORTING TECHNOLOGY REQUIREMENTS

CAPABILITY OPTION 4, CONFIGURATION 1A2-3,4

STRUCTURES & MATERIALS

- o Development of composites for non-tank structures (skirts, etc.)
- o High pressure vessel development
- o Improved weld technology
- o Develop fracture mechanics technology for thin gauge materials
- o Satellite docking mechanism development

MAIN PROPULSION AND ACPS

None

KICK STAGES

Continue development of technology of low burning rate for solid propellant motors.

AVIONICS (AV-2, AV-3)

GUIDANCE & CONTROL

- o Update procedures and algorithms
- o Interferometer landmark tracking applications
- o Star availability
- o ACS optical impingement
- o SLR receiver application as star tracker
- o Man-in-loop rendezvous and docking
- o Blind rendezvous and docking
- o Acceptable information degradation and delay for closed loop docking
- o Development and simulation of rendezvous logic (6 DOF)
- o Artificial intelligence applied to rotating vehicle docking
- o RF target signatures
- o Target vehicle signatures as star tracker targets
- o Capture of a precessing, nutating satellite

DATA MANAGEMENT SYSTEM - Flexible Signal Interface

- o Develop and demonstrate application of circuits and interface technology.

CAPABILITY OPTION 4, CONFIGURATION 1A2-3,4 (Continued)

ELECTRICAL POWER SUBSYSTEM

- Light weight, low volume packaging of $H_2O_2$ fuel cell and battery with provisions for refurbishment of critical components
- Evaluation of life and degradation characteristics of new high efficiency cells developed by COMSAT.
- Light weight design of rollout solar array and empirical verification of extraction/retraction capability of up to 1,000 cycles
- Development of high energy density, long cycle life metal gas battery systems such as $ZN-O_2$ and $AG-H_2$.
- Development of multiplexed electrical power distribution and control system using solid-state power controllers specifically for Tug application.

THERMAL CONTROL

None

## CAPABILITY OPTION 5

DEPLOY - CONFIGURATION 1A2-8

DEPLOY - CONFIGURATION 1A2-4

RETRIEVE - CONFIGURATION 1A2-3

(CONFIGURATION IA2-3 SHOWN)

CONFIGURATION PROFILE SKETCH

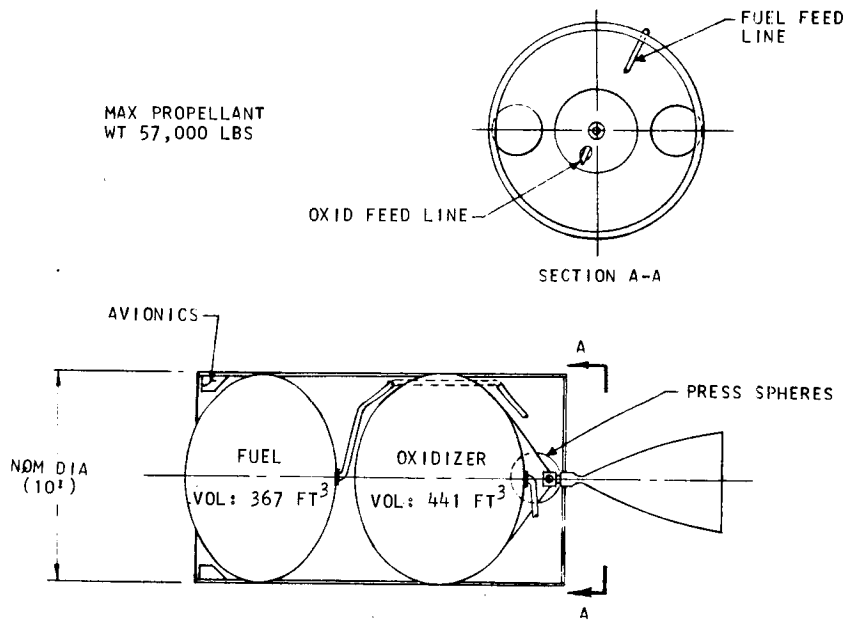


SPACE TUG VEHICLE SUBSYSTEM DEFINITION

| WBS NO. 320-03 | NOMENCLATURE | WT. | SUBSYSTEM CONFIG ① |
|---|---|---|---|
| | SPACE TUG VEH MAIN STG | 2461 | DRY WT +10% CONTINGENCY |
| 01 | STRUCTURES | (721) | |
| 01 | FUEL TANK & SUPPORT | 94 | AS INDICATED (TITANIUM) |
| 02 | OX TANK & SUPPORT | 160 | AS INDICATED (TITANIUM) |
| 03 | BODY STRUCTURE | 311 | AS INDICATED (COMPOSITE) |
| 04 | THRUST STRUCTURE | 20 | AS INDICATED (COMPOSITE) |
| 05 | METEOROID SHIELD | 45 | |
| 06 | PAYLOAD INTERFACE | 91 | |
| | | | |
| 02 | THERMAL CONTROL | (111) | TH-1 |
| 01 | FUEL TANK INSULATION | 81 | MLI (INCLUDES ALL MAIN STG MLI) |
| 02 | OX TANK INSULATION | | |
| 03 | PURGE SYSTEM | - | N/A |
| 04 | THERMAL CONTROL SYSTEM | 30 | HTRS, PAINT, ACPS RADIATION SHLD |
| | | | |
| 03 | AVIONICS | (647) | AV-2 |
| 01 | DATA MANAGEMENT | 60 | FLEXIBLE SIGNAL INTERFACE (FSI) |
| 02 | GN&C | | |
| | GUID & NAV | 93 | IMUS & STAR TRACKERS, SLR |
| | CONTROLS | 20 | TANDEM INT ACT PLUS ACPS CNTLS |
| | DOCKING SYSTEM | 90 | DOCKING HARDWARE |
| 03 | COMMUNICATIONS | 34 | S-BAND |
| 04 | INSTRUMENTATION | - | WT INCLUDED WITH DATA MGMT |
| 05 | ELECTRICAL POWER | 350 | SOLAR ARRAY |
| 06 | POWER DIST & CONTROL | | 2 WIRE POS, STRUCT RETURN |
| | | | |
| 04 | PROPULSION | (763) | |
| 01 | MAIN ENGINE (GFE) | 273 | PR-1(2), E338 ENGINE |
| 02 | MAIN ENGINE SUPPORT | 307 | PR-1(2) |
| 03 | ACPS ENGINE | 60 | ACPS-2 (8) |
| 04 | ACPS ENGINE SUPPORT | 123 | ACPS-2 (8) |
| | | | |
| 05 | ORBITER INTERFACE | (1650) | EXCLUDED FROM MAIN STG WT |
| 01 | STRUCTURES | | TBD |
| 02 | INTERFACE PANELS | | TBD |
| 03 | PURGE PROVISIONS | | TBD |
| 04 | ABORT PROVISIONS | | TBD |
| | | | |
| 06 | DROP TANKS | — | N/A |
| 01 | STRUCTURES | | |
| 02 | THERMAL INSULATION | | |
| 03 | PROPELLANT SUPPORT SYS | | |

SIGNIFICANT DESIGN PARAMETERS:

MAIN ENGINE: PROPELLANT MMH/$N_2O_4$ THRUST 12K

M.R. 2:1 $I_{SP}$ 338.1

PLANNED OPERATIONAL SPAN-FROM ___ TO ___

PROPELLANT LOAD FACTOR ( $\lambda$ ) ___

DESIGN LIFE ___ MISSIONS

AUTONOMY LEVEL 2

NOTES:

① SUBSYSTEM(S) CONFIG MAY BE DESIGNATED BY A CODE WITH DETAILS ON SUPPL CONFIG DATA SHEETS

PLANNED EVOLUTION:

C03 IA2-8 (79D) TO IA2-4 (83R) TO IA2-3 (83R)
C04 IA2-4 (83D) TO IA2-3 (83R)
C05 IA2-8 (79D) TO IA2-4 (83D) TO IA2-3 (83R)
C06 IA2-8 (79D) TO IA2-7 (79R) TO IA2-4 (83D) TO IA2-3 (83R)
C07 IA2-4 (83D) TO IA2-3 (83R)

CONFIGURATION SUMMARY SHEET
SPACE TUG SYSTEM STUDY

CONFIG NO. IA2-3, SINGLE STG

NASA CO NO. 3,4,5,6 & 7

DATE 7-9-73, REV 1

MARTIN MARIETTA

## PRELIMINARY RELIABILITY PREDICTION SUMMARY

Capability Option Number Five (5)

Configuration Number(s) 1A2-8, 1A2-4, 1A2-3

Mission Type(s)/Duration(s) 1A2-8 and 1A2-4 Deploy/3 day; 1A2-3 Round Trip/7 Day

| 1A2-8 | 1A2-4 | 1A2-3 |
|---|---|---|
| Same prediction as in Capability Option Number One (1); IE. | Same prediction as in Capability Option Number Three (3); IE | Same prediction as in Capability Option Number Three (3); IE |
| Vehicle Reliability (without Kick Stage) .98948 | .99143 | .98514 |
| Vehicle Reliability (with Kick Stage) .98651 | .98845 | .98218 |

# TUG SUMMARY SCHEDULE - CAPABILITY OPTION 3 & 5, CONFIGURATION IA2-8/-3, 4

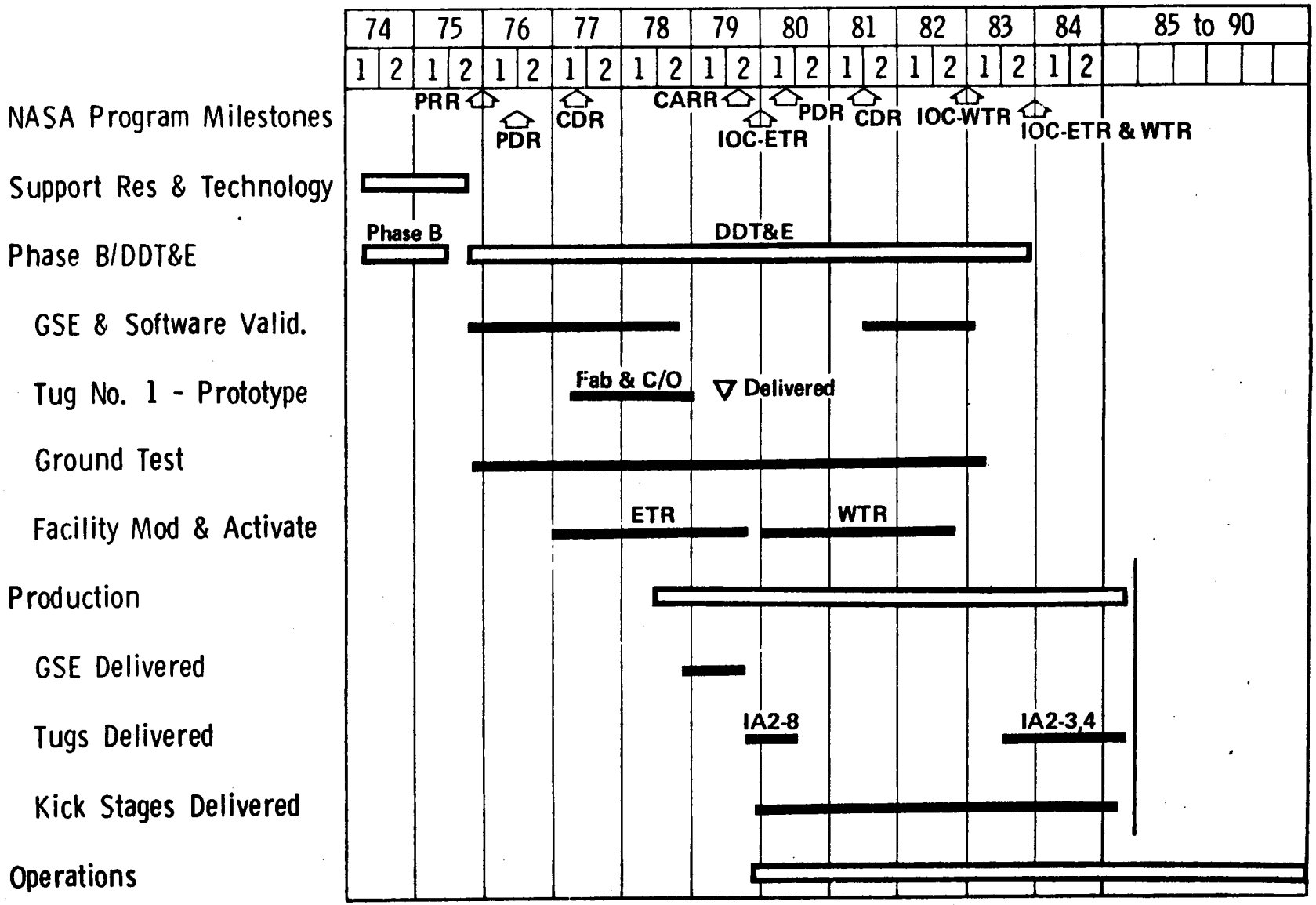

## STORABLE TUG TECHNOLOGY STATUS

## SUPPORTING TECHNOLOGY REQUIREMENTS

CAPABILITY OPTION 5, CONFIGURATION 1A2-8 to 3,4

STRUCTURES & MATERIALS

- o Development of composites for non-tank structures (skirts, etc.)
- o High pressure vessel development
- o Improved weld technology
- o Develop fracture mechanics technology for thin gauge materials
- o Satellite docking mechanism development

MAIN PROPULSION AND ACPS

None

KICK STAGES

Continue development of technology of low burning rate for solid propellant motors.

AVIONICS (AV-1, AV-2, AV-3)

GUIDANCE & CONTROL

- o Update procedures and algorithms
- o Interferometer landmark tracking applications
- o Star availability
- o ACS optical impingement
- o SLR receiver application as star tracker
- o Man-in-loop rendezvous and docking
- o Blind rendezvous and docking
- o Acceptable information degradation and delay for closed loop docking
- o Development and simulation of rendezvous logic (6 DOF)
- o Artificial intelligence applied to rotating vehicle docking
- o RF target signatures
- o Target vehicle signatures as star tracker targets
- o Capture of a precessing, nutating satellite

DATA MANAGEMENT SYSTEM - Flexible Signal Interface

- o Develop and demonstrate application of circuits and interface technology

CAPABILITY OPTION 5, CONFIGURATION 1A2-8 to 3,4 (Continued)

ELECTRICAL POWER SUBSYSTEM

- Light weight, low volume packaging of $H_2O_2$ fuel cell and battery with provisions for refurbishment of critical components
- Evaluation of life and degradation characteristics of new high efficiency cells developed by COMSAT.
- Light weight design of rollout solar array and empirical verification of extraction/retraction capability of up to 1,000 cycles.
- Development of high energy density, long cycle life metal gas battery systems such as $ZN-O_2$ and $AG-H_2$.
- Development of multiplexed electrical power distribution and control system using solid-state power controllers specifically for Tug application.

THERMAL CONTROL

None

## CAPABILITY OPTION 6

DEPLOY - CONFIGURATION 1A2-8

RETRIEVE - CONFIGURATION 1A2-7

DEPLOY - CONFIGURATION 1A2-4

RETRIEVE - CONFIGURATION 1A2-3

(CONFIGURATION 1A2-7 SHOWN)

CONFIGURATION PROFILE SKETCH

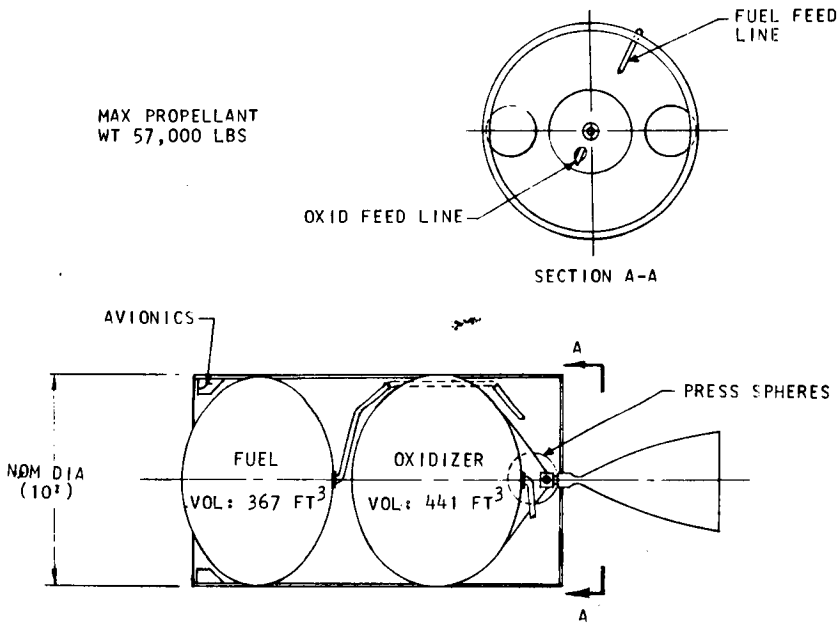


SPACE TUG VEHICLE SUBSYSTEM DEFINITION

| WBS NO. 320-03 | NOMENCLATURE | WT. | SUBSYSTEM CONFIG ① |
|---|---|---|---|
| | SPACE TUG VEH MAIN STG | 2754 | DRY WT +10% CONTINGENCY |
| 01 | STRUCTURES | (721) | |
| 01 | FUEL TANK & SUPPORT | 94 | AS INDICATED (TITANIUM) |
| 02 | OX TANK & SUPPORT | 160 | AS INDICATED (TITANIUM) |
| 03 | BODY STRUCTURE | 311 | AS INDICATED (COMPOSITE) |
| 04 | THRUST STRUCTURE | 20 | AS INDICATED (COMPOSITE) |
| 05 | METEOROID SHIELD | 45 | |
| 06 | PAYLOAD INTERFACE | 91 | |
| | | | |
| 02 | THERMAL CONTROL | (111) | TH-1 |
| 01 | FUEL TANK INSULATION | 81 | MLI (INCLUDES ALL MAIN STG MLI) |
| 02 | OX TANK INSULATION | | |
| 03 | PURGE SYSTEM | - | N/A |
| 04 | THERMAL CONTROL SYSTEM | 30 | HTRS, PAINT, ACPS RADIATION SHLD |
| | | | |
| 03 | AVIONICS | (872) | AV-4 |
| 01 | DATA MANAGEMENT | 60 | FLEXIBLE SIGNAL INTERFACE (FSI) |
| 02 | GN&C | | |
| | GUID & NAV | 258 | IMUS, STAR TRACKERS, RF RADAR |
| | CONTROLS | 20 | TANDEM INT ACT PLUS ACPS CNTLS |
| | DOCKING SYSTEM | 150 | DOCKING HARDWARE |
| 03 | COMMUNICATIONS | 34 | S-BAND |
| 04 | INSTRUMENTATION | - | WT INCLUDED WITH DATA MGMT |
| 05 | ELECTRICAL POWER | 350 | SOLAR ARRAY |
| 06 | POWER DIST & CONTROL | | 2 WIRE POS, STRUCT RETURN |
| | | | |
| 04 | PROPULSION | (800) | |
| 01 | MAIN ENGINE (GFE) | 410 | PR-1(2), E332 ENGINE |
| 02 | MAIN ENGINE SUPPORT | 307 | PR-1(2) |
| 03 | ACPS ENGINE | 60 | ACPS-2 (8) |
| 04 | ACPS ENGINE SUPPORT | 123 | ACPS-2 (8) |
| | | | |
| 05 | ORBITER INTERFACE | (1650) | EXCLUED FROM MAIN STG WT |
| 01 | STRUCTURES | | TBD |
| 02 | INTERFACE PANELS | | TBD |
| 03 | PURGE PROVISIONS | | TBD |
| 04 | ABORT PROVISIONS | | N/A |
| | | | |
| 06 | DROP TANKS | | |
| 01 | STRUCTURES | | |
| 02 | THERMAL INSULATION | | |
| 03 | PROPELLANT SUPPORT SYS | | |

SIGNIFICANT DESIGN PARAMETERS:

MAIN ENGINE: PROPELLANT MMH/$N_2O_4$ THRUST 12K

M.R. 2:1 $I_{SP}$ 332

PLANNED OPERATIONAL SPAN-FROM ___ TO ___

PROPELLANT LOAD FACTOR ( $\lambda$ ) ___

DESIGN LIFE ___ MISSIONS

AUTONOMY LEVEL 2

NOTES:

① SUBSYSTEM(S) CONFIG MAY BE DESIGNATED BY A CODE WITH DETAILS ON SUPPL CONFIG DATA SHEETS

PLANNED EVOLUTION:

C02 IA2-8 (79D) TO IA2-7 (79R)
C03 IA2-8 (79D) TO (83D) TO IA2-7 (83R)
C06 IA2-8 (79D) TO IA2-7 (79R) TO IA2-4 (83D) TO IA2-3 (83R)

CONFIGURATION SUMMARY SHEET
SPACE TUG SYSTEM STUDY

CONFIG NO. IA2-7, SINGLE STG

NASA CO NO. 2,3 & 6

DATE 7-9-73, REV 1

MARTIN MARIETTA

PRELIMINARY RELIABILITY PREDICTION SUMMARY

Capability Option Number Six (6)

Configuration Number(s) 1A2-8, 1A2-8, 1A2-4, 1A2-3

Mission Type(s)/Duration(s) 1A2-8 & 1A2-4 Deploy/3 Day; 1A2-3 & 1A2-7 Round Trip/7 Day

| 1A2-8 | 1A2-4 | 1A2-3 | 1A2-7 |
|---|---|---|---|
| Same Prediction as Capability Option Number One (1); IE | Same Prediction as Capability Option Number Three (3); IE | Same Prediction as Capability Option Number Three (3); IE | Same Prediction as Capability Option Number Two (2); IE |
| Vehicle Reliability .98948 (without Kick Stage) | Vehicle Reliability .99143 (without Kick Stage) | Vehicle Reliability .98514 (without Kick Stage) | Vehicle Reliability .98298 (without Kick Stage) |
| Vehicle Reliability .98651 (with Kick Stage) | Vehicle Reliability .98845 (with Kick Stage) | Vehicle Reliability .98218 (with Kick Stage) | Vehicle Reliability .98003 (with Kick Stage) |

# TUG SUMMARY SCHEDULE - CAPABILITY OPTION 6, CONFIGURATION IA2-7,8/-3,4

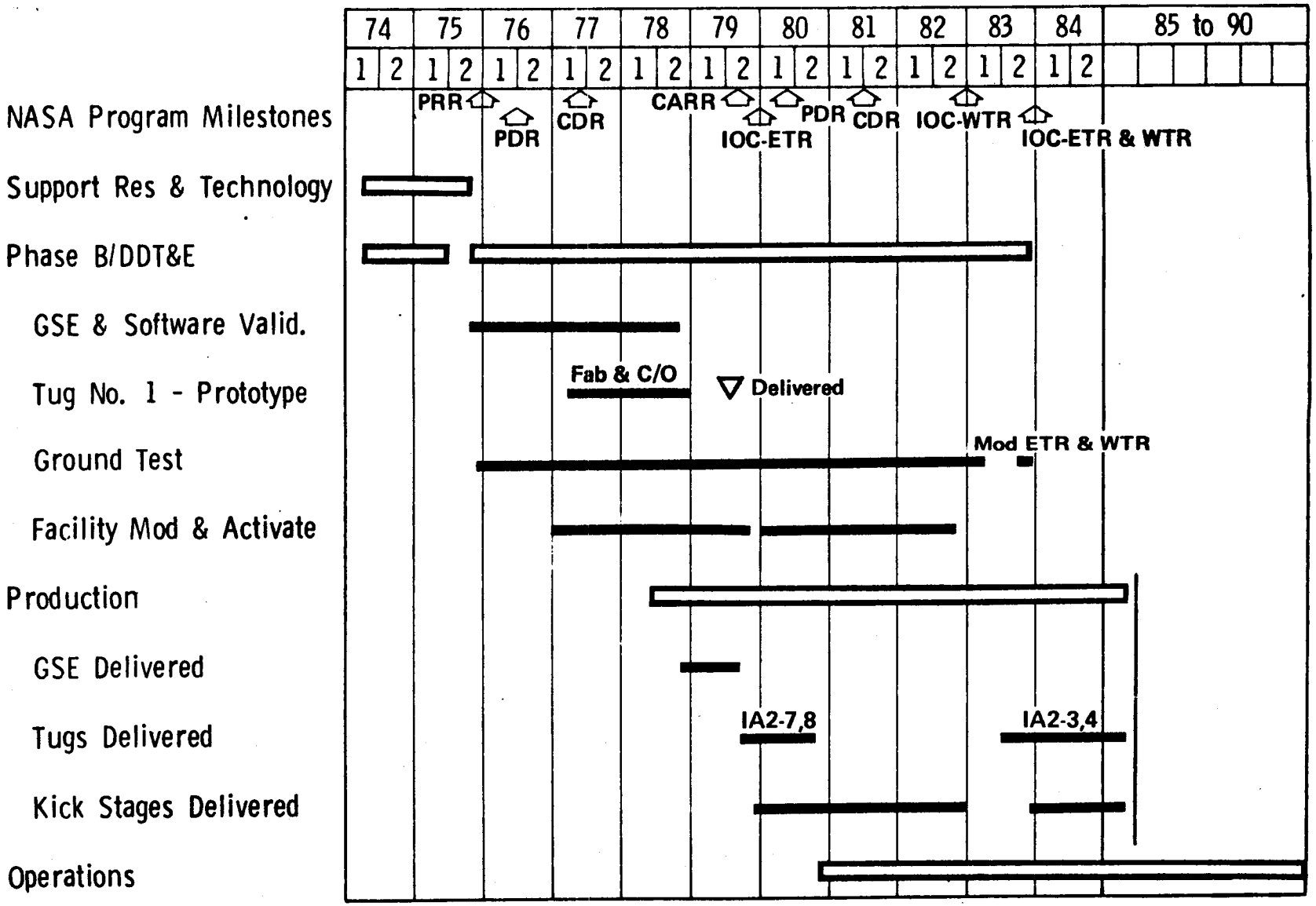

## STORABLE TUG TECHNOLOGY STATUS

## SUPPORTING TECHNOLOGY REQUIREMENTS

CAPABILITY OPTION 6, CONFIGURATION 1A2-8,7 to 3,4

STRUCTURES & MATERIALS

- o Development of composites for non-tank structures (skirts, etc.)
- o High pressure vessel development
- o Improved weld technology
- o Develop fracture mechanics technology for thin gauge materials
- o Satellite docking mechanism development

MAIN PROPULSION AND ACPS

None

KICK STAGES

Continue development of technology of low burning rate for solid propellant motors.

AVIONICS (AV-1, AV-2, AV-3, AV-4)

GUIDANCE & CONTROL

- o Update procedures and algorithms
- o Interferometer landmark tracking applications
- o Star availability
- o ACS optical impingement
- o SLR receiver application as star tracker
- o Man-in-loop rendezvous and docking
- o Blind rendezvous and docking
- o Acceptable information degradation and delay for closed loop docking
- o Development and simulation of rendezvous logic (6 DOF)
- o Artificial intelligence applied to rotating vehicle docking
- o RF target signatures
- o Target vehicle signatures as star tracker targets
- o Capture of a precessing, nutating satellite

DATA MANAGEMENT SYSTEM - Flexible Signal Interface

- o Develop and demonstrate application of circuits and interface technology

CAPABILITY OPTION 6, CONFIGURATION 1A2-8,7 to 3,4 (Continued)

ELECTRICAL POWER SUBSYSTEM

- Light weight, low volume packaging of $H_2O_2$ fuel cell and battery with provisions for refurbishment of critical components
- Evaluation of life and degradation characteristics of new high efficiency cells developed by COMSAT.
- Light weight design of rollout solar array and empirical verification of extraction/retraction capability of up to 1,000 cycles
- Development of high energy density, long cycle life metal gas battery systems such as $ZN-O_2$ and $AG-H_2$.
- Development of multiplexed electrical power distribution and control system using solid-state power controllers specifically for Tug application.

THERMAL CONTROL

None

## CAPABILITY OPTION 7

DEPLOY - CONFIGURATION 1A2-4

RETRIEVE - CONFIGURATION 1A2-3

(CONFIGURATION IA2-3 SHOWN)

CONFIGURATION PROFILE SKETCH

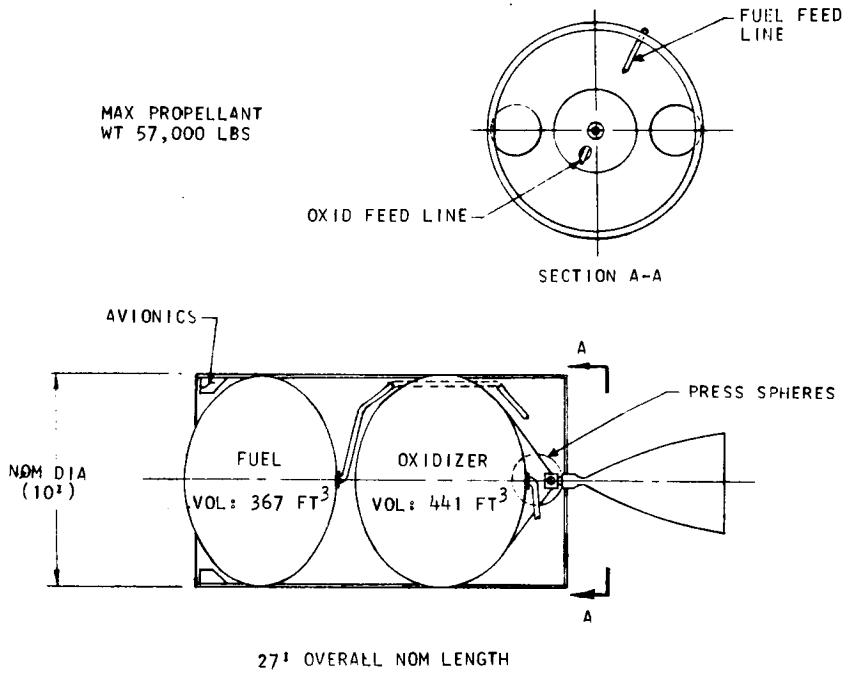


SPACE TUG VEHICLE SUBSYSTEM DEFINITION

| WBS NO. 320-03 | NOMENCLATURE | WT. | SUBSYSTEM CONFIG ① |
|---|---|---|---|
| | SPACE TUG VEH MAIN STG | 2461 | DRY WT +10% CONTINGENCY |
| 01 | STRUCTURES | (721) | |
| 01 | FUEL TANK & SUPPORT | 94 | AS INDICATED (TITANIUM) |
| 02 | OX TANK & SUPPORT | 160 | AS INDICATED (TITANIUM) |
| 03 | BODY STRUCTURE | 311 | AS INDICATED (COMPOSITE) |
| 04 | THRUST STRUCTURE | 20 | AS INDICATED (COMPOSITE) |
| 05 | METEOROID SHIELD | 45 | |
| 06 | PAYLOAD INTERFACE | 91 | |
| | | | |
| 02 | THERMAL CONTROL | (111) | TH-1 |
| 01 | FUEL TANK INSULATION | 81 | MLI (INCLUDES ALL MAIN STG MLI) |
| 02 | OX TANK INSULATION | | |
| 03 | PURGE SYSTEM | - | N/A |
| 04 | THERMAL CONTROL SYSTEM | 30 | HTRS, PAINT, ACPS RADIATION SHLD |
| | | | |
| 03 | AVIONICS | (647) | AV-2 |
| 01 | DATA MANAGEMENT | 60 | FLEXIBLE SIGNAL INTERFACE (FSI) |
| 02 | GN&C | | |
| | GUID & NAV | 93 | IMUS & STAR TRACKERS, SLR |
| | CONTROLS | 20 | TANDEM INT ACT PLUS ACPS CNTLS |
| | DOCKING SYSTEM | 90 | DOCKING HARDWARE |
| 03 | COMMUNICATIONS | 34 | S-BAND |
| 04 | INSTRUMENTATION | - | WT INCLUDED WITH DATA MGMT |
| 05 | ELECTRICAL POWER | 350 | SOLAR ARRAY |
| 06 | POWER DIST & CONTROL | | 2 WIRE POS, STRUCT RETURN |
| | | | |
| 04 | PROPULSION | (763) | |
| 01 | MAIN ENGINE (GFE) | 273 | PR-1(2), E338 ENGINE |
| 02 | MAIN ENGINE SUPPORT | 307 | PR-1(2) |
| 03 | ACPS ENGINE | 60 | ACPS-2(8) |
| 04 | ACPS ENGINE SUPPORT | 123 | ACPS-2(8) |
| | | | |
| 05 | ORBITER INTERFACE | (1650) | EXCLUDED FROM MAIN STG WT |
| 01 | STRUCTURES | | TBD |
| 02 | INTERFACE PANELS | | TBD |
| 03 | PURGE PROVISIONS | | TBD |
| 04 | ABORT PROVISIONS | | TBD |
| | | | |
| 06 | DROP TANKS | - | N/A |
| 01 | STRUCTURES | | |
| 02 | THERMAL INSULATION | | |
| 03 | PROPELLANT SUPPORT SYS | | |

SIGNIFICANT DESIGN PARAMETERS:

MAIN ENGINE: PROPELLANT MMH/$N_2O_4$ THRUST 12K

M.R. 2:1 $I_{SP}$ 338.1

PLANNED OPERATIONAL SPAN-FROM ___ TO ___

PROPELLANT LOAD FACTOR ( $\lambda$ ) ___

DESIGN LIFE ___ MISSIONS

AUTONOMY LEVEL 2

NOTES:

① SUBSYSTEM(S) CONFIG MAY BE DESIGNATED BY A CODE WITH DETAILS ON SUPPL CONFIG DATA SHEETS

PLANNED EVOLUTION:

C03 IA2-8 (79D) TO IA2-4 (83R) TO IA2-3 (83R)
C04 IA2-4 (83D) TO IA2-3 (83R)
C05 IA2-8 (79D) TO IA2-4 (83D) TO IA2-3 (83R)
C06 IA2-8 (79D) TO IA2-7 (79R) TO IA2-4 (83D) TO IA2-3 (83R)
C07 IA2-4 (83D) TO IA2-3 (83R)

CONFIGURATION SUMMARY SHEET
SPACE TUG SYSTEM STUDY

CONFIG NO. IA2-3, SINGLE STG

NASA CO NO. 3,4,5,6 & 7

DATE 7-9-73, REV 1

MARTIN MARIETTA

## PRELIMINARY RELIABILITY PREDICTION SUMMARY

Capability Option Number Seven (7) and Four (4)

Configuration Number(s) 1A2-3 and 1A2-4

Mission Type(s)/Duration(s) 1A2-3 Round Trip/7 Day; 1A2-4 Deploy/3 Day

| 1A2-4 | | 1A2-3 | |
|---|---|---|---|
| Same prediction as in Capability Option Number Three (3), IE: | | Same prediction as in Capability Option Number Three (3), IE: | |
| Vehicle Reliability (without Kick Stage) | .99143 | Vehicle Reliability (without Kick Stage) | .98514 |
| Vehicle Reliability (with Kick Stage) | .98845 | Vehicle Reliability (with Kick Stage) | .98218 |

## TUG SUMMARY SCHEDULE - CAPABILITY OPTION 4 & 7, CONFIGURATION IA2-3,4

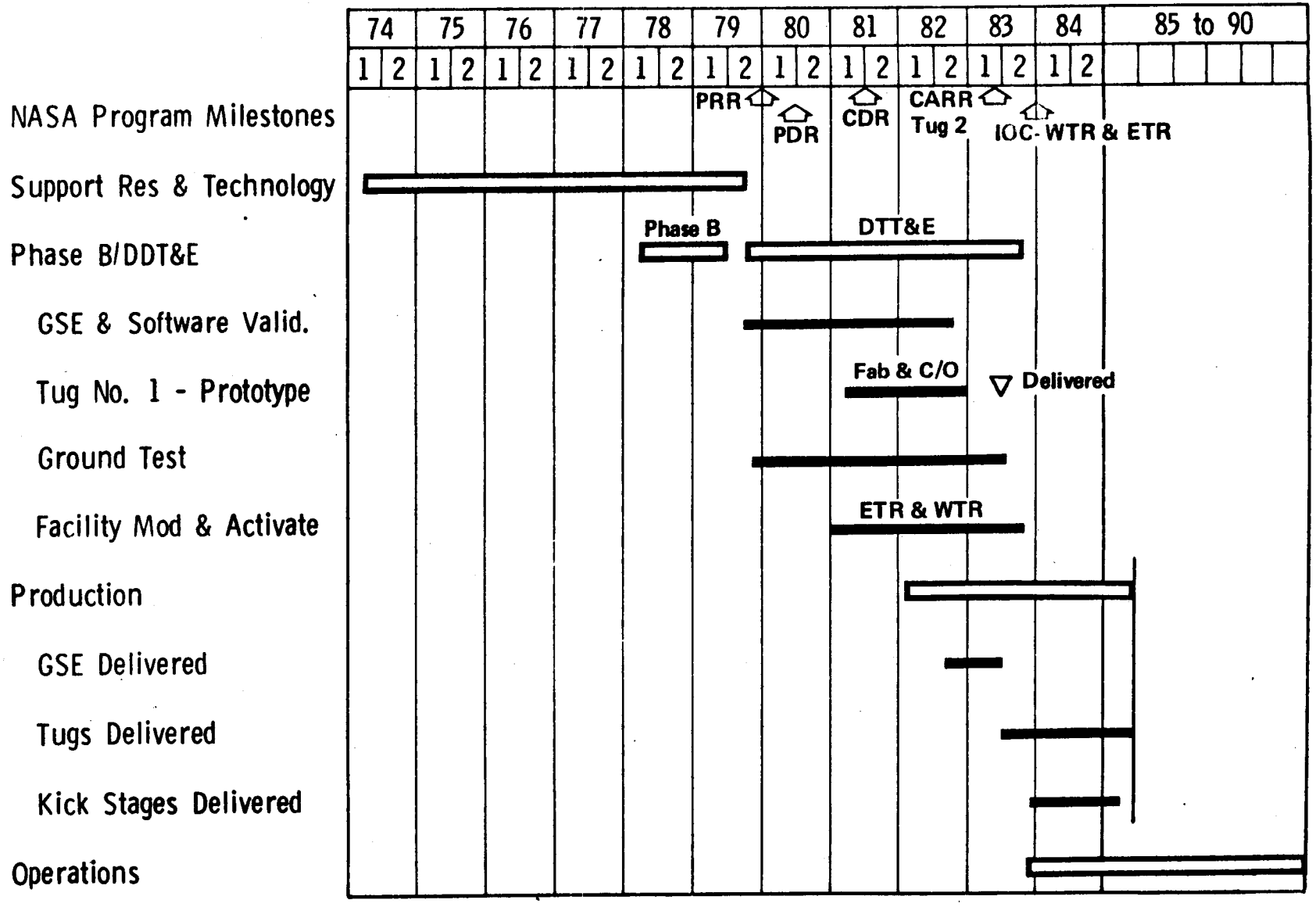

## STORABLE TUG TECHNOLOGY STATUS

## SUPPORTING TECHNOLOGY REQUIREMENTS

### CAPABILITY OPTION 7, CONFIGURATION 1A2-3,4

STRUCTURES & MATERIALS

- o Development of composites for non-tank structures (skirts, etc.)
- o High pressure vessel development
- o Improved weld technology
- o Develop fracture mechanics technology for thin gauge materials
- q o Satellite docking mechanism development

MAIN PROPULSION AND ACPS

None

KICK STAGES

Continue development of technology of low burning rate for solid propellant motors.

AVIONICS (AV-2, AV-3)

GUIDANCE & CONTROL

- o Update procedures and algorithms
- o Interferometer landmark tracking applications
- o Star availability
- o ACS optical impingement
- o SLR receiver application as star tracker
- o Man-in-loop rendezvous and docking
- o Blind rendezvous and docking
- o Acceptable information degradation and delay for closed loop docking
- o Development and simulation of rendezvous logic (6 DOF)
- o Artificial intelligence applied to rotating vehicle docking
- o RF target signatures
- o Target vehicle signatures as star tracker targets
- o Capture of a precessing, nutating satellite

DATA MANAGEMENT SYSTEM - Flexible Signal Interface

- o Develop and demonstrate application of circuits and interface technology

CAPABILITY OPTION 7, CONFIGURATION 1A2-3,4 (Continued)

ELECTRICAL POWER SUBSYSTEM

- Light weight, low volume packaging of $H_2O_2$ fuel cell and battery with provisions for refurbishment of critical components
- Evaluation of life and degradation characteristics of new high efficiency cells developed by COMSAT.
- Light weight design of rollout solar array and empirical verification of extraction/retraction capability of up to 1,000 cycles.
- Development of high energy density, long cycle life metal gas battery systems such as $ZN-O_2$ and $AG-H_2$.
- Development of multiplexed electrical power distribution and control system using solid-state power controllers specifically for Tug application.

THERMAL CONTROL

None

SUPPLEMENTARY DATA

STAGE AND ONE HALF IN-BOARD PROFILE

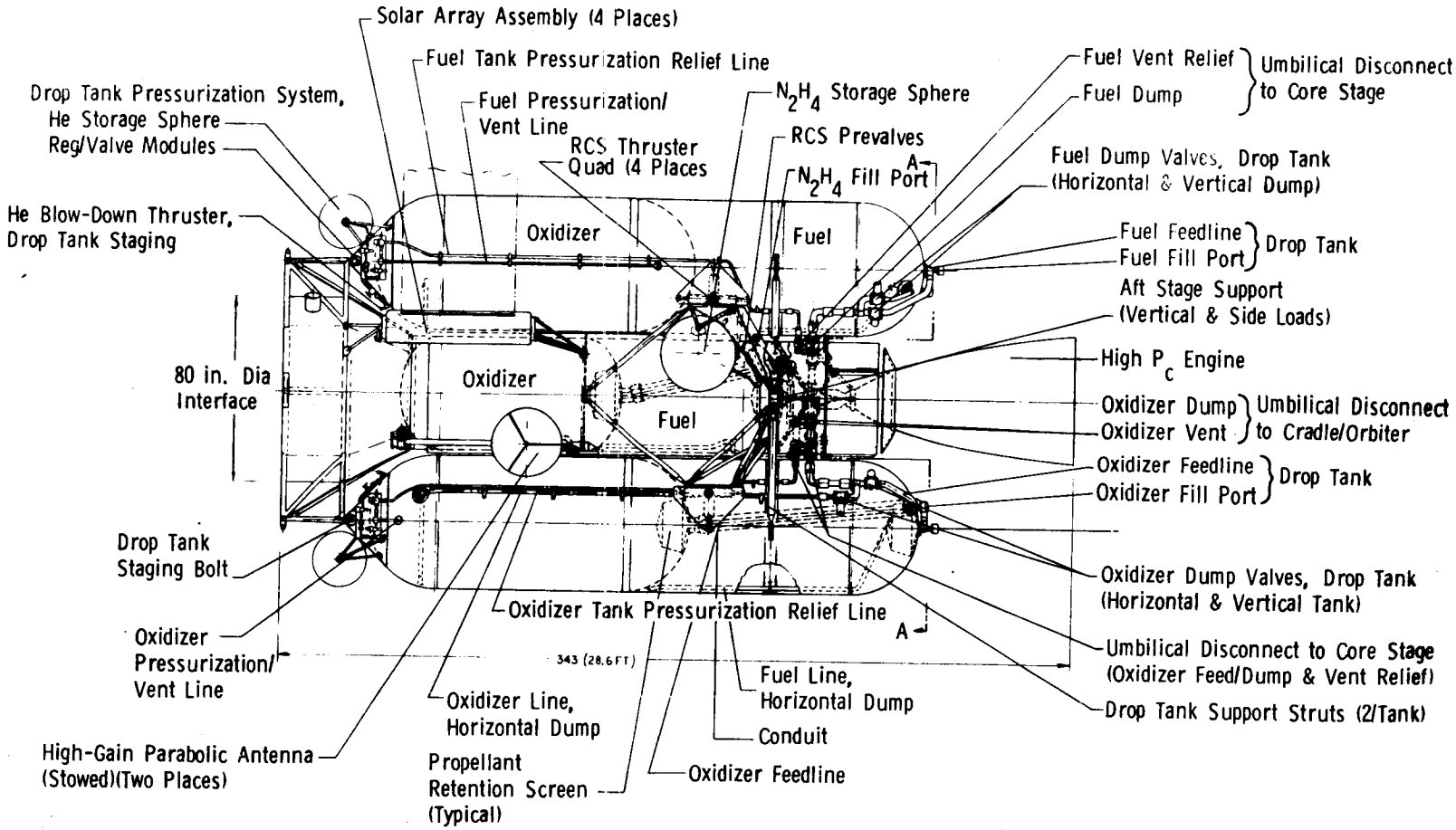


STORABLE SPACE TUG, STAGE AND ONE HALF, 80-20 SPLIT, CONFIGURATION IVE

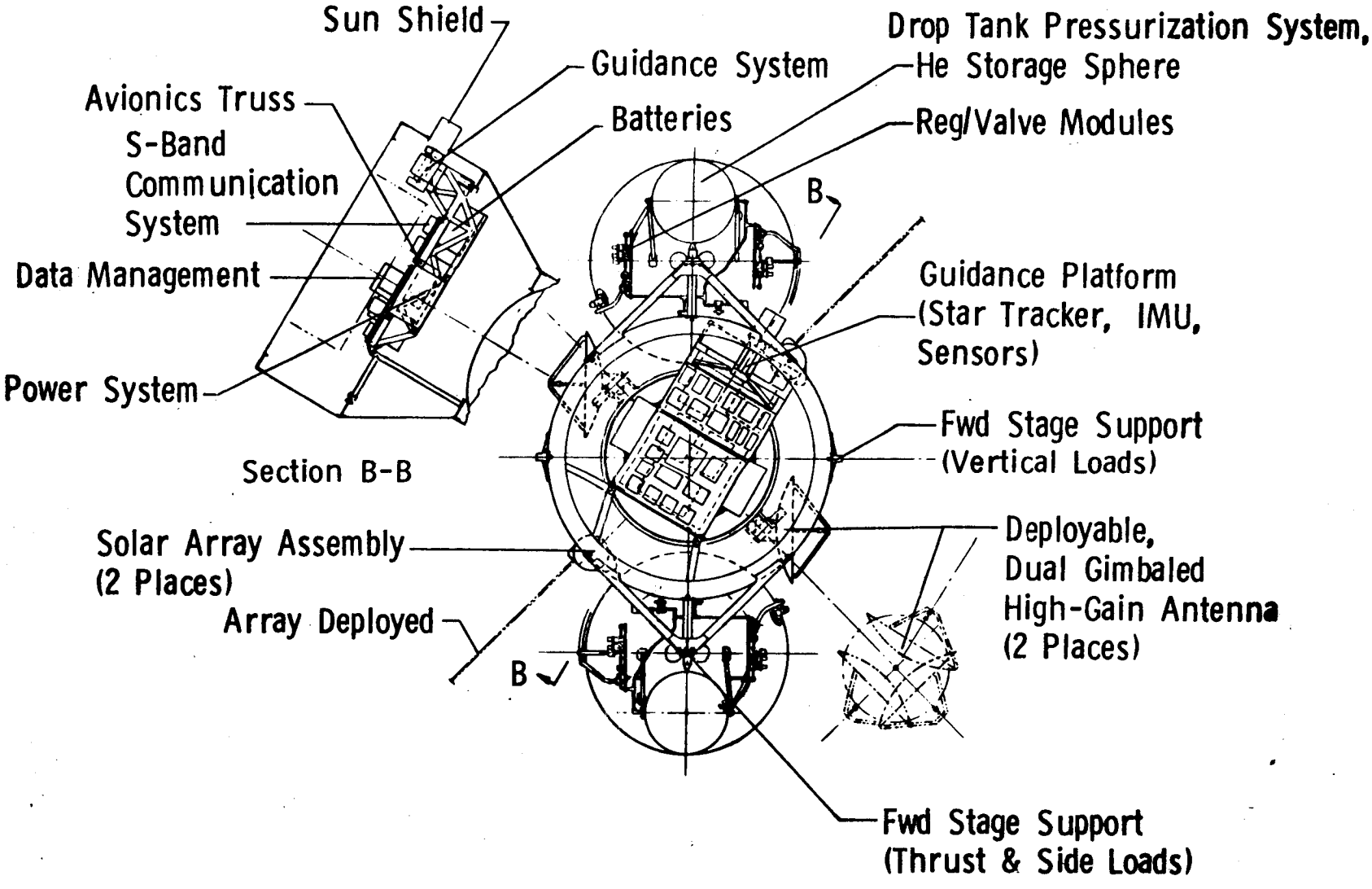


STORABLE SPACE TUG, STAGE AND ONE HALF, 80-20 SPLIT, CONFIGURATION IVE

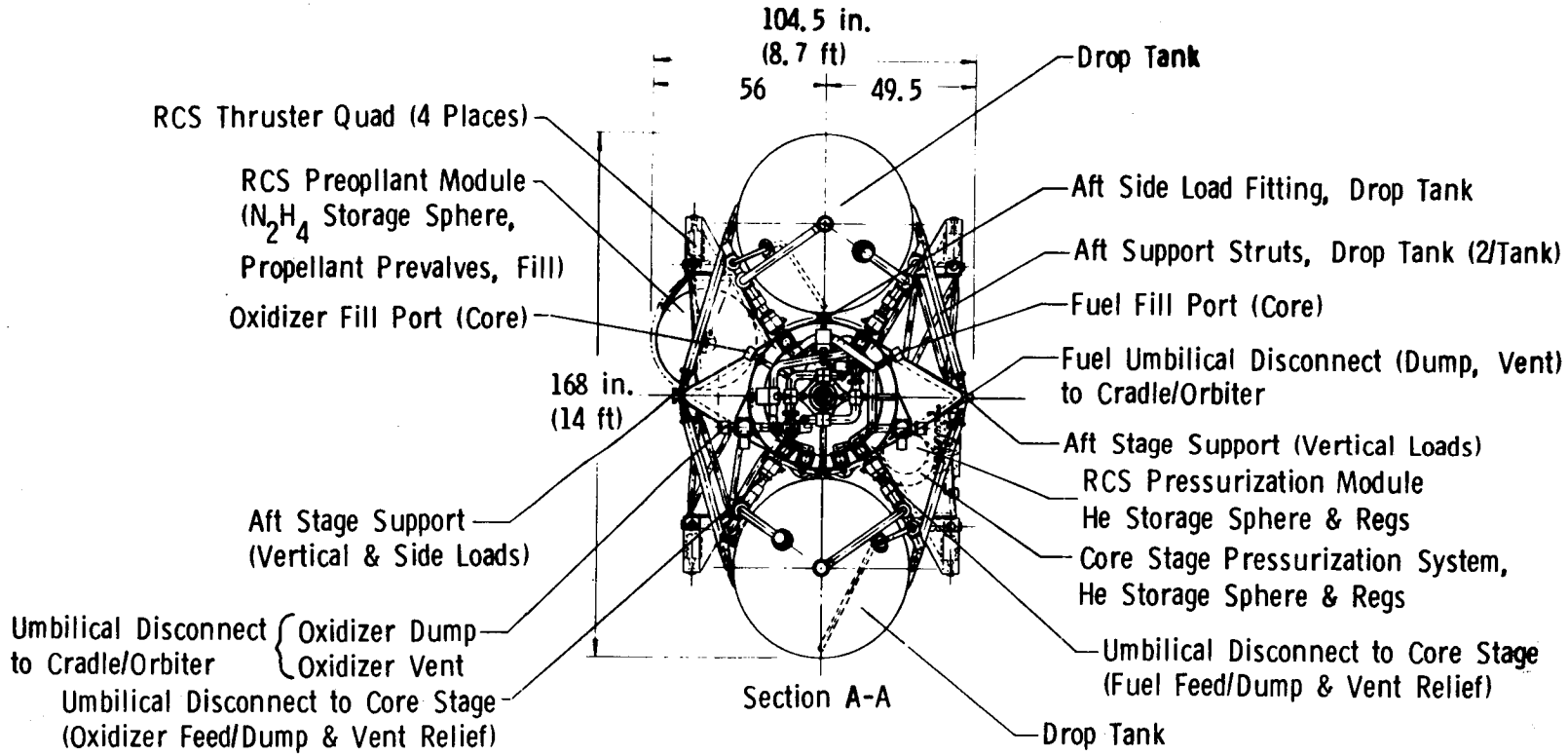


STORABLE SPACE TUG, STAGE AND ONE HALF, 80-20 SPLIT, CONFIGURATION IVE

# SECTION II

# SUMMARY DESCRIPTION OF OPTIONS

| TUG DESIGNATOR | RATING | CAP. OPTION REQ'T. | SUBSYSTEM APPLICABILITY | | | | | | TUG DRY WEIGHT | * CAPABILITY | | | |
|---|---|---|---|---|---|---|---|---|---|---|---|---|---|
| | | | STRUCT | AVIONICS | ENGINE | PRESS & FEED | ACPS | THERMAL | | DELIVER | | RETRIEVE | |
| | | | | | | | | | | ALONE | W/KS | ALONE | W/KS |
| IA2-8 | 1 | 79D3500 | T1 & C | AV-1 | E-325-u | PR-1(2) | ACPS-2(8) | TH-1 | 2261 | 6300 | 11000 | N/A | N/A |
| IIIC-2 | 5 | 79D3500 | T1 & C | AV-1 | E-325-u | PR-1(4) | ACPS-2(8) | TH-4 | 2067/2208 | 5600S | 10300S | N/A | N/A |
| IVE-2 | 4 | 79D3500 | T1 & C | AV-1 | E-325-u | PR-1(5) | ACPS-2(8) | TH-2 | 3520 | 7300 | 10700 | N/A | N/A |
| IA2-1 | 2 | 79D3500 | A1 | AV-1 | E-325-u | PR-1(2) | ACPS-2(8) | TH-1 | 2475 | 5300 | 10300 | N/A | N/A |
| IA2-11 | ** | 79D3500 | A1 | AV-9 | E-325-u | PR-1(2) | ACPS-2(8) | TH-1 | 2831 | 3900 | 10300 | N/A | N/A |
| IA1-1 | 3 | 79D3500 | 035 A1 | AV-1 | E-325-B | PR-1(2) | ACPS-2(8) | TH-1 | 2729 | 4300 | 10200 | N/A | N/A |
| IA3-1 | 2 | 79D3500 | 035 A1 | AV-1 | E-325-0 | PR-1(2) | ACPS-2(8) | TH-1 | 2448 | 4700 | 10300 | N/A | N/A |

* FOR DUAL STAGES S=SLINGSHOT MODE

** BATTERY POWER SYSTEM (2 DAY LIFE)

CAPABILITY OPTION #1

| TUG DESIGNATOR | RATING | CAP. OPTION REQ'T. | SUBSYSTEM APPLICABILITY | | | | | | TUG DRY WEIGHT | * CAPABILITY | | | |
|---|---|---|---|---|---|---|---|---|---|---|---|---|---|
| | | | STRUCT | AVIONICS | ENGINE | PRESS & FEED | ACPS | THERMAL | | DELIVER | | RETRIEVE | |
| | | | | | | | | | | ALONE | W/KS | ALONE | W/KS |
| IA2-7 | 1 | 79R2200 | Ti & C | AV-4 | E-325-u | PR-1(2) | ACPS-2(8) | TH-1 | 2688 | 4400 | | 1230 | 3000 |
| IA2-8 | | 79D3500 | Ti & C | AV-1 | E-325-u | PR-1(2) | ACPS-2(8) | TH-1 | 2261 | 6300 | 11000 | N/A | N/A |
| IIIC-1 | 5 | 79R2200 | Ti & C | AV-4 | E-325-u | PR-1(4) | ACPS-2(8) | TH-4 | 2494/2580 | 3950S | 5700T | 900S | 3000T |
| IIIC-2 | | 79D3500 | Ti & C | AV-1 | E-325-u | PR 1(4) | ACPS-2(8) | TH-4 | 2067/2208 | 5600S | 10300S | N/A | N/A |
| IVE-1 | 4 | 79R2200 | Ti & C | AV-4 | E-325-u | PR-1(5) | ACPS-2(8) | TH-2 | 3947 | 5400 | | 1300 | 3200 |
| IVE-2 | | 79D3500 | Ti & C | AV-1 | E-325-u | PR-1(5) | ACPS-2(8) | TH-2 | 3520 | 7300 | 10700 | N/A | N/A |
| IA2-1 | 2 | 79D3500 | Al | AV-1 | E-325-u | PR-1(2) | ACPS-2(8) | TH-1 | 2475 | 5300 | 10300 | N/A | N/A |
| IA2-2 | | 79R2200 | Al | AV-4 | E-325-u | PR-1(2) | ACPS-2(8) | TH-1 | 2902 | 3550 | | 920 | 2300 |
| IVE-3 | 3 | 79R2200 | Ti & C | AV-4 | E-338 | PR-1(5) | ACPS-2(8) | TH-2 | 3903 | 7000 | | 2150 | 4700 |
| IVE-4 | | 79D3500 | Ti & C | AV-1 | E-338 | PR-1(5) | ACPS-2(8) | TH-2 | 3476 | 8350 | | N/A | N/A |

* FOR DUAL STAGES S = SLINGSHOT MODE
T = TRAPEZE MODE

CAPABILITY OPTION #2

| TUG DESIGNATOR | RATING | CAP. OPTION REQ'T. | SUBSYSTEM APPLICABILITY | | | | | | TUG DRY WEIGHT | *CAPABILITY | | | |
|---|---|---|---|---|---|---|---|---|---|---|---|---|---|
| | | | STRUCT | AVIONICS | ENGINE | PRESS & FEED | ACPS | THERMAL | | DELIVER | | RETRIEVE | |
| | | | | | | | | | | ALONE | W/KS | ALONE | W/KS |
| IA2-7 | 2 | 83R2200 | Ti & C | AV-4 | E-325-u | PR 1(2) | ACPS-2(8) | TH-1 | 2688 | 4400 | | 1230 | 3000 |
| IA2-8 | | 79D3500<br>83D3500 | Ti & C | AV-1 | E-325-u | PR-1(2) | ACPS-2(8) | TH-1 | 2261 | 6300 | 11000 | N/A | N/A |
| IIIC-1 | 4 | 83R2200 | Ti & C | AV-4 | E-325-u | PR-1(4) | ACPS-2(8) | TH-4 | 2494/2580 | 3950S | 5700T | 900S | 3000T |
| IIIC-2 | | 79D3500<br>83D3500 | Ti & C | AV-1 | E-325-u | PR-1(4) | ACPS-2(8) | TH-4 | 2067/2208 | 5600S | 10300S | N/A | N/A |
| IVE-1 | 3 | 83R2200 | Ti & C | AV-4 | E-325-u | PR-1(5) | ACPS-2(8) | TH-2 | 3947 | 5400 | | 1300 | 3200 |
| IVE-2 | | 79D3500<br>83D3500 | Ti & C | AV-1 | E-325-u | PR-1(5) | ACPS-2(8) | TH-2 | 3520 | 7300 | 10700 | N/A | N/A |
| IA2-8 | 1 | 79D3500 | Ti & C | AV-1 | E-325-u | PR-1(2) | ACPS-2(8) | TH-1 | 2261 | 6300 | 11000 | N/A | N/A |
| IA2-4 | | 83D3500 | Ti & C | AV-3 | E-338 | PR-1(2) | ACPS-2(8) | TH-1 | 2182 | 7800 | | N/A | N/A |
| IA2-3 | | 83R2200 | Ti & C | AV-2 | E-338 | PR-1(2) | ACPS-2(8) | TH-1 | 2395 | 7100 | | 2300 | 4800 |

*FOR DUAL STAGES S = SLINGSHOT MODE
T = TRAPEZE MODE

CAPABILITY OPTION #3

| TUG DESIGNATOR | RATING | CAP. OPTION REQ'T. | SUBSYSTEM APPLICABILITY | | | | | | TUG DRY WEIGHT | *CAPABILITY | | | |
|---|---|---|---|---|---|---|---|---|---|---|---|---|---|
| | | | STRUCT | AVIONICS | ENGINE | PRESS & FEED | ACPS | THERMAL | | DELIVER | | RETRIEVE | |
| | | | | | | | | | | ALONE | W/KS | ALONE | W/KS |
| IA2-3 | 1 | 83R3500 | Ti & C | AV-2 | E-338 | PR-1(2) | ACPS-2(8) | TH-1 | 2395 | 7100 | | 2300 | 4800 |
| IA2-4 | | 83D3500 | Ti & C | AV-3 | E-338 | PR-1(2) | ACPS-2(8) | TH-1 | 2182 | 7800 | | N/A | N/A |
| IIIC-5 | 7 | 83R3500 | Ti & C | AV-2 | E-338 | PR-1(4) | ACPS-2(8) | TH-4 | 2201/2287 | 6430S | 7600T | 2000S | 4300T |
| IIIC-6 | | 83D3500 | Ti & C | AV-3 | E-338 | PR-1(4) | ACPS-2(8) | TH-4 | 1989/2129 | 7500S | N/A | N/A | N/A |
| IVE-5 | 6 | 83R3500 | Ti & C | AV-2 | E-338 | PR-1(5) | ACPS-2(8) | TH-2 | 3655 | 8000 | | 2500 | 5400 |
| IVE-6 | | 83D3500 | Ti & C | AV-3 | E-338 | PR-1(5) | ACPS-2(8) | TH-2 | 3443 | 8600 | | N/A | N/A |
| ID-1 | 5 | 83R3500 | Ti & C | AV-7 | E-338 | PR-6(1) | ACPS-2(8) | TH-3 | 2401 | 7000 | | 2200 | 4800 |
| ID-2 | | 83D3500 | Ti & C | AV-8 | E-338 | PR-6(1) | ACPS-2(8) | TH-3 | 2189 | 7900 | | N/A | N/A |
| IA2-9 | 4 | 83R3500 | Ti & C | AV-2 | E-344 | PR-1(2) | ACPS-2(8) | TH-1 | 2422 | 7800 | | 2470 | 5200 |
| IA2-10 | | 83D3500 | Ti & C | AV-3 | E-344 | PR-1(2) | ACPS-2(8) | TH-1 | 2210 | 8650 | | N/A | N/A |
| IA1-5 | 2 | 83R3500 | 035 A1 | AV-2 | E-338 | PR-1(2) | ACPS-2(8) | TH-1 | 2813 | 5450 | | 1700 | 3500 |
| IA1-6 | | 83D3500 | 035 A1 | AV-3 | E-338 | PR-1(2) | ACPS-2(8) | TH-1 | 2600 | 6300 | | N/A | N/A |
| ID-3 | 3 | 83R3500 | A1 | AV-7 | E-338 | PR-6(1) | ACPS-2(8) | TH-3 | 2605 | 5900 | | 1830 | 4500 |
| ID-4 | | 83D3500 | A1 | AV-8 | E-338 | PR-6(1) | ACPS-2(8) | TH-3 | 2391 | 6900 | | N/A | N/A |

* FOR DUAL STAGES S = SLINGSHOT MODE
T = TRAPEZE MODE

CAPABILITY OPTION #4

| TUG DESIGNATOR | RATING | CAP. OPTION REQ'T. | SUBSYSTEM APPLICABILITY | | | | | | TUG DRY WEIGHT | *CAPABILITY | | | |
|---|---|---|---|---|---|---|---|---|---|---|---|---|---|
| | | | STRUCT | AVIONICS | ENGINE | PRESS & FEED | ACPS | THERMAL | | DELIVER | | RETRIEVE | |
| | | | | | | | | | | ALONE | W/KS | ALONE | W/KS |
| IA2-8 | | 79D3500 | Ti & C | AV-1 | E-325-u | PR-1(2) | ACPS-2(8) | TH-1 | 2261 | 6300 | 11000 | N/A | N/A |
| IA2-4 | 1 | 83D3500 | Ti & C | AV-3 | E-338 | PR-1(2) | ACPS-2(8) | TH-1 | 2182 | 7800 | | N/A | N/A |
| IA2-3 | | 83R3500 | Ti & C | AV-2 | E-338 | PR-1(2) | ACPS-2(8) | TH-1 | 2395 | 7100 | | 2300 | 4800 |
| IIIC-2 | | 79D3500 | Ti & C | AV-1 | E-325-u | PR-1(4) | ACPS-2(8) | TH-4 | 2067/2208 | 5600S | 10300S | N/A | N/A |
| IIIC-6 | 3 | 83D3500 | Ti & C | AV-3 | E-338 | PR-1(4) | ACPS-2(8) | TH-4 | 1989/2129 | 7500S | N/A | N/A | N/A |
| IIIC-5 | | 83R3500 | Ti & C | AV-2 | E-338 | PR-1(4) | ACPS-2(8) | TH-4 | 2201/2287 | 6430S | 7600T | 2000S | 4300T |
| IVE-2 | | 79D3500 | Ti & C | AV-1 | E-325-u | PR-1(5) | ACPS-2(8) | TH-2 | 3520 | 7300 | 10700 | N/A | N/A |
| IVE-6 | 2 | 83D3500 | Ti & C | AV-3 | E-338 | PR-1(5) | ACPS-2(8) | TH-2 | 3443 | 8600 | | N/A | N/A |
| IVE-5 | | 83R3500 | Ti & C | AV-2 | E-338 | PR-1(5) | ACPS-2(8) | TH-2 | 3655 | 8000 | | 2500 | 5400 |

* FOR DUAL STAGES S = SLINGSHOT MODE
T = TRAPEZE MODE

CAPABILITY OPTION #5

| TUG DESIGNATOR | RATING | CAP. OPTION REQ'T. | SUBSYSTEM APPLICABILITY | | | | | | TUG DRY WEIGHT | *CAPABILITY | | | |
|---|---|---|---|---|---|---|---|---|---|---|---|---|---|
| | | | STRUCT | AVIONICS | ENGINE | PRESS & FEED | ACPS | THERMAL | | DELIVER | | RETRIEVE | |
| | | | | | | | | | | ALONE | W/KS | ALONE | W/KS |
| IA2-8 | 1 | 79D3500 | Ti & C | AV-1 | E-325-u | PR-1(2) | ACPS-2(8) | TH-1 | 2261 | 6300 | 11000 | N/A | N/A |
| IA2-7 | | 79R2200 | Ti & C | AV-4 | E-325-u | PR-1(2) | ACPS-2(8) | TH-1 | 2688 | 4400 | | 1230 | 3000 |
| IA2-4 | | 83D3500 | Ti & C | AV-3 | E-338 | PR-1(2) | ACPS-2(8) | TH-1 | 2182 | 7800 | | N/A | N/A |
| IA2-3 | | 83R3500 | Ti & C | AV-2 | E-338 | PR-1(2) | ACPS-2(8) | TH-1 | 2395 | 7100 | | 2300 | 4800 |
| IIIC-2 | 3 | 79D3500 | Ti & C | AV-1 | E-325-u | PR-1(4) | ACPS-2(8) | TH-4 | 2067/2208 | 5600S | 10300S | N/A | N/A |
| IIIC-1 | | 79R2200 | Ti & C | AV-4 | E-325-u | PR-1(4) | ACPS-2(8) | TH-4 | 2494/2580 | 3950S | 5700T | 900S | 3000T |
| IIIC-6 | | 83D3500 | Ti & C | AV-3 | E-338 | PR-1(4) | ACPS-2(8) | TH-4 | 1989/2129 | 7500S | N/A | N/A | N/A |
| IIIC-5 | | 83R3500 | Ti & C | AV-2 | E-338 | PR-1(4) | ACPS-2(8) | TH-4 | 2201/2287 | 6430S | 7600T | 2000S | 4300T |
| IVE-2 | 2 | 79D3500 | Ti & C | AV-1 | E-325-u | PR-1(5) | ACPS-2(8) | TH-2 | 3520 | 7300 | 10700 | N/A | N/A |
| IVE-1 | | 79R2200 | Ti & C | AV-4 | E-325-u | PR-1(5) | ACPS-2(8) | TH-2 | 3947 | 5400 | | 1300 | 3200 |
| IVE-6 | | 83D3500 | Ti & C | AV-3 | E-338 | PR-1(5) | ACPS-2(8) | TH-2 | 3443 | 8600 | | N/A | N/A |
| IVE-5 | | 83R3500 | Ti & C | AV-2 | E-338 | PR-1(5) | ACPS-2(8) | TH-2 | 3665 | 8000 | | 2500 | 5400 |

* FOR DUAL STAGES S = SLINGSHOT MODE
T = TRAPEZE MODE

CAPABILITY OPTION #6

| TUG DESIGNATOR | RATING | CAP. OPTION REQ'T. | SUBSYSTEM APPLICABILITY | | | | | | TUG DRY WEIGHT | *CAPABILITY | | | |
|---|---|---|---|---|---|---|---|---|---|---|---|---|---|
| | | | STRUCT | AVIONICS | ENGINE | PRESS & FEED | ACPS | THERMAL | | DELIVER | | RETRIEVE | |
| | | | | | | | | | | ALONE | W/KS | ALONE | W/KS |
| IA2-3 | 1 | 83R2200 | Ti & C | AV-2 | E-338 | PR-1(2) | ACPS-2(8) | TH-1 | 2395 | 7100 | | 2300 | 4800 |
| IA2-4 | | 83D3500 | TI & C | AV-3 | E-338 | PR-1(2) | ACPS-2(8) | TH-1 | 2182 | 7800 | | N/A | N/A |
| IIIC-5 | 8 | 83R2200 | Ti & C | AV-2 | E-338 | PR-1(4) | ACPS-2(8) | TH-4 | 2201/2287 | 6430S | 7600T | 2000S | 4300T |
| IIIC-6 | | 83D3500 | Ti & C | AV-3 | E-338 | PR-1(4) | ACPS-2(8) | TH-4 | 1989/2129 | 7500S | N/A | N/A | N/A |
| IVE-5 | 7 | 83R2200 | Ti & C | AV-2 | E-338 | PR-1(5) | ACPS-2(8) | TH-2 | 3655 | 8000 | | 2500 | 5400 |
| IVE-6 | | 83D3500 | Ti & C | AV-3 | E-338 | PR-1(5) | ACPS-2(8) | TH-2 | 3443 | 8600 | | N/A | N/A |
| ID-1 | 5 | 83R2200 | Ti & C | AV-7 | E-338 | PR-6(1) | ACPS-2(8) | TH-3 | 2401 | 7000 | | 2200 | 4800 |
| ID-2 | | 83D3500 | Ti & C | AV-8 | E-338 | PR-6(1) | ACPS-2(8) | TH-3 | 2189 | 7900 | | N/A | N/A |
| IA2-9 | 3 | 83R2200 | Ti & C | AV-2 | E-344 | PR-1(2) | ACPS-2(8) | TH-1 | 2422 | 7800 | | 2470 | 5200 |
| IA2-10 | | 83D3500 | Ti & C | AV-3 | E-344 | PR-1(2) | ACPS-2(8) | TH-1 | 2210 | 8650 | | N/A | N/A |
| IA1-5 | 2 | 83R2200 | 035 A1 | AV-2 | E-338 | PR-1(2) | ACPS-2(8) | TH-1 | 2813 | 5450 | | 1700 | 3500 |
| IA1-6 | | 83D3500 | 035 A1 | AV-3 | E-338 | PR-1(2) | ACPS-2(8) | TH-1 | 2600 | 6300 | | N/A | N/A |
| ID-3 | 4 | 83R2200 | A1 | AV-7 | E-338 | PR-6(1) | ACPS-2(8) | TH-3 | 2605 | 5900 | | 1830 | 4500 |
| ID-4 | | 83D3500 | A1 | AV-8 | E-338 | PR-6(1) | ACPS-2(8) | TH-3 | 2391 | 6900 | | N/A | N/A |

* FOR DUAL STAGES S = SLINGSHOT MODE
T = TRAPEZE MODE

CAPABILITY OPTION #7

| TUG DESIGNATOR | RATING | CAP. OPTION REQ'T. | SUBSYSTEM APPLICABILITY | | | | | | TUG DRY WEIGHT | *CAPABILITY | | | |
|---|---|---|---|---|---|---|---|---|---|---|---|---|---|
| | | | STRUCT | AVIONICS | ENGINE | PRESS & FEED | ACPS | THERMAL | | DELIVER | | RETRIEVE | |
| | | | | | | | | | | ALONE | W/KS | ALONE | W/KS |
| IA1-3 | 2 | 83R2200 | 035 A1 | AV-4 | E-338 | PR-1(2) | ACPS-2(8) | TH-1 | 3062 | 4350 | | 1400 | 3050 |
| IA1-4 | | 83D3500 | 035 A1 | AV-1 | E-338 | PR-1(2) | ACPS-2(8) | TH-1 | 2635 | 6100 | | N/A | N/A |
| IIIC-3 | 9 | 83R2200 | T1 & C | AV-4 | E-338 | PR-1(4) | ACPS-2(8) | TH-4 | 2450/2536 | 5400S | 6800T | 1700S | 3900T |
| IIIC-4 | | 83D3500 | T1 & C | AV-1 | E-338 | PR-1(4) | ACPS-2(8) | TH-4 | 2023/2164 | 7250S | N/A | N/A | N/A |
| IVE-7 | 6 | 83R2200 | A1 | AV-2 | E-338 | PR-1(5) | ACPS-2(8) | TH-2 | 3659 | 7600 | | 2350 | 5100 |
| IVE-8 | | 83D3500 | A1 | AV-3 | E-338 | PR-1(5) | ACPS-2(8) | TH-2 | 3446 | 8200 | | N/A | N/A |

* FOR DUAL STAGES S = SLINGSHOT MODE
T = TRAPEZE MODE

CAPABILITY OPTION #7 (CONTINUED)

# SECTION III

# SPACE TUG

# CONFIGURATION SUMMARY

## CONFIGURATION PROFILE SKETCH

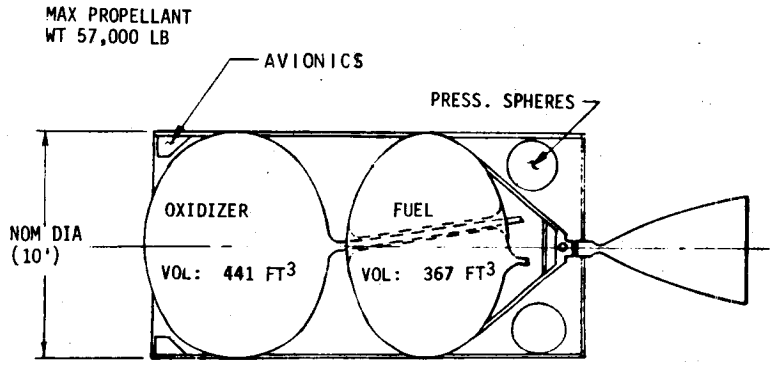


28' OVERALL NOM LENGTH

## SPACE TUG VEHICLE SUBSYSTEM DEFINITION

| WBS NO. 320-03 | NOMENCLATURE | WT. | SUBSYSTEM CONFIG ① |
|---|---|---|---|
| | SPACE TUG VEH MAIN STG | 2729 | DRY WT +10% CONTINGENCY |
| 01 | STRUCTURES | (1000) | |
| 01 | FUEL TANK & SUPPORT | 173 | AS INDICATED (ALUM. .035 TANK) |
| 02 | OX TANK & SUPPORT | 329 | AS INDICATED (ALUM. .035 TANK) |
| 03 | BODY STRUCTURE | 395 | AS INDICATED(ALUM & HONEYCOMB) |
| 04 | THRUST STRUCTURE | 28 | AS INDICATED (ALUM) |
| 05 | METEOROID SHIELD | 45 | |
| 06 | PAYLOAD INTERFACE | 30 | |
| | | | |
| 02 | THERMAL CONTROL | (111) | TH-1 |
| 01 | FUEL TANK INSULATION | 81 | MLI(INCLUDES ALL MAIN STG MLI) |
| 02 | OX TANK INSULATION | | |
| 03 | PURGE SYSTEM | — | N/A |
| 04 | THERMAL CONTROL SYSTEM | 30 | HTRS,PAINT,ACPS RADIATION SHLD |
| | | | |
| 03 | AVIONICS | (534) | AV-1 |
| 01 | DATA MANAGEMENT | 60 | FLEXIBLE SIGNAL INTERFACE(FSI) |
| 02 | GN&C | | |
| | GUID & NAV | 70 | IMUS & STAR TRACKERS |
| | CONTROLS | 20 | TANDEM INT ACT PLUS ACPS CNTLS |
| | DOCKING SYSTEM | — | N/A |
| 03 | COMMUNICATIONS | 34 | S-BAND |
| 04 | INSTRUMENTATION | — | WT INCLUDED WITH DATA MGMT |
| 05 | ELECTRICAL POWER | 350 | SOLAR ARRAY |
| 06 | POWER DIST & CONTROL | | 2 WIRE POS, STRUCT RETURN |
| | | | |
| 04 | PROPULSION | (834) | |
| 01 | MAIN ENGINE (GFE) | 355 | PR-1(2), BELL ENGINE |
| 02 | MAIN ENGINE SUPPORT | 307 | PR-1(2) |
| 03 | ACPS ENGINE | 49 | ACPS-2 (8) |
| 04 | ACPS ENGINE SUPPORT | 123 | ACPS-2 (8) |
| | | | |
| 05 | ORBITER INTERFACE | (1650) | EXCLUDED FROM MAIN STG WT |
| 01 | STRUCTURES | | TBD |
| 02 | INTERFACE PANELS | | TBD |
| 03 | PURGE PROVISIONS | | TBD |
| 04 | ABORT PROVISIONS | | TBD |
| | | | |
| 06 | DROP TANKS | — | N/A |
| 01 | STRUCTURES | | |
| 02 | THERMAL INSULATION | | |
| 03 | PROPELLANT SUPPORT SYS | | |

**SIGNIFICANT DESIGN PARAMETERS:**

MAIN ENGINE: PROPELLANT $MMH/N_2O_4$ THRUST 12K

M.R. 1.78:1 $I_{SP}$ 325

PLANNED OPERATIONAL SPAN-FROM ___ TO ___

PROPELLANT LOAD FACTOR ( $\lambda$ ) ___

DESIGN LIFE ___ MISSIONS

AUTONOMY LEVEL 2

**NOTES:**

① SUBSYSTEM(S) CONFIG MAY BE DESIGNATED BY A CODE WITH DETAILS ON SUPPL CONFIG DATA SHEETS

**PLANNED EVOLUTION:**

C01 1A1-1 (79D)

CONFIGURATION SUMMARY SHEET
SPACE TUG SYSTEM STUDY

CONFIG NO. 1A1-1, SINGLE STG

NASA CO NO. 1

DATE 6-22-73

MARTIN MARIETTA

CONFIGURATION PROFILE SKETCH

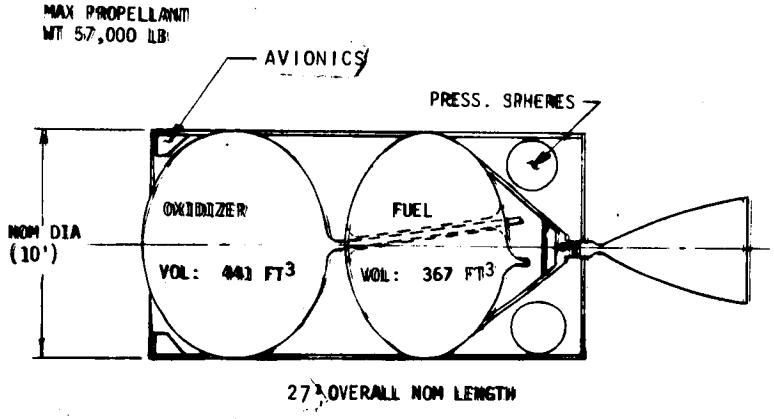


SPACE TUG VEHICLE SUBSYSTEM DEFINITION

| WBS NO. 320-03 | NOMENCLATURE | WT. | SUBSYSTEM CONFIG ① |
|---|---|---|---|
| | SPACE TUG VEH MAIN STG | 3062 | DRY WT +10% CONTINGENCY |
| 01 | STRUCTURES | (1050) | |
| 01 | FUEL TANK & SUPPORT | 173 | AS INDICATED (ALUM..035 TANK) |
| 02 | OX TANK & SUPPORT | 329 | AS INDICATED (ALUM..035 TANK) |
| 03 | BODY STRUCTURE | 395 | AS INDICATED(ALUM & HONEYCOMB) |
| 04 | THRUST STRUCTURE | 28 | AS INDICATED (ALUM) |
| 05 | METEOROID SHIELD | 45 | |
| 06 | PAYLOAD INTERFACE | 80 | |
| | | | |
| 02 | THERMAL CONTROL | (111) | TH-1 |
| 01 | FUEL TANK INSULATION | 81 | MLI(INCLUDES ALL MAIN STG MLI) |
| 02 | OX TANK INSULATION | | |
| 03 | PURGE SYSTEM | - | N/A |
| 04 | THERMAL CONTROL SYSTEM | 30 | HTRS,PAINT,ACPS RADIATION SHLD |
| | | | |
| 03 | AVIONICS | | AV-4 |
| 01 | DATA MANAGEMENT | 60 | FLEXIBLE SIGNAL INTERFACE(FSI |
| 02 | GN&C | (872) | |
| | GUID & NAV | 258 | IMUS,STAR TRACKERS & RF RADAR |
| | CONTROLS | 20 | TANDEM INT ACT PLUS ACPS CNTL |
| | DOCKING SYSTEM | 150 | DOCKING HARDWARE |
| 03 | COMMUNICATIONS | 34 | S-BAND |
| 04 | INSTRUMENTATION | - | WT INCLUDED WITH DATA MGMT |
| 05 | ELECTRICAL POWER | 350 | SOLAR ARRAY |
| 06 | POWER DIST & CONTROL | | 2 WIRE POS, STRUCT RETURN |
| | | | |
| 04 | PROPULSION | (749) | |
| 01 | MAIN ENGINE (GFE) | 270 | PR-1(2), E338 ENGINE |
| 02 | MAIN ENGINE SUPPORT | 307 | PR-1(2) |
| 03 | ACPS ENGINE | 49 | ACPS-2 (8) |
| 04 | ACPS ENGINE SUPPORT | 123 | ACPS-2 (8) |
| | | | |
| 05 | ORBITER INTERFACE | (1650) | EXCLUDED FROM MAIN STG WT |
| 01 | STRUCTURES | | TBD |
| 02 | INTERFACE PANELS | | TBD |
| 03 | PURGE PROVISIONS | | TBD |
| 04 | ABORT PROVISIONS | | TBD |
| | | | |
| 06 | DROP TANKS | - | N/A |
| 01 | STRUCTURES | | |
| 02 | THERMAL INSULATION | | |
| 03 | PROPELLANT SUPPORT SYS | | |

SIGNIFICANT DESIGN PARAMETERS:

MAIN ENGINE: PROPELLANT $MMH/N_2O_4$ THRUST 12K

M.R. 2:1 $I_{SP}$ 338.1

PLANNED OPERATIONAL SPAN-FROM ___ TO ___

PROPELLANT LOAD FACTOR ( $\lambda$ ) ___

DESIGN LIFE ___ MISSIONS

AUTONOMY LEVEL 2

NOTES:

① SUBSYSTEM(S) CONFIG MAY BE DESIGNATED BY A CODE WITH DETAILS ON SUPPL CONFIG DATA SHEETS

PLANNED EVOLUTION:

C07 IA1-4 (83D) TO IA1-3 (83R)

CONFIGURATION SUMMARY SHEET
SPACE TUG SYSTEM STUDY

CONFIG NO. IA1-3, SINGLE STG

NASA CO NO. 7

DATE 6-22-73

MARTIN MARIETTA

## CONFIGURATION PROFILE SKETCH

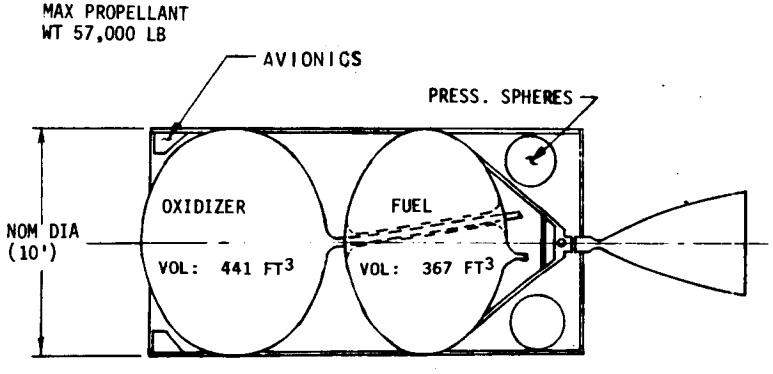


27' OVERALL NOM LENGTH

## SPACE TUG VEHICLE SUBSYSTEM DEFINITION

| WBS NO. 320-03 | NOMENCLATURE | WT. | SUBSYSTEM CONFIG ① |
|---|---|---|---|
| | SPACE TUG VEH MAIN STG | 2635 | DRY WT +10% CONTINGENCY |
| 01 | STRUCTURES | (1000) | |
| 01 | FUEL TANK & SUPPORT | 173 | AS INDICATED (ALUM,.035 TANK) |
| 02 | OX TANK & SUPPORT | 329 | AS INDICATED (ALUM,.035 TANK) |
| 03 | BODY STRUCTURE | 395 | AS INDICATED(ALUM & HONEYCOMB) |
| 04 | THRUST STRUCTURE | 28 | AS INDICATED (ALUM) |
| 05 | METEOROID SHIELD | 45 | |
| 06 | PAYLOAD INTERFACE | 30 | |
| | | | |
| 02 | THERMAL CONTROL | (111) | TH-1 |
| 01 | FUEL TANK INSULATION | 81 | MLI(INCLUDES ALL MAIN STG MLI) |
| 02 | OX TANK INSULATION | | |
| 03 | PURGE SYSTEM | — | N/A |
| 04 | THERMAL CONTROL SYSTEM | 30 | HTRS,PAINT,ACPS RADIATION SHLD |
| | | | |
| 03 | AVIONICS | (534) | AV-1 |
| 01 | DATA MANAGEMENT | 60 | FLEXIBLE SIGNAL INTERFACE(FSI) |
| 02 | GN&C | | |
| | GUID & NAV | 70 | IMUS,STAR TRACKERS |
| | CONTROLS | 20 | TANDEM INT ACT PLUS ACPS CNTLS |
| | DOCKING SYSTEM | — | N/A |
| 03 | COMMUNICATIONS | 34 | S-BAND |
| 04 | INSTRUMENTATION | — | WT INCLUDED WITH DATA MGMT |
| 05 | ELECTRICAL POWER | 350 | SOLAR ARRAY |
| 06 | POWER DIST & CONTROL | | 2 WIRE POS,STRUCT RETURN |
| | | | |
| 04 | PROPULSION | (749) | |
| 01 | MAIN ENGINE (GFE) | 270 | PR-1(2), E338 ENGINE |
| 02 | MAIN ENGINE SUPPORT | 307 | PR-1(2) |
| 03 | ACPS ENGINE | 49 | ACPS-2 (8) |
| 04 | ACPS ENGINE SUPPORT | 123 | ACPS-2 (8) |
| | | | |
| 05 | ORBITER INTERFACE | (1650) | EXCLUDED FROM MAIN STG WT |
| 01 | STRUCTURES | | TBD |
| 02 | INTERFACE PANELS | | TBD |
| 03 | PURGE PROVISIONS | | TBD |
| 04 | ABORT PROVISIONS | | TBD |
| | | | |
| 06 | DROP TANKS | — | N/A |
| 01 | STRUCTURES | | |
| 02 | THERMAL INSULATION | | |
| 03 | PROPELLANT SUPPORT SYS | | |

**SIGNIFICANT DESIGN PARAMETERS:**

MAIN ENGINE: PROPELLANT MMH/N2O4 THRUST 12K

M.R. 2:1 $I_{SP}$ 338.1

PLANNED OPERATIONAL SPAN-FROM ___ TO ___

PROPELLANT LOAD FACTOR ( λ ) ___

DESIGN LIFE ___ MISSIONS

AUTONOMY LEVEL 2

**NOTES:**

① SUBSYSTEM(S) CONFIG MAY BE DESIGNATED BY A CODE WITH DETAILS ON SUPPL CONFIG DATA SHEETS

**PLANNED EVOLUTION:**

C07 1A1-4 (83D) TO 1A1-3 (83R)

**CONFIGURATION SUMMARY SHEET**
**SPACE TUG SYSTEM STUDY**

CONFIG NO. 1A1-4, SINGLE STG

NASA CO NO. 7

DATE 6-22-73

MARTIN MARIETTA

CONFIGURATION PROFILE SKETCH

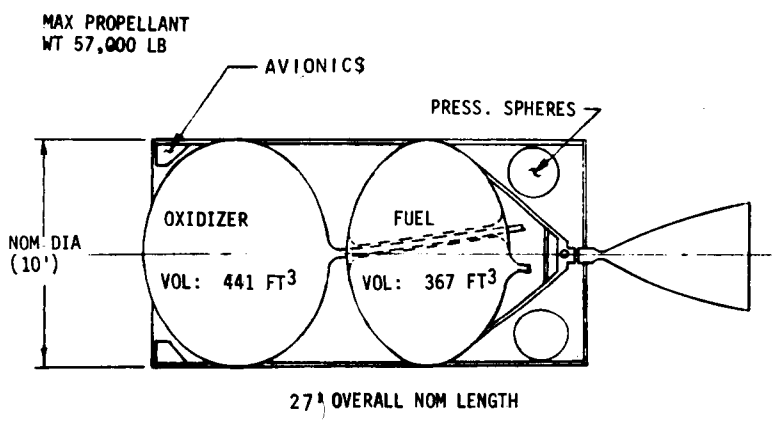


SPACE TUG VEHICLE SUBSYSTEM DEFINITION

| WBS NO. 320-03 | NOMENCLATURE | WT. | SUBSYSTEM CONFIG ① |
|---|---|---|---|
| | SPACE TUG VEH MAIN STG | 2813 | DRY WT +10% CONTINGENCY |
| 01 | STRUCTURES | (1050) | |
| 01 | FUEL TANK & SUPPORT | 173 | AS INDICATED (ALUM,.035 TANK) |
| 02 | OX TANK & SUPPORT | 329 | AS INDICATED (ALUM,.035 TANK) |
| 03 | BODY STRUCTURE | 395 | AS INDICATED(ALUM & HONEYCOMB) |
| 04 | THRUST STRUCTURE | 28 | AS INDICATED (ALUM) |
| 05 | METEOROID SHIELD | 45 | |
| 06 | PAYLOAD INTERFACE | 80 | |
| | | | |
| 02 | THERMAL CONTROL | (111) | TH-1 |
| 01 | FUEL TANK INSULATION | 81 | MLI(INCLUDES ALL MAIN STG MLI) |
| 02 | OX TANK INSULATION | | |
| 03 | PURGE SYSTEM | — | N/A |
| 04 | THERMAL CONTROL SYSTEM | 30 | HTRS,PAINT,ACPS RADIATION SHLD |
| | | | |
| 03 | AVIONICS | (647) | AV-2 |
| 01 | DATA MANAGEMENT | 60 | FLEXIBLE SIGNAL INTERFACE(FSI) |
| 02 | GN&C | | |
| | GUID & NAV | 93 | IMUS,STAR TRACKERS,SLR |
| | CONTROLS | 20 | TANDEM INT ACT PLUS ACPS CNTLS |
| | DOCKING SYSTEM | 90 | DOCKING HARDWARE |
| 03 | COMMUNICATIONS | 34 | S-BAND |
| 04 | INSTRUMENTATION | — | WT INCLUDED WITH DATA MGMT |
| 05 | ELECTRICAL POWER | 350 | SOLAR ARRAY |
| 06 | POWER DIST & CONTROL | | 2 WIRE POS, STRUCT RETURN |
| | | | |
| 04 | PROPULSION | (749) | |
| 01 | MAIN ENGINE (GFE) | 270 | PR-1(2), E338 ENGINE |
| 02 | MAIN ENGINE SUPPORT | 307 | PR-1(2) |
| 03 | ACPS ENGINE | 49 | ACPS-2 (8) |
| 04 | ACPS ENGINE SUPPORT | 123 | ACPS-2 (8) |
| | | | |
| 05 | ORBITER INTERFACE | (1650) | EXCLUDED FROM MAIN STG WT |
| 01 | STRUCTURES | | TBD |
| 02 | INTERFACE PANELS | | TBD |
| 03 | PURGE PROVISIONS | | TBD |
| 04 | ABORT PROVISIONS | | TBD |
| | | | |
| 06 | DROP TANKS | — | N/A |
| 01 | STRUCTURES | | |
| 02 | THERMAL INSULATION | | |
| 03 | PROPELLANT SUPPORT SYS | | |

SIGNIFICANT DESIGN PARAMETERS:

MAIN ENGINE: PROPELLANT MMH/$N_2O_4$ THRUST 12K

M.R. 2:1 $I_{SP}$ 338.1

PLANNED OPERATIONAL SPAN-FROM ___ TO ___

PROPELLANT LOAD FACTOR ( $\lambda$ ) ___

DESIGN LIFE ___ MISSIONS

AUTONOMY LEVEL 2

NOTES:

① SUBSYSTEM(S) CONFIG MAY BE DESIGNATED BY A CODE WITH DETAILS ON SUPPL CONFIG DATA SHEETS

PLANNED EVOLUTION:

C04 IA1-6 (83D) TO IA1-5 (83R)
C07 IA1-6 (83D) TO IA1-5 (83R)

CONFIGURATION SUMMARY SHEET
SPACE TUG SYSTEM STUDY

CONFIG NO. IA1-5, SINGLE STG

NASA CO NO. 4 & 7

DATE 6-22-73

MARTIN MARIETTA

## CONFIGURATION PROFILE SKETCH

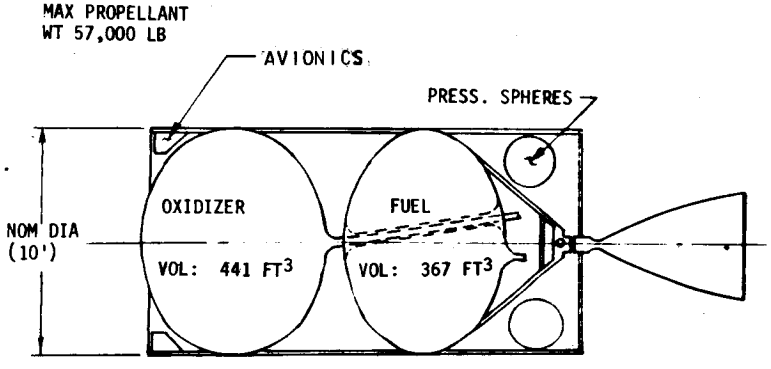


27' OVERALL NOM LENGTH

## SPACE TUG VEHICLE SUBSYSTEM DEFINITION

| WBS NO. 320-03 | NOMENCLATURE | WT. | SUBSYSTEM CONFIG ① |
|---|---|---|---|
| | SPACE TUG VEH MAIN STG | 2600 | DRY WT +10% CONTINGENCY |
| 01 | STRUCTURES | (1000) | |
| 01 | FUEL TANK & SUPPORT | 173 | AS INDICATED (ALUM. .035 TANK) |
| 02 | OX TANK & SUPPORT | 329 | AS INDICATED (ALUM. .035 TANK) |
| 03 | BODY STRUCTURE | 395 | AS INDICATED(ALUM & HONEYCOMB) |
| 04 | THRUST STRUCTURE | 28 | AS INDICATED (ALUM) |
| 05 | METEOROID SHIELD | 45 | |
| 06 | PAYLOAD INTERFACE | 30 | |
| | | | |
| 02 | THERMAL CONTROL | (111) | TH-1 |
| 01 | FUEL TANK INSULATION | 81 | MLI(INCLUDES ALL MAIN STG MLI) |
| 02 | OX TANK INSULATION | | |
| 03 | PURGE SYSTEM | - | N/A |
| 04 | THERMAL CONTROL SYSTEM | 30 | HTRS,PAINT,ACPS RADIATION SHLD |
| | | | |
| 03 | AVIONICS | (504) | AV-3 |
| 01 | DATA MANAGEMENT | 60 | FLEXIBLE SIGNAL INTERFACE(FSI) |
| 02 | GN&C | | |
| | GUID & NAV | 40 | IMUS & STAR TRACKERS |
| | CONTROLS | 20 | TANDEM INT ACT PLUS ACPS CNTLS |
| | DOCKING SYSTEM | - | N/A |
| 03 | COMMUNICATIONS | 34 | S-BAND |
| 04 | INSTRUMENTATION | - | WT INCLUDED WITH DATA MGMT |
| 05 | ELECTRICAL POWER | 350 | SOLAR ARRAY |
| 06 | POWER DIST & CONTROL | | 2 WIRE POS, STRUCT RETURN |
| | | | |
| 04 | PROPULSION | (749) | |
| 01 | MAIN ENGINE (GFE) | 270 | PR-1(2), E338 ENGINE |
| 02 | MAIN ENGINE SUPPORT | 307 | PR-1(2) |
| 03 | ACPS ENGINE | 49 | ACPS-2 (8) |
| 04 | ACPS ENGINE SUPPORT | 123 | ACPS-2 (8) |
| | | | |
| 05 | ORBITER INTERFACE | (1650) | EXCLUDED FROM MAIN STG WT |
| 01 | STRUCTURES | | TBD |
| 02 | INTERFACE PANELS | | TBD |
| 03 | PURGE PROVISIONS | | TBD |
| 04 | ABORT PROVISIONS | | TBD |
| | | | |
| 06 | DROP TANKS | - | N/A |
| 01 | STRUCTURES | | |
| 02 | THERMAL INSULATION | | |
| 03 | PROPELLANT SUPPORT SYS | | |

**SIGNIFICANT DESIGN PARAMETERS:**

MAIN ENGINE: PROPELLANT MMH/$N_2O_4$ THRUST 12K

M.R. 2:1 $I_{SP}$ 338.1

PLANNED OPERATIONAL SPAN-FROM ___ TO ___

PROPELLANT LOAD FACTOR ( $\lambda$ ) ___

DESIGN LIFE ___ MISSIONS

AUTONOMY LEVEL 2

**NOTES:**

① SUBSYSTEM(S) CONFIG MAY BE DESIGNATED BY A CODE WITH DETAILS ON SUPPL CONFIG DATA SHEETS

**PLANNED EVOLUTION:**

C04 IA1-6 (83D) TO IA1-5 (83R)
C07 IA1-6 (83D) TO IA1-5 (83R)

CONFIGURATION SUMMARY SHEET
SPACE TUG SYSTEM STUDY

CONFIG NO. IA1-6, SINGLE STG

NASA CO NO. 4 & 7

DATE 6-22-73

MARTIN MARIETTA

CONFIGURATION PROFILE SKETCH

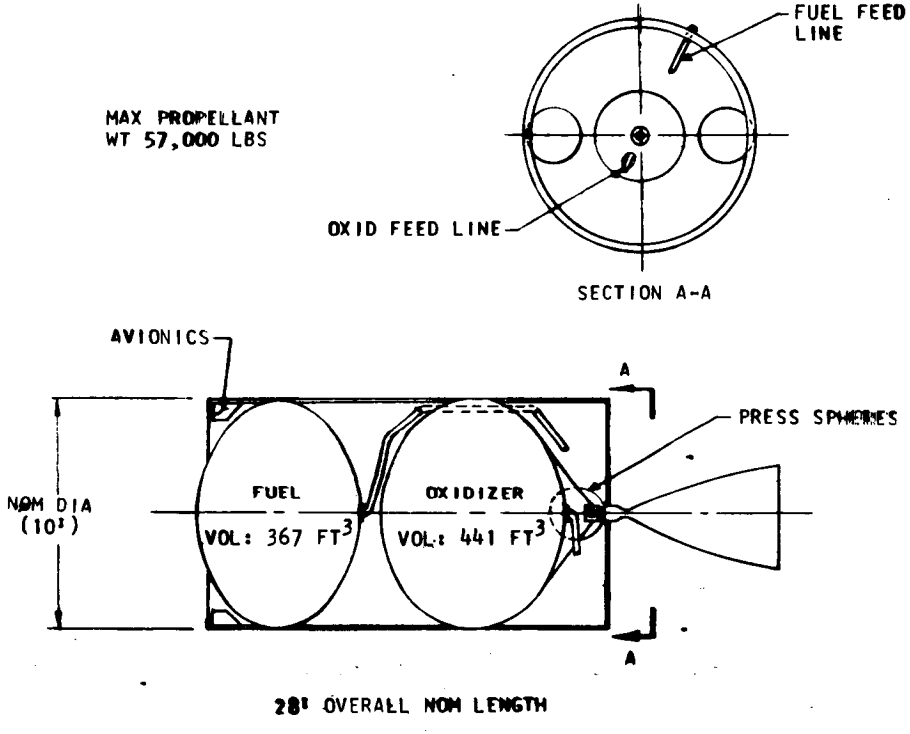


SPACE TUG VEHICLE SUBSYSTEM DEFINITION

| WBS NO. 320-03 | NOMENCLATURE | WT. | SUBSYSTEM CONFIG ① |
|---|---|---|---|
| | SPACE TUG VEH MAIN STG | 2475 | DRY WT +10% CONTINGENCY |
| 01 | STRUCTURES | (815) | |
| 01 | FUEL TANK & SUPPORT | 131 | AS INDICATED (ALUM) |
| 02 | OX TANK & SUPPORT | 281 | AS INDICATED (ALUM) |
| 03 | BODY STRUCTURE | 309 | AS INDICATED(ALUM & HONEYCOMB) |
| 04 | THRUST STRUCTURE | 28 | AS INDICATED (ALUM) |
| 05 | METEOROID SHIELD | 36 | |
| 06 | PAYLOAD INTERFACE | 30 | |
| | | | |
| 02 | THERMAL CONTROL | (111) | TH-1 |
| 01 | FUEL TANK INSULATION | 81 | MLI(INCLUDES ALL MAIN STG MLI) |
| 02 | OX TANK INSULATION | | |
| 03 | PURGE SYSTEM | - | N/A |
| 04 | THERMAL CONTROL SYSTEM | 30 | HTRS,PAINT,ACPS RADIATION SHLD |
| | | | |
| 03 | AVIONICS | (534) | AV-1 |
| 01 | DATA MANAGEMENT | 60 | FLEXIBLE SIGNAL INTERFACE(FS |
| 02 | GN&C | | |
| | GUID & NAV | 70 | IMUS STAR TRACKERS |
| | CONTROLS | 20 | TANDEM INT ACT PLUS ACPS CNTL |
| | DOCKING SYSTEM | - | N/A |
| 03 | COMMUNICATIONS | 34 | S-BAND |
| 04 | INSTRUMENTATION | - | WT INCLUDED WITH DATA MGMT |
| 05 | ELECTRICAL POWER | 350 | SOLAR ARRAY |
| 06 | POWER DIST & CONTROL | | 2 WIRE POS, STRUCT RETURN |
| | | | |
| 04 | PROPULSION | (789) | |
| 01 | MAIN ENGINE (GFE) | 310 | PR-1(2), UPRATED OME ENGINE |
| 02 | MAIN ENGINE SUPPORT | 307 | PR-1(2) |
| 03 | ACPS ENGINE | 49 | ACPS-2 (8) |
| 04 | ACPS ENGINE SUPPORT | 123 | ACPS-2 (8) |
| | | | |
| 05 | ORBITER INTERFACE | (1650) | EXCLUDED FROM MAIN STG WT |
| 01 | STRUCTURES | | TBD |
| 02 | INTERFACE PANELS | | TBD |
| 03 | PURGE PROVISIONS | | TBD |
| 04 | ABORT PROVISIONS | | TBD |
| | | | |
| 06 | DROP TANKS | - | N/A |
| 01 | STRUCTURES | | |
| 02 | THERMAL INSULATION | | |
| 03 | PROPELLANT SUPPORT SYS | | |

SIGNIFICANT DESIGN PARAMETERS:

MAIN ENGINE: PROPELLANT MMH/$N_2O_4$ THRUST 12K

M.R. 2:1 $I_{SP}$ 325

PLANNED OPERATIONAL SPAN-FROM ___ TO ___

PROPELLANT LOAD FACTOR ( $\lambda$ ) ___

DESIGN LIFE ___ MISSIONS

AUTONOMY LEVEL 2

NOTES:

① SUBSYSTEM(S) CONFIG MAY BE DESIGNATED BY A CODE WITH DETAILS ON SUPPL CONFIG DATA SHEETS

PLANNED EVOLUTION:

CO1 IA2-1 (79D)
CO2 IA2-1 (79D) TO IA2-2 (79R)

CONFIGURATION SUMMARY SHEET
SPACE TUG SYSTEM STUDY

CONFIG NO. IA2-1, SINGLE STG

NASA CO NO. 1 & 2

DATE 6-22-73

MARTIN MARIETTA

## CONFIGURATION PROFILE SKETCH

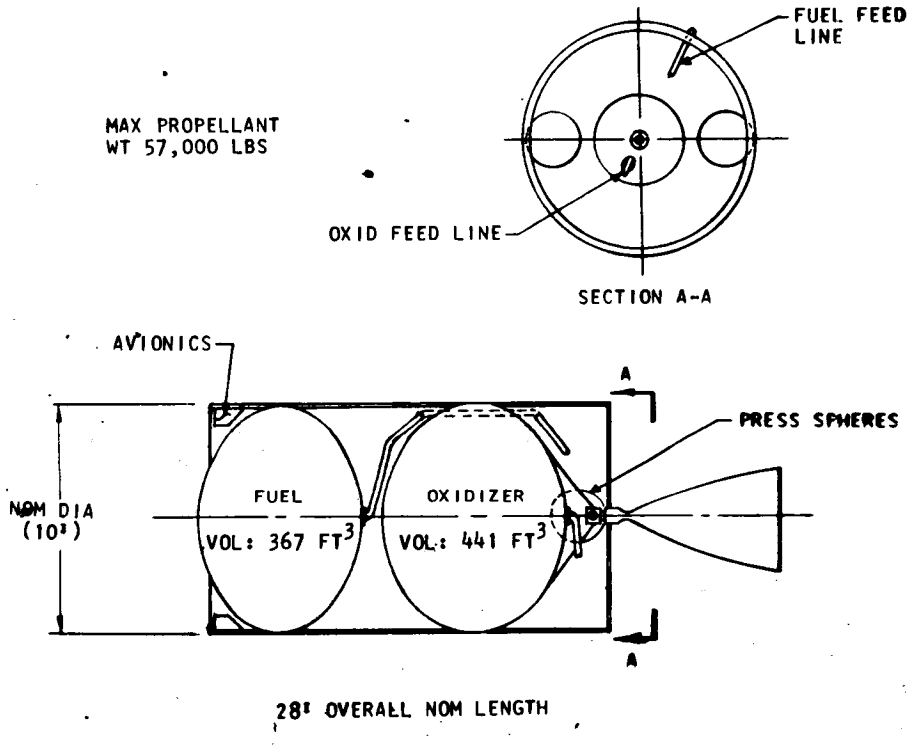


## SPACE TUG VEHICLE SUBSYSTEM DEFINITION

| WBS NO. 320-03 | NOMENCLATURE | WT. | SUBSYSTEM CONFIG ① |
|---|---|---|---|
| | SPACE TUG VEH MAIN STG | 2902 | DRY WT +10% CONTINGENCY |
| 01 | STRUCTURES | (865) | |
| 01 | FUEL TANK & SUPPORT | 131 | AS INDICATED (ALUM) |
| 02 | OX TANK & SUPPORT | 281 | AS INDICATED (ALUM) |
| 03 | BODY STRUCTURE | 309 | AS INDICATED(ALUM & HONEYCOMB) |
| 04 | THRUST STRUCTURE | 28 | AS INDICATED (ALUM) |
| 05 | METEOROID SHIELD | 36 | |
| 06 | PAYLOAD INTERFACE | 80 | |
| | | | |
| 02 | THERMAL CONTROL | (111) | TH-1 |
| 01 | FUEL TANK INSULATION | 81 | MLI(INCLUDES ALL MAIN STG MLI) |
| 02 | OX TANK INSULATION | | |
| 03 | PURGE SYSTEM | - | N/A |
| 04 | THERMAL CONTROL SYSTEM | 30 | HTRS,PAINT,ACPS RADIATION SHLD |
| | | | |
| 03 | AVIONICS | (872) | AV-4 |
| 01 | DATA MANAGEMENT | 60 | FLEXIBLE SIGNAL INTERFACE (FSI) |
| 02 | GN&C | | |
| | GUID & NAV | 258 | IMUS,STAR TRACKERS & RF RADAR |
| | CONTROLS | 20 | TANDEM INT ACT PLUS ACPS CNTLS |
| | DOCKING SYSTEM | 150 | DOCKING HARDWARE |
| 03 | COMMUNICATIONS | 34 | S-BAND |
| 04 | INSTRUMENTATION | - | WT INCLUDED WITH DATA MGMT |
| 05 | ELECTRICAL POWER | 350 | SOLAR ARRAY |
| 06 | POWER DIST & CONTROL | | 2 WIRE POS, STRUCT RETURN |
| | | | |
| 04 | PROPULSION | (789) | |
| 01 | MAIN ENGINE (GFE) | 310 | PR-1(2), UPRATED OME ENGINE |
| 02 | MAIN ENGINE SUPPORT | 307 | PR-1(2) |
| 03 | ACPS ENGINE | 49 | ACPS-2 (8) |
| 04 | ACPS ENGINE SUPPORT | 123 | ACPS-2 (8) |
| | | | |
| 05 | ORBITER INTERFACE | (1650) | EXCLUDED FROM MAIN STG WT |
| 01 | STRUCTURES | | TBD |
| 02 | INTERFACE PANELS | | TBD |
| 03 | PURGE PROVISIONS | | TBD |
| 04 | ABORT PROVISIONS | | TBD |
| | | | |
| 06 | DROP TANKS | - | N/A |
| 01 | STRUCTURES | | |
| 02 | THERMAL INSULATION | | |
| 03 | PROPELLANT SUPPORT SYS | | |

**SIGNIFICANT DESIGN PARAMETERS:**

MAIN ENGINE: PROPELLANT $MMH/N_2O_4$ THRUST 12K

M.R. 2:1 $I_{SP}$ 325

PLANNED OPERATIONAL SPAN-FROM ___ TO ___

PROPELLANT LOAD FACTOR ( $\lambda$ ) ___

DESIGN LIFE ___ MISSIONS

AUTONOMY LEVEL 2

**NOTES:**

① SUBSYSTEM(S) CONFIG MAY BE DESIGNATED BY A CODE WITH DETAILS ON SUPPL CONFIG DATA SHEETS

**PLANNED EVOLUTION:**

CO2 IA2-1 (79D) TO IA2-2 (79R)

**CONFIGURATION SUMMARY SHEET**
**SPACE TUG SYSTEM STUDY**

CONFIG NO. IA2-2, SINGLE STG

NASA CO NO. 2

DATE 6-22-73

MARTIN MARIETTA

CONFIGURATION PROFILE SKETCH

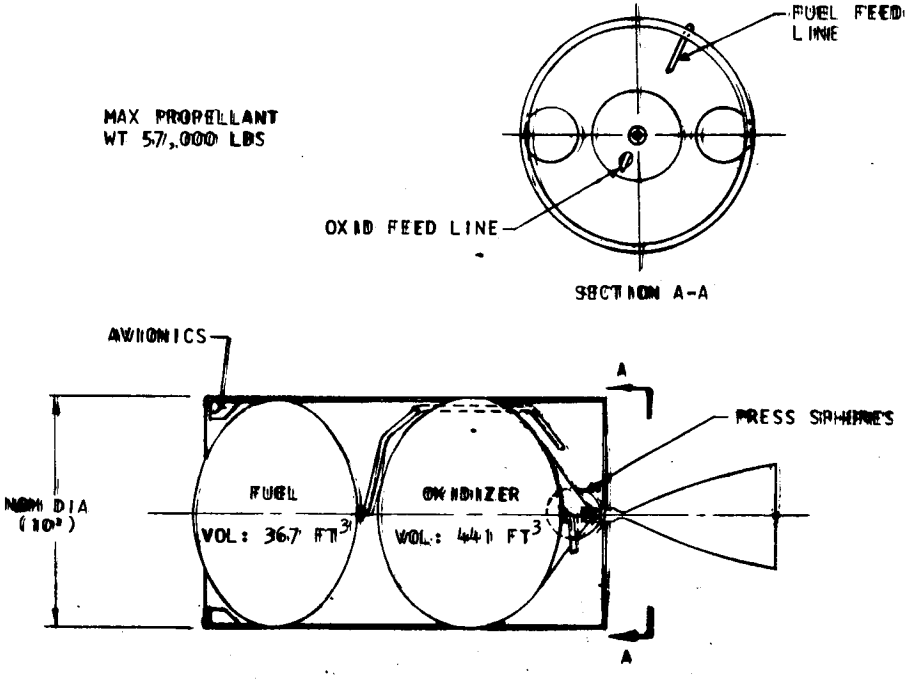


SPACE TUG VEHICLE SUBSYSTEM DEFINITION

| WBS NO. 320-03 | NOMENCLATURE | WT. | SUBSYSTEM CONFIG ① |
|---|---|---|---|
| | SPACE TUG VEH MAIN STG | 2395 | DRY WT +10% CONTINGENCY |
| 01 | STRUCTURES | (670) | |
| 01 | FUEL TANK & SUPPORT | 105 | AS INDICATED (TITANIUM) |
| 02 | OX TANK & SUPPORT | 225 | AS INDICATED (TITANIUM) |
| 03 | BODY STRUCTURE | 204 | AS INDICATED (COMPOSITE) |
| 04 | THRUST STRUCTURE | 20 | AS INDICATED (COMPOSITE) |
| 05 | METEOROID SHIELD | 36 | |
| 06 | PAYLOAD INTERFACE | 80 | |
| | | | |
| 02 | THERMAL CONTROL | (111) | TH-1 |
| 01 | FUEL TANK INSULATION | 81 | MLI (INCLUDES ALL MAIN STG MLI) |
| 02 | OX TANK INSULATION | | |
| 03 | PURGE SYSTEM | - | N/A |
| 04 | THERMAL CONTROL SYSTEM | 30 | HTRS, PAINT, ACPS RADIATION SHLD |
| | | | |
| 03 | AVIONICS | (647) | AV-2 |
| 01 | DATA MANAGEMENT | 60 | FLEXIBLE SIGNAL INTERFACE(FS |
| 02 | GN&C | | |
| | GUID & NAV | 93 | IMUS & STAR TRACKERS, SLR |
| | CONTROLS | 20 | TANDEM INT ACT PLUS ACPS CNTL |
| | DOCKING SYSTEM | 90 | DOCKING HARDWARE |
| 03 | COMMUNICATIONS | 34 | S-BAND |
| 04 | INSTRUMENTATION | - | WT INCLUDED WITH DATA MGMT |
| 05 | ELECTRICAL POWER | 350 | SOLAR ARRAY |
| 06 | POWER DIST & CONTROL | | 2 WIRE POS, STRUCT RETURN |
| | | | |
| 04 | PROPULSION | (749) | |
| 01 | MAIN ENGINE (GFE) | 270 | PR-1(2), E338 ENGINE |
| 02 | MAIN ENGINE SUPPORT | 307 | PR-1(2) |
| 03 | ACPS ENGINE | 49 | ACPS-2 (8) |
| 04 | ACPS ENGINE SUPPORT | 123 | ACPS-2 (8) |
| | | | |
| 05 | ORBITER INTERFACE | (1650) | EXCLUDED FROM MAIN STG WT |
| 01 | STRUCTURES | | TBD |
| 02 | INTERFACE PANELS | | TBD |
| 03 | PURGE PROVISIONS | | TBD |
| 04 | ABORT PROVISIONS | | TBD |
| | | | |
| 06 | DROP TANKS | - | N/A |
| 01 | STRUCTURES | | |
| 02 | THERMAL INSULATION | | |
| 03 | PROPELLANT SUPPORT SYS | | |

SIGNIFICANT DESIGN PARAMETERS:

MAIN ENGINE: PROPELLANT MMH/$N_2O_4$ THRUST 12K

M.R. 2:1 $I_{SP}$ 338.1

PLANNED OPERATIONAL SPAN-FROM ___ TO ___

PROPELLANT LOAD FACTOR ( $\lambda$ ) ___

DESIGN LIFE ___ MISSIONS

AUTONOMY LEVEL 2

NOTES:

① SUBSYSTEM(S) CONFIG MAY BE DESIGNATED BY A CODE WITH DETAILS ON SUPPL CONFIG DATA SHEETS

PLANNED EVOLUTION:

C03 IA2-8 (79D) TO IA2-4 (83R) TO IA2-3 (83R)
C04 IA2-4 (83D) TO IA2-3 (83R)
C05 IA2-8 (79D) TO IA2-4 (83D) TO IA2-3 (83R)
C06 IA2-8 (79D) TO IA2-7 (79R) TO IA2-4 (83D) TO IA2-3 (83R)
C07 IA2-4 (83D) TO IA2-3 (83R)

CONFIGURATION SUMMARY SHEET
SPACE TUG SYSTEM STUDY

CONFIG NO. IA2-3, SINGLE STG

NASA CO NO 3,4,5,6, & 7

DATE 6-22-73

MARTIN MARIETTA

CONFIGURATION PROFILE SKETCH

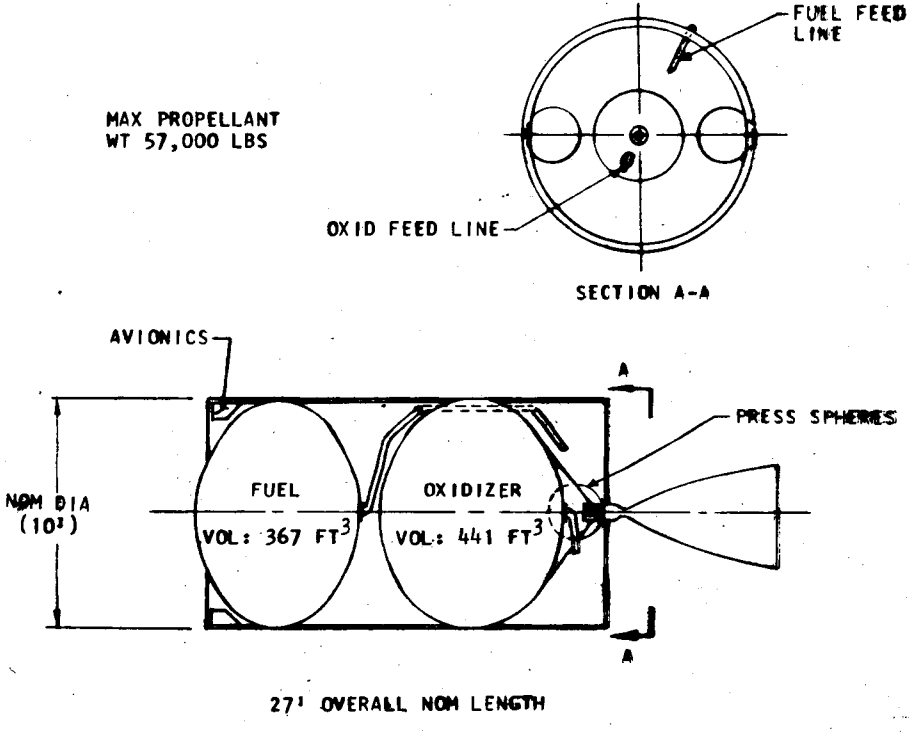


SPACE TUG VEHICLE SUBSYSTEM DEFINITION

| WBS NO. 320-03 | NOMENCLATURE | WT. | SUBSYSTEM CONFIG ① |
|---|---|---|---|
| | SPACE TUG VEH MAIN STG | 2182 | DRY WT +10% CONTINGENCY |
| 01 | STRUCTURES | (620) | |
| 01 | FUEL TANK & SUPPORT | 105 | AS INDICATED (TITANIUM) |
| 02 | OX TANK & SUPPORT | 225 | AS INDICATED (TITANIUM) |
| 03 | BODY STRUCTURE | 204 | AS INDICATED (COMPOSITE) |
| 04 | THRUST STRUCTURE | 20 | AS INDICATED (COMPOSITE) |
| 05 | METEOROID SHIELD | 36 | |
| 06 | PAYLOAD INTERFACE | 30 | |
| | | | |
| 02 | THERMAL CONTROL | (111) | TH-1 |
| 01 | FUEL TANK INSULATION | 81 | MLI(INCLUDES ALL MIN STG MIL) |
| 02 | OX TANK INSULATION | | |
| 03 | PURGE SYSTEM | - | N/A |
| 04 | THERMAL CONTROL SYSTEM | 30 | HTRS,PAINT,ACPS RADIATION SHLD |
| | | | |
| 03 | AVIONICS | (504) | AV-3 |
| 01 | DATA MANAGEMENT | 60 | FLEXIBLE SIGNAL INTERFACE(FSI) |
| 02 | GN&C | | |
| | GUID & NAV | 40 | IMUS & STAR TRACKERS |
| | CONTROLS | 20 | TANDEM INT ACT PLUS ACPS CNTLS |
| | DOCKING SYSTEM | - | N/A |
| 03 | COMMUNICATIONS | 34 | S-BAND |
| 04 | INSTRUMENTATION | - | WT INCLUDED WITH DATA MGMT |
| 05 | ELECTRICAL POWER | 350 | SOLAR ARRAY |
| 06 | POWER DIST & CONTROL | | 2 WIRE POS, STRUCT RETURN |
| | | | |
| 04 | PROPULSION | (749) | |
| 01 | MAIN ENGINE (GFE) | 270 | PR-1(2), E338 ENGINE |
| 02 | MAIN ENGINE SUPPORT | 307 | PR-1(2) |
| 03 | ACPS ENGINE | 49 | ACPS-2 (8) |
| 04 | ACPS ENGINE SUPPORT | 123 | ACPS-2 (8) |
| | | | |
| 05 | ORBITER INTERFACE | (1650) | EXCLUDED FROM MAIN STG WT |
| 01 | STRUCTURES | | TBD |
| 02 | INTERFACE PANELS | | TBD |
| 03 | PURGE PROVISIONS | | TBD |
| 04 | ABORT PROVISIONS | | TBD |
| | | | |
| 06 | DROP TANKS | | N/A |
| 01 | STRUCTURES | | |
| 02 | THERMAL INSULATION | | |
| 03 | PROPELLANT SUPPORT SYS | | |

SIGNIFICANT DESIGN PARAMETERS:

MAIN ENGINE: PROPELLANT MMH/$N_2O_4$ THRUST 12K

M.R. 2:1 $I_{SP}$ 338.1

PLANNED OPERATIONAL SPAN-FROM ___ TO ___

PROPELLANT LOAD FACTOR ( λ ) ___

DESIGN LIFE ___ MISSIONS

AUTONOMY LEVEL 2

NOTES:

① SUBSYSTEM(S) CONFIG MAY BE DESIGNATED BY A CODE WITH DETAILS ON SUPPL CONFIG DATA SHEETS

PLANNED EVOLUTION:

C03 1A2-8 (79D) TO 1A2-4 (83D) TO 1A2-3 (83R)
C04 1A2-4 (83D) TO 1A2-3 (83R)
C05 1A2-8 (79D) TO 1A2-4 (79R) TO 1A2-3 (83R)
C06 1A2-8 (79D) TO 1A2-7 (79R) TO 1A2-4 (83D) TO 1A2-3 (83R)
C07 1A2-4 (83D) TO 1A2-3 (83R)

CONFIGURATION SUMMARY SHEET
SPACE TUG SYSTEM STUDY

CONFIG NO. 1A2-4, SINGLE STG

NASA CO NO. 3,4,5,6 & 7

DATE 6-22-73

MARTIN MARIETTA

CONFIGURATION PROFILE SKETCH

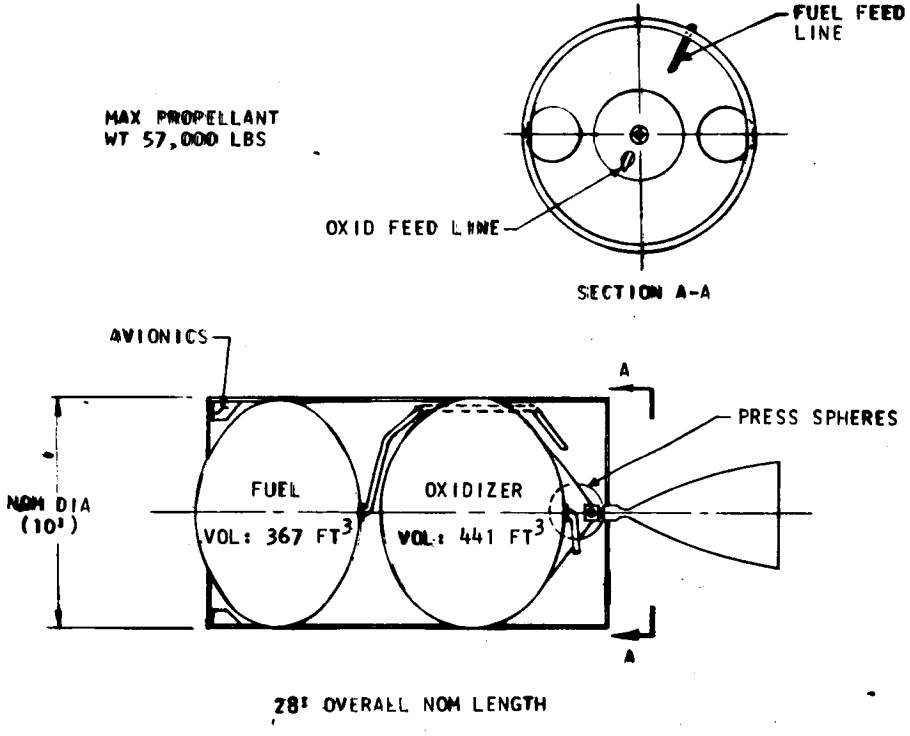


SPACE TUG VEHICLE SUBSYSTEM DEFINITION

| WBS NO. 320-03 | NOMENCLATURE | WT. | SUBSYSTEM CONFIG ① |
|---|---|---|---|
| | SPACE TUG VEH MAIN STG | 2688 | DRY WT +10% CONTINGENCY |
| 01 | STRUCTURES | (670) | |
| 01 | FUEL TANK & SUPPORT | 105 | AS INDICATED (TITANIUM) |
| 02 | OX TANK & SUPPORT | 225 | AS INDICATED (TITANIUM) |
| 03 | BODY STRUCTURE | 204 | AS INDICATED (COMPOSITE) |
| 04 | THRUST STRUCTURE | 20 | AS INDICATED (COMPOSITE) |
| 05 | METEOROID SHIELD | 36 | |
| 06 | PAYLOAD INTERFACE | 80 | |
| | | | |
| 02 | THERMAL CONTROL | (111) | TH-1 |
| 01 | FUEL TANK INSULATION | 81 | MLI(INCLUDES ALL MAIN STG MLI) |
| 02 | OX TANK INSULATION | | |
| 03 | PURGE SYSTEM | - | N/A |
| 04 | THERMAL CONTROL SYSTEM | 30 | HTRS,PAINT,ACPS RADIATION SHL |
| | | | |
| 03 | AVIONICS | (872) | AV-4 |
| 01 | DATA MANAGEMENT | 60 | FLEXIBLE SIGNAL INTERFACE(FSI |
| 02 | GN&C | | |
| | GUID & NAV | 258 | IMUS,STAR TRACKERS,RF RADAR |
| | CONTROLS | 20 | TANDEM INT ACT PLUS ACPS CNTL |
| | DOCKING SYSTEM | 150 | DOCKING HARDWARE |
| 03 | COMMUNICATIONS | 34 | S-BAND |
| 04 | INSTRUMENTATION | - | WT INCLUDED WITH DATA MGMT |
| 05 | ELECTRICAL POWER | 350 | SOLAR ARRAY |
| 06 | POWER DIST & CONTROL | | 2 WIRE POS, STRUCT RETURN |
| | | | |
| 04 | PROPULSION | (789) | |
| 01 | MAIN ENGINE (GFE) | 310 | PR-1(2), UPRATED OME ENGINE |
| 02 | MAIN ENGINE SUPPORT | 307 | PR-1(2) |
| 03 | ACPS ENGINE | 49 | ACPS-2 (8) |
| 04 | ACPS ENGINE SUPPORT | 123 | ACPS-2 (8) |
| | | | |
| 05 | ORBITER INTERFACE | (1650) | EXCLUDED FROM MAIN STG WT |
| 01 | STRUCTURES | | TBD |
| 02 | INTERFACE PANELS | | TBD |
| 03 | PURGE PROVISIONS | | TBD |
| 04 | ABORT PROVISIONS | | TBD |
| | | | |
| 06 | DROP TANKS | - | N/A |
| 01 | STRUCTURES | | |
| 02 | THERMAL INSULATION | | |
| 03 | PROPELLANT SUPPORT SYS | | |

SIGNIFICANT DESIGN PARAMETERS:

MAIN ENGINE: PROPELLANT $MMH/N_2O_4$ THRUST 12K

M.R. 2:1 $I_{SP}$ 325

PLANNED OPERATIONAL SPAN-FROM ___ TO ___

PROPELLANT LOAD FACTOR ( $\lambda$ ) ___

DESIGN LIFE ___ MISSIONS

AUTONOMY LEVEL 2

NOTES:

① SUBSYSTEM(S) CONFIG MAY BE DESIGNATED BY A CODE WITH DETAILS ON SUPPL CONFIG DATA SHEETS

PLANNED EVOLUTION:

CO2 IA2-8 (79D) TO IA2-7 (79R)
CO3 IA2-8 (79D) TO (83D) TO IA2-7 (83R)
CO6 IA2-8 (79D) TO IA2-7 (79R) TO
IA2-4 (83D) TO IA2-3 (83R)

CONFIGURATION SUMMARY SHEET
SPACE TUG SYSTEM STUDY

CONFIG NO. IA2-7, SINGLE STG

NASA CO NO. 2,3 & 6

DATE 6-22-73

MARTIN MARIETTA

## CONFIGURATION PROFILE SKETCH

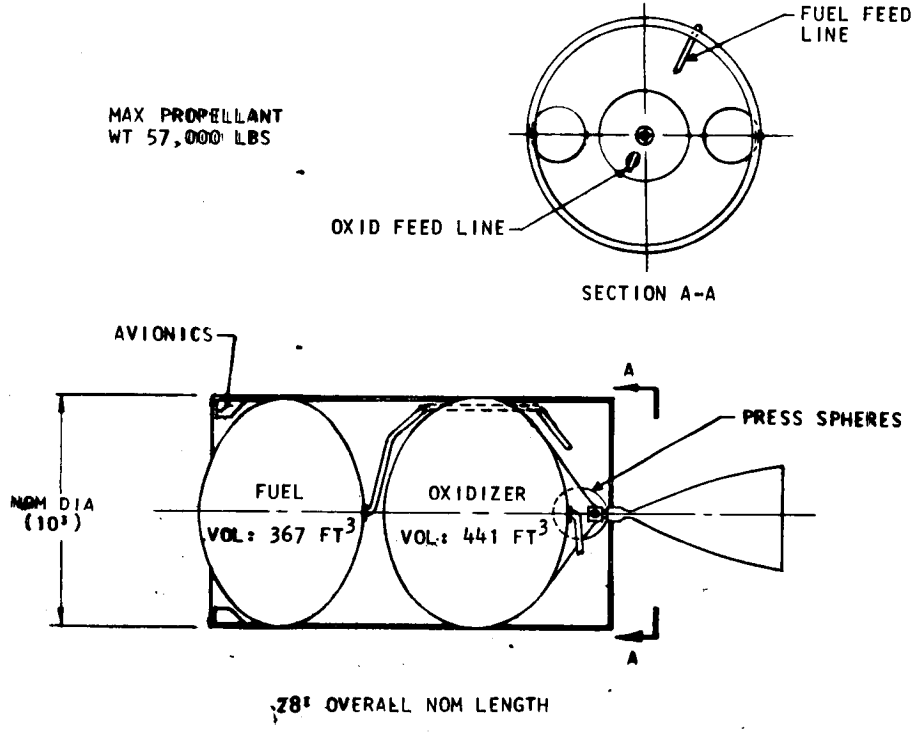


## SPACE TUG VEHICLE SUBSYSTEM DEFINITION

| WBS NO. 320-03 | NOMENCLATURE | WT. | SUBSYSTEM CONFIG ① |
|---|---|---|---|
| | SPACE TUG VEH MAIN STG | 2261 | DRY WT +10% CONTINGENCY |
| 01 | STRUCTURES | (620) | |
| 01 | FUEL TANK & SUPPORT | 105 | AS INDICATED (TITANIUM) |
| 02 | OX TANK & SUPPORT | 225 | AS INDICATED (TITANIUM) |
| 03 | BODY STRUCTURE | 204 | AS INDICATED (COMPOSITE) |
| 04 | THRUST STRUCTURE | 20 | AS INDICATED (COMPOSITE) |
| 05 | METEOROID SHIELD | 36 | |
| 06 | PAYLOAD INTERFACE | 30 | |
| | | | |
| 02 | THERMAL CONTROL | (111) | TH-1 M |
| 01 | FUEL TANK INSULATION | 81 | MLI (INCLUDES ALL MAIN STG MLI) |
| 02 | OX TANK INSULATION | | |
| 03 | PURGE SYSTEM | - | N/A |
| 04 | THERMAL CONTROL SYSTEM | 30 | HTRS, PAINT, ACPS RADIATION SHLD |
| | | | |
| 03 | AVIONICS | (534) | AV-1 |
| 01 | DATA MANAGEMENT | 60 | FLEXIBLE SIGNAL INTERFACE (FSI |
| 02 | GN&C | | |
| | GUID & NAV | 70 | IMUS & STAR TRACKERS |
| | CONTROLS | 20 | TANEDM INT ACT PLUS ACPS CNTL |
| | DOCKING SYSTEM | - | N/A |
| 03 | COMMUNICATIONS | 34 | S-BAND |
| 04 | INSTRUMENTATION | - | WT INCLUDED WITH DATA MGMT |
| 05 | ELECTRICAL POWER | 350 | SOLAR ARRAY |
| 06 | POWER DIST & CONTROL | | 2 WIRE POS, STRUCT RETURN |
| | | | |
| 04 | PROPULSION | (789) | |
| 01 | MAIN ENGINE (GFE) | 310 | PR-1(2) UPRATED OME ENGINE |
| 02 | MAIN ENGINE SUPPORT | 307 | PR-1(2) |
| 03 | ACPS ENGINE | 49 | ACPS-2 (8) |
| 04 | ACPS ENGINE SUPPORT | 123 | ACPS-2 (8) |
| | | | |
| 05 | ORBITER INTERFACE | (1650) | EXCLUDED FROM MAIN STG WT |
| 01 | STRUCTURES | | TBD |
| 02 | INTERFACE PANELS | | TBD |
| 03 | PURGE PROVISIONS | | TBD |
| 04 | ABORT PROVISIONS | | TBD |
| | | | |
| 06 | DROP TANKS | - | N/A |
| 01 | STRUCTURES | | |
| 02 | THERMAL INSULATION | | |
| 03 | PROPELLANT SUPPORT SYS | | |

**SIGNIFICANT DESIGN PARAMETERS:**

MAIN ENGINE: PROPELLANT MMH/$N_2O_4$ THRUST 12K

M.R. 2:1 $I_{SP}$ 325

PLANNED OPERATIONAL SPAN-FROM ___ TO ___

PROPELLANT LOAD FACTOR ( $\lambda$ ) ___

DESIGN LIFE ___ MISSIONS

AUTONOMY LEVEL 2

**NOTES:**

① SUBSYSTEM(S) CONFIG MAY BE DESIGNATED BY A CODE WITH DETAILS ON SUPPL CONFIG DATA SHEETS

**PLANNED EVOLUTION:**

C01 IA2-8 (79D)
C02 IA2-8 (79D) TO IA2-7 (79R)
C03 IA2-8 (79D) TO IA2-4 (83D) TO IA2-3 (83R)
C03 IA2-8 (79D TO 83D) TO IA2-7 (83R)
C05 IA2-8 (79D) TO IA2-4 (83D) TO IA2-3 (83R)
C06 IA2-8 (79D) TO IA2-7 (79R) TO IA2-4 (83D) TO IA2-3 (83R)

CONFIGURATION SUMMARY SHEET
SPACE TUG SYSTEM STUDY

CONFIG NO. IA2-8, SINGLE STG

NASA CO NO. 1,2,3,5 & 6

DATE 6-22-73

MARTIN MARIETTA

CONFIGURATION PROFILE SKETCH

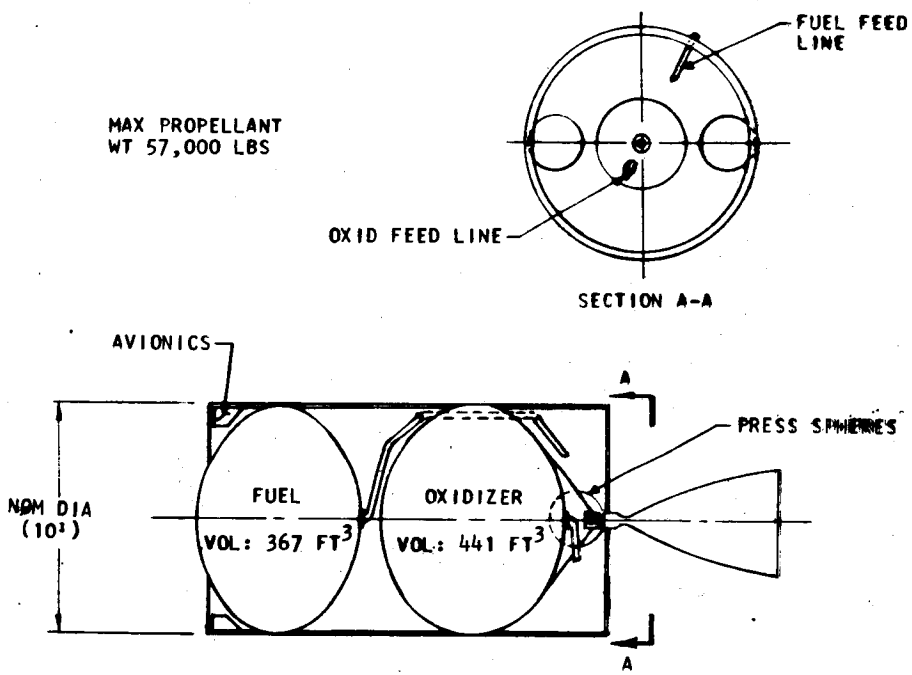


SPACE TUG VEHICLE SUBSYSTEM DEFINITION

| WBS NO. 320-03 | NOMENCLATURE | WT. | SUBSYSTEM CONFIG ① |
|---|---|---|---|
| | SPACE TUG VEH MAIN STG | 2422 | DRY WT +10% CONTINGENCY |
| 01 | STRUCTURES | (690) | |
| 01 | FUEL TANK & SUPPORT | 105 | AS INDICATED (TITANIUM) |
| 02 | OX TANK & SUPPORT | 225 | AS INDICATED (TITANIUM) |
| 03 | BODY STRUCTURE | 204 | AS INDICATED (COMPOSITE) |
| 04 | THRUST STRUCTURE | 20 | AS INDICATED (COMPOSITE) |
| 05 | METEOROID SHIELD | 36 | |
| 06 | PAYLOAD INTERFACE | 80 | |
| | | | |
| 02 | THERMAL CONTROL | (111) | TH-1 |
| 01 | FUEL TANK INSULATION | 81 | MLI (INCLUDES ALL MAIN STG MLI) |
| 02 | OX TANK INSULATION | | |
| 03 | PURGE SYSTEM | - | N/A |
| 04 | THERMAL CONTROL SYSTEM | 30 | HTRS, PAINT, ACPS RADIATION SHLD |
| | | | |
| 03 | AVIONICS | (647) | AV-2 |
| 01 | DATA MANAGEMENT | 60 | FLEXIBLE SIGNAL INTERFACE (FSI) |
| 02 | GN&C | | |
| | GUID & NAV | 93 | IMUS, STAR TRACKERS & SLR |
| | CONTROLS | 20 | TANDEM INT ACT PLUS ACPS CNTLS |
| | DOCKING SYSTEM | 90 | DOCKING HARDWARE |
| 03 | COMMUNICATIONS | 34 | S-BAND |
| 04 | INSTRUMENTATION | - | WT INCLUDED WITH DATA MGMT |
| 05 | ELECTRICAL POWER | 350 | SOLAR ARRAY |
| 06 | POWER DIST & CONTROL | | 2 WIRE POS, STRUCT RETURN |
| | | | |
| 04 | PROPULSION | (774) | |
| 01 | MAIN ENGINE (GFE) | 295 | PR-1(2) E344 ENGINE |
| 02 | MAIN ENGINE SUPPORT | 307 | PR-1(2) |
| 03 | ACPS ENGINE | 49 | ACPS-2 (8) |
| 04 | ACPS ENGINE SUPPORT | 123 | ACPS-2 (8) |
| | | | |
| 05 | ORBITER INTERFACE | (1650) | EXCLUDED FROM MAIN STG WT |
| 01 | STRUCTURES | | TBD |
| 02 | INTERFACE PANELS | | TBD |
| 03 | PURGE PROVISIONS | | TBD |
| 04 | ABORT PROVISIONS | | TBD |
| | | | |
| 06 | DROP TANKS | - | N/A |
| 01 | STRUCTURES | | |
| 02 | THERMAL INSULATION | | |
| 03 | PROPELLANT SUPPORT SYS | | |

SIGNIFICANT DESIGN PARAMETERS:

MAIN ENGINE: PROPELLANT MMH/$N_2O_4$ THRUST 12K

M.R. 2:1 $I_{SP}$ 344.7

PLANNED OPERATIONAL SPAN-FROM ___ TO ___

PROPELLANT LOAD FACTOR ( $\lambda$ ) ___

DESIGN LIFE ___ MISSIONS

AUTONOMY LEVEL 2

NOTES:

① SUBSYSTEM(S) CONFIG MAY BE DESIGNATED BY A CODE WITH DETAILS ON SUPPL CONFIG DATA SHEETS

PLANNED EVOLUTION:

C04 IA2-10 (83D) TO IA2-9 (83R)
C07 IA2-10 (83D) TO IA2-9 (83R)

CONFIGURATION SUMMARY SHEET
SPACE TUG SYSTEM STUDY

CONFIG NO. IA2-9, SINGLE STG

NASA CO NO. 4 & 7

DATE 6-22-73

MARTIN MARIETTA

CONFIGURATION PROFILE SKETCH

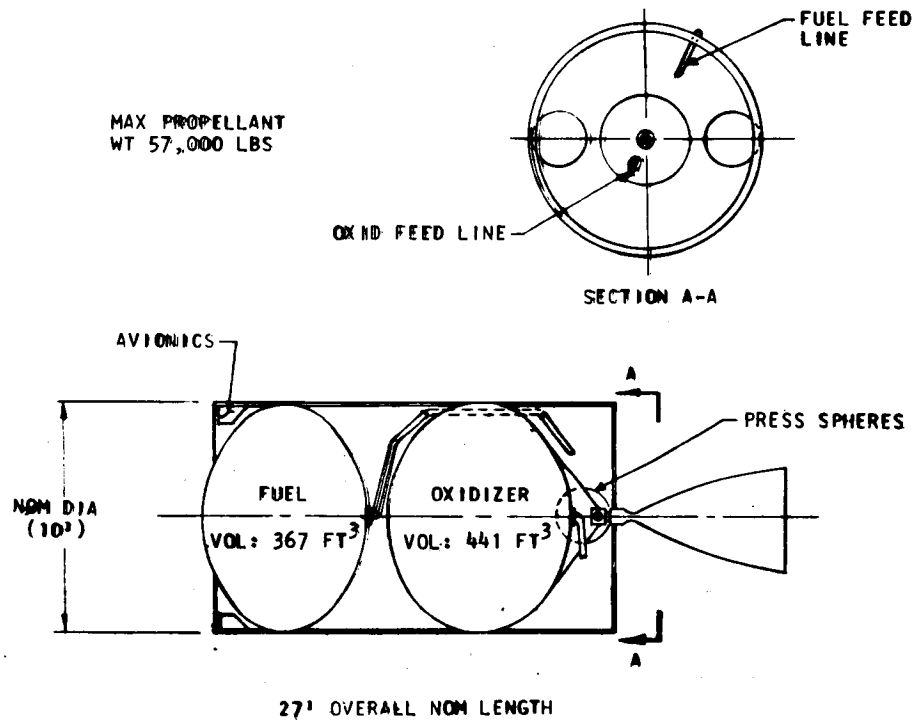


SPACE TUG VEHICLE SUBSYSTEM DEFINITION

| WBS NO. 320-03 | NOMENCLATURE | WT. | SUBSYSTEM CONFIG ① |
|---|---|---|---|
| | SPACE TUG VEH MAIN STG | 2210 | DRY WT +10% CONTINGENCY |
| 01 | STRUCTURES | (620) | |
| 01 | FUEL TANK & SUPPORT | 105 | AS INDICATED (TITANIUM) |
| 02 | OX TANK & SUPPORT | 225 | AS INDICATED (TITANIUM) |
| 03 | BODY STRUCTURE | 204 | AS INDICATED (COMPOSITE) |
| 04 | THRUST STRUCTURE | 20 | AS INDICATED (COMPOSITE) |
| 05 | METEOROID SHIELD | 36 | |
| 06 | PAYLOAD INTERFACE | 30 | |
| | | | |
| 02 | THERMAL CONTROL | (111) | TH-1 |
| 01 | FUEL TANK INSULATION | 81 | MLI (INCLUDES ALL MAIN STG MLI) |
| 02 | OX TANK INSULATION | | |
| 03 | PURGE SYSTEM | - | N/A |
| 04 | THERMAL CONTROL SYSTEM | 30 | HTRS, PAINT, ACPS RADIATION SHL |
| | | | |
| 03 | AVIONICS | (504) | AV-3 |
| 01 | DATA MANAGEMENT | 60 | FLEXIBLE SIGNAL INTERFACE (FSI |
| 02 | GN&C | | |
| | GUID & NAV | 40 | IMUS & STAR TRACKERS |
| | CONTROLS | 20 | TANDEM INT ACT PLUS ACPS CNTLS |
| | DOCKING SYSTEM | - | N/A |
| 03 | COMMUNICATIONS | 34 | S-BAND |
| 04 | INSTRUMENTATION | - | WT INCLUDED WITH DATA MGMT |
| 05 | ELECTRICAL POWER | 350 | SOLAR ARRAY |
| 06 | POWER DIST & CONTROL | | 2 WIRE POS, STRUCT RETURN |
| | | | |
| 04 | PROPULSION | (774) | |
| 01 | MAIN ENGINE (GFE) | 295 | PR-1(2) E344 ENGINE |
| 02 | MAIN ENGINE SUPPORT | 307 | PR-1(2) |
| 03 | ACPS ENGINE | 49 | ACPS-2 (8) |
| 04 | ACPS ENGINE SUPPORT | 123 | ACPS-2 (8) |
| | | | |
| 05 | ORBITER INTERFACE | (1650) | EXCLUDED FROM MAIN STG WT |
| 01 | STRUCTURES | | TBD |
| 02 | INTERFACE PANELS | | TBD |
| 03 | PURGE PROVISIONS | | TBD |
| 04 | ABORT PROVISIONS | | TBD |
| | | | |
| 06 | DROP TANKS | - | N/A |
| 01 | STRUCTURES | | |
| 02 | THERMAL INSULATION | | |
| 03 | PROPELLANT SUPPORT SYS | | |

SIGNIFICANT DESIGN PARAMETERS:

MAIN ENGINE: PROPELLANT $MMH/N_2O_4$ THRUST 12K

M.R. 2:1 $I_{SP}$ 344.7

PLANNED OPERATIONAL SPAN-FROM ___ TO ___

PROPELLANT LOAD FACTOR ( λ ) ___

DESIGN LIFE ___ MISSIONS

AUTONOMY LEVEL 2

NOTES:

① SUBSYSTEM(S) CONFIG MAY BE DESIGNATED BY A CODE WITH DETAILS ON SUPPL CONFIG DATA SHEETS

PLANNED EVOLUTION:

C04 IA2-10 (83D) TO IA2-9 (83R)

C07 IA2-10 (83D) TO IA2-9 (83R)

CONFIGURATION SUMMARY SHEET
SPACE TUG SYSTEM STUDY

CONFIG NO. IA2-10, SINGLE STG

NASA CO NO. 4 & 7

DATE 6-22-73

MARTIN MARIETTA

## CONFIGURATION PROFILE SKETCH

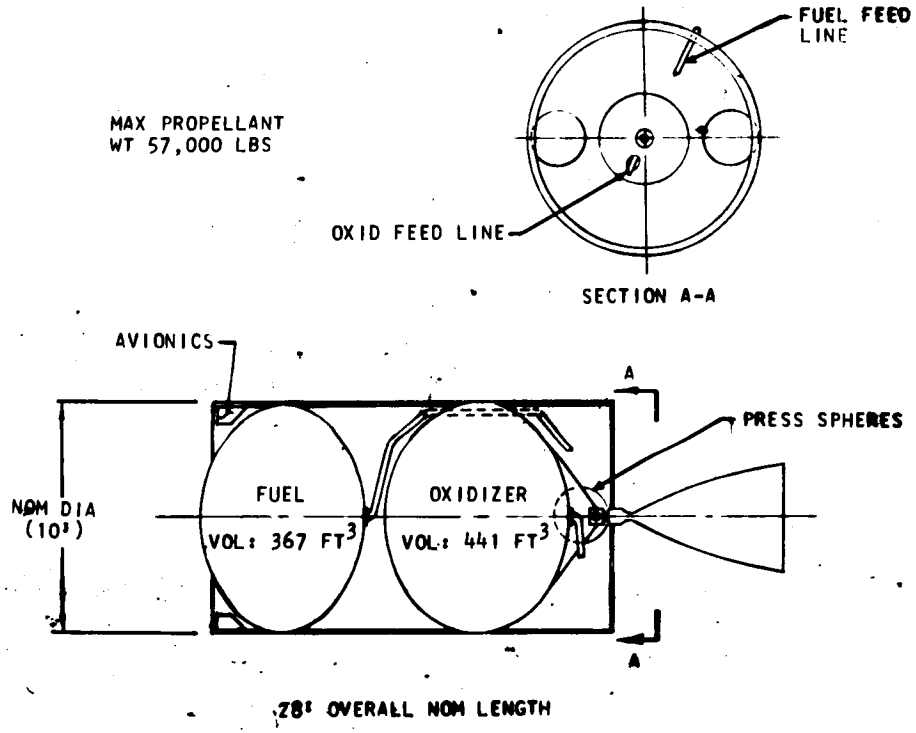


## SPACE TUG VEHICLE SUBSYSTEM DEFINITION

| WBS NO. 320-03 | NOMENCLATURE | WT. | SUBSYSTEM CONFIG ① |
|---|---|---|---|
| | SPACE TUG VEH MAIN STG | 2831 | DRY WT +10% CONTINGENCY |
| 01 | STRUCTURES | (815) | |
| 01 | FUEL TANK & SUPPORT | 131 | AS INDICATED (ALUM) |
| 02 | OX TANK & SUPPORT | 281 | AS INDICATED (ALUM) |
| 03 | BODY STRUCTURE | 309 | AS INDICATED (ALUM) |
| 04 | THRUST STRUCTURE | 28 | AS INDICATED (ALUM & HONEYCOMB) |
| 05 | METEOROID SHIELD | 36 | |
| 06 | PAYLOAD INTERFACE | 30 | |
| | | | |
| 02 | THERMAL CONTROL | (111) | TH-1 |
| 01 | FUEL TANK INSULATION | 81 | MLI (INCLUDES ALL MAIN STG MLI) |
| 02 | OX TANK INSULATION | | |
| 03 | PURGE SYSTEM | — | N/A |
| 04 | THERMAL CONTROL SYSTEM | 30 | HTRS, PAINT, ACPS RADIATION SHLD |
| | | | |
| 03 | AVIONICS | (859) | AV-9 |
| 01 | DATA MANAGEMENT | 60 | FLEXIBLE SIGNAL INTERFACE (FSI) |
| 02 | GN&C | | |
| | GUID & NAV | 70 | IMUS & STAR TRACKERS |
| | CONTROLS | 20 | TANDEM INT ACT PLUS ACPS CNTLS |
| | DOCKING SYSTEM | — | N/A |
| 03 | COMMUNICATIONS | 34 | S-BAND |
| 04 | INSTRUMENTATION | — | WT INCLUDED WITH DATA MGMT |
| 05 | ELECTRICAL POWER | 675 | BATTERIES |
| 06 | POWER DIST & CONTROL | | |
| | | | |
| 04 | PROPULSION | (789) | |
| 01 | MAIN ENGINE (GFE) | 310 | PR-1(2), UPRATED OME ENGINE |
| 02 | MAIN ENGINE SUPPORT | 307 | PR-1(2) |
| 03 | ACPS ENGINE | 49 | ACPS-2 (8) |
| 04 | ACPS ENGINE SUPPORT | 123 | ACPS-2 (8) |
| | | | |
| 05 | ORBITER INTERFACE | (1650) | |
| 01 | STRUCTURES | | TBD |
| 02 | INTERFACE PANELS | | TBD |
| 03 | PURGE PROVISIONS | | TBD |
| 04 | ABORT PROVISIONS | | TBD |
| | | | |
| 06 | DROP TANKS | — | N/A |
| 01 | STRUCTURES | | |
| 02 | THERMAL INSULATION | | |
| 03 | PROPELLANT SUPPORT SYS | | |

**SIGNIFICANT DESIGN PARAMETERS:**

MAIN ENGINE: PROPELLANT MMH/$N_2O_4$ THRUST 12K

M.R. 2:1 $I_{SP}$ 325

PLANNED OPERATIONAL SPAN-FROM ___ TO ___

PROPELLANT LOAD FACTOR ( λ ) ___

DESIGN LIFE ___ MISSIONS

AUTONOMY LEVEL 2

**NOTES:**

① SUBSYSTEM(S) CONFIG MAY BE DESIGNATED BY A CODE WITH DETAILS ON SUPPL CONFIG DATA SHEETS

**PLANNED EVOLUTION:**

C01 1A2-11 (79D)

CONFIGURATION SUMMARY SHEET
SPACE TUG SYSTEM STUDY

CONFIG NO. 1A2-11, SINGLE STAGE

NASA CO NO. 1

DATE 6-29-73

MARTIN MARIETTA

CONFIGURATION PROFILE SKETCH

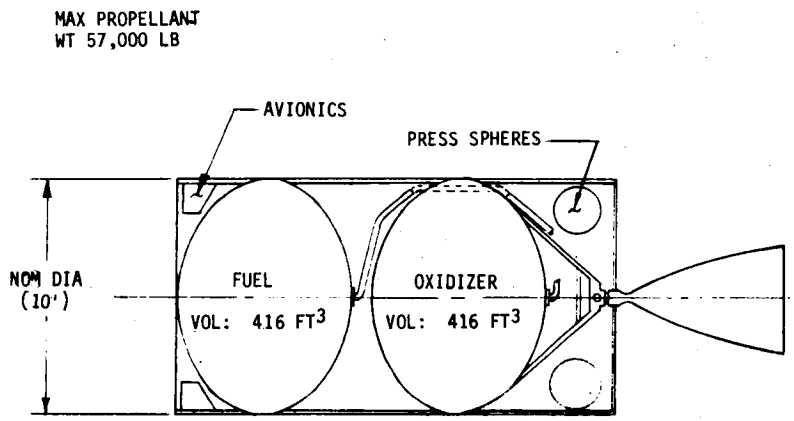


31' OVERALL NOM LENGTH

SPACE TUG VEHICLE SUBSYSTEM DEFINITION

| WBS NO. 320-03 | NOMENCLATURE | WT. | SUBSYSTEM CONFIG ① |
|---|---|---|---|
| | SPACE TUG VEH MAIN STG | 2448 | DRY WT +10% CONTINGENCY |
| 01 | STRUCTURES | (851) | |
| 01 | FUEL TANK & SUPPORT | 174 | AS INDICATED (ALUM) |
| 02 | OX TANK & SUPPORT | 244 | AS INDICATED (ALUM) |
| 03 | BODY STRUCTURE | 339 | AS INDICATED(ALUM & HONEYCOMB) |
| 04 | THRUST STRUCTURE | 28 | AS INDICATED (ALUM) |
| 05 | METEOROID SHIELD | 36 | |
| 06 | PAYLOAD INTERFACE | 30 | |
| | | | |
| 02 | THERMAL CONTROL | (111) | TH-1 |
| 01 | FUEL TANK INSULATION | 81 | MLI(INCLUDE ALL MAIN STG MLI) |
| 02 | OX TANK INSULATION | | |
| 03 | PURGE SYSTEM | - | |
| 04 | THERMAL CONTROL SYSTEM | 30 | HTRS,PAINT,ACPS RADIATION SHLD |
| | | | |
| 03 | AVIONICS | (534) | AV-1 |
| 01 | DATA MANAGEMENT | 60 | FLEXIBLE SIGNAL INTERFACE(FSI) |
| 02 | GN&C | | |
| | GUID & NAV | 70 | IMUS & STAR TRACKERS |
| | CONTROLS | 20 | TANDEM INT ACT PLUS ACPS CNTLS |
| | DOCKING SYSTEM | - | N/A |
| 03 | COMMUNICATIONS | 34 | S-BAND |
| 04 | INSTRUMENTATION | - | WT INCLUDED WITH DATA MGMT |
| 05 | ELECTRICAL POWER | 350 | SOLAR ARRAY |
| 06 | POWER DIST & CONTROL | | 2 WIRE POS, STRUCT RETURN |
| | | | |
| 04 | PROPULSION | (729) | |
| 01 | MAIN ENGINE (GFE) | 250 | PR-1(2),BASIC"AS IS"OME ENGINE |
| 02 | MAIN ENGINE SUPPORT | 307 | PR-1(2) |
| 03 | ACPS ENGINE | 49 | ACPS-2 (8) |
| 04 | ACPS ENGINE SUPPORT | 123 | ACPS-2 (8) |
| | | | |
| 05 | ORBITER INTERFACE | (1650) | EXCLUDED FROM MAIN STG WT |
| 01 | STRUCTURES | | TBD |
| 02 | INTERFACE PANELS | | TBD |
| 03 | PURGE PROVISIONS | | TBD |
| 04 | ABORT PROVISIONS | | TBD |
| | | | |
| 06 | DROP TANKS | - | N/A |
| 01 | STRUCTURES | | |
| 02 | THERMAL INSULATION | | |
| 03 | PROPELLANT SUPPORT SYS | | |

SIGNIFICANT DESIGN PARAMETERS:

MAIN ENGINE: PROPELLANT MMH/$N_2O_4$ THRUST 6K

M.R. 1.65:1 $I_{SP}$ 324

PLANNED OPERATIONAL SPAN-FROM ___ TO ___

PROPELLANT LOAD FACTOR ( λ ) ___

DESIGN LIFE ___ MISSIONS

AUTONOMY LEVEL 2

NOTES:

① SUBSYSTEM(S) CONFIG MAY BE DESIGNATED BY A CODE WITH DETAILS ON SUPPL CONFIG DATA SHEETS

PLANNED EVOLUTION:

C01 1A3-1 (79D)

CONFIGURATION SUMMARY SHEET
SPACE TUG SYSTEM STUDY

CONFIG NO. 1A3-1, SINGLE STG

NASA CO NO. 1

DATE 6-26-73

MARTIN MARIETTA

## CONFIGURATION PROFILE SKETCH

MAX PROPELLANT WT 57,000 LB

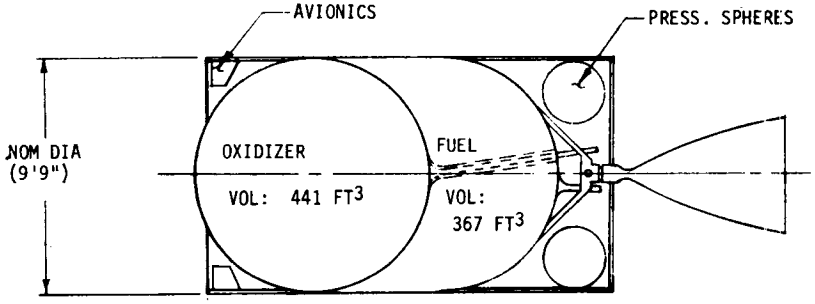


25'9" OVERALL NOM LENGTH

## SPACE TUG VEHICLE SUBSYSTEM DEFINITION

| WBS NO. 320-03 | NOMENCLATURE | WT. | SUBSYSTEM CONFIG ① |
|---|---|---|---|
| | SPACE TUG VEH MAIN STG | 2401 | DRY WT & 10% CONTINGENCY |
| 01 | STRUCTURES | (619) | |
| 01 | FUEL TANK & SUPPORT | 107 | AS INDICATED (TITANIUM) |
| 02 | OX TANK & SUPPORT | 123 | AS INDICATED (TITANIUM) |
| 03 | BODY STRUCTURE | 213 | AS INDICATED (COMPOSITE) |
| 04 | THRUST STRUCTURE | 31 | AS INDICATED (COMPOSITE) |
| 05 | METEOROID SHIELD | 65 | |
| 06 | PAYLOAD INTERFACE | 80 | |
| | | | |
| 02 | THERMAL CONTROL | (196) | TH-3 |
| 01 | FUEL TANK INSULATION | 81 | MLI (INCLUDES ALL MAIN STG MLI) |
| 02 | OX TANK INSULATION | | |
| 03 | PURGE SYSTEM | – | N/A |
| 04 | THERMAL CONTROL SYSTEM | 115 | HEATERS, PAINT, ACPS RADN SHLD |
| | | | |
| 03 | AVIONICS | (657) | AV-7 |
| 01 | DATA MANAGEMENT | 60 | FLEXIBLE SIGNAL INTERFACE (FSI) |
| 02 | GN&C | | |
| | GUID & NAV | 93 | IMU'S, STAR TRACKERS & SLR |
| | CONTROLS | 20 | TANDEM INT. ACT. PLUS ACPS CONT |
| | DOCKING SYSTEM | 90 | DOCKING HARDWARE |
| 03 | COMMUNICATIONS | 34 | S-BAND |
| 04 | INSTRUMENTATION | – | WT INCLUDED WITH DATA MGMT |
| 05 | ELECTRICAL POWER | 360 | FUEL CELL |
| 06 | POWER DIST & CONTROL | | 2 WIRE POS, STRUCT, RETURN |
| | | | |
| 04 | PROPULSION | (711) | |
| 01 | MAIN ENGINE (GFE) | 270 | PR-6(1), E338 ENGINE |
| 02 | MAIN ENGINE SUPPORT | 269 | PR-6(1) |
| 03 | ACPS ENGINE | 49 | ACPS-2 (8) |
| 04 | ACPS ENGINE SUPPORT | 123 | ACPS-2 (8) |
| | | | |
| 05 | ORBITER INTERFACE | (1650) | EXCLUDED |
| 01 | STRUCTURES | | TBD |
| 02 | INTERFACE PANELS | | TBD |
| 03 | PURGE PROVISIONS | | TBD |
| 04 | ABORT PROVISIONS | | TBD |
| | | | |
| 06 | DROP TANKS | – | N/A |
| 01 | STRUCTURES | | |
| 02 | THERMAL INSULATION | | |
| 03 | PROPELLANT SUPPORT SYS | | |

**SIGNIFICANT DESIGN PARAMETERS:**

MAIN ENGINE: PROPELLANT MMH/$N_2O_4$ THRUST 12K

M.R. 2:1 $I_{SP}$ 338.1

PLANNED OPERATIONAL SPAN-FROM ___ TO ___

PROPELLANT LOAD FACTOR ( λ ) ___

DESIGN LIFE ___ MISSIONS

AUTONOMY LEVEL 2

**NOTES:**

① SUBSYSTEM(S) CONFIG MAY BE DESIGNATED BY A CODE WITH DETAILS ON SUPPL CONFIG DATA SHEETS

**PLANNED EVOLUTION:**

C04 ID-2 (83D) TO ID-1 (83R)
C07 ID-2 (83D) TO ID-1 (83R)

CONFIGURATION SUMMARY SHEET
SPACE TUG SYSTEM STUDY

CONFIG NO. ID-1, SINGLE STG

NASA CO NO. 4 & 7

DATE 6/22/73

MARTIN MARIETTA

CONFIGURATION PROFILE SKETCH

MAX PROPELLANT WT 57,000 LB

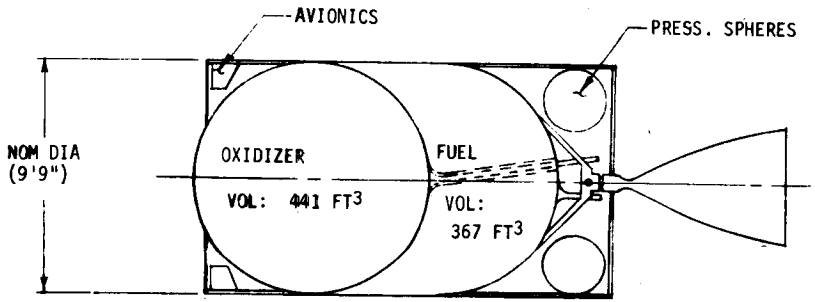


25'9" OVERALL NOM LENGTH

SPACE TUG VEHICLE SUBSYSTEM DEFINITION

| WBS NO. 320-03 | NOMENCLATURE | WT. | SUBSYSTEM CONFIG ① |
|---|---|---|---|
| | SPACE TUG VEH MAIN STG | 2189 | DRY WT & 10% CONTINGENCY |
| 01 | STRUCTURES | (569) | |
| 01 | FUEL TANK & SUPPORT | 107 | AS INDICATED (TITANIUM) |
| 02 | OX TANK & SUPPORT | 123 | AS INDICATED (TITANIUM) |
| 03 | BODY STRUCTURE | 213 | AS INDICATED (COMPOSITE) |
| 04 | THRUST STRUCTURE | 31 | AS INDICATED (COMPOSITE) |
| 05 | METEOROID SHIELD | 65 | |
| 06 | PAYLOAD INTERFACE | 30 | |
| 02 | THERMAL CONTROL | (196) | TH-3 |
| 01 | FUEL TANK INSULATION | 81 | MLI (INCLUDES ALL MAIN STG. MLI) |
| 02 | OX TANK INSULATION | | |
| 03 | PURGE SYSTEM | – | N/A |
| 04 | THERMAL CONTROL SYSTEM | 115 | HTRS, PAINT, ACPS RDTN SHIELD |
| 03 | AVIONICS | (514) | AV-8 |
| 01 | DATA MANAGEMENT | 60 | FLEXIBLE SIGNAL INTERFACE (FSI |
| 02 | GN&C | | |
| | GUID & NAV | 40 | IMU'S & STAR TRACKERS |
| | CONTROLS | 20 | TANDEM INT. ACT. PLUS ACPS CONT |
| | DOCKING SYSTEM | – | N/A |
| 03 | COMMUNICATIONS | 34 | S-BAND |
| 04 | INSTRUMENTATION | – | WT INCLUDED WITH DATA MGMT |
| 05 | ELECTRICAL POWER | 360 | FUEL CELL |
| 06 | POWER DIST & CONTROL | | 2 WIRE POS. STRUCT. RETURN |
| 04 | PROPULSION | (711) | |
| 01 | MAIN ENGINE (GFE) | 270 | PR-6(1). E338 ENGING |
| 02 | MAIN ENGINE SUPPORT | 269 | PR-6(1) |
| 03 | ACPS ENGINE | 49 | ACPS-2 (8) |
| 04 | ACPS ENGINE SUPPORT | 123 | ACPS-2 (8) |
| 05 | ORBITER INTERFACE | (1650) | EXCLUDED |
| 01 | STRUCTURES | | TBD |
| 02 | INTERFACE PANELS | | TBD |
| 03 | PURGE PROVISIONS | | TBD |
| 04 | ABORT PROVISIONS | | TBD |
| 06 | DROP TANKS | – | N/A |
| 01 | STRUCTURES | | |
| 02 | THERMAL INSULATION | | |
| 03 | PROPELLANT SUPPORT SYS | | |

SIGNIFICANT DESIGN PARAMETERS:

MAIN ENGINE: PROPELLANT $MMH/N_2O_4$ THRUST 12K

M.R. 2:1 $I_{SP}$ 338.1

PLANNED OPERATIONAL SPAN-FROM ___ TO ___

PROPELLANT LOAD FACTOR ( $\lambda$ ) ___

DESIGN LIFE ___ MISSIONS

AUTONOMY LEVEL 2

NOTES:

① SUBSYSTEM(S) CONFIG MAY BE DESIGNATED BY A CODE WITH DETAILS ON SUPPL CONFIG DATA SHEETS

PLANNED EVOLUTION:

C04 ID-2 (83D) TO ID-1 (83R)
C07 ID-2 (83D) TO ID-1 (83R)

CONFIGURATION SUMMARY SHEET
SPACE TUG SYSTEM STUDY

CONFIG NO. ID-2, SINGLE STG

NASA CO NO. 4 & 7

DATE 6/22/72

MARTIN MARIETTA

## CONFIGURATION PROFILE SKETCH

MAX PROPELLANT WT 57,000 LB

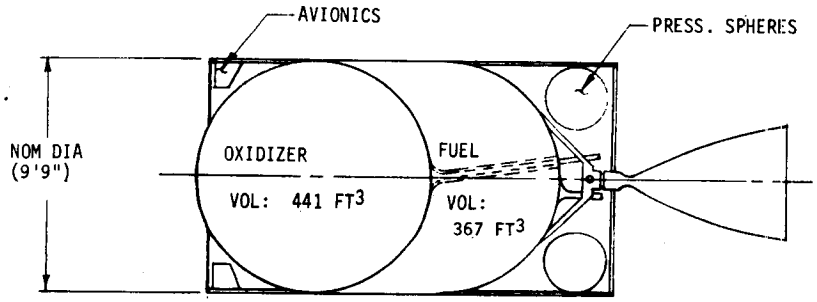


25'9" OVERALL NOM LENGTH

## SPACE TUG VEHICLE SUBSYSTEM DEFINITION

| WBS NO. 320-03 | NOMENCLATURE | WT. | SUBSYSTEM CONFIG ① |
|---|---|---|---|
| | SPACE TUG VEH MAIN STG | 2605 | DRY WT. & 10% CONTINGENCY |
| 01 | STRUCTURES | (804) | |
| 01 | FUEL TANK & SUPPORT | 168 | AS INDICATED (ALUM.) |
| 02 | OX TANK & SUPPORT | 178 | AS INDICATED (ALUM.) |
| 03 | BODY STRUCTURE | 274 | AS INDICATED (ALUM. & HONEYCOMB) |
| 04 | THRUST STRUCTURE | 39 | AS INDICATED (ALUM.) |
| 05 | METEOROID SHIELD | 65 | |
| 06 | PAYLOAD INTERFACE | 80 | |
| | | | |
| 02 | THERMAL CONTROL | (196) | TH-3 |
| 01 | FUEL TANK INSULATION | 81 | MLI (INCLUDES ALL MAIN STG. MLI) |
| 02 | OX TANK INSULATION | | |
| 03 | PURGE SYSTEM | — | N/A |
| 04 | THERMAL CONTROL SYSTEM | 115 | HEATERS, PAINT, ACPS RADN SHIELD |
| | | | |
| 03 | AVIONICS | (657) | AV-7 |
| 01 | DATA MANAGEMENT | 60 | FLEXIBLE SIGNAL INTERFACE (FSI) |
| 02 | GN&C | | |
| | GUID & NAV | 93 | IMU'S, STAR TRACKERS & SLR |
| | CONTROLS | 20 | TANDEM INT. ACT. PLUS ACPS CTRLS |
| | DOCKING SYSTEM | 90 | DOCKING HARDWARE |
| 03 | COMMUNICATIONS | 34 | S-BAND |
| 04 | INSTRUMENTATION | — | WT INCLUDED WITH DATA MGMT |
| 05 | ELECTRICAL POWER | 360 | FUEL CELL |
| 06 | POWER DIST & CONTROL | | 2 WIRE POS. STRUCT. RETURN |
| | | | |
| 04 | PROPULSION | (711) | |
| 01 | MAIN ENGINE (GFE) | 270 | PR-6(1), E338 ENGINE |
| 02 | MAIN ENGINE SUPPORT | 269 | PR-6(1) |
| 03 | ACPS ENGINE | 49 | ACPS-2 (8) |
| 04 | ACPS ENGINE SUPPORT | 123 | ACPS-2 (8) |
| | | | |
| 05 | ORBITER INTERFACE | (1650) | EXCLUDED |
| 01 | STRUCTURES | | TBD |
| 02 | INTERFACE PANELS | | TBD |
| 03 | PURGE PROVISIONS | | TBD |
| 04 | ABORT PROVISIONS | | TBD |
| | | | |
| 06 | DROP TANKS | — | N/A |
| 01 | STRUCTURES | | |
| 02 | THERMAL INSULATION | | |
| 03 | PROPELLANT SUPPORT SYS | | |

**SIGNIFICANT DESIGN PARAMETERS:**

MAIN ENGINE: PROPELLANT MMH/$N_2O_4$ THRUST 12K

M.R. 2:1 $I_{SP}$ 338.1

PLANNED OPERATIONAL SPAN-FROM ___ TO ___

PROPELLANT LOAD FACTOR ( λ ) ___

DESIGN LIFE ___ MISSIONS

AUTONOMY LEVEL 2

**NOTES:**

① SUBSYSTEM(S) CONFIG MAY BE DESIGNATED BY A CODE WITH DETAILS ON SUPPL CONFIG DATA SHEETS

**PLANNED EVOLUTION:**

C04 ID-4(83D) TO ID-3(83R)

C07 ID-4 (83D) TO ID-3 (83R)

CONFIGURATION SUMMARY SHEET
SPACE TUG SYSTEM STUDY

CONFIG NO. ID-3, SINGLE STG

NASA CO NO. 4 & 7

DATE 6/22/73

MARTIN MARIETTA

## CONFIGURATION PROFILE SKETCH

MAX PROPELLANT WT 57,000 LB

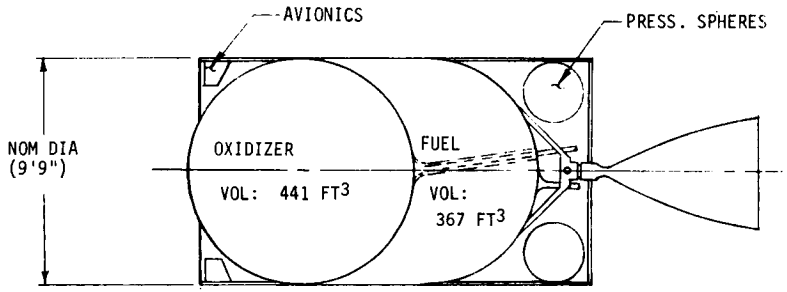


25'9" OVERALL NOM LENGTH

## SPACE TUG VEHICLE SUBSYSTEM DEFINITION

| WBS NO. 320-03 | NOMENCLATURE | WT. | SUBSYSTEM CONFIG ① |
|---|---|---|---|
| | SPACE TUG VEH MAIN STG | 2391 | DRY WT. & 10% CONTINGENCY |
| 01 | STRUCTURES | (754) | |
| 01 | FUEL TANK & SUPPORT | 168 | AS INDICATED (ALUM.) |
| 02 | OX TANK & SUPPORT | 178 | AS INDICATED (ALUM.) |
| 03 | BODY STRUCTURE | 274 | AS INDICATED (ALUM. & HONEYCOMB) |
| 04 | THRUST STRUCTURE | 39 | AS INDICATED (ALUM.) |
| 05 | METEOROID SHIELD | 65 | |
| 06 | PAYLOAD INTERFACE | 30 | |
| | | | |
| 02 | THERMAL CONTROL | (196) | TH-3 |
| 01 | FUEL TANK INSULATION | 81 | MIL(INCLUDES ALL MAIN STG. MLI) |
| 02 | OX TANK INSULATION | | |
| 03 | PURGE SYSTEM | — | N/A |
| 04 | THERMAL CONTROL SYSTEM | 115 | HEATERS, PAINT, ACPS RADN SHLD |
| | | | |
| 03 | AVIONICS | (514) | AV-8 |
| 01 | DATA MANAGEMENT | 60 | FLEXIBLE SIGNAL INTERFACE (FSI) |
| 02 | GN&C | | |
| | GUID & NAV | 40 | IMU'S & STAR TRACKERS |
| | CONTROLS | 20 | TANDEM INT. ACT. PLUS ACPS CONT |
| | DOCKING SYSTEM | — | NA |
| 03 | COMMUNICATIONS | 34 | S-BAND |
| 04 | INSTRUMENTATION | | WT INCLUDED WITH DATA MGMT |
| 05 | ELECTRICAL POWER | 360 | FUEL CELL |
| 06 | POWER DIST & CONTROL | | 2 WIRE POS, STRUCT. RETURN |
| | | | |
| 04 | PROPULSION | (711) | |
| 01 | MAIN ENGINE (GFE) | 270 | PR-6(1), E338 ENGINE |
| 02 | MAIN ENGINE SUPPORT | 269 | PR-6(1) |
| 03 | ACPS ENGINE | 49 | ACPS-2 (8) |
| 04 | ACPS ENGINE SUPPORT | 123 | ACPS-2 (8) |
| | | | |
| 05 | ORBITER INTERFACE | (1650) | EXCLUDED |
| 01 | STRUCTURES | | TBD |
| 02 | INTERFACE PANELS | | TBD |
| 03 | PURGE PROVISIONS | | TBD |
| 04 | ABORT PROVISIONS | | TBD |
| | | | |
| 06 | DROP TANKS | — | N/A |
| 01 | STRUCTURES | | |
| 02 | THERMAL INSULATION | | |
| 03 | PROPELLANT SUPPORT SYS | | |

**SIGNIFICANT DESIGN PARAMETERS:**

MAIN ENGINE: PROPELLANT MMH/$N_2O_4$ THRUST 12K

M.R. 2:1 $I_{SP}$ 338.1

PLANNED OPERATIONAL SPAN-FROM ___ TO ___

PROPELLANT LOAD FACTOR ( λ ) ___

DESIGN LIFE ___ MISSIONS

AUTONOMY LEVEL 2

**NOTES:**

① SUBSYSTEM(S) CONFIG MAY BE DESIGNATED BY A CODE WITH DETAILS ON SUPPL CONFIG DATA SHEETS

**PLANNED EVOLUTION:**

C04 ID-4(83D) TO ID-3(83R)

C07 ID-4(83D) TO ID-3 (83R)

**CONFIGURATION SUMMARY SHEET**
**SPACE TUG SYSTEM STUDY**

CONFIG NO. ID-4, SINGLE STG

NASA CO NO. 4 & 7

DATE 6/22/73

MARTIN MARIETTA

CONFIGURATION PROFILE SKETCH

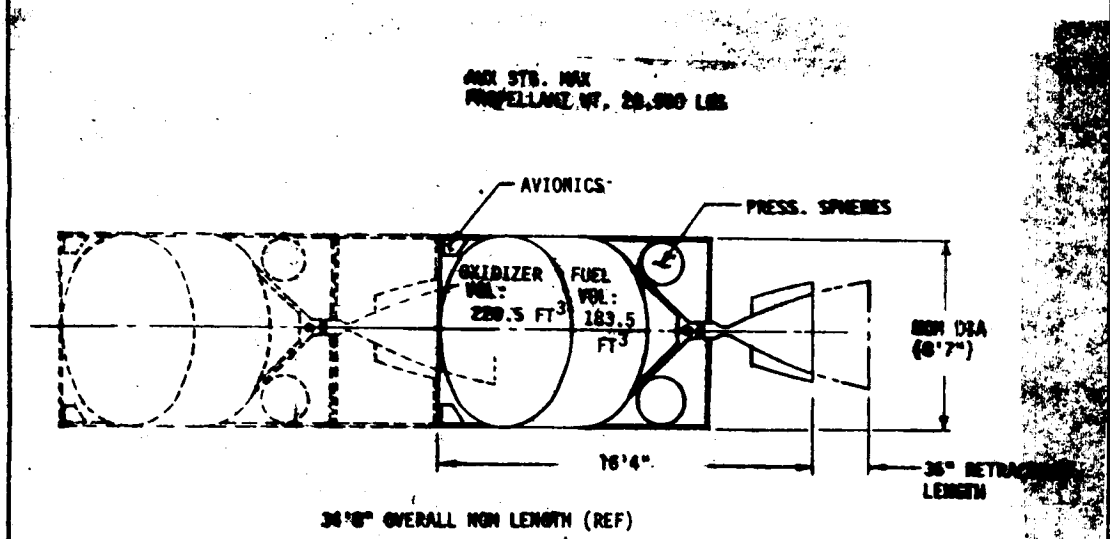


SPACE TUG VEHICLE SUBSYSTEM DEFINITION

| WBS NO. 320-03 | NOMENCLATURE | WT. | SUBSYSTEM CONFIG ① |
|---|---|---|---|
| | SPACE TUG VEH MAIN STG | 2424 | DRY WT +10% CONTINGENCY |
| 01 | STRUCTURES | (510) | |
| 01 | FUEL TANK & SUPPORT | 66 | AS INDICATED (TITANIUM) |
| 02 | OX TANK & SUPPORT | 106 | AS INDICATED (TITANIUM) |
| 03 | BODY STRUCTURE | 293 | AS INDICATED (COMPOSITE) |
| 04 | THRUST STRUCTURE | 12 | AS INDICATED (COMPOSITE) |
| 05 | METEOROID SHIELD | 33 | |
| 06 | PAYLOAD INTERFACE | — | N/A |
| 02 | THERMAL CONTROL | (92) | TH-4 |
| 01 | FUEL TANK INSULATION | 63 | MLI (INCLUDES ALL MAIN STG MLI) |
| 02 | OX TANK INSULATION | | |
| 03 | PURGE SYSTEM | — | N/A |
| 04 | THERMAL CONTROL SYSTEM | 29 | HTRS, PAINT, ACPS RADIATION SHLD |
| 03 | AVIONICS | (872) | AV-4 |
| 01 | DATA MANAGEMENT | 60 | FLEXIBLE SIGNAL INTERFACE (FSI |
| 02 | GN&C | | |
| | GUID & NAV | 258 | IMUS, STAR TRACKERS & RF RADAR |
| | CONTROLS | 20 | TANDEM INT ACT PLUS ACPS CNTL |
| | DOCKING SYSTEM | 150 | DOCKING HARDWARE |
| 03 | COMMUNICATIONS | 34 | S-BAND |
| 04 | INSTRUMENTATION | — | WT INCLUDED WITH DATA MGMT |
| 05 | ELECTRICAL POWER | 350 | SOLAR ARRAY |
| 06 | POWER DIST & CONTROL | | 2 WIRE POS, STRUCT RETURN |
| 04 | PROPULSION | (728) | |
| 01 | MAIN ENGINE (GFE) | 310 | PR-1(4), UPRATED OME ENGINE |
| 02 | MAIN ENGINE SUPPORT | 246 | PR-1(4) |
| 03 | ACPS ENGINE | 49 | ACPS-2 (8) |
| 04 | ACPS ENGINE SUPPORT | 123 | ACPS-2 (8) |
| 05 | ORBITER INTERFACE | (1700) | EXCLUDED FROM MAINT STG WT |
| 01 | STRUCTURES | | TBD |
| 02 | INTERFACE PANELS | | TBD |
| 03 | PURGE PROVISIONS | | TBD |
| 04 | ABORT PROVISIONS | | TBD |
| 06 | DROP TANKS | — | N/A |
| 01 | STRUCTURES | | |
| 02 | THERMAL INSULATION | | |
| 03 | PROPELLANT SUPPORT SYS | | |

SIGNIFICANT DESIGN PARAMETERS:

MAIN ENGINE: PROPELLANT $MMH/N_2O_4$ THRUST 12K

M.R. 2:1 $I_{SP}$ 325

PLANNED OPERATIONAL SPAN-FROM ___ TO ___

PROPELLANT LOAD FACTOR ( $\lambda$ ) ___

DESIGN LIFE ___ MISSIONS

AUTONOMY LEVEL 2

NOTES:

① SUBSYSTEM(S) CONFIG MAY BE DESIGNATED BY A CODE WITH DETAILS ON SUPPL CONFIG DATA SHEETS

PLANNED EVOLUTION:

CO2 IIIC-2 (79D) TO IIIC-1 (79R)
CO3 IIIC-2 (79D) TO (83D) TO IIIC-1 (83R)
CO6 IIIC-2 (79D) TO IIIC-1 (79R)
IIIC-6 (83D) TO IIIC-5 (83R)

CONFIGURATION SUMMARY SHEET
SPACE TUG SYSTEM STUDY

CONFIG NO. IIIC-1, MAIN STG

NASA CO NO. 2, 3 & 6

DATE 6-22-73

MARTIN MARIETTA

CONFIGURATION PROFILE SKETCH

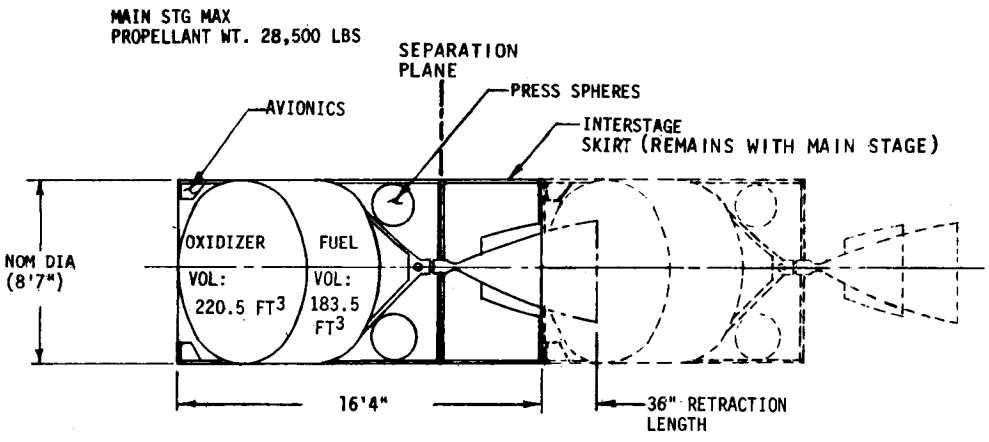


SPACE TUG VEHICLE SUBSYSTEM DEFINITION

| WBS NO. 320-04 | NOMENCLATURE | WT. | SUBSYSTEM CONFIG ① |
|---|---|---|---|
| | SPACE TUG VEH AUX STG | 2650 | DRY WT +10% CONTINGENCY |
| 01 | STRUCTURES | (560) | |
| 01 | FUEL TANK & SUPPORT | 66 | AS INDICATED (TITANIUM) |
| 02 | OX TANK & SUPPORT | 106 | AS INDICATED (TITANIUM) |
| 03 | BODY STRUCTURE | 263 | AS INDICATED (COMPOSITE) |
| 04 | THRUST STRUCTURE | 12 | AS INDICATED (COMPOSITE) |
| 05 | METEOROID SHIELD | 33 | |
| 06 | PAYLOAD INTERFACE | 80 | |
| | | | |
| 02 | THERMAL CONTROL | (92) | TH-4 |
| 01 | FUEL TANK INSULATION | 63 | MLI (INCLUDES ALL AUX STG MLI) |
| 02 | OX TANK INSULATION | | |
| 03 | PURGE SYSTEM | - | N/A |
| 04 | THERMAL CONTROL SYSTEM | 29 | HTRS, PAINT, ACPS RADIATION SHLD |
| | | | |
| 03 | AVIONICS | (872) | AV-4 |
| 01 | DATA MANAGEMENT | 60 | FLEXIBLE SIGNAL INTERFACE (FSI) |
| 02 | GN&C | | |
| | GUID & NAV | 258 | IMUS, STAR TRACKERS & RF RADAR |
| | CONTROLS | 20 | TANDEM INT ACT PLUS ACPS CNTLS |
| | DOCKING SYSTEM | 150 | DOCKING HARDWARE |
| 03 | COMMUNICATIONS | 34 | S-BAND |
| 04 | INSTRUMENTATION | - | WT INCLUDED WITH DATA MGMT |
| 05 | ELECTRICAL POWER | 350 | SOLAR ARRAY |
| 06 | POWER DIST & CONTROL | | 2 WIRE POS, STRUCT RETURN |
| | | | |
| 04 | PROPULSION | (728) | |
| 01 | MAIN ENGINE (GFE) | 310 | PR-1(4), UPRATED OME ENGINE |
| 02 | MAIN ENGINE SUPPORT | 246 | PR-1(4) |
| 03 | ACPS ENGINE | 49 | ACPS-2 (8) |
| 04 | ACPS ENGINE SUPPORT | 123 | ACPS-2 (8) |
| | | | |
| 05 | INTERSTAGE INTERFACE | (156) | |
| 01 | STRUCTURES | 126 | TITANIUM |
| 02 | SEPARATION SYSTEM | 30 | |
| | | | |
| 06 | DROP TANKS | - | N/A |
| 01 | STRUCTURES | | |
| 02 | THERMAL INSULATION | | |
| 03 | PROPELLANT SUPPORT SYS | | |

SIGNIFICANT DESIGN PARAMETERS:

MAIN ENGINE: PROPELLANT $MMH/N_2O_4$ THRUST 12K

M.R. 2:1 $I_{SP}$ 325

PLANNED OPERATIONAL SPAN-FROM ____ TO ____

PROPELLANT LOAD FACTOR ( $\lambda$ ) ____

DESIGN LIFE ____ MISSIONS

AUTONOMY LEVEL ____

NOTES:

① SUBSYSTEM(S) CONFIG MAY BE DESIGNATED BY A CODE WITH DETAILS ON SUPPL CONFIG DATA SHEETS

PLANNED EVOLUTION:

CO2 IIIC-2 (79D) TO IIIC-1 (79R)

CO3 IIIC-2 (79D TO 83D) TO IIIC-1 (83R)

CO6 IIIC-2 (79D) TO IIIC-1 (79R) TO IIIC-6 (83D) TO IIIC-5 (83R)

CONFIGURATION SUMMARY SHEET
SPACE TUG SYSTEM STUDY

CONFIG NO. IIIC-1, AUX STG

NASA CO NO. 2, 3 & 6

DATE 6-22-73

MARTIN MARIETTA

CONFIGURATION PROFILE SKETCH

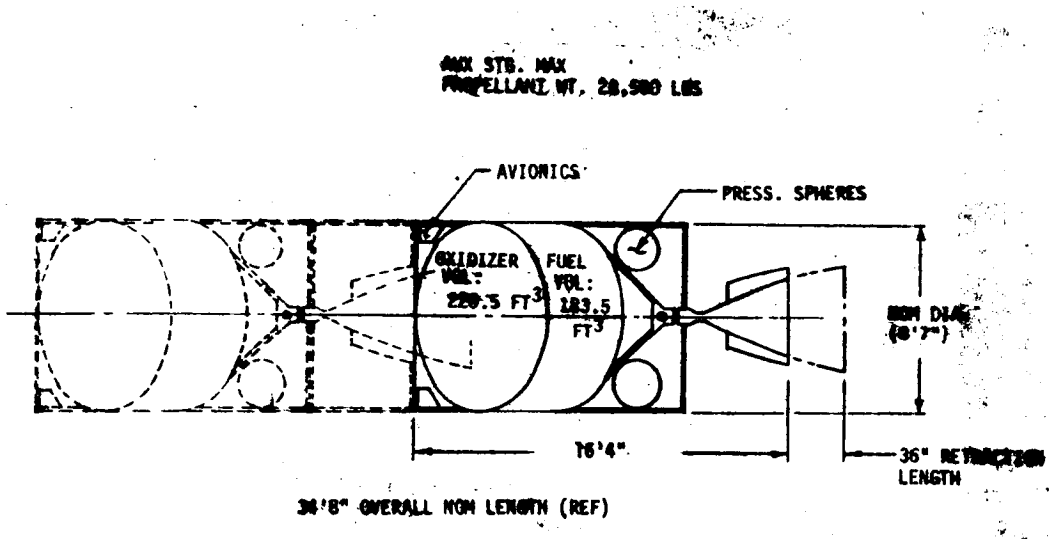


SPACE TUG VEHICLE SUBSYSTEM DEFINITION

| WBS NO. 320-03 | NOMENCLATURE | WT. | SUBSYSTEM CONFIG ① |
|---|---|---|---|
| | SPACE TUG VEH MAIN STG | 2052 | DRY WT +10% CONTINGENCY |
| 01 | STRUCTURES | (510) | |
| 01 | FUEL TANK & SUPPORT | 66 | AS INDICATED (TITANIUM) |
| 02 | OX TANK & SUPPORT | 106 | AS INDICATED (TITANIUM) |
| 03 | BODY STRUCTURE | 293 | AS INDICATED (COMPOSITE) |
| 04 | THRUST STRUCTURE | 12 | AS INDICATED (COMPOSITE) |
| 05 | METEOROID SHIELD | 33 | |
| 06 | PAYLOAD INTERFACE | — | N/A |
| | | | |
| 02 | THERMAL CONTROL | (92) | TH-4 |
| 01 | FUEL TANK INSULATION | 63 | MLI (INCLUDES ALL MAIN STG MLI) |
| 02 | OX TANK INSULATION | | |
| 03 | PURGE SYSTEM | — | N/A |
| 04 | THERMAL CONTROL SYSTEM | 29 | HTRS, PAINT, ACPS RADIATION SHLD |
| | | | |
| 03 | AVIONICS | (534) | AV-1 |
| 01 | DATA MANAGEMENT | 60 | FLEXIBLE SIGNAL INTERFACE (FSI) |
| 02 | GN&C | | |
| | GUID & NAV | 70 | IMUS & STAR TRACKERS |
| | CONTROLS | 20 | TANDEM INT ACT PLUS ACPS CNTLS |
| | DOCKING SYSTEM | — | N/A |
| 03 | COMMUNICATIONS | 34 | S-BAND |
| 04 | INSTRUMENTATION | — | WT INCLUDED WITH DATA MGMT |
| 05 | ELECTRICAL POWER | 350 | SOLAR ARRAY |
| 06 | POWER DIST & CONTROL | | 2 WIRE POS, STRUCT RETURN |
| | | | |
| 04 | PROPULSION | (728) | |
| 01 | MAIN ENGINE (GFE) | 310 | PR-1(4), UPRATED OME ENGINE |
| 02 | MAIN ENGINE SUPPORT | 246 | PR-1(4) |
| 03 | ACPS ENGINE | 49 | ACPS-2 (8) |
| 04 | ACPS ENGINE SUPPORT | 123 | ACPS-2 (8) |
| | | | |
| 05 | ORBITER INTERFACE | (1700) | EXCLUDED FROM MAIN STG WT |
| 01 | STRUCTURES | | TBD |
| 02 | INTERFACE PANELS | | TBD |
| 03 | PURGE PROVISIONS | | TBD |
| 04 | ABORT PROVISIONS | | TBD |
| | | | |
| 06 | DROP TANKS | — | N/A |
| 01 | STRUCTURES | | |
| 02 | THERMAL INSULATION | | |
| 03 | PROPELLANT SUPPORT SYS | | |

SIGNIFICANT DESIGN PARAMETERS:

MAIN ENGINE: PROPELLANT $MMH/N_2O_4$ THRUST 12K

M.R. 2:1 $I_{SP}$ 325

PLANNED OPERATIONAL SPAN-FROM ___ TO ___

PROPELLANT LOAD FACTOR ( $\lambda$ ) ___

DESIGN LIFE ___ MISSIONS

AUTONOMY LEVEL 2

NOTES:

① SUBSYSTEM(S) CONFIG MAY BE DESIGNATED BY A CODE WITH DETAILS ON SUPPL CONFIG DATA SHEETS

PLANNED EVOLUTION:

C01 IIIC-2 (79D)
C02 IIIC-2 (79D) TO IIIC-1 (79R)
C03 IIIC-2 (79D) TO (83D) TO IIIC-1 (83R)
C05 IIIC-2 (79D) TO IIIC-6 (83D) TO IIIC-5 (83R)
C06 IIIC-2 (79D) TO IIIC-1 (79R) TO IIIC-6 (83D) TO IIIC-5 (83R)

CONFIGURATION SUMMARY SHEET
SPACE TUG SYSTEM STUDY

CONFIG NO. IIIC-2, MAIN STG

NASA CO NO. 1,2,3,5 & 6

DATE 6-22-73

MARTIN MARIETTA

CONFIGURATION PROFILE SKETCH

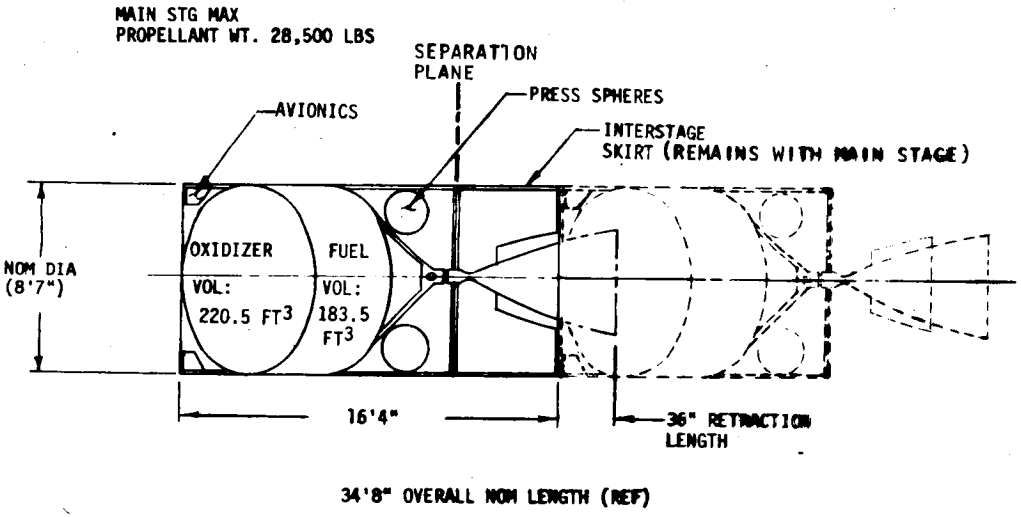


SPACE TUG VEHICLE SUBSYSTEM DEFINITION

| WBS NO. 320-04 | NOMENCLATURE | WT. | SUBSYSTEM CONFIG ① |
|---|---|---|---|
| | SPACE TUG VEH AUX STG | 2223 | DRY WT +10% CONTINGENCY |
| 01 | STRUCTURES | (510) | |
| 01 | FUEL TANK & SUPPORT | 66 | AS INDICATED (TITANIUM) |
| 02 | OX TANK & SUPPORT | 106 | AS INDICATED (TITANIUM) |
| 03 | BODY STRUCTURE | 263 | AS INDICATED (COMPOSITE) |
| 04 | THRUST STRUCTURE | 12 | AS INDICATED (COMPOSITE) |
| 05 | METEOROID SHIELD | 33 | |
| 06 | PAYLOAD INTERFACE | 30 | |
| 02 | THERMAL CONTROL | (92) | TH-4 |
| 01 | FUEL TANK INSULATION | 63 | MLI (INCLUDES ALL AUX STG MLI) |
| 02 | OX TANK INSULATION | | |
| 03 | PURGE SYSTEM | | N/A |
| 04 | THERMAL CONTROL SYSTEM | 29 | HTRS, PAINT, ACPS RADIATION SHLD |
| 03 | AVIONICS | (534) | AV-1 |
| 01 | DATA MANAGEMENT | 60 | FLEXIBLE SIGNAL INTERFACE (FSI) |
| 02 | GN&C | | |
| | GUID & NAV | 70 | IMUS & STAR TRACKERS |
| | CONTROLS | 20 | TANDEM INT ACT PLUS ACPS CNTLS |
| | DOCKING SYSTEM | | N/A |
| 03 | COMMUNICATIONS | 34 | S-BAND |
| 04 | INSTRUMENTATION | | WT INCLUDED WITH DATA MGMT |
| 05 | ELECTRICAL POWER | 350 | SOLAR ARRAY |
| 06 | POWER DIST & CONTROL | | |
| 04 | PROPULSION | (728) | 2 WIRE POS, STRUCT RET |
| 01 | MAIN ENGINE (GFE) | 310 | PR-1(4), UPRATED OME ENGINE |
| 02 | MAIN ENGINE SUPPORT | 246 | PR-1(4) |
| 03 | ACPS ENGINE | 49 | ACPS-2 (8) |
| 04 | ACPS ENGINE SUPPORT | 123 | ACPS-2 (8) |
| 05 | INTERSTAGE INTERFACE | (156) | |
| 01 | STRUCTURES | 126 | TITANIUM |
| 02 | SEPARATION SYSTEM | 30 | |
| 06 | DROP TANKS | | N/A |
| 01 | STRUCTURES | | |
| 02 | THERMAL INSULATION | | |
| 03 | PROPELLANT SUPPORT SYS | | |

SIGNIFICANT DESIGN PARAMETERS:

MAIN ENGINE: PROPELLANT $MMH/N_2O_4$ THRUST 12K

M.R. 2:1 $I_{SP}$ 325

PLANNED OPERATIONAL SPAN-FROM ____ TO ____

PROPELLANT LOAD FACTOR ( $\lambda$ ) ____

DESIGN LIFE ____ MISSIONS

AUTONOMY LEVEL 2

NOTES:

① SUBSYSTEM(S) CONFIG MAY BE DESIGNATED BY A CODE WITH DETAILS ON SUPPL CONFIG DATA SHEETS

PLANNED EVOLUTION:

C01 IIIC-2 (79D)

C02 IIIC-2 (79D) TO IIIC-1 (79R)

C03 IIIC-2 (79D TO 83D) TO IIIC-1 (83R)

C05 IIIC-2 (79D) TO IIIC-6 (83D) TO IIIC-5 (83R)

C06 IIIC-2 (79D) TO IIIC-1 (79R) TO IIIC-6 (83D) TO IIIC-5 (83R)

CONFIGURATION SUMMARY SHEET
SPACE TUG SYSTEM STUDY

CONFIG NO. IIIC-2, AUX STG

NASA CO NO. 1, 2, 3, 5, & 6

DATE 6-22-73

MARTIN MARIETTA

CONFIGURATION PROFILE SKETCH

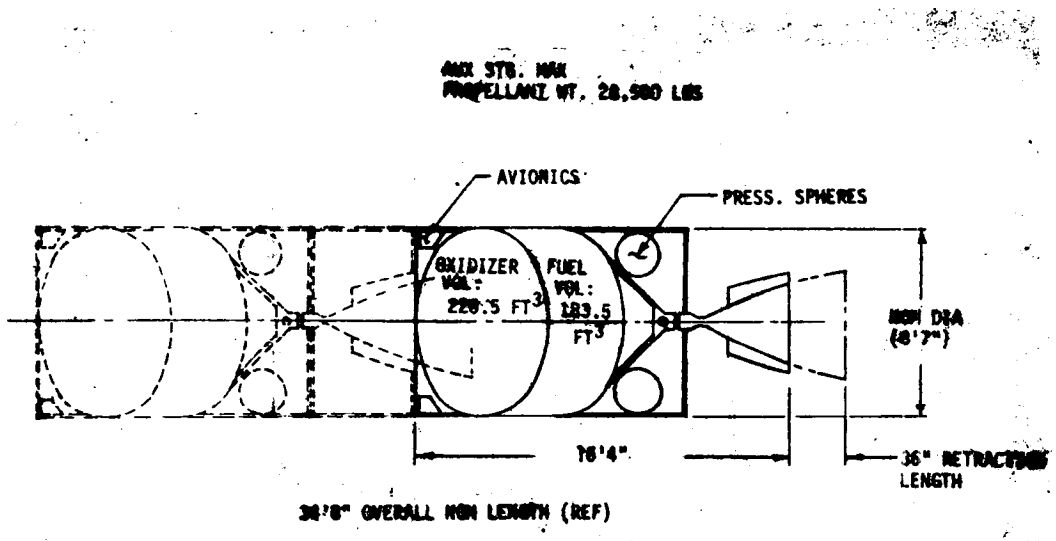


SPACE TUG VEHICLE SUBSYSTEM DEFINITION

| WBS NO. 320-03 | NOMENCLATURE | WT. | SUBSYSTEM CONFIG ① |
|---|---|---|---|
| | SPACE TUG VEH MAIN STG | 2380 | DRY WT +10% CONTINGENCY |
| 01 | STRUCTURES | (510) | |
| 01 | FUEL TANK & SUPPORT | 66 | AS INDICATED (TITANIUM) |
| 02 | OX TANK & SUPPORT | 106 | AS INDICATED (TITANIUM) |
| 03 | BODY STRUCTURE | 293 | AS INDICATED (COMPOSITE) |
| 04 | THRUST STRUCTURE | 12 | AS INDICATED (COMPOSITE) |
| 05 | METEOROID SHIELD | 33 | |
| 06 | PAYLOAD INTERFACE | - | N/A |
| | | | |
| 02 | THERMAL CONTROL | (92) | TH-4 |
| 01 | FUEL TANK INSULATION | 63 | MLI(INCLUDES ALL MAIN STG MLI) |
| 02 | OX TANK INSULATION | | |
| 03 | PURGE SYSTEM | - | N/A |
| 04 | THERMAL CONTROL SYSTEM | 29 | HTRS,PAINT,ACPS RADIATION SHLD |
| | | | |
| 03 | AVIONICS | (872) | AV-4 |
| 01 | DATA MANAGEMENT | 60 | FLEXIBLE SIGNAL INTERFACE(FSI) |
| 02 | GN&C | | |
| | GUID & NAV | 258 | IMUS,STAR TRACKERS & RF RADAR |
| | CONTROLS | 20 | TANDEM INT ACT PLUS ACPS CNTLS |
| | DOCKING SYSTEM | 150 | DOCKING HARDWARE |
| 03 | COMMUNICATIONS | 34 | S-BAND |
| 04 | INSTRUMENTATION | - | WT INCLUDED WITH DATA MGMT |
| 05 | ELECTRICAL POWER | 350 | SOLAR ARRAY |
| 06 | POWER DIST & CONTROL | | 2 WIRE POS, STRUCT RETURN |
| | | | |
| 04 | PROPULSION | (688) | |
| 01 | MAIN ENGINE (GFE) | 270 | PR-1(4),E388 ENGINE |
| 02 | MAIN ENGINE SUPPORT | 246 | PR-1(4) |
| 03 | ACPS ENGINE | 49 | ACPS-2 (8) |
| 04 | ACPS ENGINE SUPPORT | 123 | ACPS-2 (8) |
| | | | |
| 05 | ORBITER INTERFACE | (1700) | EXCLUDED FROM MAIN STG WT |
| 01 | STRUCTURES | | TBD |
| 02 | INTERFACE PANELS | | TBD |
| 03 | PURGE PROVISIONS | | TBD |
| 04 | ABORT PROVISIONS | | TBD |
| | | | |
| 06 | DROP TANKS | - | N/A |
| 01 | STRUCTURES | | |
| 02 | THERMAL INSULATION | | |
| 03 | PROPELLANT SUPPORT SYS | | |

SIGNIFICANT DESIGN PARAMETERS:

MAIN ENGINE: PROPELLANT $MMH/N_2O_4$ THRUST 12K

M.R. 2:1 $I_{SP}$ 338.7

PLANNED OPERATIONAL SPAN-FROM ___ TO ___

PROPELLANT LOAD FACTOR ( $\lambda$ ) ___

DESIGN LIFE ___ MISSIONS

AUTONOMY LEVEL 2

NOTES:

① SUBSYSTEM(S) CONFIG MAY BE DESIGNATED BY A CODE WITH DETAILS ON SUPPL CONFIG DATA SHEETS

PLANNED EVOLUTION:

C07 111C-4 (83D) TO 111C-3 (83R)

CONFIGURATION SUMMARY SHEET
SPACE TUG SYSTEM STUDY

CONFIG NO. 111C-3, MAIN STG

NASA CO NO. 7

DATE 6-22-73

MARTIN MARIETTA

## CONFIGURATION PROFILE SKETCH

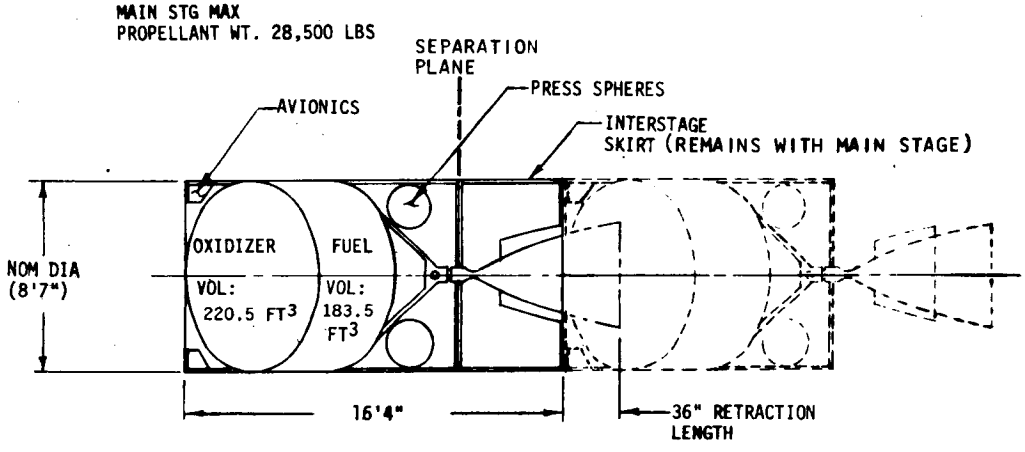


## SPACE TUG VEHICLE SUBSYSTEM DEFINITION

| WBS NO. 320-04 | NOMENCLATURE | WT. | SUBSYSTEM CONFIG ① |
|---|---|---|---|
| | SPACE TUG VEH AUX STG | 2606 | DRY WT +10% CONTINGENCY |
| 01 | STRUCTURES | (560) | |
| 01 | FUEL TANK & SUPPORT | 66 | AS INDICATED (TITANIUM) |
| 02 | OX TANK & SUPPORT | 106 | AS INDICATED (TITANIUM) |
| 03 | BODY STRUCTURE | 263 | AS INDICATED (COMPOSITE) |
| 04 | THRUST STRUCTURE | 12 | AS INDICATED (COMPOSITE) |
| 05 | METEOROID SHIELD | 33 | |
| 06 | PAYLOAD INTERFACE | 80 | |
| | | | |
| 02 | THERMAL CONTROL | (92) | TH-4 |
| 01 | FUEL TANK INSULATION | 63 | MLI (INCLUDES ALL AUX STG MLI) |
| 02 | OX TANK INSULATION | | |
| 03 | PURGE SYSTEM | - | N/A |
| 04 | THERMAL CONTROL SYSTEM | 29 | HTRS, PAINT, ACPS RADIATION SHLD |
| | | | |
| 03 | AVIONICS | (872) | AV-4 |
| 01 | DATA MANAGEMENT | 60 | FLEXIBLE SIGNAL INTERFACE (FSI) |
| 02 | GN&C | | |
| | GUID & NAV | 258 | IMUS, STAR TRACKERS & RF RADAR |
| | CONTROLS | 20 | TANDEM INT ACT PLUS ACPS CNTLS |
| | DOCKING SYSTEM | 150 | DOCKING HARDWARE |
| 03 | COMMUNICATIONS | 34 | S-BAND |
| 04 | INSTRUMENTATION | | WT INCLUDED WITH DATA MGMT |
| 05 | ELECTRICAL POWER | 350 | SOLAR ARRAY |
| 06 | POWER DIST & CONTROL | | 2 WIRE POS, STRUCT RETURN |
| | | | |
| 04 | PROPULSION | (688) | |
| 01 | MAIN ENGINE (GFE) | 270 | PR-1(4), E338 ENGINE |
| 02 | MAIN ENGINE SUPPORT | 246 | PR-1(4) |
| 03 | ACPS ENGINE | 49 | ACPS-2 (8) |
| 04 | ACPS ENGINE SUPPORT | 123 | ACPS-2 (8) |
| | | | |
| 05 | INTERSTAGE INTERFACE | (156) | |
| 01 | STRUCTURES | 126 | TITANIUM |
| 02 | SEPARATION SYSTEM | 30 | |
| | | | |
| 06 | DROP TANKS | | N/A |
| 01 | STRUCTURES | | |
| 02 | THERMAL INSULATION | | |
| 03 | PROPELLANT SUPPORT SYS | | |

**SIGNIFICANT DESIGN PARAMETERS:**

MAIN ENGINE: PROPELLANT MMH/$N_2O_4$ THRUST 12K

M.R. 2:1 $I_{SP}$ 338.7

PLANNED OPERATIONAL SPAN-FROM ____ TO ____

PROPELLANT LOAD FACTOR ($\lambda$) ____

DESIGN LIFE ____ MISSIONS

AUTONOMY LEVEL 2

**NOTES:**

① SUBSYSTEM(S) CONFIG MAY BE DESIGNATED BY A CODE WITH DETAILS ON SUPPL CONFIG DATA SHEETS

**PLANNED EVOLUTION:**

C07 111C-4 (83D) TO 111C-3 (83R)

**CONFIGURATION SUMMARY SHEET**
**SPACE TUG SYSTEM STUDY**

CONFIG NO. 111C-3, AUX STG

NASA CO NO. 7

DATE 6-22-73

MARTIN MARIETTA

CONFIGURATION PROFILE SKETCH

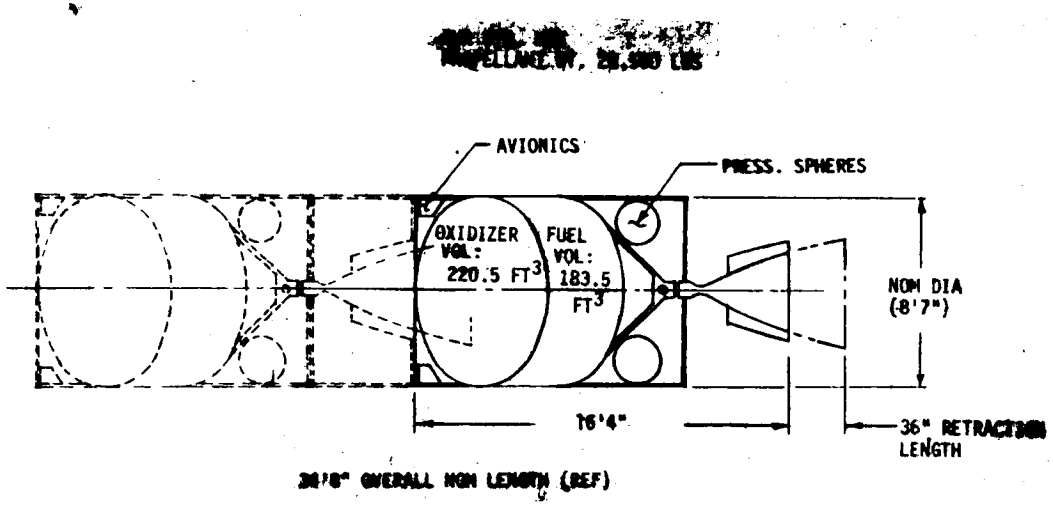


SPACE TUG VEHICLE SUBSYSTEM DEFINITION

| WBS NO. 320-03 | NOMENCLATURE | WT. | SUBSYSTEM CONFIG ① |
|---|---|---|---|
| | SPACE TUG VEH MAIN STG | 2008 | DRY WT +10% CONTINGENCY |
| 01 | STRUCTURES | (510) | |
| 01 | FUEL TANK & SUPPORT | 66 | AS INDICATED (TITANIUM) |
| 02 | OX TANK & SUPPORT | 106 | AS INDICATED (TITANIUM) |
| 03 | BODY STRUCTURE | 293 | AS INDICATED (COMPOSITE) |
| 04 | THRUST STRUCTURE | 12 | AS INDICATED (COMPOSITE) |
| 05 | METEOROID SHIELD | 33 | |
| 06 | PAYLOAD INTERFACE | — | N/A |
| | | | |
| 02 | THERMAL CONTROL | (92) | TH-4 |
| 01 | FUEL TANK INSULATION | 63 | MLI (INCLUDES ALL MAIN STG MLI) |
| 02 | OX TANK INSULATION | | |
| 03 | PURGE SYSTEM | — | N/A |
| 04 | THERMAL CONTROL SYSTEM | 29 | HTRS, PAINT, ACPS RADIATION SHLD |
| | | | |
| 03 | AVIONICS | (534) | AV-1 |
| 01 | DATA MANAGEMENT | 60 | FLEXIBLE SIGNAL INTERFACE (FSI) |
| 02 | GN&C | | |
| | GUID & NAV | 70 | IMUS & STAR TRACKERS |
| | CONTROLS | 20 | TANDEM INT ACT PLUS ACPS CNTLS |
| | DOCKING SYSTEM | — | N/A |
| 03 | COMMUNICATIONS | 34 | S-BAND |
| 04 | INSTRUMENTATION | — | WT INCLUDED WITH DATA MGMT |
| 05 | ELECTRICAL POWER | 350 | SOLAR ARRAY |
| 06 | POWER DIST & CONTROL | | 2 WIRE POS, STRUCT RETURN |
| | | | |
| 04 | PROPULSION | (688) | |
| 01 | MAIN ENGINE (GFE) | 270 | PR-1(4), E338 ENGINE |
| 02 | MAIN ENGINE SUPPORT | 246 | PR-1(4) |
| 03 | ACPS ENGINE | 49 | ACPS-2 (8) |
| 04 | ACPS ENGINE SUPPORT | 123 | ACPS-2 (8) |
| | | | |
| 05 | ORBITER INTERFACE | (1700) | EXCLUDED FROM MAIN STG WT |
| 01 | STRUCTURES | | TBD |
| 02 | INTERFACE PANELS | | TBD |
| 03 | PURGE PROVISIONS | | TBD |
| 04 | ABORT PROVISIONS | | TBD |
| | | | |
| 06 | DROP TANKS | — | N/A |
| 01 | STRUCTURES | | |
| 02 | THERMAL INSULATION | | |
| 03 | PROPELLANT SUPPORT SYS | | |

SIGNIFICANT DESIGN PARAMETERS:

MAIN ENGINE: PROPELLANT MMH/$N_2O_4$ THRUST 12K

M.R. 2:1 $I_{SP}$ 338.1

PLANNED OPERATIONAL SPAN-FROM ___ TO ___

PROPELLANT LOAD FACTOR ( $\lambda$ ) ___

DESIGN LIFE ___ MISSIONS

AUTONOMY LEVEL 2

NOTES:

① SUBSYSTEM(S) CONFIG MAY BE DESIGNATED BY A CODE WITH DETAILS ON SUPPL CONFIG DATA SHEETS

PLANNED EVOLUTION:

C07 IIIC-4 (83D) TO IIIC-3 (83R)

CONFIGURATION SUMMARY SHEET
SPACE TUG SYSTEM STUDY

CONFIG NO. IIIC-4, MAIN STG

NASA CO NO. 7

DATE 6-22-73

MARTIN MARIETTA

CONFIGURATION PROFILE SKETCH

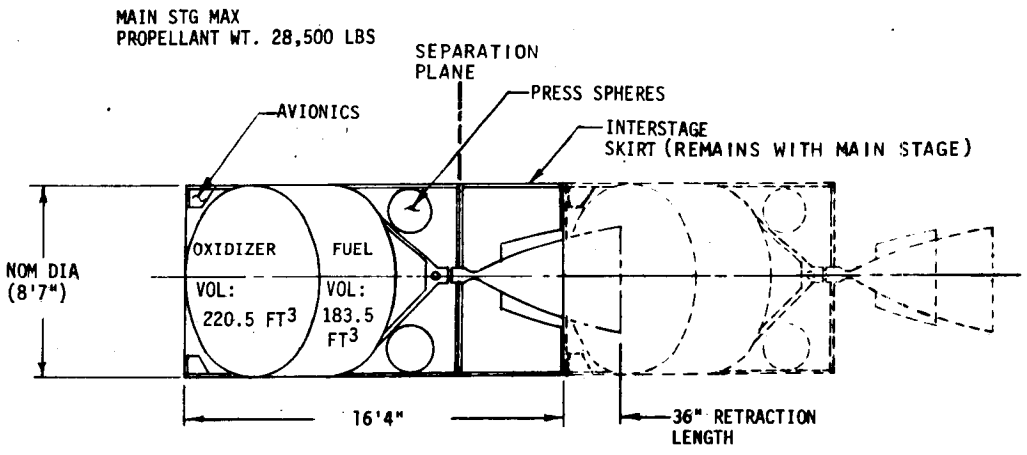


34'8" OVERALL NOM LENGTH (REF)

SPACE TUG VEHICLE SUBSYSTEM DEFINITION

| WBS NO. 320-04 | NOMENCLATURE | WT. | SUBSYSTEM CONFIG ① |
|---|---|---|---|
| | SPACE TUG VEH AUX STG | 2179 | DRY WT +10% CONTINGENCY |
| 01 | STRUCTURES | (510) | |
| 01 | FUEL TANK & SUPPORT | 66 | AS INDICATED (TITANIUM) |
| 02 | OX TANK & SUPPORT | 106 | AS INDICATED (TITANIUM) |
| 03 | BODY STRUCTURE | 263 | AS INDICATED (COMPOSITE) |
| 04 | THRUST STRUCTURE | 12 | AS INDICATED (COMPOSITE) |
| 05 | METEOROID SHIELD | 33 | |
| 06 | PAYLOAD INTERFACE | 30 | |
| | | | |
| 02 | THERMAL CONTROL | (92) | TH-4 |
| 01 | FUEL TANK INSULATION | 63 | MLI (INCLUDES ALL AUX STG MLI) |
| 02 | OX TANK INSULATION | | |
| 03 | PURGE SYSTEM | - | N/A |
| 04 | THERMAL CONTROL SYSTEM | 29 | HTRS, PAINT, ACPS RADIATION SHLD |
| | | | |
| 03 | AVIONICS | (534) | AV-1 |
| 01 | DATA MANAGEMENT | 60 | FLEXIBLE SIGNAL INTERFACE (FSI) |
| 02 | GN&C | | |
| | GUID & NAV | 70 | IMUS & STAR TRACKERS |
| | CONTROLS | 20 | TANDEM INT ACT PLUS ACPS CNTLS |
| | DOCKING SYSTEM | - | N/A |
| 03 | COMMUNICATIONS | 34 | S-BAND |
| 04 | INSTRUMENTATION | | WT INCLUDED WITH DATA MGMT |
| 05 | ELECTRICAL POWER | 350 | SOLAR ARRAY |
| 06 | POWER DIST & CONTROL | | 2 WIRE POS, STRUCT RETURN |
| | | | |
| 04 | PROPULSION | (688) | |
| 01 | MAIN ENGINE (GFE) | 270 | PR-1(4), E338 ENGINE |
| 02 | MAIN ENGINE SUPPORT | 246 | PR-1(4) |
| 03 | ACPS ENGINE | 49 | ACPS-2 (8) |
| 04 | ACPS ENGINE SUPPORT | 123 | ACPS-2 (8) |
| | | | |
| 05 | INTERSTAGE INTERFACE | (156) | |
| 01 | STRUCTURES | 126 | TITANIUM |
| 02 | SEPARATION SYSTEM | 30 | |
| | | | |
| 06 | DROP TANKS | - | N/A |
| 01 | STRUCTURES | | |
| 02 | THERMAL INSULATION | | |
| 03 | PROPELLANT SUPPORT SYS | | |

SIGNIFICANT DESIGN PARAMETERS:

MAIN ENGINE: PROPELLANT MMH/$N_2O_4$ THRUST 12K

M.R. 2:1 $I_{SP}$ 338.1

PLANNED OPERATIONAL SPAN-FROM ____ TO ____

PROPELLANT LOAD FACTOR ( $\lambda$ ) ____

DESIGN LIFE ____ MISSIONS

AUTONOMY LEVEL 2

NOTES:

① SUBSYSTEM(S) CONFIG MAY BE DESIGNATED BY A CODE WITH DETAILS ON SUPPL CONFIG DATA SHEETS

PLANNED EVOLUTION:

C07 IIIC-4 (83D) TO IIIC-3 (83R)

CONFIGURATION SUMMARY SHEET
SPACE TUG SYSTEM STUDY

CONFIG NO. IIIC-4, AUX STG

NASA CO NO. 7

DATE 6-22-73

MARTIN MARIETTA

CONFIGURATION PROFILE SKETCH

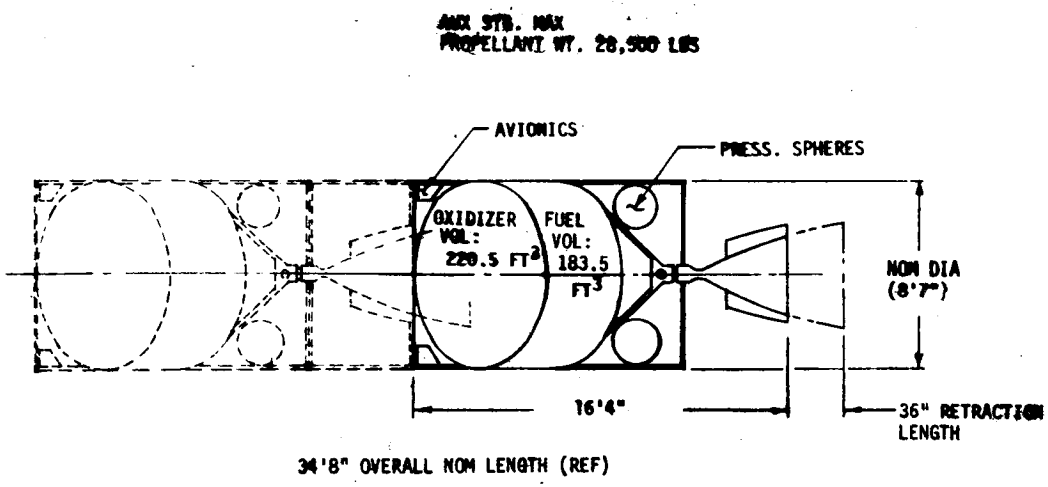


SPACE TUG VEHICLE SUBSYSTEM DEFINITION

| WBS NO. 320-03 | NOMENCLATURE | WT. | SUBSYSTEM CONFIG ① |
|---|---|---|---|
| | SPACE TUG VEH MAIN STG | 2131 | DRY WT +10% CONTINGENCY |
| 01 | STRUCTURES | (510) | |
| 01 | FUEL TANK & SUPPORT | 66 | AS INDICATED (TITANIUM) |
| 02 | OX TANK & SUPPORT | 106 | AS INDICATED (TITANIUM) |
| 03 | BODY STRUCTURE | 293 | AS INDICATED (COMPOSITE) |
| 04 | THRUST STRUCTURE | 12 | AS INDICATED (COMPOSITE) |
| 05 | METEOROID SHIELD | 33 | |
| 06 | PAYLOAD INTERFACE | — | N/A |
| | | | |
| 02 | THERMAL CONTROL | (92) | TH-4 |
| 01 | FUEL TANK INSULATION | 63 | MLI(INCLUDES ALL MAIN STG MLI) |
| 02 | OX TANK INSULATION | | |
| 03 | PURGE SYSTEM | — | N/A |
| 04 | THERMAL CONTROL SYSTEM | 29 | HTRS,PAINT,ACPS RADIATION SHLD |
| | | | |
| 03 | AVIONICS | (647) | AV-2 |
| 01 | DATA MANAGEMENT | 60 | FLEXIBLE SIGNAL INTERFACE(FSI) |
| 02 | GN&C | | |
| | GUID & NAV | 93 | IMUS,STAR TRACKERS & SLR |
| | CONTROLS | 20 | TANDEM INT ACT PLUS ACPS CNTLS |
| | DOCKING SYSTEM | 90 | DOCKING HARDWARE |
| 03 | COMMUNICATIONS | 34 | S-BAND |
| 04 | INSTRUMENTATION | — | WT INCLUDED WITH DATA MGMT |
| 05 | ELECTRICAL POWER | 350 | SOLAR ARRAY |
| 06 | POWER DIST & CONTROL | | 2 WIRE POS, STRUCT RETURN |
| | | | |
| 04 | PROPULSION | (688) | |
| 01 | MAIN ENGINE (GFE) | 270 | PR-1(4), E338 ENGINE |
| 02 | MAIN ENGINE SUPPORT | 246 | PR-1(4) |
| 03 | ACPS ENGINE | 49 | ACPS-2 (8) |
| 04 | ACPS ENGINE SUPPORT | 123 | ACPS-2 (8) |
| | | | |
| 05 | ORBITER INTERFACE | (1700) | EXCLUDED FROM MAIN STG WT |
| 01 | STRUCTURES | | TBD |
| 02 | INTERFACE PANELS | | TBD |
| 03 | PURGE PROVISIONS | | TBD |
| 04 | ABORT PROVISIONS | | TBD |
| | | | |
| 06 | DROP TANKS | — | N/A |
| 01 | STRUCTURES | | |
| 02 | THERMAL INSULATION | | |
| 03 | PROPELLANT SUPPORT SYS | | |

SIGNIFICANT DESIGN PARAMETERS:

MAIN ENGINE: PROPELLANT $MMH/N_2O_4$ THRUST 12K

M.R. 2:1 $I_{SP}$ 338.1

PLANNED OPERATIONAL SPAN-FROM ___ TO ___

PROPELLANT LOAD FACTOR ( $\lambda$ ) ___

DESIGN LIFE ___ MISSIONS

AUTONOMY LEVEL 2

NOTES:

① SUBSYSTEM(S) CONFIG MAY BE DESIGNATED BY A CODE WITH DETAILS ON SUPPL CONFIG DATA SHEETS

PLANNED EVOLUTION:

C04 IIIC-6 (83D) TO IIIC-5 (83R)
C05 IIIC-2 (79D) TO IIIC-6 (83D) TO IIIC-5 (83R)
C06 IIIC-2 (79D) TO IIIC-1 (79R)
IIIC-6 (83D) TO IIIC-5 (83R)
C07 IIIC-6 (83D) TO IIIC-5 (83R)

CONFIGURATION SUMMARY SHEET
SPACE TUG SYSTEM STUDY

CONFIG NO. IIIC-5, MAIN STG

NASA CO NO. 4,5,6 & 7

DATE 6-22-73

MARTIN MARIETTA

CONFIGURATION PROFILE SKETCH

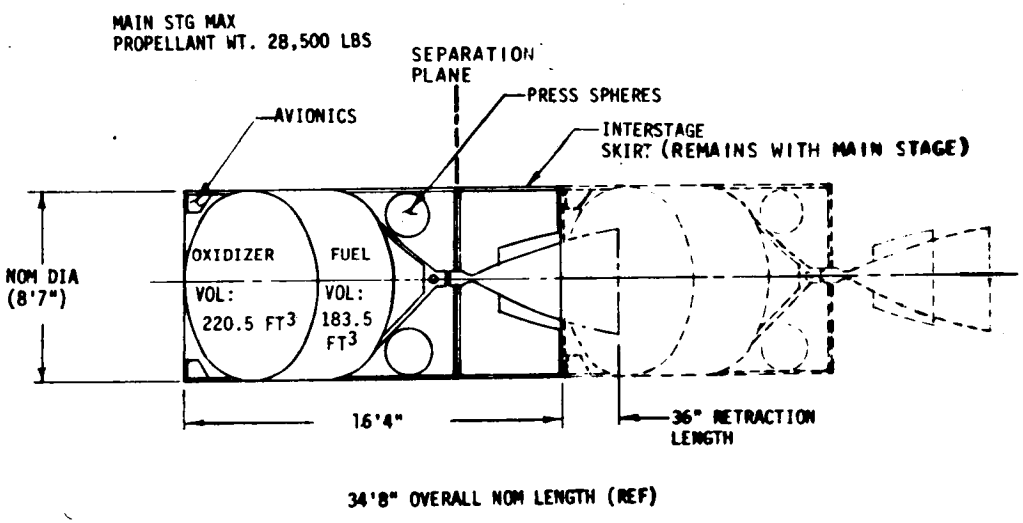


SPACE TUG VEHICLE SUBSYSTEM DEFINITION

| WBS NO. 320-04 | NOMENCLATURE | WT. | SUBSYSTEM CONFIG ① |
|---|---|---|---|
| | SPACE TUG VEH AUX STG | 2357 | DRY WT +10% CONTINGENCY |
| 01 | STRUCTURES | (560) | |
| 01 | FUEL TANK & SUPPORT | 66 | AS INDICATED (TITANIUM) |
| 02 | OX TANK & SUPPORT | 106 | AS INDICATED (TITANIUM) |
| 03 | BODY STRUCTURE | 263 | AS INDICATED (COMPOSITE) |
| 04 | THRUST STRUCTURE | 12 | AS INDICATED (COMPOSITE) |
| 05 | METEOROID SHIELD | 33 | |
| 06 | PAYLOAD INTERFACE | 80 | |
| | | | |
| 02 | THERMAL CONTROL | (92) | TH-4 |
| 01 | FUEL TANK INSULATION | 63 | MLI (INCLUDES ALL AUX STG MLI) |
| 02 | OX TANK INSULATION | | |
| 03 | PURGE SYSTEM | - | N/A |
| 04 | THERMAL CONTROL SYSTEM | 29 | HTRS, PAINT, ACPS RADIATION SHLD |
| | | | |
| 03 | AVIONICS | (647) | AV-2 |
| 01 | DATA MANAGEMENT | 60 | FLEXIBLE SIGNAL INTERFACE (FSI) |
| 02 | GN&C | | |
| | GUID & NAV | 93 | IMUS, STAR TRACKERS & SLR |
| | CONTROLS | 20 | TANDEM INT ACT PLUS ACPS CNTLS |
| | DOCKING SYSTEM | 90 | DOCKING HARDWARE |
| 03 | COMMUNICATIONS | 34 | S-BAND |
| 04 | INSTRUMENTATION | | WT INCLUDED WITH DATA MGMT |
| 05 | ELECTRICAL POWER | 350 | SOLAR ARRAY |
| 06 | POWER DIST & CONTROL | | 2 WIRE POS, STRUCT RETURN |
| | | | |
| 04 | PROPULSION | (688) | |
| 01 | MAIN ENGINE (GFE) | 270 | PR-1(4), E338 ENGINE |
| 02 | MAIN ENGINE SUPPORT | 246 | PR-1(4) |
| 03 | ACPS ENGINE | 49 | ACPS-2 (8) |
| 04 | ACPS ENGINE SUPPORT | 123 | ACPS-2 (8) |
| | | | |
| 05 | INTERSTAGE INTERFACE | (156) | |
| 01 | STRUCTURES | 126 | TITANIUM |
| 02 | SEPARATION SYSTEM | 30 | |
| | | | |
| 06 | DROP TANKS | | N/A |
| 01 | STRUCTURES | | |
| 02 | THERMAL INSULATION | | |
| 03 | PROPELLANT SUPPORT SYS | | |

SIGNIFICANT DESIGN PARAMETERS:

MAIN ENGINE: PROPELLANT MMH/$N_2O_4$ THRUST 12K

M.R. 2:1 $I_{SP}$ 338.1

PLANNED OPERATIONAL SPAN-FROM ____ TO ____

PROPELLANT LOAD FACTOR ( $\lambda$ ) ____

DESIGN LIFE ____ MISSIONS

AUTONOMY LEVEL 2

NOTES:

① SUBSYSTEM(S) CONFIG MAY BE DESIGNATED BY A CODE WITH DETAILS ON SUPPL CONFIG DATA SHEETS

PLANNED EVOLUTION:

C04 IIIC-6 (83D) TO IIIC-5 (83R)

C05 IIIC-2 (79D) TO IIIC-6 (83D) TO IIIC-5 (83R)

C06 IIIC-2 (79D) TO IIIC-1 (79R) TO IIIC-6 (83D) TO IIIC-5 (83R)

C07 IIIC-6 (83D) TO IIIC-5 (83R)

CONFIGURATION SUMMARY SHEET
SPACE TUG SYSTEM STUDY

CONFIG NO. IIIC-5, AUX STG

NASA CO NO. 4,5,6, & 7

DATE 6-22-73

MARTIN MARIETTA

CONFIGURATION PROFILE SKETCH

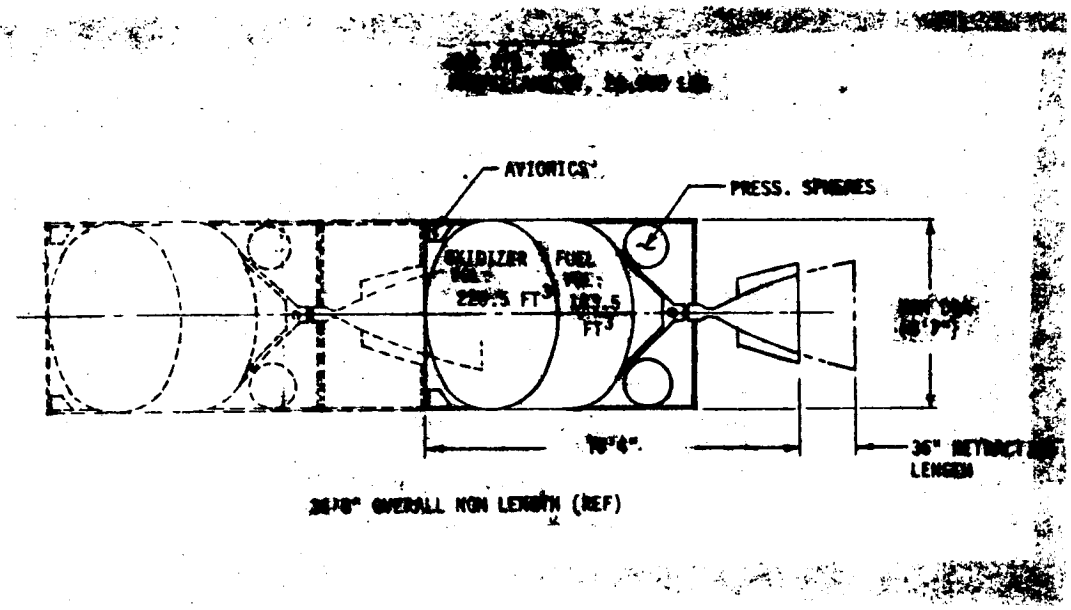


SPACE TUG VEHICLE SUBSYSTEM DEFINITION

| WBS NO. 320-03 | NOMENCLATURE | WT. | SUBSYSTEM CONFIG ① |
|---|---|---|---|
| | SPACE TUG VEH MAIN STG | 1973 | DRY WT +10% CONTINGENCY |
| 01 | STRUCTURES | (510) | |
| 01 | FUEL TANK & SUPPORT | 66 | AS INDICATED (TITANIUM) |
| 02 | OX TANK & SUPPORT | 106 | AS INDICATED (TITANIUM) |
| 03 | BODY STRUCTURE | 293 | AS INDICATED (COMPOSITE) |
| 04 | THRUST STRUCTURE | 12 | AS INDICATED (COMPOSITE) |
| 05 | METEOROID SHIELD | 33 | |
| 06 | PAYLOAD INTERFACE | - | N/A |
| | | | |
| 02 | THERMAL CONTROL | (92) | TH-4 |
| 01 | FUEL TANK INSULATION | 63 | MLI (INCLUDES ALL MAIN STG MLI) |
| 02 | OX TANK INSULATION | | |
| 03 | PURGE SYSTEM | - | N/A |
| 04 | THERMAL CONTROL SYSTEM | 29 | HTRS, PAINT, ACPS RADIATION SHLD |
| | | | |
| 03 | AVIONICS | (504) | AV-3 |
| 01 | DATA MANAGEMENT | 60 | FLEXIBLE SIGNAL INTERFACE (FSI) |
| 02 | GN&C | | |
| | GUID & NAV | 40 | IMUS & STAR TRACKERS |
| | CONTROLS | 20 | TANDEM INT ACT PLUS ACPS CNTLS |
| | DOCKING SYSTEM | - | N/A |
| 03 | COMMUNICATIONS | 34 | S-BAND |
| 04 | INSTRUMENTATION | - | WT INCLUDED WITH DATA MGMT |
| 05 | ELECTRICAL POWER | 350 | SOLAR ARRAY |
| 06 | POWER DIST & CONTROL | | 2 WIRE POS, STRUCT RETURN |
| | | | |
| 04 | PROPULSION | (688) | |
| 01 | MAIN ENGINE (GFE) | 270 | PR-1(4), E338 ENGINE |
| 02 | MAIN ENGINE SUPPORT | 246 | PR-1(4) |
| 03 | ACPS ENGINE | 49 | ACPS-2 (8) |
| 04 | ACPS ENGINE SUPPORT | 123 | ACPS-2 (8) |
| | | | |
| 05 | ORBITER INTERFACE | (1700) | EXCLUDED FROM MAIN STG WT |
| 01 | STRUCTURES | | TBD |
| 02 | INTERFACE PANELS | | TBD |
| 03 | PURGE PROVISIONS | | TBD |
| 04 | ABORT PROVISIONS | | TBD |
| | | | |
| 06 | DROP TANKS | - | N/A |
| 01 | STRUCTURES | | |
| 02 | THERMAL INSULATION | | |
| 03 | PROPELLANT SUPPORT SYS | | |

SIGNIFICANT DESIGN PARAMETERS:

MAIN ENGINE: PROPELLANT MMH/$N_2O_4$ THRUST 12K

M.R. 2:1 $I_{SP}$ 338.1

PLANNED OPERATIONAL SPAN-FROM ___ TO ___

PROPELLANT LOAD FACTOR ( λ ) ___

DESIGN LIFE ___ MISSIONS

AUTONOMY LEVEL 2

NOTES:

① SUBSYSTEM(S) CONFIG MAY BE DESIGNATED BY A CODE WITH DETAILS ON SUPPL CONFIG DATA SHEETS

PLANNED EVOLUTION:

C04 IIIC-6 (83D) TO IIIC-5 (83R)

C05 IIIC-2 (79D) TO IIIC-6 (83D) TO IIIC-5 (83R)

C06 IIIC-2 (79D) TO IIIC-1 (79R) TO IIIC-6 (83D) TO IIIC-5 (83R)

C07 IIIC-6 (83D) TO IIIC-5 (83R)

CONFIGURATION SUMMARY SHEET
SPACE TUG SYSTEM STUDY

CONFIG NO. IIIC-6, MAIN STG

NASA CO NO. 4,5,6 & 7

DATE 6-22-73

MARTIN MARIETTA

CONFIGURATION PROFILE SKETCH

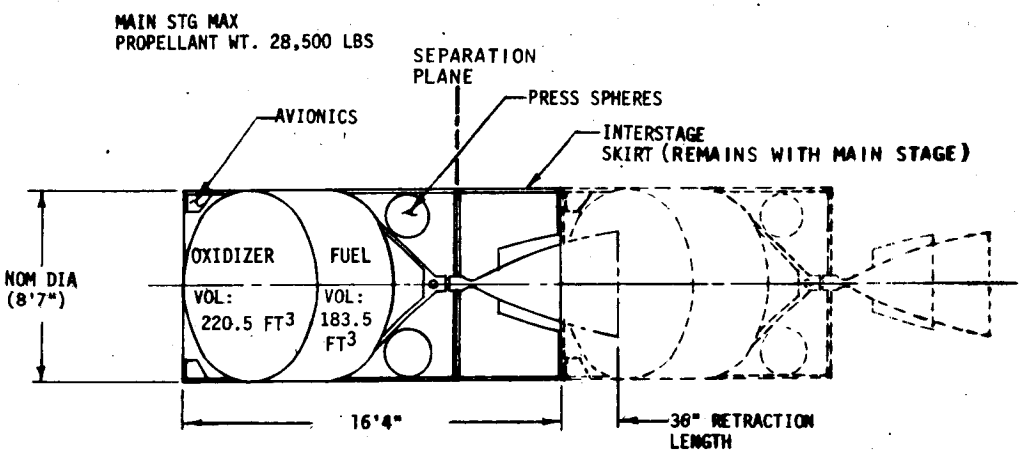


SPACE TUG VEHICLE SUBSYSTEM DEFINITION

| WBS NO. 320-04 | NOMENCLATURE | WT. | SUBSYSTEM CONFIG ① |
|---|---|---|---|
| | SPACE TUG VEH AUX STG | 2145 | DRY WT +10% CONTINGENCY |
| 01 | STRUCTURES | (510) | |
| 01 | FUEL TANK & SUPPORT | 66 | AS INDICATED (TITANIUM) |
| 02 | OX TANK & SUPPORT | 106 | AS INDICATED (TITANIUM) |
| 03 | BODY STRUCTURE | 263 | AS INDICATED (COMPOSITE) |
| 04 | THRUST STRUCTURE | 12 | AS INDICATED (COMPOSITE) |
| 05 | METEOROID SHIELD | 33 | |
| 06 | PAYLOAD INTERFACE | 30 | |
| | | | |
| 02 | THERMAL CONTROL | (92) | TH-4 |
| 01 | FUEL TANK INSULATION | 63 | MLI(INCLUDES ALL AUX STG MLI) |
| 02 | OX TANK INSULATION | | |
| 03 | PURGE SYSTEM | - | N/A |
| 04 | THERMAL CONTROL SYSTEM | 29 | HTRS,PAINT,ACPS RADIATION SHLD |
| | | | |
| 03 | AVIONICS | (504) | AV-3 |
| 01 | DATA MANAGEMENT | 60 | FLEXIBLE SIGNAL INTERFACE(FSI) |
| 02 | GN&C | | |
| | GUID & NAV | 40 | IMUS & STAR TRACKERS |
| | CONTROLS | 20 | TANDEM INT ACT PLUS ACPS CNTLS |
| | DOCKING SYSTEM | - | N/A |
| 03 | COMMUNICATIONS | 34 | S-BAND |
| 04 | INSTRUMENTATION | - | WT INCLUDED WITH DATA MGMT |
| 05 | ELECTRICAL POWER | 350 | SOLAR ARRAY |
| 06 | POWER DIST & CONTROL | | 2 WIRE POS, STRUCT RET |
| | | | |
| 04 | PROPULSION | (688) | |
| 01 | MAIN ENGINE (GFE) | 270 | PR-1(4), E338 ENGINE |
| 02 | MAIN ENGINE SUPPORT | 246 | PR-1(4) |
| 03 | ACPS ENGINE | 49 | ACPS-2 (8) |
| 04 | ACPS ENGINE SUPPORT | 123 | ACPS-2 (8) |
| | | | |
| 05 | INTERSTAGE INTERFACE | (156) | |
| 01 | STRUCTURES | 126 | TITANIUM |
| 02 | SEPARATION SYSTEM | 30 | |
| | | | |
| 06 | DROP TANKS | - | N/A |
| 01 | STRUCTURES | | |
| 02 | THERMAL INSULATION | | |
| 03 | PROPELLANT SUPPORT SYS | | |

SIGNIFICANT DESIGN PARAMETERS:

MAIN ENGINE: PROPELLANT MMH/$N_2O_4$ THRUST 12K

M.R. 2:1 $I_{SP}$ 338.1

PLANNED OPERATIONAL SPAN-FROM ____ TO ____

PROPELLANT LOAD FACTOR ( $\lambda$ ) ____

DESIGN LIFE ____ MISSIONS

AUTONOMY LEVEL 2

NOTES:

① SUBSYSTEM(S) CONFIG MAY BE DESIGNATED BY A CODE WITH DETAILS ON SUPPL CONFIG DATA SHEETS

PLANNED EVOLUTION:

C04 IIIC-6 (83D) TO IIIC-5 (83R)

C05 IIIC-2 (79D) TO IIIC-6 (83D) TO IIIC-5 (83R)

C06 IIIC-2 (79D) TO IIIC-1 (79R) TO IIIC-6 (83D) TO IIIC-5 (83R)

C07 IIIC-6 (83D) TO IIIC-5 (83R)

CONFIGURATION SUMMARY SHEET
SPACE TUG SYSTEM STUDY

CONFIG NO. IIIC-6, AUX STG

NASA CO NO. 4,5,6 & 7

DATE 6-22-73

MARTIN MARIETTA

## CONFIGURATION PROFILE SKETCH

NOTES:

- MAX PROPELLANT WT 57,000 LBS
- PROPELLANT WT RATIO
  STAGE 20%
  DROP TANKS 80%

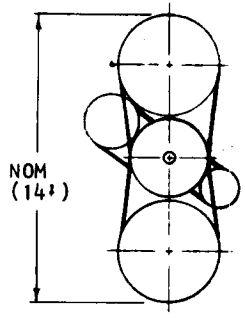


SECTION A-A

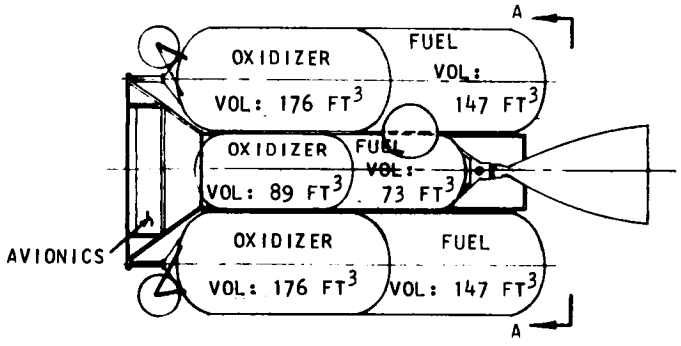


31'7" OVERALL NOM LENGTH

## SPACE TUG VEHICLE SUBSYSTEM DEFINITION

| WBS NO. 320-03 | NOMENCLATURE | WT. | SUBSYSTEM CONFIG ① |
|---|---|---|---|
| | SPACE TUG VEH MAIN STG | 4038 | DRY WT +10% CONTINGENCY |
| 01 | STRUCTURES | (554) | |
| 01 | FUEL TANK & SUPPORT | 52 | AS INDICATED (TITANIUM) |
| 02 | OX TANK & SUPPORT | 148 | AS INDICATED (TITANIUM) |
| 03 | BODY STRUCTURE | 200 | AS INDICATED (COMPOSITE) |
| 04 | THRUST STRUCTURE | 23 | AS INDICATED (COMPOSITE) |
| 05 | METEOROID SHIELD | 51 | |
| 06 | PAYLOAD INTERFACE | 80 | |
| | | | |
| 02 | THERMAL CONTROL | (66) | TH-2 |
| 01 | FUEL TANK INSULATION | 40 | MLI (INCLUDES ALL MAIN STG MLI) |
| 02 | OX TANK INSULATION | | |
| 03 | PURGE SYSTEM | - | N/A |
| 04 | THERMAL CONTROL SYSTEM | 26 | HTRS, PAINT, ACPS RADIATION SHL |
| | | | |
| 03 | AVIONICS | (872) | AV-4 |
| 01 | DATA MANAGEMENT | 60 | FLEXIBLE SIGNAL INTERFACE (FSI |
| 02 | GN&C | | |
| | GUID & NAV | 258 | IMUS, STAR TRACKERS & RF RADAR |
| | CONTROLS | 20 | TANDEM INT ACT PLUS ACPS CNTL |
| | DOCKING SYSTEM | 150 | DOCKING HARDWARE |
| 03 | COMMUNICATIONS | 34 | S-BAND |
| 04 | INSTRUMENTATION | - | WT INCLUDED WITH DATA MGMT |
| 05 | ELECTRICAL POWER | 350 | SOLAR ARRAY |
| 06 | POWER DIST & CONTROL | | 2 WIRE POS, STRUCT RETURN |
| | | | |
| 04 | PROPULSION | (680) | |
| 01 | MAIN ENGINE (GFE) | 310 | PR-1 (5) UPRATED OME ENG NE |
| 02 | MAIN ENGINE SUPPORT | 198 | PR-1 (5) |
| 03 | ACPS ENGINE | 49 | ACPS-2 (8) |
| 04 | ACPS ENGINE SUPPORT | 123 | ACPS-2 (8) |
| | | | |
| 05 | ORBITER INTERFACE | (900) | EXCLUDED |
| 01 | STRUCTURES | | TBD |
| 02 | INTERFACE PANELS | | TBD |
| 03 | PURGE PROVISIONS | | TBD |
| 04 | ABORT PROVISIONS | | TBD |
| | | | |
| 06 | DROP TANKS | (1433) | |
| 01 | STRUCTURES | 957 | AS INDICATED (ALUM) |
| 02 | THERMAL INSULATION | - | N/A |
| 03 | PROPELLANT SUPPORT SYS | 476 | PR-1 (5) |

**SIGNIFICANT DESIGN PARAMETERS:**

MAIN ENGINE: PROPELLANT MMH/$N_2O_4$ THRUST 12K
M.R. 2:1 $I_{SP}$ 325
PLANNED OPERATIONAL SPAN-FROM ___ TO ___
PROPELLANT LOAD FACTOR ( $\lambda$ ) ___
DESIGN LIFE ___ MISSIONS
AUTONOMY LEVEL 2

NOTES:

① SUBSYSTEM(S) CONFIG MAY BE DESIGNATED BY A CODE WITH DETAILS ON SUPPL CONFIG DATA SHEETS

**PLANNED EVOLUTION:**

C02 IVE-2 (79D) TO IVE-1 (79R)
C03 IVE-2 (79D TO 83D) TO IVE-1 (83R)
C06 IVE-2 (79D) TO IVE-1 (79R) TO IVE-6 (83D) TO IVE-5 (83R)

CONFIGURATION SUMMARY SHEET
SPACE TUG SYSTEM STUDY

CONFIG NO. IVE-1, 1-1/2 STAGE
NASA CO NO. 2, 3, & 6
DATE 6-22-73

MARTIN MARIETTA

## CONFIGURATION PROFILE SKETCH

NOTES:

- MAX PROPELLANT WT 57,000 LBS
- PROPELLANT WT RATIO
  STAGE 20%
  DROP TANKS 80%

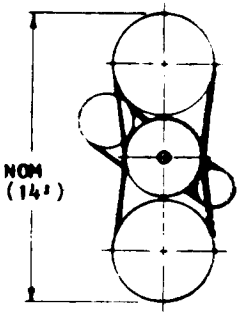


SECTION A-A

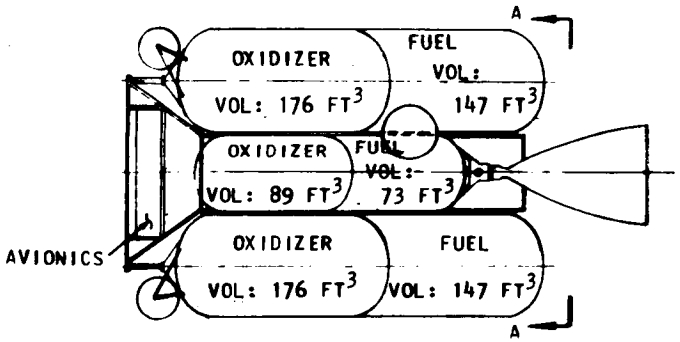


31'7" OVERALL NOM LENGTH

## SPACE TUG VEHICLE SUBSYSTEM DEFINITION

| WBS NO. 320-03 | NOMENCLATURE | WT. | SUBSYSTEM CONFIG ① |
|---|---|---|---|
| | SPACE TUG VEH MAIN STG | 3539 | DRY WT +10% CONTINGENCY |
| 01 | STRUCTURES | (504) | |
| 01 | FUEL TANK & SUPPORT | 52 | AS INDICATED (TITANIUM) |
| 02 | OX TANK & SUPPORT | 148 | AS INDICATED (TITANIUM) |
| 03 | BODY STRUCTURE | 200 | AS INDICATED (COMPOSITE) |
| 04 | THRUST STRUCTURE | 23 | AS INDICATED (COMPOSITE) |
| 05 | METEOROID SHIELD | 51 | |
| 06 | PAYLOAD INTERFACE | 30 | |
| | | | |
| 02 | THERMAL CONTROL | (66) | TH-2 |
| 01 | FUEL TANK INSULATION | 40 | MLI (INCLUDES ALL MAIN STG MLI) |
| 02 | OX TANK INSULATION | | |
| 03 | PURGE SYSTEM | - | N/A |
| 04 | THERMAL CONTROL SYSTEM | 26 | HTRS, PAINT, ACPS RADIATION SHLD |
| | | | |
| 03 | AVIONICS | (534) | AV-1 |
| 01 | DATA MANAGEMENT | 60 | FLEXIBLE SIGNAL INTERFACE (FSI) |
| 02 | GN&C | | |
| | GUID & NAV | 70 | IMUS & STAR TRACKERS |
| | CONTROLS | 20 | TANDEM INT ACT PLUS ACPS CNTRLS |
| | DOCKING SYSTEM | - | N/A |
| 03 | COMMUNICATIONS | 34 | S-BAND |
| 04 | INSTRUMENTATION | - | WT INCLUDED WITH DATA MGMT |
| 05 | ELECTRICAL POWER | 350 | SOLAR ARRAY |
| 06 | POWER DIST & CONTROL | | 2 WIRE POS, STRUCT RETURN |
| | | | |
| 04 | PROPULSION | (680) | |
| 01 | MAIN ENGINE (GFE) | 310 | PR-1 (5) UPRATED OME ENGINE |
| 02 | MAIN ENGINE SUPPORT | 198 | PR-1 (5) |
| 03 | ACPS ENGINE | 49 | ACPS-2 (8) |
| 04 | ACPS ENGINE SUPPORT | 123 | ACPS-2 (8) |
| | | | |
| 05 | ORBITER INTERFACE | (900) | EXCLUDED |
| 01 | STRUCTURES | | TBD |
| 02 | INTERFACE PANELS | | TBD |
| 03 | PURGE PROVISIONS | | TBD |
| 04 | ABORT PROVISIONS | | TBD |
| | | | |
| 06 | DROP TANKS | (1433) | |
| 01 | STRUCTURES | 957 | AS INDICATED (ALUM) |
| 02 | THERMAL INSULATION | - | N/A |
| 03 | PROPELLANT SUPPORT SYS | 476 | PR-1 (5) |

**SIGNIFICANT DESIGN PARAMETERS:**

MAIN ENGINE: PROPELLANT MMH/$N_2O_4$ THRUST 12K

M.R. 2:1 $I_{SP}$ 325

PLANNED OPERATIONAL SPAN-FROM ___ TO ___

PROPELLANT LOAD FACTOR ( λ ) ___

DESIGN LIFE ___ MISSIONS

AUTONOMY LEVEL 2

**NOTES:**

① SUBSYSTEM(S) CONFIG MAY BE DESIGNATED BY A CODE WITH DETAILS ON SUPPL CONFIG DATA SHEETS

**PLANNED EVOLUTION:**

C01 IVE-2 (79D)
C02 IVE-2 (79D) TO IVE-1 (79R)
C03 IVE-2 (79D TO(83D) TO IVE-1 (83R)
C05 IVE-2 (79D) TO IVE-6 (83D) TO IVE-5 (83R)
C06 IVE-2 (79D) TO IVE-1 (79R) TO IVE-6 (83D) TO IVE-5 (83R)

CONFIGURATION SUMMARY SHEET
SPACE TUG SYSTEM STUDY

CONFIG NO. IVE-2, 1-1/2 STAGE
NASA CO NO. 1,2,3,5, & 6
DATE 6-22-73

MARTIN MARIETTA

CONFIGURATION PROFILE SKETCH

NOTES:

- MAX PROPELLANT WT 57,000 LBS
- PROPELLANT WT RATIO
  STAGE 20%
  DROP TANKS 80%

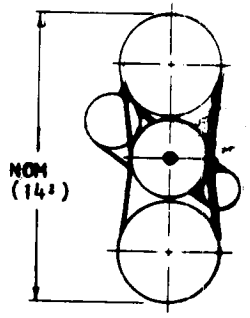


SECTION A-A

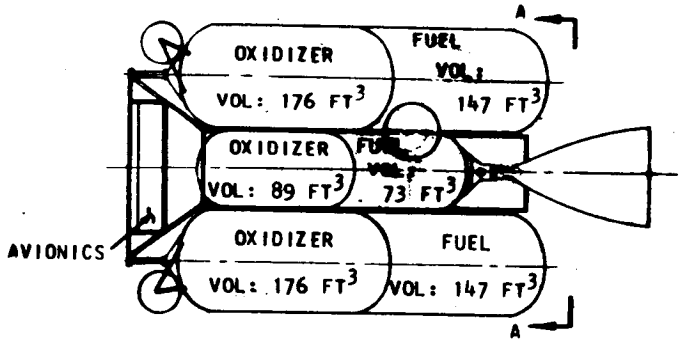


30'7" OVERALL NOM LENGTH

SPACE TUG VEHICLE SUBSYSTEM DEFINITION

| WBS NO. 320-03 | NOMENCLATURE | WT. | SUBSYSTEM CONFIG ① |
|---|---|---|---|
| | SPACE TUG VEH MAIN STG | 3998 | DRY WT +10% CONTINGENCY |
| 01 | STRUCTURES | (554) | |
| 01 | FUEL TANK & SUPPORT | 52 | AS INDICATED (TITANIUM) |
| 02 | OX TANK & SUPPORT | 148 | AS INDICATED (TITANIUM) |
| 03 | BODY STRUCTURE | 200 | AS INDICATED (COMPOSITE) |
| 04 | THRUST STRUCTURE | 23 | AS INDICATED (COMPOSITE) |
| 05 | METEOROID SHIELD | 51 | |
| 06 | PAYLOAD INTERFACE | 80 | |
| | | | |
| 02 | THERMAL CONTROL | (66) | TH-2 |
| 01 | FUEL TANK INSULATION | 40 | MLI (INCLUDES ALL MAIN STG MLI) |
| 02 | OX TANK INSULATION | | |
| 03 | PURGE SYSTEM | - | N/A |
| 04 | THERMAL CONTROL SYSTEM | 26 | HTRS, PAINT, ACPS RADIATION SHD |
| | | | |
| 03 | AVIONICS | (872) | AV-4 |
| 01 | DATA MANAGEMENT | 60 | FLEXIBLE SIGNAL INTERFACE (FS |
| 02 | GN&C | | |
| | GUID & NAV | 258 | IMUS, STAR TRACKERS & RF RADAR |
| | CONTROLS | 20 | TANDEM INT ACT PLUS ACPS CNTS |
| | DOCKING SYSTEM | 150 | DOCKING HARDWARE |
| 03 | COMMUNICATIONS | 34 | S-BAND |
| 04 | INSTRUMENTATION | - | WT INCLUDED WITH DATA MGMT |
| 05 | ELECTRICAL POWER | 350 | SOLAR ARRAY |
| 06 | POWER DIST & CONTROL | | 2 WIRE POS, STRUCT RETURN |
| | | | |
| 04 | PROPULSION | (640) | |
| 01 | MAIN ENGINE (GFE) | 270 | PR-1(5), E338 ENGINE |
| 02 | MAIN ENGINE SUPPORT | 198 | PR-1(5) |
| 03 | ACPS ENGINE | 49 | ACPS-2 (8) |
| 04 | ACPS ENGINE SUPPORT | 123 | ACPS-2 (8) |
| | | | |
| 05 | ORBITER INTERFACE | (900) | EXCLUDED |
| 01 | STRUCTURES | | TBD |
| 02 | INTERFACE PANELS | | TBD |
| 03 | PURGE PROVISIONS | | TBD |
| 04 | ABORT PROVISIONS | | TBD |
| | | | |
| 06 | DROP TANKS | (1433) | |
| 01 | STRUCTURES | 957 | AS INDICATED (ALUM) |
| 02 | THERMAL INSULATION | - | N/A |
| 03 | PROPELLANT SUPPORT SYS | 476 | PR-1 (5) |

SIGNIFICANT DESIGN PARAMETERS:

MAIN ENGINE: PROPELLANT MMH/$N_2O_4$ THRUST 12K

M.R. 2:1 $I_{SP}$ 338.1

PLANNED OPERATIONAL SPAN-FROM ___ TO ___

PROPELLANT LOAD FACTOR ( $\lambda$ ) ___

DESIGN LIFE ___ MISSIONS

AUTONOMY LEVEL 2

NOTES:

① SUBSYSTEM(S) CONFIG MAY BE DESIGNATED BY A CODE WITH DETAILS ON SUPPL CONFIG DATA SHEETS

PLANNED EVOLUTION:

CO2 IVE-4 (79D) TO IVE-3 (79R)

CONFIGURATION SUMMARY SHEET
SPACE TUG SYSTEM STUDY

CONFIG NO. IVE-3, 1-1/2 STAGE

NASA CO NO. 2

DATE 6-22-73

MARTIN MARIETTA

CONFIGURATION PROFILE SKETCH

NOTES:

- MAX PROPELLANT WT 57,000 LBS
- PROPELLANT WT RATIO
  STAGE 20%
  DROP TANKS 80%

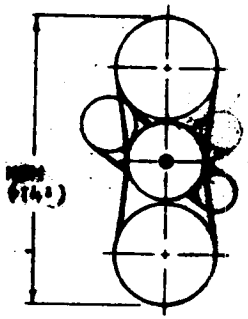


SECTION A-A

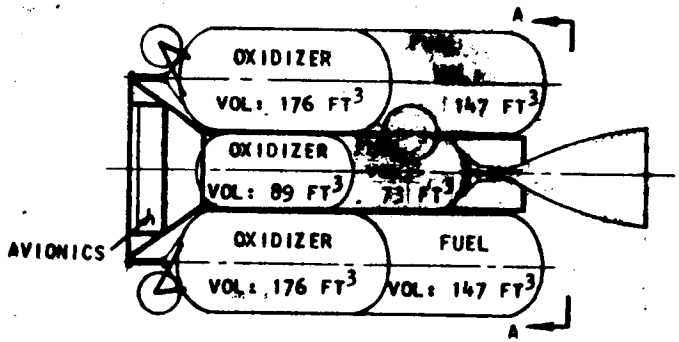


30'7" OVERALL NOM LENGTH

SPACE TUG VEHICLE SUBSYSTEM DEFINITION

| WBS NO. 320-03 | NOMENCLATURE | WT. | SUBSYSTEM CONFIG ① |
|---|---|---|---|
| | SPACE TUG VEH MAIN STG | 3495 | DRY WT +10% CONTINGENCY |
| 01 | STRUCTURES | (504) | |
| 01 | FUEL TANK & SUPPORT | 52 | AS INDICATED (TITANIUM) |
| 02 | OX TANK & SUPPORT | 148 | AS INDICATED (TITANIUM) |
| 03 | BODY STRUCTURE | 200 | AS INDICATED (COMPOSITE) |
| 04 | THRUST STRUCTURE | 23 | AS INDICATED (COMPOSITE) |
| 05 | METEOROID SHIELD | 51 | |
| 06 | PAYLOAD INTERFACE | 30 | |
| | | | |
| 02 | THERMAL CONTROL | (66) | TH-2 |
| 01 | FUEL TANK INSULATION | 40 | MLI (INCLUDES ALL MAIN STG MLI) |
| 02 | OX TANK INSULATION | | |
| 03 | PURGE SYSTEM | - | N/A |
| 04 | THERMAL CONTROL SYSTEM | 26 | HTRS, PAINT, ACPS RADIATION SHLD |
| | | | |
| 03 | AVIONICS | (534) | AV-1 |
| 01 | DATA MANAGEMENT | 60 | FLEXIBLE SIGNAL INTERFACE (FSI) |
| 02 | GN&C | | |
| | GUID & NAV | 70 | IMUS & STAR TRACKERS |
| | CONTROLS | 20 | TANDEM INT ACT PLUS ACPS CNTLS |
| | DOCKING SYSTEM | - | N/A |
| 03 | COMMUNICATIONS | 34 | S-BAND |
| 04 | INSTRUMENTATION | - | WT INCLUDED WITH DATA MGMT |
| 05 | ELECTRICAL POWER | 350 | SOLAR ARRAY |
| 06 | POWER DIST & CONTROL | | 2 WIRE POS, STRUCT RETURN |
| | | | |
| 04 | PROPULSION | (640) | |
| 01 | MAIN ENGINE (GFE) | 270 | PR-1(5), E338 ENGINE |
| 02 | MAIN ENGINE SUPPORT | 198 | PR-1(5) |
| 03 | ACPS ENGINE | 49 | ACPS-2 (8) |
| 04 | ACPS ENGINE SUPPORT | 123 | ACPS-2 (8) |
| | | | |
| 05 | ORBITER INTERFACE | (900) | EXCLUDED |
| 01 | STRUCTURES | | TBD |
| 02 | INTERFACE PANELS | | TBD |
| 03 | PURGE PROVISIONS | | TBD |
| 04 | ABORT PROVISIONS | | TBD |
| | | | |
| 06 | DROP TANKS | (1433) | |
| 01 | STRUCTURES | 957 | AS INDICATED (ALUM) |
| 02 | THERMAL INSULATION | - | N/A |
| 03 | PROPELLANT SUPPORT SYS | 476 | PR-1 (5) |

SIGNIFICANT DESIGN PARAMETERS:

MAIN ENGINE: PROPELLANT MMH/$N_2O_4$ THRUST 12K

M.R. 2:1 $I_{SP}$ 338.1

PLANNED OPERATIONAL SPAN-FROM ___ TO ___

PROPELLANT LOAD FACTOR ( λ ) ___

DESIGN LIFE ___ MISSIONS

AUTONOMY LEVEL 2

NOTES:

① SUBSYSTEM(S) CONFIG MAY BE DESIGNATED BY A CODE WITH DETAILS ON SUPPL CONFIG DATA SHEETS

PLANNED EVOLUTION:

CO2 IVE-4(79D) TO IVE-3(79R)

CONFIGURATION SUMMARY SHEET
SPACE TUG SYSTEM STUDY

CONFIG NO. IVE-4, 1-1/2 STAGE

NASA CO NO. 2

DATE 6-22-73

MARTIN MARIETTA

CONFIGURATION PROFILE SKETCH

NOTES:

- MAX PROPELLANT WT 57,000 LBS
- PROPELLANT WT RATIO
  STAGE 20%
  DROP TANKS 80%

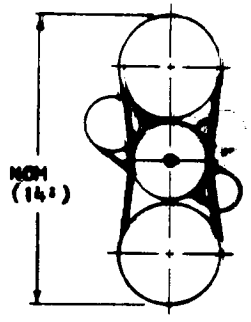


SECTION A-A

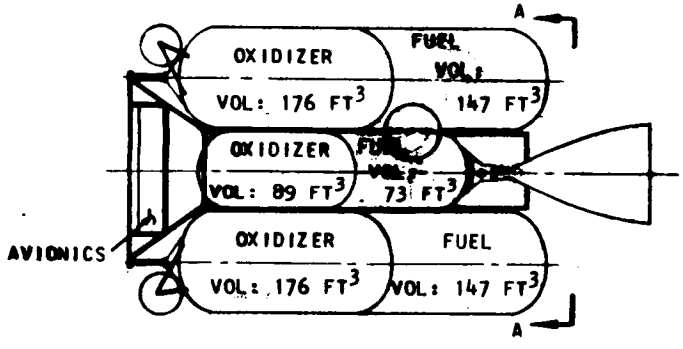


30'7" OVERALL NOM LENGTH

SPACE TUG VEHICLE SUBSYSTEM DEFINITION

| WBS NO. 320-03 | NOMENCLATURE | WT. | SUBSYSTEM CONFIG ① |
|---|---|---|---|
| | SPACE TUG VEH MAIN STG | 3674 | DRY WT +10% CONTINGENCY |
| 01 | STRUCTURES | (554) | |
| 01 | FUEL TANK & SUPPORT | 52 | AS INDICATED (TITANIUM) |
| 02 | OX TANK & SUPPORT | 148 | AS INDICATED (TITANIUM) |
| 03 | BODY STRUCTURE | 200 | AS INDICATED (COMPOSITE) |
| 04 | THRUST STRUCTURE | 23 | AS INDICATED (COMPOSITE) |
| 05 | METEOROID SHIELD | 51 | |
| 06 | PAYLOAD INTERFACE | 80 | |
| | | | |
| 02 | THERMAL CONTROL | (66) | TH-2 |
| 01 | FUEL TANK INSULATION | 40 | MLI (INCLUDES ALL MAIN STG MLI) |
| 02 | OX TANK INSULATION | | |
| 03 | PURGE SYSTEM | - | N/A |
| 04 | THERMAL CONTROL SYSTEM | 26 | HTRS, PAINT, ACPS RADIATION SHLD |
| | | | |
| 03 | AVIONICS | (647) | AV-2 |
| 01 | DATA MANAGEMENT | 60 | FLEXIBLE SIGNAL INTERFACE (FSI) |
| 02 | GN&C | | |
| | GUID & NAV | 93 | IMUS, STAR TRACKERS & SLR |
| | CONTROLS | 20 | TANDEM INT ACT PLUS ACPS CNTL |
| | DOCKING SYSTEM | 90 | DOCKING HARDWARE |
| 03 | COMMUNICATIONS | 34 | S-BAND |
| 04 | INSTRUMENTATION | - | WT INCLUDED WITH DATA MGMT |
| 05 | ELECTRICAL POWER | 350 | SOLAR ARRAY |
| 06 | POWER DIST & CONTROL | | 2 WIRE POS, STRUCT RETURN |
| | | | |
| 04 | PROPULSION | (640) | |
| 01 | MAIN ENGINE (GFE) | 270 | PR-1(5), E338 ENGINE |
| 02 | MAIN ENGINE SUPPORT | 198 | PR-1(5) |
| 03 | ACPS ENGINE | 49 | ACPS-2 (8) |
| 04 | ACPS ENGINE SUPPORT | 123 | ACPS-2 (8) |
| | | | |
| 05 | ORBITER INTERFACE | (900) | EXCLUDED |
| 01 | STRUCTURES | | TBD |
| 02 | INTERFACE PANELS | | TBD |
| 03 | PURGE PROVISIONS | | TBD |
| 04 | ABORT PROVISIONS | | TBD |
| | | | |
| 06 | DROP TANKS | (1433) | |
| 01 | STRUCTURES | 957 | AS INDICATED (ALUM) |
| 02 | THERMAL INSULATION | - | N/A |
| 03 | PROPELLANT SUPPORT SYS | 476 | PR-1 (5) |

SIGNIFICANT DESIGN PARAMETERS:

MAIN ENGINE: PROPELLANT MMH/$N_2O_4$ THRUST 12K

M.R. 2:1 $I_{SP}$ 338.1

PLANNED OPERATIONAL SPAN-FROM ___ TO ___

PROPELLANT LOAD FACTOR ( λ ) ___

DESIGN LIFE ___ MISSIONS

AUTONOMY LEVEL 2

NOTES:

① SUBSYSTEM(S) CONFIG MAY BE DESIGNATED BY A CODE WITH DETAILS ON SUPPL CONFIG DATA SHEETS

PLANNED EVOLUTION:

C04 IVE-6 (83D) TO IVE-5 (83R)
C05 IVE-2 (79D) TO IVE-6 (83D) TO IVE-5 (83R)
C06 IVE-2 (79D) TO IVE-1 (79R) TO IVE-6 (83D) TO IVE-5 (83R)
C07 IVE-6 (83D) TO IVE-5 (83R)

CONFIGURATION SUMMARY SHEET
SPACE TUG SYSTEM STUDY

CONFIG NO. IVE-5, 1-1/2 STAGE

NASA CO NO. 4,5,6 & 7

DATE 6-22-73

MARTIN MARIETTA

CONFIGURATION PROFILE SKETCH

NOTES:

- MAX PROPELLANT WT 57,000 LBS
- PROPELLANT WT RATIO
  STAGE 20%
  DROP TANKS 80%

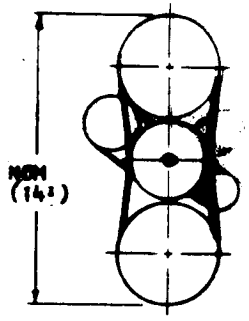


SECTION A-A

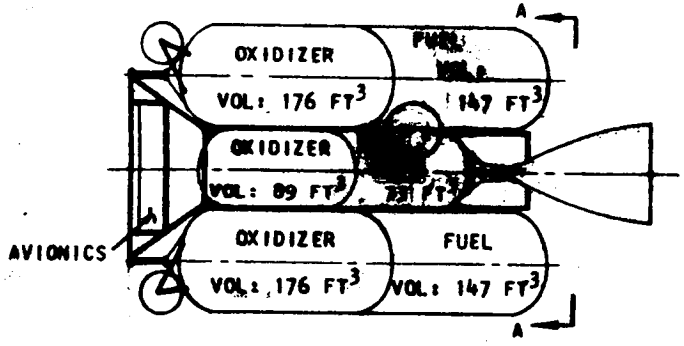


30'7" OVERALL MOM LENGTH

SPACE TUG VEHICLE SUBSYSTEM DEFINITION

| WBS NO. 320-03 | NOMENCLATURE | WT. | SUBSYSTEM CONFIG ① |
|---|---|---|---|
| | SPACE TUG VEH MAIN STG | 3462 | DRY WT +10% CONTINGENCY |
| 01 | STRUCTURES | (504) | |
| 01 | FUEL TANK & SUPPORT | 52 | AS INDICATED (TITANIUM) |
| 02 | OX TANK & SUPPORT | 148 | AS INDICATED (TITANIUM) |
| 03 | BODY STRUCTURE | 200 | AS INDICATED (COMPOSITE) |
| 04 | THRUST STRUCTURE | 23 | AS INDICATED (COMPOSITE) |
| 05 | METEOROID SHIELD | 51 | |
| 06 | PAYLOAD INTERFACE | 30 | |
| | | | |
| 02 | THERMAL CONTROL | (66) | TH-2 |
| 01 | FUEL TANK INSULATION | 40 | MLI(INCLUDES ALL MAIN STG MLI) |
| 02 | OX TANK INSULATION | | |
| 03 | PURGE SYSTEM | - | N/A |
| 04 | THERMAL CONTROL SYSTEM | 26 | HTRS,PAINT,ACPS RADIATION SHLD |
| | | | |
| 03 | AVIONICS | (504) | AV-3 |
| 01 | DATA MANAGEMENT | 60 | FLEXIBLE SIGNAL INTERFACE(FSI |
| 02 | GN&C | | |
| | GUID & NAV | 40 | IMUS & STAR TRACKERS |
| | CONTROLS | 20 | TANDEM INT ACT PLUS ACPS CNTLS |
| | DOCKING SYSTEM | - | N/A |
| 03 | COMMUNICATIONS | 34 | S-BAND |
| 04 | INSTRUMENTATION | - | WT INCLUDED WITH DATA MGMT |
| 05 | ELECTRICAL POWER | 350 | SOLAR ARRAY |
| 06 | POWER DIST & CONTROL | | 2 WIRE POS, STRUCT RETURN |
| | | | |
| 04 | PROPULSION | (640) | |
| 01 | MAIN ENGINE (GFE) | 270 | PR1-(5),E338 ENGINE |
| 02 | MAIN ENGINE SUPPORT | 198 | PR-1(5) |
| 03 | ACPS ENGINE | 49 | ACPS-2 (8) |
| 04 | ACPS ENGINE SUPPORT | 123 | ACPS-2 (8) |
| | | | |
| 05 | ORBITER INTERFACE | (900) | EXCLUDED |
| 01 | STRUCTURES | | TBD |
| 02 | INTERFACE PANELS | | TBD |
| 03 | PURGE PROVISIONS | | TBD |
| 04 | ABORT PROVISIONS | | TBD |
| | | | |
| 06 | DROP TANKS | (1433) | |
| 01 | STRUCTURES | 957 | AS INDICATED (ALUM) |
| 02 | THERMAL INSULATION | - | N/A |
| 03 | PROPELLANT SUPPORT SYS | 476 | PR-1(5) |

SIGNIFICANT DESIGN PARAMETERS:

MAIN ENGINE: PROPELLANT MMH/$N_2O_4$ THRUST 12K

M.R. 2:1 $I_{SP}$ 338.1

PLANNED OPERATIONAL SPAN-FROM ___ TO ___

PROPELLANT LOAD FACTOR ( $\lambda$ ) ___

DESIGN LIFE ___ MISSIONS

AUTONOMY LEVEL 2

NOTES:

① SUBSYSTEM(S) CONFIG MAY BE DESIGNATED BY A CODE WITH DETAILS ON SUPPL CONFIG DATA SHEETS

PLANNED EVOLUTION:

C04 IVE-6 (83D) TO IVE-5 (83R)
C05 IVE-2 (79D) TO IVE-6 (83D) TO IVE-5 (83R)
C06 IVE-2 (79D) TO IVE-1 (79R) TO IVE-6 (83D) TO IVE-5 (83R)
C07 IVE-6 (83D) TO IVE-5 (83R)

CONFIGURATION SUMMARY SHEET
SPACE TUG SYSTEM STUDY

CONFIG NO. IVE-6, 1-1/2 STAGE

NASA CO NO. 4,5,6 & 7

DATE 6-22-73

MARTIN MARIETTA

CONFIGURATION PROFILE SKETCH

NOTES:

- MAX PROPELLANT WT 57,000 LBS
- PROPELLANT WT RATIO
  STAGE 20%
  DROP TANKS 80%

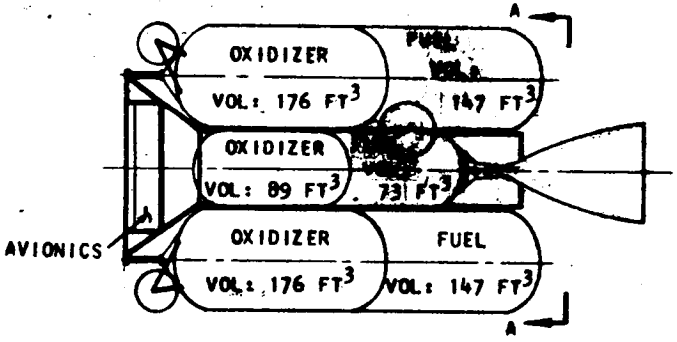


30'7" OVERALL NOM LENGTH

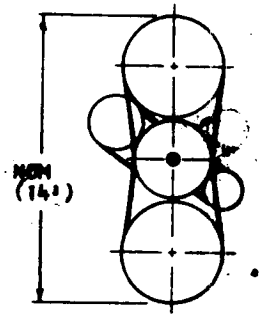


SECTION A-A

SPACE TUG VEHICLE SUBSYSTEM DEFINITION

| WBS NO. 320-03 | NOMENCLATURE | WT. | SUBSYSTEM CONFIG ① |
|---|---|---|---|
| | SPACE TUG VEH MAIN STG | 3726 | DRY WT +10% CONTINGENCY |
| 01 | STRUCTURES | (601) | |
| 01 | FUEL TANK & SUPPORT | 56 | AS INDICATED (ALUM) |
| 02 | OX TANK & SUPPORT | 128 | AS INDICATED (ALUM) |
| 03 | BODY STRUCTURE | 258 | AS INDICATED (ALUM & HONEYCOMB) |
| 04 | THRUST STRUCTURE | 28 | AS INDICATED (ALUM) |
| 05 | METEOROID SHIELD | 51 | |
| 06 | PAYLOAD INTERFACE | 80 | |
| | | | |
| 02 | THERMAL CONTROL | (66) | TH-2 |
| 01 | FUEL TANK INSULATION | 40 | MLI (INCLUDES ALL MAIN STG MLI) |
| 02 | OX TANK INSULATION | | |
| 03 | PURGE SYSTEM | - | N/A |
| 04 | THERMAL CONTROL SYSTEM | 26 | HTRS, PAINT, ACPS RADIATION SHLD |
| | | | |
| 03 | AVIONICS | (647) | AV-2 |
| 01 | DATA MANAGEMENT | 60 | FLEXIBLE SIGNAL INTERFACE (FSI) |
| 02 | GN&C | | |
| | GUID & NAV | 93 | IMUS, STAR TRACKERS & SLR |
| | CONTROLS | 20 | TANDEM INT ACT PLUS ACPS CNTLS |
| | DOCKING SYSTEM | 90 | DOCKING HARDWARE |
| 03 | COMMUNICATIONS | 34 | S-BAND |
| 04 | INSTRUMENTATION | - | WT INCLUDED WITH DATA MGMT |
| 05 | ELECTRICAL POWER | 350 | SOLAR ARRAY |
| 06 | POWER DIST & CONTROL | | 2 WIRE POS, STRUCT RETURN |
| | | | |
| 04 | PROPULSION | (640) | |
| 01 | MAIN ENGINE (GFE) | 270 | PR-1(5), E338 ENGINE |
| 02 | MAIN ENGINE SUPPORT | 198 | PR-1(5) |
| 03 | ACPS ENGINE | 49 | ACPS-2 (8) |
| 04 | ACPS ENGINE SUPPORT | 123 | ACPS-2 (8) |
| | | | |
| 05 | ORBITER INTERFACE | (900) | EXCLUDED |
| 01 | STRUCTURES | | TBD |
| 02 | INTERFACE PANELS | | TBD |
| 03 | PURGE PROVISIONS | | TBD |
| 04 | ABORT PROVISIONS | | TBD |
| | | | |
| 06 | DROP TANKS | (1433) | |
| 01 | STRUCTURES | 957 | AS INDICATED (ALUM) |
| 02 | THERMAL INSULATION | - | N/A |
| 03 | PROPELLANT SUPPORT SYS | 476 | PR-1 (5) |

SIGNIFICANT DESIGN PARAMETERS:

MAIN ENGINE: PROPELLANT MMH/$N_2O_4$ THRUST 12K

M.R. 2:1 $I_{SP}$ 338.1

PLANNED OPERATIONAL SPAN-FROM ___ TO ___

PROPELLANT LOAD FACTOR ( λ ) ___

DESIGN LIFE ___ MISSIONS

AUTONOMY LEVEL 2

NOTES:

① SUBSYSTEM(S) CONFIG MAY BE DESIGNATED BY A CODE WITH DETAILS ON SUPPL CONFIG DATA SHEETS

PLANNED EVOLUTION:

C07 IVE-8 (83D) TO IVE-7 (83R)

CONFIGURATION SUMMARY SHEET
SPACE TUG SYSTEM STUDY

CONFIG NO. IVE-7, 1-1/2 STAGE

NASA CO NO. 7

DATE 6-22-73

MARTIN MARIETTA

## CONFIGURATION PROFILE SKETCH

NOTES:

- MAX PROPELLANT WT 57,000 LBS
- PROPELLANT WT RATIO
  STAGE 20%
  DROP TANKS 80%

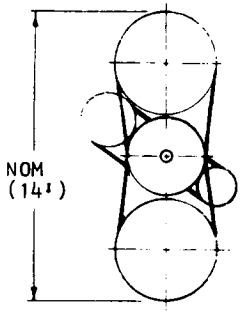


SECTION A-A

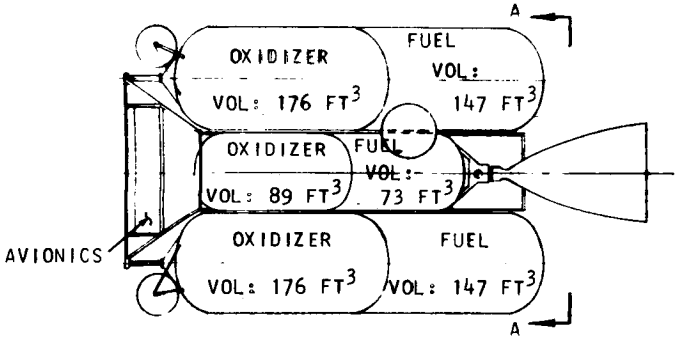


30'7" OVERALL NOM LENGTH

## SPACE TUG VEHICLE SUBSYSTEM DEFINITION

| WBS NO. 320-03 | NOMENCLATURE | WT. | SUBSYSTEM CONFIG ① |
|---|---|---|---|
| | SPACE TUG VEH MAIN STG | 3513 | DRY WT +10% CONTINGENCY |
| 01 | STRUCTURES | (551) | |
| 01 | FUEL TANK & SUPPORT | 56 | AS INDICATED (ALUM) |
| 02 | OX TANK & SUPPORT | 128 | AS INDICATED (ALUM) |
| 03 | BODY STRUCTURE | 258 | AS INDICATED(ALUM & HONEYCOMB) |
| 04 | THRUST STRUCTURE | 28 | AS INDICATED (ALUM) |
| 05 | METEOROID SHIELD | 51 | |
| 06 | PAYLOAD INTERFACE | 30 | |
| | | | |
| 02 | THERMAL CONTROL | (66) | TH-2 |
| 01 | FUEL TANK INSULATION | 40 | MLI(INCLUDES ALL MAIN STG MLI) |
| 02 | OX TANK INSULATION | | |
| 03 | PURGE SYSTEM | - | N/A |
| 04 | THERMAL CONTROL SYSTEM | 26 | HTRS,PAINT,ACPS RADIATION SHLD |
| | | | |
| 03 | AVIONICS | (504) | AV-3 |
| 01 | DATA MANAGEMENT | 60 | FLEXIBLE SIGNAL INTERFACE(FSI) |
| 02 | GN&C | | |
| | GUID & NAV | 40 | IMUS & STAR TRACKERS |
| | CONTROLS | 20 | TANDEM INT ACT PLUS ACPS CNTL |
| | DOCKING SYSTEM | - | N/A |
| 03 | COMMUNICATIONS | 34 | S-BAND |
| 04 | INSTRUMENTATION | - | WT INCLUDED WITH DATA MGMT |
| 05 | ELECTRICAL POWER | 350 | SOLAR ARRAY |
| 06 | POWER DIST & CONTROL | | 2 WIRE POS, STRUCT RETURN |
| | | | |
| 04 | PROPULSION | (640) | |
| 01 | MAIN ENGINE (GFE) | 270 | PR-1(5),E338 ENGINE |
| 02 | MAIN ENGINE SUPPORT | 198 | PR-1(5) |
| 03 | ACPS ENGINE | 49 | ACPS-2 (8) |
| 04 | ACPS ENGINE SUPPORT | 123 | ACPS-2 (8) |
| | | | |
| 05 | ORBITER INTERFACE | (900) | EXCLUDED |
| 01 | STRUCTURES | | TBD |
| 02 | INTERFACE PANELS | | TBD |
| 03 | PURGE PROVISIONS | | TBD |
| 04 | ABORT PROVISIONS | | TBD |
| | | | |
| 06 | DROP TANKS | (1433) | |
| 01 | STRUCTURES | 957 | AS INDICATED (ALUM) |
| 02 | THERMAL INSULATION | - | |
| 03 | PROPELLANT SUPPORT SYS | 476 | PR-1(5) |

**SIGNIFICANT DESIGN PARAMETERS:**

MAIN ENGINE: PROPELLANT MMH/$N_2O_4$ THRUST 12K

M.R. 2:1 $I_{SP}$ 338.1

PLANNED OPERATIONAL SPAN-FROM ___ TO ___

PROPELLANT LOAD FACTOR ( $\lambda$ ) ___

DESIGN LIFE ___ MISSIONS

AUTONOMY LEVEL 2

NOTES:

① SUBSYSTEM(S) CONFIG MAY BE DESIGNATED BY A CODE WITH DETAILS ON SUPPL CONFIG DATA SHEETS

**PLANNED EVOLUTION:**

C07 IVE-8 (83D) TO IVE-7 (83R)

CONFIGURATION SUMMARY SHEET
SPACE TUG SYSTEM STUDY

CONFIG NO. IVE-8, 1-1/2 STAGE

NASA CO NO. 7

DATE 6-22-73

MARTIN MARIETTA

# SECTION IV

# KICK STAGE

# CONFIGURATION SUMMARY

CONFIGURATION PROFILE SKETCH

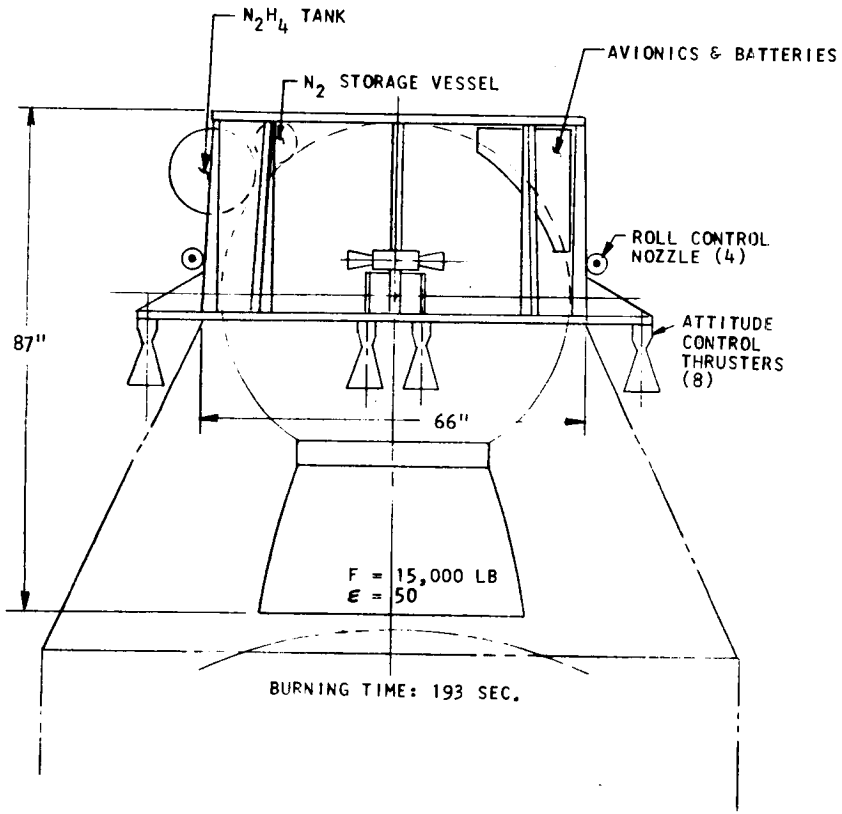


SPACE TUG VEHICLE SUBSYSTEM DEFINITION

| WBS NO. 320-04 | NOMENCLATURE | WT. | SUBSYSTEM CONFIG ① |
|---|---|---|---|
| | SPACE TUG VEH AUX STG | 11412 | STG WT INCLUDING 10% DRY WT CONT. |
| 01 | STRUCTURES | (100) | |
| 01 | FUEL TANK & SUPPORT | | |
| 02 | OX TANK & SUPPORT | | |
| 03 | BODY STRUCTURE | | |
| 04 | THRUST STRUCTURE | 70 | |
| 05 | METEOROID SHIELD | | |
| 06 | PAYLOAD INTERFACE | 30 | SEPARATION MECHANISM |
| 02 | THERMAL CONTROL | — | |
| 01 | FUEL TANK INSULATION | | |
| 02 | OX TANK INSULATION | | |
| 03 | PURGE SYSTEM | | |
| 04 | THERMAL CONTROL SYSTEM | | |
| 03 | AVIONICS | (30) | |
| 01 | DATA MANAGEMENT | | |
| 02 | GN&C | 12 | |
| | GUID & NAV | | |
| | CONTROLS | | |
| | DOCKING SYSTEM | | |
| 03 | COMMUNICATIONS | | |
| 04 | INSTRUMENTATION | | |
| 05 | ELECTRICAL POWER | 14 | |
| 06 | POWER DIST & CONTROL | 4 | |
| 04 | PROPULSION | (1121) | |
| 01 | MAIN ENGINE (GFE) | 1020 | SRM CASE |
| 02 | MAIN ENGINE SUPPORT | | |
| 03 | ACPS ENGINE | 101 | |
| 04 | ACPS ENGINE SUPPORT | | |
| 05 | INTERSTAGE INTERFACE | | |
| 01 | STRUCTURES | | |
| 02 | SEPARATION SYSTEM | | |
| 06 | DROP TANKS | — | |
| 01 | STRUCTURES | | |
| 02 | THERMAL INSULATION | | |
| 03 | PROPELLANT SUPPORT SYS | | |
| | NON-USABLE PROPELLANT | 10 | |
| | SOLID PROPELLANT | 10,000 | |
| | ACPS PROPELLANT | 26 | $N_2H_4$, $N_2$ |
| | 10% DRY WT CONTINGENCY | 125 | 10% X 1251 |

SIGNIFICANT DESIGN PARAMETERS:

MAIN ENGINE: PROPELLANT SOLID THRUST 15K

M.R. NA $I_{SP}$ 290

PLANNED OPERATIONAL SPAN-FROM ____ TO ____

PROPELLANT LOAD FACTOR ( λ ) ____

DESIGN LIFE ____ MISSIONS

AUTONOMY LEVEL ____

NOTES:

① SUBSYSTEM(S) CONFIG MAY BE DESIGNATED BY A CODE WITH DETAILS ON SUPPL CONFIG DATA SHEETS

PLANNED EVOLUTION:

CONFIGURATION SUMMAR SHEET
SPACE TUG SYSTEM STUDY
ASCENT KICK MOTOR
CONFIG NO. AK'-1
NASA CO NO. —
DATE 6/23/73

MARTIN MARIETTA

CONFIGURATION PROFILE SKETCH

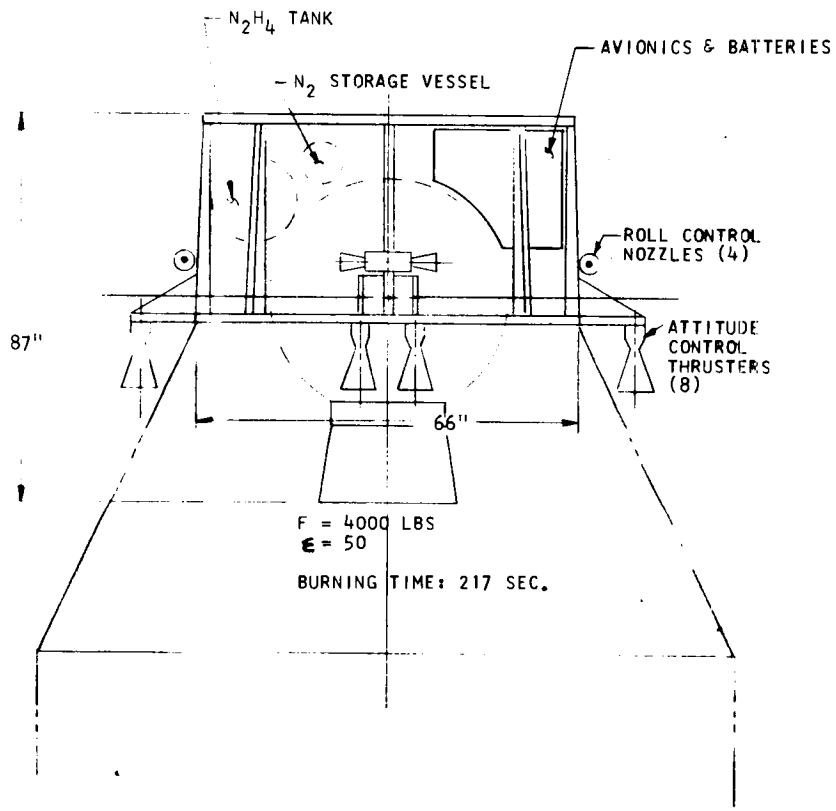


SPACE TUG VEHICLE SUBSYSTEM DEFINITION

| WBS NO. 320-04 | NOMENCLATURE | WT. | SUBSYSTEM CONFIG ① |
|---|---|---|---|
| | SPACE TUG VEH AUX STG | 3675 | STG WT INCLUDING 10% DRY WT CONT. |
| 01 | STRUCTURES | (100) | |
| 01 | FUEL TANK & SUPPORT | | |
| 02 | OX TANK & SUPPORT | | |
| 03 | BODY STRUCTURE | | |
| 04 | THRUST STRUCTURE | 70 | |
| 05 | METEOROID SHIELD | | |
| 06 | PAYLOAD INTERFACE | 30 | SEPARATION MECHANISM |
| | | | |
| 02 | THERMAL CONTROL | — | |
| 01 | FUEL TANK INSULATION | | |
| 02 | OX TANK INSULATION | | |
| 03 | PURGE SYSTEM | | |
| 04 | THERMAL CONTROL SYSTEM | | |
| | | | |
| 03 | AVIONICS | (30) | |
| 01 | DATA MANAGEMENT | | |
| 02 | GN&C | 12 | |
| | GUID & NAV | | |
| | CONTROLS | | |
| | DOCKING SYSTEM | | |
| 03 | COMMUNICATIONS | | |
| 04 | INSTRUMENTATION | | |
| 05 | ELECTRICAL POWER | 14 | |
| 06 | POWER DIST & CONTROL | 4 | |
| | | | |
| 04 | PROPULSION | (451) | |
| 01 | MAIN ENGINE (GFE) | 350 | SRM CASE |
| 02 | MAIN ENGINE SUPPORT | | |
| 03 | ACPS ENGINE | 101 | |
| 04 | ACPS ENGINE SUPPORT | | |
| | | | |
| 05 | INTERSTAGE INTERFACE | | |
| 01 | STRUCTURES | | |
| 02 | SEPARATION SYSTEM | | |
| | | | |
| 06 | DROP TANKS | | |
| 01 | STRUCTURES | | |
| 02 | THERMAL INSULATION | | |
| 03 | PROPELLANT SUPPORT SYS | | |
| | NON-USABLE PROPELLANT | 10 | |
| | SOLID PROPELLANT | 3000 | |
| | ACPS PROPELLANT | 26 | $N_2H_4$, $N_2$ |
| | 10% DRY WT CONTINGENCY | 58 | 10% X 581 |

SIGNIFICANT DESIGN PARAMETERS:

MAIN ENGINE: PROPELLANT SOLID THRUST 4K

M.R. NA $I_{SP}$ 290

PLANNED OPERATIONAL SPAN-FROM ____ TO ____

PROPELLANT LOAD FACTOR ( λ ) ____

DESIGN LIFE ____ MISSIONS

AUTONOMY LEVEL ____

NOTES:

① SUBSYSTEM(S) CONFIG MAY BE DESIGNATED BY A CODE WITH DETAILS ON SUPPL CONFIG DATA SHEETS

PLANNED EVOLUTION:

CONFIGURATION SUMMARY SHEET
SPACE TUG SYSTEM STUDY
ASCENT KICK MOTOR
CONFIG NO. AKM-2
NASA CO NO. —
DATE 7-11-73

MARTIN MARIETTA

CONFIGURATION PROFILE SKETCH

REF: BOEING DOCUMENT D2-1116274-1
FOR CONFIGURATION PROFILE SKETCH

SPACE TUG VEHICLE SUBSYSTEM DEFINITION

| WBS NO. 320-04 | NOMENCLATURE | WT. | SUBSYSTEM CONFIG ① |
|---|---|---|---|
| | SPACE TUG VEH AUX STG | 1928 | |
| 01 | STRUCTURES | | |
| 01 | FUEL TANK & SUPPORT | | |
| 02 | OX TANK & SUPPORT | | |
| 03 | BODY STRUCTURE | | |
| 04 | THRUST STRUCTURE | | |
| 05 | METEOROID SHIELD | | |
| 06 | PAYLOAD INTERFACE | | |
| | | | |
| 02 | THERMAL CONTROL | | |
| 01 | FUEL TANK INSULATION | | |
| 02 | OX TANK INSULATION | | |
| 03 | PURGE SYSTEM | | |
| 04 | THERMAL CONTROL SYSTEM | | |
| | | | |
| 03 | AVIONICS | (175) | |
| 01 | DATA MANAGEMENT | | |
| 02 | GN&C | 64 | |
| | GUID & NAV | | ADDED HORIZON SCANNER & SUN SEN. |
| | CONTROLS | | |
| | DOCKING SYSTEM | | |
| 03 | COMMUNICATIONS | | ADDED FOR "S" - XCVR & ANT. ARRAY |
| 04 | INSTRUMENTATION | | |
| 05 | ELECTRICAL POWER | 101 | ADDED BATTERIES FOR 14 DAYS |
| 06 | POWER DIST & CONTROL | 10 | |
| | | | |
| 04 | PROPULSION | | |
| 01 | MAIN ENGINE (GFE) → | | PRESENTLY EMPLOYED MOTOR |
| 02 | MAIN ENGINE SUPPORT | | (TE-M-364-2) WILL BE REPLACED |
| 03 | ACPS ENGINE | | BY A MOTOR WITH LOW BURNING |
| 04 | ACPS ENGINE SUPPORT | | RATE PROPELLANTS. CHAR'TICS |
| | | | OF NEW MOTOR: 1440 LBS |
| 05 | INTERSTAGE INTERFACE | | PROPELLANT, THRUST 3000 LBS. |
| 01 | STRUCTURES | | BURNING TIME ABOUT 160 SEC. |
| 02 | SEPARATION SYSTEM | | THE ACTUAL PROPELLANT |
| | | | WEIGHT WILL BE TAILORED |
| 06 | DROP TANKS | | TO THE SELECTED TUG. |
| 01 | STRUCTURES | | |
| 02 | THERMAL INSULATION | | |
| 03 | PROPELLANT SUPPORT SYS | | |
| | PROPELLANT WEIGHT | 1440 | |
| | PRESENT BURNOUT WT, BN II | 313 | |
| | ADDED WT. (SEE ABOVE) | 175 | |

SIGNIFICANT DESIGN PARAMETERS:

MAIN ENGINE: PROPELLANT _____ THRUST ____

M.R. _____ $I_{SP}$ _____

PLANNED OPERATIONAL SPAN-FROM ____ TO _____

PROPELLANT LOAD FACTOR ( $\lambda$ ) _____

DESIGN LIFE _____ MISSIONS

AUTONOMY LEVEL _____

NOTES:

① SUBSYSTEM(S) CONFIG MAY BE DESIGNATED BY A CODE WITH DETAILS ON SUPPL CONFIG DATA SHEETS

PLANNED EVOLUTION:

BURNER II STAGE IS USED WITH CHANGES DESCRIBED UNDER SUBSYSTEM CONFIGURATIONS. DETAILS FOR THIS STAGE STILL HAVE TO BE COORDINATED WITH THE BOEING CORPORATION.

CONFIGURATION SUMMARY SHEET
SPACE TUG SYSTEM STUDY
DEORBIT KICK MOTOR

CONFIG NO. DKM-1

NASA CO NO. —

DATE 6/23/73

MARTIN MARIETTA

CONFIGURATION PROFILE SKETCH

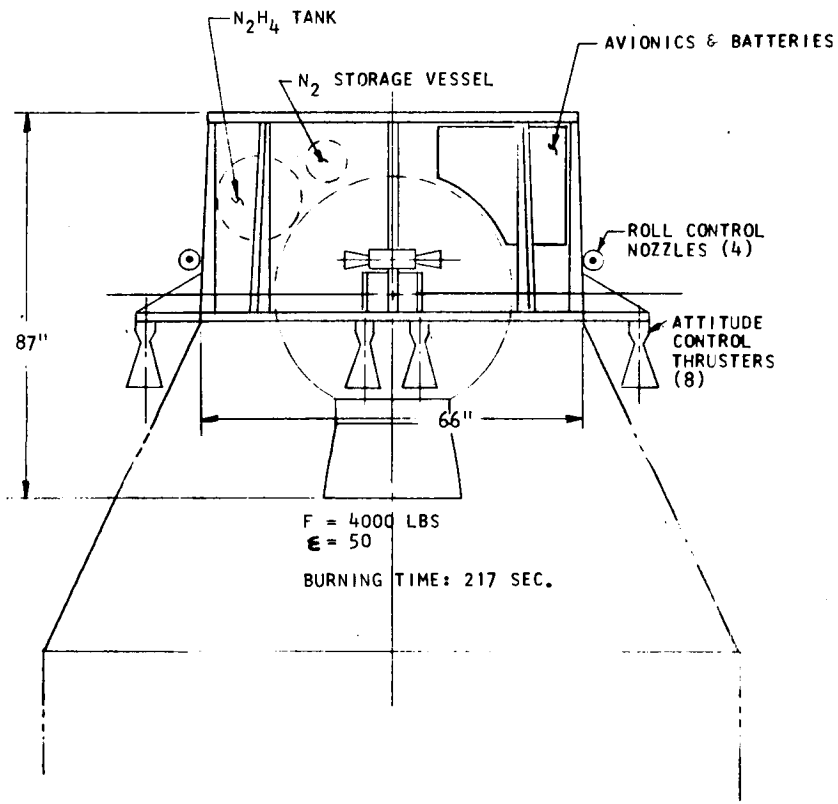


SPACE TUG VEHICLE SUBSYSTEM DEFINITION

| WBS NO. 320-04 | NOMENCLATURE | WT. | SUBSYSTEM CONFIG ① |
|---|---|---|---|
| | SPACE TUG VEH AUX STG | 3956 | STG WT INCLUDING 10% DRY WT CONT |
| 01 | STRUCTURES | (210) | |
| 01 | FUEL TANK & SUPPORT | | |
| 02 | OX TANK & SUPPORT | | |
| 03 | BODY STRUCTURE | | |
| 04 | THRUST STRUCTURE | 70 | |
| 05 | METEOROID SHIELD | | |
| 06 | PAYLOAD INTERFACE | 140 | DOCKING HARDWARE |
| | | | |
| 02 | THERMAL CONTROL | – | |
| 01 | FUEL TANK INSULATION | | |
| 02 | OX TANK INSULATION | | |
| 03 | PURGE SYSTEM | | |
| 04 | THERMAL CONTROL SYSTEM | | |
| | | | |
| 03 | AVIONICS | (175) | |
| 01 | DATA MANAGEMENT | | |
| 02 | GN&C | 64 | |
| | GUID & NAV | | |
| | CONTROLS | | |
| | DOCKING SYSTEM | | |
| 03 | COMMUNICATIONS | | |
| 04 | INSTRUMENTATION | | |
| 05 | ELECTRICAL POWER | 101 | BATTERIES (FOR 14 DAYS) |
| 06 | POWER DIST & CONTROL | 10 | |
| | | | |
| 04 | PROPULSION | (451) | |
| 01 | MAIN ENGINE (GFE) | 350 | SRM CASE |
| 02 | MAIN ENGINE SUPPORT | | |
| 03 | ACPS ENGINE | 101 | |
| 04 | ACPS ENGINE SUPPORT | | |
| | | | |
| 05 | INTERSTAGE INTERFACE | | |
| 01 | STRUCTURES | | |
| 02 | SEPARATION SYSTEM | | |
| | | | |
| 06 | DROP TANKS | | |
| 01 | STRUCTURES | | |
| 02 | THERMAL INSULATION | | |
| 03 | PROPELLANT SUPPORT SYS | | |
| | NON-USABLE PROPELLANT | 10 | |
| | SOLID PROPELLANT | 3000 | |
| | ACSP PROPELLANT | 26 | |
| | 10% DRY WT CONTINGENCY | 84 | 10% X 836 |

SIGNIFICANT DESIGN PARAMETERS:

MAIN ENGINE: PROPELLANT SOLID THRUST 4K

M.R. N/A $I_{SP}$ 290

PLANNED OPERATIONAL SPAN-FROM ____ TO ____

PROPELLANT LOAD FACTOR ( λ ) ____

DESIGN LIFE ____ MISSIONS

AUTONOMY LEVEL ____

NOTES:

① SUBSYSTEM(S) CONFIG MAY BE DESIGNATED BY A CODE WITH DETAILS ON SUPPL CONFIG DATA SHEETS

PLANNED EVOLUTION:

CONFIGURATION SUMMARY SHEET
SPACE TUG SYSTEM STUDY
DEORBIT KICK MOTOR

CONFIG NO. DKM-2

NASA CO NO. —

DATE 6-23-73

MARTIN MARIETTA

## AVIONICS SUBSYSTEM

ASCENT KICK STAGE AVIONICS

DEORBIT KICK STAGE AVIONICS

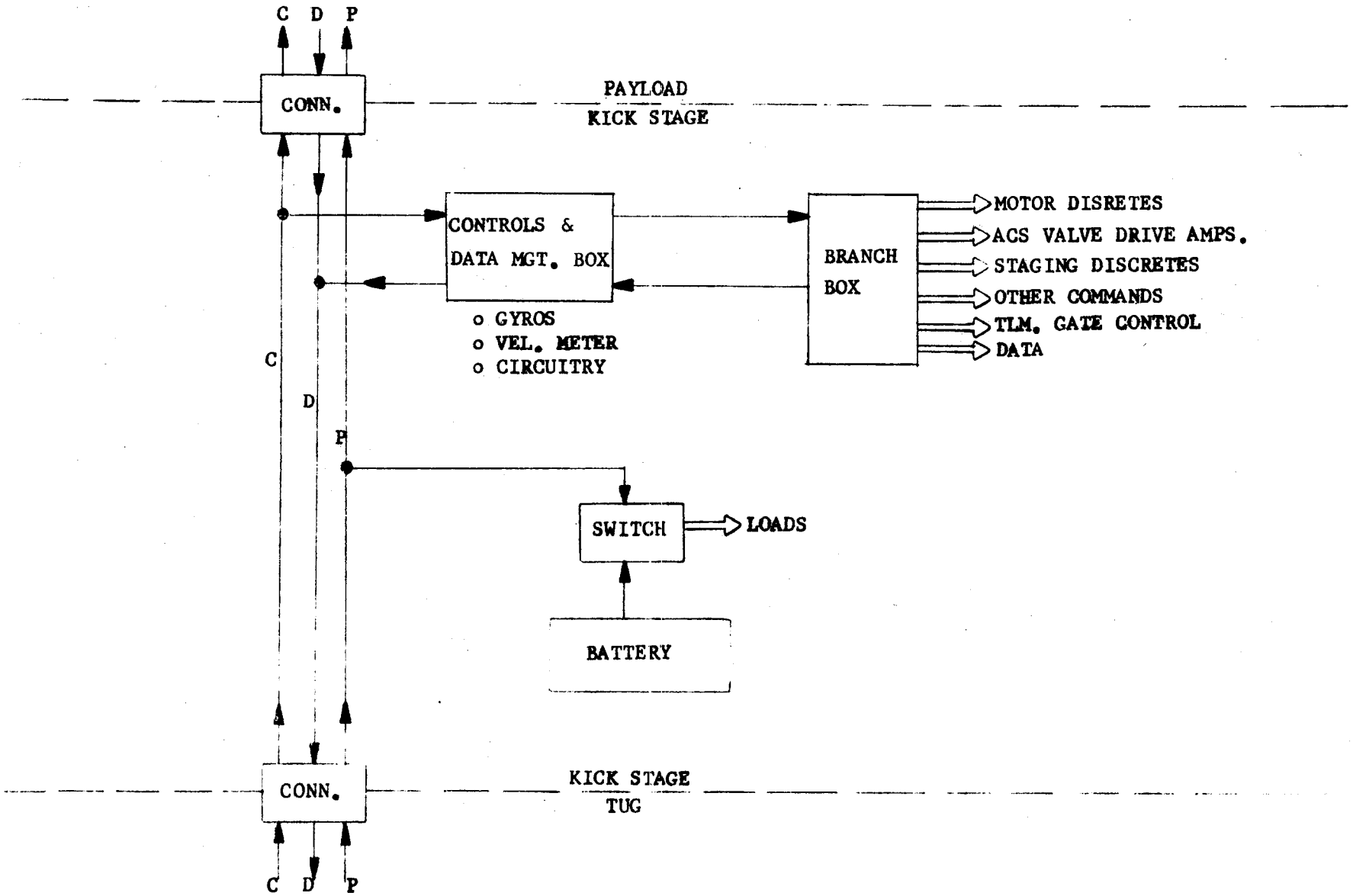


ACSENT KICK STAGE AVIONICS

TBS

ASCENT KICK STAGE - RELIABILITY DIAGRAM

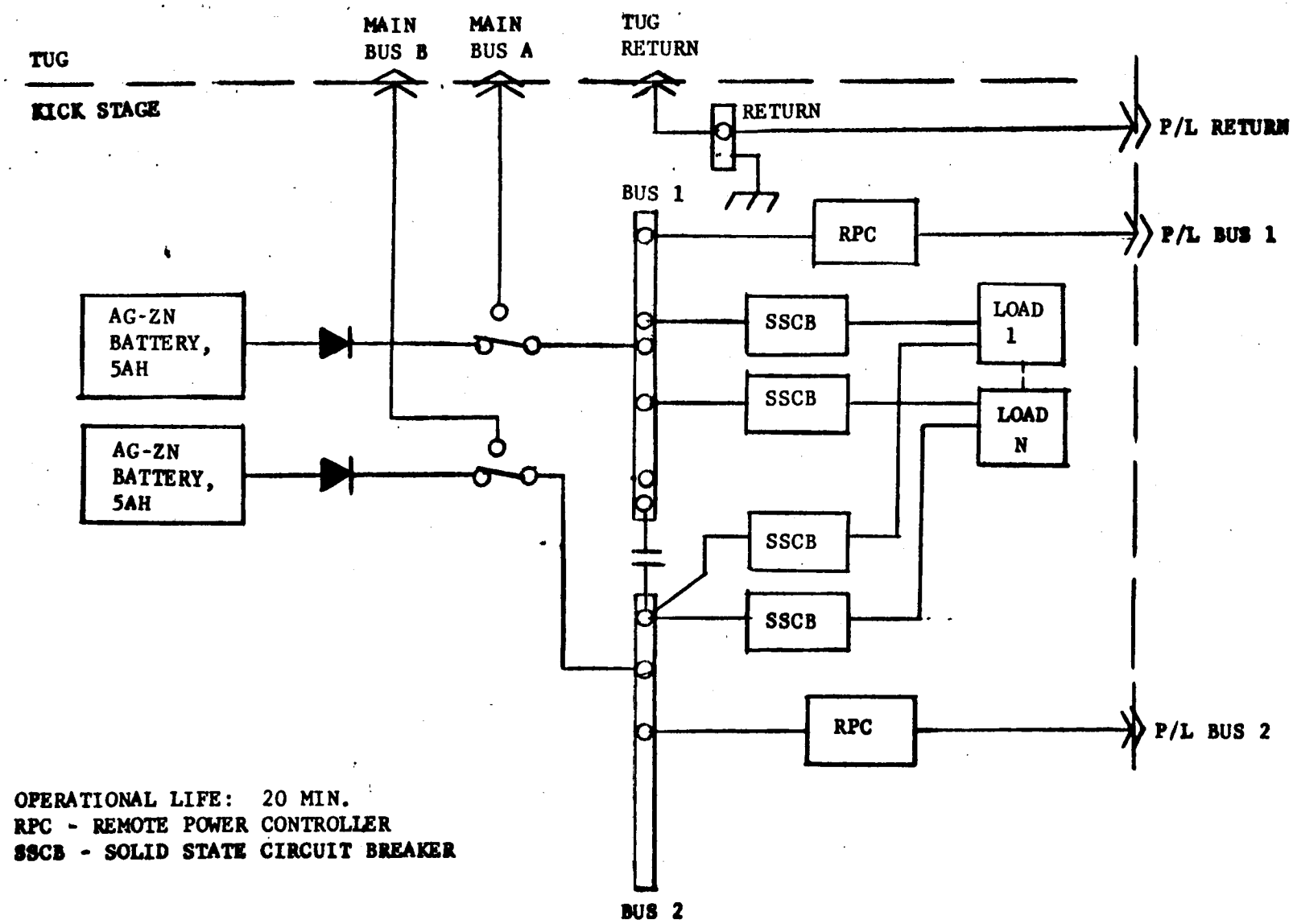


OPERATIONAL LIFE: 20 MIN.
RPC - REMOTE POWER CONTROLLER
SSCB - SOLID STATE CIRCUIT BREAKER

ASCENT KICK STAGE POWER SYSTEM SCHEMATIC

| COMPONENT | QTY. | TOTAL WEIGHT (LBS) | UNIT SIZE (IN) | TOTAL VOL. ($FT^3$) | OPERATING POWER (WATTS) | TOTAL POWER (WATTS) | MFG. MODEL NO. | REMARKS |
|---|---|---|---|---|---|---|---|---|
| GUID., NAV. & CONTROLS | | | | | | | | |
| CONTROLS & DATA MANAGEMENT BOX | 1 | 10 | | | | | | |
| BRANCH BOXES | 10 | 2 | | | | | | |
| TOTAL WEIGHT | | 12 | | | | | | |

COMPONENT LIST/PHYSICAL CHARACTERISTICS

ASCENT KICK STAGE AVIONICS

| COMPONENT | QTY. | TOTAL WEIGHT (LBS) | UNIT SIZE (IN) | TOTAL VOL. ($FT^3$) | OPERATING POWER (WATTS) | TOTAL POWER (WATTS) | MFG. MODEL NO. | REMARKS |
|---|---|---|---|---|---|---|---|---|
| **ELECTRICAL POWER** | | | | | | | | |
| BATTERY, 5AH | 2 | 8 | 4x6x6 | | | | | |
| POWER DISTRIBUTOR | 2 | 6 | 4x4x8 | | | | | |
| WIRING & CONNECTORS | - | 4 | - | | | | | |
| TOTAL WEIGHT | | 18 | | | | | | |

COMPONENT LIST/PHYSICAL CHARACTERISTICS

ASCENT KICK STAGE AVIONICS

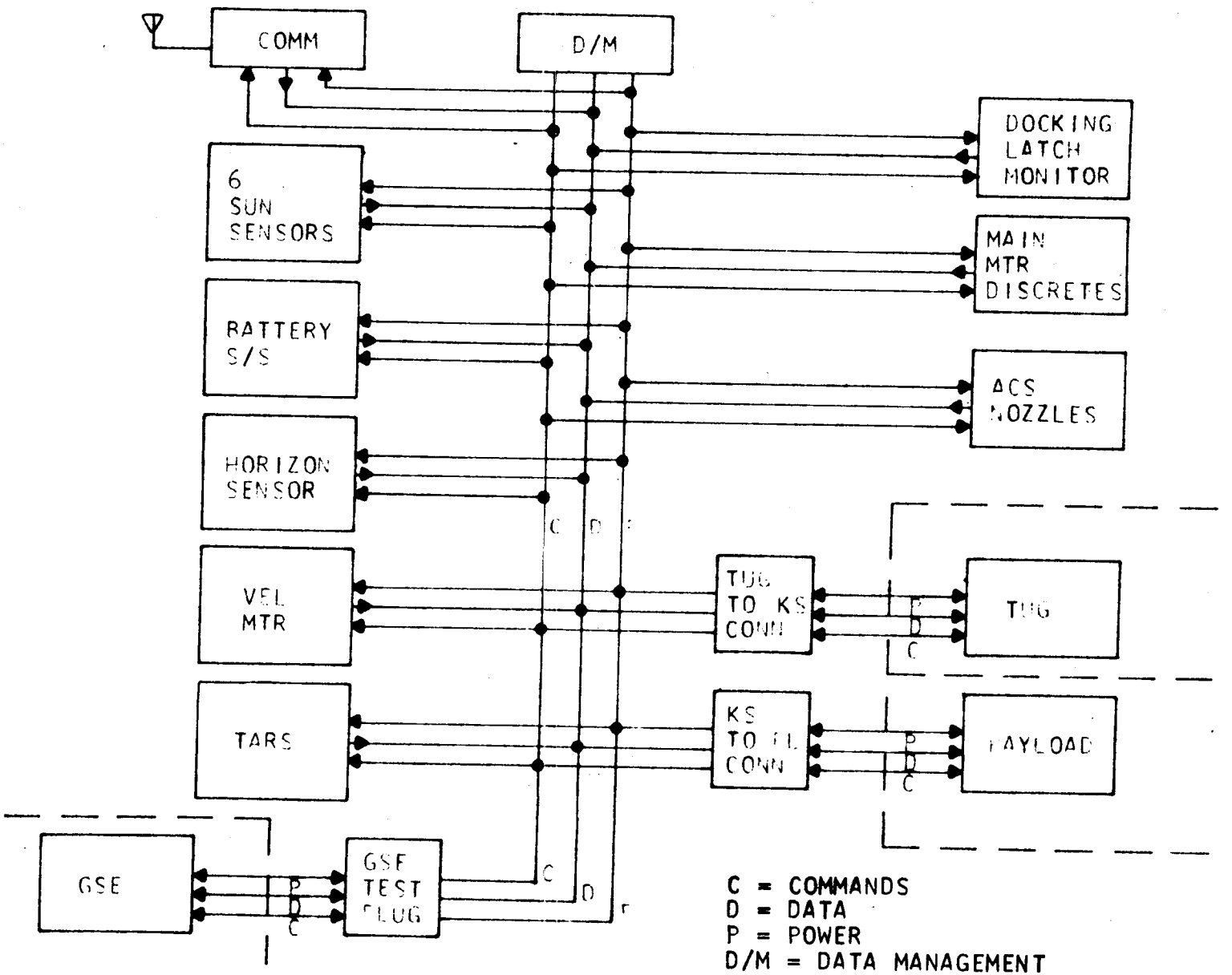


DEORBIT KICK STAGE AVIONICS

TBS

DEORBIT KICK STAGE - RELIABILITY DIAGRAM

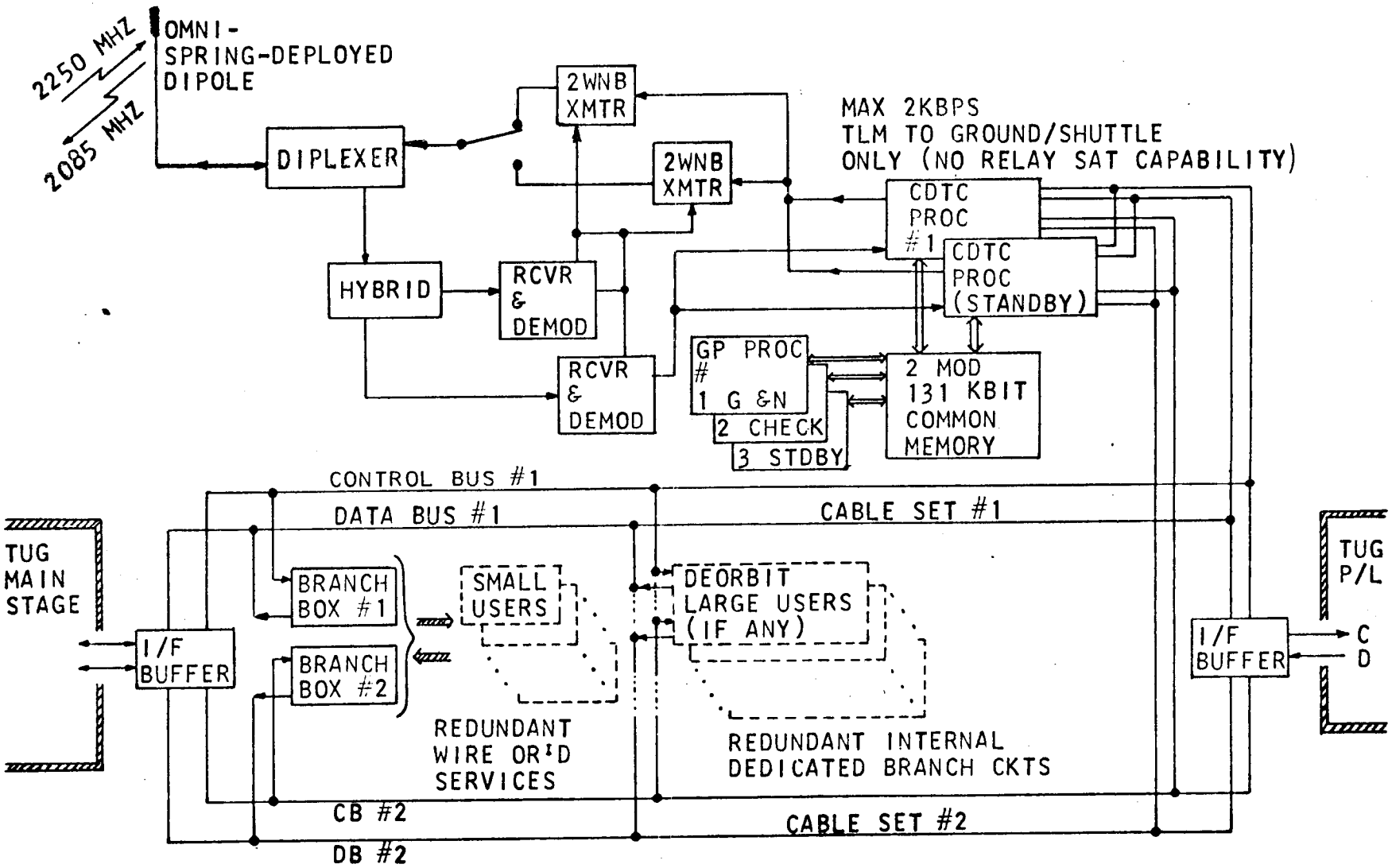


TUG DEORBIT STAGE COMMUNICATIONS & DATA MANAGEMENT

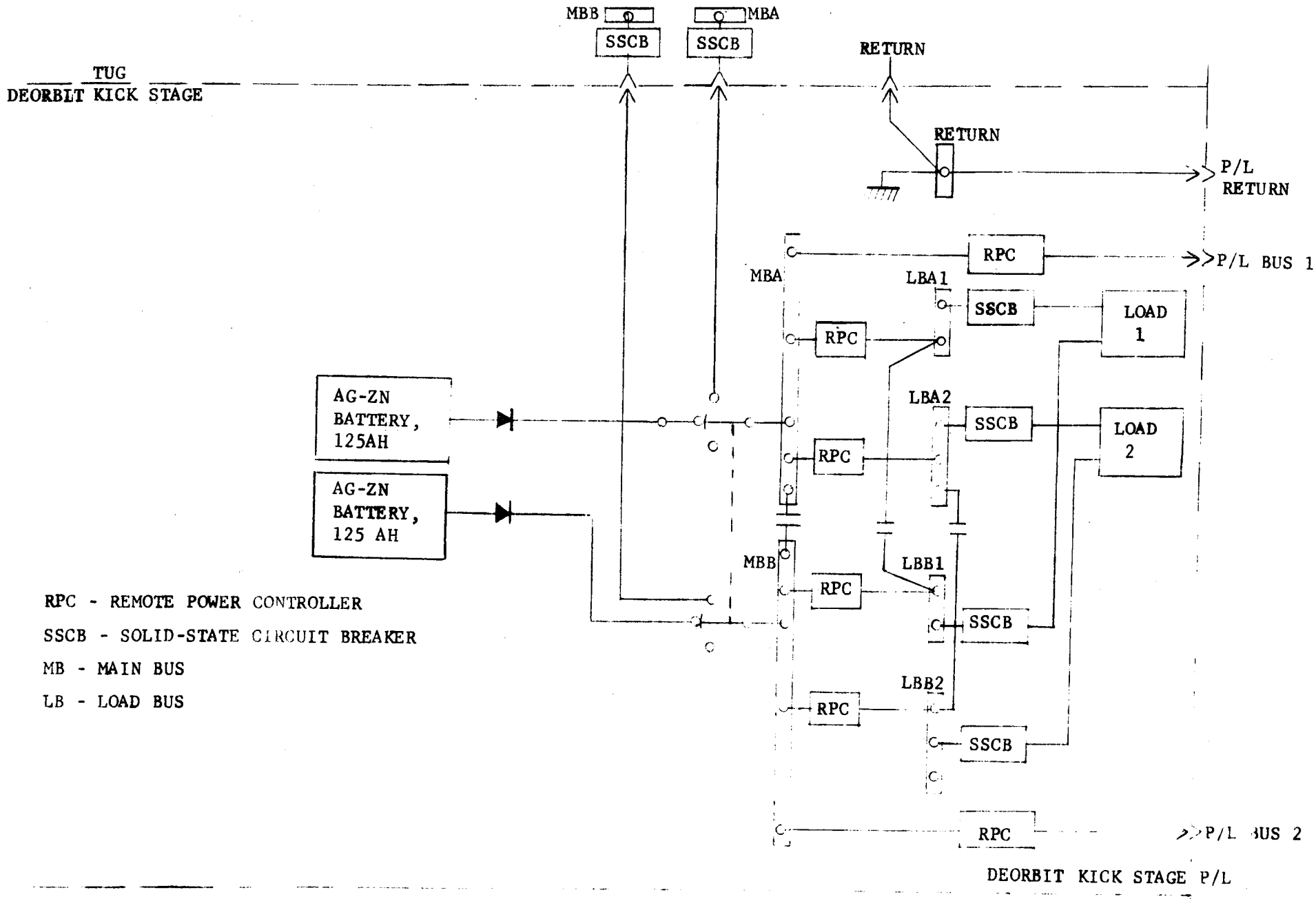


RPC - REMOTE POWER CONTROLLER

SSCB - SOLID-STATE CIRCUIT BREAKER

MB - MAIN BUS

LB - LOAD BUS

DEORBIT KICK STAGE

ELECTRICAL POWER SYSTEM

| COMPONENT | QTY. | TOTAL WEIGHT (LBS) | UNIT SIZE (IN) | TOTAL VOL. ($FT^3$) | OPERATING POWER (WATTS) | TOTAL POWER (WATTS) | MFG. MODEL NO. | REMARKS |
|---|---|---|---|---|---|---|---|---|
| GUID., NAV. & CONTROLS | | | | | | | | |
| TARS | 1 | 10 | 6x6x4 | | | | | |
| VEL. METER | 1 | 5 | 2x4x2 | | | | | |
| HORIZON | 1 | 7 | 10x6x6 | | | | | |
| SUN SCANNER | 6 | 5 | 4x2x2 | | | | | |
| TOTAL WEIGHT | | 27 | | | | | | |

COMPONENT LIST/PHYSICAL CHARACTERISTICS
DEORBIT KICK STAGE AVIONICS

| COMPONENT | QTY. | TOTAL WEIGHT (LBS) | UNIT SIZE (IN) | TOTAL VOL. ($FT^3$) | OPERATING POWER (WATTS) | TOTAL POWER (WATTS) | MFG. MODEL NO. | REMARKS |
|---|---|---|---|---|---|---|---|---|
| COMMUNICATION & DATA MANAGEMENT | | | | | | | | |
| OMNI ANTENNA | 1 | 1.0 | 0.5x0.5x60 | | NA | | | |
| DIPLEXER + HYBRID | 1+1 | 1.0 + 0.5 | 2x5x5 + 1x5x5 | | NA | | | |
| TRANSMITTER | 2 | 2.0 | 2x2x5 | | 15.0 | | | |
| RECEIVER | 2 | 2.7 | 2x3x5 | | 2.5 | | | |
| CDTC PROCESSOR | 2 | 8.0 | 4x4x6.5 | | 5.0 | | | |
| SMALL COMMON MENORY | 1 | 2.0 | 8.5x9x1.5 | | 2.0 | | | |
| GP PROCESSOR | 3 | 7.5 | 4x4x3 | | 2.5 | | | |
| BRANCH BOXES | 2 | 2.0 | 4x4x1.5 | | 1.0 | | | |
| I/F BUFFERS (2), CABLING & CONNECTORS | 1 SET | 10.0 | NA | | NA | | | |
| TOTAL WEIGHT | | 36.7 | | | | | | |

COMPONENT LIST/PHYSICAL CHARACTERISTICS

DEORBIT KICK STAGE AVIONICS

| COMPONENT | QTY. | TOTAL WEIGHT (LBS) | UNIT SIZE (IN) | TOTAL VOL. ($FT^3$) | OPERATING POWER (WATTS) | TOTAL POWER (WATTS) | MFG. MODEL NO. | REMARKS |
|---|---|---|---|---|---|---|---|---|
| **ELECTRICAL POWER** | | | | | | | | |
| Battery, 250 AH | 1 | 87 | 10 X 12 X 20 | | | | | |
| Power Distributor | 2 | 14 | 6 X 8 X 12 | | | | | |
| Wiring & Connectors | - | 10 | --- | | | | | |
| TOTAL WEIGHT | | 111 | | | | | | |

COMPONENT LIST/PHYSICAL CHARACTERISTICS

DEORBIT KICK STAGE AVIONICS

# SECTION V

# SPACE TUG

# THERMAL CONTROL SUBSYSTEM CANDIDATES

## CONFIGURATIONS

TH-1, Single Stage Passive System

TH-2, 1½ Stage Passive System

TH-3, Single Stage Active System

TH-4, Two Stage Passive System

TH-5, Single Stage Passive System

NOTE:
ILLUSTRATION SHOWN IS FOR TUG CONFIGURATION IA1. OTHER SINGLE STAGE CONFIGURATIONS ARE SIMILAR.

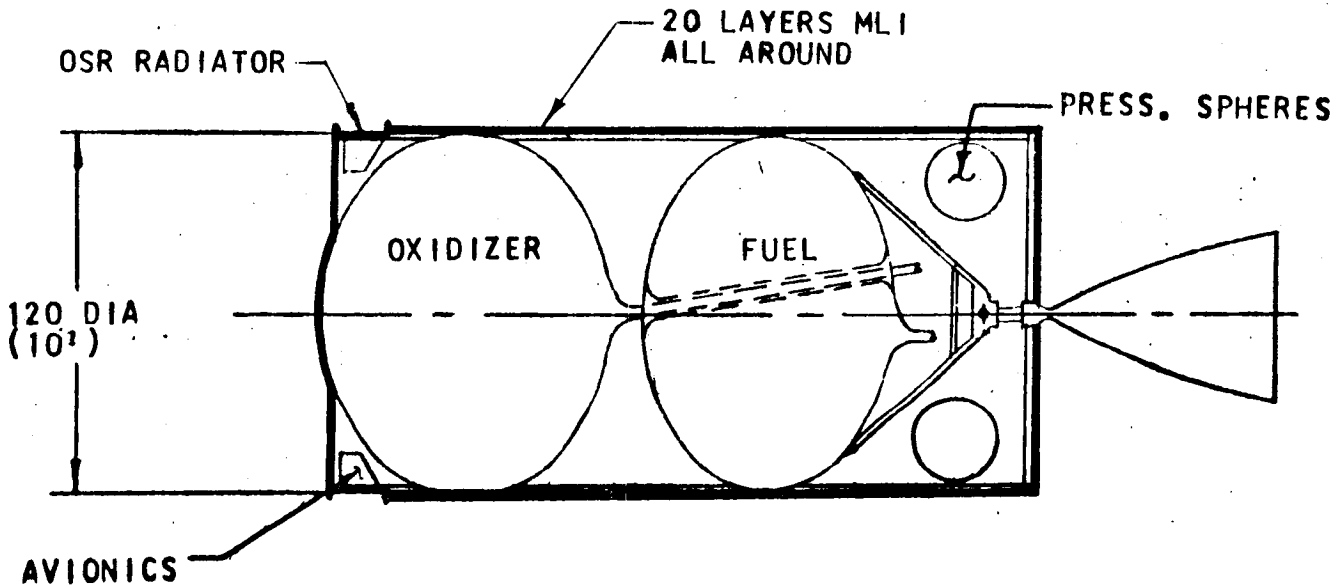


THERMAL CONTROL DIAGRAM
SINGLE STAGE PASSIVE SYSTEM
CONFIGURATION TH-1

| COMPONENT | QTY. | TOTAL WEIGHT (LBS) | UNIT SIZE (IN) | TOTAL VOL. ($FT^3$) | OPERATING POWER (WATTS) | TOTAL POWER (WATTS) | MFG. MODEL NO. | REMARKS |
|---|---|---|---|---|---|---|---|---|
| Multilayer Insulation (MLI) | 1 | 81 | 600 $ft^2$ | | | | | 20 layers |
| Thermal Control Paint | | 9 | | | | | | |
| Electric Heaters & Thermostats | 4 | 15 | | | | 300 | | |
| Optical Solar Reflector (OSR) | 1 | 2 | 1.5X31.4 ft 48 $ft^2$ | | | | | |
| ACPS Radiation Shield | 4 | 4 | | | | | | |
| TOTAL WEIGHT | | 111 | | | | | | |

COMPONENT LIST/PHYSICAL CHARACTERISTICS

THERMAL CONTROL - CONFIGURATION TH-1

NOTES:

1. ROLL MANEUVER MAY BE REQUIRED TO KEEP EXTERNAL TANK WARM.
2. HEATERS ON $N_2H_4$ TANK & ACS LINES.
3. PAINT ON DROP TANKS

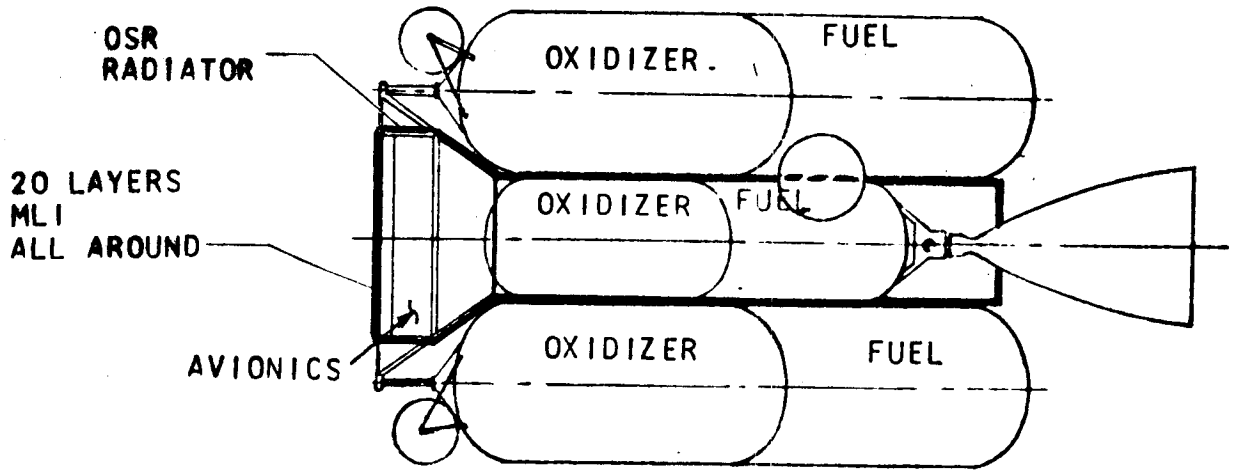


THERMAL CONTROL DIAGRAM
1-1/2 STAGE PASSIVE SYSTEM
CONFIGURATION TH-2

| COMPONENT | QTY. | TOTAL WEIGHT (LBS) | UNIT SIZE (IN) | TOTAL VOL. ($FT^3$) | OPERATING POWER (WATTS) | TOTAL POWER (WATTS) | MFG. MODEL NO. | REMARKS |
|---|---|---|---|---|---|---|---|---|
| MULTILAYER INSULATION (MLI) | 1 | 40 | 200 $ft^2$ | | | | | 20 Layers |
| Thermal Control Paint | | 5 | | | | | | |
| Electric Heaters & Thermostats | 4 | 15 | | | | 300 | | |
| Optical Solar Reflector (OSR) | 1 | 2 | 1.5X31.4 Ft 48 $Ft^2$ | | | | | |
| ACPS Radiation Shield | 4 | 4 | | | | | | |
| TOTAL WEIGHT | | 66 | | | | | | |

**COMPONENT LIST/PHYSICAL CHARACTERISTICS**

THERMAL CONTROL - CONFIGURATION TH-2

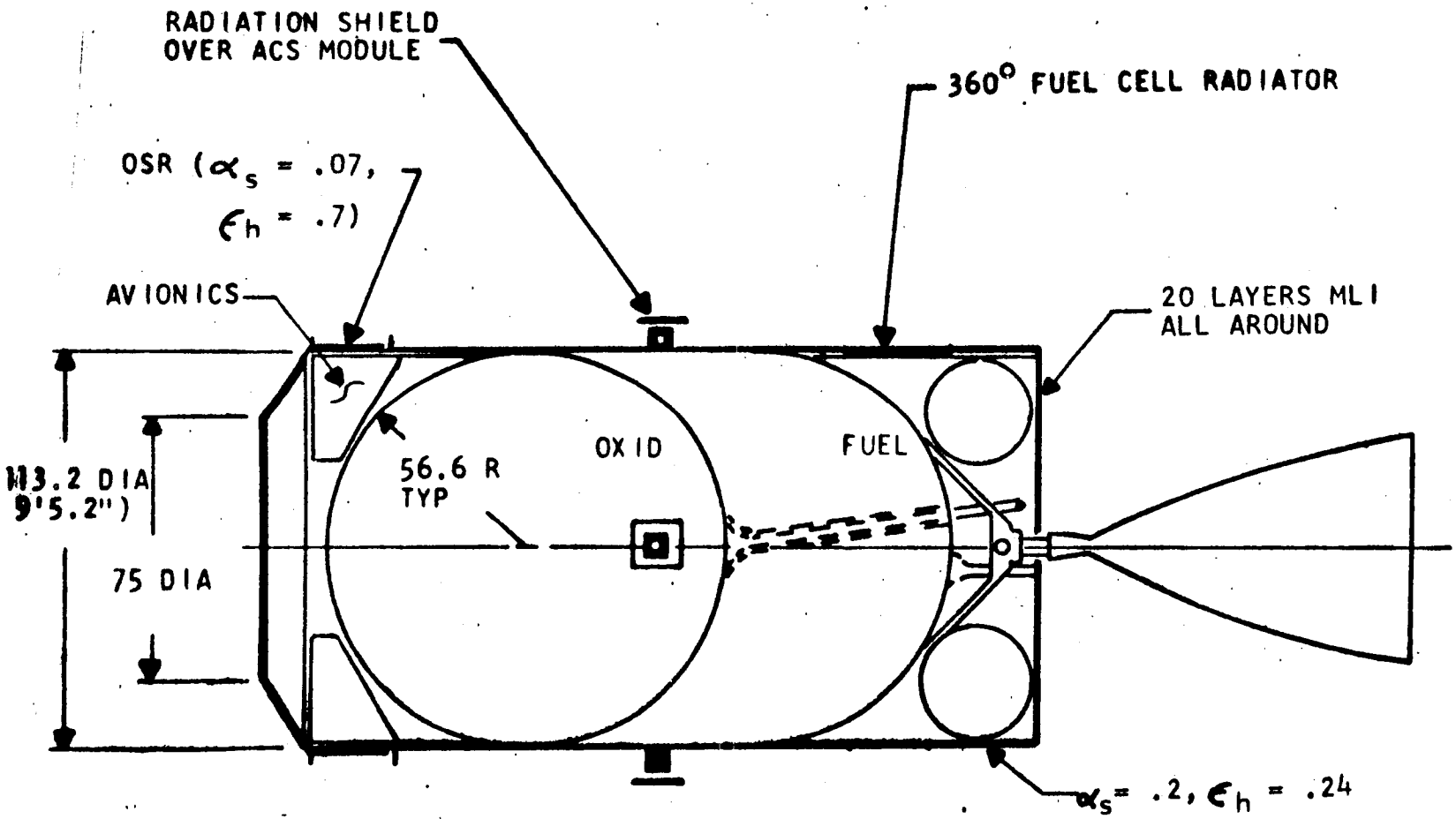


THERMAL CONTROL DIAGRAM
SINGLE STAGE ACTIVE SYSTEM
CONFIGURATION TH-3

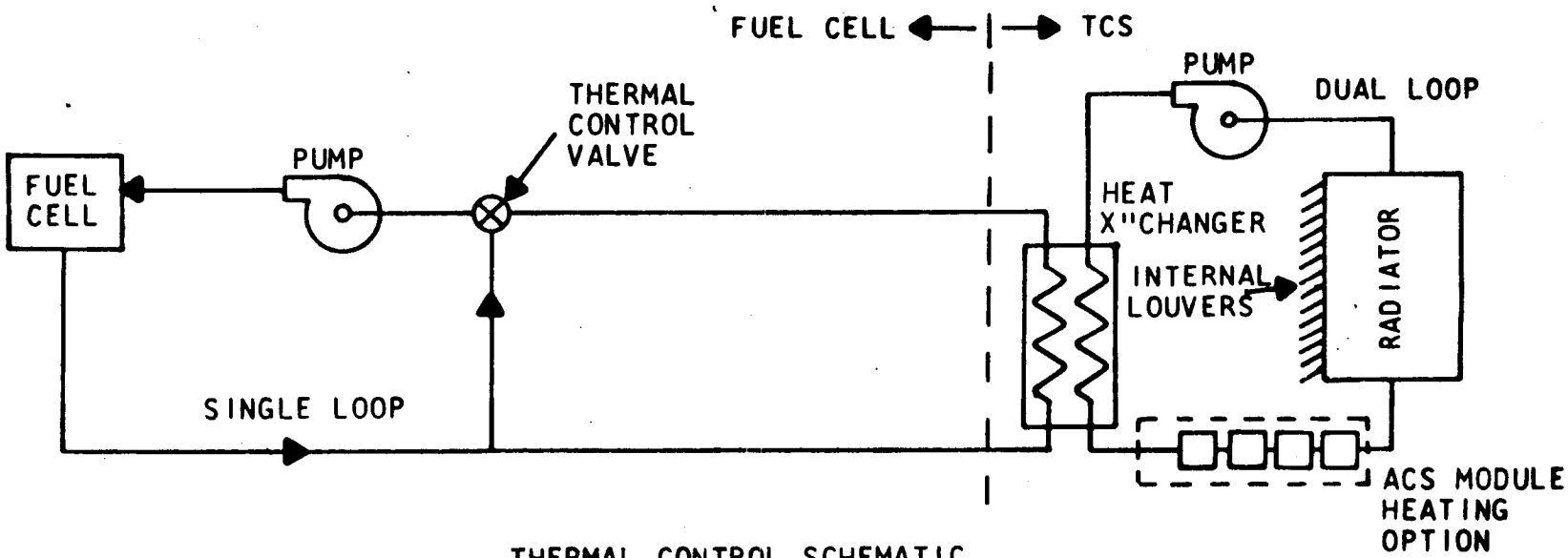


THERMAL CONTROL SCHEMATIC
SINGLE STAGE ACTIVE SYSTEM
CONFIGURATION TH-3

| COMPONENT | QTY. | TOTAL WEIGHT (LBS) | UNIT SIZE (IN) | TOTAL VOL. ($FT^3$) | OPERATING POWER (WATTS) | TOTAL POWER (WATTS) | MFG. MODEL NO. | REMARKS |
|---|---|---|---|---|---|---|---|---|
| Multi Layer Insulation | | 81 | 600 $ft^2$ | | | | | |
| OSR | | 2 | 1.5X30 Ft | | | | | |
| Radiator | | 58 | 2.7X30 Ft | | | | | |
| Accumulator | 2 | 15 | | | | | | |
| Pump Package | 3 | 15 | | | 100 | | | |
| Heat Exchanger | 1 | 15 | | | | | | |
| Louver | 1 | 10 | 3 $ft^2$ | | | | | |
| TOTAL WEIGHT | | 196 | | | | | | |

**COMPONENT LIST/PHYSICAL CHARACTERISTICS**
THERMAL CONTROL - CONFIGURATION TH-3

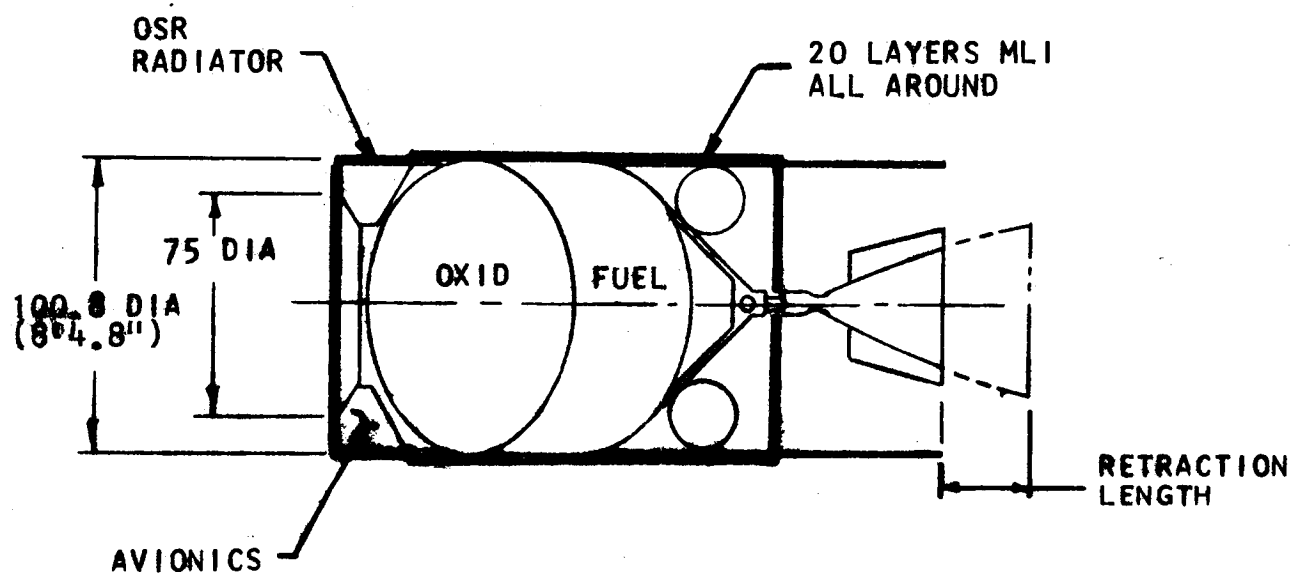


THERMAL CONTROL DIAGRAM
TWO STAGE PASSIVE SYSTEM
CONFIGURATION TH-4

| COMPONENT | QTY. | TOTAL WEIGHT (LBS) | UNIT SIZE (IN) | TOTAL VOL. ($FT^3$) | OPERATING POWER (WATTS) | TOTAL POWER (WATTS) | MFG. MODEL NO. | REMARKS |
|---|---|---|---|---|---|---|---|---|
| Multilayer Insulation (MLI) | 1 | 63 | 450 $ft^2$ | | | | | 20 layers |
| Thermal Control Paint | | 8 | | | | | | |
| Electric Heaters & Thermostats | 4 | 15 | | | | 300 | | |
| Optical Solar Reflector (OSR) | 1 | 2 | 1.5 X 31.4 ft 48 $ft^2$ | | | | | |
| ACPS Radiation Shield | 4 | 4 | | | | | | |
| TOTAL WEIGHT | | 92 | | | | | | |

**COMPONENT LIST/PHYSICAL CHARACTERISTICS**
THERMAL CONTROL - CONFIGURATION TII-4

NOTE:
ILLUSTRATION SHOWN IS FOR TUG CONFIGURATION 1A1. OTHER SINGLE STAGE CONFIGURATIONS ARE SIMILAR.

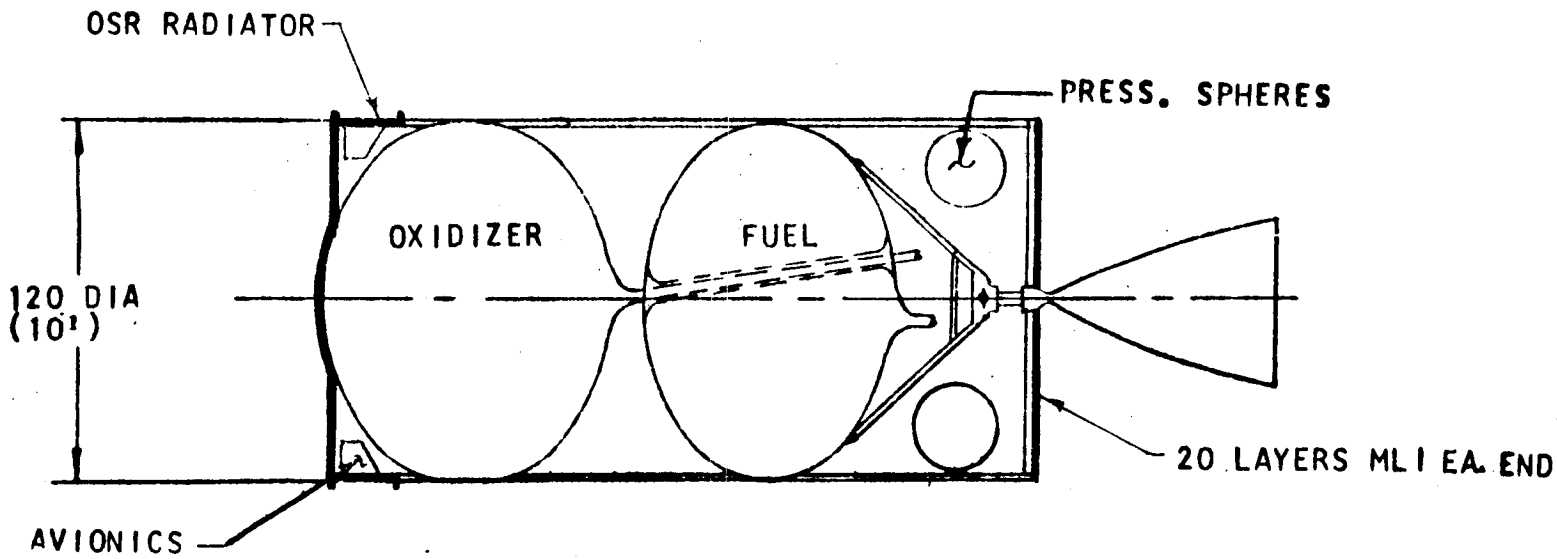


THERMAL CONTROL DIAGRAM
SINGLE STAGE PASSIVE SYSTEM
CONFIGURATION TH-5

| COMPONENT | QTY. | TOTAL WEIGHT (LBS) | UNIT SIZE (IN) | TOTAL VOL. ($FT^3$) | OPERATING POWER (WATTS) | TOTAL POWER (WATTS) | MFG. MODEL NO. | REMARKS |
|---|---|---|---|---|---|---|---|---|
| Multilayer Insulation (MLI) | 1 | 27 | 200 $ft^2$ | | | | | 20 layers |
| Thermal Control Paint | | 9 | | | | | | |
| Electric Heaters & Thermostats | 4 | 15 | | | | 300 | | |
| Optical Solar Reflector (OSR) | 1 | 2 | 1.5X31.4 ft 48 $ft^2$ | | | | | |
| ACPS Radiation Shield | 4 | 4 | | | | | | |
| Battery Heat Pipes | 2 | 6 | | | | | | |
| TOTAL WEIGHT | | 61 | | | | | | |

COMPONENT LIST/PHYSICAL CHARACTERISTICS

THERMAL CONTROL - CONFIGURATION TH-5

# SECTION VI

# SPACE TUG

## AVIONICS SYSTEM CANDIDATES

### CONFIGURATIONS

AV-1, Average weight, Deploy Only, Solar Arrays

AV-2, Light weight, Deploy/Retrieve, Solar Arrays

AV-3, Light weight, Deploy Only, Solar Arrays

AV-4, Average weight, Deploy/Retrieve, Solar Arrays

AV-7, Light weight, Deploy/Retrieve, Fuel Cells

AV-8, Light weight, Deploy Only, Fuel Cells

AV-9, Average weight, Deploy Only, Batteries

| SUBSYSTEM/COMPONENT | UNIT WEIGHT | SYSTEM CONFIGURATION | | | | | | | | | | | | | |
|---|---|---|---|---|---|---|---|---|---|---|---|---|---|---|---|
| | | AV-1 DEPLOY | | AV-2 RETRIEVE | | AV-3 DEPLOY | | AV-4 RETRIEVE | | AV-7 RETRIEVE | | AV-8 DEPLOY | | AV-9 DEPLOY | |
| | | QTY | TOT WT | QTY | TOT WT | QTY | TOT WT | QTY | TOT WT | QTY | TOT WT | QTY | TOT WT | QTY | TOT WT |
| GUID.,NAV. & CONTROL | | | | | | | | | | | | | | | |
| STAR TRACKER | 10 | 1 | 10 | 1 | 10 | 1 | 10 | 1 | 10 | 1 | 10 | 1 | 10 | 1 | 10 |
| RENDEZVOUS SLR | 40 | | | 1 | 40 | | | | | 1 | 40 | | | | |
| RENDEZVOUS RF RADAR | 175 | | | | | | | 1 | 175 | | | | | | |
| DOCKING RF RADAR | 10 | | | | | | | 1 | 10 | | | | | | |
| IMU | 10/30* | 2 | 60 | 1 | 10 | 1 | 10 | 2 | 60 | 1 | 10 | 1 | 10 | 2 | 60 |
| HORIZON SENSOR** | 45 | 1 | 45 | 1 | 45 | 1 | 45 | 1 | 45 | 1 | 45 | 1 | 45 | 1 | 45 |
| VIDEO SUBSYSTEM | 13 | | | 1 | 13 | | | 1 | 13 | 1 | 13 | | | | |
| ~~REDUNDANT ATTITUDE SENSORS~~ | ~~10~~ | | | ~~2~~ | ~~20~~ | ~~2~~ | ~~20~~ | | | ~~2~~ | ~~20~~ | ~~2~~ | ~~20~~ | | |
| DOCKING HARDWARE | 90/150* | | | 1 | 90 | | | 1 | 150 | 1 | 90 | | | | |
| POWERED FLIGHT ACTUATORS | 10 | 2 | 20 | 2 | 20 | 2 | 20 | 2 | 20 | 2 | 20 | 2 | 20 | 2 | 20 |
| COMMUNICATIONS | 34 | 1 | 34 | 1 | 34 | 1 | 34 | 1 | 34 | 1 | 34 | 1 | 34 | 1 | 34 |
| DATA MANAGEMENT | 60 | 1 | 60 | 1 | 60 | 1 | 60 | 1 | 60 | 1 | 60 | 1 | 60 | 1 | 60 |
| ELECT. POWER (SOLAR ARRAY) | 350 | 1 | 350 | 1 | 350 | 1 | 350 | 1 | 350 | | | | | | |
| ELECT. POWER (FUEL CELL) | 360 | | | | | | | | | 1 | 360 | 1 | 360 | | |
| ELECT. POWER (BATTERY) | 675 | | | | | | | | | | | | | 1 | 675 |
| TOTAL WEIGHT | | | 534 | | 637 ~~647~~ | | 494 ~~504~~ | | 882 ~~872~~ | | 647 ~~657~~ | | 504 ~~514~~ | | 859 |

* Evolutionary Weights - Minimum/Average Weights
** DOD Level 1 Autonomy Option
(Not included in Total Weight)

NOTE: GROSS WEIGHTS REVISED TO REFLECT MARKED UP SCHEMATICS (REV. 7/4/73). CONFIGURATION SUMMARY SHEETS NOT UPDATED.

AVIONICS SYSTEM

CONFIGURATION COMPARISON

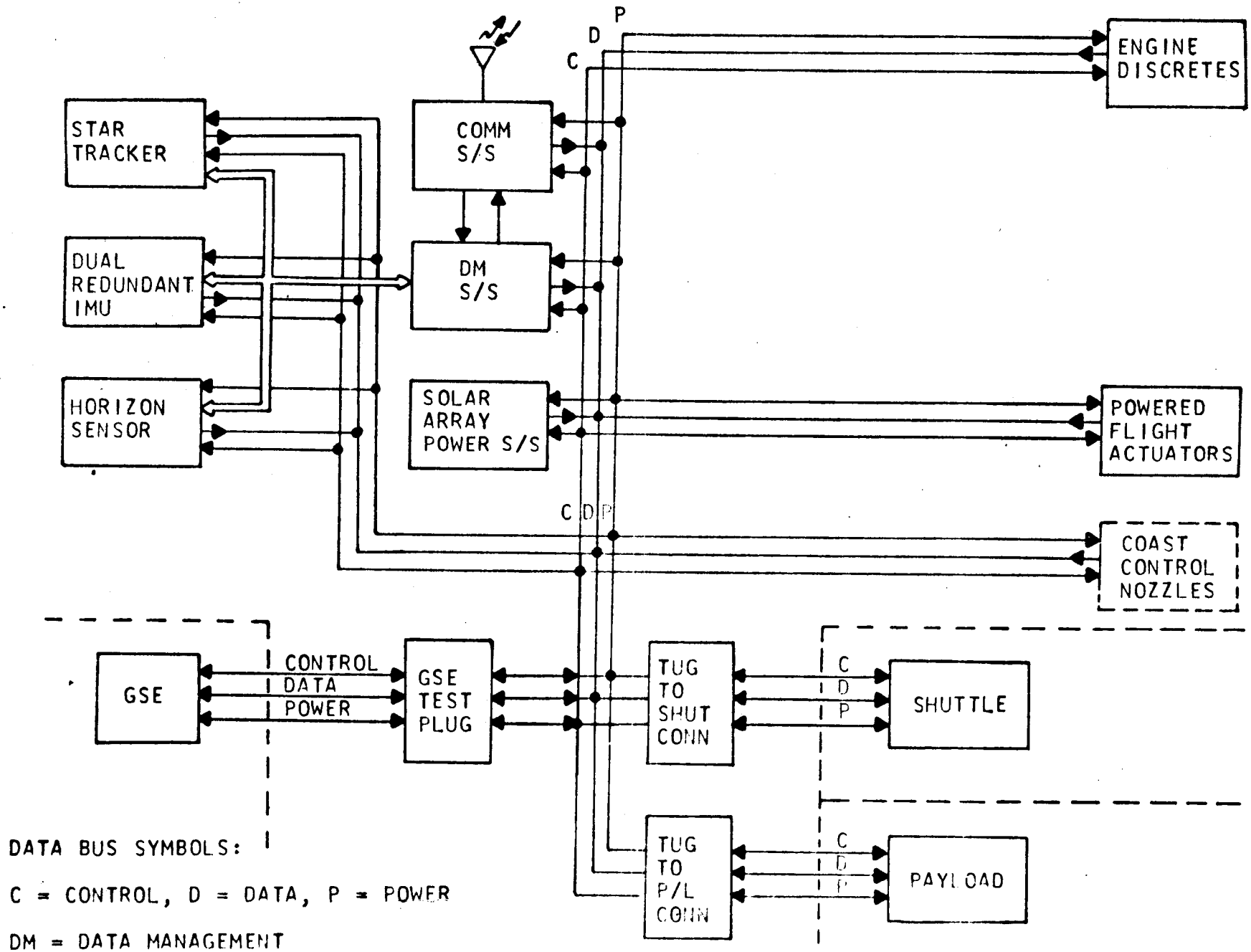


TUG AVIONICS SYSTEM, AUTONOMY LEVEL 2
CONFIGURATION AV-1 (DEPLOY ONLY)

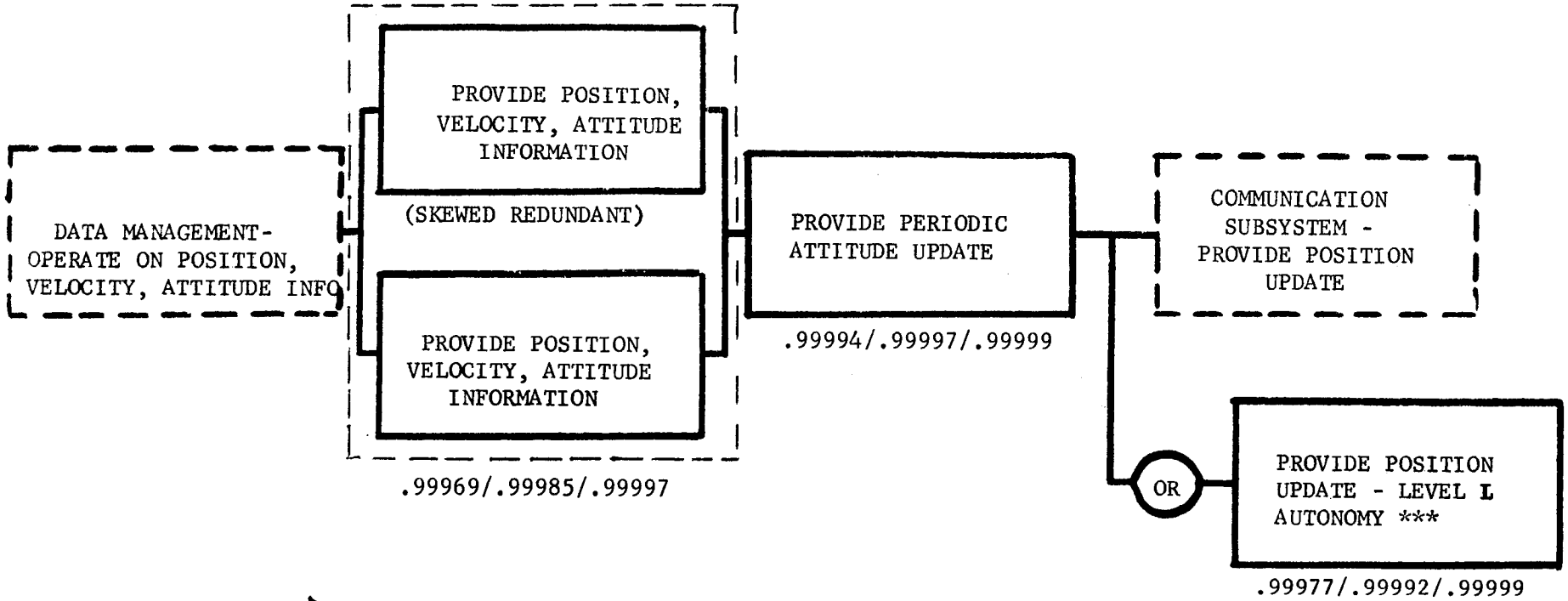


*** OPTION

| TWO STAGE TRAPEZE | ONE STAGE & STAGE AND A HALF | TWO STAGE SLINGSHOT |
|---|---|---|
| $R_7$ = .99880 | $R_7$ = .99940 | $R_7$ = .99935 |
| $R_3$ = .99978 | $R_3$ = .99974 | $R_3$ = .99969 |

LEGEND:
$R_7$ = 7 DAY MISSION RELIABILITY
$R_3$ = 3 DAY MISSION RELIABILITY
.XXXXX/.YYYYY/.ZZZZZ = 7 DAY RELIABILITY/3 DAY RELIABILITY/ 12 HOUR RELIABILITY

GUIDANCE AND NAVIGATION SUBSYSTEM - RELIABILITY DIAGRAM

CONFIGURATION AV-1

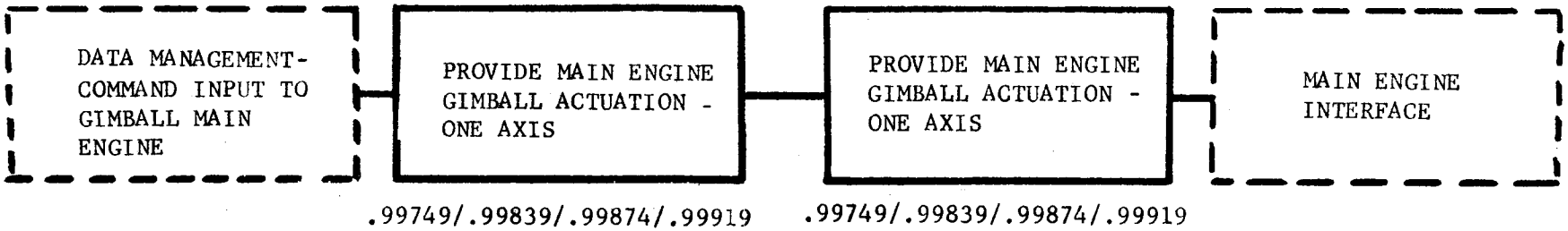


| TWO STAGE TRAPEZE | ONE STAGE & STAGE AND A HALF | TWO STAGE SLING SHOT | |
|---|---|---|---|
| $R_{OME}$=.99248<br>$R_{HiPc}$=.99516 | $R_{OME}$=.99499<br>$R_{HiPc}$=.99678 | $R_{OME}$=.99248<br>$R_{HiPc}$=.99516 | LEGEND:<br>$R_{OME}$ = Reliability with OME ENGINE<br>$R_{HiPc}$ = Reliability with HiPc ENGINE<br>.XXXXX/.YYYYY/.ZZZZZ/.TTTTT = The individual actuator assembly reliabilities for OME-one stage/ HiPc- one stage/OME - 2nd stage/ HiPc - 2nd stage respectively |

CONTROLS FOR MAIN ENGINE GIMBALLING - RELIABILITY DIAGRAM

CONFIGURATION AV-1

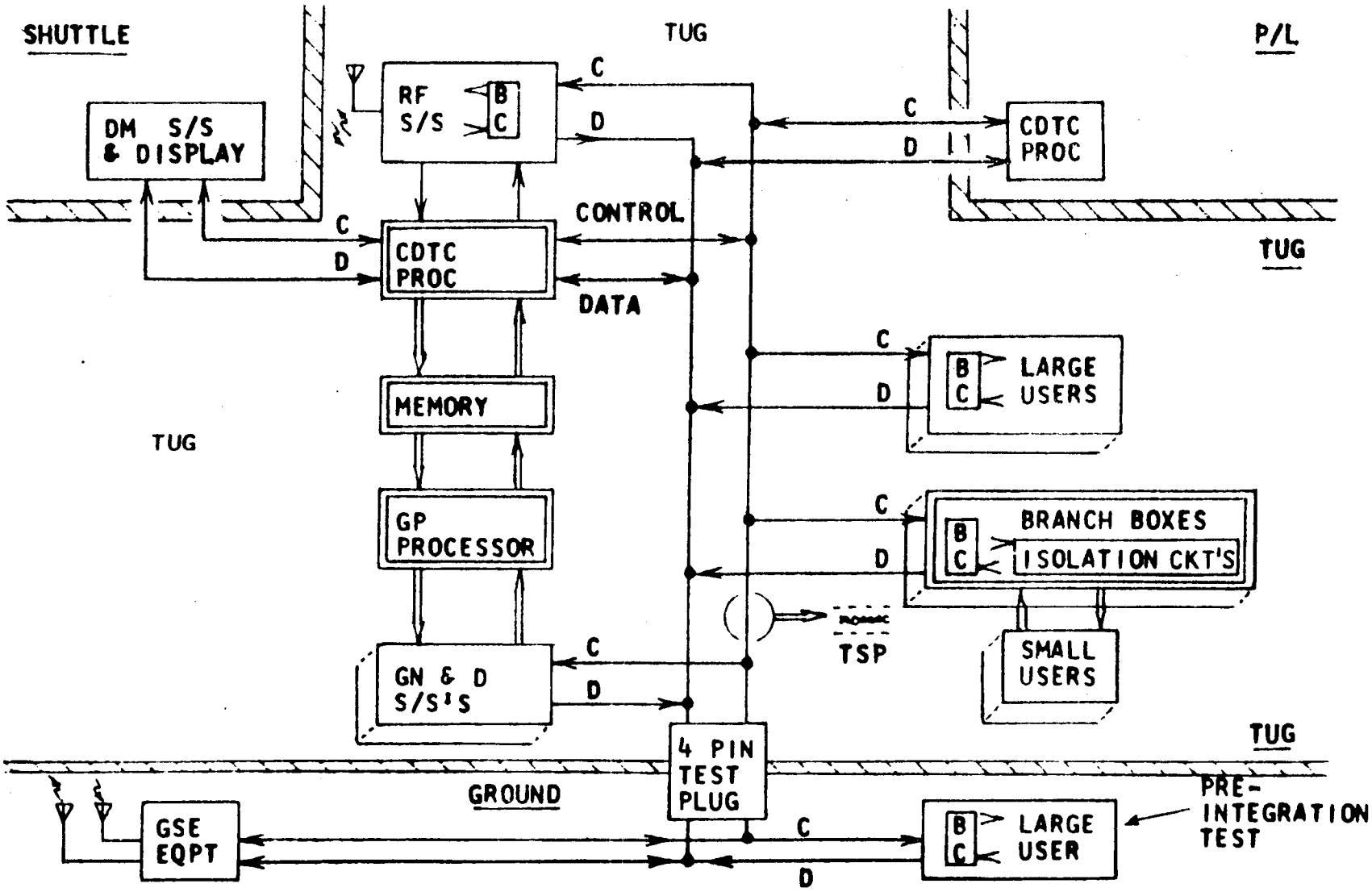


TUG DATA MANAGEMENT SYSTEM
FLEXIBLE SIGNAL INTERFACE

CONFIGURATION AV-1

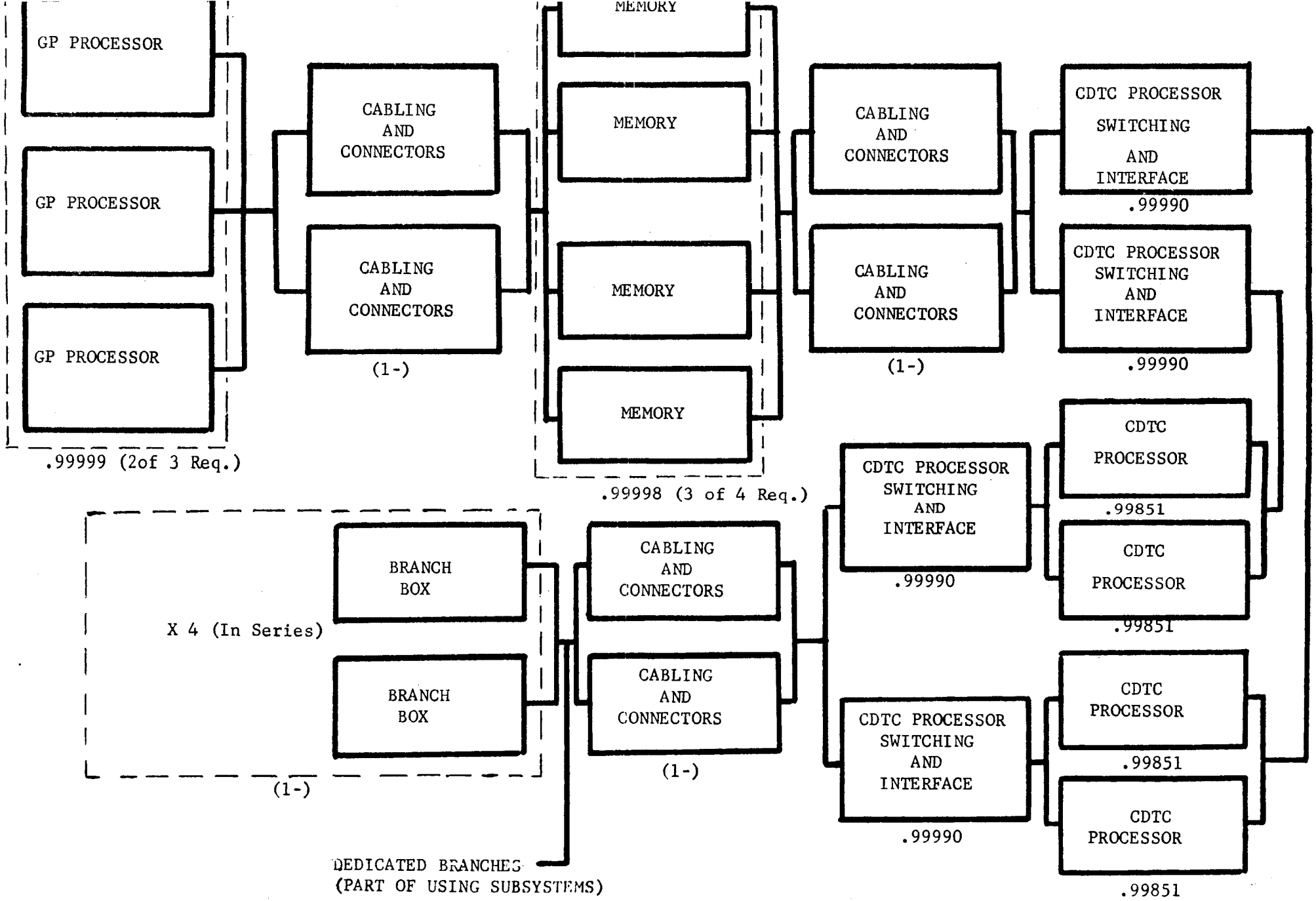


DATA MANAGEMENT SUBSYSTEM - RELIABLITY DIAGRAM (PAGE 1 OF 2 )
CONFIGURATION AV - 1

ONE STAGE AND
STAGE AND A
HALF

$R_{7\ DAY\ MISSION} = .99993$

$R_{3\ DAY\ MISSION} = .99999$

TWO STAGE
VEHICLE

$R_{7\ DAY\ MISSION} = .99986$

$R_{3\ DAY\ MISSION} = .99998$

DATA MANAGEMENT SUBSYSTEM - RELIABILITY DIAGRAM (PAGE 2 OF 2 )
CONFIGURATION AV -1

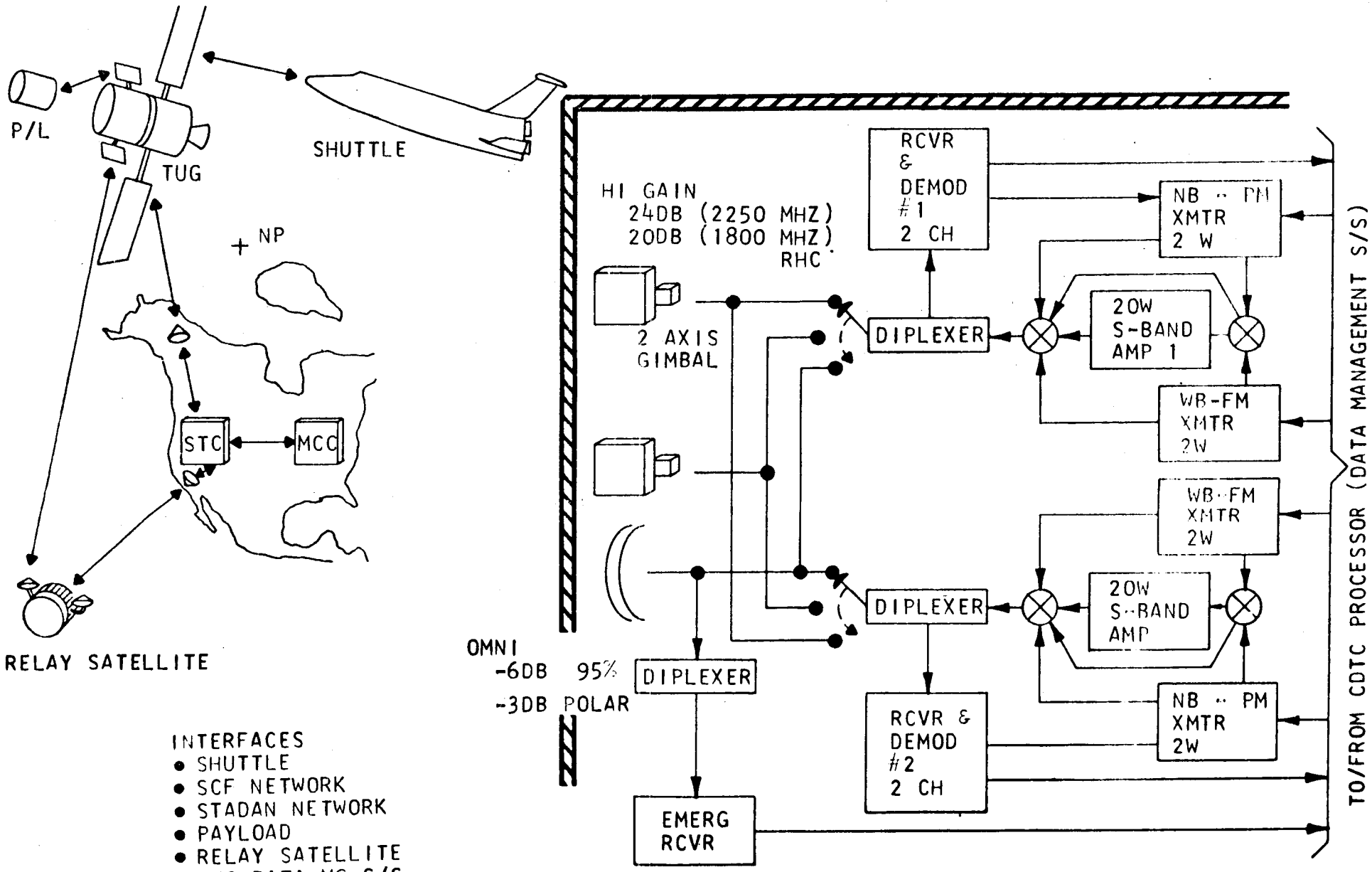


INTERFACES
- SHUTTLE
- SCF NETWORK
- STADAN NETWORK
- PAYLOAD
- RELAY SATELLITE
- TUG DATA MG S/S

TUG COMMUNICATION SYSTEM — ALL S-BAND

CONFIGURATION AV-1

.XXXXX/.YYYYY = 7 DAY RELIABILITY/3 DAY RELIABILITY

ONE STAGE & STAGE AND A HALF

$R_7$ DAY MISSION = .99999 (3)
$R_3$ DAY MISSION = .99999 (9)

TWO STAGE VEHICLE

$R_7$ DAY MISSION = .99998
$R_3$ DAY MISSION = .99999

COMMUNICATIONS SUBSYSTEM - RELIABILITY DIAGRAM

CONFIGURATION AV-1

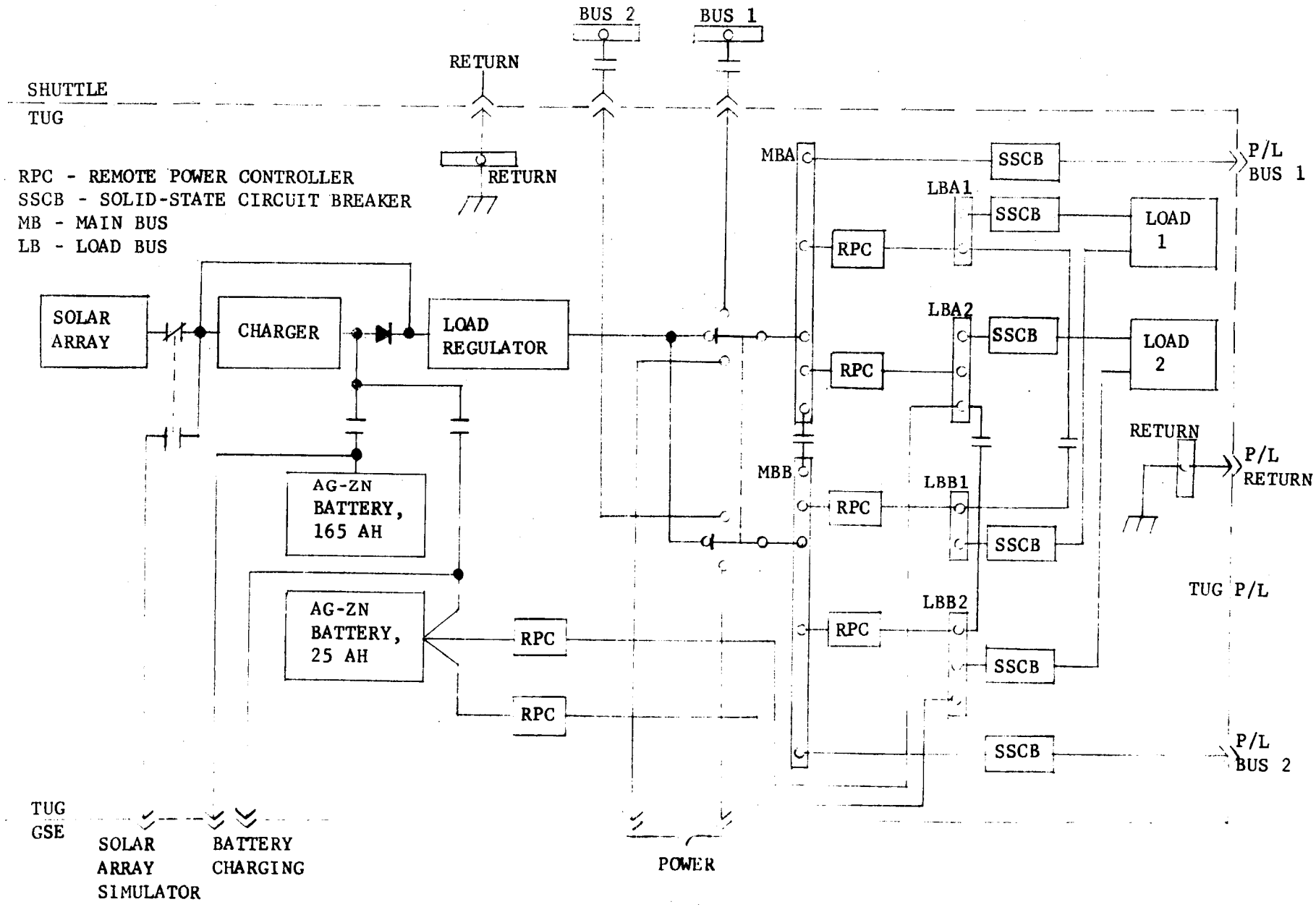


TUG ELECTRICAL POWER SYSTEM

SOLAR ARRAY/BATTERY

CONFIGURATION AV-1

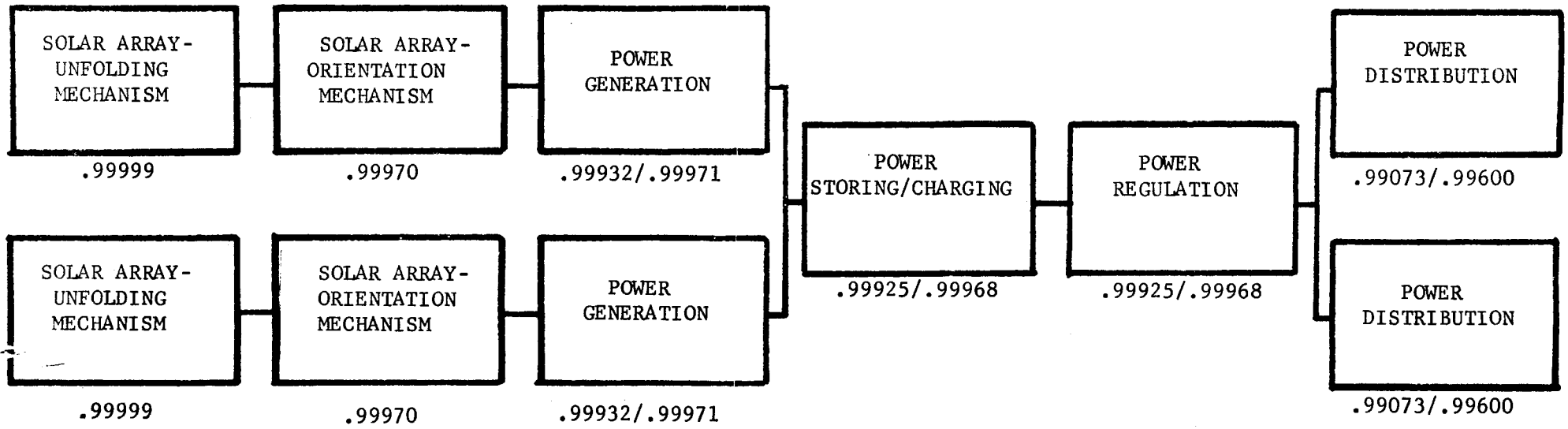


| ONE STAGE & STAGE AND A HALF | TWO STAGE VEHICLE |
|---|---|
| $R_7$=.99841 | $R_7$=.99682 |
| $R_3$=.99927 | $R_3$=.99854 |

LEGEND:

$R_7$= 7DAY MISSION RELIABILITY

$R_3$= 3DAY MISSION RELIABILITY

.XXXXX/.YYYYY = 7 DAY and 3 DAY RELIABILITY

SOLAR ARRAY ELECTRICAL POWER SUBSYSTEM - RELIABILITY DIAGRAM
CONFIGURATION AV-1

| COMPONENT | QTY. | TOTAL WEIGHT (LBS) | UNIT SIZE (IN) | TOTAL VOL. ($FT^3$) | OPERATING POWER (WATTS) | TOTAL POWER (WATTS) | MFG. MODEL NO. | REMARKS |
|---|---|---|---|---|---|---|---|---|
| DATA MANAGEMENT | | | | | | | | |
| CDTC Processor | 2 | 8 | 4X4X6.5 | | 5 | 5 | | (1) Active |
| Memory Unit | 1 | 8 | 6.5X8.5X9 | | 10 | 10 | | |
| GP Processor | 3 | 7.5 | 3X4X4 | | 30 | 30 | | (2) Active |
| Branch Boxes | 8 | 8 | 1.5X4X4 | | 8 | 8 | | |
| Encrypter/Decrypter | 1 | 6 | 5X5X7 | | 8 | 8 | | GFE |
| Dedicated Branch Circuits (Hybrids) | 25 | 5.5 | 1.25X1.25X2 | | | | | |
| Cabling & Connectors | 1 set | 17 | | | | | | |
| TOTAL WEIGHT | | 60 | | | | | | |

COMPONENT LIST/PHYSICAL CHARACTERISTICS
CONFIGURATION AV-1

| COMPONENT | QTY. | TOTAL WEIGHT (LBS) | UNIT SIZE (IN) | TOTAL VOL. ($FT^3$) | OPERATING POWER (WATTS) | TOTAL POWER (WATTS) | MFG. MODEL NO. | REMARKS |
|---|---|---|---|---|---|---|---|---|
| GUID., NAV. & CONTROLS | | | | | | | | |
| GUID. & NAV. | | | | | | | | |
| Star Tracker | 1 | 10 | 5¼X6X12 | | 5 | 5 | | |
| IMU | 2 | 60 | 12X12X12 | | 160 | 160 | | |
| Horizon Sensor | 1 | 45 | 10X10X10 | | 25 | 25 | | DOD Level 1 Autonomy Option |
| CONTROLS | | | | | | | | |
| Tandem Integrated Actuators | 2 | 20 | | | 470 | 470 | | Includes Control circuitry for 16 ACPS nozzles |
| DOCKING SYSTEM | | | | | | | | N/A |
| TOTAL WEIGHT | | 90 | | | | | | Horizon Sensor Wt. Not Included |

COMPONENT LIST/PHYSICAL CHARACTERISTICS

CONFIGURATION AV-1

| COMPONENT | QTY. | TOTAL WEIGHT (LBS) | UNIT SIZE (IN) | TOTAL VOL. ($FT^3$) | OPERATING POWER (WATTS) | TOTAL POWER (WATTS) | MFG. MODEL NO. | REMARKS |
|---|---|---|---|---|---|---|---|---|
| COMMUNICATIONS | | | | | | | | |
| S-Band Transponder | | | | | | | | |
| a. Receiver | 3 | 4 | 2X3X5 | | 2.5 | 7.5 | | |
| b. Transmitter | 4 | 4 | 2X2X5 | | 15 | 30 | | 2 Narrow Band, 2 Wide Band |
| S-Band Power Amplifier | 2 | 4 | 9X10X2 | | 100 | 200 | | |
| Diplexer | 3 | 3 | 5X5X2 | | --- | | | |
| Omni Antenna | 1 | 2 | 6X6X6 | | | | | |
| High Gain Antenna | 2 | 12 | 30" dia. X 24" deep | | --- | | | Includes gimbal mechanism |
| Misc. Switches & Cabling | 1 set | 5 | | | --- | | | |
| TOTAL WEIGHT | | 34 | | | | | | |

COMPONENT LIST/PHYSICAL CHARACTERISTICS
CONFIGURATION AV-1

| COMPONENT | QTY. | TOTAL WEIGHT (LBS) | UNIT SIZE (IN) | TOTAL VOL. ($FT^3$) | OPERATING POWER (WATTS) | TOTAL POWER (WATTS) | MFG. MODEL NO. | REMARKS |
|---|---|---|---|---|---|---|---|---|
| ELECTRICAL POWER, DIST. & CONTROL | | | | | Negligible | | | |
| Solar Array | 1 | 71 | 10 dia X48 | 0.18 | | | | Includes panel, drum, cushion, reel and drive mechanism |
| Solar Array Orientation Assembly | 1 | 42 | | | | | | |
| Charger-Load Regulator Unit | 1 | 15 | 5X8X12 | 0.03 | | | | |
| Ag-An Battery, 165 AH | 1 | 81 | 10.2X17X8.2 | 0.08 | | | | |
| Ag-An Battery, 25 AH | 1 | 36 | 13.5X9.2X7.2 | 0.05 | | | | |
| Power Distributors | 3 | 18 | | | | | | |
| Wiring & Connectors | 1 set | 65 | | 0.8 | | | | |
| Supports | 1 set | 15 | | 0.1 | | | | |
| Motor Driven Switch | 2 | 7 | 1.3X1.5X2.5 | | | | | |
| TOTAL WEIGHT | | 350 | | | | | | |

COMPONENT LIST/PHYSICAL CHARACTERISTICS

CONFIGURATION AV-1

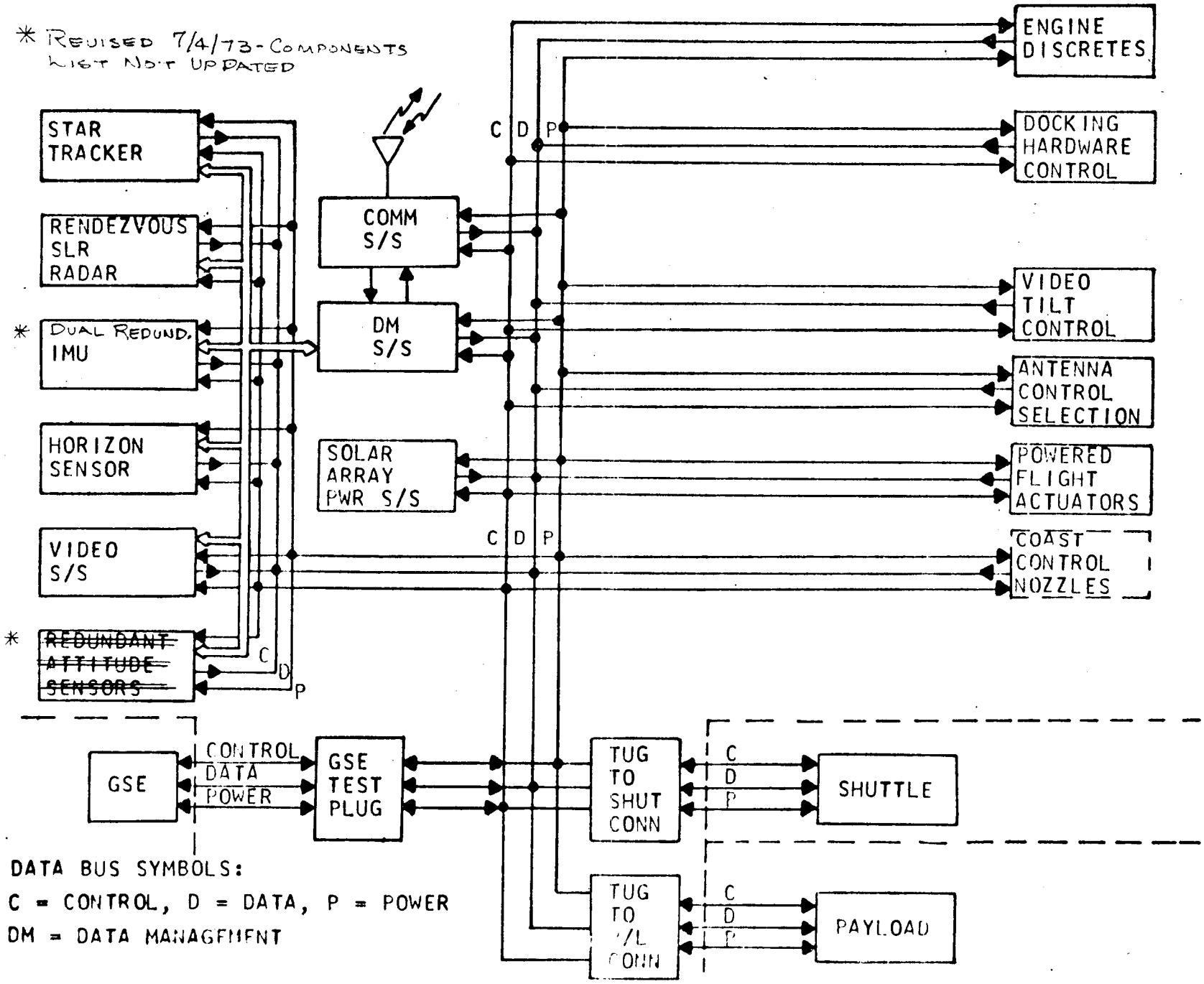


TUG AVIONICS SYSTEM, AUTONOMY LEVEL 2
CONFIGURATION AV-2 (DEPLOY/RETRIEVE)

FUNCTION: HOWEVER, RELIABILITY REQUIREMENTS DICTATE REDUNDANCY.

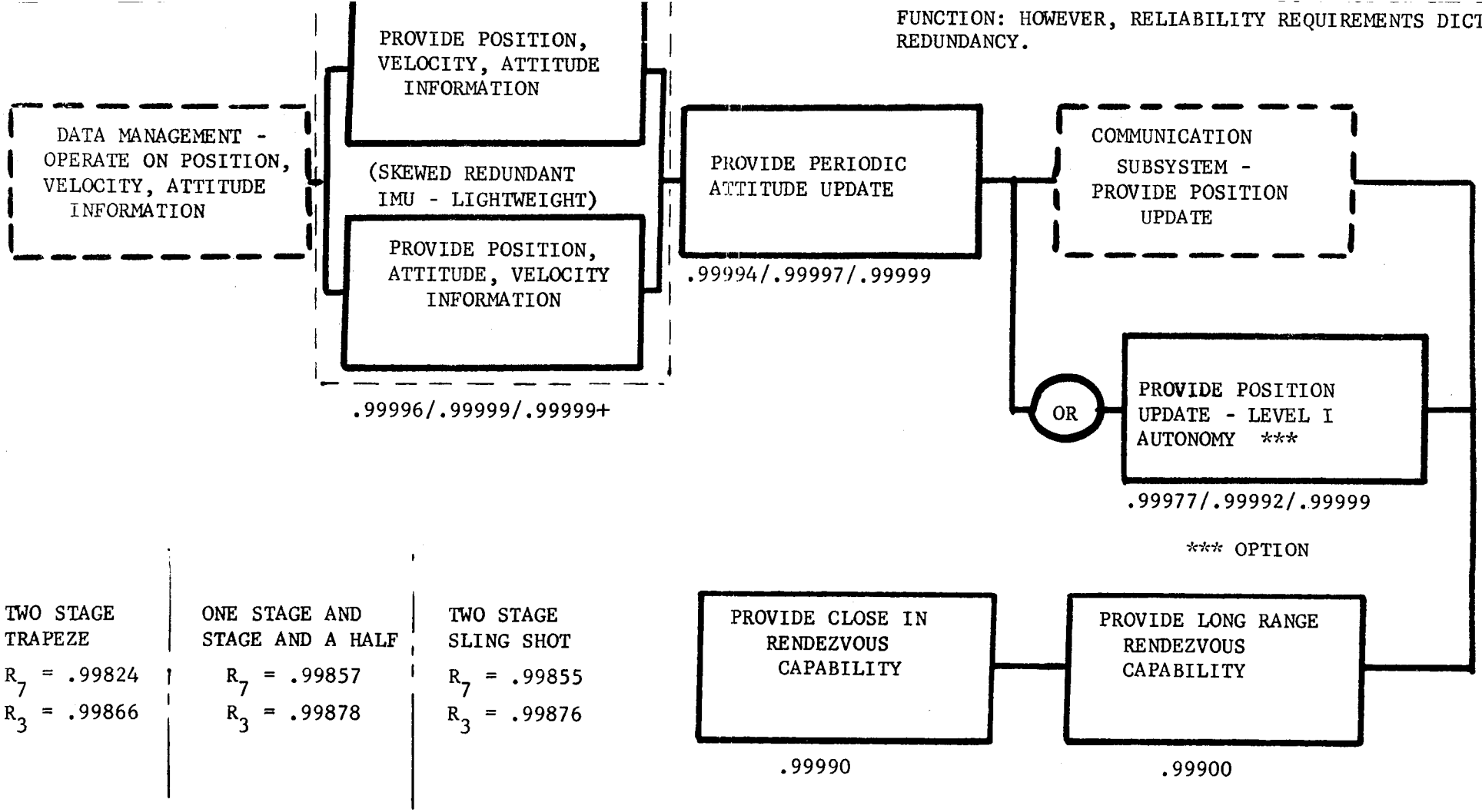


| TWO STAGE TRAPEZE | ONE STAGE AND STAGE AND A HALF | TWO STAGE SLING SHOT |
|---|---|---|
| $R_7$ = .99824 | $R_7$ = .99857 | $R_7$ = .99855 |
| $R_3$ = .99866 | $R_3$ = .99878 | $R_3$ = .99876 |

LEGEND:

$R_7$ = 7 DAY MISSION RELIABILITY

$R_3$ = 3 DAY MISSION RELIABILITY

.XXXXX/.YYYYY/.ZZZZZ = 7 DAY RELIABILITY/ 3 DAY RELIABILITY/12 HOUR RELIABILITY

GUIDANCE AND NAVIGATION SUBSYSTEM - RELIABILITY DIAGRAM
CONFIGURATION AV -2

IDENTICAL TO RELIABILITY DIAGRAM FOR CONFIGURATION AV-1

CONTROLS FOR MAIN ENGINE GIMBALLING - RELIABILITY DIAGRAM
CONFIGURATION AV-2

TBS

DOCKING SUBSYSTEM - RELIABILITY DIAGRAM

CONFIGURATION AV-2, AV-4 AND AV-7

DATA MANAGEMENT, COMMUNICATIONS &

ELECTRICAL POWER SUBSYSTEMS

ARE SAME AS FOR CONFIGURATION AV-1

CONFIGURATION AV-2

| COMPONENT | QTY. | TOTAL WEIGHT (LBS) | UNIT SIZE (IN) | TOTAL VOL. ($FT^3$) | OPERATING POWER (WATTS) | TOTAL POWER (WATTS) | MFG. MODEL NO. | REMARKS |
|---|---|---|---|---|---|---|---|---|
| GUID., NAV. & CONTROLS | | | | | | | | |
| GUID. & NAV. | | | | | | | | |
| Star Tracker | 1 | 10 | 5¼X6X12 | | 5 | 5 | | |
| Rendezvous SLR | 1 | 40 | 6X9X21 | | | | | |
| IMU | 1 | 10 | 6X6X6 | | 10 | 10 | | |
| Horizon Sensor | 1 | 45 | 10X10X10 | | 25 | 25 | | DOD Level 1 Autonomy Option |
| Video Subsystem | 1 | 13 | | | 16 | 16 | | |
| Redundant Attitude Sensors | 2 | 20 | 6X6X12 | | 20 | 20 | | |
| CONTROLS | | | | | | | | |
| Tandem Integrated Actuators | 2 | 20 | | | 470 | 470 | | Includes Control circuitry for 16 ACPS nozzles |
| DOCKING SYSTEM | | | | | | | | |
| Docking Hardware | 1 | 90 | | | | | | |
| TOTAL WEIGHT | | 203 | | | | | | Horizon Sensor Wt. Not Included |

COMPONENT LIST/PHYSICAL CHARACTERISTICS

CONFIGURATION AV-2

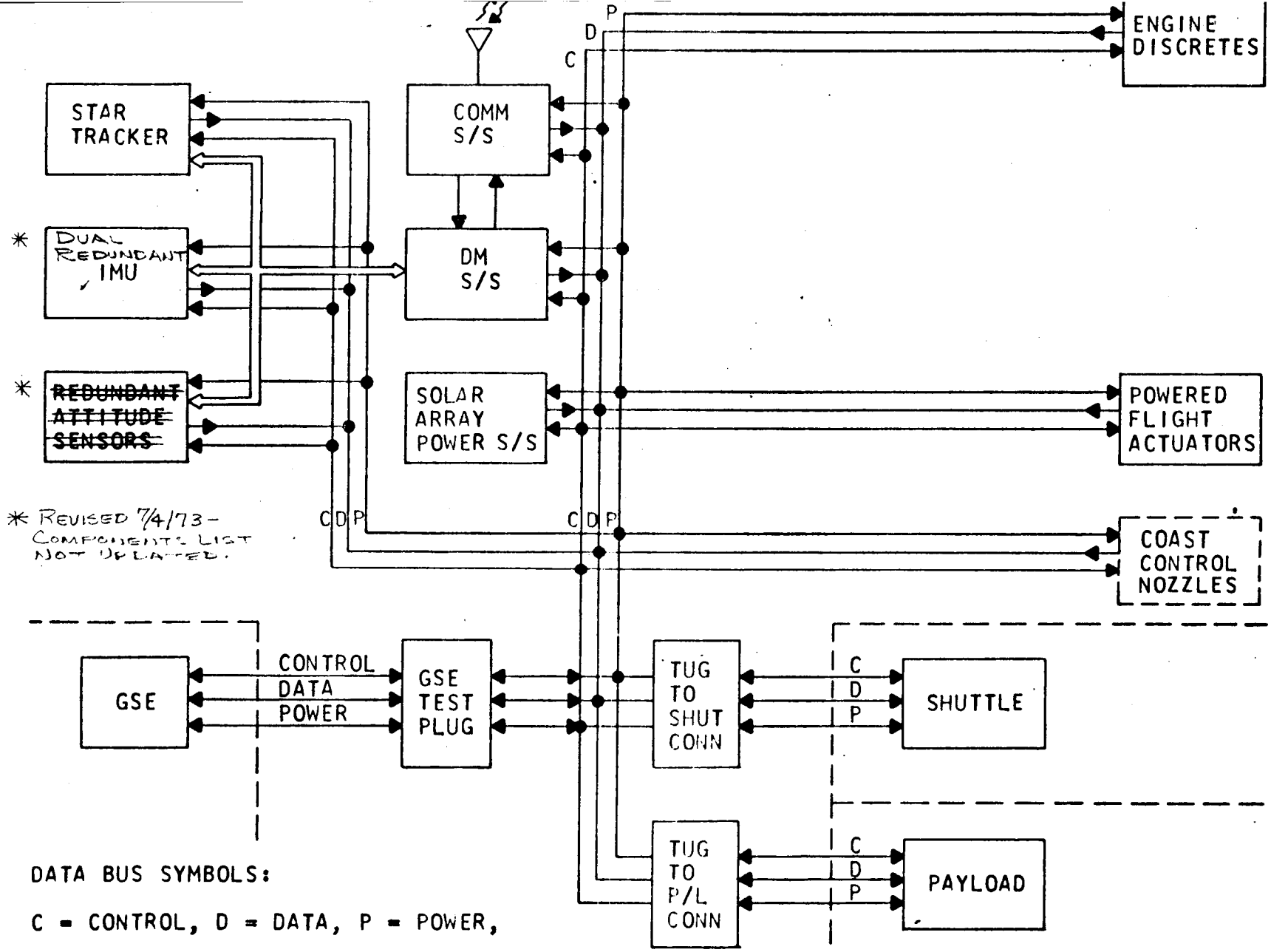


DATA BUS SYMBOLS:

C = CONTROL, D = DATA, P = POWER,

DM = DATA MANAGEMENT

TUG AVIONICS SYSTEM, AUTONOMY LEVEL 2
CONFIGURATION AV-3 (DEPLOY ONLY)

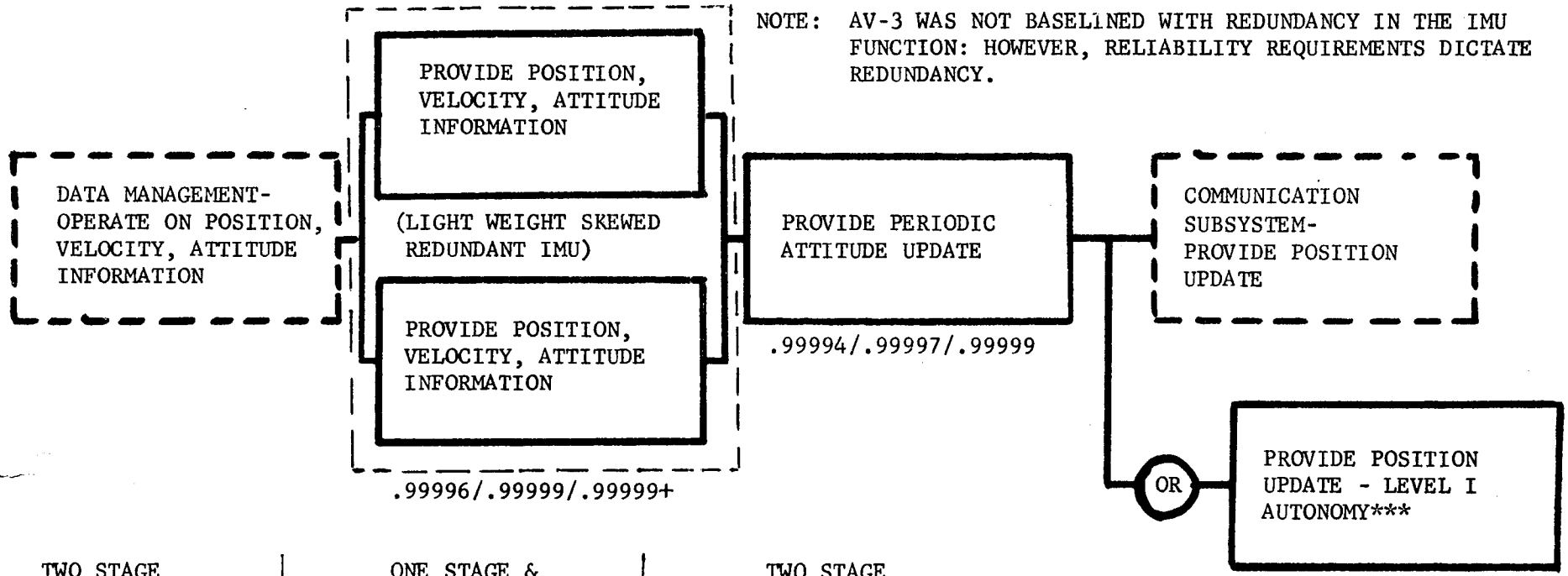


| TWO STAGE TRAPEZE | ONE STAGE & STAGE AND A HALF | TWO STAGE SLINGSHOT |
|---|---|---|
| $R_7$ = .99934 | $R_7$ = .99967 | $R_7$ = .99964 |
| $R_3$ = .99976 | $R_3$ = .99988 | $R_3$ = .99985 |

LEGEND:

$R_7$ = 7 DAY MISSION RELIABILITY

$R_3$ = 3 DAY MISSION RELIABILITY

.XXXXX/.YYYYY/.ZZZZZ - 7 DAY RELIABILITY/ 3 DAY RELIABILITY/12 HOUR RELIABILITY

GUIDANCE AND NAVIGATION SUBSYSTEM - RELIABILITY DIAGRAM

CONFIGURATION AV-3

IDENTICAL TO RELIABILITY DIAGRAM FOR CONFIGURATION AV-1

CONTROLS FOR MAIN ENGINE GIMBALLING - RELIABILITY DIAGRAM
CONFIGURATION AV-3

DATA MANAGEMENT, COMMUNICATIONS &

ELECTRICAL POWER SUBSYSTEMS

ARE SAME AS FOR CONFIGURATION AV-1

CONFIGURATION AV-3

| COMPONENT | QTY. | TOTAL WEIGHT (LBS) | UNIT SIZE (IN) | TOTAL VOL. ($FT^3$) | OPERATING POWER (WATTS) | TOTAL POWER (WATTS) | MFG. MODEL NO. | REMARKS |
|---|---|---|---|---|---|---|---|---|
| GUID., NAV. & CONTROLS | | | | | | | | |
| GUID. & NAV. | | | | | | | | |
| Star Tracker | 1 | 10 | 5¼X6X12 | | 5 | 5 | | |
| IMU | 1 | 10 | 6X6X6 | | 10 | 10 | | |
| Horizon Sensor | 1 | 45 | 10X10X10 | | 25 | 25 | | DOD Level 1 Autonomy Option |
| Redundant Attitude Sensors | 2 | 20 | 6X6X12 | | 20 | 20 | | |
| CONTROLS | | | | | | | | |
| Tandem Integrated Actuators | 2 | 20 | | | 470 | 470 | | Includes Control circuitry for 16 ACPS nozzles |
| DOCKING SYSTEM | | | | | | | | N/A |
| TOTAL WEIGHT | | 60 | | | | | | Horizon Sensor Wt Not Included |

COMPONENT LIST/PHYSICAL CHARACTERISTICS
CONFIGURATION AV-3

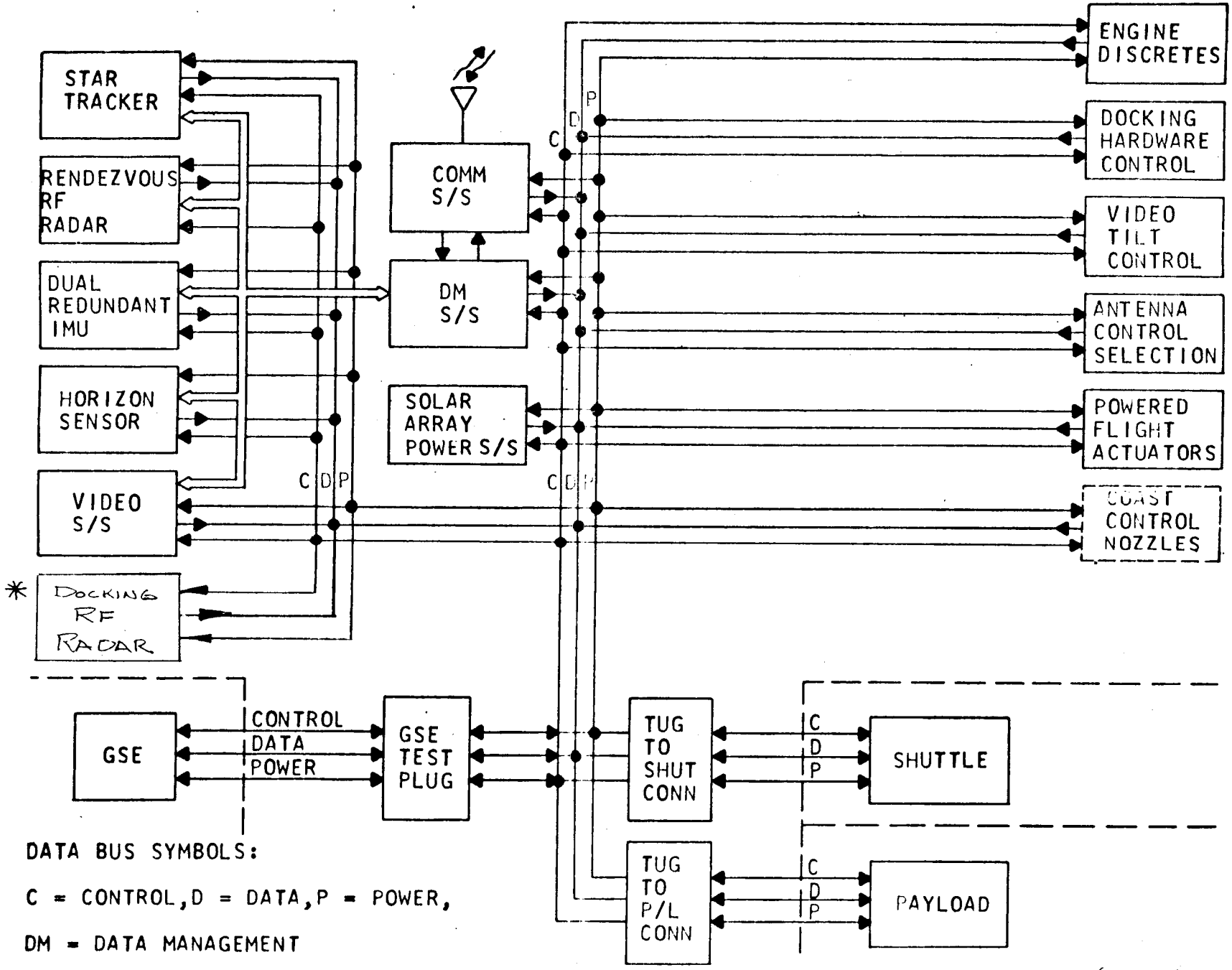


DATA BUS SYMBOLS:

C = CONTROL, D = DATA, P = POWER,

DM = DATA MANAGEMENT

* REVISED 7/4/73 - COMPONENTS LIST NOT DELETED.

TUG AVIONICS SYSTEM, AUTONOMY LEVEL 2
CONFIGURATION AV-4 (DEPLOY/RETRIEVE)

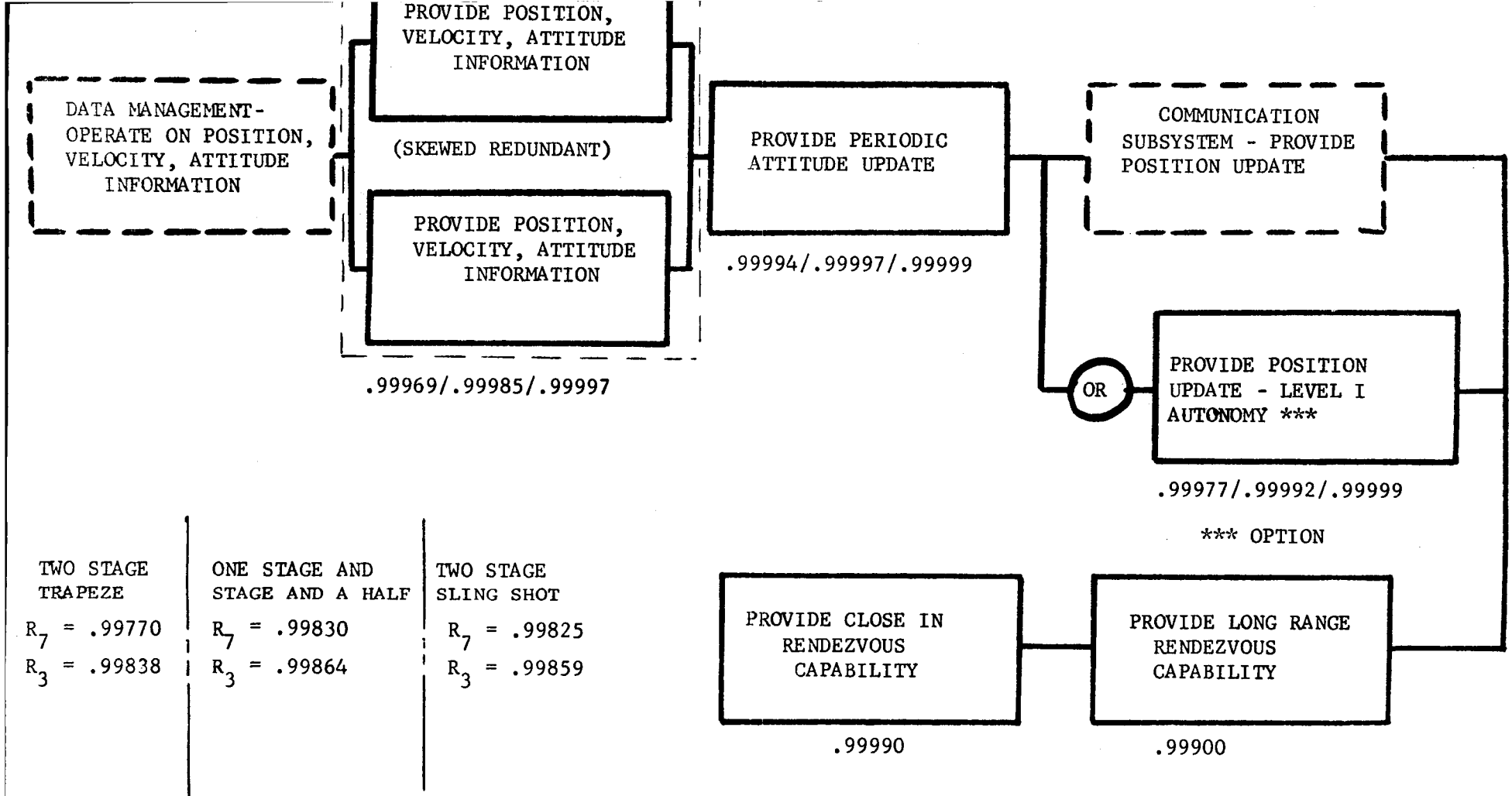


| TWO STAGE TRAPEZE | ONE STAGE AND STAGE AND A HALF | TWO STAGE SLING SHOT |
|---|---|---|
| $R_7$ = .99770 | $R_7$ = .99830 | $R_7$ = .99825 |
| $R_3$ = .99838 | $R_3$ = .99864 | $R_3$ = .99859 |

LEGEND:

$R_7$ = 7 DAY MISSION RELIABILITY

$R_3$ = 3 DAY MISSION RELIABILITY

XXXXX/YYYYY/ZZZZZ = 7 DAY RELIABILITY/ 3 DAY RELIABILITY/ 12 HOUR RELIABILITY

GUIDANCE AND NAVIGATION SUBSYSTEM = RELIABILITY DIAGRAM
CONFIGURATION AV -4

IDENTICAL TO RELIABILITY DIAGRAM FOR CONFIGURATION AV-1

CONTROLS FOR MAIN ENGINE GIMBALLING - RELIABILITY DIAGRAM
CONFIGURATION AV-4

TBS

DOCKING SUBSYSTEM - RELIABILITY DIAGRAM

CONFIGURATION AV-2, AV-4 AND AV-7

DATA MANAGEMENT, COMMUNICATIONS &

ELECTRICAL POWER SUBSYSTEMS

ARE SAME AS FOR CONFIGURATION AV-1

CONFIGURATION AV-4

| COMPONENT | QTY. | TOTAL WEIGHT (LBS) | UNIT SIZE (IN) | TOTAL VOL. ($FT^3$) | OPERATING POWER (WATTS) | TOTAL POWER (WATTS) | MFG. MODEL NO. | REMARKS |
|---|---|---|---|---|---|---|---|---|
| GUID., NAV. & CONTROLS | | | | | | | | |
| GUID. & NAV. | | | | | | | | |
| Star Tracker | 1 | 10 | 5¼X6X12 | | 5 | 5 | | |
| Rendezvous RF Radar | 1 | 175 | 24X24X18 | | 1000 | 1000 | | |
| IMU | 2 | 60 | 12X12X12 | | 160 | 160 | | |
| Horizon Sensor | 1 | 45 | 10X10X10 | | 25 | 25 | | DOD Level 1 Autonomy Option |
| Video Subsystem | 1 | 13 | | | 16 | 16 | | |
| CONTROLS | | | | | | | | |
| Tandem Integrated Actuators | 2 | 20 | | | 470 | 470 | | Includes Control circuitry for 16 ACPS nozzles |
| DOCKING SYSTEM | | | | | | | | |
| Docking Hardware | 1 | 150 | | | | | | |
| TOTAL WEIGHT | | 428 | | | | | | Horizon Sensor Wt Not Included |

COMPONENT LIST/PHYSICAL CHARACTERISTICS

CONFIGURATION AV-4

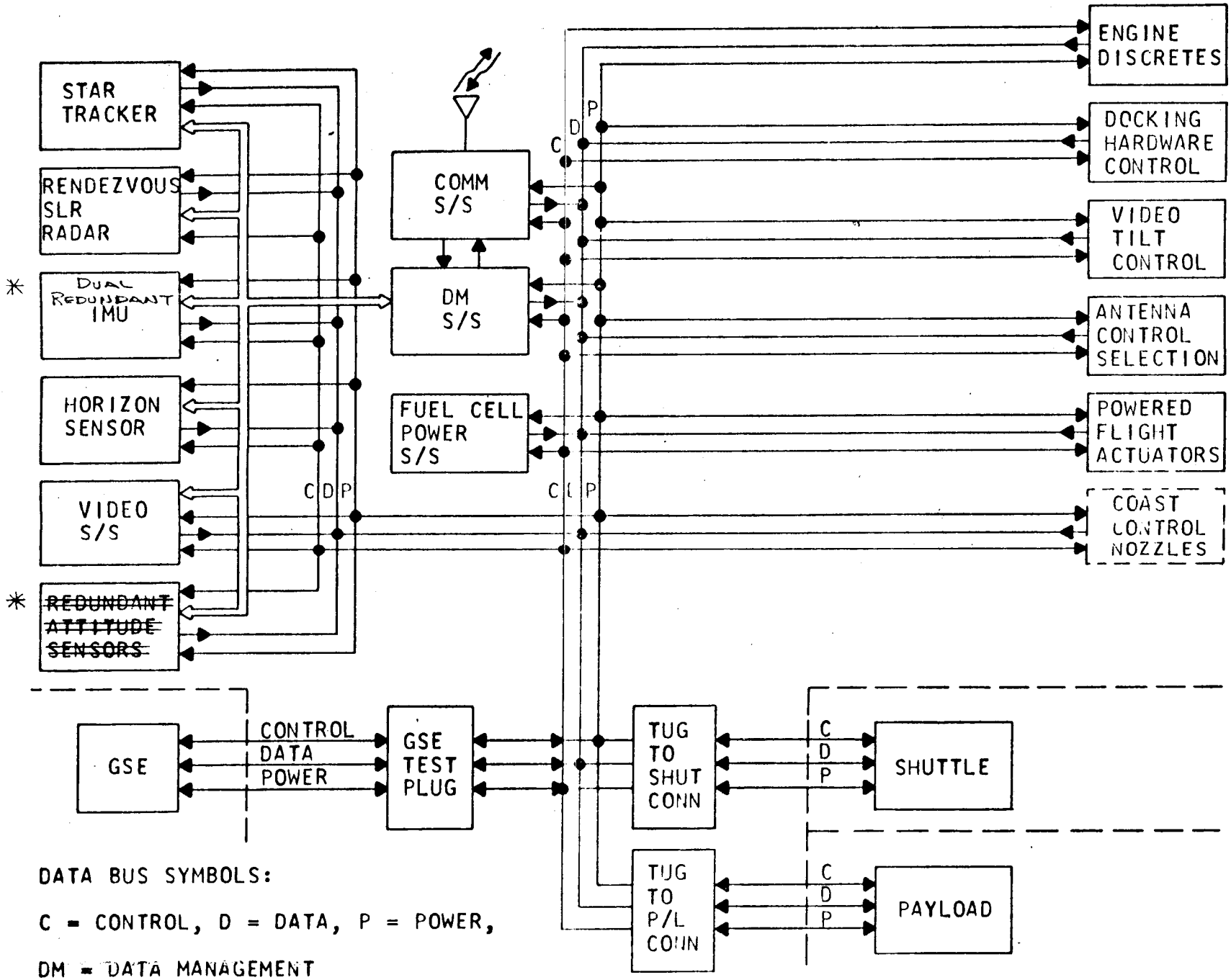


DATA BUS SYMBOLS:

C = CONTROL, D = DATA, P = POWER,

DM = DATA MANAGEMENT

* REVISED 7/4/73 — COMMUNITS LIST NOT UPDATED

TUG AVIONICS SYSTEM, AUTONOMY LEVEL 2
CONFIGURATION A1-7 (DEPLOY/RETRIEVE)

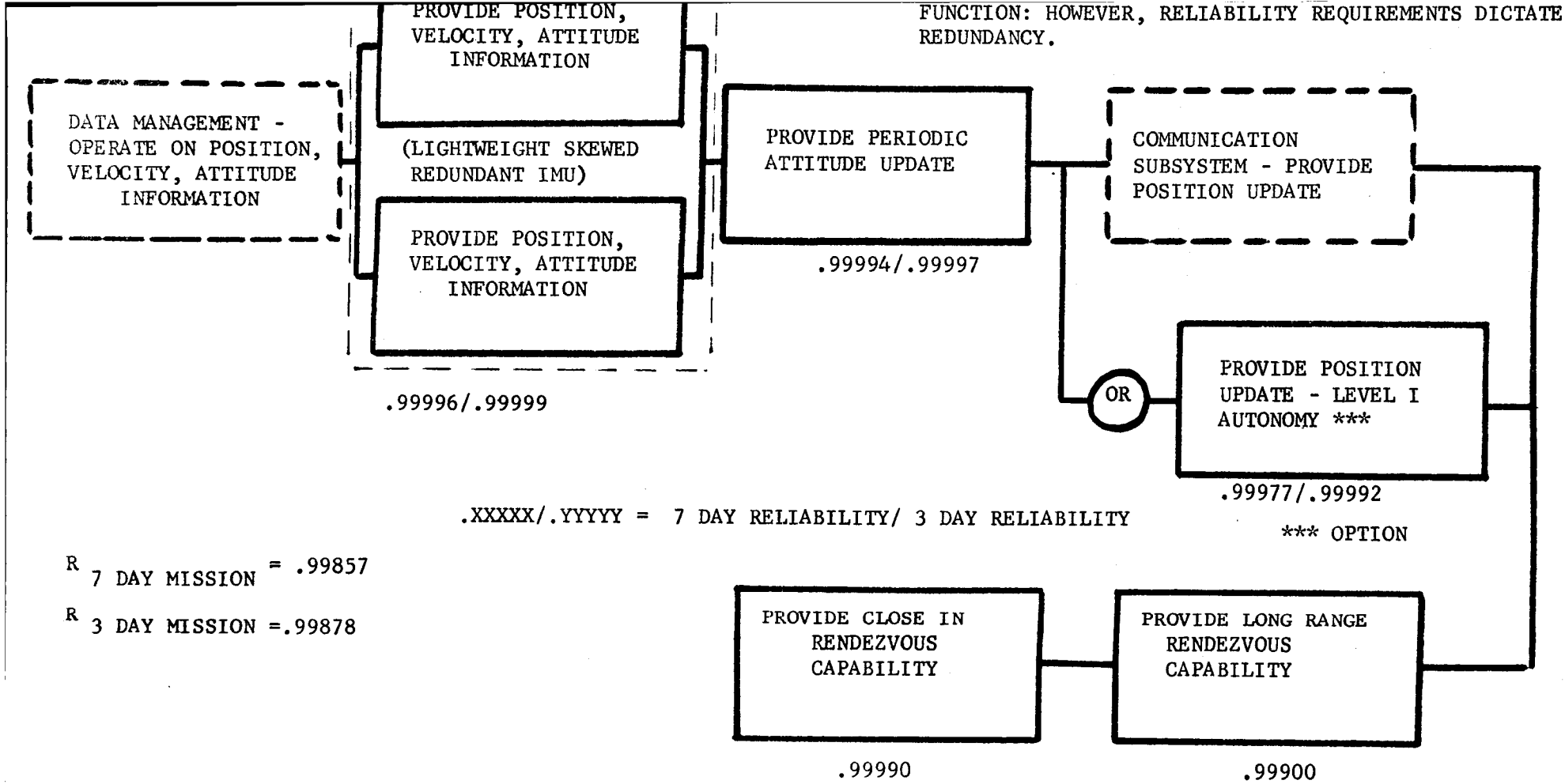


GUIDANCE AND NAVIGATION SUBSYSTEM - RELIABILITY DIAGRAM
CONFIGURATION AV -7

IDENTICAL TO RELIABILITY DIAGRAM FOR CONFIGURATION AV-1

APPLICABLE DATA FROM AV-1 DIAGRAM:

ONE STAGE &
STAGE AND A
HALF

$R_{HiPc}$=.99678

CONTROLS FOR MAIN ENGINE GIMBALLING - RELIABILITY DIAGRAM
CONFIGURATION AV-7

TBS

DOCKING SUBSYSTEM - RELIABILITY DIAGRAM

CONFIGURATION AV-2, AV-4 AND AV-7

DATA MANAGEMENT & COMMUNICATION

SUBSYSTEMS ARE SAME AS

FOR CONFIGURATION AV-1.

GN&C IS SAME AS FOR AV-2.

CONFIGURATION AV-7

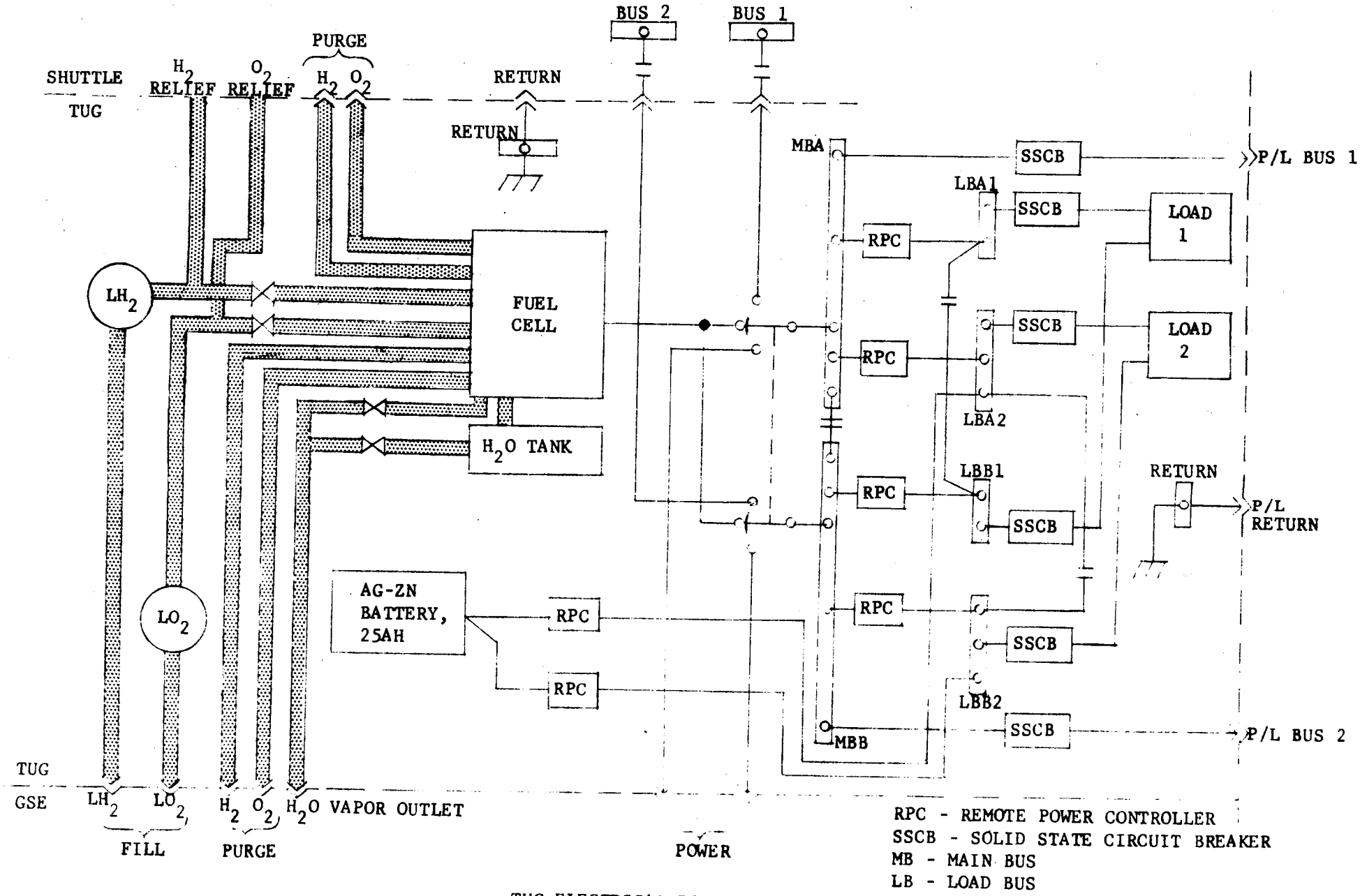


TUG ELECTRICAL POWER SYSTEM
FUEL CELL/BATTERY

CONFIGURATION AV-7

.XXXXX/.YYYYY = 7 DAY AND 3 DAY RELIABILITY RESPECTIVELY

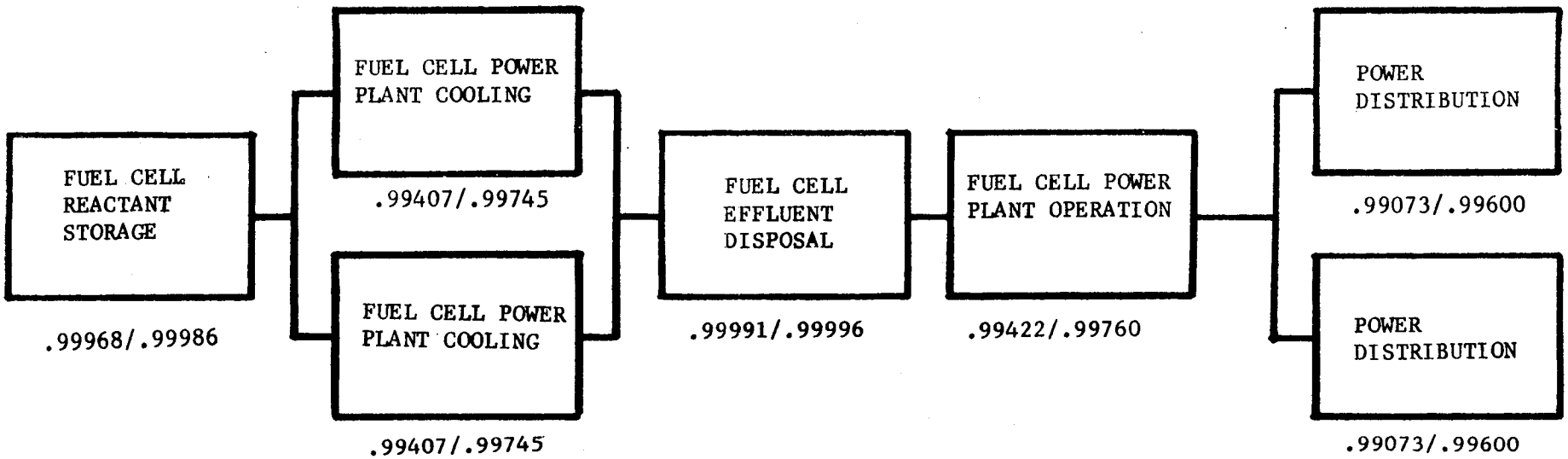


$R_{7\ DAY\ MISSION} = .99371$

$R_{3\ DAY\ MISSION} = .99740$

FUEL CELL ELECTRICAL POWER SUBSYSTEM - RELIABILITY DIAGRAM
CONFIGURATION AV-7

| COMPONENT | QTY. | TOTAL WEIGHT (LBS) | UNIT SIZE (IN) | TOTAL VOL. ($FT^3$) | OPERATING POWER (WATTS) | TOTAL POWER (WATTS) | MFG. MODEL NO. | REMARKS |
|---|---|---|---|---|---|---|---|---|
| ELECT. POWER, DIST. AND CONTROL | | | | | | | | |
| Fuel Cell, 1 KW Nominal | 1 | 50 | 12.1X6.3X14.5 | 0.64 | | | | |
| Plumbing & Valves | 1 set | 25 | | 0.20 | | | | |
| Water Tank | 1 | 3 | 4 dia X 8 | 0.58 | | | | |
| Condenser | 1 | 10 | 2.5 dia X 8 | | | | | |
| $O_2$ Tank | 1 | 56 | 26.5 dia sphere | 4.75 | 115.0 | | | |
| $H_2$ Tank | 1 | 47 | 31.8 dia sphere | 6.83 | 19.0 | | | |
| Supports | 1 set | 20 | | 0.1 | | | | |
| Radiator | 1 | 30 | | | | | | |
| Power Distributor | 3 | 18 | 10X1.5X6 | | | | | |
| Wiring & Connectors | 1 set | 65 | | 0.8 | | | | |
| Ag-Zn Battery, 25 AH | 1 | 36 | 13.5X9.2X7.2 | 0.05 | | | | |
| TOTAL WEIGHT | | 360 | | | | | | |

COMPONENT LIST/PHYSICAL CHARACTERISTICS

CONFIGURATION AV-7

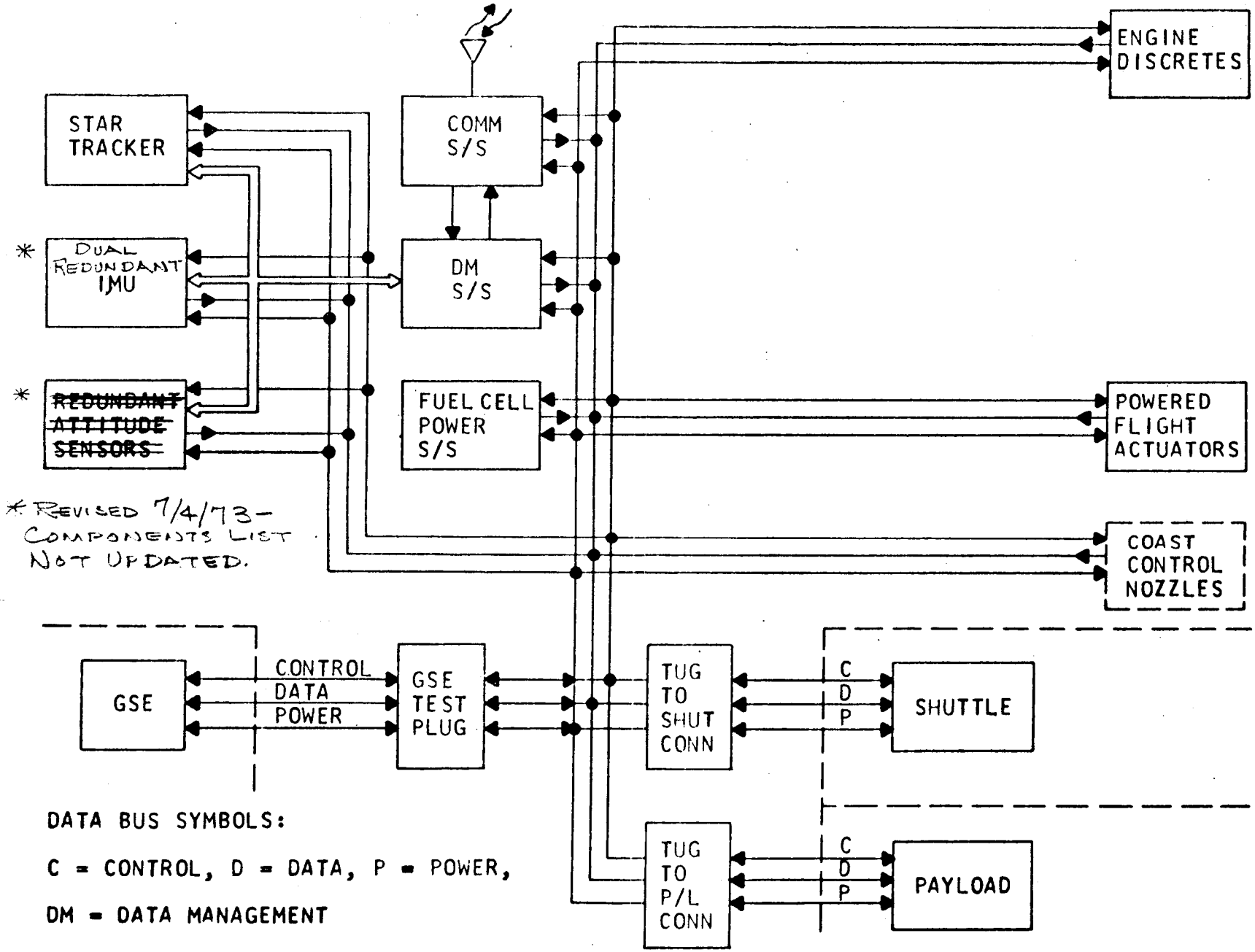


TUG AVIONICS SYSTEM, AUTONOMY LEVEL 2
CONFIGURATION AV-8 (DEPLOY ONLY)

IDENTICAL TO RELIABILITY DIAGRAM FOR CONFIGURATION AV -3
APPLICABLE DATA:

$R_7$ = .99967

$R_3$ =.99988 ,

SINCE AV -8 APPLIES TO ONE STAGE VEHICLES ONLY

NOTE: CONFIGURATION AV -8 WAS BASELINED WITHOUT REDUNDANCY HOWEVER, IT HAS BEEN REVISED BECAUSE THE BASELINED AV -8 WILL NOT MEET RELIABILITY REQUIREMENTS.

GUIDANCE AND NAVIGATION SUBSYSTEM - RELIABILITY DIAGRAM
CONFIGURATION AV -8

IDENTICAL TO RELIABILITY DIAGRAM FOR CONFIGURATION AV-1

APPLICABLE DATA FROM AV-1 DIAGRAM:

ONE STAGE &
STAGE AND A
HALF

$R_{HiPc} = .99678$

CONTROLS FOR MAIN ENGINE GIMBALLING - RELIABILITY DIAGRAM
CONFIGURATION AV-8

DATA MANAGEMENT & COMMUNICATION

SUBSYSTEMS ARE SAME AS FOR CONFIGURATION AV-1.

ELECTRICAL POWER IS SAME AS FOR AV-7.

GN&C IS SAME AS FOR AV-3.

CONFIGURATION AV-8

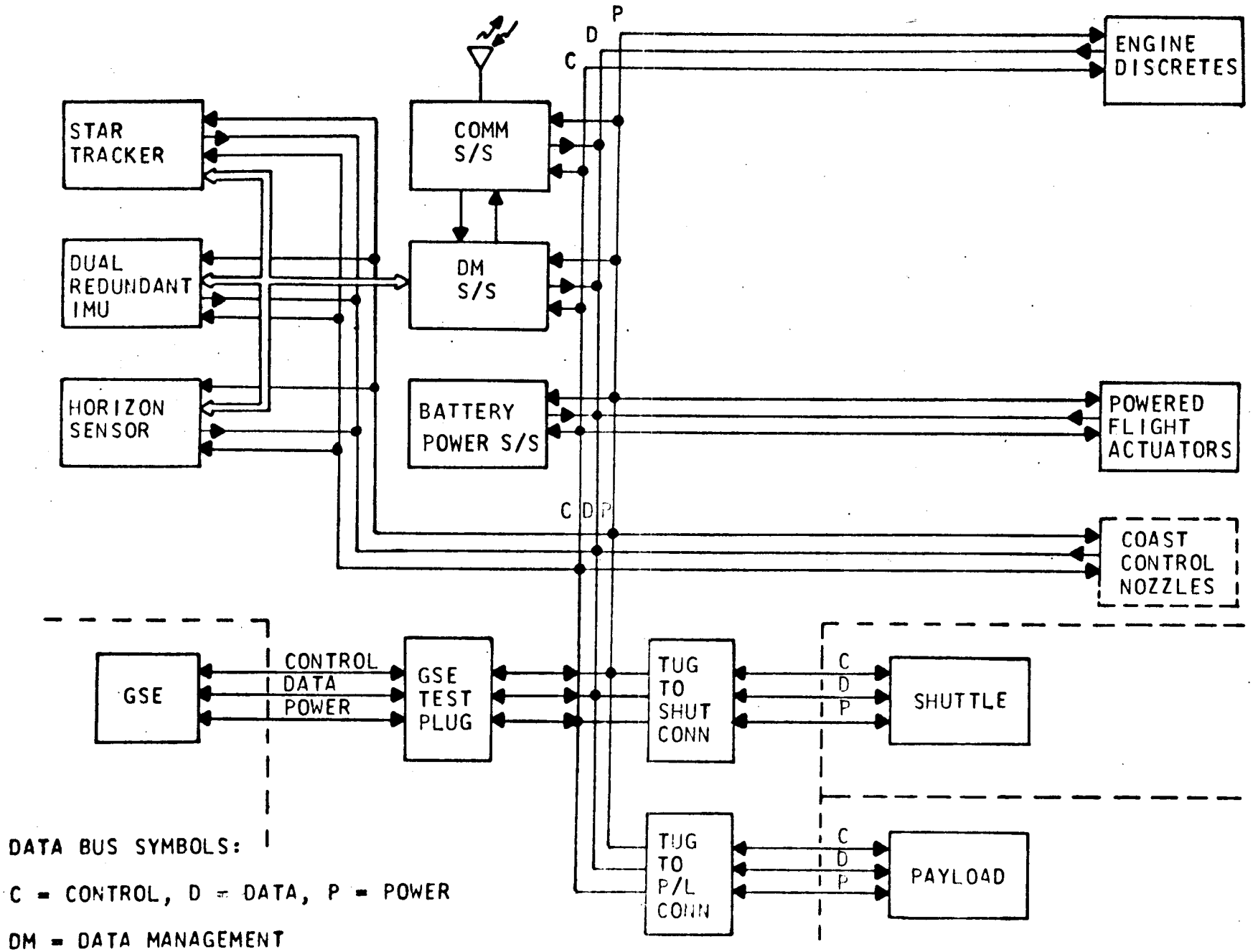


TUG AVIONICS SYSTEM, AUTONOMY LEVEL 2
CONFIGURATION AV-9 (DEPLOY ONLY)

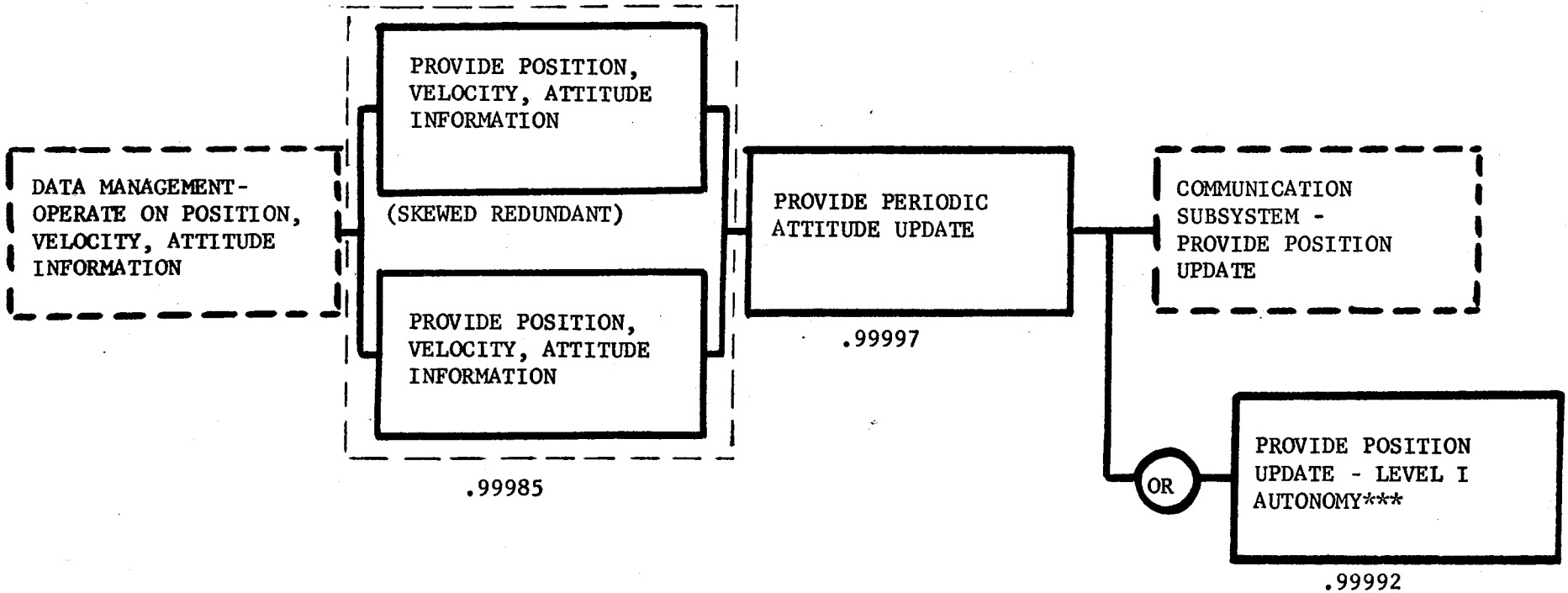


$R_3$ DAY MISSION = .99974

GUIDANCE AND NAVIGATION SUBSYSTEM - RELIABILITY DIAGRAM

CONFIGURATION AV-9

IDENTICAL TO RELIABILITY DIAGRAM FOR CONFIGURATION AV-1

APPLICABLE DATA FROM AV-1 DIAGRAM:

ONE STAGE &
STAGE AND A
HALF

$R_{OME}$=.99499

CONTROLS FOR MAIN ENGINE GIMBALLING - RELIABILITY DIAGRAM
CONFIGURATION AV-9

DATA MANAGEMENT, COMMUNICATIONS

& GN&C SUBSYSTEMS ARE

SAME AS FOR CONFIGURATION AV-1

CONFIGURATION AV-9

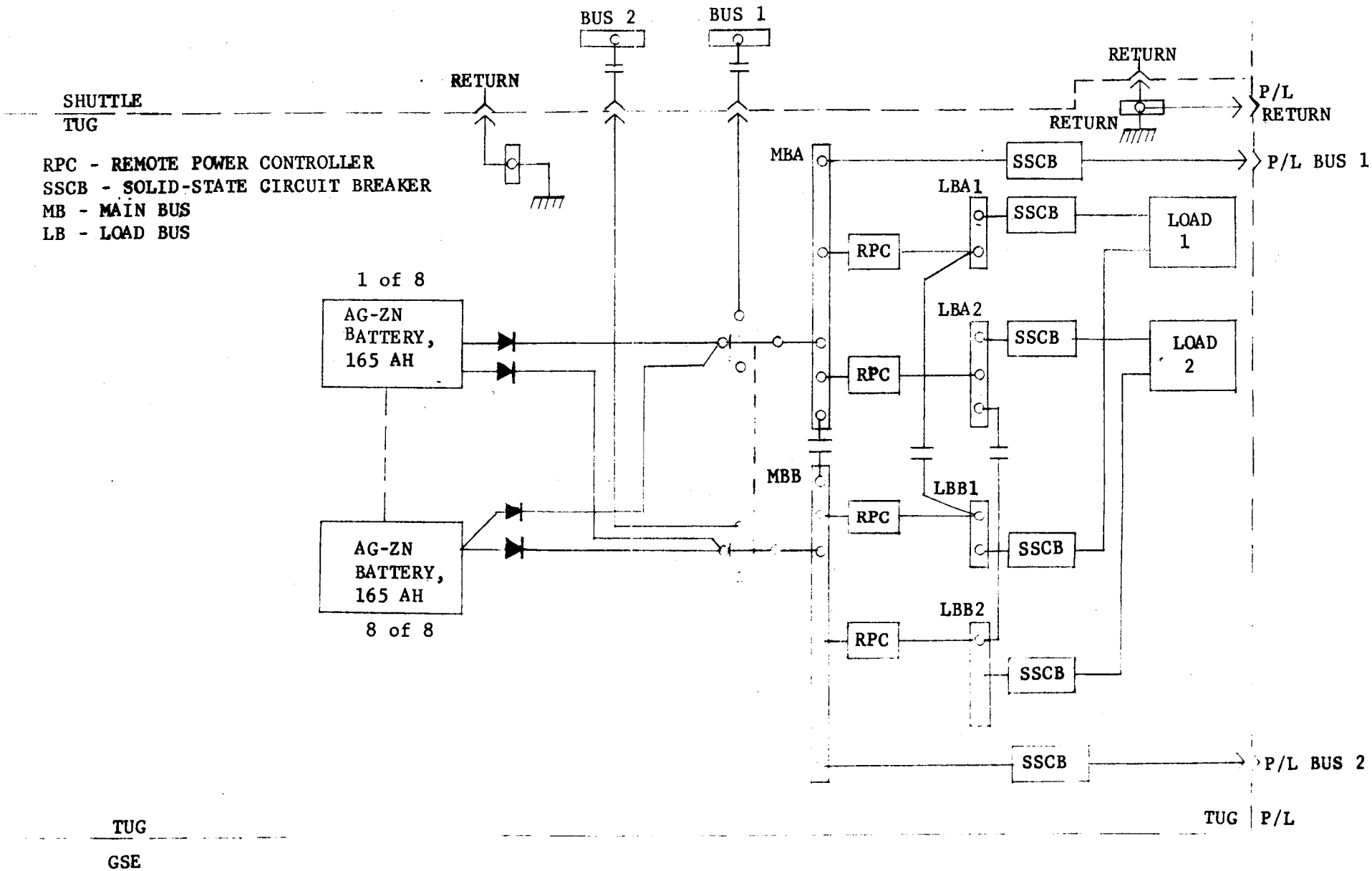


TUG ELECTRICAL SYSTEM

BATTERY POWER

CONFIGURATION AV-9

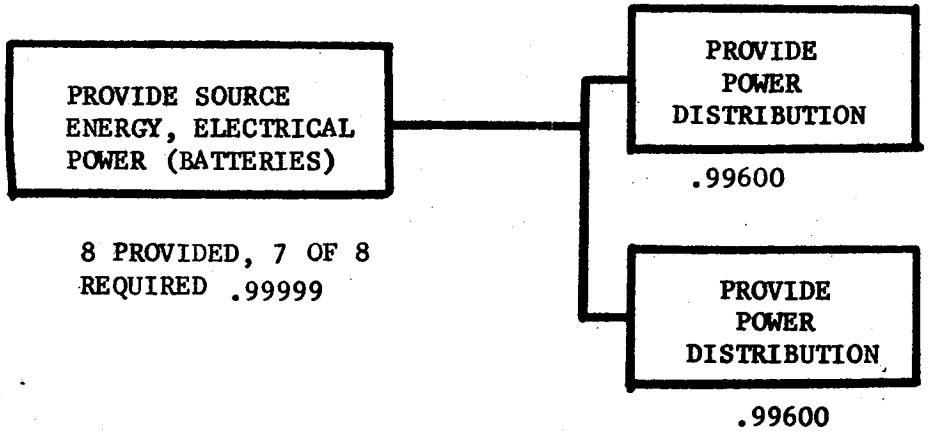


$R_{\text{3 DAY MISSION}} = .99997$

BATTERY POWER ELECTRICAL SUBSYSTEM - RELIABILITY DIAGRAM
CONFIGURATION AV -9

| COMPONENT | QTY. | TOTAL WEIGHT (LBS) | UNIT SIZE (IN) | TOTAL VOL. ($FT^3$) | OPERATING POWER (WATTS) | TOTAL POWER (WATTS) | MFG. MODEL NO. | REMARKS |
|---|---|---|---|---|---|---|---|---|
| ELECTRICAL POWER, DIST. AND CONTROL | | | | | | | | |
| Battery, 165 AH | 8 | 648 | 10.2X17X8.2 | | | | | |
| Power Distributor | 2 | 15 | 6X8X12 | | | | | |
| Wiring & Connectors | 1 set | 12 | | | | | | |
| TOTAL WEIGHT | | 675 | | | | | | |

COMPONENT LIST/PHYSICAL CHARACTERISTICS

CONFIGURATION AV-9

# SECTION VII

# SPACE TUG

## PROPULSION SUBSYSTEM CANDIDATES

### CONFIGURATIONS

Main Engine and Support

PR-1(2), Regulated Helium-Ambient Storage, Single Stage

PR-1(4), Regulated Helium-Ambient Storage, Two Stage

PR-1(5), Regulated Helium-Ambient Storage, 1½ Stage

PR-6(1), Dedicated Gas Generator-Cascade Pressurization, Single Stage

ACPS Engine and Support

ACPS-2(8), Hydrazine ACPS

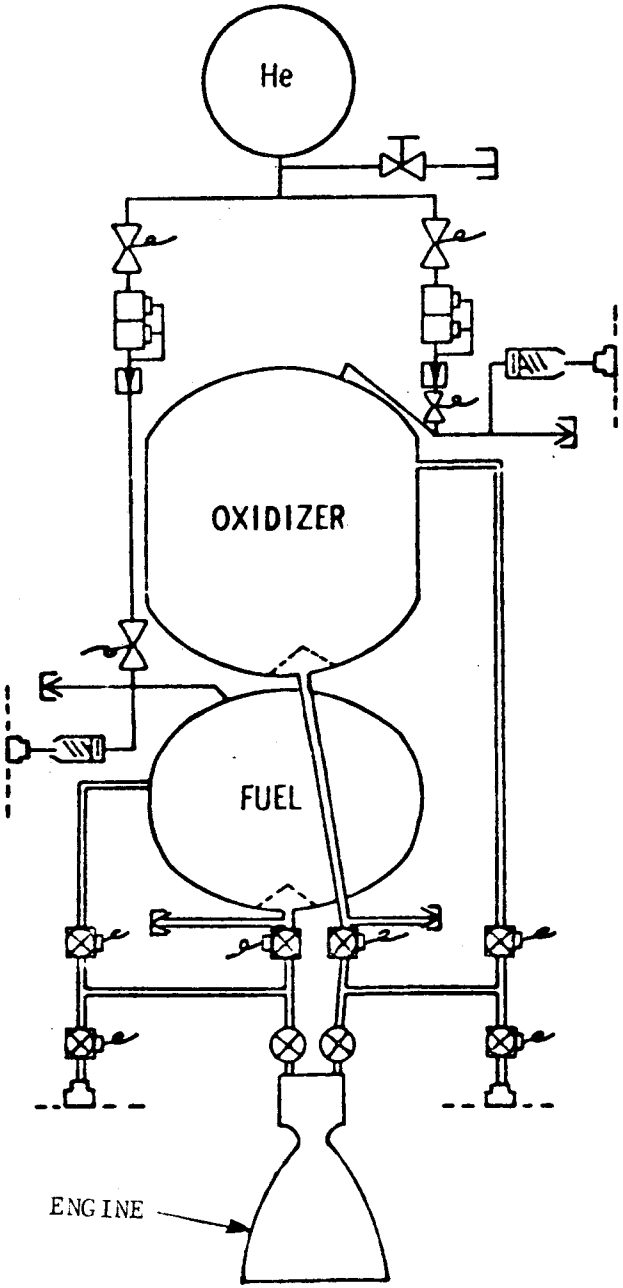


He MANUAL VALVE
He SOLENOID VALVE
He REGULATOR
CHECK VALVE
CAPPED DISCONNECT
CAPPED DISCONNECT (SELF-SEALING)
PROPELLANT SHUTOFF VALVE
ENGINE VALVE
UMBILICAL DISCONNECT
BURST/RELIEF VALVE

PR-1 CONCEPTS

| ID NO | WT CAT | MISSION (DAYS) | TUG | DRY WT | REMARKS |
|---|---|---|---|---|---|
| (1) | MAX | 2/7 | SS | 367 | T1 SPHERE, 18 #HE |
| (2) | AV | 2/7 | SS | 307 | COMPOSITE SPHERE, 18#HE |
| (3) | MAX | 2/7 | DS | 290 | T1 SPHERE, 9#HE |
| (4) | AV | 2/7 | DS | 246 | COMPOSITE SPHERE, 9#HE |
| (5) | AV | 2/7 | 1-1/2 S | 674 | 80% IN DROP TANK |

NOTE: TANKS ARE REVERSED ON SOME TUG CONFIGURATIONS

BLOCK DIAGRAM
SPACE TUG REGULATED HELIUM - AMBIENT STORAGE
CONFIGURATION PR-1

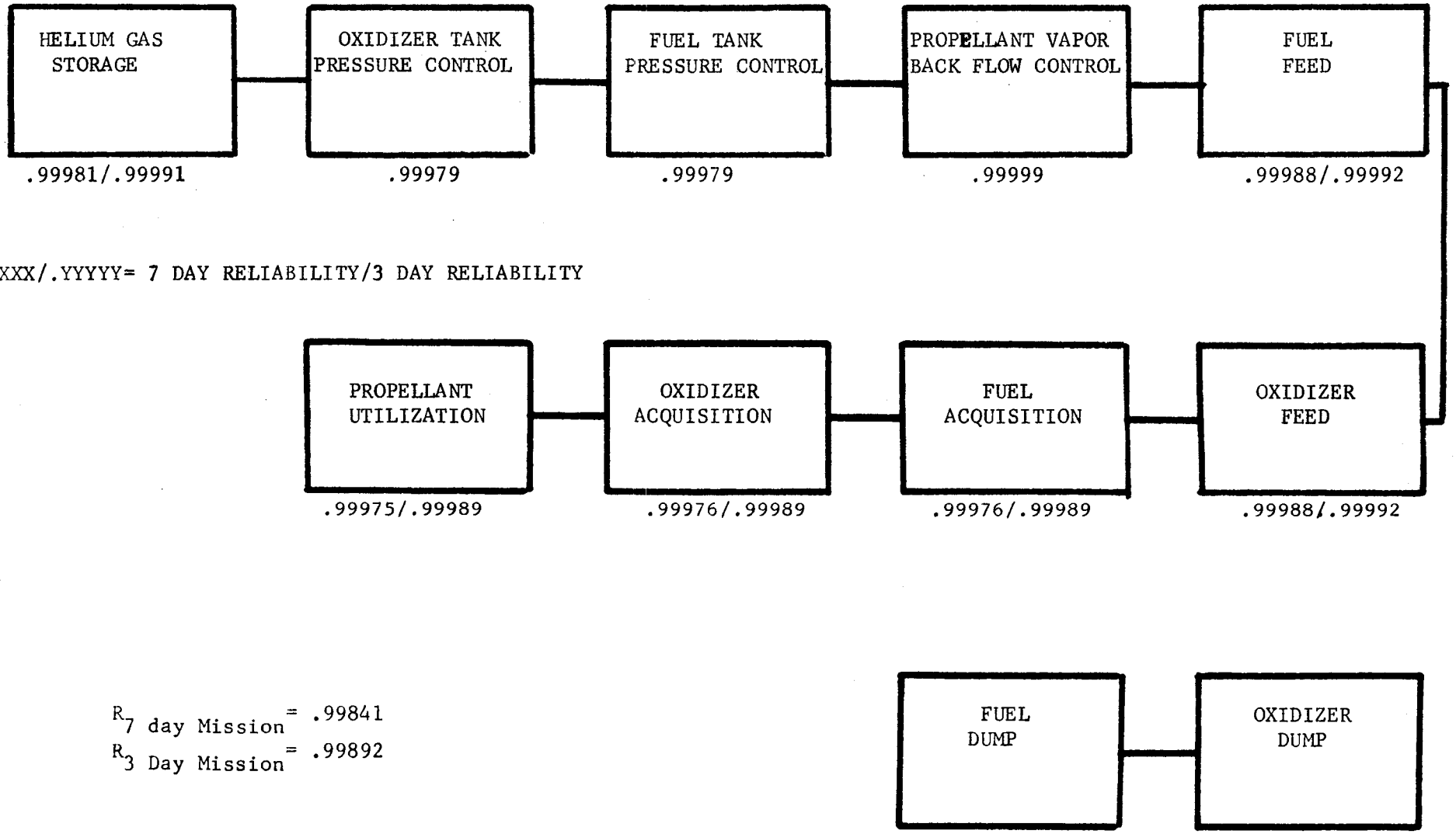


.XXXXX/.YYYYY= 7 DAY RELIABILITY/3 DAY RELIABILITY

$R_{7\ \text{day Mission}} = .99841$

$R_{3\ \text{Day Mission}} = .99892$

PROPELLANT AND PRESSURIZATION SUBSYSTEM - RELIABILITY DIAGRAM
CONFIGURATION PR - 1(2)

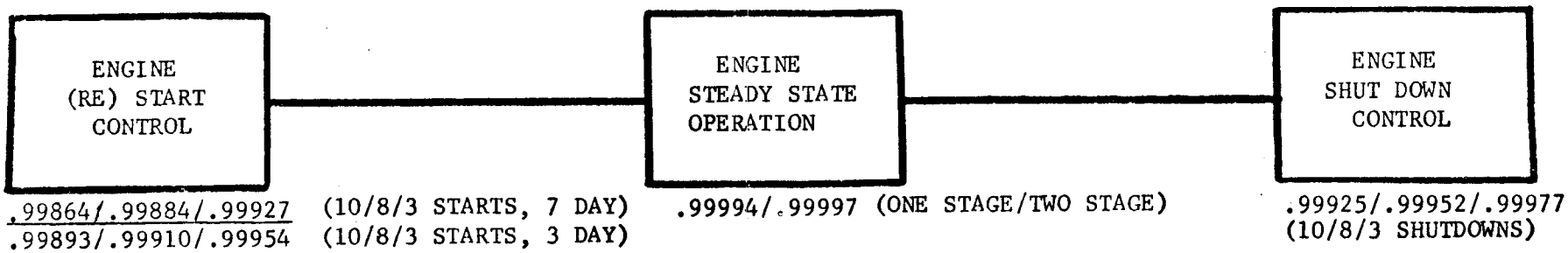


7 DAY MISSION

ONE STAGE VEHICLE: ( AND STAGE AND A HALF)

10 ENGINE STARTS: R = .99783
8 ENGINE STARTS: R = .99830

TWO STAGE VEHICLE:

8 ENGINE STARTS ONE VEHICLE STAGE
AND 3 ENGINE STARTS 2ND VEHICLE
STAGE: R = .99734

3 DAY MISSION

ONE STAGE VEHICLE: (AND STAGE AND A HALF)

10 ENGINE STARTS: R = .99812
8 ENGINE STARTS: R = .99856

TWO STAGE VEHICLE:

8 ENGINE STARTS ONE VEHICLE STAGE
AND 3 ENGINE STARTS 2ND VEHICLE
STAGE: R = .99878

→ PR -1(2) USE ONE STAGE VEHICLE DATA ONLY (
PR -1(4) USE TWO STAGE VEHICLE DATA ONLY
PR -1(5) USE ONE STAGE VEHICLE (AND STAGE AND A HALF)
VEHICLE DATA ONLY

OME ENGINE SUBSYSTEM - RELIABILITY DIAGRAM
CONFIGURATION PR -1(2), PR -1(4) AND PR -1(5)

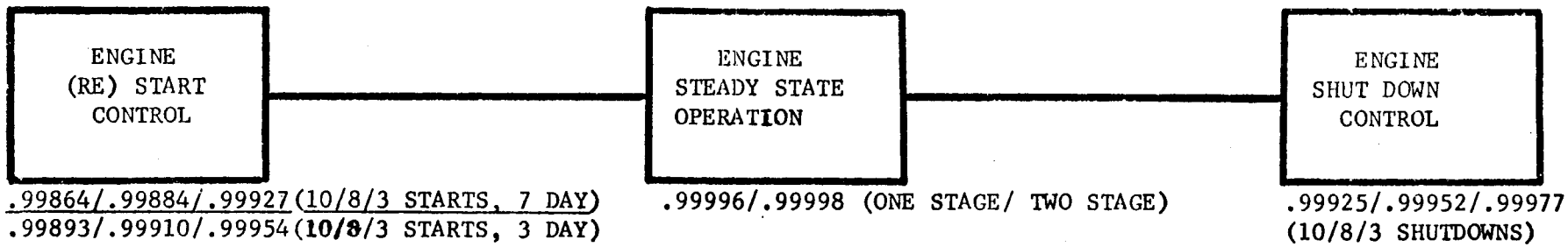


7 DAY MISSION

ONE STAGE VEHICLE: (AND STAGE AND A HALF)

10 ENGINE STARTS: R = .99785
8 ENGINE STARTS: R = .99832

TWO STAGE VEHICLE:
8 ENGINE STARTS ONE ENGINE AND
3 ENGINE STARTS, 2 ND ENGINE:
R = .99736

3 DAY MISSION

ONE STAGE VEHICLE: (AND STAGE AND A HALF)

10 ENGINE STARTS: R = .99814
8 ENGINE STARTS: R = .99858

TWO STAGE VEHICLE:
8 ENGINE STARTS ONE ENGINE AND
3 ENGINE STARTS, 2 ND ENGINE:
R = .99789

→ PR -1(2) USE ONE STAGE VEHICLE DATA ONLY
PR -1(4) USE TWO STAGE VEHICLE DATA ONLY
PR -1(5) USE ONE STAGE (AND STAGE AND A HALF) VEHICLE DATA ONLY

HIGH Pc ENGINE SUBSYSTEM - RELIABILITY DIAGRAM
CONFIGURATION PR -1(2), PR -1(4), and PR -1(5)

| COMPONENT | QTY. | TOTAL WEIGHT (LBS) | UNIT SIZE (IN) | TOTAL VOL. ($FT^3$) | OPERATING POWER (WATTS) | TOTAL POWER (WATTS) | MFG. MODEL NO. | REMARKS |
|---|---|---|---|---|---|---|---|---|
| PRESSURIZATION | | | | | | | | |
| He Sphere (Composite) | 1 | 126 | 29.6" I.D. | 7.9 | | | | 3600 psia<br>17.8 lb helium |
| He Solenoid Valve | 4 | 10.4 | ½" (Line) | | 30 max. | 120 max. | | 22 to 30 volts, 1 amp each, during each main engine burn |
| He Regulator | 4 | 7.0 | ½" (Line) | | | | | |
| He Manual Valve | 1 | 1.0 | ½" (Line) | | | | | |
| He Check Valve | 2 | 0.4 | ½" (Line) | | | | | |
| Capped Disconnect | 1 | 0.7 | ½" (Line) | | | | | |
| Capped, Self-sealing Disconnect | 2 | 2.0 | ½" (Line) | | | | | |
| Burst/Relief Valve | 2 | 5.6 | 1" (Line) | | | | | |
| Umbilical Disconnect | 2 | 2.0 | 1" (Line) | | | | | |
| Lines & Fittings | | 7.0 | ½" High Press<br>1" Low Press | | | | | |
| SUB TOTAL | | 162 | | | | | | |

**COMPONENT LIST/PHYSICAL CHARACTERISTICS**

MAIN ENGINE SUPPORT - CONFIGURATION PR-1(2)

| COMPONENT | QTY. | TOTAL WEIGHT (LBS) | UNIT SIZE (IN) | TOTAL VOL. ($FT^3$) | OPERATING POWER (WATTS) | TOTAL POWER (WATTS) | MFG. MODEL NO. | REMARKS |
|---|---|---|---|---|---|---|---|---|
| PROPELLANT FEED | | | | | | | | |
| Propellant Valves | 2 | 8 | 2½" & 3" | | | | | |
| Capped Disconnect (Self-Sealing) | 2 | 3 | 2" | | | | | |
| Lines 2½" & 3" | | 22 | 2½" & 3" | | | | | |
| Instrumentation | | 7 | | | | | | |
| SUB TOTAL | | 40 | | | | | | |
| PROPELLANT ACQUISITION | | | | | | | | |
| Screen and Trap | 2 | 30 | | | | | | 15 lb per tank |
| PROPELLANT DUMP | | | | | | | | |
| Propellant Shutoff Valve | 6 | 27 | 2½" & 3" | | | | | |
| Umbilical Disconnect | 2 | 6 | 2½" & 3" | | | | | |
| Lines & Fittings | | 7 | | | | | | |
| SUB TOTAL | | 40 | | | | | | |
| PROP. UTILIZATION | | | | | | | | |
| Capacitance Prop | 2 | 30 | | | | | | |
| Engine Valve & Elec. | 1 | 5 | | | | | | |
| SUB TOTAL | | 35 | | | | | | |
| ENGINE OPTION | | | | | | | | |
| BASIC "AS IS" OME | | 250 | 6,000 lb Thrust At 324 Isp MR= 1.65 | | | | | NO ACTUATORS |
| UPRATED OME | | 310 | 12,000 lb Thrust At 325 Isp MR= 2.0 | | | | | |
| BELL | | 355 | 12,000 lb Thrust At 325 Isp MR= 1.78 | | | | | |
| HIGH Pc (300:1) | | 270 | 12,000 lb Thrust At 338.1 Isp MR= 2.0 | | | | | |
| HIGH Pc (400:1) | | 295 | 12,000 lb Thrust At 344.7 Isp MR= 2.0 | | | | | |

**COMPONENT LIST/PHYSICAL CHARACTERISTICS**

MAIN ENGINE SUPPORT - CONFIGURATION PR-1(2) (CONTINUED)

IDENTICAL TO RELIABILITY DIAGRAM FOR CONFIGURATION PR - 1(2) EXCEPT THAT THERE ARE TWO SUBSYSTEMS: ONE FOR EACH STAGE OF THE TWO STAGE VEHICLE, THEREFORE:

$$R_{\text{7 DAY MISSION}} = .99682$$

$$R_{\text{3 DAY MISSION}} = .99784$$

PROPELLANT AND PRESSURIZATION SUBSYSTEM - RELIABILITY DIAGRAM
CONFIGURATION PR - 1(4)

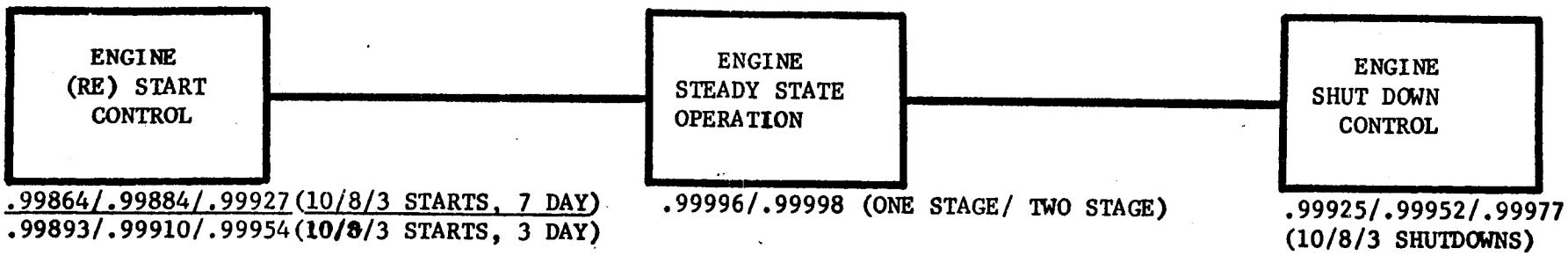


7 DAY MISSION

ONE STAGE VEHICLE: (AND STAGE AND A HALF)

10 ENGINE STARTS: R = .99785
8 ENGINE STARTS: R = .99832

TWO STAGE VEHICLE:
8 ENGINE STARTS ONE ENGINE AND
3 ENGINE STARTS, 2 ND ENGINE:
R = .99736

3 DAY MISSION

ONE STAGE VEHICLE: (AND STAGE AND A HALF)

IO ENGINE STARTS: R = .99814
8 ENGINE STARTS: R = .99858

TWO STAGE VEHICLE:
8 ENGINE STARTS ONE ENGINE AND
3 ENGINE STARTS, 2 ND ENGINE:
R = .99789

PR -1(2) USE ONE STAGE VEHICLE DATA ONLY
PR -1(4) USE TWO STAGE VEHICLE DATA ONLY
PR -1(5) USE ONE STAGE (AND STAGE AND A HALF) VEHICLE DATA ONLY

HIGH Pc ENGINE SUBSYSTEM - RELIABILITY DIAGRAM
CONFIGURATION PR -1(2), PR -1(4), and PR -1(5)

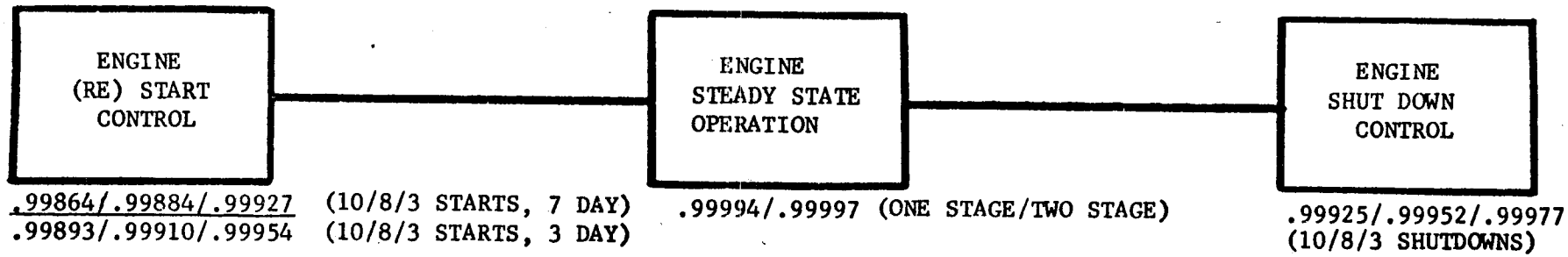


7 DAY MISSION

ONE STAGE VEHICLE: ( AND STAGE AND A HALF)

10 ENGINE STARTS: R = .99783
8 ENGINE STARTS: R = .99830

TWO STAGE VEHICLE:

8 ENGINE STARTS ONE VEHICLE STAGE AND 3 ENGINE STARTS 2ND VEHICLE STAGE: R = .99734

3 DAY MISSION

ONE STAGE VEHICLE: (AND STAGE AND A HALF)

10 ENGINE STARTS: R = .99812
8 ENGINE STARTS: R = .99856

TWO STAGE VEHICLE:

8 ENGINE STARTS ONE VEHICLE STAGE AND 3 ENGINE STARTS 2ND VEHICLE STAGE: R = .99878

PR -1(2) USE ONE STAGE VEHICLE DATA ONLY (
PR -1(4) USE TWO STAGE VEHICLE DATA ONLY
PR -1(5) USE ONE STAGE VEHICLE (AND STAGE AND A HALF) VEHICLE DATA ONLY

OME ENGINE SUBSYSTEM - RELIABILITY DIAGRAM
CONFIGURATION PR -1(2), PR -1(4) AND PR -1(5)

| COMPONENT | QTY. | TOTAL WEIGHT (LBS) | UNIT SIZE (IN) | TOTAL VOL. ($FT^3$) | OPERATING POWER (WATTS) | TOTAL POWER (WATTS) | MFG. MODEL NO. | REMARKS |
|---|---|---|---|---|---|---|---|---|
| PRESSURIZATION | | | | | | | | |
| He Sphere (Composite) | 1 | 65 | 23.6 I.D. | 4.0 | | | | 3600 psia<br>8.9 lb. helium |
| He Solenoid Valve | 4 | 10.4 | ½" (Line) | | 30 max. | 120 max. | | 22 to 30 volts, 1 amp each, during each main engine burn |
| He Regulator | 4 | 7.0 | ½" (Line) | | | | | |
| He Manual Valve | 1 | 1.0 | ½" (Line) | | | | | |
| He Check Valve | 2 | 0.4 | ½" (Line) | | | | | |
| Capped Disconnect | 1 | 0.7 | ½" (Line) | | | | | |
| Capped, Self-sealing Disconnect | 2 | 2.0 | ½" (Line) | | | | | |
| Burst/Relief Valve | 2 | 5.6 | 1" (Line) | | | | | |
| Umbilical Disconnect | 2 | 2.0 | 1" (Line) | | | | | |
| Lines & Fittings | | 7.0 | ½" High Press<br>1" Low Press | | | | | |
| SUB TOTAL | | 101 | | | | | | |

**COMPONENT LIST/PHYSICAL CHARACTERISTICS**
MAIN ENGINE SUPPORT - CONFIGURATION PR-1 (4)

| COMPONENT | QTY. | TOTAL WEIGHT (LBS) | UNIT SIZE (IN) | TOTAL VOL. ($FT^3$) | OPERATING POWER (WATTS) | TOTAL POWER (WATTS) | MFG. MODEL NO. | REMARKS |
|---|---|---|---|---|---|---|---|---|
| PROPELLANT FEED | | | | | | | | |
| Propellant Valves | 2 | 8 | 2½" & 3" | | | | | |
| Capped Disconnect (Self-Sealing) | 2 | 3 | 2" | | | | | |
| Lines 2½" & 3" | | 22 | 2½" & 3" | | | | | |
| Instrumentation | | 7 | | | | | | |
| SUB TOTAL | | 40 | | | | | | |
| PROPELLANT ACQUISITION | | | | | | | | |
| Screen and Trap | 2 | 30 | | | | | | 15 lb per tank |
| PROPELLANT DUMP | | | | | | | | |
| Propellant Shutoff Valve | 6 | 27 | 2½" & 3" | | | | | |
| Umbilical Disconnect | 2 | 6 | 2½" & 3" | | | | | |
| Lines & Fittings | | 7 | | | | | | |
| SUB TOTAL | | 40 | | | | | | |
| PROP. UTILIZATION | | | | | | | | |
| Capacitance Prop | 2 | 30 | | | | | | |
| Engine Valve & Elec. | 1 | 5 | | | | | | |
| SUB TOTAL | | 35 | | | | | | |
| ENGINE OPTION | | | | | | | | |
| UPRATED OME | | 310 | 12,000 lb Thrust At 325 Isp MR= 2.0 | | | | | NO ACTUATORS |
| HIGH Pc (300:1) | | 270 | 12,000 lb Thrust At 338.1 Isp MR= 2.0 | | | | | |

**COMPONENT LIST/PHYSICAL CHARACTERISTICS**

**MAIN ENGINE SUPPORT - CONFIGURATION PR-1(4) (CONTINUED)**

IDENTICAL TO RELIABILITY DIAGRAM FOR CONFIGURATION PR - 1(2) EXCEPT THAT THERE ARE TWO SUBSYSTEMS: ONE FOR THE STAGE AND ONE FOR THE DROP TANKS, THEREFORE:

$$R_{\text{7 DAY MISSION}} = .99860$$

$$R_{\text{3 DAY MISSION}} = .99907$$

PROPELLANT AND PRESSURIZATION SUBSYSTEM - RELIABILITY DIAGRAM
CONFIGURATION PR - 1(5)

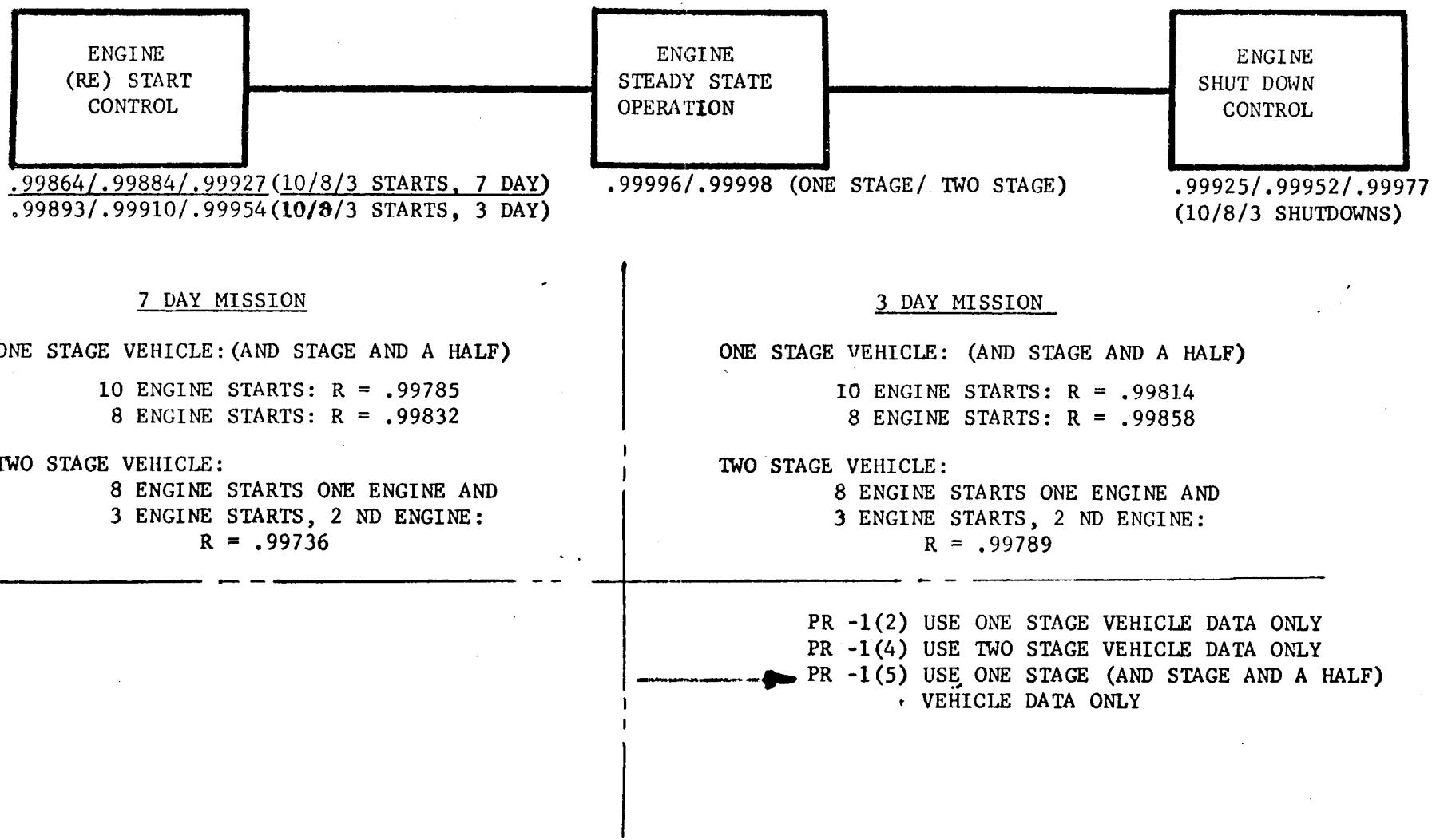


HIGH Pc ENGINE SUBSYSTEM - RELIABILITY DIAGRAM
CONFIGURATION PR -1(2), PR -1(4), and PR -1(5)

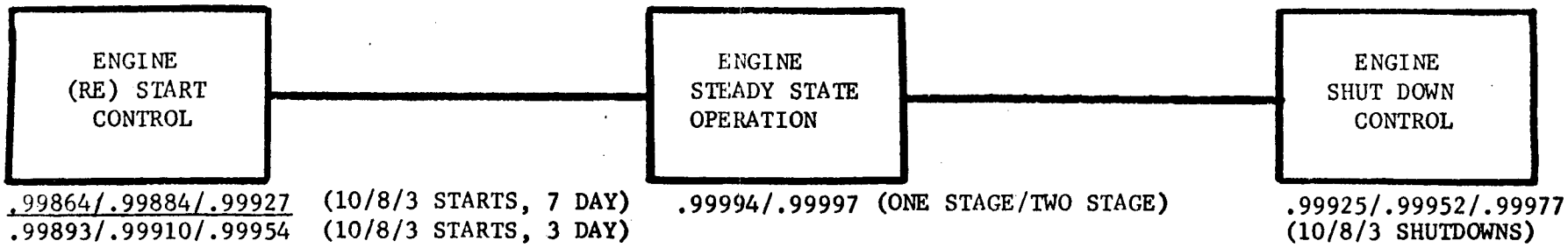


7 DAY MISSION

ONE STAGE VEHICLE: ( AND STAGE AND A HALF)

10 ENGINE STARTS: R = .99783
8 ENGINE STARTS: R = .99830

TWO STAGE VEHICLE:

8 ENGINE STARTS ONE VEHICLE STAGE AND 3 ENGINE STARTS 2ND VEHICLE STAGE: R = .99734

3 DAY MISSION

ONE STAGE VEHICLE: (AND STAGE AND A HALF)

10 ENGINE STARTS: R = .99812
8 ENGINE STARTS: R = .99856

TWO STAGE VEHICLE:

8 ENGINE STARTS ONE VEHICLE STAGE AND 3 ENGINE STARTS 2ND VEHICLE STAGE: R = .99878

PR -1(2) USE ONE STAGE VEHICLE DATA ONLY (
PR -1(4) USE TWO STAGE VEHICLE DATA ONLY
PR -1(5) USE ONE STAGE VEHICLE (AND STAGE AND A HALF) VEHICLE DATA ONLY

OME ENGINE SUBSYSTEM - RELIABILITY DIAGRAM
CONFIGURATION PR -1(2), PR -1(4) AND PR -1(5)

| COMPONENT | QTY. | TOTAL WEIGHT (LBS) | UNIT SIZE (IN) | TOTAL VOL. ($FT^3$) | OPERATING POWER (WATTS) | TOTAL POWER (WATTS) | MFG. MODEL NO. | REMARKS |
|---|---|---|---|---|---|---|---|---|
| STAGE PRESSURIZATION | | | | | | | | |
| He Sphere (Composite) | 1 | 28 | 17.4 | 1.6 | | | | 3600 psia, 3.6 lb He |
| He Solenoid Valve | 4 | 10.4 | ½" (Line) | | 30 max | 120 max | | 22 to 30 volts, 1 amp each, during each main engine burn |
| He Regulator | 4 | 7.0 | ½" (Line) | | | | | |
| He Manual Valve | 1 | 1.0 | ½" (Line) | | | | | |
| He Check Valve | 2 | 0.4 | ½" (Line) | | | | | |
| Capped Disconnect | 1 | 0.7 | ½" (Line) | | | | | |
| Capped, Self Sealing Q/D | 2 | 2.0 | ½" (Line) | | | | | |
| Burst/Relief Valve | 2 | 5.6 | 1" (Line) | | | | | |
| Umbilical Disconnect | 2 | 2.0 | 1" (Line) | | | | | |
| Lines & Fittings | | 18.0 | ½" High Press<br>1" Low Press | | | | | |
| STAGE WEIGHT | | 75.0 | | | | | | |
| DROP TANK PRESSURIZATION | | | | | | | | |
| He Sphere (Composite) | 2 | 105 | 27.6 | 6.4 | | | | 3600 psia, 14.2 lb He |
| He Solenoid Valve | 8 | 21 | ½" (Line) | | 30 | 120 max | | 22 to 30 volts, 1 amp each, during each main engine burn |
| He Regulator | 8 | 14 | ½" (Line) | | | | | |
| He Manual Valve | 2 | 2 | ½" (Line) | | | | | |
| He Check Valve | 4 | 0.8 | ½" (Line) | | | | | |
| Capped Disconnect | 2 | 1.4 | ½" (Line) | | | | | |
| Capped Self-Seal Q/D | 4 | 4 | ½" (Line) | | | | | |

**COMPONENT LIST/PHYSICAL CHARACTERISTICS**
MAIN ENGINE SUPPORT - CONFIGURATION PR-1 (5)

| COMPONENT | QTY. | TOTAL WEIGHT (LBS) | UNIT SIZE (IN) | TOTAL VOL. ($FT^3$) | OPERATING POWER (WATTS) | TOTAL POWER (WATTS) | MFG. MODEL NO. | REMARKS |
|---|---|---|---|---|---|---|---|---|
| DROP TANK PRESSURIZATION (CONTINUED) | | | | | | | | |
| Burst/Relief Valve | 4 | 11.2 | 1" (Line) | | | | | |
| Umbilical Disconnect | 4 | 4.0 | 1" (Line) | | | | | |
| Lines & Fittings | | 20.0 | ½" High Press<br>1" Low Press | | | | | |
| DROP TANK WEIGHT | | 163.4 | | | | | | |

**COMPONENT LIST/PHYSICAL CHARACTERISTICS**

MAIN ENGINE SUPPORT - CONFIGURATION PR-1 (5) (CONTINUED)

| COMPONENT | QTY. | TOTAL WEIGHT (LBS) | UNIT SIZE (IN) | TOTAL VOL. ($FT^3$) | OPERATING POWER (WATTS) | TOTAL POWER (WATTS) | MFG. MODEL NO. | REMARKS |
|---|---|---|---|---|---|---|---|---|
| DROP TANK | | | | | | | | |
| PROPELLANT CROSSFEED | | | | | | | | |
| Prop. Valve | 4 | 16 | 2½" | | 1 Avg | 2 | | 1 watt avg, 3 watts peak each |
| Q/D Half | 4 | 4 | 2½" | | | | | |
| Crossfeed Line | 4 | 2 | 2½" | | | | | |
| SUB TOTAL | | 22 | | | | | | |
| PROPELLANT FEED | | | | | | | | |
| Prop. Valves | 4 | 16 | 2½" & 3" | | | | | |
| Capped Self Seal Disconnect | 4 | 6 | 2" | | | | | |
| Lines & Fittings | | 37 | 2½" & 3" | | | | | |
| Instr. & Wiring | | 30 | | | | | | |
| SUB TOTAL | | 89 | | | | | | |
| PROPELLANT ACQUISITION | | | | | | | | |
| Screen & Trap | 4 | 60 | | | | | | -15 # per tank |
| PROPELLANT DUMP | | | | | | | | |
| Shutoff Valve | 12 | 54 | 2½" & 3" | | 1 Avg | 6 | | 1 W average, 3 watt peak each |
| Umbilical Q/D | 4 | 12 | 2½" | | | | | |
| Lines & Fittings | | 27 | 2½" & 3" | | | | | |
| SUB TOTAL | | 93 | | | | | | |
| PROP. UTILIZATION | | | | | | | | |
| Capacitance Probes | 4 | 48 | | | | | | |
| MR Valve & Control | 1 | 1 | | | | | | |
| SUB TOTAL | | 49 | | | | | | |

**COMPONENT LIST/PHYSICAL CHARACTERISTICS**

MAIN ENGINE SUPPORT - CONFIGURATION PR-1(5) (CONTINUED)

| COMPONENT | QTY. | TOTAL WEIGHT (LBS) | UNIT SIZE (IN) | TOTAL VOL. ($FT^3$) | OPERATING POWER (WATTS) | TOTAL POWER (WATTS) | MFG. MODEL NO. | REMARKS |
|---|---|---|---|---|---|---|---|---|
| STAGE | | | | | | | | |
| PROP. CROSSFEED | | | | | | | | |
| Propellant Valve | 2 | 8.0 | 2½" | | 1 Avg. | 2 | | 2 watt avg, 3 watts peak each |
| Crossfeed Line | 2 | 1.5 | 2½" | | | | | |
| Q/D Half | 2 | 1.5 | 2½" | | | | | |
| SUB TOTAL | | 11.0 | | | | | | |
| PROPELLANT FEED | | | | | | | | |
| Propellant Valves | 2 | 8 | 2" & 3" | | 1 | 2 | | 1 watt avg, 3 watts peak each |
| Capped Self-Seal Disconnect | 2 | 3 | 2" | | | | | |
| Lines & Fittings | | 9 | 2½" & 3" | | | | | |
| SUB TOTAL | | 20 | | | | | | |
| PROPELLANT ACQUISITION | | | | | | | | |
| Screen & Trap | 2 | 30 | | | | | | -15 # per tank |
| PROPELLANT DUMP | | | | | | | | |
| Prop. Shutoff Valve | 6 | 27 | 2½" & 3" | | 1 | 6 | | 1 W average, 3 watt peak each |
| Umbilical Disconnect | 2 | 6 | 2½" | | | | | |
| Lines & Fittings | | 12 | 2½" & 3" | | | | | |
| SUB TOTAL | | 45 | | | | | | |
| PROPELLANT UTILIZATION | | | | | | | | |
| Capacitance Probes | 2 | 12 | | | | | | |
| MR Valve & Control | 1 | 5 | | | | | | |
| SUB TOTAL | | 17 | | | | | | |

**COMPONENT LIST/PHYSICAL CHARACTERISTICS**

MAIN ENGINE SUPPORT - CONFIGURATION PR-1 (5) (CONTINUED)

| COMPONENT | QTY. | TOTAL WEIGHT (LBS) | UNIT SIZE (IN) | TOTAL VOL. ($FT^3$) | OPERATING POWER (WATTS) | TOTAL POWER (WATTS) | MFG. MODEL NO. | REMARKS |
|---|---|---|---|---|---|---|---|---|
| STAGE (CONTINUED) | | | | | | | | |
| ENGINE OPTION | | | | | | | | |
| UPRATED OME | | 310 | 12,000 lb Thrust At 325 Isp MR= 2.0 | | | | | |
| HIGH Pc (300:1) | | 270 | 12,000 lb Thrust At 338.1 Isp MR= 2.0 | | | | | |

**COMPONENT LIST/PHYSICAL CHARACTERISTICS**

MAIN ENGINE SUPPORT - CONFIGURATION PR-1 (5) (CONTINUED)

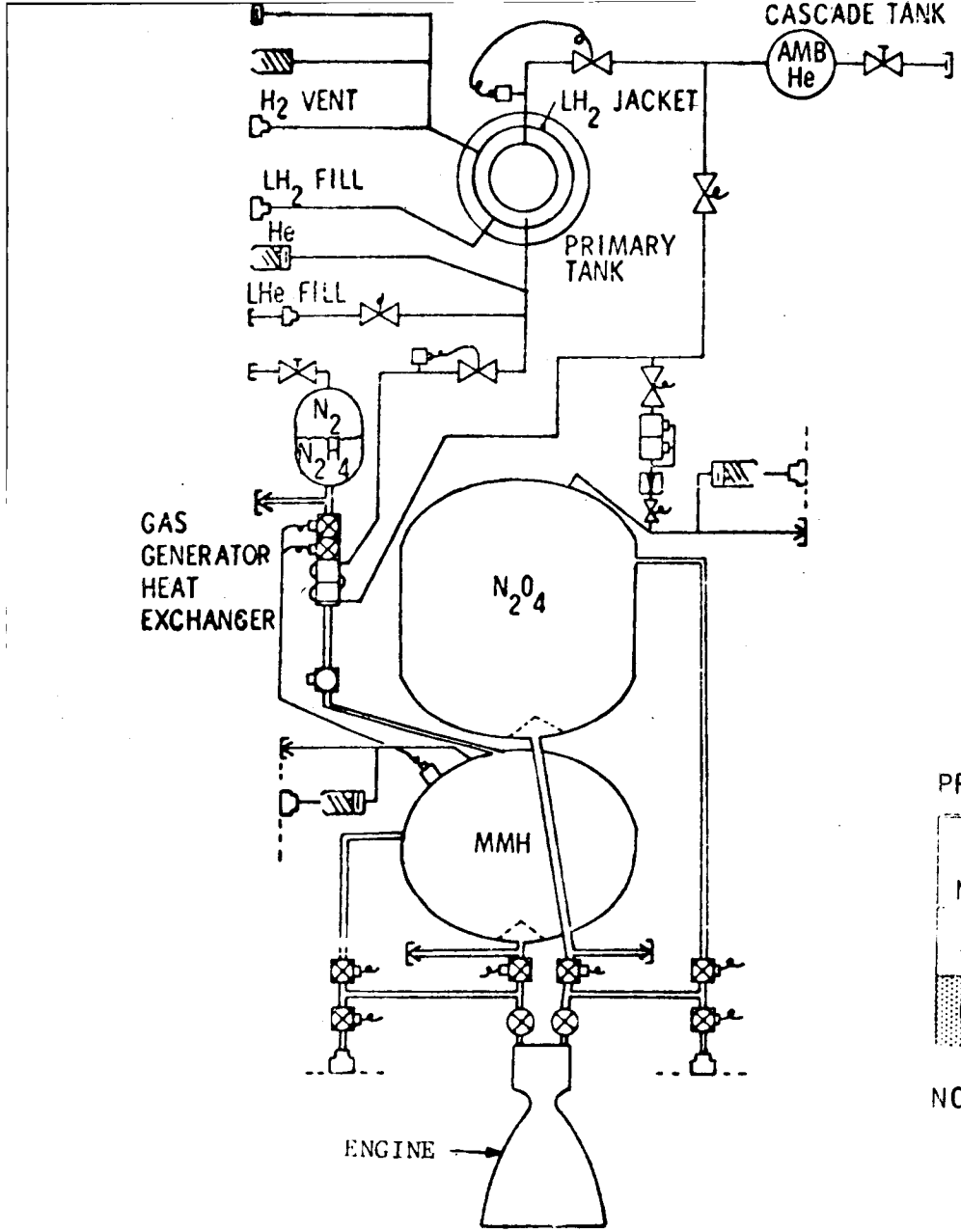


He HAND VALVE
He SOLENOID VALVE
He REGULATOR
CHECK VALVE
BURST DISC
CAPPED DISCONNECT
PRESSURE SWITCH
CAPPED DISCONNECT (SELF-SEALING)
PROPELLANT SHUTOFF VALVE
ENGINE VALVE
UMBILICAL DISCONNECT
BURST/RELIEF VALVE
VENT VALVE

PR-6 CONCEPTS

| ID NO | WT CAT | MISSION (DAYS) | TUG | DRY WT | REMARKS |
|---|---|---|---|---|---|
| (1) | MIN | 7 | SS | 269 | 21 # HE |
| (2) | MIN | 7 | DS | 240 | 11 # HE |

NOTE: TANKS ARE REVERSED ON SOME TUG CONFIGURATIONS

BLOCK DIAGRAM
SPACE TUG DEDICATED GAS GENERATOR - CASCADE PRESSURIZATION
CONFIGURATION PR-6

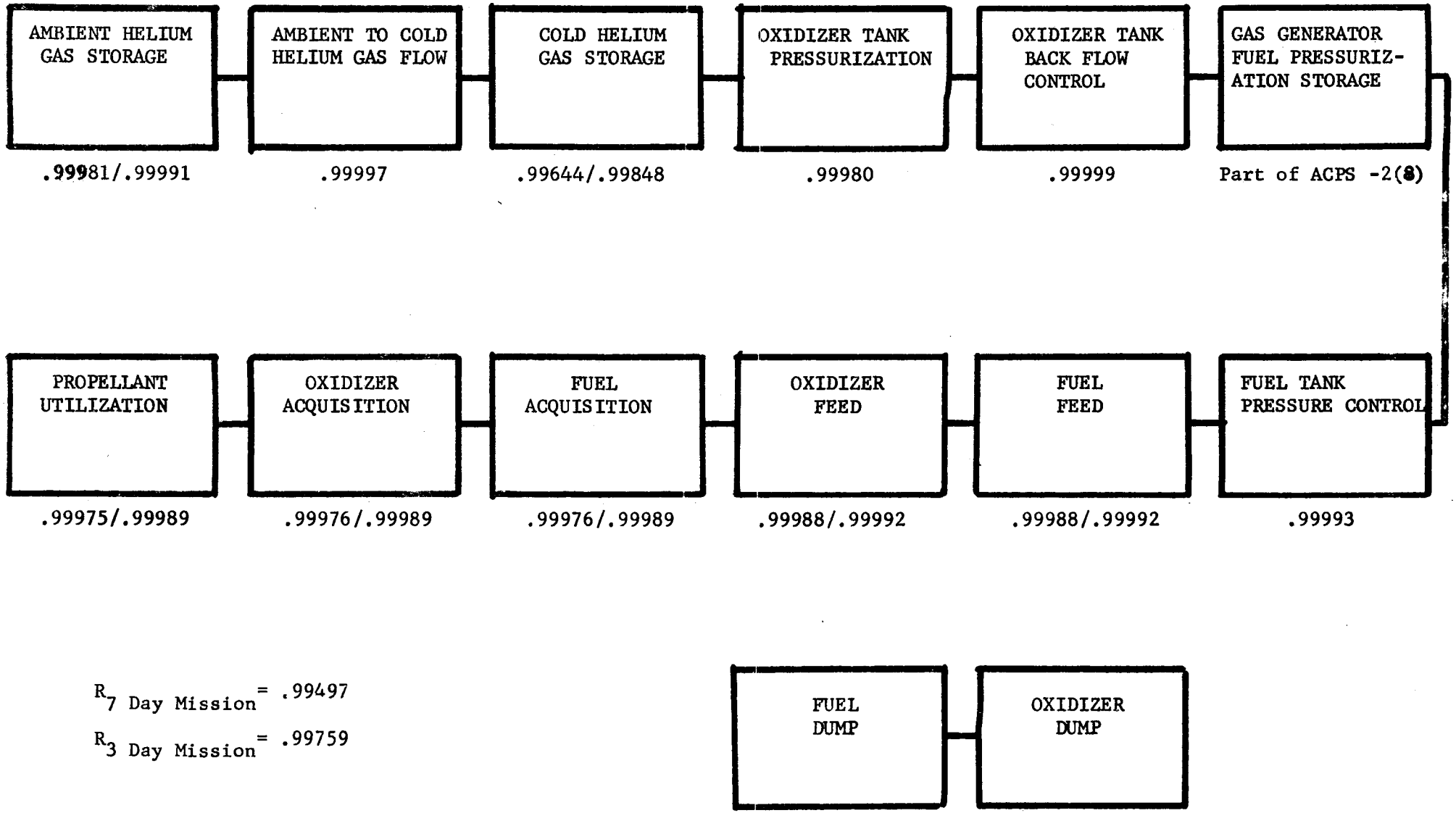


$R_{7\ Day\ Mission} = .99497$

$R_{3\ Day\ Mission} = .99759$




CASCADE PROPELLANT AND PRESSURIZATION SUBSYSTEM - RELIABILITY DIAGRAM
CONFIGURATION PR -6(1)

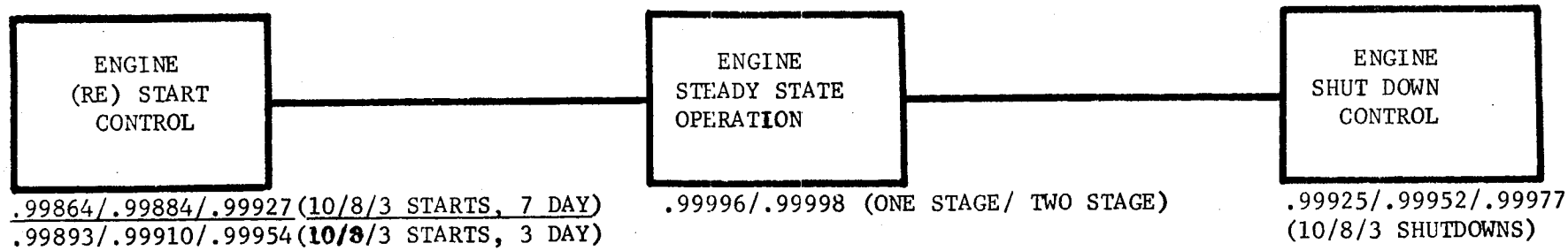


7 DAY MISSION

ONE STAGE VEHICLE: (AND STAGE AND A HALF)

10 ENGINE STARTS: R = .99785
8 ENGINE STARTS: R = .99832

TWO STAGE VEHICLE:
8 ENGINE STARTS ONE ENGINE AND
3 ENGINE STARTS, 2 ND ENGINE:
R = .99736

3 DAY MISSION

ONE STAGE VEHICLE: (AND STAGE AND A HALF)

10 ENGINE STARTS: R = .99814
8 ENGINE STARTS: R = .99858

TWO STAGE VEHICLE:
8 ENGINE STARTS ONE ENGINE AND
3 ENGINE STARTS, 2 ND ENGINE:
R = .99789

PR -1(2) USE ONE STAGE VEHICLE DATA ONLY
PR -1(4) USE TWO STAGE VEHICLE DATA ONLY
PR -1(5) USE ONE STAGE (AND STAGE AND A HALF) VEHICLE DATA ONLY
→ PR -6(1) USE ONE STAGE VEHICLE DATA ONLY

HIGH Pc ENGINE SUBSYSTEM - RELIABILITY DIAGRAM
CONFIGURATION PR -1(2), PR -1(4), and PR -1(5) AND PR -6(1)

| COMPONENT | QTY. | TOTAL WEIGHT (LBS) | UNIT SIZE (IN) | TOTAL VOL. ($FT^3$) | OPERATING POWER (WATTS) | TOTAL POWER (WATTS) | MFG. MODEL NO. | REMARKS |
|---|---|---|---|---|---|---|---|---|
| PRESSURIZATION | | | | | | | | |
| $H_2$ Jacketed Sphere | 1 | 23.5 | | | | | | 11.5 lb of He |
| He Sphere (Ambient) | 1 | 10.0 | 81. | 0.6 | | | | 1.1 lb of He |
| He Solenoid Valve | 6 | 15.6 | ½" Line | | 30 | 180 | | |
| He Regulator | 2 | 3.5 | ½" Line | | | | | |
| He/$N_2$ Manual Valve | 2 | 2.0 | ½" Line | | | | | |
| Pressure Switch | 3 | 6.3 | --- | | | | | |
| Check Valve | 1 | 1.5 | ½" Line | | | | | |
| Capped Disconnect | 3 | 2.1 | ½" Line | | | | | |
| Capped Self-Seal Q/D | 2 | 2.0 | ½" Line | | | | | |
| Burst/Relief Valve | 3 | 6.9 | 1" Line | | | | | |
| Burst Disc | 1 | 1.4 | ½" Line | | | | | |
| Vent Valve | 1 | 2.0 | ½" Line | | | | | |
| $N_2/H_4$ Solenoid Valve | 2 | 5.2 | ½" Line | | | | | |
| Fuel Pressurant Valve | 1 | 2.6 | 1" Line | | | | | |
| Gas Generator | 1 | 3.0 | --- | | | | | |
| Umbilical Disconnect | 3 | 3.0 | ½" Line | | | | | |
| Vent Disconnect | 2 | 2.0 | 1" Line | | | | | |
| $N_2H_4$ Tank | 1 | 8.0 | | 0.5 | | | | 14 lbs of $N_2H_4$ |
| Lines & Fittings | | 13.0 | | | | | | |
| TOTAL | | 124.0 | | | | | | |

**COMPONENT LIST/PHYSICAL CHARACTERISTICS**
MAIN ENGINE SUPPORT, CONFIGURATION PR-6 (1)

| COMPONENT | QTY. | TOTAL WEIGHT (LBS) | UNIT SIZE (IN) | TOTAL VOL. ($FT^3$) | OPERATING POWER (WATTS) | TOTAL POWER (WATTS) | MFG. MODEL NO. | REMARKS |
|---|---|---|---|---|---|---|---|---|
| PROPELLANT FEED | | | | | | | | |
| Propellant Valves | 2 | 8 | 2½" & 3" | | | | | |
| Capped Disconnect (Self-Sealing) | 2 | 3 | 2" | | | | | |
| Lines 2½" & 3" | | 22 | 2½" & 3" | | | | | |
| Instrumentation | | 7 | | | | | | |
| SUB TOTAL | | 40 | | | | | | |
| PROPELLANT ACQUISITION | | | | | | | | |
| Screen and Trap | 2 | 30 | | | | | | 15 lb per tank |
| PROPELLANT DUMP | | | | | | | | |
| Propellant Shutoff Valve | 6 | 27 | 2½" & 3" | | | | | |
| Umbilical Disconnect | 2 | 6 | 2½" & 3" | | | | | |
| Lines & Fittings | | 7 | | | | | | |
| SUB TOTAL | | 40 | | | | | | |
| PROP. UTILIZATION | | | | | | | | |
| Capacitance Prop | 2 | 30 | | | | | | |
| Engine Valve & Elec. | 1 | 5 | | | | | | |
| SUB TOTAL | | 35 | | | | | | |
| ENGINE OPTION | | | | | | | | |
| HIGH Pc (300:1) | | 270 | 12,000 lb Thrust At 338.1 Isp MR= 2.0 | | | | | |

**COMPONENT LIST/PHYSICAL CHARACTERISTICS**

**MAIN ENGINE SUPPORT - CONFIGURATION PR-6(1) (CONTINUED)**

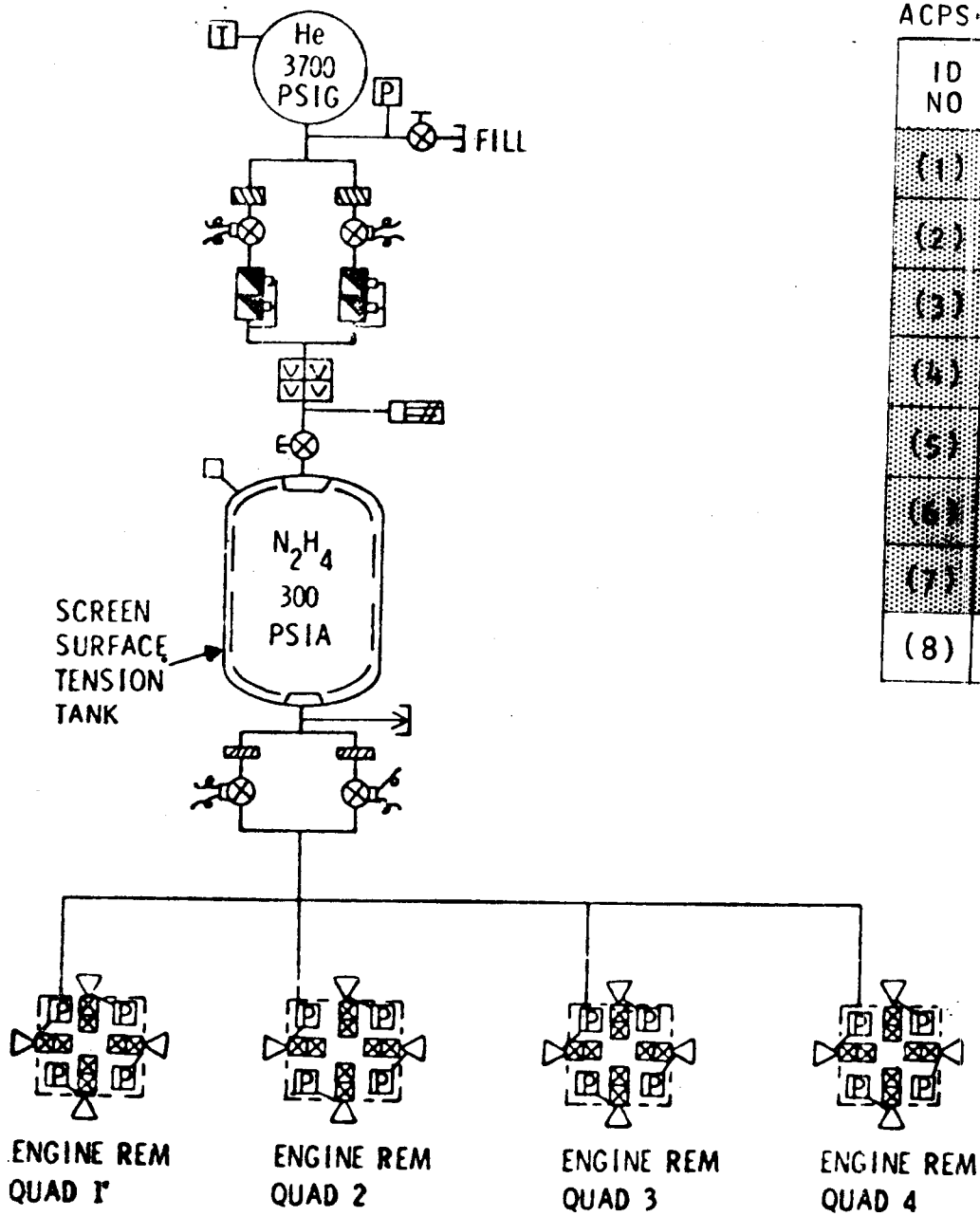


BLOCK DIAGRAM
HYDRAZINE ACPS FOR SPACETUG
CONFIGURATION ACPS-2

ACPS-2 CONCEPTS

| ID NO | WT CAT | MISSION (DAYS) | TUG | DRY WT | REMARKS |
|---|---|---|---|---|---|
| (1) | AV | 2 | SS | 198 | 125K # SEC IMPULSE |
| (2) | MAX | 7 | SS | 236 | 150K # SEC IMPULSE |
| (3) | MIN | 2/7 | SS | 148 | 100K # SEC IMPULSE |
| (4) | AV | 2 | DS | 168 | 100K # SEC IMPULSE |
| (5) | AV | 7 | DS | 198 | 125K # SEC IMPULSE |
| (6) | MIN | 2 | DS | 118 | 75K # SEC IMPULSE |
| (7) | MIN | 7 | DS | 148 | 100K # SEC IMPULSE |
| (8) | AV | 2/7 | SS DS | 172 | 125K # SEC IMPULSE |

- HAND VALVE
- SYSTEM FILTER
- LATCHING SOLENOID VALVE
- PRESSURE REGULATOR
- PRESS RELIEF VALVE & BURST DISC
- Q/D WITH CAP
- Q/D WITH POPPET SEAL & CAP
- TEMP TRANSDUCER
- PRESSURE TRANSDUCER
- QUAD CHECK VALVES
- 3 PORT 2 WAY HAND VALVE

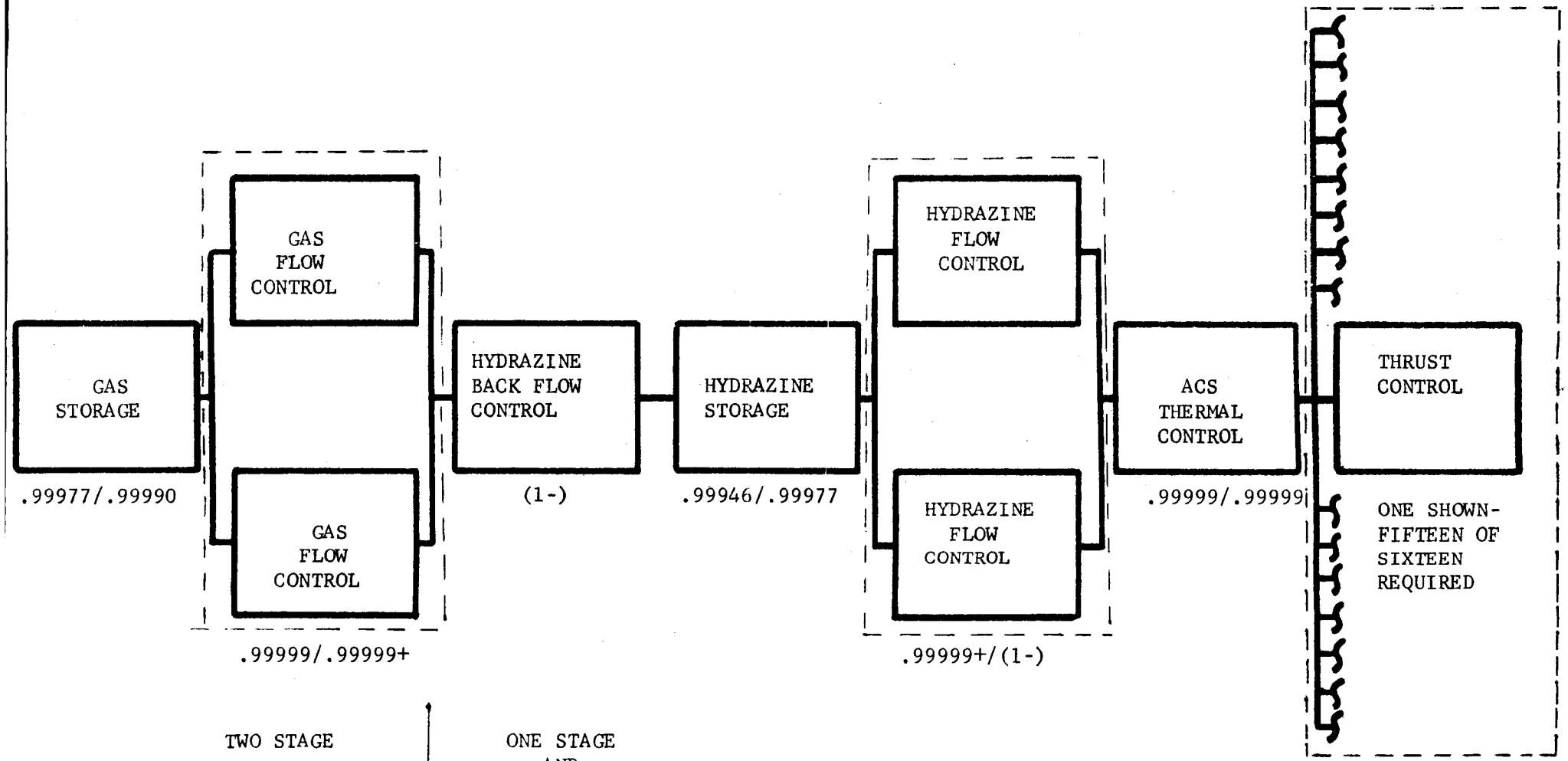


TWO STAGE VEHICLE

$R_7$ = .99402

$R_3$ = .99650

ONE STAGE AND STAGE AND A HALF

$R_7$ = .99701

$R_3$ = .99825

LEGEND:

$R_7$ = 7 DAY MISSION RELIABILITY

$R_3$ = 3 DAY MISSION RELIABILITY

.XXXXX/YYYYY = 7 DAY RELIABILITY/3 DAY RELIABILITY

HYDRAZINE ATTITUDE CONTROL SYSTEM - RELIABILITY DIAGRAM
CONFIGURATION ACPS -2(8)

| COMPONENT | QTY. | TOTAL WEIGHT (LBS) | UNIT SIZE (IN) | TOTAL VOL. ($FT^3$) | OPERATING POWER (WATTS) | TOTAL POWER (WATTS) | MFG. MODEL NO. | REMARKS |
|---|---|---|---|---|---|---|---|---|
| VALVES | | | | | | | | |
| Hand Valve | 1 | 1.5 | ½" Line | | | | | |
| Latching Solenoid | 4 | 10.4 | ½" & 3/4" | | | | | |
| Filters | 4 | 2.0 | ½" & 3/4" | | | | | 2 per assembly |
| Redundant Press. Reg. | 2 | 6.0 | ½" Line | | | | | |
| Burst/Relief Valve | 1 | 1.3 | ½" Line | | | | | |
| Q/D with Cap. | 1 | 0.7 | | | | | | |
| Q/D with poppet | 1 | 1.0 | | | | | | |
| Quad Check Valve | 1 | 0.6 | ½" | | | | | |
| 3 port, 2 way hand use | 1 | 1.6 | ½" | | | | | |
| Prop & Press. Lines & Support | | 12.0 | ½" & 3/4" | | | | | 300" lines and fittings |
| INSTRUMENTATION | | | | | | | | |
| Transducer(Press.) | 16 | 8.0 | | | | | | 0-300 psia |
| Transducer (Press.) | 1 | 0.5 | | | | | | 0-4000 psia |
| Transducer (Temp.) | 1 | 0.3 | | | | | | -100 to 300°F |
| HYDRAZINE TANK & SUPPORT | 1 | 50.0 n | | 10 $ft^3$ | | | | 300 psia oper (600 lb) Isp = 208 |
| HELIUM TANK & SUPPORT | 1 | 25.5 | | 1 $ft^3$ | | | | 3600 psia oper |
| Thruster Assembly | 4 | 40.6 | | | | | | 4 nozzles per Eng. Assy. |
| Thruster Mating Assembly | 4 | 8.0 | | | | | | |
| Wiring | | 1.5 | | | | | | |
| Heaters | | TBD | | | | | | |
| TOTAL | | 171.5 | | | | | | |

**COMPONENT LIST/PHYSICAL CHARACTERISTICS**

ACPS ENGINE & SUPPORT-CONFIGURATION ACPS-2(8)

SECTION VIII

## ORBITER INTERFACE

STORAGE SPACE TUG INTERFACE ASSUMPTIONS

TUG CONFIGURATION 1A2 CRADLE CONCEPT (COMMON TO ALL SINGLE STAGE TUGS)

TUG CONFIGURATION IVE CRADLE CONCEPT

TUG CONFIGURATION IIIC CRADLE CONCEPT

## STORABLE SPACE TUG INTERFACE ASSUMPTIONS

- FLUID INTERFACES - ONLY TWO

  OXIDIZER AND FUEL DUMP LINES

- ELECTRICAL INTERFACES

  TWO UMBILICALS: ONE FLIGHT, ONE GSE - DATA/CONTROL/POWER

  TWO PANELS FOR SHUTTLE USE: CAUTION & WARNING, OPERATIONS

- STRUCTURAL/MECHANICAL INTERFACES

  CRADLE CONCEPT WITH THE 4 POINT SHUTTLE ATTACHMENT

- OTHER INTERFACES

  ENVELOPE - OK

  ABORT CONDITIONS - OK

  RMS CHARACTERISTICS - OK

  ATCS - NOT REQUIRED

  INDUCED ENVIRONMENT - OK

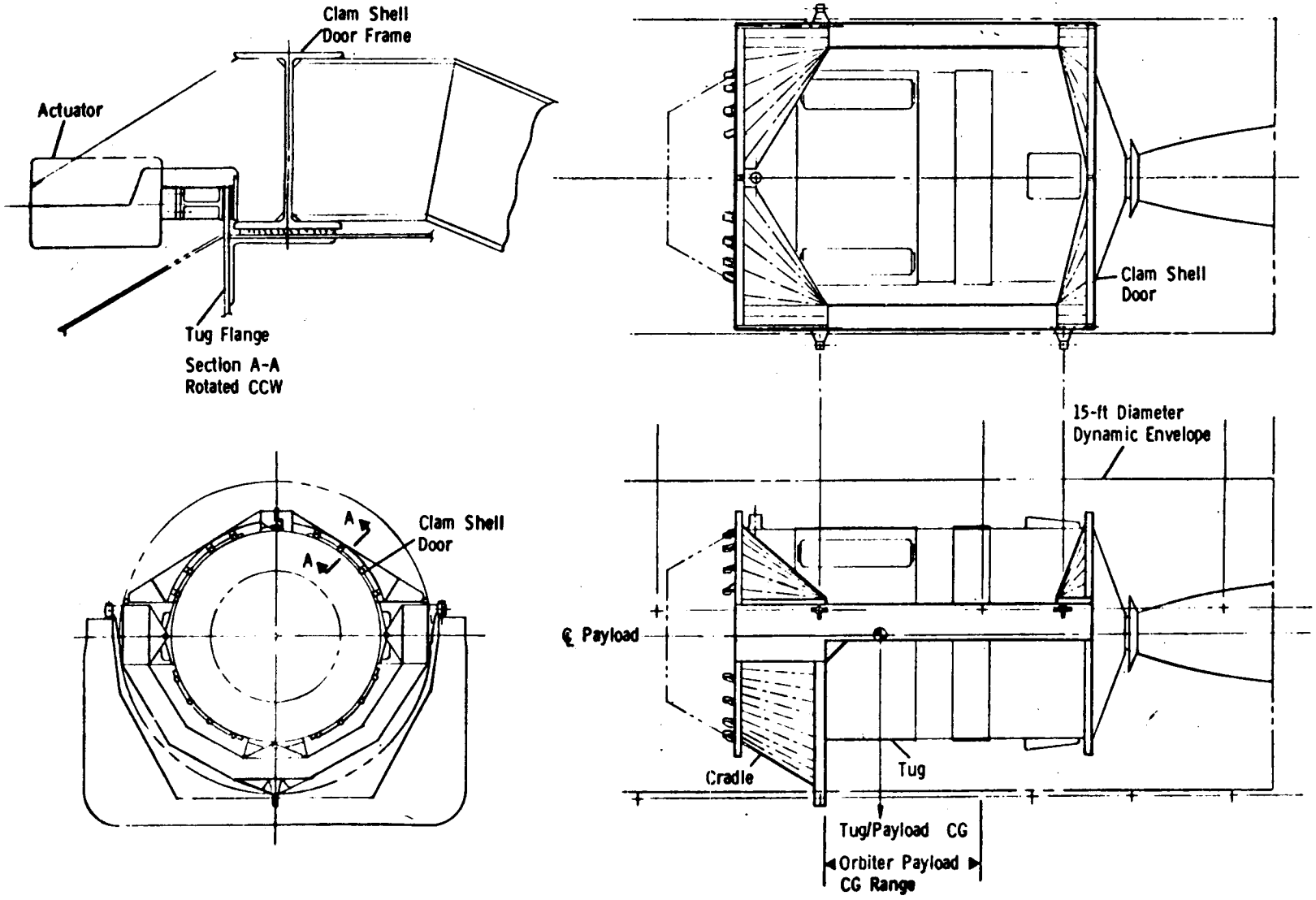


TUG CONFIGURATION 1A(2) CRADLE CONCEPT

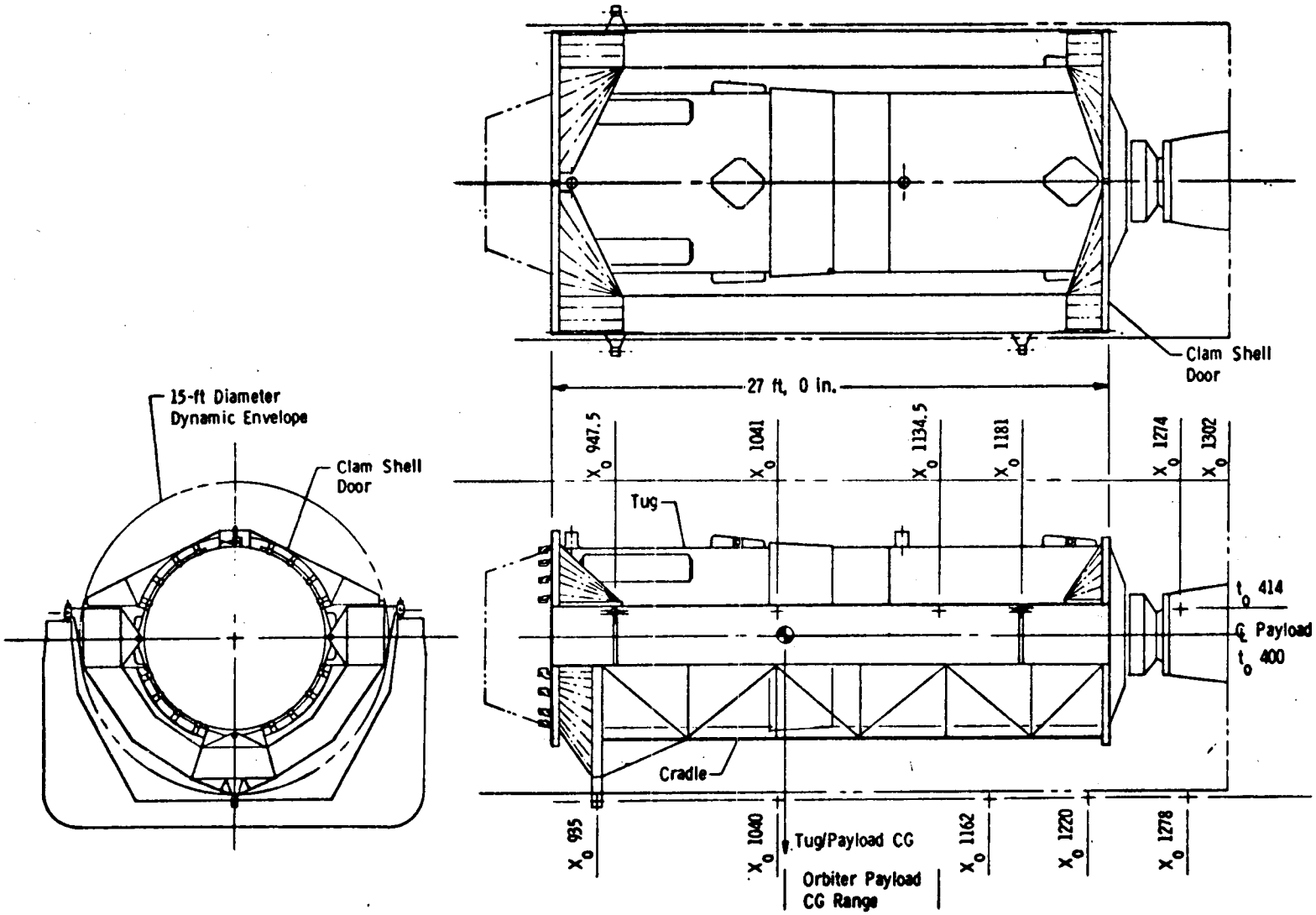


CONFIGURATION IIIC CRADLE CONCEPT

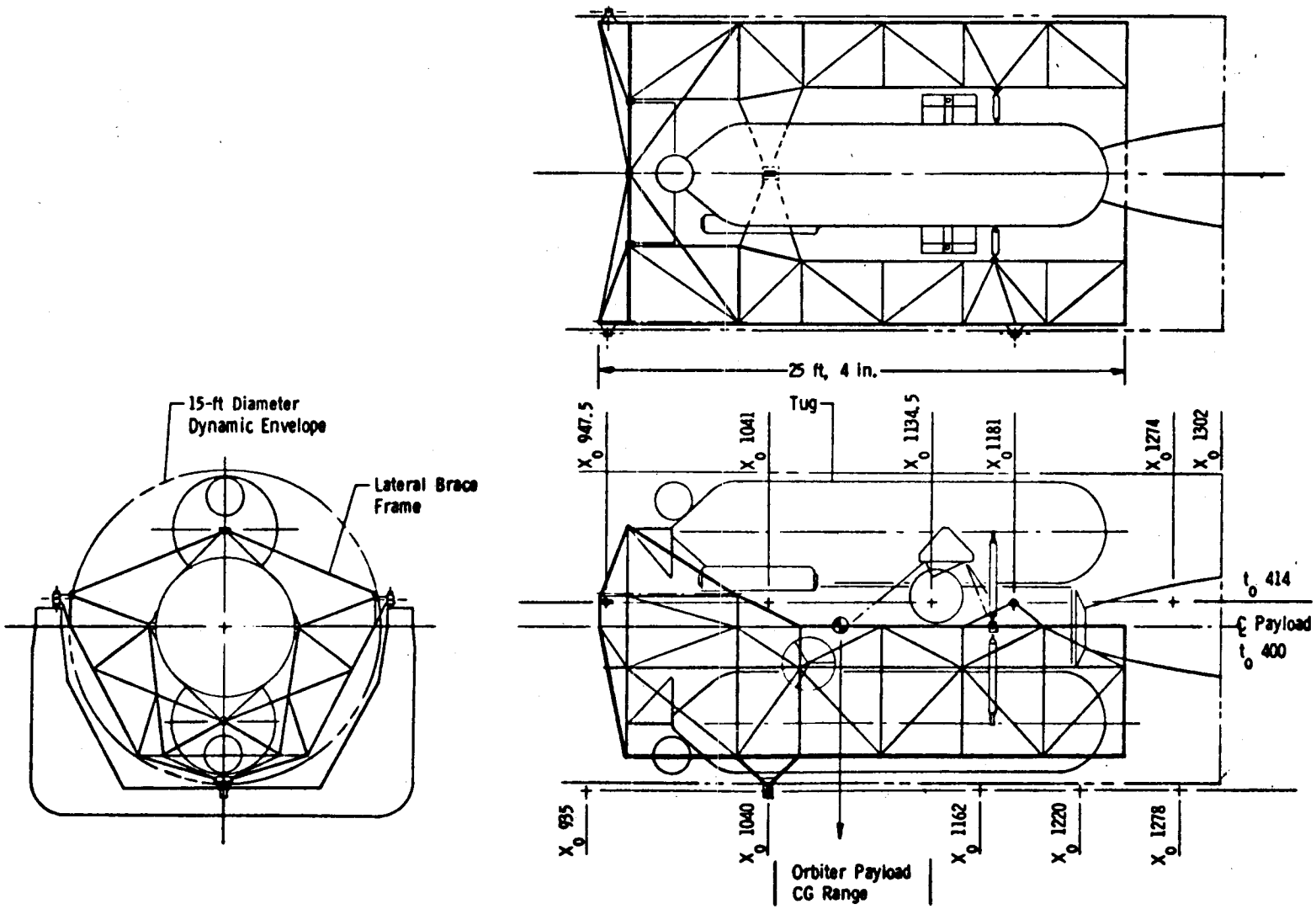


CONFIGURATION IVE CRADLE CONCEPT