NASA CONTRACTOR REPORT 177411

ELECTROCHEMICAL CARBON DIOXIDE CONCENTRATOR SUBSYSTEM DEVELOPMENT

E. P. Koszenski
D. B. Heppner
C. T. Bunnell

(NASA-CR-177411) ELECTROCHEMICAL CARBON DIOXIDE CONCENTRATOR SUBSYSTEM DEVELOPMENT Final Report (Life Systems) 92 p CSCL 05H

N88-16353

Unclas

G3/54 0120395

CONTRACT NAS2- 11783
March 1986

NASA

NASA CONTRACTOR REPORT 177411

ELECTROCHEMICAL CARBON DIOXIDE CONCENTRATOR SUBSYSTEM DEVELOPMENT

E. P. Koszenski, D. B. Heppner and C. T. Bunnell
Life Systems, Inc.
Cleveland, OH

Prepared For
Ames Research Center
under Contract NAS2-11783

National Aeronautics and
Space Administration

Ames Research Center
Moffett Field, California 94035

TR-600-4

ELECTROCHEMICAL CARBON DIOXIDE CONCENTRATOR SUBSYSTEM DEVELOPMENT

Final Report

by

E. P. Koszenski, D. B. Heppner and C. T. Bunnell

March, 1986

Distribution of this report is provided in the interest of information exchange. Responsibility for the contents resides in the authors or organization that prepared it.

Prepared Under

Contract NAS2-11783

by

Life Systems, Inc.
Cleveland, OH 44122

for

National Aeronautics and Space Administration
Ames Research Center

FOREWORD

The development work described herein was conducted by Life Systems, Inc. at Cleveland, Ohio under Contract NAS2-11783 during the period of January, 1984 through March, 1986. The Program Manager was Dr. Dennis B. Heppner. The personnel contributing to the program and their responsibilities are outlined below:

Personnel	Area of Responsibility
Robert B. Boyda	Supporting Technology Studies, System Analysis
Charles T. Bunnell	Program Testing, Data Reduction, Hardware Fabrication and Assembly
David N. Case	Electronic Assembly and Checkout
Steve Czernec	Mechanical Systems and Test Support Accessories Assembly
Roger B. Fell	Control/Monitor Instrumentation Hardware, Supporting Technology Studies
Steve P. Hendrix	Control/Monitor Instrumentation Software
Dennis B. Heppner, Ph.D.	Program Manager, System Design and Analysis
John O. Jessup	Electronic Assembly and Checkout
James M. Khoury	Control/Monitor Instrumentation Hardware
Eugene P. Koszenski	Project Management, Supporting Technology Studies, Quality Assurance
Licia S. Kovach	Supporting Technology Studies
Joel B. Lantz, Ph.D.	Triple Redundant Relative Humidity Sensor Development
M. C. Lee, Ph.D.	Sabatier Reactor Subsystem Development, Supporting Technology Studies
Dorothy A. Ruschak	Contract Administration
Marty Sudar	Program Testing and Data Reduction
Dan C. Walter	Design Engineering
Ed M. Zdankiewicz	Supporting Technology Studies

The contract's Technical Monitor is Dr. T. Wydeven, National Aeronautics and Space Administration, Ames Research Center, Moffett Field, CA.

TABLE OF CONTENTS

	PAGE
LIST OF FIGURES	iii
LIST OF TABLES	iv
LIST OF ACRONYMS	v
SUMMARY	1
PROGRAM ACCOMPLISHMENTS	2
INTRODUCTION	3
Background	3
Program Objectives	4
Report Organization	7
THE ELECTROCHEMICAL CARBON DIOXIDE CONCENTRATOR SUBSYSTEM	7
General Description	7
Mechanical/Electrochemical Assembly	7
Electrochemical Carbon Dioxide Concentrator Module	14
Fluids Control Assembly	14
Coolant Control Assembly	14
Control/Monitor Instrumentation	18
General Description	18
Hardware Description	18
Current Controller	22
PROGRAM COMPONENT DEVELOPMENT	22
Lightweight End Plates	24
Air/Liquid Heat Exchanger Design	24
Coolant Control Assembly Diaphragm Modification	31
Subsystem Fail-Safe Operation	31
Process Air Isolation Valves	33
Triple Redundant Relative Humidity Sensor	35
Sabatier CO_2 Reduction Reactor	44

continued-

Table of Contents - continued

	PAGE
PROGRAM TEST ACTIVITIES	49
One-Person CO_2 Concentrator Subsystem Testing	49
Test Support Accessories	49
Endurance Testing	49
Cyclic Testing	55
Conclusions of CS-1 Testing	55
Six-Cell EDCM Testing	55
Testing	55
Conclusions	58
Coolant Control Assembly Testing	58
Testing	58
Conclusions	58
Fluid Control Assembly Testing	58
Testing	62
Conclusions	62
Triple Redundant Relative Humidity Sensor Testing	62
Test Support Accessories	62
Testing	66
Conclusions	66
Carbon Dioxide Reduction System Evaluation	66
Testing	68
Conclusions	68
AIR REVITALIZATION SYSTEM INTEGRATION TECHNOLOGY STUDIES	68
Mechanical/Electrochemical Assembly Design	70
Control/Monitor Instrumentation Design	70
Impact of an Alternate CO_2 Removal Subsystem	73
Evaluation to Minimize ARS Blower Noise	75
Sizing and Characteristics Table for an ARS EDC	78
CONCLUSIONS	80
RECOMMENDATIONS	80
REFERENCES	81

LIST OF FIGURES

FIGURE		PAGE
1	EDC Single-Cell Schematic	5
2	EDC Electrochemical Cell Functional Schematic With Reactions	6
3	CS-1 Mechanical/Electrochemical Assembly	8
4	Model 220 C/M I (Front View)	9
5	CS-1 Process Block Diagram	10
6	CS-1 Mass and Energy Balance	12
7	CS-1 Mechanical Schematic	13
8	CS-1 Unitized Core and Composite Cell	15
9	Fluids Control Assembly	16
10	Coolant Control Assembly	17
11	CS-1 Modes and Allowable Mode Transitions	19
12	Model 220 C/M I (Internal Packaging)	21
13	CS-1 Current Controller	23
14	Mock-Up of EDCM Lightweight Upper End Plate	27
15	Space Station Atmosphere Humidity Specification Ranges	28
16	EDC Air/Liquid Heat Exchanger Mechanical Design	30
17	CCA Accumulator Modification for Metal Bellows Diaphragm	32
18	CS-1 Subsystem Fail-Safe Operation Block Diagram	34
19	Isolation Valve Positive Closure Concepts	36
20	EDCM Isolation Valves	38
21	EDCM Isolation Valve Pressure Drop Versus Air Flow Rate	40
22	Triple Redundant Relative Humidity Sensor	42
23	Triple Redundant Relative Humidity Sensor and Monitor	45
24	Sabatier CO_2 Reduction Subsystem Concept	46
25	Sabatier CO_2 Reduction Reactor	47
26	CS-1 TSA - Gas/Coolant Supply	50
27	CS-1 TSA - Gas Sample Analysis	51
28	CS-1 Endurance Test Performance	53
29	Liquid-Cooled EDCM Test Stand	56
30	Six-Cell EDCM Long-Term Endurance Test	57
31	Coolant Control Assembly Test Stand	59
32	CCA Endurance Test Performance	60
33	Fluids Control Assembly Test Stand	61
34	FCA Endurance Test Performance	63
35	TRRHS Test Stand Mechanical Schematic	64
36	Triple Redundant Relative Humidity Sensor Test Stand	65
37	Sabatier Reactor Test Scheme	67
38	One-Person Air Revitalization System Mechanical Schematic With Sensors	71
39	Steam Desorbed Amine CO_2 Removal Process	74
40	ARS-1 Mechanical Schematic With Sensors - SDAS Substitution	76

LIST OF TABLES

TABLE		PAGE
1	CS-1 Design Specifications	11
2	CS-1 Mode Definitions	20
3	Lightweight End Plate Design Requirements/Desirable Characteristics	25
4	EDCM Lightweight End Plate Evaluation - Top/Bottom End Plates	26
5	Isolation Valve Concept Characteristics	37
6	EDCM Isolation Valve Design Specifications	39
7	Triple Redundant Relative Humidity Sensor Design Specifications	43
8	Sabatier Reactor Design Features	48
9	CS-1 Nominal Test Conditions	52
10	Sabatier Reactor Test Operating Conditions	69
11	ARS-1 Specification, Weight, Volume and Power Summary	72
12	ARS-1 SDAS-EDC Comparison	77
13	Component Sizing and Characteristics Summary for an ARS-1 EDC	79

LIST OF ACRONYMS

A/D	Analog/Digital
ARS	Air Revitalization System
CCA	Coolant Control Assembly
C/M I	Control/Monitor Instrumentation
CPU	Central Processing Unit
CS-1	One-Person Carbon Dioxide Concentrator Subsystem
EDC	Electrochemical Carbon Dioxide Concentrator
EDCM	EDC Module
EPROM	Erasable Programmable Read-Only Memory
FCA	Fluids Control Assembly
M/EA	Mechanical/Electrochemical Assembly
NASA	National Aeronautics and Space Administration
ORU	Orbital Replacement Unit
RAM	Random Access Memory
RH	Relative Humidity
S-CRR	Sabatier CO_2 Reduction Reactor
SDAS	Steam Desorbed Amine CO_2 Concentrator Subsystem
SFWE	Static Feed Water Electrolyzer
SFWES	Static Feed Water Electrolyzer Subsystem
TRRHS	Triple Redundant Relative Humidity Sensor
TSA	Test Support Accessories

SUMMARY

Regenerative carbon dioxide removal techniques are needed to sustain man in space for extended periods of time. The most promising concept for a regenerative carbon dioxide removal system is the Electrochemical Carbon Dioxide Concentrator. This device allows for the continuous, efficient removal of carbon dioxide from the spacecraft cabin and delivery of the carbon dioxide premixed with hydrogen to a carbon dioxide reduction subsystem for subsequent oxygen recovery.

The objectives of this program were to (1) advance the development of the Electrochemical Carbon Dioxide Concentrator Subsystem by developing related hardware components which improve overall performance and provide for ultimate flight application aboard the Space Station, (2) develop the Electrochemical Carbon Dioxide Concentrator Module, ancillary components and subsystem reliability data through extensive endurance testing, (3) establish a subsystem technology base for integration of the Electrochemical Carbon Dioxide Concentrator into an Air Revitalization System and (4) evaluate the impact of carbon dioxide and hydrogen flow from the Electrochemical Carbon Dioxide Concentrator Subsystem on a Sabatier Carbon Dioxide Reduction Reactor by fabricating a Sabatier Reactor and testing it with an Electrochemical Carbon Dioxide Concentrator Module.

An extended test program was performed on previously developed hardware including the one-person Electrochemical Carbon Dioxide Concentrator Subsystem, the six-cell Electrochemical Carbon Dioxide Concentrator Module, a Coolant Control Assembly and a Fluids Control Assembly. A Triple Redundant Relative Humidity Sensor, a Sabatier Carbon Dioxide Reduction Reactor and Isolation Valves were fabricated, assembled and tested. A concept for subsystem fail-safe operation was also evaluated.

The one-person Electrochemical Carbon Dioxide Concentrator Subsystem was both endurance tested and tested in a cyclic operating mode. Over 4,200 hours of endurance testing was achieved. The Subsystem carbon dioxide removal efficiency at a nominal carbon dioxide partial pressure of 400 Pa (3 mm Hg) averaged over 90% and cell voltages averaged 0.38 V during the course of the testing. A cyclic test program, simulating low-earth orbit operating conditions of 54 minutes "on" and 36 minutes "off," was performed. Approximately 600 hours (400 cycles) were completed. The one-person Carbon Dioxide Concentrator Subsystem consistently demonstrated the capability of attaining carbon dioxide removal efficiencies of greater than 85% within six minutes of the transition from Standby operation ("off") to Normal operation ("on").

Endurance testing of the previously developed six-cell Electrochemical Carbon Dioxide Concentrator Module with unitized composite core construction continued during this program. Over 4,700 hours of additional operation were accumulated. After 5.5 years of combined operation and storage, the average carbon dioxide removal efficiency was typically 70% at nominal carbon dioxide partial pressures of 400 Pa (3 mm Hg) and cell voltages averaged 0.30 volts. Over 19,000 hours of endurance testing have been accumulated on this module.

A Fluids Control Assembly and its test stand completed over 9,000 additional hours of operation, which included over 13,000 test cycles. No failure of the Fluids Control Assembly was observed. The Coolant Control Assembly performed at or above its design point levels for over 9,500 additional hours (over 2,700 typical test cycles). Satisfactory mechanical performance was achieved on both of these devices.

A Triple Redundant Relative Humidity Sensor was designed, fabricated and tested, along with a characterization and endurance test stand. The test program verified the design concept and accuracy of the sensor to within ±3% over the range of 20 to 90% relative humidity.

A Carbon Dioxide Reduction Reactor based upon the Sabatier reaction was fabricated and integrated with the one-person Carbon Dioxide Concentrator Subsystem. The Sabatier Reactor was tested for 1,296 hours at nominal operating conditions of a carbon dioxide inlet rate of 1.04 kg/day (2.30 lb/day), a hydrogen inlet rate of 0.18 kg/day (0.40 lb/day) and a gas inlet temperature of 700 to 727 K (800 to 850 F). No decrease in reactor conversion efficiency was noted after 1,296 hours of operation with the hydrogen-to-carbon dioxide mole ratio maintained in the range of 3.36 to 4.05.

A concept for implementing fail-safe operation of the Carbon Dioxide Concentrator Subsystem was designed, installed and effectively demonstrated. Isolation Valves were designed, fabricated and tested. The valves met the design requirement of (1) no leakage across the valve when closed and (2) a pressure drop across the valve of less than 124 Pa differential pressure (0.5 in water) when open.

A series of Air Revitalization System integration reports were prepared. The objectives of these studies were to define the requirements to integrate Electrochemical Carbon Dioxide Concentrator technology into an overall, integrated Air Revitalization System for Space Station application and identify areas of technology improvement which are required to meet flight qualified hardware status. These objectives were met. Additionally, design concepts were prepared for a new lightweight end plate and a versatile air/liquid heat exchanger.

All primary objectives of the program were successfully met.

PROGRAM ACCOMPLISHMENTS

The key program accomplishments were as follows:

- Completed over 4,200 hours of testing of the one-person capacity Carbon Dioxide (CO_2) Concentrator Subsystem (CS-1) with CO_2 removal efficiencies averaging between 90 and 100%. Total test time on the CS-1 is now 6,035 hours.

- Completed over 9,000 hours of endurance testing of the Fluids Control Assembly (FCA), which integrates 11 gas handling components required by the CS-1 into a single unit. The total test time accumulated on the Fluids Control Assembly is now 18,500 hours.

- Completed over 9,500 hours of endurance testing of a Coolant Control Assembly (CCA), which integrates a coolant pump, diverter valve and a liquid accumulator into a single unit. The total test time accumulated on the CCA is now 18,925 hours.

- Completed an additional 4,700 hours of endurance testing on the first six-cell Electrochemical Carbon Dioxide Concentrator Module (EDCM) using unitized cores. The total test time accumulated on this module is now 19,375 hours.

- Completed design, fabrication and testing of a Triple Redundant Relative Humidity Sensor (TRRHS) and a characterization/endurance test stand.

- Completed design, fabrication and testing of EDCM Isolation Valves.

- Completed a series of short technology studies designed to evaluate the requirements for integrating an Electrochemical Carbon Dioxide Concentrator (EDC) subsystem into the Space Station integrated Air Revitalization System (ARS).

- Completed fabrication and integrated testing of a Sabatier CO_2 Reduction Reactor (S-CRR).

- Completed design of an improved air/liquid heat exchanger.

- Completed an analysis for the development of lightweight end plates for the EDCM.

INTRODUCTION

Regenerative processes for revitalization of spacecraft atmospheres are essential for making long-term manned space missions a reality. An important air revitalization step is the collection and concentration of metabolically produced CO_2 for subsequent oxygen recovery. This report discusses advancement of an electrochemically-based subsystem which performs that function and development of ancillary components and related technology which enhance the performance of the subsystem.

Background

The EDC technique is the most promising technique for concentrating low level CO_2 from the air without incurring large weight and volume penalties. The EDC removes CO_2 continuously from low CO_2 partial pressure in a flowing air stream. The CO_2 exhaust, premixed with hydrogen (H_2), can be sent to a CO_2 reduction subsystem for recovery of the oxygen (O_2) from the CO_2 or vented, as

required. The EDC also generates electrical power which can be used in other life support processes (e.g., O_2 generation by water electrolysis) if that is desired.

The CO_2 removal process takes place in a module consisting of a series of electrochemical cells. Each cell consists of two electrodes separated by a matrix containing an aqueous carbonate electrolyte solution. Plates adjacent to the electrodes provide passageways for distribution of gases and electrical current. Figure 1 shows the functional schematic of the EDC cell. Figure 2 details the specific electrochemical and chemical reactions which occur at the electrodes. As shown in Figure 2, the overall reaction is

$$O_2 + 2CO_2 + 2H_2 = 2CO_2 + 2H_2O + \text{Electrical Energy} + \text{Heat} \qquad (1)$$

A theoretical maximum of two moles of CO_2 can be transferred for one mole of O_2 consumed. The observed ratio of CO_2 transferred to O_2 consumed represents the removal process efficiency. A defined removal process efficiency of 100% occurs when 2.75 kg (6.05 lb) of CO_2 is removed for each kilogram (2.20 lb) of O_2 consumed.

The EDC concept utilizing alkaline metal carbonate electrolytes has evolved at Life Systems, Inc. (Life Systems) under the National Aeronautics and Space Administration (NASA) sponsorship through contracts NAS2-6118, NAS2-6478, NAS2-8666, NAS2-10204 and NAS2-11129.[1-11] The concept has progressed from operation of single EDC cells to fabrication and testing of one-, three-, four- and six-person self-contained subsystems. These previous research and development activities resulted in demonstrated performance improvements in the electrodes, the electrolyte and the electrolyte-retaining matrix. These programs also included development of unique peripheral components and advancement of technology relating to EDC subsystem integration with other spacecraft air revitalization subsystems.

Program Objectives

The objectives of this program were to:

1. Endurance test the EDC subsystem and ancillary components to improve the subsystem and component reliability data.

2. Develop new components and improve existing components to enhance overall subsystem performance.

3. Identify the requirements for integrating the EDC into an Air Revitalization System for Space Station application.

4. Expand the EDC technology base through the preparation of a series of short technology studies.

The objectives of the program were met.

(1-11) References cited at the end of this report.

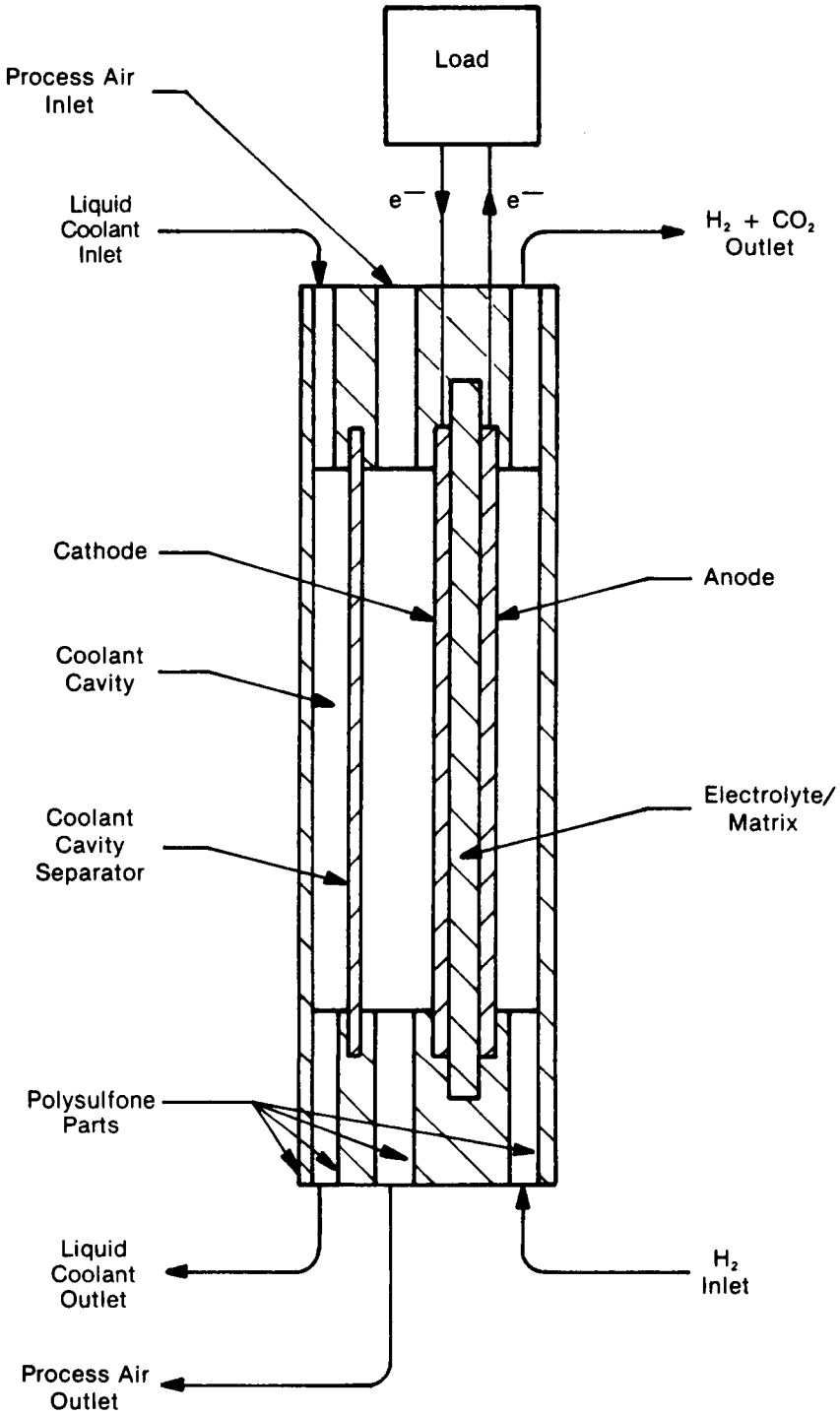

FIGURE 1 EDC SINGLE-CELL SCHEMATIC

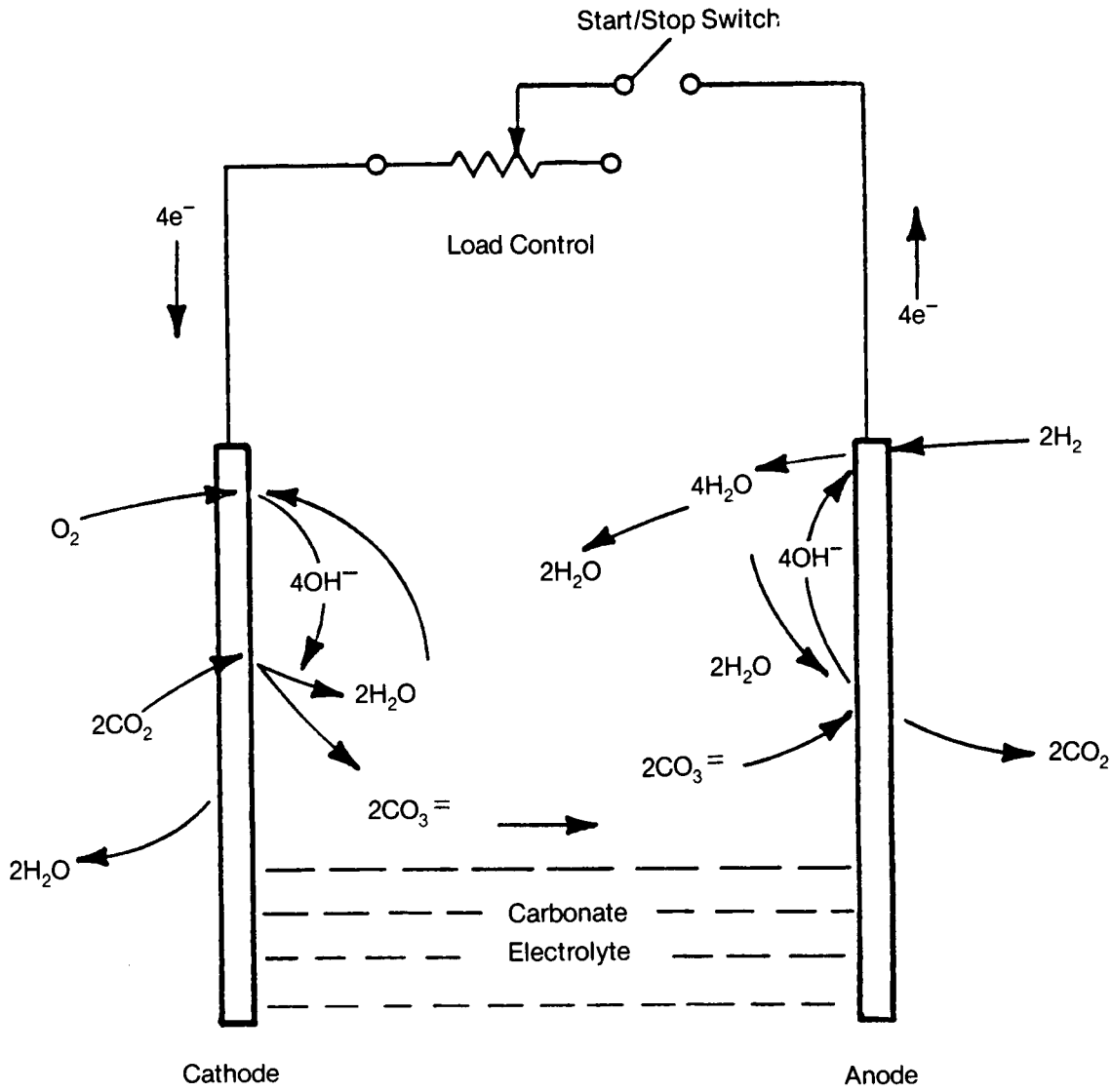

Cathode Reactions:

$O_2 + 2H_2O + 4e^- = 4OH^-$

$4OH^- + 2CO_2 = 2H_2O + 2CO_3^=$

Anode Reactions:

$2H_2 + 4OH^- = 4H_2O + 4e^-$

$2CO_3^= + 2H_2O = 4OH^- + 2CO_2$

Overall Reaction:

$O_2 + 2CO_2 + 2H_2 = 2CO_2 + 2H_2O$ + Electrical Energy + Heat

FIGURE 2 EDC ELECTROCHEMICAL CELL FUNCTIONAL SCHEMATIC WITH REACTIONS

Report Organization

This Final Report covers the work performed during the period January, 1984 through March, 1986. The following major sections of this report present the technical results grouped according to:

- The Electrochemical Carbon Dioxide Concentrator Subsystem
- Program Component Development
- Program Test Activities
- Air Revitalization System Integration Technology Studies

These sections are followed by conclusions and recommendations based upon the work performed and by the references cited in the text.

THE ELECTROCHEMICAL CARBON DIOXIDE CONCENTRATOR SUBSYSTEM

This section describes the design of the CS-1 subsystem. Testing is covered in a subsequent section. This section includes a general subsystem description including specifications and a schematic, a description of the Mechanical/Electrochemical Assembly (M/EA) and a description of the Control and Monitor Instrumentation (C/M I).

General Description

The CS-1 Subsystem was fabricated, assembled and initially tested under a previous NASA Contract, NAS2-11129.[12] The subsystem consists of a M/EA, shown in Figure 3 and a C/M I package, shown in Figure 4.

The overall CO_2 removal process and control scheme is shown in Figure 5. The M/EA includes a six-cell EDCM and all components required to sense and control gaseous and liquid fluid flows to and from the module. The C/M I controls overall subsystem operation through the sensors and actuators located on the M/EA. The C/M I also monitors and interprets subsystem operational parameters and, through the use of a communication link, can display values on a separate video monitor. The C/M I can, through the communication link, provide for appropriate changes in operational modes in response to operator inputs or subsystem malfunctions. The general design specifications for the CS-1 Subsystem, which include a capability for two operating modes ("Central," or Space Station operation and "Shuttle," or Shuttle Orbiter operation), are listed in Table 1. The overall fluid, electrical and thermal inputs and outputs for the CS-1 are illustrated in Figure 6.

Mechanical/Electrochemical Assembly

The M/EA is illustrated schematically in Figure 7. The three primary components are:

- The EDCM, which is the CO_2 concentration element;

ORIGINAL PAGE IS
OF POOR QUALITY

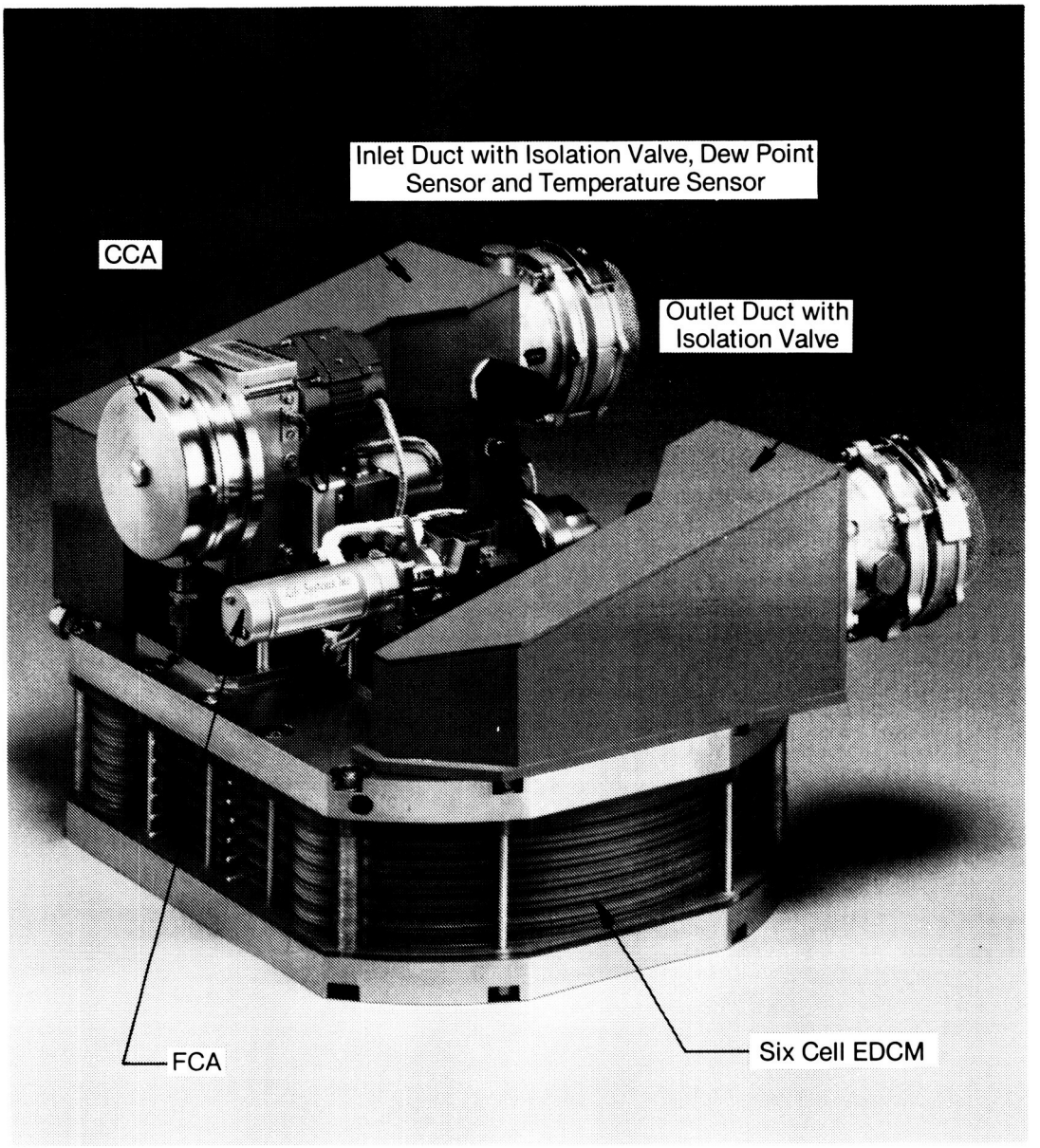

FIGURE 3 CS-1 MECHANICAL/ELECTROCHEMICAL ASSEMBLY

ORIGINAL PAGE IS
OF POOR QUALITY

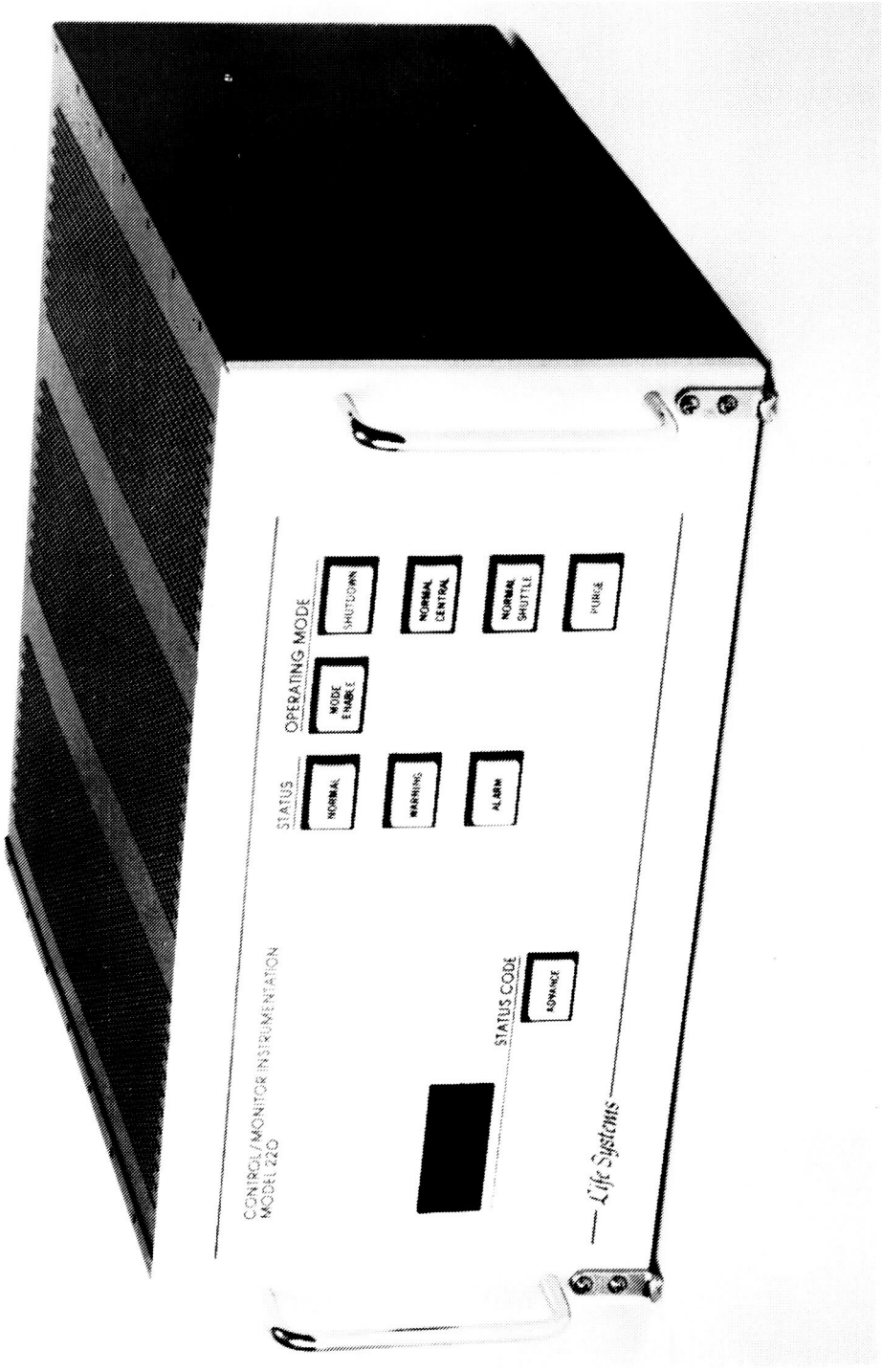

FIGURE 4 MODEL 220 C/M I (FRONT VIEW)

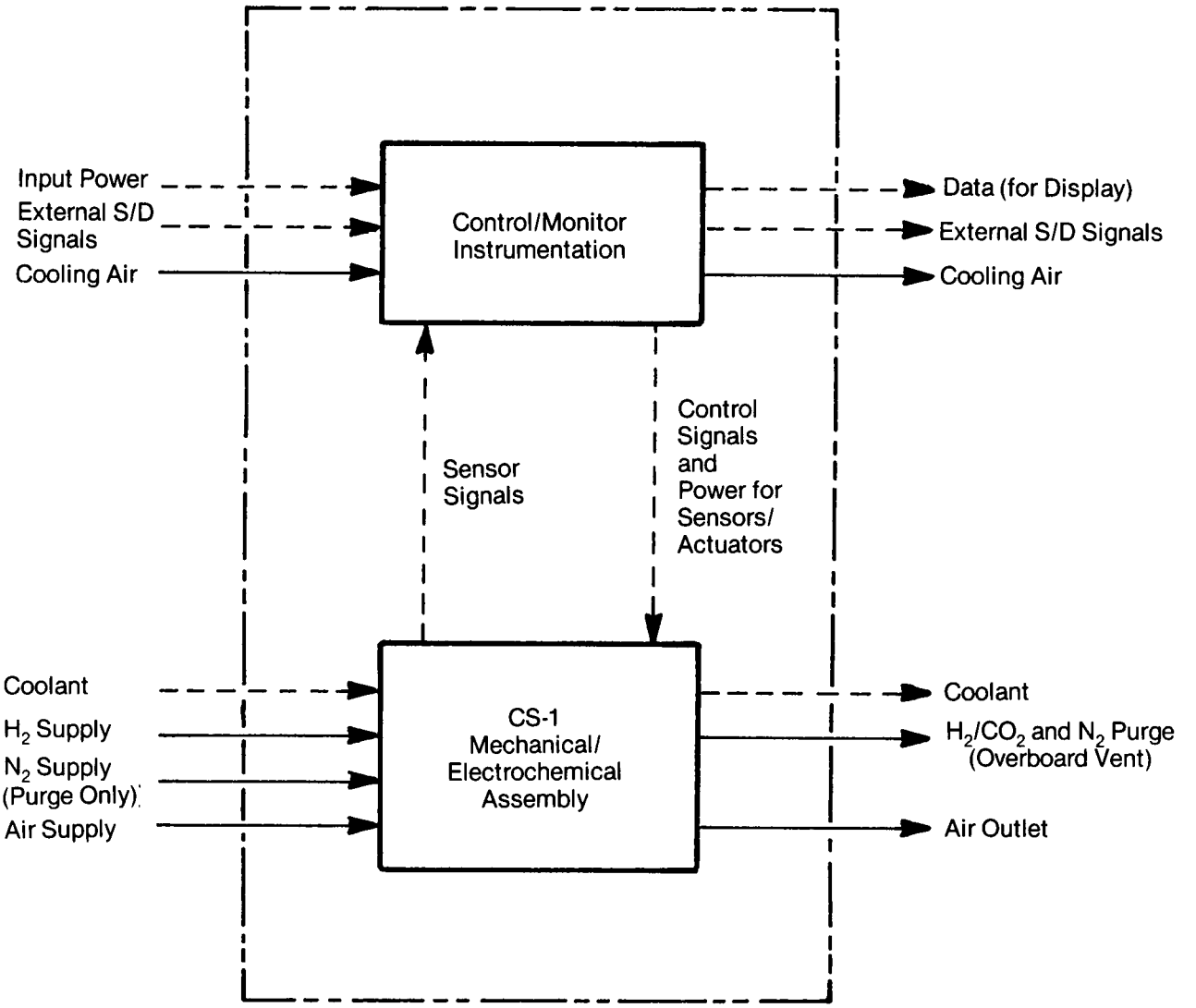

CS-1 Subsystem Interface

FIGURE 5 CS-1 PROCESS BLOCK DIAGRAM

TABLE 1 CS-1 DESIGN SPECIFICATIONS

	Application	
	Central	Shuttle
Crew Size	1	1
CO_2 Removal Rate, kg/d (lb/d)	1.0 (2.2)	1.0 (2.2)
Cabin pCO_2, Pa (mm Hg)		
Daily Average	400 (3.0)	667 (5.0)
Maximum	667 (5.0)	1.013 (7.6)
Cabin pO_2, kPa (psia)	22.1 (3.2)	22.1 (3.2)
Cabin Temperature, K (F)	286 to 297 (60 to 75)	291 to 302 (65 to 84)
Cabin Dew Point, K (F)	277 to 286 (40 to 60)	277 to 289 (39 to 61)
Cabin Pressure, kPa (psia)	101 (14.7)	101 (14.7)
Process Air Humidity Range, %	See Figure 15	20-80
Liquid Coolant		
Temperature (max), K (F)	280 (45)	275 to 295 (35 to 71)
Flow Rate, kg/h (lb/h)	432 (950)	432 (950)
H_2 Supply		
Flow Rate, kg/h (lb/h)	0.007 (0.014) 2.9 Stoichiometric (at 9.9 A)	0.0024 (0.0053) 1.2 Stoichiometric (at 9.0 A)
Pressure, kPa (psia)	173 (25)	173 (25)
Relative Humidity, %	0 to 75	0 to 5
Purge Gas		
Type	N_2	N_2
Pressure, kPa (psia)	173 (25)	173 (25)
Electrical Power		
VAC	115, 400 Hz, 1Ø	115, 400 Hz, 1Ø
VDC	28	28
Gravity	0 to 1	0 to 1
Noise Criteria, db	55	55

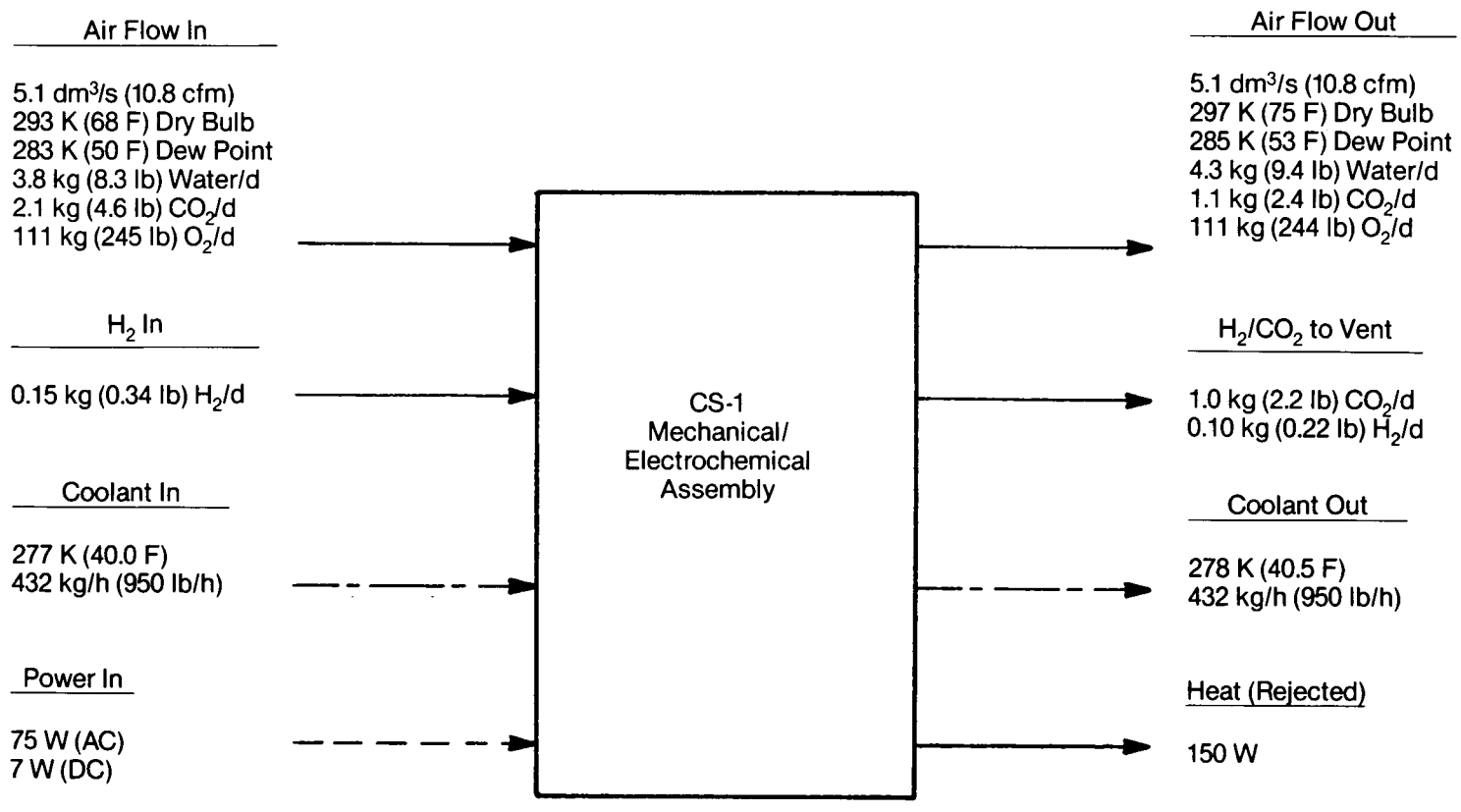

FIGURE 6 CS-1 MASS AND ENERGY BALANCE

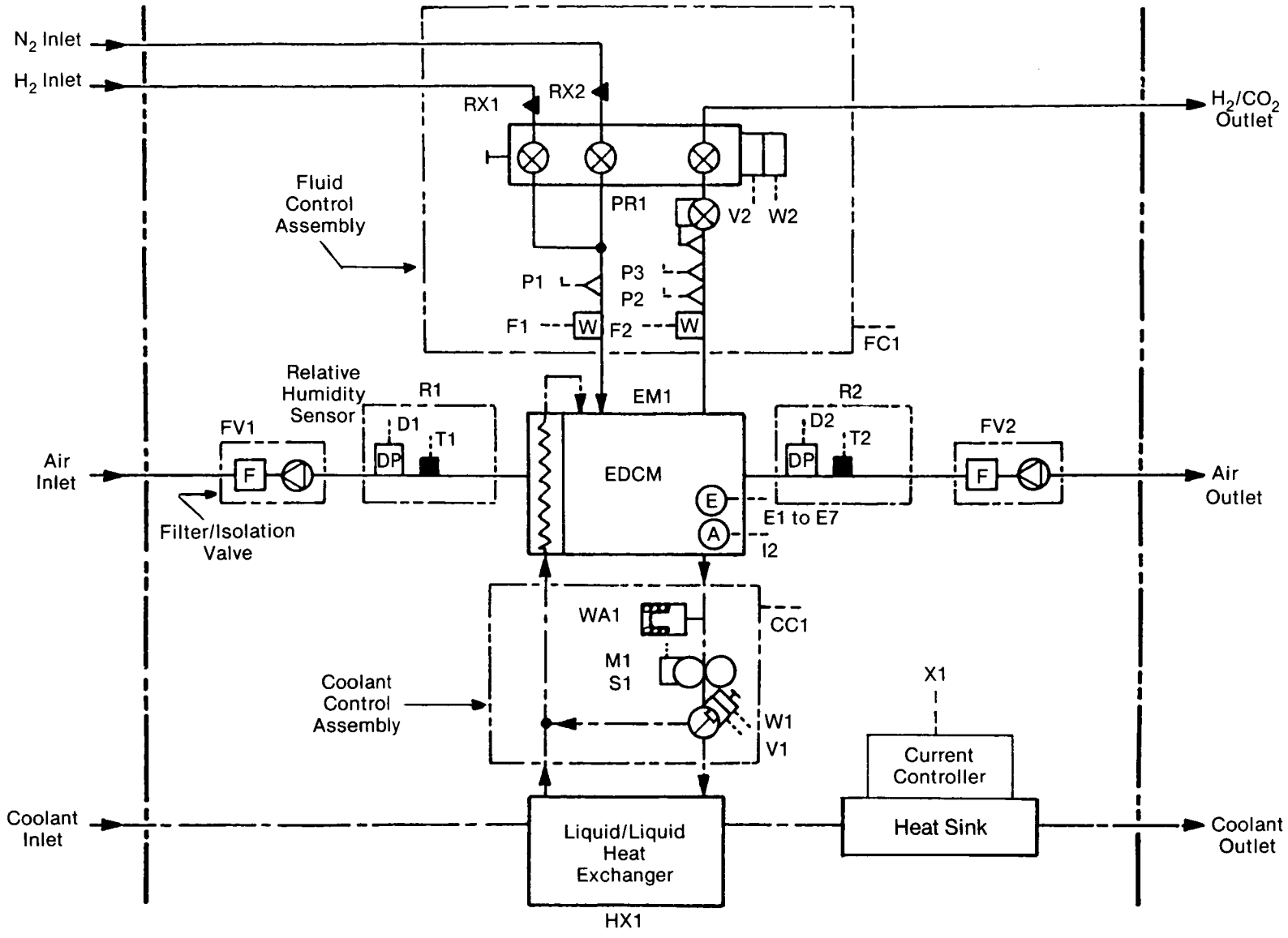

FIGURE 7 CS-1 MECHANICAL SCHEMATIC

- An FCA, which regulates EDCM back pressure and Nitrogen (N_2) and H_2 flows; and

- The CCA, which in conjunction with the liquid/liquid heat exchanger permits temperature regulation of the EDCM.

In addition to the primary components the subsystem includes: (a) two filter/isolation valves (inlet and outlet), (b) two dry bulb temperature sensors, (c) two dew point temperature sensors (which when combined with the dry bulb temperature sensors are used to measure inlet and outlet relative humidity (RH)) and (d) a liquid/liquid heat exchanger.

Electrochemical Carbon Dioxide Concentrator Module

The primary component of the CS-1 is the advanced Carbon Dioxide Concentrator Module, the EDCM. The advanced EDCM is designed as a liquid-cooled module, composed of six unitized core composite cells which provide superior performance and differential pressure capabilities. Each composite cell consists of two electrodes (anode and cathode), a gas separator matrix, support screens, cell frames and coolant cavity covers. These items are illustrated in Figure 8. The selected number of cells, six, was based on the one-person CO_2 removal rate of 1.0 kg/day (2.2 lb/day) and a current density of 21.3 mA/cm^2 (19.8 ASF). The module has additional CO_2 removal capacity if operated at higher current densities. This advanced design features integral process air manifolds which simplify interfacing with the process air.

The principal M/EA components, besides the EDCM, are the FCA and the CCA. Each of these components is discussed in the following sections.

Fluids Control Assembly

The CS-1 EDCM requires monitoring and control of H_2 flow, H_2/CO_2 back pressure and N_2 purge gas flow. These functions, which were previously performed by 11 discrete components, have been integrated into a single, lightweight, low-volume FCA, shown in Figure 9. The FCA consists of a backpressure regulator mounted on a valve with a multiple function spool, a valve housing with built-in orifices to limit H_2 and N_2 flow rates, sensors for monitoring upstream and downstream module pressures and sensors to monitor flow rates to and from the module. The FCA also has a manual override capability and a positive valve position indicator for use with the control electronics.

Coolant Control Assembly

Three elements are essential for temperature control of the liquid-cooled EDCM: a circulation pump, a diverter valve to regulate the proportions of module coolant flowing through and around the liquid/liquid heat exchanger (connected to a central coolant source) and a liquid/gas accumulator to accommodate coolant expansion/contraction. These previously discrete components have been incorporated into a single integrated assembly, the CCA, shown in Figure 10. The CCA performs the functions of maintaining a constant coolant flow rate to the EDCM and varying the coolant temperature.

ORIGINAL PAGE IS
OF POOR QUALITY

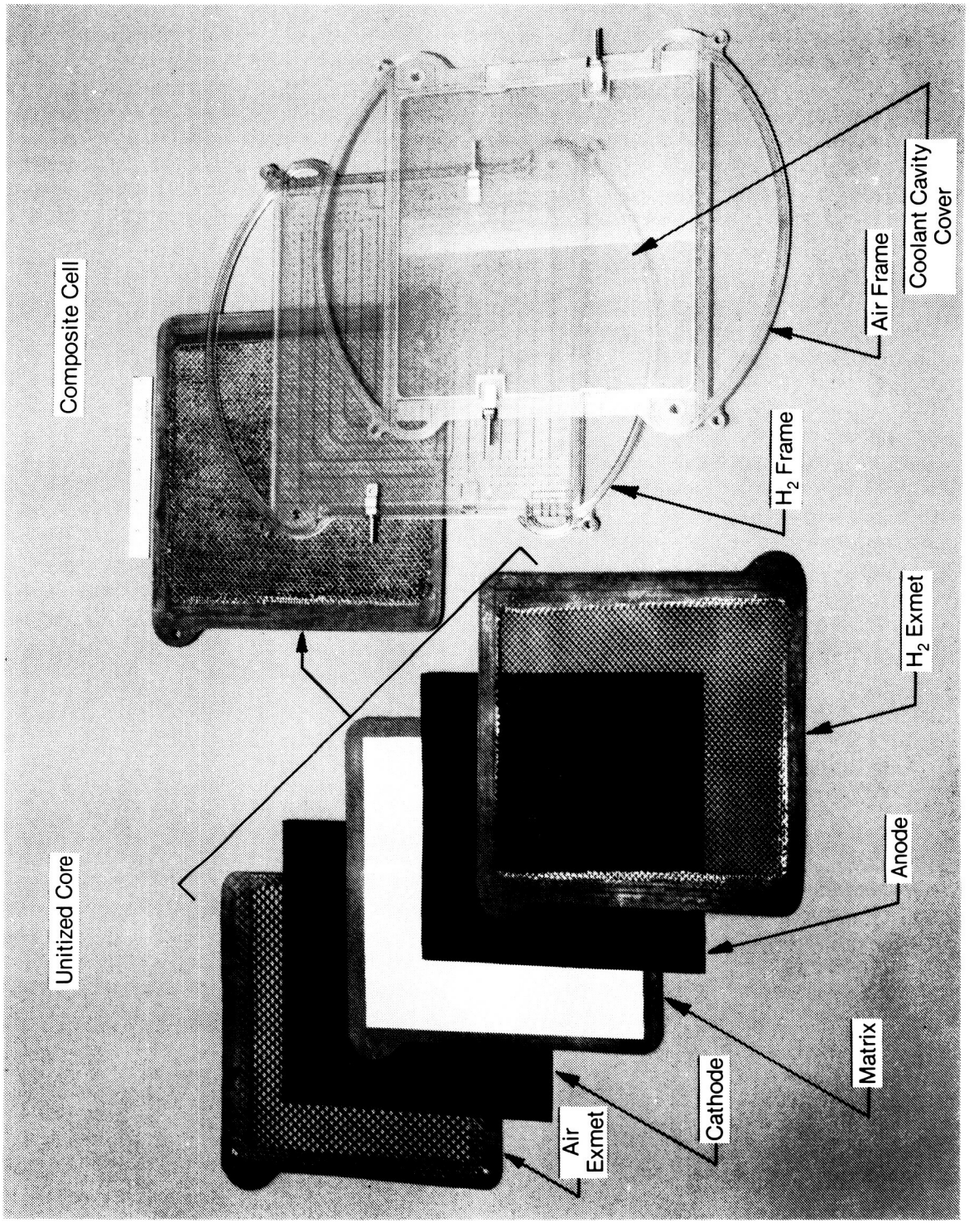

FIGURE 8 CS-1 UNITIZED CORE AND COMPOSITE CELL

ORIGINAL PAGE IS
OF POOR QUALITY

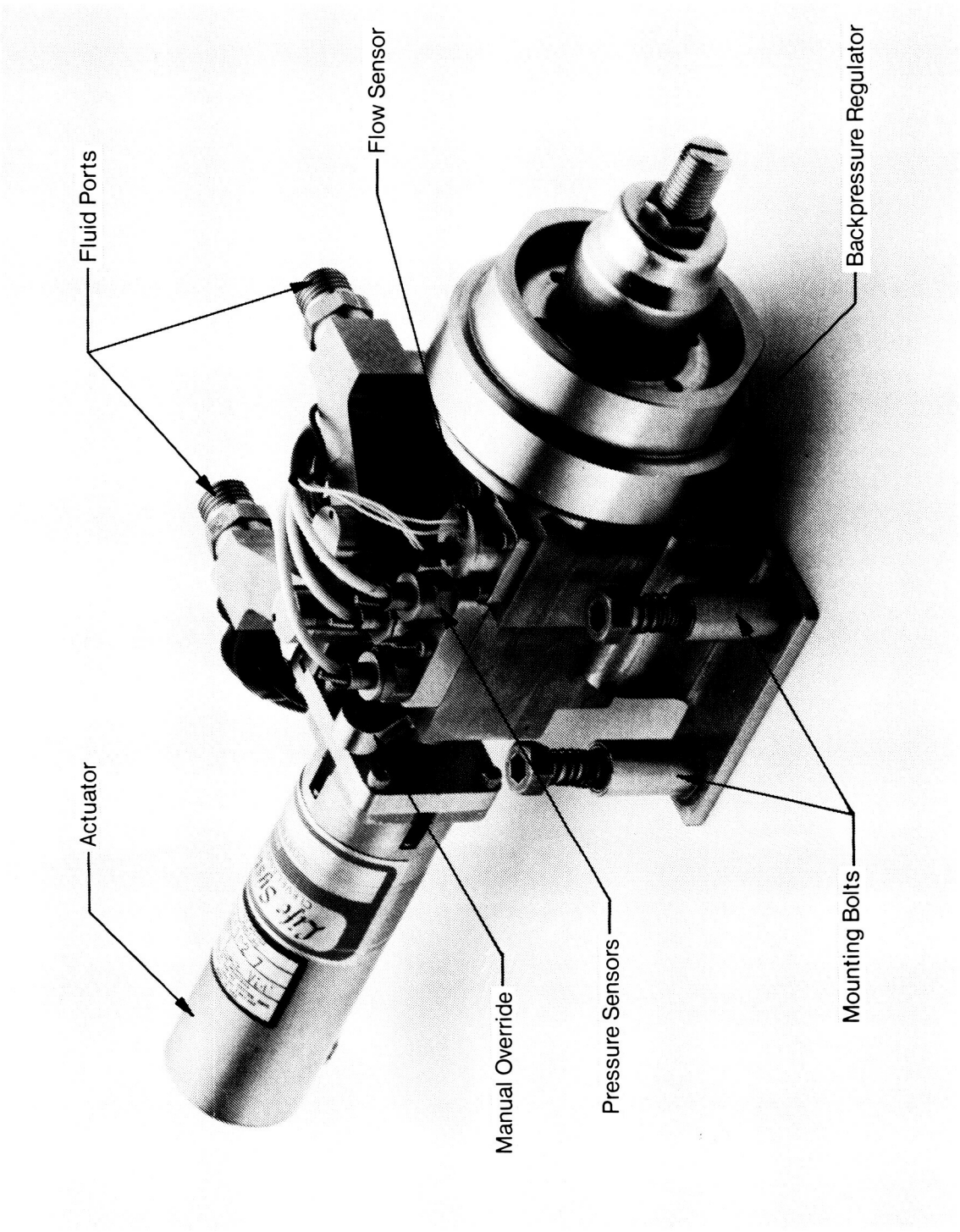

FIGURE 9 FLUIDS CONTROL ASSEMBLY

ORIGINAL PAGE IS
OF POOR QUALITY

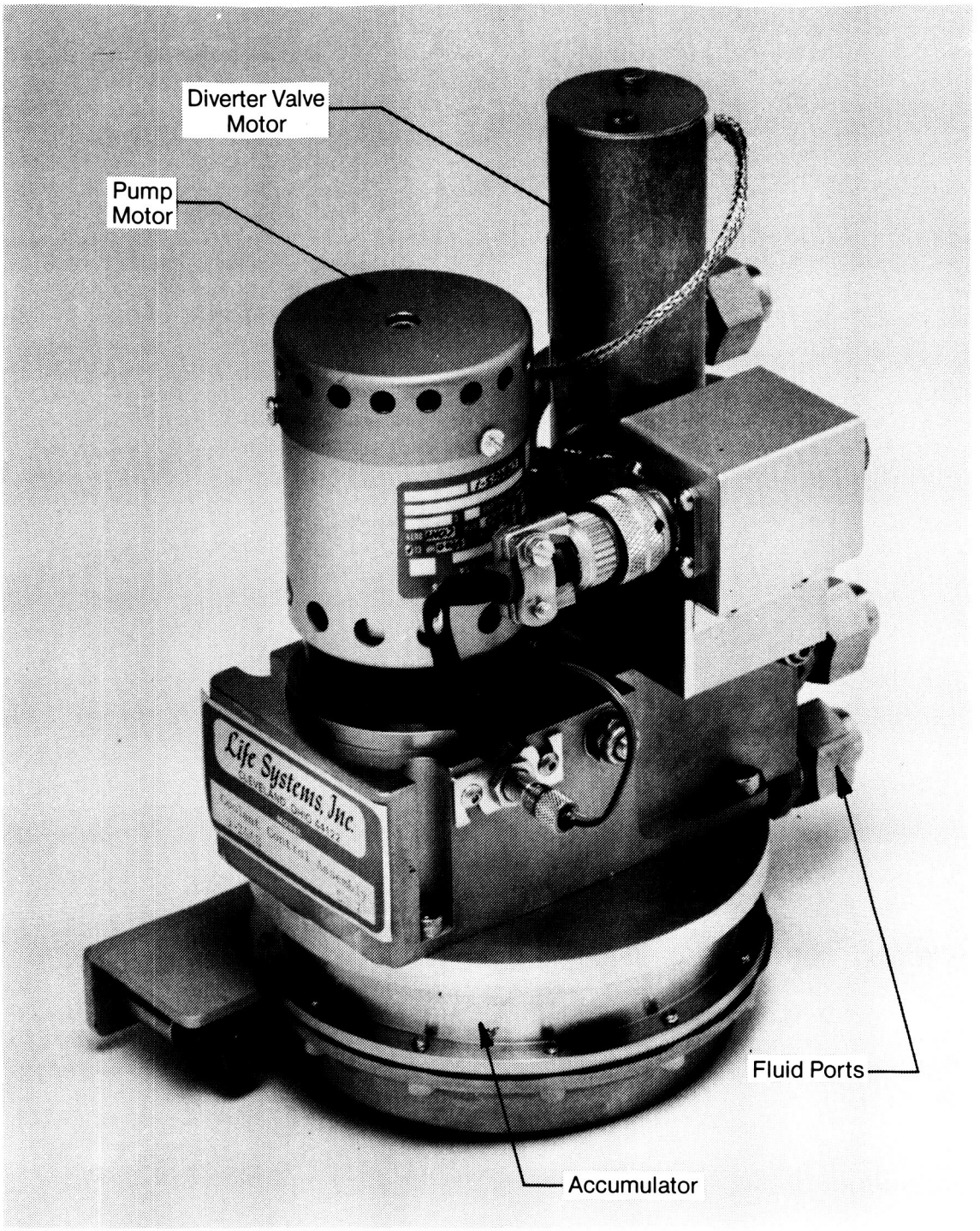

FIGURE 10 COOLANT CONTROL ASSEMBLY

Control/Monitor Instrumentation

The function of the CS-1 C/M I is to provide for automatic mode and mode transition control, automatic shutdown for self-protection, monitoring of subsystem parameters and interface to ground Test Support Accessories (TSA) and data acquisition facilities. The CS-1 C/M I, termed the Model 220 and previously shown in Figure 4, represents a major reduction in weight, volume and power consumption from prior instrumentation. The Model 220 C/M I provides the CS-1 subsystem with four operating modes, as shown in Figure 11, and has separate normal modes corresponding to the operating conditions of either Shuttle Orbiter or Central (i.e., Space Station) application. The Shutdown Mode and the four operating modes are defined in Table 2.

General Description

The CS-1 C/M I receives signals from and transmits signals to the M/EA sensors and actuators. Through these it controls and monitors subsystem pressures, flow rates, temperatures, cell voltages, current and valve positions in each operating mode. It implements each mode, whether initiated automatically or manually, and provides fail-safe operational changes to protect the CS-1 if malfunctions occur. The process operating mode control is fully automated by the C/M I so that the operator need only press the mode enable and the desired mode buttons to initiate transition sequences. This control includes selection of different unit processes, selection of valve positions, sequencing of valve positions, sequencing of actuators and checking of parametric conditions as a transition (e.g., Shutdown to Normal Central) proceeds.

The C/M I uses erasable programmable read-only memory (EPROM) for its program storage. It also uses some random access memory (RAM) for data storage. This permits the access of the real-time data by an external monitor through a standard communications link.

Hardware Description

The 220 C/M I packaging is shown in Figure 12. It contains five major assemblies:

1. A computer card cage containing the microprocessor's central processing unit (CPU) along with support cards (memory, analog/digital conversion (A/D), digital input and output, etc.);

2. A power supply module for supplying ± 15 volts and + 5 volts from the input power of + 28 volts;

3. A signal conditioning card cage and 11 signal conditioning cards for conditioning the sensor outputs and providing actuator drive signals;

4. A power assembly for supplying those sensors and actuators which require drive current for their operation (dew point, flow and motor actuation); and

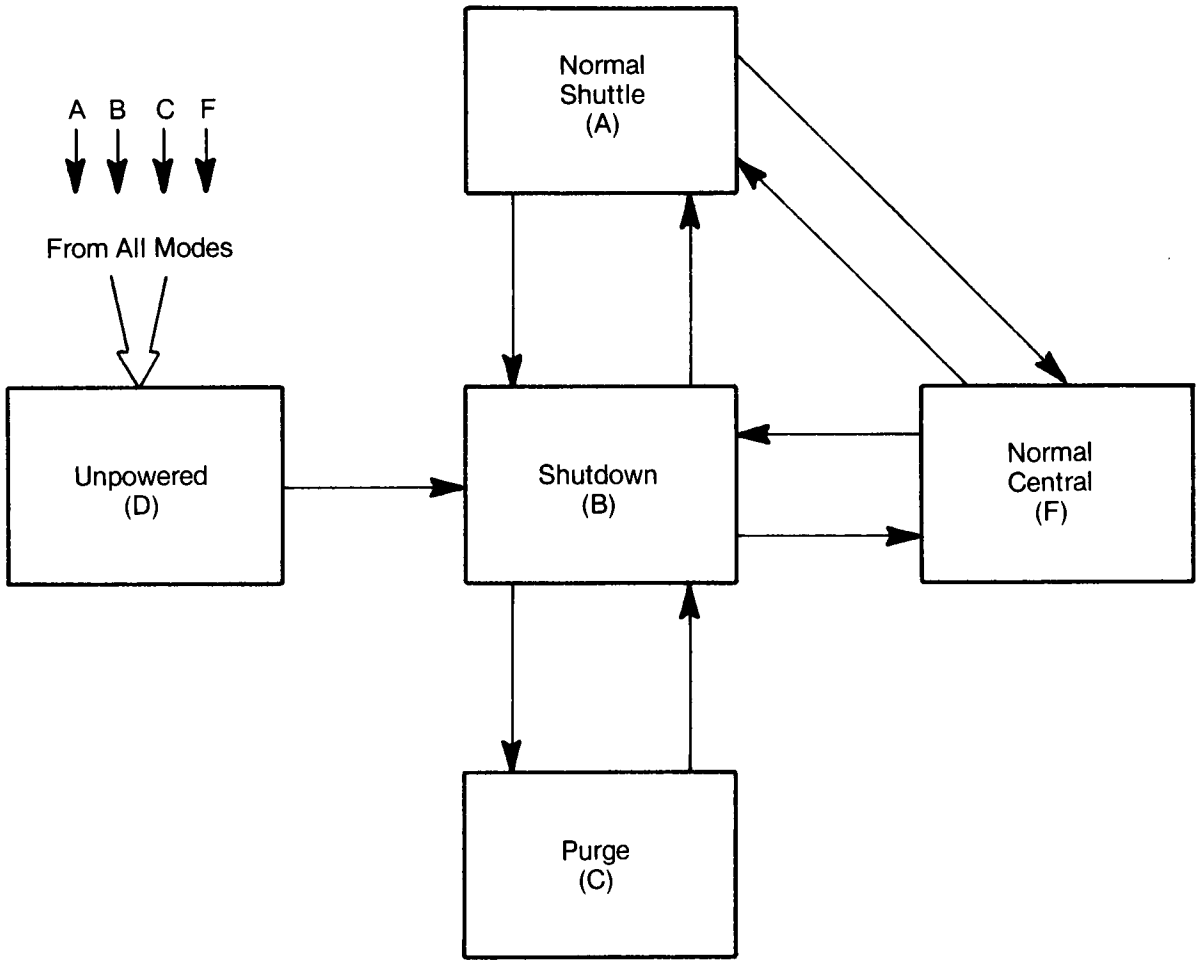

- 5 Modes
- 4 Operating Modes
- 13 Mode Transitions
- 9 Programmable, Allowed Mode Transitions

FIGURE 11 CS-1 MODES AND ALLOWABLE MODE TRANSITIONS

TABLE 2 CS-1 MODE DEFINITIONS

Mode (Code)	
Shutdown (B)	The EDCM is not removing CO_2. Module current is zero, the CCA pump is off and all valves are closed. The system is powered and all sensors are working. The Shutdown Mode is called for by: • Manual actuation • Low EDCM individual cell voltage • Low H_2 pressure • High H_2 pressure • Low outlet process air RH • High outlet process air RH • Second failure of triple redundant sensors for pressure, relative humidity, temperature and combustible gas concentration (capability only) • Power on reset (POR) from Unpowered Mode D • Mode transition from Shutdown Mode (B) to Normal Shuttle (A), Normal Central (F), or Purge (C) was not successful. All transitions to the Shutdown Mode except POR and Purge include a timed purge sequence as part of the mode transition sequence.
Normal Shuttle (A)	The EDCM is operating at the constant current density of 19.4 mA/cm^2 (18.0 ASF) sized to perform the CO_2 removal function for one-person assuming an inlet pCO_2 level of 667 Pa (5.0 mm Hg). The Normal Shuttle Mode is called for by: • Manual actuation
Normal Central (F)	The EDCM is operating at a constant current density of 21.3 mA/cm^2 (19.8 ASF) sized to perform the CO_2 removal function for one-person assuming an inlet pCO_2 level of 400 Pa (3.0 mm Hg). The Normal Central Mode is called for by: • Manual actuation
Purge (C)	The EDC is being purged with N_2 through all H_2 lines, H_2 carrying module cavities and out through the vent line. Module current and the CCA pump are off. This is a continuous purge until a new mode is called for. The Purge Mode is called for by: • Manual actuation
Unpowered (D)	No electrical power is applied to the EDC. Actuator positions can only be verified visually. Process air flow is stopped. There is no N_2 or H_2 flow. The Unpowered Mode is called for by: • Manual actuation (circuit breaker) • Electrical power failure • C/M I failure as detected by the Built-in Diagnostic (BID) circuit and supply power to the C/M I is interrupted

ORIGINAL PAGE IS
OF POOR QUALITY

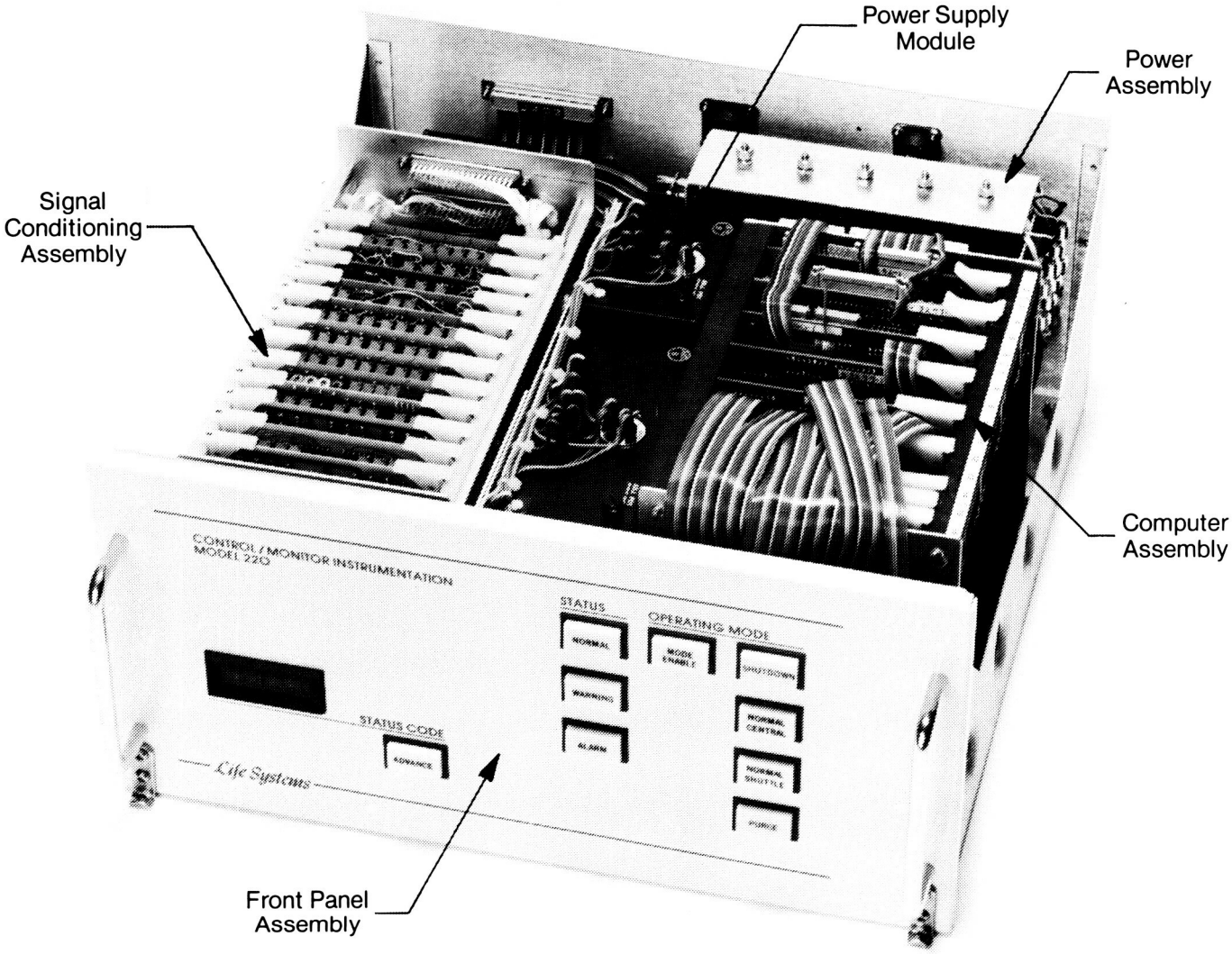

FIGURE 12 MODEL 220 C/M I (INTERNAL PACKAGING)

5. A front panel assembly with status indication and mode transition selection buttons.

Current Controller

The current controller, shown in Figure 13, provides a regulated current sink for the power generated by the EDCM and is packaged as a separate device. It is designed to be liquid cooled and located with the CS-1 M/EA. The central coolant source, which interfaces with the CCA, also removes the waste heat from the current controller. Placement of the current controller near the EDCM reduces the length of electrical leads between the module and the current controller and thereby minimizes voltage drops. This unit is an improvement over prior EDC current controllers, not only in size reduction but also in the method and efficiency of controlling current and dissipating the EDCM-produced power.

PROGRAM COMPONENT DEVELOPMENT

A series of analyses, studies and developments of EDC-related hardware components were completed. The goal was enhancement of overall subsystem performance and reliability. These studies and developments were intended to advance the use or application of the EDC to the proposed Space Station, as opposed to defining components which permit demonstration of EDC technology feasibility, which has already been accomplished. The activities included preparing evaluations and conceptual designs for:

1. Lightweight EDCM end plates; and

2. An air/liquid heat exchanger;

evaluation and demonstration of subsystem operational improvements including:

1. A CCA using an improved gas/liquid separator diaphragm; and

2. CS-1 Subsystem fail-safe operation;

and design, fabrication and testing of:

1. A new process air isolation valve; and

2. A new TRRHS.

Additionally, a S-CRR was fabricated for use in EDC testing and evaluation. Each of these developments is discussed in the following sections.

ORIGINAL PAGE IS
OF POOR QUALITY

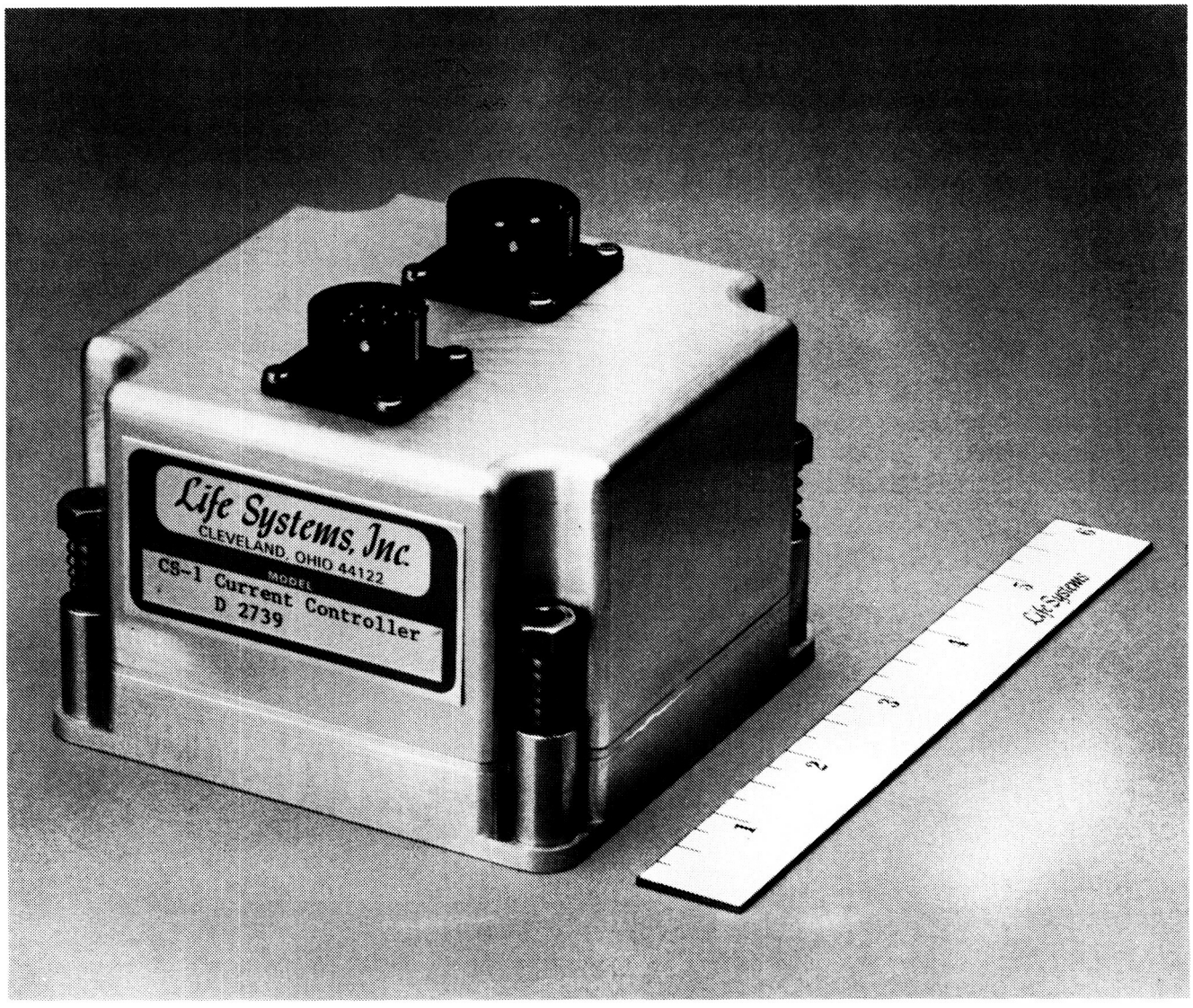

FIGURE 13 CS-1 CURRENT CONTROLLER

Lightweight End Plates

Improvements which can reduce the weight of individual components and, subsequently, the overall subsystem are continually being evaluated. With respect to the EDCM, the module end plates are currently fabricated from stainless steel. They weigh approximately 36.3 kg (80.2 lb), about 80% of the total CS-1 weight. Use of lightweight metals, a metal honeycomb structure or nonmetallic materials could substantially reduce this weight and, consequently, the total subsystem weight. An analysis was performed on alternative end plate materials to determine comparative sizes and weights as well as practicality of fabrication and costs for end plates of adequate strength.

The design requirements and desirable characteristics for lightweight end plates are listed in Table 3. The analysis included (1) investigation of suitable alternate materials, (2) calculation of mechanical characteristics and (3) configurational design. Four approaches were taken to select the candidate alternative materials for evaluation: (1) optimization of the present end plate weight, (2) use of lighter weight metals in place of stainless steel, (3) use of high strength nonmetallic composite materials and (4) use of honeycomb structures.

The results of the analysis are summarized in Table 4. The 30% glass-filled polysulfone (Item No. 5 of Table 4) is the recommended material because (1) it has been previously used with success at Life Systems, (2) separate insulation plates are not required and (3) it has a cost effective approach. The lightweight end plates would be designed to incorporate the EDC subsystem's gas/liquid heat exchanger directly into the manifold ports or ducts. The ducts would be bonded directly to the manifold ports and the interface plumbing for the FCA and CCA of the subsystem would be integral to the top end of the plate. The projected configuration of the upper end plate with its integrated heat exchanger, ducts and interface fittings is illustrated in the mock-up shown in Figure 14. The estimated weight savings of using the 30% glass-filled polysulfone over stainless steel are approximately 28.8 kg (63.6 lb).

Air/Liquid Heat Exchanger Design

A key design feature of EDC technology is the use of a heat exchanger to precondition the inlet atmosphere before it is processed through the module cells. The preconditioning adjusts the RH of the inlet atmosphere to allow application of EDC technology over the full range of projected Space Station atmosphere conditions. An analysis and design was performed for a new process air inlet air/liquid heat exchanger to be compatible with EDCs sized up to an eight-person capacity.

The range of inlet atmosphere conditions specified for the Space Station program is shown in Figure 15. For optimum EDC operation, an RH of approximately 55% is desired for atmosphere entering the module cells. To achieve this condition, the heat exchanger must efficiently adjust the temperature of the inlet atmosphere to approach the desired dew point. As shown in Figure 15, the worst-case condition occurs with inlet atmospheres

TABLE 3 LIGHTWEIGHT END PLATE DESIGN REQUIREMENTS/ DESIRABLE CHARACTERISTICS

Requirements

1. Lighter in weight than present stainless steel end plate design with no loss of functionality.
2. Overall size, porting and interfaces compatible with current EDC cell frames and insulation plates.
3. End plate materials compatible with EDC electrolyte.
4. No more than 0.015 mm (0.006 in) deflection at center of an end plate under cell pressurization forces.
5. End plate stress under pressurization less than 66% of allowable maximum for the material used (>150% safety factor).
6. Flight qualifiable material.
7. Material bondable/sealable at interface ports.

Desirable Characteristics

1. Material amenable to established end plate fabrication procedures, such as machining, to minimize cost of these operations.
2. Material has history of successful end plate application.
3. Low raw materials cost.
4. Eliminate separate insulation plate in the EDCM.
5. Provides for integration of fluid components.

TABLE 4 EDCM LIGHTWEIGHT END PLATE EVALUATION - TOP/BOTTOM END PLATES

Item	Candidate	Grade	Density, kg/m^3 (lb/in^3)	Modulus of Elasticity, 10^6	End Plate Thickness, cm (in) Top/Bottom	End Plate Weight, kg (lbs) Top/Bottom	Insul. Plate Weight, kg (lbs) Top/Bottom	Total Weight, kg (lbs) Top/Bottom	Material Experience	Ease of Fab. 1-10[a]	Overall 6 Cell Module Weight, kg (lb)	Weight Savings, %	Goal Compar., %[b]	Overall 6 Cell Module Height, cm (in)	Height Change, %	Accept Rating[c]
Present CS-1 Design																
—	Stainless Steel	316L	8.03×10^3 (0.290)	28.40	2.22/2.22 (0.875/0.875)	16.3/20.0 (36.0/44.2)	0.9/1.0 (2.0/2.2)	17.2/20.6 (38.0/45.4)	—	—	44.9 (99.0)	—	—	12.77 (5.03)	—	—
Lightweight Options																
1	Stainless Steel	316L	8.03×10^3 (0.290)	28.40	1.59/1.03 (0.624/0.406)	11.7/9.3 (25.8/20.5)	0.9/1.0 (2.0/2.2)	12.6/10.3 (27.8/22.7)	Compatible w/fluids	6	29.5 (65.1)	34	+290	10.95 (4.31)	-14	6
2	Aluminum	7075-T6	2.68×10^3 (0.097)	10.40	1.45/1.45 (0.570/0.570)	3.6/4.4 (7.9/9.7)	4.4/2.3 (9.7/5.0)	8.0/6.7 (17.6/14.7)	Not compatible with electrolyte	10	21.3 (47.0)	52	+10	15.16 (5.97)	+19	4
3	30% Carbon Polysulfone	GC-1006	1.36×10^3 (0.049)	2.05	3.03/2.48 (1.195/0.975)	3.8/3.8 (8.3/8.4)	N/A[d]	3.8/3.8 (8.3/8.4)	None. Highest strength filled plastic evaluated	3	14.2 (31.3)	68	-17	12.70 (5.00)	-1	1
4	40% Glass Polysulfone	GF-1008	1.55×10^3 (0.056)	1.60	3.25/2.69 (1.280/1.060)	4.6/4.7 (10.2/10.3)	N/A	4.6/4.7 (10.2/10.3)	None	3	15.9 (35.1)	65	+2	13.13 (5.17)	+3	2
5	30% Glass Polysulfone	CF-1006	1.44×10^3 (0.052)	1.20	3.52/2.96 (1.385/1.165)	4.7/4.8 (10.3/10.6)	N/A	4.7/4.8 (10.3/10.6)	IARS End Plates	4	16.1 (35.4)	64	+3	13.67 (5.38)	+7	3
6	Alum. Honeycomb		$8.05 \times 10^3/1.52 \times 10^2$[e] (0.290/0.0055)	28.40	3.89/3.89 (1.530/1.530)	1.2/1.1 (2.7/2.4)	4.4/2.3 (9.7/5.0)	5.6/3.4 (12.4/7.4)	WES End Plates	1	15.6 (34.4)	65	-68	19.96 (7.86)	+56	5

(a) 10 = easiest, 1 = most difficult.
(b) (+) = % over goal (unfavorable); (-) = % under goal (favorable).
(c) Based on average of total cost, overall weight and overall height which relates to volume. Overall weight and height are weighted in the averaging to reflect percent gain or loss, giving emphasis to the more critical parameters.
(d) Thin, unfilled polysulfone insulators.
(e) Stainless Steel Facing/Honeycomb Aluminum filler.

ORIGINAL PAGE IS
OF POOR QUALITY

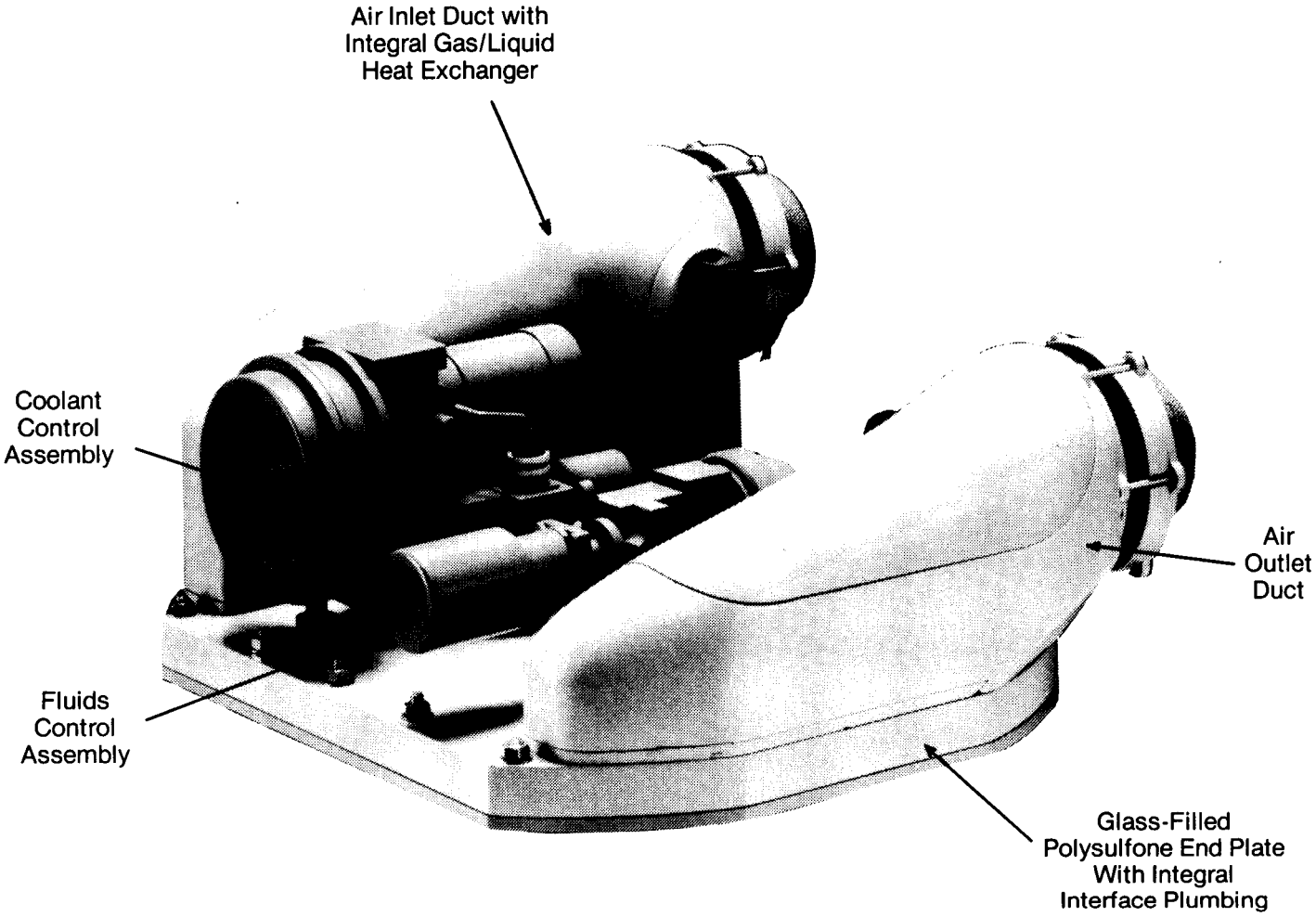

FIGURE 14 MOCK-UP OF EDCM LIGHTWEIGHT UPPER END PLATE

ORIGINAL PAGE IS
OF POOR QUALITY

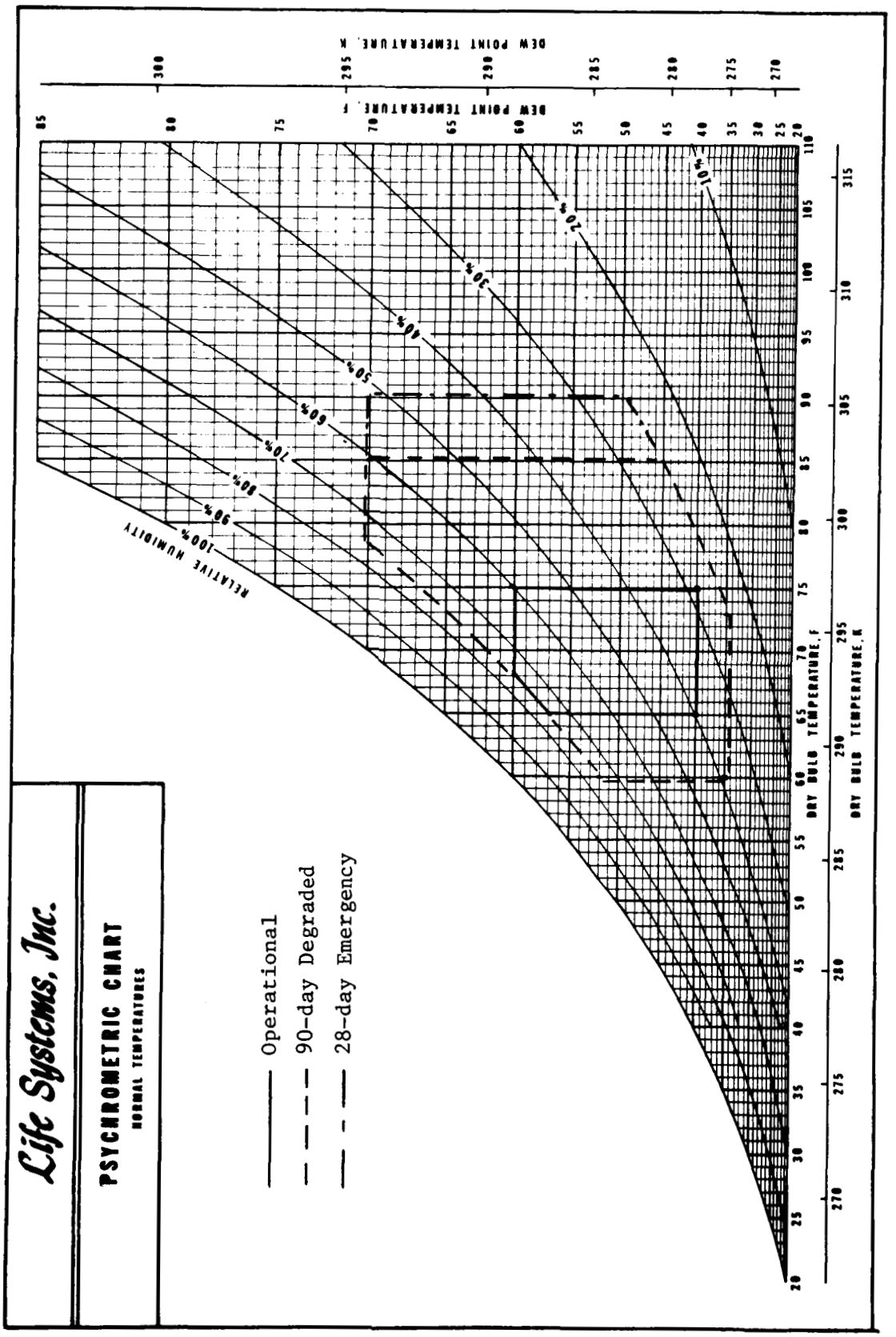

FIGURE 15 SPACE STATION ATMOSPHERE HUMIDITY SPECIFICATION RANGES

which are hot and dry (lower right-hand corner of the specified range in Figure 15). Inlet atmosphere with a dry bulb temperature of 305 K (90 F) and a dew point temperature of 283 K (50 F) must be cooled to approximately 292 K (66 F) to achieve the desired RH. In comparison, an inlet atmosphere with a temperature of 305 K (90 F) and a dew point of 291 K (65 F) needs to be cooled to only 301 K (82 F). Because the atmosphere flow through each cell is small (0.85 l/sec (1.8 cfm)) and the cooling area large (465 cm^2 (72 in^2) per cell), the atmosphere will quickly adjust to the desired condition. Therefore, the job of the process air inlet air/liquid heat exchanger becomes one of minimizing the temperature adjustment required within the cell.

Coolant flow through the EDC is controlled by the CCA. Coolant from the CCA returns to the module where it flows through the air-to-liquid heat exchanger and then in-parallel through each electrochemical cell. Since the temperature of the module will closely approach the temperature of the coolant and since all coolant flows through the heat exchanger, extremes in coolant temperature must be avoided. Therefore, the heat exchanger size cannot be reduced by the use of very cold coolant. Sufficient heat exchanger surface area must, therefore, be provided to achieve desired temperatures. Additionally, the circulating pump of the CCA is a major subsystem user of electrical power. It is desirable, therefore, to minimize the pressure drop of the circulating coolant through the module and thereby reduce the power requirement of the CCA and overall subsystem.

The design developed under this contract is illustrated in Figure 16. Process atmosphere flows down through the heat exchanger across four rows of coolant tubes. Side walls along the length of the exchanger prevent process atmosphere from short-circuiting around the cooling surface. Coolant flows through the exchanger in two passes. In the first pass, coolant flows in parallel through the top five tubes, and in the second pass, in parallel through the bottom five tubes. The use of a parallel, two-pass flow minimizes the pressure drop of the coolant, in contrast to a single flow of coolant through each tube in series. A pressure drop savings of greater than 50% is anticipated. The exchanger illustrated in Figure 16 is designed to operate at a minimum capacity of three persons for a subsystem operating at worst-case conditions. The upper limit capacity of the unit can only be defined by a comprehensive test program. However, if testing were to demonstrate a need for additional heat exchanger capacity, the exchanger design could be readily adapted by adding a second cooling core above the one presently defined.

The air/liquid heat exchanger designed and developed in response to the requirement provides a means of adjusting the inlet atmosphere conditions to those required for reliable EDC subsystem operation over the full range of specified Space Station atmosphere conditions. The design minimizes the pressure drop of the circulating coolant and reduces the power requirement of an EDC subsystem. In addition, the heat exchanger design can be expanded in a modular fashion for applications requiring added capacity.

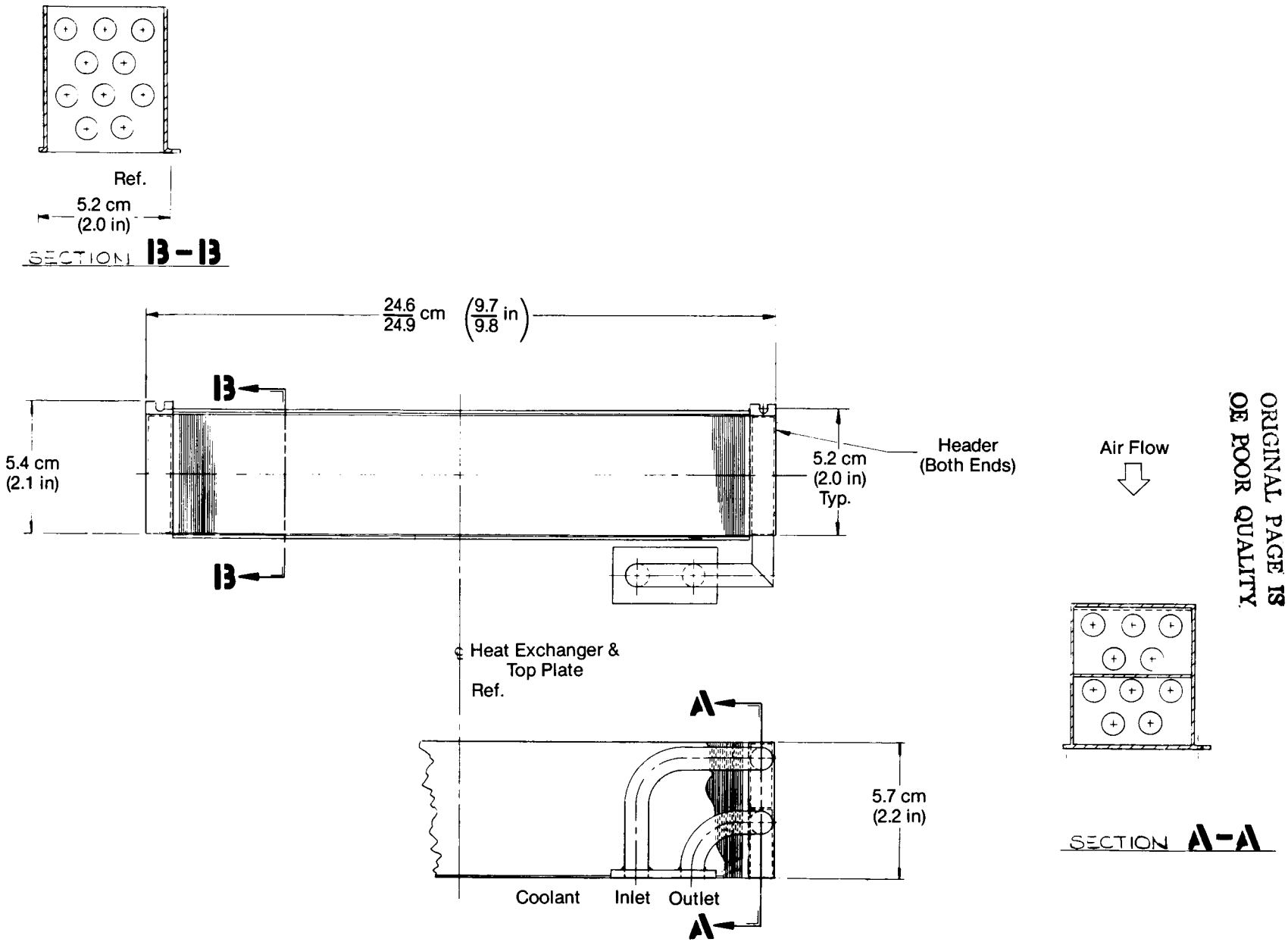

FIGURE 16 EDC AIR/LIQUID HEAT EXCHANGER MECHANICAL DESIGN

ORIGINAL PAGE IS
OF POOR QUALITY

Coolant Control Assembly Diaphragm Modification

In some applications of the CCA, particularly at high pressures, build-up of gas in the coolant loop of the CCA had been noted. Evaluations indicated this build-up of gas was due to diffusion of the gas across the diaphragm in the CCA accumulator. An effort was initiated to identify alternative diaphragm materials and diaphragm sealing approaches which would effectively retain the gas/liquid separation in the accumulator and prevent diffusion of gas across the diaphragm into the coolant loop.

A variety of polymeric materials were evaluated with respect to their permeability to gases at different pressures, elasticity and elastic memory, sealing characteristics, durability and maintainability. Polymeric materials compatible with CCA operating conditions and environment demonstrated some permeability over time to oxygen and other gases. Metallic-coated polymers did not exhibit expansion and sealing characteristics required over a wide range of CCA operating conditions. The ideal characteristic would combine the elasticity of polymeric diaphragms with the resistance to diffusion and permeability afforded by metallic diaphragms. These characteristics are afforded in stainless steel bellows-type diaphragms. The stainless steel diaphragm provides excellent operating environment compatibility, weldability, flexibility and is engineered for pressurized and vacuum applications.

The accumulator of a CCA was redesigned to accommodate a commercially available stainless steel bellows diaphragm. To ensure leak-tight integrity, welding the stainless steel diaphragm into the accumulator was favored over a compression seal. The original and modified accumulator designs are illustrated in Figure 17. The CCA using the stainless steel bellows diaphragm was tested. The CCA cavity was pressurized and the coolant loop of the CCA was examined for gas build-up. No gas build-up was detected and no loss of coolant fluid was noted, verifying the sealing capability and nonpermeability of the stainless steel bellows diaphragm for the CCA.

Subsystem Fail-Safe Operation

A hardware requirement, particularly at the subsystem and system levels, for application to the Space Station will be the capability to effectively configure the hardware into a fail-safe operating or shutdown mode in the event of a malfunction or failure (e.g., loss of main system power, loss of operating fluids, loss of system computer control, etc.). The objective of configuring hardware into a fail-safe mode is to prevent operation of the hardware under conditions which could result in damage to the hardware, ancillary components or adjacent equipment or injury to personnel. A task was included in the program activities to establish and incorporate fail-safe operation into the CS-1 Subsystem. Consideration for assuring fail-safe operation of the FCA and provisions for shutting off the H_2 and purging the CS-1 with N_2 were included. A fail-safe technique was implemented and successfully demonstrated.

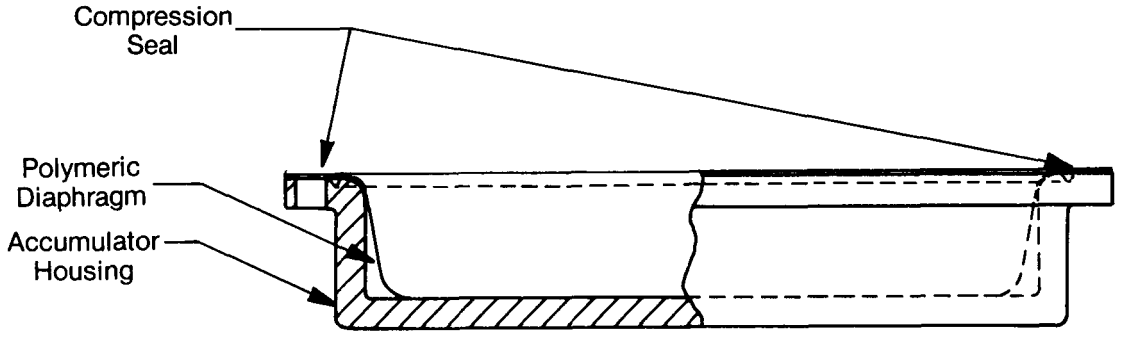

A. Original CCA Accumulator Design - Scale: Full Size

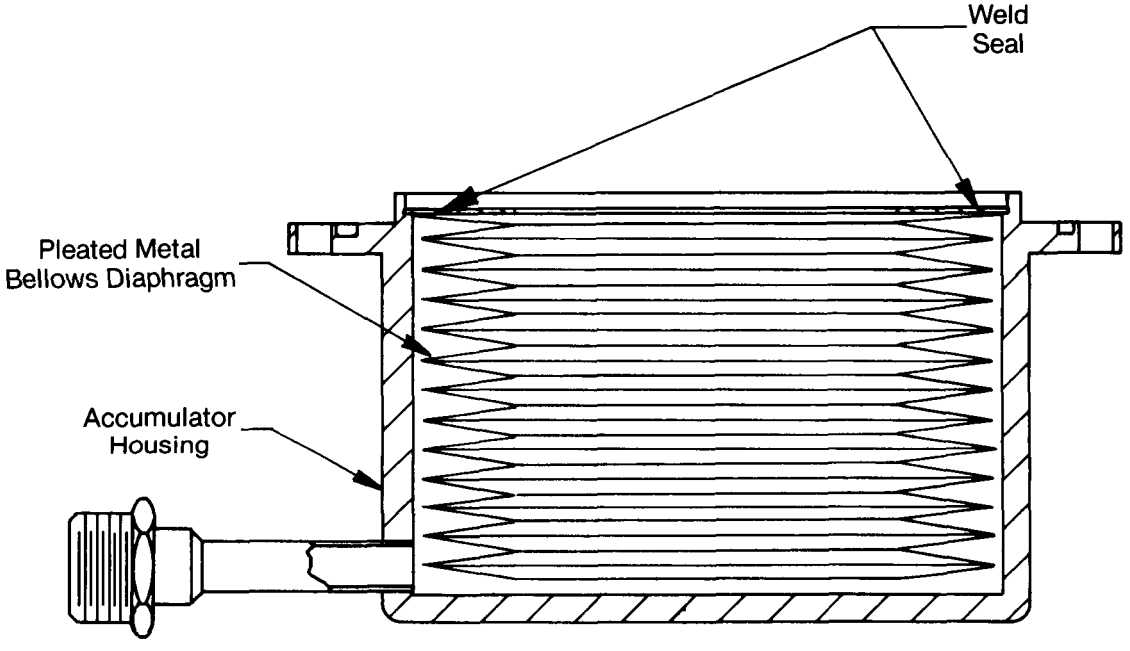

B. Modified CCA Accumulator Design - Scale: Full Size

FIGURE 17 CCA ACCUMULATOR MODIFICATION FOR METAL BELLOWS DIAPHRAGM

The approach to this activity included (1) defining the requirements for subsystem fail-safe operation, (2) defining the hardware and software needed to demonstrate the fail-safe operation, (3) defining the requirements to integrate the hardware and software with the CS-1 subsystem and (4) implementing and demonstrating the fail-safe technique. The principal failure modes requiring fail-safe subsystem shutdown were identified as (1) loss of system power (main power failure), (2) loss of computer control functions (C/M I failure) and (3) detection of out-of-tolerance operating conditions. In the case of a main power failure, a secondary power source would be required to configure the subsystem into a fail-safe operating mode. In the case of a C/M I failure where main power is still available, a secondary power source is not required but an independent, supplementary shutdown control is needed. For a failure or malfunction involving the module or component hardware, the C/M I monitors subsystem operating interfaces and is is designed to initiate a controlled transition to shutdown when an out-of-tolerance operating condition is detected.

The fail-safe demonstration concept is illustrated in the block diagram of Figure 18. The principal component of the fail-safe mechanism is supplementary shutdown circuit, which continually monitors the subsystem for a "C/M I alive" signal. In the event of main system power failure, the C/M I alive signal from the C/M I to the supplementary shutdown circuit is lost. The supplementary shutdown circuit, using power supplied by the secondary power source, will (1) move the FCA from H_2 flow to N_2 permitting nitrogen purge of the module and (2) shut off current to the module. For the failure mode where main system power is temporarily lost, the supplementary shutdown circuit will function in the same manner. However, upon the resumption of supplied power, the subsystem's C/M I will take over and begin a normal transition to shutdown. For the case where a C/M I failure occurs but main power is maintained, the C/M I alive signal to the supplementary shutdown circuit will be lost and the supplementary shutdown circuit will move the FCA to N_2 purge and shut off subsystem current as previously described.

An electronic circuit designed to accomplish this function was fabricated and installed in the CS-1 Subsystem. The failure modes previously described were manually initiated. In each case, the supplementary shutdown circuit successfully moved the FCA to the nitrogen purge position and shut off subsystem current. The time required to move the FCA to the nitrogen purge position was approximately 1.5 seconds following initiation of the failure mode.

Process Air Isolation Valves

The EDC technology advancement activities include an on-going effort to improve the overall characteristics and reliability of the EDC subsystem. One improvement would be to provide hermetic sealing of the EDCM in the presence of a vacuum, as could occur during cabin decompression. This requires isolating the EDCM air inlet and outlet manifolds from the cabin environment. The filter/isolation valves presently used in the CS-1 subsystem provide gross particulate filtering and limited isolated via manual actuation but do not provide total sealing against a vacuum. The objective of this effort was to design, fabricate and evaluate a valve that incorporates this capability.

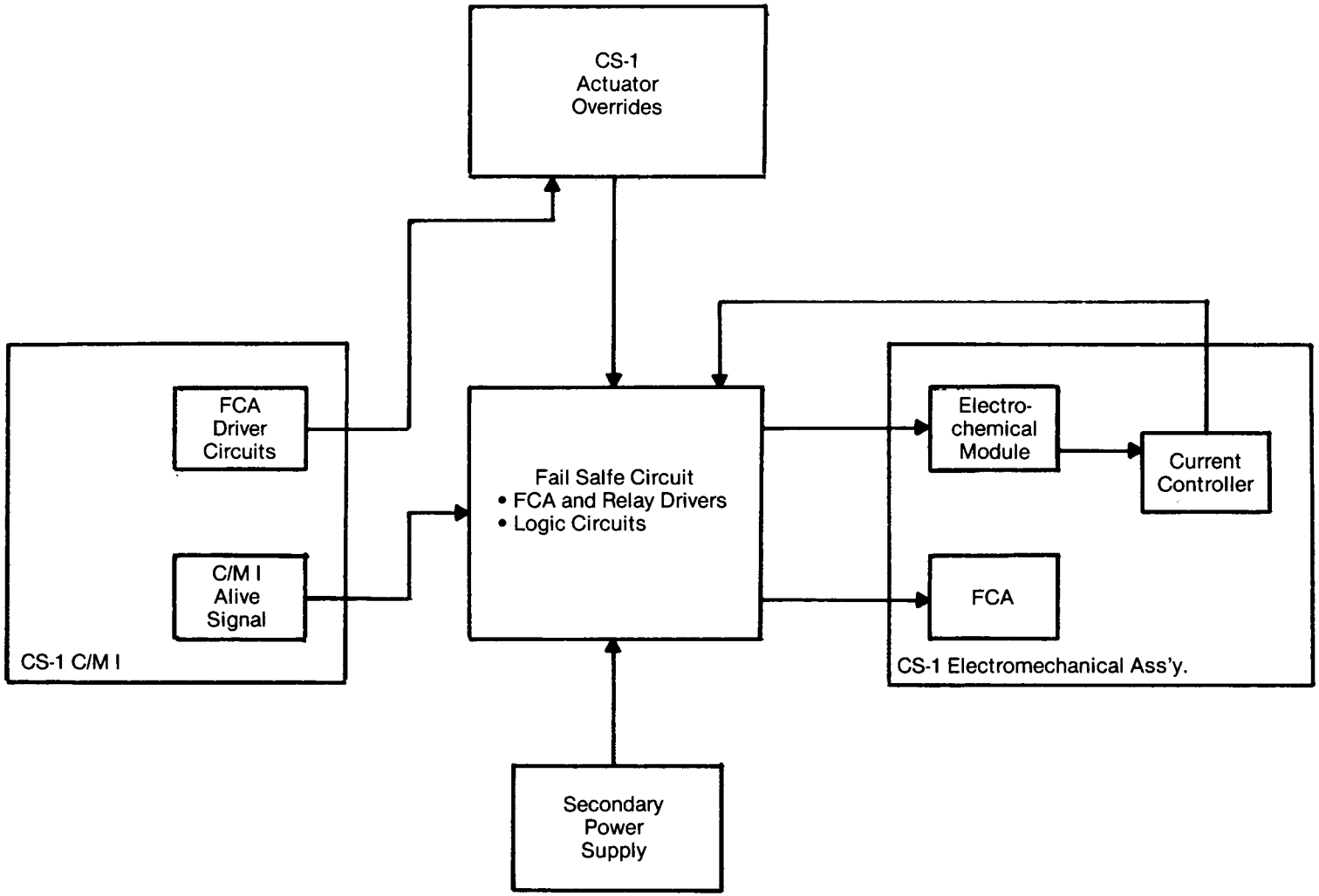

FIGURE 18 CS-1 SUBSYSTEM FAIL-SAFE OPERATION BLOCK DIAGRAM

The primary objectives were to size a valve orifice large enough that the pressure drop through to the valve did not exceed 124 Pa differential pressure (0.5 inches of water) at a nominal four-person air flow rate of 1.22 m^3/min (43.2 ft^3/min) and a sealing capability which would limit the leakage rate across the valve to not more than 0.010 cm^3/day (0.0006 in^3/day). Several concepts for a suitable valve were investigated and evaluated. These are illustrated in Figure 19 and compared in Table 5. As can be seen from Table 5, an isolation valve employing a butterfly valve offered the best compromise between performance (sealing against vacuum), simplicity, manufacturability and adaptation to motorized actuation.

Design of an isolation valve using the butterfly valve approach was completed. Two isolation valves were fabricated per this design and are shown in Figure 20. The design specifications for the isolation valve are given in Table 6.

The fabricated isolation valves were tested to evaluate their pressure drop and sealing characteristics. The pressure drop across the valves met the design requirements and is illustrated in Figure 21. At a process air flow rate of 1.23 m^3/min (43.2 ft^3/min), the pressure drop across the valve was only 107 Pa differential pressure (0.43 in water). The sealing characteristics of the isolation valves were evaluated by isolating a differential pressure across the butterfly valve. With a differential pressure of 103 kPa (15 psid) across the valve, no leakage or pressure decay was noted. The isolation valves demonstrated the capability to provide a positive seal and zero leakage from internal to external and are sized to permit air flows from a nominal one-person up to four-person capacity EDC subsystems, although there are no design limitations in the valve to prevent usage for larger person-level systems (e.g., up to eight-person subsystems). The filter/isolation valve will provide for isolation of the EDCM inlet and outlet both during normal operation and periods where the ambient environment may be reduced to zero absolute pressure.

Triple Redundant Relative Humidity Sensor

A requirement for manned spacecraft is monitoring and control of the humidity content of the crew quarters and work areas. A variety of standard techniques for monitoring RH include (1) direct measurement of the RH and (2) measurement of the dew point and dry bulb temperatures and subsequent calculation of the RH. However, hardware available to perform the RH monitor function, either by direct sensing of the RH or by dew point and dry bulb temperature comparisons, tends to be large, inaccurate, unreliable or requires support equipment.

Improved measurement of RH is, therefore, a needed technology goal for the Space Station. Additionally, the EDC subsystem requires monitoring of RH in order to control its operation. A task was performed to develop an improved RH sensor which would meet Space Station application requirements as well as be incorporated into EDC Subsystems.

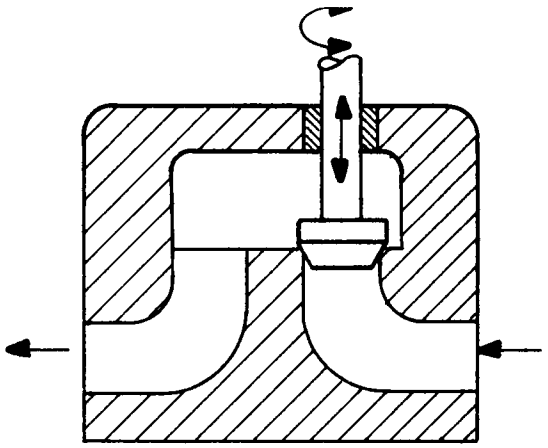

1. Globe Valve

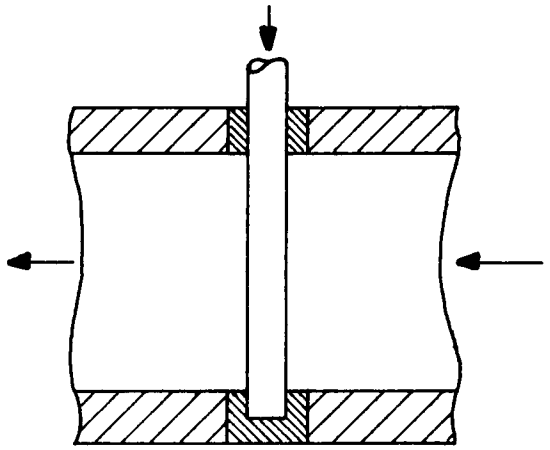

2. Gate Valve

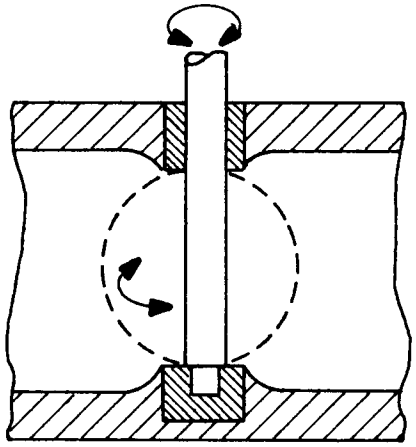

3. Butterfly Valve

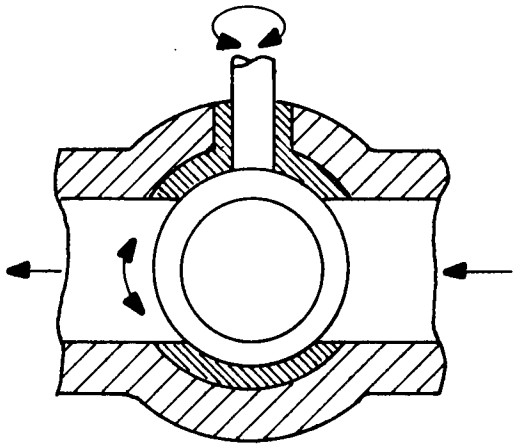

4. Ball Valve

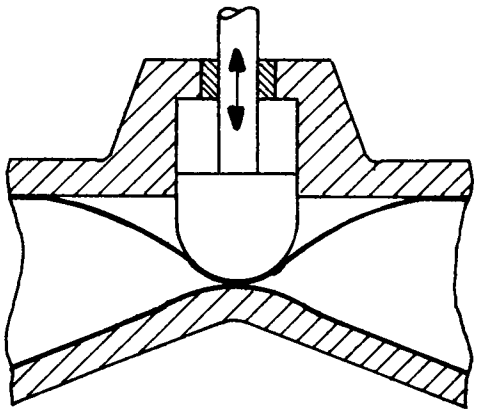

5. Pinch Valve

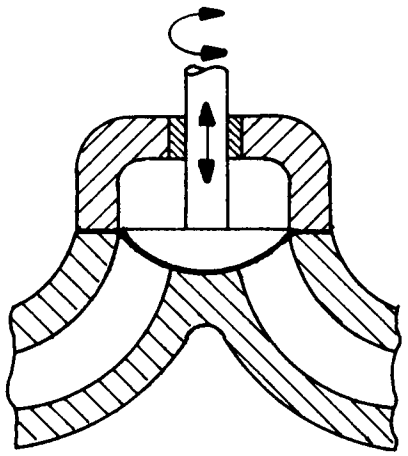

6. Diaphragm Valve

FIGURE 19 ISOLATION VALVE POSITIVE CLOSURE CONCEPTS

TABLE 5 ISOLATION VALVE CONCEPT CHARACTERISTICS

No.	Valve Style	Sealing[a] Ability	Complexity[b]	Actuation[c]	Difficulty of Manufacture	Size[d]	Cost
1	Globe	High	High	Rotation and Translation	High	High	High
2	Gate	Medium	Low	Translation	Medium	Medium	High
3	Butterfly	High	Low	Rotation	Low	Medium	Medium
4	Ball	High	Low	Rotation	Medium	High	Medium
5	Pinch	Low	Medium	Translation	High	High	High
6	Diaphragm	Medium	Medium	Rotation and Translation	High	High	High

(a) Medium = Leakage rate of 0.01 cm^3 (0.0006 in^3) air/day at 103 kPa (15 psi) differential pressure.
(b) Based on number of seals, moving parts, sealing surfaces and total number of discrete parts.
(c) Of final mechanism to effect seal.
(d) Medium = 737 cm^3 (45 in^3) based on 7.6 cm (3 in) inlet/outlet ports, 10.2 cm (4 in) length and motor of 279 cm^3 (17 in^3)

ORIGINAL PAGE IS
OF POOR QUALITY

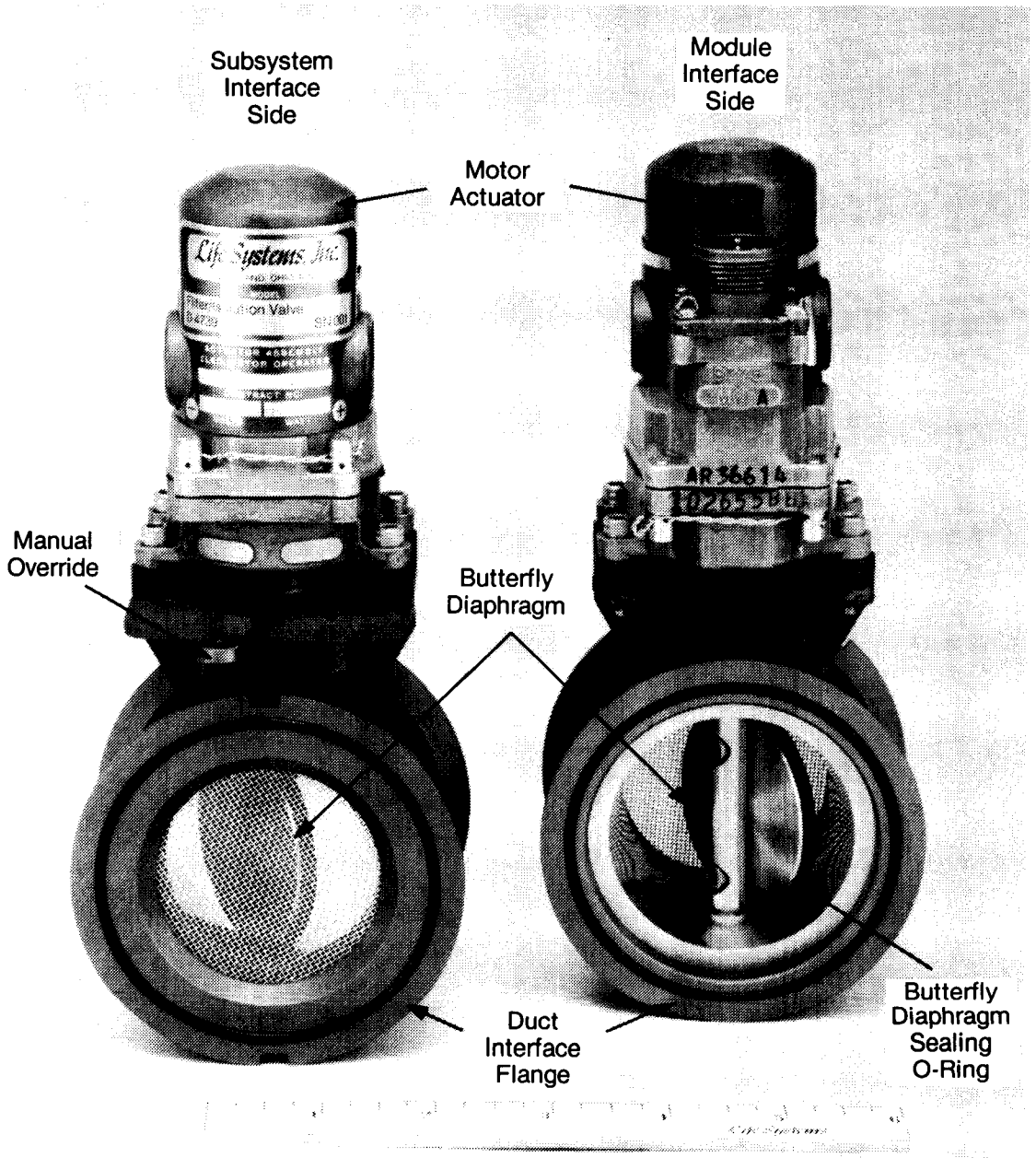

FIGURE 20 EDCM ISOLATION VALVES

TABLE 6 EDCM ISOLATION VALVE DESIGN SPECIFICATIONS

OPERATING INTERFACES:

The data shown below are for a nominal four-person subsystem. The nominal range covers from zero to an eight-person subsystem.

	Nominal	Range
Air flow, at standard temperature and pressure, l/min (cfm)	1,223 (43.2)	0 to 2,447 (0 to 86.4)
Pressure drop, Pa (in of H_2O)	124 (0.5)	0 to 249 (0 to 1.0)
Air leakage in closed position, cm^3/d (in^3/d)	0.01 (0.0006)	0 to 0.03 (0 to 0.0018)
Pressure Differential, kPa (psid)		
Open	0.069 (0.01)	0 to 0.206 (0 to 0.03)
Closed	6.9 (1.0)	0 to 103 (0 to 15)
Temperature, K (F)	294 (70)	278 to 305 (40 to 90)

PERFORMANCE CHARACTERISTICS:

Working Fluids	Air (N_2, O_2, CO_2, water vapor)
Power, W	10 (momentary)
Time to open and close, sec	1.0
Particulate Removal Capability	
Min. particulate size, cm (in)	0.318 (0.125)
equiv. screen mesh size	6.0
Gravity Environment, g	0 to 1

RELIABILITY:

Failure Rate

Failure per three years	1
MTBF, years	10
Installed redundancy	None
Service Life, years	10

Safety

The EDCM isolation valve shall not present a hazard to service or operating personnel.

PHYSICAL CHARACTERISTICS:

Weight, kg (lb)	1.4 (3.0)
Volume, cm^3 (in^3)	819 (50)
Dimensions, cm (in)	8.6 x 5.3 x 15.2 (3.4 x 2.1 x 6.0)
Appearance	Compact and Aesthetic

MATERIALS:

Metallic	Aluminum, stainless steel, bronze
Nonmetallic	Viton, ethylene-propylene, teflon

ELECTRICAL CHARACTERISTICS:

Motor Voltage, VDC	24
Maximum Current, A	0.4 (momentary)
Valve Position Indicator	Relay Contacts

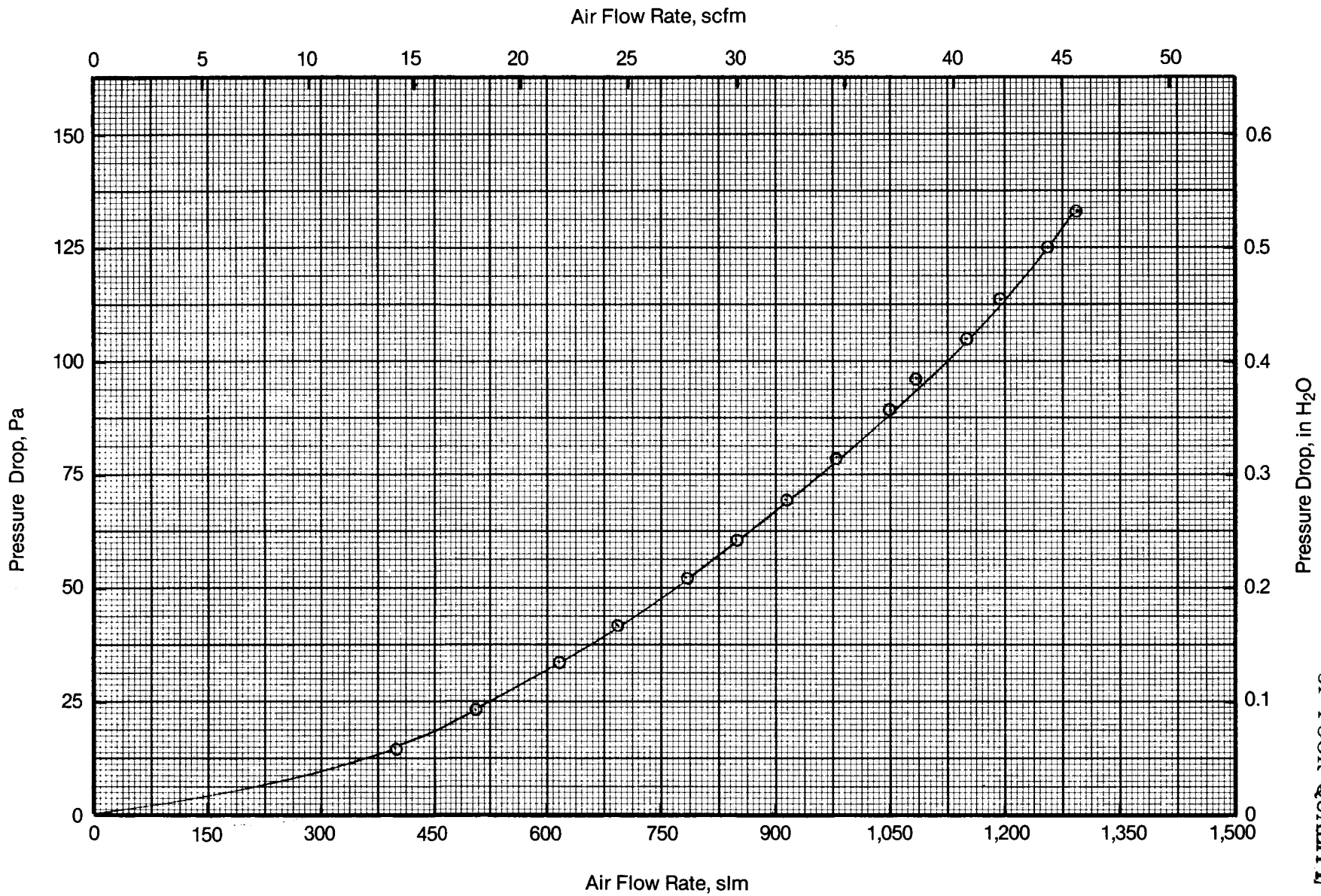

FIGURE 21 EDCM ISOLATION VALVE PRESSURE DROP VERSUS AIR FLOW RATE

ORIGINAL PAGE IS
OF POOR QUALITY

The objective of this effort was to fabricate a TRRHS having triply redundant sensor elements to improve reliability, repeatability and accuracy. Direct measurement of RH was desired, allowing the sensor's output to be more compatible with the hardware that is used to control the RH, particularly in the EDC. Overall size, configuration and performance were considered to be the significant improvements desired over existing techniques. The initial specifications used to compare and evaluate candidate sensor techniques were generated based on the Space Station application projected for the TRRHS, also noting that a TRRHS which met the Space Station specifications would also meet EDC applications.

An evaluation of the most critical component of the TRRHS, the relative humidity sensing element, was completed. The following criteria were key factors in selection of a sensing element:

- Resistance to extremes in RH
- Resistance to contaminants
- Overall small size of the sensor element
- Ability to recover from exposure to 100% RH
- Fast response time
- Reliability, repeatability and accuracy
- Wide temperature range compatibility
- Low hysteresis

Three types of sensor elements were evaluated. One type used electrical impedance to measure RH; a second type used electrical resistance to measure RH and the third type used electrical capacitance to measure RH. Of the three candidate sensor elements evaluated, the sensor which determined RH by electrical capacitance was selected since it most closely met the design criteria.

A TRRHS using the capacitance-type element was fabricated and assembled and is shown in Figure 22. The TRRHS consists of a main housing which has the three sensing elements mounted in one end and a commercially available electrical connector mounted at the opposite end. A sensor element cover, which is slotted to allow passage of the atmosphere sample stream over the sensor elements, attaches to the sensor housing and protects the sensor elements from contact damage. When completely assembled, the TRRHS is approximately 12 cm (4.7 in) long (including the electrical connector) and approximately 1.8 cm (0.7 in) in diameter. The design specifications for the TRRHS are presented in Table 7.

ORIGINAL PAGE IS
OF POOR QUALITY

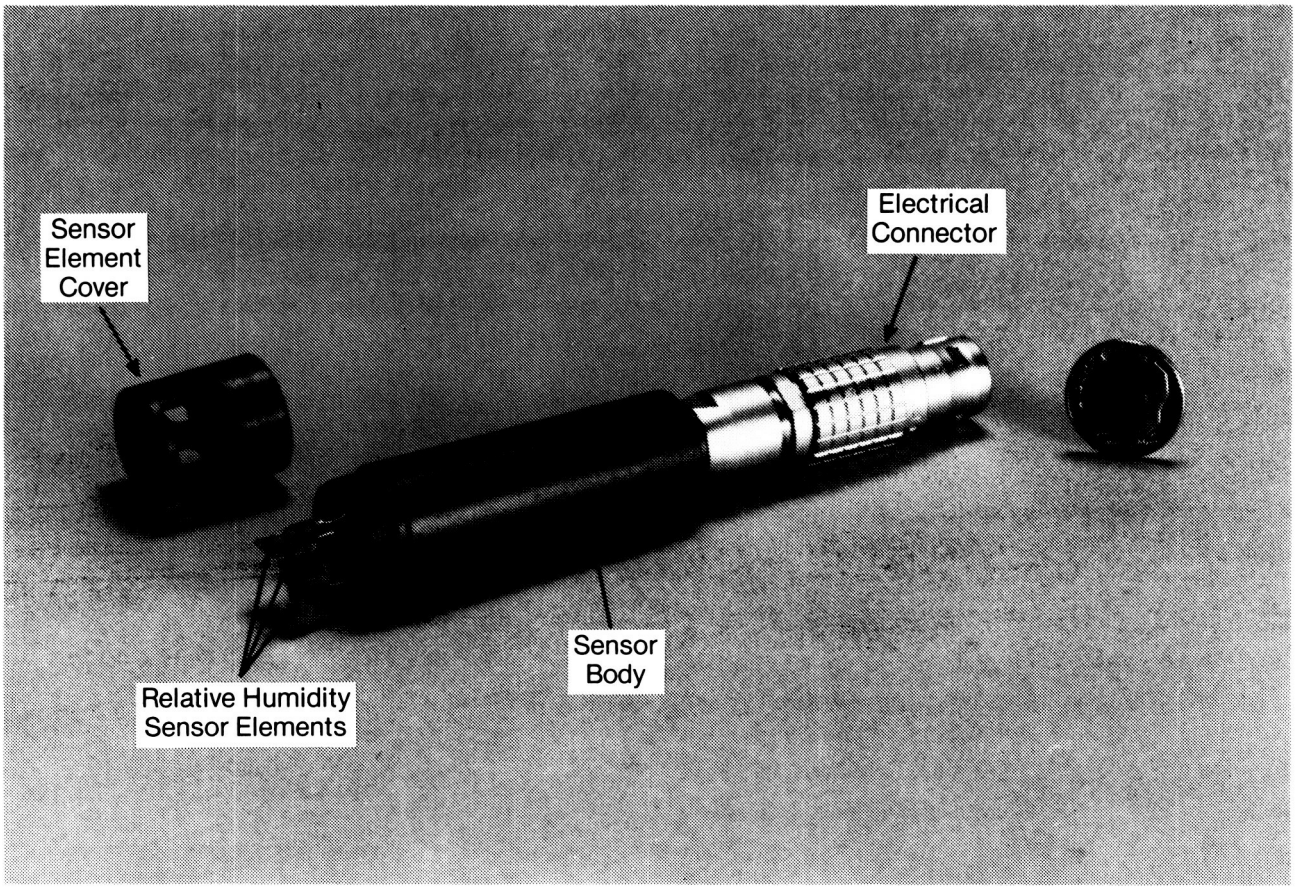

FIGURE 22 TRIPLE REDUNDANT RELATIVE HUMIDITY SENSOR

TABLE 7 TRIPLE REDUNDANT RELATIVE HUMIDITY SENSOR DESIGN SPECIFICATIONS

Operational Characteristics	
RH Range, %	20-90
Dew Point Temperature Range, K (F)	253-321 (-4-118)
Temperature Range, K (F)	263-343 (14-158)
Pressure, kPa (psia)	34-138 (5-20)
Accuracy, % RH	± 3 over range
Stability (at 50% RH)	
Short-term, % RH change/mo	± 3
Long-term, % RH change/yr	± 10
Repeatability, % RH	± 2
Reproducibility, % RH[a]	± 3
Linearity, Max., % RH Deviation from a straight line over range	± 5
Response Time, sec	
Step Increase (63% FS)	<1
Step Decrease (90% FS)	<2
Hysteresis, from 5-90% RH, %	± 1
Display Resolution, % RH	0.1
Temperature Sensitivity, % RH/F	0.05
Air Velocity Sensitivity %RH/m/sec (ft/sec)	0.03 (0.1)
Air Pressure Sensitivity, % RH/psia	0.2
Shelf Life, yr	5
Operating Life, yr	2
Reliability (MTBF), hr	10,000
Sensor Orientation Sensitivity, % RH	± 4
Electrical Characteristics	
Power (total), W	10
Power Supply Voltage, VAC	115
Power Supply Frequency, Hz	60
Front Panel Controls	
Display(s)	RH:3 Digit LCD
Indicators	Power On, RH Overlimit, RH Override
Control Adjustments	RH Overlimit
Calibration Set	20-Turn Trim Potentiometer[b]
Rear Panel	
Sensor Cable	25-Pin AMP Connector
Physical Characteristics	
Sensor	
Weight, kg (lb)	0.1 (0.2)
Volume, cm^3 (in^3)	29.5 (1.8)
Dimensions, cm (in)	1.8 dia x 12.1 L (0.7 dia. x 4.75 L)
Mounting	Boss-Mounted
Electronic Package	
Weight, kg (lb)	2.7 (6)
Volume, cm^3 (in^3)	9,734 (594)
Dimensions, cm (in)	30.5 x 11.4 x 27.9 (12 x 4.5 x 11)
Mounting	Free Standing or rack mounted
Environmental Limits	
Air Velocity, m/sec (ft/sec)	0-6.1 (0-20)
Air Pressure, kPa (psia)	34-138 (5-20)
Ambient Temperature, K (F)	
Sensor	263-343 (14-158)
Electronics Package	277-311 (40-100)
Gravity, g	0-2
Maintainability	
Line Replaceable Components	Sensor, Electronics Package
Replacement Time, hr	
Sensor	0.2
Electronic Package	0.3
Special Tools	None

(a) Variation from one instrument to another.
(b) Internal to electronics package.

A control electronics package, shown in Figure 23, was also designed and fabricated. This TRRHS monitor provides for measurement and display of the RH. The monitor contains an oscillator circuit which provides an excitation voltage for each of the sensing elements. Each sensing element is continuously monitored. Signal conditioning for each sensor is designed such that the capacitance of each sensor is proportional to the RH. The output of each sensing element is amplified and further signal conditioned to yield an output which is linearly proportional to the RH and displayed on independent liquid crystal display meters. The monitor also contains an RH overlimit control circuit which allows the operator to select and set a predetermined RH limit (e.g., 95% RH). If any one of the sensing elements detect this level of RH, the monitor will send a shutdown signal to the TRRHS test stand. The TRRHS test stand and testing are discussed in subsequent sections of this report.

Sabatier CO_2 Reduction Reactor

The EDC subsystem concentrates CO_2 removed from cabin atmosphere into an H_2 stream. This H_2/CO_2 stream undergoes further processing downstream of the EDC to reduce the CO_2 and recover water from the reaction product stream. A technique which can be used to accomplish this is a CO_2 reduction process based upon the Sabatier reaction. A task was included in this program to evaluate the effects of product gases exhausting from the EDC on a CO_2 reduction reactor based upon the Sabatier reaction.

The Sabatier Reactor is depicted schematically in Figure 24. The H_2/CO_2 reactant mixture from the EDC (containing water vapor at a dew point less than 289 K (60 F)) enters the Sabatier Reactor. The CO_2 reacts with H_2 via the equation shown in Figure 24. The CO_2 reduction reaction generates heat which is removed by the incoming reactant gases and cooling air. A decreasing temperature profile from the inlet of the reactor to the outlet of the reactor is maintained so that the best reactor efficiency is obtained. The methane (CH_4) and water vapor formed along with excess reactants are subsequently delivered to a condenser/separator where the water vapor is condensed, removed from the gas stream and stored in an accumulator. The accumulator is periodically emptied as required while the CH_4 and excess reactants, after being cooled in the condenser/separator, exhaust the subsystem to overboard vent.

To enable downstream testing with the EDC, a one-person S-CRR was designed and fabricated. It is shown in Figure 25. This one-person S-CRR, which is based on a previously-developed prototype design, optimizes the prototype design with respect to the length-to-diameter ratio, mechanical and electrical interfaces and overall subsystem maintainability. The end result is a reactor which weighs 2.4 kg (5.3 lb) (with catalyst) and which has 56% fewer parts than the prototype version. These design features are summarized in Table 8. The EDC testing with the Sabatier Reactor is discussed in a subsequent section.

ORIGINAL PAGE IS
OF POOR QUALITY

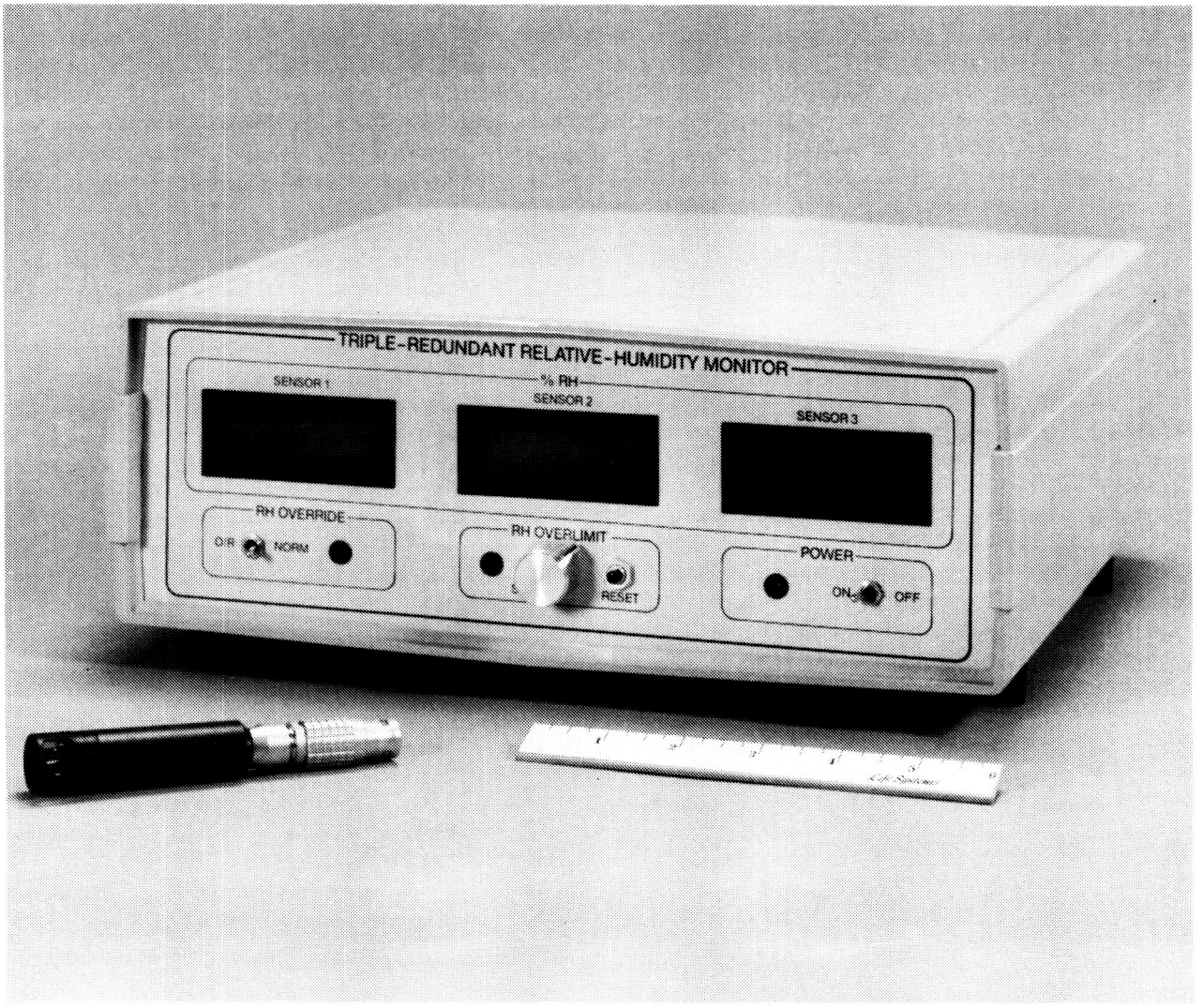

FIGURE 23 TRIPLE REDUNDANT RELATIVE HUMIDITY SENSOR AND MONITOR

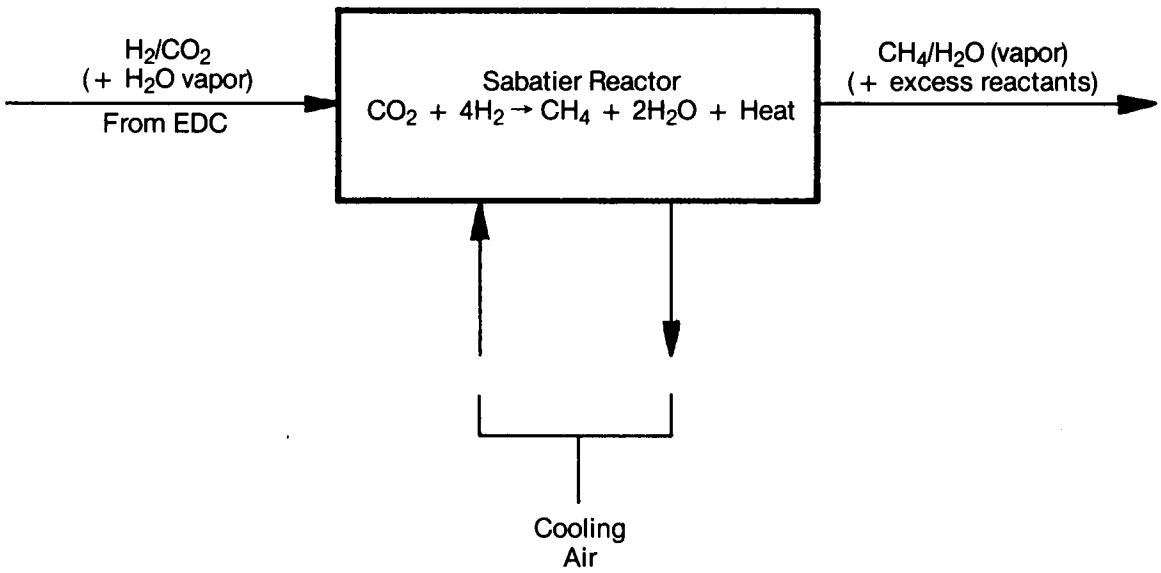

FIGURE 24 SABATIER CO_2 REDUCTION SUBSYSTEM CONCEPT

ORIGINAL PAGE IS
OF POOR QUALITY

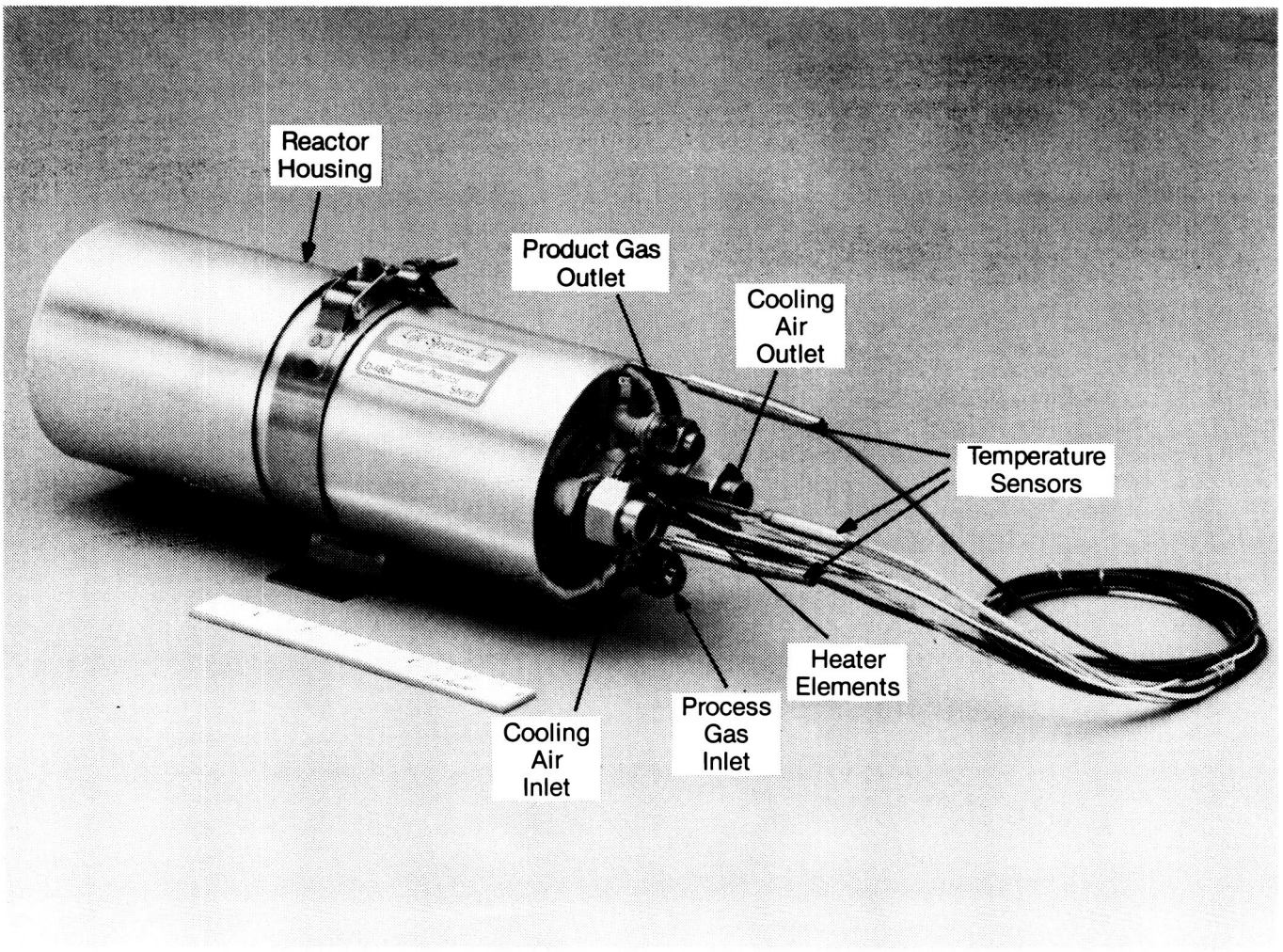

FIGURE 25 SABATIER CO_2 REDUCTION REACTOR

TABLE 8 SABATIER REACTOR DESIGN FEATURES

1. Optimized catalyst bed — L/D ratio, catalyst type ratio and quantity.
2. Single plane interface at one end for mechanical and electrical interfaces.
3. Fewer total parts:

   Prior design — 77 parts
   Current design — 43 parts

4. Two-stage heater for development testing — secondary heater may be removed after testing.
5. Cooling air flow controlled in two different zones.
6. Maintainable heater — four screw removal.
7. Maintainable temperature sensors in wells.
8. Simplified bed loading with wafer springs.
9. Reactor line maintainable using quick-release strap clamp and CPV fluid fittings

PROGRAM TEST ACTIVITIES

Testing was performed as part of the overall program activities. The testing included continued endurance testing of the CS-1 subsystem, the six-cell EDCM, the FCA and the CCA and cyclic testing of the CS-1. Performance evaluation tests were completed on the TRRHS and the Sabatier Reduction Reactor. Results of each of these test activities are discussed in the following sections.

One-Person CO_2 Concentrator Subsystem Testing

Over 4,800 hours of CS-1 testing (both endurance and cyclic) were completed under this contract. As discussed in the following sections, the performance of the CS-1 was excellent.

Test Support Accessories

The CS-1 subsystem TSA, which were developed under previous contracts and were refurbished for the current program, are shown schematically in Figures 26 and 27. Figure 26 illustrates the gas/coolant supply schematic and Figure 27 shows the arrangement for gas sample analysis. Performance of the CS-1 based on air side (e.g., pCO_2) measurements and H_2/CO_2 exhaust measurements (e.g., flow rate) was determined with this equipment. The CS-1 TSA provides the following:

1. Process air at the desired flow rate, dew point, temperature and pCO_2 levels.

2. Nitrogen and H_2 gases at the desired pressures and flow rates.

3. Coolant simulating a central spacecraft coolant source.

4. Electrical power at 28 volts for the C/M I and 115 volts, 400 Hz for the CCA pump.

5. Electrical circuitry to permit shutdown interface between the CS-1 and the TSA.

6. Gas analysis equipment for meeting CS-1 performance.

Endurance Testing

The CS-1 subsystem was endurance tested for an additional 4,225 hours (176 days) beyond the test time completed under the previous contract. The endurance testing demonstrated the ability of the module to maintain acceptable performance while running continuously. Conditions were typically maintained within the ranges listed in Table 9. Performance during the entire 4,225 hours of continued endurance testing is plotted in Figure 28. The CO_2 removal efficiency averaged greater than 90% and cell voltage averaged 0.38 V even with pCO_2 and process air inlet RH excursions outside the nominal operating conditions. The stability and reliability of the electrochemical cells are evidenced by the results of this testing.

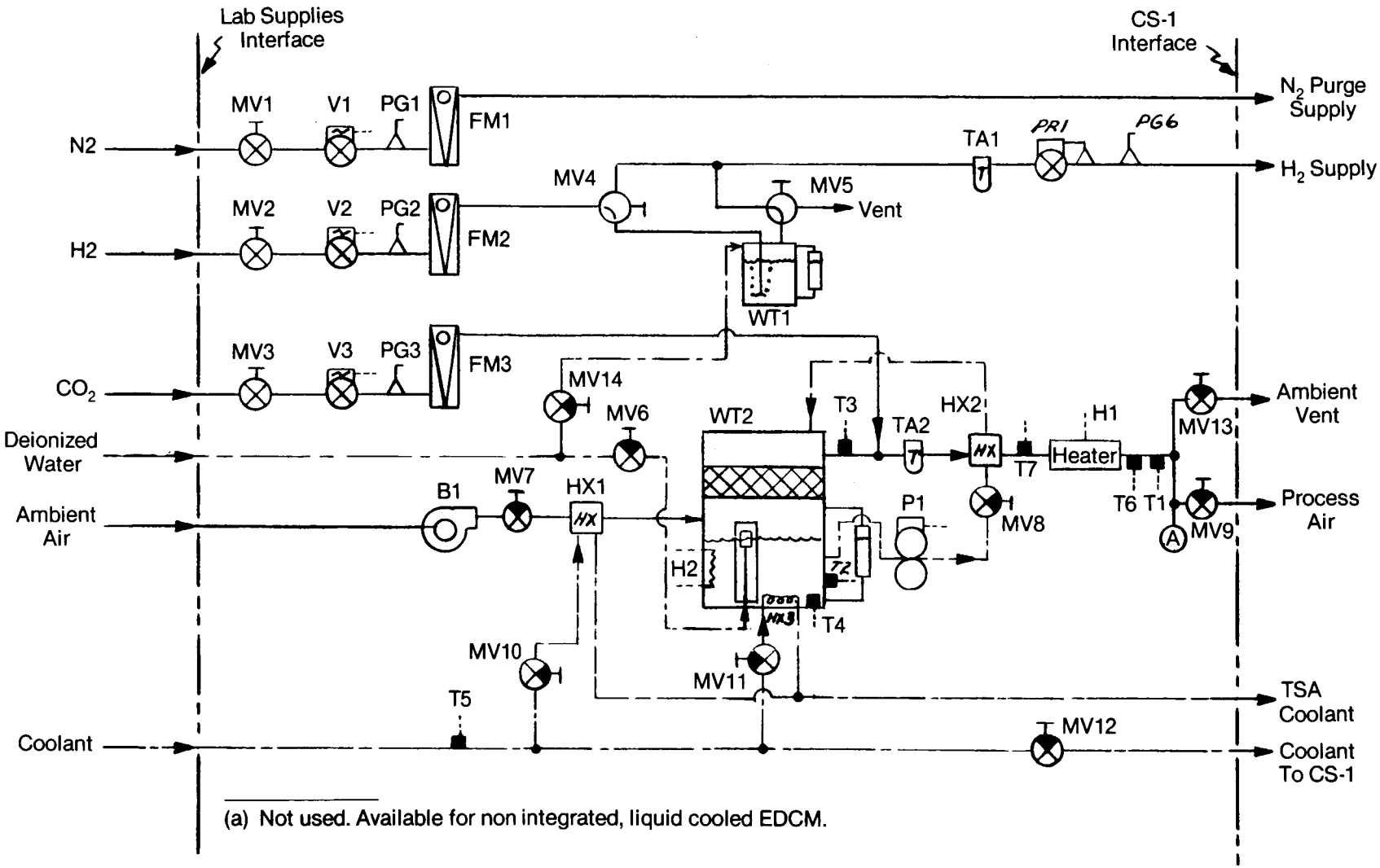

(a) Not used. Available for non integrated, liquid cooled EDCM.

FIGURE 26 CS-1 TSA - GAS/COOLANT SUPPLY

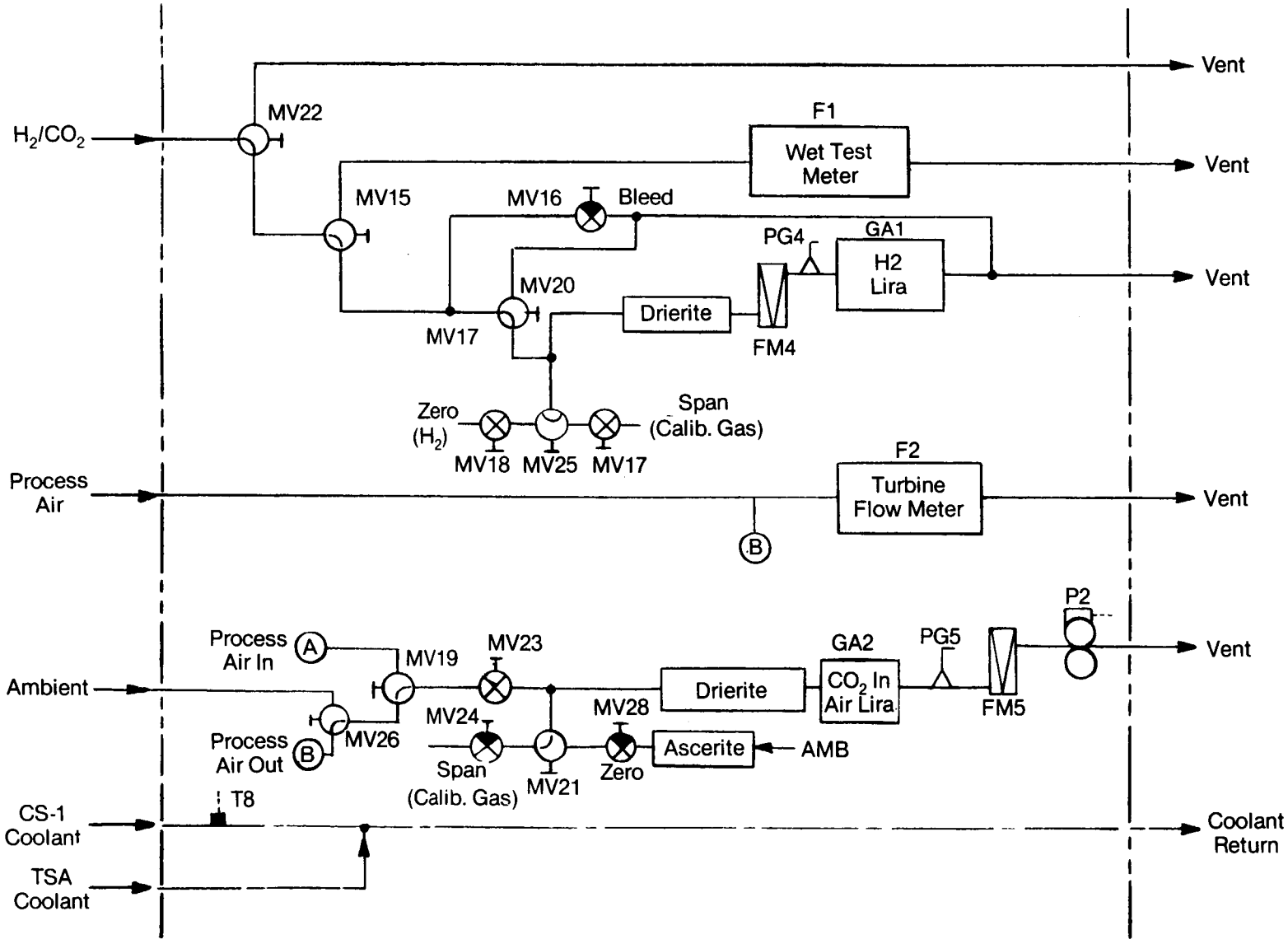

FIGURE 27 CS-1 TSA - GAS SAMPLE ANALYSIS

TABLE 9 CS-1 NOMINAL TEST CONDITIONS

Current, A	9.9
Process Air	
Flow Rate, dm^3/s (cfm)	5.1 (10.8)
pCO_2, Pa (mm Hg)	400 (3.0)
Relative Humidity, %	56-64
Dew Point, K (F)	283-286 (50-56)
Dry Bulb, K (F)	291-293 (64-68)
Hydrogen	
Flow Rate, kg/h (lb/h)	0.006 (0.014)
Pressure, kPa (psia)	172 (25)
Module Backpressure, kPa (psia)	34.5 (5.0)
Purge Gas	
Type	Nitrogen
Pressure, kPa (psia)	207 (30)
Coolant	
Temperature, K (F)	275-277 (36-40)

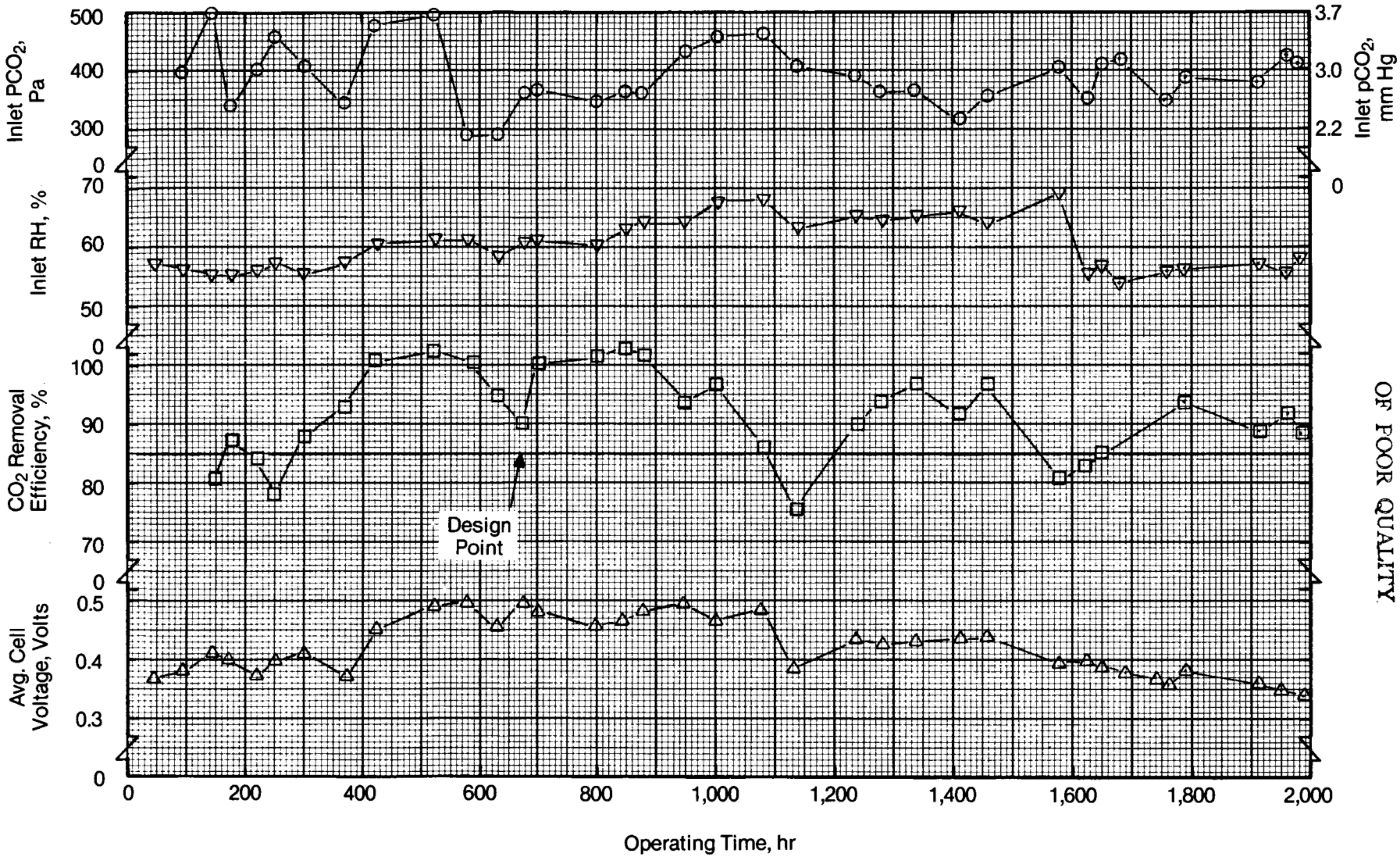

FIGURE 28 CS-1 ENDURANCE TEST PERFORMANCE

ORIGINAL PAGE IS OF POOR QUALITY

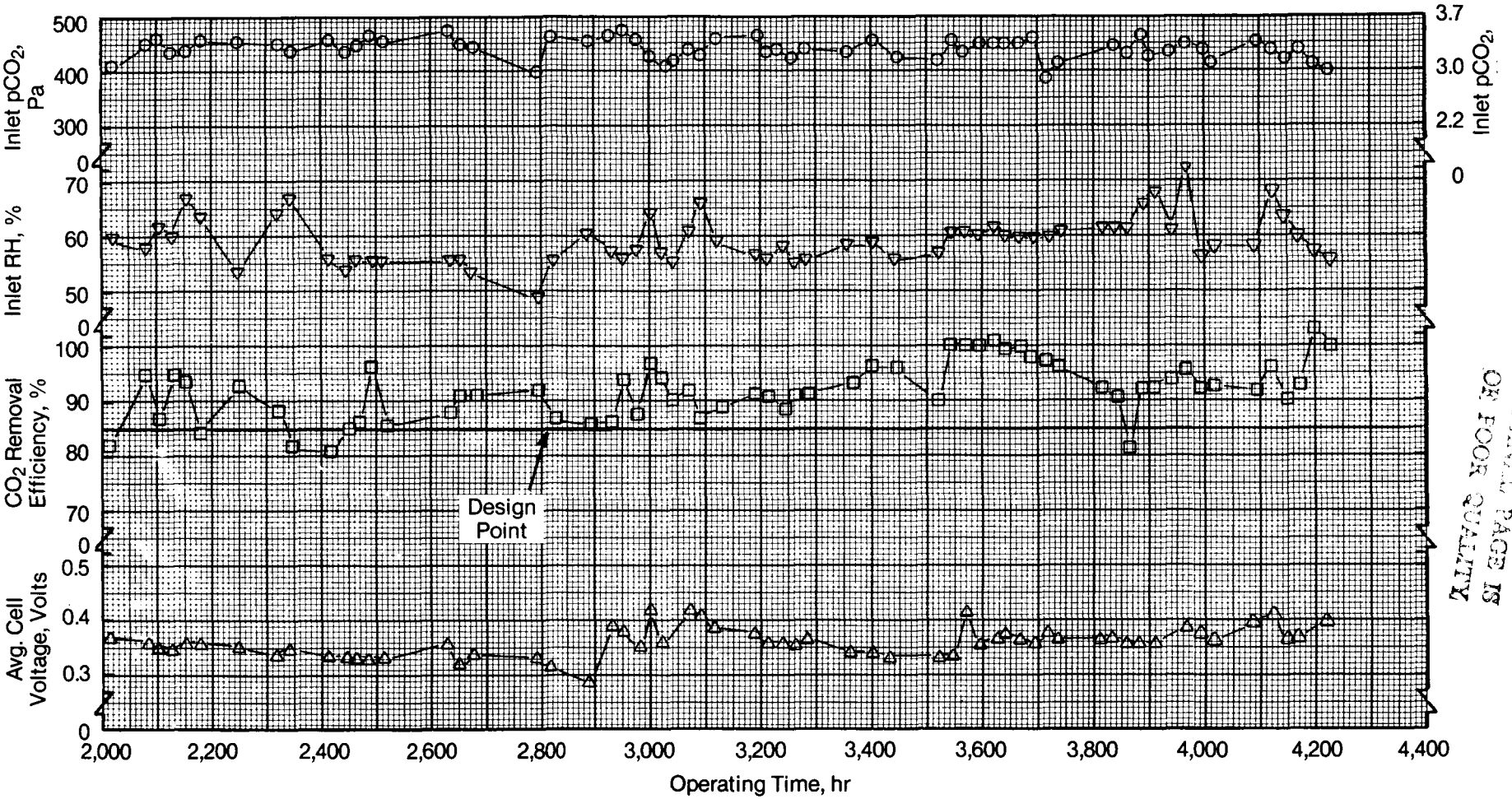

Figure 28 - continued

ORIGINAL PAGE IS OF POOR QUALITY

The total accumulated endurance test time on the CS-1 subsystem, including the testing completed under this contract and the previous contract, is 6,035 hours.

Cyclic Testing

Over 600 hours (25 days) of cyclic testing was performed at subsystem baseline conditions. The cyclic testing was designed to simulate operating conditions with respect to light side, dark side Space Station orbit characteristics. To achieve this, the CS-1 subsystem C/M I software was modified to provide a "Standby" operating mode in place of the "Normal Shuttle" operating mode. Through the C/M I, the CS-1 subsystem cycled between Normal operation and Standby. A test cycle was defined as 54 minutes in Normal operation (on, or light side of orbit) and 36 minutes in Standby operation (off or dark side of orbit). Approximately 400 test cycles were completed during the 600 hours of cyclic testing. The CS-1 consistently demonstrated the ability to achieve baseline CO_2 removal efficiency requirements within six minutes following the transition from Standby to Normal.

Conclusions of CS-1 Testing

The results of the endurance and cyclic tests verified the predictable, reproducible, high-level performance of the EDC subsystem. The test results verified the concept of the unitized core and liquid-cooled cells and the preconditioning of the EDCM inlet air using the air/liquid heat exchanger.

Six-Cell EDCM Testing

Long-term endurance testing of the six-cell EDCM with the developmental unitized cell cores continued under this contract. The objective of the testing was to expand the data base for the liquid-cooled, unitized core EDC concept. The test stand used to perform the continued endurance testing of the six-cell EDCM is shown in Figure 29. This test stand, which was developed under a prior program and was refurbished for the testing under this program, provides for unattended EDCM operation for long periods. It incorporates electronic packages which automatically control and monitor the CO_2 concentrating process and protect against failures. The test stand includes instrumentation for monitoring operating temperatures, pressures, RHs, cell current and cell voltages.

Testing

Figure 30 shows the EDCM endurance test data obtained from an additional 4,728 hours (197 days) of testing under the current program. In spite of over 2.2 years of total accumulated test time and an additional 3.3 years of module storage, cell voltages still averaged almost 0.30 V and the average CO_2 removal efficiency was still approximately 70% during this test cycle. Although these values have dropped off somewhat since testing of this module began 5.5 years ago, the development unitized cores continue to perform the CO_2 removal function.

ORIGINAL PAGE IS
OF POOR QUALITY

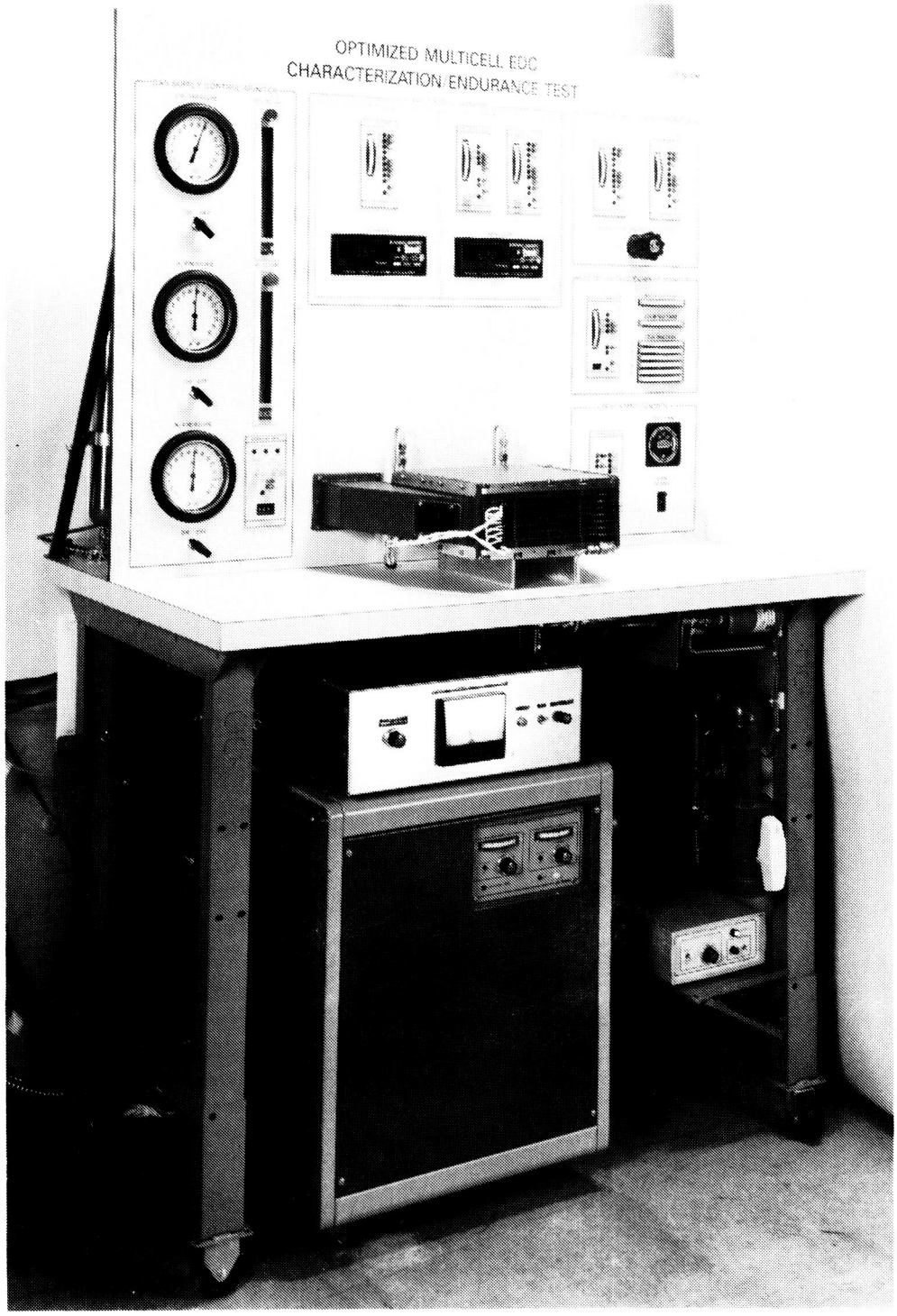

FIGURE 29 LIQUID-COOLED EDCM TEST STAND

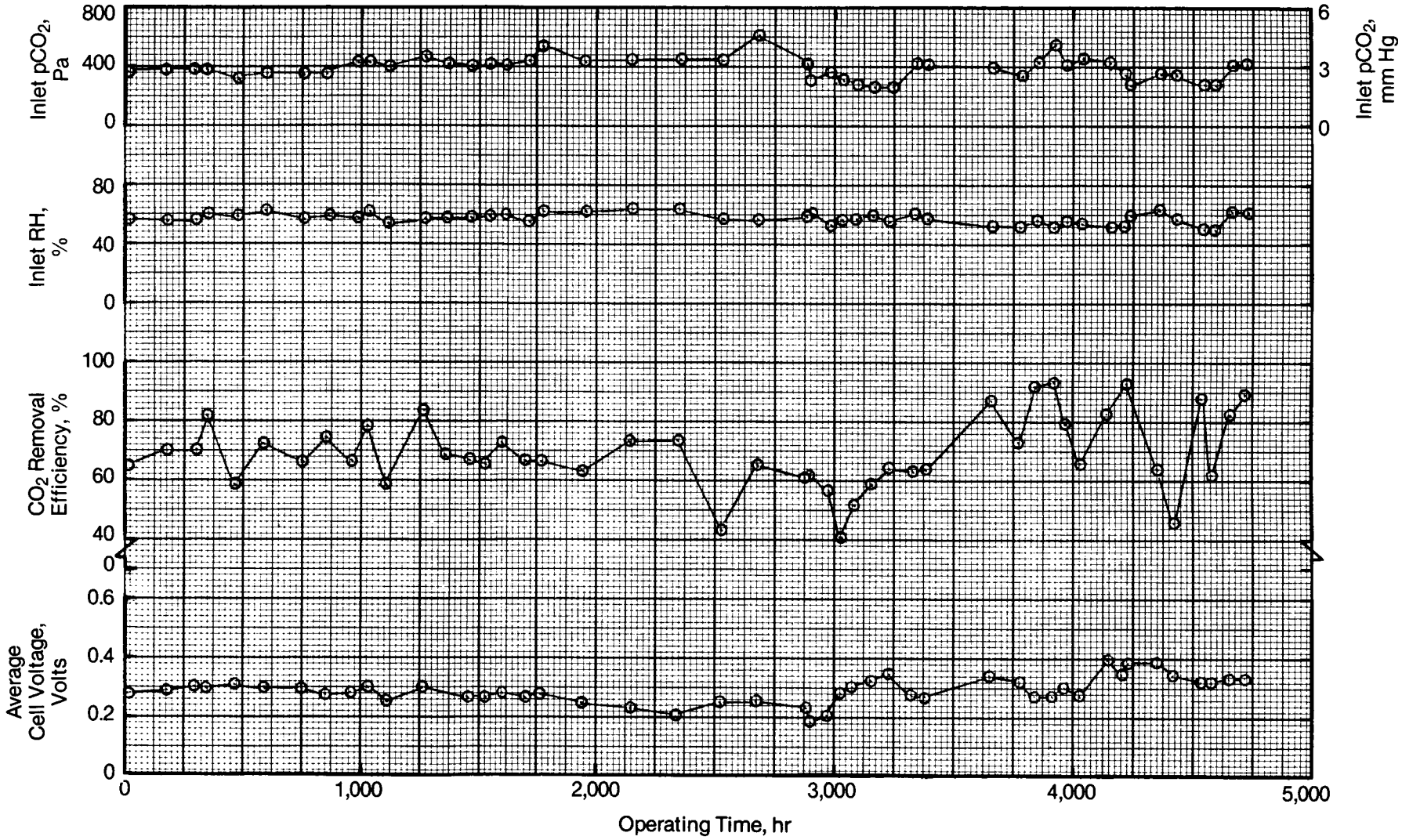

FIGURE 30 SIX-CELL EDCM LONG-TERM ENDURANCE TEST

Conclusions

The total test time accumulated on this EDCM over a 5.5 year period is now 19,375 hours (807 days). The developmental unitized cores used in this module have demonstrated significant performance capability and reliability, have verified the unitized core concept and its application to electrochemical CO_2 concentration and have provided an excellent data base for the new and improved unitized cores which are now part of the baseline design of EDC modules.

Coolant Control Assembly Testing

Endurance testing of the CCA, which was fabricated and initially tested under a prior program, continued under the current program. Figure 31 shows the test stand used to perform the continued endurance testing of the CCA. This test stand, which was developed under a prior program and was refurbished for the testing under this program, provides the instrumentation required to exercise the CCA through a range of conditions simulating various EDCM heat loads. The CCA varies the coolant flow in response to the simulated varying temperature.

Testing

Figure 32 shows the performance of the CCA over the 9,550 hours (398 days) of endurance testing completed under this program. The parameters selected for illustrating performance are the following: (1) total mass flow rate, (2) developed pump head pressure, (3) temperature of the heat source which the CCA is trying to maintain and (4) cycle time of the heater used to simulate a varying module heat source. For the last parameter, the heater is on for 30 minutes and off for 30 minutes in the case shown. The CCA completed the testing without hardware malfunction or premature component wearout.

Conclusions

The CCA has accumulated a total of 18,925 hours (788 days) of endurance operation under this and the previous contract. The CCA has demonstrated consistent, reliable operation and has verified the reliability of the hardware and control concept.

Fluid Control Assembly Testing

Endurance testing of the FCA, which was fabricated and tested under a prior program, continued under this program. Figure 33 shows the test stand which was used to perform the continued endurance testing of the FCA. This stand, which was developed under a prior program and was refurbished for testing under this program, provides the instrumentation necessary to exercise the FCA through various operating modes.

ORIGINAL PAGE IS
OF POOR QUALITY

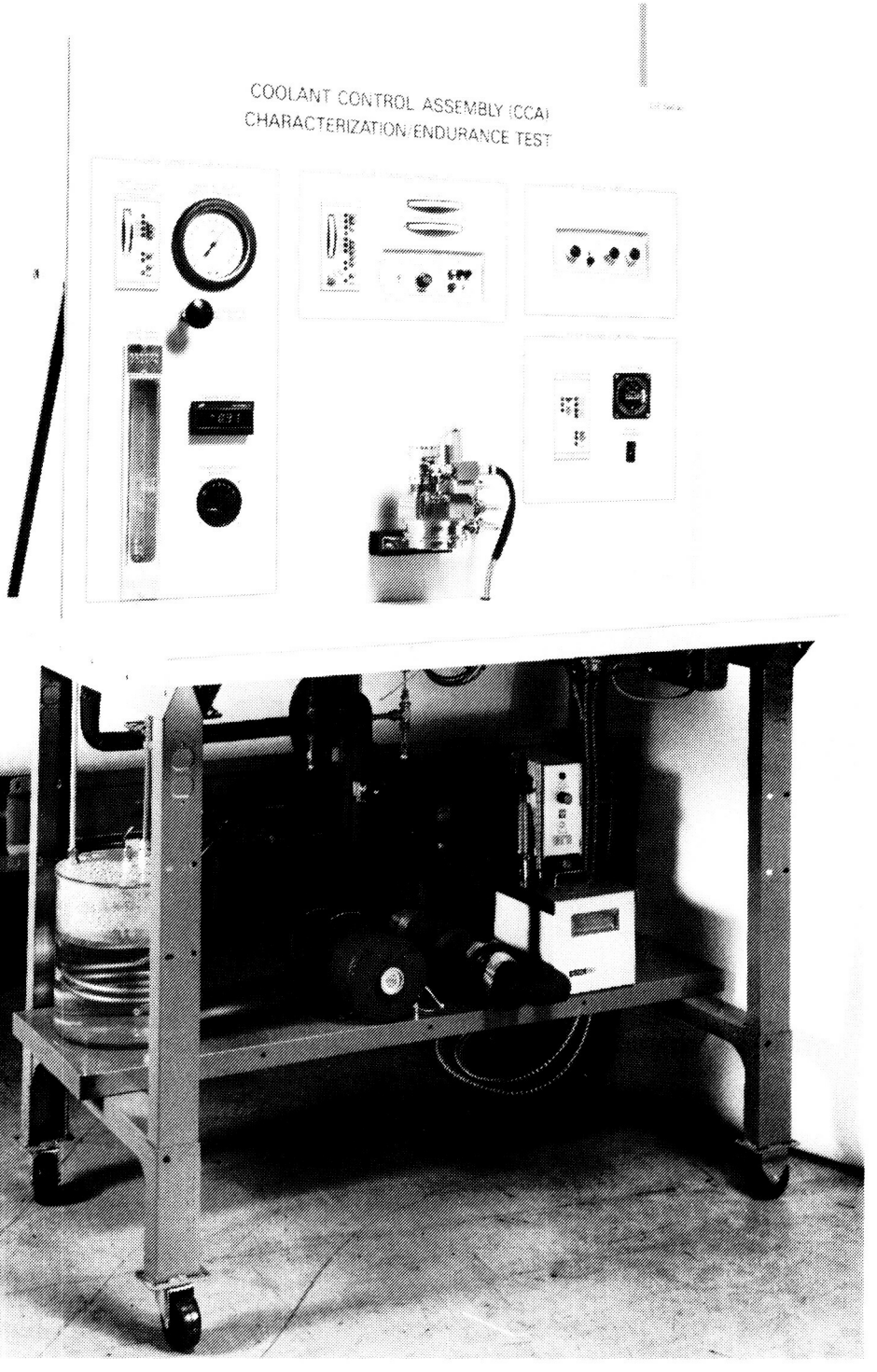

FIGURE 31 COOLANT CONTROL ASSEMBLY TEST STAND

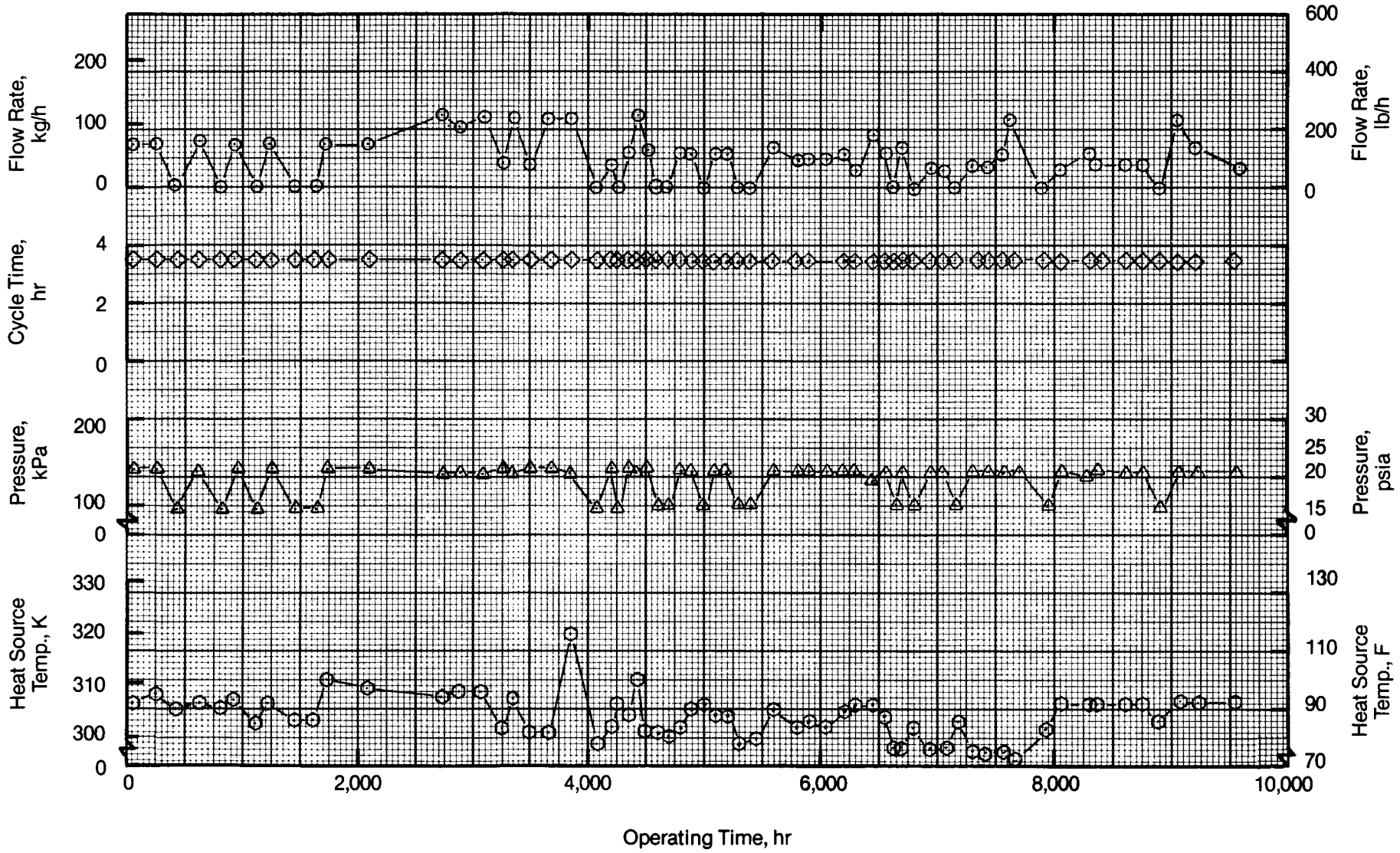

FIGURE 32 CCA ENDURANCE TEST PERFORMANCE

ORIGINAL PAGE IS OF POOR QUALITY

ORIGINAL PAGE IS
OF POOR QUALITY

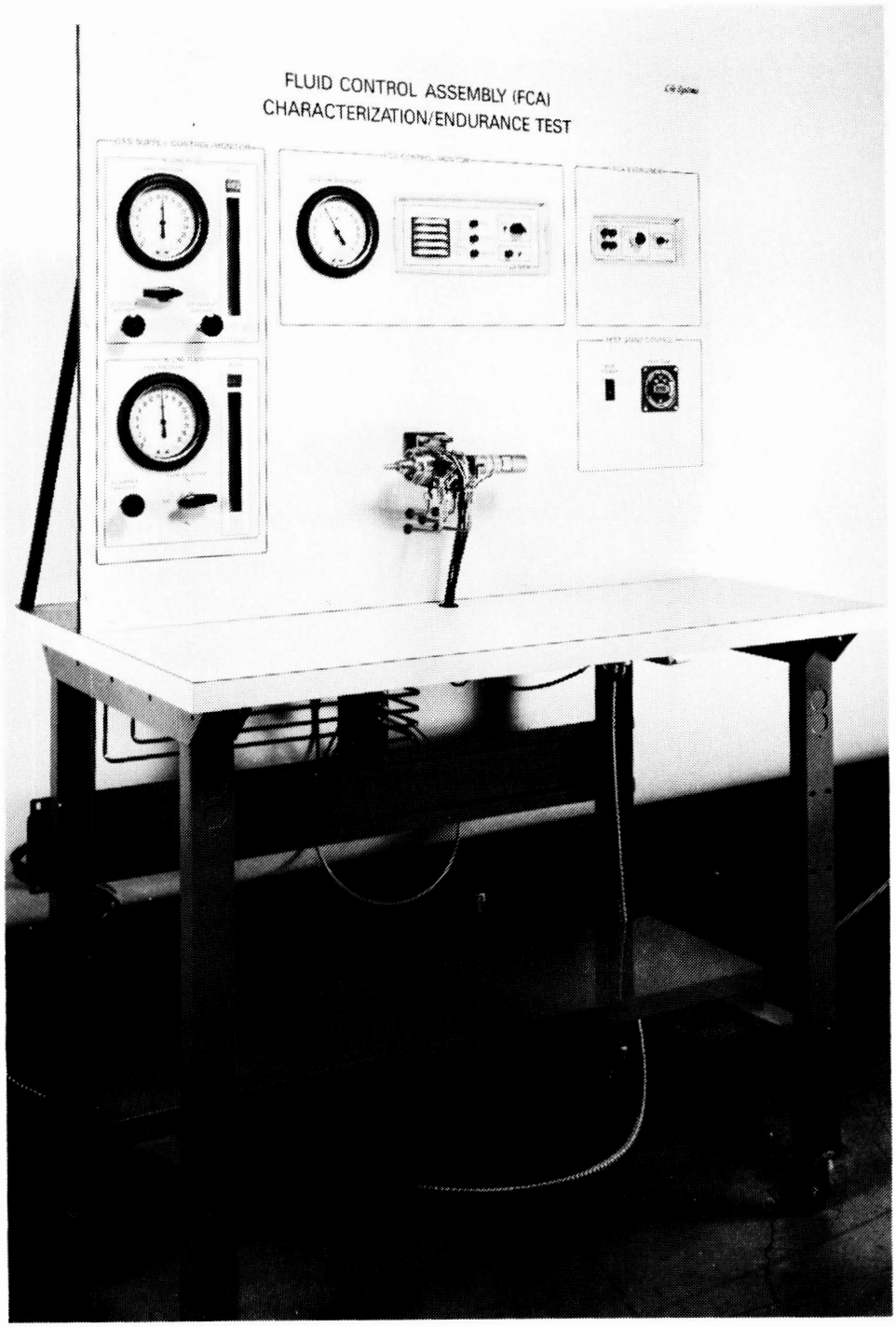

FIGURE 33 FLUIDS CONTROL ASSEMBLY TEST STAND

Testing

Figure 34 shows the FCA performance over approximately 9,050 hours (377 days) of added endurance testing. The parameters plotted are gas (air) inlet pressure, flow rate and residence time. Residence time is related to how often the FCA valve is actuated or cycled in a given period. For a residence time of 10 minutes, the FCA remains in each of its four states for 10 minutes before changing states, resulting in a complete cycle every 40 minutes or 36 cycles per day. During the course of the testing, the FCA successfully performed over 13,500 test cycles. No problems were encountered with any mechanical parts of the FCA including the housing, valve spool, seals or drive motor.

Conclusions

The total test time accumulated on the FCA during this and the prior contract is approximately 18,500 hours (771 days). Thus far, no FCA failure due to premature component wear or failure has occurred, verifying the reliability of the FCA.

Triple Redundant Relative Humidity Sensor Testing

Characterization testing of the TRRHS designed and fabricated under this program was completed. The characterization testing was performed using a test stand specifically designed and fabricated for the TRRHS test program.

Test Support Accessories

A test stand was designed and fabricated to characterize TRRHS performance. The test stand is shown schematically in Figure 35 and photographically in Figure 36. The test stand provides for humidification and monitoring of the RH of the sample air stream, control of the sample air stream flow rate and control and monitoring of temperatures critical to the accurate determination of RH. A Relative Humidity Monitor (previously discussed) is included in the test stand for observation of sensor performance. The test stand will provide a RH range from 18% to 100% in the sensor environmental chamber.

The test stand takes air from a compressed air source, passes it through a gas humidifier which is controlled to impart a pre-determined level of humidity in the air, and routes the air to an enclosed environmental chamber housing the TRRHS. The TRRHS sensor elements respond to the RH level in the process air and the RH readings are displayed on the TRRHS monitor. The wet bulb temperature (temperature of the water in the gas humidifier) is closely controlled and monitored in order to achieve a desired RH in the process air. The temperature of the test chamber is monitored as the dry bulb temperature. These two temperatures, when plotted on a psychrometric chart (previously shown in Figure 15), determine the actual RH of the sensor test chamber.

A comparison of the sensor readings on the TRRHS Monitor with the actual test chamber RH from the psychrometric chart provides an evaluation of sensor performance.

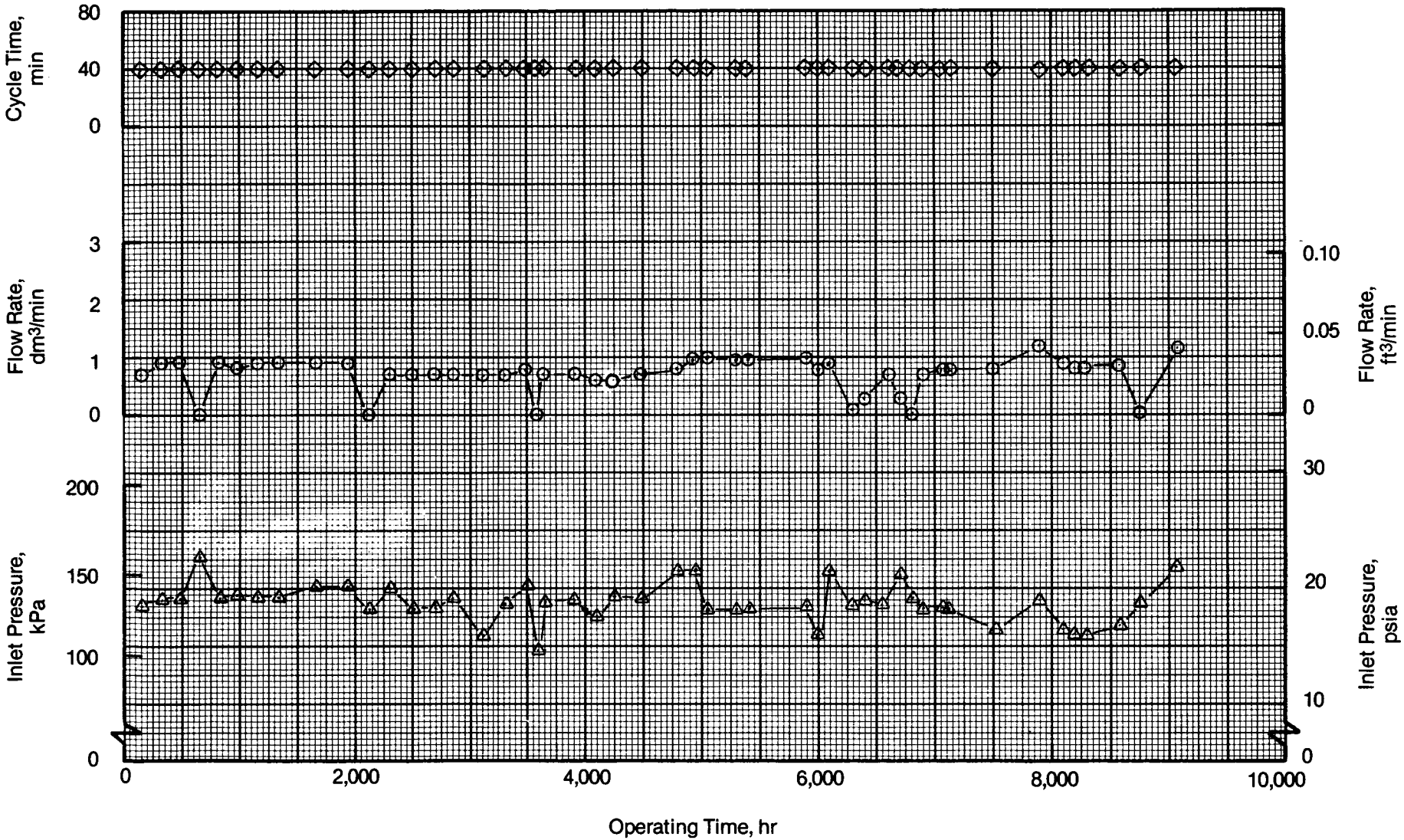

FIGURE 34 FCA ENDURANCE TEST PERFORMANCE

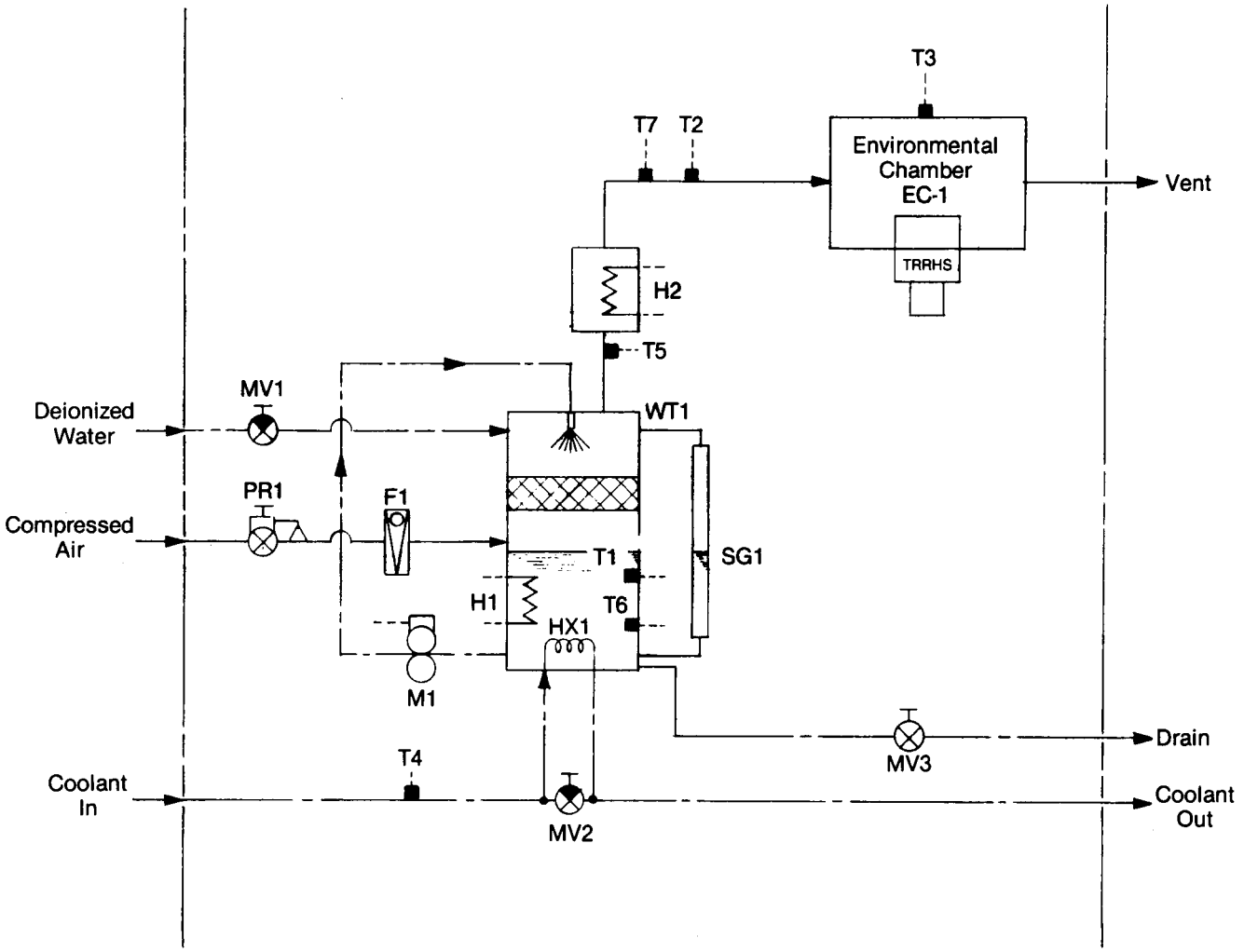

FIGURE 35 TRRHS TEST STAND MECHANICAL SCHEMATIC

ORIGINAL PAGE IS
OF POOR QUALITY

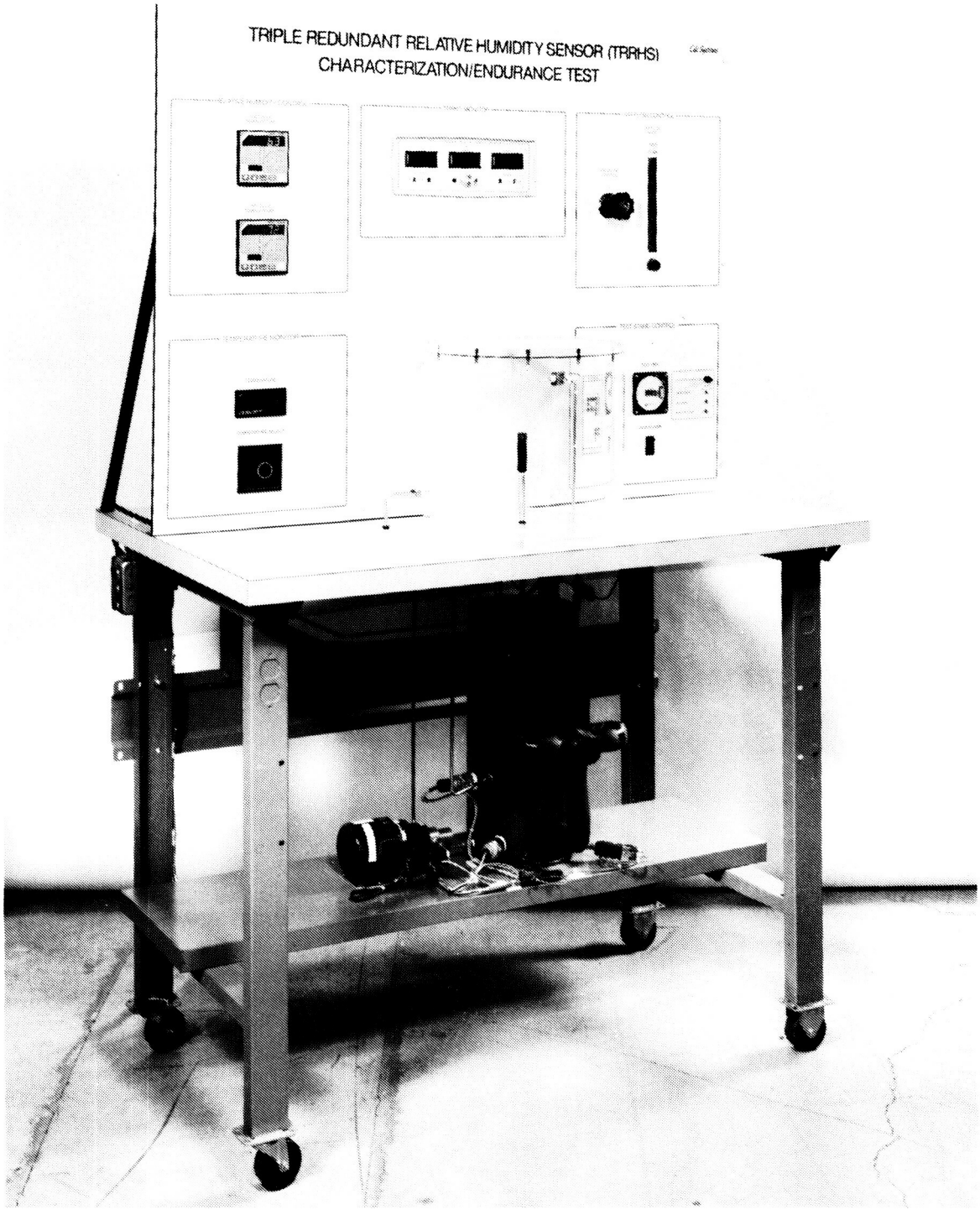

FIGURE 36 TRIPLE REDUNDANT RELATIVE HUMIDITY SENSOR TEST STAND

Testing

Checkout and shakedown testing of the TRRHS test stand provided calibration of all temperature sensors and verified the performance of each automatic shutdown feature and the TRRHS Monitor. The characterization testing evaluated the overall accuracy, repeatability and linearity of the TRRHS.

Following calibration of the individual sensor elements, conditions in the environmental chamber were varied over the operating range of the sensor. The response of the sensor was linear from 18 to 90% RH with only a slight nonlinearity indicated above 90% RH. The accuracy of the sensor elements was within ±3% of actual RH. At 50% RH, the repeatability and short-term stability of the sensor was within ±2%. The sensor was operated for a short interval at 100% actual RH without a permanent adverse effect on the sensor elements.

Conclusions

Short-term testing of the TRRHS indicates a favorable design and sensor selection and promising performance characteristics. More extensive evaluation of the TRRHS is required, particularly with respect to temperature, air velocity, air pressure and sensor position sensitivity. Long-term sensor stability and reliability also require evaluation.

Carbon Dioxide Reduction System Evaluation

A task performed under this program evaluated the effects of CO_2 and H_2 exhausting from the EDC on the Sabatier CO_2 reduction process. A test program was conducted using the CS-1 and the S-CRR fabricated under this program as previously described. The S-CRR was mounted in the exhaust line of the CS-1 subsystem, as shown in Figure 37. Exhaust gases from the S-CRR were analyzed by a gas chromatograph to evaluate S-CRR performance. The performance of the Sabatier reactor was determined by evaluating the efficiency of the reactor in converting the reactant gases to CH_4.

"Conversion efficiency" can be expressed as a percentage of the amount of H_2 or CO_2 reacted, and is dependent upon which component (H_2 or CO_2) is the limiting or "lean" reactant. As previously illustrated in the Sabatier reaction (Figure 24), four moles of H_2 are required to completely convert one mole of CO_2 to one mole of CH_4 and two moles of water vapor. By optimizing the reactor size, catalyst bed composition, reactor temperature profile and reactant gas flow rates, the efficiency of converting stoichiometric quantities of the reactant gases to CH_4 will approach 100%. If the reactant gases are not at the stoichiometric ratio of four moles of H_2 to one mole of CO_2, one reactant gas will be completely reacted (the lean component) while some portion of the second reactant will remain unreacted. For example, if less H_2 is present than required for complete conversion of CO_2, the conversion efficiency based upon reacted H_2 will be greater than the conversion efficiency based upon reacted CO_2 since all H_2 will be reacted and some CO_2 will remain unreacted. Conversion efficiencies based upon the abundant reactant (or reactant in excess) are not an accurate measure of

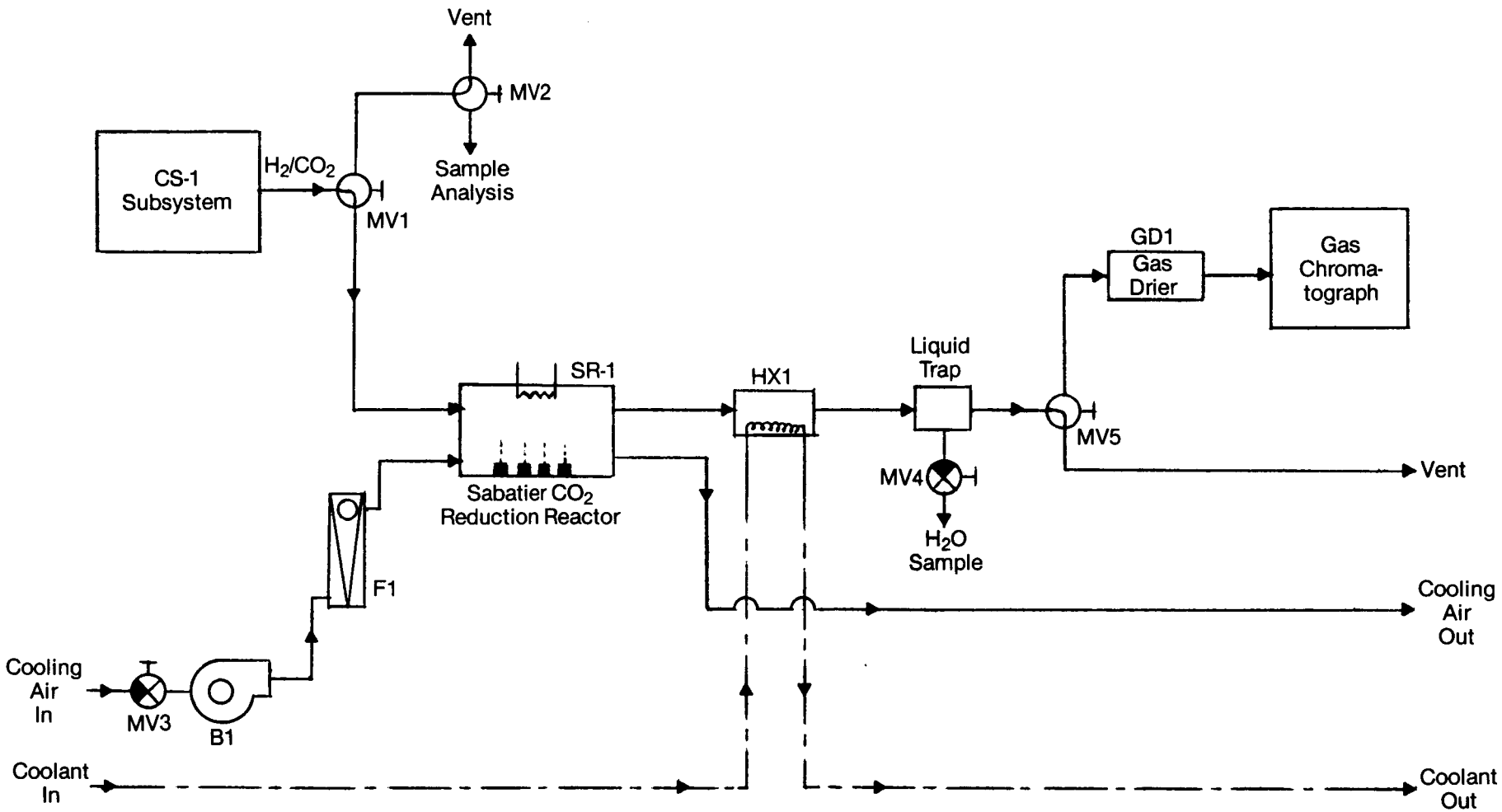

FIGURE 37 SABATIER REACTOR TEST SCHEME

reactor efficiency since the total amount of reactants which could be converted are limited by the quantity of lean, or less abundant, component. Therefore, the lean component in the Sabatier reaction is used to calculate the reactor conversion efficiency.

Testing

Endurance testing of the CS-1/S-CRR system was performed for 1,296 hours (54 days). At the initiation of testing, the CS-1 product gas H_2/CO_2 mole ratio was nominally 3.88 but varied in a range of 3.36 to 4.05 during the term of testing. The operating conditions for the S-CRR evaluation test are presented in Table 10. Since the H_2/CO_2 mole ratio in the CS-1 outlet stream was typically below the stoichiometric requirement for the Sabatier reaction, H_2 (the lean component) was used to determine the reactor conversion efficiency. Hydrogen conversion efficiencies were determined before, at several intervals during and at the end of testing. The reactor conversion efficiency at the start of the test was greater than 98%; conversion efficiency at the end of the test was greater than 99%. These results indicate no reduction in reactor conversion efficiency during the 1,296 hours of testing and no adverse effects of EDC-exhausted H_2 and CO_2 on reactor catalyst performance.

Conclusions

As expected, the S-CRR exhibited no catalyst degradation or loss of catalytic activity when operated in-line with the product gases from the EDC subsystem. Continued testing of the CS-1/S-CRR system is recommended to further evaluate the long-term effects of EDC subsystem exhaust gases on S-CRR catalytic activity. Additionally, optimization of S-CRR operating conditions, including reactor temperature profile and catalyst bed composition, are expected to further enhance S-CRR performance.

AIR REVITALIZATION SYSTEM INTEGRATION TECHNOLOGY STUDIES

Under previous NASA contracts and sponsorship, Life Systems designed, fabricated and evaluated the performance of a one-person Experimental Air Revitalization System.[13] This system was designed to provide the atmosphere revitalization functions necessary to support spacecraft crew members. Under an advanced development program, a one-person integrated ARS will be developed to provide weight, power and volume savings over the use of discrete subsystems.

A series of studies and analyses were performed under this program to define requirements needed to incorporate the EDC CO_2 concentration function into an integrated ARS. The studies included (1) definition of the mechanical/electrochemical assembly of the integrated ARS, (2) definition of the C/M I requirements for the ARS, (3) a study detailing the impact of replacing the EDC with a steamed desorbed amine CO_2 concentrator subsystem in the ARS, (4) a study evaluating techniques for minimizing ARS blower noise and (5) preparation of a subsystem component size and characteristics table. The results of each of these studies are discussed in summary fashion in the following sections, with Figures and Tables used to provide illustrations or examples of the type of information generated by the individual technology studies.

TABLE 10 SABATIER REACTOR TEST OPERATING CONDITIONS

	Nominal	Range
H_2/CO_2 Molar Feed Ratio	3.88	3.36-4.05
H_2 Inlet Flow, cm^3/min (in^3/min)	1,560 (95.2)	1,340-1,610 (81.8-98.2)
CO_2 Inlet Flow, cm^3/min (in^3/min)	400 (24.4)	380-410 (23.2-25.0)
Inlet Temperature, K (F)	716 (830)	704-752 (808-895)
Bed Temperature[a], K (F)	535 (504)	522-572 (481-570)
Bed Temperature[b], K (F)	473 (392)	394-503 (250-446)
Outlet Temperature, K (F)	380 (225)	367-398 (202-257)
Total Operating Time, days	54	—

(a) Thermocouple located approximately 2.54 cm (1.0 in) from bed inlet
(b) Thermocouple located approximately 11.7 (4.6 in) from bed inlet

Mechanical/Electrochemical Assembly Design

The ARS performs the function of humidity control, CO_2 concentration, CO_2 reduction and oxygen (O_2) generation. Technologies utilized are a condensing heat exchanger for humidity control, an EDC for CO_2 concentration, a Sabatier Reactor for CO_2 reduction and a Static Feed Water Electrolyzer (SFWE) for O_2 generation. Also included is the ancillary equipment necessary to move cabin atmosphere through the system and collect both humidity and Sabatier Reactor condensate. The mechanical schematic with sensors for a single-person ARS is shown in Figure 38. A study was completed which defined the preliminary schematics, parts lists, component sizing and selection and heat and mass balances for a one-person Space Station level ARS. The study defined the following:

- The major mechanical components in a one-person ARS, including the weight, power and volume requirements of each component.
- Mass and energy balance calculations based upon inlet atmosphere temperature, RH and CO_2 partial pressure conditions and specifications.
- A mass and energy balance flow scheme.
- The one-person ARS operating interfaces and overall mass and energy balance summary.
- A summary of the system electrical power requirements.

The ARS design specifications, weight, volume and power data are summarized in Table 11.

Control/Monitor Instrumentation Design

A study was performed which identified the means by which the one-person ARS will be controlled. Areas which were evaluated during this study included:

- Sensor and Actuator Identification Code Definitions
- Mode Definitions and Allowable Mode Transitions
- Control Definitions
- EDCM Current Control and EDCM RH Control Definitions
- EDC-FCA Control Definition
- S-CRR Accumulator Level Control and Temperature Control Definitions
- SFWEM Current Pressure and Coolant Temperature Control Definitions
- 2-FPC Temperature Control Definition
- WES-FCA Control Definition
- Dew Point Temperature Control Definition
- Sensor and Input Definitions
- Actuator and Output Definitions
- Steady-State Actuator Conditions

ORIGINAL PAGE IS
OF POOR QUALITY

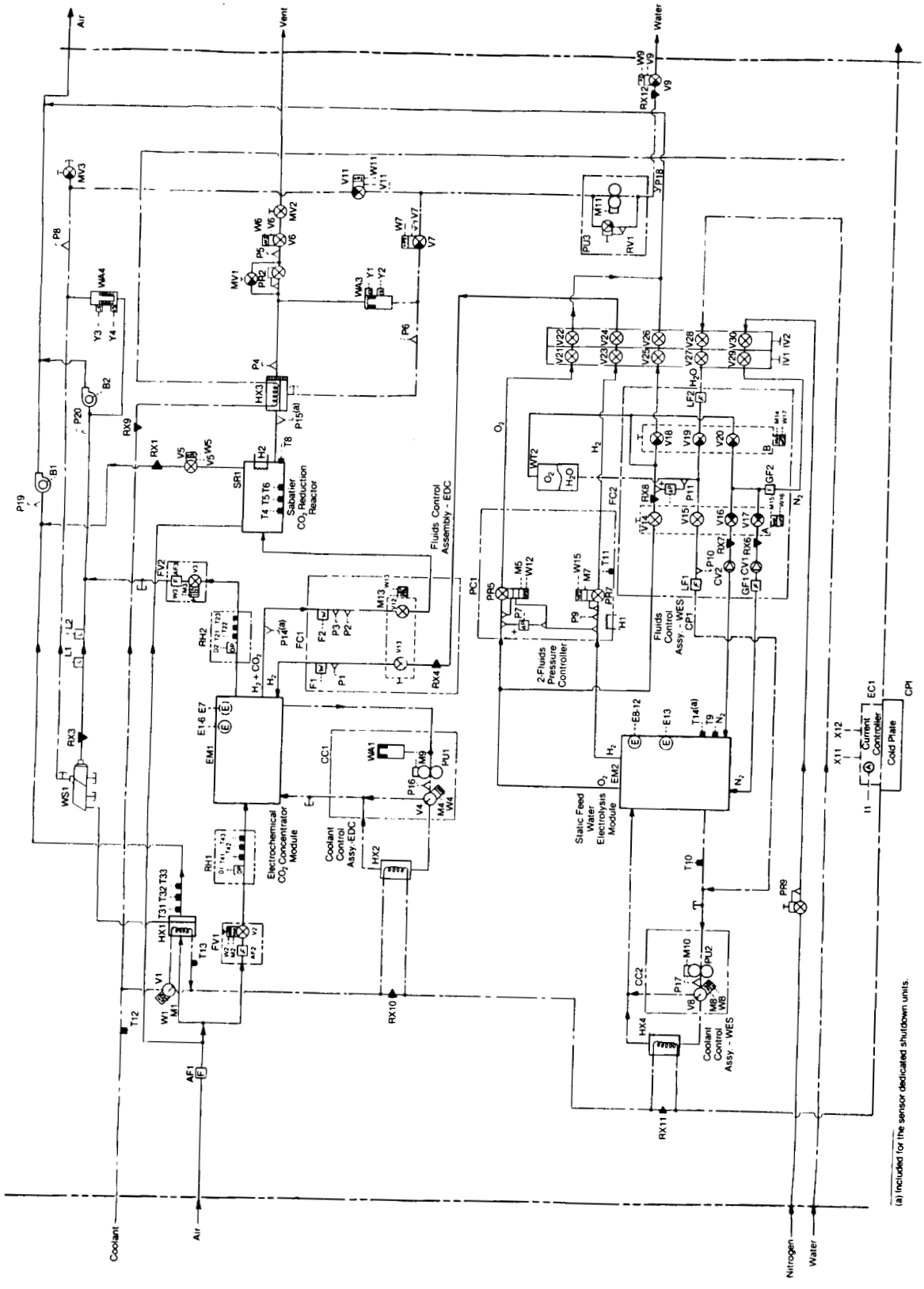

FIGURE 38 ONE-PERSON AIR REVITALIZATION SYSTEM MECHANICAL SCHEMATIC WITH SENSORS

TABLE 11 ARS-1 SPECIFICATION, WEIGHT, VOLUME AND POWER SUMMARY

Crew Size	1
CO_2 Removal Rate, kg/day (lb/day)	1.00 (2.20)
O_2 Generation Rate, kg/day (lb/day)	1.40 (3.08)
Humidity Condensate Rate, kg/day (lb/day)	2.82 (6.22)
Sabatier Reactor Efficiency, %	>95
Cabin pCO_2, Pa (mmHg)	400 (3.0)[a]
Cabin pO_2, kPa (psia)	21 (3.0)
Cabin Temperature, K (F)	291-300 (65-80)
Cabin Dew Point, K (F)	277-289 (40-60)
Cabin Pressure, kPa (psia)	101 (14.7)
Gravity, g	0 to 1
Duty Cycles	Continuous and Cyclic
Mechanical Assembly Weight, kg (lb)	116.0 (255.7)
Mechanical Assembly Dimensions, Height × Width × Depth, cm (in)	91 × 46 × 84 (36 × 18 × 33)
Mechanical Assembly Volume, m^3 (ft^3)	0.36 (12.64)
Mechanical Assembly Power Requirement, W	584

(a) Range = 133 to 1,600 Pa (1 to 12 mmHg.)

The ARS operating modes and mode transitions, control loops and control algorithms and lists of sensors and actuators to be included in the electromechanical assembly were defined. The results can be summarized as follows.

1. The C/M I will have the capability to both control system operation and provide automatic protection against out-of-tolerance conditions.

2. Operation of the ARS-1 will be characterized by five separate modes: Normal, Standby, Purge, Shutdown and Unpowered.

3. Mode transitions will be performed automatically by the C/M I and each mode transition will consist of a series of sequential steps which will provide a safe and orderly change from one mode to the next.

4. To implement each mode and programmed mode transition, a series of specific control loops must be initiated and maintained.

The information evaluated during this study effort will form the architecture for an ARS-1 C/M I. Implementation of this information can be achieved by the selection of the required electrical hardware components and their assembly into an integrated instrumentation package.

Impact of an Alternate CO_2 Removal Subsystem

The objective of this study report was to evaluate the impact of substituting a Steam Desorbed Amine CO_2 Concentrator Subsystem (SDAS) in place of the EDC. The evaluation included the preparation of a schematic, a power, weight and volume comparison and a discussion of operational differences which would result from the substitution.

The SDAS technology is based on the cyclic absorption and desorption of CO_2 by a bed of a weekly basic ion exchange amine resin.[14] The mechanisms for CO_2 absorption and desorption are defined by equations (2), (3) and (4) below and illustrated in Figure 39.

Absorption: $$RzNH_2 + H_2O \rightarrow RzNH_3OH \quad (2)$$

$$RzNH_3OH + CO_2 \rightarrow RzNH_2 \cdot H_2CO_3 \quad (3)$$

Desorption: $$RzNH_2 \cdot H_2CO_3 + \text{Heat} \rightarrow RzNH_2 + CO_2 + H_2O \quad (4)$$

A key parameter not shown by these equations is that the moisture content of each bed must be maintained in the 20 to 35% range for optimal CO_2 absorption. Also, because the process operates in an on-off batch mode, two resin beds are required. This requires having one bed absorbing while the other is desorbing to maintain a steady pCO_2 level.

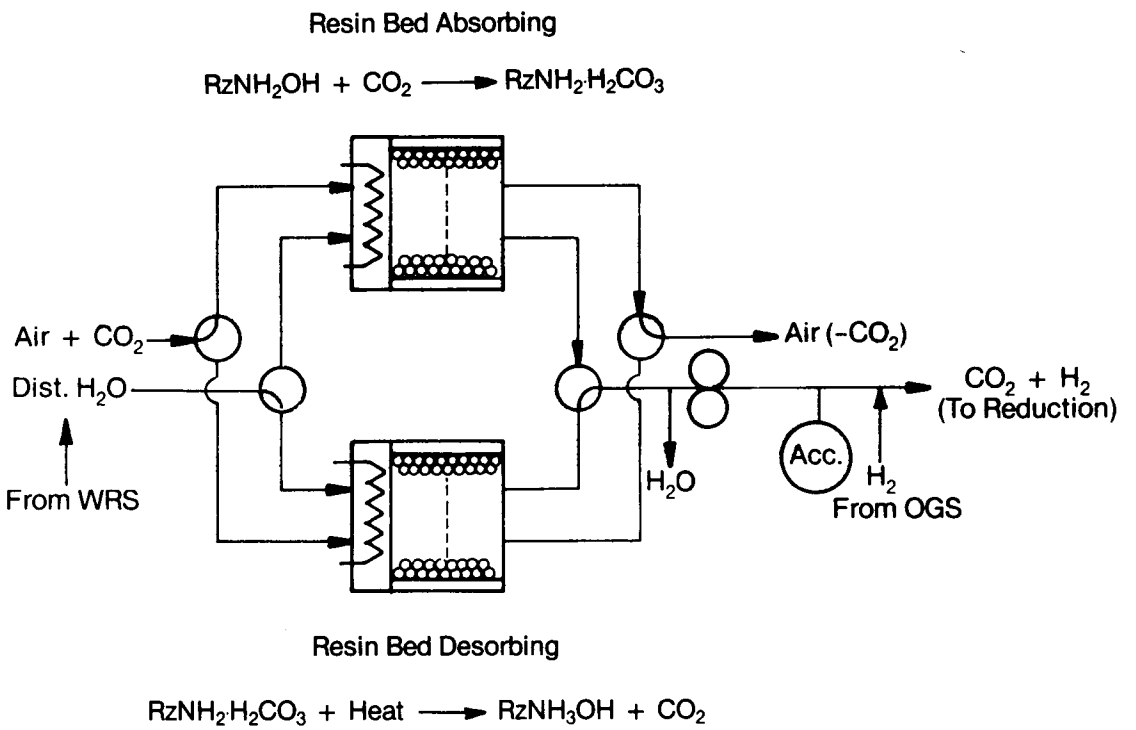

OGS = O_2 Generation Subsystem WRS = Water Reclamation System

FIGURE 39 STEAM DESORBED AMINE CO_2 REMOVAL PROCESS

Figure 40 illustrates the schematic of a single-person ARS system using the SDAS CO_2 concentrator. This can be compared with the ARS using the EDC Subsystem illustrated in Figure 38 (previously shown). A comparison of the two integrated systems resulted in the following key points:

1. Substitution of the SDAS results in a weight increase of 22.5 kg (49.5 lb) and an equivalent weight increase of 110.9 kg (244.1 lb).

2. Substitution of the SDAS results in a negligible net power increase (only 1.8 W).

3. Substitution of the SDAS results in a volume increase of 0.12 m^3 (4.08 ft^3).

4. Substitution of the SDAS results in a net sensible heat rejection decrease of 75 W and a net latent heat rejection increase of 76.4 W.

5. Substitution of the SDAS results in a reduction of the oxygen consumption rate by 0.42 kg/day (0.93 lb/day).

While these values are specifically for a one person-sized system, they can readily be used on a per person basis when scaling the ARS concept to larger crew size.

Substitution of an SDAS into the ARS in place of an EDC module results in significant weight and volume penalties for a spacecraft ARS. In addition, the operating rate flexibility provided by an EDC-based ARS is lost by SDAS-based ARS without further power, weight and volume penalties. An advantage of the SDAS substitution is an ability to operate without concurrent operation of the water electrolysis unit during the dark portion of the orbit, since H_2 is not required for SDAS function. Results of the comparison are summarized in Table 12.

Evaluation to Minimize ARS Blower Noise

A concern in design of the Space Station is high noise levels in the crew environment. A major source of noise are fans and blowers. In recognition of this concern, a study was performed to identify blowers and noise prevention techniques for the ARS.

The mechanical schematic of the ARS was previously shown in Figure 38. As shown, two blowers are utilized. Blower B1 is used to provide air flow through the condensing heat exchanger and the cooling air through the Sabatier Reactor; blower B2 is used to provide air flow through the EDC module and the humidity condensate separator. Several blowers which meet the noise, power, weight and current requirements are commercially available.

Noise reduction techniques were grouped into the following categories:

1. Noise control at the source.
2. Control of the path sound.
3. Noise control at the receiver.

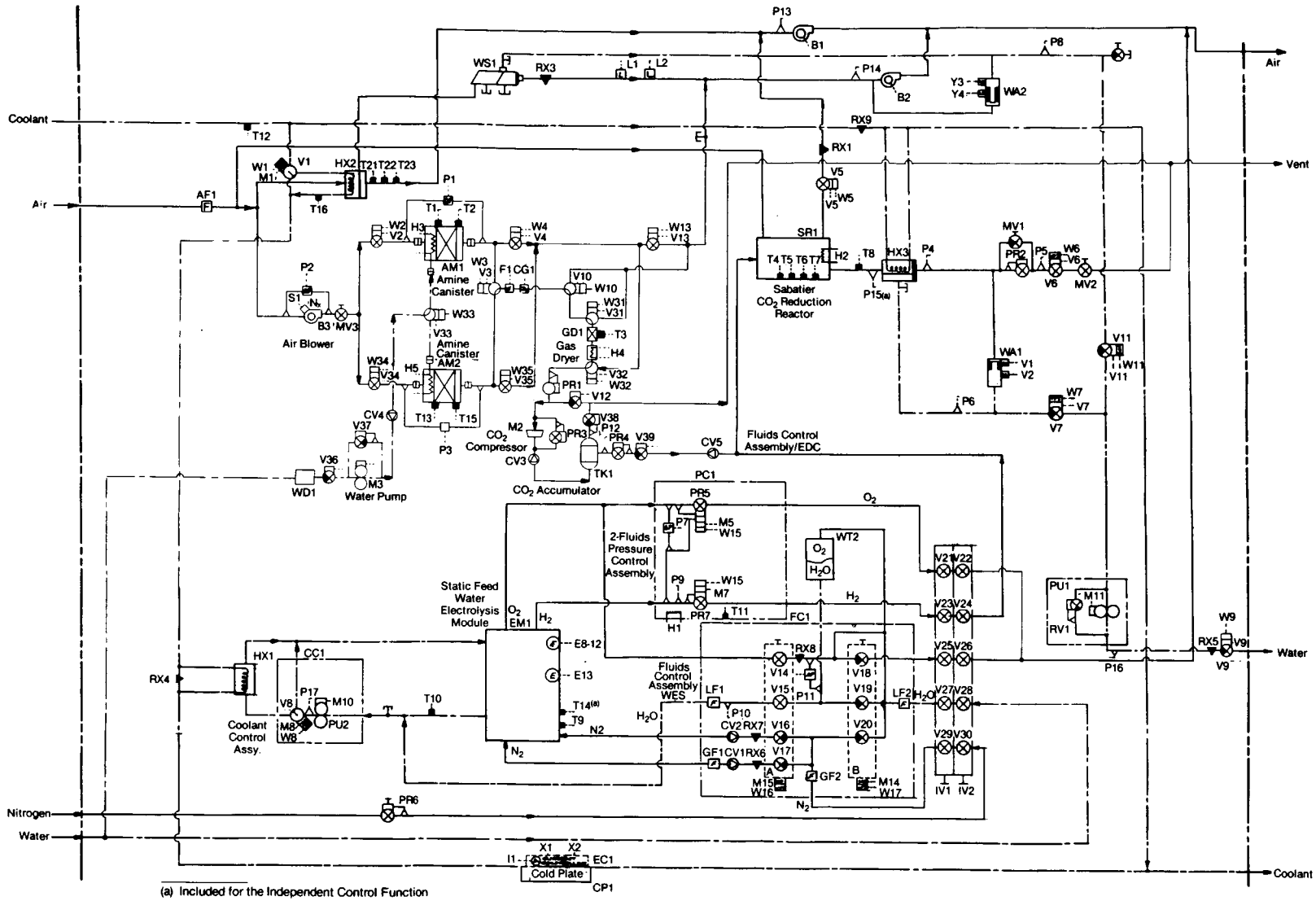

FIGURE 40 ARS-1 MECHANICAL SCHEMATIC WITH SENSORS - SDAS SUBSTITUTION

ORIGINAL PAGE IS
OF POOR QUALITY

TABLE 12 ARS-1 SDAS-EDC COMPARISON

Subsystem Characteristic[a]	ARS-1 With SDAS	ARS-1 With EDC
Total Power, W	57.8[b]	56.0
Total Heat Rejection, W	54.0[b]	129.0
O_2 Consumption, kg/day (lb/day)	——	0.4 (0.9)
H_2O Latent Load, kg H_2O/day (lb H_2O/day)	3.2 (7.0)	0.5 (1.1)
Total Weight, kg (lb)	56.4 (124.3)	33.9 (74.8)
AC Power Penalty, kg (lb)	46.4 (102.2)	15.5 (34.1)
DC Power Penalty, kg (lb)	1.4 (3.0)	2.1 (4.7)
Liquid Coolant Penalty, kg (lb)	——	9.0 (19.9)
Cooling Air Penalty, kg (lb)	21.2 (46.6)	4.2 (9.2)
Humidity Control Penalty, kg (lb)	81.0 (178.5)	12.4 (27.3)
Condensate Processing Penalty, kg (lb)	21.5 (47.3)	3.3 (7.2)
O_2 Generation Penalty, kg (lb)	——	36.6 (80.6)
Total Equivalent Weight, kg (lb)	227.9 (501.9)	117.0 (257.8)
Total Volume, m^3 (ft^3)	0.16 (5.6)	0.04 (1.5)

(a) Penalties: AC Power = 0.32 kg/W (0.71 lb/W), DC Power = 0.27 kg/W (0.59 lb/W), Liquid Coolant = 0.08 kg/W (0.18 lb/W), Cooling Air = 0.20 kg/W (0.44 lb/W), Humidity Control = 11.56 kg/kg/day (25.50 lb/lb/day), Water Processing = 3.06 kg/kg/day (6.75 lb/lb/day), O_2 Generation = 34.93 kg/kg H_2O/day (77.00 lb/lb H_2O/day).

(b) Includes 40 W credit for reduction of blower B2 duty with elimination of EDC and a 91.2 W credit for reduction of the SFWE duty.

An evaluation of each of these noise control/reduction techniques was performed. The most straightforward and best method of noise control is selection of equipment with inherently quiet operation. However, other methods of controlling noise at the source exist including changing the radiating structure and method of mounting. Changing the radiating structure includes techniques such as reducing surface areas of external vibrating parts and placing holes in radiating members to reduce the efficiency of radiation. Mounting can prevent transmission of vibrations from one structure to another through the use of shock mounts and viscous damping materials applied to vibratory surfaces.

Two elements can be altered to control the path of sound: position and environment. The position of the source can be altered by changing the direction and/or the distance from the receiver. Both of these methods are effective only when a free-field condition exists, which is not the case being considered. Addition of acoustical absorbing materials to the environment is very effective and a wide range of these materials exist and can be found in the literature. Attenuating structures such as walls, barriers and total enclosures, can also be added to the environment to reduce noise levels to the receiver. Airborne sound reduction can be achieved by a total enclosure or combination of enclosures. The trade-off between complexity, weight, volume and cost and noise levels must be considered when adding attenuating structures.

Noise control at the receiver consists primarily of personal protective equipment, e.g., ear plugs. This method is not practical for the case being considered.

The evaluation indicated that the most favorable means of blower noise reduction for the ARS is the selection of equipment with inherently quiet operating characteristics. Noise reduction can then be further enhanced through the use of supplementary acoustical absorbing materials.

Sizing and Characteristics Table for an ARS EDC

The preparation of Space Station trade studies requires information on the power, weight and volume characteristics of the candidate technologies. A study was completed which determined power, heat rejection, weight, dimensional, volume packaging, maintainability, safety and reliability data for the individual components of a one-person EDC subsystem. The information was broken down to the ORU level. Data were generated for each of the following components: the EDCM, the FCA, the CCA, the inlet duct assembly, the outlet duct assembly, the RH sensor, the filter and isolation valves and the liquid/liquid heat exchanger. Data defined as a result of this report are summarized in Table 13.

TABLE 13 COMPONENT SIZING AND CHARACTERISTICS SUMMARY FOR ARS-1 EDC

Item No.	Unit or Component Name	Qty.	Total Weight[a] kg (lb)	Qty. On-Board Spares	Weight of On-Board Expendables kg (lb)	Volume cm^3 (in^3)	Heat Rejection, W	Total Average Power, W	Est. Maintenance Time Required, hr/year
1	Module, Elec. CO_2 Conc.	1	14.8 (32.6)	0	0.0	18,354 (1,120.0)	63	-24	<0.8
2	Assembly, Fluids Control	1	1.1 (2.5)	1	0.0	1,966 (120.0)	2	2	<0.8
3	Assembly, Coolant Control	1	1.6 (3.5)	1	0.0	3,277 (200.0)	48	48	<1.2
4	Assembly, Inlet Duct	1	2.0 (4.3)	0	0.0	4,588 (280.0)	—	0	0.0
5	Assembly, Outlet Duct	1	1.0 (2.2)	0	0.0	3,277 (200.0)	—	0	0.0
6	Sensor, Relative Humidity	2	0.6 (1.4)	1	0.0	38 (2.3)	4	4	<0.8
7	Valve, Filter and Isolation	2	2.6 (5.8)	0	0.0	411 (25.1)	0	70	<0.8
8	Heat Exchanger, Liq./Liq.	1	0.7 (1.5)	0	0.0	90 (5.5)	—	0	0.0

(a) Basic System

CONCLUSIONS

The following conclusions are a direct result of the program activities.

1. The CS-1, sized for one-person CO_2 removal capacity, successfully performed its intended function with the liquid-cooled electrochemical cells. Over 4,200 hours of added operation were achieved with an average CO_2 removal efficiency of greater than 90% and an average cell voltage of 0.38 V. Total operating time on the CS-1 has now reached 6,035 hours.

2. Cyclic operation of the CS-1 verified overall subsystem versatility and demonstrated the capability to quickly recover the CO_2 removal process following the transition from Standby operation to Normal operation.

3. Continued endurance testing of the EDC subsystem components (EDCM, FCA and CCA) was successfully conducted. Over 9,000 hours of testing were achieved on the FCA and CCA and over 4,700 hours on the six-cell EDCM, bringing the total test time to 18,500 hours on the FCA, 18,925 hours on the CCA and 19,375 hours on the six-cell EDCM.

4. The isolation valve designed and fabricated under this effort demonstrated effective operation and sealing characteristics against both pressure and vacuum while imparting a pressure drop of 107 Pa differential pressure (0.43 in water) at an air flow rate of 1.22 m^3/min (43.2 ft^3/min).

5. The Sabatier Reactor fabricated under this program to aid in evaluating EDC exhaust gas effects demonstrated design level performance with no deterioration in CO_2 reduction capability after 1,296 hours of operation.

6. The TRRHS demonstrated reliable, accurate relative humidity sensing in the range of 20 to 95% RH.

RECOMMENDATIONS

It is recommended that the current program be extended and focused on continued testing of the CS-1 concept, hardware and ancillary components. This added activity would include continued endurance testing of the CS-1 subsystem in both the normal and cyclic operating modes to accumulate extended performance and reliability data. Continued long-term testing of the six-cell EDCM, the FCA and the CCA would be performed to expand the hardware reliability data base. The follow-on program should include extensive characterization testing of the TRRHS to evaluate its long-term accuracy, reliability, stability and durability. Added endurance testing with the Sabatier CO_2 Reduction Reactor should be performed to determine a long-term performance profile when tested with EDC exhaust gases at the nonstoichiometric H_2/CO_2 mole ratios typically experienced with an EDC. The overall objective of a follow-on activity would be to advance the EDC subsystem to the stage where it can be incorporated into the ECLSS for the Space Station.

REFERENCES

1. Quattrone, P. D.; Babinsky, A. D. and Wynveen, R. A., "Carbon Dioxide Control and Oxygen Generation," Paper No. 70-Av/SpT-8 ASME Conference; Los Angeles, CA; 1970.

2. Wynveen, R. A. and Quattrone, P. D., "Electrochemical Carbon Dioxide Concentrating Systems," Paper No. 71-Av-21, SAE/ASME AIAA Conference; San Francisco, CA; July, 1971.

3. Wynveen, R. A.; Schubert, F. H. and Powell, J. D., "One-Man, Self-Contained CO_2 Concentrator Systems," Final Report, Contract NAS2-6118, NASA CR-114426; Life Systems, Inc., Cleveland, OH; March, 1972.

4. Powell, J. D. et al., "Six-Man, Self-Contained Carbon Dioxide Concentrator Subsystems," Final Report, Contract NAS2-6478, NASA CR-11473; Life Systems, Inc., Cleveland, OH; July, 1974.

5. Schubert, F. H. and Quattrone, P. D., "Development of a Six-Man, Self-Contained Carbon Dioxide Collection Subsystem for Spacecraft Application, Paper No. 74-ENAs-16, Intersociety Conference on Environmental Systems; Seattle, WA; July, 1974.

6. Schubert, F. H.; Marshall, R. D.; Quattrone, P. D. and Wynveen, R. A., "Development of a Three-Man Preprototype CO_2 Collection Subsystem for Spacecraft Application," Paper No. 77-ENAs-19, Intersociety Conference on Environmental Systems; San Francisco, CA; July, 1977.

7. Marshall, R. D.; Ellis, G. S.; Schubert, F. H. and Wynveen, R. A., "Extended Duration Orbiter Study: CO_2 Removal and Water Recovery," Final Report, Contract NAS9-15218, NASA CR-160317; Life Systems, Inc., Cleveland, OH; May, 1979.

8. Schubert, F. H.; Heppner, D. B.; Hallick, T. M. and Woods, R. R., "Technology Advancement of the Electrochemical CO_2 Concentrating Process," Final Report, Contract NAS2-8666, NASA CR-152250; Life Systems, Inc., Cleveland, OH; May, 1979.

9. Marshall, R. D.; Schubert, F. H. and Yang, P. Y., "EDC - A Regenerable CO_2 Removal Subsystem for an Enhanced Capability Orbiter," Paper No. 79-ENAs-34, Intersociety Conference on Environmental Systems; San Francisco, CA; July, 1979.

10. Schubert, F. H. and Lance, N., "Regenerable CO_2 Collection for Spacecraft Application," Paper No. 81-ENAs-28, Intersociety Conference on Environmental Systems; San Francisco, CA; July, 1981.

11. Schubert, F. H.; Hallick, T. M. and Koszenski, E. P., "Advanced Electrochemical Depolarized Concentrator Cell Development," Final Report, Contract NAS2-10204, NASA CR-166141; Life Systems, Inc., Cleveland, OH; December, 1981.

12. Heppner, D. B.; Dahlhausen, M. J. and Schubert, F. H., "Electrochemical Carbon Dioxide Concentrator Subsystem Development," Final Report, Contract NAS2-11129; Life Systems, Inc., Cleveland, OH; November, 1983.

13. Heppner, D. B.; Hallick, T. M. and Schubert, F. H., "Advanced Air Revitalization System Testing," Final Report, Contract NAS2-10961; Life Systems, Inc., Cleveland, OH; June, 1983.

14. Heppner, D. B. and Schubert, F. H., "Electrochemical and Steam-Desorbed Amine CO_2 Concentration: Subsystem Comparison," Paper No. 831120, Intersociety Conference on Environmental Systems; San Francisco, CA; July, 1983.

1. Report No.	2. Government Accession No.	3. Recipient's Catalog No.
NASA CR-177411		NASA CR-177411

4. Title and Subtitle	5. Report Date
ELECTROCHEMICAL CARBON DIOXIDE CONCENTRATOR SUB-SYSTEM DEVELOPMENT - Final Technical Report	March 1986
	6. Performing Organization Code
7. Author(s)	8. Performing Organization Report No.
E. P. Koszenski, D. B. Heppner, C. T. Bunnell	
9. Performing Organization Name and Address	10. Work Unit No.
Life Systems, Inc. 24755 Highpoint Road Cleveland, OH 44122	T-6936
	11. Contract or Grant No.
	NAS2-11783
12. Sponsoring Agency Name and Address	13. Type of Report and Period Covered
National Aeronautics and Space Administration Washington, DC 20546	Contractor Report
	14. Sponsoring Agency Code
	506-64-31

15. Supplementary Notes

Point of Contact: Technical Monitor, Dr. Ted W. Wydeven, LXL:239-04
Ames Research Center, Moffett Field, CA 94035
(415) 694-5738

16. Abstract

Regenerative Carbon Dioxide removal techniques are needed to sustain man in space for extended periods of time. The most promising concept for a regenerative carbon dioxide removal system is the Electrochemical Carbon Dioxide Concentrator (EDC). This device allows for the continuous, efficient removal of carbon dioxide from the spacecraft cabin. This study addressed the advancement of the EDC subsystem by generating subsystem and ancillary component reliability data through extensive endurance testing and developing related hardware components such as electrochemical module lightweight end plates, electrochemical module improved isolation valves, an improved air/liquid heat exchanger and a triple redundant relative humidity sensor. Efforts included fabrication and testing the EDC with a Sabatier Carbon Dioxide Reduction Reactor and generation of data necessary for integration of the EDC into a Space Station air revitalization system. The results of this effort verified the high level of performance, reliability and durability of the EDC subsystem and ancillary hardware, verified the high efficiency level of the Sabatier Carbon Dioxide Reduction Reactor, and increased the overall EDC technology engineering data base. The overall conclusion of the study was that EDC technology and its related ancillary components are approaching the hardware maturity levels required for a Space Station integrated air revitalization system.

17. Key Words (Suggested by Author(s))	18. Distribution Statement
Electrochemical Carbon Dioxide Concentrator, Integrated Air Revitalization System, Sabatier Carbon Dioxide Reduction Reactor	UNCLASSIFIED - UNLIMITED Subject Category: 54

19. Security Classif. (of this report)	20. Security Classif. (of this page)	21. No. of Pages	22. Price*
UNCLASSIFIED	UNCLASSIFIED	92	

*For sale by the National Technical Information Service, Springfield, Virginia 22161