CR-171912
C.2

INTERLEAVED ARRAYS ANTENNA TECHNOLOGY DEVELOPMENT

TECHNICAL BRIEFING

PHASE ONE

AUGUST 20, 1985

GIB-9668

NASA CONTRACT NAS9-17312

GOODYEAR AEROSPACE

INTERLEAVED ARRAYS ANTENNA TECHNOLOGY DEVELOPMENT

TECHNICAL BRIEFING

PHASE ONE

AUGUST 20, 1985

GIB-9668

NASA CONTRACT NAS9-17312

GOODYEAR
AEROSPACE

PRESENTATION OUTLINE

PROGRAM HISTORY

PRIOR CONTRACT REVIEW

- CONFIGURATION AND ELECTRICAL
- MECHANICAL

CURRENT CONTRACT

- SCHEDULE
- PHASE ONE RESULTS
- PHASE THREE

ADVANCED PLANS

RELATED WORK

E-065-2(11-82)1886

PROGRAM HISTORY

-665-2(11-82)1886

CONTRACT STUDIES

- PHASE ONE - OCT 1981 TO JUNE 1982
  - CONSIDER VARIOUS ANTENNA CONCEPTS FOR A MULTIFREQUENCY, MULTIPOLARIZATION SPACEBORNE SYNTHETIC APERTURE RADAR
  - IDENTIFY KEY TECHNOLOGY ITEMS, DEVELOP VERIFICATION PLAN FOR MOST SUITABLE CANDIDATE
- PHASE TWO - SEPT 1982 TO APRIL 1983
  - ADDITIONAL FEASIBILITY STUDIES: ELECTRICAL, MECHANICAL, FABRICATION
  - VERIFICATION PLAN FOR PROPOSED APPROACH
- PHASE THREE - JULY 1983 TO JULY 1984
  - DEMONSTRATE FEASIBILITY OF GRAPHITE EPOXY COMPONENTS BY FABRICATION AND TEST OF WAVEGUIDE ASSEMBLIES
  - ACQUISITION PLAN AND SCHEDULE FOR ANTENNA

REQUIREMENTS AND PARAMETERS

- FREQUENCY: 1.2 GHz ± 25 MHz (L-BAND)
  5.3 GHz ± 75 MHz (C-BAND)
  9.6 GHz ± 150 MHz (X-BAND)
- POLARIZATION: HH, HV, VH, VV
- PEAK POWER: 1.5 KW (L-BAND)
  10 KW (C-BAND)
  10 KW (X-BAND)
- POLARIZATION ISOLATION: 20 dB MIN, 27 dB DESIRED
- VSWR: 1.5 MAXIMUM OVER BANDWIDTH
- SIDELOBES: -18 dB RANGE (ELEVATION)
  -14 dB AZIMUTH

REQUIREMENTS AND PARAMETERS (CONT)

- SIZE: HEIGHT: 2.1m (L-BAND)
  0.51m (C-BAND)
  0.28m (X-BAND)
  LENGTH: 12-18m
- GROUND SWATHS: 100 TO 500 KM
  EMPHASIS ON 100 TO 250
- INCIDENCE ANGLES: 15 TO 60 DEG
- ALTITUDE: 250 TO 800 KM

CONCLUSIONS

- REFLECTOR IS HIGH RISK WITH MINIMAL BENEFITS
  - RESTOWAGE
  - NO ELEVATION BEAM STEERING OR BEAMWIDTH SELECTION
  - BROADBAND MULTIFREQUENCY FEED
  - REQUIRED ILLUMINATION FUNCTION
  - ADAPTABILITY TO SUBSEQUENT MISSIONS
  - THERMAL, MECHANICAL SUSCEPTIBILITY
  - WEIGHT IS MAIN ADAVANTAGE
- LENS HAS SAME ELECTRICAL DISADVANTAGES AS REFLECTOR, PLUS SIZE AND WEIGHT DISADVANTAGES

CONCLUSIONS, CONT

- INTERLEAVED ARRAY MAKES BEST USE OF AVAILABLE APERTURE
  - INDEPENDENT CONTROL OF PERFORMANCE AT EACH FREQUENCY
  - BEAM STEERING, BEAM WIDTH SELECTION
  - CFRP FOR THERMAL STABILITY
  - LARGE NUMBER OF PIECE PARTS IS RISK FACTOR

INTERLEAVED ARRAY

- MAXIMUM USE OF APERTURE
- MINIMUM OVERALL ANTENNA SIZE
- EXCELLENT POLARIZATION ISOLATTION
- WIDE BAND WIDTH RADIATORS AND FEED NETWORKS
- EXCELLENT PEAK POWER HANDLING CAPABILITY
- OVERALL WEIGHT IS COMPETITIVE WITH OTHER CONCEPTS

INTERLEAVED ARRAY (CONT'D)

- LARGE NUMBER OF PIECE PARTS
- COMPLEX ASSEMBLY, TOOLING REQUIRED
- COST MUST BE ADDRESSED
- REQUIRED PARTS FABRICATION, TOLERANCES USING GRAPHITE EPOXY COMPOSITES ARE FEASIBLE USING EXISTING TECHNOLOGY
- DEPLOYMENT/STOWAGE OF ANTENNA CAN BE COMPATIBLE WITH SHUTTLE REQUIREMENTS

GRAPHITE EPOXY ANTENNA ADVANTAGES

- ELECTRICAL
  - LOWEST LOSS AT X-BAND AND ABOVE
  - OPEN-ENDED WAVEGUIDE RADIATORS HAVE BEST PERFORMANCE OVER WIDE SCAN ANGLES AND FREQUENCY BANDS
  - HIGH PEAK POWER CAPABILITY
  - LOW CROSS-POLARIZED COMPONENTS
  - EXCELLENT SIDELOBE CONTROL
  - BEAM POINTING ACCURACIES
  - TRACKING NULL DISTORTIONS

GRAPHITE EPOXY ANTENNA ADVANTAGES (CONT)

- MECHANICAL
  - MINIMAL THERMAL DISTORTIONS
  - STIFFNESS TO WEIGHT RATIO

PRIOR CONTRACT REVIEW

E-665-2(11-82)1886

CONFIGURATION AND ELECTRICAL

INTERLEAVED ARRAY CONFIGURATION

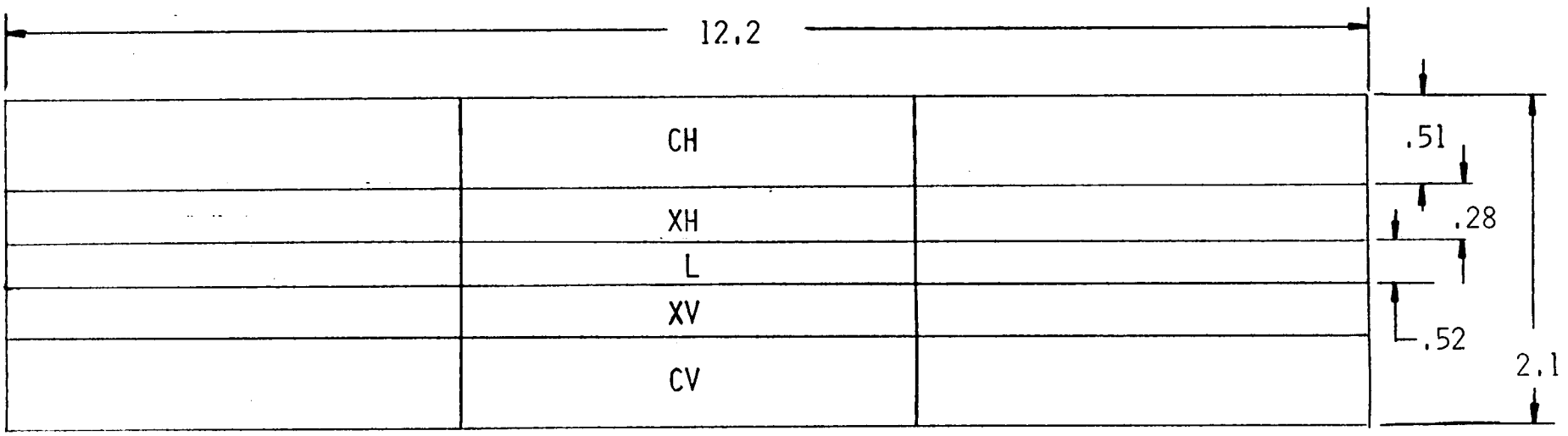

GIB-9668

L - BAND SLOTS / X - BAND RECT WG'S

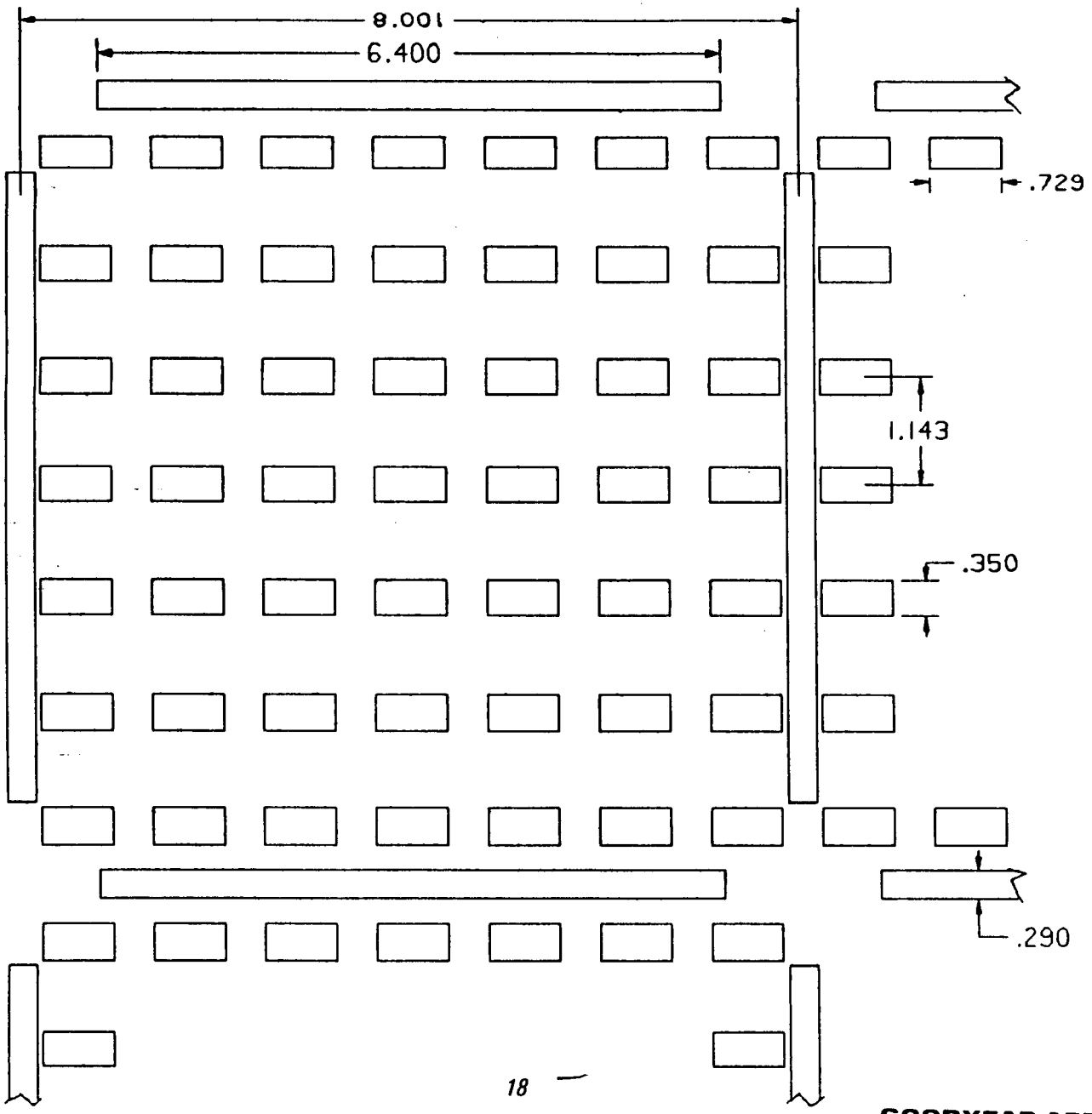

GOODYEAR AEROSPACE

L - BAND SLOTS / C - BAND RECT WG'S

GIB-9668

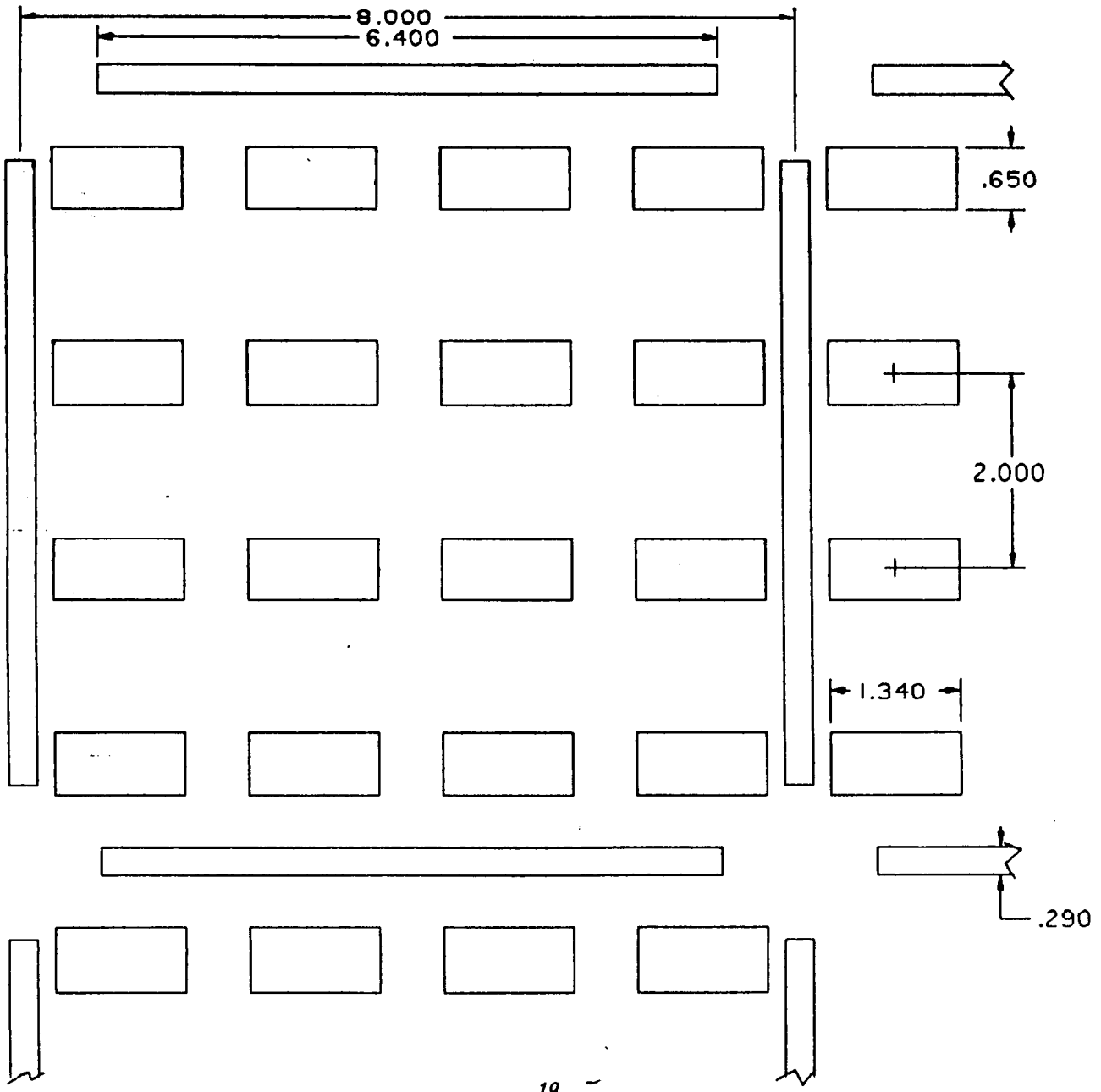

GOODYEAR AEROSPACE

ARRAY CONFIGURATION

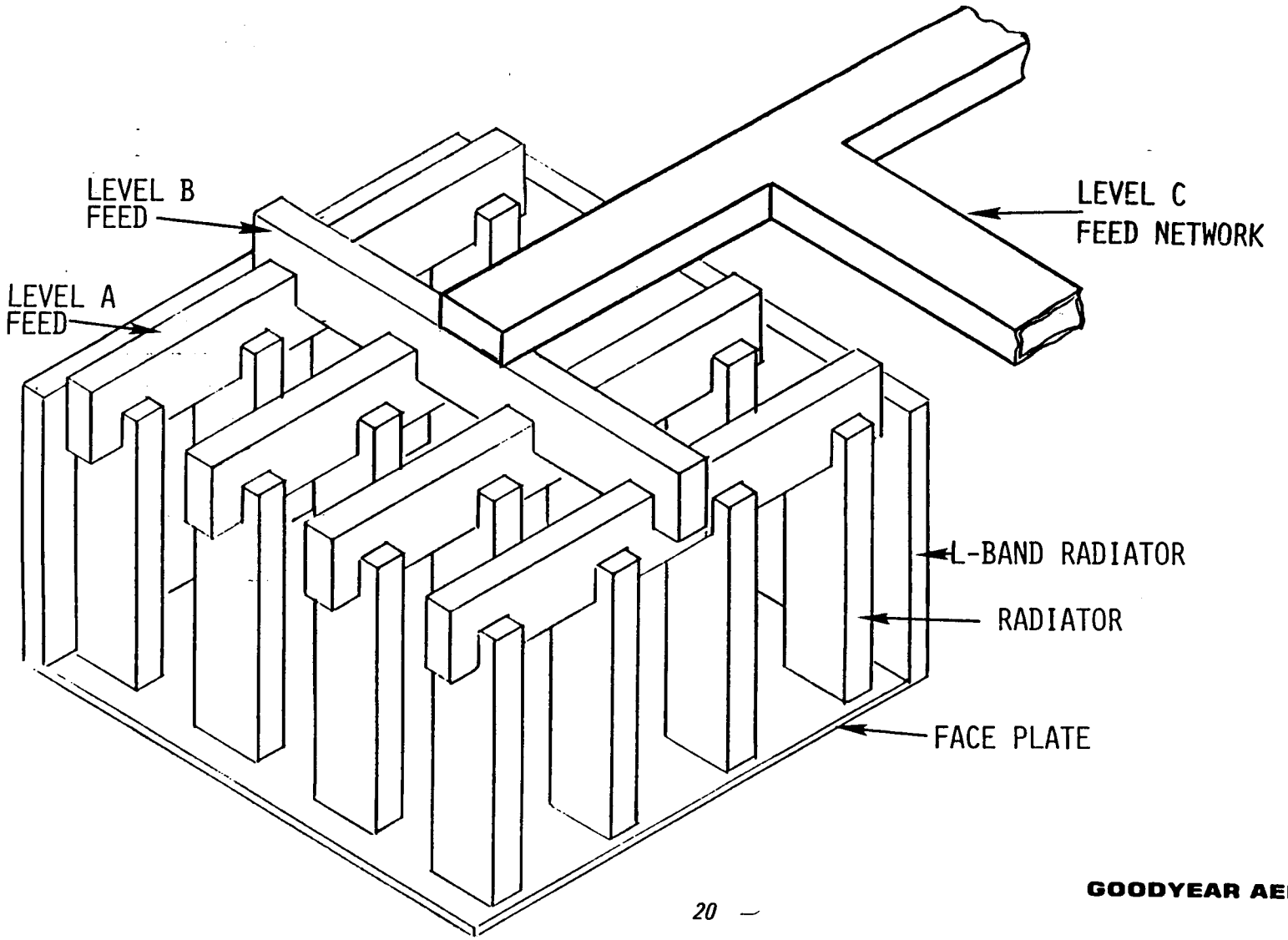

COUPLING SLOT CONCEPT

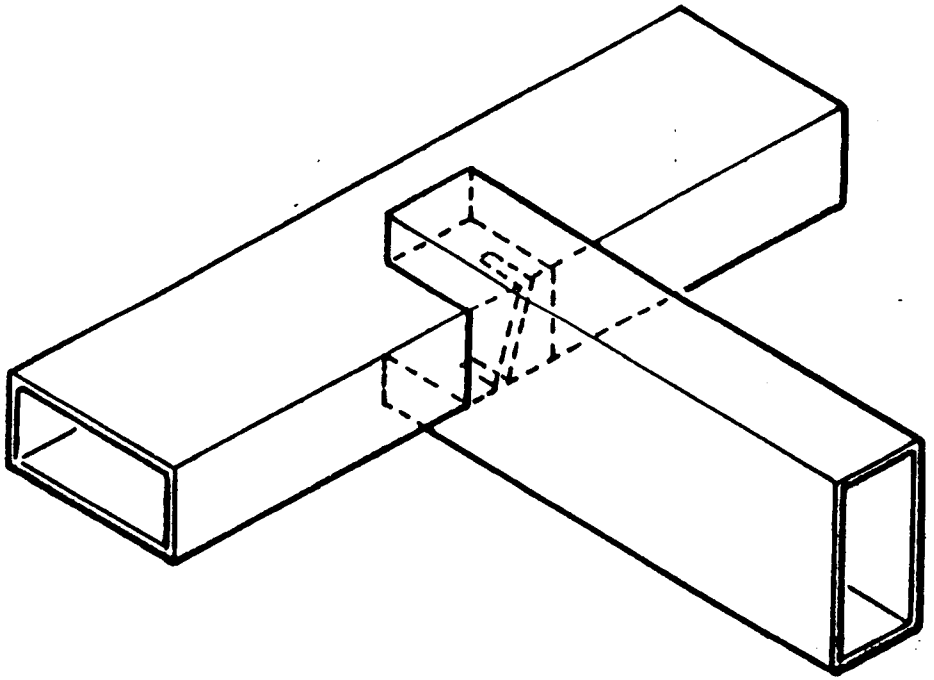

365-2(11-82)1886

X - BAND FEED NETWORK

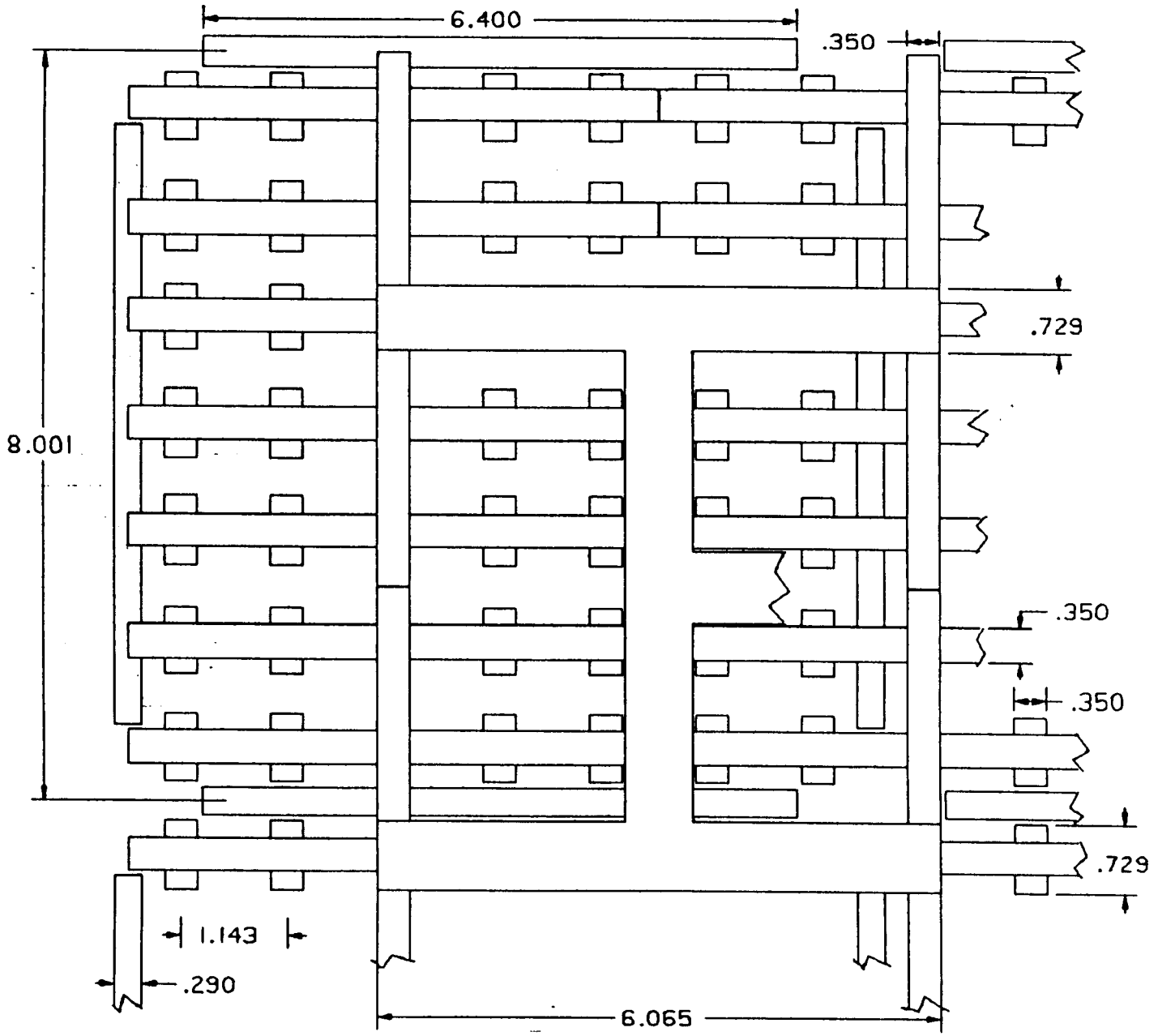

C - BAND FEED NETWORK

GIB-9668

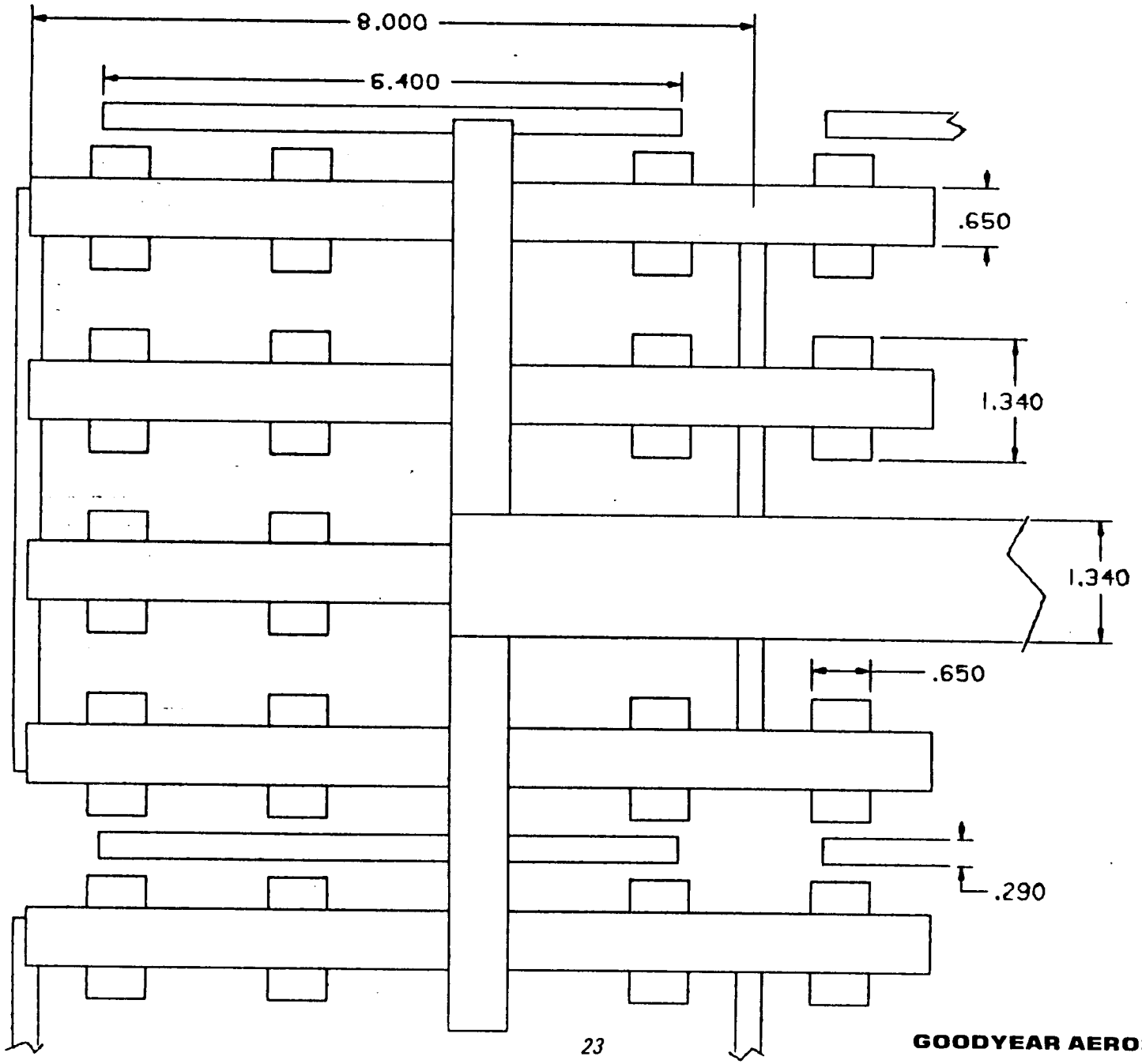

GOODYEAR AEROSPACE

PANEL C- / X - BAND FEED NETWORKS

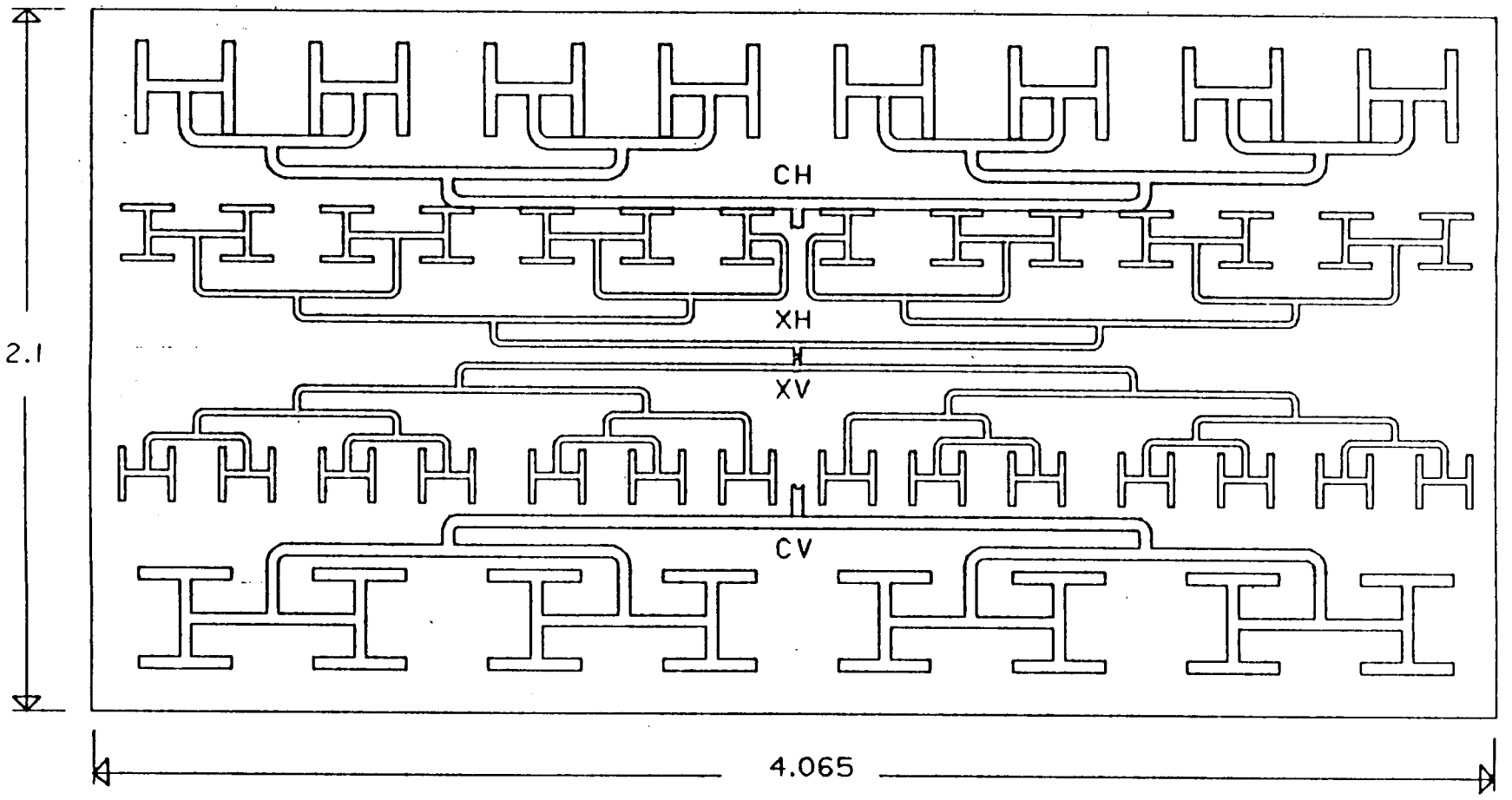

PANEL FEED FOR L-BAND

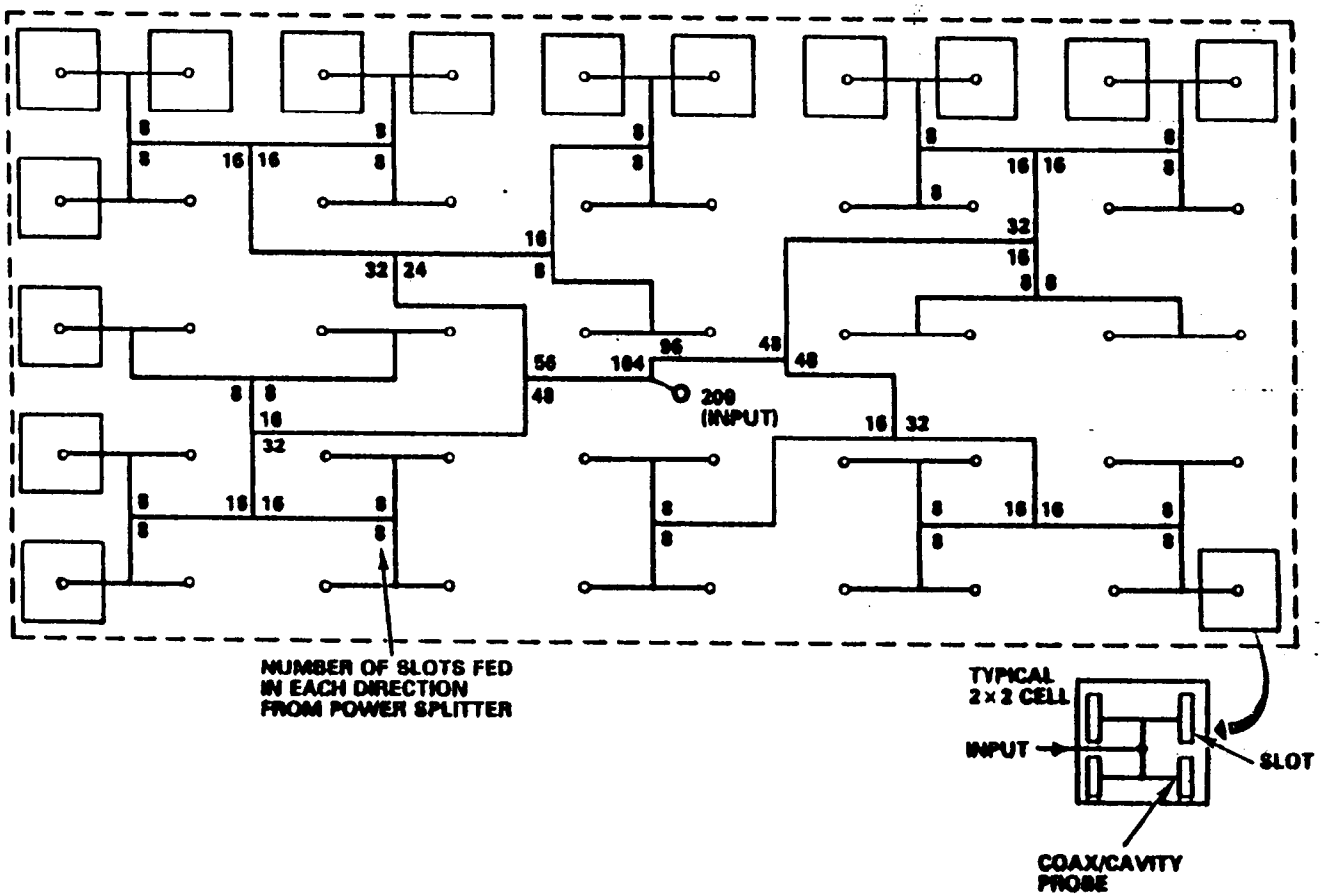

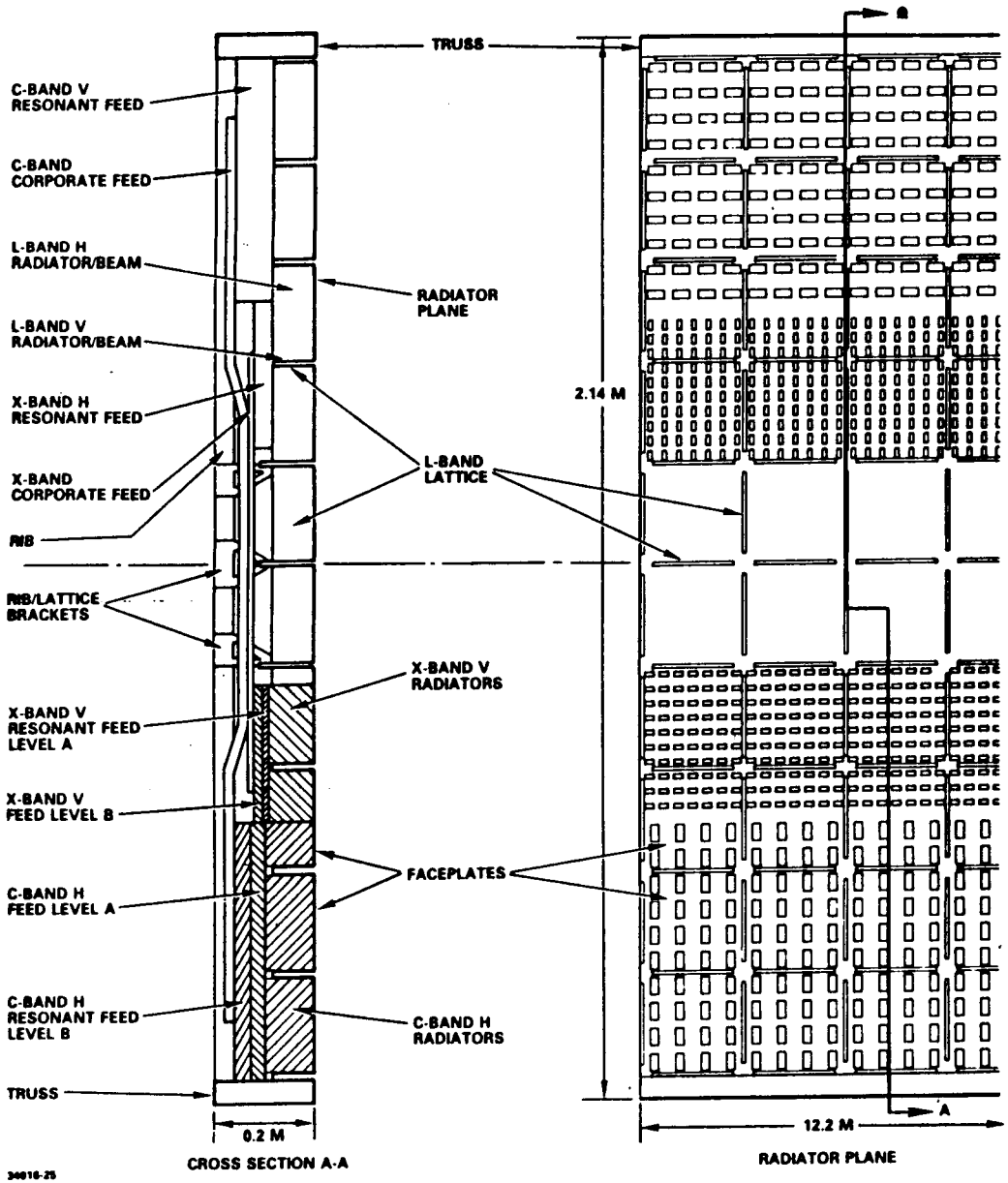

ANTENNA CONSTRUCTION

ANTENNA DIMENSIONS

- ARRAY - DEPLOYED: 12.2m LONG (40.02 FT)
  2.2m HIGH (7.22 FT)
  0.20m THICK (8 INCHES)

  STOWED: 4.06m LONG (13.32 FT)
  2.2m HIGH (7.22 FT)
  .635m THICK (25 INCHES)

- RADIATOR - L-BAND: 6.40 x 0.290 INCHES
  C-BAND: 1.340 x 0.650 INCHES
  X-BAND: 0.729 x 0.350 INCHES
  } 0.020 INCH WALL THICKNESS

- NUMBER OF RADIATORS PER POLARIZATION:
  L-BAND: 600
  C-BAND: 2400
  X-BAND: 4800

GAIN BUDGET

	L	C	X
DIRECTIVITY, $4\pi A/\lambda^2$, dB	37.6	43.9	46.2
LOSSES, dB			
APERTURE TAPER	0.5	0.5	0.5
VSWR (1.5:1)	0.2	0.2	0.2
CORPORATE FEED	1.70	1.9	3.0
RANDOM ERRORS	0.15	0.15	0.15
THERMAL, MECHANICAL DISTORTIONS	0.10	0.10	0.20
CONTINGENCY	0.3	0.5	0.5
TOTAL LOSSES, dB	2.95	3.25	4.35
NET GAIN, dB	34.65	40.65	41.85

EXPECTED PERFORMANCE

FREQUENCY	GAIN	BEAMWIDTH AZ	BEAMWIDTH EL	SIDELOBES AZ	SIDELOBES EL	CROSS-POLARIZATION
L	34.8	1.0	6.7	14	20	> 30
C	40.7	.25	6.9	14	19.2	> 30
X	41.8	.14	6.6	14	18.3	> 30

SINGLE AXIS SCAN

- MUST PLACE RADIATORS CLOSER TOGETHER IN SCAN PLANE. ±25 DEGREES IS FEASIBLE, BUT MAY REQUIRE DIELECTRIC OR RIDGE LOADING FOR H-PLANE POLARIZATION.

- FEED CONCEPT MODIFIED TO FEED ROWS, WITH ONE PHASE SHIFTER PER ROW.

PHASED ARRAY SINGLE BAND FEED NETWORK FOR ENTIRE ARRAY

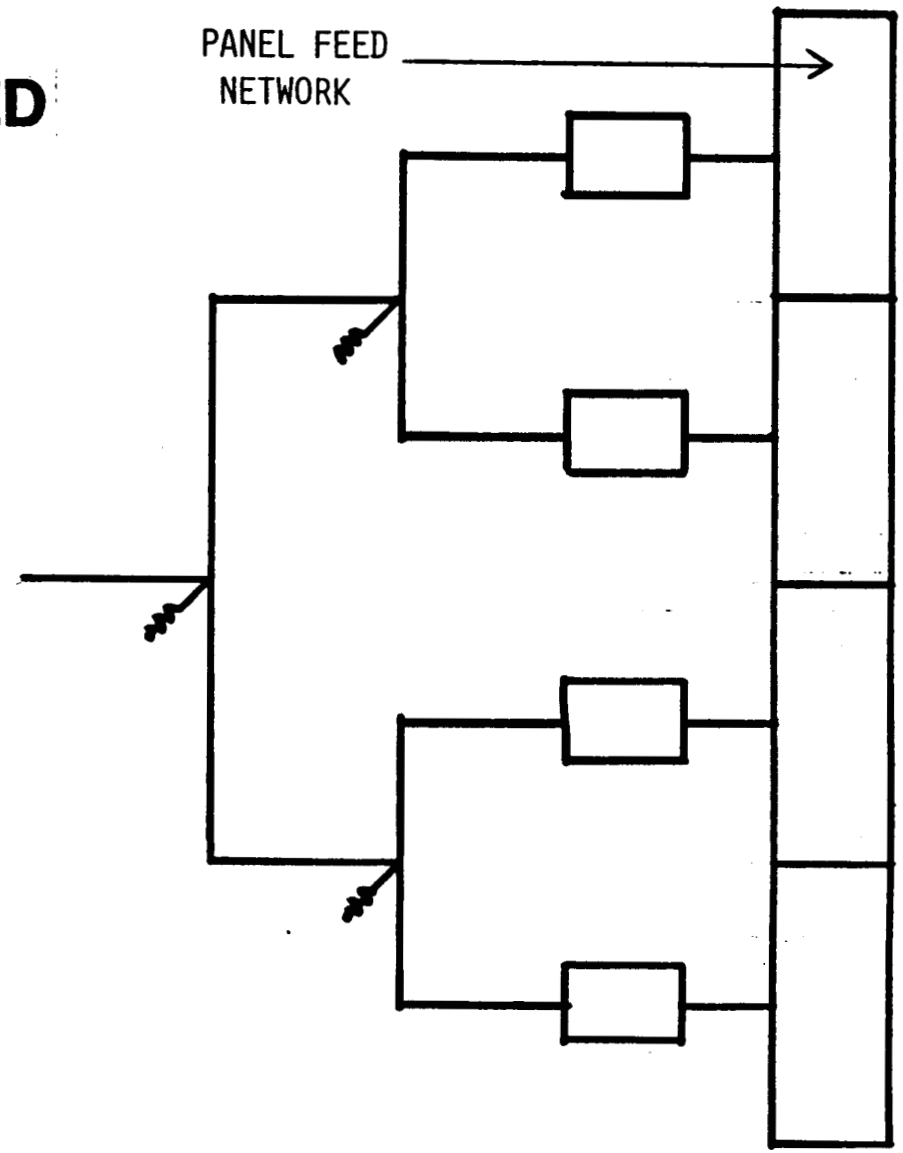

PHASED ARRAY ELEVATION PLANE FEED NETWORK

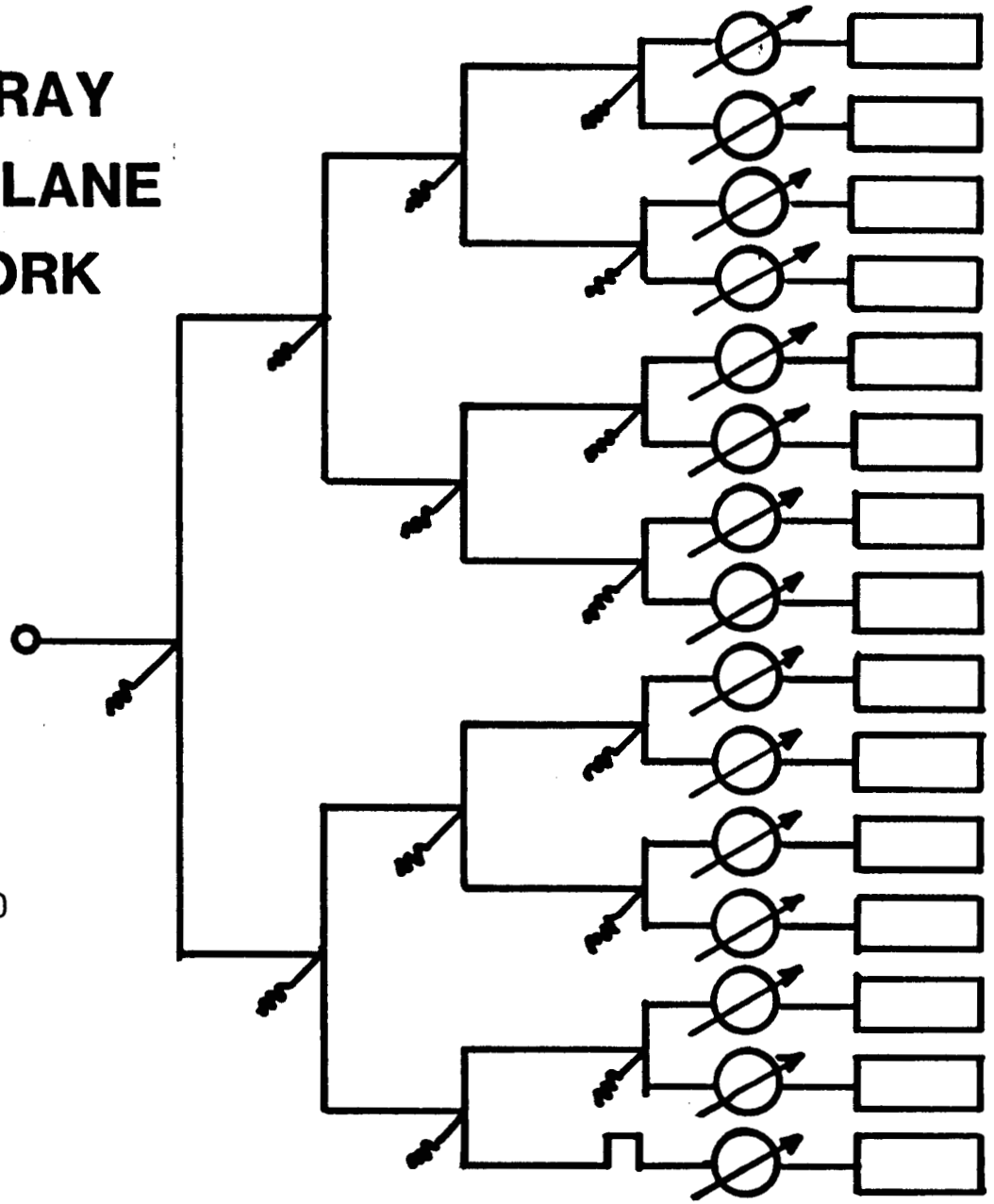

LEGEND:

AZIMUTH PLANE CORPORATE FEED

HYBRID

SCANNABLE INTERLEAVED ARRAY

GIB-9668

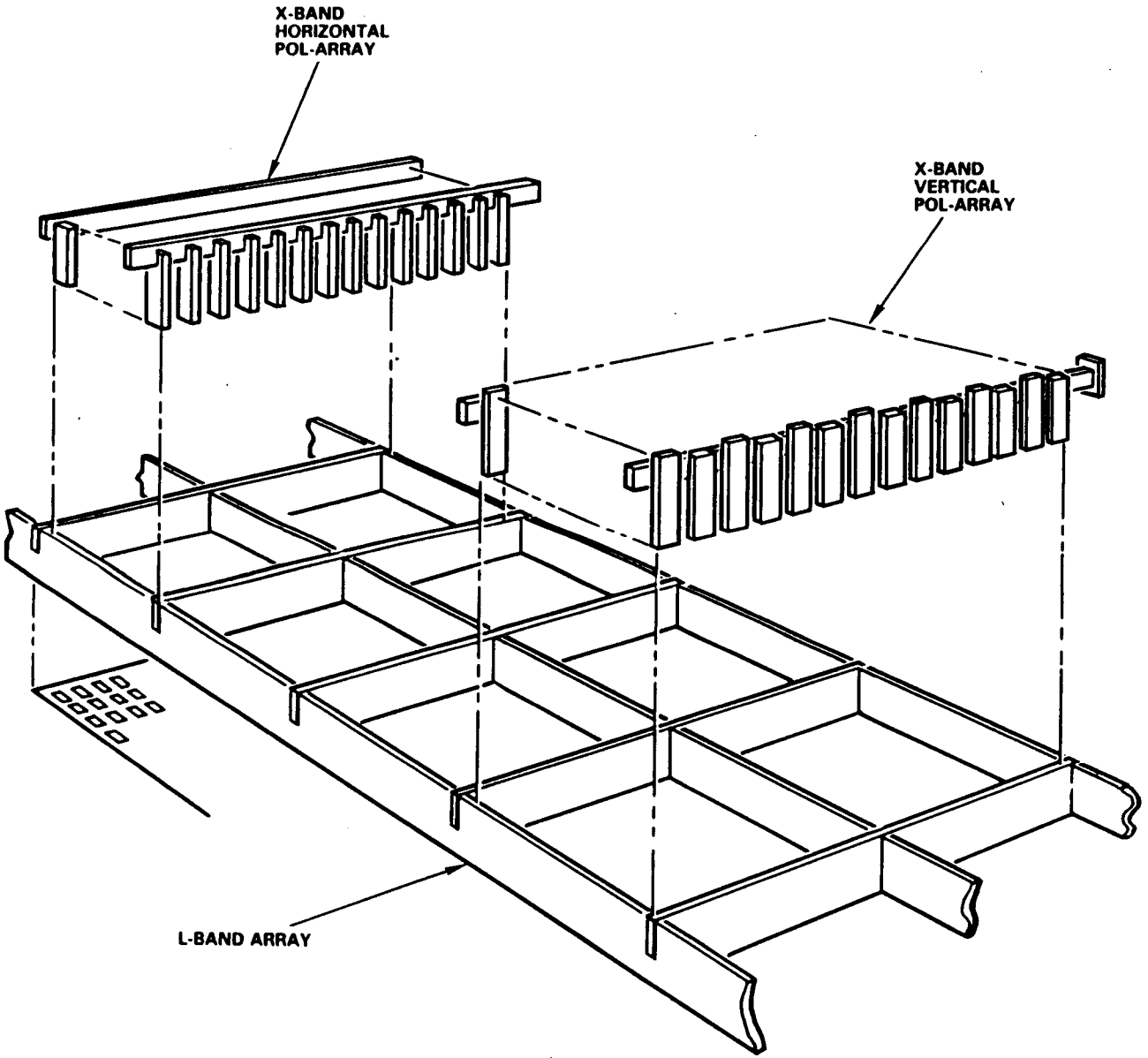

GOODYEAR AEROSPACE

E-665-2(11-82)1886

KEY HARDWARE AND PERFORMANCE

CRITICAL	LONG-LEAD	DEVELOPMENT
• METALLIZED GRAPHITE EPOXY WAVEGUIDE • COMPLEX WAVEGUIDE ASSEMBLIES • COMPACT L-BAND RADIATOR AND ASSEMBLY • MASS PRODUCTION TECHNIQUES • RF LOSSES • ASSEMBLY TOLERANCES	• X, C-BAND ROTARY JOINTS • DEPLOY/STOW PANEL DRIVE • DEPLOY/STOW ANTENNA DRIVE • L-BAND COAX COMPONENTS • PANEL CROSSOVER CABLES • PANEL SUPPORT STRUCTURE • ELECTRICAL PERFORMANCE • MULTIPACTOR AVOIDANCE • SPACE ENVIRONMENTAL EFFECTS	• THERMAL CONTROL BLANKETS • MISCELLANEOUS STRUCTURE • PANEL HINGES • MISCELLANEOUS RF HARDWARE

PROOF-OF-CONCEPT PANEL DEVELOPMENT

OBJECTIVE: TO ESTABLISH EXPECTED PERFORMANCE OF INTERLEAVED ARRAY ANTENNA AND TO DEMONSTRATE FEASIBILITY OF APPROACH.

TASKS:

(A) DESIGN, FABRICATE, AND TEST A GRAPHITE EPOXY UNIT CELL. PERFORM ELECTRICAL, VIBRATION, AND THERMAL VACUUM TESTS. COMPARE DATA TO THEORETICAL, AND PROJECT DATA TO FULL ANTENNA.

(B) DESIGN, FABRICATE AND TEST A FULL PANEL USING GRAPHITE EPOXY COMPONENTS.

(C) PERFORM ELECTRICAL, MECHANICAL, AND THERMAL ANALYSES USING DATA FROM (A), AND (B).

(D) DEVELOP OTHER LONG LEAD COMPONENTS.

NOTES:

(1) UNIT CELL IS CONSIDERED MINIMUM SIZE TO DEMONSTRATE REQUIRED PERFORMANCE OF CONCEPT. CONSISTS OF A 10 X 10 ARRAY OF X-BAND RADIATORS PLUS FEED NETWORK, A 10 X 10 ARRAY OF C-BAND RADIATORS PLUS FEED NETWORK, AND 16 L-BAND RADIATORS PLUS FEED.

MECHANICAL DESIGN

- THERMAL DISTORTIONS
- PREVIOUS CONTRACT
- SAR ANTENNA APPLICATION

TEMPERATURE INDUCED MECHANICAL DISTORTIONS

- ABSOLUTE DIMENSION CONTROL (TEMPERATURE RANGE)
  - WAVEGUIDE INTERIOR DIMENSIONS
- RELATIVE DIMENSION CONTROL (TEMPERATURE DIFFERENTIALS)
  - CORPORATE FEED LENGTHS
  - ARRAY FLATNESS

THERMAL CONTROL:

- FRONT: ALPHA QUARTZ CLOTH
- BACK: MULTI-LAYER SILVERED KAPTON
- SIDES: SECOND SURFACE SILVERED TEFLON

THERMAL COEFFICIENT OF EXPANSION

CONDITION	MAXIMUM T.C.E
• ABSOLUTE DIMENSION CONTROL	
• WAVEGUIDE INTERIOR ± .003 INCHES	$4.5 \times 10^{-6}/°F$
• RELATIVE DIMENSION CONTROL	
• CORPORATE FEED	
LENGTH DIFFERENCE ≤ .038 INCHES RMS	$0.7 \times 10^{-6}/°F$
• ARRAY FLATNESS ± .100	$0.8 \times 10^{-6}/°F$

MATERIAL SELECTION

	ALUMINUM	GRAPHITE/EPOXY	
THERMAL COEFFICIENT OF EXPANSION $10^{-6}\ \frac{in}{in°F}$	24	0	≤ .7 REQUIRED
MODULUS OF ELASTICITY $10^{3}\ \frac{lb.}{in^2}$	10	26	LESS VOLUME REQUIRED, THINNER WALL
DENSITY $\frac{lb.}{in^3}$	.098	.06	40% LIGHTER
TENSIILE STRENGTH $10^{3}\ \frac{lb.}{in^2}$	35	30	NOT CRITICAL

GRAPHITE WAVEGUIDE HERITAGE

- SATELLITE REFLECTOR FEEDS
- AIRBORNE ANTENNAS
- NAVAL SURVEILLANCE

PHASE THREE (PRIOR CONTRACT)

- FEASIBILITY OF PLATED GRAPHITE EPOXY WAVEGUIDE FOR SPACE ANTENNA
- DEVELOP, PROCURE, FABRICATE AND TEST COMPONENTS
- INVESTIGATE ASSEMBLY PROCESSES

GRAPHITE COMPOSITE ELEMENTS

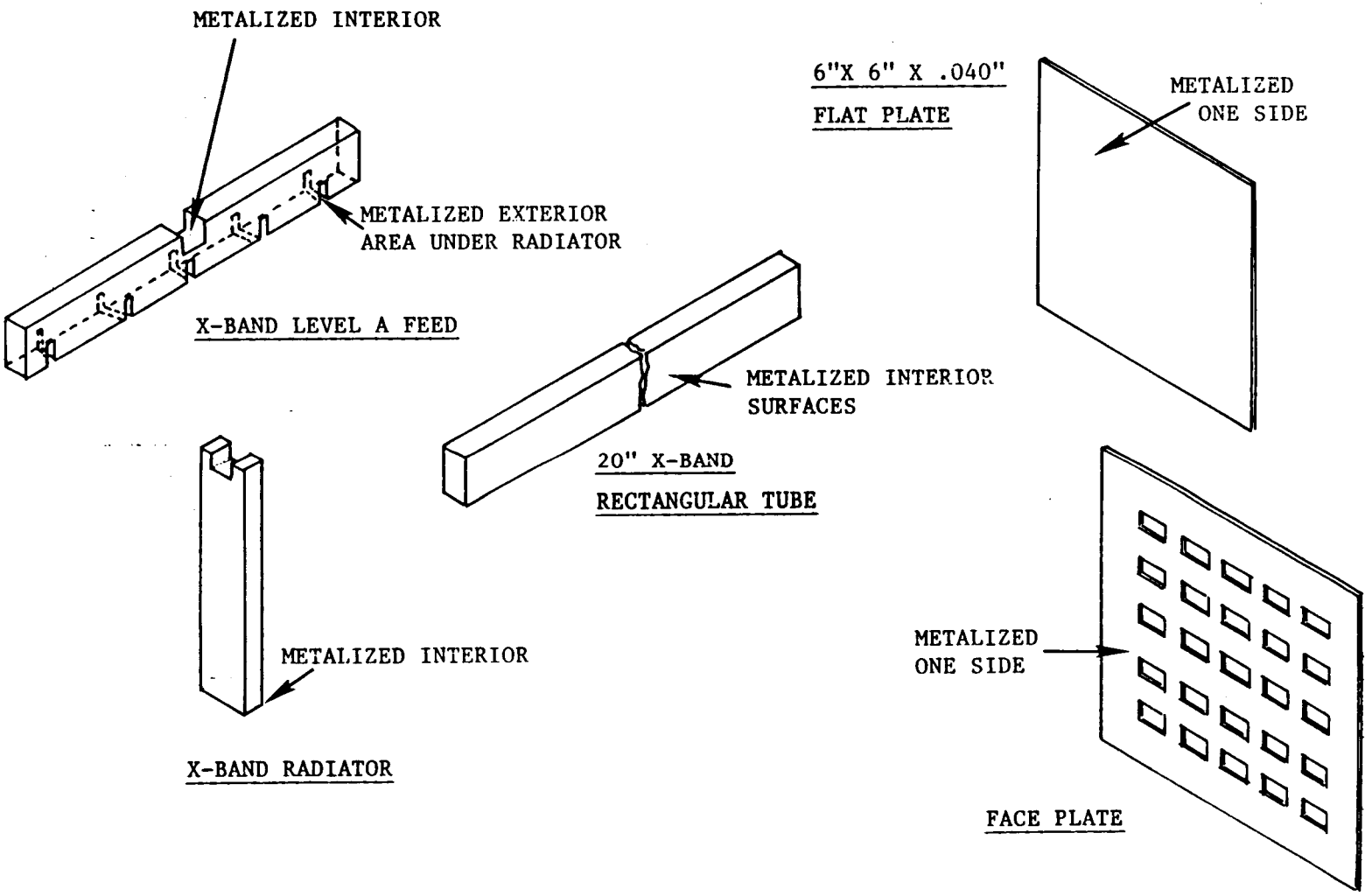

PART PRODUCTION TECHNIQUES

PROCESSES

- FILAMENT WINDING
- OPEN MOLD LAMINATION
- PULTRUSION
- COMPRESSION MOLDING

INTERIOR TOLERANCES:

- ± .002 REQUIRED
- ACHIEVABLE IN LARGE QUANTITIES

VENDOR SURVEY

VENDOR	AVERAGE COST/PART	TECHNIQUE
FIBER SCIENCE	$ 12.00	FILAMENT WINDING
DITTMER & DACY	$ 28.00	COMPRESSION MOLDING
COMPOSITE OPTICS INC.	$200.00	HAND LAYUP MANDREL/MOLD

- CONSTRUCTION: 6 OR 8 PLY UNIDIRECTIONAL
- FIBER: P50 - P70
- RESIN SYSTEM: 930 or E-42 EPOXIES

PART PRODUCTION

COMPRESSION MOLD
FIBERITE HYE2030D PREPREG.
P75 FIBER
930 EPOXY RESIN

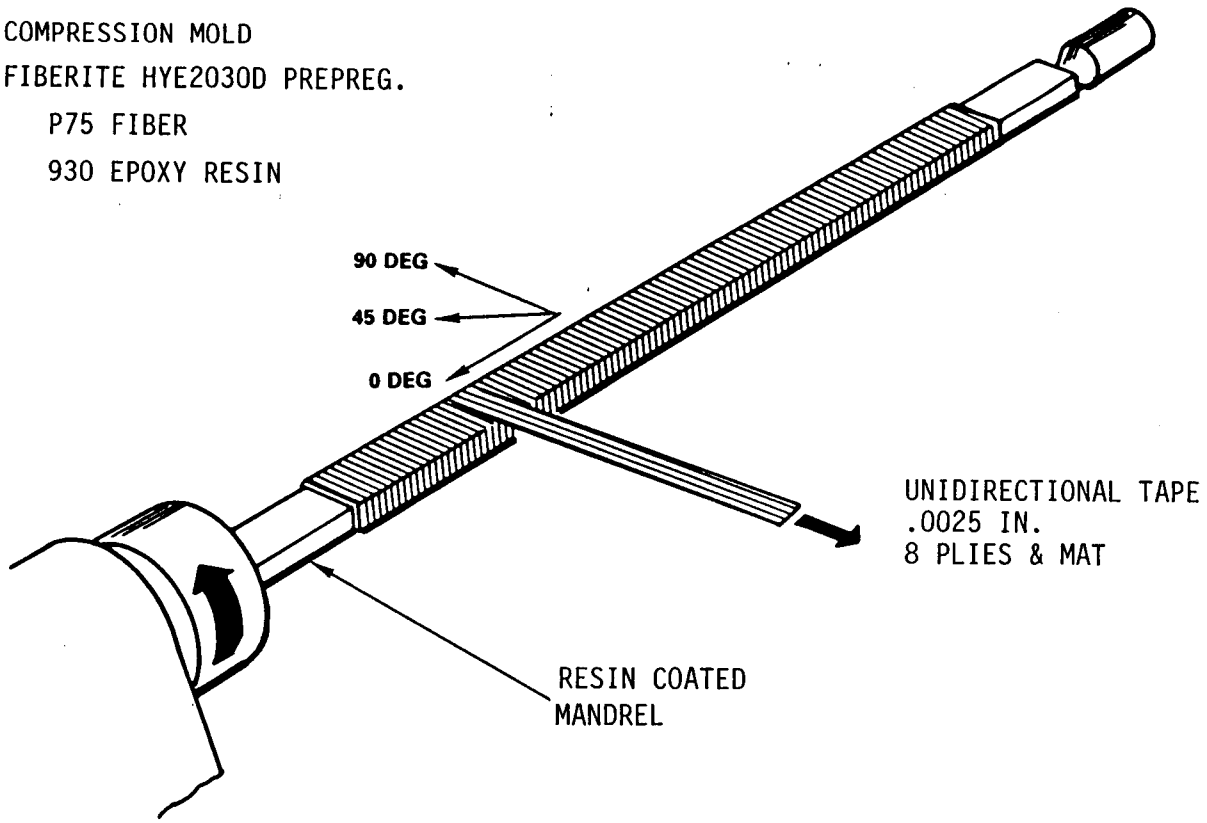

E-665-2(11-82)1886

MACHINING

- TOLERANCES
- EDGE CONDITION

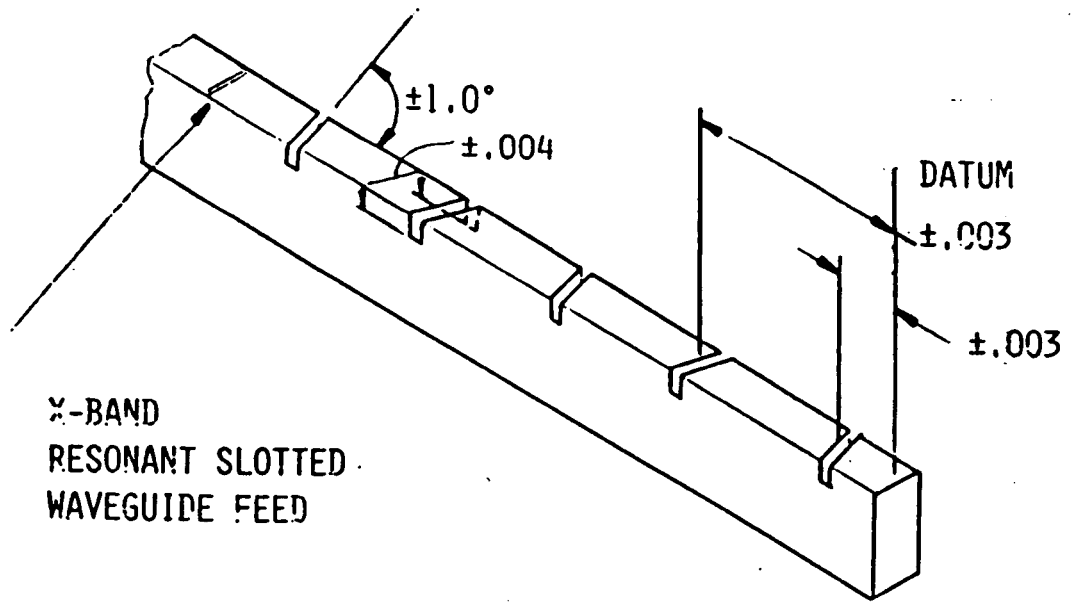

TECHNIQUE

- WATER JET
- CARBIDE TOOLS
- NUMERICAL CONTROL

METALLIZATION PROCESSES

- ELECTRO PLATE - MANDREL
- DIRECT PLATE
- FOIL WRAP - MANDREL
- METALLIZED FIBERS/METAL FILLED MATRIX
- SPRAY

DIRECT PLATING

ELECTROLESS PLATE NICKEL

- 1-2 MICRON THICK
- CONDUCTIVE CATHODE

ELECTROPLATE SILVER

- RECTANGULAR ANODE BAR
- .0001 - .0005 INCHES THICK

GIB-9668

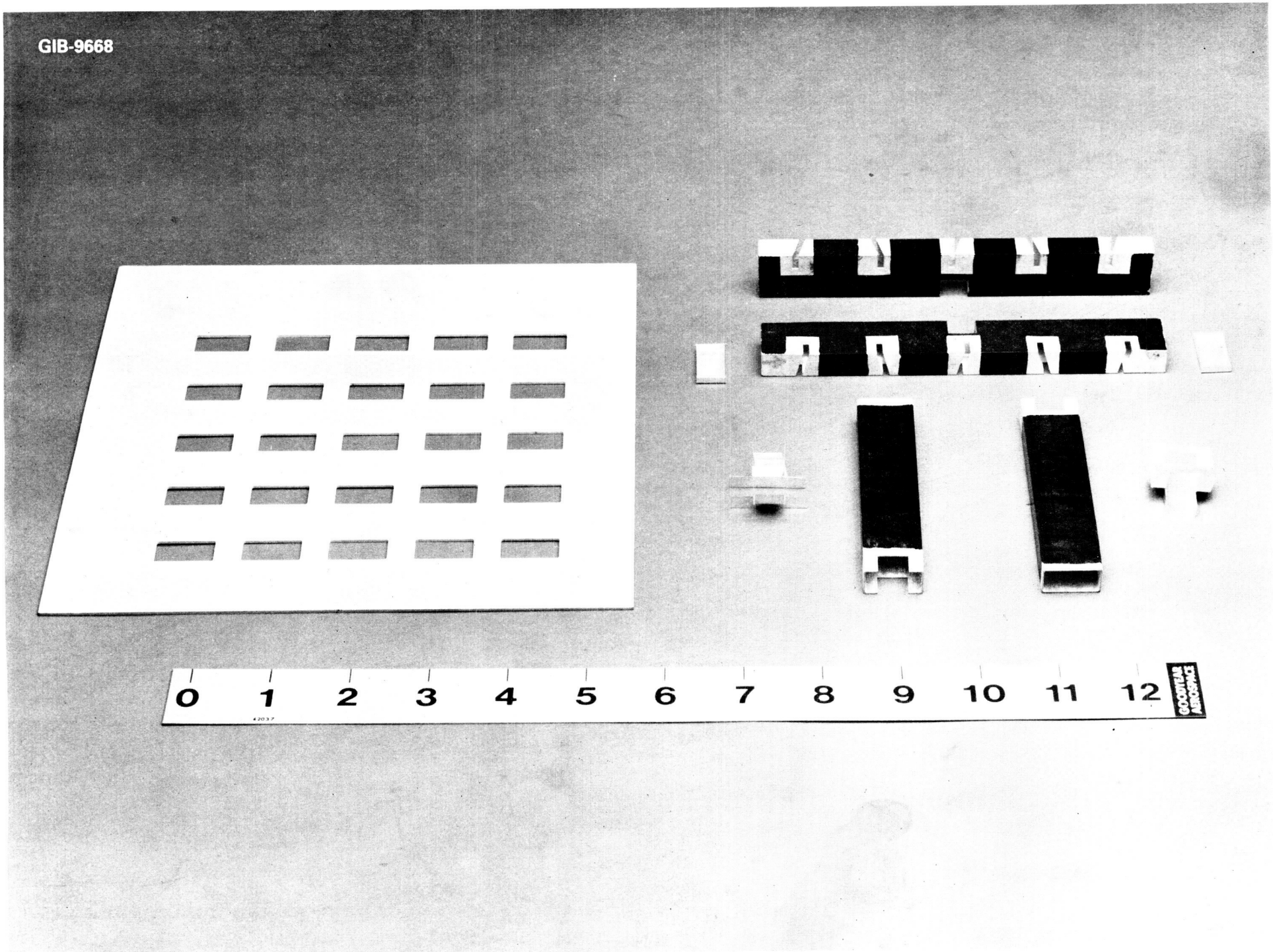

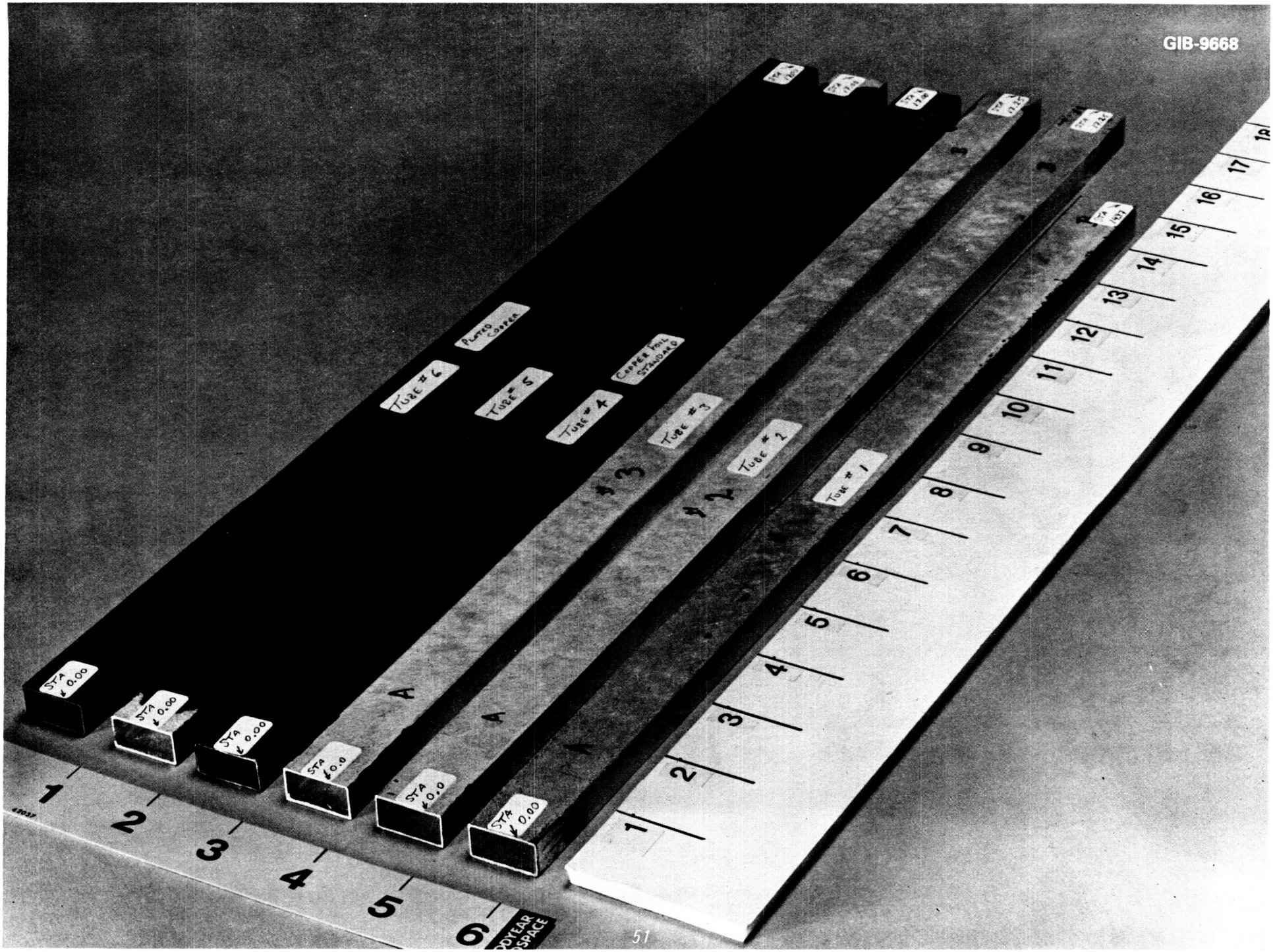
GIB-9668
TUBE #6
PLATED COPPER
TUBE #5
TUBE #4
COPPER FOIL STANDARD
TUBE #3
TUBE #2
TUBE #1
STA 0.00
STA 0.00
STA 0.00
STA 0.0
STA 0.0
STA 0.00
1
2
3
4
5
6
7
8
9
10
11
12
13
14
15
16
17
18

INSPECTION

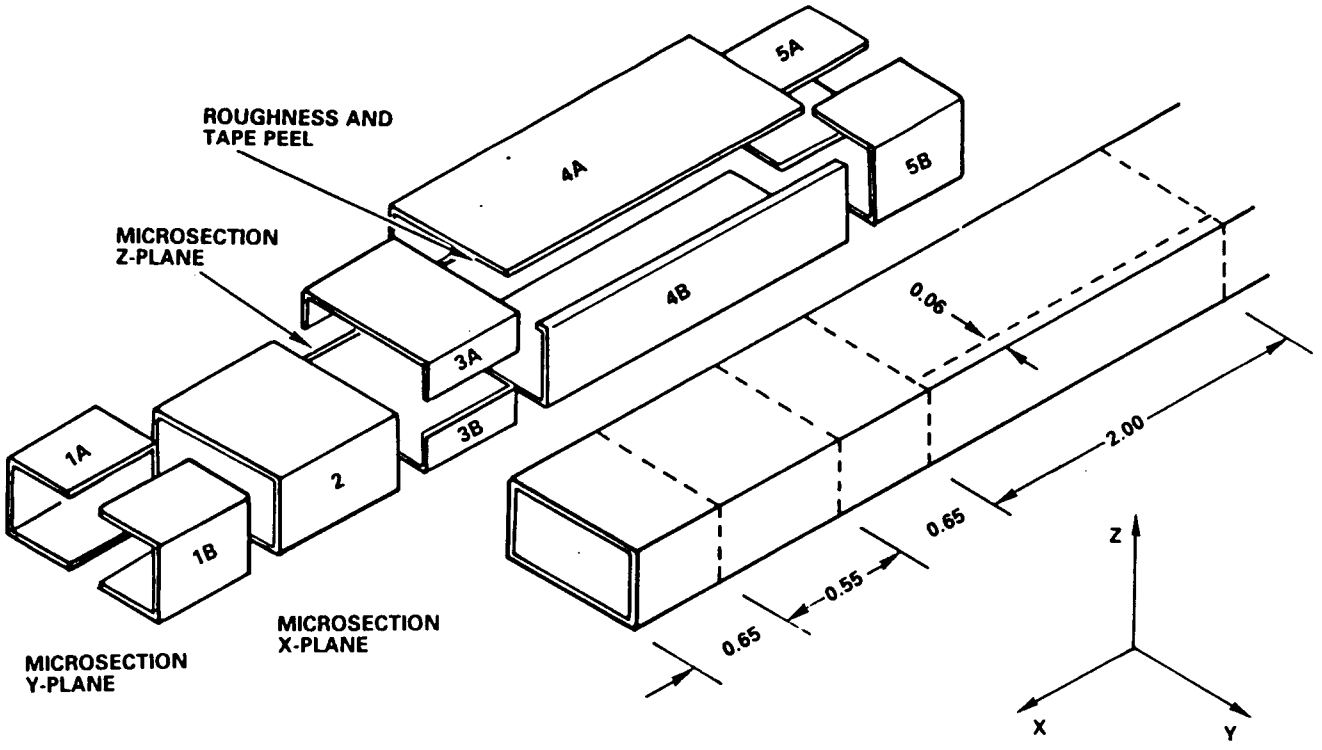
ROUGHNESS AND
TAPE PEEL
MICROSECTION
Z-PLANE
MICROSECTION
X-PLANE
MICROSECTION
Y-PLANE
1A
1B
2
3A
3B
4A
4B
5A
5B
0.06
2.00
0.65
0.55
0.65
Z
X
Y

1-A TUBE #1
1-B
TUBE #1
3-B
4-A
4-B
5-B
7-A TUBE #1
7-B
0 1 2 3 4 5 6 7 8 9 10 11 12
GOODYEAR AEROSPACE
8-B
9-A TUBE #1
9-B
10 TUBE #1
11-A TUBE #1
11-B
12-A
12-B
13-A TUBE #1
13-B
14 TUBE
15-A TUBE
15-B

SURFACE ROUGHNESS

- MEASURED: 30 TO 120 μINCHES RMS
- SPECIFIED: 60 μINCHES RMS
- EXPOSED FIBER, OVER ETCHED, THIN COATING

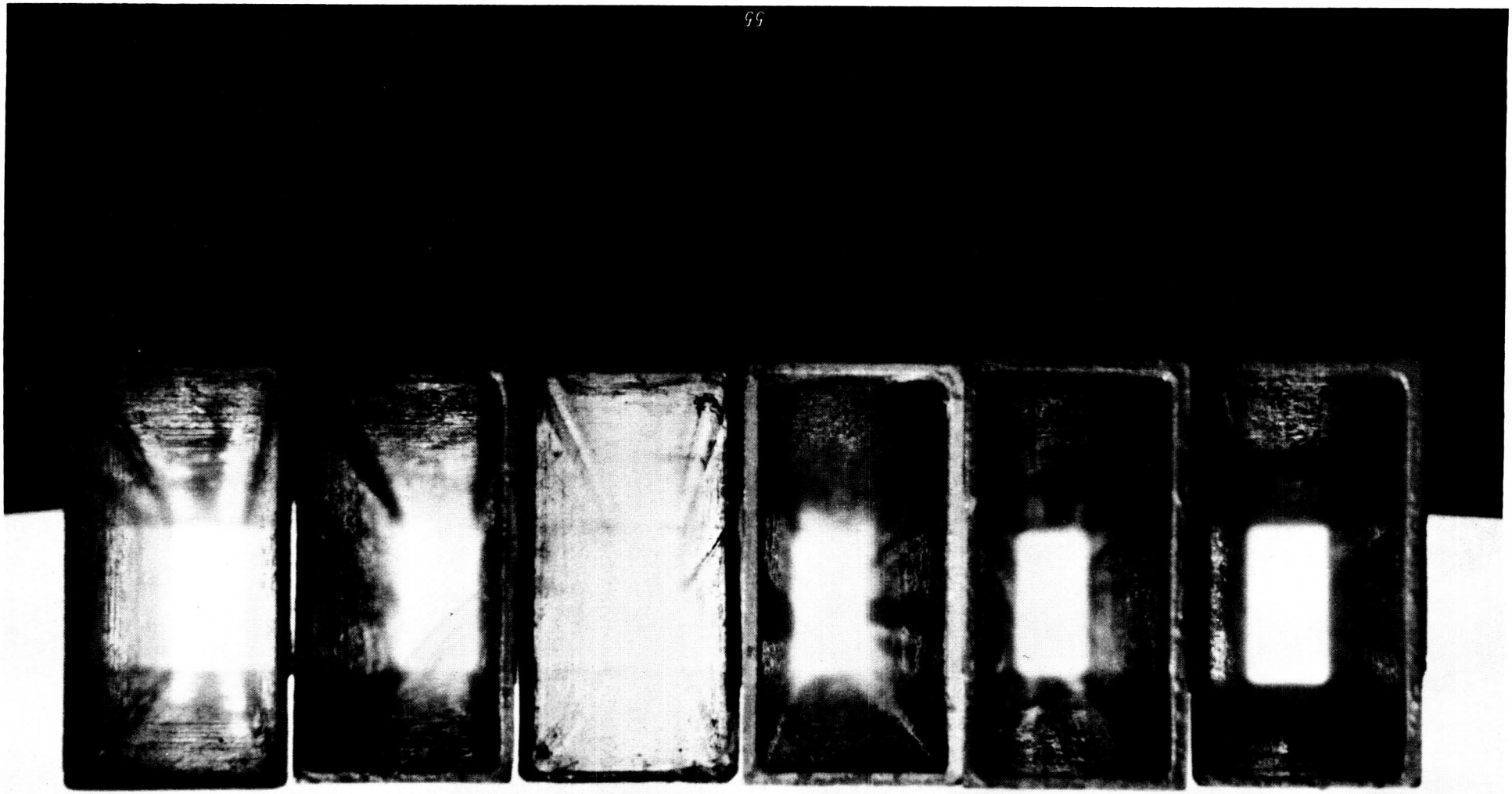

METAL ADHESION

- MORE DEVELOPMENT REQUIRED
- SURFACE ROUGHNESS DEPENDENT
- THICKER COATING HELPS
- MAY LEAD TO MANDREL METALLIZATION

COEFFICIENT OF THERMAL EXPANSION

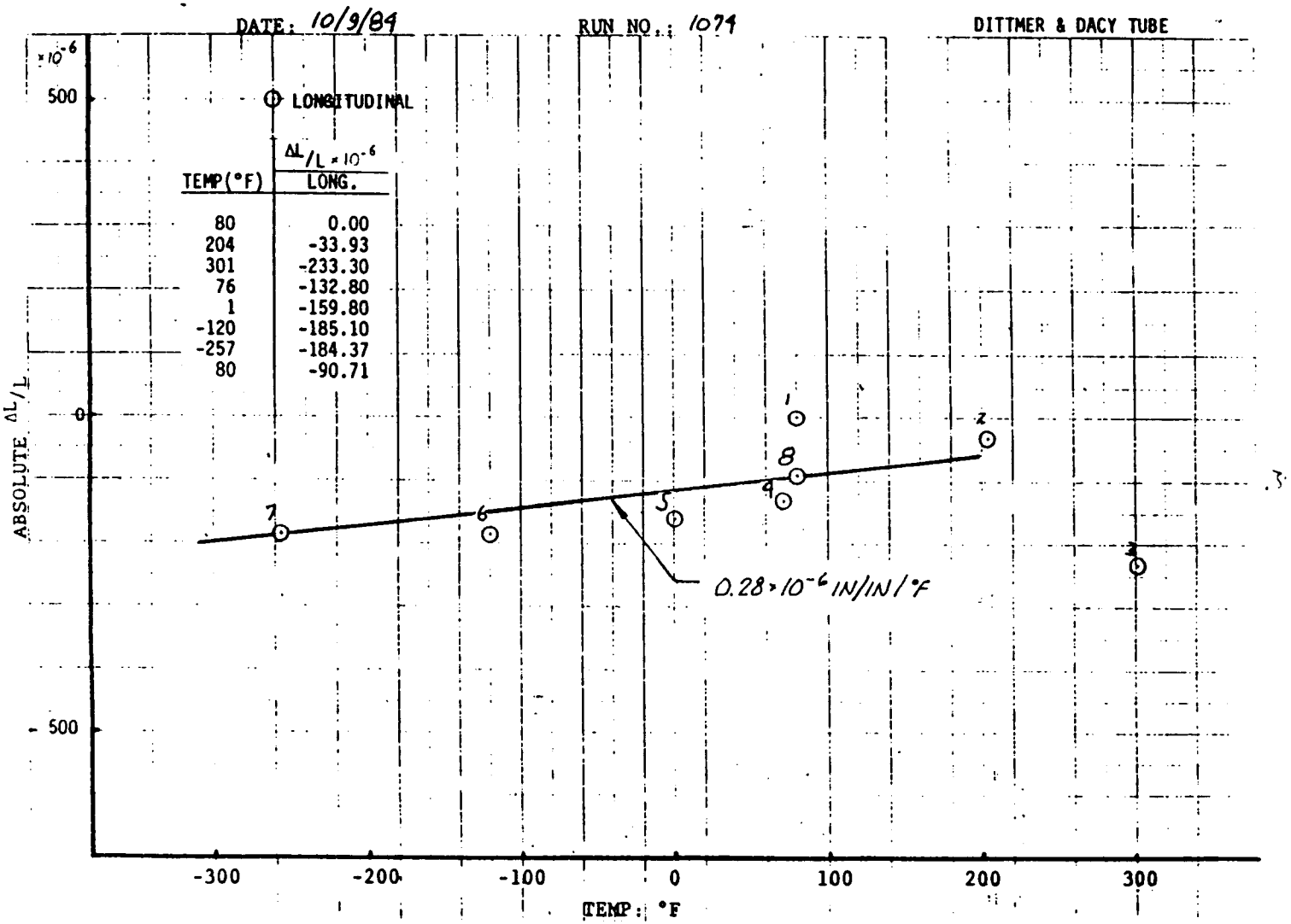

RF TESTS

- INSERTION LOSS AT 9.6 GHz
- MEASURED LOSS
  - 0.08 TO 0.14 dB/FT
  - MEAN OF 0.10 dB/FT (SAMPLES)
- THEORETICAL LOSS, WITHOUT ALLOWANCE FOR METAL THICKNESS OR ROUGHNESS, IS 0.073 dB/FT
- CONTROL OF PLATING THICKNESS, ROUGHNESS, VOIDS, AND BLISTERS CAN PRODUCE SATISFACTORY WAVEGUIDE

FABRICATION SUMMARY

- GRAPHITE WAVEGUIDE FEASIBILITY
  - NO NEW TECHNOLOGY REQUIRED
  - OPERATIONAL WAVEGUIDE EXISTS
  - LARGE, PRECISION ASSEMBLIES ARE FEASIBLE
- LARGE WAVEGUIDE ASSEMBLIES
  - HIGH VOLUME PART PRODUCTION
  - TOOLING AIDED HAND ASSEMBLY
  - LARGE SCALE METALLIZATION DEVELOPMENT

GIB-9668

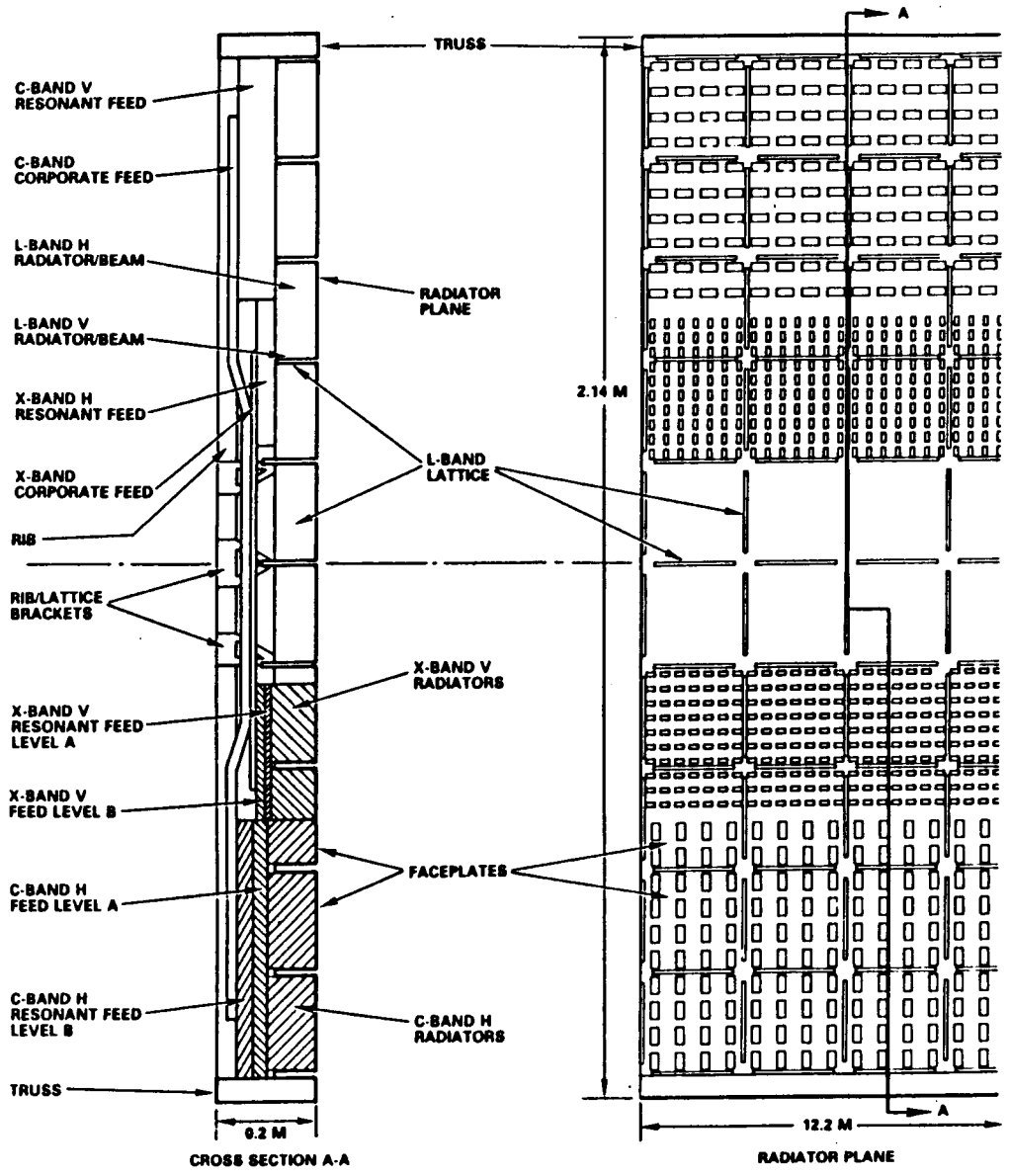

INTERLEAVED ARRAYS SAR ANTENNA

GOODYEAR AEROSPACE

E-665-2(11-82)1886

SCANNABLE INTERLEAVED ARRAY

GIB-9668

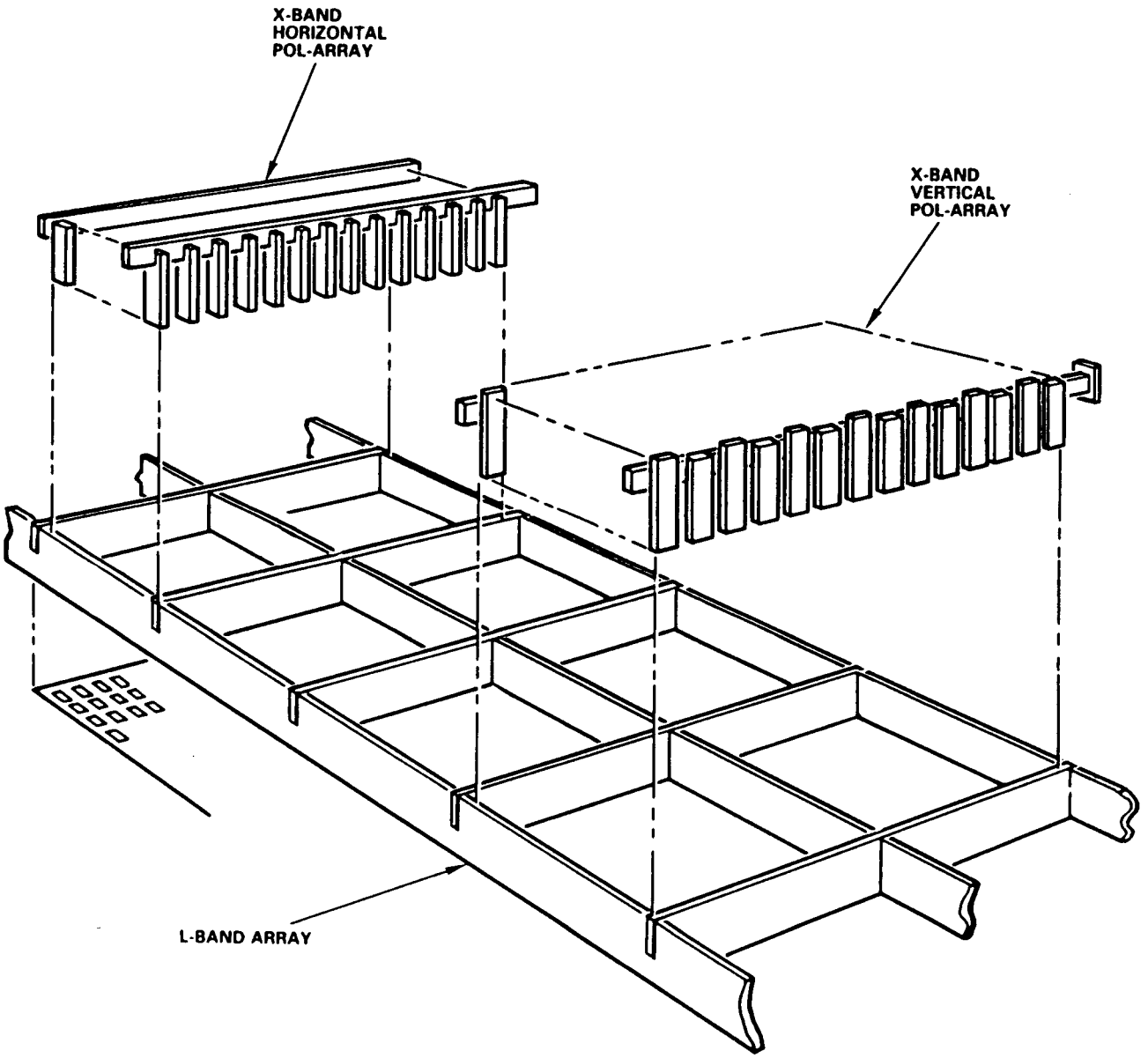

GOODYEAR AEROSPACE

E-665-2(11-82)1886

PASSIVE THERMAL CONTROL

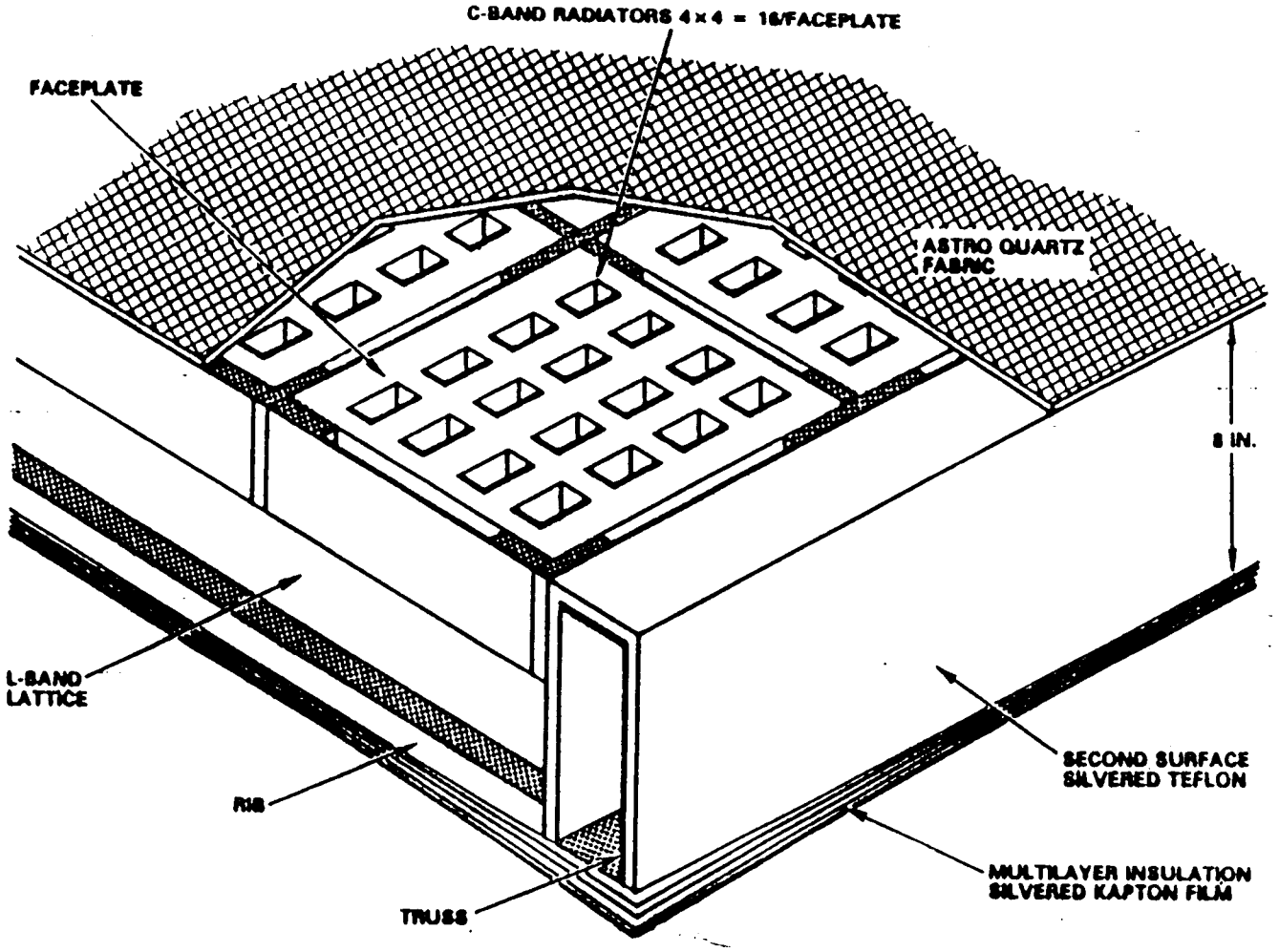

RADIATOR PLANE CONSTRUCTION

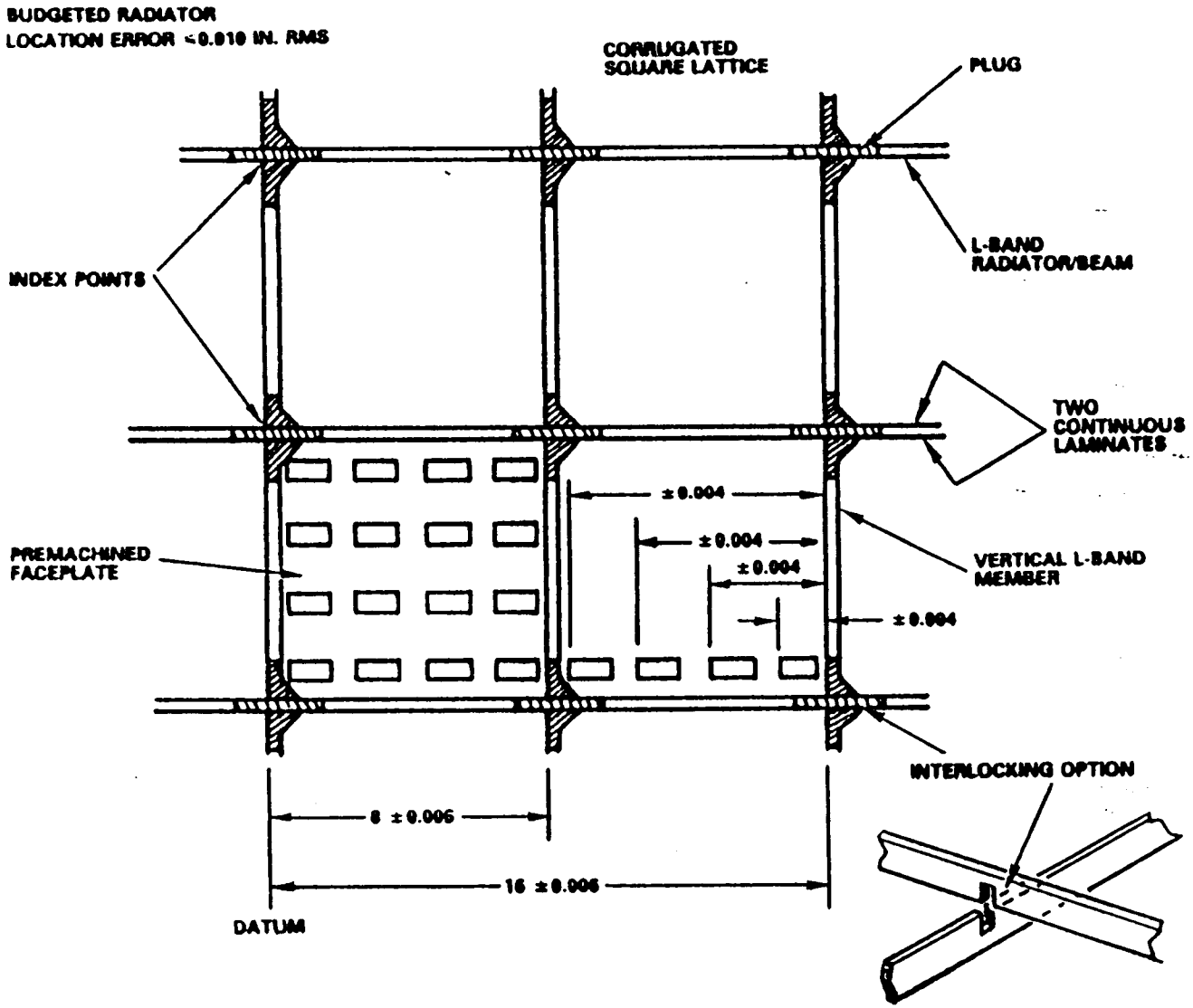

ALL DIMENSIONS IN INCHES

-665-2(11-82)1886

INTERLOCKING OF L-BAND MEMBERS

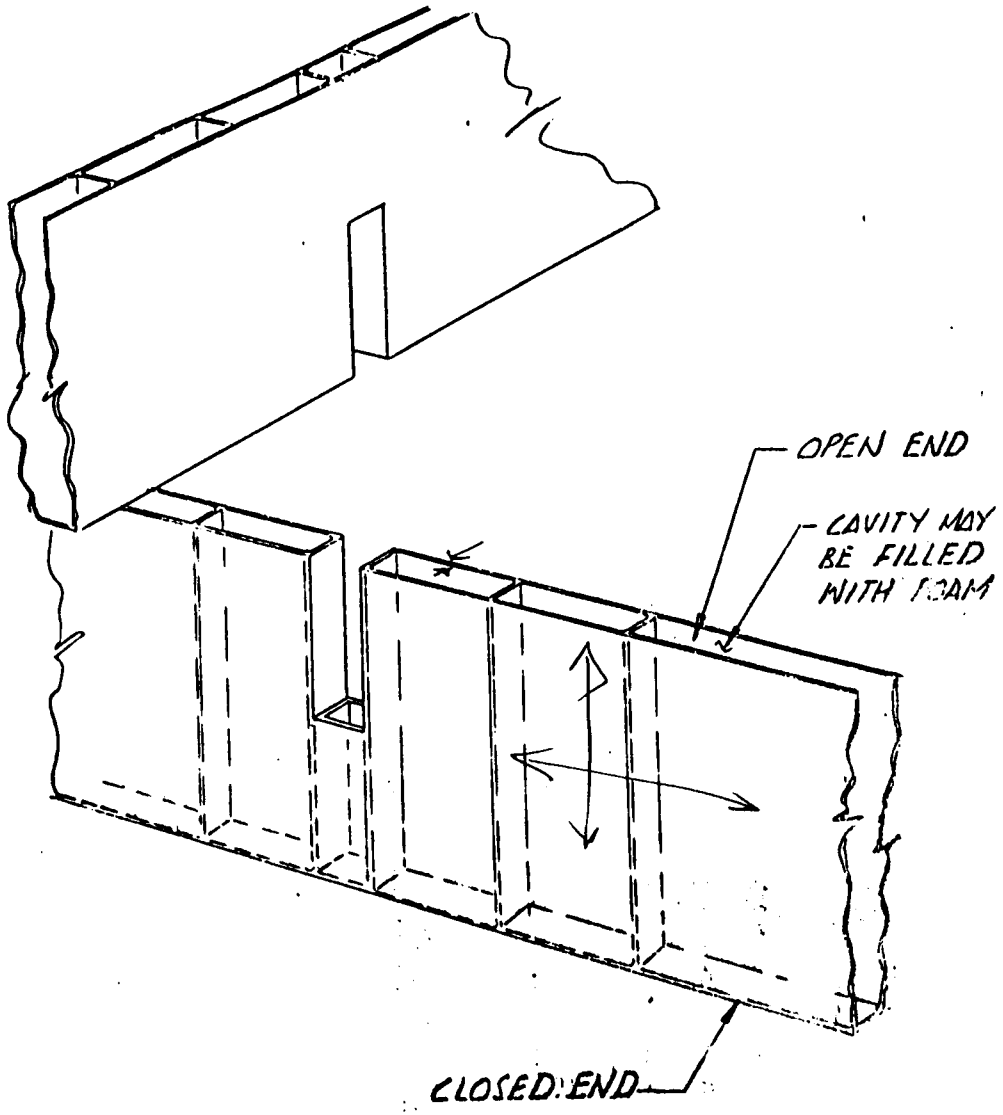

ARRAY SUPPORT STRUCTURE

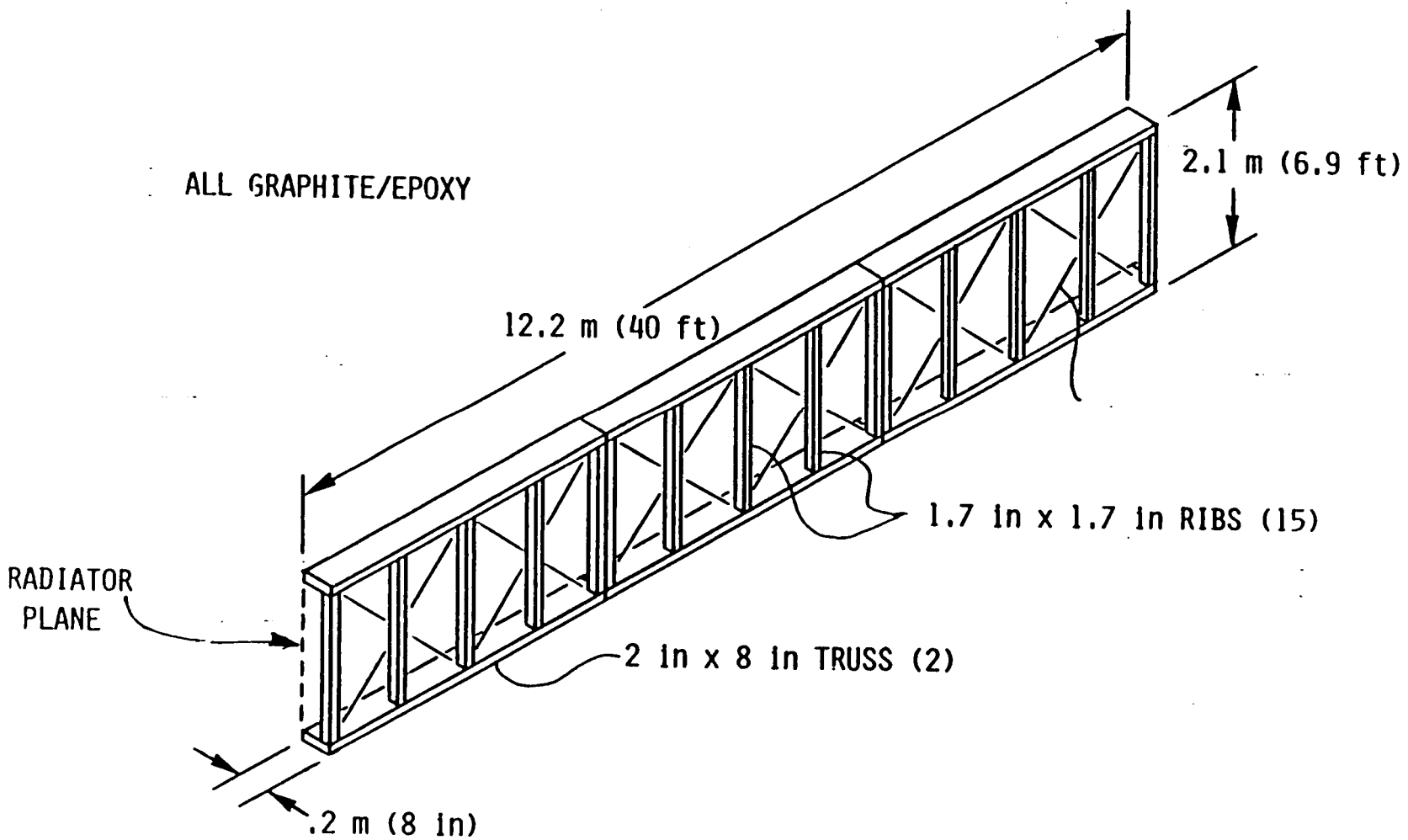

NATURAL FREQUENCY: 3.2 Hz

ANTENNA DEPLOYMENT

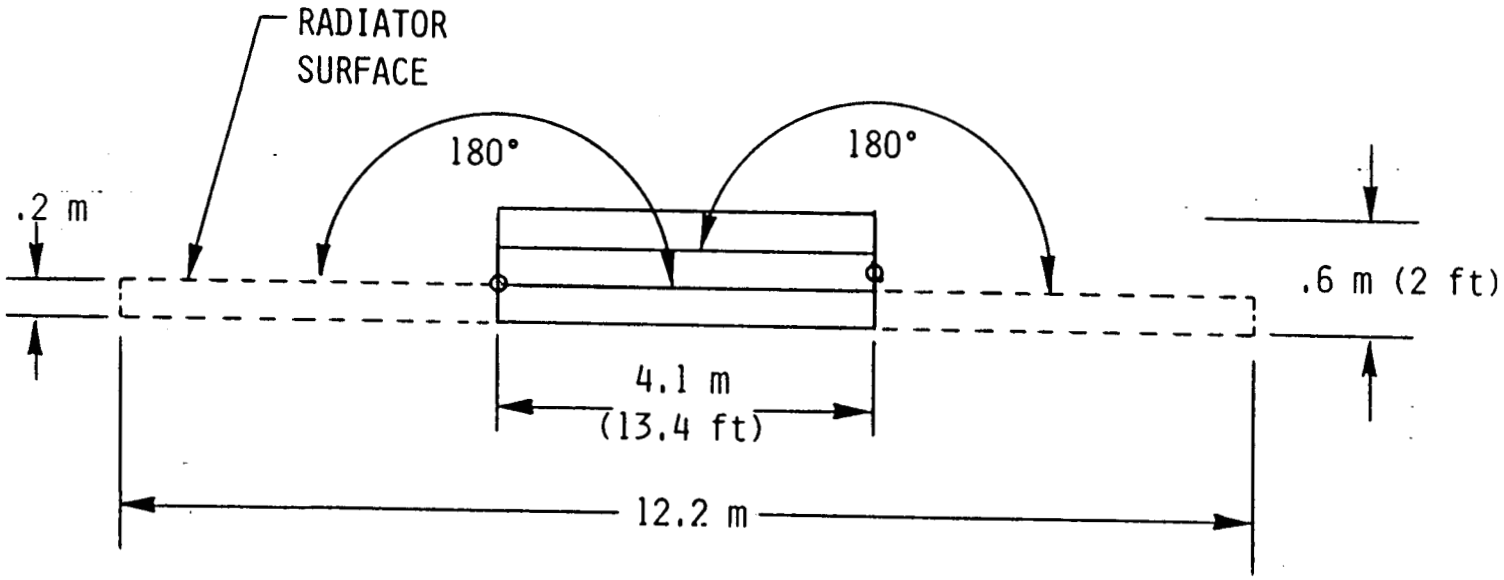

SHUTTLE STOWAGE POSITIONS

PAYLOAD BAY DIAMETER 4.572 m

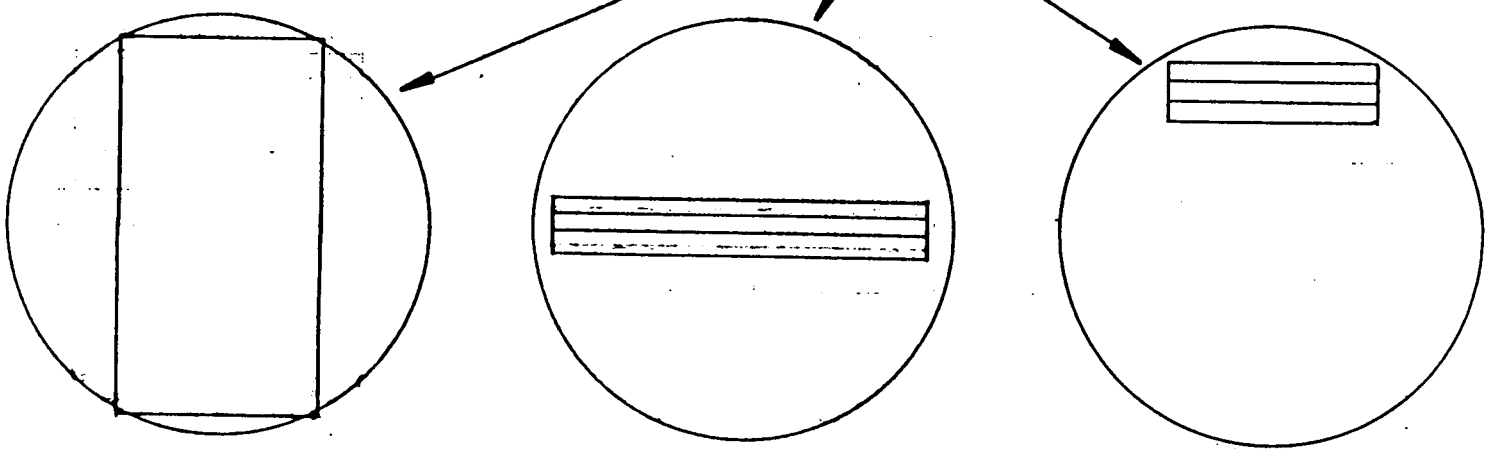

PAYLOAD BAY LENGTH REQD.	.6 m	2.2 m	4.1 m
DEPLOYMENT MOTIONS	Z ELEVATION 4 m Y ROTATION 90° DEPLOY	Z ELEVATION 2.5 m Z ROTATION 90° DEPLOY	Z ELEVATION .5 m DEPLOY

MASS ESTIMATE

WAVEGUIDE	392
COAXIAL CABLE	60
FACE PLATE	73
SUPPORT STRUCTURE	193
ACTUATORS, HINGES, LOCKS	40
TOTAL ANTENNA	758 LBS., 345 Kg

MECHANICAL FEASIBILITY SUMMARY

- DIMENSIONALLY STABLE - GRAPHITE
- FABRICATION
  - STANDARD INDUSTRY PROCESSES
  - VOLUME PARTS PRODUCTION
  - LABOR INTENSIVE ASSEMBLY
- DURABLE FRAME
- COMPACT, LIGHT WEIGHT

CURRENT CONTRACT

SCHEDULE

CURRENT CONTRACT

PHASE I	-	ASSEMBLE 5 x 5 ARRAY OF SLOTTED WAVEGUIDE ELEMENTS
	-	ACQUISITION PLANS
PHASE II	-	VIBRATION TESTS ON ARRAY
	-	ALTERNATE DESIGNS
	-	OPTIMIZE DESIGN
PHASE III (UNFUNDED)	-	BUILD SMALL L- AND C-BAND PANEL WHICH WILL DEMONSTRATE FREQUENCY AND POLARIZATION INTERLEAVING. BEAMSTEERING DEMONSTRATION BY ADJUSTABLE LINE LENGTHS

CONTRACT SCHEDULE

Rev. May 22, 1985

Schedule - Exhibit C and Amendment for Interleaved Array
Antenna Technology Development

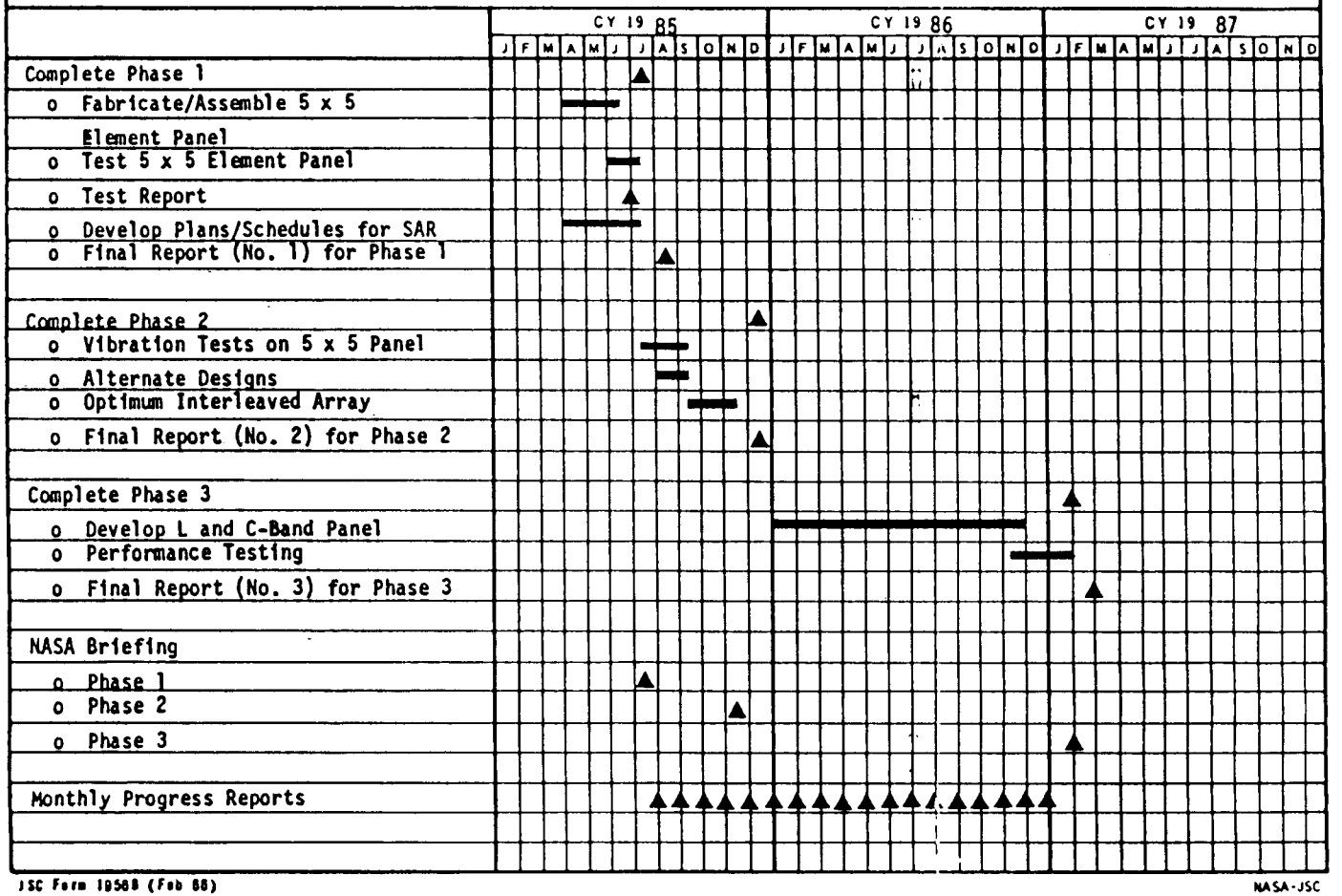

JSC Form 19588 (Feb 88)

NASA-JSC

GOODYEAR AEROSPACE

PHASE ONE RESULTS

CURRENT CONTRACT - PHASE I

- ASSEMBLY DEVELOPMENT
- 5 x 5 ARRAY ASSEMBLY & TEST
- WAVEGUIDE JOINTS
- ADHESIVES

GIB-9668

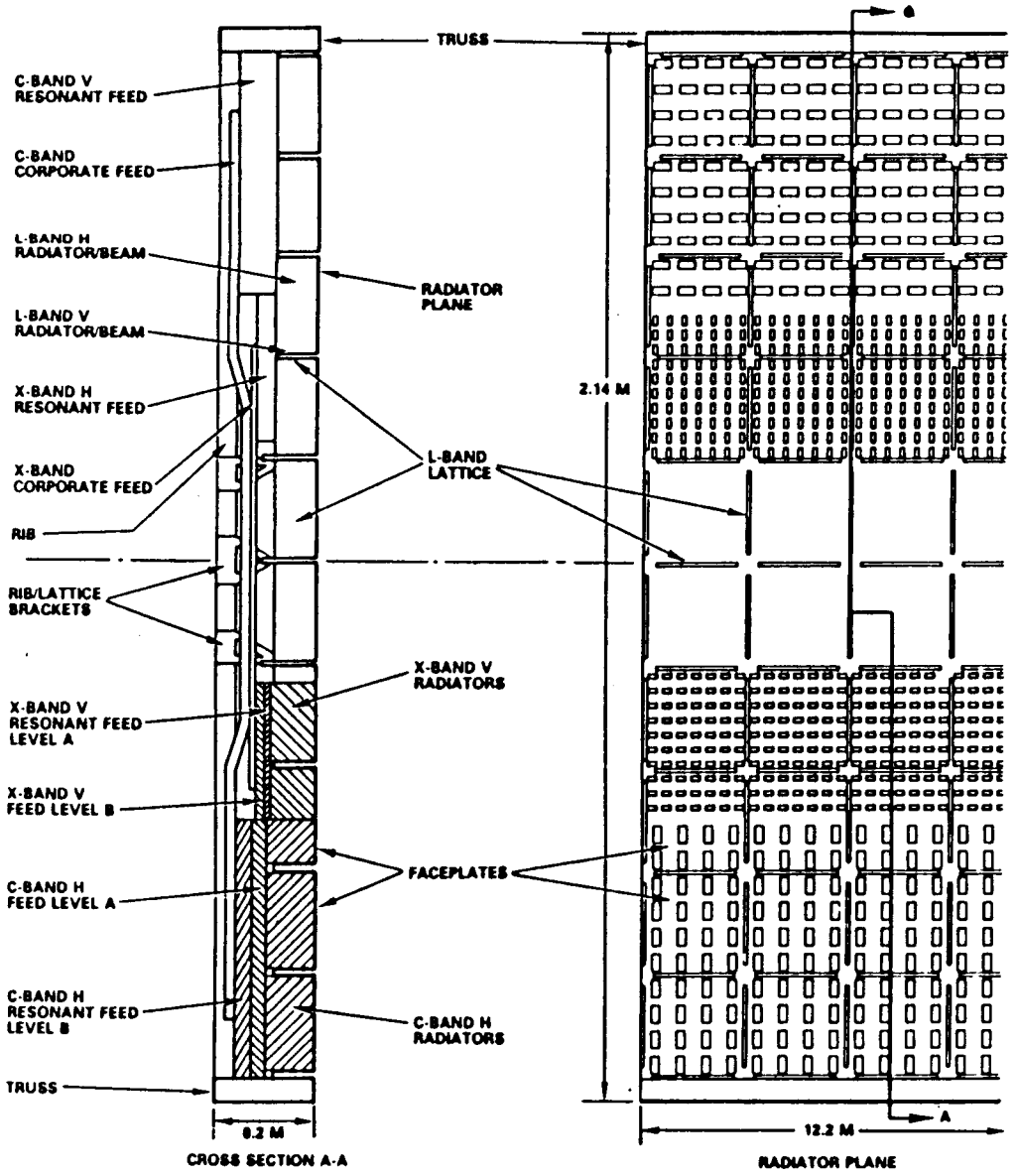

INTERLEAVED ARRAYS SAR ANTENNA

GOODYEAR AEROSPACE

5-2(11-82)1886

ARRAY ASSEMBLY FEATURES

- MODULAR CONSTRUCTION
- NOW CUMULATIVE TOLERANCES
  - MODULE-TO-MODULE
  - RADIATOR-TO-RADIATOR
- SIMPLE GRAPHITE TOOLING
- INHERENT STRUCTURE

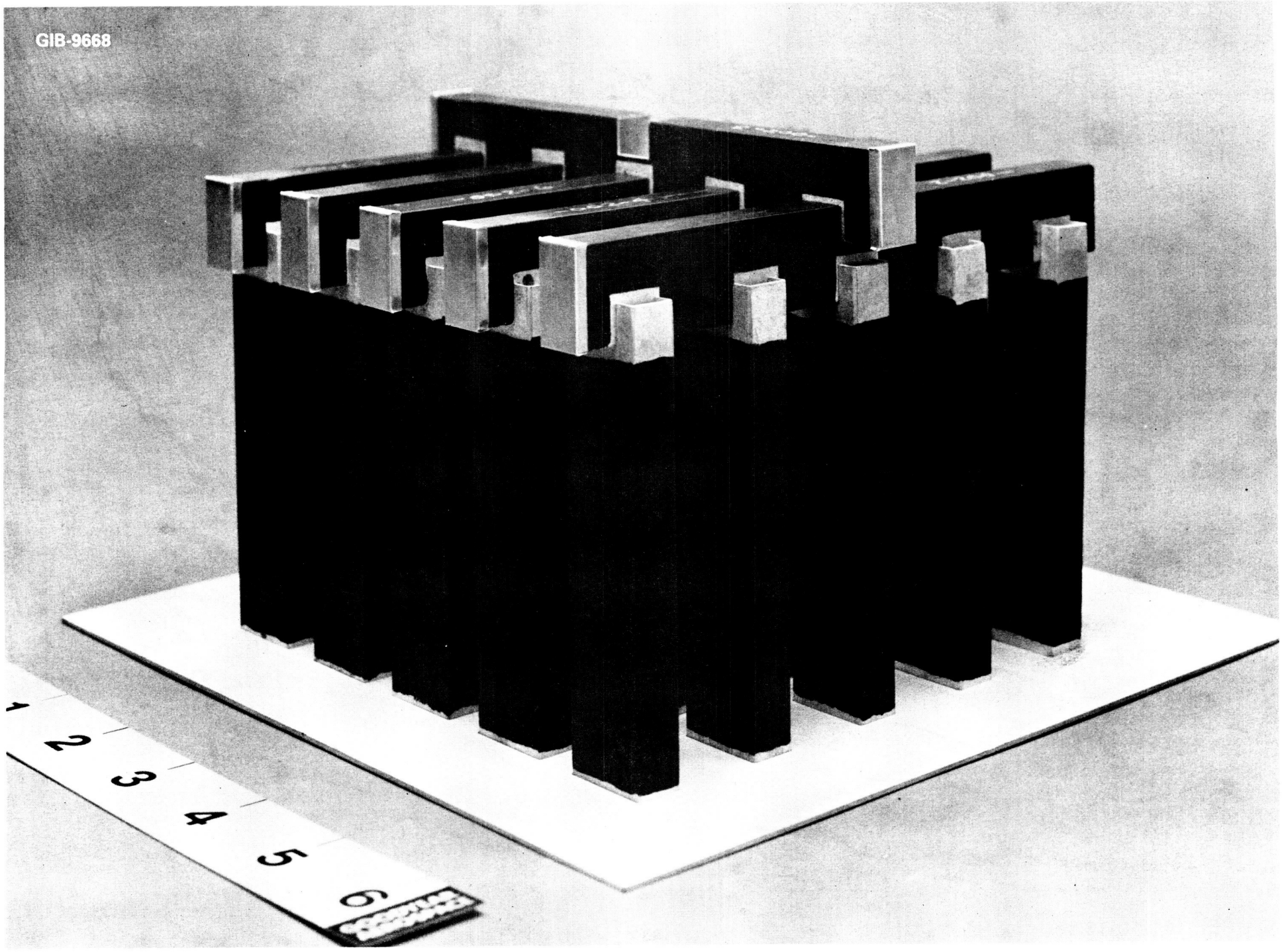
GIB-9668
2
3
4
5
0

JOINT DESIGN

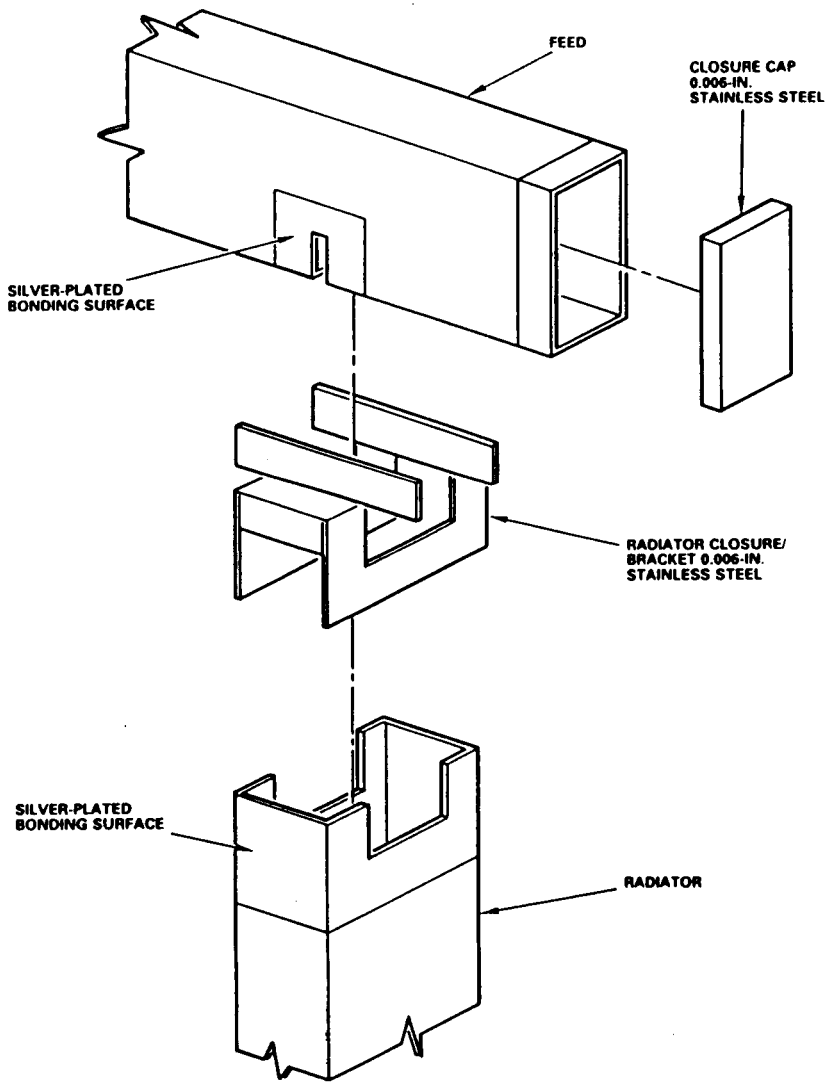

- ADHESIVE FILETS
- BRACKET REINFORCED

E-665-2(11-82)1886

JOINT METALLIZATION

- METAL FILLED ADHESIVES
- CONTACT ASSURED JOINT DESIGN
- SPRAY
- FOIL SLEEVES
- ELECTROLESS PLATE

EXTERNAL BRACKET JOINT

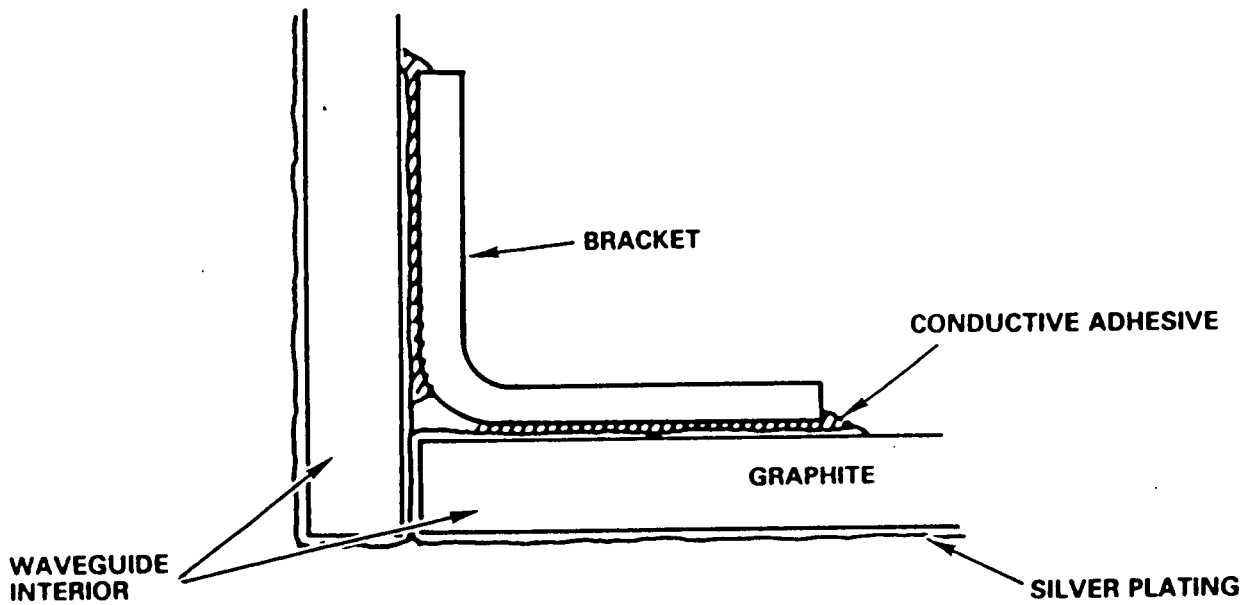

BRACKET

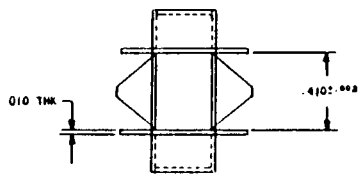

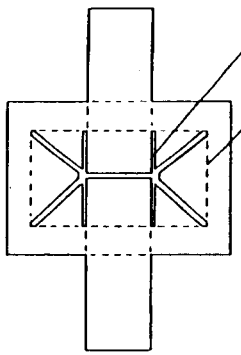

FLAT PATTERN LAYOUT

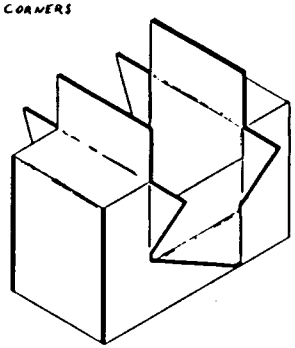

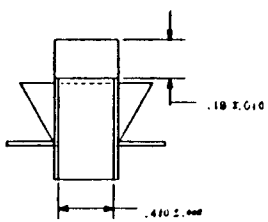

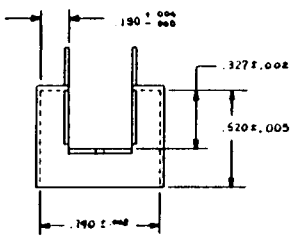

MATERIAL TO BE BRASS, ½ HARD
.010 THK.

REINFORCED CONDUCTIVE ADHESIVE JOINT

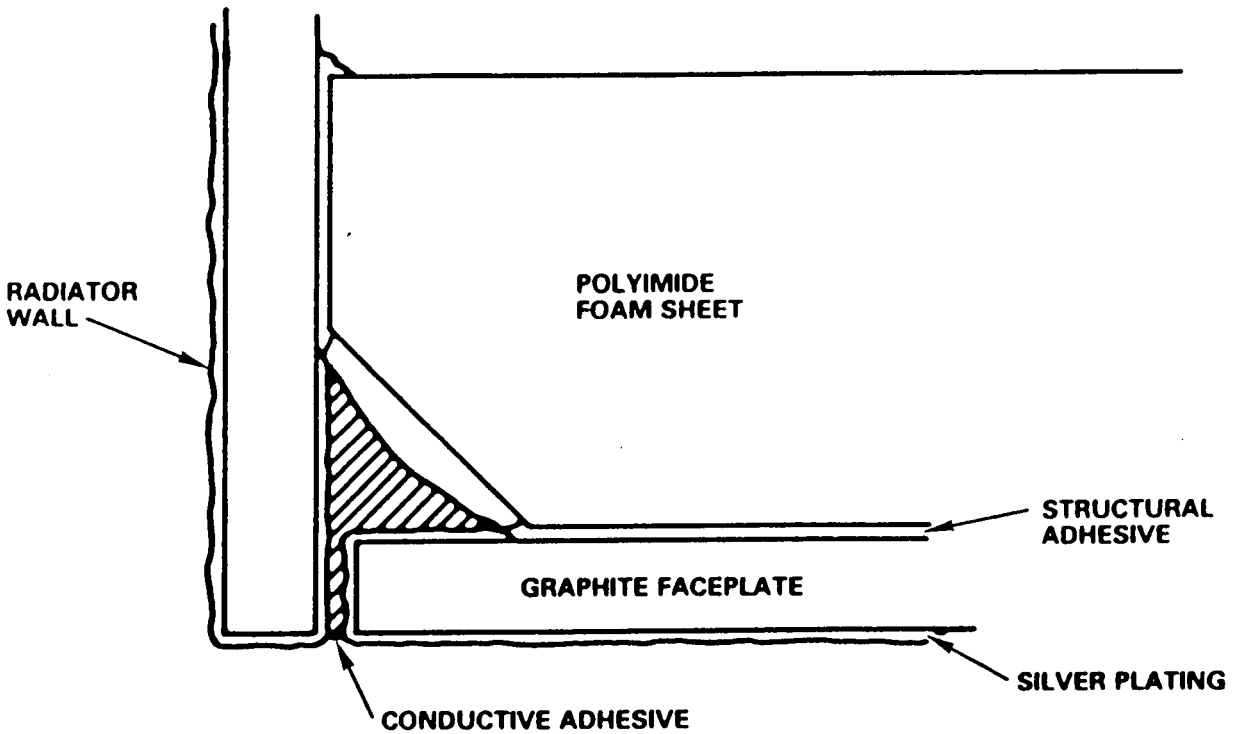

DUAL FILLET JOINT

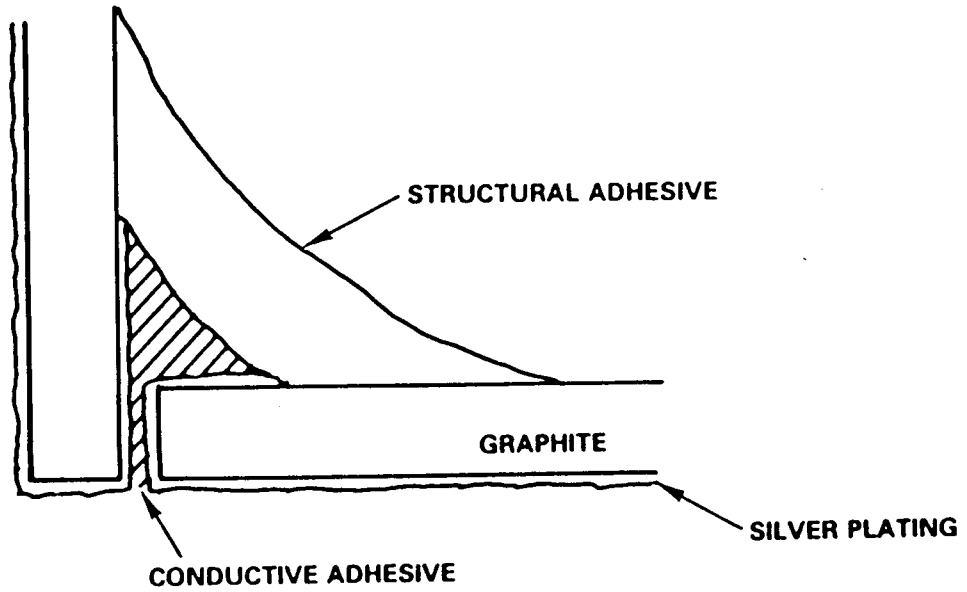

CONDUCTIVE ADHESIVE JOINT

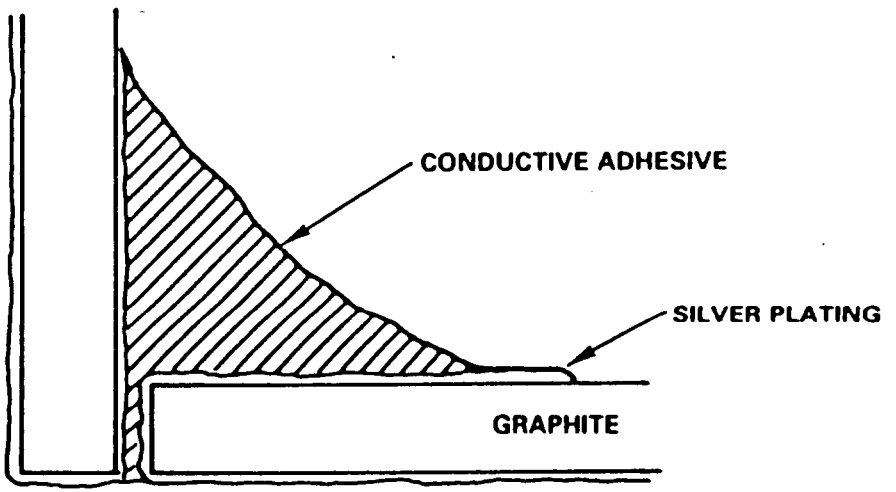

CONDUCTIVE PAINT JOINT

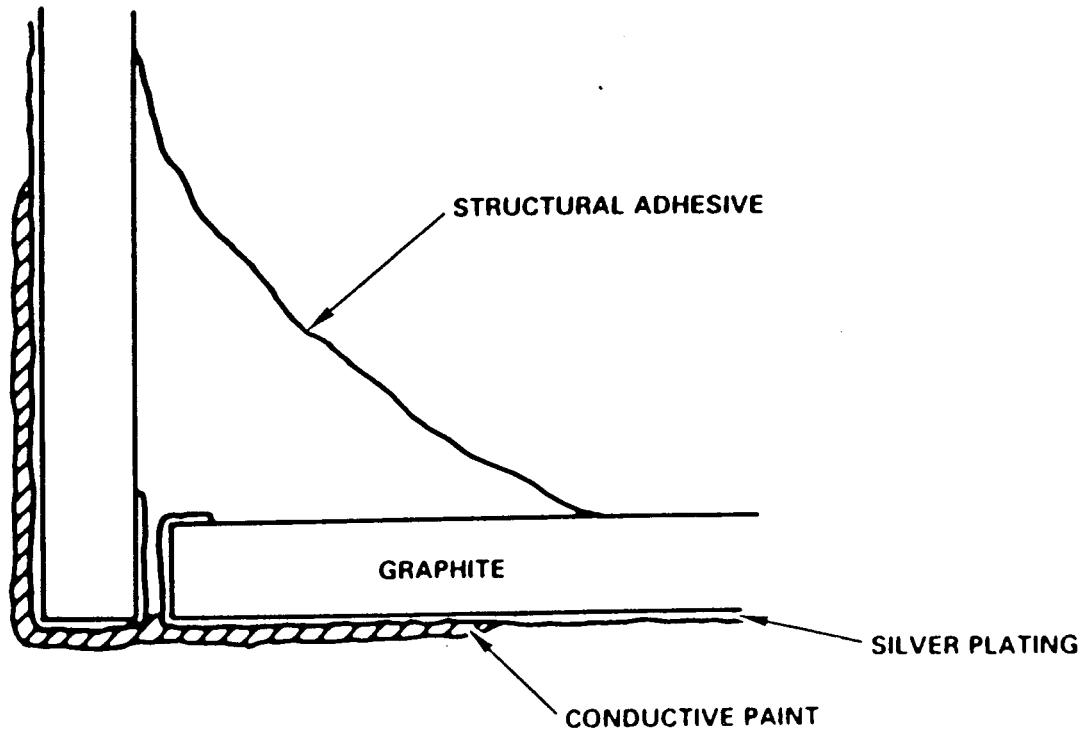

ADHESIVES - CONDUCTIVE

- THERMOSETS
  - EPOXY
  - SILICONE
  - POLYIMIDE
- THERMOPLASTICS
  - COATING
  - FILM
  - SOLDER
- COMBINATIONS

THERMOSET - ADHESIVE CANDIDATES

	Max. Service Temp °F (°C)	Min. Service Temp °F (°C)	Volume Resistivity Ohm-cm	Coef. of Thermal Expansion ppm/°F (°C)	Components	Cure Temp °F	Published Lap Shear Strength psi	Measured Lap Shear Strength psi	Matrix
Transcene PDA S-500	700 (375)	-49 (-45)	1×10^{-4}		1	518	2000	349 C	Polyimide
Transcene Microcircuit Type-N	390 (200)	-76 (-60)	2×10^{-3}	50 (90)	1	275-350	3500	824 A	Epoxy
Transcene Silver Bond Type-40	390 (200)	-85 (-65)	1×10^{-4}		2	120-300	1500	883 A	Epoxy
Ablestik 84-1 LMI T	300 (150)	-67 (-55)	2×10^{-4}	30 (55)	1	250-320	1600	658 C	Epoxy
Amicon C-770			1×10^{-3}		1	250-480	1500	85 C	Epoxy
Emerson & Cuming Ecco Bond 83C	275 (135)	-65 (-54)	4×10^{-4}	25 (45)	2	RT-220	1000	781 A	Epoxy
Emerson & Cuming Ecco Bond 56C	350 (177)	-70 (-57)	2×10^{-4}	20	2	150-200	800	874 A	Epoxy
Emerson & Cuming Ecco Bond 59C	500 (260)	-80 (-62)	1×10^{-3}	35 (63)	1	RT-300	300	194 C	Silicone

MECHANICAL TEST OF 5 x 5 ARRAY

- RANDOM VIBRATION
- RESONANT SEARCH
- THERMO CYCLING

PHASE THREE

E-665-2(11-82)1886

PHASE THREE

OBJECTIVE – A DEMONSTRATION OF PERFORMANCE FROM A GRAPHITE-EPOXY ANTENNA

- L-BAND 3 x 3 RADIATORS, DUAL POLARIZED
- C-BAND 8 x 8 RADIATORS, V-POL
  SCAN USING LINE LENGTHS
- FREQUENCY ISOLATION
- POLARIZATION ISOLATION
- SCAN PERFORMANCE, RF LOSSES
- VIBRATION
- THERMAL

PHASE THREE TASKS

- RADIATOR DEVELOPMENT - L-BAND
  C-BAND
- FEED DEVELOPMENT
- PARTS FABRICATION AND PROCUREMENT
- ASSEMBLE ANTENNA
- TESTS - RF
  - MECHANICAL
  - THERMAL

PHASE THREE SCHEDULE (MONTHS)

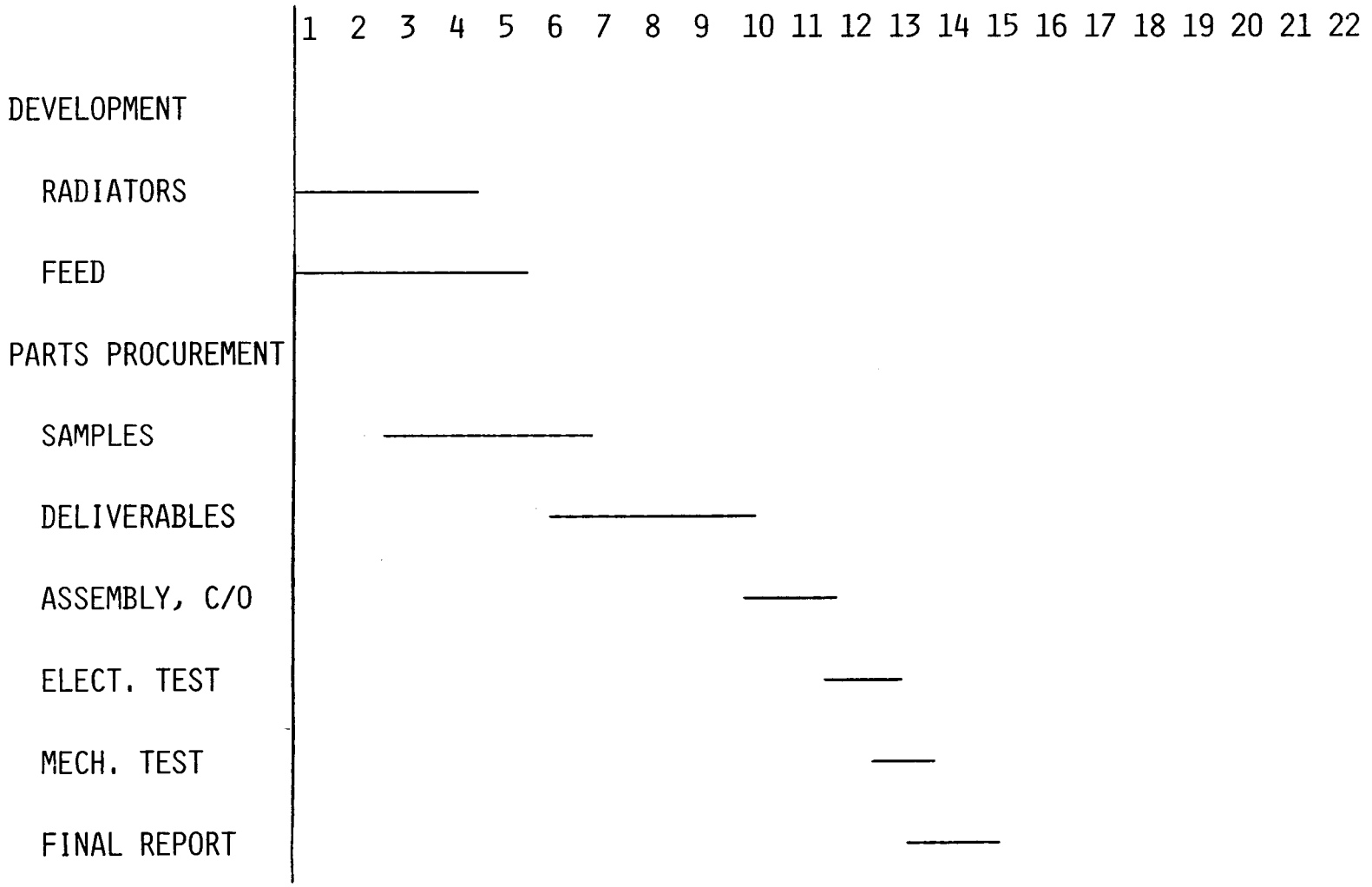

PHASE THREE REDIRECTION (POTENTIAL)

- X-BAND
- DUAL POLARIZED
- SINGLE AXIS SCAN
- SCHEDULE AND COSTS ALREADY ESTIMATED FOR PHASE THREE NEED TO BE CONSIDERED
- USE PHASE TWO TASK-ALTERNATE DESIGNS TO ESTABLISH PHASE THREE CONFIGURATION AND TASKS

ADVANCED PLANS

TRANSMIT/RECEIVE MODULE

OBJECTIVE - DEVELOPMENT OF AN X-BAND MODULE FOR A DISTRIBUTED ANTENNA

- CONTAINS
  - 20 TO 40 WATT AMPLIFIER (TRANSMIT)
  - LOW NOISE AMPLIFIER (RECEIVE)
  - T/R SWITCHES
  - PHASE SHIFTERS

T/R MODULE TASKS

- CIRCUIT DESIGN - MODULE CONFIGURATION
- TRANSMIT AMPLIFIER DEVELOPMENT
- LOW NOISE AMPLIFIER DEVELOPMENT
- PHASE SHIFTER DEVELOPMENT
- BREADBOARD MODULE TESTS
- PROCUREMENT OF QUANTITY AND TEST WITH BREADBOARD ANTENNA
- TESTS - RF
  - ELECTRICAL
  - MECHANICAL
  - THERMAL

T/R MODULE DEVELOPMENT

GIB-9668

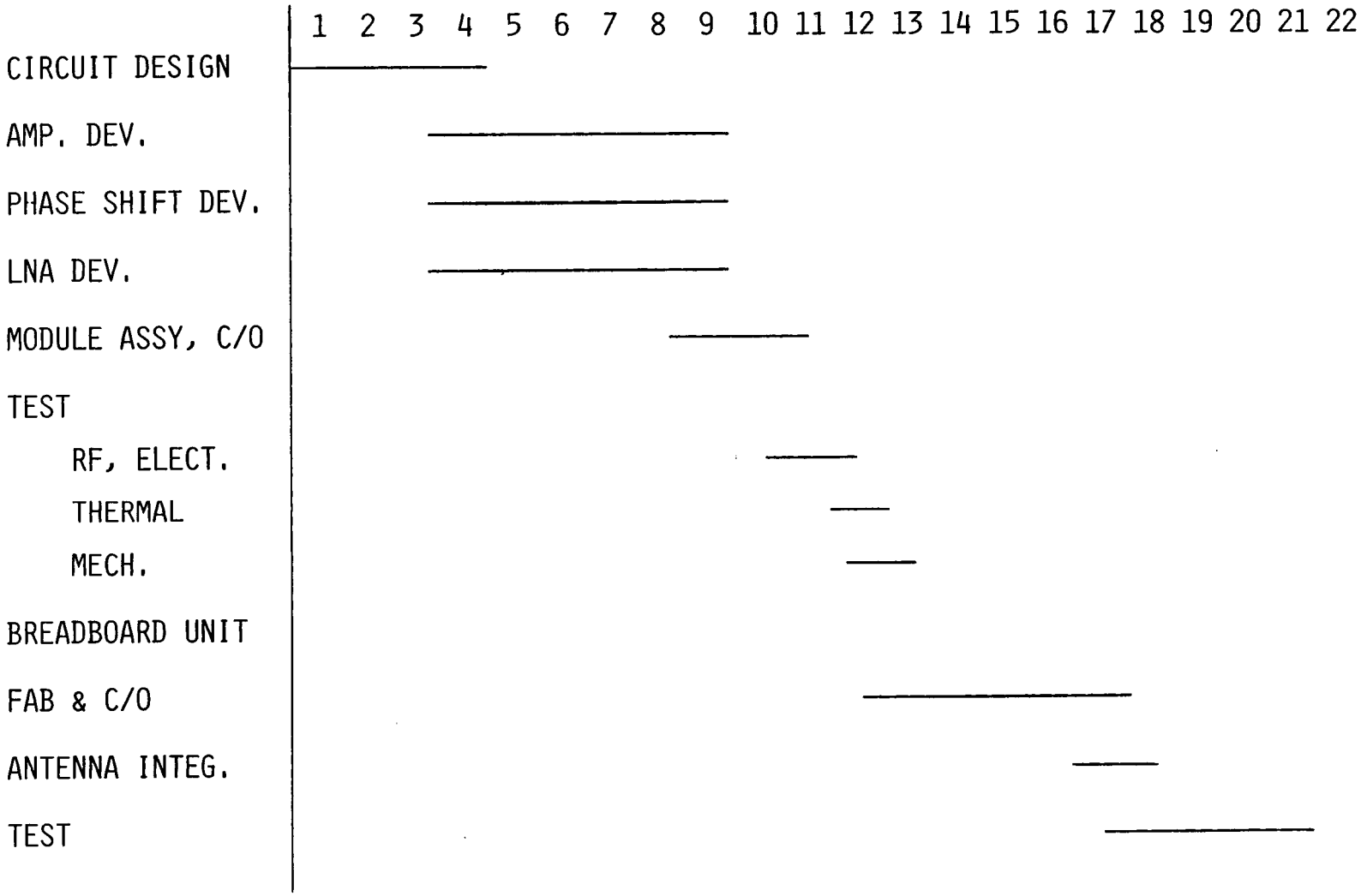

GOODYEAR AEROSPACE

E-665-2(11-82)1886

ANTENNA ENGINEERING MODEL

- OBJECTIVE - FORM, FIT, AND FUNCTION,
  NOT FLIGHTWORTHY
- MECHANICAL DESIGN - STRUCTURAL
  - THERMAL
- ELECTRICAL DESIGN - RF
  - CONTROL
  - PRIME POWER
- PARTS PROCUREMENT AND FABRICATION
- ASSEMBLY
- TESTS - RF
  - QUALIFICATION

ANTENNA ENGINEERING MODEL SCHEDULE

GIB-9668

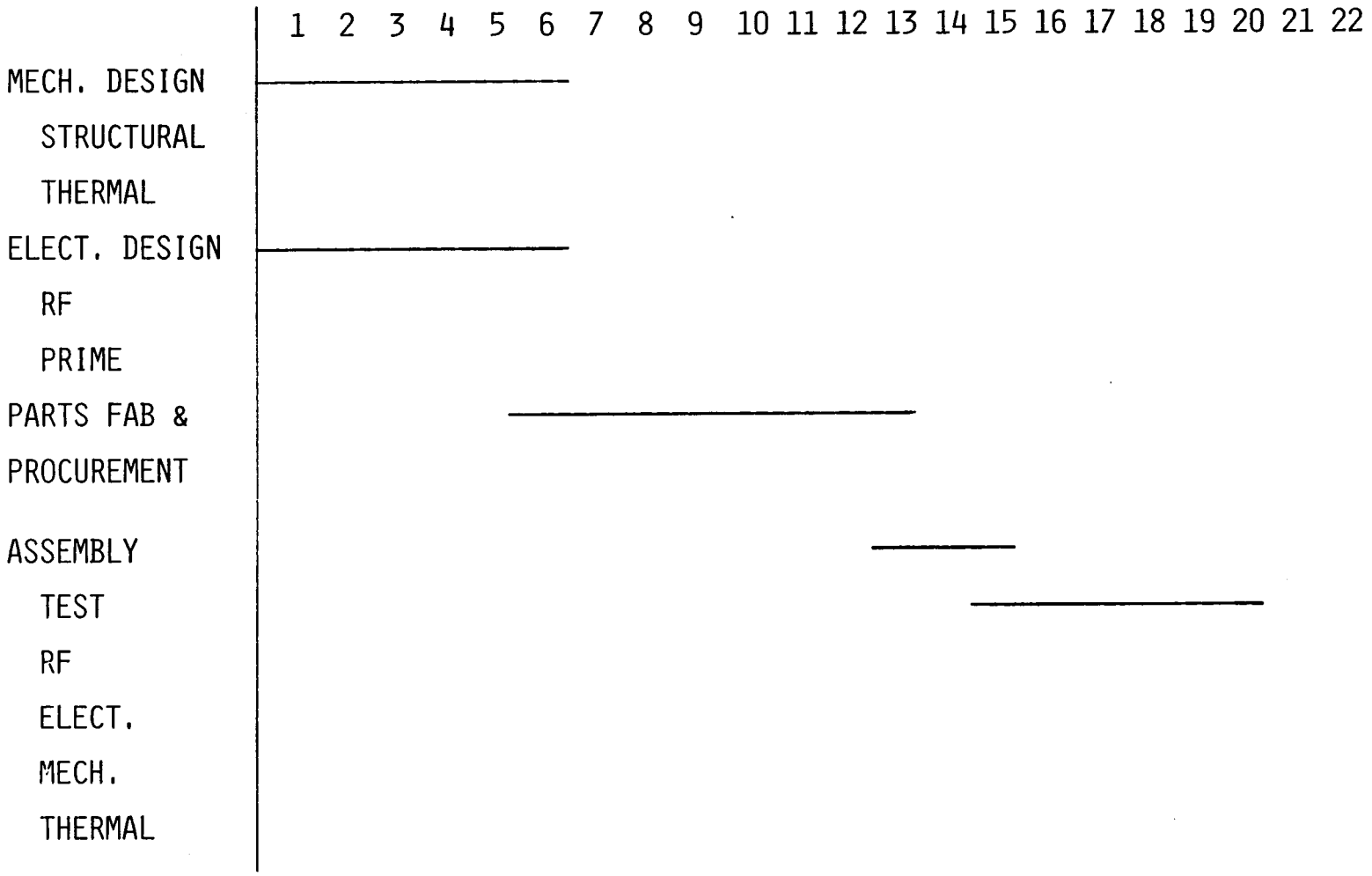

GOODYEAR AEROSPACE

565-2(11-82)1886

RELATED WORK

PLATED GRAPHITE EPOXY APPLICATIONS

- AIRBORNE ROTMAN LENS ANTENNA
  - RADIATOR ASSEMBLY
  - LENS ASSEMBLY
  - STRUCTURAL MEMBERS
- AIRBORNE ELECTRONICS BOXES
  - PROCESSOR CHASSIS AND COVERS
  - TRANSMITTER COVERS
  - SELECTED RECEIVER COMPONENTS

ANTENNA CROSS SECTION

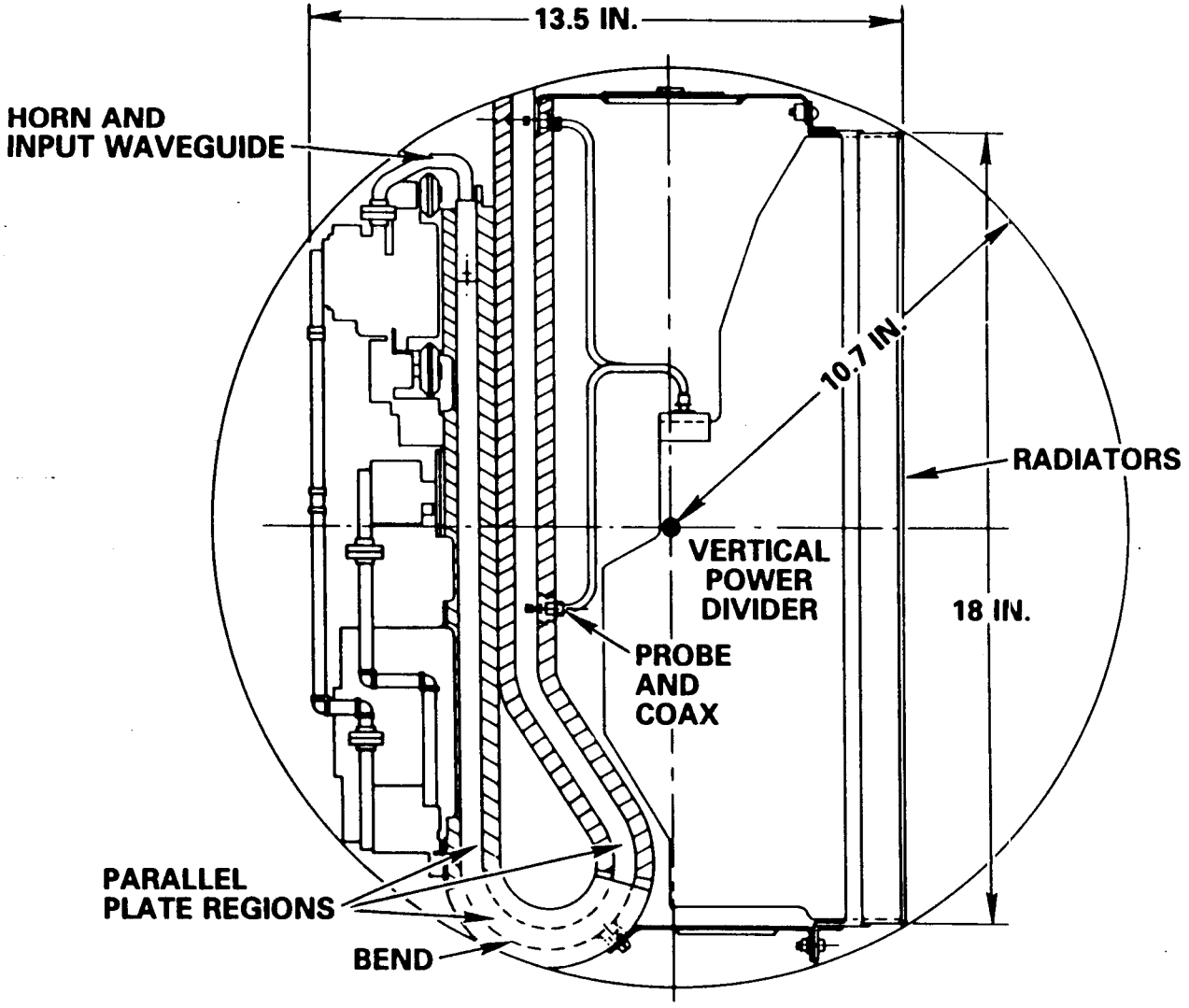

21161-18 (24027-5)

GOODYEAR AEROSPACE

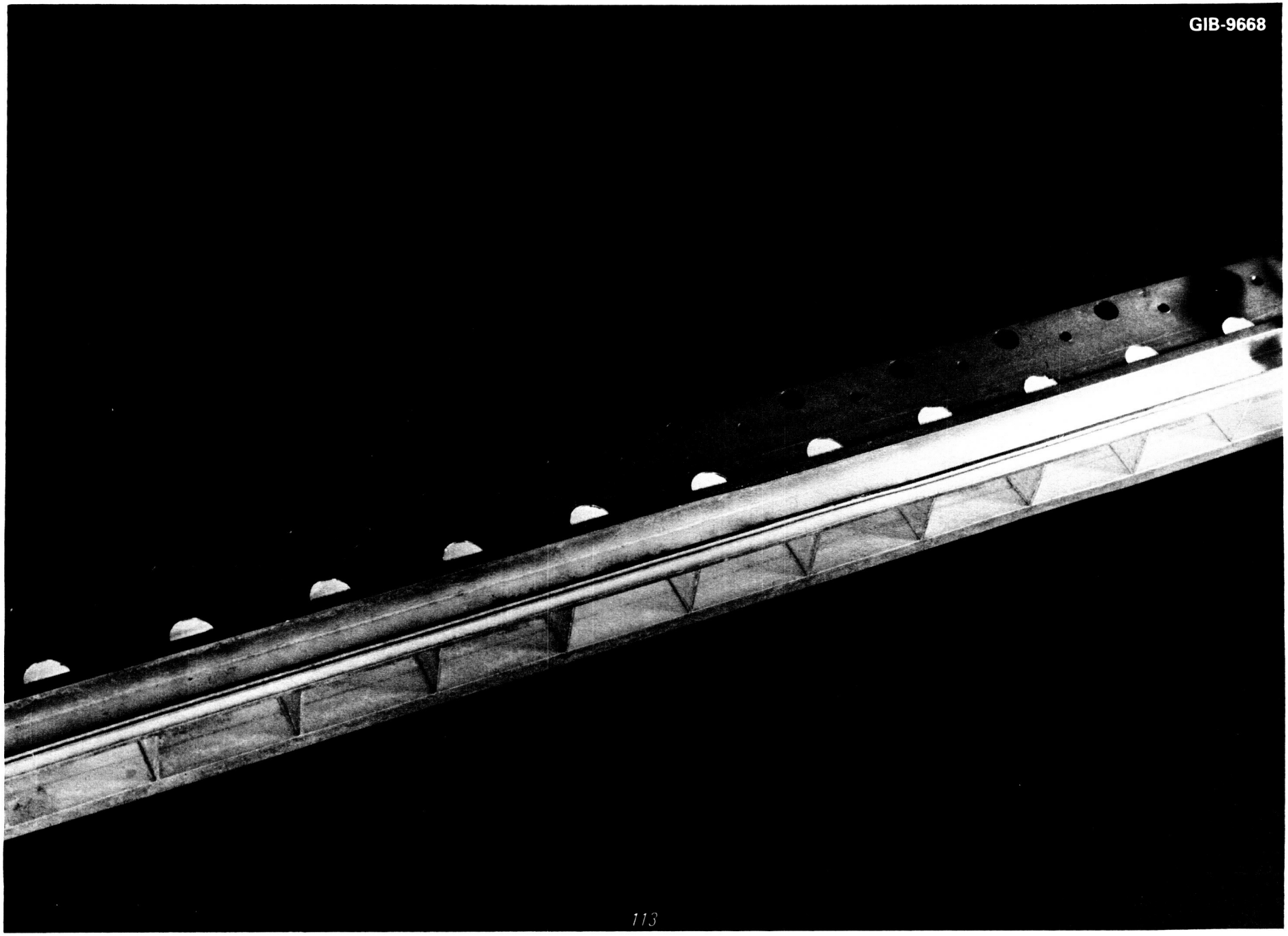
GIB-9668

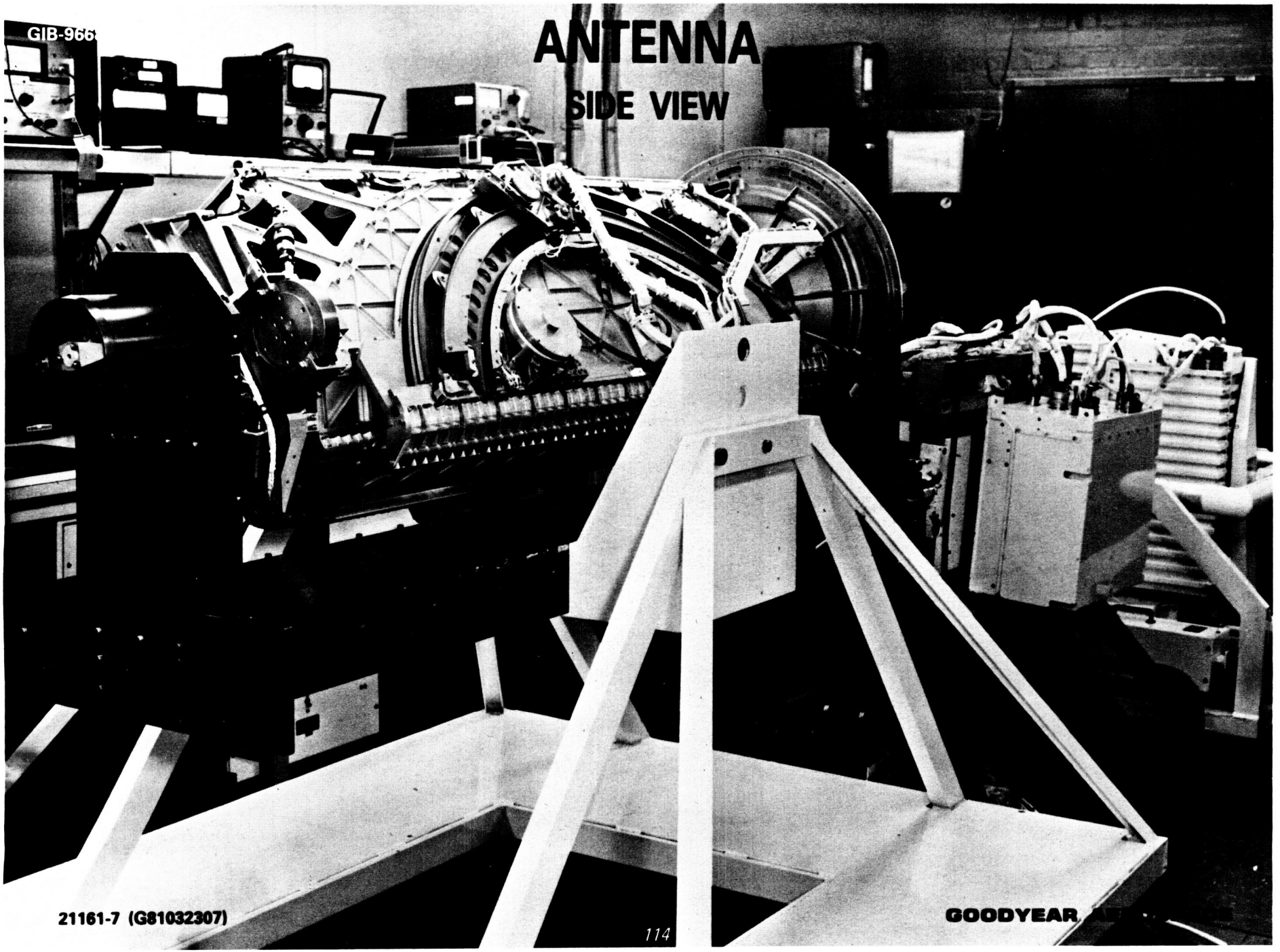
GIB-966
ANTENNA
SIDE VIEW
21161-7 (G81032307)
GOODYEAR

ANTENNA
FRONT VIEW

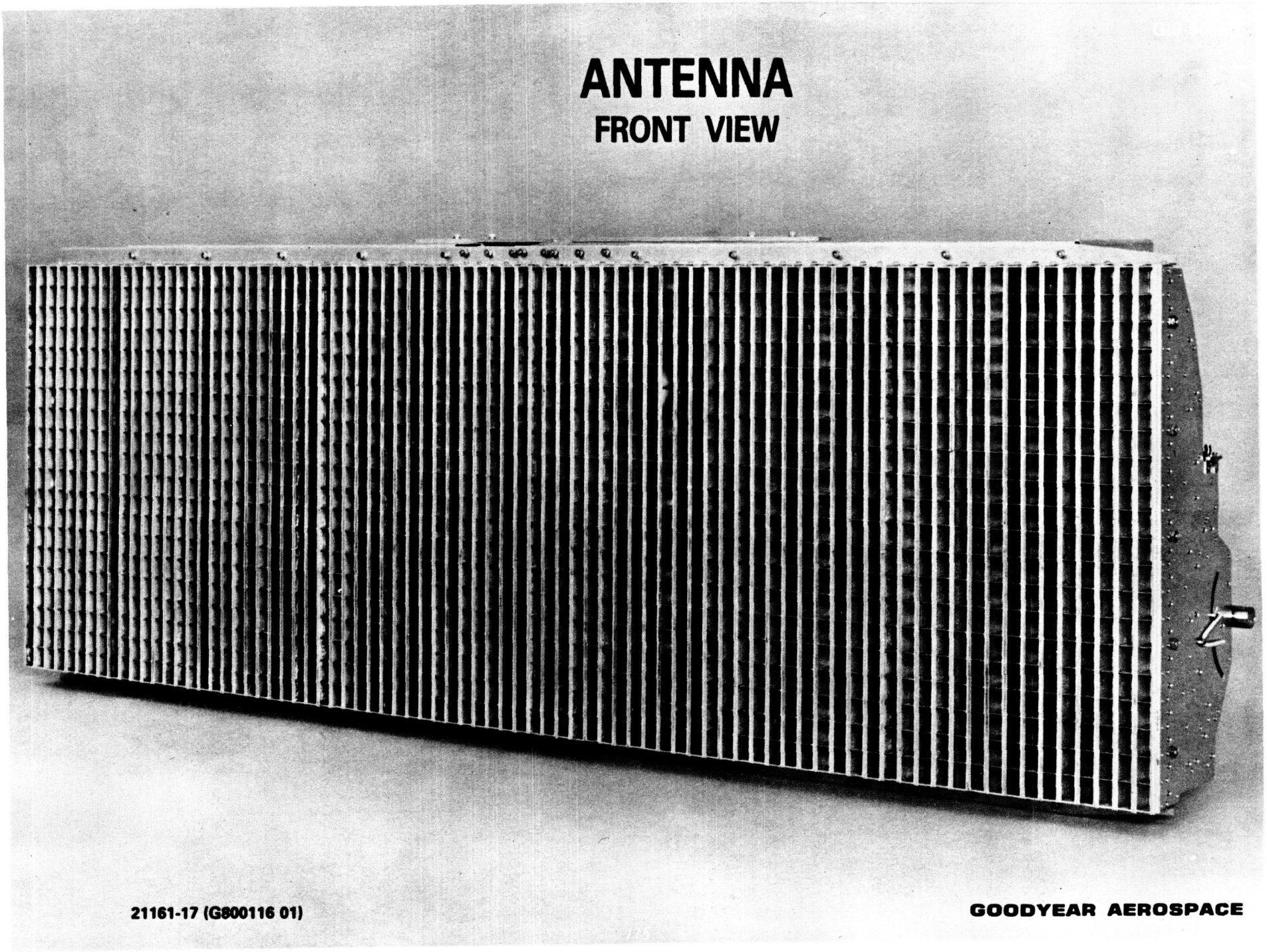

21161-17 (G800116 01)

GOODYEAR AEROSPACE