CONSULTATIVE COMMITTEE FOR SPACE DATA SYSTEMS

REPORT CONCERNING SPACE DATA SYSTEM STANDARDS

(NASA-TM-101169) SPACE STATION: APPLICATION OF CCSDS RECOMMENDATIONS FOR SPACE DATA SYSTEM STANDARDS TO THE SPACE STATION INFORMATION SYSTEM (SSIS) ARCHITECTURE (NASA) 56 p N89-70129

Unclas

00/18 0149338

SPACE STATION:

APPLICATION OF CCSDS RECOMMENDATIONS FOR SPACE DATA SYSTEM STANDARDS TO THE SPACE STATION INFORMATION SYSTEM (SSIS) ARCHITECTURE

"GREEN BOOK"
ISSUE – 1
OCTOBER 1985

CCSDS

CONSULTATIVE COMMITTEE FOR SPACE DATA SYSTEMS

REPORT CONCERNING SPACE DATA SYSTEM STANDARDS

SPACE STATION:

APPLICATION OF CCSDS RECOMMENDATIONS FOR SPACE DATA SYSTEM STANDARDS TO THE SPACE STATION INFORMATION SYSTEM (SSIS) ARCHITECTURE

"GREEN BOOK"
ISSUE – 1
OCTOBER 1985

FOREWORD AND EXECUTIVE SUMMARY

As the "space frontier" of twenty years ago has evolved into the "space workplace" of today, the sophistication of the missions and investigations has rapidly increased. This has been accompanied by an explosion in the appetite of users for data transmission capacity: in the Space Station era we are potentially faced with daily requirements for moving the digital equivalent of the entire US Library of Congress between the spacecraft and the ground!

Unfortunately our technical and fiscal ability to deal with these staggering quantities of data has not kept pace with the challenge. In recent years increasingly urgent user demands have been voiced for better space data system service and responsiveness. The Space Station may be our last chance before we drown in data.

In response to this looming problem, new high-performance data system architectures have been developed which offer solutions that are achievable using existing technology. The cornerstone of these architectures is the concept of standardization of the data handling interfaces and protocols which operate within the system. A Space Station Information System based on these standards can be economically built which is totally insensitive to the content, mix and rate of the user data which flow though it. By virtue of the high degree of automation offered by standardization, it can also be operated efficiently and cheaply.

NASA and ESA began the cooperative development of these new data system standards in 1980. Recognizing the importance of this work, the Consultative Committee for Space Data Systems (CCSDS) was formed in 1982 and seventeen other agencies from around the world began active collaboration in the design of standards covering telemetry, telecommand, timecodes and message formats. Since then major international technical agreements have been reached which recommend interoperable, standard ways of flowing data through space data systems. All of the international partners in the Space Station program have been parties to these agreements.

This report, which has been written by the Space Station Advisory Group of the CCSDS, describes an end-to-end Space Station Data System architecture that is fully based on the new internationally-recommended space data handling standards. The architecture is based on simple, modular building blocks which are recursively replicated and linked to construct virtually any desired data system configuration: CCSDS standards provide the mortar which holds the building blocks together.

The system architecture is developed within this report from top-level requirements and principles all the way through to a detailed functional design which demonstrates the feasibility of its implementation. This functional design is offered as a "strawman" from which detailed design analyses may be performed by the agencies and contractors participating in the Space Station program.

CONTENTS

Sections: **Page:**

AUTHORITY AND STATEMENT OF INTENT iii
REFERENCES vi
1 INTRODUCTION 1-1
1.1 PURPOSE 1-1
1.2 SCOPE 1-1
1.3 APPLICABILITY 1-1
1.4 ORGANIZATION OF THIS REPORT 1-2
2 SSDS ARCHITECTURAL REQUIREMENTS 2-1
2.1 ASSUMED SSIS DESIGN DRIVERS 2-1
2.2 SSDS ARCHITECTURAL CHARACTERISTICS 2-4
3 ARCHITECTURAL CONCEPT 3-1
3.1 EXISTING ARCHITECTURES 3-1
3.2 ARCHITECTURAL ATTRIBUTES OF THE SSDS 3-7
3.2.1 SSDS Architectural Layers 3-7
3.2.2 Data Traffic Analysis 3-10
3.2.3 SSDS Service Model 3-13
3.2.4 Standards and Service Characteristics 3-15
4 A CCSDS-BASED FUNCTIONAL DESIGN FOR THE SSDS 4-1
4.1 BASIC "BUILDING BLOCK" OF NETWORK TOPOLOGY 4-1
4.2 DETAILED "STRAWMAN: FUNCTIONAL DESIGN 4-6
4.2.1 The NASA Space Station 4-7
4.2.2 Attached Payload Facilities and International Elements 4-9
4.2.3 Interfaces, Unattached Flight Elements ... 4-10
4.2.4 TDRS/White Sands Ground Terminal 4-10
4.2.5 Mission Control Centers 4-11
4.2.6 Payload/User Data Processing Facilities... 4-12
5 OPEN ISSUES REQUIRING MORE STUDY 5-1

Tables:

1 LIST OF CCSDS/SSAG AGENCY CONTACT POINTS v
2 PRINCIPAL DATA TYPES TO BE HANDLED BY THE SSDS 3-11
3 DELIVERY CHARACTERISTICS OF SSDS DATA TYPES 3-12

Figures:

1 ORGANIZATION OF THE CCSDS iv
2 ORIENTATION OF THE SSDS WITHIN THE SSIS 1-3
3 SSDS TOPLOGY STUDIED BY MDAC 3-2
4 SSDS TOPLOGY STUDIED BY TRW 3-3
5 MDAC DATA TRANSPORT CONCEPT 3-4
6 MDAC DATA STANDARDS CONCEPT 3-4
7 TRW DATA TRANSPORT CONCEPT 3-5
8 TRW DATA STANDARDS CONCEPT 3-6
9 SSDS ARCHITECTURAL LAYERS 3-9
10 SSDS SERVICE MODEL 3-14
11 MAPPING OF SSDS SERVICES, LAYERS AND STANDARDS 3-16
12 CHARACTERISTICS OF CCSDS DATA STRUCTURES 3-17
13 DATA LINK OPERATIONS CONCEPT 3-22
14 SSDS ARCHITECTURAL BUILDING BLOCK 4-1
15 "SIMPLE" CONFIGURATION OF THE SSDS 4-4
16 "COMPLEX" ORBITAL CONSTELLATION 4-5
17 STRAWMAN SSDS FUNCTIONAL DESIGN ..... Last

AUTHORITY AND STATEMENT OF INTENT

Issue:	Green Book, Issue-1
Date:	October 1985
Location:	SSAG Meeting, September 4-6, 1985, Washington, DC, USA.

This report has been prepared by the Space Station Advisory Group (SSAG), an activity of the Consultative Committee for Space Data Systems (CCSDS).

A detailed description of the CCSDS is contained in Reference [1], and a summary overview of the structure and products of the Committee is shown in Figure-1. The CCSDS is a purely voluntary organization, dedicated to the goal of developing recommended, internationally-agreed standard techniques for space mission data exchange. It is supported by virtually every space agency in the free world, divided according to interest into "Members" and "Observers". It is organized into four technical Panels, staffed by experts nominated by each Agency, the products of which are consensus technical "Recommendations" for space mission data handling standards. A current list of CCSDS Recommendations is contained in References [2] through [9]. Recommendations are not binding on any Agency until they have been transformed into local "Standards" by that Agency.

The Space Station Advisory Group was created as an ad-hoc activity of the CCSDS for the purpose of identifying how its Recommendations may be applied to the design of the data system for the international Space Station Program. This Report, which represents the consensus technical agreement of the expert members of the Space Station Advisory Group, is intended to demonstrate the feasibility of designing a Space Station Information System which is fully compatible with the CCSDS Recommendations. It is offered to the international Space Station Program by the CCSDS in an advisory capacity.

For further information concerning any aspects of this Report, or for copies of the CCSDS Recommendations, a list of contact points within each of the partner Agencies participating in the Space Station Phase-B studies is provided in Table-1.

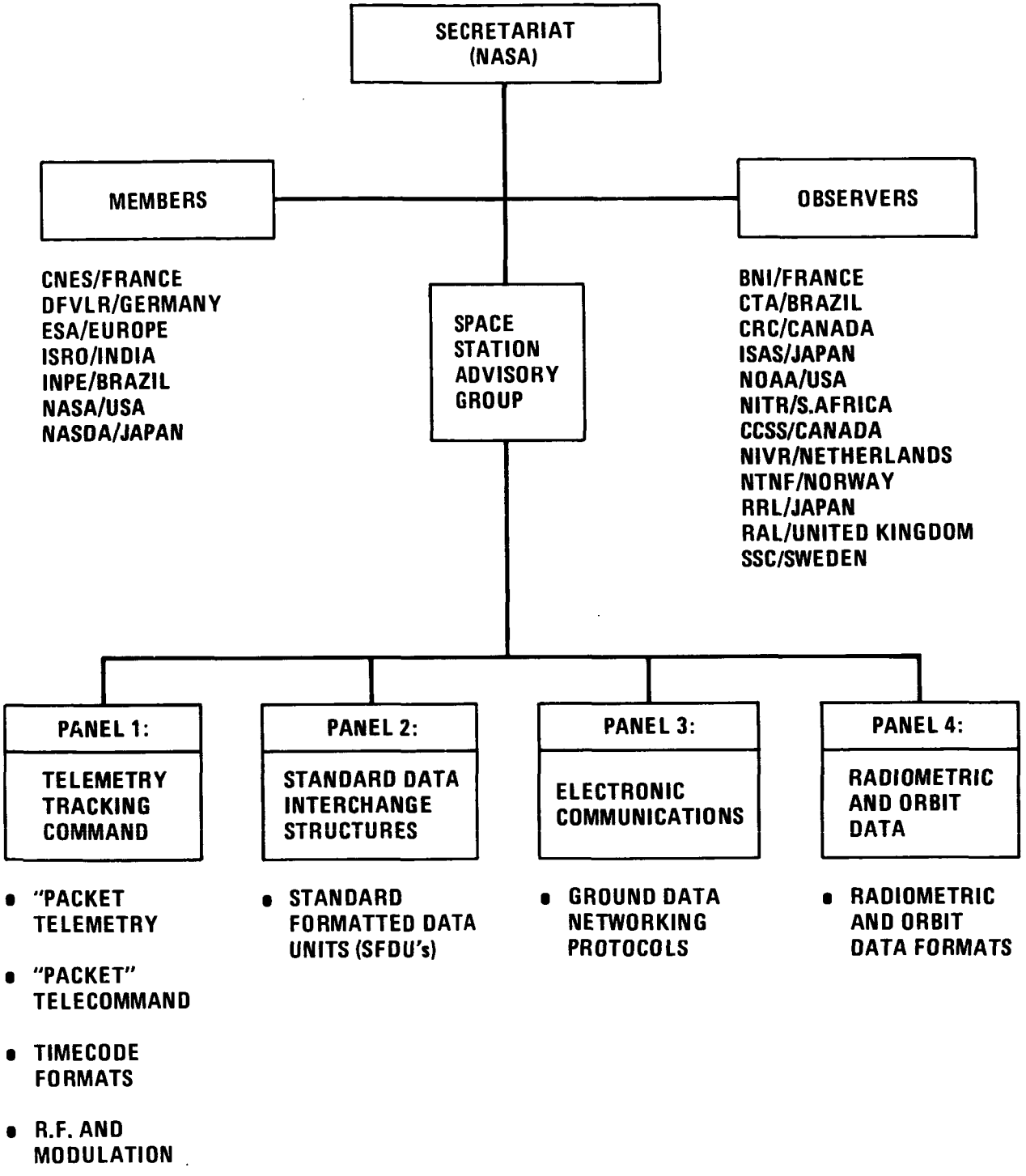

FIGURE - 1: ORGANIZATION OF THE CONSULTATIVE COMMITTEE FOR SPACE DATA SYSTEMS

CANADA:

Mr. David Boulding / DOC-CRC, Ottawa

EUROPEAN SPACE AGENCY:

Mr. Stefano Ciarrocca / ESTEC, Noordwijk, Netherlands
Mr. Dinesh Chaturvedi / ESTEC, Noordwijk, Netherlands
Mr. Richard Creasey / ESTEC, Noordwijk, Netherlands
Dr. Horst Kummer / ESOC, Darmstadt, W.Germany

JAPAN:

Mr. Shigeru Igarashi / NASDA, Tokyo
Mr. Michio Kato / NASDA, NASA-JSC Resident Office

UNITED STATES OF AMERICA:

Dr. Dana Hall / NASA-HQ-SEG, Washington DC
Mr. Robert Stephens / NASA-HQ-TS, Washington DC
Mr. Edward Connell / NASA-GSFC, Greenbelt, MD
Mr. Warner Miller / NASA-GSFC, Greenbelt, MD
Mr. William Poland / NASA-GSFC, Greenbelt, MD
Mr. Alex Dula / NASA-JSC, Houston, TX
Mr. John Muratore / NASA-JSC, Houston, TX
Mr. Sidney Novosad / NASA-JSC, Houston, TX
Mr. Adrian Hooke / NASA-JPL, Pasadena, CA

TABLE-1: LIST OF CCSDS/SSAG AGENCY AND CENTER CONTACT POINTS

REFERENCES

[1] "Procedures Manual for the Consultative Committee for Space Data Systems", CCSDS Document, Issue-1, August 1985.

[2] "Recommendation for Space Data System Standards: Packet Telemetry", CCSDS Recommendation, Blue Book, May 1984.

[3] "Recommendation for Space Data System Standards: Telemetry Channel Coding", CCSDS Recommendation, Blue Book, May 1984.

[4] "Report Concerning Space Data System Standards: Telecommand, Summary of Concept and Service", CCSDS Document, Green Book, Issue-4, July 1985.

[5] "Recommendation for Space Data System Standards: Telecommand, Part 3: Data Management Service", CCSDS Document, Red Book, Issue-1, July 1985.

[6] "Recommendation for Space Data System Standards: Telecommand, Part 2: Data Routing Service", CCSDS Document, Red Book, Issue-1, July 1985.

[7] "Recommendation for Space Data System Standards: Telecommand, Part 1: Channel Service", CCSDS Document, Red Book, Issue-2, July 1985.

[8] "Recommendation for Space Data System Standards: Time Code Formats", CCSDS Document, Red Book, Issue-3, June 1985.

[9] "Recommendation for Space Data System Standards: Standard Formatted Data Units -- Concept and Primary Label", CCSDS Recommendation, Red Book, Issue-0, December 1984.

[10] "Space Station Data System Analysis/Architecture Study, System Definition Report", McDonnell Douglas document # MDC-H1942, May 1985 and updated August 1985.

[11] "Space Station Data System (SSDS) Analysis/Architecture Study, Draft Task-4 IOC Preliminary Design Report", TRW document # SSDS TR 104-8-85, August 1985.

1. INTRODUCTION

1.1 PURPOSE

The purpose of this Report is to propose a functional design for the data transport facilities and services that are embedded within the Space Station Information System, and to show how this design may be based upon a menu of mission-independent data handling techniques which are fully compatible with the CCSDS Recommendations for space data systems standards (References [2] through [9]).

1.2 SCOPE

This report addresses the bidirectional end-to-end flow of data between user investigations which are distributed throughout all on-orbit elements of the Space Station Program, and their associated user analysis processes which are distributed throughout the ground and space systems.

The current NASA Phase-B contractor data management system architectures (References [10] and [11]) are assumed as a baseline for this Report. These architectures are blended within this document into a common functional design which uses standard data handling techniques based fully on the CCSDS Recommendations.

1.3 APPLICABILITY

The Space Station Data System (SSDS) consists of all of the facilities and systems which transport data between the user "ends" of the Space Station Information System (SSIS). The orientation of the SSDS within the SSIS is shown in Figure-2. The principal difference between the SSIS and the SSDS is that the SSIS contains the users and their investigations (i.e. its product is information and increased human knowledge), whereas the SSDS provides data communication between these user ends (i.e. its product is only inanimate data). The SSDS may be thought of as a "telephone system" which exists to service the communications needs of users in the conduct of their investigations: there is only one SSDS, but a new SSIS is created each time a user interacts with the system.

This Report proposes a standard, user-independent architecture for the data systems which transport data bidirectionally between the ends of the SSIS. It does NOT attempt to levy requirements on the internal data processing or analysis activities of the user, since these are unique to each application. The essence of the SSDS concept presented herein is to outline an architecture for a user-transparent data transport system, which is completely independent of the characteristics of the user data that are being transported, and which has total flexibility to accomodate mission-induced changes in data traffic.

Major physical elements of the SSDS, which are distributed throughout all elements of the Space Station program, include the following:

- On-orbit Local Area Networks (LANs).
- Interfaces between the onboard LANs and the payload/subsystems of the Space Station, or between the LANs and flight crew users.
- Telemetry and Telecommand data handling termini on the various flight elements of the Space Station constellation.
- Space-to-ground, ground-to-space, and space-to-space data links.
- Ground mission support facilities containing Telemetry and Telecommand data handling termini and pre-processing services.
- Local or wide area data distribution networks within the ground system which interconnect users with mission support facilities, data archives, and with each other's data processing facilities.

1.4 ORGANIZATION OF THIS REPORT

This Report is organized into four principal sections:

- Identification of key requirements that influence the design of the SSDS (Section 2).
- Synthesis of a system architecture for the SSDS which is based on existing Space Station Phase-B contractor studies and organized to exploit standard CCSDS data handling techniques (Section 3).
- Definition of a functional design configuration for the SSDS, and description of its major elements (Section 4).
- Assessment of open issues (Section 5).

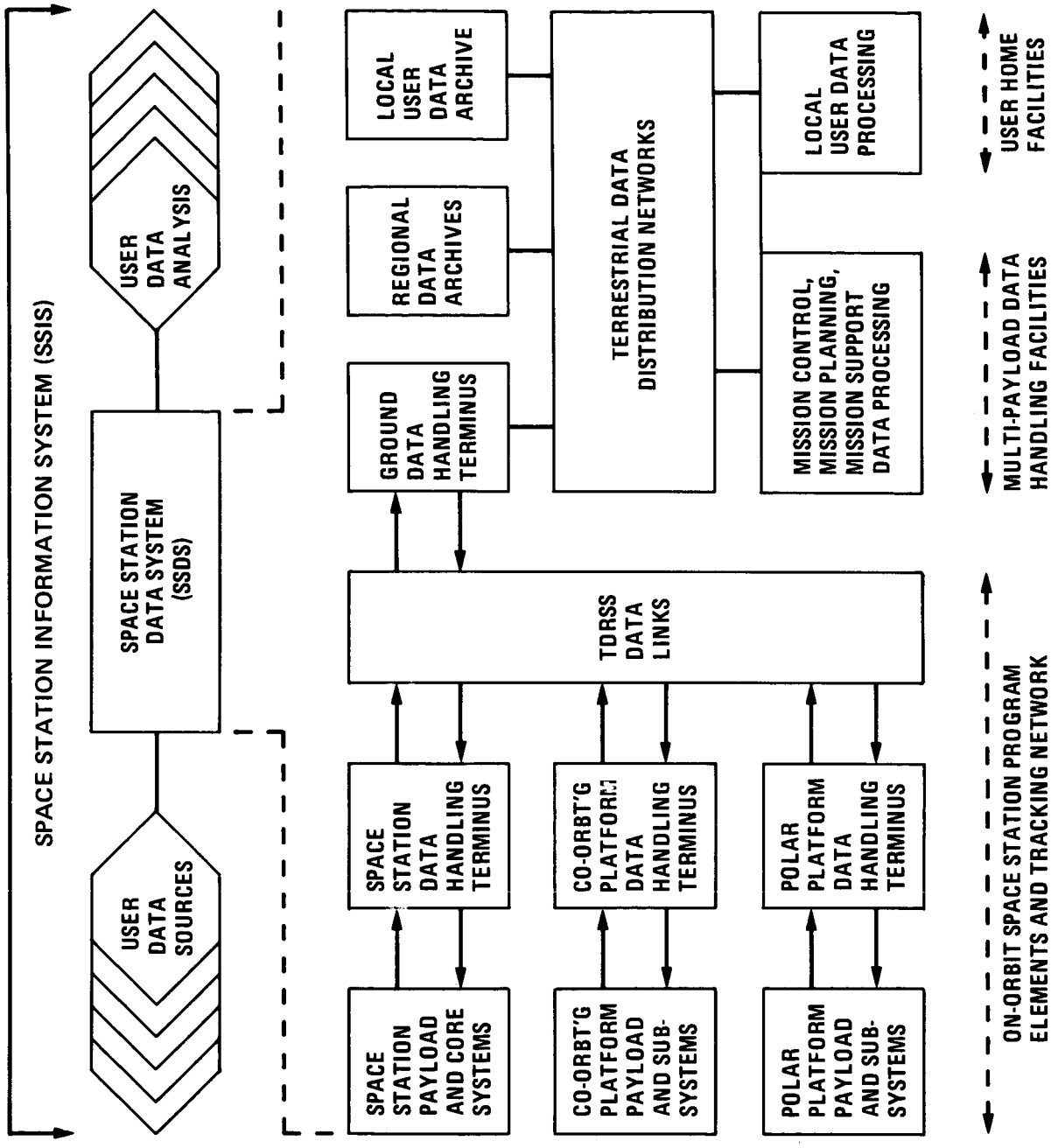

FIGURE - 2: ORIENTATION OF THE "SPACE STATION DATA SYSTEM" (SSDS) WITHIN THE "SPACE STATION INFORMATION SYSTEM" (SSIS)

2. SSDS ARCHITECTURAL REQUIREMENTS.

The SSDS must be designed, implemented and operated affordably in an environment of almost constant change. Some of the assumed design drivers imposed by its environment within the SSIS are listed in Section 2.1. The resulting architectural characteristics are listed in Section 2.2.

2.1 ASSUMED SSIS DESIGN DRIVERS

A. TECHNOLOGY AND USER REQUIREMENTS WILL GROW AND EVOLVE

A key architectural driver for the SSDS is imposed by its projected lifecycle, which paints a picture of a very complex, dynamic system that must accomodate growth and evolution of both technology and user requirements.

At birth the performance requirements imposed on the SSDS will push data handling technology to the limit, and much of the system control will probably be performed from the ground. During the growing years its data handling capabilities must evolve to support a maturing Space Station facility which carries an increasing number of user payloads with insatiable appetite for data transmission, yet its technology will be rapidly outdated unless the system is designed to accommodate change. As the SSDS matures, Space Station operations will become more and more independent, and its data communications and processing capabilities will need to expand in a controlled, evolutionary fashion to support this growth and migration of autonomy.

This evolutionary, changing nature of the system will require that the SSDS is built around a high degree of architectural modularity and structure.

B. THE SPACE STATION WILL BE A DISTRIBUTED SYSTEM SUPPORTING A GLOBAL NETWORK OF INTERNATIONAL SCIENCE, TECHNOLOGY AND COMMERCIAL USERS

Once the Space Station data stream is captured on the ground, it will be distributed to a confederation of remotely located data processing and archiving facilities, many of which will be interconnected by private (e.g. NASCOM) or shared public (e.g. X.25-based) communications networks.

These facilities will be distributed world-wide, and will provide specialized data handling, processing and archival services in support of a large and as yet undefined future community of users: international and domestic; government and private; working in the fields of commerce, science and technology. The breadth and diversity of the user community will require that the SSDS features a comprehensive menu of data format and protocol standards for the interchange of user application data. These application-oriented standards are essential to facilitate the early development of a dynamically adaptive, distributed SSDS that can sustain planned

evolution. The majority of these users will also require that the SSDS provides routine data handling services such as accounting, merging, ancillary data processing and temporary storage and retrieval capability. Some users will require the capability to make their data private so that they are unintelligible to eavesdroppers.

C. THE SSDS MUST INTERFACE "INTEROPERABLY" WITH DATA STREAMS FROM MANY DIFFERENT SOURCES

The in-orbit manned Space Station will be a major data generation, collection, and routing facility. Data from the manned Station itself, plus many different external data streams from the flight constellation of attached payloads, co-orbiting platforms, space facilities being constructed and independent free-flying spacecraft (owned by NASA or other agencies, either Earth-orbiting or bound for Deep-Space) must all be collected and merged by the Station, then relayed to the ground system, principally via the TDRSS.

Many independent free-flyers which are only transiently associated with the Space Station (perhaps for servicing and repair) will also have the capability to communicate directly with their own ground systems via dedicated links: these spacecraft must be given data handling support without incurring major expenditures for protocol conversion. The international elements may have their own data relay satellites and ground support networks which can provide valuable backup data paths for monitor and control. The TDRSS ground station will have to simultaneously handle ultra-high-rate data streams from the Space Station and platforms, plus other data streams from free flyers, all of which must be rapidly sorted and switched to a variety of processing centers.

Handling all of these data interfaces in an economical way will require that the SSDS establish standard formats and protocols for passing user data through the system, and that these standards be coordinated widely within the international space community so that maximum levels of data system commonality and interoperability can be attained. Compounding the problem of interoperability is the requirement to prevent unauthorized users from interfering with the operation of the system.

D. THE SSDS MUST TRANSPORT A WIDE VARIETY OF DIFFERENT DATA TYPES AND RATES

The SSDS will be required to transport and deliver a mix of digital payload, engineering, audio and video data -- each with its own unique characteristics and requirements -- through the bidirectional TDRSS links. A broad spectrum of performance requirements will exist, for example:

a) Operational video and audio data need real time, sequential data delivery, but are tolerant of data errors and short data outages.

b) Scientific imaging data can tolerate delivery delays but not data outages. They are moderately tolerant of data errors when uncompressed, but very intolerant when compressed.

c) Other digital data types -- including low and medium rate payload telemetry, engineering and housekeeping date, ancillary data, data base transfers, telecommand sequences, memory loads, and text and graphics -- each have differing and often conflicting requirements but must be mixed during transmission through space/ground data links. Some data types (such as programs and data base transfers) are intolerant of any data errors or outages, while other data types are tolerant of even the poorest communications.

Even in the initial on-orbit configuration, the SSDS downlink data service will need to accommodate a composite data rate that periodically approaches (and even transiently exceeds) the present TDRSS limit of 300 Mb/s. The SSDS uplink data service (which includes operational and recreational audio and video) will be maximally bounded by the TDRSS capabilities of 25 Mb/s. These SSDS data link services must transparently support instantaneous, dynamic and adaptive changes in the mix and volume of user data which flow through them.

The wide diversity of user data requirements will require that the SSDS provides several different "classes" of standard user data transport service, each displaying a well-defined quality of service which includes clear specifications of data rate, error rate, delay, sequentiality and completeness. The SSDS will also probably be required to provide certain value-added utility services for user data streams such as merging, sorting, storage and remote access.

E. OPERATION OF THE SSDS MUST BE FLEXIBLE AND EFFICIENT

The SSDS design must minimize the amount of manpower which is required to plan data acquisition and transmission, to monitor and control its operational transfer, and to reconfigure the network in response to changing inflight data gathering strategies. Present (e.g. Spacelab) missions have link characteristics -- data rate, modulation type, multiple formats, etc. -- which change according to the content and mix of data being transmitted, requiring that thick books are written and maintained (each consuming hundreds of manhours of engineering time) to describe the unique data configurations for literally every minute of a seven day flight. In the Space Station era this kind of operational complexity will be impossible to afford. The data transfer systems must be completely transparent to the content and type of integrated digital data which are being transmitted through them, allowing rapid reconfiguration of core and payload data acquisition strategies "on the fly".

F. THE SSDS MUST BE COMPATIBLE WITH TDRSS

All Space Station digital data types, each with its own service requirements, must be merged into a single stream to pass through the TDRSS uplink/downlink transmission path. This will require that all data be transferred digitally through the standard TDRSS capabilities. The TDRSS services include uplink and downlink transmission on S-band and K-band multiple and single access channels. The 300 Mb/s K-band single access service, using I and Q channels, will provide the dominant downlink data transport service for user payloads. Some critical core monitor and control data may be carried separately on the S-band channel.

2.2 RESULTING SSDS ARCHITECTURAL CHARACTERISTICS

Design of the SSDS is clearly not a run-of-the-mill data handling problem. NASA and the international space community must build upon lessons learned from past deficiencies which have caused intense user dissatisfaction with systems that have proven to be very difficult and costly to use, operate and maintain. The Space Station Advisory Group proposes that three important engineering concepts must be embedded in the initial design of SSDS to guarantee its smooth implementation and evolution. These concepts are: layering and modularity; virtual channelization; and standard data structures and data autonomy.

A. LAYERING AND MODULARITY

The concept of layering ("dividing and conquering") allows a diverse and complex system to be broken up into easily-comprehended modules that reside in clear architectural strata. Within the strata (or layers), similar data handling functions talk to each other using well-defined standard rules. By layering the SSDS, a design can be created which:

a) Is understandable by a wide range of users and implementers.
b) Can modularly expand or contract to accommodate changing user or technological requirements.
c) Can be tested in a modular fashion, by maximizing the functional independence between processes residing in different system layers.
d) Displays simple, well-defined system interfaces that are not constantly changing.
e) Can adaptively respond to dynamic mission events.
f) Facilitates modular, recursive use of replicated hardware and software elements to lower system development and operation costs.
g) Avoids the need for quantum jumps in technology development by permitting complex tasks to be broken into pieces which can be handled by existing state-of-the-art technological capabilities (e.g. parallel processing of very high rate data streams).

B. VIRTUAL CHANNELIZATION

The SSDS must transport huge quantities of multi-source data at extraordinarily high data rates through the bandwidth-constrained TDRSS serial data channels that interconnect the space and ground systems. Handling and processing serial data streams at rates approaching 300 Mb/s poses severe technological challenge.

A concept known as "Virtual Channelization" allows a physical serial data channel to be logically divided into many virtual (apparently parallel) data paths. Application of this technique to the SSDS is vital, since it allows the high rate serial data stream to be immediately split and routed to many independent parallel processors at the ends of the channel, each operating at data rates that are well within the capabilities of current technology.

C. STANDARD DATA STRUCTURES AND DATA AUTONOMY

The concept of standardizing the formats and protocols by which data are exchanged between distributed elements of the SSDS is critical to the design of a transparent, highly automated, user-friendly system.

A component of standardization is the concept of data autonomy. In order for the SSDS to provide efficient, high performance data services that handle a diverse mix of data types and requirements, it must be designed to be adaptively "data driven". Data autonomy -- encapsulation of variable user data within standardized labels -- provides the foundation for these adaptive data services. It is achieved within the CCSDS Recommendations by having each data source (engineering subsystem or user payload instrument) encapsulate its application data messages into standard "Source Packets". These Source Packets have globally interpretable labels from which the SSDS interface equipment can identify the source and/or destination, end-to-end class of service, priorities and conditions for delivery. The labels contain information required for the verification, validation, and accounting for the transported block of user data within the Packet. Standard methods for autonomously time-tagging the block of user data are also recommended by the CCSDS.

Within the framework of the layered concept of "Open System Interconnection" (OSI), the International Standards Organization (ISO) is currently developing a broad spectrum of commercially-supported general purpose standard data protocols which are designed to provide interoperability between dissimilar elements within an open worldwide communications system. Many of these emerging standards will have direct and cost-effective application to the SSDS.

However, the ISO-OSI standards are not currently very attractive for specialized mission data exchange through capacity or bandwidth constrained space data channels, or for data rates exceeding 1 Mb/s, owing to their high protocol overhead (caused by their wide range of general-purpose options) and undesirable error-propagation effects when operated through weak signal channels. Because space system implementation complexity and data link performance optimization are both dominant drivers for space missions, the CCSDS has been developing a set of Recommendations for simple, robust, special purpose standard techniques that are tailored for the unique environment of exchanging data through noisy space data channels. The CCSDS Recommendations are internationally agreed and are supportable by virtually every type of space mission, thus permitting a wide degree of interoperability between space vehicles and facilities owned by many different agencies.

The CCSDS Recommendations were NOT intended to replace the ISO-OSI standards, but to supplement them in those specific areas that are "unique" to space missions -- primarily data transport through space data channels. They are conceptually intended to support systems of the complexity of the SSDS, though their initial definition has focused on a narrower problem, i.e. the cross support of free-flying spacecraft by a global, international network of ground tracking stations. For this reason a few expansions and enhancements to the present CCSDS Recommendations may be required in order to fully utilize them within the SSDS. The CCSDS Recommendations were specifically designed to permit this planned evolution and expansion.

Nearly all of the existing CCSDS data link formats and protocols are directly applicable to the SSDS. Only one technical area (coding techniques for use on spacecraft-to-spacecraft data channels, an environment which has not yet been considered by CCSDS) may require additional development and international coordination.

3. ARCHITECTURAL CONCEPT

This Section contains two parts: in Section 3.1 the existing NASA contractor SSDS architectures are reviewed; in Section 3.2 these are blended into a "common" architecture that is based on CCSDS-compatible standard data handling techniques.

3.1 EXISTING ARCHITECTURES

The NASA Phase-A contractor "Data Management System Architecture" studies, and the ongoing contractor activities within Phase-B, have already generated excellent data system architectural concepts which assume a high level of standardization and CCSDS compatibility (References [10], [11]).

The SSDS topologies proposed by the NASA contractors -- McDonnell Douglas (MDAC) and TRW -- are overviewed in Figure-3 and Figure-4. Both show a widely distributed system having many independent data processing nodes in space and on the ground, with the space and ground elements interconnected by a wideband data umbilical through TDRSS.

The MDAC concept (Figure-5) is to connect the user ends of the system by a transparent "data transport service": this service is implemented using CCSDS Source Packets, Transfer Frames and Channel Coding (Figure-6). Packets are user message structures, which are exchanged onboard and within the ground system using commercial local area network standards. The Frames and Channel Coding are used on the space/ground data link.

The TRW concept (Figure-7) is similar, i.e. the user ends of the system interconnected by a standardized flow of "inbound" (uplink) and "outbound" (downlink) data. The service is again implemented using CCSDS Transfer Frames and Channel Coding on the RF space/ground links (Figure-8), with CCSDS Packets being user-level data structures.

Although both contractors have clearly recognized the utility of the CCSDS data structures, the nature of competitive studies makes it difficult to discern the common ground. Furthermore, NASA has only recently opened the SSDS studies to the international participants in the Space Station Program, and the full implications of the internationally agreed CCSDS Recommendations may not be immediately clear. The Space Station Advisory Group has therefore created this Report with the intent of:

1. Clarifying the intended applicability of the CCSDS Recommendations.

2. Presenting a "unified" end-to-end SSDS architecture which embraces the results of the present contractor studies, demonstrates recursive use of standardized CCSDS data interfaces, and reveals the power of these interfaces to facilitate international interoperability.

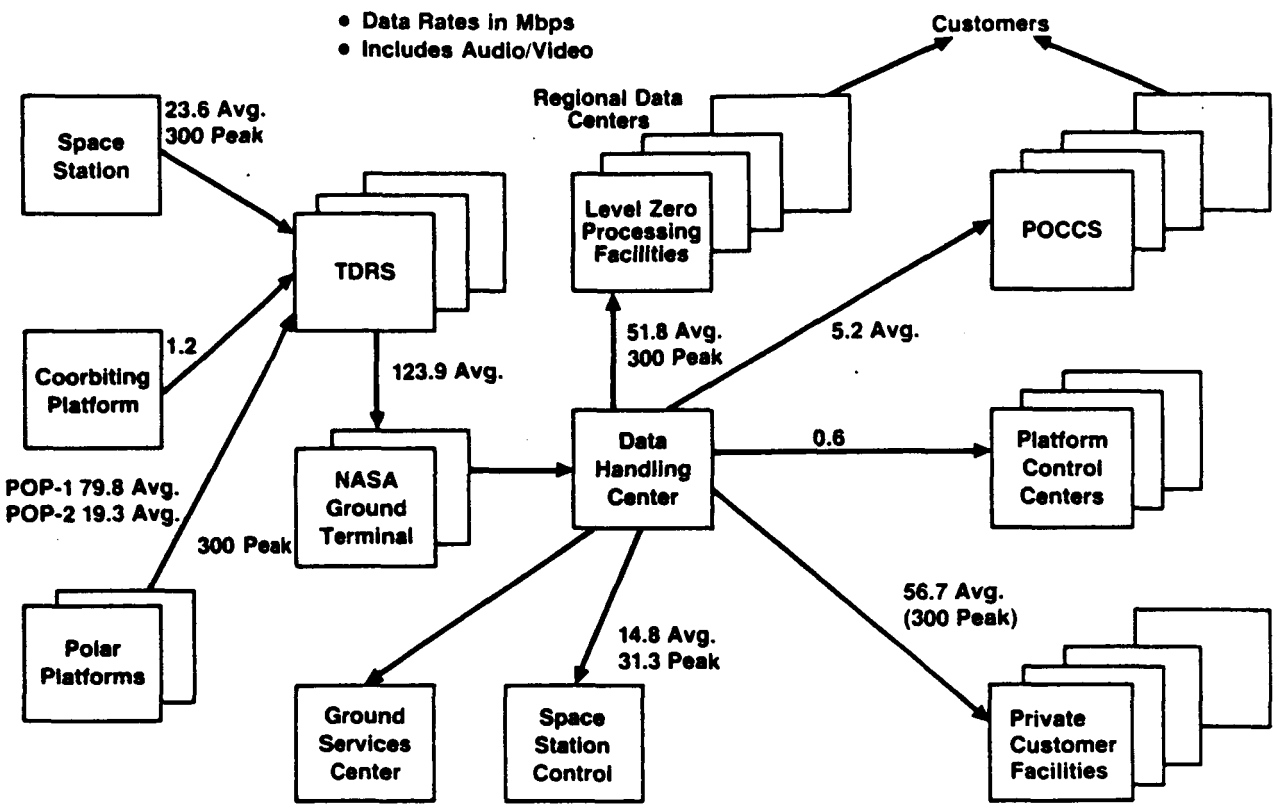

FIGURE-3: SSDS TOPOLOGY STUDIED BY MDAC

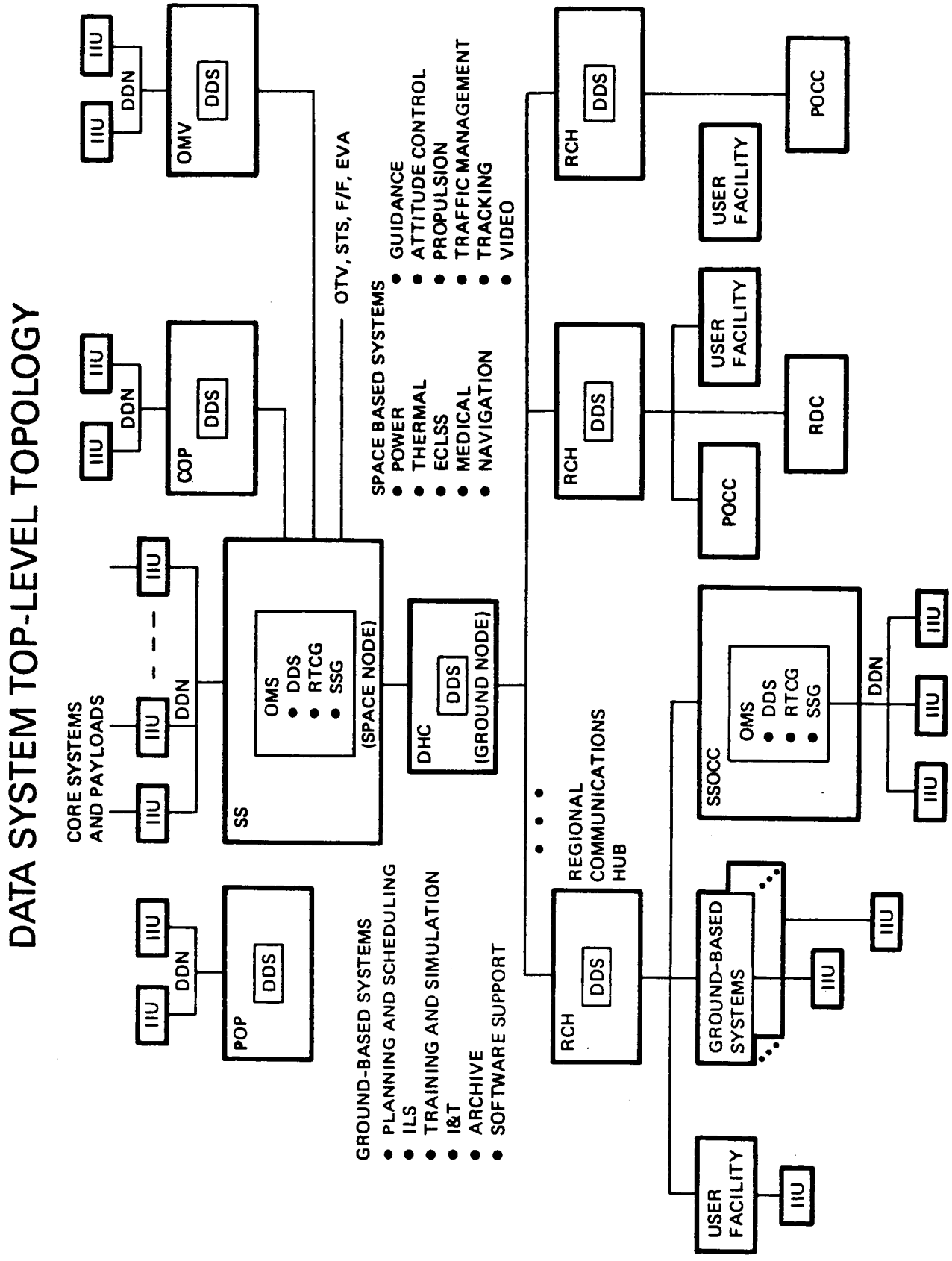

FIGURE-4: SSDS TOPOLOGY STUDIED BY TRW

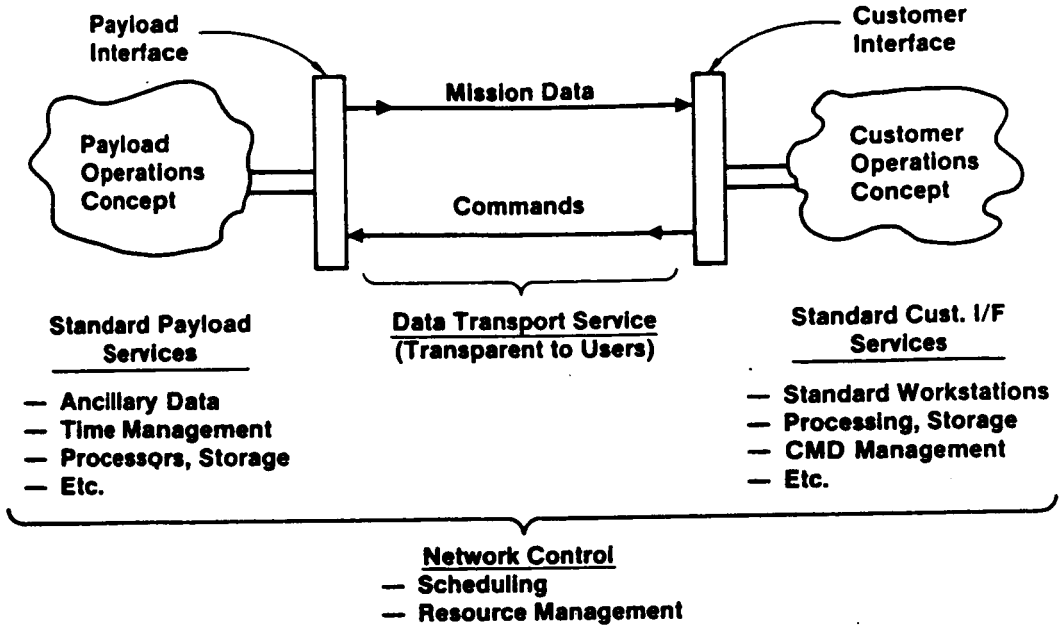

FIGURE-5: MDAC DATA TRANSPORT CONCEPT

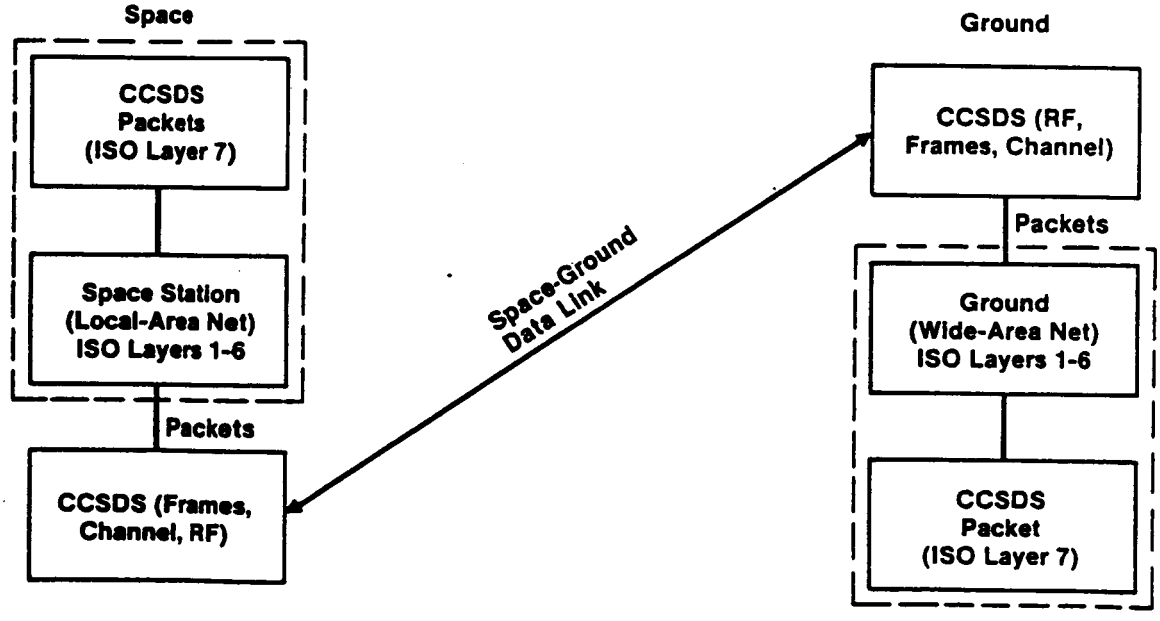

FIGURE-6: MDAC DATA STANDARDS CONCEPT

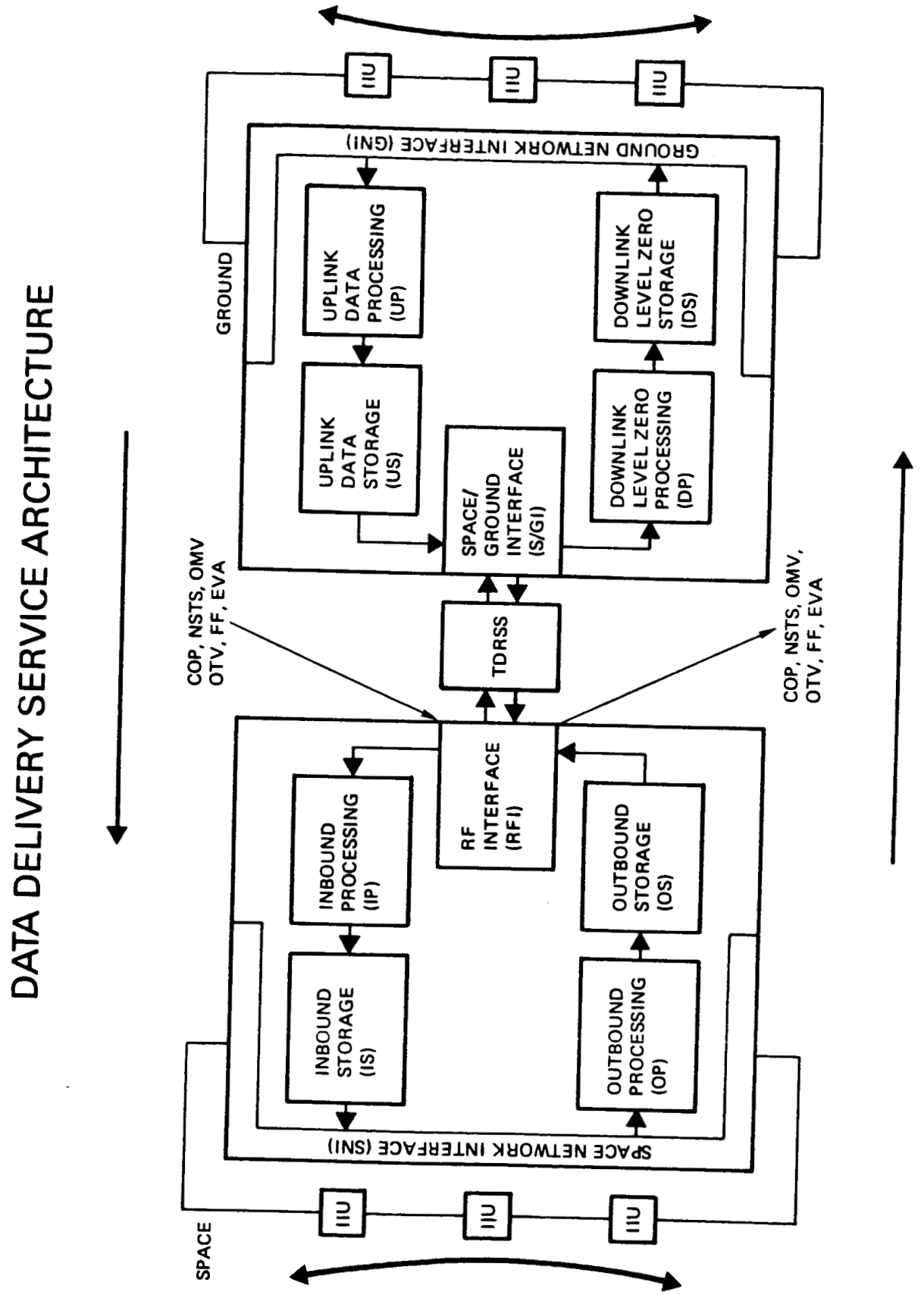

FIGURE-7: TRW DATA TRANSPORT CONCEPT

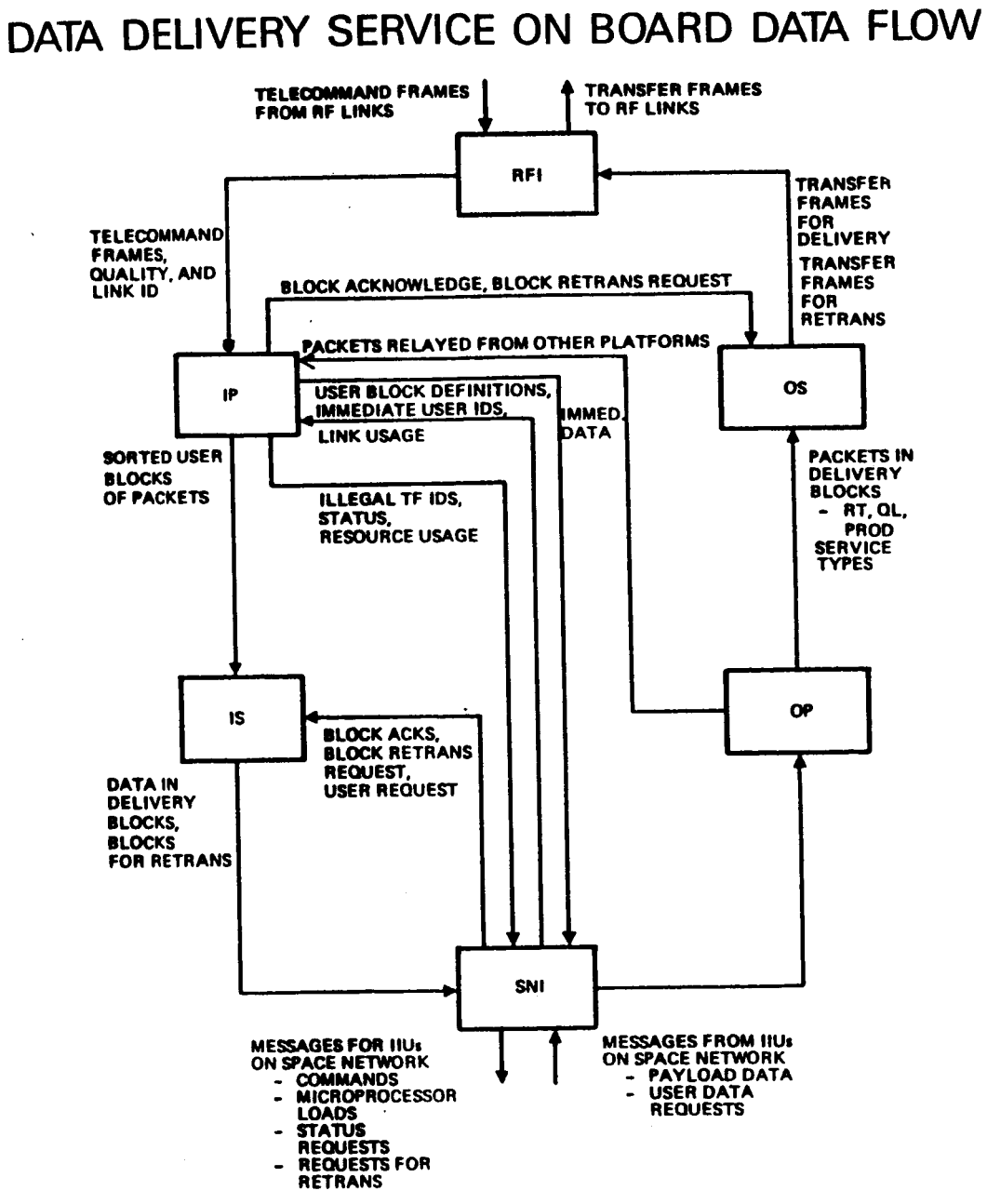

FIGURE-8: TRW DATA STANDARDS CONCEPT

3.2 ARCHITECTURAL ATTRIBUTES OF THE SSDS

The Phase-A and preliminary Phase-B contractor data management system architectures have been abstracted and combined by the Space Station Advisory Group into a set of common SSDS architectural attributes. The process used was:

- Identification of the system layering (Section 3.2.1).
- Analysis of the system data traffic requirements, and derivation of the services to be provided (Section 3.2.2).
- Construction of an SSDS Service Model (Section 3.2.3).
- Definition of the standards used to implement the SSDS services, and of the salient service characteristics (Section 3.2.4).

3.2.1 SSDS ARCHITECTURAL LAYERS

The SSDS contains two principal "regions" that are interconnected by space-to-space or space-to-ground data channels (Figure-9). The "user region" contains the user and the local data processing and communication systems which support his investigation. The "remote region" contains the sensors and effectors which observe the event being investigated, all under the remote supervision of the user, plus their supporting data processing systems. If the user is located in space, the two regions may become superimposed.

Most modern communication networks have adopted "layered" architectures which conform to Reference Model of Open System Interconnection (OSI) that has been developed by ISO. Although the seven-layer ISO-OSI model is general enough to cover space networks, Space Station remote sensing applications have communications requirements which differ from most commercial systems in three important ways:

1. Data rates are extremely high.
2. The weak-signal data channels which interconnect the remote and user regions are expensive to provide and operate, and have unique error-injection characteristcs.
3. Many different types of data must be simultaneously transmitted in digital form through these channels.

The commercial standards being developed for the lower layers (particularly Layers 1, 2 and 3) of the ISO-OSI architecture are not suitable for use on space data links operating at very high data rates and displaying weak-signal error characteristics. Because of this the CCSDS has focussed on developing space-specific protocols for use on these data links, which operate at high efficiency and are customized to their error environment. The SSDS design assumes that ISO-OSI standards will be used at higher layers wherever possible, and that commercial networking standards may be used in other parts of the system where space data channels do not exist (e.g. onboard data exchange or inter-user networking on the ground).

In view of the important need to take channel characteristics into consideration (especially their efficient utilization), a modified OSI model was constructed for space data systems. A diagram identifying five principal data handling layers within the SSDS is presented in Figure-9. The layers are:

1. A **USER LAYER**, within which reside the user-controlled activities associated with space mission remote sensing such as payload instruments, core subsystems, and data analysis facilities. The objective of the lower layers of the SSDS is to place minimum constraints on this layer. The User Layer (which falls outside of the ISO-OSI communications environment) is supported by:

2. An **APPLICATION PROCESS LAYER**, which contains the data processing elements associated with the user activities. Within the space segment, multitudes of distributed application processes execute within instruments or core subsystems and provide functions such as telemetry acquisition, command execution, system management and ancillary data computation. Within the ground segment these processes provide functions such as data reduction, data archiving, mission planning and command generation. Standard message formatting protocols are required within this layer (which in the ISO-OSI model would embrace Layers 7, 6, 5 and 4), drawing upon the services of:

3. A **LOCAL NETWORKING LAYER**, that allows the application processes to intercommunicate in their local (space or ground) environment. In space, this layer contains onboard local area networks and data buses. On the ground, this layer contains local and wide area data distribution networks, either private (e.g. NASCOM) or public (e.g. commercial packet-switched service). Standard networking protocols (residing at ISO-OSI Layers 3, 2 and 1) are required within this layer, interconnected by gateways or bridges with:

4. A **SPACE DATA LINK LAYER**, which allows the various on-orbit local area networks within the space segment (Space Station, tethered platform, co-orbiter, etc.) to communicate with each other, or to communicate with the data distribution networks on the ground. Standard data link protocols are required within this layer (residing at ISO-OSI Layer 2), drawing upon:

5. A **SPACE DATA CHANNEL LAYER** (residing at ISO-OSI Layer 1) that establishes the physical space/space or space/ground signal transmission paths.

The bottom two layers must be carefully designed in order to insulate the effects of the unique space channel from higher layers. Special purpose space data link and space data channel data structures must be provided for these layers, since commercial techniques are not available. The networking layer is assumed to use conventional techniques. Messages flowing across the application process layer (since they must pass through the space channel) must use efficient formats and, in the absence of suitable commercial standards, will be unique to space mission applications.

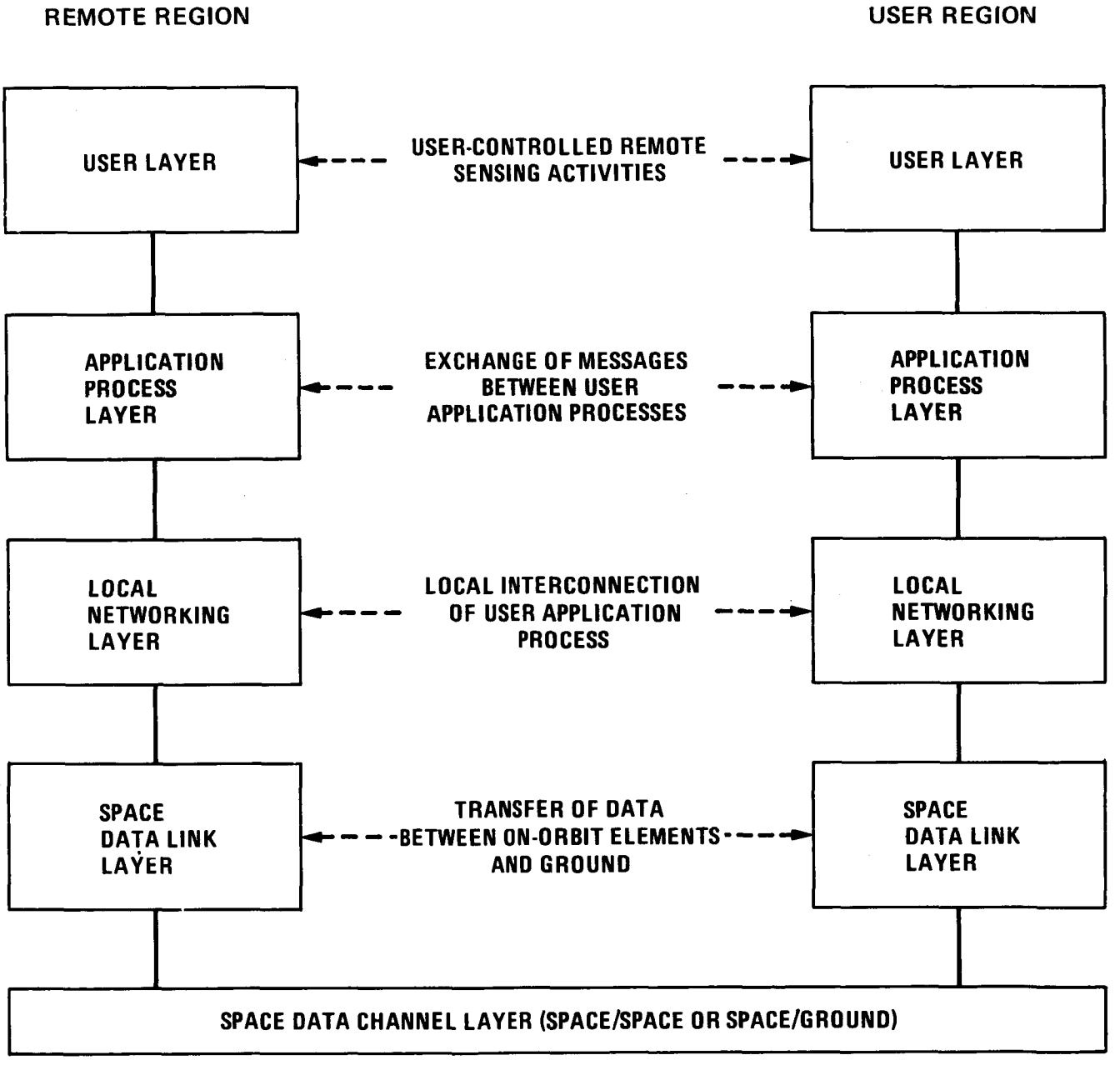

FIGURE - 9: SSDS ARCHITECTURAL LAYERS

3.2.2 DATA TRAFFIC ANALYSIS

Using information contained within the NASA Phase-A/B contractor reports, an synthesis of the data traffic requirements for the SSDS was performed.

A summary of the principal types of user data which must be delivered end-to-end by the SSDS is shown in Table-2.

The delivery characteristics and gross service requirements of each data type are shown in Table-3. These are the key paramaters which drive the design of the data transport systems.

Four principal "grades" of SSDS data delivery service have been defined, and mapped onto Table-3. These are as follows:

- **GRADE-I DATA DELIVERY SERVICE:**

  Data are delivered guaranteed to be complete, error-free, in sequence and without duplication.

- **GRADE-II DATA DELIVERY SERVICE:**

  Data are delivered possibly incomplete (containing outages), but guaranteed to be error-free, in-sequence and without duplication.

- **GRADE-III DATA DELIVERY SERVICE:**

  Data are delivered possibly containing outages, possibly containing errors, but guaranteed to be in-sequence and without duplication.

- **GRADE-IV DATA DELIVERY SERVICE:**

  Data are delivered possibly containing outages, possibly containing errors, possibly out of sequence, and possibly with duplication.

Within the SSDS, users will be able to choose the grade of service which matches the requirements of their application. The SSDS will be implemented to provide selectable value-added services which can remove many routine data handling burdens from the user. In particular, the use of accountable standard data structures will enable delivery performance to be guaranteed.

ASCII TEXT	Electronic mail, flight plans, procedures, text file transfers (core or payload, bidirectional).
CONF. VIDEO	Video for routine space/ground discussions and payload control, recreation, etc. (core or payload, bidirectional)
CONF. AUDIO	Audio for routine space/ground discussions and payload control, recreation, etc. (core or payload, bidirectional)
OPERAT'L VIDEO	Full resolution video for observing critical activities (core or payload, bidirectional).
OPERAT'L AUDIO	High quality audio for discussing critical activities (core or payload, bidirectional).
OPERAT'L TELEM.	Engineering telemetry, monitoring critical activities (core or payload).
OPERAT'L COMMAND	Engineering telecommands, controlling critical activities (core or payload).
COMPUTER OR DB LD	Exchange of data between computer memories (core or payload, bidirectional).
HR P/L DIGITAL SCIENCE:	Imaging telemetry (multi-spectral, SAR, etc.).
Bulk	Offline analysis, research oriented.
Quick Lk	Near-real time analysis, operationally/adaptively oriented
L-MR P/L DIGITAL SCIENCE:	Non-imaging telemetry (materials process, science instrument, routine housekeeping data, etc.)
Bulk	Offline analysis, research oriented.
Quick Lk	Near-real time analysis, operationally/adaptively oriented
TEXT AND GRAPHICS HARDCOPY	High fidelity pixel map of digitized image (e.g. fax), for planning, troubleshooting, recreation or discussions (core or payload, bidirectional).
INTER-ACTIVE QUERY	Discrete messages transmitted to remote application processes to e.g. initiate subroutines, interrogate data bases, etc. (bidirectional, "Telescience" mode)
BULK DATA	Bulk transfer of general purpose digital data up/down (e.g. low fidelity imagery, newspapers, etc.)

Key:

CONF.	=	Conference	DB LD	=	Data Base Load
OPERAT'L	=	Operational	HR	=	High rate
L-MR	=	Low or medium rate	P/L	=	Payload data
TELEM	=	Telemetry	Quick Lk	=	Quick Look

TABLE 2: PRINCIPAL DATA TYPES TO BE HANDLED BY THE SSDS

DATA TYPE:	DATE RATE / CHANNEL	TRANSPORT DELAY, MAX	CONTINUOUS OR BURST?	GRADE OF SERVICE	ALLOWABLE ERROR RATE
ASCII TEXT	< 1 Mb/s	Minutes to hours	Burst	I	-
CONF. VIDEO	5-10 Mb/s 5 channls	1 to 2 sec	Continuous	III	10*-5 BER (compressed)
CONF. AUDIO	16-32kb/s 5 channls	1 to 2 sec	Continuous	III	10*-5 BER (compressed)
OPERAT'L VIDEO	<25 Mb/s 5 channls	2 to 4 sec	Continuous	III	10*-5 BER (compressed)
OPERAT'L AUDIO	<64 kb/s 20 chanls	1 to 2 sec	Continuous	I (speech recognition) III other	- 10*-3 BER
OPERAT'L TELEM.	<500 kb/s	2 to 4 sec	Continuous	I< 100kb/s II< 500kb/s	- <0.1% outage
OPERAT'L COMMAND	<100 kb/s	2 to 4 sec	Continuous	I Critical II Routine	- <1% outages
COMPUTER OR DB LD	< 1 Mb/s	Minutes to hours	Burst	I	-
HR P/L DIGITAL SCIENCE:					
Bulk	<300 Mb/s	Days	Continuous	III	10*-3 BER
Quick Lk	< 30 Mb/s	Minutes	Burst	III	10*-5 BER
L-MR P/L DIGITAL SCIENCE:					
Bulk	< 1 Mb/s	Hours	Continuous	II	<1% outages
Quick Lk	< 1 Mb/s	Seconds	Burst	III	10*-5 BER
TEXT AND GRAPHICS HARDCOPY	< 1 Mb/s	Minutes	Burst	III	10*-5 BER
INTER-ACTIVE QUERY	< 10 kb/s	2 to 4 sec	Burst	I	-
BULK DATA	1-5 Mb/s	Minutes	Continuous	III IV	10*-5 BER

TABLE-3: DELIVERY CHARACTERISTICS OF SSDS DATA TYPES

3.2.3 SSDS SERVICE MODEL

Using the system layering model and the data traffic analysis, a Service Model of the SSDS (Figure-10) was constructed. The SSDS provides three principal data communication and delivery services to user application processes:

1. A **MESSAGE DELIVERY SERVICE,** which uses a standard message format to route autonomous sets of user data "door to door" between the required source and destination application processes.

   Comprehensive value-added Message Delivery services are available to users including end-to-end message accounting, time ordering and merging, and quality control of application data sets which conform to the standard message format interface.

2. A **DATA TRANSFER SERVICE,** which uses a standard data link format to move data bidirectionally between the major physical nodes of the Space Station constellation (e.g. between the Space Station and associated co-orbiters/free-flyers, or between the ground system and any of these elements in space).

   This service (which is embedded within the Message Delivery Service) can provide a reduced level of value-added support to any users who choose not to be compatible with the standard message format. Such users can interface with the SSDS either by generating the standard data link format themselves, or by handing over a "bitstream", which will then be transferred by the system within the standard data link format.

3. A **DATA INTEGRITY SERVICE,** which controls the quality of data as they pass through the noisy space/space or space/ground signal transmission paths.

   User-selectable levels of data integrity are provided, depending upon whether the channel is uncoded, coded to provide forward error-correction, or controlled via error detection and retransmission (ARQ) techniques.

An important part of the SSDS concept is that a variety of application-independent value added data handling services will be implemented within the system. Most users will be able to "buy into" these services by simply conforming to some basic rules for structuring their data, in which case they will not have to perform many routine, repetetive and resource-consuming data handling tasks. The SSDS will also include the capability for users to bypass certain services, if more effective for their application, by interfacing at intermediate access points.

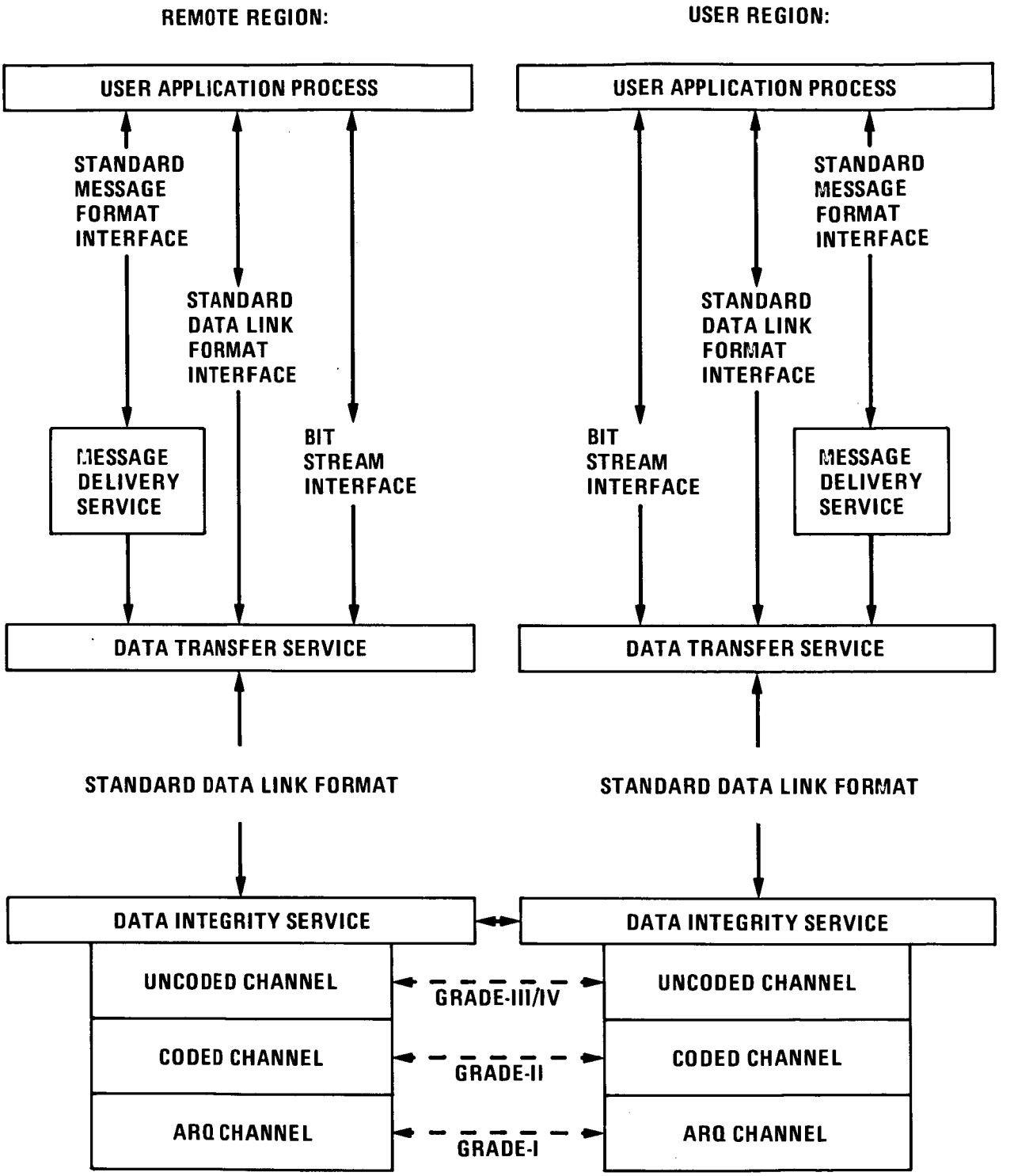

FIGURE - 10: SSDS SERVICE MODEL

3.2.4 STANDARDS AND SERVICE CHARACTERISTICS.

In order to implement the elements of service identified by the SSDS Service Model, a set of standard data structures, interfaces and protocols are required within the system. The concept of using the CCSDS Recommendations as the basis for SSDS standards has been selected because it:

- o Fully and recursively exploits the investment which has been made by many space agencies in developing CCSDS standards (by some estimates, as much as 100 man years of engineering time).
- o Requires no structural change to the existing, proven CCSDS protocols.
- o Is fully achievable within capabilities of existing technology.
- o Introduces minimum "culture shock" within the implementation community by using familiar techniques for space data exchange.
- o Supports the integrated transmission of ALL anticipated types of Space Station core and user data (e.g. payload and engineering data, operational video and audio, computer memory exchange, text and graphics) through common, capacity-constrained TDRSS uplink and downlink data channels.
- o Enables the Space Station program to be fully interoperable with free-flying vehicles and ground networks operated by many different agencies, and vice versa.
- o Is compatible with complementary utilization of commercially-supported terrestrial standards for Open System Interconnection.
- o Is highly structured to be modular, testable, automated, adaptive, data-driven and (through use of simple, recursive data handling techniques) easily understood by a wide community of implementers, operators and users.

These characteristics are achieved by the straightforward concept of:

1. Using two simple CCSDS data structures as the standard interfaces upon which the Message Delivery Service is founded: these are the "Telemetry/Telecommand Source Packet", and the "Standard Formatted Data Unit" (SFDU).

2. Using a simple CCSDS data link structure as the standard interface upon which the Data Transfer Service is founded: this is the "Telemetry Transfer Frame".

3. Using the CCSDS Telemetry Channel Coding ("Reed-Solomon Codeblock") data structure and elements of the Telecommand "Command Operation Procedure" retransmission protocol as standard methods of controlling link quality upon which the Data Integrity Service is founded.

In Figure-11, the SSDS Service Model has been mapped onto the system layers to show where these standard data structures are applied. The physical characteristics of the CCSDS data structures are outlined in Figure-12. **Note the bidirectional application of the TELEMETRY frame and coding mechanisms -- the CCSDS Telecommand Frame and coding will not be used in the Space Station application.**

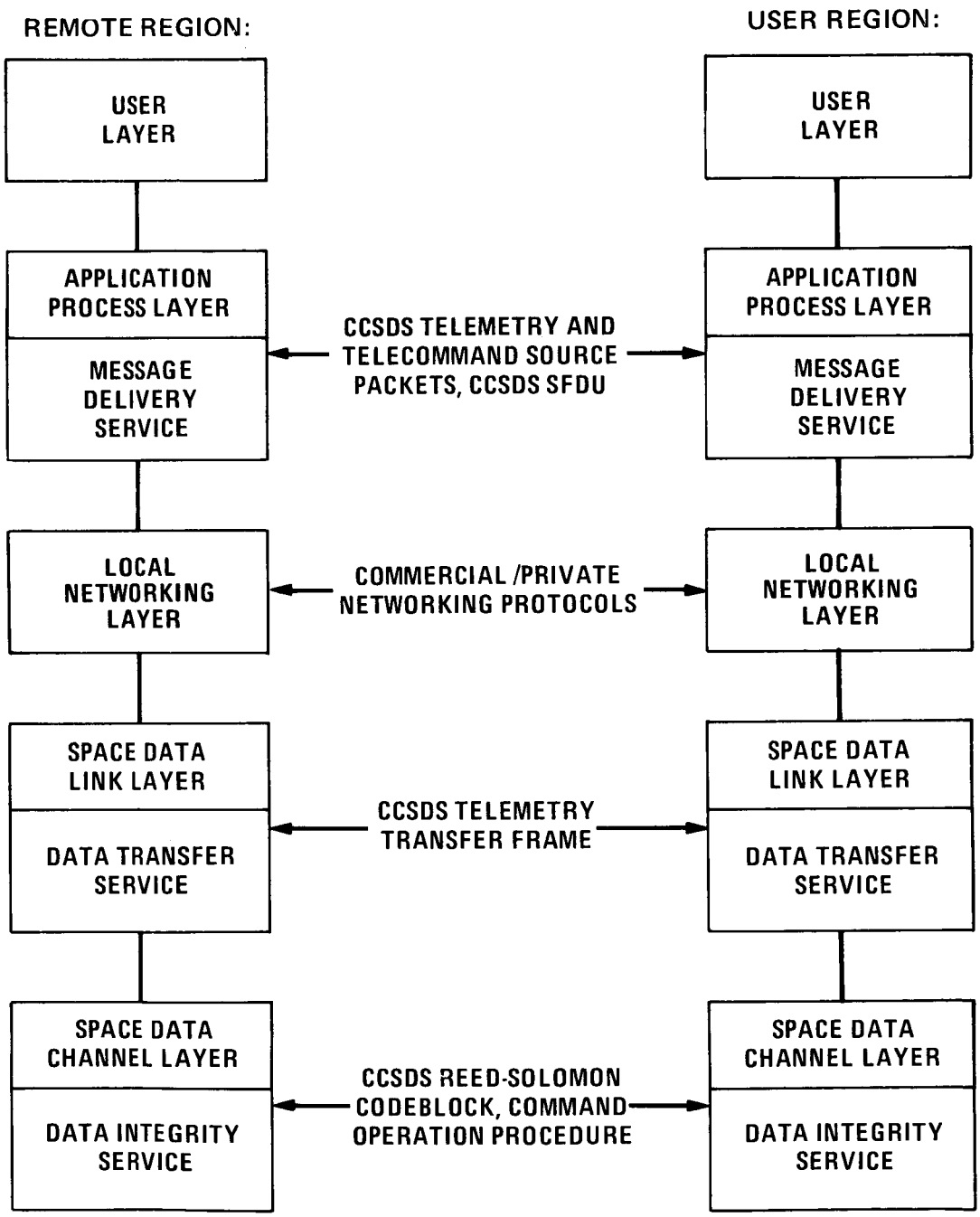

FIGURE-11: MAPPING OF SSDS LAYERS, SERVICES AND STANDARDS

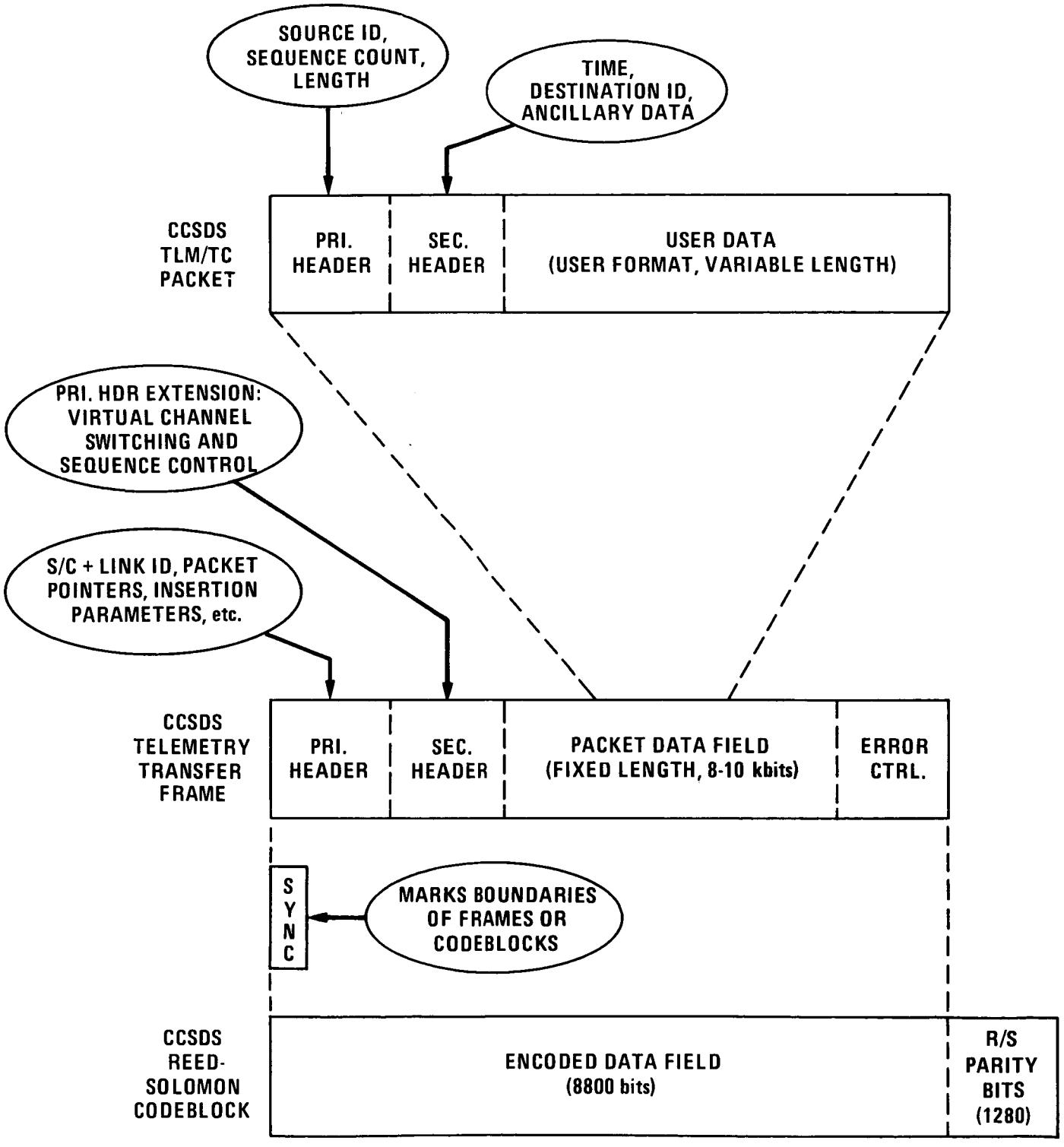

FIGURE-12: CHARACTERISTICS OF CCSDS DATA STRUCTURES

3.2.4.1 Message Delivery Service Implementation.

The noisy, capacity-constrained space/space and space/ground data channels which interconnect the major functional nodes of space missions inject unique and far-reaching requirements into the flow of user data. Historically, user investigations have been shackled (via multitudes of scrupulously designed and negotiated data rates and formats) to the instantaneous transmission capacity and error characteristics of the space data channels. Without such channels, there is no reason why user data flow should not follow conventional ground networking techniques. A driving force behind the CCSDS concepts has been to sever the coupling between the user's application and the data link.

The vehicle for achieving this decoupling is the CCSDS Source Packet, which is structurally identical in both its Telemetry and Telecommand manifestations. The Source Packet allows a user application process to create a complete "set" or block of data at a rate appropriate to the phenomemon being observed, wrap it up in a standard label or header, and then release it to the data communications system for transmission. By placing the flow of space application "messages" (CCSDS Packets) into its own layer, and creating a separate layer for the transfer of these messages through space data links (via CCSDS Frames), an independent set of processes may be dedicated to the task of matching the user's demand for transmission to the data link resources which are available.

The SSDS Message Delivery Service provides the required layer of insulation between the user's application and the data channel. Packetized user data contain all of the information needed for the SSDS to accountably route the variable-format, variable-length user data as they flow between application processes.

To interface with the service, the user application process only has to conform to the most basic and simply implemented rule: a message must be preceded by a short standard label (the Source Packet Header). Otherwise the internal content and format of the message is unconstrained (it may be encrypted), and its length is only bounded at an upper limit that is far in excess of known requirements. The Message Delivery Service will then automatically perform the buffering, transmission, routing and accounting functions that are necessary to move it to the intended destination, drawing upon Data Transfer Service options selected by the user.

In the Space Station environment, the CCSDS Telemetry/Telecommand Source Packet format will be expanded (using built-in flexibility features) by adding a standard Secondary Header. Candidate data for inclusion in this Secondary Header include a Destination ID, and a CCSDS standard Time Code Format (Reference [8]) which is synchronized with precise Universal Time maintained by an onboard atomic clock, thus precluding any need for time conversion or calibration. The Time Code (concatenated with the Packet Sequence Count) will provide the long-term unique identification of the set of data, thus facilitating value-added services such as merging and sorting of data.

Within those elements of the SSDS which are "open" to a wide range of users (principally the ground segment), files of Source Packets will be aggregated together and encapsulated within Standard Formatted Data Units (Reference [9]), thus facilitating their inter-process exchange, storage, retrieval and archiving. The SFDU will be an almost universal unit of data exchange currency within the terrestrial portions of the SSDS. Ground user data in SFDU format may in turn be recursively encapsulated within Source Packets if it is desired to transmit them to the Space Station elements via the Message Delivery Service, e.g. for data base transfer applications.

3.2.4.2 Data Transfer Service Implementation.

The concept of transmitting uplink (forward) and downlink (return) data streams through the TRDSS space/ground links within the SSDS is slightly different from the "conventional" techniques used by CCSDS free-flying spacecraft. With conventional free-flyers, the downlink typically contains a medium or high-rate stream of multi-source payload and subsystem data, while the uplink consists of low-rate discrete telecommands or onboard memory loads. Since weight and power are usually severely constrained for free-flyers, the design of the space/ground data links locates most of the processing complexity on the ground. The asymmetry of the present CCSDS Telemetry and Telecommand formats reflects this conventional environment. The conventional Telecommand channel coding scheme assumes a powerful transmitted signal and is fairly unsophisticated so that decoding is simple; the Telecommand Transfer Frame structure (variable length) exploits this lower-layer "clean channel" environment. The conventional Telemetry Transfer Frame assumes a weak-signal noisy channel, so it is of fixed length to facilitate synchronization. The conventional Telemetry Channel Coding scheme assumes a fairly competent decoding capability.

However, for the Space Station the contents of the uplink and downlink data streams are actually nearly identical (e.g: low/medium rate payload and engineering data; computer-to-computer data exchange; text and graphics; and digital television plus voice). The major difference is that the downlink is driven towards 300 Mb/s data rates by high-rate imaging instruments whereas the uplink is bounded by TDRSS capacity to about 25 Mb/s. The uplink for the Space Station in fact resembles the downlink for many conventional free-flyers. Furthermore, the physical characteristics of the TDRSS uplink and downlink satellite data channels, through which SSDS data flow, are virtually the same.

In view of this unique Space Station environment, the standard CCSDS **TELEMETRY Transfer Frame** and **TELEMETRY Channel Coding** data structures have been selected **for bidirectional use** on the TDRSS link: the conventional CCSDS Telecommand Transfer Frame and Channel Coding layers will not be used in this application.

The rationale for using the Telemetry Transfer Frame (Reference [2]) as the standard bidirectional data link format within the Data Transfer Service is as follows:

1. The Telemetry Transfer Frame has been optimised by CCSDS for very efficient channel utilization.

2. It is a fixed length data structure, suitable for use on noisy data channels. The present implementation indicates that frame size in the region of 8 to 10 k-bits will perform well, which turns out to be a very convenient segment of data to be handling on data links operating at multi-megabit rates.

3. The frame is organized around the concept of "Virtual Channels", which provides a mechanism for segregating different types of data, transmitted serially through a common data channel, into several logically-parallel paths. This permits the high rate serial stream to be immediately split into many parallel lower-rate data handling processes at the receiving end, using relatively unsophisticated hardware, thus significantly reducing the requirements for developing high rate processing technology.

The Data Transfer Service will support the Message Delivery Service by moving standard CCSDS Source Packets through noisy space data channels. Some high-rate users may choose not to packetize their data, in which case they may create their own Telemetry Transfer Frames which the Data Transfer Service will integrate into its own stream of frames. Alternatively, users may interface with the service at a "bitstream" level, in which case the "Asynchronous" feature of the Telemetry Transfer Frame will be invoked and the user data will be simply poured into the data field of frames on a particular Virtual Channel, for movement through the link and subsequent unstructured delivery back to the user. Note, however, that users who bypass the Message Delivery Service and interface with the Data Transfer Service at the frame or bitstream level will inherently have to become involved with the data link management processes.

It is anticipated that in the Space Station application the standard CCSDS Telemetry Transfer Frame will be expanded, using the built-in flexibility feature of defining a standard Secondary Header, to include format elements that support very high speed routing operations, such as provision of more Virtual Channels, an expanded sequence count, and header error protection.

3.2.4.3 Data Integrity Service Implementation.

The Telemetry Transfer Frame has been optimized to fit within the high-performance Reed-Solomon codeblock structure that is defined in Reference [3], the CCSDS Recommendation for Telemetry Channel Coding. The Reed-Solomon (R-S) scheme is an extremely low overhead and high performance code which is capable of being cheaply implemented at moderate (multi-megabit per second) rates in both flight and ground hardware. It is a systematic block-oriented code which does not scramble the user data and which can correct large

numbers of random and burst errors. Note that in the Space Station environment the R-S codeblock will NOT be concatenated with the convolutional code, which will be discarded for this application.

Because R-S is a block-oriented code, all of the R-S parity bits are simply appended to the end of the frame. Therefore some frames can be transmitted with the R-S parity bits attached (permitting virtually perfect frame data quality to be achieved after decoding, and even allowing decoding to be optional if the channel performance is sufficiently good) whereas others can be transmitted without the R-S protection, in which case the frame will operate at whatever the TDRSS channel bit error rate is (nominally about 1x10*-5).

By selectively R-S encoding some frames, and transmitting others uncoded (to save the 15% coding overhead), different data qualities can be provided for dissimilar data types being transmitted through the common TDRSS channel. This feature provides the foundation for the different "Grades" of service defined for the CCSDS. Grade-III and Grade-IV service will be implemented by placing data in uncoded Transfer Frames. Grade-II service (error-free delivery) will be achieved by R-S encoding the Transfer Frames. Grade-I service (error-free and complete delivery) will be accomplished by R-S encoding the frames and implementing an ARQ (automatic repeat queueing) protocol so that frames which are not received correctly will be retransmitted.

The CCSDS Command Operation Procedure ("COP", see Reference [6]) will form the basis for the bidirectional retransmission protocol on the TDRSS data link that interconnects the Space Station with the ground. The format elements in the Telecommand Transfer Frame that support the COP will be placed in a new Space Station standard Secondary Header within the Telemetry Transfer Frame.

3.2.4.4 Data Link Operations Concept.

The efficient, high-performance utilization of the bidirectional TDRSS "pipeline", which forms the electronic umbilical between the space and ground segments of the SSDS, is one of the most critical parts of the system.

The operations concept for applying the CCSDS Telemetry Transfer Frame to the SSDS space/ground data link through TDRSS is summarized in Figure-13. The TDRSS uplink and downlink data channels are both symmetrically divided into 10,080-bit data transmission "slots", each of which is synchronously occupied by one R-S coded or uncoded CCSDS Telemetry Transfer Frame attached to one particular Virtual Channel. Note that the 10,080-bit slot length was chosen as the strawman, instead of the 10,200-bit block described in the CCSDS Blue Books (References [2], [3]), because it is divisible into 32-bit words that facilitate high speed data handling. When encoded, the shorter codeblock length is achieved using Reed-Solomon virtual fill techniques.

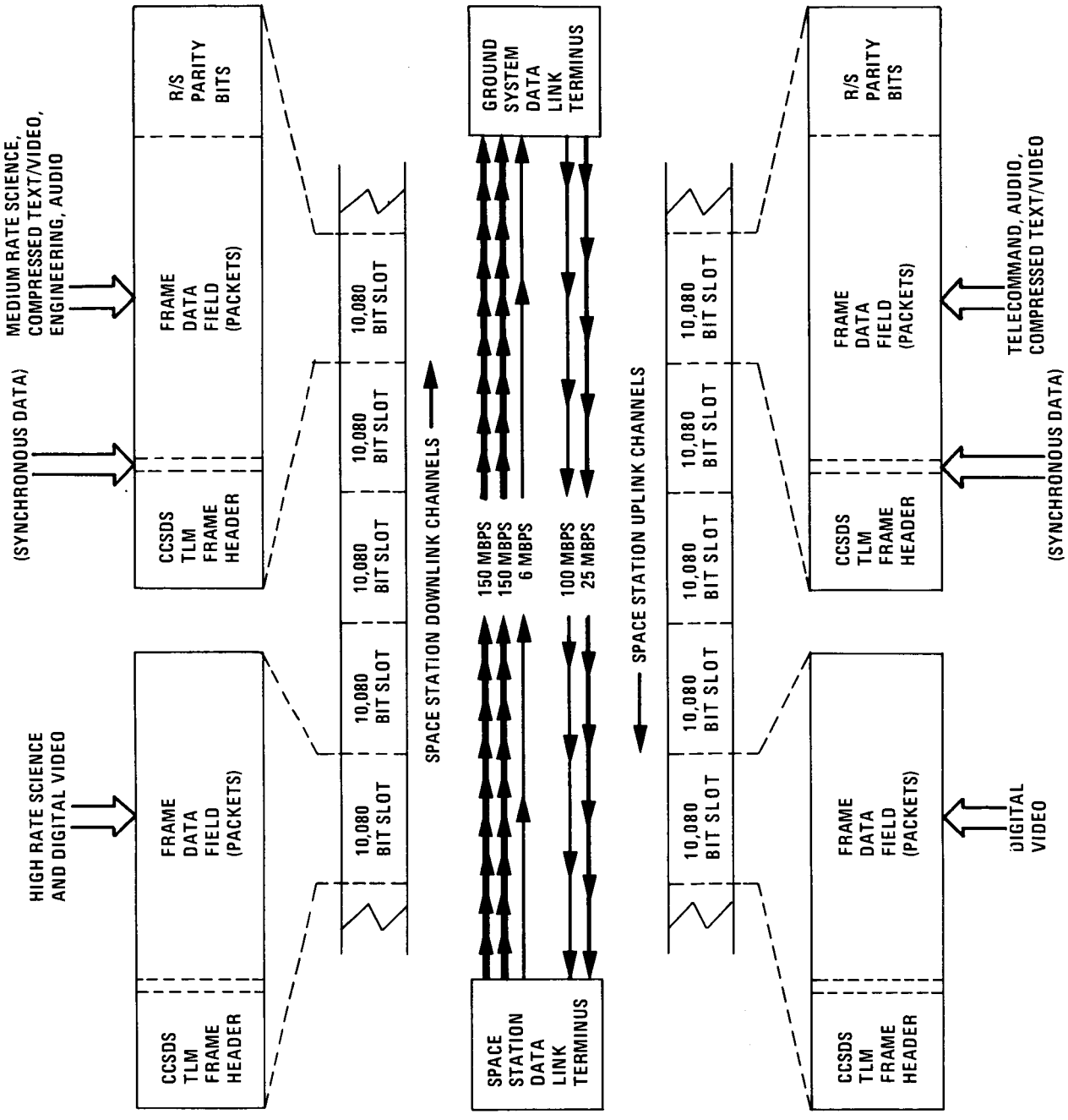

FIGURE-13: DATA LINK OPERATION CONCEPT

The Telemetry Transfer Frame contains the standard CCSDS Primary Header, which will be extended by adding a new standard Space Station Secondary Header containing error-protected Virtual Channel switching information. A small status insert zone may be placed after the Secondary Header for the insertion of any "heartbeat" data types which require synchronous sampling in every frame. The majority of the user data (either packetized or unstructured bitstreams) is placed in the frame data field.

Each 10,080-bit slot on the uplink and downlink data channels therefore contains one CCSDS Telemetry Transfer Frame, bearing its own unique Virtual Channel ID. If the user data carried within the frame are not tolerant of transmission errors (Grade-I or Grade-II service), the frame will be assigned to a Virtual Channel that is R-S encoded: in this case the Transfer Frame contains 8800-bits of information, followed by 1280-bits of R-S parity. If the data carried within the frame are error-tolerant (e.g. Grade-III or Grade-IV service for digital television, high rate imaging, bulk transfer, etc.) then the frame is assigned to an uncoded Virtual Channel: in this case the R-S parity bits are omitted and the Transfer Frame within that Virtual Channel contains 10,080 information bits (i.e. it has a longer data field).

The different user data types which may be simultaneously carried through the common duplex TDRSS channel by using this "integrated digital data link" technique are indicated in Figure-13. On the downlink path (the 300 Mb/s TDRSS K-band single access channel, split into I and Q paths operating at 150 Mb/s each), coded and uncoded Telemetry Transfer Frames are interleaved and synchronously inserted into the 10,080-bit "slots". Uncoded frames provide one grade of user service by carrying imaging and operational digital TV. The coded frames provide another grade of user service by carrying CCSDS Source Packets containing general payload and engineering data, text, graphics, data bases transfers, audio, etc. (Note that current NASA contractor studies have indicated that the maximum anticipated delays introduced by such a system appear to be consistent with audio requirements: otherwise, the capability exists to place audio synchronously in the frame via the "status insert" feature, which allows such data to be placed in a special zone following the Secondary Header in each frame).

At the receiving end of the TDRSS links, the high rate serial stream of frames is immediately split into parallel Virtual Channels, and these selected frames are routed to appropriate lower-rate data handlers such as decoders, packet extractors, data capture devices, etc. **This concept of Virtual Channel switching in order to transform a complex high-rate serial data processing task into a modular set of lower-rate parallel processes is of critical significance to the design of the SSDS.** By splitting the serial stream into many parallel virtual paths a wide range of architectural options are opened up for processing and distributing user data.

Closed-loop retransmission protocols (using the CCSDS "COPs") will be implemented for certain Virtual Channels carrying critical data

which cannot tolerate data outages. The elements of protocol required to execute the closed-loop COPs (presently contained in the CCSDS Telecommand Transfer Frame, which will not be used in the SSDS) will be placed in the Secondary Header of the Telemetry Transfer Frames assigned to those Virtual Channel which use retransmission techniques. Identical data handling techniques will be used on both the downlink and uplink data channels.

In the initial orbital configuration of the Space Station configuration, it is anticipated that a "deterministic" multiplexing scheme may be implemented in order to simplify the processing and testing tasks, i.e. the sequence in which frames from different Virtual Channels are transmitted will be pre-established and will match the total mix of core and payload data that are to be transmitted. As the system matures, the multiplexing scheme will become "adaptive", i.e. smarter onboard processes will dynamically match user data transmission demand to the available channel capacity by varying the Virtual Channel switching sequence.

3.2.4.5 Data Privacy and Security Concept.

It is a firm requirement that the SSDS must provide an adequate level of data security. Security requirements fall into two main categories:

1. Source data protection.

For reasons of commercial security, a payload user may wish to prevent competing organizations from interpreting his data. The SSDS concept is that such users will encrypt/decrypt the data contents of their Telemetry or Telecommand Source Packets, but that the Packets will be transmitted with their headers in clear text so that they may be routed through the system.

2. Operational data protection.

For reasons of operational security, unauthorized attempts to manipulate the Space Station or its payloads must be prevented. This requires that data addressed to a particular subsystem or payload must be provided with authentication that identifies the sender as a properly authorized individual. The SSDS concept is that such an authentication field will be attached to the user data internal to a Packet or Frame, but that the Packets or Frames will be transmitted with clear-text headers.

The CCSDS data structures have been specifically designed to be compatible with encryption or authentication of the Source Packet Data Field, or authentication of the Transfer Frame Data Field. This approach provides full operational data security and protection, while permitting intermediate data routing and accounting protocols to be achieved through unsecure systems. It should be noted that this approach does not protect against denial of access (i.e. jamming), which requires specialized antijamming techniques at the data channel level that are not discussed herein.

4. A CCSDS-BASED FUNCTIONAL DESIGN FOR THE SSDS.

The purpose of this section of the Report is to lay-out a functional design for the Space Station Data System, which fully and recursively uses the data handling techniques described by the CCSDS Recommendations. In Section 4.1, a simple architectural "building block" is defined and some possible system configurations are developed. In Section 4.2 these configurations are expanded into a candidate functional design for the entire SSDS.

4.1 BASIC "BUILDING BLOCK" OF NETWORK TOPOLOGY.

The proposed functional SSDS design is based on modular, recursive application of the basic architectural building block which is shown in Figure-14. Note that this is a logical view which is not intended to imply any particular physical architecture (such as a ring or star configuration).

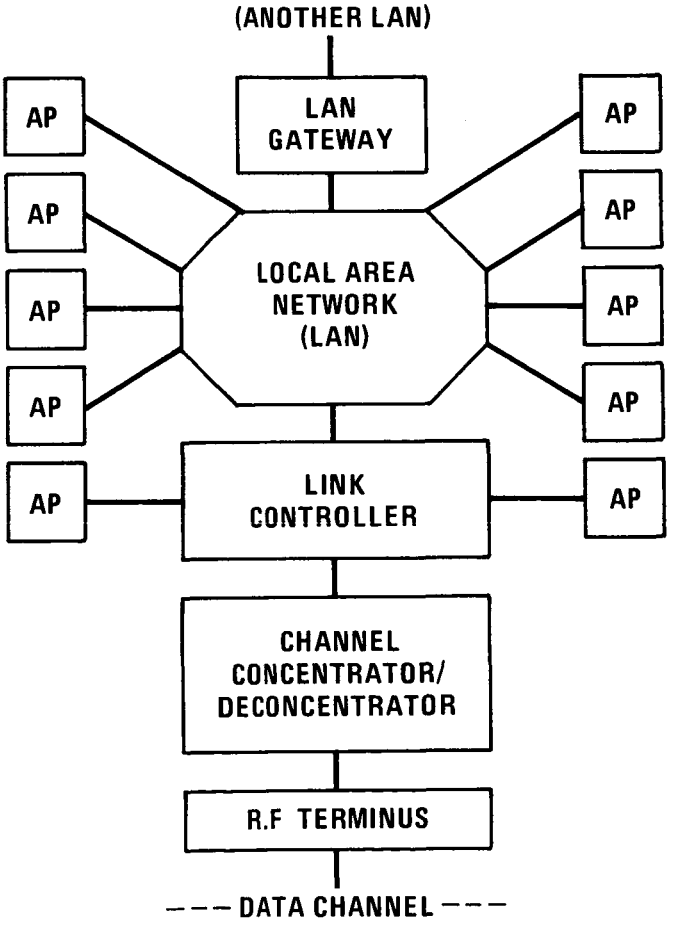

FIGURE-14: SSDS ARCHITECTURAL BUILDING BLOCK

The abstract SSDS architectural layers are mapped into the following concrete functions within this building block:

- **"Application Processes"** (AP's), residing in the Application Process Layer.
- **"Local Area Networks"** (LAN's) and **"LAN Gateways"**, residing in the Local Networking Layer.
- **"Link Controllers"**, residing in the Space Data Link Layer and providing the interface between the Local Networking Layer and the Space Data Channel Layer.
- **"Channel Concentrators and Deconcentrators"**, residing in the Space Data Channel Layer and connected to **"RF Terminus"** equipment.

Within a particular Space Station functional data handling node (i.e. core, payload module, international element, COP, POP, EMU, free flyer, OMV, etc.) distributed subsystems or instruments containing user-defined AP's are interconnected via Local Area Networks. The LAN's may, if feasible, use commercial off-the-shelf protocols: the CCSDS has made no recommendations concerning the selection of a LAN protocol. Each AP is connected to the LAN via a "network interface unit" (NIU). The CCSDS recommends that the Source Packet be adopted as the universal protocol data unit for interfacing an AP with the NIU. The NIU will control the transfer of Source Packets across the LAN to their destination.

Dissimilar LAN's may be interconnected by LAN Gateways, which permit AP's in different elements to communicate with each other, or to draw upon external communications services.

AP's which subscribe to the Message Delivery Service must transmit and receive messages using the CCSDS Source Packet data structure. The Packet length, source, and destination ID's (a destination field will be added to the standard Space Station Secondary Header) are interpreted by the NIU in order to determine the Packet's transport requirements. The NIU interfaces with the LAN, which moves the Packet around the onboard system. The LAN breaks the variable length CCSDS Source Packets into its own convenient-sized "network packets" and sends them to the proper destination AP within the onboard system, or to an appropriate Link Controller. The NIU which services the destination AP or Link Controller receives the appropriate network packets, reassembles the Source Packet (discarding the local network headers), and delivers this Packet to the addressed AP. This scheme allows onboard intercommunication between any of the user AP's, or connection to the outside world via Link Controllers.

The Link Controllers, connected to the LAN, are principal components of the Data Transfer Service. These devices permit the Space Station element to communicate with the ground (or with another orbiting element) via a suitable data link. They support

the Message Delivery Service by performing the multiplexing of CCSDS Source Packets in and out of the CCSDS Telemetry Transfer Frame structure that is used as the bidirectional data link protocol. The Link Controllers create frames associated with each of the Virtual Channels, and (for convenience of implementation) provide the interface to the channel layer by performing the Reed-Solomon encoding or decoding as required.

Users who do not subscribe to the Message Delivery Service may use the Data Transfer Service by interfacing with the Link Controllers at a bitstream level, in which case their data stream will be asynchronously inserted into the Transfer Frame data field by the controllers. Alternatively, high rate users may internally emulate the function of a Link Controller by outputting fully-formed Transfer Frames (containing data in user-defined format) which are associated with their pre-assigned Virtual Channel, in which case the services of the SSDS Link Controllers are bypassed.

The inputs and outputs of the Link Controllers consist of many different Telemetry Transfer Frames, associated with many parallel Virtual Channels. These frames are aggregated into a synchronous serial stream of Frames for transmission through the data channel by the Channel Concentrators, or are split back out into parallel Virtual Channels by the Channel Deconcentrators. The Concentrators and Deconcentrators are connected to the data channel by RF (radio frequency) Terminus equipment, which handles the establishment and maintenance of the physical signal path between elements.

The simplest possible end-to-end configuration of an SSDS is shown in Figure-15, where two of these basic building blocks (one in the space segment, one in the ground system) are interconnected via the bidirectional TDRSS data channels. This might represent a very early stage of the initial orbital capability.

A more complex configuration is depicted in Figure-16 containing free-flyers, international modules, and multiple data links. (Note that for clarity only the orbital constellation is shown: the ground system would be a mirror-image). The diagram shows how free-flyers may communicate either with the Space Station or with their own ground networks. Gateways between the NASA Space Station LAN and the LAN's in the Canadian, ESA or Japanese elements are indicated. The capability of the ESA or Japanese elements to communicate independently with their users via Data Relay Satellites is identified. Note also the cross-strapping interconnections that are possible at the interface between the Link Controllers and the Channel Concentrators, where the global interoperability of the CCSDS Transfer Frame data structure is evident.

The simplicity of the basic building block is apparent in these diagrams: it can be concatenated almost ad-infinitum to expand or contract to accommodate almost any conceivable complex system topology. The flexibility and modularity of the internationally-agreed CCSDS data structures, applied universally and recursively throughout the system, is also revealed.

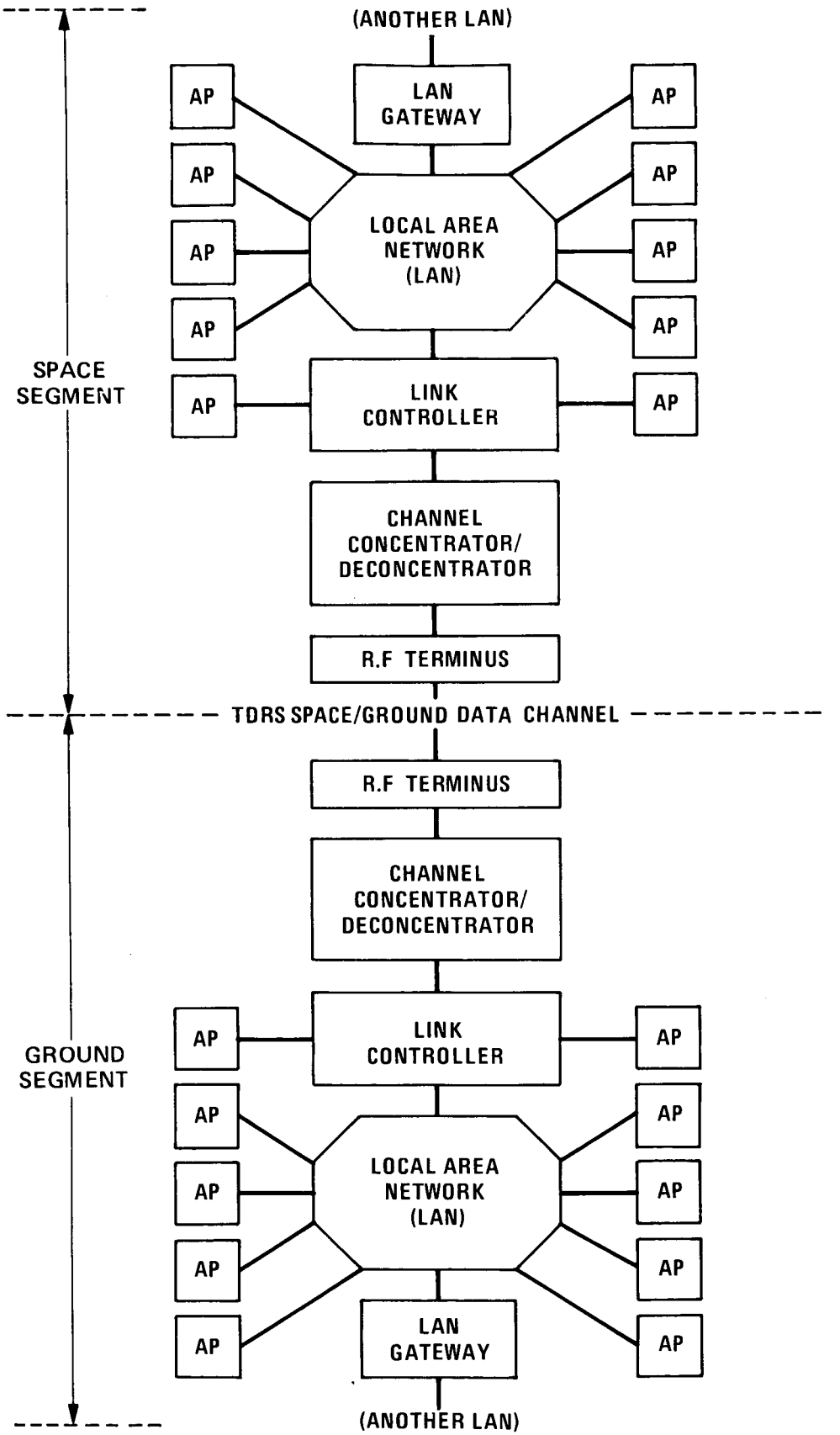

FIGURE-15: "SIMPLE" CONFIGURATION OF THE SSDS

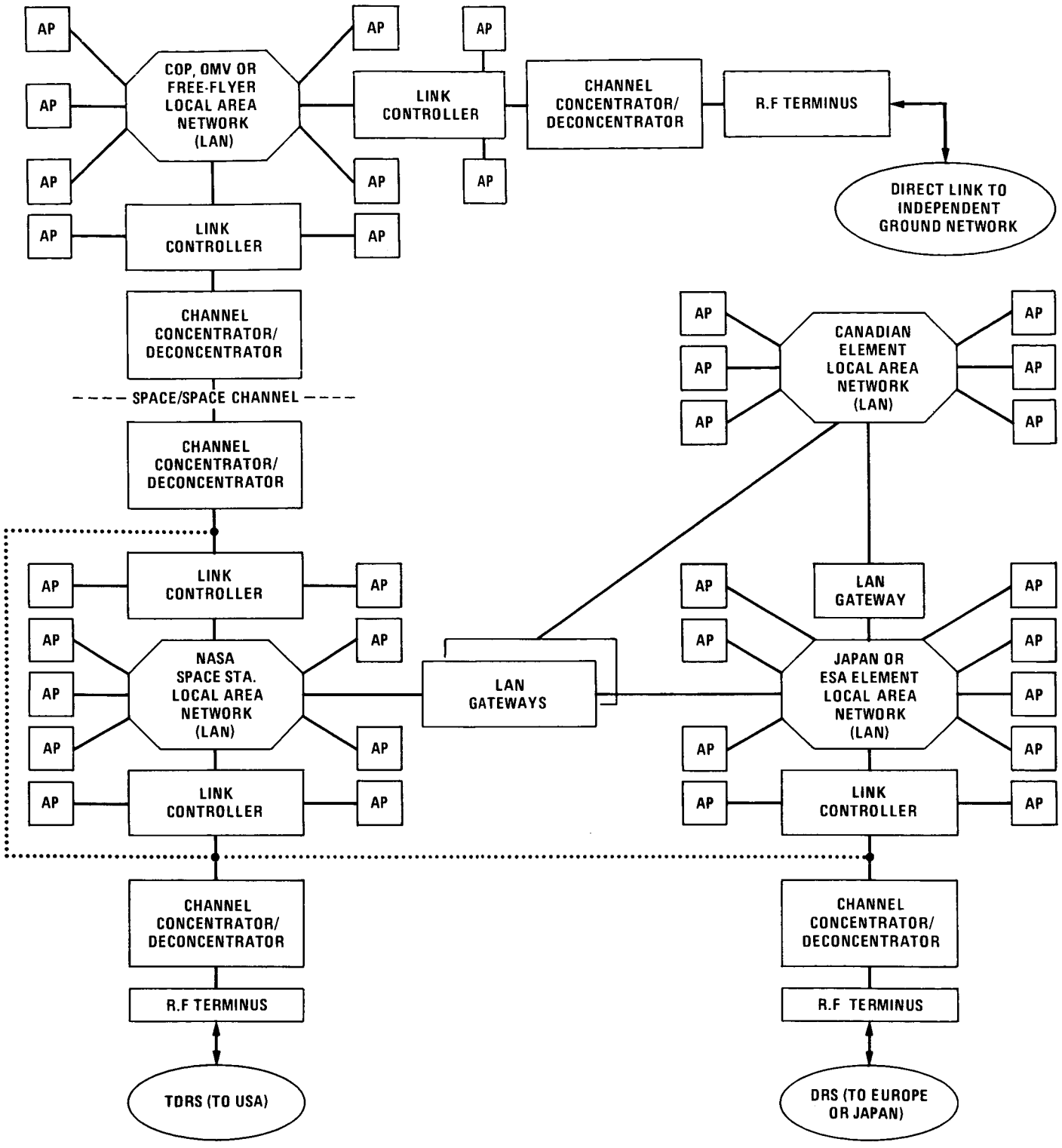

FIGURE-16: "COMPLEX" ORBITAL CONSTELLATION

4.2 DETAILED "STRAWMAN" FUNCTIONAL DESIGN.

Using the complex orbital constellation shown in Figure-16 as a starting point, a concrete functional design for the entire SSDS has been created by the Space Station Advisory Group. Our objective is to show how a flexible, standardized, interoperable system can be constructed by the straightforward modular linking of architectural building blocks, and by the consistent use of a very small number of simple CCSDS data structures.

We offer this candidate end-to-end design as a "strawman" in order to catalyze more detailed analysis and discussion, with the thought that through the process of careful review and refinement by the agencies and contractors involved with the Space Station program it may possibly become a baselined configuration for the SSDS.

The proposed SSDS design is presented in Figure-17, which is attached as a fold-out (along with a legend describing the abbreviations used) at the end of this report. (It is recommended that you study this diagram for a while, and then leave it folded-out while you read further.) At first glance this appears to be a complicated diagram, but with a little examination it will be seen that it is highly structured and modular, using only a few functions and data interfaces which are recursively replicated throughout the system. In particular, the data objects flowing through every major system interface are identified: these standard interfaces are already designed and internationally agreed -- the system interface control documents could be written now!

Figure-17 embraces the following major distributed elements:

- The NASA core Space Station.
- Attached modules such as NASA payload facilities, or international elements provided by Canada, ESA and Japan, plus their possible independent data transmission paths to their own control and analysis facilities in the US, Europe or Japan.
- Independent vehicles in the vicinity of the Space Station, including Co-Orbiting Platforms, Extravehicular Maneuvering Units, Orbital Maneuvering Vehicles, the Space Shuttle, and free-flying spacecraft, plus their possible independent data transmission paths to their own control and analysis facilities distributed world-wide.
- Independent Polar Orbiting Platforms in distant orbits.
- The NASA Tracking and Data Relay Satellite System, plus its White Sands ground terminal, which provides a primary "data trunk" interconnection between the elements of the on-orbit constellation and their complementary systems on Earth.
- Mission Control facilities, assumed to be located in the US, Europe and Japan, which provide overall support to each of the major Space Station orbiting elements.

- Globally distributed payload data processing facilities, user home facilities and data archives, which service scientific and applications users.
- Terrestrial communications networks and satellite trunks which interconnect the ground facilities.

4.2.1 THE NASA SPACE STATION.

The internal data handling architecture of the Space Station conforms to the basic architectural building block, which is recursively replicated throughout the entire SSDS.

Large numbers of low or medium data rate payload or engineering subsystem AP's are connected to an onboard LAN via a system-provided Network Interface Unit (NIU), or via the operating system services of an on-board data processor which supports payload operations. In view of the wide variety of onboard data communications requirements, it is possible that instead of there being only "one" onboard LAN, it may conceivably turn out to be a confederated collection of interconnected networks. The CCSDS Source Packet is the standard data structure which crosses the payload or subsystem interface: user messages which conform to this standard are called "packetized data" within this report.

A precise timing source onboard the Space Station (driven by an atomic clock) generates and distributes accurate Universal Time to all payloads and subsystems. The Time distribution system will extend into the attached elements provided by other sponsors or agencies. Those subsystems or payloads requiring value-added data handling services such as sorting and merging of data will insert a standard Space Station time code into the Secondary Header of each Source Packet. The format of this code will be compatible with the CCSDS Time Code Recommendation (Reference [8]).

High rate payloads (e.g. SAR's, multi spectral scanners) will provide their own Link Controller functions by formatting their packetized imaging data directly into CCSDS Transfer Frames, which will be placed directly into the high rate Frame switching system for insertion into the downlink stream. These payloads can also exchange low-rate Source Packets via the LAN.

Low rate Audio (voice) data are packetized and transmitted digitally to and from the Space Station, and distributed to local onboard audio loops directly or via the LAN. Preliminary analysis by the NASA Phase-B contractors indicates that the delays introduced by multiplexing these Audio Packets with other low or medium rate packetized data are anticipated to be negligible. Otherwise, the packetized Audio data could be inserted into the synchronous "status insert" zone of Frames on certain Virtual Channels.

High rate Video (TV) data are transmitted digitally between elements, but are converted onboard to analog form for distribution via analog Video Loops. During transmission, the Video data are packetized (to facilitate transparent selection of multiple

resolution options or compression ratios) and formatted into their own Transfer Frames on certain Virtual Channels, which are handled by separate Video Link Controllers.

Uplink and downlink Link Controllers allow the LAN to communicate with the outside world, by switching the packetized user data in and out of the standard data link structure (the CCSDS Telemetry Transfer Frame) which is used on each Virtual Channel. The Link Controllers perform Reed-Solomon encoding or decoding in order to support different grades of service. Certain "ARQ" controllers also implement the closed loop retransmission protocol required to provide Grade-I service. This is accomplished by using the CCSDS Command Operation Procedure logic, with the standard protocol data elements inserted into the Transfer Frame headers and trailers.

The outputs of the downlink Link Controllers are individual, asynchronous CCSDS Transfer Frames, each assigned to a particular Virtual Channel and either uncoded or appended with a Reed-Solomon parity field. These Transfer Frames are interfaced with the Channel Concentrators via a very high rate onboard switching system (which may be implemented as a high speed network, or a set of point-to-point links). The uplink Link Controllers receive asynchronous coded or uncoded Transfer Frames from the Channel Deconcentrators via this switching system.

The Channel Concentrators and Deconcentrators switch Transfer Frames synchronously in and out of the data "slots" which are created by use of the CCSDS Frames on the TDRSS uplink/downlink channels. The Concentrators receive asynchronous fixed-length input Frame data structures from the downlink Link Controllers which, depending on the grade of transfer service required by the user data, may or not contain Reed-Solomon parity bits in their trailing field. The Concentrators synchronously insert these Frames into the uplink/downlink slots, and pass the serial stream to the RF Terminus equipment for downlinking via a TDRS.

A "data link manager" function must be implemented within the onboard system, which provides control inputs to all of the other functions. This is not shown on the diagram in order to reduce complexity, but its job is to direct all of the onboard data scheduling and flow control, including the assignment of user data to specific Virtual Channels, the switching of frames from each Virtual Channel to or from the appropriate Channel Concentrator, Channel Deconcentrator, or Storage Device. The Storage Devices provide buffering when the user data rates exceed the downlink transmission capacity. In the initial phases of Space Station operations, it is probable that the data link manager will operate in a deterministic manner, by establishing a fixed sequence of Transfer Frames on the uplink and downlink channels, and assigning user data to the fixed sequence of Virtual Channels in a predetermined manner. As the Space Station matures, the link manager will become smarter and more adaptive.

If the incoming Frame rate from all of the downlink Link Controllers is less than the outgoing channel capacity, the Concentrator creates fill Frames and inserts them into the appropriate slots to preserve synchronism. Fill Frames are discarded by the Deconcentrators at the other end of the channel. If the incoming Frame rate from the downlink Controllers exceeds the channel capacity, Frames are buffered until transmission capacity becomes available: however, the Concentrators only have limited storage capability since they rely on the data link manager function to direct traffic flow. Sustained over-capacity input demand will result in the Concentrator discarding the lowest-priority Frames and alerting the data link manager.

The Deconcentrators receive a serial stream of Transfer Frames from the TDRSS via RF terminus equipment, separate them into Virtual Channels, and place them on the high rate switching system for asynchronous routing to the proper uplink Link Controller.

Most of the high rate payload and Video data will be placed on the TDRSS K-band channels. Critical low-rate data used for core or attached element mission control will probably be placed on their separate S-band channel. All data channels are continuously operated at maximum rate, in order to avoid outages caused by the losses of synchronization introduced by date rate changes.

4.2.2 ATTACHED PAYLOAD FACILITIES AND INTERNATIONAL ELEMENTS.

The core Space Station will be modularly expanded by attaching payload facilities and elements provided by international partner agencies. The functional design diagram shows only one such attached element (to maintain simplicity), but the basic configuration will be replicated for each module provided by Canada, ESA, Japan or another payload sponsor.

The internal data handling architecture of the attached modules conforms to the basic building block. Clusters of low or medium rate application processes are interconnected via a LAN. The module LAN is connected to the NASA Space Station LAN by a LAN Gateway, which allows the exchange of packetized user data, including audio. The CCSDS Source Packet is the standard data structure which crosses the interface between subsystems or payloads within the attached modules.

The modules may utilize the services of the NASA Space Station in order to transmit packetized data to and from the ground via a TDRS, or they may (e.g. ESA and Japanese elements) contain their own Link Controllers, Channel Concentrators and Deconcentrators, and RF terminus equipment which permit them to communicate directly with their home Agency via their own Data Relay Satellites (DRS's).

Video data may be exchanged by connecting into the NASA Space Station analog distribution loops, or may be handled independently by sending them digitally through the DRS's (which also provide backup paths for NASA Video data).

High rate payloads packetize their data and insert them into their own CCSDS Transfer Frames for transmission directly to Europe or Japan via independent Channel Concentrators and the DRS's, or may interface these Frames with the NASA very high rate switching system for transmission via TDRSS.

4.2.3 INTERFACES WITH UNATTACHED FLIGHT ELEMENTS.

Clustered around the Space Station will be a number of unattached co-orbiting elements. These will communicate with the Station via space-to-space data links. Some of these elements (e.g. free-flyers which are perhaps only transiently involved with the Station for the purpose of construction, servicing or repair) will also communicate directly with their own dedicated ground support systems, using networks of conventional ground stations or the TDRSS. The unmanned Co-Orbiting Platform may have its own dedicated link via TDRSS, or may communicate via the Space Station.

Each unattached element will have its own RF Terminus on the Space Station. A set of dedicated Link Controllers will be assigned to each terminus. Each unattached element will create a downlink data stream that consists of standard CCSDS Telemetry Transfer Frames containing packetized user data. Packets may be extracted from these Frames by the downlink Link Controller for routing to the Space Station LAN, or the Frames may be directly placed on the onboard high rate switching system for concentration into the TDRSS downlink stream and relay to the ground. (If the latter option is selected, the unattached element will insert the standard Space Station secondary header into each Frame.)

Certain free-flyers will have command systems which conform fully to all layers of the CCSDS Telecommand (TC) Recommendations (References [5,6,7]). To handle these spacecraft, which use the CCSDS TC Channel Coding and TC Transfer Frame formats, certain uplink Link Controllers will contain protocol convertors which generate the TC Frames and TC Codeblocks, and handle the local ARQ data link retransmission protocol. During the transition period to a fully standardized SSDS, other vehicles (e.g. the STS) may have non standard onboard systems which require special gateway equipment in order to perform the format conversions required to interface them with the standard Station systems.

4.2.4 TDRSS AND THE WHITE SANDS GROUND TERMINAL.

The White Sands Ground Terminal will be a major switching center for NASA Space Station operations. The basic internal architecture of the terminal will be replicated when the European and Japanese Data Relay Satellites become operational: these DRS terminals are not shown in order to simplify the diagram, but they will provide important parallel and backup paths for NASA data transmission.

The key to containing the complexity of the ground terminal's task is the use of parallel processing, enabled by the Virtual Channel facility in the CCSDS Telemetry Transfer Frame. The concept of multiplexing the serial 300-Mb/s TDRSS data stream into multiple Virtual Channels allows the high rate front-end data handling task to be immediately split into many lower rate parallel processes. Processing-intensive functions (such as Reed-Solomon decoding) can therefore be performed at data rates which are well within the capabilities of existing technology. This capability to stream split and route using simple ground terminal hardware is immensely important to the design of the SSDS.

The diagram shows a representative cluster of RF Terminus equipment, Channel Concentrators and Deconcentrators, and Link Controllers. The cluster chosen is shown primarily servicing the Mission Control Centers, but similar clusters service the interfaces with other remote facilities. The incoming downlink pipeline of high rate serial Frames is sorted by the Deconcentrators (according to their Spacecraft and Virtual Channel ID's) into the appropriate lower rate Link Controllers. The Link Controllers perform Packet extraction and assemble Packets (or files of Packets) into Standard Formatted Data Units, which are relayed to the data processing center via communications networks. SFDU's containing packetized uplink data are received from these networks and routed to Link Controllers associated with the appropriate Virtual Channel, where they are inserted into Frames and then Concentrated onto the uplink channel.

Bulk data streams such as multispectral imaging or SAR can be readily split off to feed dedicated real time onsite high rate payload processors, or dumped to a storage medium for immediate capture and possibly non-electronic transport to the user.

Some Link Controllers on particular uplink and downlink Virtual Channels execute a retransmission protocol in concert with their Space Station conterparts in order to provide Grade-I data transfer service.

Gateways are provided to route Frames to and from remote payload data processing and control facilities. For NASA, facilities such as the Customer Data Operations System (CDOS) receive their data directly via bulk DOMSAT transfer. ESA and Japanese centers receive data streams via INTELSAT or other public telecommunications circuits. The set of Frames for a particular center (selected by their Spacecraft and Virtual Channel ID's) are re-concentrated into a serial stream for transmission: if the DOMSAT or INTELSAT link is used in a circuit-switched mode, the stream of Frames may be used directly on the satellite transponder without requiring any other link protocol. The CCSDS Frame switching technique can also be used as a Time Division Multiple Access protocol on NASA's Program Support Communication Network.

4.2.5 MISSION CONTROL CENTERS.

The Mission Control Centers conform to the architectural building block -- clusters of applications interconnected by a LAN. The NASA Space Station control center is shown on the diagram, but centers for other elements are added as modules as required. The control centers contain all of the application processes required to monitor or plan the day-to-day flight activities, or to support the flight crew as they perform this function. The control centers are connected to the ground terminal by a high-reliability operational communications network, and to payload centers and user facilities via public data networks.

4.2.6 PAYLOAD AND USER DATA PROCESSING FACILITIES.

While the control centers are dedicated to the task of flying the on-orbit elements, the payload data processing facilities are the primary interfaces with scientific and applications users. The basic SSDS concept is that the payload data processing facilities such as CDOS provide front-end services, while distributed "Telescience" users perform detailed data analysis from their home facilities.

The payload facilities receive a concentrated stream of Frames from the satellite links. This stream is Deconcentrated into parallel Virtual Channels and fed to downlink Link Controllers for Packet Extraction. Packets are assembled into files, encapsulated within SFDU's, and placed on the LAN. Non-packetized user data are extracted by a Link controller, pre-processed as required, and placed on the LAN encapsulated within SFDU's. User processors or utility processors (e.g. data sorting and merging, Level-1 conversions, orbit and attitude computation, etc.) exchange products in SFDU format via the LAN. The LAN is connected to remote user telescience facilities by public data networks.

User command data are aggregated by the payload facility and are either transmitted to the appropriate mission control facility for integration and uplinking, or are fed to Link Controllers and Concentrators for relay back to the ground terminal, where they are interleaved on the uplink channel to TDRSS. The degree to which user commands must be constraint checked prior to transmission is not presently clear and requires careful study. It is, however, a topic of design philosophy for the overall Space Station program: the SSDS design described in this Report is capable of handling any required degree of command transparency.

5. OPEN ISSUES REQUIRING MORE STUDY.

In preparing this Report, the Space Station Advisory Group compiled a list of Open Issues which require more detailed study. Some issues are internal to the CCSDS and will be worked at upcoming Panel meetings. Other issues are more general, and are listed below. As the design of the SSDS evolves and matures during Phase-B, many of these questions will be answered. The Space Station Advisory Group invites the participation of the agencies and their contractors in their resolution.

5.1 GENERAL TECHNICAL ISSUES:

1. A good model of the TDRSS data channel error characteristics and distribution is needed.

2. Identification of any "special" Space Station space-to-space data links, which cannot use CCSDS Frames, is needed.

3. The problems of protocol conversion at the gateways with free flyers which don't conform to CCSDS formats need to be studied.

4. The requirements for emergency service and emergency data links (both core and payloads) need to be studied.

5. The exact services provided at the international cross-support gateway points need to be specified.

6. The requirements for telemetry ARQ need detailed study.

7. The requirements for a Destination ID in the Source Packet need study.

8. Any requirements for more than eight Virtual Channels in the Telemetry Transfer Frame need to be studied, plus the details of Frame header protection, CLCW location, frame count and use of the first header pointer need to be worked in terms of developing a standard Secondary Header for Space Station.

9. The topic of whether very high rate data should be integrated with lower rate data during transmission needs more study.

10. The end-to-end commanding flexibility provided to users is very dependent upon the Space Station resource management philosophy. Study is needed to determine whether users will be able to "transparently" command payloads using a virtual circuit approach, or whether all commands must go through centralized validation. An overall Space Station command resource management concept needs to be developed.

5.2 PROGRAMMATIC ISSUES:

1. The Space Station program needs to establish an office to generate and maintain data handling standards which are compatible with the CCSDS Recommendations.

2. The topic of security and encryption needs more study. A Space Station threat analysis and security/privacy policy is needed. If bulk link encryption is imposed, its effects on link performance and channel coding must be known. The user effect of secure facilities on otherwise "open" international networks needs to be known.

3. A mechanism must be found to allow CCSDS Recommendations to percolate down to all subcontractors.

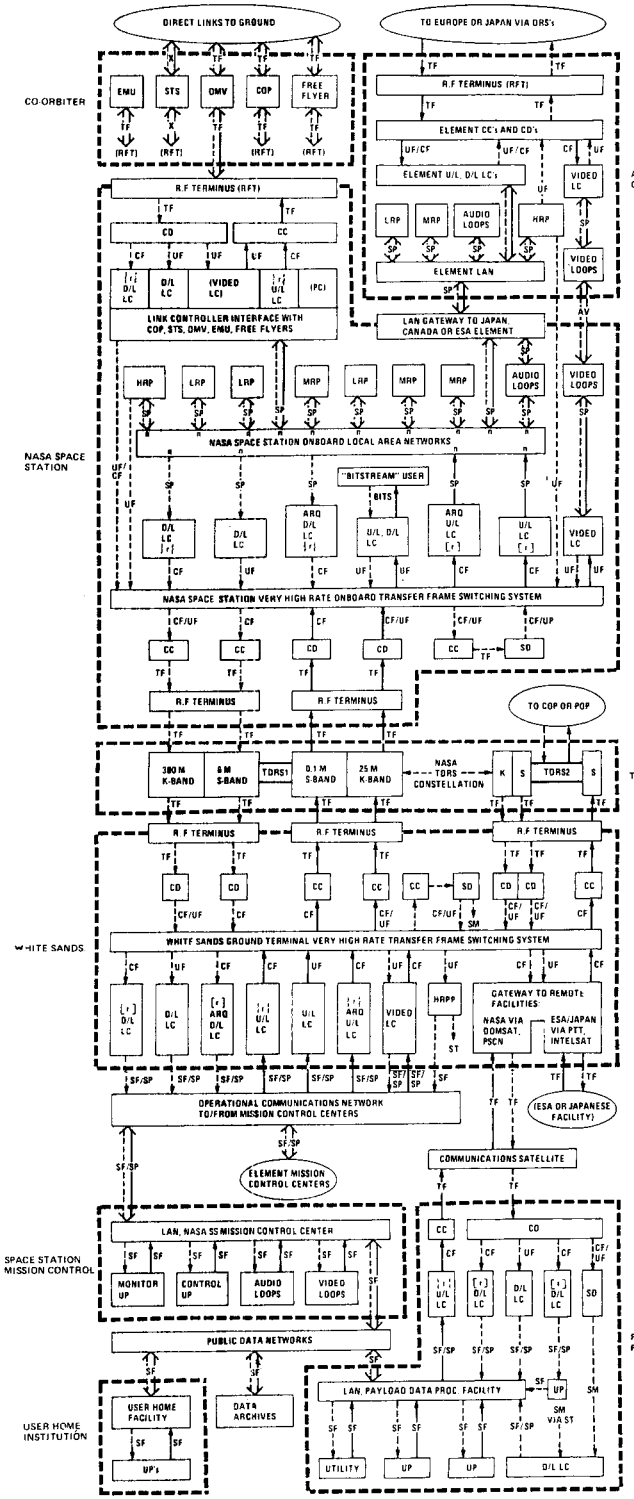

ARQ D/L LC = DOWNLINK LINK CONTROLLER USING RETRANSMISSION
ARQ U/L LC = UPLINK LINK CONTROLLER USING RETRANSMISSION
AV = ANALOG VIDEO DISTRIBUTION SIGNAL
CC = CHANNEL CONCENTRATOR
CD = CHANNEL DECONCENTRATOR
CF = REED/SOLOMON CODED TRANSFER FRAMES, ASYNCHRONOUSLY TRANSPORTED
COP = CO-ORBITING PLATFORM
D/L = DOWNLINK
D/L LC = DOWNLINK LINK CONTROLLER
DOMSAT = COMMERCIAL DOMESTIC COMMUNICATIONS SATELLITE
DRS = EUROPEAN OR JAPANESE DATA RELAY SATELLITE
EMU = EXTRAVEHICULAR MANEUVERING UNIT
HRP = HIGH RATE PAYLOAD (e.g. IMAGER, SAR)
HRPP = HIGH RATE PAYLOAD PROCESSOR
INTELSAT = COMMERCIAL INTERNATIONAL COMMUNICATIONS SATELLITE
K = K-BAND
LAN = LOCAL AREA NETWORK
LC = LINK CONTROLLER
LRP = LOW RATE PAYLOAD OR SUBSYSTEM
M = MEGABITS PER SECOND
MRP = MEDIUM RATE PAYLOAD OR SUBSYSTEM
n = NETWORK INTERFACE UNIT
OMV = ORBITAL MANEUVERING VEHICLE
PC = PROTOCOL CONVERTER
POP = POLAR-ORBITING PLATFORM
PSCN = NASA PROGRAM SUPPORT COMMUNICATIONS NETWORK
PTT = NATIONAL POST-TELEPHONE-TELEGRAPH ORGANIZATION
[+] = REED/SOLOMON ENCODER
[-] = REED/SOLOMON DECODER
RFT = RADIO FREQUENCY TERMINUS
S = S-BAND
SD = SERIAL STORAGE DEVICE
SF = STANDARD FORMATTED DATA UNITS (SFDU's)
SF/SP = SFDU's CONTAINING SOURCE PACKETS
SM = DATA STORAGE MEDIUM (i.e. TAPE, VIDEO DISK)
SP = CCSDS SOURCE PACKET
SS = MANNED SPACE STATION
STS = SPACE TRANSPORTATION SYSTEM
TDRS = TRACKING AND DATA RELAY SATELLITE
TF = CODED, UNCODED AND FILL TRANSFER FRAMES, SYNCHRONOUSLY TRANSPORTED
UF = UNCODED TRANSFER FRAMES, ASYNCHRONOUSLY TRANSPORTED (i.e. SAR, IMAGING DATA, OPERATIONAL VIDEO)
U/L = UPLINK
U/L LC = UPLINK LINK CONTROLLER
UP = LOW OR MEDIUM RATE USER PROCESSOR
X = SPACE/SPACE COMMUNICATIONS LINK

FIGURE 17: STRAWMAN SSDS FUNCTIONAL DESIGN