NGT-21-002-080
NGT-80001

THE SPACE BASED MOON ORE CAPTURE SYSTEM

AND

MANUFACTURING PLANT

Final Report

30 April 1986

(NASA-CR-184694) THE SPACE BASED MOON ORE CAPTURE SYSTEM AND MANUFACTURING PLANT Final Report (Naval Academy) 80 p

N89-70274

Unclas

00/91 0189681

Dan Baczkowski

Scott Dubov

Greg Glaros

Tony Istvan

Bob Maus

Naval Academy

Since the early 1950's, when von Braun conceptualized the donut-shaped space station, man have dreamed of building a similar space station. But because of our limited present and future lift capabilities and because of the enormous energy and cost requirements neccessary to place the needed material out of the earth's atmosphere, a large orbiting space station has remained a virtual impossibility.

This design project, the Space Based Moon Ore Refinery and Manufacturing Plant, proposes to: 1. Design a space structure capable of receiving raw materials; 2. Process the raw materials into useful metal products; 3. Utilize these materials in order to build a large space station in a high earth orbit at a substantially lower cost than has been available.

It will be neccessary to use a magnetic rail launcher to launch the raw materials from the moon's surface. It's trajectory must pass through the lower earth's atmosphere which will provide the needed atmospheric drag to slow the ore modules sufficiently so that the modules can be intercepted by the Capture System. A detailed structure analysis of this collision was made by using GIFTS, a commercially available finite element structural analysis program.

After the ore has been captured, it will be transferred to a manufacturing plant in a near earth orbit. Since the moon ore catcher is the primary design concern of our project, a previously designed manufacturing facility was used in conjunction with generic habitats. Design criteria for the plant was taken from Gerald Diggers(Space Applications Inc.) and Jonathan Newman(Amherst College) who conceptualized a detailed protoplant.1 This refinery and manufacturing plant will provide the neccessary means to produce refined materials. These products derived from raw materials found on the moon will, in

turn be utilized in the construction of a large space station in a geosynchronous earth orbit.

The capture system will require several support systems to include power, thermal protection, attitude reference and control, communications, propulsion, and orbital maintenance. A power system will consist primarily of a solar array and storage batteries. The storage batteries will be very important as a power source during the manuevering of the capture system while receiving the moon ore. Thermal protection will be limited to a passive system required to protect the electronic equipment. The attitude reference and control system must be very accurate in order to properly intercept the moon ore in its trajectory and deliver it to the manufacturing plant. The communication system will not be very extensive in that it will relay all of its necessary information and system status through the manufacturing structure. A propulsion system will be needed to enable the capture system limited manueverability in order to receive the ore as well as to maintain the required orbit.

In addition, the manufacturing plant itself will require similar support systems. The large power requirements of the plant will be met using a large solar mirror. Additional power may be obtained through the utilization of some of the by-products of the manufacturing process itself. The structure of the plant will consist of a modular habitat and working area, built around the actual furnace, that will contain the crew and the other support systems. Thermal protection will require both active and passive systems in order to maintain proper conditions for both the crew and the electronic systems onboard. The attitude reference and control system will be a very elaborate combination of a number of systems that

will be able to precisely determine the correct attitude. These systems will include horizon sensors, star cameras, gyros, and sun sensors as well as control systems needed to adjust the attitude of the plant. A sophisticated communications system will be needed to ensure proper relays between the electromagnetic rail station on the moon and the plant. The trajectory of the moon ore must be constantly monitored and transmitted to the capture system as well as being able to communicate with earth stations the status of the plant and accompanying systems. The manufacturing plant will not require any propulsion system except for that necessary for attitude and orbital corrections. Since the structure will be in a low earth orbit and its mass will not be constant, there will be a need for cold gas jets or some other system the maintain the proper altitude.

Once the complete system is constructed and operational, the only required earth-based service will be to help monitor operations, help to shuttle new crews to the plant, bring food and other living necessities, and occasional parts for repair. For the most part the capture system/manufacturing plant should be able to operate independent of earth-based facilities as it will have the capabilities to make most of its own repairs and to manufacture some neccessary consumables like hydrogen and oxygen which are by-products of the manufacturing process.

In designing the LEO capture system and the accompaning manufacturing facility a number of prerequisites were established. Among these, obviously, was the ability to catch the ore modules in rapid succession over short time intervals with a minimun maintenance requirement. In order to successfully capture the moon ore, the relative kinetic energy between the incoming ore and the capture system had to be

reduced to a minimum before impact, thus minimizing the energy dissipation requirements of the capture system itself. Due to orbital perturbations and possible deviations in the ore's trajectory the capture system must have a large receiving area and have some degree of maneuverability. After successful capture of the ore, it must be transferred (in a timely manner) to the manufacturing facility where it will be processed into a usable form. As should be expected, there are significant power requirements on the manufacturing plant that must be met. To allow for the continuous monitoring of the manufacturing process, accomodations for the crew must be made available, preferrably in the form of an adjoining habitat.

In implementing the entire system, assumptions regarding the projected level of technology must be made. One of the assumptions include the ability to establish and maintain a moon-based electromagnetic launching facility which will have the capability to put the moon ore in an acceptable trajectory. Furthermore, the ability to compute and track this trajectory is neccessary. The ability to place the capture system and manufacturing facility in its desired orbit will be dependent on the capabilities of heavy-lift launch vehicles and Shuttle Derived Vehicles now in development.

Based on the aforementioned prerequisites a few possible solutions came to light in the initial design phase. Through the process of elimination, the team soon focused on a single concept and the design became an optimization problem.

One of the possible solutions the design team considered was a large conical shaped cylinder with internal baffles to slow and stop the incoming ore. This concept was taken from *Space Based Manufacturing*

from Nonterrestrial Materials. It would be able to take in the material it is large, and it is assumed that some type of propulsion system could be added to provide it with some manueverability. The drawbacks of this design, which took it out of consideration were that it was not versatile enough and the design of the baffles was too difficult. Its lack of versatility was marked by its inability to handle the addition of other subsystems. The construction and repair of a facility like this would also be much more complicated than in the case of other proposed ideas.

Another idea that was considered involved sending huge containers full of moon ore. The containers themselves would be equipped with an active on-board system that could provide a large increase in drag or even with an active manuevering capability. There were several inherent drawbacks to this design, including: a phenomenal power requiremnet to launch it from the moon, a large increase in the amount of equipment needed on the moon, and exhorbinant costs to finance and maintain the active systems aboard the ore packages.

Another of the team's proposals was the forerunner of the actual system developed. It consisted of a large net stretched over a very large area with a limited depth support structure. The structure was very simple in design and had very little dampening incorperated into it. In addition, its attitude control functions would have to have been very extensive due to the instability of the system. This system did, however, provide an acceptable baseline on which to develop the existing design. This basic design is shown below in Fig. 1.

The structure of this initial design was enhanced in a manner which solved many problems. The size of the netting support structure was increased, causing three significant improvements. First, it allowed for

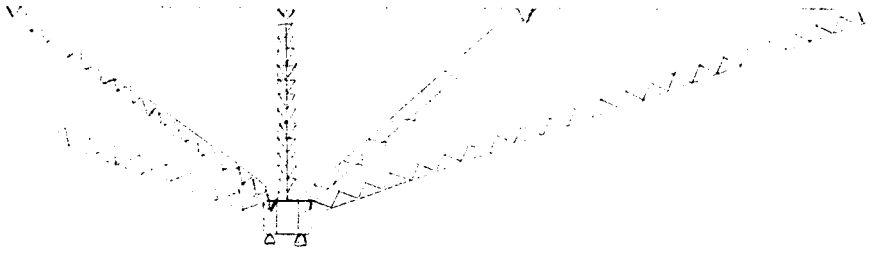

Fig. 1

an efficient dampening system to be placed on board. Secondly the greater depth minimized the attitude control and stability problem. Lastly, the larger structure provides an excellent foundation for many possible subsystems.

As stated earlier, the ore modules will be launched from the moon's surface by means of a magnetic rail launcher. The ore will escape the moon and enter into a Hohmann transfer orbit which will send it on its way to Earth. During this time the ore is travelling at great speed and thus has a great deal of energy. It is neccessary to reduce the velocity of the modules for the capture system interception. This could be accomplished any number of ways including many active systems such as drag producing balloots or some type of propulsive system. Although effective, these options are too expensive and would destroy the economic advantage this entire system is designed to acheive. The design group decided to use a passive dragging technique in that we would send the ore modules through the earth's atmosphere on its path to the capture system. There is no cost involved and the heat generated by the passage will be dissipated on the outward trip to interception at apogee. Figure 2 illustrates the path of the ore modules from start to finish.

The capture system primarily consists of four different components. The most significant and most noticable of these components are the eight large arms extending radially from the center out. These will be

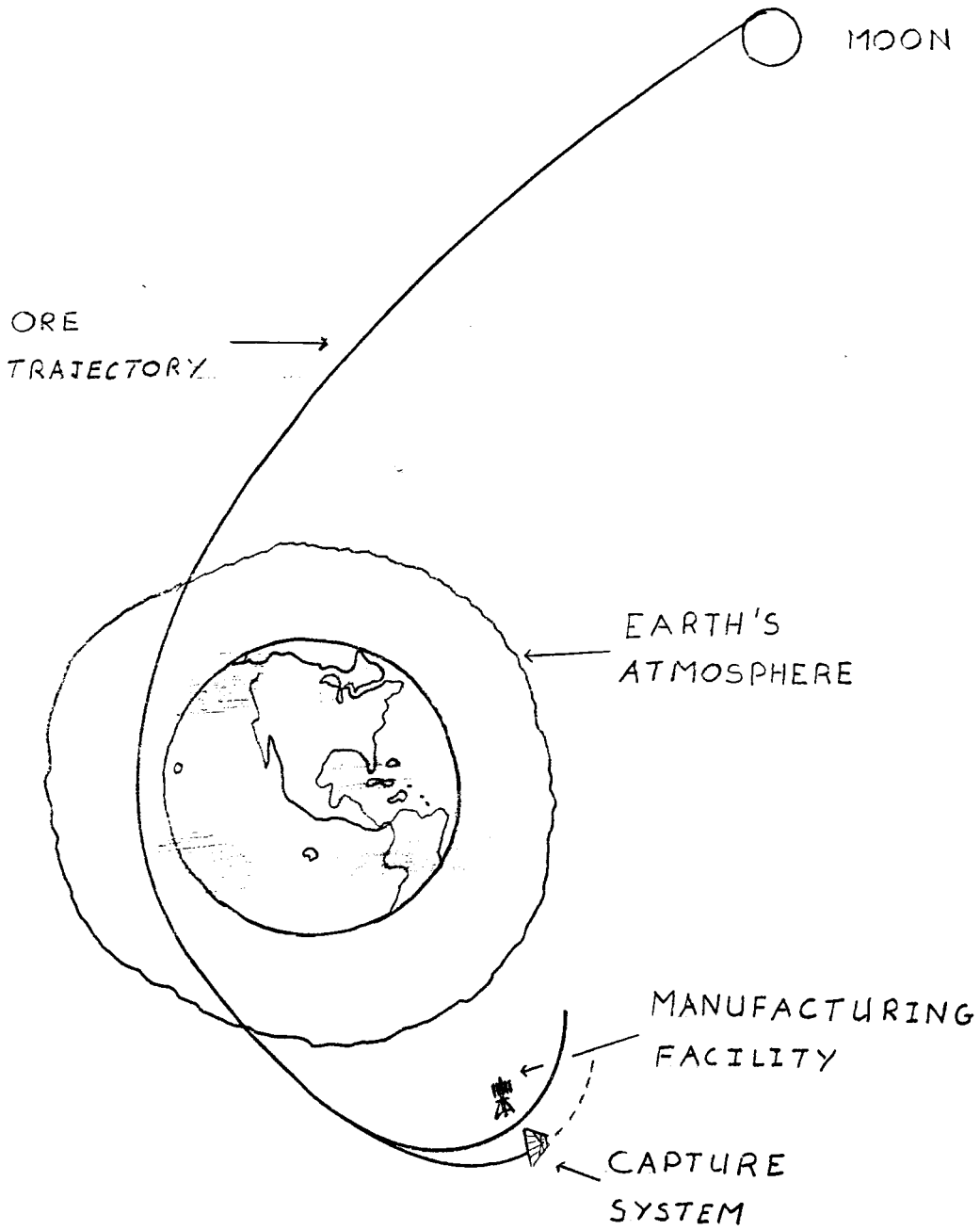
MOON
ORE
TRAJECTORY
EARTH'S
ATMOSPHERE
MANUFACTURING
FACILITY
CAPTURE
SYSTEM

Fig. 2

referred to as A-beams. Providing structural support to the A-beams, also extending from the center out are the smaller C-beams. The C-beams are connected at one end to a support on the center-structure and the other to a point on the A-beam. The center-structure will not only act as a common connection point, but will house the command and control center for the capture system. The fourth and most important component of the capture system is the nettting structure. Connected to each of the eight A-beams at their tips and spanning the entire frontal cross section, the net will provide the stopping barrier for the incoming moon ore, thus allowing removal and transfer to the manufacturing plant and preventing any damage to the A-beams, C-beams, or the center-structure.

A front and side view of the command and control center are found below in Fig. 3

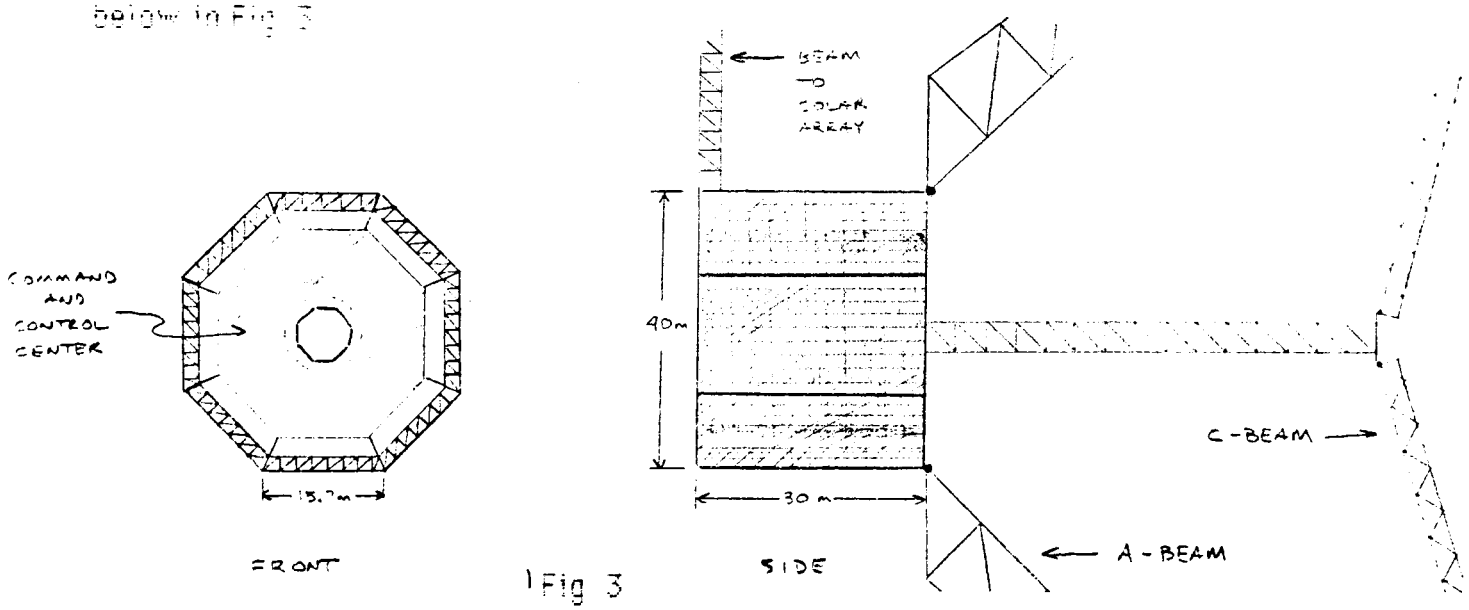

Fig 3

This structure is an octagonal cylinder 40 meters in diameter and 30 meters deep. Each straight side of the octagon is approximately 15.7 meters in length, thus allowing adequate room to mount the base of each A-beam. On board the command and control structure will be a suitable zero-gravity working habitat containing working spaces for a crew of five

to six a controlling computer with two back up computers an environmental control system, and a propulsion system mounted at the base. Also mounted on the base is an extending boom with a solar array to provide power to onboard batteries. Note from the sketch of the C&C center the arm extending toward (what will be) the center of the capture system. The free end of this arm will provide the connection points for the C-beams.

As previously mentioned, the base of the A-beams will be connected along the straight side of the C&C octagon. The base cross-section of the A-beam is configured as an isosceles triangle with a 15 meter side length (See Appendix A). One side of the isosceles triangle will be hinged to the C&C structure. This movable hinge allows for ease of deployment of the arm itself and the netting. In Appendix A it is seen that the A-beam tapers from a 15 meter side length base to a 2 meter tip. This modification saves a great deal of weight and, in turn, money. Each element of this beam is a rod measuring 0.5 square inches in area. It is made of an aluminum alloy of the characteristics given in Appendix B.

The C-beam is a simple triangular shaped beam with no taper. As shown in Fig 3, it is connected to the center arm using a hinge connection. This hinge connection allows a distinct advantage. If the C-beam is connected to the A-beam with a movable connection, the angular position of the C-beam will determine how wide the frontal area of the capture system becomes.

Figure 4 depicts a simple design for a movable connection between a C-beam and an A-beam. The design of the C-beam complete with dimensions is found in Appendix C. The netting that is to be stretched across the front of the capture system will be made of Kevlar 49 material.

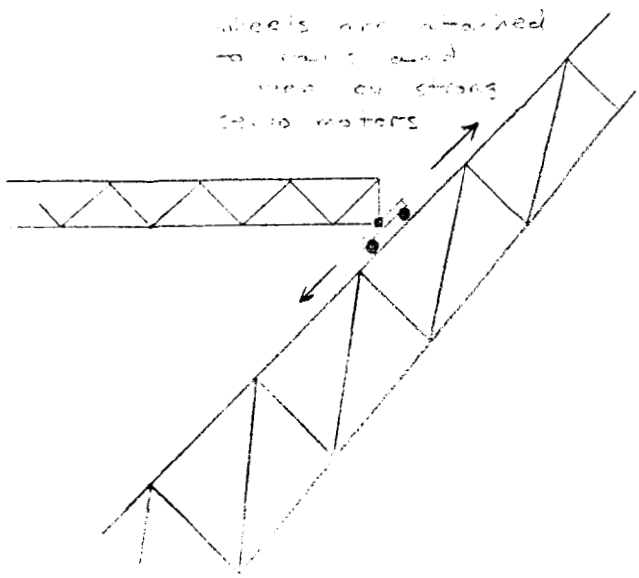

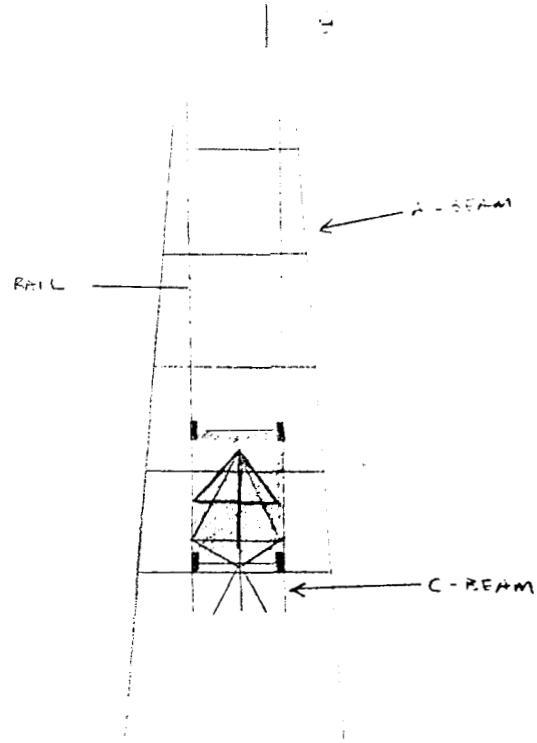

Fig.4

It has the following properties:

Density=1.45 kg/m^3 Strength=3.6 GPa Modulus=130 GPa

Based on these parameters, the cross-sectional area of the net webbing only has to be 0.2 square inches at any impact point. The actual allowable area of impact is a circle of radius 142 meters centered on the frontal projection. The webbing outside this area must be somewhat stronger to dissipate more of the energy quicker should some moon ore hit off target. The cross hatch pattern of the net depends on the size of the modules to be caught. The larger the modules, the less Kevlar needed but stronger beams would be needed. Thus, there is a trade off.

The Kevlar net will only be attatched at the tip of each A-beam by one cable. This cable will be able to sustain the maximum amount of tension expected without failure. The cable will not be rigidly attached to the A-beam but rather it will be bent over a pulley of some type at the tip and then corrected to an active damping system located somewhere along

the A-beam. The dampers will have the same effect as the trap wires do on an aircraft carrier.

The lengths of the beams (A-beam and C-beam) were designed determined through trial and error. The only definite parameter was the area of capture. The diameter of the frontal area had to be 400 meters. Considering the maximum allowable deflection of the net, the maximum angular deflections of the C-beams and A-beams, and keeping the amount of material to a minimum gave the present dimensions found in Figures 5 and 6.

The structural analysis of the capture system was done using the GIFTS computer program. Only one of the structure's eight arms was modeled because of the symmetry which existed. Two load cases were modeled to simulate the largest load conditions which the capture system structure would encounter.

The modeling process began with the building of data files for each of the trusses used. The programs "ABUILD" and "CBUILD" found in Appendix D generated the data files for the inner and outer trusses, respectively. The data points for these trusses are located in files "BEAMA" and "BEAMC", also located in Appendix D.

The program "MBUILD" was then created to build a "BULKM" driver file. The driver file is called "PROM.SRC" and contains all responses and data necessary to execute the "BULKM" module of the "GIFTS" program. The program "MBUILD" also creates a polygon file which draws all eight arms of the structure using the VAX computer and PS300 terminal. The data file containing this information is called "PROJ.PF". Neither "PROJ.PF" or "PROM.SRC" is listed in the Appendix because of the large number of data points and connection parameters contained in each, which

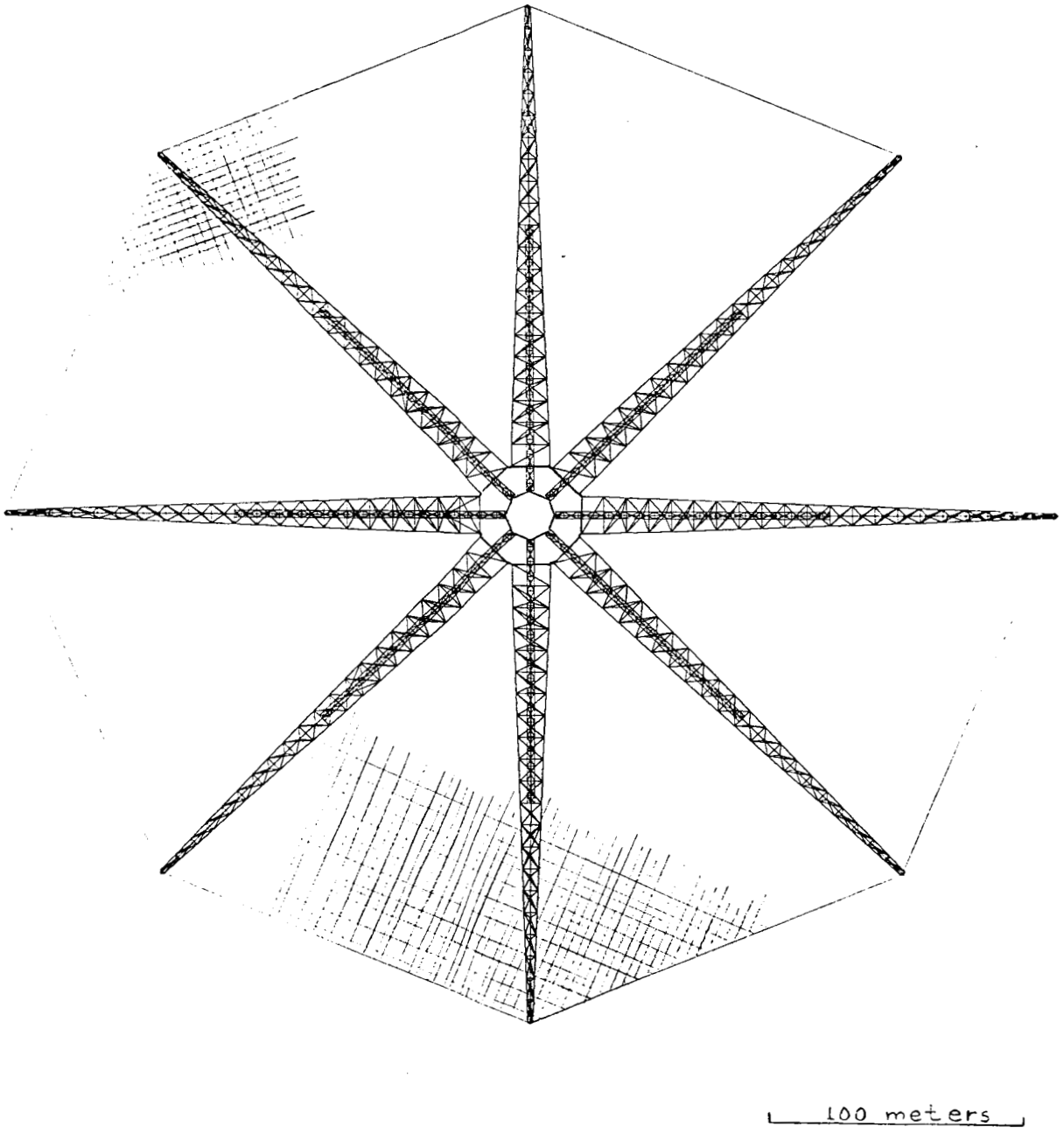

Fig. 5

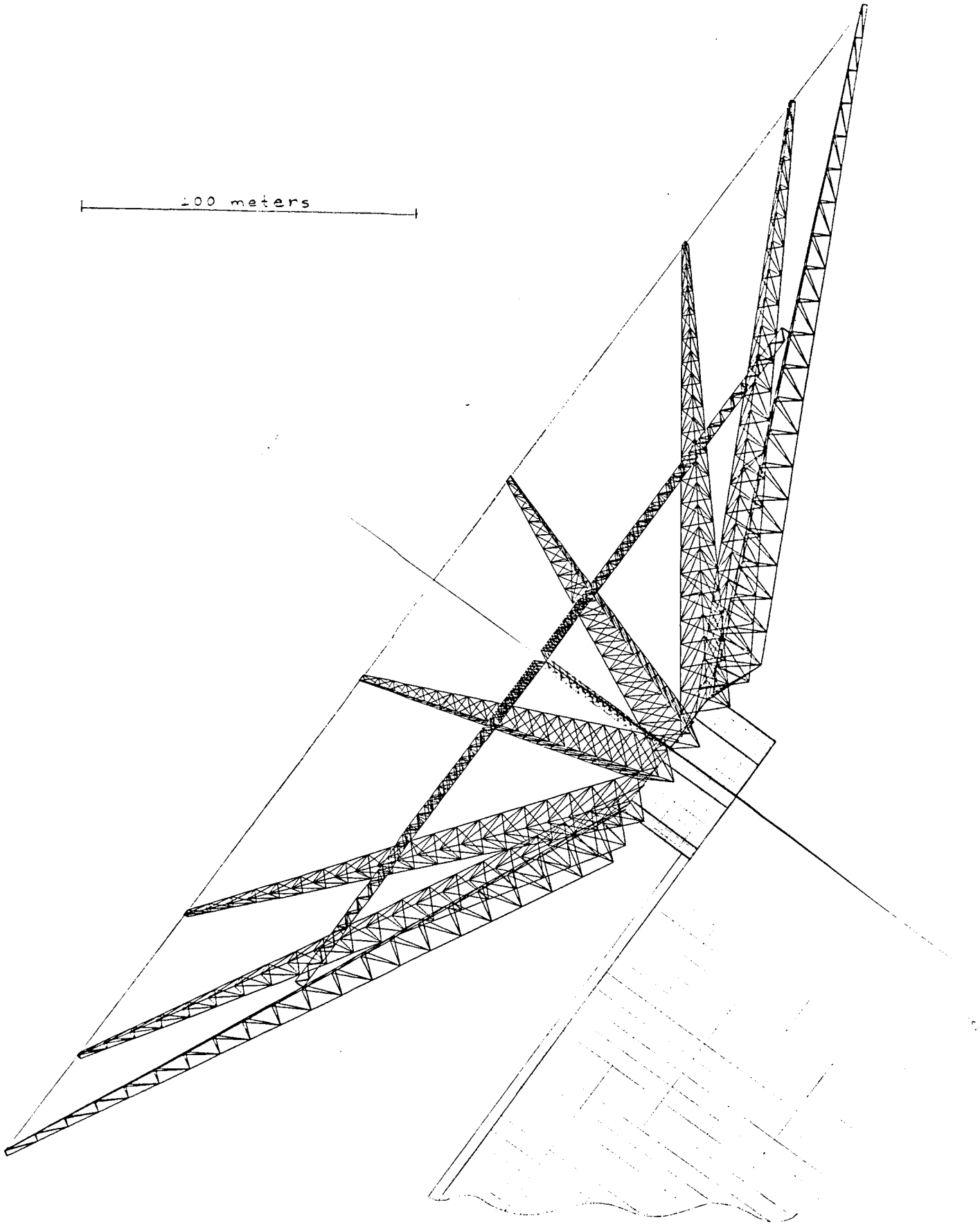

Fig. 6

are relatively meaningless to the reader. In a similar fashion the program "LOBULD" creates a "BULKLB" driver file for the GIFTS program. The driver file is "PUSH.SRC".

The program "GIFTSRUN" is performed to execute the entire static analysis of the capture system. The user is then left in the "RESULT" module so that information commands can be called if desired. The program "GIFTSRUN"is executed in the following manner: PER GIFTSRUN;LOD1;PROM.SRC;PUSH.SRC.

The deflections and stresses obtained from the two loadings are contained and discussed in Appendix D. They were obtained by executing the INFDN and INFST commands. The dynamical analysis of the capture system was done in a similar fashion using the program "DYNESRUN".

The propulsion system on board the capture system presents a unique problem. In order to provide the degree of manueverability neccessary to safely intercept the moon ore modules, a number of thrusters must be attached to the tips of the A-beams of the structure as well as having a main propulsion engine located at the base of the structure. By developing a main propulsion system consisting of multiple, uni-directional engines, the majority of the manuevers required of the structure may be implemented via the use of this system alone. To fine point the capture system and make slight asjustments prior to and during tthe interception of the moon ore, small hydrazine tnrusters will be mounted in accordance with the three axes coordinate sysstem on each A-beam. The main propulsion system will be powered by a fuel mixture of nitrogen and oxygen and can be refueled by depleting the reserve fuel left on board the shuttle and shuttle derived vehicles' main booster engines. Since the smaller hydrazine thrusters will use only a fraction of the fuel

used by the main engines, they may be refueled during a resupply mission at the same time as the thruster system on the habitat and manufacturing plant are refueled.

The attitude and control system of the capture system will be directed via the habitat facility. Information regarding the position of the capture system relative to the habitat and the incoming ore will be transmitted from the habitat communications center to both the ground facility and the capture structure. Horizon sensors, sun sensors, and star sensors will be mounted on the control enclosure of the capture system as well as inertial moment units that will correlate their data to the positioning information provided by the habitat. In case of a communications failure in the habitat, the capture structure will have the ability to transmit directly to the ground stations for assistance. The attitude control, however, will be provided by the propulsion system and the main purpose will be to align the capture system with the inbound ore.

Thermal control systems for the capture system will consist of both passive and active units. The cold gas thrusters and associated mechanisms located on the structures A-beams will be protected with entirely passive systems. The command and control facility onboard the capture system requires both active and passive thermal systems to ensure the proper working environments for both the crew and the computers. Active systems will consist of individual cooling and heating elements on computers and comminication system. Between each component and on the exterior of the command structure will be insulation and thermal shielding to prevent excessive thermal expansion of the structure and possible system failure.

The manufacturing facility is an integrated system that may be

divided into three seperate components, shown in Fig. 7, consisting of the refinery, the habitat, and the power system. The refinery section of the manufacturing plant will be capable of processing moon ore, alloying casting, forming, and final fabrication of the products as illustrated in Fig. 8 and 9.[2] After the final fabrication is complete, products from the facility are off loaded and stored in storage bin attatched to the outside of the work area. At the end of the refinery is located an interfacing section that attatches the habitat to the refinery and allows either access or isolation of the two spaces in case of emergency. The interface section will include a sealed vacuum chamber for entry to and from the space environment as well as emergency rescue equipment and communication facilities.

The habitat structure will be made up of ten common modules that will be initially combined into four groups of two each. Each group will be launched seperately and, once in orbit, the modules will be combined to provide crew quarters, a galley, medical and exercise areas, and a commend center.[7] The modules will be connected side by side, each with their own life support systems to include environmental control and thermal protection. To enable the facility to be easily resupplied, a docking area will be attached to the end of the habitat structure opposite the refinery. The docking area will have the ability to dock a shuttle directly to the habitat and will include a work area with equipment to work in the space environment. An illustration is shown on the following page.

In the design of the manufacturing facility and habitat, there were a number of different subsystems that required additional attention. Some of the subsystems included the power system, thermal protection, attitude

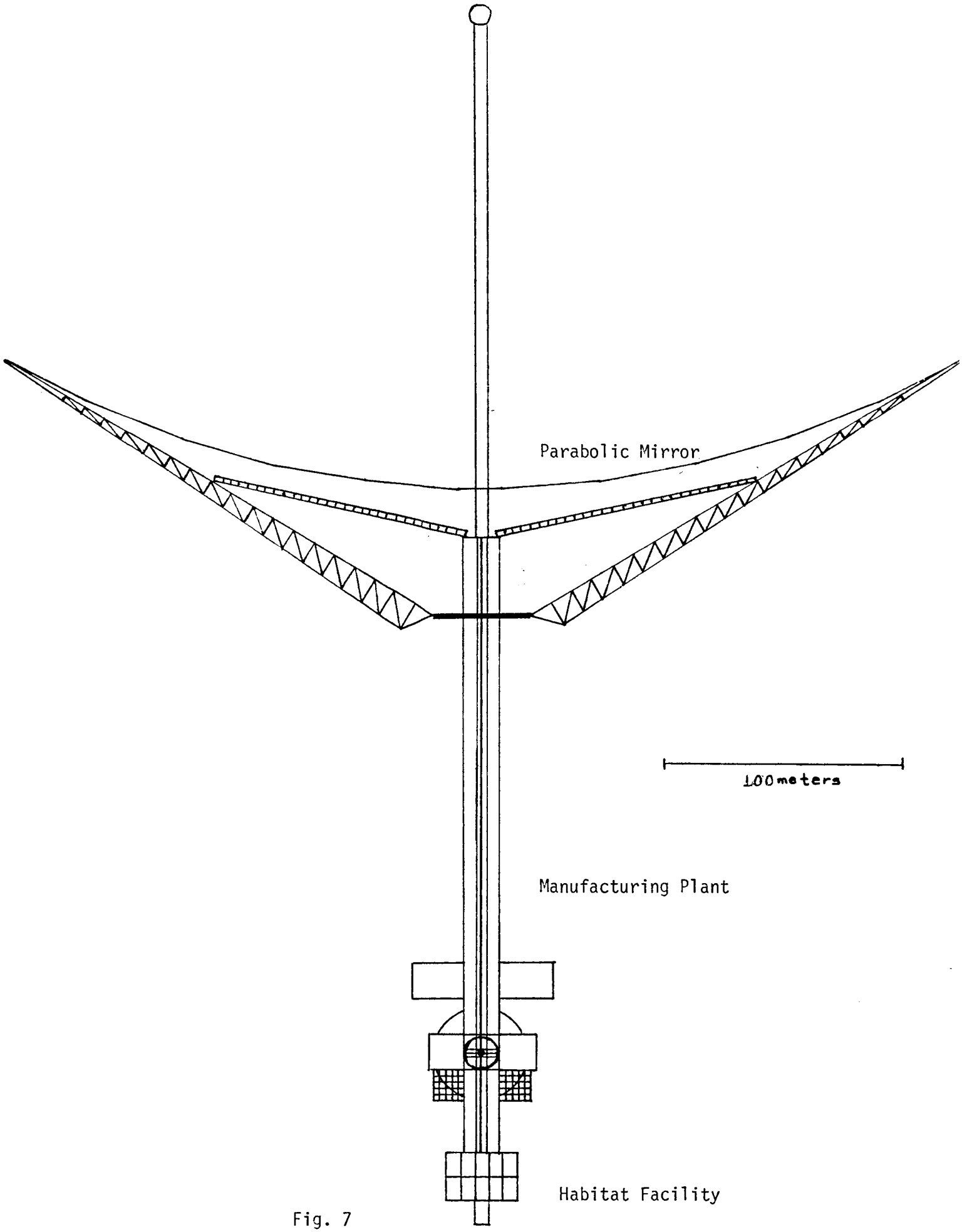
Parabolic Mirror
100 meters
Manufacturing Plant
Habitat Facility

Fig. 7

Manufacturing Facility

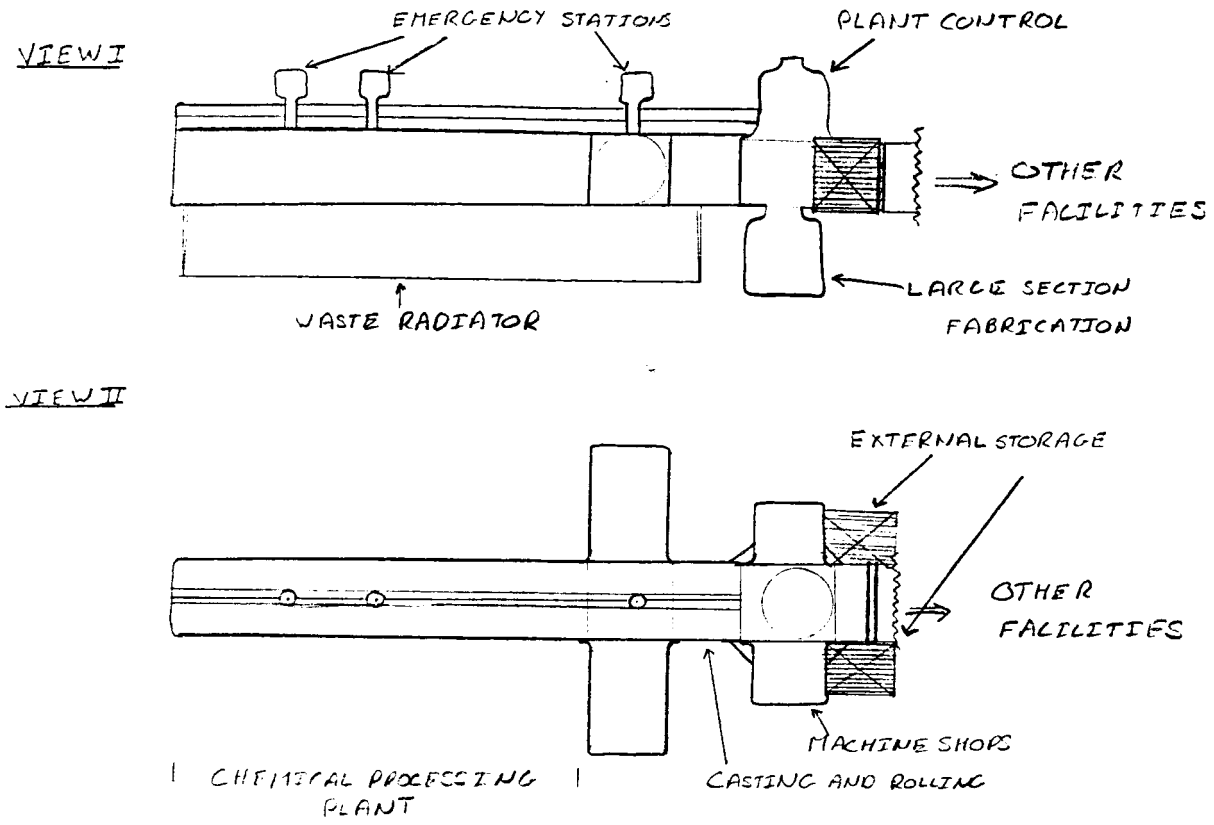

Fig. 8

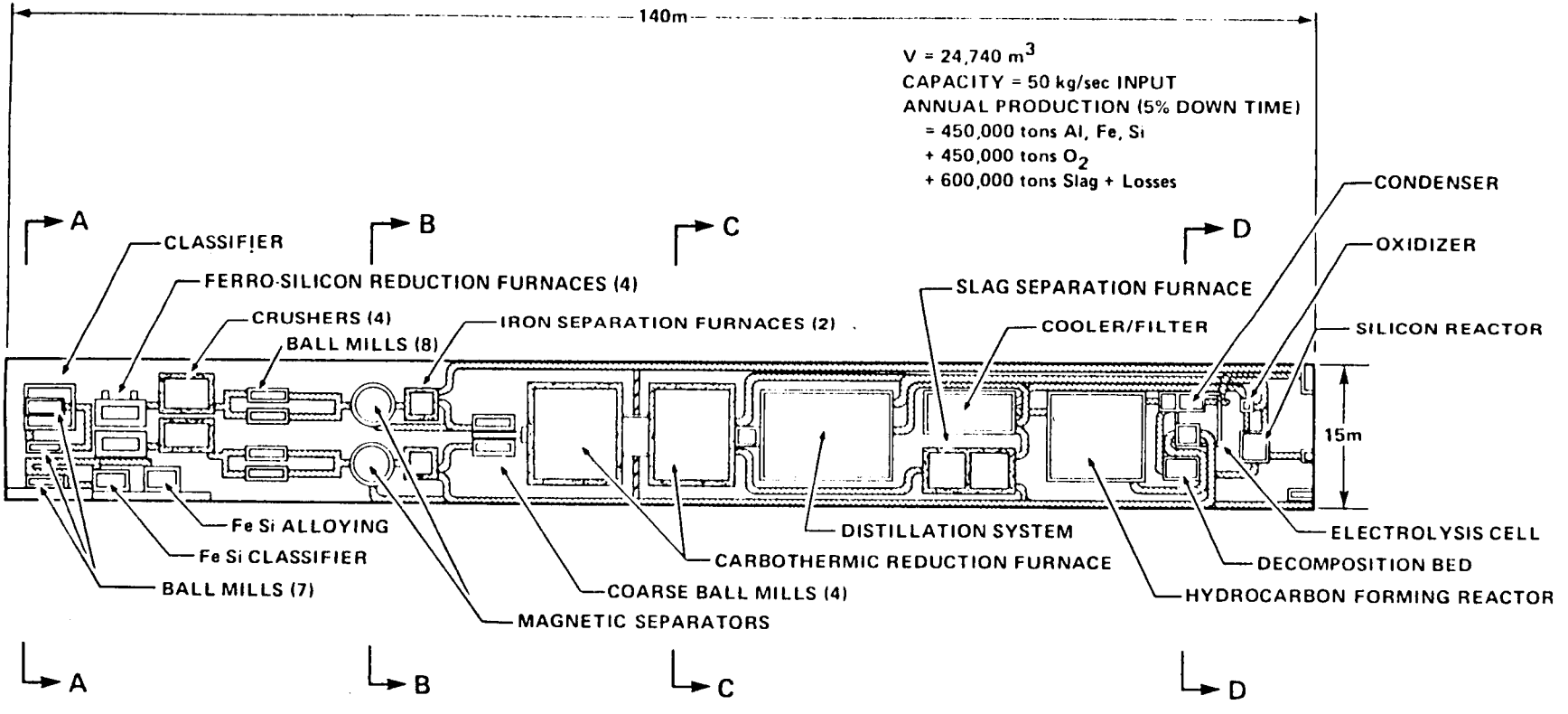

Lateral-view schematic of the chemical process plant concept.

Fig. 9

reference and control, orbital maintenance, and communications and data systems. The power system needed for the facility is largely dependent upon the power required to operate the refinery and associated working spaces. Approximately 56 Megawatts[2] are required to operate the manufacturing facility, including the habitat and a safety factor of about 1.1, the total energy requirements amount to 62 Megawatts. Conventional power supplies, such as a solar array or battery units, would have to be too large to be practical in order to supply the neccessary power. A nuclear power plant would be able to supply the required amount of power but the hazards of placing a nuclear power plant in a LEO erases any feasibility. An advanced power system based on a parabolic mirror that focuses the solar energy on a focal point and thus concentrating the energy is the best prospect. As the solar energy is focused on the boiler, the energy is converted into thermal energy. The water, in turn, is pumped directly into the refinery, generating the required amount of power.

The thermal control system will actually consist of two seperate systems, one system for the manufacturing plant and another one for the habitat. The manufacturing facility will have a thermal control system consisting primarily of a heat pipe radiator[3] and passive systems such as insulation and shielding. Thermal control requirements for the habitat do not neccessitate as large a system as that for the manufacturing plant. However, the habitat's system will consist of both active and passive thermal control devices. An active system may consist of a smaller version of the heat pipe radiator used on the manufacturing facility. In this way, the similarities of the two systems make it easier to maintain both systems and effect repairs. Also, slag from the refining process may be used incombination with the empty shuttle booster rockets for

zero insulation and solar radiation protection of the habitat facility.

Attitude Reference and Control systems for the structure will be of a magnitude that has not been used in space to date. Since the size of the parabolic mirror greatly affects the amount of aerodynamic drag and moments acting on the facility, the control system must be powerful enough to maintain the proper attitude. With the use of dual sets of sun sensors, horizon sensors, and star sensors, the facility will be able to monitor a very exact attitude. The attitude control system will consist of cold gas hydrazine thrusters strategically located about the structure to enable motion in all directions of the three axes coordinate system. These thrusters, with the guidance from the attitude reference sensors and additional assistance from multiple Global Positioning Satellite (GPS) receivers, will be able to control the attitude to within 0.5 degrees.

The orbital maintenance system will be directly tied into the attitude control system. Since there is no need to provide an onboard propulsion system in order to boost the facility to final orbit, there will be no main propulsion engines. Instead, the array of thrusters required for attitude control will be complemented by a number of larger thrusters that will feed off the same hydrazine fuel storage. The larger thrusters will provide the neccessary power to maintain the proper orbit.

Communications and data systems for the facility will include both ground-based and space-based networks. Located inside the habitat facility itself will be the main computer and communications network that will continuously record and transmit all orbital and attitude reference data automatically. Also located in the habitat will be an audio network and television system capable of voice and video communications from numerous positions throughout the facility. The manufacturing plant will house a separate communications network which will provide a

backup to to the main network as well as supplying the main command center an information on the refinery and associated processes. All transmissions will be relayed, either directly or via communications satellites, to earth based stations located at White Sands.

After both the manufacturing facility and capture system are designed, each subsystem must be tested and interfaced with one another until the entire system can be integrated together. Once the manufacturing facility is built, it must be broken down into specific sections and arranged for easy assembly in space. In the case of the large parabolic mirror and the support beams of the capture system, each piece will be prefabricated prior to launch to enable quick and simple construction.

The initial in-space building phase of the system will begin with the launch and construction of the common modules, thus providing an initial space habitat to work from. The ten generic modules will be divided among two shuttle derived vehicle (SDV) payloads and one basic shuttle payload. The SDV used will be a heavy-lift launch vehicle using a side-mounted configuration similar to the one shown on the following page. In this configuration, with larger side mounted booster rockets, four common habitat modules may be launched in each SDV. The shuttle itself will carry two more modules to LEO. Completion of this initial phase will have the ten module habitat constructed in LEO within a two month time period. In the following two months, one SDV and one shuttle launch will be made. The SDV launch will carry the habitat-manufacturing plant interface structure as its payload. The shuttle payload will be the docking structure to be attatched to the end of the habitat.

The manufacturing facility will be broken into ten SDV launches,

very much the same as the SDV used in the previous phase. These launches will be spread out evenly over a period of ten months after which there will be a two month period of no scheduled launches. During this period the refinery and habitat will be joined. The next phase is the launching of the materials for the power system. For ten months there will be one launch per month of materials to assemble the parabolic mirror and associated equipment.

Once the manufacturing facility and habitat are located in LEO and are powered up, the building of the capture system may begin. The initial launch of the capture system components will occur three months after the completed refinery is in orbit. This phase will consist of one SDV and one shuttle launch. These first two launches will contain the command and control center and the lower frame of the capture system. Four additional SDV launches, spread over a four month period, will put into orbit the remaining support structures and the netting for the capture system. Once assembled, the capture system will power up, test systems, and begin communications with the habitat.

APPENDIXES

A.....A-BEAM STRUCTURE

B.....ALUMINUM ALLOY CHARACTERISTICS

C.....C-BEAM STRUCTURE

D.....GIFTS PROGRAMMING AND RESULTS

Appendix A

The A-beam

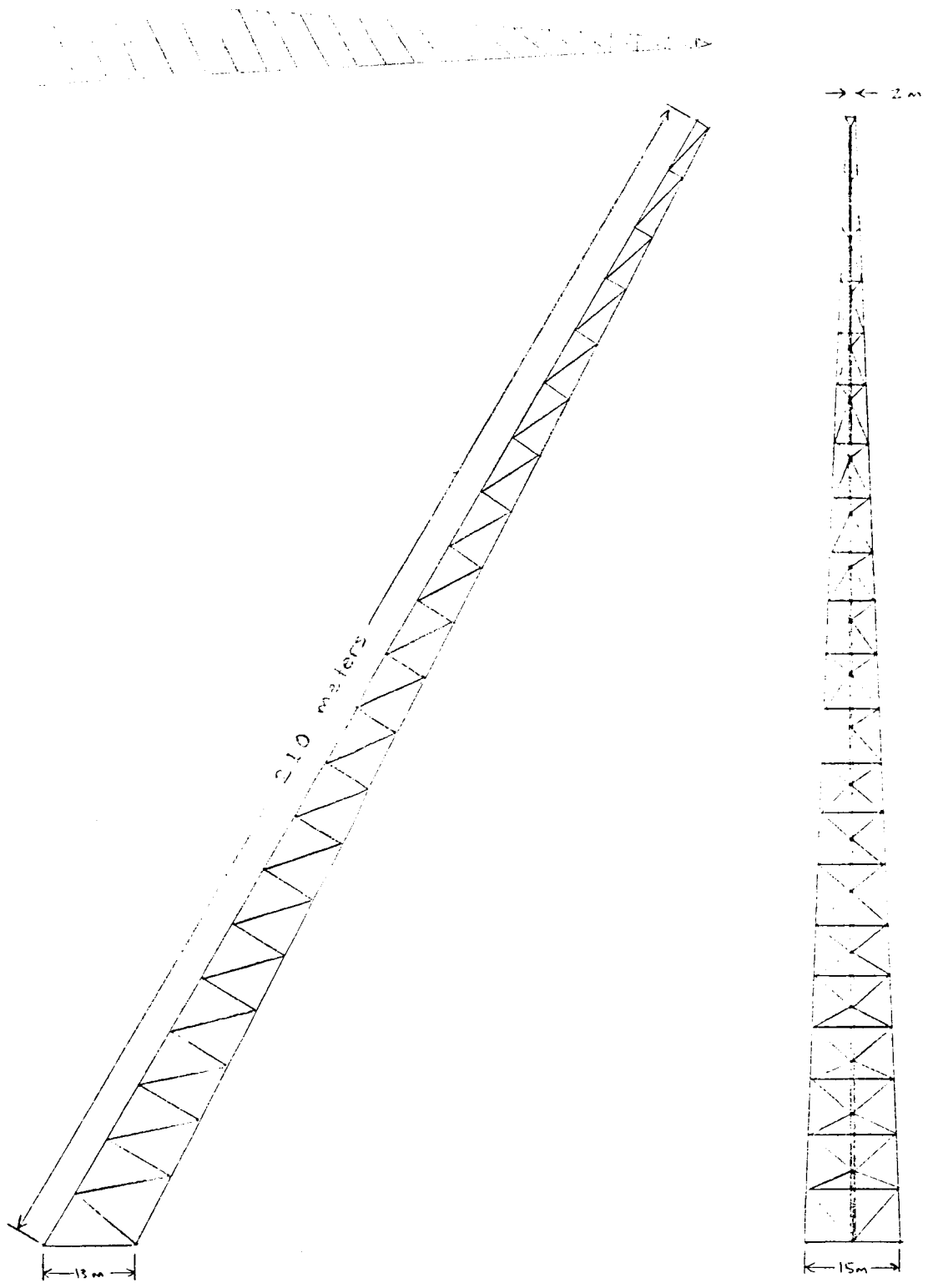

APPENDIX A

Appendix B

The Al Alloy

ALLOY 2014-T6 (4.4% Cu)

	U.S. CUSTOMARY UNITS	SI UNITS
Specific Weight	.101 lb/in^3	2800 kg/m^3
Ultimate Strength		
tension	70 ksi	480 MPa
compression	70 ksi	480 MPa
shear	42 ksi	290 MPa
Yield Strength		
tension	60 ksi	410 MPa
shear	32 ksi	220 MPa
Modulus of Elasticity	10.6×10^6 psi	72 GPa
Modulus of Rigidity	3.9×10^6 psi	27 GPa

APPENDIX B

Appendix C

The C-beam

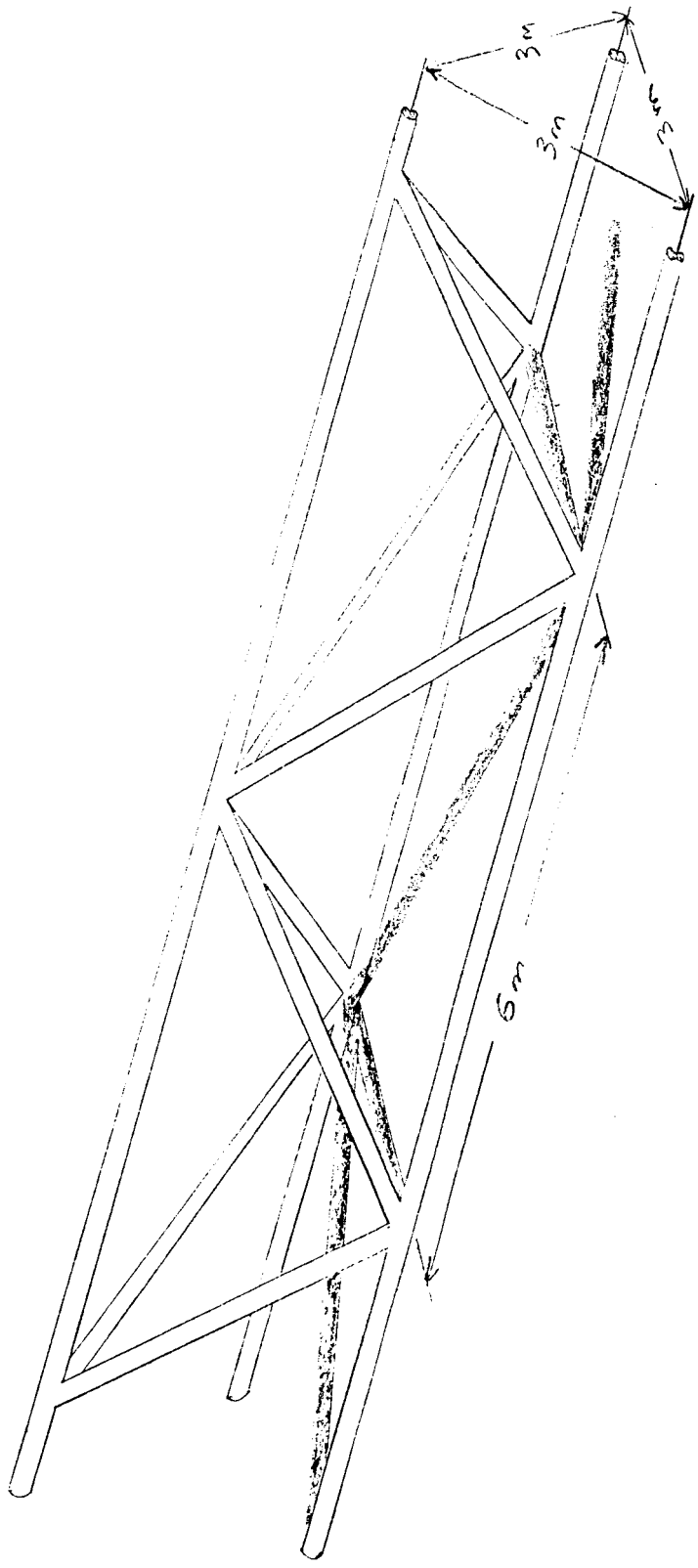

APPENDIX C

Appendix D

GIFTS Data, Programs & Results

The job name CAS1 denotes the loading case for the off center hit in the upper half of the structure. An example of this is on the previous page. The first listing is that of the deflections. Note that the maximum deflection occurs at node #125,(dimensions are in feet). The second listing is that of the stresses in each member. Note that the maximum stresses occur in elements #175 and #181. They are 17.78 ksi and -18.14 ksi, respectfully. This leaves a safety factor of approximately 3 (max allowable= 60 ksi).

For the lower part of the structure, the case loading is denoted as CAS2. The maximum deflection (at node #125) is .9411 feet in the x-direction and .7107 feet in the z-direction. The way the beam was modeled, these are the only to directions of concern (unless, ofcourse, failure occurs). Again, the maximum stresses occur in element #'s 175 and 181. The safety factor in this beam is well over 3 and actually closer to 5.

LOADING CASE 1

[illegible]

[illegible]

[illegible]

[illegible]

JOB:CAS1 04/28/86 LOADING CASE 1 19:50:2[illegible] [illegible]

NP	U	V	W	THX	THY	[illegible]
1	0.000E-01	0.000E-01	0.000E-01			
2	0.000E-01	0.000E-01	0.000E-01			
3	0.000E-01	0.000E-01	0.000E-01			
4	-1.[illegible]E-02	3.892E-02	-1.849E-[illegible]			
5	-2.[illegible]E-02	3.892E-02	3.969E-02			
6	-5.[illegible]E-02	2.[illegible]E-02	-1.441E-02			
7	-8.[illegible]E-02	1.242E-01	-4.454E-03			
8	-9.078E-02	1.242E-01	3.914E-02			
9	-1.309E-01	1.818E-01	-2.774E-02			
10	-1.[illegible]E-01	2.029E-01	-8.138E-03			
11	-1.[illegible]E-01	2.[illegible]E-01	3.641E-02			
12	-2.278E-01	2.759E-01	-3.990E-02			
13	-2.[illegible]E-01	2.941E-01	-1.073E-02			
14	-2.942E-01	2.941E-01	3.366E-02			
15	-3.423E-01	3.702E-01	-5.112E-02			
16	-3.785E-01	3.700E-01	-1.440E-02			
17	-4.246E-01	3.700E-01	2.874E-02			
18	-4.703E-01	4.620E-01	-6.116E-02			
19	-5.11[illegible]E-01	4.584E-01	-1.[illegible]98E-02			
20	-5.590E-01	4.584E-01	2.381E-02			
21	-6.094E-01	[illegible]E-01	-7.015E-02			
22	-6.442E-01	5.227E-01	-2.068E-02			
23	-7.114E-01	5.227E-01	1.[illegible]E-02			
24	-7.546E-01	6.298E-01	-7.904E-02			
25	-7.936E-01	5.994E-01	-2.320E-02			
26	-8.590E-01	5.994E-01	9.571E-03			
27	-9.048E-01	7.004E-01	-3.484E-02			
28	-9.333E-01	6.433E-01	-2.684E-02			
29	-1.020E+00	6.433E-01	2.701E-04			
30	-1.054E+00	7.601E-01	-9.055E-02			

TO CONTINUE, STRIKE 'RETURN': TO STOP, TYPE 'S'?

JOB:CAS1 04/28/86 LOADING CASE 1 19:50:44 PAGE 2

NP	U	V	W	THX	THY	THZ
31	-1.094E+00	6.996E-01	-2.940E-02			
32	-1.168E+00	6.996E-01	-9.036E-03			
33	-1.203E+00	8.064E-01	-9.517E-02			
34	-1.219E+00	7.143E-01	-3.303E-02			
35	-1.325E+00	7.143E-01	-2.052E-02			
36	-1.344E+00	8.369E-01	-9.871E-02			
37	-1.353E+00	7.414E-01	-3.557E-02			
38	-1.460E+00	7.414E-01	-3.201E-02			
39	-1.477E+00	8.496E-01	-1.012E-01			
40	-1.472E+00	7.181E-01	-3.919E-02			
41	-1.600E+00	7.181E-01	-4.567E-02			
42	-1.597E+00	8.421E-01	-1.025E-01			
43	-1.589E+00	7.071E-01	-4.172E-02			
44	-1.709E+00	7.071E-01	-5.934E-02			
45	-1.702E+00	8.124E-01	-1.028E-01			
46	-1.671E+00	6.372E-01	-4.534E-02			
47	-1.819E+00	6.372E-01	-7.516E-02			
48	-1.787E+00	7.582E-01	-1.020E-01			
49	-1.751E+00	5.795E-01	-4.786E-02			

[illegible]	[illegible]	[illegible]	[illegible]
[illegible]	[illegible]	[illegible]	-5.146E-02
[illegible]	[illegible]	[illegible]	[illegible]
[illegible]	[illegible]	[illegible]	[illegible]
[illegible]	[illegible]	[illegible]	-5.897E-02
[illegible]	[illegible]	1.474E-01	-1.270E-01
[illegible]	[illegible]	4.278E-01	-9.214E-02
[illegible]	[illegible]	2.610E-01	-5.397E-02
[illegible]	[illegible]	2.565E-01	-1.300E-01
[illegible]	[illegible]	0.000E-01	0.000E-01

TO CONTINUE, STRIKE 'RETURN'; TO STOP, TYPE 'S'?

JOB:CAS1 04/28/86 LOADING CASE 1 19:50:58 PAGE

NP	U	V	W	THX	THY	THZ
61	0.000E-01	0.000E-01	0.000E-01			
62	0.000E-01	0.000E-01	0.000E-01			
63	-3.865E-01	2.297E-01	-1.049E-01			
64	-1.214E+00	-4.908E-01	3.497E-01			
65	-1.442E+00	2.362E-01	-6.303E-01			
66	-9.078E-01	2.352E-01	-2.857E-01			
67	-1.650E+00	-4.753E-01	1.491E-02			
68	-1.718E+00	2.384E-01	-6.864E-01			
69	-1.365E+00	2.391E-01	-4.143E-01			
70	-1.975E+00	-4.594E-01	-2.546E-01			
71	-2.133E+00	2.423E-01	-8.084E-01			
72	-1.676E+00	2.416E-01	-4.944E-01			
73	-2.193E+00	-4.425E-01	-4.597E-01			
74	-2.428E+00	2.448E-01	-8.798E-01			
75	-1.874E+00	2.480E-01	-5.282E-01			
76	-2.207E+00	-4.239E-01	-6.016E-01			
77	-2.609E+00	2.462E-01	-9.027E-01			
78	-1.965E+00	2.434E-01	-5.183E-01			
79	-2.323E+00	-4.027E-01	-6.819E-01			
80	-2.678E+00	2.466E-01	-8.792E-01			
81	-1.956E+00	2.433E-01	-4.687E-01			
82	-2.248E+00	-3.779E-01	-7.034E-01			
83	-2.648E+00	2.465E-01	-8.132E-01			
84	-1.855E+00	2.430E-01	-3.343E-01			
85	-2.092E+00	-3.491E-01	-6.697E-01			
86	-2.513E+00	2.462E-01	-7.087E-01			
87	-1.677E+00	2.431E-01	-2.718E-01			
88	-1.868E+00	-3.118E-01	-5.859E-01			
89	-2.297E+00	2.463E-01	-5.717E-01			
90	-1.438E+00	2.440E-01	-1.399E-01			

TO CONTINUE, STRIKE 'RETURN'; TO STOP, TYPE 'S'?

JOB:CAS1 04/28/86 LOADING CASE 1 19:51:12 PAGE 4

NP	U	V	W	THX	THY	THZ
91	-1.593E+00	-2.668E-01	-4.588E-01			
92	-2.013E+00	2.472E-01	-4.102E-01			
93	-1.150E+00	2.651E-01	5.012E-03			
94	-1.299E+00	-2.141E-01	-3.020E-01			
95	-1.681E+00	2.497E-01	-2.345E-01			
96	-9.079E-01	2.520E-01	1.069E-01			
97	-1.036E+00	-1.712E-01	-1.656E-01			
98	-1.387E+00	2.548E-01	-1.062E-01			
99	-6.517E-01	2.576E-01	2.234E-01			
100	-7.692E-01	-1.306E-01	-2.675E-02			
101	-1.090E+00	2.576E-01	2.896E-02			
102	-3.947E-01	2.636E-01	3.404E-01			
103	-5.014E-01	-3.962E-02	1.125E-01			
104	-7.934E-01	2.636E-01	1.637E-01			
105	-1.369E-01	2.700E-01	4.578E-01			
106	-2.328E-01	-4.816E-02	2.522E-01			
107	-4.962E-01	2.700E-01	2.988E-01			

[illegible]	[illegible]	[illegible]	[illegible]
[illegible]	[illegible]	1.770E-01	[illegible]
[illegible]	[illegible]	2.843E-01	[illegible]
[illegible]	[illegible]	1.610E-02	5.330E-01
[illegible]	[illegible]	2.842E-01	[illegible]
[illegible]	[illegible]	2.921E-01	8.122E-01
[illegible]	[illegible]	7.686E-02	6.741E-01
[illegible]	[illegible]	2.920E-01	7.062E-01
[illegible]	[illegible]	3.002E-01	9.811E-01
[illegible]	[illegible]	1.320E-01	8.156E-01
[illegible]	[illegible]	3.002E-01	8.425E-01
120	[illegible]	3.085E-01	1.050E+00

TO CONTINUE, STRIKE 'RETURN'; TO STOP, TYPE 'S'?

JOB:[illegible] 04/23/86 LOADING CASE 1 19:51:31 PAGE [illegible]

NP	U	V	W	THX	THY	THZ
121	1.121E+00	1.654E-01	9.574E-01			
122	1.302E+00	3.085E-01	9.791E-01			
123	1.426E+00	3.170E-01	1.169E+00			
124	1.393E+00	2.089E-01	1.099E+00			
125	1.304E+00	3.170E-01	1.116E+00			

+?

[illegible]

[illegible] - RETYPE FROM POINT OF ERROR
[illegible]

[illegible] 04/28/86 LOADING CASE 1 19:52:29 [illegible]
E STRESSES -- MIDDLE

1	[illegible]
2	[illegible]
3	-3.151E+03
4	[illegible]
5	-1.384E+04
6	2.454E+[illegible]
7	[illegible]
8	-2.1[illegible]E+03
9	2.891E+03
10	-1.449E+03
11	4.601E+03
12	9.756E+02
13	2.891E+03
14	-1.449E+03
15	6.509E+03
16	4.330E+03
17	2.891E+03
18	-1.449E+03
19	4.577E+03
20	4.846E+03
21	2.891E+03
22	-1.449E+03
23	6.485E+03
24	8.700E+03
25	2.891E+03
26	-1.449E+03
27	4.553E+03
28	8.714E+03
29	2.890E+03
30	-1.449E+03

TO CONTINUE, STRIKE 'RETURN'; TO STOP, TYPE 'S'?

JOB:CAS1 04/28/86 LOADING CASE 1 19:52:38 PAGE 2
NE STRESSES -- MIDDLE

31	6.462E+03
32	1.257E+04
33	2.890E+03
34	-1.449E+03
35	4.530E+03
36	1.258E+04
37	2.890E+03
38	-1.449E+03
39	6.441E+03
40	1.643E+04
41	2.889E+03
42	-1.450E+03
43	4.508E+03
44	1.644E+04
45	2.889E+03
46	-1.450E+03
47	6.421E+03
48	2.029E+04
49	2.888E+03
50	-1.451E+03
51	4.487E+03
52	[illegible]

```
[illegible]
[illegible]
[illegible]
[illegible]
[illegible]
[illegible]
[illegible]
TO CONTINUE, STRIKE 'RETURN'; TO STOP, TYPE 'S'?

JOB:CAS1          04/28/86        LOADING CASE  1        19:52:51        PAGE
 NE                              STRESSES -- MIDDLE
  61   2.887E+03
  62  -1.452E+03
  63   6.333E+03
  64   2.799E+04
  65   2.887E+03
  66  -1.452E+03
  67   4.449E+03
  68   2.798E+04
  69   2.886E+03
  70  -1.454E+03
  71   6.871E+03
  72   3.133E+04
  73   2.886E+03
  74  -1.456E+03
  75   4.428E+03
  76   3.131E+04
  77   2.886E+03
  78  -1.456E+03
  79   1.777E-01
  80   1.045E+04
  81   2.474E-01
  82   2.546E+04
  83   2.354E+04
  84   2.162E+04
  85   1.969E+04
  86   1.777E+04
  87   1.585E+04
  88   1.393E+04
  89   1.201E+04
  90   1.009E+04
TO CONTINUE, STRIKE 'RETURN'; TO STOP, TYPE 'S'?

JOB:CAS1          04/28/86        LOADING CASE  1        19:53:02        PAGE  4
 NE                              STRESSES -- MIDDLE
  91   8.168E+03
  92   6.250E+03
  93   4.333E+03
  94   2.418E+03
  95   5.032E+02
  96  -1.409E+03
  97  -3.320E+03
  98  -5.229E+03
  99  -7.136E+03
 100  -1.357E+03
 101  -2.146E+03
 102  -2.147E+03
 103  -2.148E+03
 104  -2.154E+03
 105  -2.157E+03
 106  -2.159E+03
 107  -1.478E+04
 108   2.146E+03
 109   2.146E+03
 110   2.147E+03
```

```
 [illegible]
 [illegible]
 [illegible]
 [illegible]
 [illegible]
 [illegible]
 [illegible]
 [illegible]
 [illegible]
 [illegible]
TO CONTINUE. STRIKE 'RETURN'; TO STOP, TYPE 'S'?

JOB:CAS1          04/28/86       LOADING CASE  1      19:53:14       PAGE  5
 NE                              STRESSES -- MIDDLE
 121   5.265E-02
 122   1.185E-01
 123   1.058E-01
 124   1.530E-01
 125  -4.475E-01
 126   2.896E-01
 127  -5.002E-01
 128   5.002E-01
 129  -4.212E-01
 130   6.581E-01
 131  -4.739E-01
 132   3.055E-01
 133  -1.816E-02
 134   2.311E+04
 135  -2.891E+03
 136   1.449E+03
 137  -2.891E+03
 138   1.449E+03
 139  -2.891E+03
 140   1.449E+03
 141  -2.891E+03
 142   1.449E+03
 143  -2.891E+03
 144   1.449E+03
 145  -2.890E+03
 146   1.449E+03
 147  -2.890E+03
 148   1.449E+03
 149  -2.890E+03
 150   1.449E+03
TO CONTINUE. STRIKE 'RETURN'; TO STOP, TYPE 'S'?

JOB:CAS1          04/28/86       LOADING CASE  1      19:53:27       PAGE  6
 NE                              STRESSES -- MIDDLE
 151  -2.889E+03
 152   1.450E+03
 153  -2.889E+03
 154   1.450E+03
 155  -2.888E+03
 156   1.450E+03
 157  -2.888E+03
 158   1.451E+03
 159  -2.888E+03
 160   1.452E+03
 161  -2.887E+03
 162   1.453E+03
 163  -2.887E+03
 164   1.454E+03
 165  -2.886E+03
 166   1.454E+03
 167  -2.886E+03
 168   1.456E+03
```

```
[illegible]
[illegible]
[illegible]
[illegible]
[illegible]
[illegible]
[illegible]
[illegible]
[illegible]
[illegible]
[illegible]
[illegible]
TO CONTINUE, STRIKE 'RETURN'; TO STOP, TYPE 'S'?

JOB:CAS1          04/28/86        LOADING CASE  1       19:54:39        PAGE
 NE                                STRESSES -- MIDDLE
 181 -[illegible]
 182 -[illegible]
 183 -2.757E+03
 184 -6.851E+04
 185  2.345E+03
 186 -3.190E+03
 187 -6.837E+03
 188 -6.435E+04
 189 -2.926E+03
 190 -6.541E+04
 191  2.456E+03
 192 -3.332E+03
 193 -7.154E+03
 194 -6.[illegible]E+04
 195 -3.[illegible]E+03
 196 -6.[illegible]E+04
 197  2.578E+03
 198 -3.498E+03
 199 -7.512E+03
 200 -5.552E+04
 201 -3.337E+03
 202 -5.327E+04
 203  2.714E+03
 204 -3.684E+03
 205 -7.910E+03
 206 -5.038E+04
 207 -3.588E+03
 208 -5.414E+04
 209  2.863E+03
 210 -3.888E+03
TO CONTINUE, STRIKE 'RETURN'; TO STOP, TYPE 'S'?

JOB:CAS1          04/28/86        LOADING CASE  1       19:54:50        PAGE  8
 NE                                STRESSES -- MIDDLE
 211 -8.350E+03
 212 -4.467E+04
 213 -3.879E+03
 214 -4.954E+04
 215  3.030E+03
 216 -4.113E+03
 217 -8.343E+03
 218 -3.826E+04
 219 -4.220E+03
 220 -4.441E+04
 221  3.218E+03
 222 -4.374E+03
 223 -9.395E+03
 224 -3.[illegible]E+04
 225 -4.[illegible]E+03
 226 -[illegible]E+04
```

```
 [illegible]
 229 -[illegible].012E+04
 230 -3.[illegible]E+04
 231 -7.[illegible]E+02
 232 -[illegible].[illegible]17E+04
 233  [illegible].[illegible]75E+03
 234 -3.100E+03
 235  [illegible].[illegible]71E+04
 236 -[illegible].[illegible]40E+04
 237 -[illegible].[illegible]96E+02
 238 -1.461E+04
 239 -1.584E+04
 240  1.[illegible]06E+02
TO CONTINUE, STRIKE 'RETURN'; TO STOP, TYPE 'S'?

JOB:CAS1           04/28/86       LOADING CASE  1      19:54:58      PAGE [illegible]
 NE                             STRESSES -- MIDDLE
 241  2.109E+02
 242  7.628E+03
 243 -3.241E+03
 244  5.211E+03
 245  3.745E+03
 246 -[illegible].[illegible]53E+00
 247 -7.944E+[illegible]
 248 -3.11[illegible]E+01
 249  1.205E+01
 250 -4.004E+02
 251 -7.[illegible]04E+00
 252 -6.138E+00
 253 -[illegible].[illegible]40E+00
 254 -1.312E+01
 255  1.382E+01
 256 -3.806E+02
 257 -7.988E+00
 258 -7.940E+00
 259 -[illegible].138E+01
 260 -1.510E+01
 261  1.539E+01
 262 -3.548E+02
 263 -8.165E+00
 264 -8.524E+00
 265 -1.351E+01
 266 -3.625E+01
 267  1.692E+01
 268 -3.208E+02
 269 -8.672E+00
 270 -9.505E+00
TO CONTINUE, STRIKE 'RETURN'; TO STOP, TYPE 'S'?

JOB:CAS1           04/28/86       LOADING CASE  1      19:55:11      PAGE 10
 NE                             STRESSES -- MIDDLE
 271 -1.432E+01
 272 -2.621E+01
 273  1.951E+01
 274 -2.803E+02
 275 -8.215E+00
 276 -9.441E+00
 277 -1.559E+01
 278 -3.483E+01
 279  1.987E+01
 280 -2.317E+02
 281 -8.667E+00
 282 -9.464E+00
 283 -[illegible].453E+01
 284 -1.366E+01
```

[illegible]
[illegible]
[illegible]
[illegible]
[illegible]
[illegible]
[illegible]
[illegible]
[illegible]
[illegible]
[illegible]
[illegible]
[illegible]
[illegible]
[illegible]
[illegible]
[illegible]
[illegible]
TO CONTINUE, STRIKE 'RETURN'; TO STOP, TYPE 'S'?

JOB:CAS1 04/28/86 LOADING CASE 1 19:55:24 PAGE 11
NE STRESSES -- MIDDLE

301	-1.547E+02
302	1.141E+05
303	3.555E+03
304	[illegible]
305	[illegible]
306	3.[illegible]E+03
307	3.115E+03
308	3.[illegible]E+04
309	4.[illegible]E+03
310	3.[illegible]E+03
311	[illegible]
312	4.[illegible]E+03
313	3.387E+03
314	[illegible]
315	[illegible]
316	3.760E+03
317	5.957E+04
318	5.[illegible]E+03
319	1.079E+04
320	4.604E+04
321	5.465E+03
322	1.174E+04
323	3.184E+04
324	[illegible]
325	1.233E+04
326	1.563E+04
327	6.636E+03
328	1.425E+04
329	-3.075E+03
330	7.415E+03

TO CONTINUE, STRIKE 'RETURN'; TO STOP, TYPE 'S'?

JOB:CAS1 04/28/86 LOADING CASE 1 19:55:38 PAGE 12
NE STRESSES -- MIDDLE

331	1.592E+04
332	4.028E+02
333	-2.965E+03
334	-1.245E+03
335	3.860E+02
336	8.763E+00
337	1.114E+01
338	3.[illegible]E+02
339	[illegible]
340	[illegible]
341	[illegible]
342	1.483E+01

```
[illegible]   [illegible]E-01
[illegible]   [illegible]E+01
[illegible]   [illegible].1168E+01
[illegible]   [illegible].1155E+02
[illegible]   [illegible].0781E-01
[illegible]   [illegible].3218E-01
[illegible]   [illegible].7135E+[illegible]
[illegible]   [illegible].3356E+01
[illegible]   [illegible].7775E-01
[illegible]   [illegible].1672E+01
[illegible]   [illegible].3112E-01
[illegible]   [illegible].1833E-[illegible]
[illegible]   [illegible].5345E+01
[illegible]   [illegible].5445E+01
[illegible]  -[illegible].7245E+01
[illegible]  -[illegible].4145E+01
[illegible]   [illegible].8805E-01
TO CONTINUE, STRIKE 'RETURN'; TO STOP, TYPE 'S'?

JOB:I-81          04/28/86       LOADING CASE  1       19:55:51        PAGE [illegible]
[illegible]E                          STRESSES -- MIDDLE
[illegible]1   [illegible].9205E+01
[illegible]2  -1.[illegible]29E+04
[illegible]3  -[illegible].150E+03
[illegible]4  -1.[illegible]29E+03
[illegible]5   [illegible].[illegible]17E+04
[illegible]6   [illegible].420E+04
[illegible]
Ready
```

LOADING CASE 2

[illegible]

[illegible] Time-Sharing
[illegible] 88, at 18:29, 159 users.

[illegible] 0830 Tuesday morning.

[illegible] number--001119.VBKSLYBM

Ready.

[illegible] BITTBL13****:RESULT

RESULT [illegible] 30 Apr 86 [illegible]

RESULT [illegible]

[illegible]

[illegible]

[illegible]

[illegible]

[illegible]		04/26/86		LOADING CASE 1		15:50:38	PAGE 1
[illegible]		V		W	THW	THV	THC
1	0.000E-01	0.000E-01	0.000E-01				
2	0.000E-01	0.000E-01	0.000E-01				
3	0.000E-01	0.000E-01	0.000E-01				
4	-9.121E-03	8.585E-03	-8.120E-04				
5	-5.312E-03	8.585E-03	9.015E-03				
6	-1.381E-02	2.274E-02	-9.968E-03				
7	-2.941E-02	3.871E-02	-1.898E-03				
8	-3.552E-02	2.371E-02	8.638E-03				
9	-5.333E-02	4.690E-02	-1.918E-02				
10	-5.932E-02	4.474E-02	-3.663E-03				
11	-3.366E-02	4.474E-02	6.970E-03				
12	-1.161E-01	7.125E-02	-2.765E-02				
13	-1.262E-01	6.674E-02	-4.890E-03				
14	-1.423E-01	6.674E-02	5.229E-03				
15	-1.701E-01	9.458E-02	-3.536E-02				
16	-1.905E-01	7.923E-02	-6.798E-03				
17	-2.164E-01	7.923E-02	2.197E-03				
18	-2.438E-01	1.157E-01	-4.231E-02				
19	-2.688E-01	9.825E-02	-8.166E-03				
20	-2.950E-01	9.825E-02	-9.076E-04				
21	-3.262E-01	1.383E-01	-4.952E-02				
22	-3.485E-01	1.023E-01	-1.021E-02				
23	-3.960E-01	1.023E-01	-5.303E-03				
24	-4.138E-01	1.463E-01	-5.397E-02				
25	-4.393E-01	1.134E-01	-1.173E-02				
26	-4.755E-01	1.134E-01	-9.773E-03				
27	-5.[illegible]12E-01	1.533E-01	-5.867E-02				
28	-5.254E-01	1.041E-01	-1.391E-02				
29	-5.743E-01	1.041E-01	-1.553E-02				
[illegible]	[illegible]	[illegible]	[illegible]				

[illegible] 04/28/86 LOADING CASE 1 [illegible] PAGE [illegible]

NP	L	V	W	THX	THY	THZ
[illegible]	[illegible]	1.025E-01	-1.556E-02			
32	[illegible]	1.025E-01	-2.136E-02			
[illegible]	[illegible]	1.445E-01	-6.582E-02			
[illegible]	[illegible]	7.495E-02	-1.789E-02			
[illegible]	[illegible]	7.495E-02	-2.848E-02			
[illegible]	[illegible]	1.264E-01	-6.827E-02			
[illegible]	[illegible]	5.566E-02	-1.968E-02			
[illegible]	-8.477E-01	5.566E-02	-3.567E-02			
[illegible]	[illegible]	9.756E-02	-6.997E-02			
[illegible]	[illegible]	5.025E-03	-2.215E-02			
[illegible]	[illegible]	5.025E-03	-4.415E-02			
[illegible]	[illegible]	5.666E-02	-7.091E-02			
[illegible]	[illegible]	-3.682E-02	-2.408E-02			
[illegible]	-1.000E+00	-3.682E-02	-5.270E-02			
45	-1.003E+00	2.499E-03	-7.111E-02			
46	-9.882E-01	-1.155E-01	-2.668E-02			
47	-1.072E+00	-1.155E-01	-6.255E-02			
48	-1.056E+00	-6.613E-02	-7.056E-02			
[illegible]	[illegible]	-1.847E-01	-2.875E-02			
[illegible]	-1.115E+00	-1.847E-01	-7.246E-02			
[illegible]	[illegible]	-1.505E-01	-6.926E-02			
[illegible]	[illegible]	-2.963E-01	-3.148E-02			
[illegible]	-1.155E+00	-2.963E-01	-8.366E-02			
[illegible]	-1.117E+00	-1.517E-01	-6.722E-02			
55	-1.077E+00	-3.990E-01	-3.368E-02			
[illegible]	[illegible]	-3.938E-01	-9.494E-02			
[illegible]	[illegible]	-3.712E-01	-6.443E-02			
[illegible]	[illegible]	-4.627E-01	-3.368E-02			
[illegible]	[illegible]	-4.653E-01	-9.666E-02			
[illegible]	0.000E-01	0.000E-01	0.000E-01			

TO CONTINUE, STRIKE 'RETURN'; TO STOP, TYPE '8'?

[illegible] 04/28/86 LOADING CASE 1 15:31:17 PAGE [illegible]

NP	L	V	W	THX	THY	THZ
61	0.000E-01	0.000E-01	0.000E-01			
62	0.000E-01	0.000E-01	0.000E-01			
63	-2.455E-01	9.361E-02	-6.568E-02			
64	-7.227E-01	-3.170E-01	2.017E-01			
65	-8.179E-01	9.759E-02	-4.481E-01			
66	-5.945E-01	4.236E-02	-1.810E-01			
67	-1.000E+00	-3.656E-01	-1.243E-02			
68	-9.957E-01	4.421E-02	-4.824E-01			
69	-8.637E-01	-1.040E-02	-2.628E-01			
70	-1.207E+00	-4.144E-01	-1.845E-01			
71	-1.262E+00	-8.543E-03	-5.592E-01			
72	-1.058E+00	-6.457E-02	-3.132E-01			
73	-1.344E+00	-4.631E-01	-3.150E-01			
74	-1.453E+00	-6.272E-02	-6.035E-01			
75	-1.180E+00	-1.201E-01	-3.338E-01			
76	-1.414E+00	-5.112E-01	-4.047E-01			
77	-1.569E+00	-1.182E-01	-6.165E-01			
78	-1.232E+00	-1.768E-01	-3.263E-01			
79	-1.422E+00	-5.583E-01	-4.548E-01			
80	-1.613E+00	-1.749E-01	-5.997E-01			
81	-1.220E+00	-2.345E-01	-2.932E-01			
82	-1.370E+00	-6.038E-01	-4.671E-01			
83	-1.591E+00	-2.327E-01	-5.554E-01			
84	-1.151E+00	-2.932E-01	-2.377E-01			
85	[illegible]	-6.463E-01	-4.437E-01			
[illegible]	[illegible]	-2.917E-01	-4.864E-01			
[illegible]	[illegible]	-3.525E-01	-1.642E-01			
[illegible]	[illegible]	[illegible]	[illegible]			

```
[illegible]
TO CONTINUE, STRIKE 'RETURN'; TO STOP, TYPE 'S'?

JOB:[illegible]          04/28/86        LOADING CASE  1        [illegible]        PAGE [illegible]
 NP          U            V            W            THX          THY          THZ
  91  -[illegible]  -[illegible]  -3.047E-01
  92  -1.185E-[illegible]  -4.104E-01  -2.910E-01
  93  -[illegible]  -[illegible]  1.597E-02
  94  -[illegible]  -[illegible]  -2.[illegible]E-01
  95  -[illegible]  -[illegible]  -1.764E-01
  96  -[illegible]  -[illegible]  8.115E-02
  97  -[illegible]  -[illegible]  -1.135E-01
  98  -[illegible]  -5.297E-01  -9.242E-02
  99  -[illegible]  -5.921E-01  1.556E-01
 100  -4.[illegible]  -[illegible]  -2.321E-02
 101  -[illegible]  -5.[illegible]  -3.374E-03
 102  -[illegible]  -[illegible]  2.[illegible]E-01
 103  -2.310E-01  -8.696E-01  6.726E-02
 104  -4.011E-01  -6.531E-01  8.532E-02
 105  -1.189E-02  -7.143E-01  3.050E-01
 106  -5.688E-02  -9.095E-01  1.579E-01
 107  -[illegible]  -7.143E-01  1.742E-01
 108  1.575E-01  -7.758E-01  3.7[illegible]E-01
 109  1.175E-01  -[illegible]  2.487E-01
 110  -1.[illegible]  -7.758E-01  2.682E-01
 111  3.27[illegible]  -[illegible]  4.548E-01
 112  2.922E-01  -[illegible]  3.397E-01
 113  1.724E-01  -[illegible]  3.524E-01
 114  4.[illegible]  -[illegible]  5.299E-01
 115  4.672E-01  -1.[illegible]E+00  4.309E-01
 116  3.642E-01  -[illegible]  4.418E-01
 117  6.676E-01  -9.620E-01  6.050E-01
 118  6.425E-01  -1.072E+00  5.[illegible]E-01
 119  5.564E-01  -9.620E-01  5.314E-01
 120  8.380E-01  -1.024E+00  6.301E-01
TO CONTINUE, STRIKE 'RETURN'; TO STOP, TYPE 'S'?

JOB:CAS2          04/28/86        LOADING CASE  1        15:31:50        PAGE [illegible]
 NP          U            V            W            THX          THY          THZ
 121  8.179E-01  -1.112E+00  6.136E-01
 122  7.487E-01  -1.024E+00  6.210E-01
 123  1.008E+00  -1.087E+00  7.553E-01
 124  9.933E-01  -[illegible]  [illegible]E-01
 125  9.411E-01  -1.087E+00  7.107E-01
 *? INFST

 >? 1,10001\,1000

JOB:CAS2          04/28/86        LOADING CASE  1        15:32:16        PAGE  1
 NE                                STRESSES -- MIDDLE
   1  0.000E-01
   2  0.000E-01
   3 -1.203E+03
   4  1.778E-01
   5 -1.094E+04
   6  1.933E-01
   7  2.869E+03
   8 -1.203E+03
   9  1.711E+03
  10 -7.133E+02
  11  [illegible]E+03
  12  [illegible]E+02
  13  [illegible]E+03
  14 -7.133E+02
  15  [illegible]
```

```
[illegible]
[illegible]
[illegible]
[illegible]
[illegible]
[illegible]
[illegible]
[illegible]
[illegible]
[illegible]
[illegible]
[illegible]
[illegible]
[illegible]
[illegible]
[illegible]
TO CONTINUE, STRIKE 'RETURN'; TO STOP, TYPE 'S'?

JOB:CAS2          04/28/86        LOADING CASE  1        15:32:26        PAGE  2
NE                                STRESSES -- MIDDLE
 31   3.619E+03
 32   7.765E+03
 33   1.710E+03
 34  -7.137E+02
 35   2.668E+03
 36   7.892E+03
 37   1.710E+03
 38  -7.138E+02
 39   3.868E+03
 40   1.017E+04
 41   1.710E+03
 42  -7.141E+02
 43   2.916E+03
 44   1.030E+04
 45   1.710E+03
 46  -7.144E+02
 47   4.116E+03
 48   1.258E+04
 49   1.709E+03
 50  -7.149E+02
 51   3.162E+03
 52   1.270E+04
 53   1.709E+03
 54  -7.153E+02
 55   4.061E+03
 56   1.498E+04
 57   1.709E+03
 58  -7.160E+02
 59   3.405E+03
 60   1.511E+04
TO CONTINUE, STRIKE 'RETURN'; TO STOP, TYPE 'S'?

JOB:CAS2          04/28/86        LOADING CASE  1        15:32:34        PAGE  3
NE                                STRESSES -- MIDDLE
 61   1.709E+03
 62  -7.165E+02
 63   4.601E+03
 64   1.739E+04
 65   1.708E+03
 66  -7.174E+02
 67   3.643E+03
 68   1.751E+04
 69   1.708E+03
 70  -7.182E+02
 71   [illegible]
 72   [illegible]
 73   [illegible]
```

[illegible]
[illegible]
[illegible]
[illegible]
[illegible]
[illegible]
[illegible]
[illegible]
[illegible]
[illegible]
[illegible]
[illegible]
[illegible]
[illegible]
[illegible]
[illegible]
[illegible]
TO CONTINUE, STRIKE 'RETURN'; TO STOP, TYPE 'S'?

JOB:0492 04/28/86 LOADING CASE 1 15:32:49 PAGE [illegible]
[illegible] STRESSES -- MIDDLE

[illegible]	5.650E+03
[illegible]	4.324E+03
[illegible]	3.999E+03
[illegible]	1.474E+03
[illegible]	2.921E+03
[illegible]	-4.719E+02
[illegible]	-3.299E+03
[illegible]	-3.612E+03
[illegible]	-4.981E+03
[illegible]	-7.604E+02
[illegible]	-1.203E+03
[illegible]	-1.203E+03
[illegible]	-1.203E+03
104	-1.203E+03
105	-1.203E+03
106	-1.201E+03
107	-3.601E+02
108	1.203E+03
109	1.203E+03
110	1.203E+03
111	1.203E+03
112	1.203E+03
113	1.203E+03
114	1.203E+03
115	1.202E+03
116	1.200E+03
117	-4.110E-04
118	3.291E-03
119	6.581E-03
120	-2.962E-02

TO CONTINUE, STRIKE 'RETURN'; TO STOP, TYPE 'S'?

JOB:0492 04/28/86 LOADING CASE 1 15:32:57 PAGE 5
[illegible] STRESSES -- MIDDLE

121	1.316E-02
122	-6.581E-03
123	9.872E-03
124	-5.594E-02
125	3.621E-02
126	2.369E-01
127	[illegible]
128	[illegible]
129	2.530E-01
[illegible]	[illegible]
[illegible]	[illegible]

```
134 [illegible]
135 -1.710E+03
136  7.133E+02
137 -1.7[illegible]E+03
138  7.133E+02
139 -1.710E+03
140  7.133E+02
141 -1.710E+03
142  7.134E+02
143 -1.710E+03
144  7.134E+02
145 -1.710E+03
146  7.135E+02
147 -1.710E+03
148  7.138E+02
149 -1.710E+03
150  7.139E+02
TO CONTINUE, STRIKE 'RETURN'; TO STOP, TYPE 'S'?

JOB:CAS2          04/28/86      LOADING CASE  1      15:33:13      PAGE  6
                               STRESSES -- MIDDLE
NE
151 -1.710E+03
152  7.143E+02
153 -1.710E+03
154  7.145E+02
155 -1.709E+03
156  7.149E+02
157 -1.709E+03
158  7.154E+02
159 -1.709E+03
160  7.162E+02
161 -1.709E+03
162  7.167E+02
163 -1.708E+03
164  7.176E+02
165 -1.708E+03
166  7.188E+02
167 -1.708E+03
168  7.193E+02
169 -1.708E+03
170  7.201E+02
171  0.000E-01
172  0.000E-01
173 -3.254E+04
174  4.921E+04
175  1.148E+05
176 -4.520E+04
177  7.094E+04
178  7.560E+04
179  2.813E+03
180 -1.704E-02
TO CONTINUE, STRIKE 'RETURN'; TO STOP, TYPE 'S'?

JOB:CAS2          04/28/86      LOADING CASE  1      15:33:26      PAGE  7
                               STRESSES -- MIDDLE
NE
181 -1.169E+05
182 -4.433E+04
183 -1.612E+03
184 -4.382E+04
185  1.371E+03
186 -2.180E+03
187 -4.293E+03
188 -4.137E+04
189 -1.711E+03
```

```
[illegible]
[illegible]
[illegible]
[illegible]
[illegible]
[illegible]
[illegible]
[illegible]
[illegible] -[illegible].621E+04
[illegible]
[illegible] -3.716E+04
[illegible] 1.566E+03
[illegible] -1.525E+03
[illegible] -4.577E+03
[illegible] -1.093E+04
207 -3.077E+03
208 -1.447E+04
209 1.673E+03
210 -3.665E+03
TO CONTINUE, STRIKE 'RETURN'; TO STOP, TYPE 'S'?

JOB:CAS2          04/28/86      LOADING CASE  1      15:33:40        [illegible]
 NE                            STRESSES -- MIDDLE
 211 -5.351E+03
 212 -1.925E+04
 213 -3.266E+03
 214 -3.149E+04
 215  1.770E+03
 216 -1.333E+03
 217 -8.562E+03
 218 -1.515E+04
 219 -1.465E+03
 220 -1.813E+04
 221  1.880E+03
 222 -2.999E+03
 223 -5.909E+03
 224 -2.052E+04
 225 -2.700E+03
 226 -2.437E+04
 227  2.004E+03
 228 -3.200E+03
 229 -6.204E+03
 230 -1.536E+04
 231 -2.982E+03
 232 -2.011E+04
 233  2.145E+03
 234 -3.428E+03
 235 -6.754E+03
 236 -9.235E+03
 237 -3.323E+03
 238 -1.524E+04
 239 -1.095E+04
 240  1.246E+03
TO CONTINUE, STRIKE 'RETURN'; TO STOP, TYPE 'S'?

JOB:CAS2          04/28/86      LOADING CASE  1      15:33:53        PAGE  9
 NE                            STRESSES -- MIDDLE
 241  6.308E+02
 242  4.780E+03
 243 -1.835E+03
 244  3.7[illegible]E+03
 245  2.460E+03
 246 -1.873E+03
 247 -1.334E+03
 248 -1.305E+03
 249 -1.719E+03
 [illegible]
```

```
 251 [illegible]
 252 [illegible]
 253 -1.742E-02
 254 -1.895E+01
 255 -4.391E+01
 256  1.646E+00
 257 -3.419E-02
 258 -3.498E+01
 259 -1.652E+02
 260 -1.737E+01
 261  3.166E+01
 262  1.250E+00
 263 -1.662E+01
 264 -4.010E+00
 265 -1.439E+02
 266 -1.311E-01
 267  1.257E-01
 268  6.355E+00
 270 -4.417E+00
TO CONTINUE, STRIKE 'RETURN'; TO STOP, TYPE 'S'?

JOB:CA32        04/28/86      LOADING CASE  1      15:34:03      PAGE 10
 NE                            STRESSES -- MIDDLE
 271 -5.066E+01
 272 -1.194E+02
 273 -1.360E+01
 274  1.511E+01
 275  7.133E+00
 276 -4.349E+00
 277 -6.029E+00
 278 -9.299E+01
 279 -1.980E+01
 280 [illegible].632E+00
 281  7.098E+00
 282 -4.918E+00
 283 -5.398E+00
 284 -6.316E+01
 285 -1.978E+01
 286  5.917E+00
 287  6.797E+00
 288 -3.910E+00
 289 -3.753E+00
 290 -3.237E+01
 291 -2.091E+01
 292  3.467E+00
 293  4.113E+00
 294 -3.712E+00
 295 -6.844E+00
 296 -7.322E+00
 297 -1.078E+01
 298  4.161E+00
 299  2.290E+00
 300 -1.562E+00
TO CONTINUE, STRIKE 'RETURN'; TO STOP, TYPE 'S'?

JOB:CA32        04/28/86      LOADING CASE  1      15:34:19      PAGE 11
 NE                            STRESSES -- MIDDLE
 301 -6.151E-01
 302  6.710E+04
 303  2.440E+03
 304  4.306E+03
 305  1.333E+04
 306  2.590E+03
 307  7.101E+03
 308 [illegible]
```

[illegible]	[illegible]
[illegible]	[illegible]
[illegible]	[illegible]
[illegible]	[illegible]
[illegible]	[illegible]
[illegible]	[illegible]
[illegible]	[illegible]
[illegible]	[illegible]
[illegible]	[illegible]
[illegible]	[illegible]
320	2.952E+04
321	[illegible]
322	7.382E+03
323	[illegible]
324	[illegible]
325	[illegible]
326	[illegible]
327	4.549E+03
328	3.963E+03
329	-1.259E+03
330	[illegible]

TO CONTINUE, STRIKE 'RETURN'; TO STOP, TYPE 'S'?

[illegible] 04/28/86 LOADING CASE 1 15:34:33 PAGE [illegible]

STRESSES -- MIDDLE

331	[illegible]
332	[illegible]
333	[illegible]
334	[illegible]
335	1.519E+02
336	[illegible]
337	-5.978E-01
338	[illegible]
339	5.115E+00
340	[illegible]
341	[illegible]
342	[illegible]
343	3.535E+00
344	1.172E+02
345	8.185E+00
346	8.902E+00
347	9.795E+01
348	9.307E+00
349	1.193E+01
350	7.213E+01
351	1.103E+01
352	1.543E+01
353	4.491E+01
354	1.129E+01
355	1.815E+01
356	1.395E+01
357	[illegible]
358	1.972E+01
359	-1.026E+01
360	9.409E+00

```
TO CONTINUE, STRIKE 'RETURN'; TO STOP, TYPE  C/P

[illegible]          04/28/86       LOADING CASE  1       15:37:14       PAGE 1[illegible]
 [illegible]E                          STRESSES -- MIDDLE
 [illegible]  1.[illegible]E+01
 [illegible] -1.[illegible]E+04
 [illegible] -4.[illegible]E+03
 [illegible] -2.[illegible]E+03
 [illegible]  1.866E+04
 [illegible]  2.186E+04
 +?
```

```
[illegible]
[illegible]
[illegible]
[illegible]
[illegible]
[illegible]
[illegible] STEP 1
[illegible] PRINT #OUT;"[illegible]-1,5,0"
[illegible] PRINT #OUT;"[illegible],5,0"
[illegible] PRINT [illegible]"[illegible],3"
[illegible] NEXT
[illegible] PRINT #OUT;"108,-1,5,0"
[illegible] PRINT #OUT;"109,1,5,0"
[illegible] CLOSE #OUT
[illegible] END

[illegible]
```

This program, ABEAM, is the driver program to connect the nodes listed in the file "BEAMA", below.

```
[illegible]

[illegible]

[illegible]
*** Current system is now @BASIC8
[illegible]

[illegible]

[illegible]     [illegible] Apr 86  16:1[illegible]

[illegible] -1.5,0
[illegible] 1.5,0
[illegible] 0,3
3 ,-1.5,0
3 ,1.5,0
6 ,0,3
9 ,-1.5,0
9 ,1.5,0
12 ,0,3
15 ,-1.5,0
15 ,1.5,0
18 ,0,3
21 ,-1.5,0
21 ,1.5,0
24 ,0,3
27 ,-1.5,0
27 ,1.5,0
30 ,0,3
33 ,-1.5,0
33 ,1.5,0
36 ,0,3
39 ,-1.5,0
39 ,1.5,0
42 ,0,3
45 ,-1.5,0
45 ,1.5,0
48 ,0,3
51 ,-1.5,0
51 ,1.5,0
54 ,0,3
57 ,-1.5,0
57 ,1.5,0
60 ,0,3
63 ,-1.5,0
63 ,1.5,0
66 ,0,3
69 ,-1.5,0
69 ,1.5,0
72 ,0,3
75 ,-1.5,0
75 ,1.5,0
78 ,0,3
81 ,-1.5,0
81 ,1.5,0
84 ,0,3
87 ,-1.5,0
87 ,1.5,0
90 ,0,3
93 ,-1.5,0
93 ,1.5,0
96 ,0,3
99 ,-1.5,0
[illegible]
```

```
[illegible]
[illegible] is not [illegible].
[illegible]

[illegible]
*** Current system is now $BASIC7
[illegible]

[illegible]

[illegible]    [illegible] Apr 86  16:17

[illegible] OPEN #OUT:"BEAMC"
[illegible] DISPATCH #OUT
[illegible] PRINT #OUT:"0,-7.5,0"
[illegible] PRINT #OUT:"0,0,0"
[illegible] PRINT #OUT:"0,7.5,0"
[illegible] FOR X=10 TO 210 STEP 10
[illegible] LET Y=-7.5+(13/400)*(X-10)
[illegible] PRINT #OUT:X;",";Y;",0"
[illegible] LET Z=15-(13/200)*(X-10)
[illegible] PRINT #OUT:X;",0,";Z
[illegible] PRINT #OUT:X;",";-1*Y;",0"
[illegible] NEXT X
[illegible] END

Ready
```

This is the driver program to connect the nodes listed in the file "BEAMC", below.

```
[illegible]                              [illegible] 2048100
[illegible]

LIST

TEMPO      [illegible]      16:17

[illegible]
[illegible]
[illegible]
 10 ,-7.5 ,0
 10 ,0, 15
 10 , 7.5 ,0
 20 ,-7.175 ,0
 20 ,0, 14.35
 20 , 7.175 ,0
 30 ,-6.85 ,0
 30 ,0, 13.7
 30 , 6.85 ,0
 40 ,-6.525 ,0
 40 ,0, 13.05
 40 , 6.525 ,0
 50 ,-6.2 ,0
 50 ,0, 12.4
 50 , 6.2 ,0
 60 ,-5.875 ,0
 60 ,0, 11.75
 60 , 5.875 ,0
 70 ,-5.55 ,0
 70 ,0, 11.1
 70 , 5.55 ,0
 80 ,-5.225 ,0
 80 ,0, 10.45
 80 , 5.225 ,0
 90 ,-4.9 ,0
 90 ,0, 9.8
 90 , 4.9 ,0
 100 ,-4.575 ,0
 100 ,0, 9.15
 100 , 4.575 ,0
 110 ,-4.25 ,0
 110 ,0, 8.5
 110 , 4.25 ,0
 120 ,-3.925 ,0
 120 ,0, 7.85
 120 , 3.925 ,0
 130 ,-3.6 ,0
 130 ,0, 7.2
 130 , 3.6 ,0
 140 ,-3.275 ,0
 140 ,0, 6.55
 140 , 3.275 ,0
 150 ,-2.95 ,0
 150 ,0, 5.9
 150 , 2.95 ,0
 160 ,-2.625 ,0
 160 ,0, 5.25
 160 , 2.625 ,0
 170 ,-2.3 ,0
 170 ,0, 4.6
 170 , 2.3 ,0
 180 ,-1.975 ,0
 180 ,0, 3.95
 180 , 1.975 ,0
 [illegible] ,[illegible] ,0
```

```
[illegible]

[illegible]

[illegible]  [illegible] Apr 96  16:18

100 [illegible]:"PUSH,SRC"
110 [illegible] #OUT
120 PRINT "INPUT FORCE IN THE Z-DIRECTION"
130 INPUT FZ
140 PRINT "INPUT FORCE IN X-DIRECTION"
150 INPUT FX
160 PRINT #OUT:"LOADX,3"
170 PRINT #OUT:"65"
180 PRINT #OUT:FZ
190 PRINT #OUT:"/"
200 PRINT #OUT:"LOADX,1"
210 PRINT #OUT:"65"
220 PRINT #OUT:FX
230 PRINT #OUT:"/"
240 PRINT #OUT:"SUPK,0"
250 PRINT #OUT:"1"
260 PRINT #OUT:"2"
270 PRINT #OUT:"3"
280 PRINT #OUT:"60"
290 PRINT #OUT:"61"
300 PRINT #OUT:"62"
310 PRINT #OUT:"/"
320 PRINT #OUT:"QUIT"
330 END

Ready
```

```
LIST

DIFTSLIB        13 Apr 86  16:23

RUN GIFTSLIB***:CLEANUP;$1
RUN GIFTSLIB***:BULKM
$1

RUN GIFTSLIB***:BULKF
$1

RUN GIFTSLIB***:BULKLB
$1

RUN GIFTSLIB***:OPTIM
$1

RUN GIFTSLIB***:STIFF
$1
RUN GIFTSLIB***:DECOM
$1
RUN GIFTSLIB***:DEFL
$1
RUN GIFTSLIB***:STRESS
$1
RUN GIFTSLIB***:RESULT
$1

READY
```

```
[illegible]

[illegible]

[illegible]  [illegible] 86  [illegible]:21

[illegible] BEAM(70,3),TEMP(70,5)
[illegible] OPEN #OUT1:"PROM,SRC"
[illegible] [illegible]
[illegible] OPEN #OUT2:"BEAMA"
[illegible] OPEN #OUT3:"PROJ.PP"
[illegible] SPACING #OUT3
[illegible] PRINT #OUT3:"STRUCTURE"
[illegible] PRINT #OUT3:"1000,2912"
[illegible] PRINT #OUT1:"# BULKM DRIVER FILE"
[illegible] PRINT #OUT1:"KPOINT"
[illegible] FOR A=1 TO 59
210 INPUT #OUT2:BEAM(A,1),BEAM(A,2),BEAM(A,3)
220 NEXT A
230 FOR A=1 TO 59
240 LET K=K+1
250 PRINT #OUT1:K
260 LET TEMP(A,2)=BEAM(A,2)
270 LET TEMP(A,1)=BEAM(A,3)+44.5098
280 LET TEMP(A,3)=BEAM(A,1)*(-1)-10
290 PRINT #OUT3:TEMP(A,1);",";TEMP(A,2);",";TEMP(A,3)
300 PRINT #OUT1:TEMP(A,1);",";TEMP(A,2);",";TEMP(A,3)
310 NEXT A
320 FOR A=1 TO 59
330 LET TEMP(A,3)=-1*TEMP(A,3)
340 LET TEMP(A,5)=TEMP(A,3)
350 PRINT #OUT3:TEMP(A,1);",";TEMP(A,2);",";TEMP(A,3)
360 NEXT A
370 FOR A=1 TO 59
380 LET TEMP(A,4)=TEMP(A,2)
390 LET TEMP(A,2)=TEMP(A,3)
400 LET TEMP(A,3)=TEMP(A,4)
410 PRINT #OUT3:TEMP(A,1);",";TEMP(A,2);",";TEMP(A,3)
420 NEXT A
430 FOR A=1 TO 59
440 LET TEMP(A,2)=-1*TEMP(A,2)
450 PRINT #OUT3:TEMP(A,1);",";TEMP(A,2);",";TEMP(A,3)
460 NEXT A
470 LET ANG=COS(PI/4)
480 FOR A=1 TO 59
490 LET TEMP(A,4)=TEMP(A,2)
500 LET TEMP(A,2)=TEMP(A,2)*ANG+TEMP(A,3)*ANG
510 LET TEMP(A,3)=TEMP(A,5)*ANG+TEMP(A,3)*ANG
520 PRINT #OUT3:TEMP(A,1);",";TEMP(A,2);",";TEMP(A,3)
530 NEXT A
540 FOR A=1 TO 59
550 LET TEMP(A,3)=-1*TEMP(A,3)
560 PRINT #OUT3:TEMP(A,1);",";TEMP(A,2);",";TEMP(A,3)
570 NEXT A
580 FOR A=1 TO 59
590 LET TEMP(A,2)=-1*TEMP(A,2)
600 PRINT #OUT3:TEMP(A,1);",";TEMP(A,2);",";TEMP(A,3)
610 NEXT A
620 FOR A=1 TO 59
630 LET TEMP(A,3)=-1*TEMP(A,3)
640 PRINT #OUT3:TEMP(A,1);",";TEMP(A,2);",";TEMP(A,3)
650 NEXT A
660 OPEN #OUT4:"BEAMC"
[illegible] FOR A=1 TO 66
```

```
700 FOR A=1 TO 66
710 LET [illegible]
720 [illegible]
730 LET TEMP(A,2)=BEAM(A,2)
740 LET TEMP(A,1)=BEAM(A,3)*(-1)
750 LET TEMP(A,3)=BEAM(A,1)*(-1)
760 LET TEMP(A,2)=TEMP(A,3)*49/55+TEMP(A,1)*.454181673
770 LET TEMP(A,1)=-1*TEMP(A,3)*.454181673+TEMP(A,1)*49/55
780 LET TEMP(A,3)=TEMP(A,3)-30
790 PRINT #OUT1:TEMP(A,1);",";TEMP(A,2);",";TEMP(A,3)
800 PRINT #OUT3:TEMP(A,1);",";TEMP(A,2);",";TEMP(A,3)
810 NEXT A
820 FOR A=1 TO 66
830 LET TEMP(A,3)=-1*(TEMP(A,3))
840 LET TEMP(A,5)=TEMP(A,3)
850 PRINT #OUT3:TEMP(A,1);",";TEMP(A,2);",";TEMP(A,3)
860 NEXT A
870 FOR A=1 TO 66
880 LET TEMP(A,4)=TEMP(A,2)
890 LET TEMP(A,2)=TEMP(A,3)
900 LET TEMP(A,3)=TEMP(A,4)
910 PRINT #OUT3:TEMP(A,1);",";TEMP(A,2);",";TEMP(A,3)
920 NEXT A
930 FOR A=1 TO 66
940 LET TEMP(A,2)=-1*TEMP(A,2)
950 PRINT #OUT3:TEMP(A,1);",";TEMP(A,2);",";TEMP(A,3)
960 NEXT A
970 LET ANG=COS(PI/4)
980 FOR A=1 TO 66
990 LET TEMP(A,4)=TEMP(A,2)
1000 LET TEMP(A,2)=TEMP(A,2)*ANG+TEMP(A,3)*ANG
1010 LET TEMP(A,3)=TEMP(A,5)*ANG+TEMP(A,3)*ANG
1020 PRINT #OUT3:TEMP(A,1);",";TEMP(A,2);",";TEMP(A,3)
1030 NEXT A
1040 FOR A=1 TO 66
1050 LET TEMP(A,3)=-1*TEMP(A,3)
1060 PRINT #OUT3:TEMP(A,1);",";TEMP(A,2);",";TEMP(A,3)
1070 NEXT A
1080 FOR A=1 TO 66
1090 LET TEMP(A,2)=-1*TEMP(A,2)
1100 PRINT #OUT3:TEMP(A,1);",";TEMP(A,2);",";TEMP(A,3)
1110 NEXT A
1120 FOR A=1 TO 66
1130 LET TEMP(A,3)=TEMP(A,3)*(-1)
1140 PRINT #OUT3:TEMP(A,1);",";TEMP(A,2);",";TEMP(A,3)
1150 NEXT A
1160 PRINT #OUT1:"/"
1170 PRINT #OUT1:"LETY"
1180 PRINT #OUT1:"ROD2"
1190 PRINT #OUT1:"1,1"
1200 PRINT #OUT1:"SLINE,10"
1210 FOR A=0 TO 7
1220 PRINT #OUT1:"L";STR$(1);STR$(2)
1230 PRINT #OUT1:1;",";2;",2"
1240 PRINT #OUT3:"2,";1+A*59;",";2+A*59
1250 IF A=0  THEN PRINT #OUT1:"L";STR$(2);STR$(3)
1260 IF A=0  THEN PRINT #OUT1:2;",";3;",2"
1270 PRINT #OUT3:"2,";2+A*59;",";3+A*59
1280 IF A=0 THEN PRINT #OUT1:"L";STR$(3);STR$(1)
1290 IF A=0 THEN PRINT #OUT1:3;",";3;",2"
1300 PRINT #OUT3:"2,";3+A*59;",";1+A*59
1310 IF A=0 THEN PRINT #OUT1:"L";STR$(57);STR$(58)
1320 IF A=0 THEN PRINT #OUT1:57;",";58;",2"
1330 PRINT #OUT3:"2,";57+A*59;",";58+A*59
```

```
1[illegible] PRINT #OUT3:"2,";58+A*59;",";59+A*59
1[illegible] IF A=0 THEN PRINT #OUT1:"L";STR$(59);STR$(57)
1[illegible] IF A=0 THEN PRINT #OUT1:59;",";57;",2"
1[illegible] PRINT #OUT3:"2,";59+A*59;",";57+A*59
1[illegible] FOR B=1 TO 55 STEP 3
1[illegible] IF A=0 THEN PRINT #OUT1:"L";STR$(B);STR$(B+3)
1[illegible] IF A=0 THEN PRINT #OUT1:B;",";B+3;",2"
1[illegible] PRINT #OUT3:"2,";B+A*59;",";B+3+A*59
1[illegible] IF A=0 THEN PRINT #OUT1:"L";STR$(B+1);STR$(B+4)
1[illegible] IF A=0 THEN PRINT #OUT1:B+1;",";B+4;",2"
1[illegible] PRINT #OUT3:"2,";B+1+A*59;",";B+4+A*59
1[illegible] IF A=0 THEN PRINT #OUT1:"L";STR$(B+2);STR$(B+4)
1[illegible] IF A=0 THEN PRINT #OUT1:B+2;",";B+4;",2"
1[illegible] PRINT #OUT3:"2,";B+2+A*59;",";B+4+A*59
1[illegible] IF A=0 THEN PRINT #OUT1:"L";STR$(B+2);STR$(B+3)
1[illegible] IF A=0 THEN PRINT #OUT1:B+2;",";B+3;",2"
1[illegible] PRINT #OUT3:"2,";B+2+A*59;",";B+3+A*59
1[illegible] NEXT B
1540 FOR B=3 TO 54 STEP 3
1550 IF A=0 THEN PRINT #OUT1:"L";STR$(B);STR$(B+3)
1[illegible] IF A=0 THEN PRINT #OUT1:B;",";B+3;",2"
1[illegible] PRINT #OUT3:"2,";B+A*59;",";B+3+A*59
1[illegible] NEXT B
1[illegible] FOR B=1 TO 55 STEP 6
1[illegible] IF A=0 THEN PRINT #OUT1:"L";STR$(B);B+4
1[illegible] IF A=0 THEN PRINT #OUT1:B;",";B+4;",2"
1[illegible] PRINT #OUT3:"2,";B+A*59;",";B+4+A*59
1[illegible] NEXT B
1640 FOR B=5 TO 53 STEP 6
1650 IF A=0 THEN PRINT #OUT1:"L";STR$(B);STR$(B+7)
1660 IF A=0 THEN PRINT #OUT1:B;",";B+2;",2"
1670 PRINT #OUT3:"2,";B+A*59;",";B+2+A*59
1[illegible] NEXT B
1[illegible] FOR B=4 TO 55 STEP 3
1700 IF A=0 THEN PRINT #OUT1:"L";STR$(B);STR$(B+1)
1[illegible] IF A=0 THEN PRINT #OUT1:B;",";B+1;",2"
1720 PRINT #OUT3:"2,";B+A*59;",";B+1+A*59
1730 NEXT B
1740 FOR B=5 TO 56 STEP 3
1750 IF A=0 THEN PRINT #OUT1:"L";STR$(B);STR$(B+1)
1760 IF A=0 THEN PRINT #OUT1:B;",";B+1;",2"
1770 PRINT #OUT3:"2,";B+A*59;",";B+A*59+1
1780 IF A=0 THEN PRINT #OUT1:"L";STR$(B-1);STR$(B+1)
1790 IF A=0 THEN PRINT #OUT1:B-1;",";B+1;",2"
1800 PRINT #OUT3:"2,";B+A*59-1;",";B+A*59+1
1810 NEXT B
1820 NEXT A
1830 FOR A=0 TO 7
1840 IF A=0 THEN PRINT #OUT1:"L6061"
1850 IF A=0 THEN PRINT #OUT1:"60,61,2"
1860 PRINT #OUT3:"2,";473+A*66;",";474+A*66
1870 IF A=0 THEN PRINT #OUT1:"L6162"
1880 IF A=0 THEN PRINT #OUT1:"61,62,2"
1890 PRINT #OUT3:"2,";474+A*66;",";475+A*66
1900 IF A=0 THEN PRINT #OUT1:"L6064"
1910 IF A=0 THEN PRINT #OUT1:"60,64,2"
1920 PRINT #OUT3:"2,";473+A*66;",";477+A*66
1930 IF A=0 THEN PRINT #OUT1:"L6164"
1940 IF A=0 THEN PRINT #OUT1:"61,64,2"
1950 PRINT #OUT3:"2,";474+A*66;",";477+A*66
1960 IF A=0 THEN PRINT #OUT1:"L6264"
1970 IF A=0 THEN PRINT #OUT1:"62,64,2"
1980 PRINT #OUT3:"2,";475+A*66;",";477+A*66
1990 FOR B=60 TO 120 STEP 3
```

```
1130 PRINT #OUT3:"2,";B+413+A*66;",";B+413+B*A*66
1140 IF L=0 THEN PRINT #OUT1:"L";STR$(B+2);STR$(B+3)
1150 IF L=0 THEN PRINT #OUT1:B;",";B+3;",2"
1160 PRINT #OUT3:"2,";B+413+A*66;",";B+413+B*A*66
1170 IF L=0 THEN PRINT #OUT1:"L";STR$(B+2);STR$(B+3)
1180 IF L=0 THEN PRINT #OUT1:B+2;",";B+3;",2"
1190 PRINT #OUT3:"2,";B+413+2+A*66;",";B+413+3+A*66
1200 IF L=0 THEN PRINT #OUT1:"L";STR$(B+3);STR$(B+5)
1210 IF B=90
1220 THEN LET BP=99
1230 ELSE LET BP=8
1240 NEXT B
1250 IF L=0 THEN PRINT #OUT1:B+3;",";BP+5;",2"
1260 PRINT #OUT3:"2,";B+413+3+A*66;",";B+413+5+A*66
1270 IF L=0 THEN PRINT #OUT1:"L";STR$(B+3);STR$(B+4)
1280 IF L=0 THEN PRINT #OUT1:B+3;",";B+4;",2"
1290 PRINT #OUT3:"2,";B+413+3+A*66;",";B+413+4+A*66
1300 IF L=0 THEN PRINT #OUT1:"L";STR$(B+4);STR$(B+5)
1310 IF L=0 THEN PRINT #OUT1:B+4;",";B+5;",2"
1320 PRINT #OUT3:"2,";B+413+4+A*66;",";B+413+5+A*66
1330 NEXT B
1340 FOR B=54 TO 121 STEP 3
1350 IF L=0 THEN PRINT #OUT1:"L";STR$(B);STR$(B+3)
1360 IF L=0 THEN PRINT #OUT1:B;",";B+3;",2"
1370 PRINT #OUT3:"2,";B+413+A*66;",";B+413+3+A*66
1380 IF L=0 THEN PRINT #OUT1:"L";STR$(B);STR$(B+2)
1390 IF L=0 THEN PRINT #OUT1:B;",";B+2;",2"
1400 PRINT #OUT3:"2,";B+413+A*66;",";B+413+2+A*66
1410 IF L=0 THEN PRINT #OUT1:"L";STR$(B);STR$(B+4)
1420 IF L=0 THEN PRINT #OUT1:B;",";B+4;",2"
1430 PRINT #OUT3:"2,";B+413+A*66;",";B+413+4+A*66
1440 NEXT B
1450 NEXT A
1460 PRINT #OUT1:"L5995"
1470 PRINT #OUT1:"59,95,2"
1480 PRINT #OUT1:"L5796"
1490 PRINT #OUT1:"57,96,2"
1500 PRINT #OUT1:"L5798"
1510 PRINT #OUT1:"57,98,2"
1520 PRINT #OUT1:"L5593"
1530 PRINT #OUT1:"55,93,2"
1540 PRINT #OUT1:"L5695"
1550 PRINT #OUT1:"56,95,2"
1560 PRINT #OUT1:"/"
1570 PRINT #OUT1:"ELMAT,2"
1580 PRINT #OUT1:"1"
1590 PRINT #OUT1:"6.0E4,1.06E7"
1600 PRINT #OUT1:"/"
1610 PRINT #OUT1:"ETH,1"
1620 PRINT #OUT1:"1"
1630 REM*********************************************
1640 PRINT #OUT1:".5"
1650 PRINT #OUT1:"/"
1660 PRINT #OUT1:"QUIT"
1670 END

Ready
```

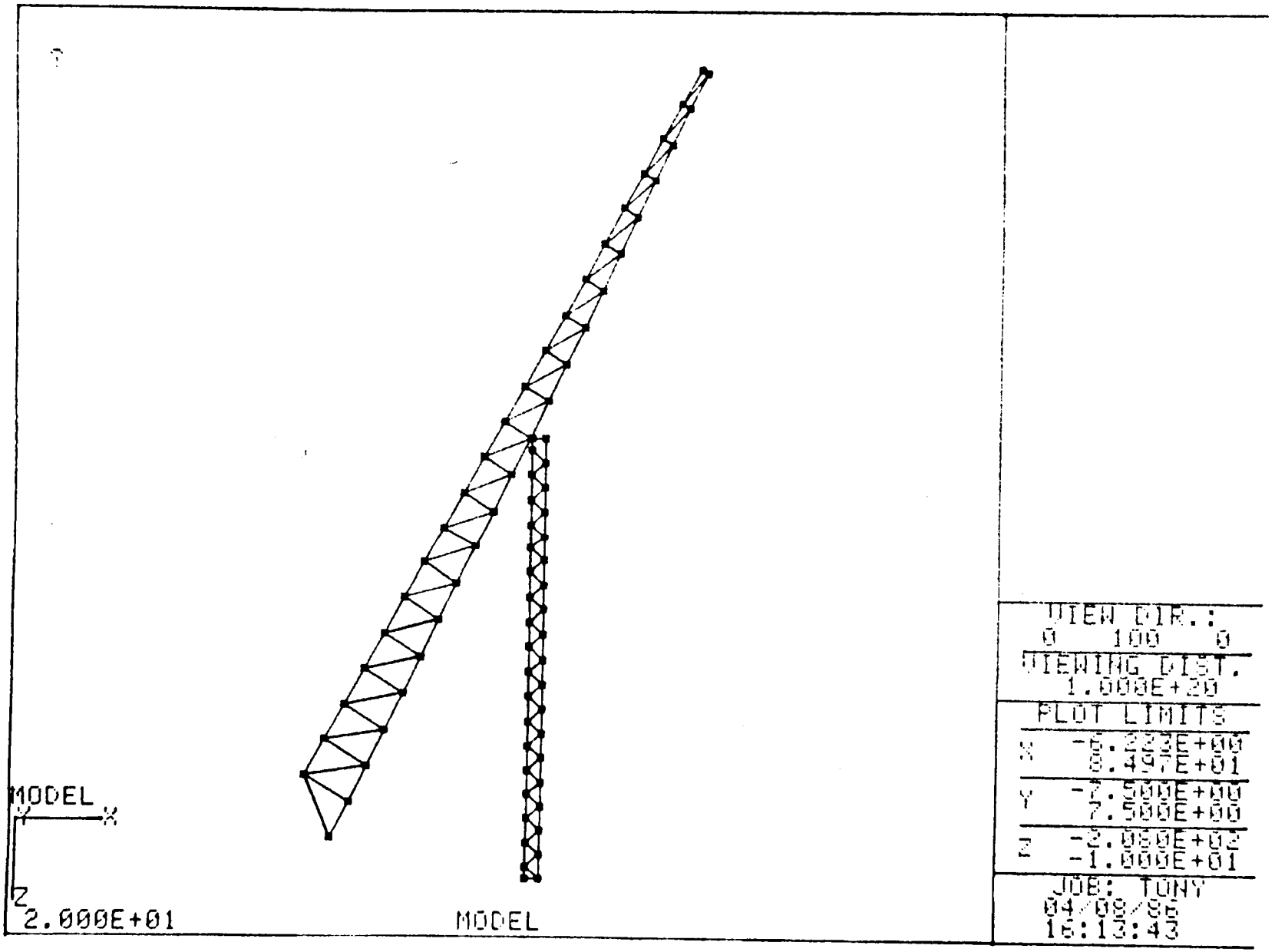
MODEL
Y
X
Z
2.000E+01
MODEL
VIEW DIR.:
0 100 0
VIEWING DIST.
1.000E+20
PLOT LIMITS
X -5.223E+00
8.497E+01
Y -7.500E+00
7.500E+00
Z -2.080E+02
-1.000E+01
JOB: TONY
04/08/86
16:13:43

COMMON ROLLERS

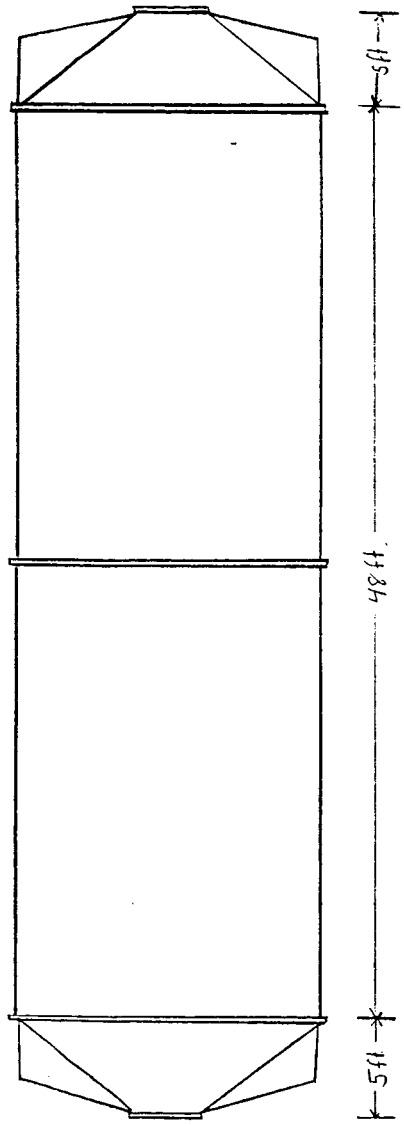

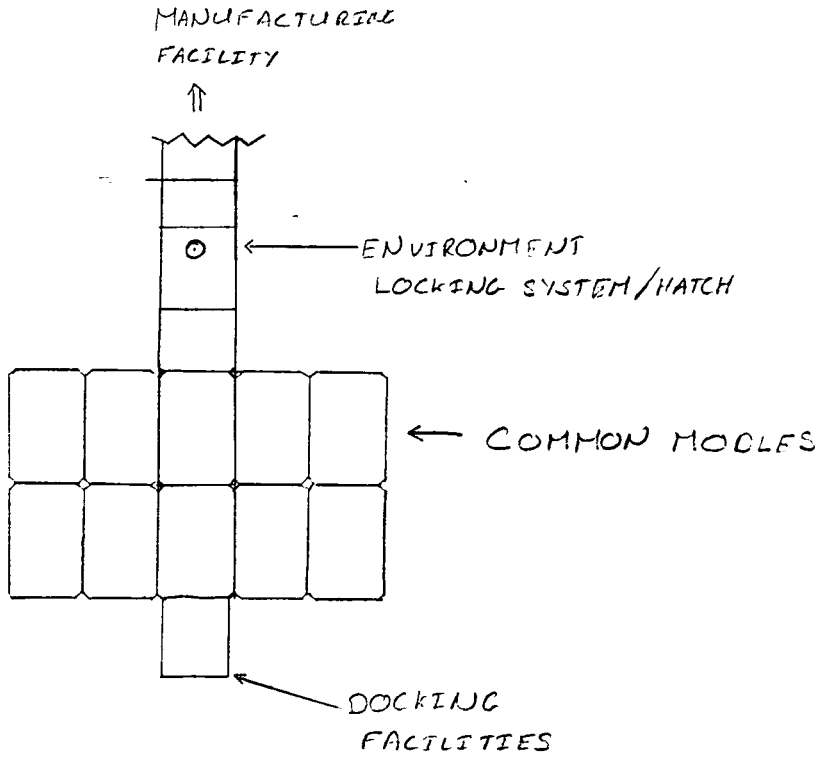
MANUFACTURING
FACILITY
ENVIRONMENT
LOCKING SYSTEM/HATCH
COMMON MODLES
DOCKING
FACILITIES

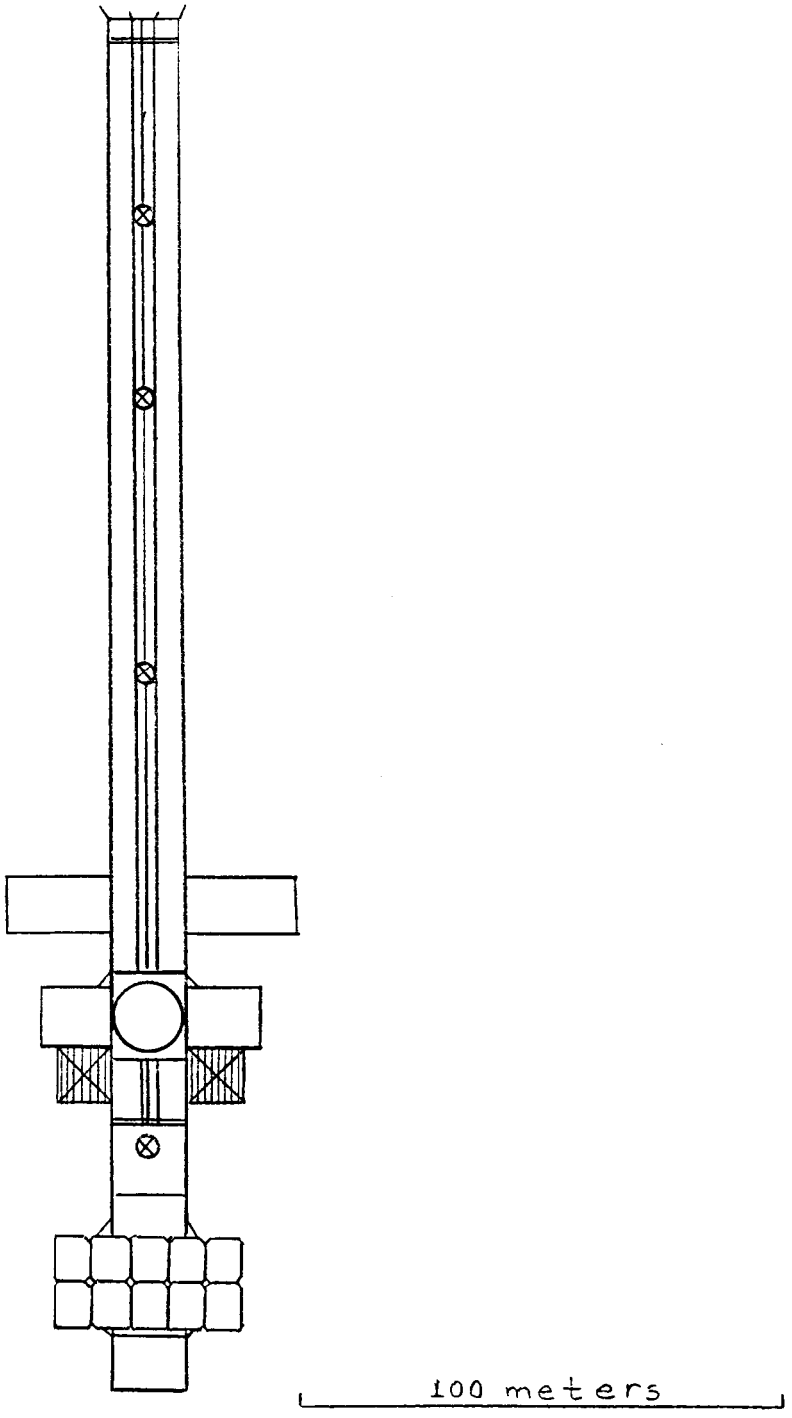
100 meters

RLV Sidemount Configuration

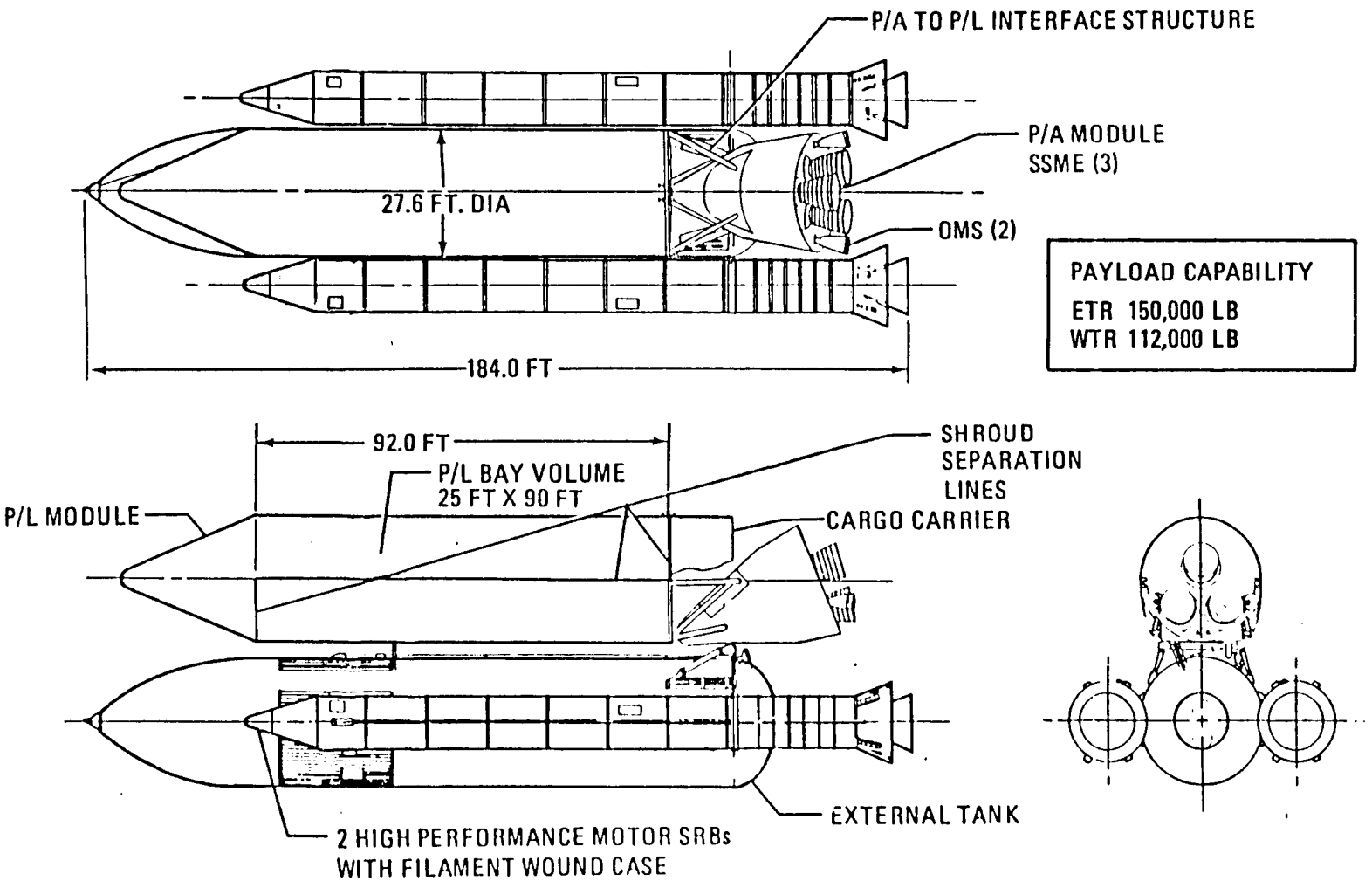

PAYLOAD CAPABILITY
ETR 150,000 LB
WTR 112,000 LB

298.2.84 341.3.84 490.6.84 753.11.84 529.11.85

STS AND PHASE II BASELINE VEHICLE CLASSES

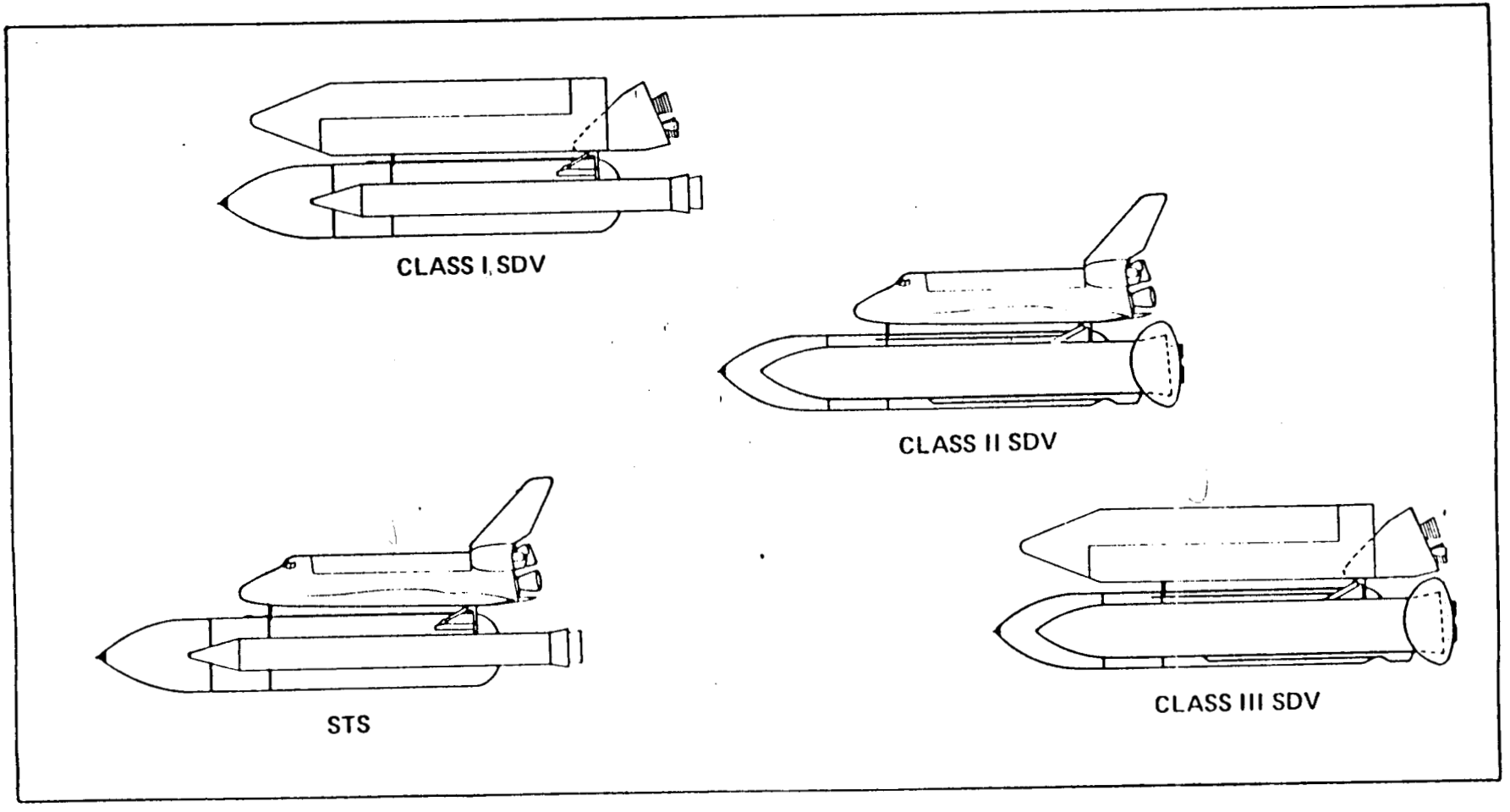

Development Options

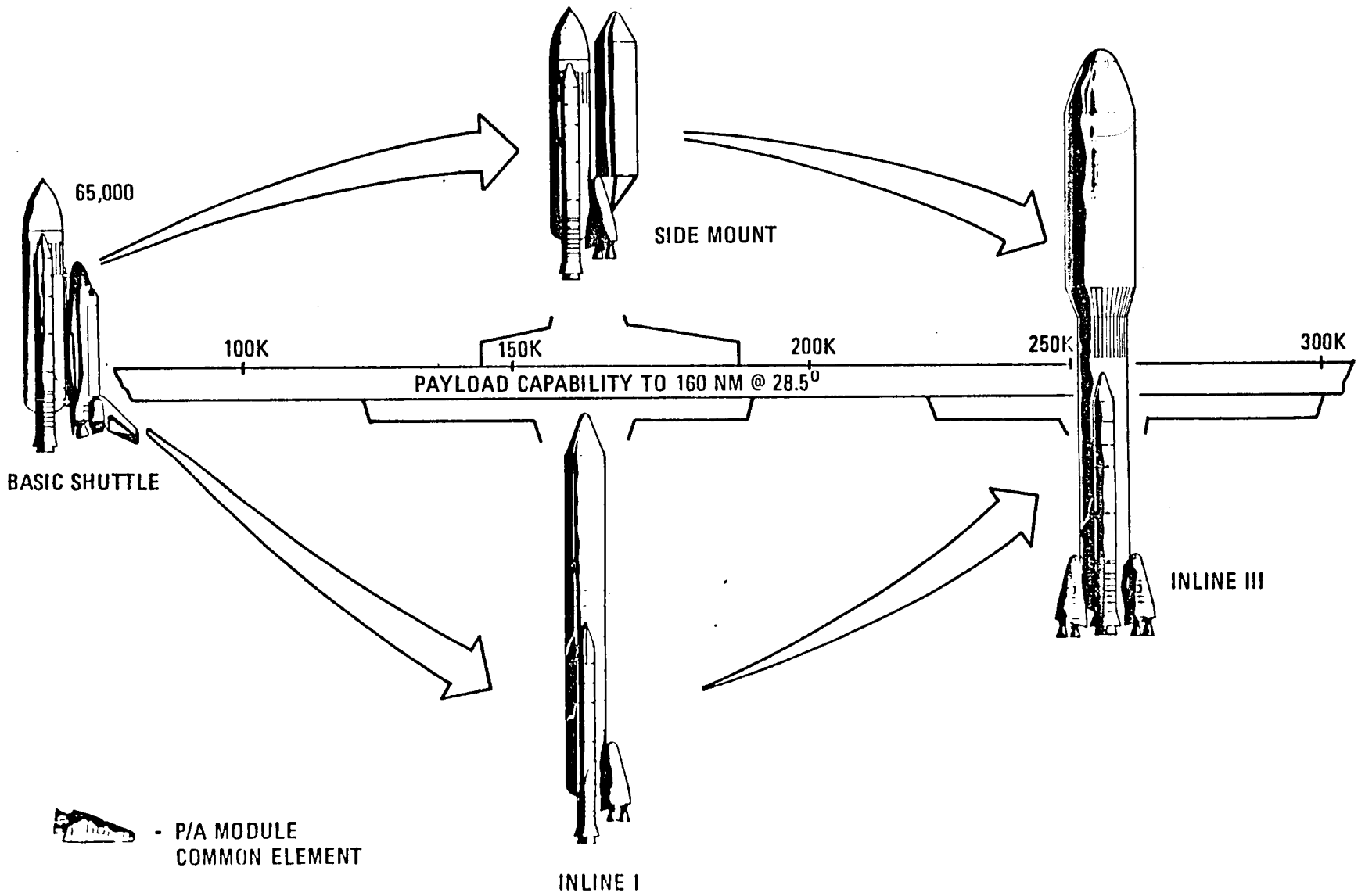

424.4.84 490.6.84 753.11.84 529.11.85

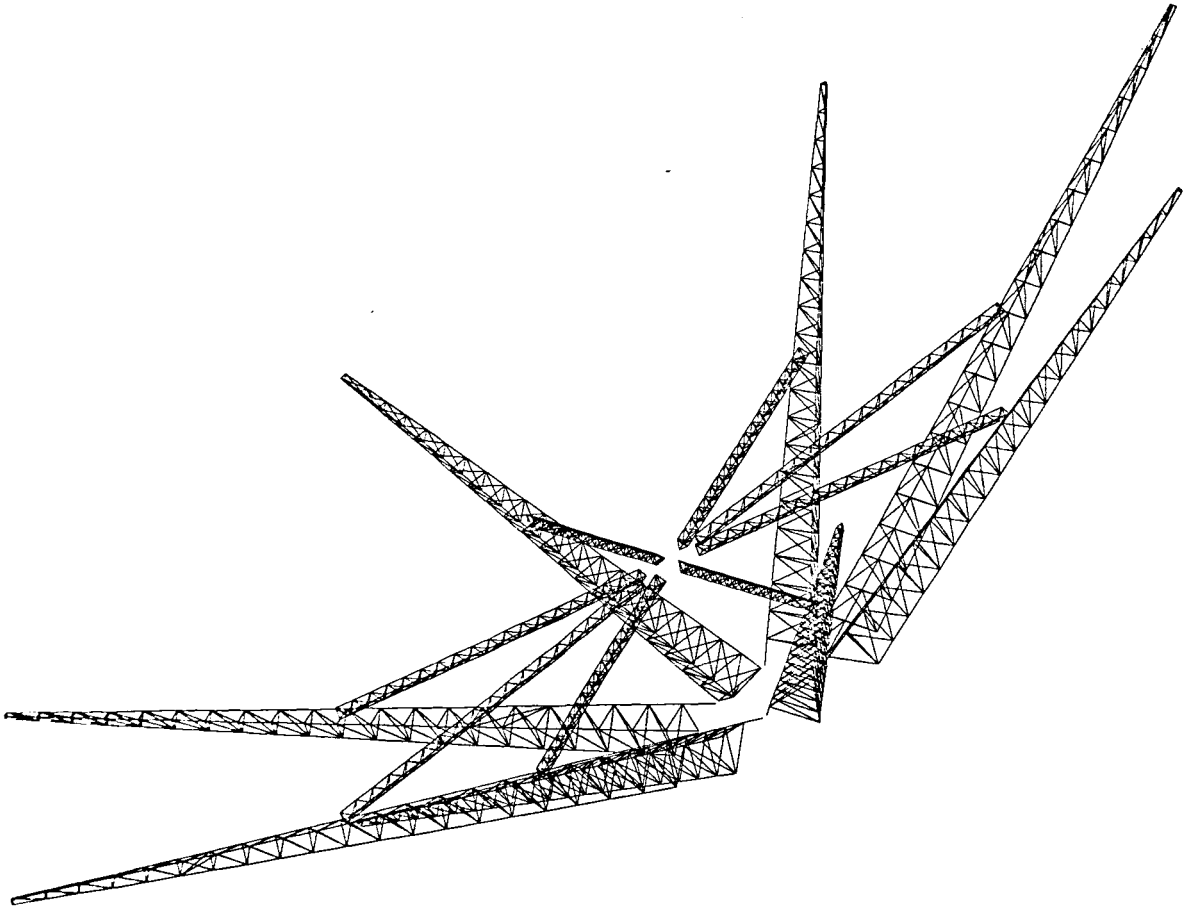

APPENDIX E

Force Calculations

The means with which the mass is to be stopped is similar to an aircraft carrier. The energy relation:

$$K_i + U = K_f$$

applies, where $K_f = 0$

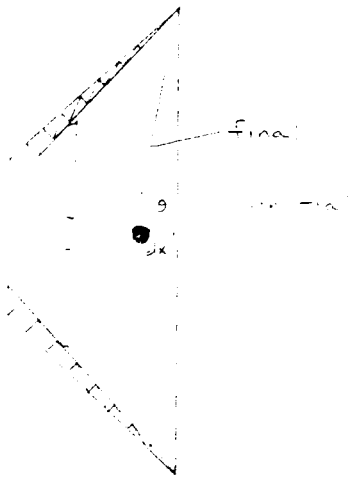

$$U = -2\int_0^x T \cos\theta \, dx$$

Since the allowable distance which the mass may travel on deceleration is restricted more for off-center catches, this is the case to be examined.

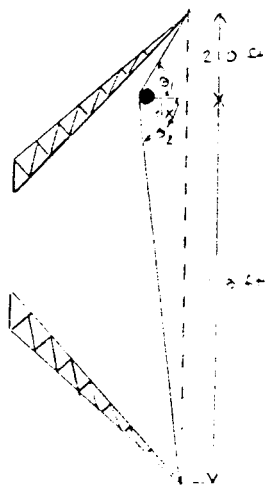

dx is limited to 100 ft to completely model the entire system, this model must be X4

$$U = 4\int_0^x T \cos\theta_1 dx + 4\int_0^x T\cos\theta_2 \, dx$$

$$\cos\theta_1 = \frac{X}{\sqrt{x^2 + (210^2)}} \qquad \cos\theta_2 = \frac{X}{\sqrt{x^2 + (1113)^2}}$$

dx = 100 ft

target area dia. = 908 ft

T = constant

$$U = -4\int_0^{100} T \frac{x}{\sqrt{x^2+210^2}}\,dx + 4\int_0^{100} T \frac{x}{\sqrt{x^2+1118^2}}\,dx$$

$$= -4T\sqrt{x^2+210^2}\,\Big|_0^{100} + -4T\sqrt{x^2+1118^2}\,\Big|_0^{100}$$

$$= -4T\left[\sqrt{100^2+210^2} - 210\right] + -4T\left[\sqrt{100^2+1118^2} - 1118\right]$$

$$= -4T\left[(22.5041) + -(4.4638)\right]$$

$$= -T\,(108.2)$$

$K_i = U = 108.2\ T$ $\qquad$ $V = 200$ m/s $= 642$ ft/s

$1/2\ m\ V^2 = 108.2\ T$

$m = \{2\,(108.2)\,T\}/(642)^2$

$m = (5.2558 \times 10^{-4})$

$T = 100{,}000$ lbs. $\qquad$ $m = 52.558$ slugs

$= 768.5$ kg

The loads will be applied in the following manner:

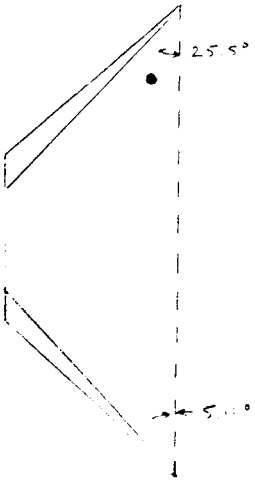

CASE 1- off center hit, upper

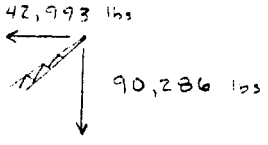

CASE 2- off center hit, lower

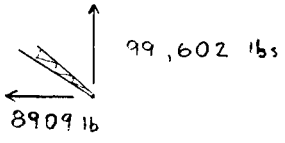

Notes

[1]G.W. Driggers and J.E. Newman, "Establishment of a Space Manufacturing Facility," Space Based Manufacturing From Nonterrestrial Materials, New York, p. 148

[2]Driggers and Newman, p.146.

[3]Ivan Bekey, Space Stations and Space Platforms-Concepts, Design, Infrastructure, and Uses, New York, p.298.

[4]Driggers and Newman, p.150.

[5]Ivan Bekey, "Permanent Presence-Making it Work", 22nd Goddard Memorial Symposium, San Diego, p. 138.

[6]Lecture notes from Professor McCandless'es class.

References

Bekey, Ivan. "Permanent Presence-Making it Work." 22nd Goddard Memorial Symposium, March 1984, pp.73-111.

Bekey, Ivan, ed. Space Stations and Space Platforms-Concepts, Design Infrastructure and Uses. New York: American Institute of Aeronautics and Astronautics, 1985.

O'Neill, Gerald K., and B. O'Leary, eds. Space-Based Manufacturing From Nonterrestrial Materials. New York: American Institute of Aeronautics and Astronautics, 1977.

Space World, "Big Dumb Booster" March 1983, p.33.

* We also used class notes from Professor McCandless's lectures.