NASA TN D-402

7N-39
199044
137P

TECHNICAL NOTE

D-402

ANALYSIS OF FRAME-REINFORCED CYLINDRICAL SHELLS

PART III - APPLICATIONS

By Richard H. MacNeal and John A. Bailie

Lockheed Aircraft Corporation
California Division
Burbank, California

NATIONAL AERONAUTICS AND SPACE ADMINISTRATION

WASHINGTON May 1960

(NASA-TN-D-402) ANALYSIS OF FRAME-REINFORCED CYLINDRICAL SHELLS. PART 3: APPLICATIONS (Lockheed Aircraft Corp.) 137 p

N89-70766

Unclas
00/39 0199044

NATIONAL AERONAUTICS AND SPACE ADMINISTRATION

TECHNICAL NOTE D-402

ANALYSIS OF FRAME-REINFORCED CYLINDRICAL SHELLS

PART III - APPLICATIONS[1]

By Richard H. MacNeal and John A. Bailie

L-1030

ABSTRACT

Tables are presented giving the loads and displacements in a flexible frame supported by a circular cylindrical shell and subjected to concentrated radial, tangential, and moment loads. Additional tables give the loads in the shell. The solutions are presented in terms of two basic parameters, one of which is of second-order importance. Procedures for modifying the important parameter to account for certain non-uniform properties of the structure are presented. This enables the one set of tables to be used for the solution of a wide variety of shell-frame problems, some of which have not been solved previously.

The parameters of the two companion publications are computed on a more rational basis than previously. This increases the confidence in, and range of application of, the charts in these publications.

NOTATION

A	$\frac{2.25}{\gamma^4}$	~ parameter of references 4 and 5
a_{ij}	influence coefficient	
B	$\left(\frac{L_r}{L_c}\right)^2 \Big/ \gamma^2$	~ parameter of references 4 and 5
d	$\frac{r^4 Gt}{EI_o L}$	~ parameter of reference 3
E	Young's modulus	~ lbs/in^2

[1]Originally prepared as LMSD 49734, Lockheed Missiles and Space Division, Sunnyvale, California, and reproduced in original form by NASA, by agreement with Lockheed Aircraft Corporation, to increase availability.

E_f Young's modulus of unloaded frames $\sim$ lbs/in^2

E_o Young's modulus of loaded frame $\sim$ lbs/in^2

E_{SK} Young's modulus of skin $\sim$ lbs/in^2

e base of natural logarithms

F axial force in loaded frame $\sim$ lbs

G shear modulus $\sim$ lbs/in^2

g eccentricity between neutral axis of loaded frame and median plane of skin $\sim$ in.

I moment of inertia of a typical unloaded frame $\sim$ in^4

I_ℓ moment of inertia of an unloaded frame, distant ℓ from the loaded frame $\sim$ in^4

I_o moment of inertia the loaded frame $\sim$ in^4

i I/ℓ_o $\sim$in^3

K_n $$\frac{n\sqrt{n^2-1}}{2\sqrt{3}} \cdot \frac{1 + 2\,\frac{(n^2-1)}{3}\left(\frac{L_r}{L_c}\right)^2}{\sqrt{1 + \frac{n^2-1}{3}\left(\frac{L_r}{L_c}\right)^2}}$$

L distance from loaded frame to undistorted shell section $\sim$ in.

L_c characteristic length (see Glossary) $= \frac{r}{\sqrt{6}}\left[\frac{t' r^2}{i}\right]^{1/4}$ $\sim$ in.

L_r characteristic length (see Glossary) $= \frac{r}{2}\sqrt{\frac{Et'}{Gt}}$ $\sim$ in.

ℓ_o frame spacing $\sim$ in.

M bending moment in loaded frame $\sim$ in lbs

M_o	externally applied concentrated moment ~ in. lbs
m	bending moment per inch in shell ~ in lbs/in.
n	index of harmonic dependence in the ϕ direction
P_o	externally applied radial load ~ lbs
p	axial load per in inch in the shell ~ lbs/in.
q	shear flow in shell ~ lbs/in.
r	radius of skin line ~ in.
S	transverse shear force in loaded frame ~ lbs
s	transverse shear per inch in shell ~ lbs/in.
T_o	externally applied tangential load ~ lbs
t	skin panel thickness ~ in.
t'	effective skin panel thickness for axial loads ~ in.
t_e	weighted average of all the bending material (skin and stiffeners) adjacent to the loaded frame, assumed uniformly distributed around the perimeter ~ ins.
u	axial displacement of shell ~ in.
v	tangential displacement of shell ~ in.
w	radial displacement of shell ~ in.
x	axial co-ordinate of shell, in.
γ	"beef-up" parameter $I_o/2iL_c$
γ_ℓ	γ for a nearby heavy frame
ϕ	polar co-ordinate of frames and shell
η	g/r - eccentricity parameter
θ	rotational displacement, radians

L-1030

GLOSSARY OF TERMINOLOGY

The terms "Input Impedance," "Transmission Matrix," and "Characteristic Length" are used in this report and are defined as follows:

Input Impedance: The relationship between the tangential displacement and shear flow harmonic coefficients of the shell at the section of the loaded frame.

Transmission Matrix: The forces and displacements at one end of a finite length of unloaded shell can be written in terms of their values at the other end; the square matrix defining these relationships is the transmission matrix.

Characteristic Length: In this report there are two characteristic lengths, defined as follows. L_c is the distance required for the exponential envelope of the lowest order self-equilibrating stress system to decay to $1/e$ of its value at $x = 0$, provided that the skin panels are rigid in shear. L_r is the distance required for the envelope of the lowest order self-equilibrating stress system to decay to $1/e$ of its value at $x = 0$, provided that the frames are rigid in bending.

L-1030

INTRODUCTION

There are basically two approaches to determining stresses that are due to concentrated loads applied to flexible frames which are supported by cylindrical shells. One is to make a complete redundant analysis of each problem, utilizing a large digital computer. The second, which is adopted here, is to devise simple approximate procedures. Such procedures should promote a better understanding of the problem, and provide tables or charts of results as functions of as few parameters as practicable. The analysis is undertaken in references 1 and 2. The results obtained from that analysis are summarized in this report which is intended to be a reference for persons interested in using the results, but who are not concerned with the mathematical derivations.

In any theoretical analysis in the field of mechanics, the first step is to set up a mathematical model that contains the essential physical characteristics of the system, and yet is amenable to known mathematical techniques. The model for this analysis is described in detail in next section. Tables for the load in the shell and the externally-loaded frame, derived for the model, are included in this report. In practice, many shells deviate markedly from any such simple model, and in reference 2 a considerable effort is devoted to the derivation of simple corrections to the basic parameter to account for such deviations. This enables the tables to be utilized in the solution of a much wider range of shell-frame problems. The results of the investigation, while initially intended mainly for airplane fuselage analysis, have been successfully applied to a ballistic missile body and an airplane landing-gear strut. These uses suggest wide applications of the techniques in cylindrical shells whose skin thickness is small compared to their radius.

BASIC ASSUMPTIONS AND COMPARISON WITH ASSUMPTIONS OF PREVIOUS ANALYTICAL METHODS

It is necessary to be aware of the basic assumptions made in this analysis in order to make effective use of the results. A comparison with the assumptions of references 3 and 4 is made to indicate differences in the solutions of the three methods.

In the method of attack with which this report is mainly concerned, a simplified structural model (fig. 1) is used to obtain a solution for a uniform shell stretching to infinity on both sides of the loaded frame. Clearly the effect of any frame can be propagated only a finite distance along the shell. In practice, the perturbations from "elementary beam theory" are, at worst, negligible at L_c inches away from the loaded frame. Procedures for modifying the solution to account for discontinuities and non-uniform properties are discussed in the following sections. For the model used, the following assumptions are made:

L-1030

(1) Concentrated loads are applied to the loaded frame and are reacted an infinite distance away on either one or both sides. The shell extends to infinity on both sides.

(2) The loaded frame has in-plane bending flexibility. It is free to warp out of its plane and to twist. It has no axial or shearing flexibilities. Its moment of inertia for circumferential bending is constant.

(3) The effect of the eccentricity of the skin attachment with respect to the frame neutral axis is ignored for both the loaded and unloaded frames.

(4) The shell consists of skin, longerons, and frames similar to the loaded frame, but possibly with different moments of inertia. The skin and longerons have no bending stiffness. All properties of the shell are uniform.

(5) The longerons are "smeared out" over the circumference giving an equivalent constant thickness, t', (including effective skin), for axial loads.

(6) The shell frames, but not the loaded frame, are "smeared out" in the direction of the shell axis, giving an equivalent moment of inertia per inch, i, for circumferential bending loads.

The model and the assumptions employed in this report differ from those used by other authors. In reference 3, the model shown in figure 2 is used. The assumptions regarding the loaded frame are identical to those employed in this report. The assumptions regarding the idealized shell are:

(1) It contains no frames.

(2) Longerons are infinitely rigid for axial loads, infinitely flexible for bending, and continuously "smeared out."

(3) The panels have uniform shear stiffness.

The length to the undistorted section, L , is chosen on an empirical basis. Nevertheless, as will be shown, the length L can be chosen such that the results agree reasonably well with those given by the present theory.

In references 4 and 5, models are used similar to the model employed in this report. The main differences are that the shell frames are concentrated, rather than "smeared out," are equally spaced, and have moments of inertia equal to the moment of inertia of the loaded frame. Charts, calculated from the equations in reference 4, are given in reference 5.

The assumption of concentrated frames is more realistic than the assumption of "smeared out" frames. On the other hand, the following advantages are claimed for the latter assumption:

(1) Simplified mathematical processes in getting a solution. This simplification of the theory promotes clearer insight into the processes involved. It also permits easier extension to more involved problems.

(2) Eliminating oneparameter in plotting solutions. In reference 5, two parameters were required to describe the properties of a uniform shell. In the present analysis, variations in one of the two parameters produce little change in the results and it is possible to compensate for these variations by modifying the other parameter.

(3) Greater accuracy in the analysis of a heavily reinforced frame.

The simplified structural models previously described bear only slight resemblance to practical aircraft shells. The differences might be described as the omission of the following effects:

(1) Finite frame spacing

(2) Nonuniformity of longeron area, skin thickness and frame moment of inertia both in the circumferential and axial directions

(3) Local reinforcement of the loaded frame near concentrated loads

(4) Eccentricity of the skin connection to frames

(5) Internal bracing of the frames

(6) Nearby discontinuities in the shell, such as free ends, rigid bulkheads, etc.

L-1030

(7) Elliptical cross-sections

(8) Changes in radius of shell in the axial direction

(9) Presence of cut-outs

(10) Finite axial and shear stiffness of the frames

(11) Bending stiffness of longerons

(12) Assumptions of linearity, etc.

A considerable effort is expended in references 1 and 2 in attempts to account for some of these effects. The main objective of this effort is to express the influence of the above effects as modifications to the basic parameter so that the tables are still applicable. A detailed discussion of some of the above effects is given in the following sections, where it is shown that items 1 to 6 inclusive can be handled quite simply. Reference 6 presents solutions accounting for items 4, 10, and 11 above, together with experimental results for shells representative of airplane construction. It is shown that in such shells the high stear stresses adjacent to the loaded frame predicted by references 1, 3, and 5 do not occur in practice due to the neglect in the analyses of effects such as items 4, 10, and 11 above.

L-1030

EVALUATION OF PARAMETERS L_r, L_o and γ

Case of Uniform Shell

In cases where the shell happens to satisfy all of the assumptions listed in the previous section, and in particular, if the skin thickness, stringer area, and shell-frame moment of inertia are uniform in both the axial and circumferential directions, the following formulas may be used:

$$L_c = \frac{r}{\sqrt{6}} \left[\frac{t' r^2}{i}\right]^{1/4} \tag{1}$$

$$L_r = \frac{r}{2} \sqrt{\frac{Et'}{Gt}} \tag{2}$$

$$\gamma = \frac{I_o}{2iL_c} \tag{3}$$

Young's modulus for skin, stiffeners and all frames is assumed equal. Using these parameters and interpolating in the tables give coefficients which, when substituted into the equations on pages 14 and 15, yield the required loads and deformations. In non-uniform shells, use the modified parameters indicated in the following equations:

Case of Non-Uniform Shell

(1) In case that the shell properties, i, t, and t', vary over the surface of the shell to a moderate degree, the following formulas and definitions are appropriate:

$$L_c = \frac{r}{\sqrt{6}} \left[\frac{E_{SK}\, t_e\, r^2}{E_f\, i} \right]^{1/4} \tag{4}$$

$$L_r = \frac{r}{2} \sqrt{\frac{E_{SK}\, t'}{Gt}} \tag{5}$$

$$\gamma = \frac{E_o\, I_o}{2 E_f\, i\, L_c} \tag{6}$$

The stiffness factors, Gt, $E_{SK}\, t_e$, and $E_f\, i$, must be averaged in the neighborhood of the loaded frame. The factors Gt and $E_{SK}\, i$ should be averaged over a length of shell extending approximately one-half of a characteristic length from the loaded frame in both directions.

(2) When unloaded frames have unequal moments of inertia or are unequally spaced, the following weighting factor method may be used for computing $E_f\, i$:

$$E_f\, i = (E_f\, i)_{fwd} + (E_f\, i)_{aft} \tag{7}$$

$$(E_f\, i)_{fwd} = \frac{1}{L_c} \sum_{fwd} (W E_f\, I_f) \tag{8}$$

$$(E_f\, i)_{aft} = \frac{1}{L_c} \sum_{aft} (W E_f\, I_f) \tag{9}$$

L-1030

where

$$W = 1 - x/L_c \quad \text{for } x < L_c$$
$$= 0 \quad \text{for } x > L_c$$

(x is measured forward and aft of the loaded frame).

The summations in equations (8) and (9) are to be extended over all frames except the loaded frame. The method of calculation gives greater importance to frames closest to the loaded frame and less importance to those farther way. For the case of a single, particularly heavy, neighboring frame, or for other neighboring discontinuities such as rigid bulkheads, a free end, or a plane of symmetry, the correction factors to be discussed should be applied. If those corrections are applied, the heavy frame or other discontinuity must be ignored in applying equations (7), (8), and (9). In particular, if the loaded frame is near the end of the shell, the shell must be continued beyond the end, fictitiously, in the summations of equations (7), (8), and (9), as though the shell were symmetric about the loaded frame and extended for a length greater than L_c on both sides of the loaded frame.

The method of calculation indicated in this sub-section exaggerates the effect of frames which are heavier than average when compared with the more accurate method of correction given in the next section. Since L_c depends on $(E_f i)^{1/4}$, an initial estimate of $E_f i$ is required in order to calculate the L_c used in equations (7), (8), and (9).

Corrections to γ, the "Beef-Up" Parameter

A good many of the differences between practical shells and the mathematical model listed in a previous section can be approximately accounted for by modifying γ. The theory of these corrections is derived in references 1 and 2. The general form of the modified "beef-up" parameter, γ^*, is:

$$\gamma^* = \gamma \cdot f_a \cdot f_b \cdot f_c \cdot, \text{etc.}, \tag{10}$$

where γ is computed by the methods of the preceding section, and f_a, f_b, and f_c are factors accounting for effects a, b, c, etc.

Modification for Different Value of L_r/L_c

The values of L_r/L_c used in the tables are 0.2, 0.4, and 1.0. To account for values of this parameter between 0.2 and 1.0, graphical interpolation should

be used. Otherwise, the following formula may be applied:

$$\gamma^* = \gamma \frac{\sqrt{1 + \left[\left(\frac{L_r}{L_c}\right)^*\right]^2}}{1 + 2\left[\left(\frac{L_r}{L_c}\right)^*\right]^2} \cdot \frac{1 + 2\left[\left(\frac{L_r}{L_c}\right)^S\right]^2}{\sqrt{1 + \left[\left(\frac{L_r}{L_c}\right)^S\right]^2}} \tag{11}$$

where $(L_r/L_c)^S$ is the value of the parameter for the shell, and $(L_r/L_c)^*$ is the value of the parameter closest to $(L_r/L_c)^S$, for which tables are available.

Modification for Finite Frame Spacing

The modification for finite frame spacing given by Appendix A of reference 1, is repeated below:

$$\gamma^* = \gamma \left[1 + \frac{\ell_o}{2L_c K_2}\left(1 + \frac{1}{2\gamma K_2}\right)\left(4\left(\frac{L_r}{L_c}\right)^2 + \frac{1}{1 + \left(\frac{L_r}{L_c}\right)^2}\right)\right] \tag{12}$$

where ℓ_o = distance from loaded frame to adjacent frames, in this case, and

$$K_2 = \frac{1 + 2\left(\frac{L_r}{L_c}\right)^2}{\sqrt{1 + \left(\frac{L_r}{L_c}\right)^2}}$$

Modification for Nearby Heavy Frames and for Other Similar Nearby Discontinuities

The corrections to γ in a previous section are not intended to account for discontinuities in circumferential bending stiffness. The form of the correction for these effects is:

$$\gamma^* = \gamma \cdot f(2) \tag{13}$$

Figure 6 shows f(2) plotted for nearby heavy frames and for nearby rigid bulkheads.

L-1030

Figure 7 shows f(2) plotted for a finite length of shell terminated in various ways on one side of the loaded frame. The validity of the correction is considered doubtful for $f(2) < 0.25$, due to the importance of higher order stress systems. Figures 6 and 7 are for $L_r/L_c = 0.4$, but their variation with L_r/L_c is negligible for conventional airplane fuselages and adequate in other applications for $L_r/L_c < 0.75$. The corrections for nearby planes of symmetry and antisymmetry can be used to solve problems where two similar frames are simultaneously loaded. To illustrate the method the following two examples are given:

Example 1

A frame of moment of inertia 4.0 in.^{4} that is subjected to concentrated loads is supported in a uniform shell whose characteristic length, L_c, is 200 inches and moment of inertia per unit length, i, is 0.10 in.^{3} A heavy frame having a moment of inertia of 16.0 in.^{4} is 50 inches to one side of this frame. The loaded frame and shell loads are required.

The parameters needed are:

$$\gamma = \frac{4.0}{2 \times .1 \times 200} = 0.10$$

$$\gamma_\ell = \frac{16}{2 \times .1 \times 200} = 0.40 \quad \text{and} \quad \frac{\ell}{L_c} = 0.25$$

Using γ_ℓ and ℓ/L_c in figure 6 yields $f(2) = 0.75$.

$$\therefore \gamma^* = 0.75 \times 0.10 = 0.075$$

Use $\gamma = 0.075$ instead of 0.10 in the tables to account for the presence of the heavy frame on the stresses in and near the loaded frame.

Example 2

A shell whose characteristic length L_c is 250 inches is supported by a large number of identical frames whose moments of inertia are 2.0 in.^{4}, spaced 24 inches apart. A pair of frames 96 inches apart are subjected to concentrated loads at the same polar angle, ϕ. The two radial loads are of equal magnitude but opposite sign, while the tangential loads are of the same magnitude and sign. The loads in the loaded frames and shell are to be found.

$$\gamma = \frac{2.0}{2 \times .0833 \times 250} = 0.048 \qquad \frac{\ell}{L_c} = \frac{48}{250} = 0.192$$

For the tangential loads there is a plane of symmetry midway between the loaded frames, while for the radial loads a plane of antisymmetry exists at the same place.

L-1030

From figure 7 it is seen that for the radial load stress system, $f(2) = 0.32$, while for the tangential loading, $f(2) = 1.75$. Hence, the values of γ^* to be used in the tables are 0.015 and 0.084, respectively.

Eccentricity Between Skin Line and Neutral Axis of the Loaded Frame

In the three types of perturbation just discussed, it is possible to account for the effects by modifying γ only, since the "elementary-beam-theory" part of the solution is always valid. In the case when the eccentricity between skin line and neutral axis of the loaded frame exists, the "elementary-beam-theory" solution is also affected. This particular aspect is discussed in Appendix E of reference 1.

CALCULATIONS BY USE OF TABLES

Formulas are given in a further section, by which the effects of a concentrated load or moment on a shell-supported frame may be computed by using the tabulated coefficients. The method of computing γ is indicated in a previous section. These enable the shear flow and axial load at all points in the shell and the internal loads and displacements of the loaded frame to be computed. Charts for the loads in the loaded frame are included in references 3 and 5, as well as in this report, but the tables for the computation of shell loads due to frame flexibility are new. To illustrate the order of magnitude of the loads in a possible airplane fuselage, an example problem is solved in reference 1.

The following parts of the overall solution are omitted in the tabulated coefficients:

(1) The "elementary-beam-theory" part of the skin shear flow which should be calculated from beam theory

(2) The "elementary-beam-theory" part of the axial load intensity in longerons which should be calculated from beam theory

(3) The rigid translations and rotation of the loaded frame

As a consequence of items (1) and (2), shear flow and axial load intensity in the shell, as calculated from the tables, can be added directly to the results of an "engineers bending theory" calculation. The shear flow and axial load distributions given in the tables are assumed to be symmetrical with respect to the loaded frame. In a shell that is unsymmetric about the loaded frame, the shear flows and axial loads are not symmetric about the loaded frame. It is not possible to derive a simple correction for this effect, but the exact solutions indicated in reference 2 are applicable.

It is observed in the tables that the perturbing axial load and shear flows are significant even at large distances from the loaded frame.

Distributed Load on a Frame

The effects of a distributed load on one frame may be obtained by superimposing the effects of the concentrated loads into which the distributed load can be resolved. The axial load and shear flow in the shell can be obtained for loads on several frames by a similar superposition, since p and q are tabulated as functions of x/L_c .

Frames Adjacent to the Loaded Frame

At the present time it is not possible by use of the tables to compute the internal forces in frames adjacent to the loaded frame. It is, however, a simple matter to tabulate the frame-bending moment per inch, m , and the other internal forces as a function of x/L_c . The bending moment in an adjacent frame, due to a force applied at the loaded frame, is then obtained by multiplying m at the frame station by I_F/i (see Appendix D of reference 1).

L-1030

Effect of Local Reinforcement of the Loaded Frame

It is not practicable to attempt to cover, by a set of tables or charts, the many possible reinforcing patterns that can be used to locally strengthen frames in the region of applied concentrated loads. A solution is presented in Appendix A, together with a simple worked example, to illustrate the numerical procedure. A loaded frame, whose moment of inertia varies around the circumference in any manner, can be treated as a frame of constant moment of inertia that is reinforced to produce the actual inertia variation. Hence, the analysis of Appendix A applies to any loaded frame whose moment of inertia is not constant.

Internal Bracing of Frames

A typical example of bracing the frames is the floor-supporting members in a transport airplane fuselage. Each connection of the members to the frame introduces three redundants. These are solved by using the tables of load and deflection coefficients in conjunction with a "consistent deformations" solution for redundant structures.

Evaluation of Parameters Used in Other Publications

The charts in references 3 and 5 can be used with the theory given in this report. In order to do this, the relationships between the parameters used in this report and the parameters used in other publications must be written. For a general discussion of the differences between the theories in these reports, see Appendix C, reference 1.

The parameters used in reference 5 are evaluated as follows:

$$A = \frac{2.25}{\gamma^4} \tag{14}$$

$$\frac{A}{B} = \frac{2.25}{\gamma^2\left(\frac{L_r}{L_c}\right)^2} \tag{15}$$

The charts in reference 5 are valid for a shell with equally spaced frames, with moment of inertia equal to that of the loaded frame. In applying the results to the case where the moment of inertia of the loaded frame differs from that of the other frames, the assumption is made that the other frames are regrouped and concentrated into equivalent frames that are equal in stiffness to the loaded frame. This assumption makes the frame spacing:

$$\ell_o = L_c \frac{\sqrt{6}}{A^{1/4}} = 2\gamma L_c \tag{16}$$

If this ficticious frame spacing is considerably larger than the actual frame spacing the results obtained by using reference 5 may be quite inaccurate.

The parameter "d" used in reference 1 can be obtained from γ and L_r/L_c by using the graph shown in figure 5. The straight-line portions of this graph obey the formula:

$$d = \frac{36}{\gamma} \frac{\sqrt{1 + \left(\frac{L_r}{L_c}\right)^2}}{1 + 2\left(\frac{L_r}{L_c}\right)^2} \quad \text{for } d < 110 \tag{17}$$

Since the empirical curves in figures 5 for $d > 110$ were obtained by a comparison of the charts in reference 3 and 5, the application of the charts of reference 5 using "d" from figure 5 may result in significant errors if the stiffness of the loaded frame is markedly different from the unloaded frames.

TABLES

The loads and displacements of the loaded frame and loads in the shell are given in terms of the non-dimensional coefficients of the tables by the formulas below.

$$q = C_{qp}\frac{P_o}{r} + C_{qt}\frac{T_o}{r} + C_{qm}\frac{M_o}{r^2}$$

L-1030

$$p = C_{pp} \frac{P_o}{r} \left(\frac{L_c}{r}\right) + C_{pt} \frac{T_o}{r} \left(\frac{L_c}{r}\right) + C_{pm} \frac{M_o}{r^2} \left(\frac{L_c}{r}\right)$$

$$M = C_{mp} P_o r + C_{mt} T_o r + C_{mm} M_o$$

$$S = C_{sp} P_o + C_{st} T_o + C_{sm} \frac{M_o}{r}$$

$$F = C_{fp} P_o + C_{ft} T_o + C_{fm} \frac{M_o}{r}$$

$$v = C_{vp} P_o \frac{\gamma r^3}{EI_o} + C_{vt} T_o \frac{\gamma r^3}{EI_o} + C_{vm} M_o \frac{\gamma r^2}{EI_o}$$

$$w = C_{wp} P_o \frac{\gamma r^3}{EI_o} + C_{wt} T_o \frac{\gamma r^3}{EI_o} + C_{wm} M_o \frac{\gamma r^2}{EI_o}$$

$$\theta = C_{\theta p} P_o \frac{\gamma r^2}{EI_o} + C_{\theta t} T_o \frac{\gamma r^2}{EI_o} + C_{\theta m} M_o \frac{\gamma r}{EI_o}$$

Tables 1 to 63 give the coefficients defining the loads and displacements in the loaded frame.

Tables 64 to 108 give the coefficients defining the loads in the shell.

Lockheed Aircraft Corporation,
California Division,
Burbank, Calif., October 1959.

L-1030

APPENDIX A

EFFECT OF LOCAL REINFORCEMENT OF LOADED FRAME

When large, concentrated loads or moments are applied to a frame it is often necessary to locally reinforce the frame. By considering the reinforcing as a set of structural elements having bending stiffness only, and equating the distortions of the unreinforced frame and reinforcing elements, a solution is derived.

Assumptions and Representation of the Reinforcing

The reinforcing, which is assumed to be symmetrical about the point of application of the externally applied concentrated load or moment, is idealized as a number of bending elements, each of constant moment of inertia. Each element can be represented by a rotational spring connected between adjacent points on the frame. Since the shearing and axial strains in the frame are negligible, it is not necessary to consider the corresponding transfer of force to the reinforcing. This type of representation is valid for any external loading. To illustrate the technique, a simple example is solved. The extension to more complex reinforcing patterns is simple and obvious.

L-1030

Solution

Referring to figure 8, it is seen that each constant inertia section of the reinforcing can be represented by a rotational spring. Each spring introduces a redundant, the bending moment taken by the spring. The action of these moments, M_1 and M_2, is indicated in the free bodies of figure 8. The change of slope across the ith element of reinforcing is $\Delta\theta_i = \theta_i - \theta_{i-1}$. Each incremental rotation can be considered to consist of two parts: a first part due to externally applied loads or moments, and a second part due to the moments M_i. Then we have for the frame:

$$\begin{vmatrix} \Delta\theta_1 \\ \Delta\theta_2 \end{vmatrix} = \begin{vmatrix} \Delta\theta_{e1} \\ \Delta\theta_{e2} \end{vmatrix} - \begin{bmatrix} a_{11} & a_{12} \\ a_{21} & a_{22} \end{bmatrix} \begin{vmatrix} M_1 \\ M_2 \end{vmatrix} \tag{A.1}$$

$\Delta\theta_{ei}$ is the incremental rotation due to the externally applied loads and a_{ij} are the influence coefficients that will be derived later.

From "engineers beam theory", for the ith frame element,

$$\Delta\theta_i = -\frac{1}{EI_o}\int_{\phi_{(i-1)}}^{\phi_i} m\,r\,d\phi = -(m_{av})_i\,r\,\frac{\Delta\phi_i}{EI_o} \tag{A.2}$$

where $(m_{av})_i$ is the average moment between $\phi_{(i-1)}$ and ϕ_i.

For the ith reinforcing spring,

$$\Delta\theta_i = \frac{M_i r \Delta\phi_i}{EI_i} \tag{A.3}$$

Equating (A.1) and (A.3) we obtain:

$$\begin{bmatrix} \left(a_{11} + \frac{r\Delta\phi_1}{EI_1}\right) & a_{12} \\ a_{21} & \left(a_{22} + \frac{r\Delta\phi_2}{EI_2}\right) \end{bmatrix} \begin{vmatrix} M_1 \\ M_2 \end{vmatrix} = \begin{vmatrix} \Delta\theta_{e1} \\ \Delta\theta_{e2} \end{vmatrix} \tag{A.4}$$

This equation is solved by inverting the square matrix to yield M_1 and M_2. The bending moment in the reinforced frame is given by:

$$M_{iT} = -M_i \left(1 + \frac{I_o}{I_i}\right) \tag{A.5}$$

Determination of Influence Coefficients

This problem is simplified by separately considering the cases of symmetric and antisymmetric externally applied loading. The work can be shortened by choosing all reinforcing elements to be the same length, $r\Delta\phi$. The midpoint of each element, $\bar{\phi}_i$, can thus be easily located:

$$\begin{aligned} \bar{\phi}_1 &= 0.5\,\Delta\phi \\ \bar{\phi}_2 &= 1.5\,\Delta\phi \end{aligned} \tag{A.7}$$

Radial Load Applied at ϕ_o

In this case $M_i^{(-)} = -M_i$ (see fig. 8) and the average bending moment in each frame element, due to the reinforcement moments, is:

$$(m_{av})_i = M_1\left[-C_{mm}(\bar{\phi}_i - \phi_1) + C_{mm}(\bar{\phi}_i + \phi_1)\right] + M_2\left[C_{mm}(\bar{\phi}_i - \phi_1) - C_{mm}(\bar{\phi}_i + \phi_1) - C_{mm}(\bar{\phi}_i - \phi_2) + C_{mm}(\bar{\phi}_i + \phi_2)\right]$$

where $C_{mm}(\bar{\phi}_i - \phi_j)$ is the average moment coefficient due to a moment applied at ϕ_j

L-1030

and measured at $\bar{\phi}_i$. Writing $C^*_{ij} = C_{mm}(\bar{\phi}_i - \phi_j) - C_{mm}(\bar{\phi}_i + \phi_j)$, the influence coefficients can be tabulated. The factor, $r\Delta\phi/EI_o$, is common to all coefficients. Therefore, to simplify the presentation, tabulate $a^*_{ij} = a_{ij}\, EI_o/r\Delta\phi$.

Influence coefficients for the case of a radial-applied load can now be written as:

$$a^*_{11} = -C^*_{11} \qquad a^*_{12} = C^*_{11} - C^*_{12}$$

$$a^*_{21} = -C^*_{21} \qquad a^*_{22} = C^*_{21} - C^*_{22}$$

Now it is possible to introduce a simplification into equation (A.4). If $\Delta\theta_i$ is rewritten as $r\Delta\phi/EI_o \cdot I_o/I_i$, all terms in equation (A.4) contain $r\Delta\phi/EI_o$, and the equation can be written:

$$\begin{bmatrix} (a^*_{11} + I_o/I_1) & a^*_{12} \\ a^*_{21} & (a^*_{22} + I_o/I_2) \end{bmatrix} \begin{vmatrix} M_1 \\ M_2 \end{vmatrix} = - \begin{vmatrix} C_{mp}(\bar{\phi}_1 - \phi_o) \\ C_{mp}(\bar{\phi}_2 - \phi_o) \end{vmatrix} \tag{A.8}$$

Moment or Tangential Load Applied at ϕ_o

In this case, $M_i^{(-)} = +M_i$ (see figure 8). The reinforcement moments produce an average bending moment in each frame element of

$$(m_{av})_i = M_1\left[2C_{mm}(\bar{\phi}_i - \phi_o) - C_{mm}(\bar{\phi}_i - \phi_1) - C_{mm}(\bar{\phi}_i + \phi_1)\right]$$

$$+ M_2\left[C_{mm}(\bar{\phi}_i - \phi_1) + C_{mm}(\bar{\phi}_i + \phi_1) - C_{mm}(\bar{\phi}_i - \phi_2) - C_{mm}(\bar{\phi}_i + \phi_2)\right]$$

Letting $C_{mm}(\bar{\phi}_i - \phi_j) + C_{mm}(\bar{\phi}_i + \phi_j)$ be written as C^{**}_{ij}, and introducing the same simplification as was introduced in the case of the radial load, the influence coefficients can be given as:

$$a^{**}_{11} = C^{**}_{10} - C^{**}_{11} \quad ; \quad a^{**}_{12} = C^{**}_{11} - C^{**}_{12}$$

$$a^{**}_{21} = C^{**}_{20} - C^{**}_{21} \quad ; \quad a^{*}_{22} = C^{**}_{21} - C^{**}_{22}$$

L-1030

Equation (A.4) can be written for an applied moment as:

$$\begin{bmatrix} \left(a_{11}^{**} + \frac{I_o}{I_1}\right) & a_{12}^{**} \\ a_{21}^{**} & \left(a_{22}^{**} + \frac{I_o}{I_2}\right) \end{bmatrix} \begin{vmatrix} M_1 \\ M_2 \end{vmatrix} = - \begin{vmatrix} C_{mm}(\bar{\phi}_1 - \phi_o) \\ C_{mm}(\bar{\phi}_2 - \phi_o) \end{vmatrix} \tag{A.9}$$

For an applied tangential load, equation (A.4) becomes

$$\begin{bmatrix} \left(a_{11}^{**} + \frac{I_o}{I_1}\right) & a_{12}^{**} \\ a_{21}^{**} & \left(a_{22}^{**} + \frac{I_o}{I_2}\right) \end{bmatrix} \begin{vmatrix} M_1 \\ M_2 \end{vmatrix} = - \begin{vmatrix} C_{mT}(\bar{\phi}_1 - \phi_o) \\ C_{mT}(\bar{\phi}_2 - \phi_o) \end{vmatrix} \tag{A.10}$$

L-1030

Numerical Example

A shell whose ratio of characteristic lengths, $L_r/L_c = 0.4$, has a radial load applied at a point. The loaded frame is reinforced in such a manner that $I/I_o = 6.0$ at the point of load application, and the reinforcment tapers to zero at 20 degrees either side of that point. $I_o = 2.0$ in.^{4} and $\gamma = 0.1$.

Step 1: The reinforcement is replaced by four constant-inertia elements, two on each side of the point of load application. This lumping of the inertia is shown in figure 9.

Step 2: The coefficients C_{mm} are found from the tables. In this case the table is on page 47 of the tables.

$\bar{\phi}_i$ \ ϕ_j	10°	20°	
5°	- .36509	- .16272	$C_{mm}(\bar{\phi}_i - \phi_j)$
	+ .16272	+ .05223	$C_{mm}(\bar{\phi}_i + \phi_j)$
	- .52781	- .21495	C_{ij}^*
15°	+ .36509	- .36509	$C_{mm}(\bar{\phi}_i - \phi_j)$
	+ .05223	+ .00307	$C_{mm}(\bar{\phi}_i + \phi_j)$
	+ .31286	- .36816	C_{ij}^*

Step 3. Equations (A.4) becomes

$$\begin{bmatrix} (.5278 + .267) & -.3128 \\ -.3128 & (.6749 + .8000) \end{bmatrix} \begin{vmatrix} M_1 \\ M_2 \end{vmatrix} = - \begin{vmatrix} .0558 \\ .0096 \end{vmatrix}$$

$$\therefore \; M_1 = -.0794 \quad : \quad M_2 = -.0234$$

The bending moments in the reinforced frame came from equation (A.5) and are:

$$M_{1T} = .101 \qquad M_{2T} = +.042$$

Step 4. Find the coefficients in the unreinforced part of the frame.

$$M_i = (M_i)_e + \sum \left(M_{(i+1)} - M_i \right) C^*_{ij}$$

$$(M_2 - M_1) = +.0560 \qquad -M_2 = +.0234$$

	$\bar{\phi}_i$ \ ϕ_j	10°	20°	$(M_i)_{ext}$	M_i
$C_{mm}(\bar{\phi}_i - \phi_j)$	25°	+.1627	+.3651		
$C_{mm}(\bar{\phi}_i + \phi_j)$		+.0031	-.0145		
C^*_{ij}		+.1596	+.3796	-.0101	+.008
$(M_{i+1}-M_i)C^*_{ij}$		+.0090	+.009		
$C_{mm}(\bar{\phi}_i - \phi_j)$	35°	+.0522	+.1627		
$C_{mm}(\bar{\phi}_i + \phi_j)$		-.0145	-.0172		
C^*_{ij}		+.0667	+.1799	-.0160	-.008
$(M_{i+1}-M_i)C^*_{ij}$		+.0037	+.0042		
$C_{mm}(\bar{\phi}_i - \phi_j)$	45°	+.0031	+.0522		
$C_{mm}(\bar{\phi}_i + \phi_j)$		-.0168	-.0155	-.0160	-.0133
C^*_{ij}		+.0199	+.0677		
$(M_{i+1}-M_i)\,C^*_{ij}$		+.0011	+.0016		

These results are plotted in figure 9 to show the effect of this particular reinforcing pattern on the bending-moment coefficient.

L-1030

REFERENCES

1. MacNeal, Richard H., and Bailie, John A.: Analysis of Frame-Reinforced Cylindrical Shells. Part I - Basic Theory. NASA TN D-400, 1960.

2. MacNeal, Richard H., and Bailie, John A.: Analysis of Frame-Reinforced Cylindrical Shells. Part II - Discontinuities of Circumferential-Bending Stiffness in the Axial Direction. NASA TN D-401, 1960.

3. Wignot, J. E., Combs, H., and Ensrud, A. F.: Analysis of Circular Shell-Supported Frames, NACA TN 929, July 1943.

4. Duberg, J. E., and Kempner, J.: Stress Analysis by Recurrence Formula of Reinforced Circular Cylinders Under Lateral Loads, NACA TN 1219, 1947.

5. Kempner, J., and Duberg, J. E.: Charts for the Stress Analysis of Reinforced Circular Cylinders Under Lateral Loads, NACA TN 1310, May 1947.

6. Hoff, N. J., Salerno, V. L., Liebowitz, H., Boley, B.A., and Nardo, S. V.: "Concentrated Load Effects in Reinforced Monocoque Structures," Reissner Anniversary Volume, J. W. Edwards, Ann Arbor, Mich., 1949.

L-1030

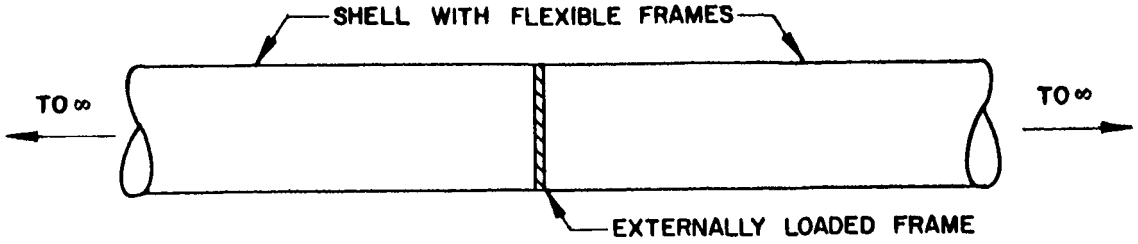

Figure 1. - Shell model on which the present analysis is based.

L-1030

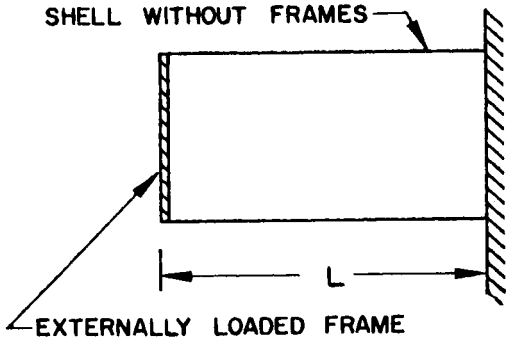

Figure 2. - Shell model on which the analysis of reference 3 is based.

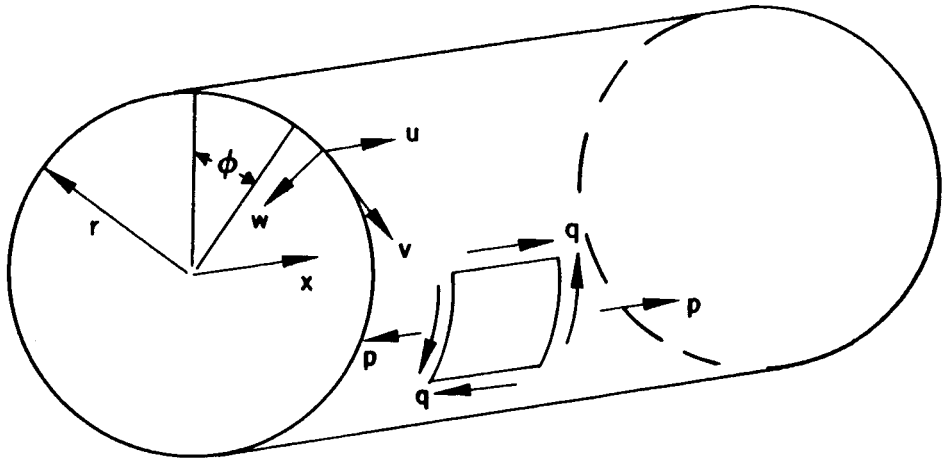

L-1030

Figure 3. - Loads per inch and displacements in the shell. (Loaded frame at x = o).

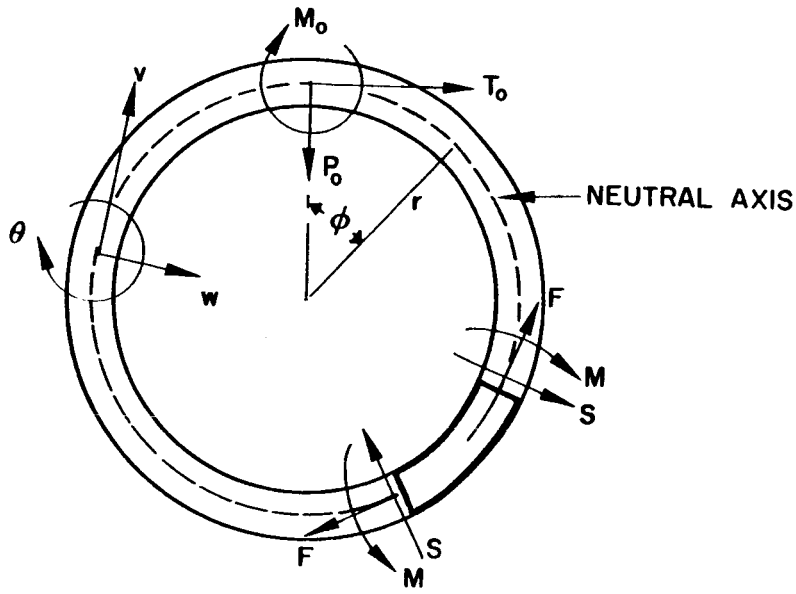

Figure 4. - Loads, moments and displacements in loaded frame.

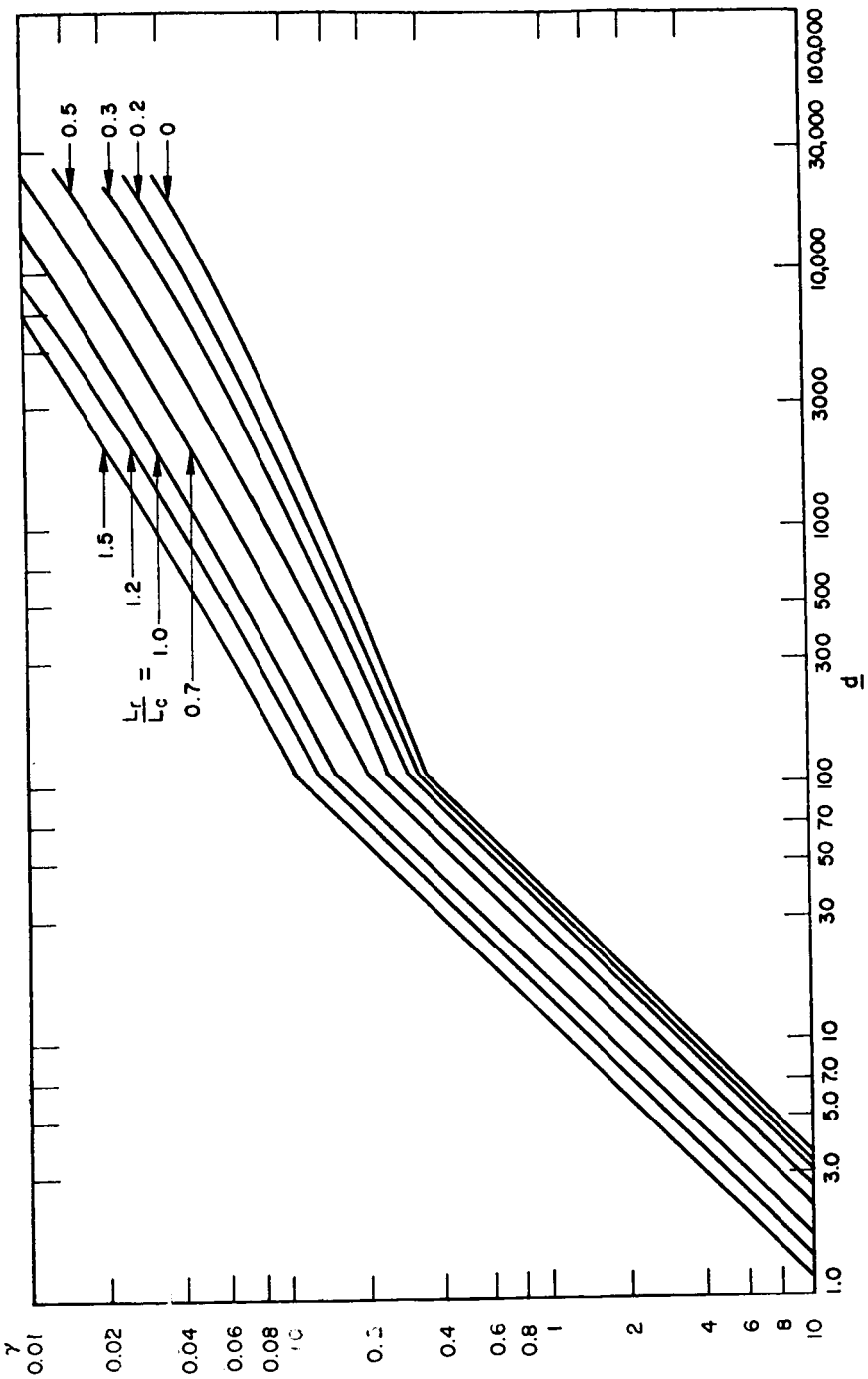

Figure 5. - Chart for determining parameter "d" of reference 1.

L-1030

L-1030

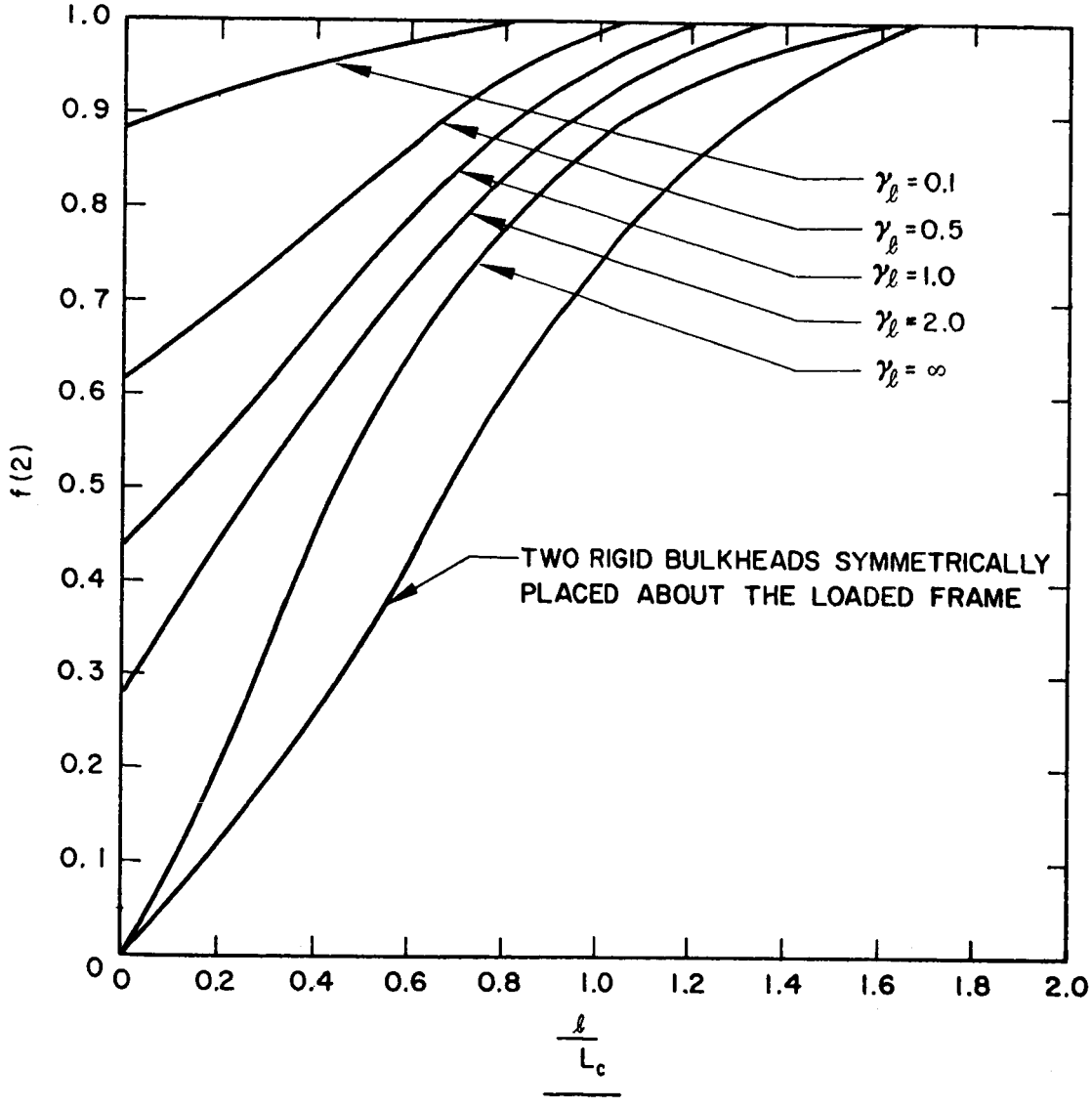

Figure 6. - A single frame on one side of loaded frame or two rigid bulkheads symmetrically placed about the loaded frame curves of f(2) and f(3). $L_r/L_c = 0.4$.

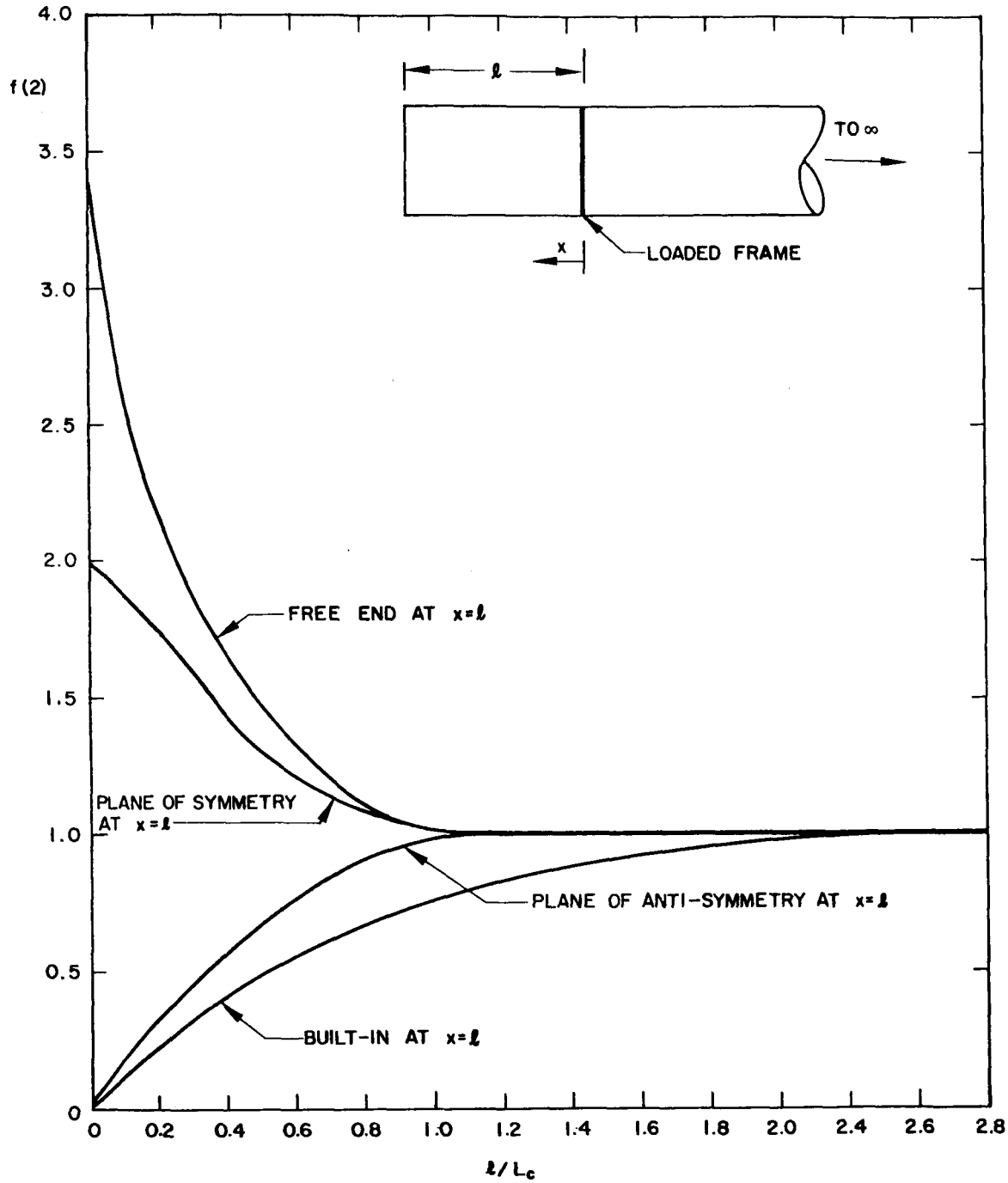

Figure 7. - Finite length of shell on one side of loaded frame f(2) v ℓ/L_c for various boundary conditions at $x = \ell$, $L_r/L_c = 0.4$.

L-1030

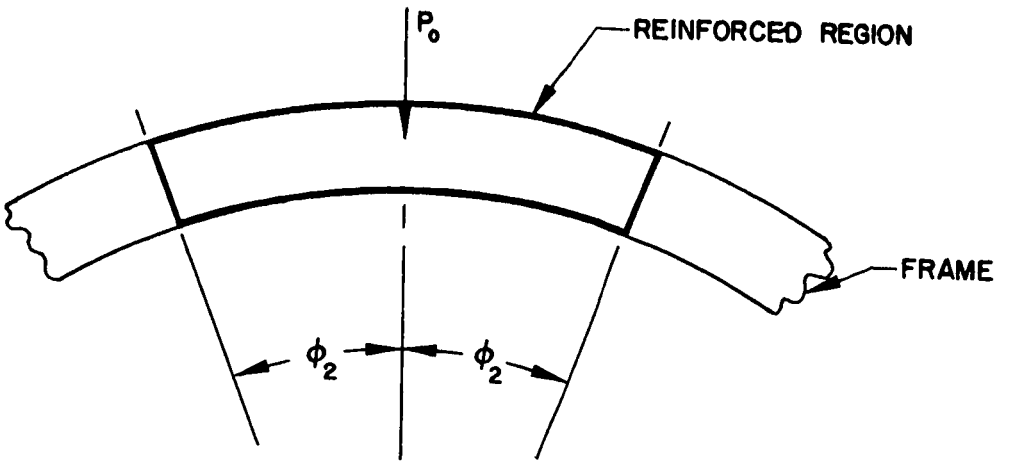

THE REINFORCING CAN BE SPLIT INTO ANY DESIRED NUMBER OF ELEMENTS. AS AN EXAMPLE TAKE FOUR ELEMENTS. FOR ANALYSIS PURPOSES THE STRUCTURE IS THEN REPRESENTED AS SHOWN BELOW.

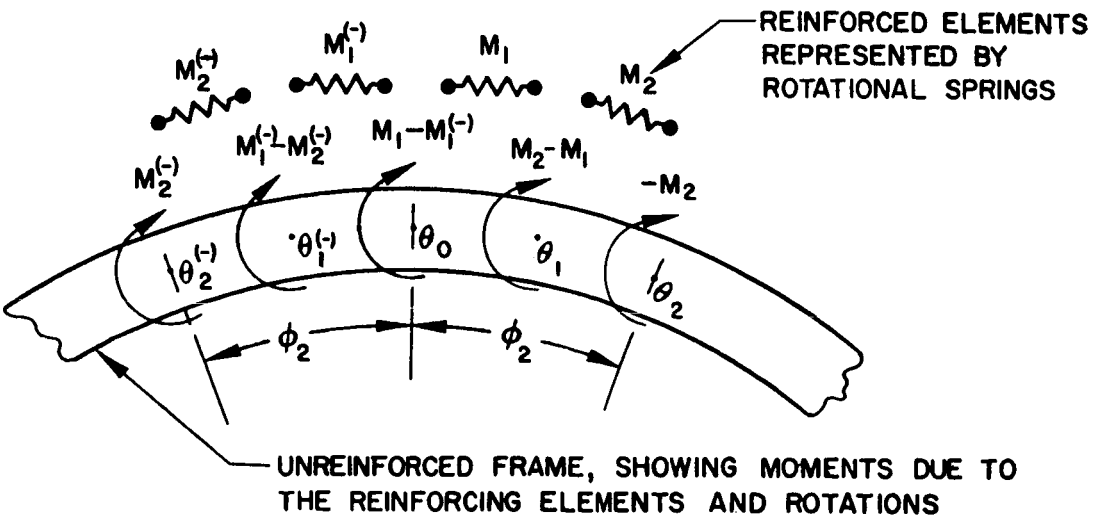

Figure 8. - Local reinforcing of the loaded frame.

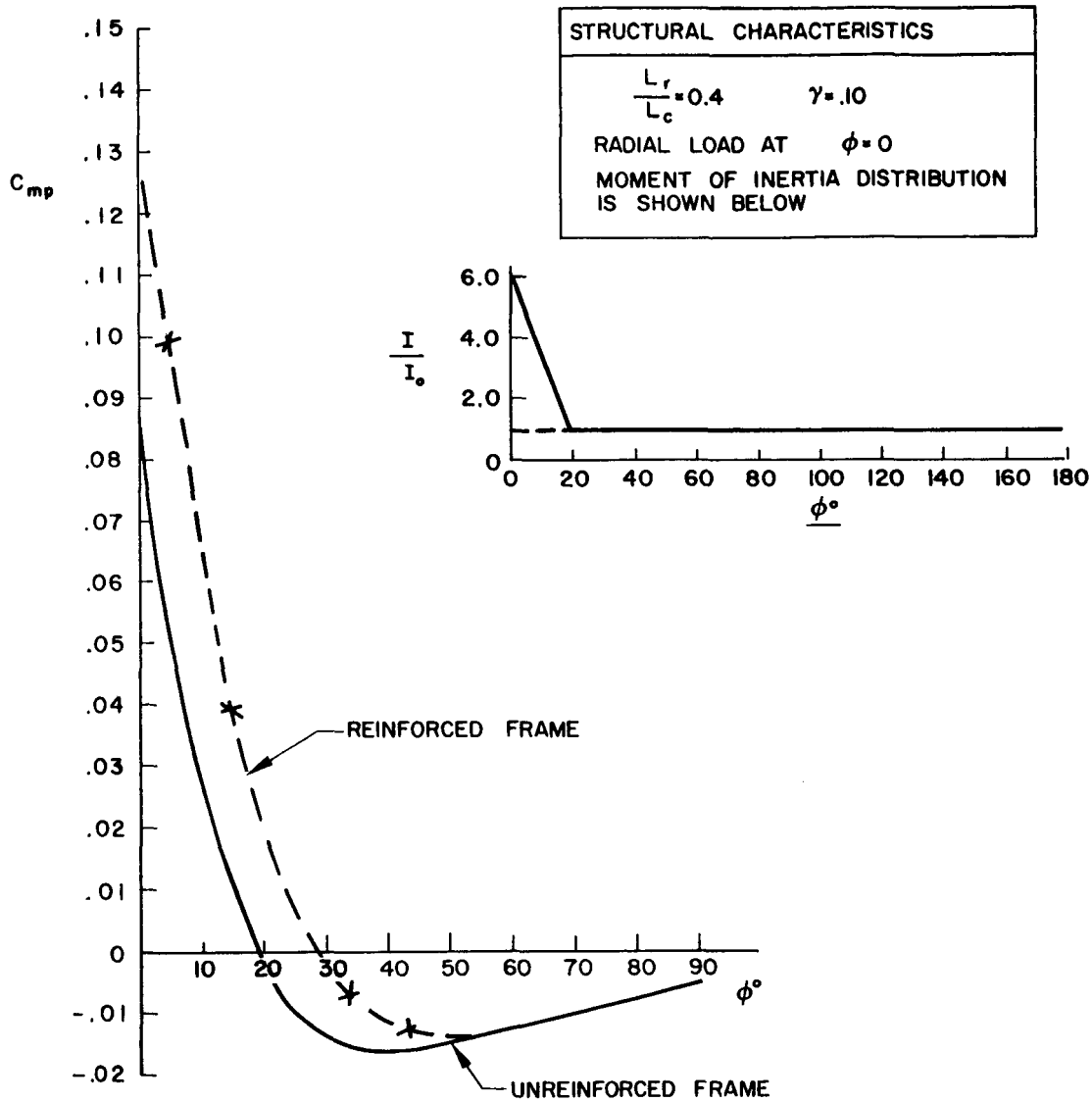

Figure 9. - An example to illustrate the effect of local reinforcing of the loaded frame.

TABLE 1

C_{qp}	L_r/L_c = .200					X = 0			
γ	.02	.03	.05	.10	.20	.30	.50	1.00	3.00
$\phi°$									
0	0	0	0	0	0	0	0	0	0
5	6.89990	5.33810	3.77393	2.27369	1.32156	.94805	.61504	.33389	.12068
10	6.68144	5.48947	4.15172	2.70018	1.66711	1.23060	.82237	.46013	.17111
15	2.47385	2.54374	2.36032	1.88063	1.30936	1.02314	.72323	.42726	.16683
20	.58099	.99406	1.25367	1.24360	1.00548	.83218	.62172	.38704	.15823
25	.77997	.87448	.97779	.98636	.84329	.72054	.55736	.35970	.15207
30	.17131	.27264	.42878	.57411	.58091	.53124	.43812	.29999	.13339
35	-.56119	-.34478	-.08619	.18871	.32336	.33870	.31114	.23250	.11059
40	-.13774	-.11576	-.03587	.11338	.22298	.24830	.24197	.19106	.09522
45	.17085	.07212	.02778	.07090	.14560	.17290	.18003	.15125	.07938
50	-.29625	-.25415	-.19919	-.09676	.01377	.06237	.09646	.09939	.05874
55	-.34632	-.28963	-.23396	-.14920	-.05089	-.00106	.04168	.06134	.04216
60	.07319	-.00079	-.06156	-.08321	-.04727	-.01616	.01706	.03832	.03023
65	-.05701	-.08789	-.11583	-.12358	-.08992	-.05941	-.02301	.00786	.01563
70	-.37321	-.30419	-.24864	-.19852	-.14407	-.10770	-.06445	-.02273	.00095
75	-.13693	-.14295	-.14973	-.15223	-.13237	-.10955	-.07623	-.03770	-.00843
80	.03737	-.02358	-.07611	-.11658	-.12234	-.11037	-.08569	-.05061	-.01693
85	-.25379	-.22313	-.19823	-.17926	-.15913	-.14064	-.11125	-.07060	-.02751
90	-.29424	-.25134	-.21546	-.18791	-.16659	-.14974	-.12257	-.08244	-.03502
100	-.09250	-.11219	-.12868	-.14170	-.14494	-.13970	-.12422	-.09254	-.04427
110	-.14005	-.14285	-.14486	-.14605	-.14472	-.14018	-.12771	-.09962	-.05065
120	-.20948	-.18651	-.16706	-.15145	-.14214	-.13633	-.12499	-.10001	-.05283
130	-.00549	-.04199	-.07243	-.09564	-.10647	-.10834	-.10490	-.08857	-.04916
140	-.23825	-.19518	-.15886	-.13011	-.11449	-.10800	-.09924	-.08171	-.04527
150	.05136	.01026	-.02416	-.05066	-.06356	-.06709	-.06743	-.05968	-.03481
160	-.15634	-.12413	-.09698	-.07557	-.05412	-.05973	-.05467	-.04551	-.02580
170	.02818	.01065	-.00404	-.01538	-.02096	-.02259	-.02310	-.02099	-.01250
180	0	0	0	0	0	0	0	0	0

TABLE 2

C_{qp}	L_r/L_c = .400					X = 0			
γ	.02	.03	.05	.10	.20	.30	.50	1.00	3.00
$\phi°$									
0	0	0	0	0	0	0	0	0	0
5	4.51671	3.42368	2.37307	1.40491	.80957	.57968	.37606	.20461	.07423
10	4.87347	3.89257	2.85927	1.80753	1.09730	.80553	.53639	.29975	.11152
15	2.61579	2.40708	2.02899	1.47094	.98458	.75510	.52539	.30655	.11857
20	1.26983	1.40501	1.38578	1.15862	.85359	.68251	.49482	.30039	.12032
25	.98419	1.06686	1.08625	.96958	.75862	.62467	.46693	.29226	.12034
30	.36461	.50313	.62913	.67169	.58948	.50943	.39896	.26089	.11151
35	-.21782	-.01117	.20545	.37803	.40943	.38075	.31816	.22021	.09852
40	-.10816	-.02437	.10321	.24642	.30364	.29732	.26085	.18878	.08765
45	.00582	-.00279	.04468	.14476	.21056	.21970	.20431	.15571	.07537
50	-.25188	-.20866	-.13061	-.00422	.09478	.12567	.13611	.11524	.05989
55	-.27849	-.24262	-.18413	-.07926	.01944	.05849	.08309	.08125	.04599
60	-.05355	-.09652	-.11495	-.08042	-.01414	.01988	.04696	.05502	.03421
65	-.11457	-.13837	-.15049	-.12402	-.06382	-.02822	.00542	.02574	.02110
70	-.27570	-.24596	-.22020	-.17653	-.11278	-.07420	-.03417	-.00258	.00812
75	-.15033	-.15932	-.16864	-.16145	-.12291	-.09244	-.05611	-.02181	-.00189
80	-.05755	-.09460	-.12846	-.14731	-.12912	-.10620	-.07416	-.03863	-.01107
85	-.20878	-.19523	-.18781	-.18002	-.15508	-.13132	-.09773	-.05759	-.02082
90	-.22995	-.20840	-.19387	-.18357	-.16324	-.14283	-.11179	-.07102	-.02852
100	-.12271	-.13365	-.14434	-.15543	-.15453	-.14458	-.12311	-.08693	-.03936
110	-.14452	-.14581	-.14737	-.15093	-.15091	-.14472	-.12854	-.09622	-.04648
120	-.17495	-.16252	-.15232	-.14580	-.14267	-.13803	-.12562	-.09771	-.04927
130	-.06104	-.08048	-.09621	-.10864	-.11560	-.11604	-.11004	-.08952	-.04706
140	-.17317	-.14999	-.13075	-.11595	-.10900	-.10577	-.09879	-.08059	-.04294
150	-.01109	-.03312	-.05103	-.06447	-.07156	-.07356	-.07230	-.06166	-.03401
160	-.10762	-.09028	-.07595	-.06475	-.05916	-.05716	-.05365	-.04495	-.02464
170	.00156	-.00784	-.01551	-.02124	-.02415	-.02509	-.02505	-.02184	-.01232
180	0	0	0	0	0	0	0	0	0

TABLE 3

	C_{qp}			$L_r/L_c = 1.000$			X = 0		
φ	.02	.03	.05	.10	.20	.30	.50	1.00	3.00
$\phi°$									
0	0	0	0	0	0	0	0	0	0
5	2.39106	1.77060	1.19763	.69092	.39048	.27701	.17782	.09544	.03398
10	2.89010	2.22985	1.57791	.95778	.56359	.40757	.26687	.14607	.05291
15	2.06531	1.73855	1.34387	.89386	.56260	.41947	.28317	.15959	.05925
20	1.42110	1.31082	1.10695	.80399	.53874	.41299	.28652	.16567	.06283
25	1.11617	1.07078	.95049	.73242	.51419	.40275	.28551	.16649	.06499
30	.65135	.70144	.69365	.59261	.44646	.36049	.26314	.15949	.06285
35	.21954	.34603	.43224	.43735	.36331	.30498	.23075	.14434	.05829
40	.11002	.20863	.29729	.33706	.30158	.26118	.20351	.13068	.05387
45	.04568	.10950	.18636	.24444	.23921	.21482	.17307	.11441	.04822
50	-.13380	-.05641	.03979	.13280	.16433	.15843	.13522	.09355	.04073
55	-.18996	-.12893	-.04390	.05397	.10425	.11071	.10147	.07398	.03338
60	-.12211	-.10848	-.06416	.00992	.06110	.07350	.07321	.05655	.02649
65	-.15805	-.14942	-.11419	-.04511	.01288	.03254	.04213	.03723	.01878
70	-.22754	-.20653	-.16746	-.09733	-.03279	-.00678	.01175	.01795	.01093
75	-.17534	-.17738	-.16315	-.11612	-.06007	-.03358	-.01118	.00221	.00416
80	-.13434	-.15244	-.15678	-.12951	-.08265	-.05677	-.03180	-.01242	-.00230
85	-.19285	-.19205	-.18574	-.15660	-.10990	-.08241	-.05357	-.02754	-.00892
90	-.19809	-.19462	-.18964	-.16755	-.12681	-.10035	-.07025	-.03993	-.01460
100	-.14720	-.15647	-.16583	-.16476	-.14157	-.12077	-.09247	-.05817	-.02350
110	-.14931	-.15274	-.15853	-.16148	-.14792	-.13166	-.10601	-.07034	-.02979
120	-.15366	-.14998	-.14970	-.15159	-.14406	-.13198	-.10994	-.07557	-.03298
130	-.09717	-.10589	-.11481	-.12491	-.12632	-.11957	-.10304	-.07312	-.03273
140	-.13146	-.12197	-.11540	-.11370	-.11220	-.10662	-.09287	-.06585	-.03030
150	-.05151	-.06072	-.06871	-.07733	-.08248	-.08090	-.07255	-.05348	-.02467
160	-.07629	-.06902	-.06337	-.06060	-.06066	-.05868	-.05233	-.03859	-.01785
170	-.01566	-.01957	-.02279	-.02607	-.02846	-.02830	-.02593	-.01947	-.00911
180	0	0	0	0	0	0	0	0	0

TABLE 4

C_{mp}	L_r/L_c = .200						X = 0		
γ	.02	.03	.05	.10	.20	.30	.50	1.00	3.00
φ°									
0	.04625	.05357	.06461	.08332	.10660	.12213	.14501	.17132	.20715
5	.01410	.02012	.02963	.04649	.06820	.08294	.10296	.13035	.16520
10	.00042	.00359	.00958	.02192	.03957	.05219	.06964	.09459	.12674
15	-.00381	-.00315	-.00071	.00644	.01889	.02863	.04293	.06383	.09184
20	-.00465	-.00542	-.00552	-.00269	.00431	.01090	.02135	.03763	.06045
25	-.00414	-.00558	-.00726	-.00812	-.00565	-.00216	.00435	.01560	.03265
30	-.00329	-.00496	-.00749	-.01078	-.01224	-.01157	-.00689	-.00267	.00825
35	-.00285	-.00445	-.00724	-.01196	-.01644	-.01817	-.01896	-.01756	-.01282
40	-.00267	-.00409	-.00685	-.01254	-.01894	-.02262	-.02640	-.02949	-.03066
45	-.00240	-.00371	-.00637	-.01217	-.02021	-.02539	-.03167	-.03571	-.04541
50	-.00222	-.00344	-.00594	-.01174	-.02063	-.02669	-.03514	-.04554	-.05722
55	-.00221	-.00332	-.00561	-.01121	-.02046	-.02741	-.03712	-.05026	-.06624
60	-.00211	-.00313	-.00523	-.01056	-.01983	-.02717	-.03787	-.05310	-.07264
65	-.00190	-.00288	-.00486	-.00984	-.01888	-.02633	-.03759	-.05428	-.07659
70	-.00180	-.00270	-.00451	-.00910	-.01770	-.02503	-.03647	-.05401	-.07829
75	-.00171	-.00252	-.00416	-.00833	-.01633	-.02337	-.03465	-.05249	-.07792
80	-.00149	-.00224	-.00375	-.00749	-.01482	-.02142	-.03225	-.04988	-.07569
85	-.00129	-.00196	-.00329	-.00663	-.01320	-.01925	-.02940	-.04635	-.07180
90	-.00118	-.00174	-.00288	-.00576	-.01152	-.01692	-.02616	-.04205	-.06647
100	-.00075	-.00115	-.00195	-.00394	-.00799	-.01194	-.01901	-.03174	-.05229
110	-.00045	-.00064	-.00105	-.00213	-.00443	-.00681	-.01135	-.02001	-.03486
120	-.00002	-.00006	-.00013	-.00035	-.00097	-.00179	-.00364	-.00781	-.01581
130	.00026	.00041	.00067	.00128	.00223	.00288	.00361	.00401	.00330
140	.00053	.00086	.00141	.00272	.00505	.00701	.01007	.01472	.02105
150	.00082	.00122	.00201	.00391	.00737	.01041	.01542	.02371	.03621
160	.00093	.00143	.00245	.00479	.00910	.01295	.01941	.03049	.04779
170	.00114	.00167	.00274	.00534	.01017	.01451	.02169	.03470	.05504
180	.00112	.00169	.00281	.00551	.01052	.01504	.02272	.03613	.05751

TABLE 5

C_{mp}	$L_r/L_c = .400$						$x = 0$		
γ	.02	.03	.05	.10	.20	.30	.50	1.00	3.00
$\phi°$									
0	.05459	.06261	.07441	.09380	.11719	.13246	.15259	.17919	.21158
5	.02055	.02744	.03796	.05584	.07796	.09258	.11202	.13786	.16948
10	.00280	.00707	.01445	.02843	.04715	.06002	.07750	.10120	.13059
15	-.00482	-.00326	.00054	.00964	.02371	.03407	.04868	.06912	.09507
20	-.00725	-.00770	-.00696	-.00263	.00638	.01384	.02501	.04141	.06299
25	-.00711	-.00879	-.01030	-.01009	-.00598	-.00152	.00594	.01783	.03436
30	-.00597	-.00825	-.01119	-.01417	-.01443	-.01285	-.00910	-.00192	.00916
35	-.00485	-.00722	-.01085	-.01604	-.01990	-.02092	-.02069	-.01816	-.01267
40	-.00396	-.00617	-.00997	-.01648	-.02312	-.02636	-.02931	-.03120	-.03120
45	-.00322	-.00518	-.00887	-.01603	-.02468	-.02972	-.03542	-.04134	-.04656
50	-.00271	-.00440	-.00781	-.01511	-.02504	-.03145	-.03941	-.04886	-.05888
55	-.00243	-.00386	-.00690	-.01398	-.02457	-.03193	-.04165	-.05406	-.06831
60	-.00219	-.00342	-.00610	-.01274	-.02350	-.03145	-.04243	-.05719	-.07502
65	-.00195	-.00304	-.00539	-.01148	-.02203	-.03022	-.04200	-.05849	-.07918
70	-.00180	-.00275	-.00479	-.01027	-.02030	-.02846	-.04060	-.05819	-.08100
75	-.00167	-.00249	-.00426	-.00910	-.01841	-.02630	-.03840	-.05652	-.08066
80	-.00147	-.00220	-.00375	-.00797	-.01641	-.02384	-.03557	-.05365	-.07838
85	-.00128	-.00192	-.00325	-.00688	-.01437	-.02118	-.03225	-.04980	-.07437
90	-.00113	-.00168	-.00279	-.00583	-.01231	-.01839	-.02855	-.04512	-.06886
100	-.00072	-.00110	-.00183	-.00380	-.00820	-.01262	-.02044	-.03393	-.05419
110	-.00038	-.00056	-.00091	-.00188	-.00425	-.00688	-.01192	-.02127	-.03612
120	.00002	.00002	.00001	-.00005	-.00054	-.00141	-.00353	-.00818	-.01639
130	.00034	.00051	.00084	.00162	.00282	.00358	.00429	.00445	.00340
140	.00065	.00097	.00159	.00308	.00574	.00793	.01118	.01586	.02178
150	.00090	.00133	.00220	.00429	.00813	.01147	.01685	.02540	.03747
160	.00107	.00160	.00265	.00518	.00989	.01410	.02107	.03257	.04945
170	.00120	.00178	.00294	.00574	.01098	.01571	.02367	.03703	.05695
180	.00121	.00182	.00302	.00592	.01134	.01626	.02454	.03853	.05950

TABLE 6

C_{mp}	$L_r/L_c = 1.000$						X = 0		
γ	.02	.03	.05	.10	.20	.30	.50	1.00	3.00
$\phi°$									
0	.07125	.08105	.09507	.11712	.14209	.15740	.17630	.19878	.22221
5	.03490	.04381	.05682	.07770	.10173	.11657	.13496	.15692	.17986
10	.01168	.01831	.02870	.04645	.06782	.08133	.09829	.11874	.14026
15	-.00179	.00208	.00905	.02246	.03997	.05148	.06624	.08434	.10363
20	-.00873	-.00746	-.00396	.00465	.01759	.02665	.03865	.05375	.07012
25	-.01147	-.01231	-.01193	-.00804	.00006	.00641	.01528	.02690	.03984
30	-.01174	-.01410	-.01624	-.01661	-.01327	-.00971	-.00415	.00370	.01286
35	-.01083	-.01409	-.01805	-.02197	-.02303	-.02219	-.01995	-.01598	-.01079
40	-.00943	-.01309	-.01820	-.02488	-.02980	-.03149	-.03244	-.03231	-.03114
45	-.00790	-.01160	-.01731	-.02597	-.03410	-.03804	-.04195	-.04549	-.04823
50	-.00649	-.00999	-.01585	-.02575	-.03639	-.04226	-.04880	-.05571	-.06214
55	-.00532	-.00847	-.01414	-.02463	-.03708	-.04451	-.05329	-.06319	-.07298
60	-.00434	-.00708	-.01234	-.02290	-.03652	-.04512	-.05571	-.06815	-.08088
65	-.00353	-.00586	-.01039	-.02082	-.03499	-.04440	-.05635	-.07082	-.08600
70	-.00290	-.00483	-.00897	-.01854	-.03275	-.04259	-.05546	-.07143	-.08853
75	-.00240	-.00397	-.00749	-.01620	-.02999	-.03994	-.05327	-.07021	-.08865
80	-.00196	-.00322	-.00615	-.01387	-.02687	-.03662	-.05002	-.06737	-.08657
85	-.00159	-.00258	-.00496	-.01160	-.02354	-.03283	-.04589	-.06315	-.08253
90	-.00128	-.00203	-.00389	-.00945	-.02008	-.02869	-.04107	-.05775	-.07675
100	-.00069	-.00107	-.00206	-.00550	-.01314	-.01986	-.03002	-.04426	-.06093
110	-.00018	-.00027	-.00056	-.00208	-.00652	-.01093	-.01803	-.02846	-.04108
120	.00030	.00046	.00073	.00084	-.00050	-.00243	-.00601	-.01178	-.01914
130	.00071	.00108	.00181	.00328	.00475	.00523	.00527	.00454	.00303
140	.00109	.00163	.00273	.00527	.00913	.01180	.01523	.01939	.02373
150	.00138	.00207	.00346	.00683	.01259	.01707	.02342	.03189	.04148
160	.00160	.00240	.00399	.00794	.01508	.02092	.02950	.04133	.05506
170	.00174	.00260	.00433	.00862	.01659	.02326	.03324	.04719	.06357
180	.00178	.00266	.00443	.00884	.01709	.02405	.03450	.04918	.06647

TABLE 7

	C_{sp}			L_r/L_c = .200			$\bar{x}$ = 0		
γ	.02	.03	.05	.10	.20	.30	.50	1.00	3.00
$\phi°$									
0	-.50000	-.50000	-.50000	-.50000	-.50000	-.50000	-.50000	-.50000	-.50000
5	-.24639	-.27384	-.30655	-.34667	-.38129	-.39888	-.41821	-.43931	-.46098
10	-.08626	-.11989	-.16373	-.22298	-.27866	-.30845	-.34225	-.38029	-.42040
15	-.02232	-.04490	-.08042	-.13744	-.19878	-.23419	-.27622	-.32558	-.37957
20	.00001	-.01107	-.03416	-.08021	-.13807	-.17440	-.21974	-.27553	-.33902
25	.00982	.00493	-.00868	-.04263	-.09265	-.12689	-.17194	-.23013	-.29913
30	.00803	.00739	.00143	-.02049	-.06022	-.09029	-.13225	-.18942	-.26029
35	.00255	.00449	.00377	-.00818	-.03739	-.06229	-.09942	-.15304	-.22270
40	.00249	.00416	.00518	-.00051	-.02081	-.04051	-.07205	-.12046	-.18649
45	.00317	.00411	.00555	.00385	-.00905	-.02377	-.04938	-.09142	-.15188
50	.00067	.00199	.00419	.00559	-.00106	-.01114	-.03074	-.06569	-.11902
55	.00017	.00142	.00368	.00674	.00478	-.00129	-.01524	-.04284	-.08800
60	.00227	.00279	.00442	.00795	.00928	.00653	-.00228	-.02261	-.05895
65	.00197	.00262	.00430	.00843	.01240	.01249	00837	-.00487	-.03201
70	.00060	.00176	.00384	.00858	.01462	.01708	.01711	.01059	-.00725
75	.00180	.00267	.00451	.00924	.01655	.02084	.02438	.02402	.01527
80	.00283	.00347	.00513	.00982	.01804	.02376	.03029	.03550	.03546
85	.00158	.00270	.00477	.00987	.01894	.02585	.03491	.04511	.05325
90	.00140	.00263	.00483	.01007	.01965	.02743	.03853	.05303	.06865
100	.00247	.00342	.00543	.01056	.02049	.02926	.04310	.06413	.09216
110	.00213	.00317	.00524	.01036	.02026	.02933	.04446	.06941	.10607
120	.00168	.00277	.00483	.00975	.01918	.02797	.04316	.06955	.11074
130	.00235	.00308	.00472	.00899	.01743	.02544	.03962	.06521	.10686
140	.00090	.00187	.00356	.00744	.01476	.02167	.03406	.05695	.09535
150	.00184	.00224	.00328	.00610	.01174	.01716	.02701	.04559	.07744
160	.00035	.00092	.00187	.00401	.00800	.01178	.01866	.03174	.05450
180	0	0	0	0	0	0	0	0	0

TABLE 8

C_{sp}	L_r/L_c = .400						X = 0		
γ	.02	.03	.05	.10	.20	.30	.50	1.00	3.00
$\phi°$									
0	-.50000	-.50000	-.50000	-.50000	-.50000	-.50000	-.50000	-.50000	-.50000
5	-.28619	-.31028	-.33818	-.37154	-.39982	-.41411	-.42978	-.44689	-.46437
10	-.13341	-.16644	-.20753	-.26047	-.30842	-.33361	-.36193	-.39356	-.42649
15	-.05077	-.07843	-.11750	-.17438	-.23127	-.26290	-.29969	-.34210	-.38745
20	-.00963	-.02790	-.05845	-.11007	-.16797	-.20229	-.24376	-.29331	-.34788
25	.00996	-.00029	-.02135	-.06357	-.11728	-.15139	-.19436	-.24770	-.30833
30	.01408	.01046	-.00138	-.03219	-.07815	-.10979	-.15157	-.20564	-.26927
35	.01129	.01221	.00777	-.01200	-.04860	-.07629	-.11487	-.16718	-.23106
40	.00934	.01192	.01189	.00090	-.02641	-.04947	-.08357	-.13220	-.19399
45	.00744	.01034	.01275	.00846	-.01020	-.02836	-.05716	-.10065	-.15833
50	.00424	.00736	.01130	.01211	.00120	-.01206	-.03512	-.07240	-.12432
55	.00264	.00539	.00973	.01378	.00924	.00053	-.01675	-.04722	-.09213
60	.00290	.00482	.00872	.01446	.01488	.01020	-.00154	-.02491	-.06192
65	.00230	.00388	.00746	.01423	.01854	.01741	.01089	-.00534	-.03386
70	.00136	.00291	.00629	.01359	.02084	.02272	.02096	.01169	-.00806
75	.00191	.00310	.00597	.01317	.02237	.02667	.02909	.02638	.01540
80	.00245	.00338	.00585	.01277	.02326	.02948	.03550	.03885	.03643
85	.00183	.00294	.00541	.01220	.02358	.03132	.04040	.04924	.05497
90	.00176	.00291	.00529	.01182	.02365	.03249	.04406	.05772	.07100
100	.00235	.00336	.00548	.01137	.02321	.03326	.04823	.06938	.09545
110	.00217	.00322	.00531	.01078	.02206	.03234	.04891	.07469	.10988
120	.00188	.00294	.00497	.01001	.02033	.03015	.04681	.07448	.11470
130	.00213	.00295	.00468	.00909	.01812	.02693	.04247	.06952	.11065
140	.00124	.00213	.00376	.00762	.01524	.02271	.03622	.06053	.09871
150	.00156	.00207	.00321	.00612	.01199	.01781	.02852	.04831	.08014
160	.00060	.00111	.00202	.00413	.00819	.01220	.01964	.03359	.05639
170	.00058	.00075	.00114	.00216	.00420	.00623	.01002	.01722	.02910
180	0	0	0	0	0	0	0	0	0

TABLE 9

C_{sp}	$L_r/L_c = 1.000$						X = 0		
γ	.02	.03	.05	.10	.20	.30	.50	1.00	3.00
$\phi°$									
0	-.50000	-.50000	-.50000	-.50000	-.50000	-.50000	-.50000	-.50000	-.50000
5	-.33590	-.35557	-.37780	-.40370	-.42511	-.43569	-.44705	-.45690	-.47000
10	-.20324	-.23579	-.27004	-.31447	-.35263	-.37230	-.39347	-.41591	-.43714
15	-.11171	-.14334	-.18388	-.23741	-.28665	-.31234	-.34132	-.37234	-.40216
20	-.05174	-.07905	-.11741	-.17277	-.22745	-.25740	-.29148	-.32900	-.36564
25	-.01431	-.03521	-.06786	-.11592	-.17556	-.20741	-.24461	-.28649	-.32612
30	.00549	-.00822	-.03313	-.07822	-.13112	-.16295	-.20122	-.24538	-.29011
35	.01409	.00694	-.00991	-.04613	-.09366	-.12393	-.16150	-.20603	-.25206
40	.01738	.01508	.00524	-.02183	-.06245	-.09002	-.12545	-.16870	-.21437
45	.01727	.01652	.01424	-.00405	-.03690	-.06095	-.09311	-.13363	-.17742
50	.01480	.01817	.01864	.00836	-.01641	-.03638	-.06439	-.10098	-.14156
55	.01222	.01674	.02035	.01679	-.00016	-.01582	-.03909	-.07089	-.10710
60	.01028	.01503	.02050	.02223	.01248	.00119	-.01704	-.04330	-.07431
65	.00818	.01286	.01943	.02528	.02202	.01497	.00194	-.01836	-.04346
70	.00628	.01070	.01776	.02662	.02900	.02595	.01606	.00395	-.01476
75	.00534	.00919	.01614	.02692	.03395	.03454	.03159	.02367	.01161
80	.00471	.00799	.01454	.02644	.03722	.04104	.04270	.04085	.03549
85	.00386	.00676	.01289	.02536	.03906	.04571	.05159	.05552	.05675
90	.00341	.00593	.01152	.02405	.03989	.04887	.05846	.06777	.07530
100	.00317	.00503	.00949	.02112	.03920	.05150	.06701	.08535	.10405
110	.00283	.00436	.00793	.01812	.03641	.05037	.06958	.09434	.12155
120	.00251	.00382	.00673	.01530	.03239	.04660	.06736	.09565	.12808
130	.00239	.00346	.00578	.01271	.02768	.04100	.06136	.09024	.12436
140	.00177	.00274	.00467	.01013	.02249	.03406	.05237	.07913	.11144
150	.00162	.00230	.00370	.00769	.01709	.02625	.04115	.06343	.09076
160	.00092	.00145	.00243	.00512	.01146	.01780	.02830	.04423	.06400
170	.00056	.00081	.00129	.00259	.00577	.00900	.01441	.02271	.03306
180	0	0	0	0	0	0	0	0	0

TABLE 10

C_{fp}	L_r/L_c = .200					X = 0			
γ	.02	.03	.05	.10	.20	.30	.50	1.00	3.00
$\phi°$									
0	-3.12410	-2.75396	-2.32431	-1.81277	-1.38370	-1.16951	-.93684	-.68560	-.43015
5	-2.47917	-2.26713	-1.99425	-1.63142	-1.29584	-1.11815	-.91798	-.69420	-.45966
10	-1.19635	-1.25565	-1.26622	-1.18914	-1.04445	-.94447	-.81546	-.65365	-.46790
15	-.39404	-.54990	-.69541	-.79489	-.79554	-.76248	-.69957	-.59993	-.46692
20	-.17153	-.26927	-.39597	-.53352	-.60334	-.61210	-.59655	-.54718	-.46169
25	-.04522	-.09901	-.19435	-.33404	-.44117	-.47872	-.49973	-.49318	-.45171
30	.06827	.02493	-.05319	-.18474	-.30894	-.36480	-.41239	-.44056	-.43819
35	.03546	.02349	-.01530	-.10836	-.22123	-.28179	-.34282	-.39437	-.42312
40	-.02066	-.00850	-.01485	-.06898	-.16099	-.21931	-.28578	-.35272	-.40619
45	.01478	.01570	.00866	-.03180	-.11037	-.16593	-.23506	-.31309	-.38685
50	.02840	.02311	.01590	-.01279	-.07635	-.12641	-.19392	-.27756	-.36612
55	-.01824	-.01086	-.00501	-.01469	-.05903	-.10069	-.16252	-.24656	-.34441
60	-.01669	-.01136	-.00635	-.01072	-.04358	-.07859	-.13477	-.21731	-.32107
65	.01967	.01272	.00741	-.00137	-.02902	-.05912	-.11005	-.18967	-.29634
70	.00224	.00051	-.00074	-.00434	-.02332	-.04727	-.09124	-.16522	-.27099
75	-.02226	-.01634	-.01142	-.00913	-.02038	-.03864	-.07557	-.14268	-.24486
80	.00404	.00176	-.00038	-.00304	-.01322	-.02829	-.05993	-.12055	-.21770
85	.01559	.00990	.00479	.00011	-.00838	-.02035	-.04667	-.10005	-.19016
90	-.01247	-.00908	-.00656	-.00506	-.00828	-.01624	-.03651	-.08158	-.16261
100	.01511	.01022	.00603	.00281	.00018	-.00394	-.01574	-.04595	-.10686
110	-.01511	-.01004	-.00558	-.00140	.00195	.00262	-.00055	-.01533	-.05284
120	.01386	.01020	.00762	.00705	.00975	.01235	.01484	.01297	-.00140
130	-.00708	-.00378	-.00026	.00467	.01175	.01755	.02601	.03654	.04504
140	.00439	.00440	.00538	.00897	.01673	.02410	.03659	.05696	.08555
150	.00521	.00522	.00638	.01065	.01987	.02878	.04463	.07303	.11850
160	-.00592	-.00221	.00220	.00940	.02094	.03140	.04999	.08447	.14278
170	.01396	.01152	.01085	.01434	.02446	.03492	.05440	.09201	.15787
180	-.01026	-.00503	.00078	.00939	.02234	.03368	.05455	.09387	.16274

TABLE 11

C_{fp}				L_r/L_c = .400			X = 0		
γ	.02	.03	.05	.10	.20	.30	.50	1.00	3.00
$\phi°$									
0	-2.58326	-2.26916	-1.91322	-1.49808	-1.15398	-.98260	-.79618	-.59439	-.38974
5	-2.17958	-1.97450	-1.72248	-1.40230	-1.11622	-.96720	-.80061	-.61558	-.42379
10	-1.30979	-1.30648	-1.25584	-1.12964	-.96854	-.86950	-.74835	-.60281	-.44223
15	-.65049	-.75359	-.83078	-.85199	-.80166	-.75135	-.67727	-.57531	-.45143
20	-.33033	-.43248	-.54011	-.62967	-.65143	-.63844	-.60386	-.54181	-.45434
25	-.12555	-.20876	-.31749	-.44041	-.51195	-.52863	-.52801	-.50281	-.45125
30	.01336	-.05373	-.15294	-.28667	-.38881	-.42731	-.45408	-.46113	-.44326
35	.03342	-.00125	-.06891	-.18397	-.29303	-.34326	-.38839	-.42054	-.43185
40	.01524	.00803	-.02789	-.11495	-.21803	-.27319	-.32987	-.38110	-.41726
45	.03216	.02929	.00690	-.06074	-.15552	-.21234	-.27639	-.34227	-.39957
50	.03342	.03299	.02120	-.02713	-.10882	-.16349	-.23021	-.30566	-.37960
55	.00274	.01146	.01359	-.01299	-.07728	-.12649	-.19166	-.27185	-.35781
60	-.00166	.00624	.01186	-.00235	-.05245	-.09584	-.15772	-.23969	-.33410
65	.01384	.01429	.01607	.00658	-.03278	-.07049	-.12796	-.20924	-.30878
70	.00269	.00473	.00872	.00649	-.02125	-.05234	-.10362	-.18138	-.28242
75	-.01128	-.00621	.00036	.00383	-.01392	-.03857	-.08304	-.15546	-.25509
80	.00189	.00173	.00368	.00589	-.00648	-.02615	-.06437	-.13072	-.22682
85	.0076	.00523	.00469	.00621	-.00163	-.01666	-.04852	-.10774	-.19807
90	-.00681	-.00486	-.00214	.00236	-.00010	-.01041	-.03560	-.08667	-.16917
100	.00779	.00513	.00345	.00461	.00564	.00152	-.01274	-.04764	-.11106
110	-.00770	-.00494	-.00232	.00188	.00732	.00853	.00422	-.01408	-.05468
120	.00769	.00590	.00492	.00637	.01207	.01618	.01917	.01567	-.00135
130	-.00304	-.00096	.00148	.00584	.01412	.02108	.03050	.04058	.04686
140	.00316	.00357	.00488	.00884	.01778	.02638	.04036	.06154	.08872
150	.00373	.00422	.00581	.01046	.02048	.03042	.04793	.07798	.12274
160	-.00196	.00058	.00399	.01043	.02194	.03303	.05316	.08975	.14782
170	.00849	.00776	.00859	.01330	.02432	.03562	.05691	.09716	.16330
180	-.00414	-.00073	.00351	.01094	.02345	.03538	.05750	.09931	.16840

TABLE 12

	C_{fp}			$L_r/L_c = 1.000$			X = 0		
γ	.02	.03	.05	.10	.20	.30	.50	1.00	3.00
$\phi°$									
0	-1.93997	-1.69346	-1.41934	-1.10560	-.85026	-.72514	-.59172	-.45315	-.32380
5	-1.74752	-1.56194	-1.34379	-1.07935	-.85321	-.73917	-.61547	-.48503	-.36182
10	-1.27623	-1.21372	-1.11289	-.95620	-.79668	-.70863	-.60824	-.49777	-.38997
15	-.84476	-.87236	-.86774	-.81032	-.71897	-.65941	-.58572	-.49919	-.41070
20	-.54721	-.61216	-.66083	-.67242	-.63714	-.60337	-.55529	-.49306	-.42520
25	-.31825	-.39834	-.47809	-.53985	-.55174	-.54147	-.51789	-.47999	-.43365
30	-.14851	-.23047	-.32453	-.41895	-.46779	-.47769	-.47630	-.46157	-.43659
35	-.06074	-.12681	-.21466	-.32010	-.39216	-.41727	-.43411	-.43981	-.43474
40	-.01740	-.06308	-.13578	-.23921	-.32426	-.36040	-.39186	-.41526	-.42840
45	.01849	-.01387	-.07324	-.17041	-.26236	-.30646	-.34961	-.38820	-.41778
50	.03292	.01285	-.03166	-.11684	-.20895	-.25760	-.30904	-.35977	-.40344
55	.02476	.01800	-.00972	-.07815	-.16454	-.21457	-.27097	-.33065	-.38580
60	.02206	.02204	.00592	-.04755	-.12619	-.17572	-.23474	-.30080	-.36505
65	.02507	.02664	.01740	-.02364	-.09346	-.14102	-.20063	-.27062	-.34158
70	.01644	.02133	.01945	-.00853	-.06751	-.11146	-.16946	-.24080	-.31587
75	.00682	.01415	.01787	.00126	-.04660	-.08600	-.14084	-.21138	-.28820
80	.00897	.01427	.01897	.00949	-.02875	-.06342	-.11420	-.18231	-.25885
85	.00891	.01275	.01799	.01435	-.01470	-.04426	-.09001	-.15406	-.22826
90	.00112	.00613	.01329	.01554	-.00441	-.02850	-.06836	-.12686	-.19681
100	.00512	.00666	.01154	.01806	.01136	-.00284	-.03043	-.07526	-.13239
110	-.00190	.00079	.00615	.01598	.01975	.01465	-.00016	-.02869	-.06840
120	.00435	.00456	.00725	.01608	.02569	.02770	.02452	.01279	-.00717
130	.00009	.00171	.00502	.01432	.02836	.03626	.04360	.04829	.04886
140	.00283	.00374	.00619	.01445	.03052	.04262	.05855	.07786	.09773
150	.00324	.00425	.00667	.01449	.03175	.04688	.06956	.10107	.13765
160	.00104	.00297	.00614	.01419	.03229	.04949	.07706	.11773	.16719
170	.00541	.00603	.00816	.01524	.03316	.05135	.08168	.12789	.18537
180	.00026	.00262	.00618	.01427	.03278	.05151	.08293	.13115	.19146

TABLE 13

C_{vp}	L_r/L_c = .200					X = 0			
γ	.02	.03	.05	.10	.20	.30	.50	1.00	3.00
$\phi°$									
0	0	0	0	0	0	0	0	0	0
5	.00631	.00601	.00559	.00493	.00415	.00365	.00298	.00209	.00098
10	.01173	.01128	.01059	.00943	.00800	.00705	.00578	.00407	.00191
15	.01590	.01543	.01464	.01321	.01132	.01003	.00826	.00584	.00275
20	.01888	.01846	.01769	.01616	.01400	.01247	.01034	.00735	.00347
25	.02083	.02046	.01976	.01826	.01599	.01432	.01194	.00854	.00405
30	.02181	.02151	.02091	.01951	.01726	.01555	.01304	.00939	.00448
35	.02197	.02173	.02121	.01996	.01784	.01616	.01364	.00988	.00475
40	.02142	.02122	.02079	.01971	.01778	.01619	.01375	.01003	.00485
45	.02025	.02008	.01973	.01882	.01712	.01567	.01340	.00984	.00479
50	.01853	.01840	.01812	.01738	.01594	.01467	.01263	.00935	.00458
55	.01637	.01627	.01606	.01549	.01432	.01325	.01148	.00857	.00423
60	.01387	.01380	.01365	.01323	.01234	.01149	.01003	.00755	.00376
65	.01110	.01106	.01096	.01070	.01008	.00945	.00833	.00633	.00319
70	.00816	.00814	.00810	.00797	.00761	.00721	.00643	.00496	.00253
75	.00512	.00513	.00514	.00514	.00503	.00485	.00441	.00348	.00182
80	.00208	.00211	.00217	.00229	.00241	.00243	.00233	.00194	.00106
85	-.00090	-.00084	-.00074	-.00052	-.00019	.00002	.00024	.00039	.00030
90	-.00374	-.00367	-.00353	-.00320	-.00269	-.00230	-.00179	-.00114	-.00046
100	-.00877	-.00867	-.00846	-.00799	-.00717	-.00650	-.00548	-.00395	-.00188
110	-.01261	-.01248	-.01224	-.01167	-.01065	-.00978	-.00840	-.00620	-.00303
120	-.01498	-.01484	-.01459	-.01397	-.01285	-.01188	-.01029	-.00769	-.00381
130	-.01574	-.01561	-.01536	-.01474	-.01363	-.01265	-.01103	-.00831	-.00415
140	-.01491	-.01479	-.01456	-.01401	-.01299	-.01209	-.01056	-.00801	-.00403
150	-.01262	-.01252	-.01234	-.01188	-.01104	-.01029	-.00903	-.00687	-.00347
160	-.00913	-.00907	-.00893	-.00861	-.00801	-.00748	-.00657	-.00501	-.00254
170	-.00479	-.00475	-.00468	-.00452	-.00421	-.00393	-.00346	-.00264	-.00134
180	0	0	0	0	0	0	0	0	0

TABLE 14

	C_{vp}			L_r/L_c = .400			X = 0		
γ	.02	.03	.05	.10	.20	.30	.50	1.00	3.00
$\phi°$									
0	0	0	0	0	0	0	0	0	0
5	.00796	.00746	.00679	.00581	.00474	.00409	.00327	.00223	.00101
10	.01479	.01399	.01286	.01111	.00914	.00792	.00635	.00435	.00197
15	.01994	.01907	.01776	.01556	.01295	.01127	.00909	.00625	.00283
20	.02346	.02268	.02138	.01902	.01602	.01402	.01137	.00786	.00358
25	.02555	.02491	.02374	.02144	.01828	.01610	.01314	.00913	.00419
30	.02639	.02591	.02494	.02283	.01972	.01748	.01436	.01005	.00463
35	.02619	.02585	.02509	.02326	.02035	.01815	.01502	.01058	.00490
40	.02517	.02493	.02436	.02284	.02023	.01816	.01513	.01074	.00501
45	.02345	.02329	.02288	.02168	.01943	.01756	.01474	.01054	.00495
50	.02117	.02106	.02078	01989	.01803	.01641	.01389	.01001	.00474
55	.01844	.01838	.01821	.01758	.01613	.01480	.01262	.00918	.00438
60	.01539	.01536	.01527	.01488	.01384	.01279	.01101	.00809	.00389
65	.01210	.01209	.01208	.01189	.01123	.01048	.00913	.00679	.00330
70	.00865	.00868	.00872	.00872	.00841	.00796	.00703	.00532	.00262
75	.00517	.00521	.00531	.00546	.00547	.00530	.00481	.00373	.00186
80	.00171	.00178	.00191	.00220	.00250	.00259	.00252	.00208	.00110
85	-.00165	-.00156	-.00138	-.00098	-.00042	-.00010	.00022	.00041	.00031
90	-.00482	-.00471	-.00450	-.00400	-.00322	-.00269	-.00201	-.00122	-.00048
100	-.01037	-.01023	-.00997	-.00932	-.00821	-.00733	-.00605	-.00423	-.00194
110	-.01454	-.01438	-.01406	-.01335	-.01204	-.01094	-.00923	-.00664	-.00313
120	-.01705	-.01689	-.01658	-.01582	-.01443	-.01322	-.01129	-.00824	-.00394
130	-.01778	-.01762	-.01732	-.01659	-.01524	-.01404	-.01208	-.00889	-.00429
140	-.01676	-.01662	-.01635	-.01569	-.01447	-.01338	-.01157	-.00858	-.00417
150	-.01413	-.01402	-.01380	-.01327	-.01227	-.01133	-.00987	-.00735	-.00359
160	-.01020	-.01013	-.00997	-.00959	-.00889	-.00825	-.00716	-.00536	-.00262
170	-.00534	-.00530	-.00522	-.00503	-.00466	-.00433	-.00377	-.00282	-.00138
180	0	0	0	0	0	0	0	0	0

TABLE 15

	Σ_{vp}			$L_r/L_c = 1.000$			X = 0		
γ	.02	.03	.05	.10	.20	.30	.50	1.00	3.00
$\phi°$									
0	0	0	0	0	0	0	0	0	0
5	.01381	.01261	.01107	.00895	.00684	.00565	.00426	.00268	.00109
10	.02591	.02385	.02111	.01721	.01323	.01096	.00829	.00523	.00214
15	.03536	.03289	.02944	.02430	.01885	.01568	.01189	.00752	.00308
20	.04197	.03947	.03578	.02994	.02347	.01961	.01494	.00949	.00390
25	.04587	.04361	.04003	.03400	.02697	.02265	.01734	.01106	.00456
30	.04735	.04547	.04227	.03646	.02928	.02473	.01904	.01220	.00505
35	.04676	.04534	.04266	.03738	.03041	.02584	.02001	.01289	.00536
40	.04453	.04354	.04145	.03689	.03042	.02601	.02026	.01313	.00548
45	.04099	.04037	.03886	.03513	.02938	.02529	.01984	.01294	.00543
50	.03644	.03614	.03516	.03230	.02742	.02378	.01878	.01233	.00520
55	.03117	.03111	.03059	.02859	.02467	.02156	.01717	.01135	.00481
60	.02542	.02554	.02540	.02420	.02126	.01875	.01507	.01005	.00429
65	.01938	.01962	.01980	.01930	.01736	.01548	.01258	.00847	.00364
70	.01323	.01356	.01397	.01409	.01310	.01186	.00979	.00668	.00290
75	.00713	.00751	.00810	.00875	.00862	.00803	.00679	.00474	.00209
80	.00122	.00163	.00234	.00341	.00408	.00409	.00369	.00271	.00124
85	-.00440	-.00397	-.00319	-.00177	-.00040	.00017	.00057	.00065	.00037
90	-.00962	-.00918	-.00835	-.00668	-.00471	-.00363	-.00248	-.00138	-.00050
100	-.01851	-.01808	-.01721	-.01524	-.01239	-.01048	-.00805	-.00514	-.00212
110	-.02494	-.02453	-.02368	-.02162	-.01829	-.01583	-.01248	-.00817	-.00344
120	-.02859	-.02821	-.02742	-.02543	-.02196	-.01924	-.01537	-.01020	-.00434
130	-.02936	-.02902	-.02832	-.02652	-.02321	-.02049	-.01652	-.01105	-.00474
140	-.02737	-.02708	-.02649	-.02496	-.02204	-.01957	-.01587	-.01069	-.00460
150	-.02291	-.02268	-.02222	-.02103	-.01869	-.01666	-.01357	-.00917	-.00396
160	-.01646	-.01630	-.01593	-.01516	-.01353	-.01209	-.00988	-.00670	-.00290
170	-.00859	-.00851	-.00833	-.00793	-.00710	-.00635	-.00520	-.00353	-.00153
180	0	0	0	0	0	0	0	0	0

TABLE 16

C_{wp}	L_r/L_c = .200						X = 0		
γ	.02	.03	.05	.10	.20	.30	.50	1.00	3.00
$\phi°$									
0	.07423	.07055	.06540	.05742	.04819	.04228	.03452	.02419	.01128
5	.06849	.06574	.06161	.05473	.04634	.04081	.03344	.02352	.01100
10	.05509	.05418	.05218	.04777	.04138	.03683	.03049	.02165	.01021
15	.04068	.04101	.04071	.03869	.03457	.03122	.02623	.01889	.00902
20	.02804	.02871	.02926	.02894	.02683	.02468	.02113	.01551	.00753
25	.01661	.01733	.01827	.01910	.01867	.01764	.01554	.01172	.00582
30	.00629	.00699	.00810	.00965	.01055	.01050	.00974	.00771	.00399
35	-.00244	-.00189	-.00085	.00101	.00284	.00359	.00401	.00367	.00210
40	-.00999	-.00957	-.00867	-.00671	-.00427	-.00289	-.00146	-.00026	.00023
45	-.01676	-.01636	-.01550	-.01351	-.01066	-.00879	-.00653	-.00398	-.00156
50	-.02242	-.02202	-.02122	-.01927	-.01619	-.01398	-.01107	-.00737	-.00323
55	-.02683	-.02650	-.02578	-.02395	-.02079	-.01838	-.01498	-.01036	-.00472
60	-.03035	-.03003	-.02936	-.02762	-.02447	-.02194	-.01822	-.01289	-.00602
65	-.03297	-.03262	-.03196	-.03030	-.02723	-.02466	-.02075	-.01492	-.00709
70	-.03442	-.03412	-.03350	-.03197	-.02904	-.02652	-.02255	-.01642	-.00790
75	-.03490	-.03464	-.03409	-.03269	-.02996	-.02753	-.02362	-.01738	-.00846
80	-.03465	-.03438	-.03386	-.03257	-.03004	-.02776	-.02399	-.01782	-.00876
85	-.03352	-.03327	-.03279	-.03161	-.02933	-.02723	-.02368	-.01774	-.00880
90	-.03150	-.03131	-.03090	-.02989	-.02788	-.02599	-.02274	-.01717	-.00859
100	-.02579	-.02563	-.02532	-.02459	-.02313	-.02173	-.01923	-.01474	-.00749
110	-.01792	-.01785	-.01770	-.01730	-.01645	-.01559	-.01397	-.01089	-.00563
120	-.00907	-.00904	-.00900	-.00888	-.00862	-.00830	-.00761	-.00611	-.00325
130	.00029	.00024	.00015	-.00005	-.00035	-.00056	-.00079	-.00090	-.00062
140	.00911	.00902	.00883	.00838	.00758	.00690	.00584	.00422	.00201
150	.01683	.01669	.01641	.01574	.01452	.01345	.01169	.00877	.00436
160	.02283	.02265	.02230	.02146	.01992	.01855	.01625	.01233	.00621
170	.02654	.02636	.02598	.02505	.02332	.02177	.01915	.01460	.00740
180	.02791	.02769	.02728	.02630	.02450	.02288	.02014	.01538	.00781

TABLE 17

	C_{wp}			L_r/L_c = .400			X = 0		
γ	.02	.03	.05	.10	.20	.30	.50	1.00	3.00
$\phi°$									
0	.09377	.08758	.07940	.06761	.05505	.04746	.03791	.02583	.01164
5	.08644	.08160	.07483	.06449	.05297	.04583	.03675	.02512	.01135
10	.06892	.06693	.06328	.05633	.04737	.04142	.03354	.02315	.01054
15	.04936	.04966	.04886	.04549	.03959	.03515	.02890	.02022	.00931
20	.03182	.03321	.03421	.03368	.03065	.02778	.02331	.01663	.00778
25	.01641	.01818	.02017	.02172	.02119	.01982	.01715	.01258	.00602
30	.00323	.00498	.00739	.01027	.01175	.01171	.01075	.00830	.00413
35	-.00734	-.00592	-.00361	-.00011	.00280	.00386	.00441	.00397	.00219
40	-.01592	-.01490	-.01291	-.00927	-.00542	-.00349	-.00164	-.00025	.00026
45	-.02318	-.02240	-.02072	-.01717	-.01275	-.01017	-.00725	-.00424	-.00160
50	-.02896	-.02837	-.02699	-.02371	-.01904	-.01601	-.01227	-.00789	-.00332
55	-.03326	-.03285	-.03178	-.02887	-.02422	-.02093	-.01659	-.01109	-.00487
60	-.03653	-.03620	-.03533	-.03279	-.02829	-.02488	-.02015	-.01381	-.00621
65	-.03881	-.03849	-.03774	-.03551	-.03127	-.02786	-.02292	-.01599	-.00732
70	-.03987	-.03959	-.03896	-.03704	-.03315	-.02985	-.02488	-.01760	-.00816
75	-.03990	-.03968	-.03915	-.03751	-.03401	-.03089	-.02602	-.01864	-.00874
80	-.03918	-.03894	-.03846	-.03704	-.03392	-.03104	-.02639	-.01910	-.00905
85	-.03756	-.03732	-.03688	-.03567	-.03295	-.03035	-.02602	-.01901	-.00910
90	-.03502	-.03484	-.03447	-.03347	-.03116	-.02888	-.02495	-.01840	-.00888
100	-.02823	-.02808	-.02781	-.02714	-.02560	-.02398	-.02103	-.01578	-.00774
110	-.01927	-.01922	-.01910	-.01879	-.01800	-.01707	-.01522	-.01165	-.00583
120	-.00938	-.00936	-.00935	-.00933	-.00922	-.00895	-.00823	-.00652	-.00337
130	.00097	.00090	.00076	.00046	-.00005	-.00040	-.00076	-.00094	-.00064
140	.01065	.01053	.01030	.00972	.00868	.00779	.00646	.00453	.00207
150	.01908	.01891	.01858	.01777	.01628	.01496	.01282	.00939	.00451
160	.02561	.02540	.02498	.02400	.02217	.02052	.01777	.01320	.00643
170	.02964	.02943	.02899	.02790	.02587	.02403	.02091	.01562	.00765
180	.03112	.03087	.03040	.02926	.02715	.02524	.02199	.01645	.00807

TABLE 18

	C_{wp}			$L_r/L_c = 1.000$				X = 0	
γ	.02	.03	.05	.10	.20	.30	.50	1.00	3.00
$\phi°$									
0	.16185	.14737	.12696	.10390	.07924	.06541	.04927	.03099	.01264
5	.15116	.13867	.12265	.09977	.07659	.06341	.04789	.03018	.01233
10	.12444	.11716	.10616	.08867	.06936	.05787	.04403	.02793	.01147
15	.09188	.08963	.08433	.07329	.05898	.04982	.03833	.02456	.01016
20	.05982	.06123	.06068	.05575	.04669	.04011	.03136	.02037	.00852
25	.03020	.03396	.03699	.03734	.03333	.02939	.02354	.01561	.00663
30	.00430	.00927	.01466	.01916	.01966	.01826	.01529	.01052	.00458
35	-.01684	-.01171	-.00520	.00216	.00638	.00725	.00700	.00532	.00247
40	-.03366	-.02899	-.02226	-.01319	-.00608	-.00325	-.00104	.00020	.00037
45	-.04695	-.04295	-.03652	-.02662	-.01740	-.01296	-.00860	-.00468	-.00166
50	-.05680	-.05359	-.04784	-.03787	-.02728	-.02160	-.01545	-.00918	-.00355
55	-.06352	-.06114	-.05631	-.04682	-.03556	-.02900	-.02144	-.01318	-.00526
60	-.06788	-.06618	-.06225	-.05358	-.04217	-.03506	-.02646	-.01661	-.00675
65	-.07020	-.06899	-.06589	-.05822	-.04709	-.03972	-.03044	-.01939	-.00797
70	-.07044	-.06967	-.06735	-.06080	-.05031	-.04294	-.03333	-.02149	-.00892
75	-.06901	-.06857	-.06691	-.06149	-.05189	-.04475	-.03511	-.02288	-.00958
80	-.06631	-.06605	-.06489	-.06052	-.05195	-.04522	-.03583	-.02356	-.00994
85	-.06232	-.06218	-.06142	-.05803	-.05059	-.04442	-.03552	-.02356	-.01001
90	-.05710	-.05708	-.05666	-.05418	-.04794	-.04244	-.03423	-.02289	-.00979
100	-.04435	-.04441	-.04439	-.04333	-.03944	-.03548	-.02910	-.01977	-.00857
110	-.02900	-.02916	-.02942	-.02945	-.02772	-.02541	-.02126	-.01472	-.00647
120	-.01270	-.01288	-.01329	-.01406	-.01418	-.01348	-.01169	-.00836	-.00376
130	.00372	.00345	.00288	.00154	-.00011	-.00087	-.00138	-.00138	-.00075
140	.01883	.01851	.01782	.01608	.01325	.01124	.00864	.00551	.00226
150	.03176	.03138	.03060	.02856	.02483	.02182	.01749	.01164	.00496
160	.04168	.04124	.04036	.03811	.03376	.03003	.02440	.01646	.00710
170	.04780	.04735	.04644	.04408	.03938	.03521	.02876	.01953	.00846
180	.04999	.04950	.04855	.04614	.04130	.03699	.03029	.02059	.00893

TABLE 19

$C_{\theta p}$	$L_r/L_c = .200$						X = 0		
γ	.02	.03	.05	.10	.20	.30	.50	1.00	3.00
$\phi°$									
0	0	0	0	0	0	0	0	0	0
5	-.11671	-.09778	-.07703	-.05429	-.03707	-.02916	-.02109	-.01299	-.00536
10	-.15806	-.13884	-.11534	-.08631	-.06173	-.04960	-.03666	-.02306	-.00970
15	-.13953	-.13182	-.11838	-.09632	-.07332	-.06059	-.04605	-.02975	-.01281
20	-.11742	-.11668	-.11118	-.09692	-.07789	-.06602	-.05147	-.03409	-.01499
25	-.10492	-.10500	-.10250	-.09328	-.07816	-.06765	-.05393	-.03652	-.01639
30	-.08760	-.08884	-.08904	-.08466	-.07404	-.06550	-.05344	-.03704	-.01697
35	-.06987	-.07221	-.07435	-.07374	-.06726	-.06082	-.05078	-.03604	-.01686
40	-.06063	-.06166	-.06316	-.06365	-.05977	-.05502	-.04690	-.03402	-.01624
45	-.05190	-.05187	-.05256	-.05339	-.05142	-.04816	-.04190	-.03107	-.01514
50	-.03867	-.03934	-.04055	-.04230	-.04216	-.04032	-.03592	-.02732	-.01362
55	-.02845	-.02914	-.03026	-.03217	-.03312	-.03236	-.02957	-.02311	-.01181
60	-.02192	-.02171	-.02196	-.02325	-.02461	-.02460	-.02313	-.01865	-.00981
65	-.01244	-.01246	-.01282	-.01419	-.01608	-.01676	-.01650	-.01394	-.00763
70	-.00218	-.00286	-.00374	-.00547	-.00787	-.00913	-.00993	-.00916	-.00535
75	.00388	.00366	.00318	.00181	-.00060	-.00219	-.00378	-.00453	-.00309
80	.00956	.00971	.00954	.00845	.00607	.00425	.00201	-.00008	-.00086
85	.01759	.01714	.01647	.01502	.01239	.01030	.00747	.00416	.00130
90	.02330	.02276	.02200	.02050	.01782	.01559	.01234	.00803	.00332
100	.03040	.03028	.02988	.02869	.02620	.02390	.02019	.01447	.00679
110	.03600	.03576	.03528	.03407	.03166	.02939	.02551	.01901	.00934
120	.03849	.03812	.03754	.03632	.03406	.03191	.02814	.02144	.01082
130	.03625	.03628	.03608	.03524	.03335	.03149	.02808	.02174	.01117
140	.03410	.03365	.03308	.03206	.03032	.02869	.02573	.02012	.01046
150	.02624	.02637	.02634	.02586	.02467	.02346	.02117	.01670	.00877
160	.01979	.01949	.01913	.01855	.01761	.01673	.01512	.01197	.00632
170	.00952	.00959	.00960	.00944	.00904	.00862	.00782	.00621	.00329
180	0	0	0	0	0	0	0	0	0

TABLE 20

$C_{\theta p}$	$L_r/L_c = .400$						X = 0		
γ	.02	.03	.05	.10	.20	.30	.50	1.00	3.00
$\phi°$									
0	0	0	0	0	0	0	0	0	0
5	-.15025	-.12237	-.09325	-.06310	-.04157	-.03209	-.02273	-.01366	-.00549
10	-.21109	-.17935	-.14323	-.10212	-.07005	-.05510	-.03977	-.02436	-.00994
15	-.19496	-.17696	-.15152	-.11636	-.08435	-.06803	-.05034	-.03157	-.01316
20	-.16439	-.15799	-.14399	-.11842	-.09042	-.07467	-.05658	-.03630	-.01543
25	-.13943	-.13809	-.13126	-.11397	-.09105	-.07682	-.05950	-.03900	-.01688
30	-.10961	-.11232	-.11180	-.10295	-.08635	-.07456	-.05912	-.03964	-.01750
35	-.08158	-.08677	-.09064	-.08874	-.07832	-.06928	-.05630	-.03865	-.01741
40	-.06521	-.06918	-.07354	-.07503	-.06915	-.06253	-.05201	-.03653	-.01678
45	-.05193	-.05427	-.05802	-.06127	-.05890	-.05449	-.04642	-.03340	-.01566
50	-.03585	-.03823	-.04218	-.04700	-.04769	-.04534	-.03973	-.02938	-.01410
55	-.02412	-.02587	-.02913	-.03419	-.03679	-.03605	-.03261	-.02486	-.01224
60	-.01700	-.01727	-.01899	-.02312	-.02658	-.02701	-.02537	-.02005	-.01016
65	-.00721	-.00739	-.00867	-.01240	-.01656	-.01798	-.01796	-.01497	-.00791
70	.00320	.00250	.00110	-.00247	-.00709	-.00928	-.01065	-.00983	-.00556
75	.00917	.00905	.00836	.00566	.00119	-.00142	-.00381	-.00485	-.00322
80	.01471	.01500	.01482	.01284	.00866	.00579	.00260	-.00006	-.00091
85	.02269	.02234	.02172	.01971	.01558	.01248	.00861	.00450	.00133
90	.02829	.02780	.02714	.02532	.02143	.01826	.01393	.00866	.00342
100	.03501	.03494	.03464	.03343	.03023	.02719	.02244	.01556	.00701
110	.04024	.04002	.03959	.03845	.03569	.03289	.02811	.02039	.00965
120	.04230	.04192	.04136	.04022	.03781	.03532	.03082	.02297	.01119
130	.03948	.03953	.03935	.03856	.03665	.03458	.03061	.02326	.01155
140	.03682	.03635	.03577	.03478	.03306	.03131	.02795	.02150	.01082
150	.02826	.02842	.02839	.02793	.02677	.02550	.02295	.01783	.00907
160	.02121	.02090	.02053	.01995	.01903	.01812	.01635	.01277	.00653
170	.01021	.01029	.01030	.01015	.00976	.00933	.00845	.00663	.00341
180	0	0	0	0	0	0	0	0	0

TABLE 21

	$C_{\theta p}$			$L_r/L_c = 1.000$			X = 0		
γ	.02	.03	.05	.10	.20	.30	.50	1.00	3.00
$\phi°$									
0	0	0	0	0	0	0	0	0	0
5	-.21951	-.17396	-.12826	-.08302	-.05227	-.03925	-.02682	-.01536	-.00580
10	-.33168	-.27157	-.20743	-.13958	-.09051	-.06889	-.04770	-.02765	-.01054
15	-.34124	-.29323	-.23565	-.16733	-.11290	-.08747	-.06162	-.03630	-.01402
20	-.31345	-.28208	-.23805	-.17616	-.12497	-.09852	-.07060	-.04224	-.01652
25	-.27520	-.25705	-.22636	-.17774	-.12936	-.10369	-.07552	-.04587	-.01816
30	-.22277	-.21729	-.20087	-.16649	-.12622	-.10304	-.07639	-.04716	-.01891
35	-.16873	-.17296	-.16885	-.14855	-.11772	-.09801	-.07406	-.04651	-.01890
40	-.12721	-.13512	-.13815	-.12851	-.10638	-.09032	-.06955	-.04443	-.01830
45	-.09175	-.10070	-.10798	-.10668	-.09259	-.08030	-.06311	-.04106	-.01716
50	-.05719	-.06713	-.07769	-.08338	-.07683	-.06836	-.05503	-.03656	-.01552
55	-.03094	-.03993	-.05128	-.06124	-.06069	-.05565	-.04606	-.03134	-.01355
60	-.01291	-.01934	-.02936	-.04106	-.04489	-.04278	-.03664	-.02566	-.01132
65	.00495	-.00006	-.00905	-.02181	-.02918	-.02968	-.02681	-.01956	-.00888
70	.02117	.01695	.00890	-.00418	-.01415	-.01685	-.01694	-.01329	-.00632
75	.03110	.02865	.02260	.01066	-.00061	-.00494	-.00750	-.00713	-.00375
80	.03928	.03820	.03396	.02351	.01167	.00612	.00148	-.00115	-.00121
85	.04901	.04796	.04443	.03502	.02288	.01636	.00994	.00460	.00127
90	.05559	.05487	.05228	.04426	.03243	.02534	.01755	.00989	.00359
100	.06267	.06284	.06198	.05693	.04677	.03939	.02994	.01881	.00761
110	.06686	.06696	.06665	.06356	.05536	.04837	.03836	.02518	.01060
120	.06684	.06671	.06651	.06467	.05843	.05226	.04256	.02871	.01236
130	.06109	.06132	.06151	.06075	.05639	.05131	.04261	.02930	.01282
140	.05492	.05453	.05423	.05358	.05044	.04642	.03906	.02722	.01204
150	.04224	.04246	.04263	.04259	.04071	.03783	.03218	.02267	.01011
160	.03078	.03047	.03022	.02996	.02873	.02681	.02294	.01626	.00729
170	.01504	.01513	.01519	.01522	.01473	.01381	.01188	.00846	.00381
180	0	0	0	0	0	0	0	0	0

TABLE 22

C_{qt}	L_r/L_c = .200						X = 0		
γ	.02	.03	.05	.10	.20	.30	.50	1.00	3.00
$\phi°$									
0	1.34644	1.16503	.95573	.70931	.50642	.40709	.30119	.18973	.07992
5	1.00851	.90550	.77381	.60083	.44389	.36242	.27234	.17414	.07431
10	.36207	.39331	.40158	.36922	.30569	.26202	.20633	.13781	.06100
15	-.03819	.04007	.11404	.16736	.17391	.16225	.13794	.09857	.04607
20	-.14569	-.09721	-.03391	.03616	.07469	.08236	.07982	.06327	.03195
25	-.20328	-.17711	-.13028	-.06086	-.00606	.01446	.02821	.03057	.01836
30	-.25319	-.23236	-.19456	-.13043	-.06906	-.04079	-.01566	.00154	.00581
35	-.22911	-.22392	-.20592	-.16176	-.10755	-.07814	-.04802	-.02156	-.00480
40	-.19250	-.19929	-.19749	-.17318	-.13047	-.10315	-.07181	-.03988	-.01374
45	-.20070	-.20182	-.19963	-.18230	-.14704	-.12185	-.09042	-.05493	-.02140
50	-.19719	-.19516	-.19280	-.18136	-.15402	-.13212	-.10249	-.06587	-.02743
55	-.16285	-.16709	-.17116	-.16912	-.15158	-.13423	-.10817	-.07271	-.03178
60	-.15187	-.15504	-.15861	-.15908	-.14728	-.13345	-.11070	-.07705	-.03494
65	-.15762	-.15464	-.15298	-.15108	-.14177	-.13044	-.11061	-.07914	-.03697
70	-.13603	-.13562	-.13590	-.13639	-.13120	-.12290	-.10663	-.07841	-.03766
75	-.11049	-.11386	-.11714	-.12037	-.11875	-.11314	-.10031	-.07567	-.03730
80	-.10998	-.10921	-.10889	-.10944	-.10801	-.10378	-.09337	-.07188	-.03621
85	-.10189	-.09938	-.09749	-.09682	-.09586	-.09290	-.08481	-.06660	-.03427
90	-.07393	-.07591	-.07774	-.07993	-.08120	-.07992	-.07441	-.05981	-.03151
100	-.05987	-.05762	-.05593	-.05531	-.05603	-.05594	-.05358	-.04484	-.02466
110	-.01781	-.02044	-.02288	-.02551	-.02833	-.02986	-.03053	-.02748	-.01615
120	-.00694	-.00513	-.00387	-.00370	-.00536	-.00707	-.00924	-.01039	-.00720
130	.02640	.02482	.02319	.02103	.01796	.01539	.01152	.00646	.00186
140	.04044	.04057	.04036	.03922	.03651	.03380	.02908	.02123	.01009
150	.05606	.05626	.05607	.05488	.05201	.04907	.04365	.03360	.01711
160	.07343	.07182	.07010	.06767	.06406	.06075	.05469	.04299	.02249
170	.07075	.07223	.07311	.07266	.07000	.06696	.06090	.04851	.02574
180	.08527	.08294	.08060	.07764	.07367	.07016	.06366	.05071	.02696

TABLE 23

C_{qt}	L_r/L_c = .400						X = 0		
γ	.02	.03	.05	.10	.20	.30	.50	1.00	3.00
$\phi°$									
0	1.08019	.92715	.75508	.55721	.39685	.31880	.23565	.14806	.06193
5	.86194	.76285	.64209	.49094	.35896	.29177	.21819	.13859	.05851
10	.41998	.42046	.39883	.34272	.27153	.22845	.17661	.11569	.05010
15	.08953	.14185	.18235	.19750	.17937	.15940	.12967	.08891	.03994
20	-.06760	-.01674	.03744	.08438	.09977	.09700	.08531	.06248	.02953
25	-.16460	-.12383	-.07022	-.00866	.02917	.03973	.04316	.03650	.01898
30	-.22707	-.19467	-.14653	-.08116	-.03022	-.01018	.00508	.01219	.00880
35	-.22908	-.21294	-.18092	-.12598	-.07338	-.04878	-.02610	-.00876	-.00036
40	-.21110	-.20859	-.19254	-.15226	-.10404	-.07809	-.05122	-.02655	-.00847
45	-.20981	-.20935	-.20000	-.16976	-.12670	-.10081	-.07163	-.04165	-.01561
50	-.19995	-.20058	-.19639	-.17587	-.13999	-.11586	-.08648	-.05348	-.02152
55	-.17345	-.17853	-.18111	-.17136	-.14451	-.12358	-.09586	-.06197	-.02612
60	-.15942	-.16398	-.16813	-.16435	-.14468	-.12696	-.10151	-.06791	-.02962
65	-.15474	-.15550	-.15757	-.15587	-.14147	-.12671	-.10386	-.07146	-.03204
70	-.13626	-.13775	-.14077	-.14239	-.13354	-.12207	-.10250	-.07242	-.03330
75	-.11596	-.11891	-.12308	-.12724	-.12302	-.11463	-.09845	-.07130	-.03355
80	-.10890	-.10918	-.11093	-.11414	-.11218	-.10606	-.09281	-.06868	-.03299
85	-.09799	-.09702	-.09742	-.09999	-.09982	-.09571	-.08531	-.06448	-.03160
90	-.07674	-.07799	-.07990	-.08368	-.08568	-.08357	-.07605	-.05880	-.02942
100	-.05620	-.05505	-.05458	-.05615	-.05886	-.05901	-.05579	-.04509	-.02350
110	-.02149	-.02295	-.02444	-.02702	-.03093	-.03285	-.03321	-.02874	-.01587
120	-.00383	-.00294	-.00246	-.00321	-.00630	-.00880	-.01135	-.01192	-.00752
130	.02441	.02346	.02240	.02061	.01708	.01397	.00962	.00466	.00099
140	.04109	.04104	.04069	.03946	.03633	.03312	.02775	.01950	.00887
150	.05684	.05681	.05645	.05517	.05208	.04878	.04271	.03196	.01562
160	.07149	.07049	.06931	.06735	.06396	.06051	.05393	.04139	.02079
170	.07351	.07417	.07433	.07338	.07049	.06720	.06054	.04709	.02399
180	.08225	.08085	.07933	.07707	.07352	.07001	.06310	.04919	.02513

TABLE 24

C_{qt}	L_r/L_c = 1.000					X = 0			
γ	.02	.03	.05	.10	.20	.30	.50	1.00	3.00
$\phi°$									
0	.76688	.64852	.51847	.37263	.25744	.20254	.14528	.08723	.03427
5	.65309	.56474	.46218	.34040	.23934	.18974	.13708	.08205	.03271
10	.40764	.37970	.33448	.26501	.19594	.15867	.11695	.07194	.02880
15	.18818	.20391	.20509	.18308	.14616	.12213	.09267	.05846	.02385
20	.04011	.07321	.09930	.10940	.09823	.08587	.06783	.04427	.01853
25	-.07043	-.03081	.00926	.04208	.05208	.05012	.04276	.02962	.01292
30	-.14903	-.10923	-.06326	-.01624	.00985	.01658	.01867	.01523	.00731
35	-.18500	-.15359	-.11164	-.06088	-.02539	-.01241	-.00287	.00197	.00203
40	-.19752	-.17650	-.14271	-.09433	-.05427	-.03704	-.02179	-.01003	-.00287
45	-.20531	-.19098	-.16415	-.11990	-.07799	-.05791	-.03829	-.02076	-.00734
50	-.20159	-.19330	-.17398	-.13633	-.09560	-.07421	-.05176	-.02985	-.01123
55	-.18590	-.18410	-.17307	-.14410	-.10714	-.08584	-.06202	-.03713	-.01445
60	-.17235	-.17371	-.16829	-.14683	-.11432	-.09386	-.06964	-.04283	-.01707
65	-.16114	-.16309	-.16083	-.14543	-.11761	-.09853	-.07470	-.04694	-.01905
70	-.14368	-.14709	-.14822	-.13902	-.11663	-.09958	-.07701	-.04933	-.02034
75	-.12538	-.12983	-.13345	-.12950	-.11246	-.09774	-.07699	-.05018	-.02099
80	-.11268	-.11596	-.11978	-.11889	-.10628	-.09382	-.07512	-.04974	-.02108
85	-.09870	-.10112	-.10492	-.10643	-.09787	-.08773	-.07139	-.04800	-.02058
90	-.08077	-.08366	-.08817	-.09207	-.08742	-.07967	-.06593	-.04502	-.01955
100	-.05484	-.05581	-.05874	-.06372	-.06419	-.06045	-.05174	-.03644	-.01621
110	-.02428	-.02567	-.02850	-.03417	-.03828	-.03793	-.03408	-.02503	-.01148
120	-.00202	-.00205	-.00326	-.00762	-.01310	-.01507	-.01527	-.01228	-.00599
130	.02304	.02241	.02112	.01720	.01092	.00721	.00356	.00085	-.00019
140	.04147	.04129	.04061	.03775	.03165	.02693	.02068	.01311	.00534
150	.05733	.05717	.05665	.05443	.04867	.04335	.03518	.02366	.01017
160	.07026	.06969	.06891	.06686	.06138	.05570	.04620	.03178	.01391
170	.07532	.07545	.07524	.07385	.06887	.06312	.05294	.03681	.01626
180	.08034	.07960	.07871	.07686	.07173	.06585	.05536	.03859	.01709

TABLE 25

C_{mt}	L_r/L_c = .200						X = 0		
γ	.02	.03	.05	.10	.20	.30	.50	1.00	3.00
$\phi°$									
0	0	0	0	0	0	0	0	0	0
5	-.00247	-.00307	-.00399	-.00557	-.00755	-.00888	-.01068	-.01312	-.01622
10	-.00300	-.00401	-.00561	-.00847	-.01219	-.01472	-.01817	-.02290	-.02893
15	-.00282	-.00398	-.00594	-.00966	-.01469	-.01820	-.02305	-.02978	-.03845
20	-.00243	-.00358	-.00564	-.00978	-.01566	-.01989	-.02582	-.03417	-.04507
25	-.00204	-.00309	-.00507	-.00927	-.01558	-.02024	-.02691	-.03647	-.04910
30	-.00172	-.00263	-.00442	-.00843	-.01477	-.01962	-.02669	-.03700	-.05086
35	-.00145	-.00222	-.00377	-.00743	-.01331	-.01830	-.02545	-.03610	-.05064
40	-.00121	-.00185	-.00316	-.00637	-.01195	-.01651	-.02345	-.03402	-.04872
45	-.00099	-.00151	-.00258	-.00529	-.01024	-.01440	-.02090	-.03103	-.04538
50	-.00079	-.00120	-.00205	-.00425	-.00845	-.01211	-.01798	-.02734	-.04088
55	-.00060	-.00090	-.00154	-.00325	-.00665	-.00974	-.01482	-.02314	-.03547
60	-.00041	-.00062	-.00107	-.00230	-.00489	-.00735	-.01153	-.01862	-.02940
65	-.00024	-.00036	-.00063	-.00141	-.00320	-.00501	-.00824	-.01392	-.02287
70	-.00007	-.00012	-.00022	-.00058	-.00161	-.00277	-.00500	-.00919	-.01609
75	.00008	.00011	.00016	.00018	-.00012	-.00065	-.00189	-.00453	-.00926
80	.00022	.00032	.00050	.00087	.00124	.00130	.00103	-.00006	-.00255
85	.00034	.00050	.00081	.00149	.00246	.00308	.00372	.00415	.00390
90	.00045	.00066	.00108	.00203	.00354	.00466	.00615	.00801	.00994
100	.00062	.00092	.00150	.00288	.00525	.00718	.01011	.01448	.02037
110	.00072	.00107	.00176	.00341	.00633	.00882	.01276	.01901	.02801
120	.00076	.00113	.00187	.00362	.00680	.00956	.01406	.02143	.03244
130	.00074	.00110	.00182	.00354	.00669	.00946	.01405	.02175	.03352
140	.00066	.00099	.00163	.00319	.00605	.00859	.01285	.02010	.03137
150	.00054	.00081	.00134	.00260	.00495	.00706	.01061	.01672	.02632
160	.00038	.00057	.00094	.00184	.00351	.00500	.00754	.01195	.01893
170	.00020	.00030	.00049	.00095	.00182	.00259	.00392	.00622	.00989
180	0	0	0	0	0	0	0	0	0

TABLE 26

C_{mt}	$L_r/L_c = .400$						X = 0		
γ	.02	.03	.05	.10	.20	.30	.50	1.00	3.00
$\phi°$									
0	0	0	0	0	0	0	0	0	0
5	-.00314	-.00381	-.00480	-.00645	-.00845	-.00976	-.01150	-.01380	-.01660
10	-.00406	-.00522	-.00700	-.01005	-.01385	-.01637	-.01973	-.02420	-.02967
15	-.00392	-.00533	-.00760	-.01166	-.01689	-.02043	-.02519	-.03160	-.03949
20	-.00337	-.00482	-.00728	-.01192	-.01817	-.02248	-.02837	-.03639	-.04637
25	-.00273	-.00409	-.00651	-.01134	-.01815	-.02299	-.02969	-.03894	-.05059
30	-.00216	-.00334	-.00556	-.01026	-.01724	-.02234	-.02953	-.03961	-.05244
35	-.00169	-.00266	-.00459	-.00893	-.01572	-.02084	-.02821	-.03871	-.05229
40	-.00131	-.00208	-.00368	-.00750	-.01383	-.01876	-.02600	-.03653	-.05035
45	-.00099	-.00158	-.00286	-.00608	-.01173	-.01630	-.02316	-.03335	-.04693
50	-.00074	-.00117	-.00213	-.00472	-.00956	-.01362	-.01988	-.02940	-.04231
55	-.00051	-.00081	-.00149	-.00345	-.00739	-.01085	-.01634	-.02489	-.03674
60	-.00031	-.00049	-.00092	-.00228	-.00529	-.00807	-.01266	-.02002	-.03047
65	-.00013	-.00021	-.00042	-.00123	-.00330	-.00538	-.00897	-.01496	-.02372
70	.00003	.00004	.00002	-.00028	-.00145	-.00282	-.00535	-.00986	-.01671
75	.00018	.00027	.00042	.00057	.00024	-.00042	-.00190	-.00484	-.00964
80	.00032	.00048	.00077	.00131	.00176	.00177	.00133	-.00003	-.00269
85	.00044	.00066	.00107	.00196	.00310	.00373	.00429	.00449	.00398
90	.00055	.00081	.00134	.00251	.00427	.00546	.00695	.00864	.01024
100	.00071	.00106	.00174	.00335	.00606	.00817	.01123	.01557	.02104
110	.00081	.00120	.00198	.00385	.00714	.00987	.01406	.02040	.02896
120	.00084	.00125	.00206	.00401	.00755	.01059	.01540	.02296	.03356
130	.00081	.00120	.00198	.00387	.00735	.01039	.01532	.02328	.03468
140	.00072	.00107	.00177	.00346	.00659	.00937	.01396	.02148	.03245
150	.00058	.00087	.00144	.00281	.00537	.00767	.01149	.01785	.02724
160	.00041	.00061	.00101	.00198	.00379	.00542	.00816	.01275	.01959
170	.00021	.00032	.00052	.00102	.00196	.00281	.00423	.00664	.01024
180	0	0	0	0	0	0	0	0	0

TABLE 27

C_{mt}	$L_r/L_c = 1.000$						X = 0		
γ	.02	.03	.05	.10	.20	.30	.50	1.00	3.00
$\phi°$									
0	0	0	0	0	0	0	0	0	0
5	-.00453	-.00536	-.00655	-.00844	-.01059	-.01191	-.01355	-.01549	-.01752
10	-.00648	-.00799	-.01021	-.01380	-.01794	-.02051	-.02369	-.02749	-.03147
15	-.00685	-.00882	-.01181	-.01676	-.02260	-.02627	-.03084	-.03633	-.04209
20	-.00635	-.00855	-.01199	-.01790	-.02508	-.02964	-.03538	-.04233	-.04965
25	-.00545	-.00766	-.01126	-.01772	-.02581	-.03105	-.03770	-.04582	-.05442
30	-.00442	-.00649	-.01001	-.01662	-.02521	-.03088	-.03816	-.04713	-.05670
35	-.00343	-.00525	-.00850	-.01491	-.02360	-.02946	-.03709	-.04657	-.05676
40	-.00255	-.00405	-.00691	-.01285	-.02128	-.02710	-.03478	-.04444	-.05491
45	-.00179	-.00297	-.00535	-.01062	-.01847	-.02405	-.03151	-.04102	-.05142
50	-.00116	-.00203	-.00390	-.00836	-.01538	-.02053	-.02753	-.03658	-.04658
55	-.00065	-.00123	-.00259	-.00615	-.01217	-.01673	-.02306	-.03137	-.04067
60	-.00023	-.00055	-.00144	-.00408	-.00895	-.01280	-.01829	-.02563	-.03393
65	.00011	.00001	-.00044	-.00217	-.00582	-.00889	-.01339	-.01955	-.02663
70	.00039	.00048	.00041	-.00045	-.00286	-.00509	-.00850	-.01333	-.01900
75	.00062	.00086	.00113	.00107	-.00012	-.00148	-.00375	-.00713	-.01125
80	.00081	.00117	.00173	.00238	.00236	.00186	.00077	-.00112	-.00359
85	.00097	.00143	.00221	.00349	.00456	.00490	.00496	.00458	.00380
90	.00109	.00163	.00259	.00441	.00647	.00758	.00875	.00987	.01076
100	.00126	.00189	.00311	.00570	.00936	.01183	.01498	.01881	.02285
110	.00134	.00201	.00333	.00636	.01107	.01451	.01918	.02518	.03180
120	.00133	.00199	.00332	.00646	.01168	.01567	.02127	.02870	.03707
130	.00124	.00186	.00309	.00609	.01129	.01541	.02132	.02932	.03847
140	.00108	.00162	.00269	.00534	.01007	.01391	.01951	.02720	.03610
150	.00086	.00129	.00215	.00428	.00816	.01137	.01611	.02269	.03036
160	.00060	.00090	.00150	.00298	.00573	.00803	.01146	.01625	.02186
170	.00031	.00046	.00077	.00153	.00295	.00415	.00595	.00847	.01143
180	0	0	0	0	0	0	0	0	0

TABLE 28

	C_{st}			L_r/L_c = .200			X = 0		
γ	.02	.03	.05	.10	.20	.30	.50	1.00	3.00
$\phi°$									
0	-.04625	-.05357	-.06461	-.08332	-.10660	-.12213	-.14301	-.17132	-.20715
5	-.01410	-.02012	-.02963	-.04649	-.06820	-.08294	-.10296	-.13033	-.16520
10	-.00042	-.00359	-.00958	-.02192	-.03957	-.05219	-.06984	-.09459	-.12674
15	.00381	.00315	.00071	-.00644	-.01889	-.02863	-.04293	-.06383	-.09184
20	.00465	.00542	.00552	.00289	-.00431	-.01090	-.02135	-.03763	-.06048
25	.00414	.00558	.00726	.00812	.00565	.00216	-.00433	-.01560	-.03265
30	.00329	.00496	.00749	.01078	.01224	.01157	.00889	.00267	-.00825
35	.00285	.00445	.00724	.01198	.01644	.01817	.01896	.01758	.01282
40	.00267	.00409	.00685	.01234	.01894	.02262	.02640	.02949	.03066
45	.00240	.00371	.00637	.01217	.02021	.02539	.03167	.03871	.04541
50	.00222	.00344	.00594	.01174	.02063	.02689	.03514	.04554	.05722
55	.00221	.00332	.00561	.01121	.02046	.02741	.03712	.05026	.06624
60	.00211	.00313	.00525	.01056	.01983	.02717	.03787	.05310	.07264
65	.00190	.00288	.00486	.00984	.01888	.02633	.03759	.05428	.07659
70	.00180	.00270	.00451	.00910	.01770	.02503	.03647	.05401	.07829
75	.00171	.00252	.00416	.00833	.01633	.02337	.03465	.05249	.07792
80	.00149	.00224	.00373	.00749	.01482	.02142	.03225	.04988	.07569
85	.00129	.00196	.00329	.00663	.01320	.01925	.02940	.04635	.07180
90	.00118	.00174	.00288	.00576	.01152	.01692	.02618	.04205	.06647
100	.00075	.00115	.00195	.00394	.00799	.01194	.01901	.03174	.05229
110	.00045	.00064	.00105	.00213	.00443	.00681	.01133	.02001	.03486
120	.00002	.00006	.00013	.00035	.00097	.00179	.00364	.00781	.01581
130	-.00026	-.00041	-.00067	-.00128	-.00223	-.00288	-.00361	-.00401	-.00330
140	-.00058	-.00086	-.00141	-.00272	-.00505	-.00701	-.01007	-.01472	-.02105
150	-.00082	-.00122	-.00201	-.00391	-.00737	-.01041	-.01542	-.02371	-.03621
160	-.00098	-.00148	-.00245	-.00479	-.00910	-.01295	-.01941	-.03049	-.04779
170	-.00114	-.00167	-.00274	-.00534	-.01017	-.01451	-.02189	-.03470	-.05504
180	-.00112	-.00169	-.00281	-.00551	-.01052	-.01504	-.02272	-.03613	-.05751

TABLE 29

C_{st}	L_r/L_c = .400						X = 0		
γ	.02	.03	.05	.10	.20	.30	.50	1.00	3.00
$\phi°$									
0	-.05459	-.06261	-.07441	-.09380	-.11719	-.13246	-.15259	-.17919	-.21158
5	-.02055	-.02744	-.03796	-.05584	-.07796	-.09258	-.11202	-.13786	-.16948
10	-.00280	-.00707	-.01445	-.02843	-.04715	-.06002	-.07750	-.10120	-.13059
15	.00482	.00326	-.00054	-.00964	-.02371	-.03407	-.04868	-.06912	-.09507
20	.00725	.00770	.00696	.00263	-.00638	-.01384	-.02501	-.04141	-.06299
25	.00711	.00879	.01030	.01009	.00598	.00152	-.00594	-.01783	-.03436
30	.00597	.00825	.01119	.01417	.01443	.01285	.00910	.00192	-.00916
35	.00485	.00722	.01085	.01604	.01990	.02092	.02069	.01816	.01267
40	.00396	.00617	.00997	.01648	.02312	.02636	.02931	.03120	.03120
45	.00322	.00518	.00887	.01603	.02468	.02972	.03542	.04134	.04656
50	.00271	.00440	.00781	.01511	.02504	.03145	.03941	.04886	.05888
55	.00243	.00386	.00690	.01398	.02457	.03193	.04165	.05406	.06831
60	.00219	.00342	.00610	.01274	.02350	.03145	.04243	.05719	.07502
65	.00195	.00304	.00539	.01148	.02203	.03022	.04200	.05849	.07918
70	.00180	.00275	.00479	.01027	.02030	.02846	.04060	.05819	.08100
75	.00167	.00249	.00426	.00910	.01841	.02630	.03840	.05652	.08066
80	.00147	.00220	.00375	.00797	.01641	.02384	.03557	.05365	.07838
85	.00128	.00192	.00325	.00688	.01437	.02118	.03225	.04980	.07437
90	.00113	.00168	.00279	.00583	.01231	.01839	.02855	.04512	.06886
100	.00072	.00110	.00183	.00380	.00820	.01262	.02044	.03393	.05419
110	.00038	.00056	.00091	.00188	.00425	.00688	.01192	.02127	.03612
120	-.00002	-.00002	-.00001	.00005	.00054	.00141	.00353	.00818	.01639
130	-.00034	-.00051	-.00084	-.00162	-.00282	-.00358	-.00429	-.00445	-.00340
140	-.00065	-.00097	-.00159	-.00308	-.00574	-.00793	-.01118	-.01586	-.02178
150	-.00090	-.00133	-.00220	-.00429	-.00813	-.01147	-.01685	-.02540	-.03747
160	-.00107	-.00160	-.00265	-.00518	-.00989	-.01410	-.02107	-.03257	-.04945
170	-.00120	-.00178	-.00294	-.00574	-.01098	-.01571	-.02367	-.03703	-.05695
180	-.00121	-.00182	-.00302	-.00592	-.01134	-.01626	-.02454	-.03853	-.05950

TABLE 30

C_{st}	L_r/L_c = 1.000						X = 0		
γ	.02	.03	.05	.10	20	.30	.50	1.00	3.00
$\phi°$									
0	-.07125	-.08105	-.09507	-.11712	-.14209	-.15740	-.17630	-.19878	-.22221
5	-.03490	-.04381	-.05682	-.07770	-.10173	-.11657	-.13496	-.15692	-.17986
10	-.01168	-.01831	-.02870	-.04645	-.06782	-.08133	-.09829	-.11874	-.14026
15	.00179	-.00208	-.00905	-.02246	-.03997	-.05148	-.06624	-.08434	-.10363
20	.00873	.00746	.00396	-.00465	-.01759	-.02665	-.03865	-.05375	-.07012
25	.01147	.01231	.01193	.00804	-.00006	-.00641	-.01528	-.02690	-.03984
30	.01174	.01410	.01624	.01661	.01327	.00971	.00415	-.00370	-.01286
35	.01083	.01409	.01805	.02197	.02303	.02219	.01995	.01598	.01079
40	.00943	.01309	.01820	.02488	.02980	.03149	.03244	.03231	.03114
45	.00790	.01160	.01731	.02597	.03410	.03804	.04195	.04549	.04823
50	.00649	.00999	.01585	.02575	.03639	.04226	.04880	.05571	.06214
55	.00532	.00847	.01414	.02463	.03708	.04451	.05329	.06319	.07298
60	.00434	.00708	.01234	.02290	.03652	.04512	.05571	.06815	.08088
65	.00353	.00586	.01059	.02082	.03499	.04440	.05635	.07082	.08600
70	.00290	.00483	.00897	.01854	.03275	.04259	.05546	.07143	.08853
75	.00240	.00397	.00749	.01620	.02999	.03994	.05327	.07021	.08865
80	.00196	.00322	.00615	.01387	.02687	.03662	.05002	.06737	.08657
85	.00159	.00258	.00496	.01160	.02354	.03283	.04589	.06315	.08253
90	.00128	.00203	.00389	.00945	.02008	.02869	.04107	.05775	.07675
100	.00069	.00107	.00206	.00550	.01314	.01986	.03002	.04426	.06093
110	.00018	.00027	.00056	.00208	.00652	.01093	.01803	.02846	.04108
120	-.00030	-.00046	-.00073	-.00084	.00050	.00243	.00601	.01178	.01914
130	-.00071	-.00108	-.00181	-.00328	-.00475	-.00523	-.00527	-.00454	-.00303
140	-.00109	-.00163	-.00273	-.00527	-.00913	-.01180	-.01523	-.01939	-.02373
150	-.00138	-.00207	-.00346	-.00683	-.01259	-.01707	-.02342	-.03189	-.04148
160	-.00160	-.00240	-.00399	-.00794	-.01508	-.02092	-.02950	-.04133	-.05506
170	-.00174	-.00260	-.00433	-.00862	-.01659	-.02326	-.03324	-.04719	-.06357
180	-.00178	.00266	-.00443	-.00884	-.01709	-.02405	-.03450	-.04918	-.06647

TABLE 31

	C_{ft}			L_r/L_c = .200				X = 0	
γ	.02	.03	.05	.10	.20	.30	.50	1.00	3.00
$\phi°$									
0	-.50000	-.50000	-.50000	-.50000	-.50000	-.50000	-.50000	-.50000	-.50000
5	-.24639	-.27384	-.30555	-.34557	-.38129	-.39868	-.41621	-.43931	-.46093
10	-.08626	-.11989	-.16373	-.22296	-.27066	-.30845	-.34225	-.38029	-.42040
15	-.02232	-.04490	-.08042	-.13744	-.19878	-.23419	-.27622	-.32558	-.37957
20	.00001	-.01107	-.03416	-.06021	-.13807	-.17440	-.21974	-.27553	-.33902
25	.00982	.00493	-.00666	-.04265	-.09205	-.12689	-.17194	-.23015	-.29913
30	.00803	.00739	.00143	-.02049	-.06022	-.09029	-.13225	-.18942	-.26029
35	.00255	.00449	.00377	-.00818	-.03739	-.06229	-.09942	-.15304	-.22270
40	.00249	.00416	.00518	-.00051	-.02081	-.04051	-.07205	-.12046	-.18649
45	.00317	.00411	.00555	.00385	-.00905	-.02377	-.04935	-.09142	-.15188
50	.00067	.00199	.00419	.00559	-.00106	-.01114	-.03074	-.06569	-.11902
55	.00017	.00142	.00368	.00674	.00478	-.00129	-.01524	-.04284	-.08800
60	.00227	.00279	.00442	.00795	.00928	.00653	-.00226	-.02261	-.05895
65	.00197	.00262	.00430	.00843	.01240	.01249	.00837	-.00487	-.03201
70	.00060	.00176	.00384	.00856	.01462	.01708	.01711	.01059	-.00725
75	.00180	.00267	.00451	.00924	.01655	.02084	.02436	.02402	.01527
80	.00283	.00347	.00513	.00982	.01804	.02376	.03029	.03550	.03546
85	.00158	.00270	.00477	.00987	.01894	.02585	.03491	.04511	.05325
90	.00140	.00263	.00483	.01007	.01965	.02743	.03853	.05303	.06865
100	.00247	.00342	.00543	.01056	.02049	.02926	.04310	.06413	.09216
110	.00213	.00317	.00524	.01038	.02026	.02953	.04446	.06941	.10307
120	.00168	.00277	.00483	.00975	.01918	.02797	.04315	.06955	.11074
130	.00235	.00308	.00472	.00899	.01743	.02544	.03962	.06921	.10555
140	.00090	.00187	.00356	.00744	.01476	.02167	.03406	.05895	.09333
150	.00134	.00224	.00328	.00610	.01174	.01718	.02701	.04333	.07743
160	.00035	.00092	.00187	.00401	.00800	.01178	.01888	.03174	.05450
170	.00069	.00032	.00127	.00216	.00414	.00605	.00998	.01630	.02814
180	0	0	0	0	0	0	0	0	0

TABLE 32

	C_{ft}			L_r/L_c = .400			X = 0		
γ	.02	.03	.05	.10	.20	.30	.50	1.00	3.00
$\phi°$									
0	-.50000	-.50000	-.50000	-.50000	-.50000	-.50000	-.50000	-.50000	-.50000
5	-.28619	-.31028	-.33315	-.37154	-.39982	-.41411	-.42978	-.44689	-.46437
10	-.13341	-.16644	-.20753	-.26047	-.30842	-.33361	-.36193	-.39356	-.42649
15	-.05077	-.07843	-.11750	-.17438	-.23127	-.26290	-.29969	-.34210	-.38745
20	-.00963	-.02790	-.05845	-.11007	-.16797	-.20229	-.24378	-.29331	-.34788
25	.00996	-.00029	-.02135	-.06357	-.11728	-.15139	-.19438	-.24770	-.30833
30	.01408	.01046	-.00138	-.03219	-.07815	-.10979	-.15157	-.20564	-.26927
35	.01129	.01221	.00777	-.01200	-.04860	-.07629	-.11487	-.16718	-.23106
40	.00934	.01192	.01189	.00090	-.02641	-.04947	-.08357	-.13220	-.19399
45	.00744	.01034	.01275	.00846	-.01020	-.02836	-.05716	-.10065	-.15833
50	.00424	.00736	.01130	.01211	.00120	-.01206	-.03512	-.07240	-.12432
55	.00264	.00539	.00973	.01376	.00924	.00055	-.01675	-.04722	-.09213
60	.00290	.00482	.00872	.01446	.01488	.01020	-.00154	-.02491	-.06192
65	.00230	.00388	.00746	.01423	.01854	.01741	.01089	-.00534	-.03386
70	.00136	.00291	.00629	.01359	.02084	.02272	.02096	.01169	-.00806
75	.00191	.00310	.00597	.01317	.02237	.02667	.02909	.02638	.01540
80	.00245	.00338	.00585	.01277	.02326	.02948	.03550	.03885	.03643
85	.00183	.00294	.00541	.01220	.02358	.03132	.04040	.04924	.05497
90	.00176	.00291	.00529	.01182	.02365	.03249	.04406	.05772	.07100
100	.00235	.00336	.00548	.01137	.02321	.03326	.04823	.06938	.09545
110	.00217	.00322	.00531	.01078	.02206	.03234	.04891	.07469	.10988
120	.00188	.00294	.00497	.01001	.02033	.03015	.04681	.07448	.11470
130	.00213	.00295	.00468	.00909	.01812	.02693	.04247	.06952	.11065
140	.00124	.00213	.00376	.00762	.01524	.02271	.03622	.06053	.09871
150	.00056	.00207	.00321	.00612	.01199	.01781	.02852	.04831	.08014
160	.00060	.00111	.00202	.00410	.00819	.01220	.01964	.03359	.05639
170	.00058	.00075	.00114	.00216	.00420	.00623	.01002	.01722	.02910
180	0	0	0	0	0	0	0	0	0

TABLE 33

	C_{rt}			L_r/L_c = 1.000				X = 0	
γ	.02	.03	.05	.10	.20	.30	.50	1.00	3.00
$\phi°$									
0	-.50000	-.50000	-.50000	-.50000	-.50000	-.50000	-.50000	-.50000	-.50000
5	-.33590	-.35557	-.37780	-.40370	-.42511	-.43569	-.44705	-.45890	-.47000
10	-.20324	-.23379	-.27004	-.31447	-.35283	-.37230	-.39349	-.41591	-.43714
15	-.11171	-.14334	-.18386	-.23741	-.28665	-.31254	-.34132	-.37234	-.40216
20	-.05174	-.07905	-.11741	-.17277	-.22745	-.25740	-.29148	-.32900	-.36564
25	-.01431	-.03521	-.06786	-.11992	-.17556	-.20741	-.24461	-.28649	-.32812
30	.00549	-.00822	-.03313	-.07822	-.13112	-.16295	-.20122	-.24538	-.29011
35	.01409	.00694	-.00991	-.04613	-.09366	-.12393	-.16150	-.20603	-.25206
40	.01738	.01508	.00524	-.02183	-.06245	-.09002	-.12545	-.16870	-.21437
45	.01727	.01832	.01424	-.00405	-.03690	-.06095	-.09311	-.13363	-.17742
50	.01480	.01817	.01864	.00836	-.01641	-.03638	-.06439	-.10098	-.14156
55	.01222	.01674	.02035	.01679	-.00016	-.01582	-.03909	-.07085	-.10710
60	.01028	.01503	.02050	.02223	.01248	.00119	-.01704	-.04330	-.07431
65	.00818	.01286	.01943	.02528	.02202	.01497	.00194	-.01836	-.04346
70	.00628	.01070	.01776	.02662	.02900	.02595	.01806	.00395	-.01476
75	.00534	.00919	.01614	.02692	.03395	.03454	.03159	.02367	.01161
80	.00471	.00799	.01454	.02644	.03722	.04104	.04270	.04085	.03549
85	.00386	.00676	.01289	.02536	.03908	.04571	.05159	.05552	.05675
90	.00341	.00593	.01152	.02405	.03989	.04887	.05848	.06777	.07530
100	.00317	.00503	.00949	.02112	.03920	.05150	.06701	.08535	.10405
110	.00283	.00436	.00793	.01812	.03641	.05037	.06956	.09434	.12155
120	.00251	.00382	.00673	.01530	.03239	.04660	.06736	.09565	.12808
130	.00239	.00346	.00578	.01271	.02768	.04100	.06136	.09024	.12436
140	.00177	.00274	.00467	.01013	.02249	.03406	.05237	.07913	.11144
150	.00162	.00230	.00370	.00769	.01709	.02625	.04115	.06343	.09076
160	.00092	.00145	.00245	.00512	.01146	.01780	.02830	.04423	.06400
170	.00058	.00081	.00129	.00259	.00577	.00900	.01441	.02271	.03306
180	0	0	0	0	0	0	0	0	0

TABLE 34

C_{vt}	L_r/L_c = .200						X = 0		
γ	.02	.03	.05	.10	.20	.30	.50	1.00	3.00
$\phi°$									
0	.01149	.01129	.01094	.01020	.00909	.00823	.00696	.00506	.00245
5	.01121	.01103	.01069	.00999	.00890	.00807	.00683	.00497	.00240
10	.01042	.01026	.00998	.00936	.00837	.00760	.00645	.00470	.00228
15	.00920	.00909	.00887	.00836	.00752	.00685	.00583	.00427	.00207
20	.00768	.00760	.00745	.00708	.00641	.00587	.00502	.00369	.00180
25	.00594	.00590	.00581	.00557	.00510	.00469	.00404	.00299	.00147
30	.00407	.00406	.00403	.00391	.00364	.00338	.00295	.00221	.00110
35	.00215	.00217	.00219	.00219	.00211	.00200	.00178	.00137	.00069
40	.00026	.00029	.00035	.00045	.00055	.00058	.00058	.00049	.00027
45	-.00157	-.00152	-.00142	-.00124	-.00098	-.00081	-.00061	-.00037	-.00015
50	-.00326	-.00320	-.00308	-.00282	-.00242	-.00214	-.00175	-.00121	-.00056
55	-.00479	-.00472	-.00457	-.00426	-.00375	-.00336	-.00280	-.00200	-.00094
60	-.00611	-.00603	-.00587	-.00551	-.00491	-.00444	-.00374	-.00270	-.00129
65	-.00720	-.00712	-.00695	-.00656	-.00589	-.00536	-.00454	-.00331	-.00160
70	-.00804	-.00795	-.00778	-.00737	-.00667	-.00609	-.00519	-.00380	-.00185
75	-.00862	-.00853	-.00836	-.00794	-.00722	-.00661	-.00566	-.00417	-.00204
80	-.00894	-.00885	-.00868	-.00827	-.00754	-.00693	-.00596	-.00441	-.00216
85	-.00899	-.00890	-.00874	-.00835	-.00764	-.00704	-.00607	-.00451	-.00222
90	-.00879	-.00871	-.00855	-.00818	-.00751	-.00694	-.00600	-.00448	-.00222
100	-.00768	-.00762	-.00749	-.00719	-.00664	-.00616	-.00536	-.00403	-.00201
110	-.00579	-.00575	-.00567	-.00546	-.00507	-.00472	-.00414	-.00313	-.00158
120	-.00336	-.00334	-.00330	-.00320	-.00300	-.00281	-.00249	-.00191	-.00097
130	-.00066	-.00066	-.00067	-.00067	-.00067	-.00065	-.00061	-.00050	-.00027
140	.00204	.00201	.00197	.00186	.00167	.00152	.00129	.00094	.00045
150	.00446	.00442	.00433	.00414	.00379	.00349	.00302	.00225	.00111
160	.00637	.00632	.00620	.00594	.00547	.00506	.00439	.00329	.00164
170	.00760	.00752	.00740	.00709	.00654	.00606	.00527	.00397	.00198
180	.00802	.00795	.00781	.00749	.00691	.00641	.00558	.00420	.00210

TABLE 35

C_{vt}	L_r/L_c = .400						X = 0		
γ	.02	.03	.05	.10	.20	.30	.50	1.00	3.00
$\phi°$									
—	.01375	.01342	.01288	.01182	.01032	.00922	.00765	.00542	.00253
5	.01339	.01309	.01258	.01157	.01011	.00904	.00751	.00532	.00248
10	.01239	.01215	.01172	.01083	.00950	.00851	.00708	.00503	.00235
15	.01086	.01069	.01037	.00966	.00853	.00767	.00641	.00457	.00214
20	.00896	.00886	.00865	.00814	.00726	.00656	.00551	.00395	.00186
25	.00681	.00678	.00668	.00637	.00576	.00524	.00444	.00321	.00152
30	.00453	.00455	.00454	.00443	.00410	.00377	.00324	.00237	.00113
35	.00223	.00229	.00235	.00241	.00234	.00221	.00195	.00146	.00072
40	-.00001	.00006	.00019	.00039	.00057	.00062	.00063	.00053	.00028
45	-.00214	-.00204	-.00187	-.00156	-.00117	-.00094	-.00068	-.00040	-.00015
50	-.00409	-.00398	-.00378	-.00337	-.00281	-.00243	-.00193	-.00130	-.00058
55	-.00582	-.00571	-.00549	-.00501	-.00430	-.00379	-.00309	-.00214	-.00097
60	-.00730	-.00718	-.00695	-.00643	-.00561	-.00500	-.00412	-.00289	-.00134
65	-.00850	-.00838	-.00815	-.00760	-.00671	-.00601	-.00500	-.00354	-.00165
70	-.00941	-.00929	-.00906	-.00850	-.00756	-.00682	-.00571	-.00407	-.00191
75	-.01001	-.00990	-.00967	-.00912	-.00817	-.00740	-.00623	-.00447	-.00211
80	-.01031	-.01020	-.00998	-.00945	-.00852	-.00774	-.00655	-.00472	-.00224
85	-.01031	-.01021	-.01000	-.00951	-.00861	-.00785	-.00667	-.00483	-.00230
90	-.01003	-.00993	-.00975	-.00929	-.00845	-.00773	-.00659	-.00480	-.00229
100	-.00869	-.00861	-.00847	-.00811	-.00744	-.00684	-.00587	-.00431	-.00208
110	-.00649	-.00644	-.00635	-.00611	-.00565	-.00523	-.00453	-.00335	-.00163
120	-.00371	-.00369	-.00365	-.00354	-.00332	-.00310	-.00272	-.00204	-.00101
130	-.00064	-.00065	-.00066	-.00069	-.00071	-.00070	-.00066	-.00053	-.00028
140	.00240	.00236	.00230	.00216	.00191	.00171	.00142	.00101	.00047
150	.00511	.00506	.00495	.00470	.00426	.00389	.00331	.00241	.00115
160	.00725	.00718	.00704	.00671	.00612	.00562	.00481	.00353	.00170
170	.00862	.00854	.00838	.00800	.00732	.00673	.00578	.00425	.00205
180	.00909	.00900	.00884	.00844	.00773	.00711	.00611	.00450	.00217

TABLE 36

C_{vt}	L_r/L_c = 1.000						X = 0		
γ	.02	.03	.05	.10	.20	.30	.50	1.00	3.00
φ°									
0	.02402	.02306	.02155	.01883	.01539	.01313	.01022	.00662	.00276
5	.02341	.02250	.02105	.01844	.01509	.01288	.01003	.00650	.00272
10	.02166	.02090	.01963	.01729	.01421	.01215	.00948	.00616	.00258
15	.01897	.01841	.01741	.01547	.01280	.01099	.00860	.00560	.00235
20	.01557	.01523	.01455	.01309	.01095	.00944	.00742	.00485	.00204
25	.01172	.01159	.01123	.01029	.00874	.00759	.00601	.00395	.00167
30	.00764	.00769	.00762	.00720	.00628	.00551	.00442	.00293	.00125
35	.00352	.00371	.00391	.00397	.00366	.00330	.00271	.00184	.00079
40	-.00047	-.00018	.00023	.00072	.00100	.00103	.00094	.00070	.00032
45	-.00421	-.00385	-.00329	-.00243	-.00162	-.00121	-.00081	-.00044	-.00016
50	-.00760	-.00719	-.00653	-.00538	-.00410	-.00336	-.00250	-.00155	-.00062
55	-.01055	-.01013	-.00940	-.00804	-.00638	-.00534	-.00407	-.00256	-.00106
60	-.01303	-.01261	-.01185	-.01035	-.00839	-.00710	-.00548	-.00352	-.00146
65	-.01498	-.01458	-.01382	-.01225	-.01007	-.00860	-.00669	-.00433	-.00181
70	-.01640	-.01603	-.01530	-.01371	-.01141	-.00980	-.00767	-.00499	-.00209
75	-.01729	-.01695	-.01626	-.01471	-.01235	-.01067	-.00839	-.00549	-.00231
80	-.01766	-.01734	-.01671	-.01524	-.01291	-.01120	-.00885	-.00582	-.00246
85	-.01751	-.01724	-.01667	-.01531	-.01307	-.01138	-.00904	-.00596	-.00253
90	-.01690	-.01666	-.01617	-.01494	-.01284	-.01123	-.00895	-.00593	-.00252
100	-.01441	-.01425	-.01390	-.01300	-.01133	-.00998	-.00802	-.00535	-.00229
110	-.01058	-.01049	-.01030	-.00974	-.00862	-.00766	-.00621	-.00418	-.00180
120	-.00587	-.00585	-.00580	-.00560	-.00500	-.00457	-.00376	-.00256	-.00111
130	-.00077	-.00081	-.00089	-.00103	-.00110	-.00107	-.00095	-.00069	-.00031
140	.00422	.00412	.00393	.00350	.00288	.00246	.00191	.00123	.00051
150	.00864	.00850	.00821	.00755	.00647	.00565	.00450	.00298	.00126
160	.01210	.01192	.01157	.01073	.00930	.00816	.00656	.00437	.00187
170	.01431	.01410	.01371	.01276	.01112	.00980	.00785	.00527	.00226
180	.01506	.01485	.01444	.01346	.01174	.01056	.00854	.00559	.00239

TABLE 37

C_{wt}	L_r/L_c = .200					X = 0			
γ	.02	.03	.05	.10	.20	.30	.50	1.00	3.00
$\phi°$									
0	0	0	0	0	0	0	0	0	0
5	-.00631	-.00601	-.00559	-.00493	-.00415	-.00365	-.00298	-.00209	-.00098
10	-.01173	-.01128	-.01059	-.00943	-.00800	-.00705	-.00578	-.00407	-.00191
15	-.01590	-.01543	-.01464	-.01321	-.01132	-.01003	-.00826	-.00584	-.00275
20	-.01888	-.01846	-.01769	-.01616	-.01400	-.01247	-.01034	-.00735	-.00347
25	-.02083	-.02046	-.01976	-.01826	-.01599	-.01432	-.01194	-.00854	-.00405
30	-.02181	-.02151	-.02091	-.01951	-.01726	-.01555	-.01304	-.00939	-.00448
35	-.02197	-.02173	-.02121	-.01996	-.01784	-.01616	-.01364	-.00988	-.00475
40	-.02142	-.02122	-.02079	-.01971	-.01778	-.01619	-.01375	-.01003	-.00485
45	-.02025	-.02008	-.01973	-.01882	-.01712	-.01567	-.01340	-.00984	-.00479
50	-.01853	-.01840	-.01812	-.01738	-.01594	-.01467	-.01263	-.00935	-.00458
55	-.01637	-.01627	-.01606	-.01549	-.01432	-.01325	-.01148	-.00857	-.00423
60	-.01387	-.01380	-.01365	-.01323	-.01234	-.01149	-.01003	-.00755	-.00376
65	-.01110	-.01106	-.01096	-.01070	-.01008	-.00945	-.00833	-.00633	-.00319
70	-.00816	-.00814	-.00810	-.00797	-.00761	-.00721	-.00643	-.00496	-.00253
75	-.00512	-.00513	-.00514	-.00514	-.00503	-.00485	-.00441	-.00348	-.00182
80	-.00208	-.00211	-.00217	-.00229	-.00241	-.00243	-.00233	-.00194	-.00106
85	.00090	.00084	.00074	.00052	.00019	-.00002	-.00024	-.00039	-.00030
90	.00374	.00367	.00353	.00320	.00269	.00230	.00179	.00114	.00046
100	.00877	.00867	.00846	.00799	.00717	.00650	.00548	.00395	.00188
110	.01261	.01248	.01224	.01167	.01065	.00978	.00840	.00620	.00303
120	.01498	.01484	.01459	.01397	.01285	.01188	.01029	.00769	.00381
130	.01574	.01561	.01536	.01474	.01363	.01265	.01103	.00831	.00415
140	.01491	.01479	.01456	.01401	.01299	.01209	.01058	.00801	.00403
150	.01262	.01252	.01234	.01188	.01104	.01029	.00903	.00667	.00347
160	.00913	.00907	.00893	.00861	.00801	.00748	.00657	.00501	.00254
170	.00479	.00475	.00468	.00452	.00421	.00393	.00346	.00264	.00134
180	0	0	0	0	0	0	0	0	0

TABLE 38

C_{wt}	L_r/L_c = .400						X = 0		
γ	.02	.03	.05	.10	.20	.30	.50	1.00	3.00
$\phi°$									
0	0	0	0	0	0	0	0	0	0
5	-.00796	-.00746	-.00679	-.00581	-.00474	-.00409	-.00327	-.00223	-.00101
10	-.01479	-.01399	-.01286	-.01111	-.00914	-.00792	-.00635	-.00435	-.00197
15	-.01994	-.01907	-.01776	-.01556	-.01295	-.01127	-.00909	-.00625	-.00283
20	-.02346	-.02268	-.02138	-.01902	-.01602	-.01402	-.01137	-.00786	-.00358
25	-.02555	-.02491	-.02374	-.02144	-.01828	-.01610	-.01314	-.00913	-.00419
30	-.02639	-.02591	-.02494	-.02283	-.01972	-.01748	-.01436	-.01005	-.00463
35	-.02619	-.02585	-.02509	-.02326	-.02035	-.01815	-.01502	-.01058	-.00490
40	-.02517	-.02493	-.02436	-.02284	-.02023	-.01816	-.01513	-.01074	-.00501
45	-.02345	-.02329	-.02288	-.02168	-.01943	-.01756	-.01474	-.01054	-.00495
50	-.02117	-.02106	-.02078	-.01989	-.01803	-.01641	-.01389	-.01001	-.00474
55	-.01844	-.01838	-.01821	-.01758	-.01613	-.01480	-.01262	-.00918	-.00438
60	-.01539	-.01536	-.01527	-.01488	-.01384	-.01279	-.01101	-.00809	-.00389
65	-.01210	-.01209	-.01208	-.01189	-.01123	-.01048	-.00913	-.00679	-.00330
70	-.00865	-.00868	-.00872	-.00872	-.00841	-.00796	-.00703	-.00532	-.00262
75	-.00517	-.00521	-.00531	-.00546	-.00547	-.00530	-.00481	-.00373	-.00188
80	-.00171	-.00178	-.00191	-.00220	-.00250	-.00259	-.00252	-.00208	-.00110
85	.00165	.00156	.00138	.00098	.00042	.00010	-.00022	-.00041	-.00031
90	.00482	.00471	.00450	.00400	.00322	.00269	.00201	.00122	.00048
100	.01037	.01023	.00997	.00932	.00821	.00733	.00605	.00423	.00194
110	.01454	.01438	.01408	.01335	.01204	.01094	.00923	.00664	.00313
120	.01705	.01689	.01658	.01582	.01443	.01322	.01129	.00824	.00394
130	.01778	.01762	.01732	.01659	.01524	.01404	.01208	.00889	.00429
140	.01676	.01662	.01635	.01569	.01447	.01338	.01157	.00858	.00417
150	.01413	.01402	.01380	.01327	.01227	.01135	.00987	.00735	.00359
160	.01020	.01013	.00997	.00959	.00869	.00825	.00710	.00536	.00262
170	.00534	.00530	.00522	.00503	.00466	.00433	.00377	.00282	.00138
180	0	0	0	0	0	0	0	0	0

TABLE 39

C_{wt}	$L_r/L_c = 1.000$						X = 0		
γ	.02	.03	.05	.10	.20	.30	.50	1.00	3.00
$\phi°$									
0	0	0	0	0	0	0	0	0	0
5	-.01381	-.01261	-.01107	-.00895	-.00684	-.00565	-.00426	-.00268	-.00109
10	-.02591	-.02385	-.02111	-.01721	-.01323	-.01096	-.00829	-.00523	-.00214
15	-.03536	-.03289	-.02944	-.02430	-.01885	-.01568	-.01189	-.00752	-.00308
20	-.04197	-.03947	-.03578	-.02994	-.02347	-.01961	-.01494	-.00949	-.00390
25	-.04587	-.04361	-.04003	-.03400	-.02697	-.02265	-.01734	-.01106	-.00456
30	-.04735	-.04547	-.04227	-.03646	-.02928	-.02473	-.01904	-.01220	-.00505
35	-.04676	-.04534	-.04266	-.03738	-.03041	-.02584	-.02001	-.01289	-.00536
40	-.04453	-.04354	-.04145	-.03689	-.03042	-.02601	-.02026	-.01313	-.00548
45	-.04099	-.04037	-.03886	-.03513	-.02938	-.02529	-.01984	-.01294	-.00543
50	-.03644	-.03614	-.03516	-.03230	-.02742	-.02378	-.01878	-.01233	-.00520
55	-.03117	-.03111	-.03059	-.02859	-.02467	-.02156	-.01717	-.01135	-.00481
60	-.02542	-.02554	-.02540	-.02420	-.02126	-.01875	-.01507	-.01005	-.00429
65	-.01938	-.01962	-.01980	-.01930	-.01736	-.01548	-.01258	-.00847	-.00364
70	-.01323	-.01356	-.01397	-.01409	-.01310	-.01186	-.00979	-.00668	-.00290
75	-.00713	-.00751	-.00810	-.00875	-.00862	-.00803	-.00679	-.00474	-.00209
80	-.00122	-.00163	-.00234	-.00341	-.00408	-.00409	-.00369	-.00271	-.00124
85	.00440	.00397	.00319	.00177	.00040	-.00017	-.00057	-.00065	-.00037
90	.00962	.00918	.00835	.00668	.00471	.00363	.00248	.00138	.00050
100	.01851	.01808	.01721	.01524	.01239	.01048	.00805	.00514	.00212
110	.02494	.02453	.02368	.02162	.01829	.01583	.01248	.00817	.00344
120	.02859	.02821	.02742	.02543	.02196	.01924	.01537	.01020	.00434
130	.02936	.02902	.02832	.02652	.02321	.02049	.01652	.01105	.00474
140	.02737	.02708	.02649	.02496	.02204	.01957	.01587	.01069	.00460
150	.02291	.02268	.02222	.02103	.01869	.01666	.01357	.00917	.00396
160	.01646	.01630	.01598	.01516	.01353	.01209	.00988	.00670	.00290
170	.00859	.00851	.00835	.00793	.00710	.00635	.00520	.00353	.00153
180	0	0	0	0	0	0	0	0	0

TABLE 40

$C_{\theta t}$	L_r/L_c = .200						X = 0		
γ	.02	.03	.05	.10	.20	.30	.50	1.00	3.00
$\phi°$									
0	-.06274	-.05925	-.05447	-.04721	-.03911	-.03405	-.02756	-.01912	-.00884
5	-.05728	-.05472	-.05092	-.04474	-.03743	-.03274	-.02661	-.01854	-.00860
10	-.04467	-.04392	-.04220	-.03841	-.03301	-.02923	-.02404	-.01694	-.00793
15	-.03148	-.03192	-.03184	-.03033	-.02705	-.02436	-.02040	-.01462	-.00694
20	-.02037	-.02111	-.02181	-.02187	-.02042	-.01881	-.01612	-.01182	-.00572
25	-.01068	-.01143	-.01246	-.01353	-.01357	-.01295	-.01150	-.00872	-.00435
30	-.00222	-.00293	-.00407	-.00574	-.00690	-.00712	-.00679	-.00550	-.00289
35	.00460	.00406	.00304	.00118	-.00073	-.00159	-.00224	-.00230	-.00141
40	.01024	.00986	.00902	.00716	.00482	.00347	.00203	.00076	.00004
45	.01519	.01484	.01408	.01228	.00968	.00798	.00592	.00361	.00141
50	.01915	.01883	.01814	.01646	.01376	.01185	.00932	.00616	.00267
55	.02204	.02178	.02121	.01969	.01704	.01501	.01218	.00836	.00378
60	.02423	.02400	.02349	.02211	.01956	.01750	.01448	.01019	.00473
65	.02576	.02551	.02501	.02374	.02134	.01930	.01621	.01161	.00549
70	.02638	.02616	.02572	.02459	.02238	.02043	.01736	.01262	.00605
75	.02628	.02611	.02573	.02474	.02274	.02092	.01795	.01321	.00642
80	.02571	.02553	.02518	.02430	.02250	.02083	.01803	.01341	.00659
85	.02453	.02436	.02405	.02327	.02169	.02019	.01761	.01323	.00657
90	.02272	.02260	.02235	.02171	.02036	.01905	.01674	.01270	.00637
100	.01811	.01801	.01783	.01740	.01649	.01557	.01387	.01071	.00548
110	.01213	.01210	.01204	.01184	.01138	.01087	.00984	.00776	.00406
120	.00571	.00570	.00569	.00568	.00562	.00549	.00512	.00420	.00228
130	-.00095	-.00090	-.00081	-.00062	-.00032	-.00009	.00018	.00040	.00035
140	-.00708	-.00701	-.00687	-.00652	-.00590	-.00538	-.00455	-.00328	-.00156
150	-.01237	-.01227	-.01208	-.01161	-.01073	-.00996	-.00867	-.00652	-.00325
160	-.01646	-.01633	-.01609	-.01552	-.01445	-.01349	-.01186	-.00904	-.00457
170	-.01894	-.01882	-.01858	-.01795	-.01678	-.01571	-.01387	-.01063	-.00542
180	-.01989	-.01974	-.01946	-.01881	-.01758	-.01647	-.01456	-.01116	-.00571

TABLE 41

	$C_{\theta t}$			L_r/L_c = .400				X = 0	
γ	.02	.03	.05	.10	.20	.30	.50	1.00	3.00
$\phi°$									
0	-.08003	-.07415	-.06652	-.05579	-.04473	-.03824	-.03026	-.02041	-.00911
5	-.07304	-.06851	-.06225	-.05293	-.04286	-.03680	-.02924	-.01980	-.00887
10	-.05653	-.05479	-.05156	-.04551	-.03787	-.03291	-.02646	-.01812	-.00819
15	-.03849	-.03897	-.03849	-.03584	-.03105	-.02748	-.02249	-.01565	-.00717
20	-.02286	-.02434	-.02555	-.02554	-.02339	-.02122	-.01780	-.01268	-.00592
25	-.00961	-.01140	-.01350	-.01535	-.01543	-.01457	-.01271	-.00938	-.00450
30	.00130	-.00043	-.00285	-.00585	-.00765	-.00794	-.00751	-.00593	-.00300
35	.00957	.00821	.00596	.00252	-.00045	-.00165	-.00246	-.00250	-.00147
40	.01591	.01496	.01310	.00966	.00599	.00411	.00227	.00078	.00003
45	.02104	.02036	.01884	.01562	.01158	.00923	.00658	.00384	.00145
50	.02487	.02439	.02321	.02034	.01624	.01359	.01034	.00659	.00275
55	.02743	.02714	.02629	.02386	.01992	.01714	.01350	.00896	.00390
60	.02923	.02902	.02838	.02636	.02268	.01989	.01603	.01092	.00488
65	.03031	.03011	.02959	.02791	.02456	.02185	.01792	.01245	.00567
70	.03046	.03031	.02991	.02854	.02559	.02303	.01917	.01353	.00626
75	.02989	.02978	.02948	.02839	.02584	.02350	.01979	.01417	.00664
80	.02887	.02874	.02847	.02758	.02540	.02330	.01984	.01438	.00682
85	.02725	.02711	.02688	.02616	.02434	.02250	.01935	.01418	.00680
90	.02499	.02490	.02473	.02418	.02271	.02115	.01836	.01361	.00659
100	.01955	.01947	.01934	.01903	.01817	.01714	.01515	.01147	.00567
110	.01279	.01278	.01276	.01268	.01235	.01184	.01069	.00829	.00420
120	.00567	.00567	.00570	.00580	.00590	.00585	.00551	.00448	.00236
130	-.00161	-.00154	-.00143	-.00114	-.00065	-.00030	.00011	.00041	.00036
140	-.00826	-.00817	-.00800	-.00757	-.00677	-.00608	-.00504	-.00352	-.00161
150	-.01396	-.01385	-.01363	-.01307	-.01202	-.01107	-.00951	-.00698	-.00336
160	-.01836	-.01822	-.01794	-.01728	-.01604	-.01490	-.01296	-.00967	-.00473
170	-.02102	-.02089	-.02061	-.01991	-.01855	-.01730	-.01514	-.01127	-.00560
180	-.02205	-.02157	-.02156	[illegible]	-.01942	[illegible]	[illegible]	[illegible]	-.00590

TABLE 42

$C_{\theta t}$				$L_r/L_c = 1.000$			X = 0		
γ	.02	.03	.05	.10	.20	.30	.50	1.00	3.00
$\phi°$									
0	-.13783	-.12431	-.10743	-.08507	-.06365	-.05228	-.03905	-.02437	-.00986
5	-.12775	-.11636	-.10161	-.08133	-.06150	-.05053	-.03786	-.02368	-.00962
10	-.10278	-.09626	-.08653	-.07138	-.05515	-.04572	-.03455	-.02178	-.00890
15	-.07291	-.07122	-.06691	-.05782	-.04618	-.03883	-.02974	-.01896	-.00782
20	-.04425	-.04600	-.04613	-.04266	-.03574	-.03067	-.02394	-.01552	-.00648
25	-.01847	-.02237	-.02576	-.02705	-.02459	-.02180	-.01753	-.01166	-.00496
30	.00334	-.00158	-.00704	-.01196	-.01338	-.01274	-.01088	-.00758	-.00333
35	.02036	.01542	.00910	.00181	-.00271	-.00395	-.00429	-.00348	-.00168
40	.03318	.02881	.02248	.01391	.00708	.00429	.00199	.00049	-.00005
45	.04273	.03910	.03323	.02419	.01578	.01175	.00779	.00423	.00150
50	.04921	.04640	.04132	.03248	.02318	.01824	.01295	.00763	.00293
55	.05297	.05101	.04691	.03878	.02918	.02366	.01737	.01060	.00420
60	.05486	.05357	.05040	.04323	.03379	.02795	.02098	.01309	.00529
65	.05521	.05441	.05207	.04597	.03702	.03112	.02375	.01506	.00617
70	.05404	.05364	.05205	.04709	.03890	.03314	.02566	.01649	.00683
75	.05171	.05162	.05065	.04678	.03953	.03409	.02672	.01738	.00727
80	.04866	.04870	.04817	.04528	.03904	.03403	.02698	.01774	.00749
85	.04480	.04494	.04474	.04272	.03753	.03304	.02648	.01759	.00748
90	.04020	.04042	.04050	.03924	.03510	.03121	.02527	.01696	.00727
100	.02994	.03016	.03049	.03033	.02811	.02550	.02108	.01442	.00628
110	.01842	.01866	.01913	.01970	.01910	.01775	.01505	.01054	.00467
120	.00683	.00703	.00750	.00847	.00911	.00891	.00795	.00580	.00265
130	-.00449	-.00426	-.00377	-.00256	-.00099	-.00020	.00044	.00069	.00044
140	-.01460	-.01439	-.01390	-.01258	-.01056	-.00878	-.00674	-.00428	-.00175
150	-.02312	-.02288	-.02238	-.02101	-.01836	-.01610	-.01300	-.00866	-.00370
160	-.02957	-.02931	-.02879	-.02730	-.02446	-.02165	-.01764	-.01209	-.00523
170	-.03349	-.03325	-.03275	-.03132	-.02826	-.02541	-.02089	-.01420	-.00621
180	-.03495	-.03485	-.03411	-.03208	-.02990	-.02665	-.02194	-.01500	-.00654

TABLE 43

C_{qm}	L_r/L_c = .200						X = 0		
γ	.02	.03	.05	.10	.20	.30	.50	1.00	3.00
$\phi°$									
0	-97.72904	-74.43639	-51.63516	-30.36415	-17.26516	-12.24125	-7.63555	-4.16392	-1.48934
5	-41.79260	-34.04441	-25.45185	-16.28372	-9.83674	-7.23092	-4.77787	-2.63755	-.96613
10	40.21056	26.51553	14.78334	5.94079	1.93232	.90052	.22490	-.07992	-.09840
15	42.00650	31.08476	20.22638	10.41605	4.95522	3.11302	1.69127	.71965	.18717
20	2.86839	5.14128	5.43062	3.90870	2.20955	1.46734	.82482	.34891	.08283
25	-.57848	2.12806	3.54642	3.30676	2.21985	1.60919	1.00692	.49445	.14941
30	11.75593	9.68714	7.71612	5.39711	3.41435	2.49171	1.60682	.83834	.27995
35	1.24689	1.77238	2.31098	2.41966	1.92837	1.53897	1.07725	.60516	.21521
40	-7.94880	-5.06686	-2.39466	-.28526	.49818	.59007	.52796	.35139	.14077
45	2.06495	1.48561	1.25810	1.27698	1.18231	1.03312	.79935	.49972	.19786
50	5.04991	3.43130	2.24545	1.54791	1.20761	1.02363	.78733	.49897	.20284
55	-4.30053	-3.00452	-1.81789	-.69107	-.02763	.16528	.25726	.23315	.11727
60	-2.94261	-2.09329	-1.32345	-.56188	-.05551	.11261	.20733	.20369	.10880
65	4.58972	3.08179	1.83415	.96966	.64224	.54706	.44861	.31732	.14663
70	.44056	.26553	.11173	.05239	.12238	.17086	.20224	.18490	.10117
75	-4.43783	-3.07386	-1.93541	-1.01380	-.45891	-.24263	-.06577	.04056	.05080
80	1.25540	.82451	.45875	.19106	.11715	.12179	.13558	.13089	.07801
85	3.29392	2.23161	1.33117	.63203	.31810	.23944	.19047	.14789	.08024
90	-2.69815	-1.86944	-1.18002	-.64538	-.34091	-.21452	-.09646	-.00601	.02505
100	3.17512	2.14801	1.28488	.60900	.27509	.17871	.11778	.08258	.04636
110	-3.32855	-2.30468	-1.44469	-.77648	-.42998	-.30346	-.18788	-.08638	-.01841
120	2.60502	1.75980	1.04892	.49291	.20793	.11704	.05428	.02202	.00982
130	-1.78932	-1.25204	-.79976	-.44716	-.26693	-.20371	-.14575	-.08829	-.03414
140	.43195	.27179	.13621	.02944	-.02660	-.04469	-.05475	-.05037	-.02755
150	.62220	.39993	.21367	.06840	-.00708	-.03254	-.05035	-.05374	-.03353
160	-1.81513	-1.26794	-.80868	-.45122	-.26904	-.20810	-.15768	-.11125	-.05624
170	2.34642	1.58153	.93883	.43726	.17899	.09123	.02140	-.02372	-.02916
180	-2.74875	-1.90730	-1.20141	-.65104	-.36982	-.27575	-.19955	-.13511	-.06705

TABLE 44

C_{gm}	L_r/L_c = .400						X = 0		
γ	.02	.03	.05	.10	.20	.30	.50	1.00	3.00
$\phi°$									
0	-62.15280	-46.38419	-31.54799	-18.22823	-10.26822	-7.26189	-4.64371	-2.48491	-.88577
5	-30.00376	-23.73040	-17.20797	-10.68415	-6.36920	-4.62712	-3.04284	-1.67542	-.61344
10	19.11067	11.54823	5.58680	1.57177	.06537	-.24898	-.36489	-.31279	-.15257
15	25.03236	17.45708	10.56833	4.92682	2.08861	1.20670	.57296	.18730	.02329
20	6.17064	5.69580	4.33402	2.44204	1.14737	.68160	.32325	.09584	.00314
25	3.68875	4.20997	3.81746	2.59150	1.45970	.97934	.56255	.24832	.06465
30	8.90151	7.52514	5.87164	3.82629	2.24275	1.57261	.97046	.48232	.15303
35	2.29202	2.68924	2.77758	2.30282	1.57087	1.17427	.77183	.40857	.13793
40	-3.41098	-1.56500	-.06306	.79556	.84801	.72247	.52974	.30814	.11278
45	1.26770	1.27099	1.39084	1.39669	1.14076	.93229	.67456	.39631	.14922
50	2.59999	1.95230	1.57951	1.34231	1.07620	.89061	.65920	.39954	.15592
55	-2.37337	-1.54937	-.72062	.03623	.36624	.40829	.37151	.26211	.11432
60	-1.70168	-1.17727	-.62112	-.04292	.26498	.32569	.31796	.23801	.10917
65	2.25848	1.46709	.90481	.62252	.53770	.48890	.40770	.28244	.12563
70	.13603	.02683	-.01303	.08070	.20855	.24850	.25203	.20146	.09915
75	-2.39657	-1.68379	-1.07450	-.51234	-.13980	-.00500	.08667	.11362	.06938
80	.58709	.33987	.14481	.06336	.10667	.13956	.15957	.14354	.07805
85	1.67354	1.08542	.59872	.26817	.17511	.16695	.16202	.13722	.07392
90	-1.44780	-1.01692	-.67254	-.38691	-.18085	-.08694	-.00405	.04595	.04090
100	1.61795	1.06328	.59984	.24545	.10126	.07563	.06925	.06575	.04111
110	-1.77629	-1.22743	-.78219	-.44886	-.26476	-.18613	-.10756	-.03884	-.00103
120	1.32389	.86953	.49440	.20008	.05438	.01622	-.00069	.00038	.00464
130	-.97434	-.68480	-.44759	-.27086	-.18346	-.14857	-.11007	-.06626	-.02459
140	.18907	.10231	.03079	-.02682	-.05997	-.06910	-.06929	-.05528	-.02711
150	.28570	.16695	.06970	-.00593	-.04805	-.06239	-.06968	-.06253	-.03458
160	-.98560	-.69216	-.45153	-.26812	-.17843	-.14980	-.12480	-.09497	-.04914
170	1.18725	.77660	.43960	.18146	.04812	.00141	-.03533	-.05303	-.03743
180	-1.47382	-1.02236	-.65206	-.36901	-.22804	-.18294	-.14648	-.10958	-.05707

TABLE 45

C_{qm}	$L_r/L_c = 1.000$						X = 0		
γ	.02	.03	.05	.10	.20	.30	.50	1.00	3.00
$\phi°$									
0	-31.75358	-23.16729	-15.58604	-8.66902	-4.79050	-3.35717	-2.12940	-1.12375	-.39446
5	-17.38128	-13.26635	-9.25726	-5.51001	-3.18036	-2.27511	-1.47127	-.79446	-.28411
10	5.48982	2.70877	.77759	-.26466	-.47775	-.45067	-.36353	-.23454	-.09579
15	10.55193	6.80336	3.71887	1.47501	.49322	.22696	.06100	-.01366	-.01970
20	4.37763	3.19807	1.95014	.83921	.27889	.11706	.01546	-.02042	-.02100
25	3.89614	3.19339	2.23542	1.19080	.55171	.33181	.16536	.05930	.01085
30	5.96298	4.71971	3.33072	1.89664	.98850	.65354	.37878	.17685	.05343
35	2.86361	2.65010	2.16081	1.41261	.81248	.56260	.34279	.16920	.05425
40	.00748	.65595	.95995	.86437	.58636	.43351	.28154	.14806	.05042
45	1.44288	1.49799	1.41907	1.10991	.74095	.55341	.36703	.19921	.07043
50	1.61316	1.48359	1.33520	1.05419	.72976	.55788	.38037	.21299	.07765
55	-.70333	-.19028	.23949	.47066	.44160	.37305	.27721	.16712	.06461
60	-.61607	-.23493	.12580	.36766	.38406	.33800	.26123	.16345	.06522
65	.90180	.70288	.61269	.56067	.46736	.39344	.29708	.18432	.07357
70	-.02132	.02597	.13817	.27070	.30359	.28124	.23006	.15242	.06390
75	-1.08558	-.72793	-.37026	-.03379	.12930	.15979	.15556	.11555	.05213
80	.13332	.06383	.06555	.14028	.19317	.19552	.17381	.12397	.05504
85	.58790	.35480	.21100	.17471	.18689	.18333	.16199	.11637	.05223
90	-.68245	-.50344	-.32702	-.12754	.01272	.05844	.08153	.07359	.03734
100	.59324	.35124	.16696	.07362	.07268	.08038	.08179	.06669	.03287
110	-.78645	-.56784	-.39166	-.23333	-.11337	-.06087	-.01697	.00857	.01041
120	.49228	.29548	.13122	.01632	-.01183	-.00808	.00109	.00817	.00666
130	-.44882	-.33152	-.24233	-.17526	-.12359	-.09482	-.06332	-.03333	-.01096
140	.03030	-.00784	-.04313	-.07495	-.08313	-.07721	-.06320	-.04171	-.01736
150	.06956	.01949	-.02380	-.06314	-.08278	-.08374	-.07538	-.05488	-.02488
160	-.45162	-.32943	-.23229	-.16543	-.13685	-.12431	-.10566	-.07553	-.03411
170	.43980	.26837	.12095	.01745	-.04650	-.06659	-.07457	-.06307	-.03155
180	-.65209	-.46368	-.31201	-.20322	-.15736	-.14137	-.12064	-.08722	-.04012

TABLE 46

C_{mm}	L_r/L_c = .200					X = 0			
γ	.02	.03	.05	.10	.20	.30	.50	1.00	3.00
$\phi°$									
0	.50000	.50000	.50000	.50000	.50000	.50000	.50000	.50000	.50000
5	.24392	.27077	.30256	.34110	.37374	.39000	.40755	.42619	.44476
10	.08326	.11588	.15813	.21451	.26647	.29373	.32407	.35739	.39146
15	.01950	.04092	.07448	.12775	.16409	.21598	.25317	.29580	.34113
20	-.00244	.00749	.02851	.07044	.12241	.15451	.19392	.24136	.29396
25	-.01186	-.00802	.00362	.03336	.07708	.10665	.14503	.19366	.25003
30	-.00975	-.01003	-.00585	.01206	.04545	.07067	.10556	.15241	.20942
35	-.00400	-.00671	-.00754	.00075	.02388	.04399	.07397	.11694	.17206
40	-.00371	-.00601	-.00834	-.00586	.00386	.02400	.04860	.08643	.13777
45	-.00417	-.00562	-.00813	-.00915	-.00119	.00937	.02847	.06039	.10650
50	-.00146	-.00319	-.00623	-.00984	-.00740	-.00097	.01276	.03335	.07813
55	-.00077	-.00233	-.00522	-.00998	-.01144	-.00844	.00042	.01970	.05253
60	-.00268	-.00341	-.00548	-.01024	-.01417	-.01388	-.00926	.00399	.02956
65	-.00221	-.00298	-.00493	-.00983	-.01561	-.01750	-.01660	-.00905	.00914
70	-.00068	-.00188	-.00406	-.00916	-.01623	-.01985	-.02211	-.01978	-.00884
75	-.00172	-.00256	-.00435	-.00906	-.01667	-.02149	-.02627	-.02855	-.02453
80	-.00261	-.00315	-.00462	-.00895	-.01680	-.02246	-.02926	-.03556	-.03800
85	-.00125	-.00220	-.00396	-.00838	-.01647	-.02277	-.03119	-.04096	-.04935
90	-.00095	-.00196	-.00375	-.00804	-.01611	-.02278	-.03238	-.04502	-.05870
100	-.00185	-.00250	-.00392	-.00768	-.01524	-.02208	-.03299	-.04965	-.07180
110	-.00141	-.00210	-.00348	-.00695	-.01393	-.02051	-.03171	-.05041	-.07806
120	-.00092	-.00164	-.00296	-.00613	-.01238	-.01841	-.02910	-.04812	-.07830
130	-.00161	-.00197	-.00290	-.00543	-.01074	-.01598	-.02557	-.04345	-.07334
140	-.00023	-.00088	-.00192	-.00425	-.00871	-.01308	-.02121	-.03685	-.06392
150	-.00129	-.00143	-.00194	-.00349	-.00679	-.01011	-.01641	-.02587	-.05112
160	.00003	-.00035	-.00093	-.00217	-.00450	-.00678	-.01111	-.01979	-.03556
170	-.00050	-.00053	-.00059	-.00120	-.00232	-.00346	-.00564	-.01008	-.01523
180	0	0	0	0	0	0	0	0	0

TABLE 47

	C_{mm}			L_r/L_c = .400			X = 0		
γ	.02	.03	.05	.10	.20	.30	.50	1.00	3.00
$\phi°$									
0	.50000	.50000	.50000	.50000	.50000	.50000	.50000	.50000	.50000
5	.28305	.30647	.33336	.36509	.39137	.40434	.41826	.43309	.44776
10	.12935	.16122	.20052	.25042	.29457	.31724	.34221	.36936	.39682
15	.04685	.07310	.10990	.16272	.21437	.24247	.27450	.31050	.34795
20	.00626	.02308	.05116	.09815	.14981	.17981	.21540	.25692	.30152
25	-.01270	-.00330	.01485	.05223	.09913	.12840	.16468	.20875	.25774
30	-.01624	-.01330	-.00417	.02193	.06092	.08745	.12204	.16602	.21631
35	-.01298	-.01487	-.01236	.00307	.03288	.05545	.08667	.12847	.17878
40	-.01065	-.01400	-.01557	-.00840	.01257	.03071	.05757	.09567	.14364
45	-.00843	-.01192	-.01560	-.01454	-.00153	.01206	.03400	.06730	.11140
50	-.00498	-.00853	-.01343	-.01683	-.01076	-.00156	.01523	.04300	.08201
55	-.00315	-.00619	-.01121	-.01723	-.01665	-.01138	.00042	.02233	.05539
60	-.00321	-.00531	-.00964	-.01674	-.02016	-.01827	-.01112	.00489	.03146
65	-.00243	-.00408	-.00788	-.01545	-.02184	-.02279	-.01986	-.00962	.01014
70	-.00133	-.00286	-.00627	-.01387	-.02229	-.02553	-.02631	-.02155	-.00865
75	-.00173	-.00282	-.00555	-.01260	-.02213	-.02709	-.03099	-.03122	-.02504
80	-.00213	-.00290	-.00508	-.01146	-.02150	-.02772	-.03418	-.03880	-.03912
85	-.00139	-.00229	-.00434	-.01024	-.02048	-.02759	-.03611	-.04475	-.05099
90	-.00121	-.00210	-.00395	-.00931	-.01938	-.02703	-.03711	-.04908	-.06075
100	-.00164	-.00230	-.00374	-.00802	-.01716	-.02509	-.03699	-.05381	-.07440
110	-.00136	-.00202	-.00333	-.00694	-.01492	-.02247	-.03485	-.05429	-.08091
120	-.00104	-.00169	-.00291	-.00600	-.01278	-.01958	-.03141	-.05152	-.08115
130	-.00132	-.00175	-.00270	-.00521	-.01077	-.01654	-.02715	-.04625	-.07597
140	-.00052	-.00106	-.00199	-.00416	-.00865	-.01334	-.02226	-.03905	-.06626
150	-.00098	-.00120	-.00177	-.00331	-.00662	-.01014	-.01703	-.03046	-.05291
160	-.00019	-.00049	-.00100	-.00215	-.00440	-.00676	-.01148	-.02005	-.03680
170	-.00036	-.00043	-.00062	-.00114	-.00224	-.00342	-.00579	-.01058	-.01886
180	0	0	0	0	0	0	0	0	0

TABLE 48

C_{mm}	L_r/L_c = 1.000						X = 0		
γ	.02	.03	.05	.10	.20	.30	.50	1.00	3.00
$\phi°$									
0	.50000	.50000	.50000	.50000	.50000	.50000	.50000	.50000	.50000
5	.33137	.35021	.37125	.39526	.41451	.42378	.43350	.44340	.45248
10	.19677	.22580	.25983	.30067	.33489	.35179	.36980	.38641	.40567
15	.10486	.13452	.17206	.22066	.26404	.28627	.31049	.33602	.36007
20	.04538	.07051	.10542	.15487	.20237	.22776	.25610	.28667	.31599
25	.00886	.02756	.05660	.10220	.14974	.17636	.20691	.24068	.27370
30	-.00991	.00173	.02312	.06160	.10591	.13207	.16306	.19825	.23341
35	-.01752	-.01219	.00141	.03122	.07006	.09447	.12441	.15946	.19530
40	-.01993	-.01913	-.01214	.00897	.04117	.06292	.09068	.12426	.15546
45	-.01906	-.02130	-.01959	-.00658	.01843	.03690	.06160	.09261	.12599
50	-.01596	-.02020	-.02254	-.01672	.00102	.01586	.03685	.06440	.09497
55	-.01287	-.01797	-.02294	-.02294	-.01200	-.00091	.01603	.03946	.06643
60	-.01051	-.01558	-.02194	-.02631	-.02143	-.01399	-.00125	.01767	.04038
65	-.00807	-.01285	-.01987	-.02744	-.02784	-.02386	-.01535	-.00118	.01683
70	-.00589	-.01022	-.01734	-.02707	-.03186	-.03104	-.02656	-.01727	-.00424
75	-.00472	-.00833	-.01501	-.02585	-.03407	-.03603	-.03534	-.03081	-.02286
80	-.00390	-.00681	-.01282	-.02406	-.03485	-.03918	-.04194	-.04197	-.03908
85	-.00289	-.00533	-.01069	-.02188	-.03452	-.04082	-.04664	-.05093	-.05295
90	-.00232	-.00430	-.00893	-.01964	-.03343	-.04129	-.04973	-.05790	-.06454
100	-.00191	-.00314	-.00638	-.01542	-.02984	-.03967	-.05205	-.06653	-.08120
110	-.00150	-.00235	-.00460	-.01176	-.02534	-.03586	-.05040	-.06916	-.08975
120	-.00118	-.00183	-.00342	-.00884	-.02072	-.03094	-.04605	-.06695	-.09101
130	-.00115	-.00160	-.00269	-.00662	-.01639	-.02559	-.04004	-.06092	-.08589
140	-.00069	-.00113	-.00197	-.00479	-.01242	-.02015	-.03286	-.05193	-.07534
150	-.00076	-.00101	-.00155	-.00341	-.00893	-.01486	-.02505	-.04074	-.06041
160	-.00032	-.00055	-.00095	-.00214	-.00573	-.00977	-.01684	-.02798	-.04214
170	-.00027	-.00035	-.00052	-.00106	-.00281	-.00484	-.00846	-.01424	-.02163
180	0	0	0	0	0	0	0	0	0

TABLE 49

C_{am}	L_r/L_c = .200						X = 0		
γ	.02	.03	.05	.10	.20	.30	.50	1.00	3.00
$\phi°$									
0	-3.17035	-2.80753	-2.38892	-1.89609	-1.49030	-1.29164	-1.07985	-.85692	-.63730
5	-2.49327	-2.28725	-2.02388	-1.67791	-1.36404	-1.20109	-1.02094	-.82452	-.62487
10	-1.19677	-1.25924	-1.27580	-1.21106	-1.08402	-.99666	-.88530	-.74825	-.59464
15	-.39023	-.54675	-.69470	-.80133	-.81443	-.79111	-.74250	-.66375	-.55876
20	-.16688	-.26385	-.39045	-.53063	-.60766	-.62299	-.61790	-.58481	-.52217
25	-.04108	-.09343	-.18709	-.32592	-.43552	-.47656	-.50406	-.50878	-.48436
30	.07156	.02990	-.04571	-.17396	-.29670	-.35323	-.40350	-.43789	-.44644
35	.03831	.02794	-.00806	-.09638	-.20479	-.26362	-.32386	-.37679	-.41030
40	-.01799	-.00440	-.00801	-.05664	-.14205	-.19670	-.25938	-.32323	-.37552
45	.01717	.01941	.01502	-.01963	-.09015	-.14054	-.20339	-.27438	-.34144
50	.03062	.02655	.02184	-.00104	-.05572	-.09952	-.15878	-.23201	-.30889
55	-.01603	-.00755	.00060	-.00348	-.03857	-.07328	-.12539	-.19630	-.27817
60	-.01458	-.00822	-.00110	-.00016	-.02374	-.05142	-.09690	-.16421	-.24843
65	.02156	.01560	.01228	.00847	-.01015	-.03279	-.07246	-.13539	-.21975
70	.00404	.00321	.00378	.00477	-.00562	-.02223	-.05477	-.11121	-.19270
75	-.02055	-.01382	-.00727	-.00080	-.00405	-.01527	-.04093	-.09020	-.16694
80	.00553	.00400	.00335	.00446	.00160	-.00687	-.02768	-.07067	-.14201
85	.01687	.01186	.00808	.00674	.00482	-.00110	-.01727	-.05370	-.11835
90	-.01129	-.00734	-.00367	.00071	.00324	.00068	-.01033	-.03953	-.09614
100	.01585	.01137	.00797	.00674	.00817	.00801	.00327	-.01421	-.05457
110	-.01467	-.00940	-.00453	.00073	.00638	.00943	.01078	.00468	-.01799
120	.01388	.01026	.00775	.00740	.01072	.01414	.01848	.02078	.01440
130	-.00735	-.00419	-.00093	.00339	.00953	.01466	.02240	.03253	.04174
140	.00380	.00354	.00397	.00625	.01167	.01709	.02652	.04223	.06450
150	.00439	.00399	.00436	.00675	.01250	.01837	.02922	.04931	.08229
160	-.00690	-.00368	-.00025	.00462	.01184	.01845	.03058	.05398	.09499
170	.01283	.00985	.00811	.00900	.01431	.02041	.03252	.05731	.10283
180	-.01138	-.00672	-.00204	.00388	.01182	.01884	.03183	.05774	.10523

TABLE 50

C_{sm}	L_r/L_c = .400						X = 0		
γ	.02	.03	.05	.10	.20	.30	.50	1.00	3.00
$\phi°$									
0	-2.63785	-2.33177	-1.98763	-1.59183	-1.27117	-1.11506	-.94677	-.77353	-.60132
5	-2.20013	-2.00195	-1.76044	-1.45813	-1.19416	-1.05979	-.91263	-.75344	-.59327
10	-1.31259	-1.31356	-1.27029	-1.15807	-1.01569	-.92952	-.82585	-.70401	-.57283
15	-.64567	-.75032	-.83132	-.86162	-.82537	-.78542	-.72595	-.64443	-.54650
20	-.32308	-.42478	-.53315	-.62704	-.65781	-.65228	-.62836	-.58322	-.51732
25	-.11844	-.19998	-.30720	-.43032	-.50593	-.52710	-.53395	-.52064	-.48560
30	.01933	-.04548	-.14175	-.27250	-.37438	-.41446	-.44498	-.45921	-.45242
35	.03827	.00598	-.05805	-.16794	-.27314	-.32234	-.36771	-.40236	-.41918
40	.01920	.01420	-.01792	-.09848	-.19491	-.24682	-.30055	-.34990	-.38605
45	.03538	.03447	.01577	-.04471	-.13084	-.18262	-.24098	-.30093	-.35301
50	.03613	.03739	.02901	-.01202	-.08378	-.13204	-.19080	-.25680	-.32071
55	.00517	.01532	.02049	.00099	-.05271	-.09456	-.15000	-.21779	-.28949
60	.00053	.00966	.01795	.01038	-.02895	-.06440	-.11529	-.18250	-.25908
65	.01579	.01733	.02146	.01806	-.01075	-.04027	-.08596	-.15075	-.22959
70	.00450	.00747	.01351	.01675	-.00095	-.02387	-.06302	-.12318	-.20142
75	-.00961	-.00372	.00462	.01293	.00449	-.01227	-.04464	-.09894	-.17443
80	.00336	.00394	.00743	.01386	.00993	-.00231	-.02880	-.07707	-.14844
85	.00908	.00715	.00795	.01308	.01274	.00452	-.01628	-.05794	-.12370
90	-.00568	-.00318	.00065	.00820	.01221	.00798	-.00705	-.04155	-.10031
100	.00852	.00623	.00528	.00841	.01384	.01415	.00770	-.01371	-.05688
110	-.00732	-.00438	-.00141	.00375	.01157	.01541	.01614	.00719	-.01856
120	.00767	.00589	.00491	.00642	.01261	.01759	.02270	.02385	.01504
130	-.00337	-.00146	.00064	.00423	.01129	.01750	.02621	.03613	.04346
140	.00251	.00260	.00330	.00576	.01203	.01845	.02916	.04569	.06695
150	.00284	.00289	.00362	.00617	.01235	.01894	.03106	.05259	.08527
160	-.00302	-.00102	.00135	.00525	.01205	.01893	.03209	.05717	.09837
170	.00729	.00598	.00565	.00757	.01334	.01991	.03324	.06013	.10635
180	-.00535	-.00255	.00049	.00502	.01211	.01913	.03295	.06077	.10890

TABLE 51

C_{sm}	L_r/L_c = 1.000					X = 0			
γ	.02	.03	.05	.10	.20	.30	.50	1.00	3.00
$\phi°$									
0	-2.01122	-1.77451	-1.51441	-1.22272	-.99235	-.88255	-.76801	-.65192	-.54600
5	-1.78242	-1.60574	-1.40061	-1.15705	-.95494	-.85573	-.75042	-.64195	-.54168
10	-1.28791	-1.23204	-1.14159	-1.00265	-.86450	-.78996	-.70653	-.61651	-.53023
15	-.84297	-.87444	-.87680	-.83278	-.75893	-.71089	-.65196	-.58353	-.51433
20	-.53848	-.60470	-.65686	-.67707	-.65473	-.63002	-.59394	-.54681	-.49532
25	-.30678	-.38603	-.46617	-.53181	-.55160	-.54788	-.53316	-.50689	-.47349
30	-.13677	-.21636	-.30829	-.40234	-.45451	-.46798	-.47215	-.46527	-.44945
35	-.04991	-.11272	-.19662	-.29813	-.36912	-.39508	-.41416	-.42383	-.42395
40	-.00796	-.04999	-.11758	-.21432	-.29446	-.32891	-.35942	-.38294	-.39726
45	.02639	-.00227	-.05593	-.14444	-.22826	-.26842	-.30766	-.34271	-.36955
50	.03941	.02284	-.01581	-.09109	-.17256	-.21534	-.26024	-.30406	-.34130
55	.03008	.02646	.00441	-.05352	-.12746	-.17006	-.21768	-.26746	-.31282
60	.02639	.02912	.01827	-.02465	-.08967	-.13059	-.17903	-.23265	-.28417
65	.02860	.03250	.02799	-.00282	-.05846	-.09662	-.14428	-.19980	-.25558
70	.01934	.02616	.02842	.01001	-.03476	-.06887	-.11400	-.16937	-.22734
75	.00922	.01812	.02536	.01746	-.01661	-.04607	-.08757	-.14117	-.19955
80	.01093	.01750	.02512	.02336	-.00187	-.02679	-.06418	-.11494	-.17228
85	.01050	.01533	.02294	.02596	.00884	-.01143	-.04412	-.09091	-.14573
90	.00239	.00816	.01718	.02499	.01568	.00019	-.02729	-.06911	-.12006
100	.00580	.00773	.01361	.02356	.02451	.01702	-.00041	-.03100	-.07146
110	-.00172	.00106	.00671	.01806	.02627	.02558	.01787	-.00023	-.02732
120	.00404	.00410	.00652	.01524	.02619	.03013	.03054	.02457	.01198
130	-.00062	.00062	.00321	.01105	.02362	.03103	.03834	.04376	.04583
140	.00175	.00211	.00346	.00918	.02139	.03082	.04332	.05847	.07401
150	.00186	.00217	.00321	.00766	.01916	.02981	.04614	.06918	.09617
160	-.00055	.00058	.00214	.00625	.01721	.02857	.04756	.07640	.11213
170	.00367	.00343	.00384	.00662	.01658	.02808	.04844	.08070	.12180
180	-.00152	-.00004	.00174	.00543	.01570	.02746	.04843	.08197	.12496

TABLE 52

C_{fm}	L_r/L_c = .200						X = 0		
γ	.02	.03	.05	.10	.20	.30	.50	1.00	3.00
φ°									
0	0	0	0	0	0	0	0	0	0
5	-13.82754	-10.70394	-7.57561	-4.57513	-2.67087	-1.92385	-1.25782	-.69552	-.26910
10	-13.41816	-11.03422	-8.35872	-5.45564	-3.38949	-2.51648	-1.70002	-.97553	-.39748
15	-5.03008	-5.16986	-4.80302	-3.80364	-2.70111	-2.12867	-1.52885	-.93691	-.41605
20	-1.27085	-2.09698	-2.61621	-2.59607	-2.11982	-1.77322	-1.35230	-.88295	-.42533
25	-1.69446	-1.88349	-2.09011	-2.10724	-1.82111	-1.57561	-1.24924	-.85392	-.43867
30	-.50178	-.70443	-1.01672	-1.30738	-1.32098	-1.22163	-1.03539	-.75913	-.42593
35	.93980	.50699	-.01019	-.55999	-.82930	-.85998	-.80485	-.64757	-.40376
40	.07087	.02692	-.13287	-.43136	-.65057	-.70120	-.68855	-.58672	-.39506
45	-.56678	-.36931	-.28064	-.36688	-.51627	-.57089	-.58513	-.52758	-.38385
50	.34866	.26446	.15455	-.05033	-.27138	-.36858	-.43676	-.44261	-.36133
55	.43191	.31851	.20717	.03765	-.15897	-.25862	-.34410	-.38343	-.34506
60	-.42205	-.27409	-.15253	-.10924	-.18113	-.24335	-.30978	-.35231	-.33612
65	-.17447	-.11272	-.05682	-.04132	-.10865	-.16967	-.24247	-.30420	-.31974
70	.44731	.30927	.19817	.09792	-.01098	-.08371	-.17022	-.25365	-.30101
75	-.03361	-.02157	-.00801	-.00300	-.04273	-.08836	-.15500	-.23206	-.29060
80	-.38821	-.26631	-.16125	-.08031	-.06879	-.09274	-.14209	-.21226	-.27962
85	.19049	.12917	.07937	.04142	.00116	-.03582	-.09461	-.17591	-.26208
90	.27016	.18437	.11261	.05751	.01487	-.01883	-.07317	-.15343	-.24826
100	-.12848	-.08908	-.05611	-.03007	-.02358	-.03408	-.06503	-.12839	-.22493
110	-.01902	-.01341	-.00939	-.00701	-.00967	-.01875	-.04370	-.09987	-.19781
120	.14329	.09736	.05847	.02724	.00861	-.00299	-.02569	-.07564	-.17000
130	-.23286	-.15986	-.09898	-.05256	-.03090	-.02716	-.03403	-.06670	-.14552
140	.27190	.18576	.11312	.05562	.02437	.01140	-.00613	-.04119	-.11407
150	-.26187	-.17968	-.11083	-.05783	-.03203	-.02498	-.02420	-.03983	-.08954
160	.20381	.13939	.08510	.04228	.01936	.01059	.00048	-.01784	-.05726
170	-.11163	-.07658	-.04720	-.02451	-.01336	-.01010	-.00896	-.01342	-.03028
180	0	0	0	0	0	0	0	0	0

TABLE 53

C_{fm}	L_r/L_c = .400						X = 0		
γ	.02	.03	.05	.10	.20	.30	.50	1.00	3.00
$\phi°$									
0	0	0	0	0	0	0	0	0	0
5	-9.06116	-6.87510	-4.77389	-2.83757	-1.64689	-1.18711	-.77987	-.43696	-.17621
10	-9.80222	-7.84042	-5.77382	-3.67034	-2.24987	-1.66633	-1.12805	-.65478	-.27832
15	-5.31396	-4.89655	-4.14037	-3.02426	-2.05154	-1.59258	-1.13315	-.69548	-.31953
20	-2.64854	-2.91889	-2.88042	-2.42611	-1.81605	-1.47390	-1.09852	-.70965	-.34951
25	-2.10291	-2.26823	-2.30703	-2.07369	-1.65177	-1.38387	-1.06839	-.71905	-.37520
30	-.88837	-1.16541	-1.41742	-1.50253	-1.33812	-1.17801	-.95708	-.68093	-.38217
35	.25306	-.16024	-.59348	-.93863	-1.00143	-.94407	-.81894	-.62299	-.37962
40	.01172	-.15586	-.41103	-.69745	-.81188	-.79924	-.72631	-.58216	-.37990
45	-.23671	-.21950	-.31444	-.51461	-.64619	-.66449	-.63369	-.53649	-.37582
50	.25992	.17348	.01739	-.23540	-.43339	-.49518	-.51607	-.47432	-.36363
55	.29623	.22450	.10752	-.10223	-.29963	-.37772	-.42693	-.42325	-.35272
60	-.16856	-.08262	-.04577	-.11482	-.24739	-.31542	-.36959	-.38570	-.34408
65	-.05935	-.01176	.01249	-.04045	-.16085	-.23206	-.29932	-.33996	-.33069
70	.25228	.19280	.14128	.05394	-.07356	-.15072	-.23077	-.29396	-.31536
75	-.00681	.01118	.02982	.01543	-.06165	-.12258	-.19525	-.26385	-.30368
80	-.19837	-.12426	-.05655	-.01885	-.05523	-.10107	-.16515	-.23621	-.29134
85	.10045	.07337	.05853	.04294	-.00693	-.05446	-.12163	-.20193	-.27545
90	.14160	.09850	.06943	.04883	.00817	-.03265	-.09474	-.17626	-.26126
100	-.06805	-.04617	-.02479	-.00262	-.00441	-.02432	-.06725	-.13962	-.23475
110	-.01007	-.00750	-.00437	.00275	.00271	-.00967	-.04203	-.10668	-.20616
120	.07423	.04938	.02897	.01593	.00968	.00040	-.02442	-.08025	-.17713
130	-.12176	-.08287	-.05141	-.02656	-.01263	-.01176	-.02375	-.06480	-.14971
140	.14174	.09537	.05690	.02730	.01340	.00694	-.00703	-.04342	-.11873
150	-.13697	-.09292	-.05710	-.03022	-.01604	-.01203	-.01456	-.03583	-.09114
160	.10637	.07170	.04305	.02063	.00946	.00545	-.00117	-.01897	-.05960
170	-.05839	-.03959	-.02425	-.01280	-.00698	-.00510	-.00517	-.01159	-.03064
180	0	0	0	0	0	0	0	0	0

TABLE 54

C_{fm}	L_r/L_c = 1.000					X = 0			
γ	.02	.03	.05	.10	.20	.30	.50	1.00	3.00
$\phi°$									
0	0	0	0	0	0	0	0	0	0
5	-4.80985	-3.56895	-2.42300	-1.40958	-.80871	-.58176	-.38337	-.21861	-.09570
10	-5.83547	-4.51497	-3.21110	-1.97084	-1.18246	-.87042	-.58901	-.34741	-.16109
15	-4.21301	-3.55949	-2.77011	-1.87010	-1.20759	-.92132	-.64872	-.40156	-.20089
20	-2.95106	-2.73050	-2.32277	-1.71686	-1.18635	-.93485	-.68192	-.44021	-.23453
25	-2.30000	-2.27608	-2.03549	-1.59936	-1.16290	-.94003	-.70555	-.47151	-.26451
30	-1.46186	-1.56204	-1.54645	-1.34437	-1.05207	-.88014	-.68543	-.47813	-.28486
35	-.62165	-.87464	-1.00706	-1.05727	-.90919	-.79254	-.64408	-.47126	-.29916
40	-.42465	-.62186	-.79919	-.87873	-.80777	-.72697	-.61162	-.46596	-.31234
45	-.31645	-.44408	-.59781	-.71397	-.70350	-.65471	-.57121	-.45390	-.32152
50	.02377	-.13102	-.32342	-.50943	-.57250	-.56070	-.51429	-.43095	-.32529
55	.11917	-.00287	-.17294	-.36868	-.46924	-.48216	-.46369	-.40871	-.32749
60	-.03144	-.05871	-.14734	-.29549	-.39786	-.42267	-.42208	-.38876	-.32864
65	.02762	.01034	-.06011	-.19827	-.31425	-.35356	-.37275	-.36296	-.32605
70	.15596	.11394	.03580	-.10446	-.23354	-.28556	-.32262	-.33501	-.32097
75	.04322	.04731	.01884	-.07523	-.18733	-.24030	-.28510	-.31189	-.31578
80	-.04479	-.00860	.00009	-.05446	-.14818	-.19994	-.24988	-.28864	-.30888
85	.06860	.06701	.05438	-.00390	-.09729	-.15228	-.20996	-.26202	-.29925
90	.07788	.07093	.06098	.01679	-.06468	-.11761	-.17781	-.23846	-.28911
100	-.01907	-.00053	.01819	.01604	-.03032	-.07194	-.12854	-.19712	-.26647
110	-.00050	.00637	.01795	.02384	-.00328	-.03575	-.08710	-.15844	-.23954
120	.03165	.02429	.02373	.02751	.01245	-.01170	-.05578	-.12452	-.20970
130	-.04951	-.03207	-.01422	.00598	.00881	-.00470	-.03776	-.09759	-.17838
140	.05831	.03933	.02618	.02280	.01979	.00863	-.01886	-.07094	-.14401
150	-.05613	-.03771	-.02174	-.00449	.00580	.00264	-.01409	-.05220	-.10981
160	.04370	.02917	.01787	.01274	.01245	.00850	-.00421	-.03170	-.07318
170	-.02394	-.01614	-.00968	-.00314	.00164	.00149	-.00341	-.01634	-.03705
180	0	0	0	0	0	0	0	0	0

TABLE 55

C_{vm}	L_r/L_c = .200						X = 0		
γ	.02	.03	.05	.10	.20	.30	.50	1.00	3.00
$\phi°$									
0	-.06274	-.05925	-.05447	-.04721	-.03911	-.03405	-.02756	-.01912	-.00884
5	-.05728	-.05472	-.05092	-.04474	-.03743	-.03274	-.02661	-.01854	-.00860
10	-.04467	-.04392	-.04220	-.03841	-.03301	-.02923	-.02404	-.01694	-.00793
15	-.03148	-.03192	-.03184	-.03033	-.02705	-.02436	-.02040	-.01462	-.00694
20	-.02037	-.02111	-.02181	-.02187	-.02042	-.01881	-.01612	-.01182	-.00572
25	-.01068	-.01143	-.01246	-.01353	-.01357	-.01295	-.01150	-.00872	-.00435
30	-.00222	-.00293	-.00407	-.00574	-.00690	-.00712	-.00679	-.00550	-.00289
35	.00460	.00406	.00304	.00118	-.00073	-.00159	-.00224	-.00230	-.00141
40	.01024	.00986	.00902	.00716	.00482	.00347	.00203	.00076	.00004
45	.01519	.01484	.01408	.01228	.00968	.00798	.00592	.00361	.00141
50	.01915	.01883	.01814	.01646	.01376	.01185	.00932	.00616	.00267
55	.02204	.02178	.02121	.01969	.01704	.01501	.01218	.00836	.00378
60	.02423	.02400	.02349	.02211	.01956	.01750	.01448	.01019	.00473
65	.02576	.02551	.02501	.02374	.02134	.01930	.01621	.01161	.00549
70	.02638	.02616	.02572	.02459	.02238	.02043	.01736	.01262	.00605
75	.02628	.02611	.02573	.02474	.02274	.02092	.01795	.01321	.00642
80	.02571	.02553	.02518	.02430	.02250	.02083	.01803	.01341	.00659
85	.02453	.02436	.02405	.02327	.02169	.02019	.01761	.01323	.00657
90	.02272	.02260	.02235	.02171	.02036	.01905	.01674	.01270	.00637
100	.01811	.01801	.01783	.01740	.01649	.01557	.01387	.01071	.00548
110	.01213	.01210	.01204	.01184	.01138	.01087	.00984	.00776	.00406
120	.00571	.00570	.00569	.00568	.00562	.00549	.00512	.00420	.00228
130	-.00095	-.00090	-.00081	-.00062	-.00032	-.00009	.00018	.00040	.00035
140	-.00708	-.00701	-.00687	-.00652	-.00590	-.00538	-.00455	-.00328	-.00156
150	-.01237	-.01227	-.01208	-.01161	-.01073	-.00996	-.00867	-.00652	-.00325
160	-.01646	-.01633	-.01609	-.01552	-.01445	-.01349	-.01186	-.00904	-.00457
170	-.01894	-.01882	-.01858	-.01795	-.01678	-.01571	-.01387	-.01063	-.00542
180	-.01989	-.01974	-.01946	-.01881	-.01758	-.01647	-.01456	-.01118	-.00571

TABLE 56

C_{vm}	L_r/L_c = .400					X = 0			
γ	.02	.03	.05	.10	.20	.30	.50	1.00	3.00
$\phi°$									
0	-.08003	-.07415	-.06652	-.05579	-.04473	-.03824	-.03026	-.02041	-.00911
5	-.07304	-.06851	-.06225	-.05293	-.04286	-.03680	-.02924	-.01980	-.00887
10	-.05653	-.05479	-.05156	-.04551	-.03787	-.03291	-.02646	-.01812	-.00819
15	-.03849	-.03897	-.03849	-.03584	-.03105	-.02748	-.02249	-.01565	-.00717
20	-.02286	-.02434	-.02555	-.02554	-.02339	-.02122	-.01780	-.01268	-.00592
25	-.00961	-.01140	-.01350	-.01535	-.01543	-.01457	-.01271	-.00938	-.00450
30	.00130	-.00043	-.00285	-.00585	-.00765	-.00794	-.00751	-.00593	-.00300
35	.00957	.00821	.00596	.00252	-.00045	-.00165	-.00246	-.00250	-.00147
40	.01591	.01496	.01310	.00966	.00599	.00411	.00227	.00078	.00003
45	.02104	.02036	.01884	.01562	.01158	.00923	.00658	.00384	.00145
50	.02487	.02439	.02321	.02034	.01624	.01359	.01034	.00659	.00275
55	.02743	.02714	.02629	.02386	.01992	.01714	.01350	.00896	.00390
60	.02923	.02902	.02838	.02636	.02268	.01989	.01603	.01092	.00488
65	.03031	.03011	.02959	.02791	.02456	.02185	.01792	.01245	.00567
70	.03040	.03031	.02991	.02854	.02559	.02303	.01917	.01353	.00626
75	.02989	.02978	.02948	.02839	.02584	.02350	.01979	.01417	.00664
80	.02887	.02874	.02847	.02758	.02540	.02330	.01984	.01438	.00682
85	.02725	.02711	.02688	.02616	.02434	.02250	.01935	.01418	.00680
90	.02499	.02490	.02473	.02418	.02271	.02115	.01836	.01361	.00659
100	.01955	.01947	.01934	.01903	.01817	.01714	.01515	.01147	.00567
110	.01279	.01278	.01276	.01268	.01235	.01184	.01069	.00829	.00420
120	.00567	.00567	.00570	.00580	.00590	.00585	.00551	.00448	.00236
130	-.00161	-.00154	-.00143	-.00114	-.00065	-.00030	.00011	.00041	.00036
140	-.00826	-.00817	-.00800	-.00757	-.00677	-.00608	-.00504	-.00352	-.00161
150	-.01396	-.01385	-.01363	-.01307	-.01202	-.01107	-.00951	-.00698	-.00336
160	-.01836	-.01822	-.01794	-.01728	-.01604	-.01490	-.01296	-.00967	-.00473
170	-.02102	-.02089	-.02061	-.01991	-.01856	-.01730	-.01514	-.01137	-.00560
180	-.02203	-.02187	-.02156	-.02082	-.01942	-.01813	-.01588	-.01196	-.00590

TABLE 57

	C_{vm}			L_r/L_c = 1.000			X = 0		
γ	.02	.03	.05	.10	.20	.30	.50	1.00	3.00
$\phi°$									
0	-.13783	-.12431	-.10743	-.08507	-.06985	-.05220	-.03905	-.02437	-.00988
5	-.12775	-.11636	-.10161	-.08153	-.06150	-.05053	-.03786	-.02368	-.00962
10	-.10278	-.09626	-.08653	-.07138	-.05515	-.04572	-.03455	-.02176	-.00890
15	-.07291	-.07122	-.06691	-.05782	-.04616	-.03883	-.02974	-.01896	-.00782
20	-.04425	-.04603	-.04613	-.04266	-.03574	-.03067	-.02394	-.01552	-.00648
25	-.01847	-.02237	-.02576	-.02705	-.02459	-.02180	-.01753	-.01166	-.00496
30	.00334	-.00158	-.00704	-.01196	-.01356	-.01274	-.01088	-.00758	-.00333
35	.02036	.01542	.00910	.00181	-.00271	-.00395	-.00429	-.00348	-.00168
40	.03318	.02881	.02248	.01391	.00708	.00429	.00199	.00049	-.00005
45	.04273	.03910	.03323	.02419	.01578	.01175	.00779	.00423	.00150
50	.04921	.04640	.04132	.03248	.02318	.01824	.01295	.00763	.00293
55	.05297	.05101	.04691	.03878	.02918	.02366	.01737	.01060	.00420
60	.05486	.05357	.05040	.04323	.03379	.02795	.02098	.01309	.00529
65	.05521	.05441	.05207	.04597	.03702	.03112	.02375	.01506	.00617
70	.05404	.05364	.05205	.04709	.03890	.03314	.02566	.01649	.00683
75	.05171	.05162	.05065	.04678	.03953	.03409	.02672	.01738	.00727
80	.04866	.04870	.04817	.04528	.03904	.03403	.02696	.01774	.00749
85	.04480	.04494	.04474	.04272	.03753	.03304	.02648	.01759	.00748
90	.04020	.04042	.04050	.03924	.03510	.03121	.02527	.01696	.00727
100	.02994	.03016	.03049	.03033	.02811	.02550	.02106	.01442	.00628
110	.01842	.01866	.01913	.01970	.01910	.01775	.01505	.01054	.00467
120	.00685	.00703	.00750	.00847	.00911	.00891	.00795	.00580	.00265
130	-.00449	-.00426	-.00377	-.00256	-.00099	-.00020	.00044	.00069	.00044
140	-.01460	-.01439	-.01390	-.01258	-.01036	-.00878	-.00674	-.00428	-.00175
150	-.02312	-.02238	-.02238	-.02101	-.01836	-.01618	-.01300	-.00566	-.00370
160	-.02957	-.02931	-.02879	-.02738	-.02446	-.02185	-.01784	-.01207	-.00523
170	-.03349	-.03325	-.03273	-.03132	-.02826	-.02541	-.02087	-.01426	-.00621
180	-.03475	-.03465	-.03411	-.03285	-.02956	-.02663	-.02194	-.01500	-.00654

TABLE 58

C_{wm}				L_r/L_c = .200			X = 0		
γ	.02	.03	.05	.10	.20	.30	.50	1.00	3.00
$\phi°$									
0	0	0	0	0	0	0	0	0	0
5	.11671	.09778	.07703	.05[illegible]	.03707	.02916	.02109	.01259	.00556
10	.15306	.13884	.11534	.0[illegible]	.06173	.04960	.03666	.02306	.00970
15	.13953	.13182	.11838	.09[illegible]	.07332	.06039	.04605	.02975	.01261
20	.11742	.11668	.11118	.09[illegible]	.07709	.06602	.05147	.03409	.01499
25	.10492	.10500	.10250	.09[illegible]	.07[illegible]	.06765	.05393	.03652	.01[illegible]
30	.08760	.08884	.08904	.08465	.07404	.06550	.05344	.03704	.01697
35	.06987	.07221	.07435	.07374	.06726	.06082	.05078	.03604	.01686
40	.06063	.06166	.06316	.06365	.05977	.05502	.04690	.03402	.01624
45	.05190	.05187	.05256	.05339	.05142	.04816	.04190	.03107	.01514
50	.03867	.03934	.04055	.04230	.04216	.04032	.03592	.02732	.01362
55	.02845	.02914	.03026	.03217	.03312	.03236	.02957	.02311	.01181
60	.02192	.02171	.02196	.02325	.02461	.02460	.02313	.01865	.00981
65	.01244	.01246	.01282	.01419	.01608	.01676	.01650	.01394	.00763
70	.00218	.00286	.00374	.00547	.00737	.00913	.00993	.00916	.00535
75	-.00388	-.00366	-.00318	-.00181	.00060	.00219	.00378	.00453	.00309
80	-.00956	-.00971	-.00954	-.00845	-.00607	-.00425	-.00201	.00008	.00086
85	-.01759	-.01714	-.01647	-.01502	-.01239	-.01030	-.00747	-.00416	-.00130
90	-.02330	-.02276	-.02200	-.02050	-.01782	-.01559	-.01234	-.00803	-.00332
100	-.03040	-.03028	-.02988	-.02869	-.02620	-.02390	-.02019	-.01447	-.00679
110	-.03600	-.03576	-.03528	-.03407	-.03166	-.02939	-.02551	-.01901	-.00934
120	-.03849	-.03812	-.03754	-.03632	-.03406	-.03191	-.02814	-.02144	-.01082
130	-.03825	-.03628	-.03608	-.03524	-.03335	-.03149	-.02808	-.02174	-.01117
140	-.03410	-.03365	-.03308	-.03206	-.03032	-.02869	-.02573	-.02012	-.01046
150	-.02624	-.02637	-.0263[illegible]	-.02500	-.02437	-.02346	-.02117	-.01670	-.00877
160	-.01979	-.01949	-.01913	-.01855	-.01761	-.01673	-.01512	-.01197	-.00632
170	-.00952	-.00959	-.00960	-.00944	-.00904	-.00862	-.00782	-.00621	-.00329
180	0	0	0	0	0	0	0	0	0

TABLE 59

C_{wm}	L_T/L_c = .400					X = 0			
γ	.02	.03	.05	.10	.20	.30	.50	1.00	3.00
$\phi°$									
0	0	0	0	0	0	0	0	0	0
5	.15025	.12237	.09325	.06310	.04157	.03209	.02273	.01366	.00549
10	.21109	.17935	.14323	.10212	.07005	.05510	.03977	.02436	.00994
15	.19496	.17696	.15152	.11636	.08435	.06803	.05034	.03157	.01316
20	.16439	.15799	.14399	.11842	.09042	.07467	.05658	.03630	.01543
25	.13943	.13809	.13126	.11397	.09105	.07682	.05950	.03900	.01688
30	.10961	.11232	.11180	.10295	.08635	.07456	.05912	.03964	.01750
35	.08158	.08677	.09064	.08874	.07832	.06928	.05630	.03865	.01741
40	.06521	.06918	.07354	.07503	.06915	.06253	.05201	.03653	.01678
45	.05193	.05427	.05802	.06127	.05890	.05449	.04642	.03340	.01566
50	.03585	.03823	.04218	.04700	.04769	.04534	.03973	.02938	.01410
55	.02412	.02587	.02913	.03419	.03679	.03605	.03261	.02486	.01224
60	.01700	.01727	.01899	.02312	.02658	.02701	.02537	.02005	.01016
65	.00721	.00739	.00867	.01240	.01656	.01798	.01796	.01497	.00791
70	-.00320	-.00250	-.00110	.00247	.00709	.00928	.01065	.00983	.00556
75	-.00917	-.00905	-.00836	-.00566	-.00119	.00142	.00381	.00485	.00322
80	-.01471	-.01500	-.01482	-.01284	-.00866	-.00579	-.00260	.00006	.00091
85	-.02269	-.02234	-.02172	-.01971	-.01558	-.01248	-.00861	-.00450	-.00133
90	-.02829	-.02780	-.02714	-.02532	-.02143	-.01826	-.01393	-.00866	-.00342
100	-.03501	-.03494	-.03464	-.03343	-.03023	-.02719	-.02244	-.01556	-.00701
110	-.04024	-.04002	-.03959	-.03845	-.03569	-.03289	-.02811	-.02039	-.00965
120	-.04230	-.04192	-.04136	-.04022	-.03781	-.03532	-.03082	-.02297	-.01119
130	-.03948	-.03953	-.03935	-.03856	-.03665	-.03458	-.03061	-.02326	-.01155
140	-.03682	-.03635	-.03577	-.03478	-.03306	-.03131	-.02795	-.02150	-.01082
150	-.02826	-.02842	-.02839	-.02793	-.02677	-.02550	-.02295	-.01783	-.00907
160	-.02121	-.02090	-.02053	-.01995	-.01903	-.01812	-.01635	-.01277	-.00653
170	-.01021	-.01029	-.01030	-.01015	-.00976	-.00933	-.00845	-.00663	-.00341
180	0	0	0	0	0	0	0	0	0

TABLE 60

C_{wm}	L_r/L_c = 1.000						X = 0		
γ	.02	.03	.05	.10	.20	.30	.50	1.00	3.00
$\phi°$									
0	0	0	0	0	0	0	0	0	0
5	.21951	.17396	.12826	.08302	.05227	.03925	.02682	.01556	.00560
10	.33168	.27157	.20743	.13958	.09051	.06889	.04770	.02765	.01054
15	.34124	.29323	.23562	.16733	.11290	.08747	.06162	.03530	.01402
20	.31345	.28208	.23605	.17816	.12497	.09852	.07060	.04224	.01652
25	.27520	.25705	.22636	.17774	.12936	.10369	.07552	.04587	.01816
30	.22277	.21729	.20087	.16549	.12622	.10304	.07639	.04716	.01891
35	.16873	.17296	.16885	.14655	.11772	.09801	.07406	.04651	.01890
40	.12721	.13512	.13815	.12851	.10638	.09032	.06955	.04443	.01830
45	.09175	.10070	.10798	.10668	.09259	.08030	.06311	.04106	.01716
50	.05719	.06713	.07769	.08338	.07683	.06836	.05503	.03650	.01552
55	.03094	.03993	.05128	.06124	.06069	.05565	.04606	.03124	.01355
60	.01291	.01934	.02936	.04106	.04489	.04276	.03664	.02560	.01132
65	-.00495	.00006	.00905	.02181	.02918	.02968	.02681	.01956	.00886
70	-.02117	-.01695	-.00890	.00418	.01415	.01685	.01694	.01329	.00632
75	-.03110	-.02865	-.02260	-.01066	.00061	.00494	.00750	.00713	.00375
80	-.03928	-.03820	-.03396	-.02351	-.01167	-.00612	-.00148	.00115	.00121
85	-.04901	-.04796	-.04443	-.03502	-.02288	-.01636	-.00994	-.00460	-.00127
90	-.05559	-.05487	-.05226	-.04426	-.03243	-.02534	-.01755	-.00989	-.00359
100	-.06267	-.06234	-.06198	-.05693	-.04677	-.03959	-.02994	-.01881	-.00761
110	-.06686	-.06696	-.06665	-.06356	-.05556	-.04837	-.03850	-.02518	-.01060
120	-.06664	-.06671	-.06651	-.06467	-.05843	-.05226	-.04250	-.02871	-.01236
130	-.06159	-.06132	-.06151	-.06075	-.05659	-.05131	-.04261	-.02956	-.01202
140	-.05492	-.05453	-.05423	-.05358	-.05044	-.04642	-.03906	-.02722	-.01204
150	-.04224	-.04246	-.04265	-.04259	-.04071	-.03765	-.03216	-.02287	-.01011
160	-.03078	-.03047	-.03022	-.02996	-.02873	-.02681	-.02294	-.01820	-.00729
170	-.01534	-.01513	-.01519	-.01522	-.01473	-.01381	-.01185	-.00946	-.00361
180	0	0	0	0	0	0	0	0	0

TABLE 61

θ_m	L_r/L_c = .200						X = 0		
γ	.02	.03	.05	.10	.20	.30	.50	1.00	3.00
$\phi°$									
0	1.47298	1.20838	.92702	.63059	.41619	.32126	.22739	.13555	.05503
5	.91489	.79386	.64854	.47359	.33027	.26154	.18998	.11712	.04325
10	-.02547	.07466	.14879	.18048	.16466	.14464	.11558	.07761	.03430
15	-.34659	-.21998	-.09581	.00922	.05496	.06277	.06048	.04672	.02284
20	-.19302	-.16186	-.10826	-.03875	.00715	.02151	.02899	.02701	.01484
25	-.16466	-.16204	-.13645	-.08411	-.03651	-.01662	-.00072	.00794	.00689
30	-.23121	-.21139	-.17964	-.12643	-.07453	-.04997	-.02716	-.00946	-.00057
35	-.14972	-.15206	-.14645	-.12101	-.08411	-.06295	-.04062	-.02012	-.00576
40	-.06872	-.09025	-.10619	-.10532	-.08445	-.06830	-.04859	-.02764	-.00982
45	-.11803	-.11791	-.11858	-.11208	-.09273	-.07755	-.05795	-.03537	-.01382
50	-.13057	-.12178	-.11607	-.10873	-.09327	-.08037	-.06251	-.04016	-.01666
55	-.06130	-.07055	-.07993	-.08691	-.08251	-.07454	-.06098	-.04135	-.01812
60	-.05958	-.06613	-.07300	-.07924	-.07747	-.07164	-.06040	-.04248	-.01934
65	-.10158	-.09222	-.08529	-.08120	-.07631	-.07063	-.06027	-.04332	-.02026
70	-.06851	-.06719	-.06661	-.06746	-.06662	-.06335	-.05578	-.04150	-.02008
75	-.02815	-.03715	-.04503	-.05235	-.05584	-.05493	-.05010	-.03866	-.01935
80	-.05710	-.05462	-.05277	-.05232	-.05245	-.05114	-.04681	-.03663	-.01869
85	-.06417	-.05725	-.05156	-.04791	-.04676	-.04560	-.04215	-.03360	-.01752
90	-.01812	-.02349	-.02810	-.03235	-.03544	-.03616	-.03491	-.02900	-.01566
100	-.04207	-.03535	-.03022	-.02657	-.02576	-.02576	-.02506	-.02149	-.01210
110	.01285	.00604	.00018	-.00485	-.00848	-.01031	-.01190	-.01179	-.00741
120	-.01449	-.00907	-.00466	-.00166	-.00116	-.00176	-.00293	-.00400	-.00311
130	.02454	.02086	.01760	.01461	.01206	.01035	.00789	.00466	.00153
140	.01823	.01919	.01986	.01993	.01897	.01774	.01543	.01136	.00544
150	.02404	.02532	.02624	.02651	.02564	.02443	.02197	.01710	.00879
160	.04468	.04100	.03776	.03479	.03226	.03048	.02746	.02170	.01144
170	.02061	.02547	.02939	.03200	.03234	.03152	.02922	.02373	.01281
180	.05482	.04921	.04434	.04010	.03691	.03491	.03164	.02533	.01359

TABLE 62

$C_{\theta\ m}$	L_r/L_c = .400						X = 0		
γ	.02	.03	.05	.10	.20	.30	.50	1.00	3.00
$\phi°$									
0	1.87267	1.49482	1.11091	.72666	.46355	.35150	.24355	.14324	.05623
5	1.22142	1.02425	.80375	.55884	.37365	.28961	.20546	.12340	.04940
10	.08190	.17986	.23677	.23852	.19771	.16705	.12849	.08305	.03533
15	-.40382	-.23067	-.07755	.03563	.07503	.07776	.06990	.05097	.02369
20	-.32557	-.24104	-.14072	-.03990	.01451	.02891	.03463	.02994	.01548
25	-.31188	-.26888	-.19819	-.10563	-.04000	-.01611	.00131	.00952	.00731
30	-.36172	-.31826	-.25235	-.16046	-.08623	-.05509	-.02830	-.00914	-.00037
35	-.24482	-.24043	-.21582	-.16019	-.10111	-.07217	-.04431	-.02090	-.00577
40	-.12789	-.15426	-.16454	-.14421	-.10418	-.08014	-.05417	-.02933	-.01001
45	-.15340	-.16124	-.16398	-.14740	-.11315	-.09074	-.06479	-.03776	-.01416
50	-.14939	-.14828	-.14858	-.13856	-.11285	-.09384	-.07003	-.04305	-.01714
55	-.06673	-.08339	-.10081	-.11043	-.10018	-.08748	-.06871	-.04456	-.01869
60	-.05886	-.07069	-.08500	-.09672	-.09266	-.08350	-.06797	-.04584	-.01939
65	-.09992	-.09277	-.09121	-.09340	-.08883	-.08107	-.06738	-.04669	-.02094
70	-.06472	-.06463	-.06602	-.07514	-.07643	-.07218	-.06223	-.04477	-.02078
75	-.02256	-.03264	-.04344	-.05642	-.06313	-.06211	-.05577	-.04173	-.02004
80	-.05298	-.05032	-.04983	-.05377	-.05752	-.05673	-.05163	-.03944	-.01936
85	-.06098	-.05328	-.04795	-.04748	-.04994	-.04973	-.04612	-.03610	-.01815
90	-.01360	-.01899	-.02392	-.03054	-.03702	-.03896	-.03802	-.03115	-.01624
100	-.03948	-.03229	-.02646	-.02353	-.02512	-.02646	-.02664	-.02292	-.01255
110	.01679	.00962	.00376	-.00146	-.00658	-.00957	-.01223	-.01251	-.00769
120	-.01246	-.00659	-.00180	.00148	.00130	-.00013	-.00232	-.00408	-.00323
130	.02755	.02362	.02031	.01750	.01471	.01246	.00918	.00511	.00158
140	.02036	.02143	.02219	.02249	.02157	.02009	.01717	.01226	.00562
150	.02539	.02738	.02839	.02863	.02814	.02686	.02400	.01832	.00910
160	.04713	.04323	.03988	.03696	.03465	.03291	.02966	.02315	.01183
170	.02189	.02710	.03125	.03403	.03463	.03393	.03151	.02331	.01326
180	.05743	.05145	.04341	.04216	.03815	.03732	.03396	.02896	.01406

TABLE 63

$C_{\theta m}$	L_r/L_c = 1.000						X = 0		
γ	.02	.03	.05	.10	.20	.30	.50	1.00	3.00
$\phi°$									
0	2.64758	2.05554	1.46355	.93075	.53874	.42081	.25240	.15367	.05902
5	1.88442	1.52137	1.14106	.74911	.47384	.35564	.24277	.13058	.05212
10	.47970	.51517	.46896	.39276	.28379	.22528	.16296	.09095	.03785
15	-.28672	-.06499	.06437	.14187	.14121	.12446	.09776	.06285	.02590
20	-.42085	-.25431	-.10138	.01580	.05619	.06216	.05575	.03943	.01730
25	-.53866	-.39737	-.24308	-.09681	-.01899	.00310	.01515	.01630	.00868
30	-.64833	-.51462	-.35759	-.19093	-.08619	-.04942	-.02175	-.00517	.00052
35	-.53313	-.46216	-.35654	-.22025	-.11905	-.07870	-.04460	-.01970	-.00535
40	-.38409	-.37127	-.31975	-.22405	-.13647	-.09705	-.06572	-.03073	-.01007
45	-.36562	-.35658	-.31835	-.23819	-.15604	-.11595	-.07665	-.04152	-.01467
50	-.31408	-.31254	-.29119	-.23274	-.16263	-.12520	-.08619	-.04585	-.01804
55	-.18554	-.21300	-.22486	-.20201	-.15350	-.12288	-.08811	-.05204	-.01994
60	-.14052	-.16807	-.18787	-.18151	-.14667	-.12102	-.08959	-.05463	-.02153
65	-.15379	-.16257	-.17281	-.16870	-.14121	-.11904	-.09025	-.05641	-.02272
70	-.09625	-.11091	-.12938	-.13935	-.12537	-.10917	-.08546	-.05504	-.02271
75	-.03747	-.06013	-.08681	-.10902	-.10733	-.09697	-.07859	-.05220	-.02207
80	-.05788	-.06430	-.07624	-.09506	-.09818	-.08861	-.07339	-.04760	-.02143
85	-.05894	-.05726	-.06410	-.07817	-.08259	-.07800	-.06627	-.04605	-.02019
90	-.00563	-.01526	-.03017	-.05162	-.06353	-.06322	-.05615	-.04044	-.01819
100	-.02720	-.02068	-.01969	-.02920	-.03986	-.04224	-.03988	-.03030	-.01418
110	.03225	.02514	.01720	.00553	-.01120	-.01715	-.02008	-.01746	-.00687
120	.05269	.05951	.01435	.01301	.00467	-.00049	-.00457	-.00537	-.00386
130	.04362	.04014	.03743	.03269	.02553	.01605	.01147	.00547	.00155
140	.03588	.03747	.03912	.03958	.03491	.03027	.02357	.01503	.00615
150	.04128	.04304	.04487	.04628	.04410	.04040	.03303	.02213	.01005
160	.06259	.05875	.05597	.05449	.05211	.04670	.04105	.02740	.01520
170	.03647	.04209	.04896	.05142	.05255	.05050	[illegible]	[illegible]	.01407
180	.07283	.06676	.06210	.05952	.05770	[illegible]	[illegible]	[illegible]	.01574

TABLE 64

C_{qp}				γ = 0.03000			L_r/L_c = .200		
$\phi°$	0.	15.	30.	45.	60.	90.	120.	150	180.
x/L_c									
.0	0	2.54374	.27264	.07212	-.00079	-.25134	-.13651	.01026	0
.1	0	.82711	.92276	.28943	-.15602	-.16200	-.13523	-.07832	0
.2	0	.33967	.55273	.42912	.08717	-.19769	-.13288	-.07718	0
.4	0	.10840	.21610	.26438	.19577	-.10267	-.15809	-.07602	0
.6	0	.04738	.10070	.14306	.14247	-.01089	-.13582	-.09043	0
.8	0	.02238	.04995	.07747	.08935	.02159	-.08979	-.09232	0
1.0	0	.00969	.02352	.04027	.05208	.02550	-.05240	-.07395	0

C_{pp}				γ = 0.03000			L_r/L_c = .200		
$\phi°$	0.	15.	30.	45.	60.	90.	120.	150.	180.
x/L_c									
.0	-1.68201	-.27120	.32942	.36117	.30972	.17184	.01472	-.11632	-.16861
.1	-.39101	-.36422	-.12390	.19370	.30601	.17602	.01950	-.10339	-.14991
.2	-.17352	-.19705	-.16002	.01268	.18819	.18872	.02716	-.08996	-.13434
.4	-.02660	-.05032	-.08467	-.06655	.01454	.14381	.05488	-.06314	-.10423
.6	.02696	.00842	-.03052	-.05411	-.03798	.06031	.06118	-.02941	-.07412
.8	.05117	.03608	.00008	-.03487	-.04794	.00053	.04028	-.00058	-.03591
1.0	.06211	.04938	.01705	-.02009	-.04571	-.03396	.01266	.01691	.00400

TABLE 65

C_{qp}				γ = .03000			L_r/L_c = .400		
$\phi°$	0.	15.	30.	45.	60.	90	120	150	180.
x/L_c									
.0	0	2.40708	.50313	-.00279	-.09652	-.20840	-.16252	-.03312	0
.1	0	.60023	.74039	.39706	-.01341	-.20226	-.13437	-.07808	0
.2	0	.28600	.44201	.37446	.14884	-.18008	-.15224	-.07545	0
.4	0	.10602	.19324	.22198	.16774	-.06293	-.15520	-.08907	0
.6	0	.04940	.09676	.12671	.11946	-.00368	-.11553	-.09621	0
.8	0	.02437	.05027	.07167	.07670	.01521	-.07566	-.08248	0
1.0	0	.01125	.02478	.03841	.04537	.01669	-.04510	-.05862	0

C_{pp}				γ = .03000			L_r/L_c = .400		
$\phi°$	0.	15.	30.	45.	60.	90.	120.	150.	180.
x/L_c									
.0	-1.10921	-.39187	.17620	.32441	.31017	.17542	.01535	-.11309	-.16240
.1	-.35609	-.29972	-.11019	.12230	.25357	.18599	.02241	-.09968	-.14583
.2	-.18137	-.17583	-.11759	.01088	.14128	.18312	.03585	-.08654	-.13037
.4	-.04160	-.05382	-.06619	-.04215	.01886	.11569	.05687	-.05428	-.10028
.6	.01471	.00130	-.02533	-.03849	-.02350	.04650	.04857	-.02217	-.06284
.8	.04137	.02895	.00005	-.02671	-.03582	-.00110	.02653	.00084	-.02236
1.0	.05403	.04287	.01495	-.01634	-.03745	-.03015	.00472	.01515	.01151

TABLE 66

C_{qp}				γ = .03000			L_r/L_c = 1.000		
$\phi°$	0.	15.	30.	45.	60.	90.	120.	150.	180.
x/L_c									
.0	0	1.73855	.70144	.10950	-.10848	-.19462	-.14998	-.06072	0
.1	0	.28987	.42578	.35724	.15943	-.16334	-.16939	-.08180	0
.2	0	.15055	.24347	.24536	.16408	-.07251	-.16300	-.10029	0
.4	0	.06512	.11296	.12887	.10742	-.00953	-.10661	-.09529	0
.6	0	.03364	.06023	.07235	.06517	.00216	-.06467	-.06542	0
.8	0	.01738	.03181	.03950	.03717	.00353	-.03686	-.03940	0
1.0	0	.00782	.01480	.01922	.01902	.00301	-.01883	-.02116	0

C_{pp}				γ = .03000			L_r/L_c = 1.000		
$\phi°$	0.	15.	30.	45.	60.	90.	120.	150.	180.
x/L_c									
.0	-.52231	-.29155	.00374	.16846	.22066	.15742	.02394	-.09039	-.13464
.1	-.20328	-.16989	-.07902	.03499	.12665	.15267	.03690	-.07607	-.11882
.2	-.11748	-.10380	-.06150	.00211	.06656	.11778	.04499	-.05813	-.10184
.4	-.03747	-.03649	-.02928	-.01094	.01566	.05552	.03355	-.02726	-.05889
.6	.00013	-.00312	-.00888	-.01024	-.00434	.01599	.01597	-.00767	-.02227
.8	.01959	.01464	.00320	-.00735	-.01345	-.00743	.00305	.00392	.00184
1.0	.02909	.02356	.00984	-.00575	-.01740	-.02027	-.00489	.01027	.01583

TABLE 67

C_{qt}	$\gamma = 0.03000$					$L_r/L_c = 0.200$			
ϕ°	0.	15.	30.	45.	60.	90.	120.	150.	180.
x/L_c									
0.	1.16503	0.04007	-0.23236	-0.20182	-0.15504	-0.07591	-0.00513	0.05626	0.08294
0.1	0.35855	0.24271	-0.00850	-0.17298	-0.17972	-0.08082	-0.00300	0.05431	0.07529
0.2	0.21924	0.17424	0.05185	-0.08450	-0.15307	-0.09101	-0.00467	0.05125	0.07199
0.4	0.11045	0.09645	0.05353	-0.01152	-0.07439	-0.09691	-0.01597	0.04577	0.06549
0.6	0.06307	0.05700	0.03766	0.00517	-0.03345	-0.07406	-0.02798	0.03634	0.05989
0.8	0.03668	0.03383	0.02447	0.00765	-0.01472	-0.04905	-0.02899	0.02456	0.05079
1.0	0.02025	0.01904	0.01479	0.00644	-0.00587	-0.02966	-0.02278	0.01486	0.03704

C_{pt}	$\gamma = 0.03000$					$L_r/L_c = 0.200$			
ϕ°	0.	15.	30.	45.	60.	90.	120.	150.	180.
x/L_c									
0.	0	0.27923	0.25224	0.15895	0.07017	-0.06002	-0.10848	-0.07801	0
0.1	0	0.10109	0.17042	0.15877	0.08825	-0.04414	-0.09476	-0.07028	0
0.2	0	0.04794	0.09773	0.11909	0.09093	-0.02581	-0.08145	-0.06249	0
0.4	0	0.00916	0.02737	0.04873	0.05650	0.00632	-0.05222	-0.04742	0
0.6	0	-0.00539	-0.00257	0.00922	0.02220	0.01650	-0.02197	-0.03083	0
0.8	0	-0.01205	-0.01703	-0.01219	-0.00072	0.01472	0.00059	-0.01218	0
1.0	0	-0.01513	-0.02412	-0.02363	-0.01462	0.00973	0.01459	0.00471	0

TABLE 68

C_{qt}	γ = 0.03000					L_r/L_c = 0.400			
$\phi°$	0.	15.	30.	45.	60.	90.	120.	150.	180.
x/L_c									
0.	0.92715	0.14185	-0.19467	-0.20935	-0.16398	-0.07799	-0.00294	0.05681	0.08085
0.1	0.29868	0.21430	0.02599	-0.12960	-0.17661	-0.08869	-0.00226	0.05442	0.07539
0.2	0.19165	0.15290	0.05329	-0.05846	-0.12866	-0.10167	-0.00692	0.05203	0.07215
0.4	0.10090	0.08691	0.04694	-0.00912	-0.06188	-0.09000	-0.02316	0.04410	0.06711
0.6	0.05864	0.05219	0.03290	0.00303	-0.03015	-0.06474	-0.02873	0.03206	0.05867
0.8	0.03433	0.03118	0.02141	0.00523	-0.01468	-0.04255	-0.02509	0.02119	0.04512
1.0	0.01894	0.01750	0.01283	0.00450	-0.00670	-0.02560	-0.01790	0.01278	0.03023

C_{pt}	γ = 0.03000					L_r/L_c = 0.400			
$\phi°$	0.	15.	30.	45.	60.	90.	120.	150.	180.
x/L_c									
0.	0	0.21419	0.23156	0.16048	0.07555	-0.05494	-0.10460	-0.07604	0
0.1	0	0.08852	0.14478	0.14229	0.09001	-0.03734	-0.09102	-0.06820	0
0.2	0	0.04719	0.08734	0.10232	0.08149	-0.01743	-0.07681	-0.06055	0
0.4	0	0.01205	0.02823	0.04340	0.04696	0.00624	-0.04485	-0.04438	0
0.6	0	-0.00264	0.00052	0.00941	0.01814	0.01197	-0.01755	-0.02548	0
0.8	0	-0.00972	-0.01369	-0.00994	-0.00128	0.01038	0.00143	-0.00734	0
1.0	0	-0.01315	-0.02096	-0.02069	-0.01331	0.00703	0.01335	0.00684	0

TABLE 69

C_{qt}	$\gamma = 0.03000$					$L_r/L_c = 1.000$			
$\phi°$	0.	15.	30.	45.	60.	90.	120.	150.	180.
x/L_c									
0.	0.64852	0.20391	-0.10923	-0.19098	-0.17371	-0.08366	-0.00205	0.05717	0.07960
0.1	0.19100	0.15114	0.05300	-0.05355	-0.12262	-0.10782	-0.01101	0.05489	0.07612
0.2	0.12174	0.10136	0.04801	-0.01805	-0.07309	-0.09558	-0.02501	0.04773	0.07416
0.4	0.06340	0.05468	0.03081	-0.00165	-0.03336	-0.06135	-0.02721	0.03062	0.05759
0.6	0.03567	0.03119	0.01867	0.00092	-0.01752	-0.03717	-0.01908	0.01855	0.03744
0.8	0.01947	0.01717	0.01063	0.00110	-0.00917	-0.02116	-0.01160	0.01056	0.02203
1.0	0.00945	0.00842	0.00542	0.00089	-0.00423	-0.01079	-0.00629	0.00538	0.01158

C_{pt}	$\gamma = 0.03000$					$L_r/L_c = 1.000$			
$\phi°$	0.	15.	30.	45.	60.	90.	120.	150.	180.
x/L_c									
0.	0	0.11376	0.14937	0.12393	0.07105	-0.03413	-0.08227	-0.06262	0
0.1	0	0.05029	0.08385	0.08961	0.06754	-0.01492	-0.06714	-0.05467	0
0.2	0	0.02957	0.05182	0.05987	0.05064	-0.00359	-0.05010	-0.04555	0
0.4	0	0.00974	0.01856	0.02407	0.02355	0.00298	-0.02322	-0.02509	0
0.6	0	0.00026	0.00186	0.00451	0.00657	0.00338	-0.00636	-0.00897	0
0.8	0	-0.00469	-0.00709	-0.00640	-0.00347	0.00275	0.00359	0.00138	0
1.0	0	-0.00712	-0.01161	-0.01211	-0.00895	0.00208	0.00903	0.00731	0

TABLE 70

c_{qm}	γ = 0.03000					L_r/L_c = 0.200			
$\phi°$	0.	15.	30.	45.	60.	90.	120.	150.	180.
x/L_c									
0.	-74.43641	31.08477	9.68714	1.48562	-2.09329	-1.86945	1.75979	0.39993	-1.90780
0.1	-3.22409	-1.97789	1.52089	2.38158	0.57823	-0.17171	-0.07698	-0.08137	-0.08126
0.2	-1.10218	-1.03357	-0.18909	1.01151	1.12097	-0.15202	-0.10215	-0.07995	-0.08302
0.4	-0.29127	-0.33472	-0.29568	0.01267	0.40421	0.31912	-0.13609	-0.10698	-0.07785
0.6	-0.11012	-0.13738	-0.16396	-0.09410	0.08174	0.29826	0.02589	-0.13237	-0.10899
0.8	-0.04386	-0.06068	-0.08823	-0.07923	-0.00809	0.17928	0.10693	-0.09044	-0.15504
1.0	-0.01328	-0.02445	-0.04673	-0.05466	-0.02801	0.09503	0.10788	-0.04831	-0.14644

c_{pm}	γ = 0.03000					L_r/L_c = 0.200			
$\phi°$	0.	15.	30.	45.	60.	90.	120.	150.	180.
x/L_c									
0.	0	-4.35853	-0.53568	0.12553	0.18905	0.30926	0.22045	0.04165	0
0.1	0	-0.30439	-1.13989	-0.73647	0.06763	0.26639	0.18729	0.10202	0
0.2	0	0.13321	-0.33278	-0.66433	-0.37655	0.27207	0.19374	0.10132	0
0.4	0	0.16315	0.08944	-0.15920	-0.31603	-0.01122	0.21366	0.11030	0
0.6	0	0.12458	0.13995	0.02994	-0.11668	-0.12992	0.11123	0.12933	0
0.8	0	0.09692	0.13410	0.08951	-0.00705	-0.11895	0.01021	0.09832	0
1.0	0	0.07822	0.11956	0.10549	0.04534	-0.07811	-0.04464	0.03545	0

TABLE 71

C_{gm}	$\gamma = 0.03000$					$L_r/L_c = 0.400$			
ϕ°	0.	15.	30.	45.	60.	90.	120.	150.	180.
x/L_c									
0.	-46.38420	17.45708	7.52514	1.27099	-1.17727	-1.01692	0.86953	0.16695	-1.02236
0.1	-2.33509	-1.41141	0.59858	1.60610	1.02428	-0.22419	-0.09488	-0.07874	-0.08143
0.2	-0.97586	-0.78123	-0.13240	0.59592	0.82346	0.09049	-0.16619	-0.08461	-0.07815
0.4	-0.31013	-0.30219	-0.20175	0.03819	0.28863	0.29584	-0.04860	-0.13021	-0.09733
0.6	-0.12865	-0.13772	-0.12848	-0.05029	0.08202	0.22851	0.06260	-0.10766	-0.14532
0.8	-0.05645	-0.06578	-0.07555	-0.05302	0.01101	0.14419	0.09226	-0.07024	-0.14688
1.0	-0.02184	-0.02943	-0.04224	-0.03992	-0.01061	0.08283	0.07847	-0.04092	-0.11321

C_{pm}	$\gamma = 0.03000$					$L_r/L_c = 0.400$			
ϕ°	0.	15.	30.	45.	60.	90.	120.	150.	180.
x/L_c									
0.	0	-2.96883	-0.98803	-0.02182	0.22264	0.26693	0.19839	0.08633	0
0.1	0	-0.38124	-0.76648	-0.61668	-0.13932	0.27810	0.19312	0.10248	0
0.2	0	-0.03422	-0.29136	-0.44948	-0.31345	0.17619	0.21606	0.10355	0
0.4	0	0.08669	0.02107	-0.13299	-0.21884	-0.03159	0.17059	0.12540	0
0.6	0	0.09006	0.09239	0.00801	-0.08937	-0.09058	0.07568	0.11245	0
0.8	0	0.07935	0.10518	0.06509	-0.00860	-0.08169	0.00504	0.06436	0
1.0	0	0.06834	0.10175	0.08656	0.03614	-0.05586	-0.03704	0.01154	0

TABLE 72

C_{qm}	$\gamma = 0.03000$					$L_r/L_s = 1.000$			
$\phi°$	0.	15.	30.	45.	60.	90.	120.	150.	180.
z/L_s									
0.	-23.16729	6.80336	4.71971	1.49799	-0.23493	-0.50344	0.29548	0.01949	-0.46368
0.1	-1.02950	-0.73730	-0.06309	0.53251	0.71588	0.16862	-0.15964	-0.10774	-0.07765
0.2	-0.49281	-0.39594	-0.14197	0.15196	0.34943	0.27112	-0.03796	-0.13448	-0.11897
0.4	-0.19633	-0.17196	-0.09818	0.00947	0.11468	0.18835	0.06360	-0.09313	-0.15416
0.6	-0.09706	-0.08864	-0.05968	-0.01005	0.04781	0.11474	0.05923	-0.05669	-0.11371
0.8	-0.04854	-0.04577	-0.03419	-0.01060	0.02081	0.06570	0.03957	-0.03241	-0.07040
1.0	-0.02077	-0.02065	-0.01771	-0.00829	0.00708	0.03387	0.02314	-0.01665	-0.03867

C_{pm}	$\gamma = 0.03000$					$L_r/L_s = 1.000$			
$\phi°$	0.	15.	30.	45.	60.	90.	120.	150.	180.
z/L_s									
0.	0	-1.14892	-0.75375	-0.26723	0.01957	0.19573	0.17678	0.09713	0
0.1	0	-0.20039	-0.33658	-0.32991	-0.19372	0.12226	0.18616	0.10429	0
0.2	0	-0.07720	-0.16014	-0.20019	-0.16657	0.03312	0.15512	0.11320	0
0.4	0	-0.00130	-0.02919	-0.06628	-0.08296	-0.02104	0.07566	0.08372	0
0.6	0	0.02208	0.01914	-0.00425	-0.02791	-0.02530	0.02334	0.03929	0
0.8	0	0.03065	0.04021	0.02738	0.00498	-0.02089	-0.00783	0.00646	0
1.0	0	0.03311	0.04870	0.04282	0.02328	-0.01599	-0.02504	-0.01369	0

TABLE 73

C_{qp}	γ = .10000					L_r/L_c = .200			
$\phi°$ / x/L_c	0.	15.	30.	45.	60.	90.	120.	150.	180.
.0	0	1.86063	.57411	.07090	-.05321	-.18791	-.15145	-.05066	0
.1	0	.64334	.74665	.52194	-.05695	-.16577	-.13447	-.07760	0
.2	0	.30136	.46926	.37572	.11041	-.17421	-.13589	-.07637	0
.4	0	.10707	.20050	.23535	.17445	-.08259	-.14992	-.07780	0
.6	0	.04886	.09797	.13233	.12788	-.00845	-.12358	-.08852	0
.8	0	.02384	.05014	.07366	.08168	.01821	-.08196	-.08604	0
1.0	0	.01087	.02445	.03917	.04830	.02153	-.04852	-.06714	0

C_{pp}	γ= .10000					L_r/L_c = .200			
$\phi°$ / x/L_c	0.	15.	30.	45.	60.	90.	120.	150.	180.
.0	-1.10403	-.38018	.17116	.31802	.30708	.17431	.01540	-.11207	-.16111
.1	-.38666	-.31470	-.10797	.14827	.26398	.17735	.02236	-.09877	-.14457
.2	-.18119	-.18214	-.12697	.01392	.15575	.17977	.03116	-.08547	-.12914
.4	-.03891	-.05315	-.07176	-.05064	.01726	.12750	.05386	-.05781	-.09924
.6	.01722	.00301	-.02664	-.04333	-.02941	.05277	.05459	-.02592	-.06802
.8	.04326	.03060	.00036	-.02914	-.04046	-.00027	.03406	-.00007	-.03054
1.0	.05552	.04432	.01555	-.01705	-.04014	-.03160	.00921	.01575	.00633

TABLE 74

C_{qp}	γ = .10000					L_r/L_c = .400			
$\phi°$	0.	15.	30.	45.	60.	90.	120.	150.	180.
x/L_c									
.0	0	1.47094	.67169	.14476	-.08042	-.18357	-.14580	-.06447	0
.1	0	.45508	.58938	.37214	.05822	-.18395	-.14093	-.07759	0
.2	0	.24222	.37228	.32653	.15211	-.14612	-.15327	-.07786	0
.4	0	.09993	.17570	.19736	.15023	-.04908	-.14305	-.08997	0
.6	0	.04920	.09221	.11605	.10705	-.00243	-.10479	-.09122	0
.8	0	.02529	.04959	.06729	.06944	.01242	-.06885	-.07545	0
1.0	0	.01228	.02531	.03651	.04141	.01351	-.04126	-.05260	0

C_{pp}	γ = 1.0000					L_r/L_c = .400			
$\phi°$	0.	15.	30.	45.	60.	90.	120.	150.	180.
x/L_c									
.0	-.75030	-.38259	.04712	.25218	.29256	.15019	.01653	-.10846	-.15639
.1	-.31665	-.26041	-.09957	.09132	.21290	.18300	.02765	-.09491	-.14056
.2	-.17650	-.16078	-.09733	.01187	.12088	.15866	.04022	-.08095	-.12528
.4	-.04992	-.05479	-.05543	-.03016	.02087	.10196	.05327	-.04383	-.09375
.6	.00567	-.00338	-.02127	-.02931	-.01649	.04030	.04214	-.01951	-.05601
.8	.03331	.02359	.00074	-.02093	-.02902	-.00203	.02142	.00119	-.01791
1.0	.04707	.03768	.01402	-.01300	-.03199	-.02316	.00208	.01413	.01280

TABLE 75

C_{qp}				γ = .10000			L_r/L_c = 1.000		
$\phi°$	0.	15.	30.	45.	60.	90.	120.	150.	180.
x/L_c									
.0	0	.89386	.59261	.24444	.00992	-.16755	-.15159	-.07733	0
.1	0	.21401	.32464	.29229	.15750	-.11359	-.16186	-.08989	0
.2	0	.12156	.19859	.20519	.14519	-.04965	-.14470	-.10015	0
.4	0	.05678	.09798	.11160	.09359	-.00643	-.09323	-.08574	0
.6	0	.03042	.05374	.06367	.05672	.00156	-.05650	-.05723	0
.8	0	.01611	.02890	.03508	.03231	.00247	-.03217	-.03407	0
1.0	0	.00752	.01377	.01723	.01649	.00210	-.01640	-.01811	0

C_{pp}				γ = .10000			L_r/L_c = 1.000		
$\phi°$	0.	15.	30.	45.	60.	90.	120.	150.	180.
x/L_c									
.0	-.35310	-.23614	-.04333	.10414	.17798	.15445	.03049	-.08332	-.12761
.1	-.16983	-.14237	-.06900	.02345	.10126	.13581	.04004	-.06775	-.11084
.2	-.10387	-.09052	-.05221	.00225	.05652	.10225	.04218	-.05076	-.09207
.4	-.03668	-.03400	-.02444	-.00582	.01578	.04761	.02835	-.02357	-.05077
.6	-.00315	-.00462	-.00701	-.00657	-.00162	.01327	.01250	-.00648	-.01817
.8	.01477	.01139	.00330	-.00508	-.01005	-.00704	.00139	.00361	.00279
1.0	.02379	.01961	.00894	-.00375	-.01395	-.01814	-.00529	.00913	.01482

TABLE 76

c_{qt}	$\gamma = 0.10000$					$L_r/L_c = 0.200$			
$\phi°$	0.	15.	30.	45.	60.	90.	120.	150.	180.
x/L_c									
0.	0.70931	0.16736	-0.13043	-0.18230	-0.15908	-0.07993	-0.00370	0.05488	0.07764
0.1	0.29980	0.20910	0.01183	-0.13355	-0.16235	-0.08374	-0.00461	0.05219	0.07298
0.2	0.19526	0.15464	0.04898	-0.06745	-0.13229	-0.09132	-0.00703	0.04919	0.06968
0.4	0.10312	0.08906	0.04812	-0.01079	-0.06654	-0.08987	-0.01802	0.04310	0.06330
0.6	0.06003	0.05368	0.03437	0.00363	-0.03149	-0.06791	-0.02702	0.03351	0.05704
0.8	0.03532	0.03225	0.02260	0.00621	-0.01461	-0.04526	-0.02667	0.02266	0.04728
1.0	0.01971	0.01832	0.01376	0.00540	-0.00626	-0.02757	-0.02056	0.01381	0.03393

c_{pt}	$\gamma = 0.10000$					$L_r/L_c = 0.200$			
$\phi°$	0.	15.	30.	45.	60.	90.	120.	150.	180.
x/L_c									
0.	0	0.21146	0.22832	0.15906	0.07532	-0.05433	-0.10368	-0.07537	0
0.1	0	0.09185	0.15049	0.14396	0.08656	-0.03824	-0.09013	-0.06760	0
0.2	0	0.04776	0.09056	0.10698	0.08312	-0.02089	-0.07669	-0.05990	0
0.4	0	0.01145	0.02824	0.04543	0.05051	0.00584	-0.04774	-0.04472	0
0.6	0	-0.00323	-0.00018	0.00961	0.01993	0.01398	-0.01978	-0.02804	0
0.8	0	-0.01020	-0.01446	-0.01045	-0.00082	0.01243	0.00074	-0.01026	0
1.0	0	-0.01354	-0.02167	-0.02145	-0.01362	0.00823	0.01360	0.00525	0

TABLE 77

C_{qt}	$\gamma = 0.10000$					$L_r/L_c = 0.400$			
$\phi°$	0.	15.	30.	45.	60.	90.	120.	150.	180.
x/L_c									
0.	0.55721	0.19750	-0.08116	-0.16976	-0.16435	-0.08368	-0.00321	0.05517	0.07707
0.1	0.24574	0.18204	0.03642	-0.09490	-0.15019	-0.09286	-0.00535	0.05246	0.07321
0.2	0.16718	0.13421	0.05026	-0.04500	-0.10926	-0.09816	-0.01118	0.04966	0.07016
0.4	0.09255	0.07924	0.04230	-0.00799	-0.05492	-0.08253	-0.02407	0.04072	0.06443
0.6	0.05507	0.04858	0.02982	0.00197	-0.02805	-0.05907	-0.02702	0.02935	0.05486
0.8	0.03272	0.02941	0.01955	0.00401	-0.01432	-0.03896	-0.02275	0.01943	0.04137
1.0	0.01828	0.01669	0.01178	0.00356	-0.00689	-0.02352	-0.01594	0.01175	0.02738

C_{pt}	$\gamma = 0.10000$					$L_r/L_c = 0.400$			
$\phi°$	0.	15.	30.	45.	60.	90.	120.	150.	180.
x/L_c									
0.	0	0.15935	0.19921	0.15549	0.08160	-0.04806	-0.09972	-0.07334	0
0.1	0	0.07802	0.12696	0.12748	0.08544	-0.03035	-0.08583	-0.06554	0
0.2	0	0.04491	0.08000	0.09189	0.07384	-0.01344	-0.07112	-0.05780	0
0.4	0	0.01354	0.02834	0.04023	0.04181	0.00533	-0.04060	-0.04110	0
0.6	0	-0.00066	0.00257	0.00959	0.01605	0.00975	-0.01571	-0.02264	0
0.8	0	-0.00785	-0.01118	-0.00835	-0.00144	0.00840	0.00152	-0.00577	0
1.0	0	-0.01149	-0.01846	-0.01853	-0.01237	0.00568	0.01239	0.00707	0

TABLE 78

C_{qt}	$\gamma = 0.10000$					$L_r/L_e = 1.000$			
$\phi°$	0.	15.	30.	45.	60.	90.	120.	150.	180.
x/L_e									
0.	0.37263	0.18308	-0.01624	-0.11990	-0.14683	-0.09207	-0.00762	0.05443	0.07686
0.1	0.15196	0.12266	0.04912	-0.03458	-0.09486	-0.09906	-0.01794	0.04996	0.07359
0.2	0.10195	0.08552	0.04225	-0.01223	-0.05930	-0.08431	-0.02633	0.04212	0.06919
0.4	0.05527	0.04766	0.02691	-0.00121	-0.02874	-0.05370	-0.02454	0.02682	0.05122
0.6	0.03160	0.02754	0.01629	0.00058	-0.01556	-0.03252	-0.01665	0.01624	0.03278
0.8	0.01742	0.01527	0.00927	0.00072	-0.00831	-0.01850	-0.00999	0.00924	0.01915
1.0	0.00855	0.00755	0.00472	0.00059	-0.00393	-0.00942	-0.00535	0.00470	0.01000

C_{pt}	$\gamma = 0.10000$					$L_r/L_e = 1.000$			
$\phi°$	0.	15.	30.	45.	60.	90.	120.	150.	180.
x/L_e									
0.	0	0.08123	0.11768	0.10820	0.06969	-0.02499	-0.07490	-0.05896	0
0.1	0	0.04204	0.07048	0.07648	0.05951	-0.01019	-0.05933	-0.05040	0
0.2	0	0.02603	0.04519	0.05193	0.04403	-0.00239	-0.04379	-0.04082	0
0.4	0	0.00937	0.01720	0.02145	0.02032	0.00209	-0.02018	-0.02164	0
0.6	0	0.00096	0.00250	0.00437	0.00554	0.00235	-0.00545	-0.00736	0
0.8	0	-0.00357	-0.00555	-0.00527	-0.00319	0.00190	0.00325	0.00164	0
1.0	0	-0.00586	-0.00969	-0.01036	-0.00795	0.00144	0.00799	0.00675	0

TABLE 79

C_{pm}	γ = 0.10000					L_T/L_c = 0.200			
$\phi°$	0.	15.	30.	45.	60.	90.	120.	150.	180.
x/L_c									
0.	-30.36416	10.41605	5.39711	1.27698	-0.56188	-0.64538	0.49291	0.06840	-0.65104
0.1	-2.53348	-1.48903	0.92516	1.74176	0.72764	-0.13780	-0.08369	-0.08211	-0.08225
0.2	-1.02129	-0.85001	-0.12508	0.78637	0.90520	-0.03139	-0.11225	-0.08220	-0.08358
0.4	-0.30734	-0.31268	-0.23209	0.03148	0.33877	0.29526	-0.09637	-0.11043	-0.08294
0.6	-0.12373	-0.13722	-0.13988	-0.06753	0.08112	0.26034	0.03747	-0.11937	-0.11561
0.8	-0.05292	-0.06376	-0.07896	-0.06318	0.00141	0.15970	0.09844	-0.08040	-0.14746
1.0	-0.01944	-0.02762	-0.04311	-0.04560	-0.01941	0.08724	0.09535	-0.04413	-0.13243

C_{pm}	γ = 0.10000					L_T/L_c = 0.200			
$\phi°$	0.	15.	30.	45.	60.	90.	120.	150.	180.
x/L_c									
0.	0	-2.90611	-0.96202	-0.04214	0.20865	0.26875	0.19831	0.08316	0
0.1	0	-0.37820	-0.87672	-0.63056	-0.05221	0.25685	0.18902	0.10196	0
0.2	0	0.00591	-0.30529	-0.52150	-0.32904	0.21511	0.19731	0.10174	0
0.4	0	0.10463	0.04511	-0.13796	-0.25648	-0.02112	0.19001	0.11224	0
0.6	0	0.09628	0.10734	0.02007	-0.09689	-0.11052	0.09337	0.11979	0
0.8	0	0.08125	0.11267	0.07590	-0.00454	-0.10025	0.00659	0.08427	0
1.0	0	0.06858	0.10511	0.09355	0.04193	-0.06599	-0.04148	0.02608	0

TABLE 80

C_{gm}	γ = 0.10000					L_r/L_c = 0.400			
$\phi°$	0.	15.	30.	45.	60.	90.	120.	150.	180.
x/L_c									
0.	-18.22824	4.92682	3.82629	1.39669	-0.04292	-0.38691	0.20008	-0.00593	-0.36901
0.1	-1.73656	-1.08614	0.29862	1.11308	0.88976	-0.07398	-0.11631	-0.08358	-0.08141
0.2	-0.83158	-0.64354	-0.11913	0.44053	0.65537	0.15504	-0.13691	-0.09706	-0.08059
0.4	-0.30228	-0.27470	-0.16179	0.04147	0.24244	0.26683	-0.01952	-0.12244	-0.10865
0.6	-0.13541	-0.13345	-0.10799	-0.03287	0.07772	0.20075	0.06503	-0.09643	-0.14275
0.8	-0.06369	-0.06711	-0.06592	-0.03952	0.01693	0.12811	0.08327	-0.06296	-0.13516
1.0	-0.02763	-0.03189	-0.03777	-0.03109	-0.00381	0.07464	0.06829	-0.03703	-0.10101

C_{pm}	γ = 0.10000					L_r/L_c = 0.400			
$\phi°$	0.	15.	30.	45.	60.	90.	120.	150.	180.
x/L_c									
0.	0	-1.77868	-1.02787	-0.26541	0.11467	0.26168	0.19619	0.09805	0
0.1	0	-0.35563	-0.61546	-0.51810	-0.17823	0.23395	0.20047	0.10399	0
0.2	0	-0.09057	-0.26739	-0.36480	-0.26671	0.12976	0.20790	0.10832	0
0.4	0	0.04012	-0.00944	-0.11492	-0.17623	-0.03204	0.14839	0.12167	0
0.6	0	0.06190	0.06353	0.00246	-0.07115	-0.07500	0.06333	0.10000	0
0.8	0	0.06203	0.08365	0.05398	-0.00393	-0.06643	0.00191	0.05271	0
1.0	0	0.05718	0.08627	0.07549	0.03459	-0.04522	-0.03511	0.00506	0

TABLE 81

C_{qm}	γ = 0.10000					L_T/L_c = 1.000			
$\phi°$	0.	15.	30.	45.	60.	90.	120.	150.	180.
x/L_c									
0.	-8.66903	1.47501	1.89664	1.10991	0.36766	-0.12754	0.01632	-0.06314	-0.20322
0.1	-0.74086	-0.54908	-0.09791	0.33072	0.51437	0.21471	-0.09329	-0.11768	-0.09927
0.2	-0.39312	-0.31844	-0.12502	0.10185	0.26531	0.24478	0.00032	-0.12183	-0.13384
0.4	-0.17188	-0.14882	-0.08340	0.00775	0.09607	0.16350	0.06169	-0.08124	-0.14131
0.6	-0.08913	-0.07955	-0.05063	-0.00601	0.04338	0.09933	0.05164	-0.04934	-0.09964
0.8	-0.04618	-0.04209	-0.02892	-0.00668	0.02032	0.05672	0.03345	-0.02815	-0.06065
1.0	-0.02089	-0.01964	-0.01487	-0.00530	0.00795	0.02909	0.01913	-0.01441	-0.03287

C_{ym}	γ = 0.10000					L_T/L_c = 1.000			
$\phi°$	0.	15.	30.	45.	60.	90.	120.	150.	180.
x/L_c									
0.	0	-0.63113	-0.57268	-0.31775	-0.08023	0.16169	0.17868	0.10319	0
0.1	0	-0.16236	-0.26772	-0.26889	-0.17379	0.08293	0.17015	0.10788	0
0.2	0	-0.07533	-0.14054	-0.16750	-0.13964	0.02115	0.13438	0.10717	0
0.4	0	-0.01241	-0.03507	-0.05886	-0.06734	-0.01546	0.06401	0.07169	0
0.6	0	0.01071	0.00831	-0.00592	-0.02085	-0.01801	0.01879	0.03126	0
0.8	0	0.02079	0.02886	0.02191	0.00678	-0.01474	-0.00806	0.00282	0
1.0	0	0.02483	0.03807	0.03581	0.02202	-0.01122	-0.02281	-0.01426	0

TABLE 82

C_{gp}	γ = .30000					L_r/L_c = .200			
$\phi°$	0.	15.	30.	45.	60.	90.	120.	150.	180.
x/L_c									
.0	0	1.02314	.53124	.17290	-.01616	-.14974	-.13633	-.06709	0
.1	0	.41600	.51467	.28915	.03309	-.13527	-.12919	-.07552	0
.2	0	.22277	.34327	.29005	.11746	-.12432	-.12894	-.07463	0
.4	0	.09171	.16374	.18592	.13925	-.05458	-.12699	-.07582	0
.6	0	.04541	.08601	.10988	.10237	-.00538	-.10022	-.07897	0
.8	0	.02358	.04645	.06372	.06681	.01261	-.06696	-.07141	0
1.0	0	.01162	.02395	.03510	.04024	.01492	-.04034	-.05361	0

C_{pp}	γ = .30000					L_r/L_c = .200			
$\phi°$	0.	15.	30.	45.	60.	90.	120.	150.	180.
x/L_c									
.0	-.67011	-.32626	.03776	.20984	.25234	.16821	.02163	-.09918	-.14537
.1	-.29011	-.24151	-.08945	.09183	.19544	.16242	.02818	-.08615	-.12984
.2	-.16161	-.15014	-.09433	.01278	.11858	.15207	.03511	-.07320	-.11480
.4	-.04620	-.05140	-.05375	-.03069	.01988	.09953	.04684	-.04679	-.08521
.6	.00466	-.00362	-.02048	-.02879	-.01682	.04070	.04157	-.02012	-.05436
.8	.03021	.02150	.00062	-.01991	-.02813	-.00102	.02357	.00041	-.02112
1.0	.04312	.03471	.01324	-.01188	-.03014	-.02643	.00410	.01319	.00896

TABLE 83

C_{qp}				γ = .30000			L_r/L_c = .400		
$\phi°$	0.	15.	30.	45.	60.	90.	120.	150.	180.
x/L_c									
.0	0	.75510	.50943	.21970	.01988	-.14283	-.13803	-.07356	0
.1	0	.29048	.39809	.29252	.09879	-.12813	-.13546	-.07810	0
.2	0	.17240	.26844	.24776	.13612	-.09441	-.13648	-.07895	0
.4	0	.08069	.13915	.15475	.11989	-.03083	-.11667	-.08306	0
.6	0	.04298	.07787	.09468	.08528	-.00131	-.08428	-.07698	0
.8	0	.02349	.04401	.05670	.05588	.00808	-.05562	-.06062	0
1.0	0	.01216	.02354	.03188	.03360	.00873	-.03354	-.04112	0
1.5	0	-.00135	-.00164	-.00050	.00146	.00305	-.00146	-.00447	0
2.0	0	-.00588	-.01010	-.01149	-.00972	-.00038	.00972	.00934	0

C_{pp}				γ = .30000			L_r/L_c = .400		
$\phi°$	0.	15.	30.	45.	60.	90.	120.	150.	180.
x/L_c									
.0	-.46776	-.28926	-.02710	.14819	.22052	.16988	.02716	-.09436	-.14062
.1	-.24038	-.19788	-.08261	.05513	.15322	.15867	.03426	-.08074	-.12498
.2	-.14665	-.12933	-.07430	.00960	.09111	.13713	.04105	-.06692	-.10944
.4	-.05049	-.04980	-.04164	-.01709	.02156	.07945	.04322	-.03873	-.07720
.6	-.00333	-.00772	-.01592	-.01782	-.00740	.03086	.03061	-.01514	-.04269
.8	.02191	.01576	.00114	-.01310	-.01899	-.00251	.01359	.00133	-.01101
1.0	.03533	.02866	.01166	-.00826	-.02314	-.02338	-.00115	.01171	.01327

TABLE 84

C_{rp}				γ = .30000			L_r/L_c = 1.000		
$\phi°$	0.	15.	30.	45.	60.	90.	120.	150.	180.
x/L_c									
.0	0	.41747	.36049	.21462	.07390	-.10055	-.13196	-.08590	0
.1	0	.15262	.20784	.19961	.12466	-.06030	-.12655	-.08434	0
.2	0	.05210	.13594	.14442	.10612	-.02616	-.10796	-.08296	0
.4	0	.04148	.07155	.05164	.06902	-.00336	-.06888	-.06504	0
.6	0	.02303	.04036	.04736	.04180	.00084	-.04171	-.04219	0
.8	0	.01247	.02208	.02634	.02379	.00131	-.02374	-.02480	0
1.0	0	.00599	.01075	.01307	.01212	.00111	-.01209	-.01303	0
1.5	0	-.00114	-.00182	-.00180	-.00118	.00055	.00119	.00071	0
2.0	0	-.00255	-.00440	-.00494	-.00411	.00026	-.00411	.00388	0

C_{pp}				γ = .30000			L_r/L_c = 1.000		
$\phi°$	0.	15.	30.	45.	60.	90.	120.	150.	180.
x/L_c									
.0	-.21486	-.15782	-.04921	.05052	.11459	.12373	.03567	-.06437	-.10472
.1	-.11905	-.10055	-.05112	.01216	.06796	.10142	.03576	-.05065	-.08769
.2	-.07658	-.06640	-.03799	.00146	.04053	.07516	.03308	-.03744	-.07010
.4	-.02941	-.02650	-.01759	-.00337	.01324	.03471	.01995	-.01726	-.03669
.6	-.00441	-.00473	-.00486	-.00331	.00046	.00945	.00795	-.00467	-.01225
.8	.00935	.00742	.00265	-.00238	-.00612	-.00547	-.00006	.00277	.00308
1.0	.01646	.01376	.00676	-.00191	-.00933	-.01367	-.00475	.00633	.01176

TABLE 85

c_{qt}	$\gamma = 0.30000$					$L_r/L_c = 0.200$			
ϕ°	0.	15.	30.	45.	60.	90.	120.	150.	180.
x/L_c									
0.	0.40709	0.16225	-0.04079	-0.12185	-0.13345	-0.07992	-0.00707	0.04907	0.07016
0.1	0.21522	0.15680	0.02611	-0.08327	-0.12326	-0.08104	-0.00887	0.04615	0.06640
0.2	0.15049	0.12026	0.04281	-0.04387	-0.09838	-0.08284	-0.01147	0.04309	0.06310
0.4	0.08527	0.07309	0.03892	-0.00827	-0.05230	-0.07473	-0.01918	0.03642	0.05649
0.6	0.05148	0.04550	0.02809	0.00191	-0.02667	-0.05577	-0.02366	0.02767	0.04921
0.8	0.03102	0.02793	0.01872	0.00409	-0.01340	-0.03747	-0.02177	0.01875	0.03933
1.0	0.01767	0.01616	0.01151	0.00371	-0.00634	-0.02304	-0.01626	0.01153	0.02755

c_{pt}	$\gamma = 0.30000$					$L_r/L_c = 0.200$			
ϕ°	0.	15.	30.	45.	60.	90.	120.	150.	180.
x/L_c									
0.	0	0.14003	0.17399	0.13804	0.07545	-0.04072	-0.09072	-0.06784	0
0.1	0	0.07182	0.11707	0.11598	0.07612	-0.02699	-0.07770	-0.06026	0
0.2	0	0.04140	0.07469	0.08609	0.06811	-0.01382	-0.06482	-0.05275	0
0.4	0	0.01260	0.02670	0.03845	0.04027	0.00436	-0.03889	-0.03782	0
0.6	0	-0.00047	0.00268	0.00949	0.01593	0.00972	-0.01586	-0.02225	0
0.8	0	-0.00713	-0.01017	-0.00749	-0.00085	0.00862	0.00080	-0.00699	0
1.0	0	-0.01054	-0.01702	-0.01715	-0.01141	0.00571	0.01140	0.00562	0

TABLE 86

C_{qt}				γ = 0.30000			L_r/L_c = 0.400		
$\phi°$	0.	15.	30.	45.	60.	90.	120.	150.	180.
x/L_c									
0.	0.31880	0.15940	-0.01018	-0.10081	-0.12696	-0.08357	-0.00880	0.04878	0.07001
0.1	0.17412	0.13375	0.03849	-0.05556	-0.10700	-0.08572	-0.01172	0.04563	0.06651
0.2	0.12893	0.10248	0.04283	-0.02768	-0.07922	-0.08391	-0.01605	0.04219	0.06319
0.4	0.07435	0.06356	0.03405	-0.00552	-0.04251	-0.06719	-0.02280	0.03335	0.05585
0.6	0.04587	0.04016	0.02406	0.00097	-0.02320	-0.04787	-0.02259	0.02385	0.04562
0.8	0.02792	0.02482	0.01588	0.00246	-0.01263	-0.03169	-0.01808	0.01582	0.03347
1.0	0.01591	0.01432	0.00961	0.00225	-0.00650	-0.01920	-0.01234	0.00960	0.02178

C_{pt}				γ = 0.30000			L_r/L_c = 0.400		
$\phi°$	0.	15.	30.	45.	60.	90.	120.	150.	180.
x/L_c									
0.	0	0.10502	0.14554	0.12734	0.07706	-0.03303	-0.08550	-0.06543	0
0.1	0	0.05921	0.09712	0.10046	0.07183	-0.01962	-0.07197	-0.05762	0
0.2	0	0.03690	0.06438	0.07321	0.05956	-0.00836	-0.05834	-0.04978	0
0.4	0	0.01318	0.02543	0.03352	0.03311	0.00358	-0.03257	-0.03352	0
0.6	0	0.00127	0.00439	0.00904	0.01261	0.00632	-0.01247	-0.01730	0
0.8	0	-0.00519	-0.00750	-0.00582	-0.00138	0.00543	0.00142	-0.00342	0
1.0	0	-0.00866	-0.01409	-0.01451	-0.01022	0.00366	0.01023	0.00675	0

TABLE 87

C_{qt}	$\gamma = 0.30000$					$L_T/L_e = 1.000$			
$\phi°$	0.	15.	30.	45.	60.	90.	120.	150.	180.
x/L_e									
0.	0.20254	0.12213	0.01658	-0.05791	-0.09386	-0.07967	-0.01507	0.04335	0.06585
0.1	0.10200	0.08391	0.03760	-0.01752	-0.06103	-0.07552	-0.02038	0.03793	0.06079
0.2	0.07185	0.06077	0.03136	-0.00639	-0.04030	-0.06265	-0.02291	0.03131	0.05454
0.4	0.04059	0.03503	0.01988	-0.00067	-0.02087	-0.03971	-0.01866	0.01984	0.03844
0.6	0.02359	0.02051	0.01203	0.00029	-0.01166	-0.02404	-0.01224	0.01201	0.02420
0.8	0.01312	0.01146	0.00684	0.00037	-0.00635	-0.01367	-0.00724	0.00683	0.01403
1.0	0.00651	0.00571	0.00348	0.00030	-0.00307	-0.00696	-0.00382	0.00348	0.00728

C_{pt}	$\gamma = 0.30000$					$L_T/L_e = 1.000$			
$\phi°$	0.	15.	30.	45.	60.	90.	120.	150.	180.
x/L_e									
0.	0	0.05090	0.07832	0.07756	0.05504	-0.01362	-0.05709	-0.04765	0
0.1	0	0.02954	0.04991	0.05508	0.04421	-0.00536	-0.04414	-0.03931	0
0.2	0	0.01915	0.03316	0.03807	0.03243	-0.00124	-0.03234	-0.03083	0
0.4	0	0.00745	0.01335	0.01619	0.01490	0.00112	-0.01484	-0.01568	0
0.6	0	0.00119	0.00246	0.00358	0.00400	0.00125	-0.00396	-0.00502	0
0.8	0	-0.00228	-0.00363	-0.00362	-0.00243	0.00101	0.00245	0.00158	0
1.0	0	-0.00407	-0.00683	-0.00746	-0.00594	0.00076	0.00595	0.00528	0

TABLE 88

C_{gm}				γ = 0.30000			L_r/L_c = 0.200		
$\phi°$	0.	15.	30.	45.	60.	90.	120.	150.	180.
x/L_c									
0.	-12.24125	3.11302	2.49171	1.03312	0.11261	-0.21452	0.11704	-0.03254	-0.27575
0.1	-1.60640	-0.97483	0.41160	1.02575	0.62381	-0.01476	-0.07642	-0.08406	-0.08487
0.2	-0.76210	-0.60347	-0.09880	0.46549	0.61588	0.07794	-0.08441	-0.08573	-0.08638
0.4	-0.27476	-0.25608	-0.16126	0.03681	0.24618	0.24094	-0.04207	-0.10077	-0.09129
0.6	-0.12373	-0.12374	-0.10489	-0.03712	0.07305	0.20004	0.04506	-0.09466	-0.11347
0.8	-0.05881	-0.06225	-0.06268	-0.04054	0.01222	0.12624	0.07942	-0.06340	-0.12477
1.0	-0.02587	-0.02972	-0.03562	-0.03108	-0.00717	0.07174	0.07237	-0.03613	-0.10453

C_{pm}				γ = 0.30000			L_r/L_c = 0.200		
$\phi°$	0.	15.	30.	45.	60.	90.	120.	150.	180.
x/L_c									
0.	0	-1.56537	-0.84457	-0.24187	0.06155	0.22644	0.18842	0.09527	0
0.1	0	-0.31837	-0.60099	-0.47188	-0.12242	0.19412	0.18179	0.10123	0
0.2	0	-0.06558	-0.25308	-0.36572	-0.24890	0.13615	0.17927	0.10083	0
0.4	0	0.04252	-0.00198	-0.11083	-0.17926	-0.02214	0.14608	0.10373	0
0.6	0	0.05720	0.06183	0.00561	-0.06914	-0.07712	0.06739	0.09543	0
0.8	0	0.05585	0.07782	0.05324	-0.00159	-0.06936	0.00261	0.05913	0
1.0	0	0.05118	0.07901	0.07171	0.03483	-0.04575	-0.03460	0.01211	0

TABLE 89

C_{qm}	$\gamma = 0.30000$					$L_r/L_c = 0.400$			
$\phi°$	0.	15.	30.	45.	60.	90.	120.	150.	180.
x/L_c									
0.	-7.26189	1.20670	1.57261	0.93229	0.32570	-0.08694	0.01622	-0.06239	-0.18294
0.1	-1.07400	-0.70940	0.07923	0.61810	0.61069	0.06846	-0.08403	-0.09102	-0.08885
0.2	-0.58463	-0.45316	-0.10728	0.26183	0.43605	0.18111	-0.07203	-0.09850	-0.09203
0.4	-0.24762	-0.21676	-0.11821	0.03304	0.17592	0.21211	0.01157	-0.10091	-0.11330
0.6	-0.12300	-0.11437	-0.08127	-0.01648	0.06616	0.15596	0.05932	-0.07617	-0.12500
0.8	-0.06335	-0.06164	-0.05127	-0.02345	0.02162	0.10092	0.06474	-0.04996	-0.10874
1.0	-0.03080	-0.03151	-0.03006	-0.01934	0.00393	0.05973	0.05051	-0.02973	-0.07795

C_{pm}	$\gamma = 0.30000$					$L_r/L_c = 0.400$			
$\phi°$	0.	15.	30.	45.	60.	90.	120.	150.	180.
x/L_c									
0.	0	-0.92862	-0.73264	-0.33860	-0.03732	0.20395	0.19187	0.10378	0
0.1	0	-0.26062	-0.42921	-0.38223	-0.17737	0.15370	0.18556	0.10587	0
0.2	0	-0.09939	-0.21496	-0.26670	-0.20097	0.07710	0.17399	0.10701	0
0.4	0	0.00322	-0.03369	-0.09350	-0.12489	-0.02383	0.11237	0.10301	0
0.6	0	0.03125	0.02992	-0.00616	-0.04954	-0.04925	0.04604	0.07465	0
0.8	0	0.03918	0.05377	0.03631	-0.00007	-0.00307	-0.00084	0.03393	0
1.0	0	0.04027	0.06187	0.05640	0.02936	-0.02922	-0.02959	-0.00304	0

TABLE 90

C_{pm}	$\gamma = 0.30000$					$L_T/L_c = 1.000$			
$\phi°$	0.	15.	30.	45.	60.	90.	120.	150.	180.
x/L_c									
0.	-3.35717	0.22696	0.65354	0.55341	0.33800	0.05844	-0.00808	-0.08374	-0.14137
0.1	-0.44693	-0.34273	-0.09198	0.16299	0.30095	0.19126	-0.02134	-0.09960	-0.11155
0.2	-0.26125	-0.21459	-0.09324	0.05289	0.16645	0.18451	0.02688	-0.09203	-0.12384
0.4	-0.12549	-0.10832	-0.06071	0.00450	0.06781	0.12017	0.04985	-0.05988	-0.10897
0.6	-0.06811	-0.06002	-0.03680	-0.00288	0.03327	0.07288	0.03773	-0.03631	-0.07343
0.8	-0.03638	-0.03249	-0.02098	-0.00333	0.01663	0.04154	0.02363	-0.02069	-0.04388
1.0	-0.01716	-0.01560	-0.01073	-0.00266	0.00721	0.02122	0.01315	-0.01056	-0.02340

C_{pm}	$\gamma = 0.30000$					$L_T/L_c = 1.000$			
$\phi°$	0.	15.	30.	45.	60.	90.	120.	150.	180.
x/L_c									
0.	0	-0.31726	-0.34619	-0.24502	-0.10995	0.09361	0.14953	0.09875	0
0.1	0	-0.10799	-0.17883	-0.18547	-0.13057	0.04346	0.12913	0.09431	0
0.2	0	-0.05737	-0.10274	-0.11982	-0.10045	0.01073	0.09840	0.08477	0
0.4	0	-0.01500	-0.03190	-0.04533	-0.04737	-0.00843	0.04608	0.05098	0
0.6	0	0.00302	0.00056	-0.00675	-0.01378	-0.00967	0.01298	0.02016	0
0.8	0	0.01178	0.01708	0.01420	0.00612	-0.00788	-0.00662	-0.00046	0
1.0	0	0.01580	0.02505	0.02495	0.01703	-0.00599	-0.01734	-0.01255	0

TABLE 91

C_{qp}	γ = 1.00000					L_r/L_c = .200			
$\phi°$	0.	15.	30.	45.	60.	90.	120.	150.	180.
x/L_c									
.0	0	.42726	.29999	.15125	.03832	-.08244	-.10001	-.05966	0
.1	0	.20112	.26552	.18149	.05956	-.07172	-.09456	-.06080	0
.2	0	.12054	.18788	.16926	.08703	-.06092	-.09098	-.05915	0
.4	0	.05730	.09988	.11193	.08585	-.02552	-.08139	-.05657	0
.6	0	.03114	.05678	.06962	.06300	-.00245	-.06222	-.05323	0
.8	0	.01739	.03262	.04219	.04184	.00608	-.04190	-.04468	0
1.0	0	.00925	.01783	.02412	.02559	.00720	-.02562	-.03216	0
1.5	0	-.00061	*	.00036	*	*	*	*	0
2.0	0	-.00417	-.00723	-.00836	-.00725	*	.00725	.00727	0

C_{pp}	γ = 1.00000					L_r/L_c = .200			
$\phi°$	0.	15.	30.	45.	60.	90.	120.	150.	180.
x/L_c									
.0	-.32586	-.19243	-.01841	.09424	.14496	.12233	.02495	-.06723	-.10386
.1	-.16976	-.14097	-.05815	.04127	.10789	.11084	.02720	-.05718	-.09114
.2	-.10451	-.09343	-.05502	.00734	.06788	.09721	.02906	-.04745	-.07883
.4	-.03720	-.03689	-.03134	-.01315	.01649	.05981	.02999	-.02882	-.05508
.6	-.00354	-.00652	-.01213	-.01326	-.00525	.02417	.02298	-.01200	-.03199
.8	.01491	.01070	.00058	-.00949	-.01373	-.00107	.01123	.00050	-.00991
1.0	.02497	.02034	.00844	-.00576	-.01662	-.01687	-.00009	.00843	.00846

TABLE 92

C_{qp}	γ = 1.00000					L_r/L_c = .400			
$\phi°$	0.	15.	30.	45.	60.	90.	120.	150.	180.
x/L_c									
.0	0	.30655	.26089	.15571	.05502	-.07102	-.09771	-.06166	0
.1	0	.13998	.20179	.16695	.08040	-.05936	-.09284	-.06146	0
.2	0	.09090	.1444	.14041	.08824	-.04212	-.08834	-.05999	0
.4	0	.04767	.08174	.09113	.07237	-.01355	-.07127	-.05655	0
.6	0	.02741	.04870	.05795	.05138	-.00052	-.05104	-.04824	0
.8	0	.01588	.02887	.03579	.03389	.00362	-.03380	-.03626	0
1.0	0	.00868	.01610	.02063	.02049	.00390	-.02047	-.02393	0
1.5	0	-.00046	-.00049	.00006	.00089	.00136	-.00089	-.00223	0
2.0	0	-.00357	-.00614	-.00702	-.00597	.00017	.00597	.00581	0

C_{pp}	γ = 1.00000					L_r/L_c = .400			
$\phi°$	0.	15.	30.	45.	60.	90.	120.	150.	180.
x/L_c									
.0	-.23115	-.15976	-.03836	.06121	.11791	.11501	.02788	-.06092	-.09681
.1	-.13577	-.11285	-.05150	.02354	.08218	.10088	.02924	-.05089	-.08397
.2	-.08897	-.07746	-.04369	.00483	.05170	.08357	.02983	-.04120	-.07143
.4	-.03544	-.03304	-.02415	-.00694	.01584	.04702	.02567	-.02317	-.04699
.6	-.00638	-.00754	-.00918	-.00762	-.00091	.01803	.01608	-.00892	-.02384
.8	.01031	.00755	.00091	-.00573	-.00876	-.00189	.00578	.00097	-.00434
1.0	.01974	.01624	.00723	-.00365	-.01231	-.01448	.00251	.00725	.00990

TABLE 93

C_{qp}				γ = 1.00000			L_r/L_c = 1.000		
$\phi°$	0.	15.	30.	45.	60.	90.	120.	150.	180.
x/L_c									
.0	0	.15959	.15949	.11441	.05655	-.03993	-.07557	-.05348	0
.1	0	.06113	.09789	.09840	.06759	-.02279	-.06812	-.05140	0
.2	0	.04019	.06726	.07297	.05686	-.00985	-.05680	-.04766	0
.4	0	.02149	.03709	.04244	.03611	-.00126	-.03606	-.03464	0
.6	0	.01223	.02134	.02491	.02186	.00032	-.02183	-.02203	0
.8	0	.00672	.01181	.01394	.01244	.00050	-.01242	-.01283	0
1.0	0	.00329	.00582	.00697	.00633	.00042	-.00632	-.00668	0
1.5	0	-.00053	-.00086	-.00089	-.00063	.00021	.00063	.00045	0
2.0	0	-.00132	-.00226	-.00256	-.00216	.00010	.00216	.00207	0

C_{pp}				γ = 1.00000			L_r/L_c = 1.000		
$\phi°$	0.	15.	30.	45.	60.	90.	120.	150.	180.
x/L_c									
.0	-.09945	-.07678	-.02976	.01820	.05340	.06745	.02241	-.03454	-.05929
.1	-.05996	-.05096	-.02682	.00455	.03313	.05338	.02101	-.02667	-.04811
.2	-.03988	-.03454	-.01975	.00060	.02076	.03925	.01797	-.01958	-.03740
.4	-.01613	-.01434	-.00910	-.00123	.00750	.01805	.01004	-.00899	-.01686
.6	-.00301	-.00294	-.00247	-.00122	.00084	.00485	.00367	-.00241	-.00595
.8	.00436	.00353	.00144	-.00095	-.00273	-.00294	-.00044	.00148	.00201
1.0	.00823	.00695	.00358	-.00071	-.00453	-.00718	-.00281	.00360	.00646

TABLE 94

C_{qt}	$\gamma = 1.00000$					$L_r/L_c = 0.200$			
ϕ°	0.	15.	30.	45.	60.	90.	120.	150.	180.
x/L_c									
0.	0.18973	0.09857	0.00154	-0.05493	-0.07705	-0.05981	-0.01039	0.03360	0.05071
0.1	0.11686	0.08881	0.02389	-0.03682	-0.06801	-0.05804	-0.01130	0.03116	0.04766
0.2	0.08695	0.07058	0.02852	-0.02010	-0.05444	-0.05614	-0.01244	0.02865	0.04473
0.4	0.05300	0.04535	0.02427	-0.00426	-0.03095	-0.04743	-0.01513	0.02336	0.03875
0.6	0.03343	0.02930	0.01760	0.00069	-0.01714	-0.03505	-0.01571	0.01745	0.03228
0.8	0.02077	0.01847	0.01185	0.00189	-0.00937	-0.02371	-0.01341	0.01186	0.02479
1.0	0.01213	0.01092	0.00734	0.00178	-0.00486	-0.01469	-0.00965	0.00735	0.01691

C_{pt}	$\gamma = 1.00000$					$L_r/L_c = 0.200$			
ϕ°	0.	15.	30.	45.	60.	90.	120.	150.	180.
x/L_c									
0.	0	0.07194	0.09868	0.08731	0.05479	-0.02071	-0.06054	-0.04785	0
0.1	0	0.04195	0.06896	0.07090	0.05034	-0.01315	-0.05088	-0.04169	0
0.2	0	0.02642	0.04651	0.05305	0.04282	-0.00645	-0.04161	-0.03569	0
0.4	0	0.00973	0.01887	0.02501	0.02472	0.00220	-0.02422	-0.02415	0
0.6	0	0.00120	0.00366	0.00715	0.00978	0.00470	-0.00975	-0.01310	0
0.8	0	-0.00353	-0.00507	-0.00383	-0.00063	0.00416	0.00061	-0.00322	0
1.0	0	-0.00613	-0.01001	-0.01034	-0.00729	0.00276	0.00729	0.00450	0

TABLE 95

C_{qt}	γ = 1.00000					L_r/L_c = 0.400			
$\phi°$	0.	15.	30.	45.	60.	90.	120.	150.	180.
x/L_c									
0.	0.14806	0.08891	0.01219	-0.04165	-0.06791	-0.05880	-0.01192	0.03196	0.04919
0.1	0.09316	0.07384	0.02688	-0.02317	-0.05600	-0.05671	-0.01308	0.02931	0.04604
0.2	0.07090	0.05856	0.02662	-0.01194	-0.04263	-0.05292	-0.01449	0.02654	0.04289
0.4	0.04445	0.03806	0.02068	-0.00257	-0.02455	-0.04106	-0.01580	0.02044	0.03611
0.6	0.02844	0.02479	0.01463	0.00035	-0.01432	-0.02917	-0.01406	0.01455	0.02831
0.8	0.01775	0.01564	0.00969	0.00106	-0.00828	-0.01935	-0.01071	0.00967	0.02022
1.0	0.01032	0.00917	0.00588	0.00099	-0.00451	-0.01176	-0.00711	0.00588	0.01293

C_{pt}	γ = 1.00000					L_r/L_c = 0.400			
$\phi°$	0.	15.	30.	45.	60.	90.	120.	150.	180.
x/L_c									
0.	0	0.05369	0.07968	0.07586	0.05143	-0.01524	-0.05436	-0.04431	0
0.1	0	0.03353	0.05567	0.05928	0.04483	-0.00876	-0.04487	-0.03808	0
0.2	0	0.02229	0.03859	0.04385	0.03621	-0.00365	-0.03579	-0.03201	0
0.4	0	0.00908	0.01673	0.02098	0.01987	0.00163	-0.01968	-0.02031	0
0.6	0	0.00178	0.00400	0.00630	0.00753	0.00283	-0.00748	-0.00974	0
0.8	0	-0.00245	-0.00361	-0.00293	-0.00093	0.00242	0.00094	-0.00126	0
1.0	0	-0.00486	-0.00802	-0.00848	-0.00630	0.00163	0.00631	0.00474	0

TABLE 96

C_{qt}	γ = 1.00000					L_r/L_c = 1.000			
$\phi°$	0.	15.	30.	45.	60.	90.	120.	150.	180.
x/L_c									
0.	0.08723	0.05846	0.01523	-0.02076	-0.04283	-0.04502	-0.01228	0.02366	0.03859
0.1	0.04987	0.04157	0.02003	-0.00646	-0.02873	-0.04016	-0.01339	0.02013	0.03436
0.2	0.03634	0.03093	0.01646	-0.00240	-0.01982	-0.03290	-0.01327	0.01645	0.02982
0.4	0.02114	0.01826	0.01041	-0.00026	-0.01079	-0.02080	-0.00995	0.01040	0.02033
0.6	0.01243	0.01079	0.00630	0.00010	-0.00616	-0.01259	-0.00638	0.00629	0.01266
0.8	0.00696	0.00606	0.00358	0.00014	-0.00340	-0.00716	-0.00373	0.00358	0.00730
1.0	0.00348	0.00304	0.00182	0.00011	-0.00167	-0.00364	-0.00195	0.00182	0.00376

C_{pt}	γ = 1.00000					L_r/L_c = 1.000			
$\phi°$	0.	15.	30.	45.	60.	90.	120.	150.	180.
x/L_c									
0.	0	0.02394	0.03812	0.03947	0.02973	-0.00520	-0.03038	-0.02662	0
0.1	0	0.01490	0.02535	0.02831	0.02321	-0.00202	-0.02319	-0.02135	0
0.2	0	0.00997	0.01725	0.01982	0.01696	-0.00047	-0.01693	-0.01637	0
0.4	0	0.00407	0.00720	0.00860	0.00777	0.00042	-0.00775	-0.00808	0
0.6	0	0.00078	0.00150	0.00201	0.00207	0.00047	-0.00206	-0.00247	0
0.8	0	-0.00107	-0.00174	-0.00180	-0.00129	0.00038	0.00130	0.00096	0
1.0	0	-0.00204	-0.00345	-0.00383	-0.00312	0.00029	0.00313	0.00287	0

TABLE 97

C_{pm}				$\gamma = 1.00000$			$L_r/L_c = 0.200$		
$\phi°$	0.	15.	30.	45.	60.	90.	120.	150.	180.
x/L_c									
0.	-4.18892	0.71965	0.83834	0.49972	0.20369	-0.00601	0.02202	-0.05374	-0.13511
0.1	-0.75266	-0.48189	0.11108	0.43294	0.34510	0.06299	-0.03203	-0.06786	-0.07701
0.2	-0.40781	-0.32079	-0.07025	0.20500	0.30804	0.10091	-0.02920	-0.06694	-0.07690
0.4	-0.17459	-0.15563	-0.08929	0.02290	0.13413	0.14947	-0.00089	-0.06736	-0.07755
0.6	-0.08864	-0.08319	-0.06096	-0.01422	0.04905	0.11837	0.03624	-0.05724	-0.08227
0.8	-0.04681	-0.04554	-0.03820	-0.01826	0.01517	0.07671	0.04757	-0.03846	-0.07876
1.0	-0.02347	-0.02378	-0.02248	-0.01478	0.00206	0.04514	0.04044	-0.02266	-0.06153

C_{pm}				$\gamma = 1.00000$			$L_r/L_c = 0.200$		
$\phi°$	0.	15.	30.	45.	60.	90.	120.	150.	180.
x/L_c									
0.	0	-0.64932	-0.46637	-0.22164	-0.04319	0.12662	0.14241	0.08406	0
0.1	0	-0.18025	-0.31533	-0.26886	-0.11096	0.09779	0.13097	0.08240	0
0.2	0	-0.06345	-0.15613	-0.20238	-0.14575	0.06121	0.11980	0.07850	0
0.4	0	0.00393	-0.02334	-0.07115	-0.09719	-0.01299	0.08514	0.07020	0
0.6	0	0.02166	0.02110	-0.00494	-0.03794	-0.03737	0.03730	0.05474	0
0.8	0	0.02693	0.03774	0.02632	0.00019	-0.03343	0.00018	0.02848	0
1.0	0	0.02787	0.04357	0.04080	0.02211	-0.02208	-0.02203	0.00046	0

TABLE 98

C_{qm}	γ = 1.00000					L_r/L_c = 0.400			
$\phi°$	0.	15.	30.	45.	60.	90.	120.	150.	180.
x/L_c									
0.	-2.48491	0.18730	0.48232	0.39631	0.23801	0.04595	0.00038	-0.06253	-0.10958
0.1	-0.50007	-0.34808	-0.01134	0.24816	0.29655	0.09887	-0.02391	-0.06922	-0.08071
0.2	-0.30206	-0.23798	-0.07179	0.11037	0.21295	0.13277	-0.01325	-0.06896	-0.08111
0.4	-0.14646	-0.12644	-0.06765	0.01649	0.09496	0.12719	0.02275	-0.06181	-0.08440
0.6	-0.08008	-0.07217	-0.04716	-0.00598	0.04171	0.09211	0.03898	-0.04543	-0.08035
0.8	-0.04467	-0.04144	-0.03040	-0.00986	0.01775	0.06025	0.03706	-0.02995	-0.06475
1.0	-0.02358	-0.02249	-0.01810	-0.00841	0.00665	0.03606	0.02744	-0.01799	-0.04456

C_{pm}	γ = 1.00000					L_r/L_c = 0.400			
$\phi°$	0.	15.	30.	45.	60.	90.	120.	150.	180.
x/L_c									
0.	0	-0.38461	-0.36805	-0.22803	-0.08169	0.10060	0.13656	0.08612	0
0.1	0	-0.13762	-0.22514	-0.21252	-0.12064	0.06904	0.12318	0.08213	0
0.2	0	-0.06575	-0.12679	-0.15026	-0.11665	0.03274	0.10737	0.07724	0
0.4	0	-0.01062	-0.03300	-0.05906	-0.06896	-0.01139	0.06468	0.06316	0
0.6	0	0.00931	0.00638	-0.00937	-0.02688	-0.02217	0.02569	0.04002	0
0.8	0	0.01755	0.02446	0.01724	0.00124	-0.01926	-0.00154	0.01458	0
1.0	0	0.02084	0.03269	0.03119	0.01843	-0.01304	-0.01851	-0.00648	0

TABLE 99

C_{gm}				γ = 1.00000			L_r/L_e = 1.000		
$\phi°$	0.	15.	30.	45.	60.	90.	180.	150.	180.
x/L_e									
0.	-1.12375	-0.01366	0.17685	0.19921	0.16345	0.07359	0.00817	-0.05488	-0.08722
0.1	-0.20097	-0.15817	-0.05319	0.05930	0.12994	0.10870	0.00820	-0.05561	-0.07507
0.2	-0.12618	-0.10489	-0.04909	0.01977	0.07652	0.09756	0.02396	-0.04870	-0.07429
0.4	-0.06492	-0.05603	-0.03157	0.00177	0.03432	0.06275	0.02758	-0.03131	-0.05863
0.6	-0.03634	-0.03182	-0.01913	-0.00103	0.01785	0.03803	0.01955	-0.01897	-0.03831
0.8	-0.01978	-0.01748	-0.01089	-0.00122	0.00929	0.02165	0.01193	-0.01080	-0.02259
1.0	-0.00956	-0.00854	-0.00556	-0.00098	0.00425	0.01104	0.00650	-0.00550	-0.01190

C_{pm}				γ = 1.00000			L_r/L_e = 1.000		
$\phi°$	0.	15.	30.	45.	60.	90.	180.	150.	180.
x/L_e									
0.	0	-0.12746	-0.15503	-0.12558	-0.07085	0.03669	0.08361	0.06208	0
0.1	0	-0.05204	-0.08689	-0.09247	-0.06895	0.01633	0.06848	0.05500	0
0.2	0	-0.03011	-0.05310	-0.06149	-0.05191	0.00397	0.05126	0.04627	0
0.4	0	-0.00960	-0.01865	-0.02453	-0.02420	-0.00322	0.02379	0.02580	0
0.6	0	0.00003	-0.00158	-0.00448	-0.00680	-0.00367	0.00654	0.00937	0
0.8	0	0.00501	0.00749	0.00666	0.00349	-0.00299	-0.00365	-0.00125	0
1.0	0	0.00744	0.01205	0.01248	0.00912	-0.00227	-0.00921	-0.00735	0

TABLE 100

C_{qp}	γ = 3.00000					L_r/L_c = .200			
$\phi°$	0.	15.	30.	45.	60.	90.	120.	150.	180.
x/L_c									
.0	0	.16683	.13339	.07938	.03023	-.03502	-.05283	-.03481	0
.1	0	.08469	.11585	.08674	.03704	-.02991	-.04947	-.03430	0
.2	0	.05372	.08467	.07916	.04531	-.02471	-.04669	-.03284	0
.4	0	.02754	.04770	.05341	.04168	-.01018	-.04010	-.03009	0
.6	0	.01575	.02831	.03415	.03053	-.00097	-.03026	-.02685	0
.8	0	.00915	.01681	.02118	.02043	.00245	-.02045	-.02169	0
1.0	0	.00505	.00946	.01235	.01258	.00291	-.01259	-.01525	0

C_{pp}	γ = 3.00000					L_r/L_c = .200			
$\phi°$	0.	15.	30.	45.	60.	90.	120.	150.	180.
x/L_c									
.0	-.14014	-.03948	-.01687	.03669	.06582	.06370	.01611	-.03405	-.05475
.1	-.07930	-.06610	-.02897	.01617	.04877	.05606	.01620	-.02855	-.04742
.2	-.05120	-.04523	-.02616	.00315	.03154	.04783	.01608	-.02349	-.04038
.4	-.02006	-.01913	-.01484	-.00503	.00910	.02866	.01462	-.01394	-.02714
.6	-.00341	-.00431	-.00578	-.00524	-.00113	.01152	.01027	-.00573	-.01489
.8	.00616	.00444	.00032	-.00361	-.00561	-.00062	.00446	.00029	-.00387
1.0	.01158	.00951	.00416	-.00233	-.00745	-.00831	-.00079	.00415	.00491

TABLE 101

C_{qp} γ 3.00000 L_r/L_c = .400

$\phi°$	0.	15.	30.	45.	60.	90.	120.	150.	180.
x/L_c									
.0	0	.11857	.11151	.07537	.03421	-.02852	-.04927	-.03401	0
.1	0	.05881	.08699	.07606	.04172	-.02327	-.04603	-.03297	0
.2	0	.03990	.06415	.06409	.04282	-.01631	-.04285	-.03146	0
.4	0	.02214	.03795	.04248	.03421	-.00522	-.03383	-.02817	0
.6	0	.01321	.02332	.02754	.02427	-.00019	-.02415	-.02313	0
.8	0	.00787	.01414	.01726	.01605	.00140	-.01602	-.01700	0
1.0	0	.00441	.00804	.01006	.00972	.00151	-.00971	-.01107	0

C_{pp} γ = 3.00000 L_r/L_c = .400

$\phi°$	0.	15.	30.	45.	60.	90.	120.	150.	180.
x/L_c									
.0	-.09947	-.07188	-.02180	.02296	.05167	.05676	.01632	-.02959	-.04890
.1	-.06188	-.05175	-.02466	.00896	.03642	.04860	.01594	-.02446	-.04173
.2	-.04188	-.03635	-.02047	.00195	.02364	.03963	.01524	-.01961	-.03497
.4	-.01776	-.01624	-.01125	-.00259	.00812	.02205	.01195	-.01091	-.02218
.6	-.00399	-.00422	-.00426	-.00290	.00040	.00841	.00699	-.00417	-.01074
.8	.00419	.00310	.00047	-.00220	-.00349	-.00097	.00214	.00049	-.00148
1.0	.00894	.00741	.00345	-.00141	-.00541	-.00691	-.00162	.00546	.00513

TABLE 102

C_{qp}	γ = 3.00000					L_r/L_c = 1.000			
$\phi°$ / x/L_c	0.	15.	30.	45.	60.	90.	120.	150.	180.
.0	0	.05925	.06285	.04822	.02649	-.01460	-.03298	-.02467	0
.1	0	.02457	.03973	.04068	.02894	-.00820	-.02912	-.02301	0
.2	0	.01657	.02786	.03048	.02412	-.00354	-.02410	-.02081	0
.4	0	.00907	.01565	.01793	.01529	-.00045	-.01528	-.01477	0
.6	0	.00521	.00907	.01057	.00926	.00012	-.00925	-.00932	0
.8	0	.00288	.00504	.00593	.00527	.00018	-.00526	-.00541	0
1.0	0	.00142	.00250	.00297	.00268	.00015	-.00268	-.00281	0

C_{pp}	γ = 3.00000					L_r/L_c = 1.000			
$\phi°$ / x/L_c	0.	15.	30.	45.	60.	90.	120.	150.	180.
.0	-.04020	-.03159	-.01314	.00645	.02153	.02895	.01033	-.01476	-.02590
.1	-.02502	-.02131	-.01137	.00163	.01364	.02266	.00928	-.01132	-.02075
.2	-.01685	-.01459	-.00835	.00022	.00872	.01661	.00772	-.00829	-.01596
.4	-.00695	-.00615	-.00384	-.00044	.00327	.00763	.00418	-.00380	-.00793
.6	-.00139	-.00132	-.00104	-.00044	.00045	.00204	.00147	-.00101	-.00244
.8	.00176	.00144	.00062	-.00034	-.00108	-.00125	-.00026	.00063	.00092
1.0	.00343	.00290	.00152	-.00025	-.00186	-.00305	-.00124	.00153	.00279

TABLE 103

C_{qt}	γ= 3.00000					L_r/L_c = .200			
$\phi°$	0.	15.	30.	45.	60.	90.	120.	150.	180.
x/L_c									
.0	.07992	.04607	.00581	-.02140	-.03494	-.03151	-.00720	.01711	.02[illegible]
.1	.05269	.04093	.01317	-.01430	-.03050	-.02996	-.00740	.01575	.02[illegible]
.2	.04043	.03314	.01431	-.00793	-.02461	-.02832	-.00766	.01436	.02339
.4	.02562	.02194	.01164	-.00177	-.01457	-.02329	-.00621	.01152	.01982
.6	.01657	.01447	.00860	.00024	-.00845	-.01714	-.00788	.00854	.01609
.8	.01047	.00926	.00581	.00075	-.00483	-.01163	-.00646	.00582	.01210
1.0	.00620	.00554	.00362	.00071	-.00262	-.00723	-.00455	.00362	.00[illegible]

C_{pt}	γ = 3.00000					L_r/L_c = .200			
$\phi°$	0.	15.	30.	45.	60.	90.	120.	150.	180.
x/L_c									
.0	0	.03168	.04542	.04230	.02836	-.00852	-.03542	-.02499	0
.1	0	.01961	.03247	.03406	.02514	-.00533	-.02533	-.02[illegible]49	0
.2	0	.01289	.02253	.02566	.02096	-.00257	-.02053	-.01313	0
.4	0	.00518	.00973	.01245	.01197	.00095	-.01179	-.01[illegible]	0
.6	0	.00097	.00231	.00382	.00473	.00195	-.00472	-.00612	0
.8	0	-.00146	-.00211	-.00163	-.00033	.00168	.00032	-.00124	0
1.0	0	-.00285	-.00469	-.00492	-.00359	.00111	.00359	.00247	0

TABLE 104

C_{gt}	$\gamma = 3.00000$					$L_r/L_c = .400$			
$\phi°$	0.	15.	.30	.45	60.	90.	120.	150.	180.
x/L_c									
.0	.06193	.03994	.00880	-.01561	-.02962	-.02942	-.00752	.01562	.02513
.1	.04140	.03332	.01335	-.00874	-.02442	-.02772	-.00775	.01419	.02328
.2	.03227	.02687	.01277	-.00456	-.01891	-.02543	-.00802	.01274	.02143
.4	.02084	.01787	.00980	-.00101	-.01131	-.01950	-.00793	.00972	.01760
.6	.01358	.01181	.00693	.00012	-.00683	-.01383	-.00673	.00691	.01352
.8	.00858	.00753	.00460	.00040	-.00406	-.00919	-.00500	.00459	.00953
1.0	.00503	.00445	.00279	.00038	-.00227	-.00559	-.00327	.00279	.00604

C_{pt}	$\gamma = .00000$					$L_r/L_c = .400$			
$\phi°$	0.	15.	30.	45.	60.	90.	120.	150.	180.
x/L_c									
.0	0	.02343	.03580	.03537	.02520	-.00597	-.02622	-.02216	0
.1	0	.01531	.02559	.02764	.02145	-.00339	-.02147	-.01878	0
.2	0	.01048	.01812	.02062	.01716	-.00140	-.01702	-.01556	0
.4	0	.00452	.00820	.01003	.00937	.00063	-.00930	-.00958	0
.6	0	.00107	.00219	.00317	.00354	.00110	-.00352	-.00442	0
.8	0	-.00100	-.00149	-.00124	-.00046	.00094	.00046	-.00040	0
1.0	0	-.00220	-.00367	-.00393	-.00300	.00063	.00301	.00240	0

TABLE 105

C_{qt}	γ = 3.00000					L_r/L_c = 1.000			
$\phi°$	0.	15.	30.	45.	60.	90.	120.	150.	180.
x/L_c									
.0	.03427	.02385	.00731	-.00734	-.01707	-.01955	-.00599	.01017	.01707
.1	.02056	.01723	.00853	-.00231	-.01165	-.01710	-.00613	.00857	.01493
.2	.01519	.01296	.00698	-.00086	-.00819	-.01395	-.00583	.00698	.01284
.4	.00894	.00772	.00441	-.00009	-.00455	-.00881	-.00425	.00441	.00865
.6	.00528	.00458	.00267	.00004	-.00262	-.00533	-.00270	.00267	.00536
.8	.00296	.00258	.00152	.00005	-.00145	-.00303	-.00157	.00152	.00308
1.0	.00148	.00129	.00077	.00004	-.00072	-.00154	-.00082	.00077	.00159

C_{pt}	γ = 3.00000					L_r/L_c = 1.000			
$\phi°$	0.	15.	30.	45.	60.	90.	120.	150.	180.
x/L_c									
.0	0	.00973	.01570	.01652	.01272	-.00188	-.01294	-.01156	0
.1	0	.00622	.01061	.01191	.00984	-.00073	-.00984	-.00917	0
.2	0	.00421	.00729	.00838	.00718	-.00017	-.00717	-.00697	0
.4	0	.00175	.00309	.00366	.00329	.00015	-.00328	-.00340	0
.6	0	.00036	.00067	.00087	.00087	.00017	-.00087	-.00102	0
.8	0	-.00043	-.00071	-.00074	-.00055	.00014	.00055	.00043	0
1.0	0	-.00085	-.00144	-.00161	-.00133	.00010	.00133	.00123	0

TABLE 106

C_{qm}	γ = 3.00000					L_r/L_c = .200			
$\phi°$ / x/L_c	0.	15.	30.	45.	60.	90.	120.	150.	180.
.0	-1.48934	.18717	.27995	.19786	.10880	.02505	.00982	-.03355	-.06705
.1	-.31044	-.20542	.02613	.16472	.15056	.04788	-.00731	-.03722	-.04667
.2	-.17972	-.14215	-.03686	.07956	.13068	.06016	-.00536	-.03586	-.04563
.4	-.08414	-.07401	-.04143	.01006	.06015	.07259	.00627	-.03365	-.04372
.6	-.04553	-.04176	-.02879	-.00511	.02457	.05632	.01951	-.02747	-.04274
.8	-.02535	-.02389	-.01842	-.00714	.00936	.03696	.02243	-.01852	-.03826
1.0	-.01342	-.01301	-.01101	-.00593	.00281	.02209	.01830	-.01108	-.02880

C_{pm}	γ = 3.00000					L_r/L_c = .200			
$\phi°$ / x/L_c	0.	15.	30.	45.	60.	90.	120.	150.	180.
.0	0	-.25290	-.20558	-.11702	-.03983	.05398	.07599	.04942	0
.1	0	-.08116	-.13940	-.12436	-.06098	.04003	.06785	.04646	0
.2	0	-.03409	-.07474	-.09322	-.06915	.02401	.05987	.04274	0
.4	0	-.00309	-.01649	-.03555	-.04435	-.00559	.04007	.03507	0
.6	0	.00698	.00573	-.00479	-.01738	-.01510	.01715	.02487	0
.8	0	.01092	.01537	.01086	.00035	-.01348	-.00022	.01137	0
1.0	0	.01239	.01954	.01872	.01086	-.00891	-.01083	-.00177	0

TABLE 107

C_{qm}				γ = 3.00000			L_r/L_c = .400		
$\phi°$	0.	15.	30.	45.	60.	90.	120.	150.	180.
x/L_c									
.0	-.88577	.02329	.15303	.14922	.10917	.04090	.00464	-.03458	-.05707
.1	-.20603	-.14741	-.01562	.09217	.12278	.05755	-.00266	-.03568	-.04630
.2	-.13095	-.10433	-.03535	.04180	.08918	.06701	.00168	-.03438	-.04524
.4	-.06788	-.05844	-.03137	.00663	.04216	.05994	.01435	-.02934	-.04358
.6	-.03889	-.03467	-.02196	-.00211	.02004	.04315	.01902	-.02136	-.03891
.8	-.02249	-.02051	-.01427	-.00373	.00946	.02835	.01694	-.01411	-.03024
1.0	-.01227	-.01142	-.00855	-.00323	.00414	.01704	.01219	-.00851	-.02039

C_{pm}				γ = 1.00000			L_r/L_c = .400		
$\phi°$	0.	15.	30.	45.	60.	90.	120.	150.	180.
x/L_c									
.0	0	-.15038	-.15654	-.10882	-.04961	.04027	.06887	.04744	0
.1	0	-.06019	-.09881	-.09619	-.05945	.02678	.06030	.04358	0
.2	0	-.03152	-.05881	-.06881	-.05433	.01246	.05110	.03943	0
.4	0	-.00747	-.01819	-.02864	-.03144	-.00451	.02995	.02977	0
.6	0	.00232	.00041	-.00581	-.01216	-.00861	.01175	.01753	0
.8	0	.00690	.00970	.00700	.00082	-.00746	-.00092	.00541	0
1.0	0	.00903	.01433	.01402	.00864	-.00505	-.00887	-.00418	0

TABLE 108

C_{qm}	γ = 3.00000					L_r/L_c = 1.000			
$\phi°$	0.	15.	30.	45.	60.	90.	120.	150.	180.
x/L_c									
.0	-.39448	-.01970	.05343	.07043	.06522	.03734	.00666	-.02488	-.04012
.1	-.07995	-.06363	-.02323	.02108	.05060	.04725	.00678	-.02405	-.03473
.2	-.05172	-.04322	-.02084	.00709	.03069	.04146	.01178	-.02071	-.03305
.4	-.02736	-.02362	-.01335	.00065	.01435	.02656	.01192	-.01326	-.02509
.6	-.01550	-.01355	-.00808	-.00036	.00763	.01609	.00824	-.00803	-.01620
.8	-.00849	-.00748	-.00460	-.00043	.00403	.00916	.00498	-.00457	-.00950
1.0	-.00414	-.00368	-.00235	-.00035	.00188	.00467	.00269	-.00233	-.00498

C_{pm}	γ = 3.00000					L_r/L_c = 1.000			
$\phi°$	0.	15.	30.	45.	60.	90.	120.	150.	180.
x/L_c									
.0	0	-.04850	-.06155	-.05242	-.03186	.01336	.03620	.02816	0
.1	0	-.02130	-.03572	-.03842	-.02929	.00567	.02914	.02424	0
.2	0	-.01273	-.02237	-.02586	-.02190	.00142	.02168	.01990	0
.4	0	-.00433	-.00821	-.01053	-.01017	-.00116	.01003	.01078	0
.6	0	-.00023	-.00097	-.00206	-.00282	-.00132	.00274	.00377	0
.8	0	.00194	.00294	.00269	.00152	-.00108	-.00157	-.00070	0
1.0	0	.00302	.00494	.00519	.00389	-.00082	-.00392	-.00325	0