7N-28
198522
P-36

NASA TN D-258

TECHNICAL NOTE

D-258

PROPELLANT VAPORIZATION AS A CRITERION FOR ROCKET-ENGINE DESIGN: EXPERIMENTAL EFFECT OF COMBUSTOR LENGTH, THROAT DIAMETER, INJECTION VELOCITY, AND PRESSURE ON ROCKET COMBUSTOR EFFICIENCY

By Bruce J. Clark

Lewis Research Center
Cleveland, Ohio

NATIONAL AERONAUTICS AND SPACE ADMINISTRATION

WASHINGTON April 1960

(NASA-TN-D-258) PROPELLANT VAPORIZATION AS A CRITERION FOR ROCKET-ENGINE DESIGN: EXPERIMENTAL EFFECT OF COMBUSTOR LENGTH, THROAT DIAMETER, INJECTION VELOCITY, AND PRESSURE ON ROCKET COMBUSTOR EFFICIENCY N89-70931

Unclas
00/28 0198522

E-544

ERRATA

NASA TECHNICAL NOTE D-258

By Bruce J. Clark

April 1960

Page 1, last line of SUMMARY: Change 7 to 5.

Page 3, last line: Change 7.12 to 6.48.

Page 7, line 3: Change 7.12 to 6.48 and 72 to 79; last line of third full paragraph: Change 7 to 5.

Page 8, last line of second paragraph of CONCLUSIONS: Change 7 to 5.

Page 12, table I(c): Change contraction ratio from 7.12 to 6.48; multiply each value in the six columns for characteristic exhaust velocity and for uncorrected and corrected combustion efficiency by the factor 1.093.

Page 17, figure 2: Change throat diameter of 1.123 to 1.181, and contraction ratio of 7.12 to 6.48.

Pages 18 to 22 and 26: Replace figures 3, 4(a) to (d), and 7 with attached figures.

Pages 24 and 25, figures 6(a) and (b): Change contraction ratio of 7.12 to 6.48.

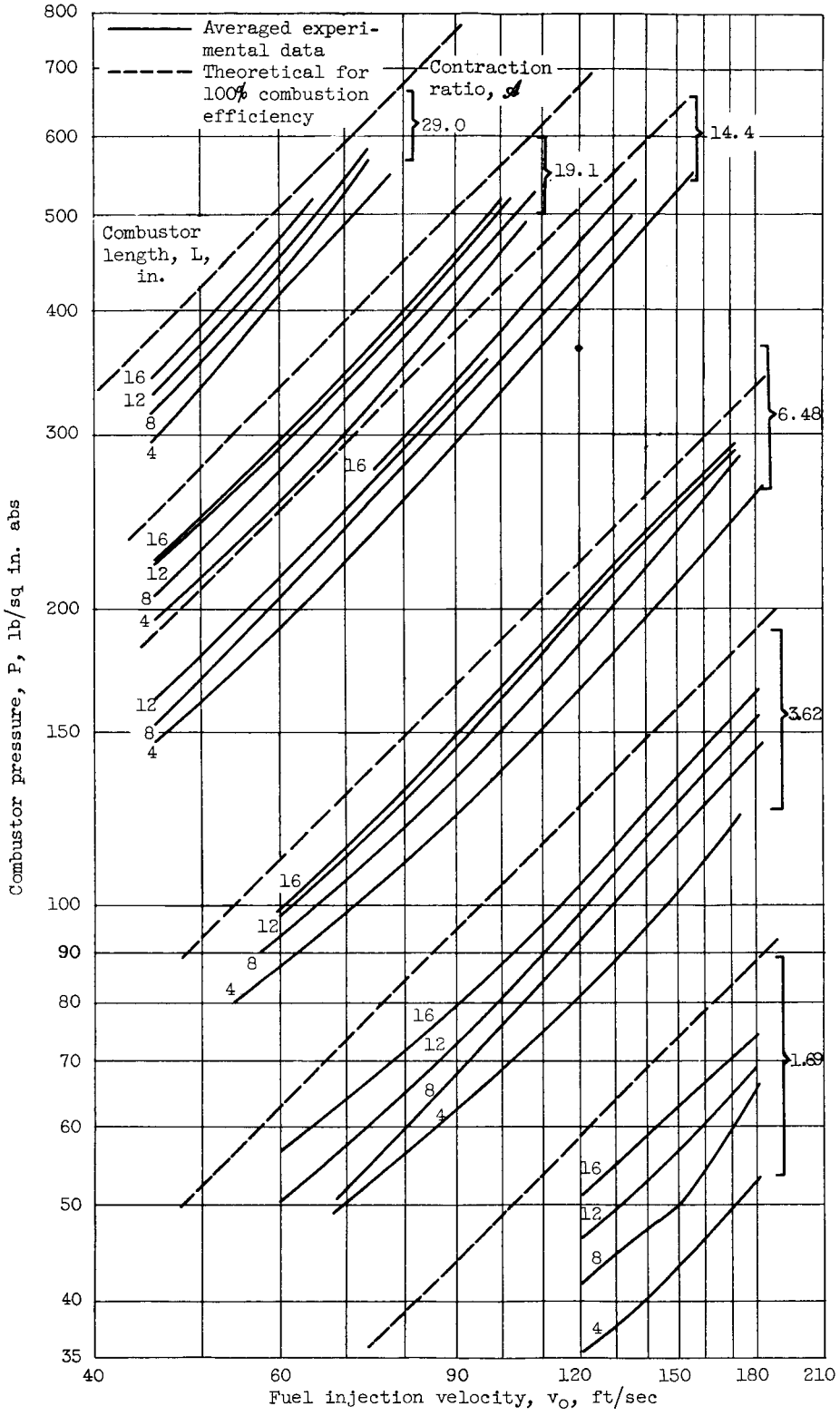

Figure 3. - Comparison of experimental and theoretical combustor pressures for all experimental conditions.

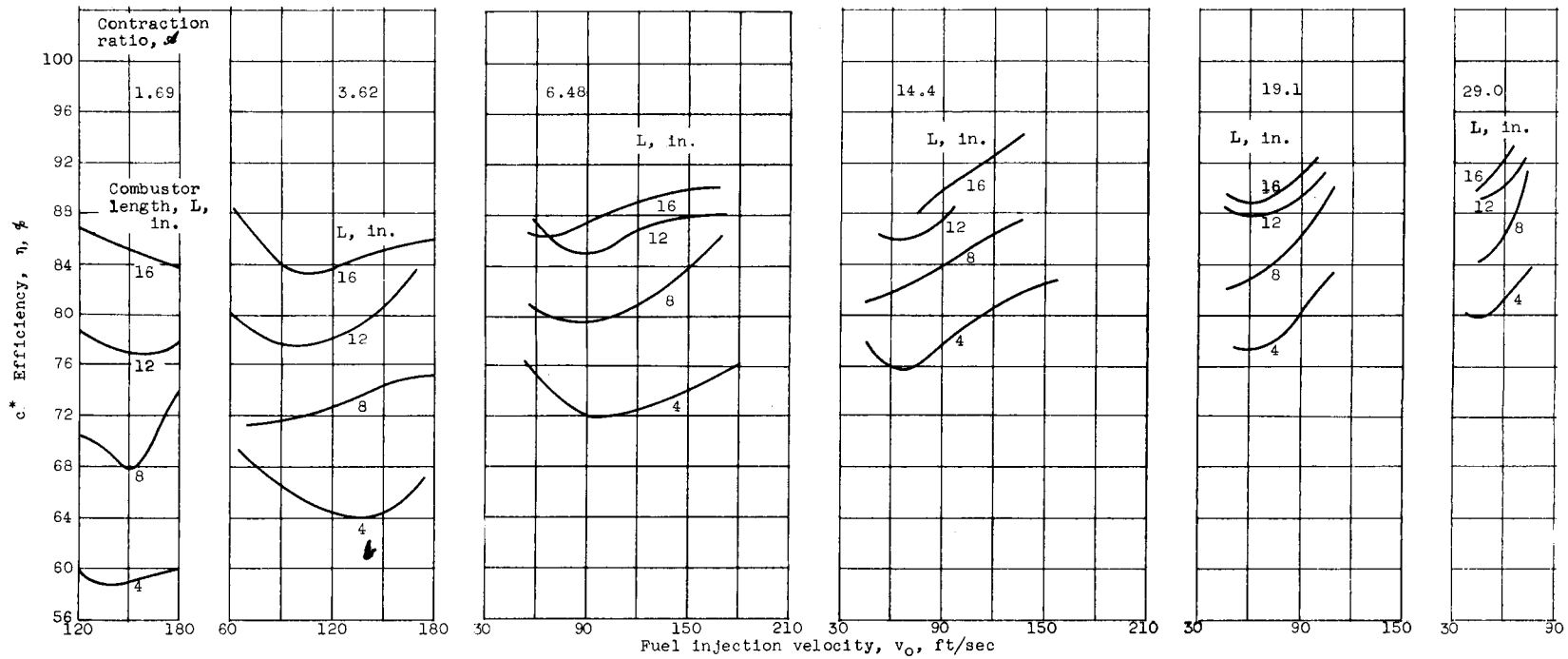

(a) Effect of fuel injection velocity with variable pressure.

Figure 4. - Variation of averaged efficiencies with various parameters.

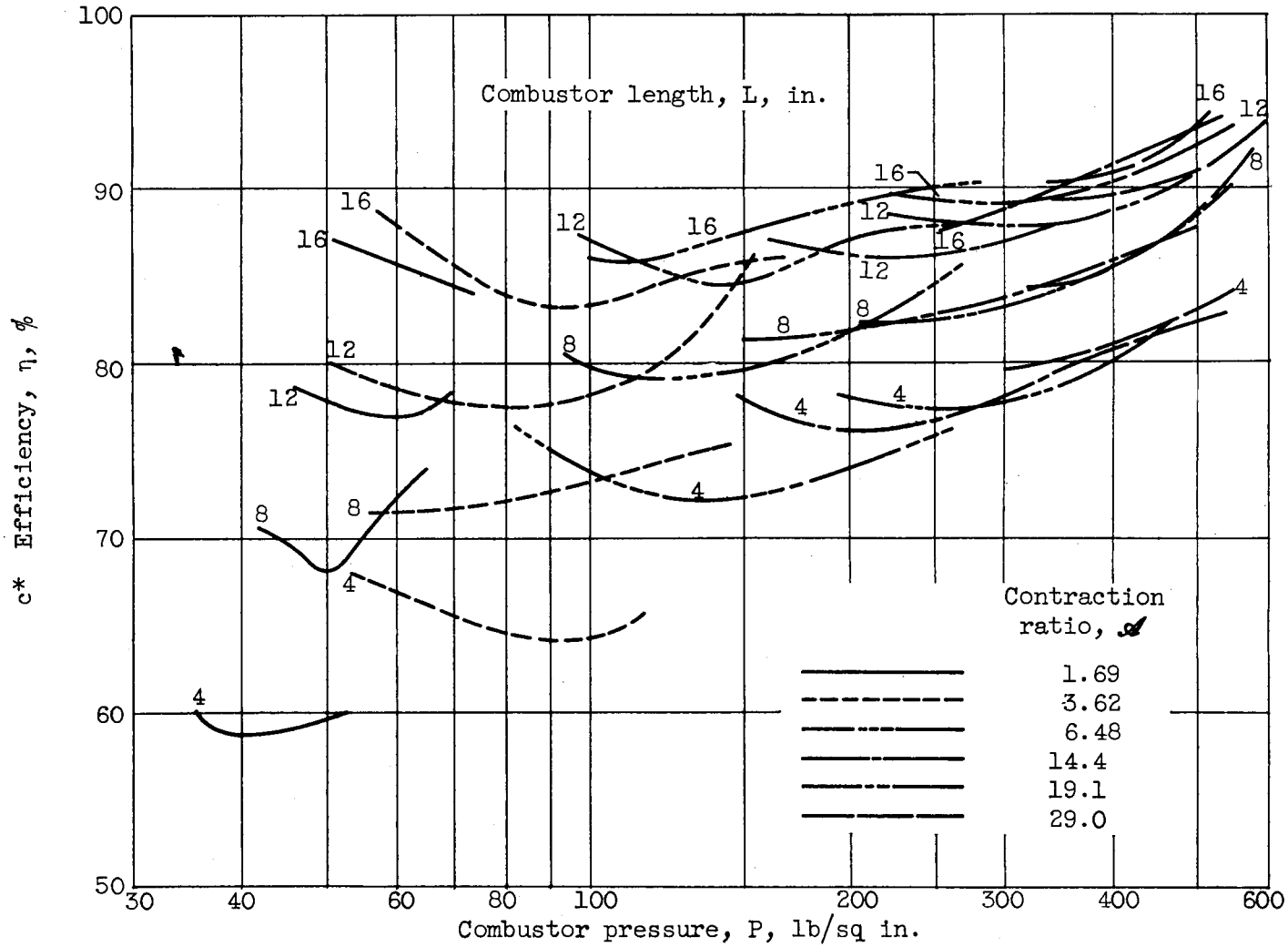

(b) Effect of combustor pressure with variable injection velocity.

Figure 4. - Continued. Variation of averaged efficiencies with various parameters.

E-544

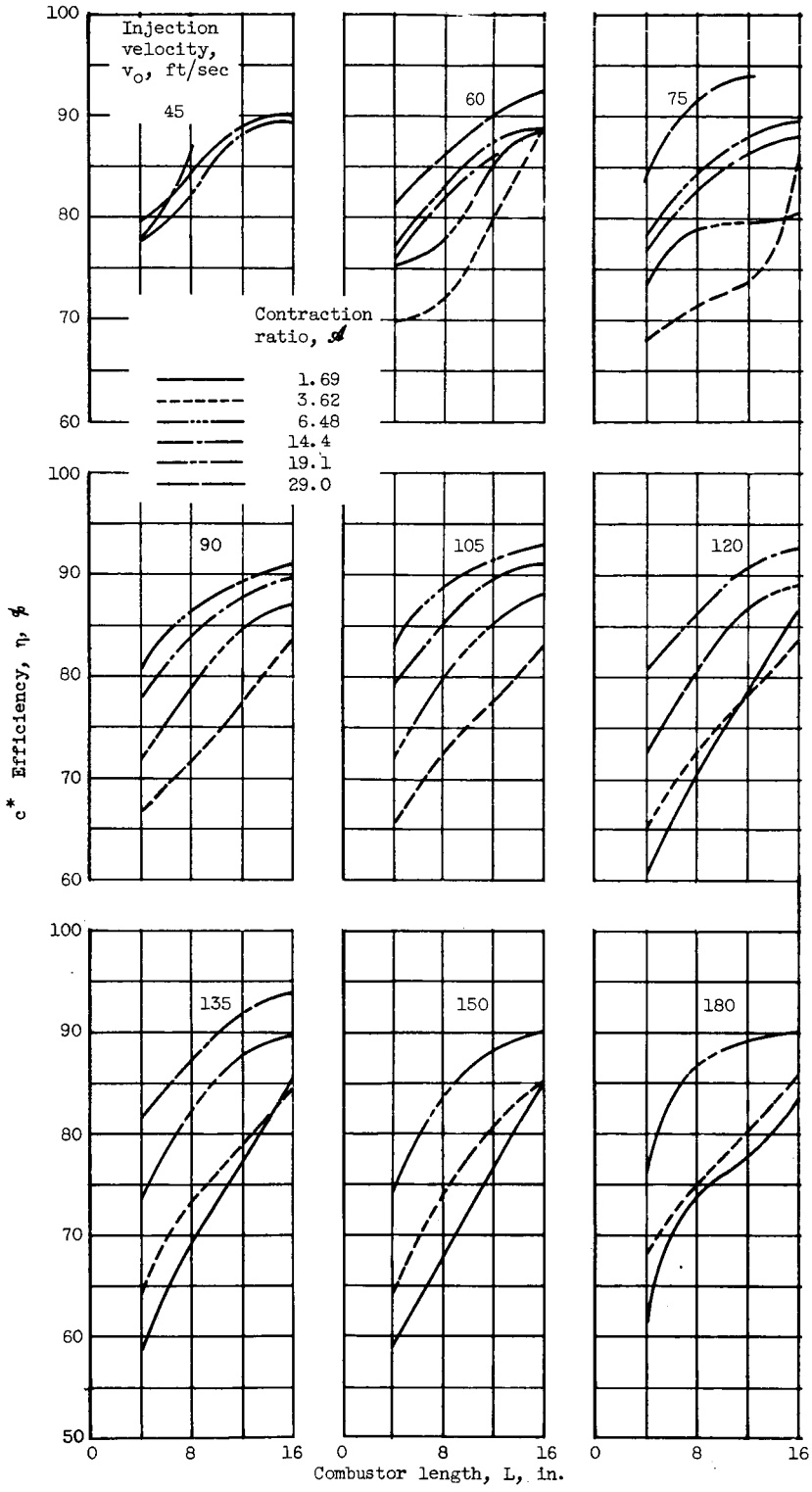

(c) Effect of combustor length with variable pressure.

Figure 4. - Continued. Variation of averaged efficiencies with various parameters.

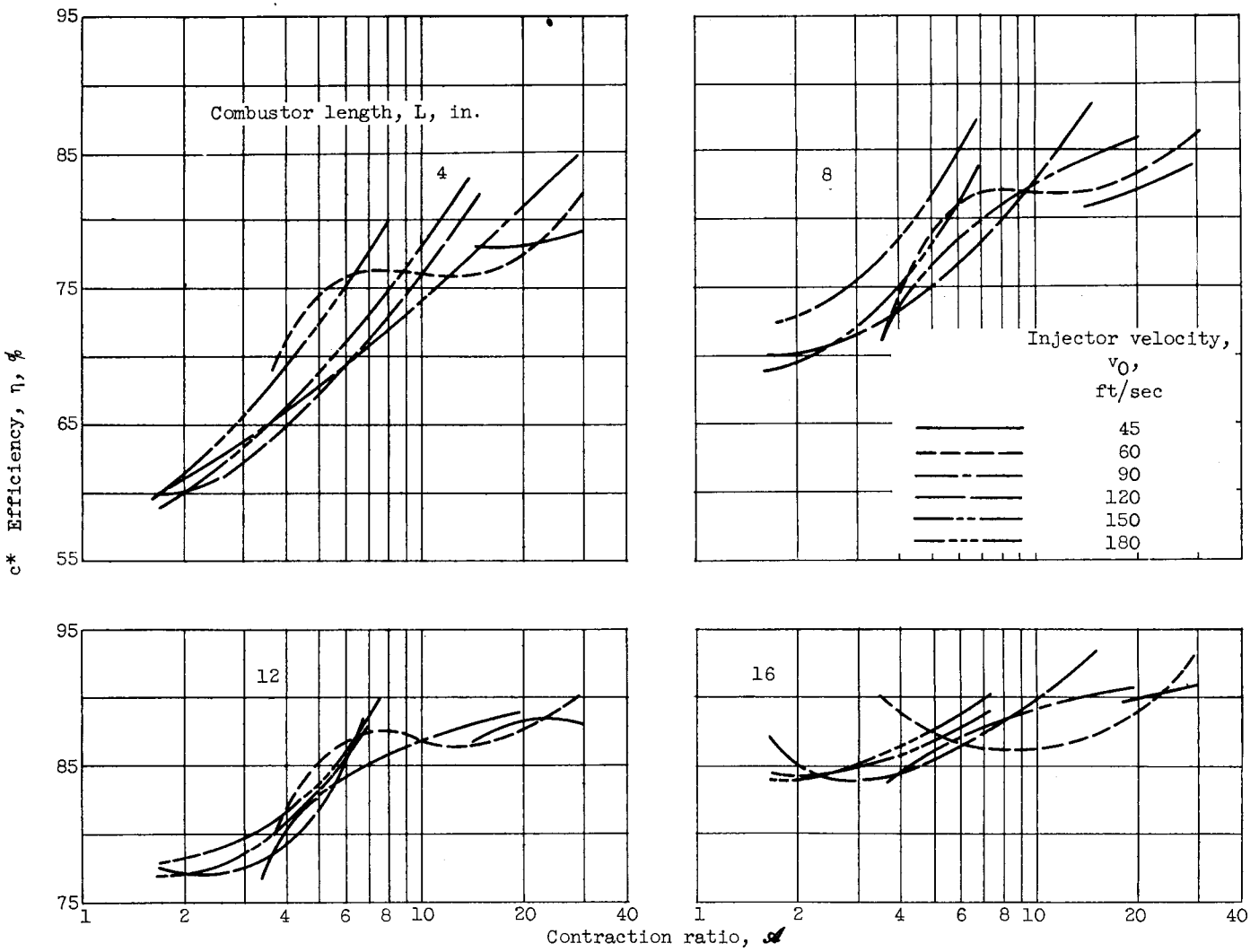

(d) Effect of contraction ratio with variable pressure.

Figure 4. - Concluded. Variation of averaged efficiencies with various parameters.

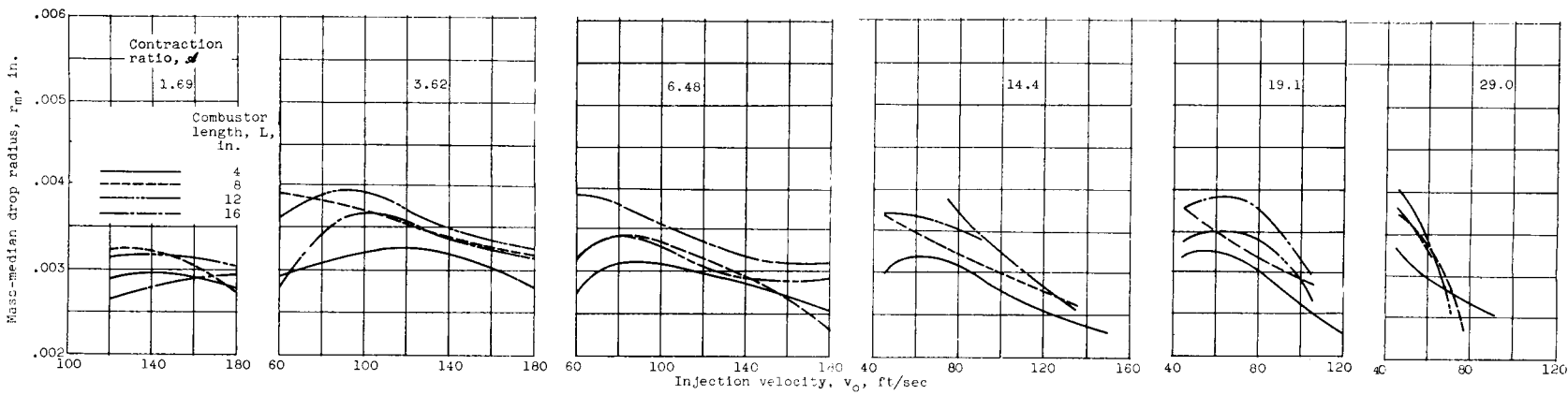

Figure 7. - Apparent drop sizes necessary to correlate analytical and experimental data.

NATIONAL AERONAUTICS AND SPACE ADMINISTRATION

TECHNICAL NOTE D-258

PROPELLANT VAPORIZATION AS A CRITERION FOR ROCKET-ENGINE DESIGN: EXPERIMENTAL EFFECT OF COMBUSTOR LENGTH, THROAT DIAMETER, INJECTION VELOCITY, AND PRESSURE ON ROCKET COMBUSTOR EFFICIENCY

By Bruce J. Clark

SUMMARY

The efficiency of a heptane-oxygen rocket combustor was measured for various combustor lengths, contraction ratios, and injection velocities of the heptane. Combustor pressure varied concomitantly with these parameters. Plots of combustion efficiency with each of these combustor parameters show that efficiency increases with injection velocity, pressure, combustor length, and contraction ratio, except at some of the lower contraction ratios and injection velocities.

Considerable scatter results from correlating the data on the basis of the effective length used in analytical vaporization-rate calculations, with either a constant drop size or drop sizes predicted from cold-flow measurements. This scatter may be explained by the wider range of experimental parameters than used in the analytical calculations, and by the inaccuracies in using cold-flow drop-size measurements under rocket conditions. The factors necessary to produce agreement between the analytical calculations and the experimental results are calculated and called apparent drop sizes. These apparent sizes are of the same order of magnitude and show the same trends as drop sizes measured in cold-flow tests. They show a maximum size at a contraction ratio of about 7.

INTRODUCTION

In the study of the parameters that control the combustion process in a rocket combustor, it is desirable to isolate and evaluate the effect of changes in each parameter individually. Previous studies (refs.

1 to 3) have shown the effects of changes in fuel temperature, injector hole size, and propellant combination on the efficiency of combustion. The present study is concerned with the effects on combustion efficiency of changes in throat diameter, injection velocity, and combustor pressure.

Experimentally, these factors are not all independent. A change in throat diameter produces not only a change in gas velocity in the combustor, but also in the combustor pressure and in the drop sizes formed by the injector. Changes in injection velocity also cause variations in combustor pressure and in drop sizes.

The concept used to analyze the observed effects is that of a combustion process limited in its rate by the vaporization of the propellants. Analytical calculations (ref. 4) based on this concept have predicted propellant vaporization rates under various conditions of pressure, gas velocity (or contraction ratio), injection velocity, drop size, and initial drop temperature. These results have been correlated by factors modifying the length of combustor required to vaporize a given percentage of the propellant.

This study used a liquid-heptane - liquid-oxygen rocket combustor of from 85- to 400-pound nominal thrust, depending on the propellant flow rate. Combustor length, throat diameter, and injection velocity were each varied over a four-to-one range. The injector used pairs of impinging like-on-like jets to form parallel sheets of heptane and oxygen and was designed to vaporize the oxidant rapidly so that the effects on fuel vaporization could be studied.

Characteristic exhaust velocities c^*, measured experimentally, are used to evaluate the efficiency of combustion. The experimental efficiency η (c^*/c^*_{theor}), corrected for heat loss and momentum pressure loss, is first averaged as a smooth function of injection velocity at each contraction ratio and combustor length. The effects of the various parameter changes on these averaged results are shown graphically. Analytical and experimental data are compared on the basis of the value of η at modified combustor lengths. Apparent drop sizes that will correlate the analytical and experimental data are calculated and compared with drop sizes that would be predicted by reference 5.

SYMBOLS

$\mathscr{A}$ contraction ratio

c^* characteristic exhaust velocity, ft/sec

d nozzle throat diameter

L total length of combustor, in.

l_c length of cylindrical portion of combustor, in.

l_{ef} effective length (eq. (1))

l_N axial length of convergent portion of nozzle, in.

P combustor pressure, lb/sq in.

r_m mass-median drop radius, in.

S nozzle shape factor, Volume of convergent portion of nozzle/Volume of equal length of chamber

T_R initial reduced temperature of drop

u velocity of gas, ft/sec

v_o injection velocity, in./sec

η c^* efficiency, percent of theoretical characteristic exhaust velocity

σ geometric standard deviation in drop sizes

APPARATUS AND PROCEDURE

The rocket combustor consisted of an injector, cylindrical chamber, and convergent nozzle in separable units. The nominal thrust varied from 85 to 400 pounds.

The injector (fig. 1) used like-on-like impinging jets to atomize both fuel and oxidant. To improve the distribution of propellants, two pairs of fuel jets and six pairs of oxidant jets were used. The spray sheets formed by these jets were all parallel. Fuel and oxidant jet diameters were 0.0595 and 0.0465 inch, respectively. These sizes corresponded closely to the orifice diameters for the 50-pound-thrust engine of reference 2. The V-shaped grooves in the injector face allowed more room for the spray sheet formed by the impinging jets. Holes for ignition by sparkplug and for sensing combustor pressure were provided through the injector face.

The rocket chambers were copper cylinders 3 inches in inside diameter and 4, 8, 12, and 16 inches in length. Six nozzles (fig. 2) with throat diameters from 0.557 to 2.309 inches gave contraction ratios of 29.0, 19.1, 14.4, 7.12, 3.62, and 1.69.

E-344
CE-1 back

Combustor pressure was measured both by a recording Bourdon-tube-type instrument and by a strain-gage transducer coupled to a multichannel recorder with galvanometer elements. Pulses from rotating-vane flowmeters were electronically counted for both fuel and oxidant flow rates. These signals were also recorded on the multichannel galvanometer.

Maximum errors of pressure transducers and flowmeters were ±1 and ±2 percent, respectively. Resultant maximum error in η was ±3 percent; reproducibility was about ±2 percent.

Total propellant flow rates varied between 0.5 and 2.0 pounds per second, corresponding to fuel injection velocities from 45 to 180 feet per second.

Oxidant-to-fuel weight-flow ratios were between 2.16 and 2.42. Combustor pressures were kept between 40 and 560 pounds per square inch absolute. All runs were of 3-second duration. Values of η were calculated from measured combustor pressure, total flow rate, nozzle throat diameter, and from the theoretical values of c^* (ref. 6).

RESULTS

Experimental results for individual runs are given in table I. Characteristic exhaust velocity efficiencies η used in this report are corrected for heat-transfer loss and momentum pressure loss (ref. 7). Heat-transfer measurements of reference 3 with modifications for pressure, gas velocity, and η as shown in appendix D therein were used to calculate heat-transfer rates in this study.

Crossplots of the data were made possible by averaging the experimental data. In averaging, the experimental efficiency was assumed to be a smooth function of injection velocity at any particular combustor length and contraction ratio.

The averaged data are summarized in figure 3 as a comparison of experimentally measured pressures with theoretical pressures for 100-percent combustion efficiency. The interdependence of pressure, contraction ratio, injection velocity (roughly proportional to total weight flow), and η for this set of experiments is illustrated by this figure.

Figures 4 show the variation of η with various parameters. The effects of these parameters cannot be shown independently, since, as mentioned earlier, it was not possible experimentally to vary them independently. A number of apparent irregularities in the data and discrepancies between experimental and vaporization-analysis results exist in these figures. An explanation of these is suggested in the DISCUSSION section of this report.

The effect of injection velocity on η is shown in figure 4(a). The pressure level is also increasing with injection velocity and contraction ratio. In general, η increases with injection velocity and pressure, except at small contraction ratios and injection velocities. This trend agrees with the effect of pressure predicted by analytical vaporization-rate calculations (ref. 4), but is opposite to the predicted effect of injection velocity.

In figure 4(b) is shown the variation of η with respect to combustor pressure rather than injection velocity. In this figure injection velocity is varying with pressure. Generally, an increase in pressure tends to increase η. This is in agreement with analytical calculations.

The variation of η with combustor length can also be shown, as in figure 4(c). Combustor pressure is also varying in this figure. The effect of length on η is generally greater at the low contraction ratios and short lengths.

Figure 4(d) shows that η increases generally with contraction ratio, again with pressure varying with injection velocity, contraction ratio, and η. According to the analytical calculations, η should decrease with an increase in contraction ratio only.

DISCUSSION

As was pointed out earlier in this report, the experimental results cannot be directly compared with the analytically calculated results of reference 4, because several of the experimental parameters change simultaneously. To make a better comparison with the analytical results, the experimental data should be plotted against the effective length used as a correlating parameter in reference 4, where

$$l_{ef} = \left(\frac{l_c}{\mathscr{A}^{0.44}} + \frac{0.83\, l_N}{\mathscr{A}^{0.22} S^{0.33}}\right) \frac{(P/300)^{0.66}}{(1 - T_R)^{0.4}\left(\frac{r_m}{0.003}\right)^{1.45}\left(\frac{v_o}{1200}\right)^{0.75}} \qquad (1)$$

The variation of experimental η with effective length is shown in figure 5(a). All of the factors in the effective length can be calculated from measured quantities except the drop-size factor. A constant value of $r_m = 0.004$ inch was chosen for this figure to make the experimental effective lengths comparable with the analytical.

To make possible the comparison shown in figure 5 between the analytical calculations of reference 4 and the experimental results, it is necessary to convert the analytical data from percent fuel vaporized to η. This conversion can be made with the use of reference 4, provided

the relation between percent oxidant and percent fuel vaporized is known. In the present study, hole sizes and injection velocities were such that the ratio of oxygen drop sizes to heptane drop sizes predicted from references 5 and 8 was about 0.75; the resulting ratio of effective lengths of oxygen and heptane was 1.5. From this ratio and the calculated percent-vaporized curves for oxygen and heptane, the ratio of percent oxygen vaporized to percent heptane vaporized was calculated. The analytically calculated values of percent heptane vaporized were then converted to η using the method of reference 4. A standard deviation in drop sizes of $\sigma = 3.6$ was assumed.

One reason for the larger spread in the experimental data in figure 5 is the wider excursions in pressure and contraction ratio in the experimental study than in the analytical study, as shown in the following table:

Parameter	Analytical calculations	Experimental data
Combustor pressure, P, lb/sq in. abs	150-600	40-560
Injection velocity, v_o, ft/sec	50-200	45-180
Contraction ratio, $\mathscr{A}$	1.65-12.6	1.69-29.0
Mass-median drop radius, r_m, in.	0.001-0.009	Unknown
Temperature factor, $1 - T_R$	0.441-0.719	0.44-0.49

Another reason for the larger spread is that the initial drop sizes probably are not constant as assumed, but vary with the other experimental parameters.

An endeavor to reduce the scatter in the experimental data was made by using measured drop sizes in the effective length. These drop sizes were calculated from the original data measured in the cold-flow tests of reference 5 and are shown in figure 6(a). Drop sizes are shown as a function of gas velocity as well as injection velocity. Drop sizes were modified for the variations in gas density in the combustor caused by changing the injection velocity and contraction ratio. As in reference 8, the drop sizes were assumed to be inversely proportional to the quarter-power of the gas density. Discontinuities in the slopes occur whenever the injection velocity and gas velocity are equal.

As an estimate of the conditions that might be expected in the rocket combustor, the gas velocity effective in drop formation was assumed to occur at a fixed distance downstream of the injector (i.e., impingement point, or point of spray-sheet breakup), and thus to be

inversely proportional to both contraction ratio and local gas density. For a reference point, the gas velocity was assumed to be 75 feet per second for a contraction ratio of 7.12 and efficiency of 72 percent (8-in. combustor length). The resulting curves at each engine condition are shown in figure 6(b). Using these drop sizes of figure 6(b) in a plot of performance against effective length does not appreciably decrease the scatter found in figure 5.

There is considerable uncertainty in applying these drop-size measurements to rocket combustor conditions, because (1) the gas velocity effective in determining initial drop size is not known inside the combustor; (2) drops are formed in an accelerating gas stream rather than a constant-velocity stream; (3) cold-flow measurements were made at only one injection velocity for the orifice diameter used in these rocket combustor tests; (4) gas densities in the rocket combustor varied considerably in these tests and were different from the air density in the cold-flow tests; and (5) the effect of other processes in the combustor, such as evaporation from liquid surfaces, is unknown.

As has been shown, considerable scatter remains in the data with the assumption of either a constant drop size or a size predicted by reference 5. If this scatter is assumed to be primarily due to drop-size variations, apparent drop sizes can be calculated that would make the averaged experimental rocket combustor data agree with the average curve of the analytical calculations (fig. 5(b)). These drop sizes are plotted in figure 7 for the different combustor conditions, assuming a standard deviation of 3.6 for the drop-size distribution. It is important to note that any inaccuracies or inadequacies in experimental data, vaporization hypothesis, and other assumptions are included in these apparent drop sizes.

The apparent drop sizes are of the same order of magnitude as those measured under cold-flow conditions. Generally, the apparent drop sizes first increase and then decrease with increasing injection velocity. The maximum points may correspond to the points of discontinuous slope at conditions of equal gas velocity and injection velocity shown in figure 6. The apparent drop sizes also increase and then decrease with increasing contraction ratio, the maximum sizes occurring at a contraction ratio of about 7, a trend also in accord with figure 6(b).

In figure 8 the apparent drop sizes of figure 7 are used to calculate effective lengths for each of the original runs. The scatter in the points is due to scatter in the original data, since the curves of figure 7 are calculated from averaged data. The scatter is about the same as the spread in the analytical calculations reproduced here from figure 5(a).

The first impression from the averaged performance curves in figure 4 is that there are a number of irregularities that would not be predicted

by a vaporization-rate-limited model of the combustion process. However, drop-size variations such as shown in figure 7 are adequate to conform all of the irregularities in the original averaged data to a vaporization model.

In testing the validity of the vaporization-rate-limited combustion model, it is of critical importance that measurements or reliable methods of prediction of the drop sizes within a combustor be obtained. It is not possible to make such an evaluation with the data of this study, since a change in any of the controllable parameters produced an unknown change in drop sizes as well.

CONCLUSIONS

A liquid-heptane - liquid-oxygen rocket combustor was operated at various conditions of contraction ratio, chamber length, and injection velocity. Experimental efficiency generally increased with combustor length, pressure, contraction ratio, and injection velocity, except at low values of contraction ratio and injection velocity.

Apparent drop sizes that make the analytical calculations agree with the experimental show similar trends and are of the same order of magnitude as drop sizes measured under cold-flow conditions. Both apparent drop sizes and measured sizes show a maximum at a contraction ratio of about 7.

Further work is needed to determine the actual drop sizes and their gas-velocity environment within a rocket combustor.

Lewis Research Center
National Aeronautics and Space Administration
Cleveland, Ohio, October 8, 1959

REFERENCES

1. Heidmann, M. F.: Propellant Vaporization as a Criterion for Rocket-Engine Design; Experimental Effect of Fuel Temperature on Liquid Oxygen - Heptane Performance. NACA RM E57E03, 1957.

2. Priem, Richard J., and Hersch, Martin: Effect of Fuel-Orifice Diameter on Performance of Heptane-Oxygen Rocket Engines. NACA RM E57I26, 1958.

3. Clark, Bruce J., Hersch, Martin, and Priem, Richard J.: Propellant Vaporization as a Criterion for Rocket-Engine Design; Experimental Performance, Vaporization, and Heat-Transfer Rates with Various Propellant Combinations. NASA MEMO 12-29-58E, 1959.

4. Priem, Richard J., and Heidmann, Marcus F.: Propellant Vaporization as a Design Criterion for Rocket-Engine Combustion Chambers. NASA TR R-67, 1960.

5. Ingebo, Robert D.: Drop-Size Distributions for Impinging-Jet Breakup in Airstreams Simulating the Velocity Conditions in Rocket Combustors. NACA TN 4222, 1958.

6. Huff, Vearl N., Fortini, Anthony, and Gordon, Sanford: Theoretical Performance of JP-4 Fuel and Liquid Oxygen as a Rocket Propellant. II - Equilibrium Composition. NACA RM E56D23, 1956.

7. Sutton, George P.: Rocket Propulsion Elements. Second ed., John Wiley & Sons, Inc., 1956.

8. Ingebo, Robert D., and Foster, Hampton H.: Drop-Size Distribution for Crosscurrent Breakup of Liquid Jets in Airstreams. NACA TN 4087, 1957.

TABLE I. - EXPERIMENTAL RESULTS

(a) Contraction ratio, 1.69.

Run	Combustor pressure, P, lb/sq in. abs	Fuel weight flow, lb/sec	Oxidant weight flow, lb/sec	Characteristic exhaust velocity, c*, ft/sec	Combustion efficiency, η	
					Uncorrected	Corrected[a]
Combustor length, L, 4 in.						
551	39	0.412	0.977	3790	63.8	59.1
550	39	.415	.979	3770	63.5	58.8
552	40	.411	.966	3920	66.0	61.2
554	44	.478	1.131	3690	62.1	57.6
553	45	.468	1.128	3810	64.1	59.4
559	50	.537	1.272	3730	62.8	58.2
556	51	.523	1.263	3860	65.0	60.2
557	↓	.533	1.260	3840	64.6	59.9
558		.534	1.264	3830	64.5	59.8
562	55	.576	1.374	3810	64.1	59.4
560	↓	.584	1.387	3770	63.5	58.8
563		.589	1.384	3760	63.3	58.7
561	57	.584	1.391	3900	65.6	60.8
Combustor length, L, 12 in.						
534	49	0.421	0.933	4880	82.1	76.7
536	51	.405	.978	4970	83.7	78.3
537	↓	.412	.975	4960	83.5	78.1
538		.417	.975	4940	83.2	77.8
539	52	.416	.988	5000	84.2	78.8
540	59	.478	1.139	4920	82.9	77.5
542	↓	.481	1.130	4940	83.2	77.7
541		.486	1.128	4930	83.0	77.6
543	64	.531	1.262	4810	81.0	75.6
545	65	.526	1.270	4890	82.4	77.0
546	72	.576	1.390	4940	83.2	77.7
548	↓	.583	1.384	4940	83.2	77.7
547		.587	1.401	4890	82.4	77.0

Run	Combustor pressure, P, lb/sq in. abs	Fuel weight flow, lb/sec	Oxidant weight flow, lb/sec	Characteristic exhaust velocity, c*, ft/sec	Combustion efficiency, η	
					Uncorrected	Corrected[a]
Combustor length, L, 8 in.						
532	46	0.417	0.985	4430	74.6	69.4
533	46	.417	.987	4420	74.4	69.2
531	47	.416	.985	4520	76.2	70.9
528	52	.475	1.128	4370	73.6	68.4
529	53	.472	1.126	4480	75.4	70.1
530	53	.473	1.134	4460	75.1	69.9
526	57	.520	1.254	4330	73.0	67.8
527	58	.526	1.260	4380	73.8	68.6
525	58	.531	1.264	4360	73.4	68.2
524	60	.521	1.260	4550	76.7	71.3
522	63	.552	1.321	4540	76.4	71.1
523	63	.552	1.325	4530	76.2	70.9
520	64	.556	1.317	4610	77.5	72.1
516	64	.573	1.334	4530	76.2	70.9
517	66	.573	1.347	4640	78.1	72.6
519	67	.577	1.333	4730	79.6	74.0
518	67	.581	1.377	4620	77.8	72.3
Combustor length, L, 16 in.						
1021	56	0.413	0.972	5450	91.7	86.4
1022	56	.415	.972	5450	91.7	86.4
1023	57	.413	.975	5540	93.3	87.9
1024	64	.474	1.118	5420	91.3	85.9
1025	64	.474	1.123	5410	91.0	85.6
1026	65	.474	1.121	5500	92.6	86.2
1027	65	.475	1.122	5490	92.4	87.1
1029	71	.525	1.260	5370	90.4	85.0
1030	71	.526	1.259	5370	90.4	85.0
1028	72	.531	1.259	5430	91.4	86.0
1031	77	.576	1.383	5310	89.3	83.9
1032	78	.576	1.388	5360	90.2	84.8

[a]For heat-transfer loss and momentum pressure loss.

E-544

CE-2 back

TABLE I. - CONTINUED. EXPERIMENTAL RESULTS

(b) Contraction ratio, 3.62.

Run	Combustor pressure, P, lb/sq in. abs	Fuel weight flow, lb/sec	Oxidant weight flow, lb/sec	Characteristic exhaust velocity, c*, ft/sec	Combustion efficiency, η	
					Uncorrected	Corrected[a]
Combustor length, L, 4 in.						
597	46	0.210	0.486	4160	70.0	68.9
587	58	.275	.642	3980	67.0	65.8
592	56	.279	.670	3840	64.6	63.5
594	60	.290	.670	3930	66.1	65.0
589	61	.285	.655	4080	68.6	67.5
567	71	.337	.796	3940	66.3	65.2
565	71	.338	.806	3900	65.6	64.5
566	72	.340	.791	4010	67.5	66.4
570	78	.374	.900	3850	64.8	63.7
569	78	.380	.900	3830	64.5	63.5
568	79	.374	.885	3950	66.5	65.4
571	87	.413	.979	3930	66.1	65.0
572	↓	.416	.981	3920	66.0	64.9
573		.419	.991	3880	65.3	64.2
576	89	.435	1.027	3930	64.5	63.5
575	94	.454	1.077	3860	65.0	63.9
578	98	.474	1.123	3860	65.0	63.9
577	98	.477	1.117	3870	65.1	64.0
573	102	.474	1.134	3920	66.0	64.9
582	113	.534	1.263	3960	66.6	65.5
586	114	.531	1.263	3990	67.1	66.0
581	114	.533	1.260	4000	67.4	66.3
583	120	.561	1.383	4030	67.8	66.7
584	126	.592	1.392	4100	69.0	67.9
585	127	.581	1.383	4160	68.4	67.3
Combustor length, L, 12 in.						
232	49	0.193	0.448	4660	[illegible]	80.1
228	55	.197	.447	4840	82.2	81.7
230	55	.219	.517	4700	79.1	78.5
231	56	.219	.528	4720	79.4	78.8
250	↓	.226	.536	4630	77.9	77.3
232		.233	.528	4730	79.6	79.0
249	57	.223	.523	4800	80.8	80.2
227	60	.289	.670	4580	77.3	76.8
229	72	.289	.675	4700	79.1	78.5
228	72	.299	.670	4680	78.8	78.2
222	82	.334	.786	4600	77.5	76.8
225	83	.332	.789	4640	78.1	77.4
226	↓	.339	.789	4640	78.1	77.4
221		.348	.790	4630	78.0	77.3
223	93	.384	.882	4620	77.8	77.2
235	94	.381	.885	4670	78.5	77.8
233	95	.383	.891	4680	78.8	78.1
234	95	.383	.895	4670	78.5	77.8
237	105	.420	.980	4710	79.2	78.5
238	105	.420	.982	4700	79.0	78.3
236	106	.425	.980	4730	79.6	78.9
241	113	.446	1.064	4740	79.8	79.1
240	113	.476	1.043	4750	79.9	79.2
242	114	.447	1.050	4780	80.5	79.8
244	123	.480	1.130	4800	80.8	80.0
243	123	.484	1.132	[illegible]	80.0	79.8
245	124	.483	1.130	4830	81.3	80.6
1001	126	.462	1.111	5000	84.1	83.4
1000	↓	.463	1.118	4970	83.7	83.0
1002		.466	1.109	5000	84.1	83.4
999		.466	1.118	4960	83.5	82.8
247	131	.513	1.208	4780	80.5	79.7
248	131	.513	1.215	[illegible]	80.5	79.5
246	132	.510	1.206	4830	81.0	80.2
1003	134	.496	1.190	5000	84.1	83.4
1005	↓	.498	1.188	5000	84.1	83.4
1004		.499	1.188	5000	84.1	83.4
1010	139	.528	1.252	4910	82.6	81.9
1012	140	.532	1.260	4910	82.6	81.9
1011	140	.538	1.252	4920	82.9	82.2
1006	142	.526	1.255	5010	84.3	83.7
1008	↓	.532	1.252	5010	84.3	83.7
1007		.533	1.255	5000	84.1	83.5
1009	143	.529	1.260	5000	84.1	83.5
1013	148	.558	1.314	4970	83.7	83.0
1014	↓	.558	1.322	4950	83.3	82.6
1015		.565	1.322	4960	83.5	82.8
1016	153	.585	1.376	4910	82.6	81.9
1017	154	.585	1.374	4940	83.2	82.5
1018	155	.585	1.379	4960	83.5	82.8
1020	155	.594	1.371	4960	83.5	82.8
1019	156	.592	1.374	4990	84.0	83.3

Run	Combustor pressure, P, lb/sq in. abs	Fuel weight flow, lb/sec	Oxidant weight flow, lb/sec	Characteristic exhaust velocity, c*, ft/sec	Combustion efficiency, η	
					Uncorrected	Corrected[a]
Combustor length, L, 8 in.						
322	53	0.232	0.545	4250	72.2	71.5
323	59	.262	.620	4200	70.7	69.8
324	60	.264	.607	4330	72.9	72.0
326	62	.270	.627	4350	73.2	72.5
327	67	.300	.689	4280	71.6	[illegible]
300	88	.380	.875	4410	74.2	73.5
304	90	.395	.912	4330	72.9	72.0
289	97	.442	.980	4290	72.3	71.5
288	98	.420	.977	4420	74.4	73.5
290	98	.430	.987	4350	73.2	72.2
302	107	.449	1.057	4470	75.3	74.5
298	107	.454	1.069	4410	74.2	73.5
301	108	.442	1.060	4520	76.1	75.2
297	110	.476	1.141	4480	75.5	74.6
296	115	.486	1.140	4460	75.1	74.1
290	117	.499	1.145	4480	75.5	74.6
293	124	.527	1.212	4480	75.5	74.6
291	125	.522	1.230	4490	75.7	74.7
292	125	.532	1.216	4490	75.7	74.7
294	133	.574	1.286	4480	75.5	74.6
301	135	.569	1.346	4450	74.9	73.9
299	145	.605	1.350	4470	75.8	75.0
Combustor length, L, 16 in.						
1067	60	0.225	0.494	5260	88.4	88.4
1066	62	.219	.531	5240	87.5	87.4
1064	74	.275	.655	5000	84.1	83.9
1057	76	.280	.665	5050	85.1	84.9
1065	86	.326	.706	4950	83.3	83.1
1053	↓	.329	.761	4960	83.5	83.3
1054		.329	.764	4950	83.3	83.1
1052	87	.337	.766	4970	83.7	83.5
1033	97	.370	.863	4950	83.3	83.0
1034	98	.370	.869	4950	83.3	83.0
1035	99	.369	.876	5000	84.1	83.8
1036	109	.409	.962	5000	84.1	83.8
1037	111	.409	.967	5080	85.5	85.1
1038	111	.412	.962	5080	85.5	85.1
1040	119	.448	1.043	5020	84.5	84.2
1041	119	.448	1.043	5020	84.5	84.2
1039	121	.448	1.041	5120	86.2	85.9
1042	127	.478	1.106	5050	85.0	84.7
1044	128	.470	1.111	5090	85.7	85.3
1045	↓	.470	1.117	5070	85.4	85.0
1043		.473	1.114	5070	85.4	85.0
1046	144	.522	1.260	5090	85.7	85.3
1047	145	.532	1.263	5080	85.5	85.1
1048	146	.532	1.267	5110	86.0	85.6
1050	158	.585	1.363	5110	86.0	85.6
1049	158	.558	1.369	5110	86.0	85.6
1051	159	.585	1.368	5120	86.2	85.8

[a]For heat-transfer loss and momentum pressure loss.

TABLE I. - CONTINUED. EXPERIMENTAL RESULTS

(c) Contraction ratio, 7.12.

Run	Combustor pressure, P, lb/sq in. abs	Fuel weight flow, lb/sec	Oxidant weight flow, lb/sec	Characteristic exhaust velocity, c*, ft/sec	Combustion efficiency, η	
					Uncorrected	Corrected[a]
Combustor length, L, 4 in.						
674	73	0.176	0.382	4190	70.6	70.1
673	74	.174	.397	4150	69.9	69.8
672	75	.174	.399	4190	70.6	70.5
670	85	.207	.466	4190	70.4	70.3
669	88	.210	.474	4110	69.1	69.0
668	89	.206	.489	4090	68.9	68.8
667	109	.258	.615	4000	67.3	67.2
666	↓	.259	.620	3970	66.8	66.7
665		.262	.618	3960	66.6	66.5
664		.274	.623	3880	65.3	65.2
661	126	.315	.727	3870	65.1	65.0
662	128	.314	.727	3930	66.1	66.0
663	128	.315	.727	3930	66.1	66.0
695	129	.314	.722	3980	67.0	66.9
694	129	.317	.712	4010	67.5	67.4
697	130	.310	.724	4020	67.7	67.6
696	130	.312	.729	4020	67.3	67.2
653	145	.343	.828	3960	66.6	66.5
654	145	.350	.843	3910	65.8	65.7
655	146	.354	.836	3920	66.0	65.9
[illegible]	147	.350	.826	4000	67.3	67.2
620	↓	.361	.826	3960	66.6	66.5
656		.362	.831	3940	66.3	66.2
657	148	.356	.848	3930	66.1	66.0
658	148	.357	.834	3980	67.0	66.9
618	163	.392	.922	3970	66.8	66.7
619	↓	.392	.922	3970	66.8	66.7
702		.393	.917	3990	67.1	67.0
701		.398	.910	3990	67.1	67.0
703	164	.395	.916	4020	67.6	67.5
700	164	.395	.925	3980	67.0	66.9
[illegible]	165	.393	.925	4010	67.5	67.4
676	179	.419	1.003	4030	67.8	67.7
678	↓	.422	1.006	4010	67.4	67.3
677		.423	1.000	4030	67.8	67.7
682	181	.426	1.012	4020	67.7	67.6
700	181	.429	1.023	3960	66.6	66.5
682	191	.456	1.073	3990	67.1	67.0
680	193	.452	1.079	4030	67.8	67.7
681	193	.459	1.079	4010	67.4	67.3
679	194	.456	1.084	4030	67.8	67.7
691	201	.492	1.114	4020	67.4	67.3
692	209	.488	1.155	4070	68.5	68.3
693	210	.481	1.143	4140	69.6	69.4
683	220	.512	1.223	4060	68.2	68.1
684	↓	.514	1.212	4080	68.7	68.6
685		.524	1.222	4020	67.7	67.6
686	222	.520	1.217	4090	68.9	68.7
689	248	.569	1.334	4130	69.6	69.4
688		.572	1.339	4120	69.4	69.2
[illegible]	↓	.563	1.337	4120	69.4	69.2
[illegible]	247	.570	1.337	4120	69.4	69.2
Combustor length, L, 8 in.						
337	99	0.181	0.396	4420	74.1	74.2
336	105	.232	.344	4330	72.8	73.0
335	105	.232	.348	4320	72.8	72.9
329	117	.264	.613	4320	72.8	72.9
330	↓	.265	.610	4280	72.1	72.2
328		.276	.610	4230	71.2	71.3
510	118	.271	.606	4320	72.6	72.6
507	133	.297	.702	4260	71.7	72.0
506	133	.318	.702	4170	70.2	71.0
508	135	.299	.714	4260	71.7	72.0
509	135	.304	.719	4220	71.0	71.7
505	137	.320	.704	4310	72.4	73.2
205	142	.320	.721	4370	73.5	73.6
206	142	.321	.721	4370	73.5	73.6
204	162	.373	.814	4370	73.5	73.6
203	164	.376	.822	4380	73.8	73.9
362	197	.404	.960	4620	77.9	78.0
359	216	.443	1.042	4650	78.2	78.3
358	216	.457	1.040	4620	77.9	78.0
510	224	.474	1.134	4460	75.1	75.2
511	224	.479	1.127	4460	75.1	75.2
512	225	.476	1.129	4480	75.5	75.6
355	229	.486	1.102	4620	77.9	78.1
356	233	.475	1.114	4700	79.1	79.2
357	↓	.479	1.113	4690	79.0	79.1
354		.483	1.125	4640	78.0	78.1
515	249	.524	1.233	4540	76.4	76.5
345	250	.509	1.221	4620	77.9	78.0
514	250	.514	1.229	4590	77.3	77.4
342	271	.566	1.304	4640	78.1	78.2
343	274	.562	1.300	4710	79.2	79.3

Run	Combustor pressure, P, lb/sq in. abs	Fuel weight flow, lb/sec	Oxidant weight flow, lb/sec	Characteristic exhaust velocity, c*, ft/sec	Combustion efficiency, η	
					Uncorrected	Corrected[a]
Combustor length, L, 12 in.						
618	93	0.192	0.431	4790	80.5	81.1
617	↓	.194	.454	4580	77.3	77.8
619		.198	.434	4720	79.5	80.1
615		.197	.429	4750	79.9	80.5
216	118	.247	.572	4550	76.0	76.4
612	119	.246	.588	4560	76.2	77.1
611	120	.253	.583	4600	77.4	77.9
217	123	.256	.591	4640	78.2	78.7
218	124	.266	.601	4580	77.2	77.6
607	137	.295	.670	4540	76.4	76.8
608	139	.298	.694	4480	75.4	75.8
609	141	.294	.694	4570	77.0	77.4
610	143	.292	.682	4720	79.1	79.6
212	148	.306	.710	4660	78.4	78.8
211	148	.324	.705	4600	77.4	77.8
598	161	.340	.776	4620	77.9	78.3
600	163	.328	.791	4660	78.4	78.8
599	163	.331	.794	4640	78.1	78.5
646	165	.343	.816	4560	76.7	77.1
647	166	.340	.816	4590	77.3	77.7
649	↓	.347	.818	4550	76.6	77.0
650		.351	.814	4550	76.6	77.0
213	169	.348	.805	4710	79.2	79.6
214	169	.362	.823	4640	78.1	78.5
801	180	.368	.861	4690	79.0	79.4
802	182	.372	.855	4730	79.6	80.0
803	183	.370	.859	4700	79.1	79.6
632	184	.377	.892	4640	78.1	78.5
631	185	.377	.892	4660	78.4	78.8
218	190	.388	.894	4760	80.1	80.6
219	199	.391	.899	4750	79.9	80.5
804	202	.402	.960	4750	79.9	80.4
625	203	.406	.962	4750	79.9	80.4
626	204	.408	.952	4810	80.9	81.4
621	218	.431	1.026	4770	80.4	81.0
620	↓	.432	1.022	4790	81.7	81.2
622		.432	1.035	4700	79.9	80.3
621		.439	1.047	4670	78.7	79.1
628		.442	1.055	4660	78.9	79.3
626	219	.432	1.022	4820	71.2	81.7
629	234	.468	1.116	4720	79.4	79.9
630	234	.476	1.113	4710	79.3	79.7
630	236	.468	1.116	4750	79.9	80.3
623	236	.469	1.116	4750	80.0	81.0
633	↓	.472	1.122	4740	79.8	80.3
631		.476	1.116	4740	79.8	80.3
646	243	.507	1.192	4590	77.1	77.4
637	248	.496	1.196	4710	79.3	79.7
638	250	.494	1.196	4750	79.9	80.3
634	253	.501	1.199	4760	80.1	80.1
635	253	.501	1.199	4730	79.6	80.0
636	253	.499	1.19[illegible]	4[illegible]	80.[illegible]	80.[illegible]
641	270	.557	1.32[illegible]	47[illegible]	79.1	80.0
639	271	.552	1.317	4[illegible]	79.9	80.3
642	278	.557	1.32[illegible]	47[illegible]	79.9	80.2
640	278	.557	1.322	47[illegible]	79.8	80.2
643	279	.557	1.310	47[illegible]	80.[illegible]	80.9
641	279	.569	1.328	4730	79.6	80.0
Combustor length, L, 16 in.						
1106	94	0.[illegible]	0.44[illegible]	46[illegible]	77.1	76.2
1109	95	.198	.4[illegible]	4[illegible]	80.6	79.4
1110	↓	.197	.4[illegible]	4[illegible]	77.9	78.7
1118		.199	.455	464[illegible]	78.2	79.0
1113	108	.227	.5[illegible]	4670	77.0	77.7
1104	108	.227	.531	4560	76.7	77.4
1105	110	.227	.521	4700	79.1	79.9
1101	122	.248	.588	4670	78.7	79.5
1102	122	.252	.595	4610	77.6	78.3
1100	123	.251	.580	4740	79.8	80.6
1097	135	.273	.647	4680	78.4	79.1
1096	135	.280	.652	4630	78.0	78.7
1095	136	.272	.659	4670	78.7	79.4
1094	147	.295	.709	4690	79.0	79.7
1092	148	.295	.702	4750	79.9	80.7
1093	148	.296	.697	4770	80.3	81.1
1091	151	.295	.709	4810	80.9	81.7
1070	168	.332	.804	4730	79.6	80.3
1069	↓	.334	.799	4740	79.8	80.5
1071		.340	.801	4710	79.2	79.9
1072	187	.368	.891	4750	79.9	80.6
1073	188	.372	.883	4790	80.7	81.5
1074	189	.372	.889	4800	80.6	81.6
1077	220	.429	1.034	4810	80.9	81.6
1075	221	.431	1.034	4850	81.3	82.1
1078	222	.435	1.034	4840	81.5	82.3
1080	239	.454	1.101	4920	82.9	83.6
1079	↓	.462	1.106	4880	82.1	82.8
1081		.462	1.109	4870	82.0	82.7
1083	253	.486	1.178	4860	81.8	82.5
1086	266	.518	1.242	4840	81.5	82.2
1085	266	.518	1.246	4820	81.2	81.9
1087	281	.551	1.304	4850	81.6	82.3
1089	282	.545	1.310	4860	81.8	82.5
1090	282	.551	1.310	4850	81.6	82.3
1088	283	.557	1.312	4850	81.6	82.3

[a]For heat-transfer loss and momentum pressure loss.

E-544

TABLE I. - CONTINUED. EXPERIMENTAL RESULTS

(d) Contraction ratio, 14.4.

Run	Combustor pressure, P, lb/sq in. abs	Fuel weight flow, lb/sec	Oxidant weight flow, lb/sec	Characteristic exhaust velocity, c*, ft/sec	Combustion efficiency, η	
					Uncorrected	Corrected[a]
Combustor length, L, 4 in.						
737	145	0.153	0.357	4490	75.6	75.9
739	146	.145	.347	4680	78.7	79.1
738	146	.154	.350	4570	77.0	77.4
736	147	.158	.342	4640	78.1	78.5
743	169	.176	.414	4530	76.2	76.5
741	↓	.176	.416	4500	75.7	76.0
742	↓	.177	.412	4530	76.2	76.5
732	215	.223	.526	4500	75.7	76.0
734	215	.228	.526	4520	76.1	76.4
733	215	.228	.528	4510	75.9	76.2
710	230	.245	.580	4410	74.1	74.4
711	232	.243	.576	4480	75.4	75.7
712	234	.245	.578	4490	75.6	75.9
715	273	.275	.662	4600	77.4	77.7
714	273	.281	.662	4580	77.1	77.4
713	274	.286	.660	4570	77.0	77.3
716	311	.317	.744	4630	78.0	78.3
717	312	.317	.746	4640	78.1	78.4
718	312	.321	.746	4620	77.9	78.2
707	348	.354	.828	4660	78.4	78.7
709	350	.351	.828	4690	79.0	79.3
708	350	.354	.821	4700	79.1	79.4
719	383	.380	.893	4750	79.9	80.3
721	385	.380	.891	4790	80.6	81.0
720	386	.383	.891	4770	80.4	80.8
724	416	.413	.952	4810	80.9	81.3
722	↓	.413	.955	4810	80.9	81.3
723	↓	.415	.965	4760	80.1	80.5
728	446	.442	1.019	4810	81.0	81.4
725	450	.438	1.040	4810	80.9	81.3
726	451	.439	1.028	4860	81.8	82.2
727	455	.428	1.007	5010	84.3	84.7
745	501	.484	1.136	4890	82.3	82.7
746	503	.479	1.143	4900	82.5	82.9
744	503	.492	1.126	4910	82.6	83.0
Combustor length, L, 12 in.						
927	200	0.186	0.436	5070	85.4	86.6
925	201	.191	.451	4940	83.2	84.3
922	202	.188	.439	5090	85.7	86.9
926	202	.189	.444	5040	84.9	86.1
929	245	.229	.536	5060	85.1	86.3
928	245	.229	.538	5050	85.0	86.2
930	246	.229	.531	5110	86.0	87.2
380	246	.229	.543	5030	84.8	85.9
382	290	.280	.652	4930	83.0	84.1
368	323	.303	.715	5020	84.5	85.6
931	324	.291	.697	5180	87.2	88.4
933	327	.301	.702	5150	86.7	87.9
932	328	.301	.697	5200	87.5	88.7
934	328	.304	.699	5160	86.8	88.0
376	329	.313	.728	5020	84.2	85.3
935	356	.341	.754	5130	86.3	87.4
374	366	.336	.810	5080	85.0	86.1
364	392	.364	.855	5080	85.5	86.6

Run	Combustor pressure, P, lb/sq in. abs	Fuel weight flow, lb/sec	Oxidant weight flow, lb/sec	Characteristic exhaust velocity, c*, ft/sec	Combustion efficiency, η	
					Uncorrected	Corrected[a]
Combustor length, L, 8 in.						
855	175	0.170	0.406	4800	80.8	81.5
856	176	.168	.404	4860	81.8	82.5
858	177	.182	.409	4730	79.6	80.3
857	177	.184	.404	4750	79.9	80.6
849	197	.198	.461	4720	79.5	80.2
851	199	.201	.451	4820	81.2	81.9
852	199	.201	.451	4820	81.2	81.9
850	200	.194	.449	4910	82.6	83.3
255	201	.190	.458	4900	82.5	83.2
256	201	.193	.448	4960	83.5	84.3
846	244	.239	.558	4840	81.5	82.2
845	244	.243	.553	4840	81.5	82.2
848	245	.238	.558	4860	81.8	82.5
847	245	.239	.556	4870	82.0	82.7
261	248	.238	.557	4930	83.0	83.7
259	248	.244	.555	4910	82.7	83.4
260	249	.245	.555	4920	82.8	83.5
818	283	.271	.645	4880	82.1	82.8
819	286	.269	.647	4930	83.0	83.7
821	287	.275	.649	4910	82.6	83.3
263	287	.282	.650	4870	82.0	82.7
264	289	.282	.642	4940	83.1	83.8
262	289	.282	.650	4910	82.6	83.3
833	323	.317	.734	4860	81.8	82.5
834	325	.311	.732	4920	82.9	83.6
822	326	.307	.734	4950	83.4	84.1
266	327	.317	.726	4910	82.6	83.3
267	328	.308	.744	4920	82.8	83.5
824	328	.310	.726	5000	84.2	84.9
265	329	.317	.737	4930	83.0	83.7
823	330	.307	.729	5040	84.9	85.6
270	366	.341	.805	5040	84.8	85.5
827	↓	.342	.808	5020	84.6	85.3
826	↓	.344	.808	5060	85.2	85.9
269	↓	.345	.818	4970	83.6	84.3
268	367	.341	.808	5040	84.8	85.5
825	367	.348	.808	5020	84.6	85.3
271	400	.388	.878	4990	84.0	84.7
829	403	.377	.868	5110	86.0	86.7
828	403	.379	.868	5100	85.8	86.5
830	404	.374	.872	5120	86.2	86.9
835	434	.403	.942	5100	85.9	86.6
836	434	.407	.942	5090	85.7	86.4
837	435	.406	.945	5090	85.7	86.4
831	438	.402	.945	5140	86.5	87.2
832	439	.400	.945	5160	86.9	87.6
840	462	.426	1.003	5110	86.0	86.7
838	↓	.426	1.012	5080	85.5	86.2
839	↓	.431	1.007	5080	85.5	86.2
841	464	.432	1.014	5070	85.4	86.1
843	537	.476	1.122	5310	89.4	90.2
842	539	.489	1.127	5340	89.9	90.7
844	544	.480	1.130	5320	89.6	90.4
Combustor length, L, 16 in.						
1112	295	0.271	0.628	5190	87.1	88.6
1113	296	.273	.632	5170	87.0	88.5
1114	297	.276	.628	5190	87.4	89.0
1115	338	.306	.716	5230	88.1	89.7
1117	341	.306	.714	5280	88.8	90.4
1116	341	.309	.706	5310	89.3	90.9
1123	375	.332	.791	5270	88.7	90.3
1119	376	.332	.796	5260	88.5	90.1
1118	377	.332	.796	5280	88.8	90.4
1120	377	.332	.801	5260	88.5	90.1
1122	379	.344	.784	5310	89.4	91.0
1121	380	.343	.789	5310	89.4	91.0
1125	411	.365	.854	5330	89.8	91.4
1126	412	.366	.851	5350	90.1	91.7
1124	412	.370	.854	5320	89.6	91.2
1128	446	.379	.915	5440	91.6	93.2
1129	447	.383	.920	5420	91.3	92.9
1127	449	.399	.910	5420	91.3	92.9
1131	481	.412	.980	5460	91.9	93.5
1132	481	.415	.982	5440	91.6	93.1
1133	508	.444	1.040	5410	91.1	92.7
1134	509	.445	1.036	5430	91.4	93.0
1135	510	.433	1.037	5480	92.2	93.8
1136	512	.435	1.040	5490	92.5	94.1

[a]For heat-transfer loss and momentum pressure loss.

TABLE I. - CONTINUED. EXPERIMENTAL RESULTS

(e) Contraction ratio, 19.1.

Run	Combustor pressure, P, lb/sq in. abs	Fuel weight flow, lb/sec	Oxidant weight flow, lb/sec	Characteristic exhaust velocity, c*, ft/sec	Combustion efficiency, η	
					Uncorrected	Corrected[a]
Combustor length, L, 4 in.						
771	200	0.170	0.411	4520	76.8	78.6
772	201	.167	.404	4520	77.9	78.3
768	221	.179	.404	4530	76.8	78.6
774	203	.179	.407	4550	76.6	77.0
777	↓	.180	.399	4590	77.3	77.1
776		.180	.402	4570	77.0	77.4
773		.183	.404	4540	76.5	76.9
775	224	.183	.407	4550	76.3	76.7
764	227	.219	.409	4600	77.4	77.7
762	228	.217	.409	4570	77.0	77.3
766	229	.217	.412	4590	77.3	77.6
765	229	.219	.414	4550	76.6	76.9
767	260	.217	.419	4560	76.7	77.0
747	321	.264	.583	4600	77.4	77.7
749	320	.260	.586	4580	77.1	77.4
748	320	.262	.589	4700	77.9	78.3
750	324	.262	.577	4682	78.7	79.1
751	322	.261	.569	4710	79.2	79.6
753	378	.284	.673	4690	79.0	79.4
754	418	.309	.756	4800	80.9	81.2
753	419	.338	.757	4780	80.4	80.8
755	419	.311	.738	4793	80.6	81.0
756	403	.344	.799	4830	81.3	81.7
757	466	.343	.799	4870	82.0	82.4
758	467	.344	.798	4890	82.4	82.8
759	508	.369	.856	4920	82.9	83.3
760	508	.369	.861	4920	82.9	83.3
761	509	.369	.863	4940	83.1	83.5
Combustor length, L, 12 in.						
976	.34	0.161	0.389	5080	85.6	86.4
971	.34	.166	.397	5140	86.6	87.6
974	.34	.169	.382	5140	87.1	88.4
972	.37	.179	.384	5210	87.7	89.0
973	.37	.178	.374	5310	89.3	90.7
969	.29	.198	.475	5130	86.3	87.5
967	293	.202	.421	5100	86.0	87.4
966	294	.202	.476	5120	87.1	88.4
969	294	.207	.476	5130	86.3	87.5
970	295	.209	.479	5120	86.0	87.4
953	343	.235	.560	5210	87.7	88.9
953	344	.239	.560	5147	86.6	87.7
946	345	.238	.565	5122	86.2	87.4
948	393	.277	.635	5240	88.5	89.7
950	394	.277	.632	5170	87.1	88.3
959	397	.275	.628	5240	88.2	89.2
962	442	.304	.689	5260	88.5	89.7
960	444	.305	.716	5190	87.4	88.6
961	444	.307	.711	5210	87.7	88.9
963	486	.326	.771	5290	89.1	90.3
964	487	.323	.776	5340	89.9	91.2
965	488	.321	.776	5350	90.0	91.3

Run	Combustor pressure, P, lb/sq in. abs	Fuel weight flow, lb/sec	Oxidant weight flow, lb/sec	Characteristic exhaust velocity, c*, ft/sec	Combustion efficiency, η	
					Uncorrected	Corrected[a]
Combustor length, L, 8 in.						
872	229	0.165	0.399	4840	81.5	82.2
873	230	.169	.399	4830	81.3	82.0
874	↓	.169	.399	4830	81.3	82.0
875		.171	.397	4830	81.3	82.0
870		.176	.392	4830	81.3	82.0
871		.176	.394	4810	81.0	81.7
877	254	.185	.436	4860	82.1	82.8
879	254	.186	.446	4780	80.4	81.1
878	255	.186	.439	4870	82.0	82.7
876	256	.185	.441	4880	82.1	82.8
866	284	.209	.486	4860	82.1	82.8
867	287	.205	.678	5010	84.3	85.1
863	288	.204	.478	5030	84.7	85.5
861	333	.242	.561	4950	83.3	84.0
863	334	.244	.561	4950	83.3	84.0
862	334	.247	.558	4950	83.3	84.0
862	337	.257	.566	4890	82.3	83.0
866	381	.270	.642	5050	85.0	85.8
865	382	.271	.648	4990	84.0	84.7
864	388	.272	.650	4990	84.0	84.7
880	430	.304	.714	5040	84.9	85.7
883	432	.303	.714	5070	85.4	86.2
881	432	.304	.712	5080	85.5	86.3
882	434	.305	.709	5110	86.0	86.8
885	478	.327	.786	5120	86.2	87.0
884	479	.330	.784	5130	86.3	87.1
886	479	.331	.796	5080	85.5	86.3
887	532	.359	.846	5270	88.7	89.5
889	533	.356	.848	5280	88.9	89.7
890	534	.356	.846	5300	89.2	90.0
888	530	.357	.851	5290	89.0	89.8
Combustor length, L, 16 in.						
1177	238	0.163	0.377	5210	87.7	89.4
1176	238	.164	.382	5160	86.9	88.6
1179	237	.163	.382	5190	87.5	89.2
1175	284	.179	.428	5160	87.2	88.9
1173	↓	.184	.432	5110	86.0	87.6
1174		.186	.432	5100	85.9	87.5
1150	285	.179	.431	5140	87.2	88.9
1144	289	.187	.421	5280	88.9	90.7
1147	291	.195	.474	5170	87.1	88.7
1148	292	.209	.469	5140	86.6	88.2
1149	294	.199	.469	5250	88.4	90.1
1137	345	.237	.561	5160	86.9	88.5
1138	347	.232	.558	5240	88.2	89.9
1139	349	.237	.563	5200	87.5	89.1
1142	392	.264	.625	5310	89.4	91.1
1141	↓	.270	.628	5260	88.5	90.1
1140		.274	.628	5240	88.2	89.8
1167	440	.295	.702	5260	88.6	90.2
1166	441	.292	.702	5280	88.9	90.5
1165	441	.302	.697	5270	88.8	90.4
1144	446	.296	.712	5280	88.9	90.5
1143	447	.293	.704	5350	90.1	91.8
1145	449	.293	.699	5400	90.9	92.6
1168	486	.320	.769	5320	89.6	91.2
1171	486	.322	.762	5350	90.1	91.8
1169	487	.316	.764	5380	90.6	92.3

[a]For heat-transfer loss and momentum pressure loss.

TABLE I. - CONCLUDED. EXPERIMENTAL RESULTS

(f) Contraction ratio, 29.0.

Run	Combustor pressure, P, lb/sq in. abs	Fuel weight flow, lb/sec	Oxidant weight flow, lb/sec	Characteristic exhaust velocity, c*, ft/sec	Combustion efficiency, η	
					Uncorrected	Corrected[a]
Combustor length, L, 4 in.						
801	258	0.127	0.298	4770	80.4	80.8
800	260	.125	.302	4770	80.4	80.8
797	260	.138	.302	4640	76.1	78.5
802	262	.127	.300	4810	81.0	81.4
804	299	.158	.342	4690	79.0	79.4
808	300	.150	.350	4710	79.2	79.6
806	↓	.153	.342	4760	80.1	80.5
805		.157	.342	4720	79.6	80.0
807	301	.156	.342	4750	80.0	80.4
813	331	.163	.387	4720	79.5	79.9
814	331	.164	.392	4670	78.7	79.1
812	332	.166	.387	4710	79.2	79.6
816	366	.184	.416	4790	80.7	81.1
778	395	.196	.449	4810	80.8	81.2
779	397	.193	.451	4830	81.4	81.8
781	399	.197	.451	4830	81.3	81.7
782	↓	.197	.451	4830	81.3	81.7
780		.201	.454	4780	80.5	80.9
783	400	.201	.451	4810	81.0	81.4
786	466	.224	.524	4890	82.4	82.8
784	↓	.227	.526	4860	81.5	82.2
785		.227	.528	4850	81.7	82.1
788	519	.242	.585	4920	82.9	83.3
787	519	.245	.583	4920	82.9	83.3
791	520	.243	.585	4930	83.0	83.4
790	↓	.243	.588	4910	82.7	83.1
789		.245	.588	4900	82.5	82.9
Combustor length, L, 12 in.						
991	343	0.162	0.365	5110	86.0	87.3
992	344	.162	.365	5120	86.2	87.5
993	345	.161	.367	5130	86.4	87.7
994	345	.162	.367	5110	86.0	87.3
995	346	.161	.365	5160	86.8	88.1
998	380	.168	.407	5190	87.4	88.7
997	382	.171	.402	5230	88.1	89.5
996	383	.168	.404	5250	88.4	89.8
981	433	.194	.456	5230	88.1	89.4
980	435	.194	.446	5330	89.7	91.1
979	435	.198	.456	5220	87.9	89.2
985	475	.211	.486	5350	90.0	91.4
984	475	.212	.494	5280	88.9	90.2
983	476	.218	.491	5270	88.7	90.0
982	476	.225	.491	5220	87.9	89.2
988	547	.234	.556	5440	91.6	93.0
986	553	.234	.561	5460	91.9	93.3
987	555	.237	.558	5480	92.2	93.7

Run	Combustor pressure, P, lb/sq in. abs	Fuel weight flow, lb/sec	Oxidant weight flow, lb/sec	Characteristic exhaust velocity, c*, ft/sec	Combustion efficiency, η	
					Uncorrected	Corrected[a]
Combustor length, L, 8 in.						
891	334	0.156	0.377	4920	82.9	83.7
892	334	.159	.369	4960	83.4	84.2
896	338	.159	.374	4980	83.8	84.6
895	338	.161	.377	4930	83.0	83.8
897	339	.159	.370	5020	84.5	85.3
901	398	.186	.441	4980	83.8	84.6
902	399	.185	.432	5070	85.4	86.2
903	↓	.186	.434	5050	85.0	85.8
899		.195	.429	5020	84.5	85.3
900	402	.195	.432	5040	84.9	85.7
905	467	.211	.503	5110	86.3	87.2
904	467	.214	.516	5020	84.5	85.3
906	470	.211	.506	5150	86.7	87.6
913	546	.238	.568	5320	89.6	90.5
910	552	.244	.583	5240	88.3	89.2
909	554	.237	.573	5370	90.4	91.4
914	554	.238	.565	5410	91.0	92.0
911	562	.239	.578	5400	90.9	91.9
Combustor length, L, 16 in.						
1180	304	0.146	0.315	5180	87.2	89.0
1181	307	.143	.325	5150	86.7	88.5
1183	309	.137	.322	5280	88.9	90.8
1184	310	.137	.320	5320	89.6	91.5
1186	340	.153	.354	5260	88.5	90.3
1188	345	.153	.357	5310	89.4	91.3
1192	379	.169	.397	5260	88.5	90.3
1190	379	.170	.392	5290	89.1	91.0
1191	380	.173	.394	5260	88.5	90.3
1194	412	.179	.431	5310	89.4	91.2
1196	413	.179	.429	5330	89.8	91.6
1198	478	.204	.491	5400	91.0	92.9

[a]For heat-transfer loss and momentum pressure loss.

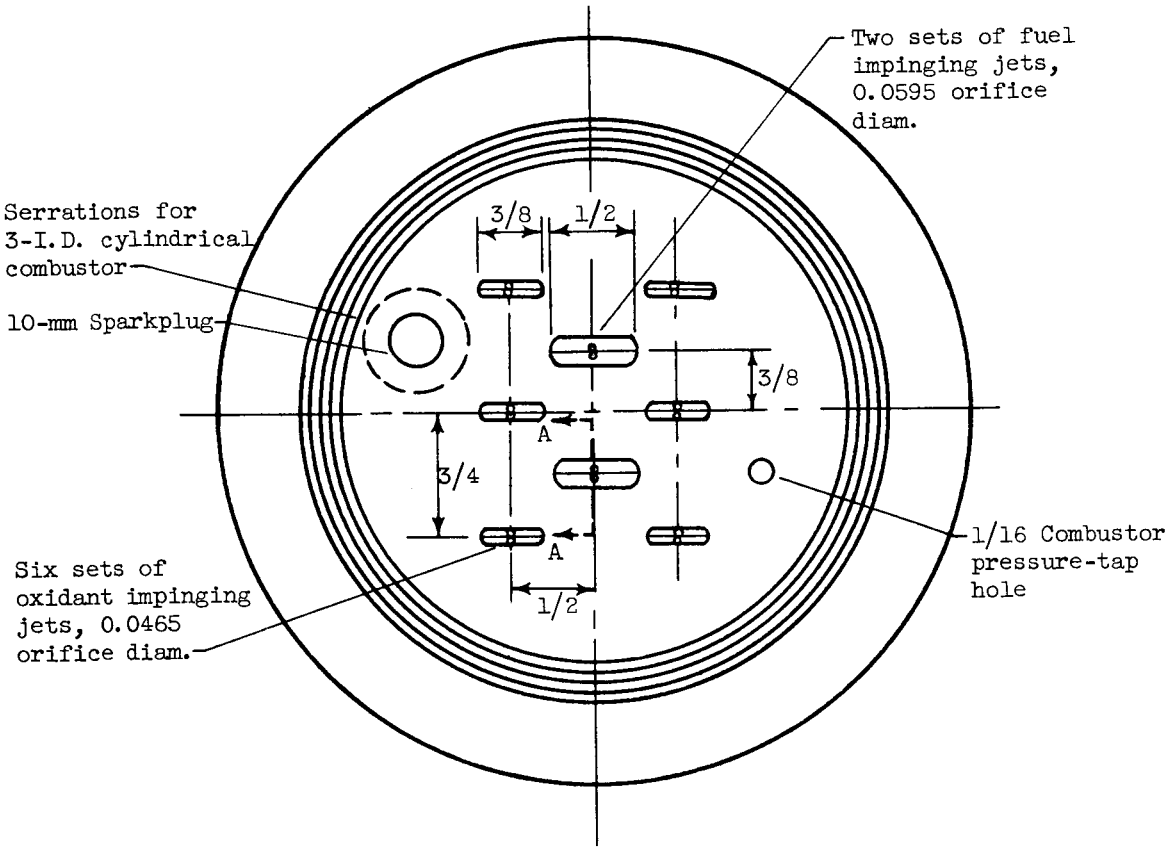

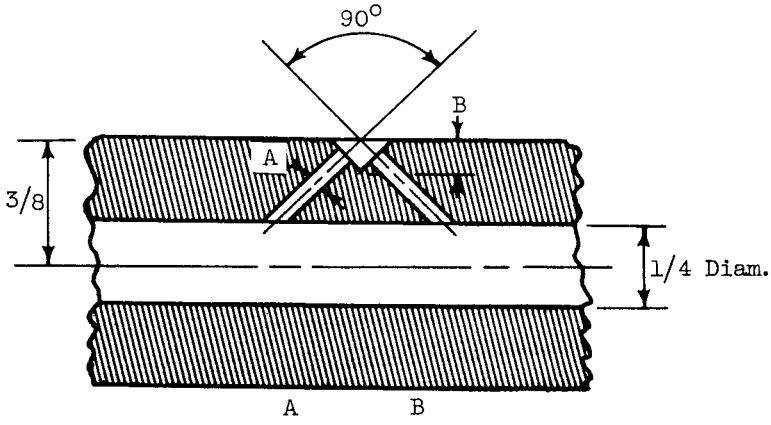

	A	B
Fuel	0.0595	0.088
Oxidant	0.0465	0.063

Section A-A, enlarged impinging-jet detail

Figure 1. - Rocket injector (dimensions in inches).

E-344

E-344

CE-3

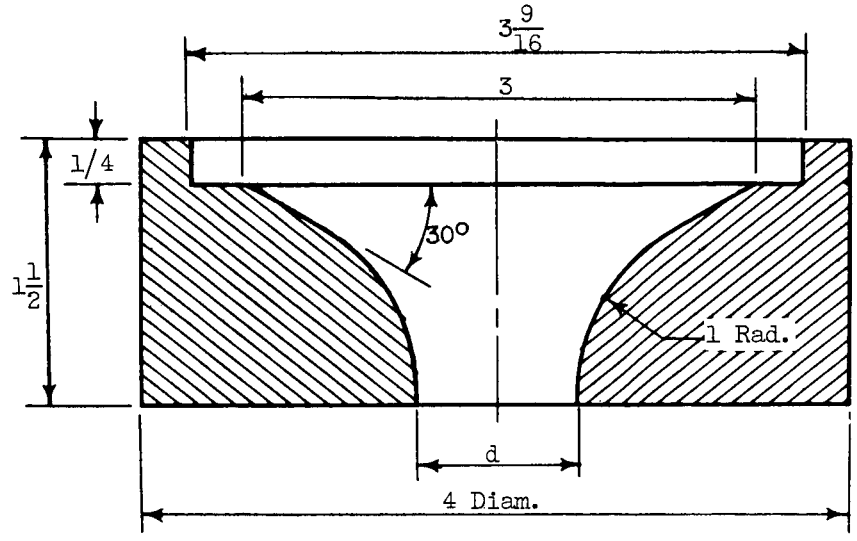

Throat diam., d, in.	Contraction ratio, $\mathscr{A}$
1.577	3.62
1.123	7.12
.791	14.4
.687	19.1
.557	29.0

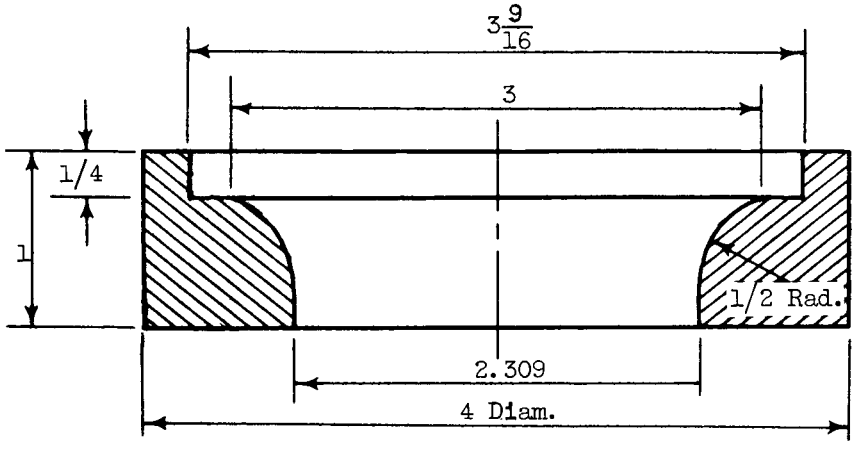

d	$\mathscr{A}$
2.309	1.69

Figure 2. - Rocket nozzles (dimensions in inches).

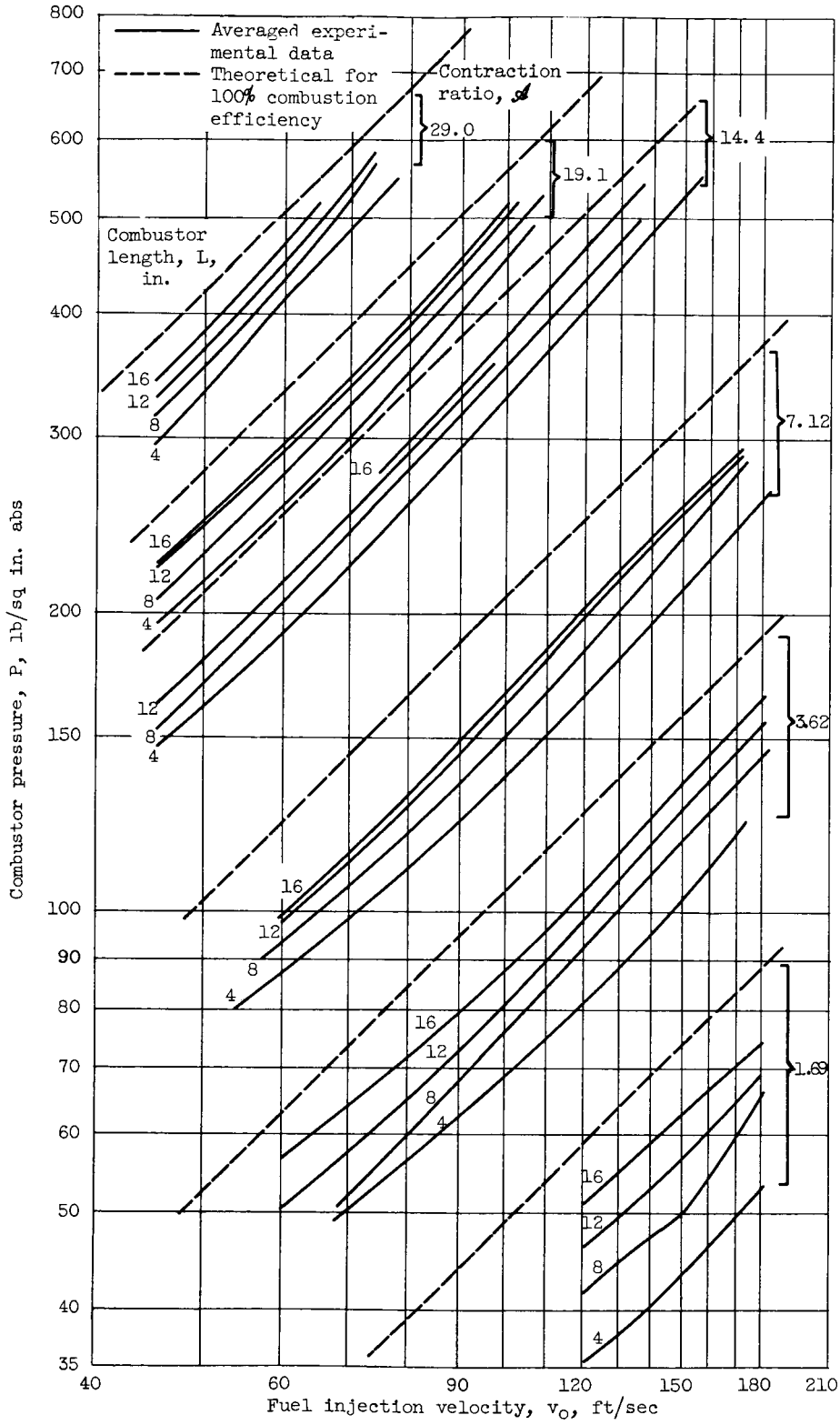

Figure 3. - Comparison of experimental and theoretical combustor pressures for all experimental conditions.

E-544

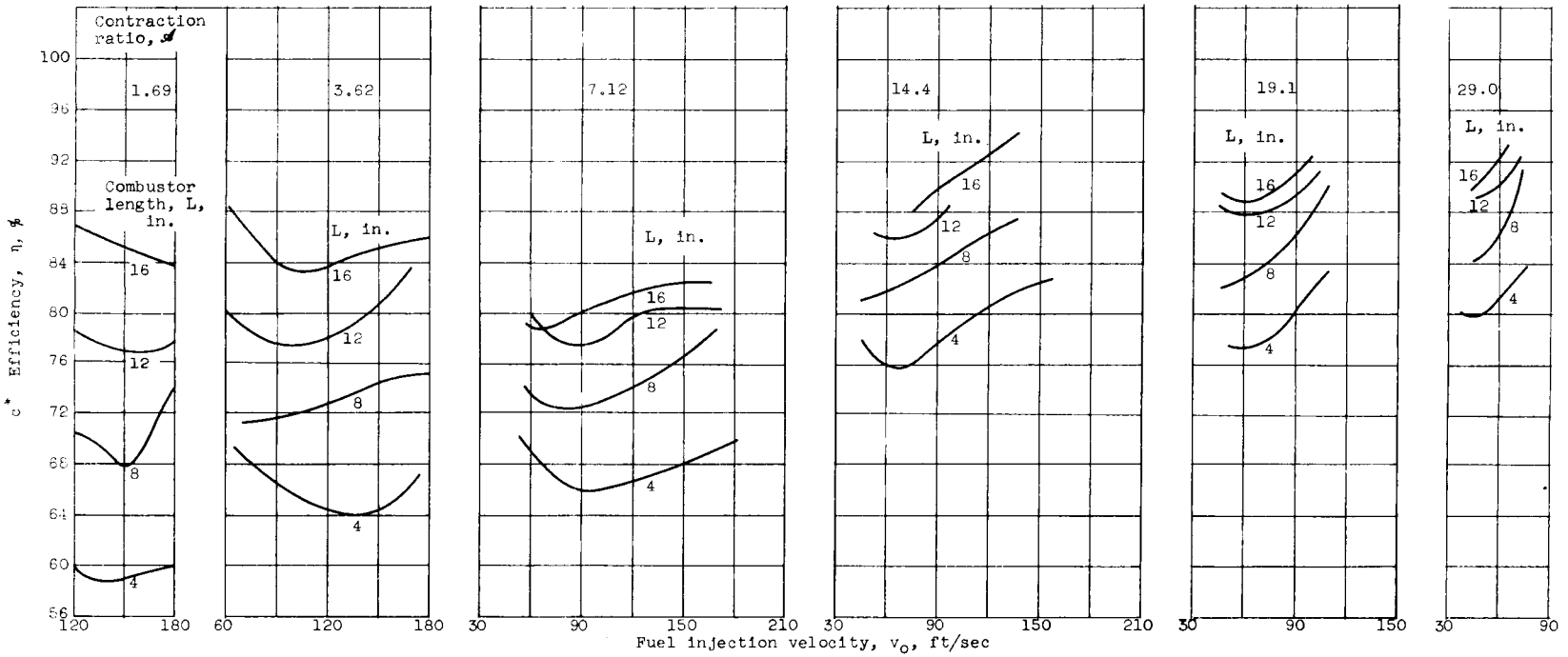

(a) Effect of fuel injection velocity with variable pressure.

Figure 4. - Variation of averaged efficiencies with various parameters.

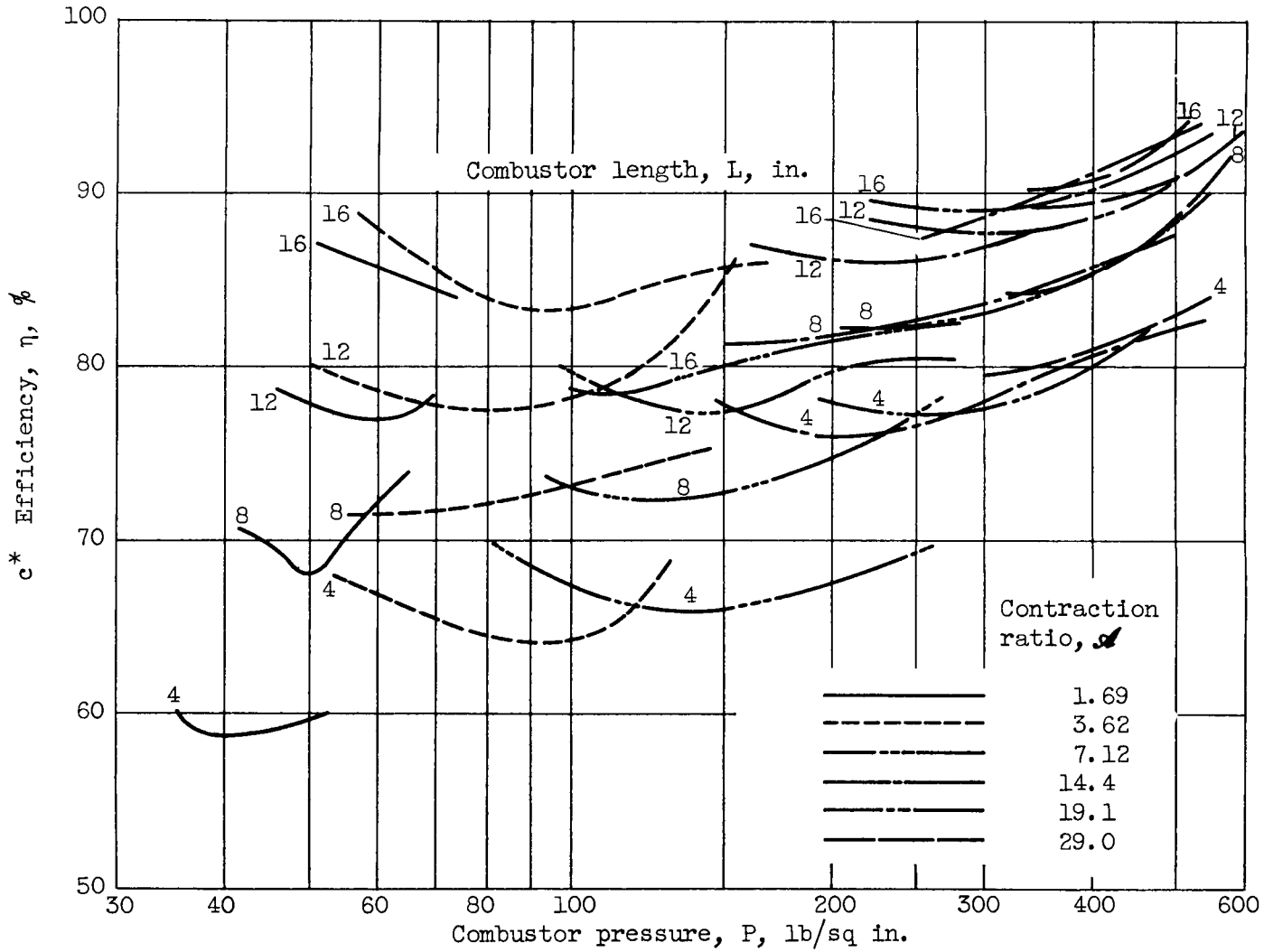

(b) Effect of combustor pressure with variable injection velocity.

Figure 4. - Continued. Variation of averaged efficiencies with various parameters.

E-544

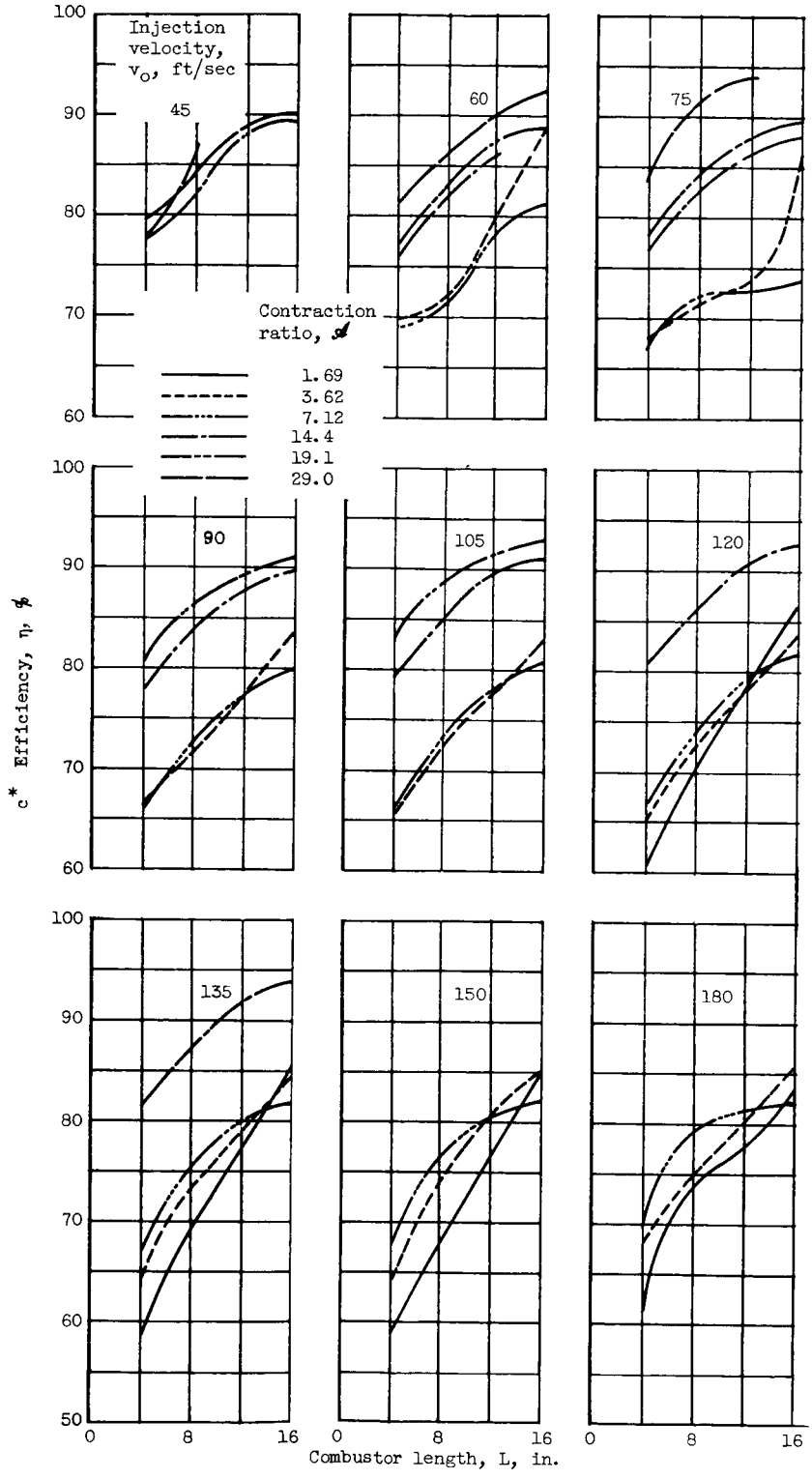

(c) Effect of combustor length with variable pressure.

Figure 4. - Continued. Variation of averaged efficiencies with various parameters.

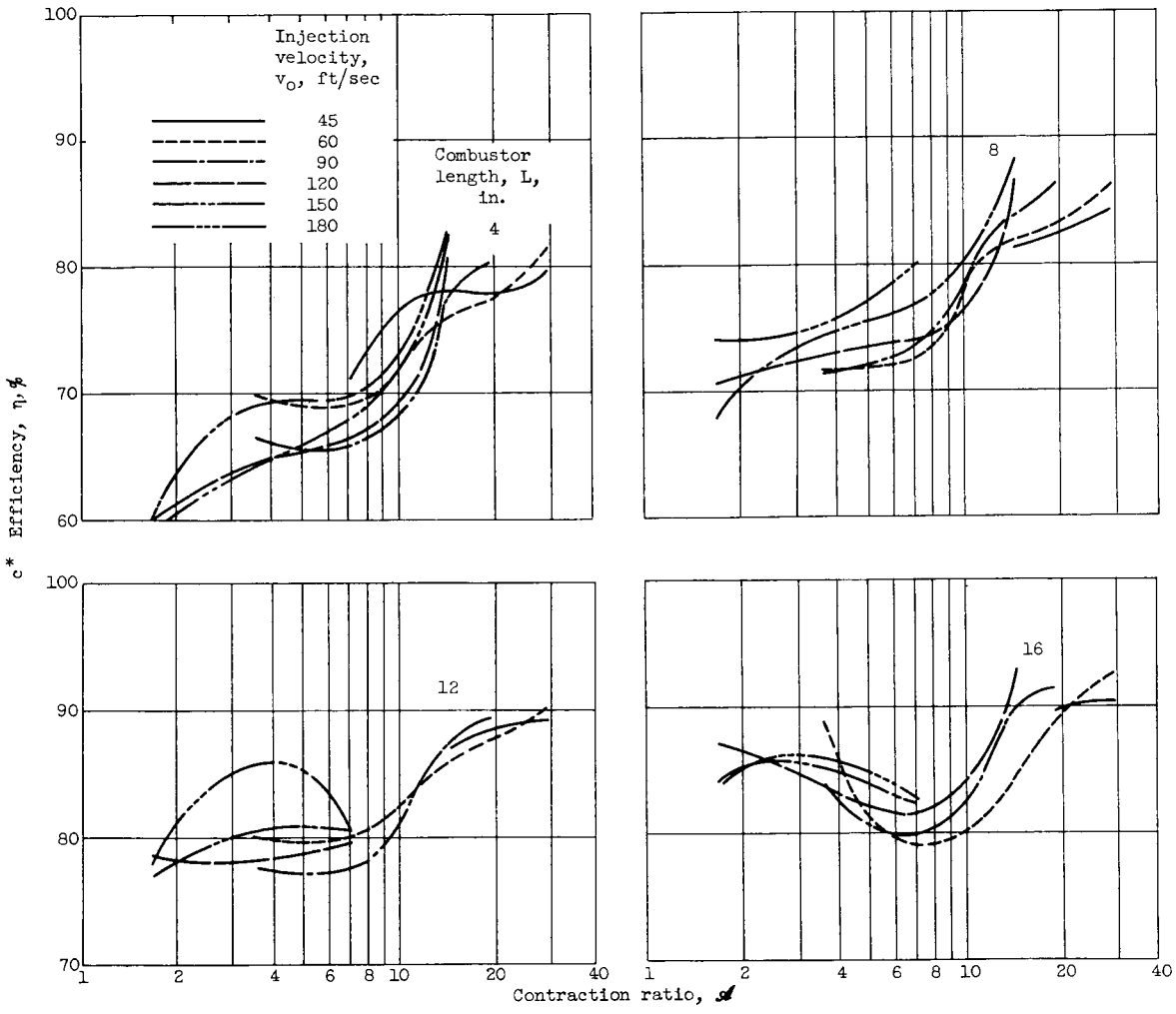

(d) Effect of contraction ratio with variable pressure.

Figure 4. - Concluded. Variation of averaged efficiencies with various parameters.

E-544

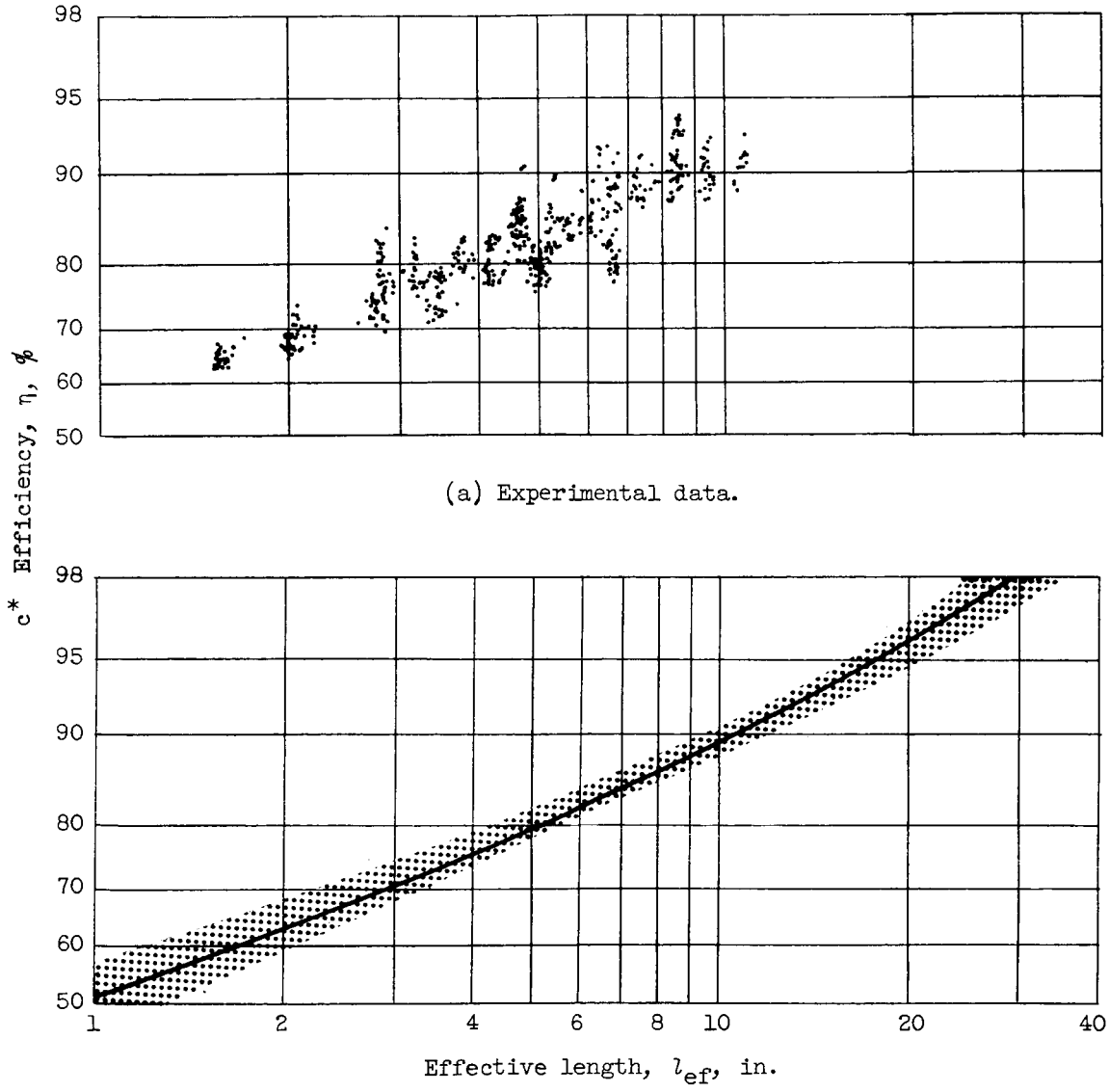

(a) Experimental data.

(b) Analytical data.

Figure 5. - Comparison of analytical and experimental data, assuming constant experimental drop size r_m of 0.004 inch, and analytical drop size distribution σ of 3.6.

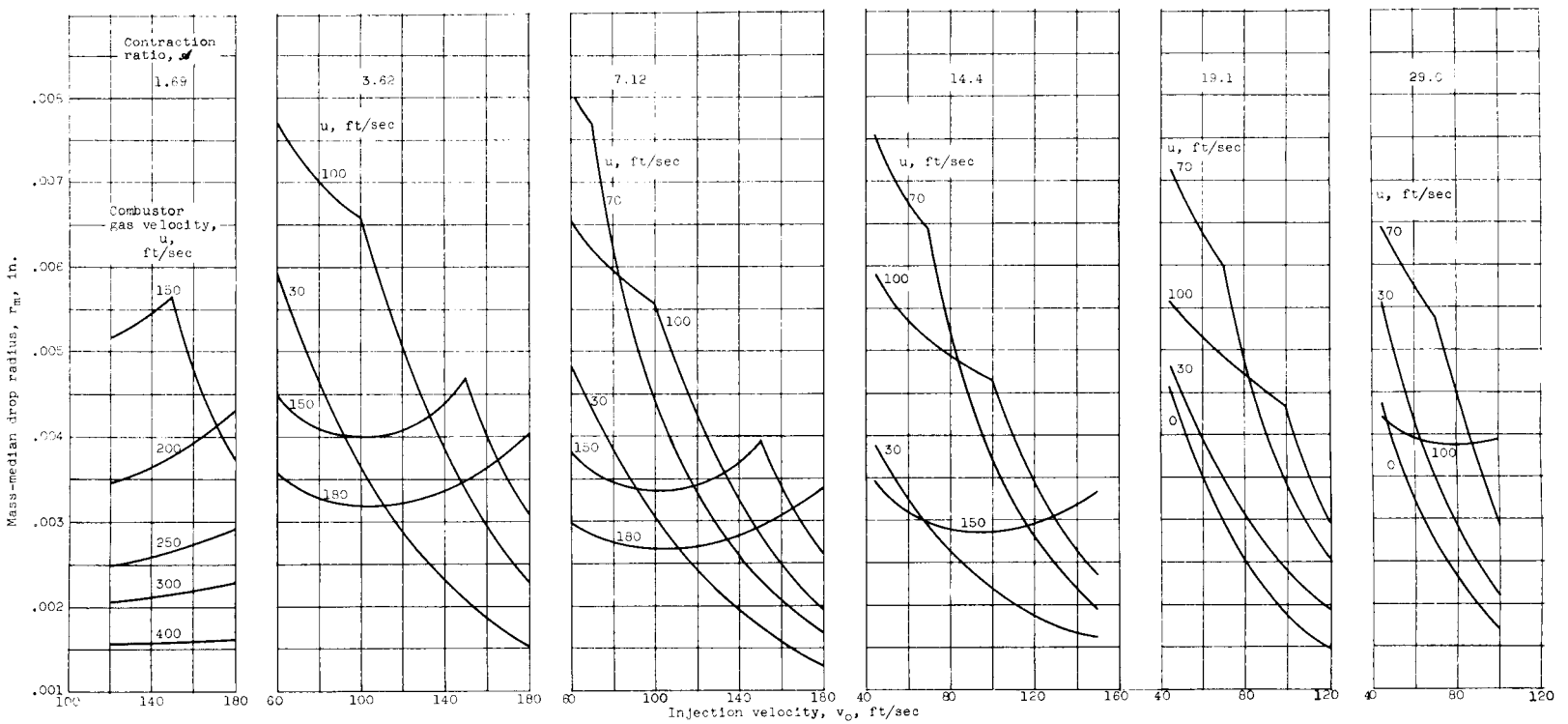

(a) For particular assumed gas velocities.

Figure 6. - Drop sizes derived from reference 5.

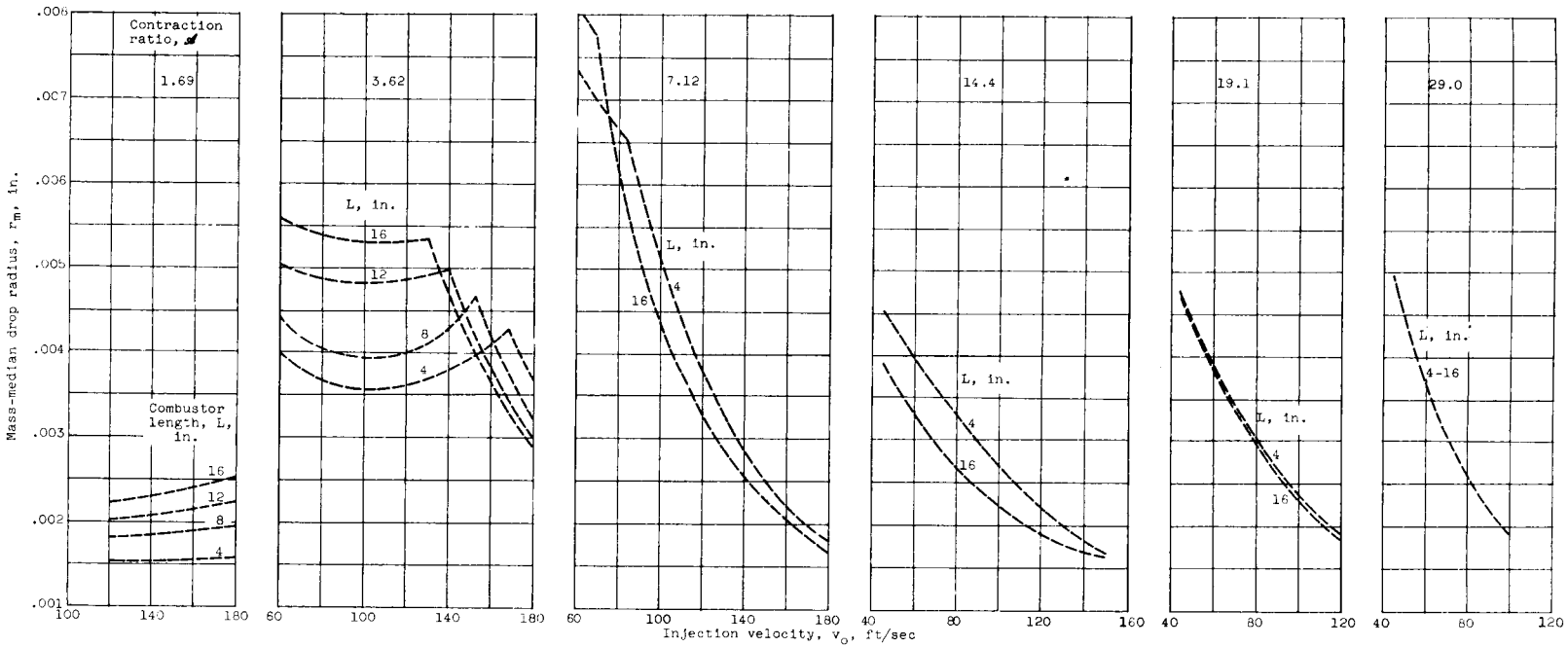

(b) At particular combustor lengths.

Figure 6. - Concluded. Drop sizes derived from reference 5.

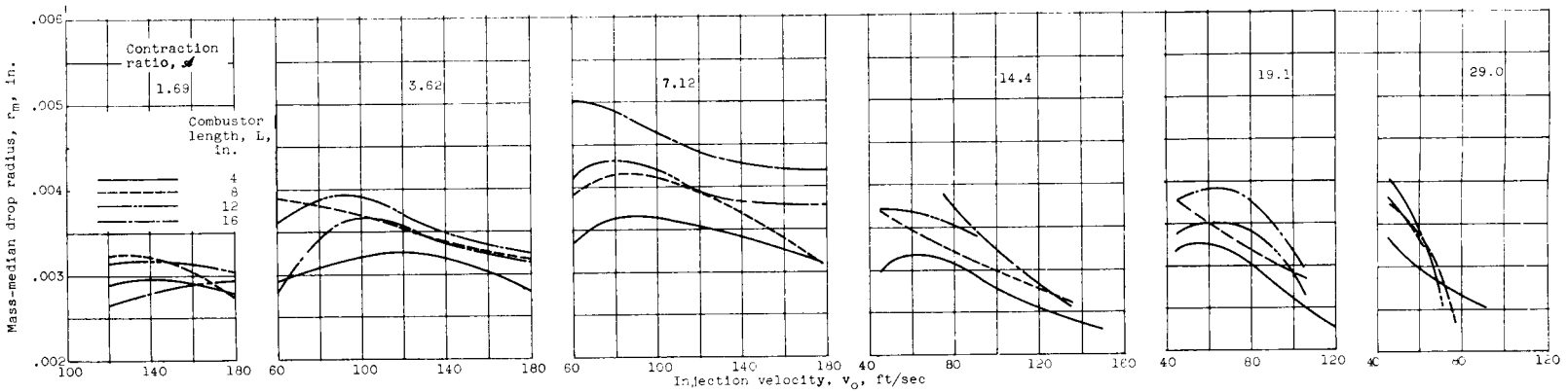

Figure 7. - Apparent drop sizes necessary to correlate analytical and experimental data.

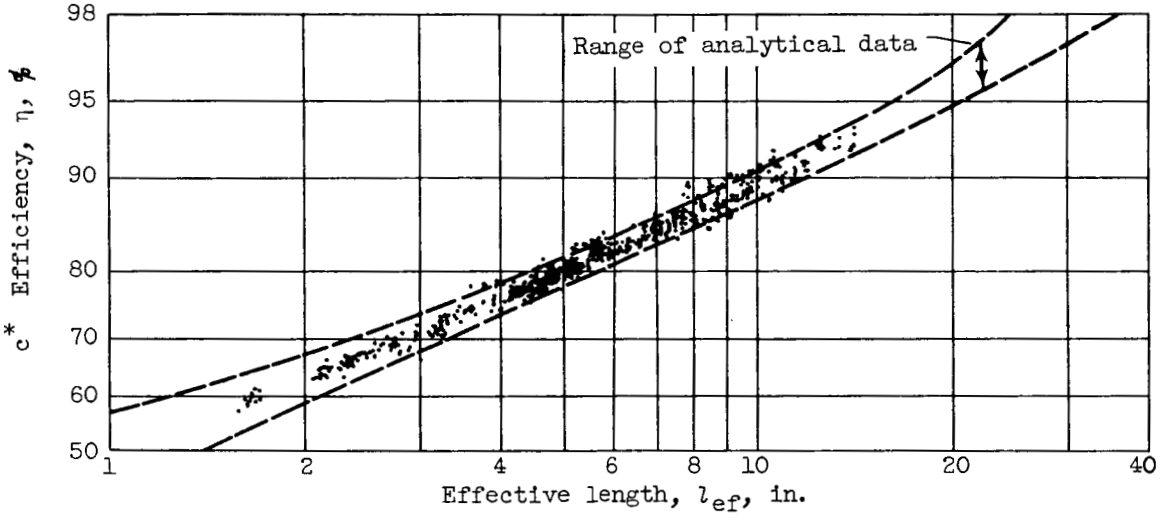

Figure 8. - Correlation of experimental data by drop sizes of figure 7.