TWR-17591

SPACE SHUTTLE

Solid Rocket Motors
Morton Thiokol, Inc.

Qualification Motor No. 8 (QM-8) Instrumentation Final Test Report

Volume IX

May 1989

Prepared for

National Aeronautics and Space Administration
George C. Marshall Space Flight Center
Marshall Space Flight Center, Alabama 35812

Contract No.	NAS8-30490
DR No.	5-3
WBS No.	HQ302-10-10
ECS No.	SS1004

MORTON THIOKOL, INC.

Aerospace Group

Space Operations

P.O. Box 707, Brigham City, Utah 84302-0707 (801) 863-3511

Publications No. 89719

(NASA-CR-183713) QUALIFICATION MOTOR NO. 8 (QM-8) INSTRUMENTATION, VOLUME 9 Final Test Report (Morton Thiokol) 40 p

N89-71308

Unclas

00/20 0224005

MORTON THIOKOL, INC.
Space Operations

TWR-17591

Qualification Motor No. 8 (QM-8) Instrumentation
Final Test Report

Prepared by:

Craig L. Prokop
Instrumentation Design
Design Engineer

Robin S. Jenner
Instrumentation Design
Supervisor

S. J. Harris
Program Manager

T. Sixley
Project Engineer

PC Tydeck 5-19-89
Data Management
ECS. No. SS1004

R. Williams
System Safety

Fred Duersch Jr.
Reliability

Michael Williams
Systems Test and Support
Manager

CONTENTS

Section		Page
1	INSTRUMENTATION	
	1.1 INTRODUCTION	
	1.2 OBJECTIVES	
	1.3 CONCLUSIONS/RECOMMENDATIONS	
	1.4 INSTRUMENTATION DISCUSSION	

APPENDIX

Appendix		Page
A	INSTRUMENTATION LIST	A-1

FIGURES

Figure		Page
1.1-1	QM-8 Case Instrumentation	
1.1-2	QM-8 Head End Pressure Transducer Locations	
1.1-3	QM-8 Joint Growth	
1.1-4	QM-8 Case-to-Nozzle Joint Instrumentation	
1.1-5	QM-8 Strain Gage Nozzle Instrumentation	
1.1-6	QM-8 Nozzle Instrumentation Displacement, Temperature, and Pressure	
1.1-7	QM-8 Aft Exit Cone Instrumentation	
1.4-1	LVDT Assembly at Forward, Center, and Aft Field Joints	
1.4-2	Case-to-Nozzle Joint Pressure Transducer	

TABLES

Table		Page
1.1-1	Instrumentation Summary	
1.3-1	QM-8 Anomaly List	
1.4-1	QM-8 Deleted Gages	

1

INSTRUMENTATION

1.1 INTRODUCTION

The QM-8 Test Article included instrumentation similar to that used on previous static motors and subscale test articles. Instrumentation was installed on the test article per Drawing 7U75880. Figures 1.1-1 through 1.1-7 show instrument locations. Table 1.1-1 summarizes the instrumentation on QM-8. See Appendix A for instrumentation list.

1.2 OBJECTIVES

QM-8 was instrumented to collect the engineering and motor performance data necessary to evaluate the following objectives.

Qualification Objectives

BB Certify the operation and installation of the motor chamber operational pressure transducer.

BW Certify that structural and electrical bonding meet the requirements in all areas except the area of lightning protection.

BX Certify that static electricity and lightning protection meets the requirements.

BZ Certify structural minimum safety factor for the adhesive bond for DFI/OFI/GEI.

1.3 CONCLUSIONS/RECOMMENDATIONS

Overall, the instrumentation performed well with the exceptions noted in Table 1.3-1. Instrumentation installation was successfully completed and performed as expected.

The instrumentation test objectives were met (Vol I, Sec 4). The operational pressure transducer was installed and performed properly. The structural and electrical bonding met the requirements. The lightning protection system was included in the low-pressure transducer installation, but the function of the system cannot be tested on full-scale test motors. The requirement to pull test the accelerometer fairings was deleted because of interference with the rounding rings used for motor disassembly. The low-pressure transducer fairing and low-pressure pick-up fairing will be pulled to failure when the forward segment is shipped to H-7.

Twelve gages were declared anomalous after the static test. Table 1.3-1 shows the anomaly list.

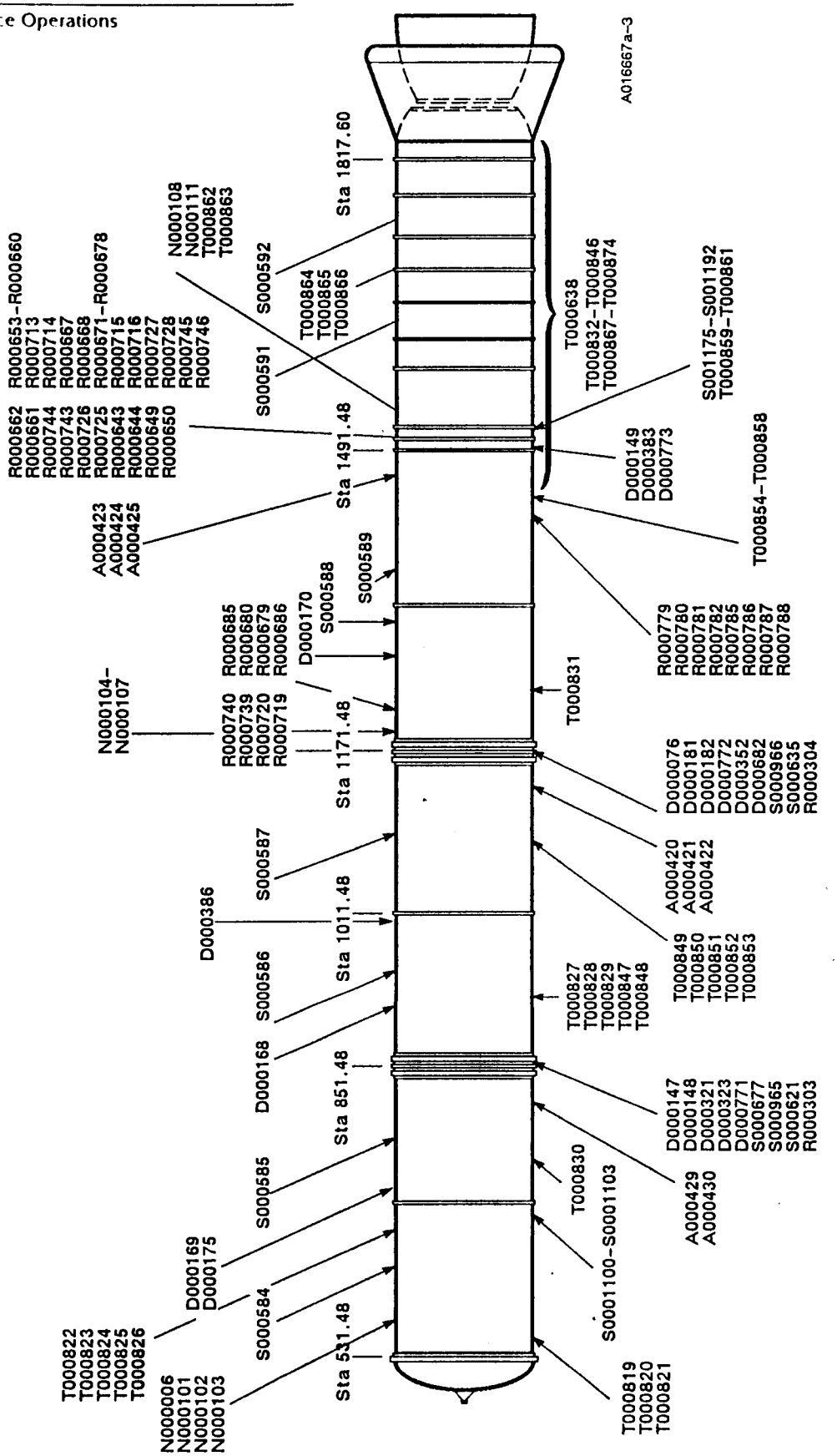

Figure 1.1-1. QM-8 Case Instrumentation

A016669aR2

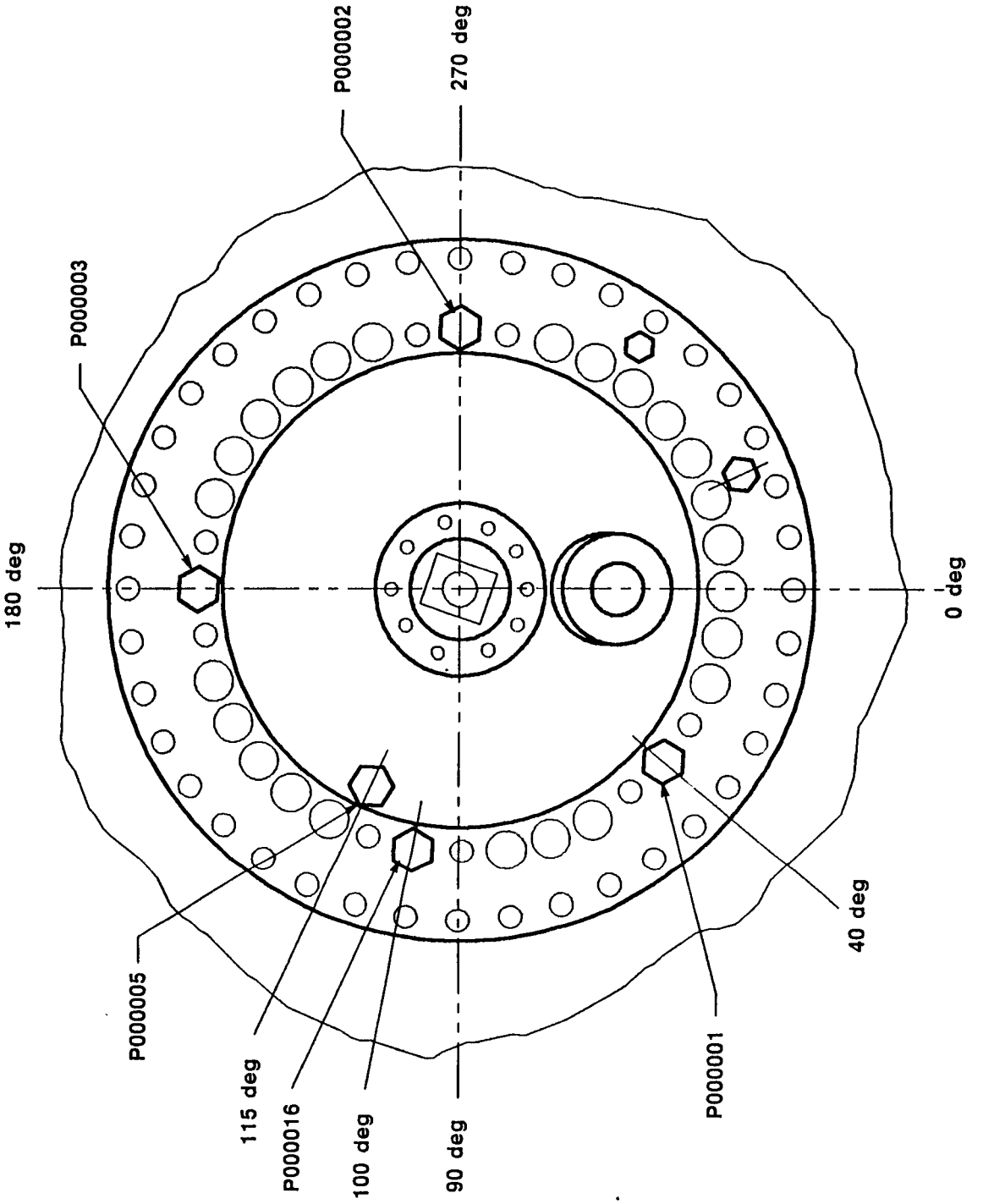

Figure 1.1-2. QM-8 Head End Pressure Transducer Locations

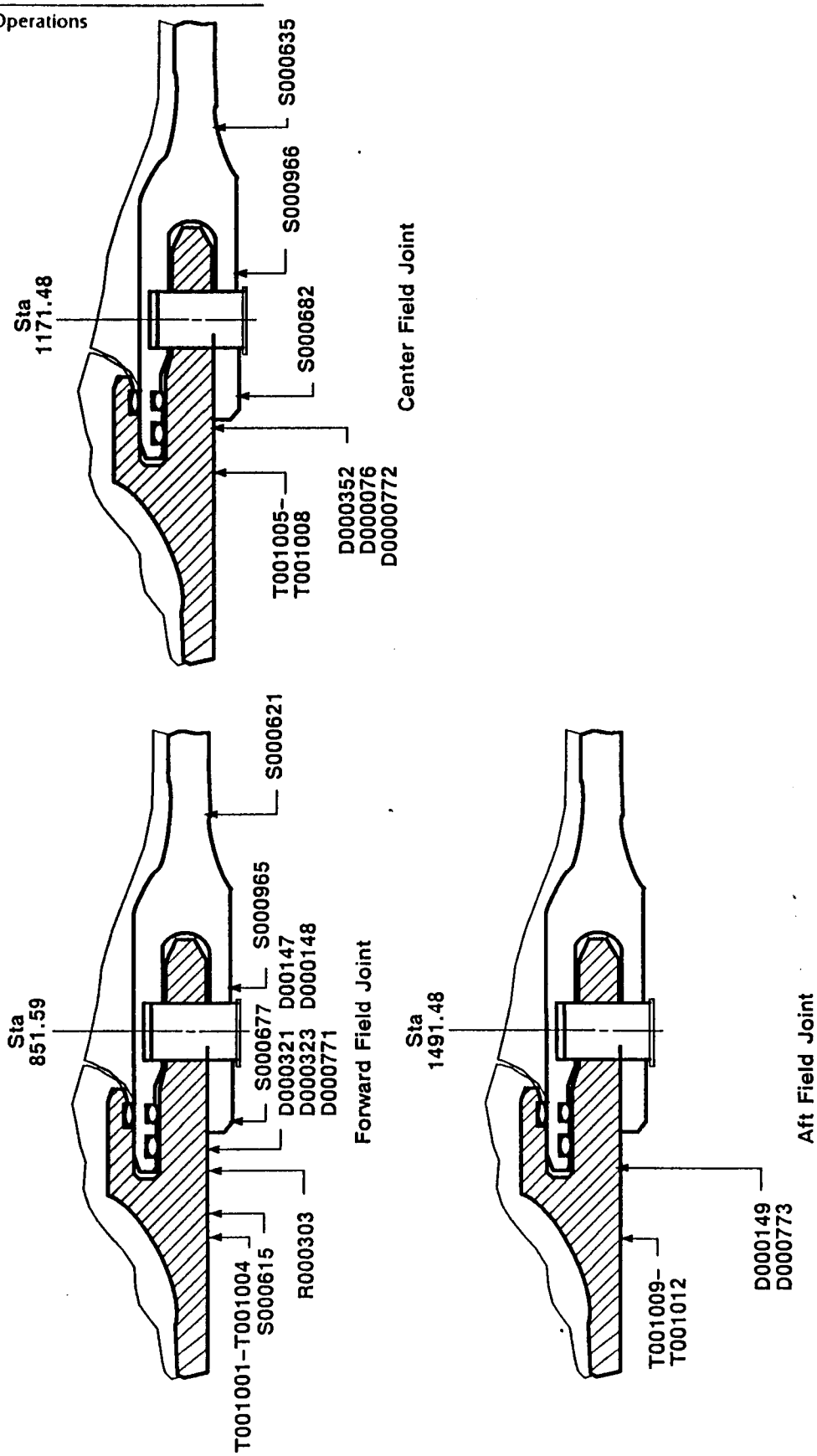

A017664a1

Figure 1.1-3. QM-8 Joint Growth

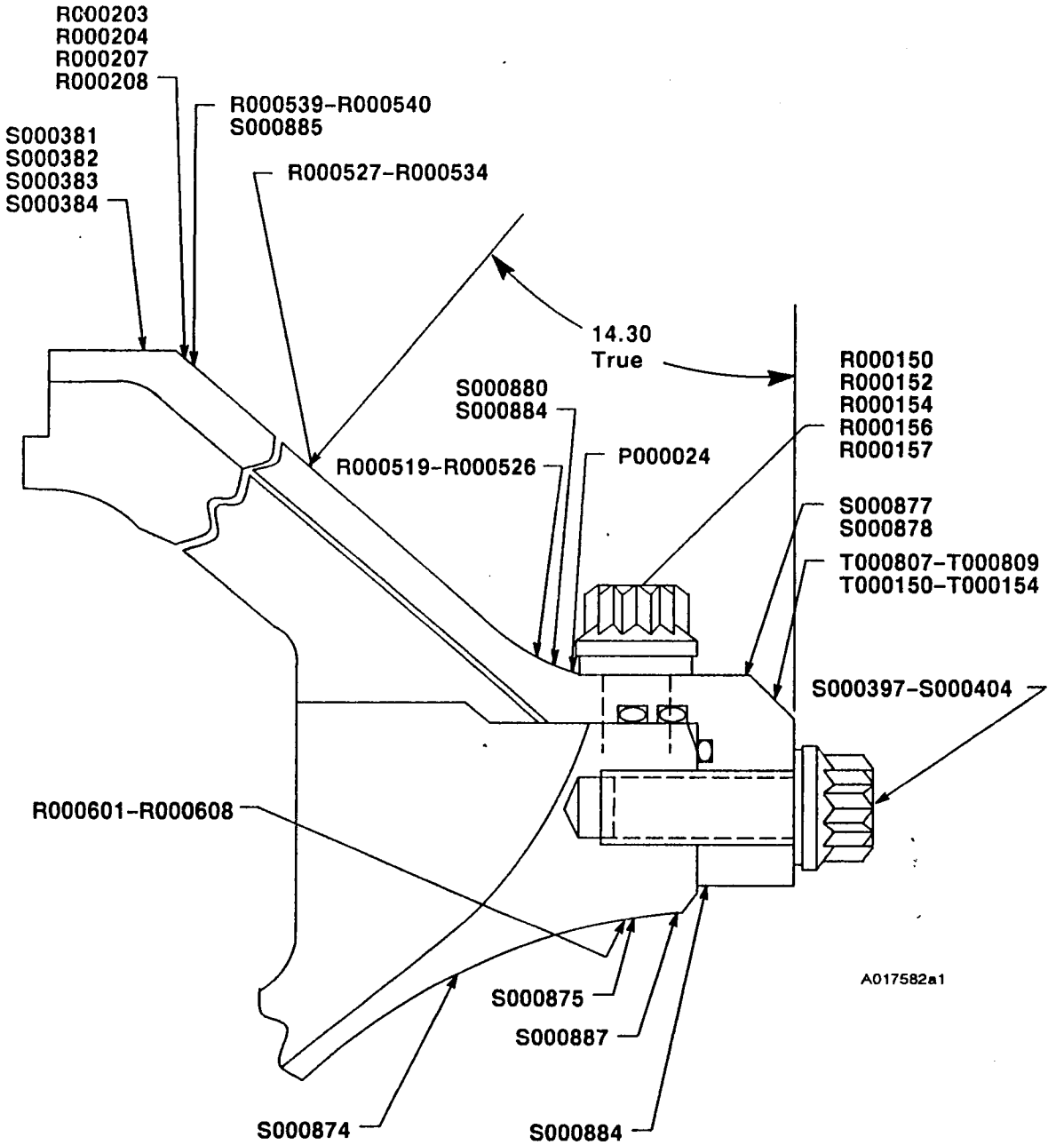

Figure 1.1-4. QM-8 Case-to-Nozzle Joint Instrumentation

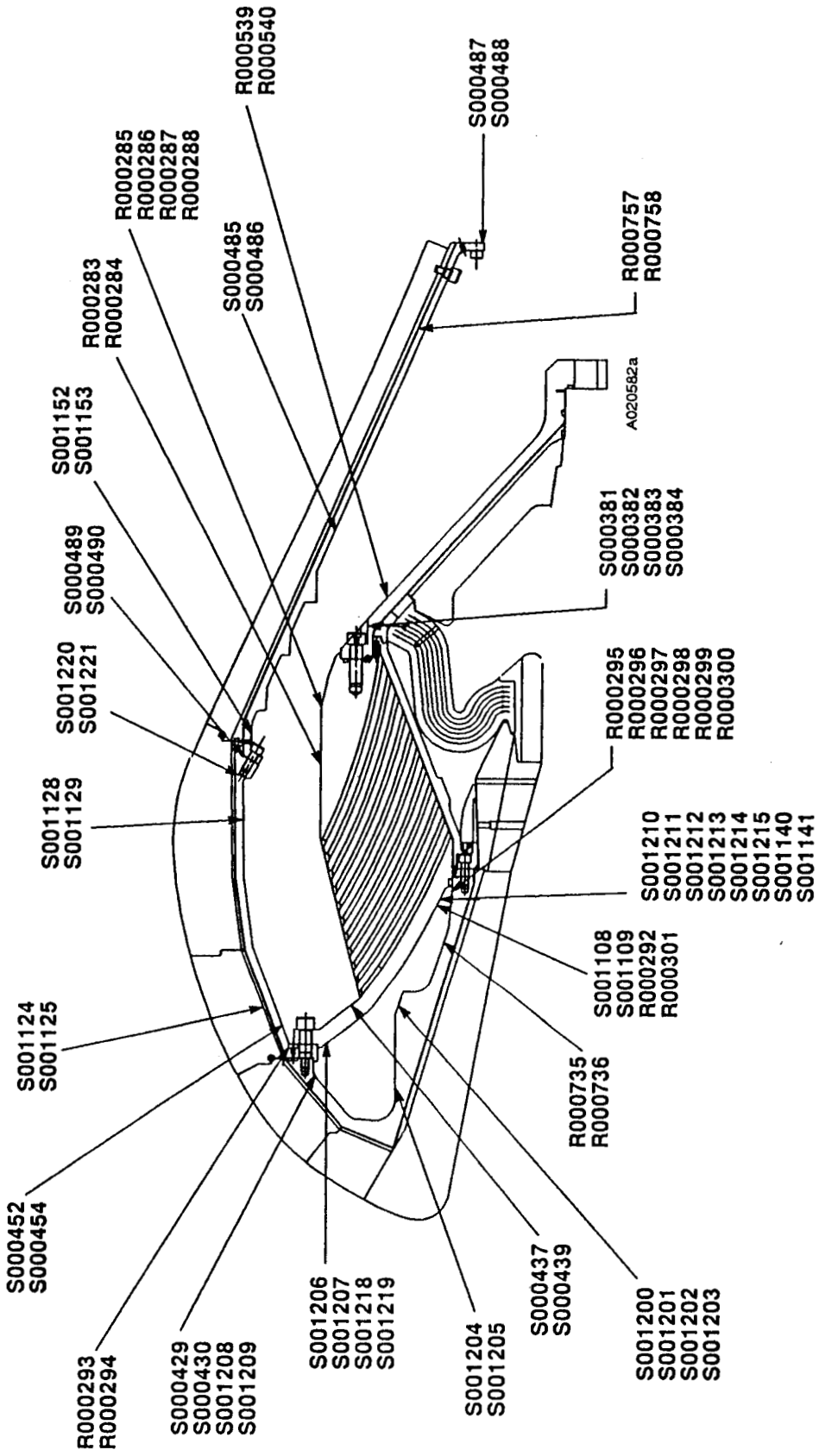

Figure 1.1-5. QM-8 Strain Gage Nozzle Instrumentation

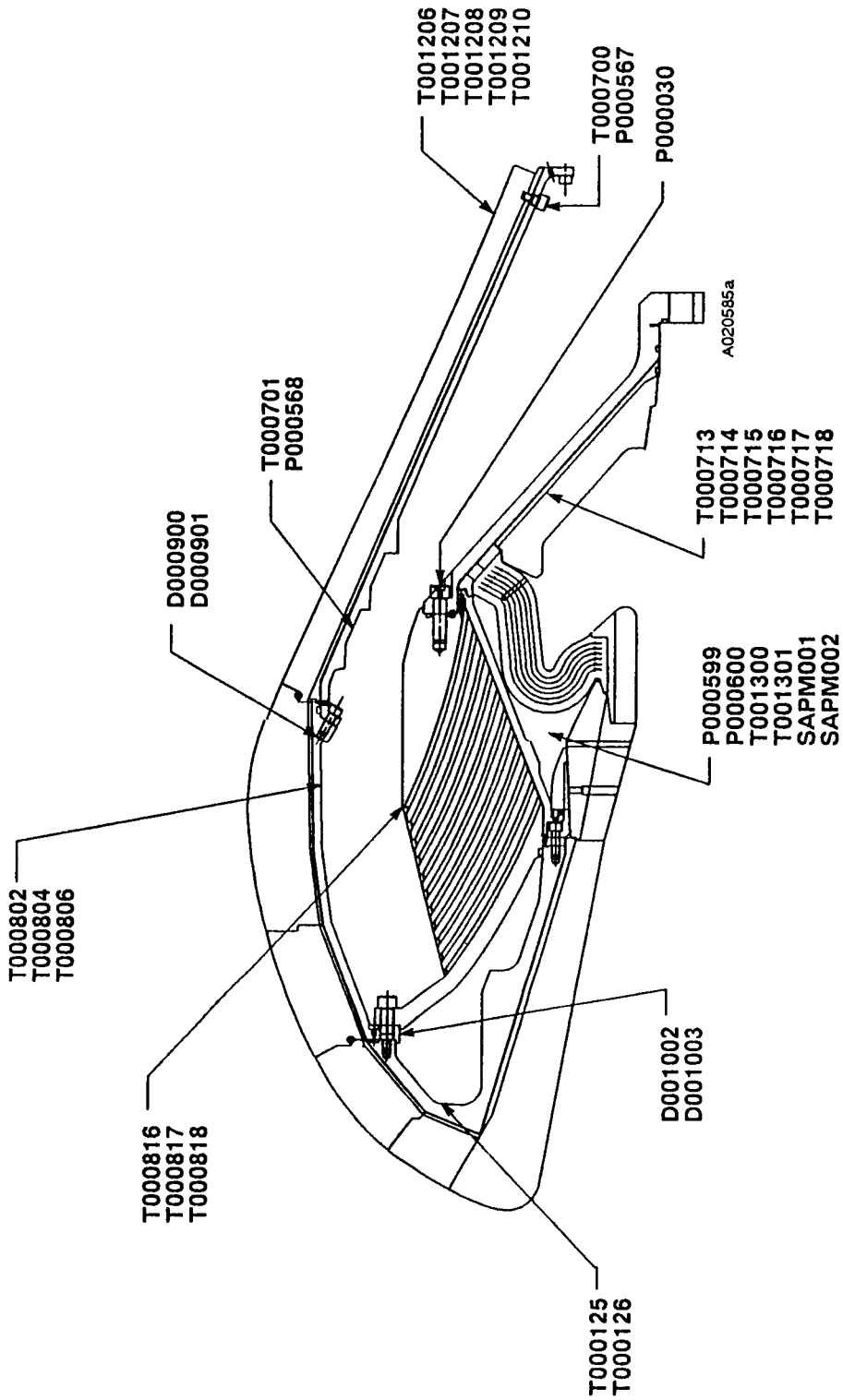

Figure 1.1-6. QM-8 Nozzle Instrumentation Displacement, Temperature, and Pressure

A020820a

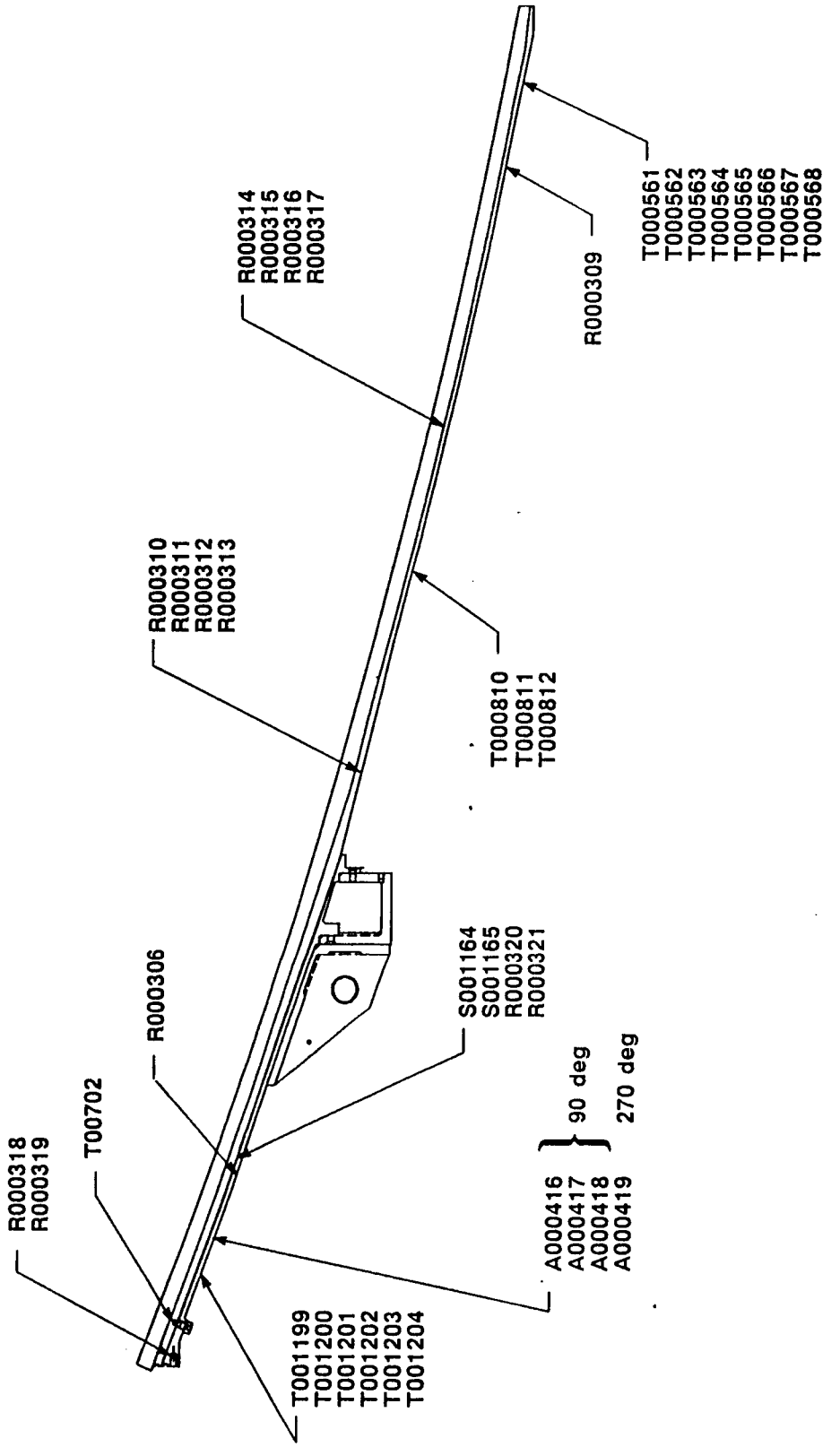

Figure 1.1-7. QM-8 Aft Exit Cone Instrumentation

Table 1.1-1. Instrumentation Summary

Type of Instrumentation	Area of Investigation	Number of Channels
Accelerometer (A)	Nozzle and case vibration TVC vibration and shock	39
Extensometers (D)	Unreinforced membrane Motor sag nozzle position axial growth	29
Proximity (D)	Exit cone bondline separation	3
LVDT (D)	Field joint movement	3
Dog Bone (D)	Nozzle joint movement	6
Voltage (E)	TVC and side load	15
Force (F)	Side load	3
Current (I)	TVC system	11
TVC Interlock (K)	TVC system	6
Microphones (N)	Forward segment Center segments Aft segment	12
Pressure (P)	Chamber pressure Igniter pressure Chamber oscillation Case-to-nozzle joint Nozzle internal joint No. 4 Boot cavity TVC system Side load Water deluge	36
Strain Gage (S&R)	Case line loads ETA ring effects Nozzle component Aft dome/fixed housing Pressure drop-in bond Joint radial growth Aft exit cone growth Case-to-nozzle expansion Case-to-nozzle joint skip/rotation	218

Table 1.1-1. Instrumentation Summary (Cont)

Type of Instrumentation	Area of Investigation	Number of Channels
Strainserts* (R-radial) (S-axial)	Case-to-nozzle joint bolt loads	16
Temperature (T)	External joint TVC system Slag Exit cone temperature Case-to-nozzle joint Igniter joint Igniter grain Propellant grain Field joint heaters Boot cavity Nozzle components Bondline Case skin S&A joint Free air Bay temperature	186
Event	Primary ignition TVC system	14
	Total	597

Table 1.3-1. QM-8 Anomaly List

Parameter No.	Symptom	Remark
A000427	No data	Broken cable
D000323	No data	Bad bus control unit (BCU)
D000772	Bad data	Sticky probe
D000773	No data	Bad ac LVDT
D000568	No data	Broken lead wire
D000900	No data	Gage damaged during snubber installation
R000303	No data	Shorted to case
S000489	No data	Open gage
S000878	No data	Open gage
X000001	No data	Unknown
T000152	No data	Unknown
P000599	No data after 6 sec	Shorted cable
SAPM001	Data after T+20 sec	T-0 established by correlation with motor pressure trace
SAPM002	No data	Bad cable

It is recommended the boot cavity instrumentation be used again on subsequent full-scale motors. Due to the instrument failures encountered in the boot cavity, an effort needs to be made to expand the data base and correlate the good data acquired.

1.4 INSTRUMENTATION DISCUSSION

There were 597 channels of instrumentation installed on the motor, including pressure, force, acceleration, displacement, strain, and temperature gages. All instrumentation that penetrated the pressure vessel remained tight and showed no evidence of blowby.

An LVDT was located in each of the field joints at 45 deg (Figure 1.4-1). The LVDT in the aft field joint, D000773, went bad during the test. The LVDT in the center field joint, D000772, had a sticky probe and did not follow joint movement properly. The LVDT in the forward field joint, D000771, performed properly.

Pressure transducers were located in the head end of the motor, case-to-nozzle joint leak check port (Figure 1.4-2), internal nozzle Joint 5, and in the boot cavity. All pressure transducers performed well with the exception of P000599, which was located in the boot cavity. Output from P000599 was lost at T+6 sec due to a shorted cable. Three other pressure transducers were located in the boot cavity. P000600, which was the same type as P000599, performed for the full-test duration. The data for P000600 after 6 sec are questionable, however. P000600 and P000599 were in the same exitation circuit, and the failure of P000599 at 6 sec may have effected P000600. SAPM001 and SAPM002 were the stand-alone pressure measuring devices furnished by Johnson Space Center (JSC). The stand-alone gages appeared to be in good condition after removal from the boot cavity. These gages were sent to JSC from data recovery. Only one stand-alone gage had any recoverable data, and this data was only good after T+20 sec. Gages that were deleted before the QM-8 static fire are listed in Table 1.4-1.

A016671a1

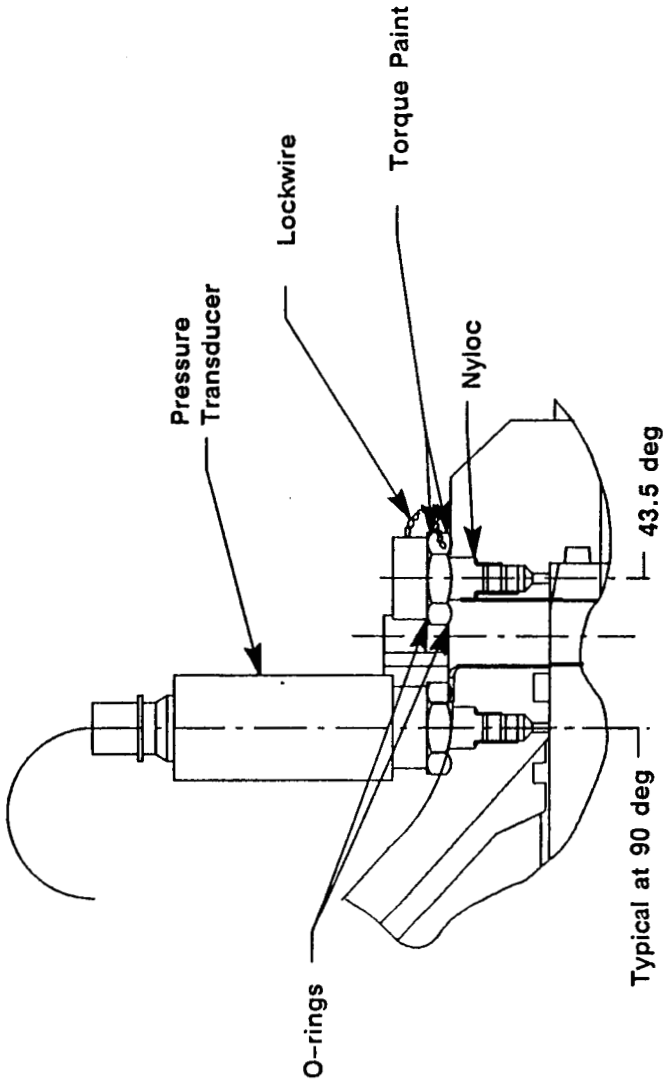

Figure 1.4-2. Case-to-Nozzle Joint Pressure Transducer

APPENDIX A

TABLE A -- QM-8 INSTRUMENTATION LIST
(SEE LAST PAGE FOR NOTES AND DEFINITIONS)

INST NO	INST NO	ANG LOC	STATION FROM	STATION TO	MEAS DIR	EXPECTED RANGE	REQ ACC	FM (Hz)	DIG (SPS)	REMARKS	PRIORITY, NOTES	INSTALLED DRAWING
A000416		98.0	1914.00		AXIAL	+/- 10 G's	+/-10%	2K		AFT EXIT CONE	R	
A000417		98.0	1914.00		TANG	+/- 10 G's	+/-10%	2K		AFT EXIT CONE	R	
A000418		98.0	1914.00		RADIAL	+/- 10 G's	+/-10%	2K		AFT EXIT CONE	R	
A000419		270.0	1914.00		TANG	+/- 10 G's	+/-10%	2K		AFT EXIT CONE	R	
A000420		86.0	1159.50		AXIAL	+/- 10 G's	+/-10%	2K		FWD/CTR SEGMENT	R	
A000421		86.0	1159.50		TANG	+/- 10 G's	+/-10%	2K		FWD/CTR SEGMENT	R	
A000422		86.0	1159.50		RADIAL	+/- 10 G's	+/-10%	2K		FWD/CTR SEGMENT	R	
A000423		86.0	1479.50		AXIAL	+/- 10 G's	+/-10%	2K		AFT/CTR SEGMENT	R	
A000424		86.0	1479.50		TANG	+/- 10 G's	+/-10%	2K		AFT/CTR SEGMENT	R	
A000425		274.0	1479.50		TANG	+/- 10 G's	+/-10%	2K		AFT/CTR SEGMENT	R	
A000426		86.0	1829.50		AXIAL	+/- 10 G's	+/-10%	2K		AFT SEGMENT (AFT DOME)	R	
A000427		86.0	1829.50		TANG	+/- 10 G's	+/-10%	2K		AFT SEGMENT (AFT DOME)	R	
A000428		86.0	1829.50		RADIAL	+/- 10 G's	+/-10%	2K		AFT SEGMENT (AFT DOME)	R	
A000429		86.0	839.5		AXIAL	+/- 10 G's	+/-10%	2K		FWD SEGMENT	R	
A000430		86.0	839.5		TANG	+/- 10 G's	+/-10%	2K		FWD SEGMENT	R	
A000551		45.0			AXIAL		+/-10%	2K		TVC,ROCK ACCTUATOR	R	
A000552		45.0			TANG		+/-10%	2K		TVC,ROCK ACCTUATOR	R	
A000553		45.0			RADIAL		+/-10%	2K		TVC,ROCK ACCTUATOR	R	
A000554		45.0			AXIAL		+/-10%	2K		TVC,ROCK ACCTUATOR	R	
A000555		45.0			TANG		+/-10%	2K		TVC,ROCK ACCTUATOR	R	
A000556		45.0			RADIAL		+/-10%	2K		TVC,ROCK ACCTUATOR	R	
A000557		135.0			AXIAL		+/-10%	2K		TVC,TILT ACCTUATOR	R	
A000558		135.0			TANG		+/-10%	2K		TVC,TILT ACCTUATOR	R	
A000559		135.0			RADIAL		+/-10%	2K		TVC,TILT ACCTUATOR	R	
A000560		135.0			AXIAL		+/-10%	2K		TVC,TILT ACCTUATOR	R	
A000561		135.0			TANG		+/-10%	2K		TVC,TILT ACCTUATOR	R	

TABLE A -- QM-8 INSTRUMENTATION LIST
(SEE LAST PAGE FOR NOTES AND DEFINITIONS)

INST NO	INST NO	ANG LOC	STATION FROM	STATION TO	MEAS DIR	EXPECTED RANGE	REQ ACC	FM (Hz)	DIG (SPS)	REMARKS	PRIORITY, NOTES	INSTALLED DRAWING
I000009						+/-50MA	+/-5%		500	COMMAND SERVOVALVE 2C (TILT)	R,5	
I000010						+/-50MA	+/-5%		500	COMMAND SERVOVALVE 2D (TILT)	R,5	
I000013						+/-100 MILLIAMPS	+/-5%	2K	500	P8 VALVE CURRENT	M,6	
I000014						+/-100 MILLIAMPS	+/-5%	2K	500	P9 VALVE CURRENT	M,6	
I000015						+/-100 MILLIAMPS	+/-5%	2K	500	P10 VALVE CURRENT	M,6	
K000001						0-28 VDC			32	N/O PRI SP CONT VALVE STATUS (ROCK)	R,5	
K000002						0-28 VDC			32	N/C SEC SP CONT VALVE STATUS (ROCK)	R,5	
K000003						0-28 VDC			32	N/O PRI SP CONT VALVE STATUS (TILT)	R,5	
K000004						0-28 VDC			32	N/C SEC SP CONT VALVE STATUS (TILT)	R,5	
K000005						0-28 VDC			32	ROCK FUEL ISOLATION VALVE OPEN	R,5	
K000006						0-28 VDC			32	TILT FUEL ISOLATION VALVE OPEN	R,5	
N000008		180.0 +/-.5	551.00		AXIAL	3.35-5.00 PSI	+/-10%	20K		FWD SEGMENT	R	
N000101		0.0	551.00		AXIAL	3.35-5.00 PSI	+/-10%	20K		FWD SEGMENT	R	
N000102		90.0	551.00		AXIAL	3.35-5.00 PSI	+/-10%	20K		FWD SEGMENT	R	
N000103		270.0	551.00		AXIAL	3.35-5.00 PSI	+/-10%	20K		FWD SEGMENT	R	
N000104		0.0	1185.00		AXIAL	3.35-5.00 PSI	+/-10%	20K		AFT CENTER SEGMENT	R	
N000105		180.0	1185.00		AXIAL	3.35-5.00 PSI	+/-10%	20K		AFT CENTER SEGMENT	R	
N000106		90.0	1185.00		AXIAL	3.35-5.00 PSI	+/-10%	20K		AFT CENTER SEGMENT	R	
N000107		270.0	1185.00		AXIAL	3.35-5.00 PSI	+/-10%	20K		AFT CENTER SEGMENT	R	
N000108		0.0	1825.00		AXIAL	3.35-5.00 PSI	+/-10%	20K		AFT SEGMENT	R	
N000109		90.0	1825.00		AXIAL	3.35-5.00 PSI	+/-10%	20K		AFT SEGMENT	R	
N000110		180.0	1825.00		AXIAL	3.35-5.00 PSI	+/-10%	20K		AFT SEGMENT	R	
N000111		270.0	1825.00		AXIAL	3.35-5.00 PSI	+/-10%	20K		AFT SEGMENT	R	
P000001		40.0	485.40			0-1000 PSI	+/-2%	2K	2K	CHAMBER PRESSURE	M,1	1U75882
P000002		270.0	485.40			0-1000 PSI	+/-1%		2K	CHAMBER PRESSURE	M,1,14	1U75882
P000003		180.0	485.40			0-1000 PSI	+/-1%		2K	CHAMBER PRESSURE	M,1,14	1U75882

TABLE A -- QM-8 INSTRUMENTATION LIST
(SEE LAST PAGE FOR NOTES AND DEFINITIONS)

INST NO	INST NO	ANG LOC	STATION FROM	STATION TO	MEAS DIR	EXPECTED RANGE	REQ ACC	FM (Hz)	DIG (SPS)	REMARKS	PRIORITY, NOTES	INSTALLED DRAWING
P000005		115.0	485.40			0-3000 PSI	+/-2%	2K	2K	IGNITER PRESSURE	R,1	1U75882
P000018		100.0	485.40			+/-10 PSI	+/-2%	100	1K	CHAMBER OSCILLATION	M,1	1U75882
P000020						0-200 PSI	+/-5%		125	WATER DELUGE PRESSURE	R,2	
P000024		90.0	1875.05			0-1000 PSIA	+/-2%		125	NOZZLE/CASE JT(leak check)	R	
P000030		262.5	1858.00			0-1000 PSI	+/-2%		125	NOZZ. INT. JT. NO. 5	R,1,2	1U76587
P000303						3500 PSID	+/-2%	2K	250	ROCK ACTUATOR DELTA P TOTAL	R,5,6	
P000304						3500 PSID	+/-2%	2K	250	TILT ACTUATOR DELTA P TOTAL	R,5,6	
P000305						3500 PSID	+/-5%		250	SERVOVALVE A (ROCK) DELTA P	R,5	
P000306						3500 PSID	+/-5%		250	SERVOVALVE B (ROCK) DELTA P	R,5	
P000307						3500 PSID	+/-5%		250	SERVOVALVE C (ROCK) DELTA P	R,5	
P000308						3500 PSID	+/-5%		250	SERVOVALVE D (ROCK) DELTA P	R,5	
P000309						3500 PSID	+/-5%	2K	250	SERVOVALVE A (TILT) DELTA P	R,5,12	
P000310						3500 PSID	+/-5%	2K	250	SERVOVALVE B (TILT) DELTA P	R,5,12	
P000311						3500 PSID	+/-5%	2K	250	SERVOVALVE C (TILT) DELTA P	R,5,12	
P000312						3500 PSID	+/-5%	2K	250	SERVOVALVE D (TILT) DELTA P	R,5,12	
P000313						0-4000 PSIG	+/-5%	2K	500	SYSTEM GAS PRESSURE, SIDE LOAD	R,6,19	
P000314						0-500 PSIG	+/-5%	2K	500	RETURN MANIFOLD PRESSURE, SIDE LOAD	R,6	
P000315						0-100 PSIG	+/-5%	2K	500	RETURN ACCUMULATOR PRESSURE, SIDE LOAD	R,6	
P000317						0-4000 PSIG	+/-5%	2K	500	P10 SUPPLY PRESSURE	R,6	
P000319						0-4000 PSIG	+/-5%	2K	500	P9 SUPPLY PRESSURE	R,6	
P000321						0-4000 PSIG	+/-5%	2K	500	P8 SUPPLY PRESSURE	R,6	
P000401						0-600 PSIA	+/-5%		32	FUEL SUPPLY MODULE (ROCK)	R,5	
P000402						0-600 PSIA	+/-5%		32	FUEL SUPPLY MODULE (TILT)	R,5	
P000503						0-3500 PSIA	+/-5%	2K	250	HYDRAULIC SUPPLY PRESSURE (ROCK)	R,5,6	
P000504						0-3500 PSIA	+/-5%	2K	250	HYDRAULIC SUPPLY PRESSURE (TILT)	R,5,6	
P000505						0-1650 PSIA	+/-5%		32	GG PRESS (ROCK)	R,5	

TABLE A -- QM-8 INSTRUMENTATION LIST
(SEE LAST PAGE FOR NOTES AND DEFINITIONS)

INST NO	INST NO	ANG LOC	STATION FROM	STATION TO	MEAS DIR	EXPECTED RANGE	REQ ACC	FM (Hz)	DIG (SPS)	REMARKS	PRIORITY, NOTES	INSTALLED DRAWING
P000506						0-1650 PSIA	+/-5%		32	GG PRESS (TILT)	R,5	
P000512						0-5000 PSIA	+/-3%		250	ROCK HYD. SYS. ACCUM-CHARGE PRESS.	R,5	
P000513						0-5000 PSIA	+/-3%		250	TILT HYD. SYS. ACCUM-CHARGE PRESS.	R,5	
P000599		180.0	1850.00			0-1000 PSI	+/-0.3%		250	BOOT CAVITY PRESSURE	R,2	1U76585
P000600		0.0	1850.00			0-1000 PSI	+/-0.3%		250	BOOT CAVITY PRESSURE	R,2	1U76585
R000150		358.2	1874.30		RADIAL	0-80 K LB	+/-5%		250	FIXED HSG/AFT DOME (STRAINSERT)	R,1	1U75883
R000151		45.0	1874.30		RADIAL	0-80 K LB	+/-5%		250	FIXED HSG/AFT DOME (STRAINSERT)	R,1	1U75883
R000152		88.2	1874.30		RADIAL	0-80 K LB	+/-5%		250	FIXED HSG/AFT DOME (STRAINSERT)	R,1	1U75883
R000153		135.0	1874.30		RADIAL	0-80 K LB	+/-5%		250	FIXED HSG/AFT DOME (STRAINSERT)	R,1	1U75883
R000154		178.2	1874.30		RADIAL	0-80 K LB	+/-5%		250	FIXED HSG/AFT DOME (STRAINSERT)	R,1	1U75883
R000155		225.0	1874.30		RADIAL	0-80 K LB	+/-5%		250	FIXED HSG/AFT DOME (STRAINSERT)	R,1	1U75883
R000156		268.2	1874.30		RADIAL	0-80 K LB	+/-5%		250	FIXED HSG/AFT DOME (STRAINSERT)	R,1	1U75883
R000157		315.0	1874.30		RADIAL	0-80 K LB	+/-5%		250	FIXED HSG/AFT DOME (STRAINSERT)	R,1	1U75883
R000203		90.0	1859.50		MERID	+/-2000 X 10E-6 IN/IN	+/-2%		250	FIXED HSG	R,1	1U52862
R000204		90.0	1859.50		CIRCUM	+/-2000 X 10E-6 IN/IN	+/-2%		250	FIXED HSG	R,1	1U52862
R000207		270.0	1859.50		MERID	+/-2000 X 10E-6 IN/IN	+/-2%		250	FIXED HSG	R,1	1U52862
R000208		270.0	1859.50		CIRCUM	+/-2000 X 10E-6 IN/IN	+/-2%		250	FIXED HSG	R,1	1U52862
R000283		90.0	1849.00		CIRCUM	2000 X 10E-6 IN/IN	+/-2%		250	BEARING ASSY, NOZZLE FLEXIBLE	R,1	1U76637
R000284		90.0	1849.00		MERID	2000 X 10E-6 IN/IN	+/-2%		250	BEARING ASSY, NOZZLE FLEXIBLE	R,1	1U76637
R000285		0.0	1856.45		CIRCUM	5000 X 10E-6 IN/IN	+/-2%		250	BEARING ASSY, NOZZLE FLEXIBLE	R,1	1U76637
R000286		0.0	1857.45		CIRCUM	5000 X 10E-6 IN/IN	+/-2%		250	BEARING ASSY, NOZZLE FLEXIBLE	R,1	1U76637
R000287		180.0	1856.45		CIRCUM	5000 X 10E-6 IN/IN	+/-2%		250	BEARING ASSY, NOZZLE FLEXIBLE	R,1	1U76637
R000288		180.0	1857.45		CIRCUM	5000 X 10E-6 IN/IN	+/-2%		250	BEARING ASSY, NOZZLE FLEXIBLE	R,1	1U76637
R000292		180.0	1843.00		CIRCUM	5000 X 10E-6 IN/IN	+/-2%		250	BEARING ASSY, NOZZLE FLEXIBLE	R,1	1U76637
R000293		0.0	1833.00		CIRCUM	5000 X 10E-6 IN/IN	+/-2%		250	BEARING ASSY, NOZZLE FLEXIBLE	R,1	1U76637
R000294		180.0	1833.00		CIRCUM	5000 X 10E-6 IN/IN	+/-2%		250	BEARING ASSY, NOZZLE FLEXIBLE	R,1	1U76637

TABLE A -- QM-8 INSTRUMENTATION LIST
(SEE LAST PAGE FOR NOTES AND DEFINITIONS)

INST NO	INST NO	ANG LOC	STATION FROM	STATION TO	MEAS DIR	EXPECTED RANGE	REQ ACC	FM (Hz)	DIG (SPS)	REMARKS	PRIORITY, NOTES	INSTALLED DRAWING
R000295		0.0	1843.60		CIRCUM	5000 X 10E-6 IN/IN	+/-2%		250	BEARING ASSY, NOZZLE FLEXIBLE	R,1	1U76637
R000296		0.0	1843.60		MERID	5000 X 10E-6 IN/IN	+/-2%		250	BEARING ASSY, NOZZLE FLEXIBLE	R,1	1U76637
R000297		180.0	1843.60		CIRCUM	5000 X 10E-6 IN/IN	+/-2%		250	BEARING ASSY, NOZZLE FLEXIBLE	R,1	1U76637
R000298		180.0	1843.60		MERID	5000 X 10E-6 IN/IN	+/-2%		250	BEARING ASSY, NOZZLE FLEXIBLE	R,1	1U76637
R000299		0.0	1843.60		HOOP	5000 X 10E-6 IN/IN	+/-2%		250	BEARING ASSY, NOZZLE FLEXIBLE	R,1	1U76637
R000300		180.0	1843.60		HOOP	5000 X 10E-6 IN/IN	+/-2%		250	BEARING ASSY, NOZZLE FLEXIBLE	R,1	1U76637
R000301		0.0	1843.00		HOOP	5000 X 10E-6 IN/IN	+/-2%		250	BEARING ASSY, NOZZLE FLEXIBLE	R,1	1U76637
R000303			848.53		HOOP	5000 X 10E-6 IN/IN	+/-2%		250	JOINT RADIAL GROWTH (BRYNER GIRTH)	R,1	7U75881
R000304			1168.53		HOOP	5000 X 10E-6 IN/IN	+/-2%		250	JOINT RADIAL GROWTH (BRYNER GIRTH)	R,1	7U75881
R000306			1901.80		HOOP	5000 X 10E-6 IN/IN	+/-2%		250	AFT EXIT CONE (GIRTH)	R,1,2	1U76123
R000309			1992.80		HOOP	5000 X 10E-6 IN/IN	+/-2%		250	AFT EXIT CONE (GIRTH)	R,1,2	1U76123
R000310		0.0	1932.80		CIRCUM	5000 X 10E-6 IN/IN	+/-2%		250	AFT EXIT CONE	R,1,2	1U76123
R000311		90.0	1932.80		CIRCUM	5000 X 10E-6 IN/IN	+/-2%		250	AFT EXIT CONE	R,1	1U76123
R000312		180.0	1932.80		CIRCUM	5000 X 10E-6 IN/IN	+/-2%		250	AFT EXIT CONE	R,1,2	1U76123
R000313		270.0	1932.80		CIRCUM	5000 X 10E-6 IN/IN	+/-2%		250	AFT EXIT CONE	R,1	1U76123
R000314		0.0	1962.80		CIRCUM	5000 X 10E-6 IN/IN	+/-2%		250	AFT EXIT CONE	R,1,2	1U76123
R000315		90.0	1962.80		CIRCUM	5000 X 10E-6 IN/IN	+/-2%		250	AFT EXIT CONE	R,1	1U76123
R000316		180.0	1962.80		CIRCUM	5000 X 10E-6 IN/IN	+/-2%		250	AFT EXIT CONE	R,1	1U76123
R000317		270.0	1962.80		CIRCUM	5000 X 10E-6 IN/IN	+/-2%		250	AFT EXIT CONE	R,1	1U76123
R000318		0.0	1885.30		CIRCUM	5000 X 10E-6 IN/IN	+/-2%		250	AFT EXIT CONE	R,1	1U76123
R000319		180.0	1885.30		CIRCUM	5000 X 10E-6 IN/IN	+/-2%		250	AFT EXIT CONE	R,1	1U76123
R000320		135.0	1902.20		CIRCUM	5000 X 10E-6 IN/IN	+/-2%		250	AFT EXIT CONE	R,1	1U76123
R000321		135.0	1902.20		MERID	5000 X 10E-6 IN/IN	+/-2%		250	AFT EXIT CONE	R,1	1U76123
R000519		0.0	1871.80		MERID	5000 X 10E-6 IN/IN	+/-2%		125	FIXED HOUSING	R,1	1U75864
R000520		0.0	1871.80		CIRCUM	5000 X 10E-6 IN/IN	+/-2%		125	FIXED HOUSING	R,1	1U75864
R000521		90.0	1871.80		MERID	5000 X 10E-6 IN/IN	+/-2%		125	FIXED HOUSING	R,1	1U75864

TABLE A -- QM-8 INSTRUMENTATION LIST
(SEE LAST PAGE FOR NOTES AND DEFINITIONS)

INST NO	INST NO	ANG LOC	STATION FROM	STATION TO	MEAS DIR	EXPECTED RANGE	REQ ACC	FM (Hz)	DIG (SPS)	REMARKS	PRIORITY, NOTES	INSTALLED DRAWING
R000522		90.0	1871.80		CIRCUM	5000 X 10E-6 IN/IN	+/-2%		125	FIXED HOUSING	R,1	1U75864
R000523		180.0	1871.80		MERID	5000 X 10E-6 IN/IN	+/-2%		125	FIXED HOUSING	R,1	1U75864
R000524		180.0	1871.80		CIRCUM	5000 X 10E-6 IN/IN	+/-2%		125	FIXED HOUSING	R,1	1U75864
R000525		270.0	1871.80		MERID	5000 X 10E-6 IN/IN	+/-2%		125	FIXED HOUSING	R,1	1U75864
R000526		270.0	1871.80		CIRCUM	5000 X 10E-6 IN/IN	+/-2%		125	FIXED HOUSING	R,1	1U75864
R000527		0.0	1867.00		MERID	5000 X 10E-6 IN/IN	+/-2%		125	FIXED HOUSING	R,1	1U52862
R000528		0.0	1867.00		CIRCUM	5000 X 10E-6 IN/IN	+/-2%		125	FIXED HOUSING	R,1	1U52862
R000529		90.0	1867.00		MERID	5000 X 10E-6 IN/IN	+/-2%		125	FIXED HOUSING	R,1	1U52862
R000530		90.0	1867.00		CIRCUM	5000 X 10E-6 IN/IN	+/-2%		125	FIXED HOUSING	R,1	1U52862
R000531		180.0	1867.00		MERID	5000 X 10E-6 IN/IN	+/-2%		125	FIXED HOUSING	R,1	1U52862
R000532		180.0	1867.00		CIRCUM	5000 X 10E-6 IN/IN	+/-2%		125	FIXED HOUSING	R,1	1U52862
R000533		270.0	1867.00		MERID	5000 X 10E-6 IN/IN	+/-2%		125	FIXED HOUSING	R,1	1U52862
R000534		270.0	1867.00		CIRCUM	5000 X 10E-6 IN/IN	+/-2%		125	FIXED HOUSING	R,1	1U52862
R000539		270.0	1861.00		CIRCUM	2000 X 10E-6 IN/IN	+/-2%		125	FIXED HOUSING	R,1	1U52862
R000540		270.0	1861.00		MERID	2000 X 10E-6 IN/IN	+/-2%		125	FIXED HOUSING	R,1	1U52862
R000601		0.0	1874.18		MERID	5000 X 10E-6 IN/IN	+/-2%		125	AFT DOME	R,1	1U75840
R000602		0.0	1874.18		CIRCUM	5000 X 10E-6 IN/IN	+/-2%		125	AFT DOME	R,1	1U75840
R000603		90.0	1874.18		MERID	5000 X 10E-6 IN/IN	+/-2%		125	AFT DOME	R,1	1U75840
R000604		90.0	1874.18		CIRCUM	5000 X 10E-6 IN/IN	+/-2%		125	AFT DOME	R,1	1U75840
R000605		180.0	1874.18		MERID	5000 X 10E-6 IN/IN	+/-2%		125	AFT DOME	R,1	1U75840
R000606		180.0	1874.18		CIRCUM	5000 X 10E-6 IN/IN	+/-2%		125	AFT DOME	R,1	1U75840
R000607		270.0	1874.18		MERID	5000 X 10E-6 IN/IN	+/-2%		125	AFT DOME	R,1	1U75840
R000608		270.0	1874.18		CIRCUM	5000 X 10E-6 IN/IN	+/-2%		125	AFT DOME	R,1	1U75840
R000643		0.0	1498.00		HOOP	7000 X 10E-6 IN/IN	+/-2%		125	ET ATTACH SEG	M,18	
R000644		0.0	1498.00		AXIAL	7000 X 10E-6 IN/IN	+/-2%		125	ET ATTACH SEG	M,18	
R000649		220.0	1498.00		HOOP	7000 X 10E-6 IN/IN	+/-2%		125	ET ATTACH SEG	M,18	

TABLE A -- QM-8 INSTRUMENTATION LIST
(SEE LAST PAGE FOR NOTES AND DEFINITIONS)

INST NO	INST NO	ANG LOC	STATION FROM	STATION TO	MEAS DIR	EXPECTED RANGE	REQ ACC	FM (Hz)	DIG (SPS)	REMARKS	PRIORITY, NOTES	INSTALLED DRAWING
R000650		220.0	1498.00		AXIAL	7000 X 10E-6 IN/IN	+/-2%		125	ET ATTACH SEG	M,18	
R000653		270.0	1498.00		HOOP	7000 X 10E-6 IN/IN	+/-2%		125	ET ATTACH SEG	M,18	
R000654		270.0	1498.00		AXIAL	7000 X 10E-6 IN/IN	+/-2%		125	ET ATTACH SEG	M,18	
R000655		255.0	1498.00		HOOP	7000 X 10E-6 IN/IN	+/-2%		125	ET ATTACH SEG	M,18	
R000656		255.0	1498.00		AXIAL	7000 X 10E-6 IN/IN	+/-2%		125	ET ATTACH SEG	M,18	
R000657		285.0	1498.00		HOOP	7000 X 10E-6 IN/IN	+/-2%		125	ET ATTACH SEG	M,18	
R000658		285.0	1498.00		AXIAL	7000 X 10E-6 IN/IN	+/-2%		125	ET ATTACH SEG	M,18	
R000659		320.0	1498.00		HOOP	7000 X 10E-6 IN/IN	+/-2%		125	ET ATTACH SEG	M,18	
R000660		320.0	1498.00		AXIAL	7000 X 10E-6 IN/IN	+/-2%		125	ET ATTACH SEG	M,18	
R000661		0.0	1501.00		HOOP	7000 X 10E-6 IN/IN	+/-2%		125	ET ATTACH SEG	M,18	
R000662		0.0	1501.00		AXIAL	7000 X 10E-6 IN/IN	+/-2%		125	ET ATTACH SEG	M,18	
R000667		220.0	1501.00		HOOP	7000 X 10E-6 IN/IN	+/-2%		125	ET ATTACH SEG	M,18	
R000668		220.0	1501.00		AXIAL	7000 X 10E-6 IN/IN	+/-2%		125	ET ATTACH SEG	M,18	
R000671		270.0	1501.00		HOOP	7000 X 10E-6 IN/IN	+/-2%		125	ET ATTACH SEG	M,18	
R000672		270.0	1501.00		AXIAL	7000 X 10E-6 IN/IN	+/-2%		125	ET ATTACH SEG	M,18	
R000673		255.0	1501.00		HOOP	7000 X 10E-6 IN/IN	+/-2%		125	ET ATTACH SEG	M,18	
R000674		255.0	1501.00		AXIAL	7000 X 10E-6 IN/IN	+/-2%		125	ET ATTACH SEG	M,18	
R000675		285.0	1501.00		HOOP	7000 X 10E-6 IN/IN	+/-2%		125	ET ATTACH SEG	M,18	
R000676		285.0	1501.00		AXIAL	7000 X 10E-6 IN/IN	+/-2%		125	ET ATTACH SEG	M,18	
R000677		320.0	1501.00		HOOP	7000 X 10E-6 IN/IN	+/-2%		125	ET ATTACH SEG	M,18	
R000678		320.0	1501.00		AXIAL	7000 X 10E-6 IN/IN	+/-2%		125	ET ATTACH SEG	M,18	
R000679		0.0	1196.50		HOOP	7000 X 10E-6 IN/IN	+/-2%		250	AFT/CTR SEG	R	
R000680		0.0	1196.50		AXIAL	7000 X 10E-6 IN/IN	+/-2%		250	AFT/CTR SEG	R	
R000685		270.0	1196.50		HOOP	7000 X 10E-6 IN/IN	+/-2%		250	AFT/CTR SEG	R	
R000686		270.0	1196.50		AXIAL	7000 X 10E-6 IN/IN	+/-2%		250	AFT/CTR SEG	R	
R000713		300.0	1498.00		HOOP	7000 X 10E-6 IN/IN	+/-2%		250	ET ATTACH SEG	M,18	

TABLE A -- QM-8 INSTRUMENTATION LIST
(SEE LAST PAGE FOR NOTES AND DEFINITIONS)

INST NO	INST NO	ANG LOC	STATION FROM	STATION TO	MEAS DIR	EXPECTED RANGE	REQ ACC	FM (Hz)	DIG (SPS)	REMARKS	PRIORITY, NOTES	INSTALLED DRAWING
R000714		300.0	1498.00		AXIAL	7000 X 10E-6 IN/IN	+/-2%		250	ET ATTACH SEG	M,18	
R000715		300.0	1501.00		HOOP	7000 X 10E-6 IN/IN	+/-2%		250	ET ATTACH SEG	M,18	
R000716		300.0	1501.00		AXIAL	7000 X 10E-6 IN/IN	+/-2%		250	ET ATTACH SEG	M,18	
R000719		188.0	1196.50		HOOP	7000 X 10E-6 IN/IN	+/-2%		250	AFT/CTR SEG	R	
R000720		188.0	1196.50		AXIAL	7000 X 10E-6 IN/IN	+/-2%		250	AFT/CTR SEG	R	
R000725		188.0	1498.00		HOOP	7000 X 10E-6 IN/IN	+/-2%		250	ET ATTACH SEG	M,18	
R000726		188.0	1498.00		AXIAL	7000 X 10E-6 IN/IN	+/-2%		250	ET ATTACH SEG	M,18	
R000727		188.0	1501.00		HOOP	7000 X 10E-6 IN/IN	+/-2%		250	ET ATTACH SEG	M,18	
R000728		188.0	1501.00		AXIAL	7000 X 10E-6 IN/IN	+/-2%		250	ET ATTACH SEG	M,18	
R000735		270.0	1839.00		CIRCUM	+/-2000 X 10E-6 IN/IN	+/-5%		250	NOSE INLET ASSY	R,1,2	1U52863
R000736		270.0	1839.00		MERID	+/-2000 X 10E-6 IN/IN	+/-5%		250	NOSE INLET ASSY	R,1,2	1U52863
R000739		90.0	1196.50		HOOP	7000 X 10E-6 IN/IN	+/-2%		250	AFT/CTR SEG	R	
R000740		90.0	1196.50		AXIAL	7000 X 10E-6 IN/IN	+/-2%		250	AFT/CTR SEG	R	
R000743		90.0	1498.00		HOOP	7000 X 10E-6 IN/IN	+/-2%		250	ET ATTACH SEG	M,18	
R000744		90.0	1498.00		AXIAL	7000 X 10E-6 IN/IN	+/-2%		250	ET ATTACH SEG	M,18	
R000745		90.0	1501.00		HOOP	7000 X 10E-6 IN/IN	+/-2%		250	ET ATTACH SEG	M,18	
R000746		90.0	1501.00		AXIAL	7000 X 10E-6 IN/IN	+/-2%		250	ET ATTACH SEG	M,18	
R000757		270.0	1877.10		CIRCUM	2000 X 10E-6 IN/IN	+/-5%		250	FWD EXIT CONE	R,1,2	1U52839
R000758		270.0	1877.10		MERID	2000 X 10E-6 IN/IN	+/-5%		250	FWD EXIT CONE	R,1,2	1U52839
R000779		0.0	1466.00		HOOP	7000 X 10E-6 IN/IN	+/-2%		250	AFT/CTR SEG	R	
R000780		0.0	1466.00		AXIAL	7000 X 10E-6 IN/IN	+/-2%		250	AFT/CTR SEG	R	
R000781		90.0	1466.00		HOOP	7000 X 10E-6 IN/IN	+/-2%		250	AFT/CTR SEG	R	
R000782		90.0	1466.00		AXIAL	7000 X 10E-6 IN/IN	+/-2%		250	AFT/CTR SEG	R	
R000785		270.0	1466.00		HOOP	7000 X 10E-6 IN/IN	+/-2%		250	AFT/CTR SEG	R	
R000786		270.0	1466.00		AXIAL	7000 X 10E-6 IN/IN	+/-2%		250	AFT/CTR SEG	R	
R000787		188.0	1466.00		HOOP	7000 X 10E-6 IN/IN	+/-2%		250	AFT/CTR SEG	R	

TABLE A -- QM-8 INSTRUMENTATION LIST
(SEE LAST PAGE FOR NOTES AND DEFINITIONS)

INST NO	INST NO	ANG LOC	STATION FROM	STATION TO	MEAS DIR	EXPECTED RANGE	REQ ACC	FM (Hz)	DIG (SPS)	REMARKS	PRIORITY, NOTES	INSTALLED DRAWING
R000788		188.0	1466.00		AXIAL	7000 X 10E-6 IN/IN	+/-2%		250	AFT/CTR SEG	R	
S000381		0.0	1857.90		CIRCUM	5000 X 10E-6 IN/IN	+/-2%		250	HOUSING ASSY NOZZLE FIXED	R,1	1U52862
S000382		0.0	1860.15		CIRCUM	5000 X 10E-6 IN/IN	+/-2%		250	HOUSING ASSY NOZZLE FIXED	R,1	1U52862
S000383		180.0	1857.90		CIRCUM	5000 X 10E-6 IN/IN	+/-2%		250	HOUSING ASSY NOZZLE FIXED	R,1	1U52862
S000384		180.0	1860.15		CIRCUM	5000 X 10E-6 IN/IN	+/-2%		250	HOUSING ASSY NOZZLE FIXED	R,1	1U52862
S000397		0.0	1875.20		AXIAL	0-140,000 LBS	+/-5%		250	FXD HSG/AFT DOME (STRAINSERT)	R,1	1U75883
S000398		90.0	1875.20		AXIAL	0-140,000 LBS	+/-5%		250	FXD HSG/AFT DOME (STRAINSERT)	R,1	1U75883
S000399		180.0	1875.20		AXIAL	0-140,000 LBS	+/-5%		250	FXD HSG/AFT DOME (STRAINSERT)	R,1	1U75883
S000400		270.0	1875.20		AXIAL	0-140,000 LBS	+/-5%		250	FXD HSG/AFT DOME (STRAINSERT)	R,1	1U75883
S000401		46.8	1875.20		AXIAL	0-140,000 LBS	+/-5%		250	FXD HSG/AFT DOME (STRAINSERT)	R,1	1U75883
S000402		136.8	1875.20		AXIAL	0-140,000 LBS	+/-5%		250	FXD HSG/AFT DOME (STRAINSERT)	R,1	1U75883
S000403		226.8	1875.20		AXIAL	0-140,000 LBS	+/-5%		250	FXD HSG/AFT DOME (STRAINSERT)	R,1	1U75883
S000404		316.8	1875.20		AXIAL	0-140,000 LBS	+/-5%		250	FXD HSG/AFT DOME (STRAINSERT)	R,1	1U75883
S000429		90.0	1829.20		CIRCUM	+/-2000 X 10E-6 IN/IN	+/-5%		250	NOZE INLET ASSY NOZZLE	R,1	1U52863
S000430		90.0	1829.20		MERID	+/-2000 X 10E-6 IN/IN	+/-5%		250	NOZE INLET ASSY NOZZLE	R,1	1U52863
S000437		90.0	1834.80		CIRCUM	+/-2000 X 10E-6 IN/IN	+/-5%		250	BEARING ASSY, NOZZLE FLEXIBLE	R,1	1U76637
S000439		90.0	1834.80		MERID	+/-2000 X 10E-6 IN/IN	+/-5%		250	BEARING ASSY, NOZZLE FLEXIBLE	R,1	1U76637
S000452		90.0	1834.00		CIRCUM	+/-2000 X 10E-6 IN/IN	+/-5%		250	NOZZ. THROAT INLET ASSY	R,1	1U50568
S000454		90.0	1834.00		MERID	+/-2000 X 10E-6 IN/IN	+/-5%		250	NOZZ. THROAT INLET ASSY	R,1	1U50568
S000485		270.0	1865.00		CIRCUM	5000 X 10E-6 IN/IN	+/-5%		250	FWD EXIT CONE	R,1,2	1U52839
S000486		270.0	1865.00		MERID	5000 X 10E-6 IN/IN	+/-5%		250	FWD EXIT CONE	R,1	1U52839
S000487		0.0	1884.10		CIRCUM	5000 X 10E-6 IN/IN	+/-5%		250	FWD EXIT CONE	R,1,2	1U52839
S000488		180.0	1884.10		CIRCUM	5000 X 10E-6 IN/IN	+/-5%		250	FWD EXIT CONE	R,1	1U52839
S000489		0.0	1850.95		CIRCUM	5000 X 10E-6 IN/IN	+/-5%		250	FWD EXIT CONE	R,1,2	1U52839
S000490		180.0	1850.95		CIRCUM	5000 X 10E-6 IN/IN	+/-5%		250	FWD EXIT CONE	R,1	1U52839
S000584			611.48		HOOP	7000 X 10E-6 IN/IN	+/-2%		250	MEMBRANE (BRYNER GIRTH)	R	

TABLE A -- QM-8 INSTRUMENTATION LIST
(SEE LAST PAGE FOR NOTES AND DEFINITIONS)

INST NO	INST NO	ANG LOC	STATION FROM	STATION TO	MEAS DIR	EXPECTED RANGE	REQ ACC	FM (Hz)	DIG (SPS)	REMARKS	PRIORITY, NOTES	INSTALLED DRAWING
S000585			771.48		HOOP	7000 X 10E-6 IN/IN	+/-2%		250	MEMBRANE (BRYNER GIRTH)	R	
S000586			931.48		HOOP	7000 X 10E-6 IN/IN	+/-2%		250	MEMBRANE (BRYNER GIRTH)	R	
S000587			1091.48		HOOP	7000 X 10E-6 IN/IN	+/-2%		250	MEMBRANE (BRYNER GIRTH)	R	
S000588			1251.48		HOOP	7000 X 10E-6 IN/IN	+/-2%		250	MEMBRANE (BRYNER GIRTH)	R	
S000589			1411.48		HOOP	7000 X 10E-6 IN/IN	+/-2%		250	MEMBRANE (BRYNER GIRTH)	R	
S000591			1637.48		HOOP	7000 X 10E-6 IN/IN	+/-2%		250	MEMBRANE (BRYNER GIRTH)	R	
S000592			1757.54		HOOP	7000 X 10E-6 IN/IN	+/-2%		250	MEMBRANE (BRYNER GIRTH)	R	
S000621			855.03		HOOP	5000 X 10E-6 IN/IN	+/-2%		250	JOINT RADIAL GROWTH (BRYNER GIRTH)	R,1	7U75881
S000635			1175.03		HOOP	5000 X 10E-6 IN/IN	+/-2%		250	JOINT RADIAL GROWTH (BRYNER GIRTH)	R,1	7U75881
S000677			850.17		HOOP	5000 X 10E-6 IN/IN	+/-2%		250	JOINT RADIAL GROWTH (BRYNER GIRTH)	R,1	7U75881
S000682			1170.17		HOOP	5000 X 10E-6 IN/IN	+/-2%		250	JOINT RADIAL GROWTH (BRYNER GIRTH)	R,1	7U75881
S000874			1872.45		HOOP	5000 X 10E-6 IN/IN	+/-2%		125	AFT SEGMENT, INSTRUMENTED (GIRTH)	M,15	1U75840
S000875			1874.18		HOOP	5000 X 10E-6 IN/IN	+/-2%		125	AFT SEGMENT, INSTRUMENTED (GIRTH)	M,15	1U75840
S000877			1876.25		HOOP	5000 X 10E-6 IN/IN	+/-2%		125	FIXED HOUSING (BRYNER GIRTH)	M,15	1U75864
S000878			1876.25		HOOP	5000 X 10E-6 IN/IN	+/-2%		125	FIXED HOUSING (BRYNER GIRTH)	M,15	1U75864
S000880			1872.95		HOOP	5000 X 10E-6 IN/IN	+/-2%		125	FIXED HOUSING (BRYNER GIRTH)	M,15	1U75864
S000884			1875.65		HOOP	5000 X 10E-6 IN/IN	+/-2%		125	FIXED HOUSING (BRYNER GIRTH)	R,1	1U75864
S000885			1861.00		CIRCUM	5000 X 10E-6 IN/IN	+/-2%		125	FIXED HOUSING (BRYNER GIRTH)	R,1	1U52862
S000887			1874.85		HOOP	5000 X 10E-6 IN/IN	+/-2%		125	AFT SEGMENT, INSTRUMENTED (GIRTH)	M,15	1U75840
S000965			852.60		HOOP	5000 X 10E-6 IN/IN	+/-2%		250	JOINT RADIAL GROWTH (BRYNER GIRTH)	R,1	7U75881
S000966			1172.60		HOOP	5000 X 10E-6 IN/IN	+/-2%		250	JOINT RADIAL GROWTH (BRYNER GIRTH)	R,1	7U75881
S001100			688.53		HOOP	5000 X 10E-6 IN/IN	+/-2%		125	FWD SEGMENT (GIRTH)	R,1	1U75423
S001101			690.17		HOOP	5000 X 10E-6 IN/IN	+/-2%		125	FWD SEGMENT (GIRTH)	R,1	1U75423
S001102			692.58		HOOP	5000 X 10E-6 IN/IN	+/-2%		125	FWD SEGMENT (GIRTH)	R,1	1U75423
S001103			695.03		HOOP	5000 X 10E-6 IN/IN	+/-2%		125	FWD SEGMENT (GIRTH)	R,1	1U75423
S001108		260.0	1842.10		CIRCUM	+/-2000 X 10E-6 IN/IN	+/-5%		125	BEARING ASSY, NOZZLE FLEXIBLE	R,1	1U76637

TABLE A -- QM-8 INSTRUMENTATION LIST
(SEE LAST PAGE FOR NOTES AND DEFINITIONS)

INST NO	INST NO	ANG LOC	STATION FROM	STATION TO	MEAS DIR	EXPECTED RANGE	REQ ACC	FM (Hz)	DIG (SPS)	REMARKS	PRIORITY, NOTES	INSTALLED DRAWING
S001109		260.0	1842.10		MERID	+/-2000 X 10E-6 IN/IN	+/-5%		125	BEARING ASSY, NOZZLE FLEXIBLE	R,1	1U76637
S001124		315.0	1835.50		CIRCUM	+/-2000 X 10E-6 IN/IN	+/-5%		125	THROAT INLET ASSY NOZZLE	R,1,2	1U50568
S001125		315.0	1835.50		MERID	+/-2000 X 10E-6 IN/IN	+/-5%		125	THROAT INLET ASSY NOZZLE	R,1	1U50568
S001128		270.0	1849.00		CIRCUM	+/-2000 X 10E-6 IN/IN	+/-5%		125	THROAT-INLET ASSY	R,1,2	
S001129		270.0	1849.00		MERID	+/-2000 X 10E-6 IN/IN	+/-5%		125	THROAT-INLET ASSY	R,1,2	
S001140		260.0	1849.00		CIRCUM	+/-2000 X 10E-6 IN/IN	+/-5%		125	NOSE INLET ASSY NOZZLE	R,1,2	1U52863
S001141		260.0	1842.50		MERID	+/-2000 X 10E-6 IN/IN	+/-5%		125	NOSE INLET ASSY NOZZLE	R,1,2	1U52863
S001152		270.0	1852.60		CIRCUM	+/-2000 X 10E-6 IN/IN	+/-5%		125	FWD EXIT CONE	R,1,2	1U52839
S001153		270.0	1852.60		MERID	+/-2000 X 10E-6 IN/IN	+/-5%		125	FWD EXIT CONE	R,1,2	1U52839
S001164		270.0	1902.20		CIRCUM	+/-2000 X 10E-6 IN/IN	+/-5%		125	AFT EXIT CONE	R,1,2	1U76123
S001165		270.0	1902.20		MERID	+/-2000 X 10E-6 IN/IN	+/-5%		125	AFT EXIT CONE	R,1,2	1U76123
S001175		0.0	1511.00		HOOP	7000 X 10-E IN/IN	+/-2%		125	ET ATTACH SEG	M,18	
S001176		0.0	1511.00		AXIAL	7000 X 10-E IN/IN	+/-2%		125	ET ATTACH SEG	M,18	
S001177		90.0	1511.00		HOOP	7000 X 10-E IN/IN	+/-2%		125	ET ATTACH SEG	M,18	
S001178		90.0	1511.00		AXIAL	7000 X 10-E IN/IN	+/-2%		125	ET ATTACH SEG	M,18	
S001179		188.0	1511.00		HOOP	7000 X 10-E IN/IN	+/-2%		125	ET ATTACH SEG	M,18	
S001180		188.0	1511.00		AXIAL	7000 X 10-E IN/IN	+/-2%		125	ET ATTACH SEG	M,18	
S001181		220.0	1511.00		HOOP	7000 X 10-E IN/IN	+/-2%		125	ET ATTACH SEG	M,18	
S001182		220.0	1511.00		AXIAL	7000 X 10-E IN/IN	+/-2%		125	ET ATTACH SEG	M,18	
S001183		300.0	1511.00		HOOP	7000 X 10-E IN/IN	+/-2%		125	ET ATTACH SEG	M,18	
S001184		300.0	1511.00		AXIAL	7000 X 10-E IN/IN	+/-2%		125	ET ATTACH SEG	M,18	
S001185		270.0	1511.00		HOOP	7000 X 10-E IN/IN	+/-2%		125	ET ATTACH SEG	M,18	
S001186		270.0	1511.00		AXIAL	7000 X 10-E IN/IN	+/-2%		125	ET ATTACH SEG	M,18	
S001187		255.0	1511.00		HOOP	7000 X 10-E IN/IN	+/-2%		125	ET ATTACH SEG	M,18	
S001188		255.0	1511.00		AXIAL	7000 X 10-E IN/IN	+/-2%		125	ET ATTACH SEG	M,18	
S001189		285.0	1511.00		HOOP	7000 X 10-E IN/IN	+/-2%		125	ET ATTACH SEG	M,18	

TABLE A -- QM-8 INSTRUMENTATION LIST
(SEE LAST PAGE FOR NOTES AND DEFINITIONS)

INST NO	INST NO	ANG LOC	STATION FROM	STATION TO	MEAS DIR	EXPECTED RANGE	REQ ACC	FM (Hz)	DIG (SPS)	REMARKS	PRIORITY, NOTES	INSTALLED DRAWING
S001190		285.0	1511.00		AXIAL	7000 X 10-E IN/IN	+/-2%		125	ET ATTACH SEG	M,18	
S001191		320.0	1511.00		HOOP	7000 X 10-E IN/IN	+/-2%		125	ET ATTACH SEG	M,18	
S001192		320.0	1511.00		AXIAL	7000 X 10-E IN/IN	+/-2%		125	ET ATTACH SEG	M,18	
S001200		90.0	1835.20		CIRCUM	+/-2000 X 10E-6 IN/IN	+/-5%		250	THROAT INLET ASSY NOZZLE	R,1	1U52863
S001201		90.0	1835.20		MERID	+/-2000 X 10E-6 IN/IN	+/-5%		250	THROAT INLET ASSY NOZZLE	R,1	1U52863
S001202		270.0	1835.20		CIRCUM	+/-2000 X 10E-6 IN/IN	+/-5%		250	THROAT INLET ASSY NOZZLE	R,1	1U52863
S001203		270.0	1835.20		MERID	+/-2000 X 10E-6 IN/IN	+/-5%		250	THROAT INLET ASSY NOZZLE	R,1	1U52863
S001204		270.0	1831.60		CIRCUM	+/-2000 X 10E-6 IN/IN	+/-5%		250	NOSE INLET ASSY NOZZLE	R,1	1U52863
S001205		270.0	1831.60		MERID	+/-2000 X 10E-6 IN/IN	+/-5%		250	NOSE INLET ASSY NOZZLE	R,1	1U52863
S001206		0.0	1831.00		CIRCUM	+/-2000 X 10E-6 IN/IN	+/-5%		250	NOSE INLET ASSY NOZZLE	R,1	1U52863
S001207		180.0	1831.00		CIRCUM	+/-2000 X 10E-6 IN/IN	+/-5%		250	NOSE INLET ASSY NOZZLE	R,1,2	1U52863
S001208		270.0	1829.20		CIRCUM	+/-2000 X 10E-6 IN/IN	+/-5%		250	NOSE INLET ASSY NOZZLE	R,1	1U52863
S001209		270.0	1829.20		MERID	+/-2000 X 10E-6 IN/IN	+/-5%		250	NOSE INLET ASSY NOZZLE	R,1	1U52863
S001210		0.0	1842.50		CIRCUM	+/-2000 X 10E-6 IN/IN	+/-5%		250	NOSE INLET ASSY NOZZLE	R,1	1U52863
S001211		0.0	1842.50		MERID	+/-2000 X 10E-6 IN/IN	+/-5%		250	NOSE INLET ASSY NOZZLE	R,1	1U52863
S001212		180.0	1842.50		CIRCUM	+/-2000 X 10E-6 IN/IN	+/-5%		250	NOSE INLET ASSY NOZZLE	R,1	1U52863
S001213		180.0	1842.50		MERID	+/-2000 X 10E-6 IN/IN	+/-5%		250	NOSE INLET ASSY NOZZLE	R,1	1U52863
S001214		0.0	1842.50		CIRCUM	+/-2000 X 10E-6 IN/IN	+/-5%		250	NOSE INLET ASSY NOZZLE	R,1	1U52863
S001215		180.0	1842.50		CIRCUM	+/-2000 X 10E-6 IN/IN	+/-5%		250	NOSE INLET ASSY NOZZLE	R,1	1U52863
S001218		0.0	1832.00		CIRCUM	+/-2000 X 10E-6 IN/IN	+/-5%		250	THROAT INLET ASSY NOZZLE	R,1	1U50568
S001219		180.0	1832.00		CIRCUM	+/-2000 X 10E-6 IN/IN	+/-5%		250	THROAT INLET ASSY NOZZLE	R,1	1U50568
S001220		0.0	1850.45		CIRCUM	5000 X 10E-6 IN/IN	+/-5%		250	THROAT INLET ASSY NOZZLE	R,1	1U50568
S001221		180.0	1850.45		CIRCUM	5000 X 10E-6 IN/IN	+/-5%		250	THROAT INLET ASSY NOZZLE	R,1	1U50568
S009030		94.0	1658.60			5000 X 10E-6 IN/IN	+/-2%		250	INSTR SPLICE PLATE BOLT (STIFF. RING)	R	
S009031		94.0	1658.60			5000 X 10E-6 IN/IN	+/-2%		250	INSTR SPLICE PLATE BOLT (STIFF. RING)	R	
S009032		94.0	1658.60			5000 X 10E-6 IN/IN	+/-2%		250	INSTR SPLICE PLATE BOLT (STIFF. RING)	R	

TABLE A -- QM-8 INSTRUMENTATION LIST
(SEE LAST PAGE FOR NOTES AND DEFINITIONS)

INST NO	INST NO	ANG LOC	STATION FROM	STATION TO	MEAS DIR	EXPECTED RANGE	REQ ACC	FM (Hz)	DIG (SPS)	REMARKS	PRIORITY, NOTES	INSTALLED DRAWING
S009033		94.0	1658.60			5000 X 10E-6 IN/IN	+/-2%		250	INSTR SPLICE PLATE BOLT (STIFF. RING)	R	
S009038		96.0	1656.30			5000 X 10E-6 IN/IN	+/-2%		250	INSTR SPLICE PLATE BOLT (STIFF. RING)	R	
S009039		96.0	1656.30			5000 X 10E-6 IN/IN	+/-2%		250	INSTR SPLICE PLATE BOLT (STIFF. RING)	R	
S009040		96.0	1656.30			5000 X 10E-6 IN/IN	+/-2%		250	INSTR SPLICE PLATE BOLT (STIFF. RING)	R	
S009041		96.0	1656.30			5000 X 10E-6 IN/IN	+/-2%		250	INSTR SPLICE PLATE BOLT (STIFF. RING)	R	
T000125		0.0	1828.10			+/- 200 DEG F	+/-5%		32	NOSE INLET HSG. NOZZLE	R,1	1U52863
T000126		180.0	1828.10			+/- 200 DEG F	+/-5%		32	NOSE INLET ASSY NOZZLE	R,1	1U52863
T000150		52.0	1876.67			+/- 200 DEG F	+/-5%		32	FIXED HOUSING, AFT	R,1,19,21	1U75864
T000151		142.0	1876.67			+/- 200 DEG F	+/-5%		32	FIXED HOUSING, AFT	R,1,19,21	1U75864
T000152		232.0	1876.67			+/- 200 DEG F	+/-5%		32	FIXED HOUSING, AFT	R,1,19,21	1U75864
T000153		232.0	1876.67			+/- 200 DEG F	+/-5%		32	FIXED HOUSING, AFT	R,1,19,21	1U75864
T000154		322.0	1876.67			+/- 200 DEG F	+/-5%		32	FIXED HOUSING, AFT	R,1,19,21	1U75864
T000160		181.5	921.98			0-200 DEG F	+/-5%		32	TUNNEL BONDLINE TEMPERATURE	R,1,19,20	1U76139
T000161		178.5	1031.23			0-200 DEG F	+/-5%		32	TUNNEL BONDLINE TEMPERATURE	R,1,19,20	1U76139
T000221						0-250 DEG F	+/-5%		32	HYDRAULIC TEMP (TILT),(SUPPLY) SKIN	R,1,19,20	
T000222						0-250 DEG F	+/-5%		32	HYDRAULIC TEMP (ROCK),(SUPPLY) SKIN	R,1,19,20	
T000301						0 TO 1500 DEG F	+/-5%		32	GG BED TEMP. (ROCK)	R,5,19	
T000302						0 TO 1500 DEG F	+/-5%		32	GG BED TEMP. (TILT)	R,5,19	
T000303						32 TO 140 DEG F	+/-5%		32	FSM TEMP. (ROCK)	R,5,19,20	
T000304						32 TO 140 DEG F	+/-5%		32	FSM TEMP. (TILT)	R,5,19,20	
T000306						0-250 DEG F	+/-5%		32	ROCK HYD. RES. TEMP.	R,5	
T000307						0 TO 400 DEG F	+/-5%		32	APU LUBE OIL TEMP. (ROCK)	R,5	
T000308						0 TO 400 DEG F	+/-5%		32	APU LUBE OIL TEMP (TILT)	R,5	
T000310						0-250 DEG F	+/-5%		32	TILT HYD. RES. TEMP.	R,5	
T000311						0 TO 250 DEG F	+/-5%		32	HYDRAULIC RETURN TEMP. (ROCK) (SKIN)	R,5,19,20	
T000312						0 TO 250 DEG F	+/-5%		32	HYDRAULIC RETURN TEMP. (TILT) (SKIN)	R,5,19,20	

TABLE A -- QM-8 INSTRUMENTATION LIST
(SEE LAST PAGE FOR NOTES AND DEFINITIONS)

INST NO	INST NO	ANG LOC	STATION FROM	STATION TO	MEAS DIR	EXPECTED RANGE	REQ ACC	FM (Hz)	DIG (SPS)	REMARKS	PRIORITY, NOTES	INSTALLED DRAWING
T000561		1.0	1995.00			0 TO 2400 DEG F	+/-5%		32	EXIT CONE BOND	R,1	
T000562		89.0	1995.00			0 TO 2400 DEG F	+/-5%		32	EXIT CONE BOND	R,1	
T000563		91.0	1995.00			0 TO 2400 DEG F	+/-5%		32	EXIT CONE BOND	R,1	
T000564		179.0	1995.00			0 TO 2400 DEG F	+/-5%		32	EXIT CONE BOND	R,1	
T000565		181.0	1995.00			0 TO 2400 DEG F	+/-5%		32	EXIT CONE BOND	R,1	
T000566		269.0	1995.00			0 TO 2400 DEG F	+/-5%		32	EXIT CONE BOND	R,1	
T000567		271.0	1995.00			0 TO 2400 DEG F	+/-5%		32	EXIT CONE BOND	R,1	
T000568		359.0	1995.00			0 TO 2400 DEG F	+/-5%		32	EXIT CONE BOND	R,1	
T000638		0.0	1511.00			0-2400 DEG F	+/-5%		32	SLAG TEMP	M,2,16	
T000700		7.5	1882.56			0-1000 F	+/-5%		32	FWD EXIT CONE ASSY	R,1,2,19,21	1U52839
T000701		0.0	1856.48			0-1000 F	+/-5%		32	FWD EXIT CONE ASSY	R,1,2,19,21	1U52839
T000702		0.0	1887.90			0-200 F	+/-5%		32	AFT EXIT CONE ASSY	R,1,2,19,21	1U76123
T000713		52.0	1865.10			0-200 F	+/-5%		32	FIXED HSNG BONDLINE TEMP	R,1,2,19,21	1U52862
T000714		42.0	1865.10			0-200 F	+/-5%		32	FIXED HSNG BONDLINE TEMP	R,1,19,21	1U52862
T000715		62.0	1865.10			0-200 F	+/-5%		32	FIXED HSNG BONDLINE TEMP	R,1,19,21	1U52862
T000716		22.0	1865.10			0-200 F	+/-5%		32	FIXED HSNG BONDLINE TEMP	R,1,19,21	1U52862
T000717		82.0	1865.10			0-200 F	+/-5%		32	FIXED HSNG BONDLINE TEMP	R,1,19,21	1U52862
T000718		52.0	1865.10			0-200 F	+/-5%		32	FIXED HSNG BONDLINE TEMP	R,1,19,21	1U52862
T000801		0.0	1847.00			+/-200 DEG F	+/-1%		32	THERMP,GEI,NOZZLE FLEX BRG	M,1,19,20	1U76637
T000802		0.0	1845.00			+/-200 DEG F	+/-1%		32	THERMO, GEI (THROAT HSG)	R,1,19,21	1U50568
T000804		120.0	1845.00			+/-200 DEG F	+/-1%		32	THERMO, GEI (THROAT HSG)	R,1,19,21	1U50568
T000806		240.0	1845.00			+/-200 DEG F	+/-1%		32	THERMO, GEI (THROAT HSG)	R,1,19,21	1U50568
T000807		0.0	1876.70			+/-200 DEG F	+/-1%		32	THERMO, GEI (FIXED HOUSING)	M,1,19,21	1U75864
T000808		120.0	1876.70			+/-200 DEG F	+/-1%		32	THERMO, GEI (FIXED HOUSING)	M,1,19,21	1U75864
T000809		240.0	1876.70			+/-200 DEG F	+/-1%		32	THERMO, GEI (FIXED HOUSING)	M,1,19,21	1U75864
T000810		0.0	1950.00			+/-200 DEG F	+/-1%			THERMO, GEI	R,1,3	1U76123

TABLE A -- QM-8 INSTRUMENTATION LIST
(SEE LAST PAGE FOR NOTES AND DEFINITIONS)

INST NO	INST NO	ANG LOC	STATION FROM	STATION TO	MEAS DIR	EXPECTED RANGE	REQ ACC	FM (Hz)	DIG (SPS)	REMARKS	PRIORITY, NOTES	INSTALLED DRAWING
T000811		120.0	1950.00			+/-200 DEG F	+/-1%			THERMO, GEI	R,1,3	1U76123
T000812		240.0	1950.00			+/-200 DEG F	+/-1%			THERMO, GEI	R,1,3	1U76123
T000815		180.0	1565.05			+/-200 DEG F	+/-1%			THERMO, GEI, AFT SEG.	R,1,3	1U75845
T000816		0.0	1847.00			+/-200 DEG F	+/-1%		32	THERMP,GEI,NOZZLE FLEX BRG	M,1,19,20	1U76637
T000817		120.0	1847.00			+/-200 DEG F	+/-1%		32	THERMO, GEI, NOZZLE FLEX BRG	M,1,19,20	1U76637
T000818		240.0	1847.00			+/-200 DEG F	+/-1%		32	THERMO, GEI, NOZZLE FLEX BRG	M,1,19,20	1U76637
T000819		150.0	534.50			+/-200 DEG	+/-1%			THERMO, GEI, FORWARD SEGMENT	R,3	1U75882
T000820		30.0	534.50			+/-200 DEG	+/-1%			THERMO, GEI, FORWARD SEGMENT	R,3	1U75882
T000821		270.0	534.50			+/-200 DEG	+/-1%			THERMO, GEI, FORWARD SEGMENT	R,3	1U75882
T000822		135.0	694.50			+/-200 DEG	+/-1%			THERMO, GEI, FORWARD SEGMENT	R,3	1U75882
T000823		45.0	694.50			+/-200 DEG	+/-1%			THERMO, GEI, FORWARD SEGMENT	R,3	1U75882
T000824		325.0	694.50			+/-200 DEG	+/-1%			THERMO, GEI, FORWARD SEGMENT	R,3	1U75882
T000825		270.0	694.50			+/-200 DEG	+/-1%			THERMO, GEI, FORWARD SEGMENT	R,3	1U75882
T000826		215.0	694.50			+/-200 DEG	+/-1%			THERMO, GEI, FORWARD SEGMENT	R,3	1U75882
T000827		135.0	931.50			+/-200 DEG	+/-1%			THERMO, GEI, CENTER/FWD SEG	R,3	1U75838
T000828		45.0	931.50			+/-200 DEG	+/-1%			THERMO, GEI, CENTER/FWD SEG	R,3	1U75838
T000829		325.0	931.50			+/-200 DEG	+/-1%			THERMO, GEI, CENTER/FWD SEG	R,3	1U75838
T000830		0.0	772.00			0-2400 DEG F	+/-5%		32	SLAG TEMP, FORWARD SEGMENT	M,2,14	
T000831		0.0	1191.00			0-2400 DEG F	+/-5%		32	SLAG TEMP, CENTER/AFT SEGMENT	M,2,14	
T000832		0.0	1411.00			0-2400 DEG F	+/-5%		32	SLAG TEMP, CENTER/AFT SEGMENT	M,2,14	
T000833		17.3	1511.00			0-2400 DEG F	+/-5%		32	SLAG TEMP, AFT SEGMENT	M,2,16	
T000834		28.3	1511.00			0-2400 DEG F	+/-5%		32	SLAG TEMP, AFT SEGMENT	M,2,16	
T000835		334.9	1511.00			0-2400 DEG F	+/-5%		32	SLAG TEMP, AFT SEGMENT	M,2,16	
T000836		349.8	1511.00			0-2400 DEG F	+/-5%		32	SLAG TEMP, AFT SEGMENT	M,2,16	
T000837		0.0	1529.00			0-2400 DEG F	+/-5%		32	SLAG TEMP, AFT SEGMENT	M,2,16	
T000838		0.0	1547.00			0-2400 DEG F	+/-5%		32	SLAG TEMP, AFT SEGMENT	M,2,16	

TABLE A -- QM-8 INSTRUMENTATION LIST
(SEE LAST PAGE FOR NOTES AND DEFINITIONS)

INST NO	INST NO	ANG LOC	STATION FROM	STATION TO	MEAS DIR	EXPECTED RANGE	REQ ACC	FM (Hz)	DIG (SPS)	REMARKS	PRIORITY, NOTES	INSTALLED DRAWING
T000839		0.0	1598.00			0-2400 DEG F	+/-5%		32	SLAG TEMP, AFT SEGMENT	M,2,14	
T000840		0.0	1652.00			0-2400 DEG F	+/-5%		32	SLAG TEMP, AFT SEGMENT	M,2,14	
T000841		0.0	1727.00			0-2400 DEG F	+/-5%		32	SLAG TEMP, AFT SEGMENT	M,2,14	
T000842		344.0	1563.00			0-2400 DEG F	+/-5%		32	SLAG TEMP, AFT SEGMENT	M,2,14	
T000843		13.3	1566.00			0-2400 DEG F	+/-5%		32	SLAG TEMP, AFT SEGMENT	M,2,14	
T000844		354.9	1538.00			0-2400 DEG F	+/-5%		32	SLAG TEMP, AFT SEGMENT	M,2,14	
T000845		27.0	1535.00			0-2400 DEG F	+/-5%		32	SLAG TEMP, AFT SEGMENT	M,2,16	
T000846		339.2	1533.00			0-2400 DEG F	+/-5%		32	SLAG TEMP, AFT SEGMENT	M,2,16	
T000847		270.0	931.50			+/-200 DEG	+/-1%			SLAG TEMP, AFT SEGMENT	M,2,16	
T000848		215.0	931.50			+/-200 DEG	+/-1%			THERMO, GEI, CENTER/FORWARD SEG	R,3	1U75838
T000849		135.0	1091.50			+/-200 DEG	+/-1%			THERMO, GEI, CENTER/FORWARD SEG	R,3	1U75838
T000850		45.0	1091.50			+/-200 DEG	+/-1%			THERMO, GEI, CENTER/FORWARD SEG	R,3	1U75838
T000851		325.0	1091.50			+/-200 DEG	+/-1%			THERMO, GEI, CENTER/FORWARD SEG	R,3	1U75838
T000852		270.0	1091.50			+/-200 DEG	+/-1%			THERMO, GEI, CENTER/FORWARD SEG	R,3	1U75838
T000853		215.0	1091.50			+/-200 DEG	+/-1%			THERMO, GEI, CENTER/FORWARD SEG	R,3	1U75838
T000854		135.0	1411.50			+/-200 DEG	+/-1%			THERMO, GEI, CENTER/FORWARD SEG	R,3	1U75838
T000855		45.0	1411.50			+/-200 DEG	+/-1%			THERMO, GEI, CENTER/AFT SEGMENT	R,3	1U75839
T000856		325.0	1411.50			+/-200 DEG	+/-1%			THERMO, GEI, CENTER/AFT SEGMENT	R,3	1U75839
T000857		270.0	1411.50			+/-200 DEG	+/-1%			THERMO, GEI, CENTER/AFT SEGMENT	R,3	1U75839
T000858		215.0	1411.50			+/-200 DEG	+/-1%			THERMO, GEI, CENTER/AFT SEGMENT	R,3	1U75839
T000859		320.0	1511.00			+/-200 DEG	+/-1%			THERMO, GEI, CENTER/AFT SEGMENT	R,3	1U75839
T000860		274.0	1511.00			+/-200 DEG	+/-1%			THERMO, GEI, AFT SEGMENT	R,3	1U75840
T000861		220.0	1511.00			+/-200 DEG	+/-1%			THERMO, GEI, AFT SEGMENT	R,3	1U75840
T000862		45.0	1535.00			+/-200 DEG	+/-1%			THERMO, GEI, AFT SEGMENT	R,3	1U75840
T000863		135.0	1535.00			+/-200 DEG	+/-1%			THERMO, GEI, AFT SEGMENT	R,3	1U75840
T000864		150.0	1700.54			+/-200 DEG	+/-1%			THERMO, GEI, AFT SEGMENT	R,3	1U75840
										THERMO, GEI, AFT SEGMENT	R,3	1U75840

TABLE A -- QM-8 INSTRUMENTATION LIST
(SEE LAST PAGE FOR NOTES AND DEFINITIONS)

INST NO	INST NO	ANG LOC	STATION FROM	STATION TO	MEAS DIR	EXPECTED RANGE	REQ ACC	FM (Hz)	DIG (SPS)	REMARKS	PRIORITY, NOTES	INSTALLED DRAWING
T000865		30.0	1700.54			+/-200 DEG	+/-1%			THERMO, GEI, AFT SEGMENT	R,3	1U75840
T000866		270.0	1700.54			+/-200 DEG	+/-1%			THERMO, GEI, AFT SEGMENT	R,3	1U75840
T000867		135.0	1751.50			+/-200 DEG	+/-1%			THERMO, GEI, AFT SEGMENT	R,3	1U75840
T000868		45.0	1751.50			+/-200 DEG	+/-1%			THERMO, GEI, AFT SEGMENT	R,3	1U75840
T000869		325.0	1751.50			+/-200 DEG	+/-1%			THERMO, GEI, AFT SEGMENT	R,3	1U75840
T000870		270.0	1751.50			+/-200 DEG	+/-1%			THERMO, GEI, AFT SEGMENT	R,3	1U75840
T000871		215.0	1751.50			+/-200 DEG	+/-1%			THERMO, GEI, AFT SEGMENT	R,3	1U75840
T000872		150.0	1820.60			+/-200 DEG	+/-1%			THERMO, GEI, AFT SEGMENT	R,3	1U75840
T000873		30.0	1820.60			+/-200 DEG	+/-1%			THERMO, GEI, AFT SEGMENT	R,3	1U75840
T000874		270.0	1820.60			+/-200 DEG	+/-1%			THERMO, GEI, AFT SEGMENT	R,3	1U75840
T000875		94.5	487.00			+/-200 DEG	+/-5%		32	IGNITER, GEI (IGNITER JOINT)	M,11,14,19	
T000876		90.0	480.00			+/-200 DEG	+/-5%		32	IGNITER, GEI (S&A JOINT)	M,11,14,19	
T000877		270.0	480.00			+/-200 DEG	+/-5%		32	IGNITER, GEI (S&A JOINT)	M,11,14,19	
T000878		274.5	487.00			+/-200 DEG	+/-5%		32	IGNITER, GEI (IGNITER JOINT)	M,11,14,19	
T000890		0.0	1091.50			+/-200 DEG	+/-5%			THERMO, CASE, CENTER/FORWARD SEG	R,1,3	1U75838
T000891		90.0	1091.50			+/-200 DEG	+/-5%			THERMO, CASE, CENTER/FORWARD SEG	R,1,3	1U75838
T000892		180.0	1091.50			+/-200 DEG	+/-5%			THERMO, CASE, CENTER/FORWARD SEG	R,1,3	1U75838
T000901		90.0	504.00			10-200 DEG F	+/-5%			FWD SEGMENT (GRAIN)	R,4	1U75882
T000902		270.0	504.00			10-200 DEG F	+/-5%			FWD SEGMENT (GRAIN)	R,4	1U75882
T000903		90.0	541.00			10-200 DEG F	+/-5%			FWD SEGMENT (CASE)	R,4	1U75882
T000904		270.0	541.00			10-200 DEG F	+/-5%			FWD SEGMENT (CASE)	R,4	1U75882
T000905		270.0	691.00			10-200 DEG F	+/-5%			FWD SEGMENT (CASE)	R,4	1U75882
T000906		270.0	691.00			10-200 DEG F	+/-5%			FWD SEGMENT (GRAIN)	R,4	1U75882
T000907		90.0	851.00			10-200 DEG F	+/-5%			FWD SEGMENT (GRAIN END)	R,4	1U75882
T000908		270.0	851.00			10-200 DEG F	+/-5%			FWD SEGMENT (GRAIN END)	R,4	1U75882
T000909A		90.0	1171.00			10-200 DEG F	+/-5%			AFT-CTR SEGMENT (GRAIN END)	R,4	1U75839

TABLE A -- QM-8 INSTRUMENTATION LIST
(SEE LAST PAGE FOR NOTES AND DEFINITIONS)

INST NO	INST NO	ANG LOC	STATION FROM	STATION TO	MEAS DIR	EXPECTED RANGE	REQ ACC	FM (Hz)	DIG (SPS)	REMARKS	PRIORITY, NOTES	INSTALLED DRAWING
T000909F		90.0	851.00			10-200 DEG F	+/-5%			FWD CTR SEGMENT (GRAIN END)	R,4	1U75838
T000910A		270.0	1171.00			10-200 DEG F	+/-5%			AFT CTR SEGMENT (GRAIN END)	R,4	1U75839
T000910F		270.0	851.00			10-200 DEG F	+/-5%			FWD CTR SEGMENT (GRAIN END)	R,4	1U75838
T000911A		90.0	1331.00			10-200 DEG F	+/-5%			AFT CTR SEGMENT (GRAIN)	R,4	1U75839
T000911F		90.0	1011.00			10-200 DEG F	+/-5%			FWD CTR SEGMENT (GRAIN)	R,4	1U75838
T000912A		90.0	1331.00			10-200 DEG F	+/-5%			AFT CTR SEGMENT (CASE)	R,4	1U75839
T000912F		90.0	1011.00			10-200 DEG F	+/-5%			FWD CTR SEGMENT (CASE)	R,4	1U75838
T000913A		90.0	1491.00			10-200 DEG F	+/-5%			AFT CTR SEGMENT (GRAIN END)	R,4	1U75839
T000913F		90.0	1171.00			10-200 DEG F	+/-5%			FWD CTR SEGMENT (GRAIN END)	R,4	1U75838
T000914A		270.0	1491.00			10-200 DEG F	+/-5%			AFT CTR SEGMENT (GRAIN END)	R,4	1U75839
T000914F		270.0	1171.00			10-200 DEG F	+/-5%			FWD CTR SEGMENT (GRAIN END)	R,4	1U75838
T000915		90.0	1491.00			10-200 DEG F	+/-5%			AFT SEGMENT (GRAIN END)	R,4	1U75840
T000916		270.0	1492.00			10-200 DEG F	+/-5%			AFT SEGMENT (GRAIN END)	R,4	1U75840
T000917		270.0	1681.00			10-200 DEG F	+/-5%			AFT SEGMENT (GRAIN)	R,4	1U75840
T000918		270.0	1681.00			10-200 DEG F	+/-5%			AFT SEGMENT (CASE)	R,4	1U75840
T000919		90.0	1853.00			10-200 DEG F	+/-5%			AFT SEGMENT (GRAIN)	R,4	1U75840
T000920		270.0	1853.00			10-200 DEG F	+/-5%			AFT SEGMENT (GRAIN)	R,4	1U75840
T000921		90.0	1853.00			10-200 DEG F	+/-5%			AFT SEGMENT (CASE)	R,4	1U75840
T000922		270.0	1853.00			10-200 DEG F	+/-5%			AFT SEGMENT (CASE)	R,4	1U75840
T000923		185.0	691.00			10-200 DEG F	+/-5%			AFT SEGMENT (CASE)	R,4	1U75840
T000924A		185.0	1331.00			10-200 DEG F	+/-5%			AFT CTR SEGMENT (CASE)	R,4	1U75839
T000924F		185.0	1011.00			10-200 DEG F	+/-5%			FWD CTR SEGMENT (CASE)	R,4	1U75838
T000925		185.0	1681.00			10-200 DEG F	+/-5%			AFT SEGMENT (CASE)	R,4	1U75840
T000950						0-120 DEG F	+/-10%			BAY TEMP	R,10	
T000953		0.0				0-200 DEG F	+/-10%			IGNITER GRAIN	R,1,4	1U75166
T000954		180.0				0-200 DEG F	+/-10%			IGNITER GRAIN	R,1,4	1U75166

TABLE A -- QM-8 INSTRUMENTATION LIST
(SEE LAST PAGE FOR NOTES AND DEFINITIONS)

INST NO	INST NO	ANG LOC	STATION FROM	STATION TO	MEAS DIR	EXPECTED RANGE	REQ ACC	FM (Hz)	DIG (SPS)	REMARKS	PRIORITY, NOTES	INSTALLED DRAWING
T001001		15.0	848.00			0-200 DEG F	+/-5%		32	HEATER TEMP,FJPS	R,1,11,19	1U75347
T001002		135.0	848.00			0-200 DEG F	+/-5%		32	HEATER TEMP,FJPS	R,1,11,19	1U75347
T001003		195.0	848.00			0-200 DEG F	+/-5%		32	HEATER TEMP,FJPS	R,1,11,19	1U75347
T001004		285.0	848.00			0-200 DEG F	+/-5%		32	HEATER TEMP,FJPS	R,1,11,19	1U75347
T001005		15.0	1168.00			0-200 DEG F	+/-5%		32	HEATER TEMP,FJPS	R,1,11,19	1U75347
T001006		135.0	1168.00			0-200 DEG F	+/-5%		32	HEATER TEMP,FJPS	R,1,11,19	1U75347
T001007		195.0	1168.00			0-200 DEG F	+/-5%		32	HEATER TEMP,FJPS	R,1,11,19	1U75347
T001008		285.0	1168.00			0-200 DEG F	+/-5%		32	HEATER TEMP,FJPS	R,1,11,19	1U75347
T001009		15.0	1488.00			0-200 DEG F	+/-5%		32	HEATER TEMP,FJPS	R,1,11,19	1U75347
T001010		135.0	1488.00			0-200 DEG F	+/-5%		32	HEATER TEMP,FJPS	R,1,11,19	1U75347
T001011		195.0	1488.00			0-200 DEG F	+/-5%		32	HEATER TEMP,FJPS	R,1,11,19	1U75347
T001012		285.0	1488.00			0-200 DEG F	+/-5%		32	HEATER TEMP,FJPS	R,1,11,19	1U75347
T001013		0.0	1876.70			0 TO 400 DEG F	+/-5%		32	FREE AIR TEMPERATURE	R,19,21	
T001014		120.0	1876.70			0 TO 400 DEG F	+/-5%		32	FREE AIR TEMPERATURE	R,19,21	
T001015		240.0	1876.70			0 TO 400 DEG F	+/-5%		32	FREE AIR TEMPERATURE	R,19,21	
T001017						0-200 DEG F	+/-5%		32	AFT SKIRT CONDITIONING INLET	R,19,21	
T001018						0-200 DEG F	+/-5%		32	AFT SKIRT CONDITIONING OUTLET	R,19,21	
T001199		82.0	1891.00			+/-200 DEG F	+/-1%		32	AFT EXIT CONE	R,1,19,21	1U76123
T001200		52.0	1891.00			+/-200 DEG F	+/-1%		32	AFT EXIT CONE	R,1,2,19,21	1U76123
T001201		42.0	1891.00			+/-200 DEG F	+/-1%		32	AFT EXIT CONE	R,1,19,21	1U76123
T001202		62.0	1891.00			+/-200 DEG F	+/-1%		32	AFT EXIT CONE	R,1,19,21	1U76123
T001203		22.0	1891.00			+/-200 DEG F	+/-1%		32	AFT EXIT CONE	R,1,19,21	1U76123
T001204		52.0	1891.00			+/-200 DEG F	+/-1%		32	AFT EXIT CONE	R,1,19,21	1U76123
T001206		52.0	1878.13			0-1000 F	+/-5%		32	FWD EXIT CONE BOND	R,1,2,19,21	1U52839
T001207		42.0	1878.13			0-1000 F	+/-5%		32	FWD EXIT CONE BOND	R,1,19,21	1U52839
T001208		62.0	1878.13			0-1000 F	+/-5%		32	FWD EXIT CONE BOND	R,1,19,21	1U52839

TABLE A -- QM-8 INSTRUMENTATION LIST
(SEE LAST PAGE FOR NOTES AND DEFINITIONS)

INST NO	INST NO	ANG LOC	STATION FROM	STATION TO	MEAS DIR	EXPECTED RANGE	REQ ACC	FM (Hz)	DIG (SPS)	REMARKS	PRIORITY, NOTES	INSTALLED DRAWING
T001209		82.0	1878.13			0-1000 F	+/-5%		32	FWD EXIT CONE BOND	R,1,19,21	1U52839
T001210		52.0	1878.13			0-1000 F	+/-5%		32	FWD EXIT CONE BOND	R,1,19,21	1U52839
T001300		0.0	1850.00			0-1000 F	+/-5%		32	TEMP, BOOT CAVITY	R,1,19,20	1U76637
T001301		0.0	1850.00			0-1000 F	+/-5%		32	TEMP, BOOT CAVITY	R,1,19,20	1U76637
T001310		270.0	486.50			0-200 DEG F	+/-5%		32	FWD DOME (R=15.00)	R,23	
T001311		270.0	486.50			0-200 DEG F	+/-5%		32	FWD DOME (R=18.00)	R,23	
T001312		270.0	486.50			0-200 DEG F	+/-5%		32	FWD DOME (R=21.00)	R,23	
T001313		270.0	486.50			0-200 DEG F	+/-5%		32	FWD DOME (R=24.00)	R,23	
T001314		270.0	486.50			0-200 DEG F	+/-5%		32	FWD DOME (R=27.00)	R,23	
X000001						+/-0.1 SEC			32	PRIMARY IGNITION (T-0)	M,9	
X000004						+/-0.1 SEC			32	QUENCH SYSTEM FWD	R,9	
X000005						+/-0.1 SEC			32	QUENCH SYSTEM AFT	R,9	
X000006									32	HYDR. PRESS. O.K., TILT ACTUATOR	R,5	
X000007									32	HYDR. PRESS. O.,K., ROCK ACTUATOR	R,5	
X000017									32	ROCK SERVOVALVE A FAIL	R,5	
X000018									32	ROCK SERVOVALVE B FAIL	R,5	
X000019									32	ROCK SERVOVALVE C FAIL	R,5	
X000020									32	ROCK SERVOVALVE D FAIL	R,5	
X000021									32	TILT SERVOVALVE A FAIL	R,5	
X000022									32	TILT SERVOVALVE B FAIL	R,5	
X000023									32	TILT SERVOVALVE C FAIL	R,5	
X000024									32	TILT SERVOVALVE D FAIL	R,5	
X000026						+/-0.1 SEC				(T-0) FM	M,9	
SAPM001		30.0	1850.00				+/-1%		40	STAND-ALONE PRESS. (BT. CAV.)	R,1,22	
SAPM002		330.0	1850.00				+/-1%		40	STAND-ALONE PRESS. (BT. CAV.)	R,1,22	

TABLE A—QM3 INSTRUMENTATION LIST

PRIORITY:

M MANDATORY, APPROVAL BY VP SPACE PROGRAMS, VP SPACE ENGINEERING, AND NASA SRM PROJECT MANAGER REQUIRED FOR ELIMINATION.
R REQUIRED, APPROVAL BY PROGRAM MANAGER AND PROJECT ENGINEER REQUIRED FOR ELIMINATION OF MEASUREMENT.

NOTES:

1 THE NOTED INSTRUMENTS ARE REFERENCED ON THE FIELD OF THE DRAWING, BUT WERE INSTALLED ON A PREVIOUS DRAWING.
2 THE NOTED INSTRUMENT WILL REQUIRE POST TEST SAMPLING PER TEST PLAN REQUIREMENTS.
3 UPON RECEIPT OF SEGMENTS TO TEST BAY, RECORD EVERY FOUR HOURS FROM T-45 DAYS (MINIMUM) TO T-10 DAYS, AND THEN HOURLY FROM T-10 DAYS TO T-1 HOUR.
4 NOTED INSTRUMENTS ARE USED TO DETERMINE TEMPERATURE PRIOR TO FIRING. DATA SHALL BE RECORDED AT 72 +/-2 HOUR INTERVALS FROM T-45 DAYS (MINIMUM) TO T-10 DAYS AND AT 24 +/-2 HOUR INTERVALS FROM T-10 DAYS TO T-2 HOURS.
5 THE NOTED INSTRUMENT IS PART OF THE NOZZLE ACTUATOR CONTROL SYSTEM.
6 THE NOTED INSTRUMENT WILL BE RECORDED REDUNDANTLY ON FM WITH AN ACCURACY OF +/-10%.
7 THE NOTED INSTRUMENT IS PART OF THE THRUST STAND.
8 THE NOTED INSTRUMENT SHALL BE RECORDED REDUNDANTLY ON FM WITH AN ACCURACY OF +/-5%.
9 THE NOTED MEASUREMENT IS PART OF THE TEST BAY FACILITY.
10 TEST BAY TEMPERATURE SHALL BE RECORDED CONTINUOUSLY WHILE TEST ARTICLE IS IN THE TEST BAY.
11 INSTRUMENT SHALL BE SAMPLED EVERY HOUR DURING HEATER OPERATION, THEN CONTINUOUSLY FROM T-0 TO T+5 MINUTES.
12 REDUNDANTLY RECORD DIGITALLY WITH AN ACCURACY OF +/-5%.
13 ONE OF THREE SENSORS AT EACH OF FOUR ANGULAR LOCATIONS MUST BE OPERATIONAL TO MEET MANDATORY REQUIREMENT.
14 ONE SENSOR FROM EACH OF THE FOLLOWING COLUMNS MUST BE OPERATIONAL TO MEET MANDATORY REQUIREMENT.

P000002	T000830	T000640	T000641	T000875	T000876	T000142	T000839
P000003	T000831	T000842	T000642	T000878	T000877	T000143	T000840
			T000832	T000843		T000144	T000841
						T000145	T000842
							T000843

15 TWO SENSORS FROM EACH OF THE FOLLOWING COLUMNS MUST BE OPERATIONAL TO MEET MANDATORY REQUIREMENT.

S000878	S000874	E000010	E000011	F000009	I000013	T000816	T000807
S000880	S000875	E000012	E000013	F000010	I000014	T000817	T000808
S000877	S000887	E000014	E000015	F000011	I000015	T000818	T000809

16 THREE SENSORS FROM EACH OF THE FOLLOWING COLUMNS MUST BE OPERATIONAL TO MEET MANDATORY REQUIREMENT

T000638	T000837
T000833	T000838
T000834	T000639
T000835	T000844
T000836	T000845
	T000846

17 NOT USED

18 MANDATORY REQUIREMENTS WILL NOT BE MET WHEN ANY TWO ADJACENT SENSORS (HORIZONTAL OR VERTICAL) IN THE FOLLOWING LIST ARE INOPERABLE.

R000643	R000661	S001175
R000644	R000662	S001176
R000743	R000745	S001177
R000744	R000746	S001178
R000725	R000727	S001179
R000726	R000728	S001180
R000649	R000667	S001181
R000650	R000668	S001182
R000655	R000673	S001187
R000656	R000674	S001188
R000653	R000671	S001185
R000654	R000672	S001186
R000657	R000675	S001189
R000658	R000676	S001190
R000713	R000715	S001183
R000714	R000716	S001184
R000659	R000677	S001191
R000660	R000678	S001192

19 NOTED INSTRUMENT SHALL BE MONITORED ON ENGINEERING UNITS DISPLAY, AND PREFIRE SAMPLING SHALL BE PREFORMED PER TEST PLAN REQUIREMENTS.

20 START RECORDING WHEN TEST BAY COLD CONDITIONING BEGINS, PER TEST PLAN REQUIREMENTS.

21 START RECORDING WHEN AFT SKIRT CONDITIONING BEGINS, PER TEST PLAN REQUIREMENTS.

22 NOTED INSTRUMENTS REQUIRE TRIGGERING PRIOR TO STATIC TEST, BUT DO NOT REQUIRE DATA ACQUISITION. DATA OBTAINED UPON POST FIRE NOZZLE DISASSEMBLY.

23 PREFIRE SAMPLING PER TEST PLAN ONLY.

INSTRUMENT CODE:

A---ACCELERATION	E---VOLTAGE	K---TVC INTERLOCK	R---STRAIN	T---TEMPERATURE	I---CURRENT
D---DISPLACEMENT	F---FORCE	P---PRESSURE	S---STRAIN	X---EVENT	