FR-20886-2

SSME ALTERNATE TURBOPUMP DEVELOPMENT PROGRAM

DESIGN VERIFICATION TEST PLAN
HOT GAS MANIFOLD WATER FLOW MODEL
HPOTP DVS DR NO. 3.1.2.2.5.1, VM NO. 4.1.3.2.4.1 C
HPFTP DVS DR NO. 3.1.2.2.4.1, VM NO. 4.1.3.2.5.1 C

JUNE 1989

Prepared under
NASA Contract NAS8-36801
DRL Sequence No. SE-07
WBS No. 1.5.1.2

Prepared for
George C. Marshall Space Flight Center
National Aeronautics and Space Administration
Marshall Space Flight Center, Al 35812

Prepared by
Pratt & Whitney
P. O. Box 109600
West Palm Beach, FL 33410-9600

(NASA-CR-183766) SSME ALTERNATE TURBOPUMP DEVELOPMENT PROGRAM. DESIGN VERIFICATION TEST PLAN. HOT GAS MANIFOLD WATER FLOW MODEL HPOTP DVS DR NO. 3.1.2.2.5.1, VM NO. 4.1.3.2.4.1 C; HPFTP DVS DR NO. 3.1.2.2.4.1, 00/20 N89-71477 Unclas 0233351

UNITED TECHNOLOGIES PRATT&WHITNEY

Printed in the United States of America

105

Internal Correspondence

UNITED TECHNOLOGIES

Government Products Division

TO: D. L. Elmore*
FROM: G. Wolfbrandt
SUBJECT: Test Plan for the SSME Phase II and II+ TAD/DIFFUSER/HGM Water Flow Models
DATE: 13 July 1988
COPIES: Distribution

REFERENCES:

1. G. B. Cox, Jr, and C. C. Dill, "SSME Hot Gas Manifold Flow Comparison Tests," AIAA 26th Aerospace Sciences Meeting, January 11-14, 1988.

2. G. B. Cox, Jr., to E. White, memo, "ATD HGS Hot Gas Manifold Pressure Losses," May 2, 1988.

SUMMARY

This memo details the objectives, requirements, configurations, instrumentation and test procedures for the water flow testing of the full-scale transparent SSME Phase II and Phase II+ turnaround duct (TAD)/diffusers/hot gas manifold (HGM) flow models. These tests will be conducted at the NASA-Marshall Space Flight Center (MSFC) Dynamic Fluid Flow Facility. Similar tests were previously run at MSFC with a half-scale model as reported in Reference 1.

OBJECTIVES

The purpose of the full-scale SSME water model testing is to verify the acceptability of the ATD HPFTP and HPOTP TAD/diffuser flowpaths and provide data to support redesign, if necessary. This will be done by meeting the following objectives:

1. Ascertain the flow distribution and patterns in the high pressure fuel turbopump (HPFTP) and high pressure oxidizer turbopump (HPOTP) TAD's, diffuser sections, and HGM.

2. Determine the circumferential variation in flow direction for both the Phase II and Phase II+ HGM configurations.

3. Verify that the HPFTP and HPOTP TAD's are separation-free.

4. Compare the flow characteristics of three different HPFTP diffuser strut designs.

5. Measure the total pressure losses, static pressure recoveries, and local flow angles in the TAD's, diffuser sections, and HGM.

REQUIREMENTS

The required water flowrates and supply pressures are listed in Table I. Pressures will be monitored to avoid damage to the test models and establish similarity between tests. Flow visualization will be accomplished using aluminum particles and air bubbled through existing pressure taps; the resulting flow patterns will be photographed with still and high speed motion picture cameras, and traced onto clear plastic wrapped around the flow models.

CONFIGURATIONS

The SSME assembled flow model is illustrated in Figure 1; Figure 2 shows cross sections of the TAD rigs and bowls, along with location angle conventions. Tests will be conducted with full-scale water models of the SSME Phase II and Phase II+ HGM's. Phase II tests will use existing MSFC bowls; Phase II+ tests will incorporate portions of the Phase II air model. For the Phase II+ testing, P&W will supply transparent pre-burner, fuel and LOX bowl and transfer tube sections. P&W will also provide full-scale HPFTP and HPOTP water flow turbine simulators to be mounted on the HGM flow models. These simulators will incorporate metering orifice plates to simulate turbine pressure drop, and replaceable turbine swirl vanes to simulate the 65% and 109% engine power levels. In addition, the HPFTP simulators will have five interchangeable diffuser and strut assemblies for evaluating the flow characteristics of different strut designs.

INSTRUMENTATION

Static pressure taps, total pressure rakes, and 2D and 3D directional probes will be located throughout the water flow model. The fuel side of the Phase II model will be instrumented with 160 static pressure taps, 18 total pressure rakes, and 27 directional probes, while the LOX side will have 107 static pressure taps and 13 total pressure rakes. The Phase II+ fuel-side measurements will include 159 static pressure taps, 27 total pressure rakes, and 43 directional probes. The Phase II+ LOX side will be monitored by 112 static pressure taps, 13 total pressure rakes, and 15 directional probes. In addition, the racetrack and main injector will be instrumented with 89 static pressure taps, and another 51 static pressure taps, 5 total pressure rakes, and 5 directional probes will be located in the transfer ducts. Not all measurements will be connected at the same time. A limit of 399 measurements can be recorded at one time, so the instrumentation will have to be broken up into two groups. Also, at the locations where both total pressure rakes and directional probes exist, either the rakes or the probes will be connected, but not both.

Measurements will be made in a number of planes in the fuel and oxidizer HGM flowpaths, and most instrumentation planes will have a number of measurement locations spaced circumferentially in the plane. Phase II configuration simulator measurement locations are shown in Figures 3 and 4, while the Phase II+ measurement locations are illustrated in Figures 5 and 6. Tables II and III detail the instrumentation along with its locations, header names, ranges, accuracies, and groupings. Phase II and II+ measurements are listed

separately, since differences exist in fuel bowl and HGM measurement locations between the Phase II and Phase II+ tests.

DATA ACQUISITION AND ANALYSIS

Test data will be acquired using the facility data acquisition and analysis systems and stored into AFAS/DBS (Aero/Fluids Analysis System/Data Base Storage). Data points will be recorded only at steady-state conditions, but will be taken as scans over an interval of time. This time interval will be defined during initial test runs, which will determine the variation in flow conditions with time.

Test data will be reduced on-line and off-line. A set of run identification parameters will be entered into the computer system before each run so that the run conditions associated with each set of data will be permanently recorded. Table IV lists the information that will be input.

Some on-line data reduction is necessary to set the test flow conditions and insure that reasonable data is recorded. Additional detailed data reduction will be done later off-line to determine such things as velocity heads, pressure loss and recovery coefficients, and transverse pressure difference coefficients. Appendix A contains the equations used to do the on-line and off-line data reduction. Reduced data will be plotted using P&W's Unigraph System.

TEST PLAN

Testing will be accomplished at the NASA-MSFC Fluid Flow Facility. A flow schematic for the facility is shown in Figure 7. A flow calibration test will be the first test conducted to establish what rig pressure will be at the required test maximum flowrate. Test procedures for the flow calibration test and subsequent model testing are given in Tables V and VI. Test matrices appear in Figures 8 and 9. Since a maximum of only 399 measurements can be recorded at once, two runs will have to be conducted for each test configuration/flowrate combination. Group I instrumentation consists mainly of fuel-side measurements plus some reference oxidizer-side measurements while Group II instrumentation is made up of oxidizer-side measurements, some reference fuel-side measurements and transfer duct and main injector measurements. These groupings are defined in Tables II and III.

The test matrix defined in Figures 8 and 9 is flexible. Some combinations of model configurations and flow rates will be deleted once results have been obtained in the early testing.

EXPECTED RESULTS

Figure 10 shows expected flow fields in the HGM TAD for the Phase II and II+ configurations with no struts or posts, based on the half-scale water flow test program results reported in Reference 1. Besides having less flow swirl, the Phase II+ flowfield has its flow division region shifted from 160-165

degrees in the Phase II configuration to 140-145 degrees in the Phase II+ flowpath.

Values of fuel-side static pressure losses, total pressure loss coefficients, and transverse static pressure coefficients for the 109% power level (2576 GPM) can also be estimated from the half-scale results. Since the flowrates used in the current testing are four times those of the half-scale tests, similarity has been preserved, and the full-scale pressure profiles should be similar to the half-scale results.

Expected fuel-side static pressure losses for Phases II and II+ configurations are given in Figures 11 through 14. The pressure loss values are relative to the bullnose static pressure.

Estimated fuel-side total pressure loss coefficients relative to the preburner duct total pressure and the swirl vane exit total pressure for Phases II and II+ configurations are shown in Figures 15 through 18. Pressure loss coefficients are calculated by subtracting the preburner duct or swirl vane exit pressure from the local pressure and dividing by the reference velocity head. Estimates are made for strutless diffusers and ones with strut and post assemblies. Figure 19 shows estimated oxidizer-side total pressure loss coefficients relative to the turbine exit. The oxidizer-side predictions are derived from information presented in the memo listed under Reference 2.

Predicted fuel-side transverse static pressure coefficients at three different stations are given in Figures 20 through 29. These are calculated by subtracting the average pressure at a station from the local pressure and dividing by the reference velocity head. Predictions are given for Phases II and II+ configurations and for strutless and strutted diffusers.

G. Wolfbrandt

GW/wk

Attachments (* only)

TABLE I. WATER FLOW TEST CONDITIONS

Fuel-Side Flowrate (GPM)	Fuel Side Supply Pressure (PSIG)	Oxidizer-Side Flowrate (GPM)	Oxidizer-Side Supply Pressure (PSIG)
450	TBD 35	194	TBD 35
900	TBD 24	388	TBD 24
1350	TBD 16	582	TBD 16
1800	TBD 7	776	TBD [illegible]

TABLE II

PHASE II INSTRUMENTATION SCHEDULE

WATER FLOW MODEL ATD HPFTP TAD/DIFFUSER/HGM

NO.	ITEM DESCRIPTION	ANGULAR LOCATION (DEG)	HEADER	RANGE	UNITS	RECORD STATIC	RECORD TRANS.	ACCURACY	RECORDING ANA	RECORDING DIG	REMARKS	GROUP	RECORDING CHANNEL
	PREBURNER DUCT, STATIC	0	PS-FDD01	0-50	PSIA	X		+/- 1/4%			1.32", ALONG TURBINE AXIS, FROM PLANE Z	1,2	
		180	02										
	HUB CAP, STATIC [2]	CL	PS-FCC	0-50	PSIA	X		+/- 1/4%				1,2	
	TURBINE INLET, STATIC O.D.	347.13	PS-FB01	0-50	PSIA	X					0.68" UPSTREAM FROM INLET FACE OF ORIFICE PLATE	1,2	
	[3]	77.13	02										
		167.13	03										
		257.13	04										
	TURBINE VANE AREA A, STATIC, O.D.	0.0	PS-FVA01	0-35	PSIA	X		+/- 1/4%			0.125" DOWNSTREAM FROM ORIFICE PLATE EXIT.	1	
	[4]	90.0	02										
		180.0	03										
		270.0	04										
	TURBINE VANE AREA B, STATIC, O.D.	0.0	PS-FVB01								0.5" DOWNSTREAM FROM PLANE OF STATIC TAPS [4]		
	[5]	90.0	02										
		180.0	03										
		270.0	04										
	TURBINE VANE AREA C, STATIC, O.D.	0.0	PS-FVC01								0.5" DOWNSTREAM FROM PLANE OF STATIC TAPS [5]		
	[6]	90.0	02										
		180.0	03										
		270.0	04										
	TURBINE VANE AREA D, STATIC, O.D.	6.0	PS-FVD01								12.31", ALONG TURBINE AXIS, FROM PLANE Z. (SEE ATTACHED INSTRUMENTATION MAP)		
	[7]	96.0	02										
		186.0	03										
		276.0	04										
	TURBINE VANE EXIT, CHANNEL I.D., STATIC	9.0	PS-FC01	0-35	PSIA	X		+/- 1/4%			13.25" (AXIALLY) FROM PLANE Z.	1	
		31.5	02									1	
		54.0	03									1	
		76.5	04									1,2	
		99.0	05									1,2	
	[8]	121.5	06									1	
		144.0	07									1	
		166.5	08									1,2	
		189.0	09									1,2	
		211.5	10									1	
		234.0	11									1	
		256.5	12									1,2	
		279.0	13									1,2	
		301.5	14									1	
		324.0	15									1	
		346.5	16									1	

NO.	ITEM DESCRIPTION	ANGULAR LOCATION (DEG)	HEADER	RANGE	UNITS	RECORD STATIC/TRANS.		ACCURACY	RECORDING ANA	RECORDING DIG	REMARKS	GROUP	RECORDING CHANNEL
	TURBINE VANE EXIT'	9.0	PS-FC17	0-35	PSIA	X		+/- 1/4%			SAME AXIAL LOCATION AS	1	
	CHANNEL O.D.,	54.0	18								|8|.		
	STATIC	99.0	19										
		144.0	20										
		189.0	21										
		234.0	22										
	|9|	279.0	23										
		324.0	24										
	45 DEGREES INTO TAD,	0	PS-FT101	0-35	PSIA	X		+/- 1/4%			14.41" (AXIALLY) FROM	1	
	CHANNEL I.D.,	45	02								PLANE Z.*		
	STATIC	90	03										
		135	04										
		180	05										
	|10|	225	06										
		270	07										
		315	08										
	90 DEGREES INTO TAD,	45	PS-FT201	0-35	PSIA	X		+/- 1/4%			13.89" (AXIALLY) FROM	1	
	TOP OF DUCT,	135	02								PLANE Z.*		
	STATIC	225	03										
	|11|	315	04										
	90 DEGREES INTO TAD,	0	PS-FD01	0-35	PSIA	X		+/- 1/4%			14.80" (AXIALLY) FROM	1	
	BOTTOM OF DUCT,	45	02								PLANE Z.*		
	STATIC	90	03										
		135	04										
	|12|	180	05										
		225	06										
		270	07										
		315	08										
	TAD, 45 DEGREES UP-	45	PS-FT301	0-35	PSIA	X		+/- 1/4%			13.82" (AXIALLY) FROM	1	
	STREAM FROM EXIT,	135	02								PLANE Z.*		
	TOP OF DUCT, STATIC	225	03										
	|13|	315	04										
	TAD, 45 DEGREES UP-	0	PS-FT305	0-35	PSIA	X		+/- 1/4%			14.36" (AXIALLY) FROM	1	
	STREAM FROM EXIT,	45	06								PLANE Z.*		
	BOTTOM, STATIC	90	07										
	|14|	135	08										
		180	09										
		225	10										
		270	11										
		315	12										

* SEE ATTACHED INSTRUMENTATION MAP

NO.	ITEM DESCRIPTION	ANGULAR LOCATION (DEG)	HEADER	RANGE	UNITS	RECORD STATIC/TRANS.	ACCURACY	RECORDING ANA	RECORDING DIG	REMARKS	GROUP	RECORDING CHANNEL
[15]	TAD, EXIT, I.D., STATIC	45	PS-FE01	0-35	PSIA	X	+/- 1/4%			13.63", ALONG TURBINE AXIS, FROM PLANE Z.*	1	
		135	02									
		225	03									
		315	04									
[16]	TAD, EXIT, O.D., STATIC	355	PS-FE05	0-35	PSIA	X	+/- 1/4%			13.89", ALONG TURBINE AXIS, FROM PLANE Z.	1	
		35	06									
		85	07									
		125	08									
		175	09									
		215	10									
		265	11									
		305	12									
[17]	DIFFUSER SECTION, I.D. PLANE DA, STATIC	11.25	PS-FDA01	0-35	PSIA	X	+/- 1/4%			PLANES DA, DB, AND DC ARE EQUALLY SPACED, AXIALLY BETWEEN TAD EXIT AND DIFFUSER EXIT. ALL TAPS ON I.D.	1	
		191.25	02									
[18]	DIFFUSER SECTION, I.D. PLANE DB, STATIC	11.25	PS-FDB01	0-35	PSIA	X	+/- 1/4%				1	
		191.25	02									
[19]	DIFFUSER SECTION, I.D. PLANE DC, STATIC	11.25	PS-FDC01	0-35	PSIA	X	+/- 1/4%				1	
		191.25	02									
[20]	FUEL BOWL, PLANE F, I.D., STATIC	10	PS-FF01	0-35	PSIA	X	+/- 1/4%			PLANE F LOCATED IMMEDIATELY DOWNSTREAM FROM DIFFUSER EXIT.	1	
		35	02									
		55	03									
		75	04									
		95	05									
		120	06									
		145	07									
		170	08									
		190	09									
		215	20									
		240	21									
		265	22									
		285	23									
		305	24									
		325	25									
		350	26									
[22]	FUEL BOWL, PLANE H, I.D., STATIC	0	PS-FH07	0-35	PSIA	X	+/- 1/4%			6.55 INCHES, AXIALLY FROM PLANE Z.*	1	
		22.5	08									
		85	09									
		135	10									

* SEE ATTACHED INSTRUMENTATION MAP.

NO.	ITEM DESCRIPTION	ANGULAR LOCATION (DEG)	HEADER	RANGE	UNITS	RECORD STATIC/TRANS.		ACCURACY	RECORDING ANA	DIG	REMARKS	GROUP	RECORDING CHANNEL
	TURBINE INLET, RAKE, 3 TOTALS CENTERED ON EQUAL WIDTH CON-	347.13	PT-FB01-RA	0-50	PSIA	X		+/- 1/4%			PROBE INLETS IN SAME PLANE AS STATIC TAPS |3| .	1,2	
	CENTRIC BANDS. (1)		RB										
			RC										
		167.13	02-RA										
			RB										
			RC										
	TURBINE VANE EXIT, RAKE, 4 TOTALS CENTERED ON EQUAL WIDTH CONCENTRIC	42.88	PT-FC01-RA	0-35	PSIA	X		+/- 1/4%			PROBE INLETS IN SAME PLANE AS STATIC TAPS |8| & |9|	1	
			RB										
			RC										
			RD								----------		
	BANDS (2)	87.88	02-RA								INDIVIDUAL RAKES MAY BE OPTIONALLY REPLACED BY TRAVERSABLE 2-D DIRECT-	1,2	
			RB										
			RC										
			RD								IONAL PROBES.		
		132.88	03-RA									1	
			RB										
			RC										
			-RD										
		177.88	04-RA									1,2	
			RB										
			RC										
			RD										
		222.88	05-RA									1	
			RB										
			RC										
			RD										
		267.88	06-RA									1,2	
			RB										
			RC										
			RD										
		312.88	07-RA									1	
			RB										
			RC										
			RD										
		357.88	08-RA									1,2	
			RB										
			RC										
			RD										
	TAD EXIT, RAKE, 4 TOTALS CENTERED ON EQUAL WIDTH CONCENTRIC BANDS.	5	PT-FE01-RA	0-35	PSIA	X		+/- 1/4%			PROBE INLETS IN SAME PLANE AS STATIC TAPS |15|,|16|.	1	
			RB										
			RC										
			RD										
	(3)	45	02-RA										
			RB										
			RC										
			RD										

NO.	ITEM DESCRIPTION	ANGULAR LOCATION (DEG)	HEADER	RANGE	UNITS	RECORD STATIC/TRANS.		ACCURACY	RECORDING ANA	RECORDING DIG	REMARKS	GROUP	RECORDING CHANNEL
	CONTINUATION OF (3)	95	PT-FE03-RA	0-35	PSIA	X		+/- 1/4%				1	
			RB										
			RC										
			RD										
		135	04-RA										
			RB										
			RC										
			RD										
		185	05-RA										
			RB										
			RC										
			RD										
		225	06-RA										
			RB										
			RC										
			RD										
		275	07-RA									1	
			RB										
			RC										
			RD										
		315	08-RA										
			RB										
			RC										
			RD										
	90 DEGREES INTO TAD, 2-D DIRECTIONAL <1>	22.5	PT-FD01-2D1	+/-30	DEGREES	X		+/- 1/4%			TRAVERSABLE	1	
			PS-FD01-2D2										
			DP-FD01-2D3										
											P2 P1 P3 HIGH		
		67.5	02-2D1				1						
			2D2										
			2D3										
											PORT ORIENTATION		
		112.5	03-2D1								AT EACH PROBE, DP-XXXX-2D3 = P3 - P2		
			2D2										
			2D3										
		157.5	04-2D1										
			2D2										
			2D3										

NO.	ITEM DESCRIPTION	ANGULAR LOCATION (DEG)	HEADER	RANGE	UNITS	RECORD STATIC/TRANS.		ACCURACY	RECORDING ANA	RECORDING DIG	REMARKS	GROUP	RECORDING CHANNEL
	CONTINUATION OF <1>	202.5	PT-FD05-2D1 PS-FD05-2D2 DP-FD05-2D3	+/-30	DEGREES	X		+/- 1/4%				1	
		247.5	06-2D1 2D2 2D3										
		292.5	07-2D1 2D2 2D3										
		337.5	08-2D1 2D2 2D3										
	DOWNSTREAM FROM TURBINE VANE EXIT, 2-D DIRECTIONAL <2>	42.88	PT-FC01-2D1 PS-FC01-2D2 DP-FC01-2D3	+/-30	DEGREES	X		+/- 1/4%			TRAVERSABLE SAME AXIAL LOCATION AS (2). INDIVIDUAL PROBES OPTIONALLY REPLACEABLE BY RAKES (2) SEE NOTE, UNDER <1>, FOR PORT CONVENTION	1	
		87.88	02-2D1 2D2 2D3										
		132.88	03-2D1 2D2 2D3										
		177.88	04-2D1 2D2 2D3										
		222.88	05-2D1 2D2 2D3										
		267.88	06-2D1 2D2 2D3										
		312.88	07-2D1 2D2 2D3										
		357.88	08-2D1 2D2 2D3										
	TAD EXIT, 3-D DIRECTIONAL. <3>	5	PT-FE01-3D1 PS-FE01-3D2 DP-FE01-3D3 PS-FE01-3D4 DP-FE01-3D5	+/-30	DEGREES	X		+/- 1/4%			TRAVERSABLE SAME AXIAL LOCATION AS (3)	1	

NO.	ITEM DESCRIPTION	ANGULAR LOCATION (DEG)	HEADER	RANGE	UNITS	RECORD STATIC/TRANS.		ACCURACY	ALOG TAPE	CM	REMARKS	GROUP	RECORDING CHANNEL
	CONTINUATION OF <3>	45	PT-FE02-3D1	+/-30	DEGREES	X		+/- 1/4%			INDIVIDUAL PROBES OPT-	1	
			PS-FE02-3D2								IONALLY REPLACEABLE		
			DP-FE02-3D3								BY RAKES (3)		
			PS-FE02-3D4								----------		
			DP-FE02-3D5										
		95	03-3D1								----------		
			3D2								| + |		
			3D3								| P5(HIGH) |		
			3D4								| |		
			3D5								| + + + |		
		135	04 3D1								| P2 P1 P3 |		
			3D2								| (HIGH) |		
			3D3								| + |		
			3D4								| P4 |		
			3D5								----------		
		185	05-3D1								PORT ORIENTATION		
			3D2										
			3D3								AT EACH PROBE,		
			3D4								DP-XXXX-3D3 = P3 - P2		
			3D5								DP-XXXX-3D5 = P5 - P4		
		225	06-3D1										
			PT-FE06-3D2									1	
			3D3										
			3D4										
			3D5										
		275	07-3D1										
			3D2										
			3D3										
			3D4										
			3D5										
		315	08-3D1										
			3D2										
			3D3										
			3D4										
			3D5										

TABLE II (CONTINUED)

PHASE II INSTRUMENTATION SCHEDULE

WATER FLOW MODEL ATD HPOTP TAD/DIFFUSER/HGM

NO.	ITEM DESCRIPTION	ANGULAR LOCATION (DEG)	HEADER	RANGE	UNITS	RECORD STATIC/TRANS.	ACCURACY	ANALOG TAPE	ANALOG CM	REMARKS	GROUP	RECORDING CHANNEL
	HUB CAP STATIC |1|	CL	PS-XA	0-35	PSIA	X	+/- 1/4%				1,2	
	TURBINE INLET, I. D., STATIC	45.0	PS-XTI01	0-35	PSIA	X	+/- 1/4%			0.45" UPSTREAM FROM INLET SIDE OF ORIFICE PLATE	1,2	
		90.0	02									
		202.5	03									
	|2|	270.0	04							* 9.59		
	TURBINE VANE AREA A, O. D., STATIC |3|	1.88	PS-XVA01	0-35	PSIA	X	+/- 1/4%			0.125" DOWNSTREAM FROM ORIFICE PLATE EXIT.	2	
		91.88	02									
		181.88	03							* 8.51		
		271.88	04									
	TURBINE VANE AREA B, O. D., STATIC |4|	1.88	PS-XVB01							0.5" DOWNSTREAM FROM PLANE OF TAPS |3|		
		91.88	02									
		181.88	03							* 8.01		
		271.88	04									
	TURBINE VANE AREA C, O. D., STATIC |5|	1.88	PS-XVC01							0.5" DOWNSTREAM FROM PLANE OF TAPS |4|		
		91.88	02									
		181.88	03							* 7.51		
		271.88	04									
	TURBINE VANE AREA D, O. D., STATIC |6|	0.72	PS-XVD01							0.5" UPSTREAM FROM TRAILING EDGE OF SWIRL VANES.		
		90.72	02									
		180.72	03									
		270.72	04							* 6.08		
	TURBINE VANE EXIT, CHANNEL I.D., STATIC |7|	3.36	PS-XB01	0-35	PSIA	X	+/- 1/4%			0.56" DOWNSTREAM FROM EXIT END OF TURBINE VANES.	2	
		14.28	02									
		36.09	03									
		47.01	04									
		68.82	05							* 5.02		
		79.74	06									
		101.55	07									
		112.47	08									
		134.28	09									
		145.20	10									
		162.01	11									
		177.93	12									
		199.74	13									
		210.66	14									
		232.47	15									

* DISTANCE FROM BASE PLANE - INCHES (SEE ATTACHED INSTRUMENTATION MAP)

	ITEM DESCRIPTION	ANGULAR LOCATION (DEG)	HEADER	RANGE	UNITS	RECORD STATIC/TRANS.		ACCURACY	ANALOG TAPE	ANALOG CM	REMARKS	GROUP	RECORDING CHANNEL
		243.39	PS-XB16	0-35	PSIA	X		+/- 1/4%			7 (CONTINUED)	2	
		265.20	25										
	TURBINE VANE EXIT,	276.12	26								* 5.02		
	CHANNEL I.D.,	297.93	27										
	STATIC - CONTD. 7	308.85	28										
		320.66	29										
		341.58	30										
	TURBINE VANE EXIT,	0	PS-XB31	0-35	PSIA	X		+/- 1/4%				2	
	CHANNEL O.D.,	32.73	32								* 5.42	2	
	STATIC 8	65.45	33									1,2	
		98.18	34									2	
		130.91	35									2	
		163.64	36									2	
		196.36	37									1,2	
		229.09	38									2	
		261.82	39									2	
		294.55	40									2	
		327.27	41									1,2	
	40 DEGREES INTO TAD,	0	PS-XTD101	0-35	PSIA	X		+/- 1/4%				2	
	CHANNEL I.D.,	32.73	02								* 3.15		
	STATIC 9	65.45	03										
		98.18	04										
		130.91	05										
		163.64	06										
		196.36	07										
		229.09	08										
		261.82	09										
		294.55	10										
		327.27	11										
	90 DEGREES INTO TAD,	8.18	PS-XTD2T01	0-35	PSIA	X		+/- 1/4%				2	
	CHANNEL TOP,	40.91	02								* 4.03		
	STATIC 10	73.63	03										
		106.36	04										
		139.09	05										
		171.82	06										
		204.54	07										
		237.27	08										
		270.00	09										
		302.73	10										
		335.45	11										

* DISTANCE FROM BASE PLANE - INCHES (SEE ATTACHED INSTRUMENTATION MAP)

	ITEM DESCRIPTION	ANGULAR LOCATION (DEG)	HEADER	RANGE	UNITS	RECORD STATIC/TRANS.		ACCURACY	ANALOG TAPE	ANALOG CM	REMARKS	GROUP	RECORDING CHANNEL
	90 DEGREES INTO TAD, CHANNEL BOTTOM, STATIC |11|	8.18	PS-XC01	0-35	PSIA	X		+/- 1/4%				2	
		40.91	02								* 2.70		
		73.63	03										
		106.36	04										
		139.09	05										
		171.82	06										
		204.54	07										
		237.27	08										
		270.00	09										
		302.73	10										
		335.45	11										
	BOWL, DOWNSTREAM FROM H X, I.D., STATIC |15|	0	PS-XE05	0-35	PSIA	X		+/- 1/4%				1,2	
		90	06										
		180	07										
		270	08										
	TURBINE INLET, RAKE-3 TOTALS CENTERED ON EQUAL WIDTH CONCENTRIC BANDS. (1)	0	PT-XTI01-RA	0-50	PSIA	X		+/- 1/4%			PROBE INLETS IN SAME PLANE AS STATIC TAPS |2| * 9.59	1,2	
			RB										
			RC										
		135	02-RA										
			RB										
			RC										

* DISTANCE FROM BASE PLANE - INCHES (SEE ATTACHED INSTRUMENTATION MAP)

	ITEM DESCRIPTION	ANGULAR LOCATION (DEG)	HEADER	RANGE	UNITS	RECORD STATIC/TRANS.	ACCURACY	ANALOG TAPE	CM	REMARKS	GROUP	RECORDING CHANNEL
	TURBINE VANE EXIT-	25.26	PT-XB01-RA	0-35	PSIA		+/- 1/4%			PROBE INLETS IN SAME PLANE	2	
	RAKE, 3 TOTALS		RB							AS STATIC TAPS [7].		
	CENTERED ON EQUAL		RC							REMOVABLE		
	WIDTH CONCENTRIC	57.98	02-RA								1,2	
	BANDS. (2)		RB							* 5.02		
			RC									
		90.71	03-RA								2	
			RB									
			RC									
		123.44	PT-XB04-RA								2	
			RB									
			RC									
		156.17	05-RA								2	
			RB									
			RC									
		188.89	06-RA								1,2	
			RB									
			RC									
		221.62	07-RA								2	
			RB									
			RC									
		254.35	08-RA								2	
			RB									
			RC									
		287.08	09-RA								2	
			RB									
			RC									
		319.88	10-RA								1,2	
			RB									
			RC									
		352.53	11-RA								2	
			RB									
			RC									

* DISTANCE FROM BASE PLANE - INCHES (SEE ATTACHED INSTRUMENTATION MAP)

MSFC MEASUREMENTS
PHASE II

TABLE II (CONTINUED)

** FUEL BOWL **

* PLANE H * |29|

PS-FH02*	0-35	R	ON FUEL BOWL OUTER WALL AT 85 DEG, IN PLUG				PSI	FUEL	H-2	T
		8.55	??	6.62						
PS-FH03	0-35	R	ON FUEL BOWL OUTER WALL AT 135 DEG				PSI	FUEL	H-3	T
		8.55	135	6.62						
PS-FH04	0-35	R	ON FUEL BOWL OUTER WALL AT 180 DEG, IN PLUG				PSI	FUEL	H-4	T
		8.55	180	6.62						
PS-FH05	0-35	R	ON FUEL BOWL OUTER WALL AT 225 DEG				PSI	FUEL	H-5	T
		8.55	225	6.62						
PS-FH06	0-35	R	ON FUEL BOWL OUTER WALL AT 275 DEG, IN PLUG				PSI	FUEL	H-6	T
		8.55	???	6.62						

* ALL MSFC FUEL BOWL MEASUREMENTS ARE GROUP 1 - ALL OTHERS ARE GROUP 2

PS-FF10	0-35	R	ABOVE G6 FLANGE, ON OUTER WALL AT 25 DEG					PSI	FUEL	F-10	T
		6.20	25	7.766							
PS-FF11	0-35	R	ABOVE G6 FLANGE, ON OUTER WALL AT 85 DEG					PSI	FUEL	F-11	T
		6.20	85	7.766							
PS-FF12	0-35	R	ABOVE G6 FLANGE, ON OUTER WALL AT 125 DEG					PSI	FUEL	F-12	T
		6.20	125	7.766							
PS-FF13	0-35	R	ABOVE G6 FLANGE, ON OUTER WALL AT 175 DEG					PSI	FUEL	F-13	T
		6.20	175	7.766							
PS-FF14	0-35	R	ABOVE G6 FLANGE, ON OUTER WALL AT 215 DEG					PSI	FUEL	F-14	T
		6.20	215	7.766							
PS-FF15	0-35	R	ABOVE G6 FLANGE, ON OUTER WALL AT 265 DEG					PSI	FUEL	F-15	T
		6.20	265	7.766							
PS-FF16	0-35	R	ABOVE G6 FLANGE, ON OUTER WALL AT 305 DEG					PSI	FUEL	F-16	T
		6.20	305	7.766							
PS-FF17	0-35	R	ABOVE G6 FLANGE, ON OUTER WALL AT 335 DEG					PSI	FUEL	F-17	T
		6.20	335	7.766							
PS-FF18	0-35	R	ABOVE G6 FLANGE, ON OUTER WALL AT 355 DEG					PSI	FUEL	F-18	T
		6.20	355	7.766							

PS-FJ02	0-35	R	ON FUEL BOWL OUTER WALL AT 90 DEG					PSI	FUEL	J-2	T
		2.80	90	8.8							
PS-FJ03	0-35	R	ON FUEL BOWL OUTER WALL AT 135 DEG					PSI	FUEL	J-3	T
		2.80	135	8.8							
PS-FJ04	0-35	R	ON FUEL BOWL OUTER WALL AT 180 DEG					PSI	FUEL	J-4	T
		2.80	180	8.8							
PS-FJ05	0-35	R	ON FUEL BOWL OUTER WALL AT 225 DEG					PSI	FUEL	J-5	T
		2.80	225	8.8							
PS-FJ06	0-35	R	ON FUEL BOWL OUTER WALL AT 270 DEG					PSI	FUEL	J-6	T
		2.80	270	8.8							

** OXIDIZER BOWL **

* PLANE XA * |18|

PS-XA10	0-35	R	ON OXIDIZER BOWL OUTER WALL, AT 0 DEG					PSI	OXIDIZER	XA-10	T
		1.58	0	7.62							
PS-XA11	0-35	R	ON OXIDIZER BOWL OUTER WALL, AT 60 DEG					PSI	OXIDIZER	XA-11	T
		1.58	60	7.62							
PS-XA12	0-35	R	ON OXIDIZER BOWL OUTER WALL, AT 90 DEG					PSI	OXIDIZER	XA-12	T
		1.58	90	7.62							
PS-XA13	0-35	R	ON OXIDIZER BOWL OUTER WALL, AT 135 DEG					PSI	OXIDIZER	XA-13	T
		1.58	135	7.62							
PS-XA14	0-35	R	ON OXIDIZER BOWL OUTER WALL, AT 180 DEG					PSI	OXIDIZER	XA-14	T
		1.58	180	7.62							
PS-XA15	0-35	R	ON OXIDIZER BOWL OUTER WALL, AT 225 DEG					PSI	OXIDIZER	XA-15	T
		1.58	225	7.62							
PS-XA16	0-35	R	ON OXIDIZER BOWL OUTER WALL, AT 270 DEG					PSI	OXIDIZER	XA-16	T
		1.58	270	7.62							
PS-XA17	0-35	R	ON OXIDIZER BOWL OUTER WALL, AT 330 DEG					PSI	OXIDIZER	XA-17	T
		1.58	330	7.62							

PS-XD37	0-35	R	ON OXIDIZER BOWL OUTER WALL, AT 45 DEG				PSI	OXIDIZER	XD-37	T	
		10.47	45	8.99							
PS-XD39	0-35	R	ON OXIDIZER BOWL OUTER WALL AT 90 DEG, IN PLUG				PSI	OXIDIZER	XD-39	T	
		10.47	90	8.99							
PS-XD40	0-35	R	ON OXIDIZER BOWL OUTER WALL AT 135 DEG, IN PLUG				PSI	OXIDIZER	XD-40	T	
		10.47	135	8.99							
PS-XD44	0-35	R	ON OXIDIZER BOWL OUTER WALL AT 225 DEG, IN PLUG				PSI	OXIDIZER	XD-44	T	
		10.47	225	8.99							
PS-XD46	0-35	R	ON OXIDIZER BOWL OUTER WALL AT 270 DEG, IN PLUG				PSI	OXIDIZER	XD-46	T	
		10.47	270	8.99							
PS-XD47	0-35	R	ON OXIDIZER BOWL OUTER WALL, AT 315 DEG				PSI	OXIDIZER	XD-47	T	
		10.47	315	8.99							

PS-XE09	0-35	R	ON OXIDIZER BOWL OUTER WALL, AT 0 DEG					PSI	OXIDIZER	XE-9	T
		5.92	0	9.19							
PS-XE10	0-35	R	ON OXIDIZER BOWL OUTER WALL, AT 60 DEG					PSI	OXIDIZER	XE-10	T
		5.92	60	9.19							
PS-XE11	0-35	R	ON OXIDIZER BOWL OUTER WALL, AT 90 DEG					PSI	OXIDIZER	XE-11	T
		5.92	90	9.19							
PS-XE12	0-35	R	ON OXIDIZER BOWL OUTER WALL, AT 120 DEG					PSI	OXIDIZER	XE-12	T
		5.92	120	9.19							
PS-XE13	0-35	R	ON OXIDIZER BOWL OUTER WALL, AT 180 DEG					PSI	OXIDIZER	XE-13	T
		5.92	180	9.19							
PS-XE14	0-35	R	ON OXIDIZER BOWL OUTER WALL, AT 240 DEG					PSI	OXIDIZER	XE-14	T
		5.92	240	9.19							
PS-XE15	0-35	R	ON OXIDIZER BOWL OUTER WALL, AT 270 DEG					PSI	OXIDIZER	XE-15	T
		5.92	270	9.19							
PS-XE16	0-35	R	ON OXIDIZER BOWL OUTER WALL, AT 300 DEG					PSI	OXIDIZER	XE-16	T
		5.92	300	9.19							

PS-FRX1	0-35	R	RIGHT FUEL TD AT 000 DEG					PSI	FUEL		T
		14.051	000								
PS-FRX2	0-35	R	RIGHT FUEL TD AT 090 DEG					PSI	FUEL		T
		14.051	090								
PS-FRX3	0-35	R	RIGHT FUEL TD AT 180 DEG					PSI	FUEL		T
		14.051	180								
PS-FRX4	0-35	R	RIGHT FUEL TD AT 270 DEG					PSI	FUEL		T
		14.051	270								
PS-FRY1	0-35	R	RIGHT FUEL TD AT 000 DEG, IN PLUG OR RAKE					PSI	FUEL		T
		14.051	000								
PS-FRY2	0-35	R	RIGHT FUEL TD AT 090 DEG, IN PLUG OR RAKE					PSI	FUEL		T
		14.051	090								

* LEFT FUEL TRANSFER DUCT *

PS-FLZ1	0-35	R	LEFT TD AT 270 DEG, at duct inlet					PSI	FUEL		T
		21.201	270								
PS-FLZ2	0-35	R	LEFT TD AT 270 DEG, at duct inlet					PSI	FUEL		T
		20.395	270								
PS-FLZ3	0-35	R	LEFT TD AT 90 DEG, at duct inlet					PSI	FUEL		T
		21.201	90								
PS-FRL4	0-35	R	LEFT TD AT 90 DEG, at duct inlet					PSI	FUEL		T
		20.395	90								
PS-FLW1	0-35	R	LEFT TD AT 000 DEG					PSI	FUEL		T
		17.801	000								
PS-FLW2	0-35	R	LEFT TD AT 090 DEG					PSI	FUEL		T
		17.801	090								
PS-FLW3	0-35	R	LEFT TD AT 180 DEG					PSI	FUEL		T
		17.801	180								
PS-FLW4	0-35	R	LEFT TD AT 270 DEG					PSI	FUEL		T
		17.801	270								

PS-FLX1	0-35	R	LEFT TD AT 000 DEG					PSI	FUEL		T
		14.051	000								
PS-FLX2	0-35	R	LEFT TD AT 090 DEG					PSI	FUEL		T
		14.051	090								
PS-FLX3	0-35	R	LEFT TD AT 180 DEG					PSI	FUEL		T
		14.051	180								
PS-FLX4	0-35	R	LEFT TD AT 270 DEG					PSI	FUEL		T
		14.051	270								
PS-FLY2	0-35	R	LEFT TD AT 090 DEG, IN PLUG OR RAKE					PSI	FUEL		T
		14.051	090								
PS-FLY3	0-35	R	LEFT TD AT 180 DEG, IN PLUG OR RAKE					PSI	FUEL		T
		14.051	180								

PS-FCP1	0-35	R	CENTER TD AT 000 DEG					PSI	FUEL		T
		8.260	000								
PS-FCP2	0-35	R	CENTER TD AT 090 DEG					PSI	FUEL		T
		8.260	090								
PS-FCP3	0-35	R	CENTER TD AT 180 DEG					PSI	FUEL		T
		8.260	180								
PS-FCP4	0-35	R	CENTER TD AT 270 DEG					PSI	FUEL		T
		8.260	270								
PS-FCQ5	0-35	R	CENTER TD AT 225 DEG					PSI	FUEL		T
		7.010	225								
PS-FCQ6	0-35	R	CENTER TD AT 315 DEG					PSI	FUEL		T
		7.010	315								
PS-FCV2	0-35	R	CENTER TD AT 090 DEG, ON PLUG OR RAKE					PSI	FUEL		T
		5.332	090								
PS-FCV4	0-35	R	CENTER TD AT 270 DEG					PSI	FUEL		T
		5.332	270								

* MAIN INJECTOR RACETRACK *

PS-IC02	0-35	R	ON INJECTOR OUTER WALL AT 225 DEG				PSI	INJECTOR	IC-2	T
		0	225	11.405						
PS-IC03	0-35	R	ON INJECTOR OUTER WALL AT 247.5 DEG				PSI	INJECTOR	IC-2	T
		0	247.5	11.405						
PS-IC04	0-35	R	ON INJECTOR OUTER WALL AT 265 DEG				PSI	INJECTOR	IC-4	T
		0	265	11.405						
PS-IC11	0-35	R	ON INJECTOR OUTER WALL AT 95 DEG				PSI	INJECTOR	IC-10	T
		0	95	11.405						
PS-IC12	0-35	R	ON INJECTOR OUTER WALL AT 140 DEG				PSI	INJECTOR	IC-12	T
		0	140	11.405						
PS-IC14	0-35	R	ON INJECTOR OUTER WALL AT 275 DEG				PSI	INJECTOR	IC-14	T
		0	275	11.405						
PS-IC15	0-35	R	ON INJECTOR OUTER WALL AT 85 DEG				PSI	INJECTOR	IC-15	T
		0	85	11.405						

* RIGHT OXIDIZER TRANSFER DUCT *

PS-XRE1	0-35	R	RIGHT OXIDIZER TD AT 0 DEG				PSI	RXTD	E-1	T
		0	000	6.884						
PS-XRE2	0-35	R	RIGHT OXIDIZER TD AT 090 DEG, IN PLUG OR RAKE				PSI	RXTD	E-2	T
		0	090	6.884						
PS-XRE3	0-35	R	RIGHT OXIDIZER TD AT 180 DEG				PSI	RXTD	E-3	T
		0	180	6.884						
PS-XRE4	0-35	R	RIGHT OXIDIZER TD AT 270 DEG				PSI	RXTD	E-4	T
		0	270	6.884						

* LEFT OXIDIZER TRANSFER DUCT *

PS-XLE1	0-35	R	LEFT OXIDIZER TD AT 0 DEG				PSI	LXTD	E-1	T
		0	000	6.884						
PS-XLE2	0-35	R	LEFT OXIDIZER TD AT 090 DEG, IN PLUG OR RAKE				PSI	LXTD	E-2	T
		0	090	6.884						
PS-XLE3	0-35	R	LEFT OXIDIZER TD AT 180 DEG				PSI	LXTD	E-3	T
		0	180	6.884						
PS-XLE4	0-35	R	LEFT OXIDIZER TD AT 270 DEG				PSI	LXTD	E-4	T
		0	270	6.884						

LABEL NAME / TRANSLATION UNITS	RANGE / MOTION T,Y,P	DATA TYPE / PORT OR K	DESCRIPTION / TAP LOCATION ANGLE	RADIUS	PHONE'S TRANS	"FIXED" YAW	COORD PITCH	UNITS	COORD INDEX	MODEL LABEL	DEVICE TYPE
* KIEL PROBES*											
PT-FH02-K	0-35	R	ON FUEL BOWL OUTER WALL AT 85 DEG					PSI	FUEL	FH02	K
INCHES	T,Y	8.55	85	6.62			0				
PT-FH04-K	0-35	R	ON FUEL BOWL OUTER WALL AT 180 DEG					PSI	FUEL	FH04	K
INCHES	T,Y	8.55	180	6.62			0				
PT-FH06-K	0-35	R	ON FUEL BOWL OUTER WALL AT 275 DEG					PSI	FUEL	FH06	K
INCHES	T,Y	8.55	275	6.62			0				
PT-XD39-K	0-35	R	ON OXIDIZER BOWL OUTER WALL, AT 90 DEG					PSI	OXIDIZER	XD-39	K
INCHES	T,Y	10.47	90	8.99			0				
PT-XD40-K	0-35	R	ON OXIDIZER BOWL OUTER WALL, AT 135 DEG					PSI	OXIDIZER	XD-40	K
INCHES	T,Y	10.47	135	8.99			0				
PT-XD44-K	0-35	R	ON OXIDIZER BOWL OUTER WALL, AT 225 DEG					PSI	OXIDIZER	XD-44	K
INCHES	T,Y	10.47	225	8.99			0				
PT-XD46-K	0-35	R	ON OXIDIZER BOWL OUTER WALL, AT 270 DEG					PSI	OXIDIZER	XD-46	K
INCHES	T,Y	10.47	270	8.99			0				
PT-XLE2-K	0-35	R	LEFT OXIDIZER TD AT 90 DEG					PSI	XLTD	E2	K
INCHES	T,Y	0	270	6.884			0				
PT-XRE2-K	0-35	R	RIGHT OXIDIZER TD AT 90 DEG					PSI	XRTD	E2	K
INCHES	T,Y	87.37	180	6.884			0				

PT-FRY1-K	0-35	R	RIGHT FUEL TD AT 0 DEG					PSI	FRTD	Y1	K
INCHES	T,Y	14.051	000				0				
PT-FRY2-K	0-35	R	RIGHT FUEL TD AT 90 DEG					PSI	FRTD	Y2	K
INCHES	T,Y	14.051	90				0				
PT-FLY3-K	0-35	R	LEFT FUEL TD AT 180 DEG					PSI	FLTD	Y3	K
INCHES	T,Y	14.051	180				0				
PT-FLY2-K	0-35	R	LEFT FUEL TD AT 90 DEG					PSI	FLTD	Y2	K
INCHES	T,Y	14.051	90				0				
PT-FCV2-K	0-35	R	CENTER FUEL TD AT 90 DEG					PSI	FCTD	V2	K
INCHES	T,Y	5.332	90				0				

* MAIN INJECTOR ASSEMBLY *

PS-IFP01	0-35	R	BETWEEN ROWS 13 & 12, APPROX. 0 DEG	PSI	INJECTOR	1	T
PS-IFP02	0-35	R	BETWEEN ROWS 9 & 10, APPROX. 0 DEG	PSI	INJECTOR	2	T
PS-IFP03	0-35	R	BETWEEN ROWS 7 & 6, APPROX. 0 DEG	PSI	INJECTOR	3	T
PS-IFP04	0-35	R	BETWEEN ROW 3 & 4, APPROX.,0 DEG	PSI	INJECTOR	4	T
PS-IFP05	0-35	R	BETWEEN ROWS 13 & 12, APPROX. 45 DEG	PSI	INJECTOR	5	T
PS-IFP06	0-35	R	BETWEEN ROWS 9 & 10, APPROX. 45 DEG	PSI	INJECTOR	6	T
PS-IFP07	0-35	R	BETWEEN ROWS 6 & 7, APPROX. 90 DEG	PSI	INJECTOR	7	T
PS-IFP08	0-35	R	BETWEEN ROWS 3 & 4, APPROX. 45 DEG	PSI	INJECTOR	8	T
PS-IFP09	0-35	R	BETWEEN ROWS 13 & 12, APPROX. 90 DEG	PSI	INJECTOR	9	T

PS-IFP10	0-35	R	BETWEEN ROWS 9 & 10, APPROX. 90 DEG	PSI	INJECTOR	10	T
PS-IFP11	0-35	R	BETWEEN ROWS 6 & 7, APPROX. 90 DEG	PSI	INJECTOR	11	T
PS-IFP12	0-35	R	BETWEEN ROWS 3 & 4, APPROX. 90 DEG	PSI	INJECTOR	12	T
PS-IFP13	0-35	R	BETWEEN ROWS 13 & 12, APPROX. 125 DEG	PSI	INJECTOR	13	T
PS-IFP14	0-35	R	BETWEEN ROWS 9 & 10, APPROX. 125 DEG	PSI	INJECTOR	14	T
PS-IFP15	0-35	R	BETWEEN ROWS 6 & 7, APPROX. 125 DEG	PSI	INJECTOR	15	T
PS-IFP16	0-35	R	BETWEEN ROWS 3 & 4, APPROX. 125 DEG	PSI	INJECTOR	16	T
PS-IFP17	0-35	R	BETWEEN ROWS 12 & 13, APPROX. 180 DEG	PSI	INJECTOR	17	T
PS-IFP18	0-35	R	BETWEEN ROWS 9 & 10, APPROX. 180 DEG	PSI	INJECTOR	18	T
PS-IFP19	0-35	R	BETWEEN ROWS 6 & 7, APPROX. 180 DEG	PSI	INJECTOR	19	T
PS-IFP20	0-35	R	BETWEEN ROWS 3 & 4, APPROX. 180 DEG	PSI	INJECTOR	20	T
PS-IFP21	0-35	R	BETWEEN ROWS 12 & 13, APPROX. 270 DEG	PSI	INJECTOR	21	T

PS-IFP22	0-35	R	BETWEEN ROWS 9 & 10, APPROX. 270 DEG	PSI	INJECTOR	22	T
PS-IFP23	0-35	R	BETWEEN ROWS 6 & 7, APPROX. 270 DEG	PSI	INJECTOR	23	T
PS-IFP24	0-35	R	BETWEEN ROWS 3 & 4, APPROX. 270 DEG	PSI	INJECTOR	24	T

PT-IFS01	0-35	R	LOX POST 1, TOP	PSI	INJECTOR	25	T
PT-IFS02	0-35	R	LOX POST 1, MIDDLE	PSI	INJECTOR	26	T
PT-IFS03	0-35	R	LOX POST 1, BOTTOM	PSI	INJECTOR	27	T
PT-IFS04	0-35	R	LOX POST 43, MIDDLE	PSI	INJECTOR	28	T
PT-IFS05	0-35	R	LOX POST 45, MIDDLE	PSI	INJECTOR	29	T
PT-IFS06	0-35	R	LOX POST 47, TOP	PSI	INJECTOR	30	T
PT-IFS07	0-35	R	LOX POST 47, MIDDLE	PSI	INJECTOR	31	T
PT-IFS08	0-35	R	LOX POST 47, BOTTOM	PSI	INJECTOR	32	T

PT-IFS09	0-35	R	LOX POST 49, TOP	PSI	INJECTOR	33	T
PT-IFS10	0-35	R	LOX POST 49, MIDDLE	PSI	INJECTOR	34	T
PT-IFS11	0-35	R	LOX POST 49, BOTTOM	PSI	INJECTOR	35	T
PT-IFS12	0-35	R	LOX POST 51, MIDDLE	PSI	INJECTOR	36	T
PT-IFS13	0-35	R	LOX POST 53, MIDDLE	PSI	INJECTOR	37	T
PT-IFS14	0-35	R	LOX POST 65, MIDDLE	PSI	INJECTOR	38	T
PT-IFS15	0-35	R	LOX POST 67, TOP	PSI	INJECTOR	39	T
PT-IFS16	0-35	R	LOX POST 67, MIDDLE	PSI	INJECTOR	40	T
PT-IFS17	0-35	R	LOX POST 67, BOTTOM	PSI	INJECTOR	41	T
PT-IFS18	0-35	R	LOX POST 69, MIDDLE	PSI	INJECTOR	42	T
PT-IFS19	0-35	R	LOX POST 71, TOP	PSI	INJECTOR	43	T
PT-IFS20	0-35	R	LOX POST 71, MIDDLE	PSI	INJECTOR	44	T

PT-IFS21	0-35	R	LOX POST 71, BOTTOM	PSI	INJECTOR	45	T
PT-IFS22	0-35	R	LOX POST 73, MIDDLE	PSI	INJECTOR	46	T
PT-IFS23	0-35	R	LOX POST 75, TOP	PSI	INJECTOR	47	T
PT-IFS24	0-35	R	LOX POST 75, MIDDLE	PSI	INJECTOR	48	T
PT-IFS25	0-35	R	LOX POST 75, BOTTOM	PSI	INJECTOR	49	T
PT-IFS26	0-35	R	LOX POST 76, MIDDLE, BACK	PSI	INJECTOR	50	T
PT-IFS27	0-35	R	LOX POST 78, TOP, BACK	PSI	INJECTOR	51	T
PT-IFS28	0-35	R	LOX POST 78, MIDDLE, BACK	PSI	INJECTOR	52	T
PT-IFS29	0-35	R	LOX POST 78, BOTTOM, BACK	PSI	INJECTOR	53	T
PT-IFS30	0-35	R	LOX POST 80, MIDDLE, BACK	PSI	INJECTOR	54	T
PT-IFS31	0-35	R	LOX POST 82, TOP, BACK	PSI	INJECTOR	55	T
PT-IFS32	0-35	R	LOX POST 82, MIDDLE, BACK	PSI	INJECTOR	56	T

PT-IFS33	0-35	R	LOX POST 82, BOTTOM, BACK	PSI	INJECTOR	57	T
PT-IFS34	0-35	R	LOX POST 84, MIDDLE, BACK	PSI	INJECTOR	58	T

PS-IFS35	0-35	R	LOX POST 2, MIDDLE, BACK	PSI	INJECTOR	59	T
PS-IFS36	0-35	R	LOX POST 42, MIDDLE, BACK	PSI	INJECTOR	60	T
PS-IFS37	0-35	R	LOX POST 44, MIDDLE, BACK	PSI	INJECTOR	61	T
PS-IFS38	0-35	R	LOX POST 46, TOP, BACK	PSI	INJECTOR	62	T
PS-IFS39	0-35	R	LOX POST 46, MIDDLE, BACK	PSI	INJECTOR	63	T
PS-IFS40	0-35	R	LOX POST 46, BOTTOM, BACK	PSI	INJECTOR	64	T
PS-IFS41	0-35	R	LOX POST 48, TOP, BACK	PSI	INJECTOR	65	T
PS-IFS42	0-35	R	LOX POST 48, MIDDLE, BACK	PSI	INJECTOR	66	T
PS-IFS43	0-35	R	LOX POST 48, BOTTOM, BACK	PSI	INJECTOR	67	T

PS-IFS44	0-35	R	LOX POST 50, MIDDLE, BACK	PSI	INJECTOR	68	T	
PS-IFS45	0-35	R	LOX POST 53, MIDDLE, BACK	PSI	INJECTOR	69	T	
PS-IFS46	0-35	R	LOX POST 64, MIDDLE, BACK	PSI	INJECTOR	70	T	
PS-IFS47	0-35	R	LOX POST 66, MIDDLE, BACK	PSI	INJECTOR	71	T	
PS-IFS48	0-35	R	LOX POST 68, MIDDLE, BACK	PSI	INJECTOR	72	T	
PS-IFS49	0-35	R	LOX POST 70, TOP, BACK	PSI	INJECTOR	73	T	
PS-IFS50	0-35	R	LOX POST 70, MIDDLE, BACK	PSI	INJECTOR	74	T	
PS-IFS51	0-35	R	LOX POST 70, BOTTOM, BACK	PSI	INJECTOR	75	T	
PS-IFS52	0-35	R	LOX POST 72, MIDDLE, BACK	PSI	INJECTOR	76	T	
PS-IFS53	0-35	R	LOX POST 74, MIDDLE, BACK	PSI	INJECTOR	77	T	
PS-IFS54	0-35	R	LOX POST 77, MIDDLE	PSI	INJECTOR	78	T	
PS-IFS55	0-35	R	LOX POST 79, TOP	PSI	INJECTOR	79	T	

PS-IPS56	0-35	R	LOX POST 79, MIDDLE	PSI	INJECTOR	80	T
PS-IPS57	0-35	R	LOX POST 79, BOTTOM	PSI	INJECTOR	81	T
PS-IPS58	0-35	R	LOX POST 81, MIDDLE	PSI	INJECTOR	82	T
PS-IPS59	0-35	R	LOX POST 83, MIDDLE	PSI	INJECTOR	83	T
PS-IPS60	0-35	R	LOX POST 85, MIDDLE	PSI	INJECTOR	84	T
PS-IPS61	0-35	R	LOX POST 2, TOP, BACK	PSI	INJECTOR	??	T
PS-IPS62	0-35	R	LOX POST 2, BOTTOM, BACK	PSI	INJECTOR	??	T
PS-IPS63	0-35	R	LOX POST 74, TOP, BACK	PSI	INJECTOR	??	T
PS-IPS64	0-35	R	LOX POST 74, BOTTOM, BACK	PSI	INJECTOR	??	T

* RAKES *

PS-XLT-R01	0-35	R	STATIC WALL PRESS, RAKE IN XLTD, XLE2	PSI	XLTD	R
PT-XLT-R02	0-35	R	RAKE IN XLTI, XLE2	PSI	XLTD	R
PT-XLT-R03	0-35	R	RAKE IN XLTI, XLE2	PSI	XLTD	R
PT-XLT-R04	0-35	R	RAKE IN XLTI, XLE2	PSI	XLTD	R
PT-XLT-R05	0-35	R	RAKE IN XLTI, XLE2	PSI	XLTD	R
PT-XLT-R06	0-35	R	RAKE IN XLTD, XLE2	PSI	XLTD	R
PT-XLT-R07	0-35	R	RAKE IN XLTD, XLE2	PSI	XLTD	R
PT-XLT-R08	0-35	R	RAKE IN XLTD, XLE2	PSI	XLTD	R
PT-XLT-R09	0-35	R	RAKE IN XLTD, XLE2	PSI	XLTD	R

PT-XLT-R10	0-35	R	RAKE IN XLTD, XLR2			PSI	XLTD		R
PS-XRT-R01	0-35	R	STATIC WALL TAP, RAKE IN XRTD, XRR2			PSI	XRTD		R
PT-XRT-R02	0-35	R	RAKE IN XRTD, XRR2			PSI	XRTD		R
PT-XRT-R03	0-35	R	RAKE IN XRTD, XRR2			PSI	XRTD		R
PT-XRT-R04	0-35	R	RAKE IN XRTD, XRR2			PSI	XRTD		R
PT-XRT-R05	0-35	R	RAKE IN XRTD, XRR2			PSI	XRTD		R
PT-XRT-R06	0-35	R	RAKE IN XRTD, XRR2			PSI	XRTD		R
PT-XRT-R07	0-35	R	RAKE IN XRTD, XRR2			PSI	XRTD		R
PT-XRT-R08	0-35	R	RAKE IN XRTD, XRR2			PSI	XRTD		R
PT-XRT-R09	0-35	R	RAKE IN XRTD, XRR2			PSI	XRTD		R

PT-XRT-R10	0-35	R	RAKE IN XRTD, XRE2	PSI	XRTD		R	
PS-IMC-R01	0-35	R	STATIC WALL PRESSURE, RAKE IN MCC, MCC-1/2	PSI	INJECTOR		R	
PT-IMC-R02	0-35	R	RAKE IN MCC, MCC-1/2	PSI	INJECTOR		R	
PT-IMC-R03	0-35	R	RAKE IN MCC, MCC-1/2	PSI	INJECTOR		R	
PT-IMC-R04	0-35	R	RAKE IN MCC, MCC-1/2	PSI	INJECTOR		R	
PT-IMC-R05	0-35	R	RAKE IN MCC, MCC-1/2	PSI	INJECTOR		R	
PT-IMC-R06	0-35	R	RAKE IN MCC, MCC-1/2	PSI	INJECTOR		R	
PT-IMC-R07	0-35	R	RAKE IN MCC, MCC-1/2	PSI	INJECTOR		R	
PT-IMC-R08	0-35	R	RAKE IN MCC, MCC-1/2	PSI	INJECTOR		R	
PT-IMC-R09	0-35	R	RAKE IN MCC, MCC-1/2	PSI	INJECTOR		R	

TABLE III

PHASE II+ INSTRUMENTATION SCHEDULE

WATER FLOW MODEL ATD HPFTP TAD/DIFFUSER/HGM

NO.	ITEM DESCRIPTION	ANGULAR LOCATION (DEG)	HEADER	RANGE	UNITS	RECORD STATIC/TRANS.		ACCURACY	RECORDING ANA	RECORDING DIG	REMARKS	GROUP	RECORDING CHANNEL
	PREBURNER DUCT, STATIC |1|	0	PS-FDD01	0-50	PSIA	X		+/- 1/4%			1.32", ALONG TURBINE AXIS, FROM PLANE Z	1,2	
		180	02										
	HUB CAP, STATIC |2|	CL	PS-FCC	0-50	PSIA	X		+/- 1/4%				1,2	
	TURBINE INLET, STATIC O.D. |3|	347.13	PS-FB01	0-50	PSIA	X					0.68" UPSTREAM FROM INLET FACE OF ORIFICE PLATE	1,2	
		77.13	02										
		167.13	03										
		257.13	04										
	TURBINE VANE AREA A, STATIC, O.D. |4|	0.0	PS-FVA01	0-35	PSIA	X		+/- 1/4%			0.125" DOWNSTREAM FROM ORIFICE PLATE EXIT.	1	
		90.0	02										
		180.0	03										
		270.0	04										
	TURBINE VANE AREA B, STATIC, O.D. |5|	0.0	PS-FVB01								0.5" DOWNSTREAM FROM PLANE OF STATIC TAPS |4|		
		90.0	02										
		180.0	03										
		270.0	04										
	TURBINE VANE AREA C, STATIC, O.D. |6|	0.0	PS-FVC01								0.5" DOWNSTREAM FROM PLANE OF STATIC TAPS |5|		
		90.0	02										
		180.0	03										
		270.0	04										
	TURBINE VANE AREA D, STATIC, O.D. |7|	6.0	PS-FVD01								12.31", ALONG TURBINE AXIS, FROM PLANE Z. (SEE ATTACHED INSTRUMENTATION MAP)		
		96.0	02										
		186.0	03										
		276.0	04										
	TURBINE VANE EXIT, CHANNEL I.D., STATIC |8|	9.0	PS-FC01	0-35	PSIA	X		+/- 1/4%			13.25" (AXIALLY) FROM PLANE Z.	1	
		31.5	02									1	
		54.0	03									1	
		76.5	04									1,2	
		99.0	05									1,2	
		121.5	06									1	
		144.0	07									1	
		166.5	08									1,2	
		189.0	09									1,2	
		211.5	10									1	
		234.0	11									1	
		256.5	12									1,2	
		279.0	13									1,2	
		301.5	14									1	
		324.0	15									1	
		346.5	16									1	

NO.	ITEM DESCRIPTION	ANGULAR LOCATION (DEG)	HEADER	RANGE	UNITS	RECORD STATIC/TRANS.		ACCURACY	RECORDING ANA	RECORDING DIG	REMARKS	GROUP	RECORDING CHANNEL
	TURBINE VANE EXIT'	9.0	PS-FC17	0-35	PSIA	X		+/- 1/4%			SAME AXIAL LOCATION AS	1	
	CHANNEL O.D.,	54.0	18								|8|.		
	STATIC	99.0	19										
		144.0	20										
		189.0	21										
		234.0	22										
	|9|	279.0	23										
		324.0	24										
	45 DEGREES INTO TAD,	0	PS-FT101	0-35	PSIA	X		+/- 1/4%			14.41" (AXIALLY) FROM	1	
	CHANNEL I.D.,	45	02								PLANE Z.*		
	STATIC	90	03										
		135	04										
		180	05										
	|10|	225	06										
		270	07										
		315	08										
	90 DEGREES INTO TAD,	45	PS-FT201	0-35	PSIA	X		+/- 1/4%			13.89" (AXIALLY) FROM	1	
	TOP OF DUCT,	135	02								PLANE Z.		
	STATIC	225	03										
	|11|	315	04										
	90 DEGREES INTO TAD,	0	PS-FD01	0-35	PSIA	X		+/- 1/4%			14.80" (AXIALLY) FROM	1	
	BOTTOM OF DUCT,	45	02								PLANE Z.		
	STATIC	90	03										
		135	04										
	|12|	180	05										
		225	06										
		270	07										
		315	08										
	TAD, 45 DEGREES UP-	45	PS-FT301	0-35	PSIA	X		+/- 1/4%			13.82" (AXIALLY) FROM	1	
	STREAM FROM EXIT,	135	02								PLANE Z.		
	TOP OF DUCT, STATIC	225	03										
	|13|	315	04										
	TAD, 45 DEGREES UP-	0	PS-FT305	0-35	PSIA	X		+/- 1/4%			14.36" (AXIALLY) FROM	1	
	STREAM FROM EXIT,	45	06								PLANE Z.		
	BOTTOM, STATIC	90	07										
	|14|	135	08										
		180	09										
		225	10										
		270	11										
		315	12										

* SEE ATTACHED INSTRUMENTATION MAP

NO.	ITEM DESCRIPTION	ANGULAR LOCATION (DEG)	HEADER	RANGE	UNITS	RECORD STATIC/TRANS.		ACCURACY	RECORDING ANA	RECORDING DIG	REMARKS	GROUP	RECORDING CHANNEL
	TAD, EXIT, I.D., STATIC	45	PS-FE01	0-35	PSIA	X		+/- 1/4%			13.63", ALONG TURBINE AXIS, FROM PLANE Z.	1	
	[15]	135	02										
		225	03										
		315	04										
	TAD, EXIT, O.D., STATIC	355	PS-FE05	0-35	PSIA	X		+/- 1/4%			13.89", ALONG TURBINE AXIS, FROMK PLANE Z.	1	
		35	06										
		85	07										
	[16]	125	08										
		175	09										
		215	10										
		265	11										
		305	12										
	DIFFUSER SECTION, I.D. PLANE DA, STATIC [17]	11.25	PS-FDA01	0-35	PSIA	X		+/- 1/4%			PLANES DA, DB, AND DC ARE EQUALLY SPACED, AXIALLY BETWEEN TAD EXIT AND DIFFUSER EXIT. ALL TAPS ON I.D.	1	
		191.25	02										
	DIFFUSER SECTION, I.D. PLANE DB, STATIC [18]	11.25	PS-FDB01	0-35	PSIA	X		+/- 1/4%				1	
		191.25	02										
	DIFFUSER SECTION, I.D. PLANE DC, STATIC [19]	11.25	PS-FDC01	0-35	PSIA	X		+/- 1/4%				1	
		191.25	02										
	FUEL BOWL, PLANE F, I.D., STATIC	10	PS-FF01	0-35	PSIA	X		+/- 1/4%			PLANE F LOCATED IMMEDIATELY DOWN-STREAM FROM DIFFUSER EXIT	1	
	[20]	35	02										
		55	03										
		75	04										
		95	05										
		120	06										
		145	07										
		170	08										
		190	09										
		215	20										
		240	21										
		265	22										
		285	23										
		305	24										
		325	25										
		350	26										
	FUEL BOWL, PLANE F, O.D., STATIC	95	PS-FF11	0-35	PSIA	X		+/- 1/4%				1	
	[21]	120	12										
		145	13										
		170	14										
		190	15										
		215	16										
		240	17										
		265	18										

NO.	ITEM DESCRIPTION	ANGULAR LOCATION (DEG)	HEADER	RANGE	UNITS	RECORD STATIC/TRANS.	ACCURACY	RECORDING ANA	RECORDING DIG	REMARKS	GROUP	RECORDING CHANNEL
	FUEL BOWL, PLANE H,	0	PS-FH07	0-35	PSIA	X	+/- 1/4%				1	
	I.D., STATIC	22.5	08									
		85	09									
	|22|	135	10									
		180	11									
		225	12									
		275	13							6.55" (ALONG TURBINE AXIS) UPSTREAM FROM PLANE Z.		
		337.5	14									
	FUEL BOWL, PLANE H,	85	PS-FH02	0-35	PSIA	X	+- 1/4%				1	
	O.D., STATIC	135	03									
		180	04									
	|23|	225	05									
		275	06									
	STATIC TAPS, FUEL	0	PS-FI01	0-35	PSIA		+/-1/4%			5.12" (ALONG TURBINE AXIS) UPSTREAM FROM PLANE Z.	1	
	BOWL, PLANE I, I.D.	22.5	02									
	|24|	45.0	03									
		315.0	04									
		337.5	05									
	FUEL BOWL, PLANE J,	0	PS-FJ08	0-35	PSIA	X	+/- 1/4%				1	
	I.D., STATIC	22.5	09									
		45	10									
	|25|	90	11									
		135	12									
		180	13									
		225	14									
		270	15									
		315	16							3.57" (ALONG TURBINE AXIS) UPSTREAM FROM PLANE Z.		
		337.5	17									
	FUEL BOWL, PLANE J,	90	PS-FJ02	0-35	PSIA	X	+/- 1/4%				1	
	O.D., STATIC	135	03									
		180	04									
	|26|	225	05									
		270	06									
	STATIC TAPS, FUEL	0	PS-FK01	0-35	PSIA		+/-1/4%			2.75" (ALONG TURBINE AXIS) UPSTREAM FROM PLANE Z.	1,2	
	BOWL, PLANE K, I.D.	22.5	02									
	|27|	45.0	03									
		315.0	04									
		337.0	05									

NO.	ITEM DESCRIPTION	ANGULAR LOCATION (DEG)	HEADER	RANGE	UNITS	RECORD STATIC/TRANS.		ACCURACY	RECORDING ANA	RECORDING DIG	REMARKS	GROUP	RECORDING CHANNEL
	TURBINE INLET, RAKE, 3 TOTALS CENTERED ON EQUAL WIDTH CON-CENTRIC BANDS. (1)	347.13	PT-FB01-RA	0-50	PSIA	X		+/- 1/4%			PROBE INLETS IN SAME PLANE AS STATIC TAPS |3| .	1,2	
			RB										
			RC										
		167.13	02-RA										
			RB										
			RC										
	TURBINE VANE EXIT, RAKE, 4 TOTALS CENTERED ON EQUAL WIDTH CONCENTRIC BANDS (2)	42.88	PT-FC01-RA	0-35	PSIA	X		+/- 1/4%			PROBE INLETS IN SAME PLANE AS STATIC TAPS |8| & |9|	1	
			RB										
			RC										
			RD								----------		
		87.88	02-RA								INDIVIDUAL RAKES MAY BE OPTIONALLY REPLACED BY TRAVERSABLE 2-D DIRECT-IONAL PROBES.	1,2	
			RB										
			RC										
			RD										
		132.88	03-RA									1	
			RB										
			RC										
			RD										
		177.88	04-RA									1,2	
			RB										
			RC										
			RD										
		222.88	05-RA									1	
			RB										
			RC										
			RD										
		267.88	06-RA									1,2	
			RB										
			RC										
			RD										
		312.88	07-RA									1	
			RB										
			RC										
			RD										
		357.88	08-RA									1,2	
			RB										
			RC										
			RD										

NO.	ITEM DESCRIPTION	ANGULAR LOCATION (DEG)	HEADER	RANGE	UNITS	RECORD STATIC/TRANS.		ACCURACY	RECORDING ANA	RECORDING DIG	REMARKS	GROUP	RECORDING CHANNEL
	TAD EXIT, RAKE, 4 TOTALS CENTERED ON EQUAL WIDTH CONCENTRIC BANDS.	5	PT-FE01-RA	0-35	PSIA	X		+/- 1/4%			PROBE INLETS IN SAME PLANE AS STATIC TAPS |15|,|16|.	1	
			RB										
			RC										
			RD										
	(3)	45	02-RA										
			RB										
			RC										
			RD										
		95	03-RA										
			RB										
			RC										
			RD										
		135	04-RA										
			RB										
			RC										
			RD										
		185	05-RA										
			RB										
			RC										
			RD										
		225	06-RA										
			RB										
			RC										
			RD										
		275	07-RA										
			RB										
			RC										
			RD										
		315	08-RA										
			RB										
			RC										
			RD										
	DIFFUSER EXIT, RAKE, 4 TOTALS CENTERED ON EQUAL WIDTH CONCENTRIC BANDS.	85	PT-FF01-RA	0-35	PSIA	X		+/- 1/4%			PROBE INLETS IN SAME PLANE AS STATIC TAPS |20|,|21|	1	
			RB										
			RC										
			RD										
	(4)	115	02-RA								*		
			RB										

* INDIVIDUAL RAKES MAY BE REPLACED BY 2-D OR 3-D DIRECTIONAL PROBES, AT THE OPTION OF THE TEST ENGINEER.

NO.	ITEM DESCRIPTION	ANGULAR LOCATION (DEG)	HEADER	RANGE	UNITS	RECORD STATIC/TRANS.		ACCURACY	RECORDING ANA	RECORDING DIG	REMARKS	GROUP	RECORDING CHANNEL
	CONTINUATION OF (4)		PT-FF02-RC								CONTINUATION OF (4)	1	
			RD										
		140	03 RA										
			RB										
			RC										
			RD										
		160	04-RA										
			RB										
			RC										
			RD										
		180	05-RA										
			RB										
			RC										
			RD										
		200	06-RA										
			RB										
			RC										
			RD										
		220	07-RA										
			RB										
			RC										
			RD										
		245	08-RA										
			RB										
			RC										
			RD										
		275	09-RA										
			RB										
			RC										
			RD										
	90 DEGREES INTO TAD, 2-D DIRECTIONAL <1>	22.5	PT-FD01-2D1	+/-30	DEGREES	X		+/- 1/4%			TRAVERSABLE	1	
			PS-FD01-2D2										
			DP-FD01-2D3										
		67.5	02-2D1								+ P2 + P1 + P3 HIGH		
			2D2										
			2D3								PORT ORIENTATION		
		112.5	03-2D1								AT EACH PROBE, DP-XXXX-2D3 = P3 - P2		
			2D2										

NO.	ITEM DESCRIPTION	ANGULAR LOCATION (DEG)	HEADER	RANGE	UNITS	RECORD STATIC/TRANS.	ACCURACY	RECORDING ANA	RECORDING DIG	REMARKS	GROUP	RECORDING CHANNEL
	CONTINUATION OF <1>		DP-FD03-2D3							CONTINUATION OF <1>	1	
		157.5	PT-FD04-2D1									
			PS-FD04-2D2									
			DP-FD04-2D3									
		202.5	05-2D1									
			2D2									
			2D3									
		247.5	06-2D1									
			2D2									
			2D3									
		292.5	07-2D1									
			2D2									
			2D3									
		337.5	08-2D1									
			2D2									
			2D3									
	DOWNSTREAM FROM TURBINE VANE EXIT, 2-D DIRECTIONAL <2>	42.88	PT-FC01-2D1	+/-30	DEGREES	X	+/- 1/4%			TRAVERSABLE ---------- SAME AXIAL LOCATION AS (2). ---------- INDIVIDUAL PROBES OPTIONALLY REPLACEABLE BY RAKES (2) ---------- SEE NOTE, UNDER <1>, FOR PORT CONVENTION	1	
			PS-FC01-2D2									
			DP-FC01-2D3									
		87.88	02-2D1									
			2D2									
			2D3									
		132.88	03-2D1									
			2D2									
			2D3									
		177.88	04-2D1									
			2D2									
			2D3									
		222.88	05-2D1									
			2D2									
			2D3									
		267.88	06-2D1									
			2D2									
			2D3									
		312.88	07-2D1									
			2D2									
			2D3									
		357.88	08-2D1									

NO.	ITEM DESCRIPTION	ANGULAR LOCATION (DEG)	HEADER	RANGE	UNITS	RECORD STATIC/TRANS.		ACCURACY	ALOG TAPE	CM	REMARKS	GROUP	RECORDING CHANNEL
	CONTINUATION OF <2>		PT-FC08-2D2 2D3								CONTINUATION OF <2>	1	
	TAD EXIT, 3-D DIRECT-IONAL. <3>	5	PT-FE01-3D1 PS-FE01-3D2 DP-FE01-3D3 PS-FE01-3D4 DP-FE01-3D5	+/-30	DEGREES	X		+/- 1/4%			TRAVERSABLE SAME AXIAL LOCATION AS (3) INDIVIDUAL PROBES OPT-IONALLY REPLACEABLE BY RAKES (3).	1	
		45	02-3D1 3D2 3D3 3D4 3D5										
		95	03-3D1 3D2 3D3 3D4 3D5								P5(HIGH) P2 P1 P3 (HIGH) P4		
		135	04 3D1 3D2 3D3 3D4 3D5										
		185	05-3D1 3D2 3D3 3D4 3D5								PORT ORIENTATION AT EACH PROBE, DP-XXXX-3D3 = P3 - P2 DP-XXXX-3D5 = P5 - P4		
		225	06-3D1 3D2 3D3 3D4 3D5										
		275	07-3D1 3D2 3D3 3D4 3D5										
		315	08-3D1 3D2 3D3 3D4 3D5										
	DIFFUSER EXIT, 2-D OR 3-D DIRECTIONAL, AT OPTION OF TEST EN-GINEER. <4>	85	PT-FF01-3D1 PS-FF01-3D2 DP-FF01-3D3 PS-FF01-3D4 DP-FF01-3D5	+/-30	DEGREES	X		+/- 1/4%			TRAVERSABLE SAME AXIAL LOCATION AS (4) INDIVIDUAL PROBES OPT-IONALLY REPLACEABLE WITH RAKES (4)	1	
		115	02-3D1 3D2										

NO.	ITEM DESCRIPTION	ANGULAR LOCATION (DEG)	HEADER	RANGE	UNITS	RECORD STATIC/TRANS.	ACCURACY	RECORDING ANA	RECORDING DIG	REMARKS	GROUP	RECORDING CHANNEL
	CONTINUATION OF <4>		DP-FF02-3D3							CONTINUATION OF <4>	1	
			3D4									
			3D5							SEE NOTE, UNDER <3>,		
		140	03-3D1							FOR PORT CONVENTION		
			3D2									
			3D3									
			3D4									
			3D5									
		160	04-3D1									
			3D2									
			3D3									
			3D4									
			3D5									
		180	05-3D1									
			3D2									
			3D3									
			3D4									
			3D5									
		200	06-3D1									
			3D2									
			3D3									
			3D4									
			3D5									
		220	07-3D1									
			3D2									
			3D3									
			3D4									
			3D5									
		245	08-3D1									
			3D2									
			3D3									
			3D4									
			3D5									
		275	09-3D1									
			3D2									
			3D3									
			3D4									
			3D5									
	FUEL BOWL, PLANE I, 3 DIRECTIONAL	90	PT-FI01-3D1	+/-30	DEGREES	X	+/- 1/4%			TRAVERSABLE	1	
			PS-FI01-3D2									
			DP-FI01-3D3							SAME PLANE AS STATIC		
	<5>		PS-FI01-3D4							TAPS [24]		
			DP-FI01-3D5									
		135	02-3D1							SEE NOTE, UNDER <3>,		
			3D2							FOR PORT CONVENTION		
			3D3									
			3D4									
			3D5									
		180	03-3D1									
			3D2									

NO.	ITEM DESCRIPTION	ANGULAR LOCATION (DEG)	HEADER	RANGE	UNITS	RECORD STATIC/TRANS.		ACCURACY	RECORDING ANA	RECORDING DIG	REMARKS	GROUP	RECORDING CHANNEL
	CONTINUATION OF <5>		DP-FI03-3D3								CONTINUATION OF <5>	1	
			PS-FI03-3D4										
			DP-FI03 3D5										
		225	04-3D1										
			3D2										
			3D3										
			3D4										
			3D5										
		270	05-3D1										
			3D2										
			3D3										
			3D4										
			3D5										
	FUEL BOWL, PLANE K, 3 DIRECTIONAL <6>	90	PT-FK01-3D1	+/-30	DEGREES	X		+/- 1/4%			TRAVERSABLE ---------- SAME PLANE AS STATIC TAPS |27|. ---------- SEE NOTE, UNDER <3>, FOR PORT CONVENTION	1	
			PS-FK01-3D2										
			DP-FK01-3D3										
			PS-FK01-3D4										
			DP-FK01-3D5										
		135	02-3D1										
			3D2										
			3D3										
			3D4										
			3D5										
		180	03-3D1										
			3D2										
			3D3										
			3D4										
			3D5										
		225	04-3D1										
			3D2										
			3D3										
			3D4										
			3D5										
		270	05-3D1										
			3D2										
			3D3										
			3D4										
			3D5										

TABLE III (CONTINUED)

PHASE II+ INSTRUMENTATION SCHEDULE

WATER FLOW MODEL ATD HPOTP TAD/DIFFUSER/HGM

NO.	ITEM DESCRIPTION	ANGULAR LOCATION (DEG)	HEADER	RANGE	UNITS	RECORD STATIC/TRANS.	ACCURACY	ANALOG TAPE	ANALOG CM	REMARKS	GROUP	RECORDING CHANNEL
	HUB CAP STATIC |1|	CL	PS-XA	0-35	PSIA	X	+/- 1/4%				1,2	
	TURBINE INLET, I. D., STATIC	45.0	PS-XTI01	0-35	PSIA	X	+/- 1/4%			0.45" UPSTREAM FROM INLET SIDE OF ORIFICE PLATE	1,2	
		90.0	02									
		202.5	03									
	|2|	270.0	04							* 9.59		
	TURBINE VANE AREA A, O. D., STATIC |3|	1.88	PS-XVA01	0-35	PSIA	X	+/- 1/4%			0.125" DOWNSTREAM FROM ORIFICE PLATE EXIT.	2	
		91.88	02									
		181.88	03							* 8.51		
		271.88	04									
	TURBINE VANE AREA B, O. D., STATIC |4|	1.88	PS-XVB01							0.5" DOWNSTREAM FROM PLANE OF TAPS |3|		
		91.88	02									
		181.88	03							* 8.01		
		271.88	04									
	TURBINE VANE AREA C, O. D., STATIC |5|	1.88	PS-XVC01							0.5" DOWNSTREAM FROM PLANE OF TAPS |4|		
		91.88	02									
		181.88	03							* 7.51		
		271.88	04									
	TURBINE VANE AREA D, O. D., STATIC |6|	0.72	PS-XVD01							0.5" UPSTREAM FROM TRAILING EDGE OF SWIRL VANES.		
		90.72	02									
		180.72	03									
		270.72	04							* 6.08		
	TURBINE VANE EXIT, CHANNEL I.D., STATIC |7|	3.36	PS-XB01	0-35	PSIA	X	+/- 1/4%			0.56" DOWNSTREAM FROM EXIT END OF TURBINE VANES.	2	
		14.28	02									
		36.09	03									
		47.01	04									
		68.82	05							* 5.02		
		79.74	06									
		101.55	07									
		112.47	08									
		134.28	09									
		145.20	10									
		162.01	11									
		177.93	12									
		199.74	13									
		210.66	14									
		232.47	15									

* DISTANCE FROM BASE PLANE - INCHES

	ITEM DESCRIPTION	ANGULAR LOCATION (DEG)	HEADER	RANGE	UNITS	RECORD STATIC/TRANS.		ACCURACY	ANALOG TAPE	ANALOG CM	REMARKS	GROUP	RECORDING CHANNEL
		243.39	PS-XB16	0-35	PSIA	X		+/- 1/4%			|7| (CONTINUED)	2	
		265.20	17										
	TURBINE VANE EXIT,	276.12	18								* 5.02		
	CHANNEL I.D.,	297.93	19										
	STATIC - CONTD. |7|	308.85	20										
		320.66	21										
		341.58	22										
	TURBINE VANE EXIT,	0	PS-XB23	0-35	PSIA	X		+/- 1/4%				2	
	CHANNEL O.D.,	32.73	24								* 5.42	2	
	STATIC |8|	65.45	25									1,2	
		98.18	26									2	
		130.91	27									2	
		163.64	28									2	
		196.36	29									1,2	
		229.09	30									2	
		261.82	31									2	
		294.55	32									2	
		327.27	33									1,2	
	40 DEGREES INTO TAD,	0	PS-XTD101	0-35	PSIA	X		+/- 1/4%				2	
	CHANNEL I.D.,	32.73	02								* 3.15		
	STATIC |9|	65.45	03										
		98.18	04										
		130.91	05										
		163.64	06										
		196.36	07										
		229.09	08										
		261.82	09										
		294.55	10										
		327.27	11										
	90 DEGREES INTO TAD,	8.18	PS-XTD2T01	0-35	PSIA	X		+/- 1/4%				2	
	CHANNEL TOP,	40.91	02								* 4.03		
	STATIC |10|	73.63	03										
		106.36	04										
		139.09	05										
		171.82	06										
		204.54	07										
		237.27	08										
		270.00	09										
		302.73	10										
		335.45	11										

* DISTANCE FROM BASE PLANE - INCHES

	ITEM DESCRIPTION	ANGULAR LOCATION (DEG)	HEADER	RANGE	UNITS	RECORD STATIC/TRANS.		ACCURACY	ANALOG TAPE	CM	REMARKS	GROUP	RECORDING CHANNEL
	90 DEGREES INTO TAD, CHANNEL BOTTOM, STATIC |11|	8.18	PS-XC01	0-35	PSIA	X		+/- 1/4%				2	
		40.91	02								* 2.70		
		73.63	03										
		106.36	04										
		139.09	05										
		171.82	06										
		204.54	07										
		237.27	08										
		270.00	09										
		302.73	10										
		335.45	11										
	TAD, 45 DEGREES UP-STREAM FROM EXIT, O. D.,STATIC |12|	0	PS-XTD301	0-35	PSIA	X		+/- 1/4%			* 3.89	2	
		45	02										
		90	03										
		135	04										
		180	05										
		225	06										
		270	07										
		315	08										
	BOWL, AT TAD EXIT, O.D., STATIC |13|	27.73	PS-XD01	0-35	PSIA	X		+/- 1/4%			* 5.25	2	
		54.09	02										
		103.18	03										
		152.27	04										
		207.73	05										
		234.09	06										
		283.13	07										
		332.27	08										
	BOWL, DOWNSTREAM FROM H X, O.D., STATIC |14|	90	PS-XE11	0-35	PSIA	X		+/- 1/4%				2	
		135	12										
		180	13										
		225	14										
		270	15										
											* 13.60		
	BOWL, DOWNSTREAM FROM H X, I.D., STATIC |15|	0	PS-XE05	0-35	PSIA	X		+/- 1/4%				1,2	
		90	06										
		180	07										
		270	08										

* DISTANCE FROM BASE PLANE - INCHES

	ITEM DESCRIPTION	ANGULAR LOCATION (DEG)	HEADER	RANGE	UNITS	RECORD STATIC/TRANS.		ACCURACY	ANALOG TAPE	CM	REMARKS	GROUP	RECORDING CHANNEL
	TURBINE INLET, RAKE-3 TOTALS CENTERED ON EQUAL WIDTH CONCENTRIC BANDS. (1)	0	PT-XT101-RA	0-50	PSIA	X		+/- 1/4%			PROBE INLETS IN SAME PLANE AS STATIC TAPS [2]	1,2	
			RB								* 9.59		
			RC										
		135	02-RA										
			RB										
			RC										
	TURBINE VANE EXIT-RAKE, 3 TOTALS CENTERED ON EQUAL WIDTH CONCENTRIC BANDS. (2)	25.26	PT-XB01-RA	0-35	PSIA			+/- 1/4%			PROBE INLETS IN SAME PLANE AS STATIC TAPS [7]. REMOVABLE	2	
			RB										
			RC										
		57.98	02-RA								* 5.02	1,2	
			RB										
			RC										
		90.71	03-RA									2	
			RB										
			RC										
		123.44	04-RA									2	
			RB										
			RC										
		156.17	05-RA									2	
			RB										
			RC										
		188.89	06-RA									1,2	
			RB										
			RC										
		221.62	07-RA									2	
			RB										
			RC										
		254.35	08-RA									2	
			RB										
			RC										
		287.08	09-RA									2	
			RB										
			RC										
		319.88	10-RA									1,2	
			RB										
			RC										
		352.53	11-RA									2	
			RB										
			RC										
	BOWL, BETWEEN TAD EXIT AND HEAT EXCHANGER, DIRECTIONAL, 2D <2>	8.18	PT-XD01-2D1	0-35	PSIA			+/- 1/4%			TRAVERSABLE	2	
			PS-XD01-2D2										
			DP-XD01-2D3								* 5.25		
		40.91	02-2D1										
			2								SEE PAGE 5 FOR PORT CONVENTION		
			3										
		90.00	03-2D1										

* DISTANCE FROM BASE PLANE - INCHES

	ITEM DESCRIPTION	ANGULAR LOCATION (DEG)	HEADER	RANGE	UNITS	RECORD STATIC/TRANS.	ACCURACY	ANALOG TAPE	ANALOG CM	REMARKS	GROUP	RECORDING CHANNEL
		90.00	PS-XD03-2D2	0-35	PSIA		+/- 1/4%			<2> (CONTINUED)	2	
			DP-XD03-2D3									
		139.09	04-2D1							* 5.25		
			2									
			3							----------		
		171.82	05-2D1							| + + + |		
	BOHL,BETWEEN TAD		2							| P2 P1 P3 |		
	EXIT AND HEAT EX-		3							| (HIGH)|		
	CHANGER, DIRECTION-	188.18	06-2D1							----------		
	AL, 2D (CONTINUED)		2							PORT ORIENTATION		
	<2>		3									
		220.91	07-2D1							AT EACH PROBE,		
			2							DP-XXXX-2D3 = P3 - P2		
			3									
		270.00	08-2D1									
			2									
			3									
		319.09	09-2D1									
			2									
			3									
		351.82	10-2D1									
			2									
			3									
	BOHL, DOWNSTREAM	90	PT-XE01-3D1	0-35	PSIA		+/- 1/4%			TRAVERSABLE	2	
	FROM HEAT EXCHANGER,		PS-XE01-3D2									
	DIRECTIONAL, 3D <1>		DP-XE01-3D3							* 12.70		
			PS-XE01-3D4									
			DP-XE01-3D5							----------		
		135	02-3D1							| + |		
			2							| P5(HIGH) |		
			3							| . |		
			4							| + + + |		
			5							| P2 P1 P3 |		
		180	03-3D1							| (HIGH)|		
			2							| + |		
			3							| P4 |		
			4							----------		
			5							PORT ORIENTATION		
		225	04-3D1									
			2							AT EACH PROBE,		
			3							DP-XXXX-3D3 = P3 - P2		
			4							DP-XXXX-3D5 = P5 - P4		
			5									
		270	05-3D1									
			2									
			3									
			4									
			5									

* DISTANCE FROM BASE PLANE - INCHES

TABLE IV. RUN IDENTIFICATION INFORMATION

Identifier	Entry
Run Number	#
Rerun Number	#
Water Temperature	#
Barometric Pressure	#
Power Level	65 or 109%
Diffuser Strut Set	A, B, C, D or E
Fuel-Side Flow Rate	#
LOX-Side Flow Rate	#
Rakes or Probes Selection	R or P
Rakes/probes Angles	#
Rakes/Probes Radial Positions	#

TABLE V. FLOW CALIBRATION TEST PROCEDURE

1. Ascertain that dump tank contains water.
2. Ascertain that pump isolation gate valves are open.
3. Connect Group I instrumentation.
4. Open model air purge valves.
5. Open 6" and 8" ball supply line valves to part-open position.
6. Close 8" discharge valve.
7. Slowly fill rig with water until full.
8. Open 6" and 8" ball supply line valves and flow control valve to full-open position.
9. Bleed instrumentation lines and close model air purge valves.
10. Record water-off zero readings (WOZ).
11. Record zero-flow pre-run data point.
12. Open 8" discharge valve.
13. Start fuel-side supply pump and begin to fill dump tank.
14. When dump tank is over half full start LOX-side supply pump and return pump.
15. Gradually increase LOX-side, fuel-side, and return flowrates to TBD, TBD and TBD GPM.
16. Ascertain that rig pressures are below maximum allowable.
17. Record Group I data points.
18. Slowly increase fuel-side, LOX-side and return pump flowrates to TBD GPM, making sure that rig pressures remain below maximum allowable.
19. Record Group I data points.
20. Repeat steps 18 and 19 until fuel-side and LOX-side flowrates of 1800 and 776 GPM have been reached, or rig pressures reach maximum allowable.
21. Shut off pumps and drain water from model.

TABLE VI. WATER FLOW TEST PROCEDURE

1. Ascertain that dump tank contains water.
2. Ascertain that pump isolation gate valves are open.
3. Connect Group I instrumentation.
4. Open model air purge valves.
5. Open 6" and 8" ball supply line valves to part-open position.
6. Close 8" discharge valve.
7. Slowly fill rig with water until full.
8. Open 6" and 8" ball supply line valves and flow control valve to full-open position.
9. Bleed instrumentation lines and close model air purge valves.
10. Record water-off zero readings (WOZ).
11. Record zero-flow pre-run data point.
12. Open 8" discharge valve.
13. Start fuel-side supply pump and begin to full dump tank.
14. When dump tank is over half full start LOX-side supply pump and return pump.
15. Gradually increase LOX-side, fuel-side, and return flowrates to 194, 450 and 450 GPM.
16. Slowly close flow control valve until TBD-side inlet static pressure reaches TBD.
17. Record Group I data points.
18. Open flow control valve and slowly increase LOX-side, fuel-side and return flowrates to 388, 900 and 900 GPM.
19. Slowly close flow control valve until TBD-side inlet static pressure reaches TBD.
20. Record Group I data points.
21. Open flow control valve and gradually increase LOX-side, fuel-side and return flowrates to 582, 1350 and 1350 GPM.
22. Slowly close flow control valve until TBD-side inlet static pressure reaches TBD.
23. Record Group I data points.
24. Open flow control valve and slowly increase LOX-side, fuel-side and return pump flowrates to 776, 1800 and 1800 GPM.
25. Slowly close flow control valve until TBD-side inlet static pressure reaches TBD.
26. Record Group I data points.
27. Shut off pumps and close rig discharge valve maintaining rig full of water.
28. Record zero-flow post-run data point.
29. Close 6" and 8" ball supply line valves and empty water from rig.
30. Connect Group II measurements and repeat steps 4 through 28.
31. Open flow control valve.
32. Open discharge valve and slowly increase LOX-side, fuel-side and return flowrates to TBD, TBD and TBD GPM.
33. Slowly close flow control valve until TBD-side inlet static pressure reaches TBD.
34. Perform flow visualization.
35. Shut off pumps and drain water from model.

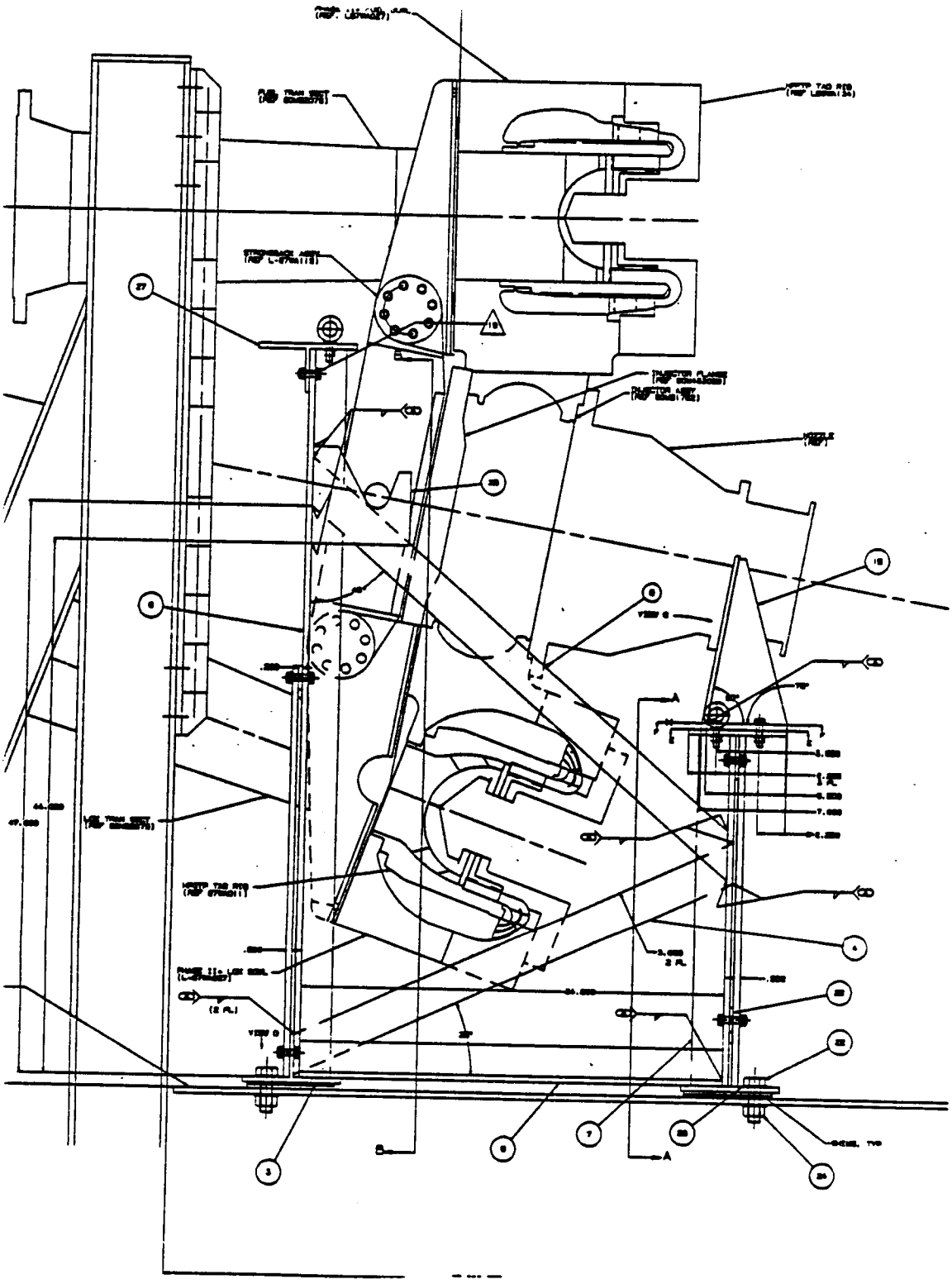

Figure 1. SSME HGM Assembled Water Flow Model on Support Stand

HPFTP TAD Rig and Bowls

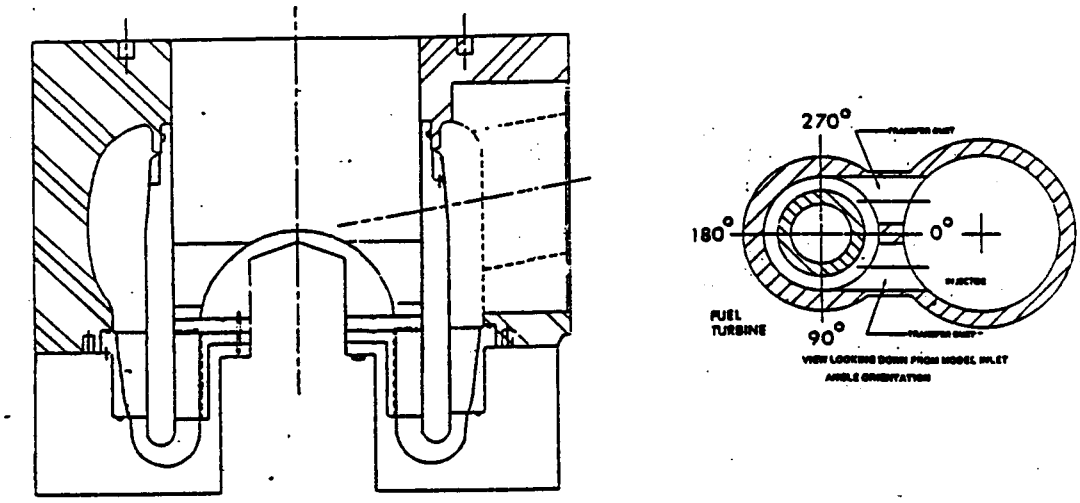

HPOTP TAD Rig and Bowls

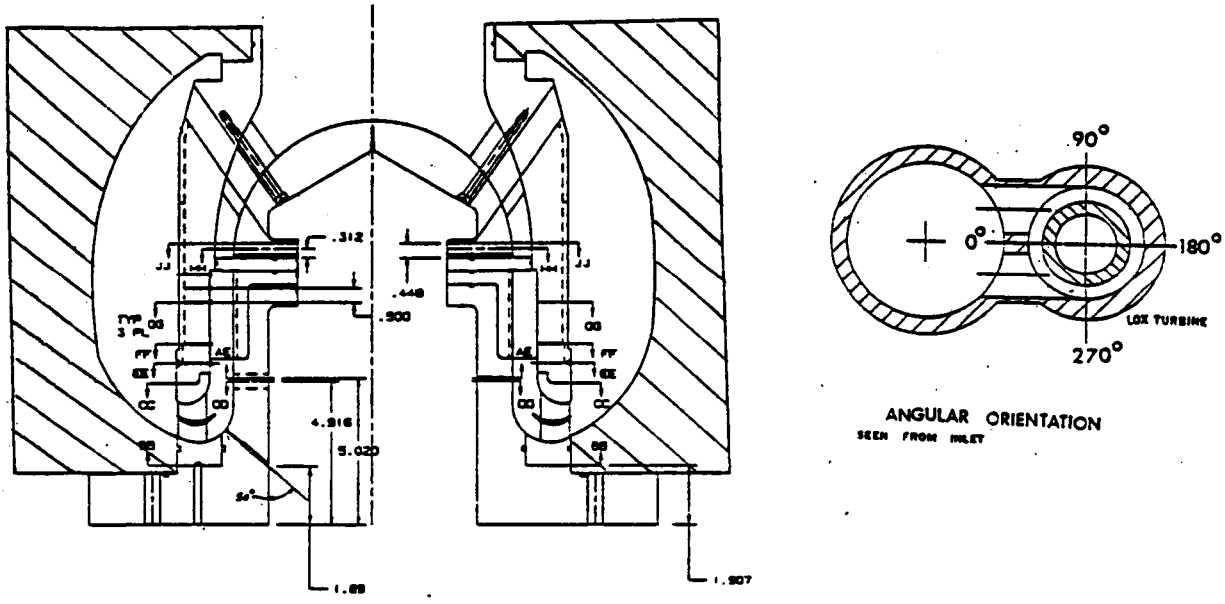

Figure 2. Cross Sections and Angular Orientation of TAD Rigs and Bowls

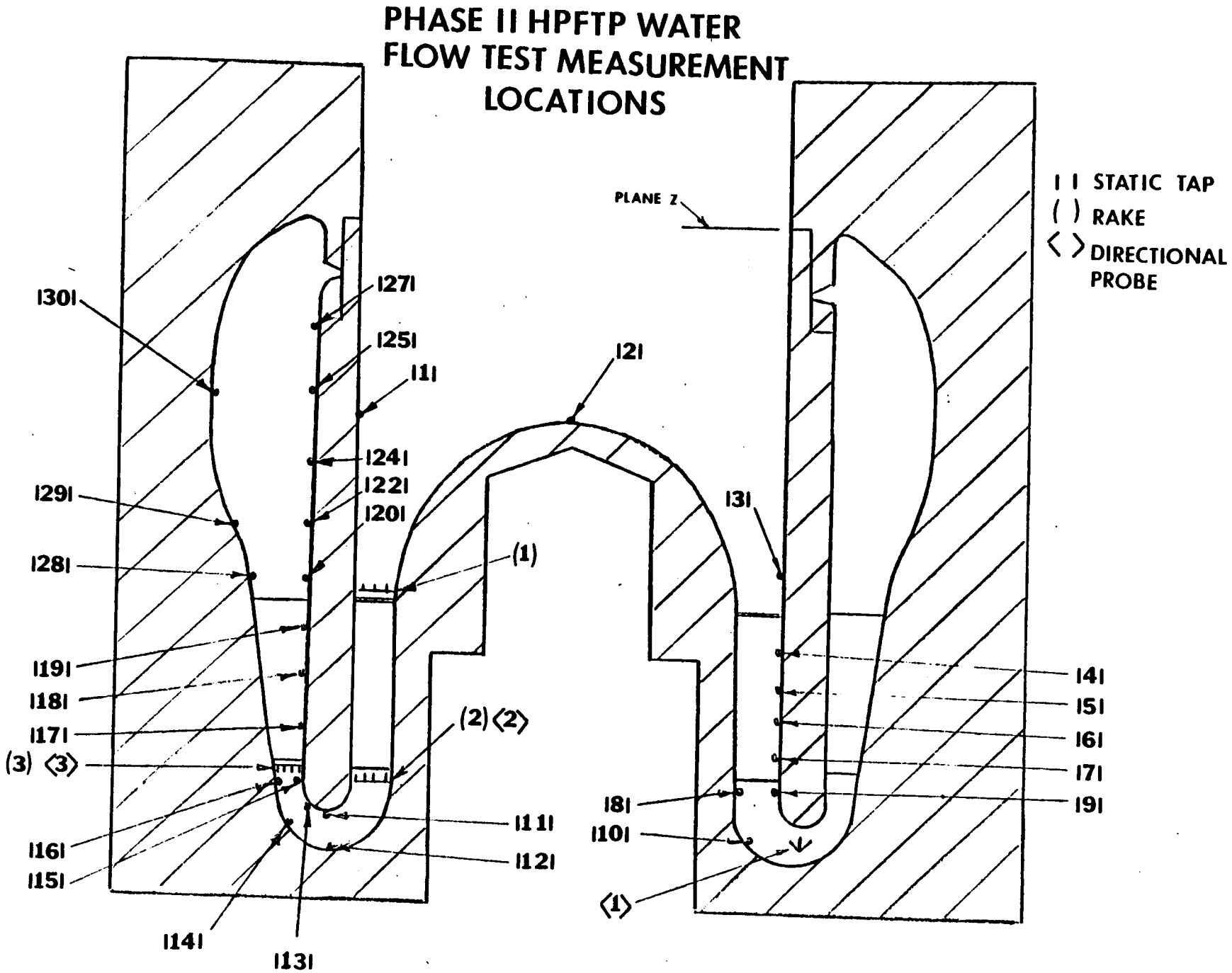

Figure 3. Phase II HPFTP Measurement Locations

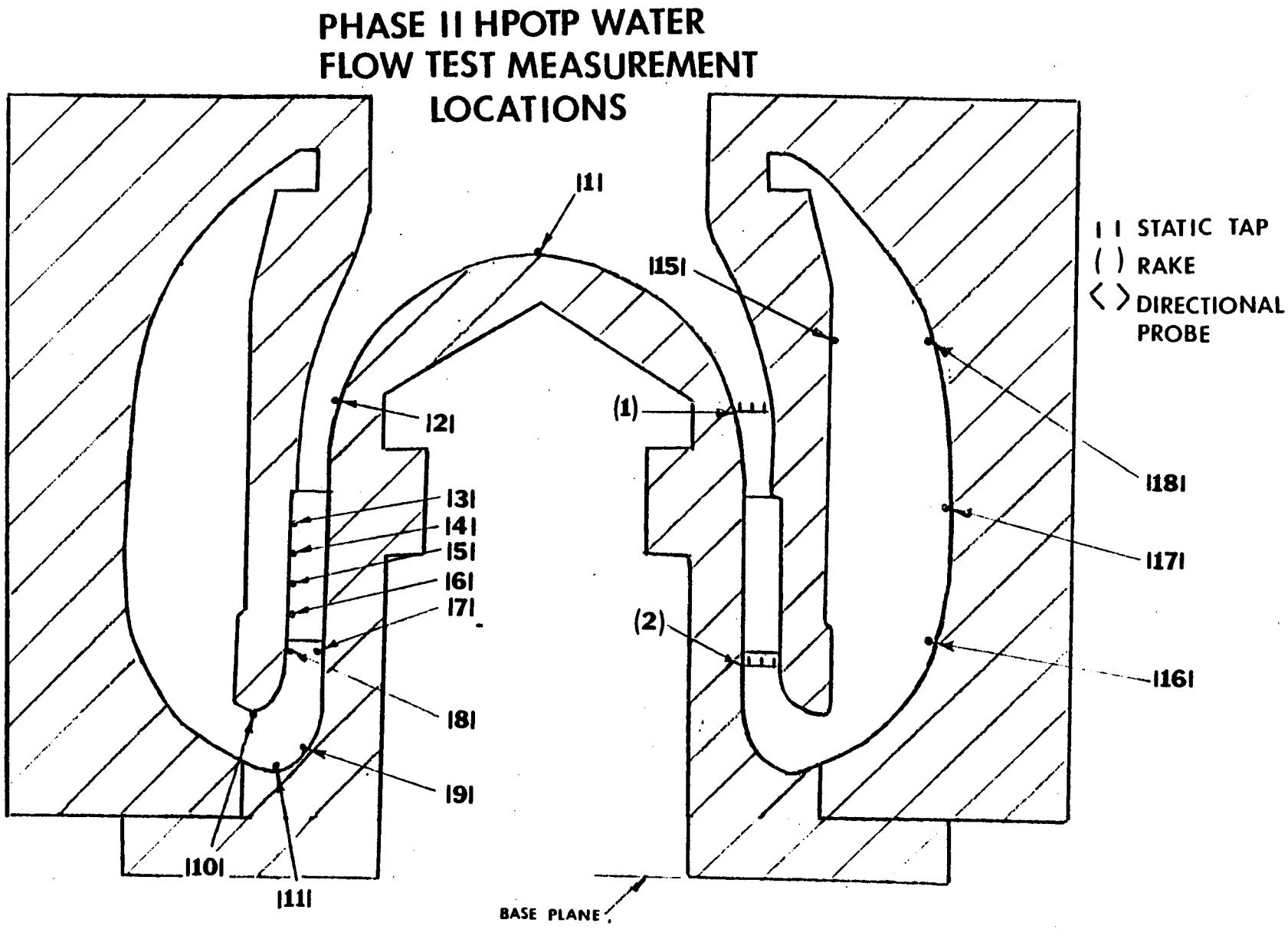

Figure 4. Phase II HPOTP Measurement Locations

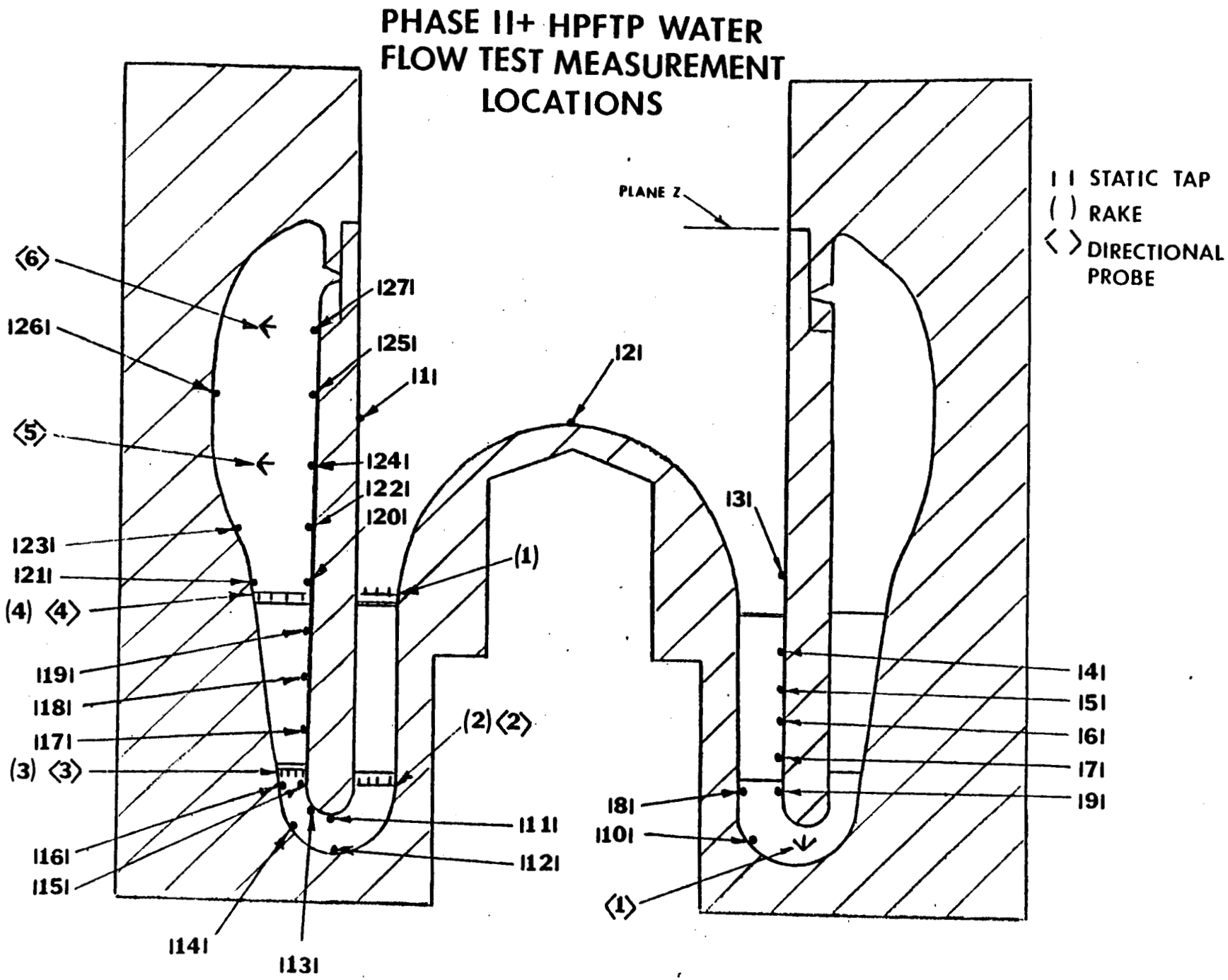

Figure 5. Phase II+ HPFTP Measurement Locations

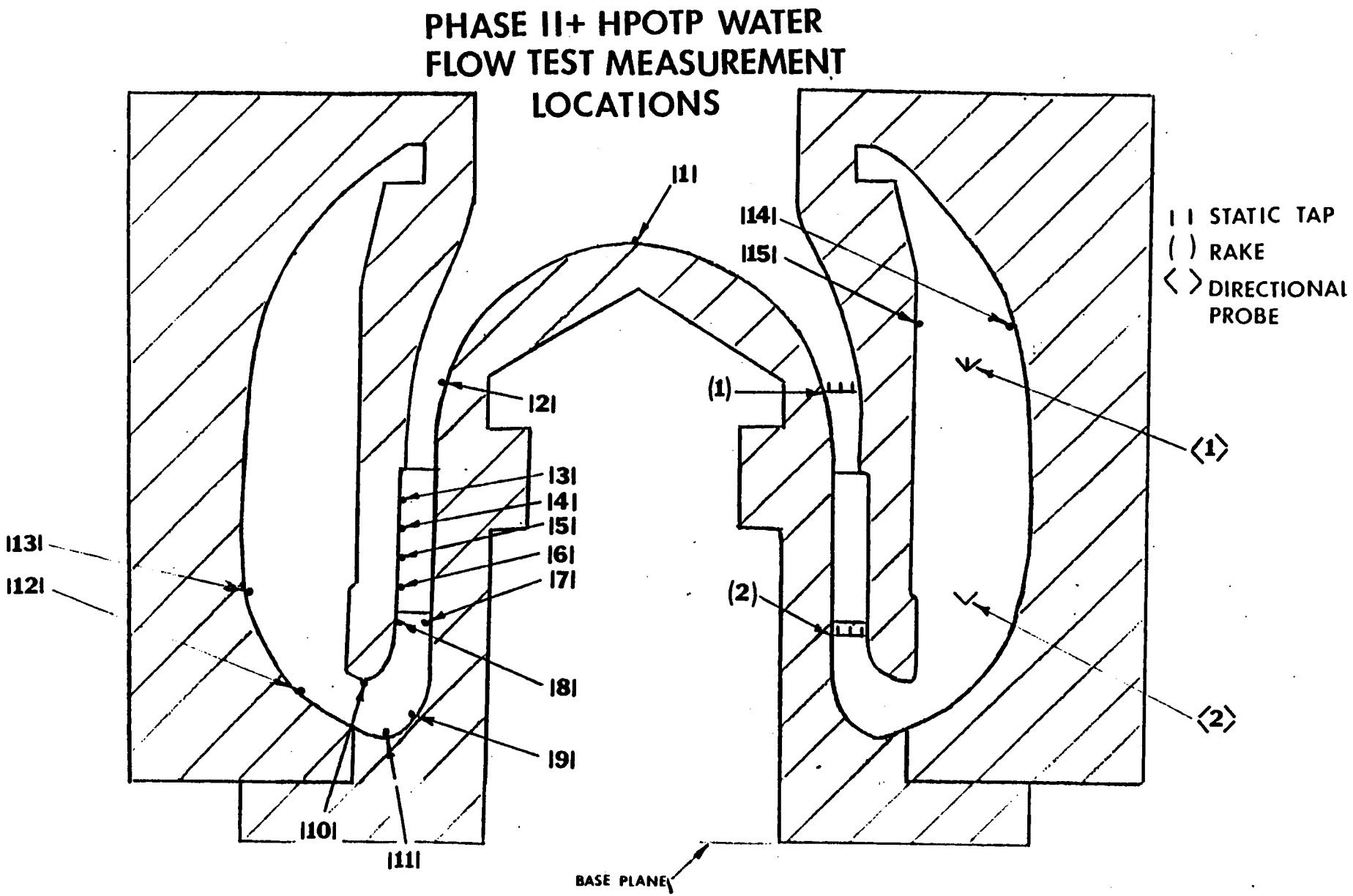

Figure 6. Phase II+ HPOTP Measurement Locations

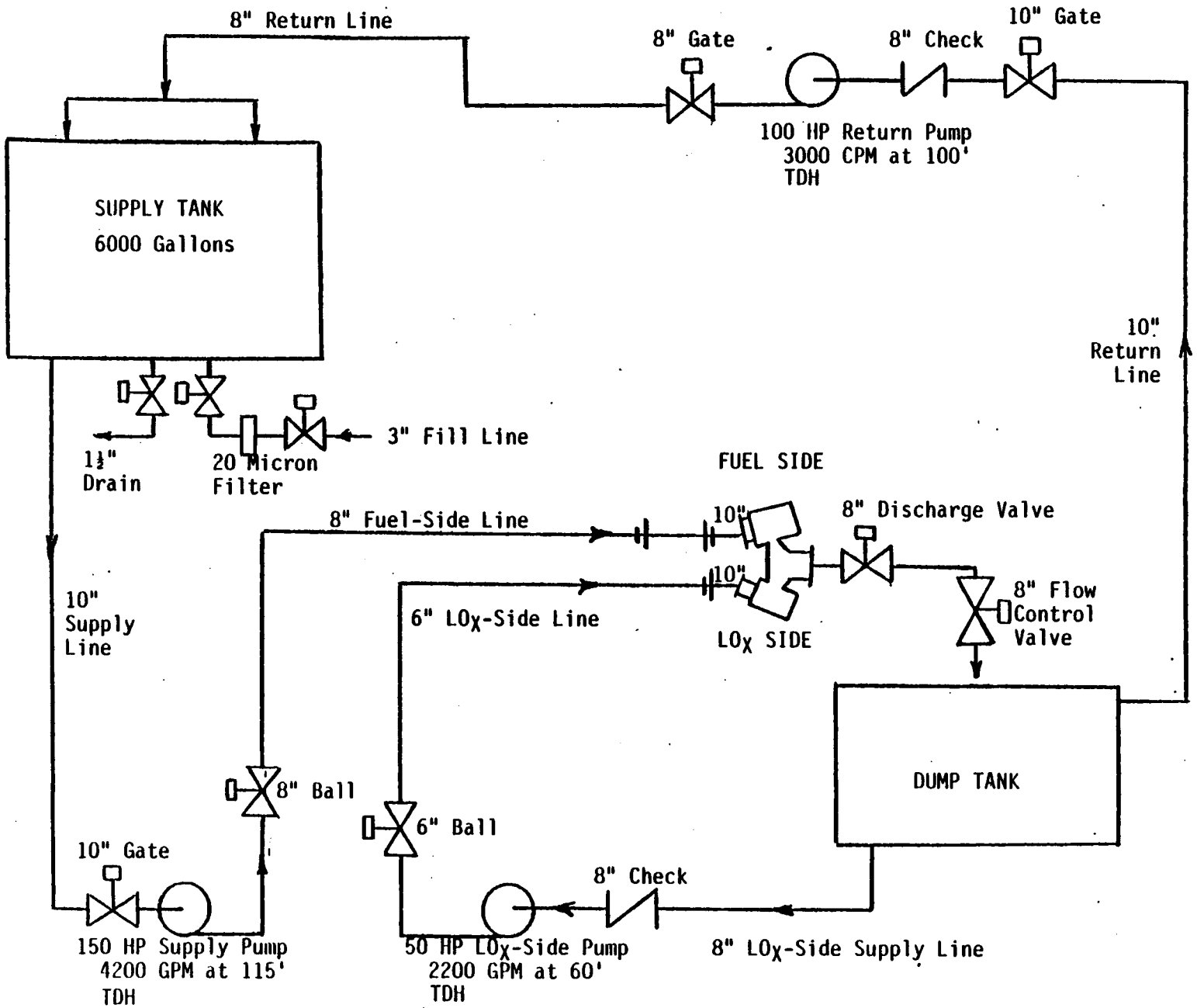

Figure 7. Water Flow Facility Piping Schematic

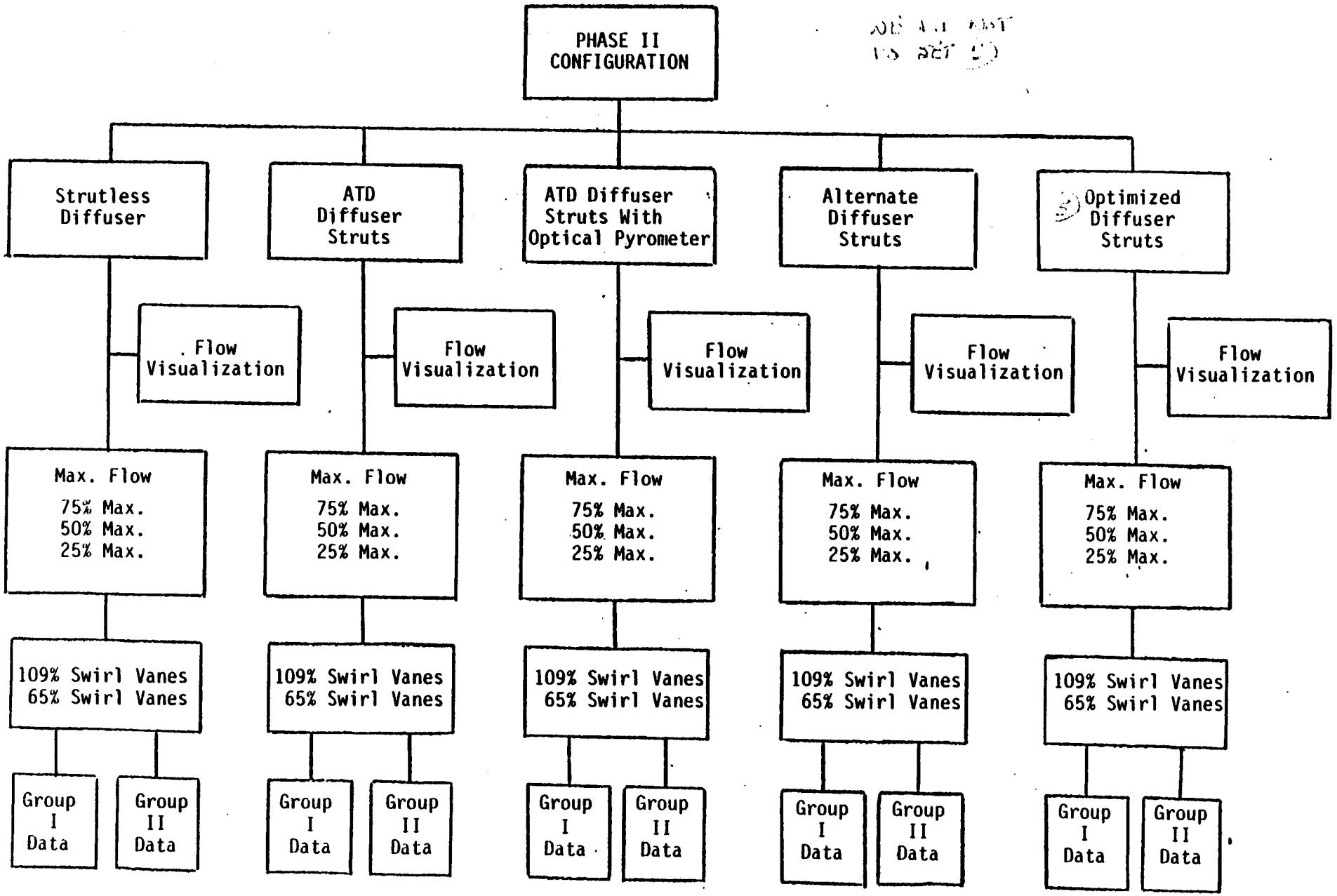

Figure 8. Test Matrix for Phase II Configuration

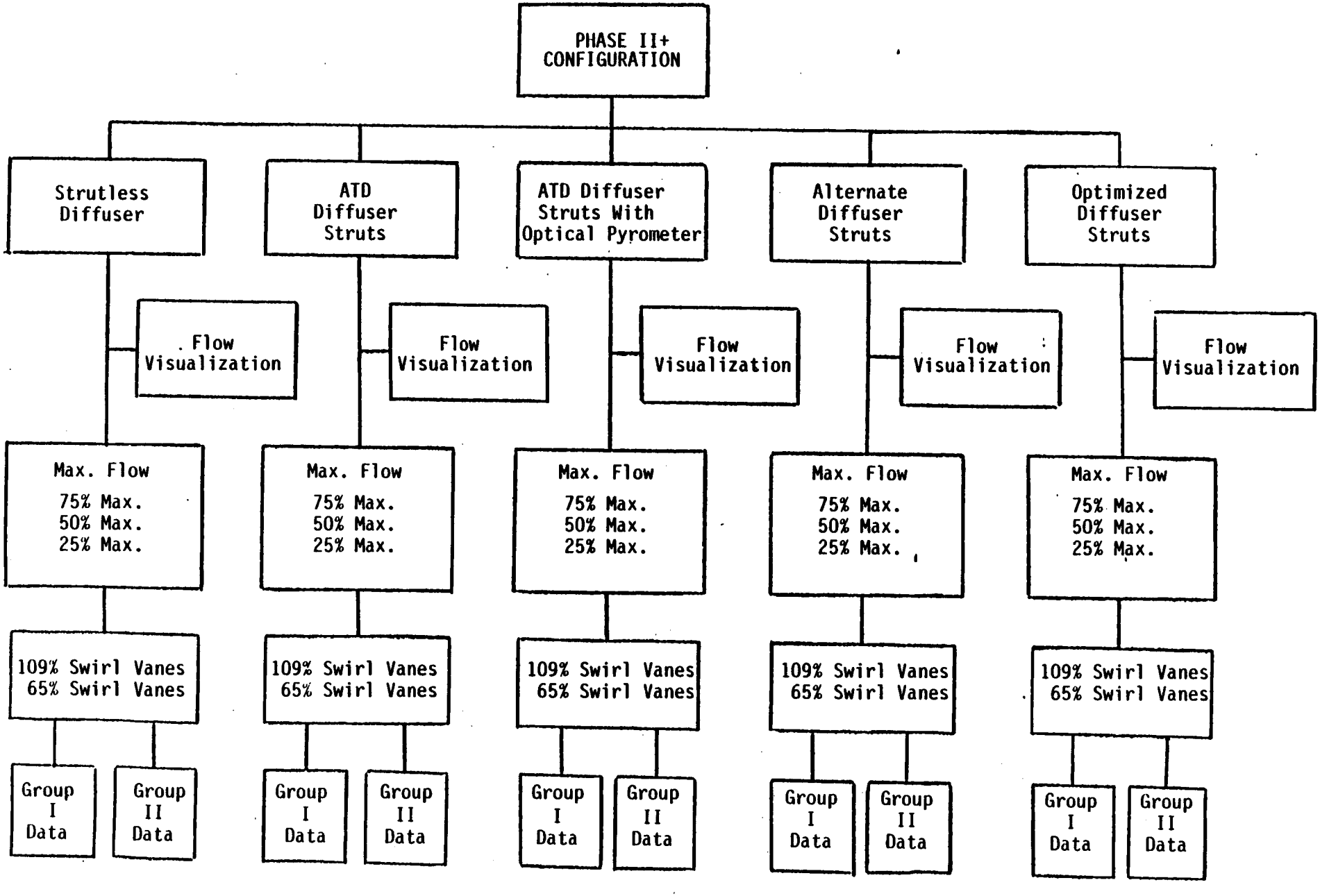

Figure 9. Test matrix for Phase II+ Configuration

Phase II Configuration - No Struts/Posts

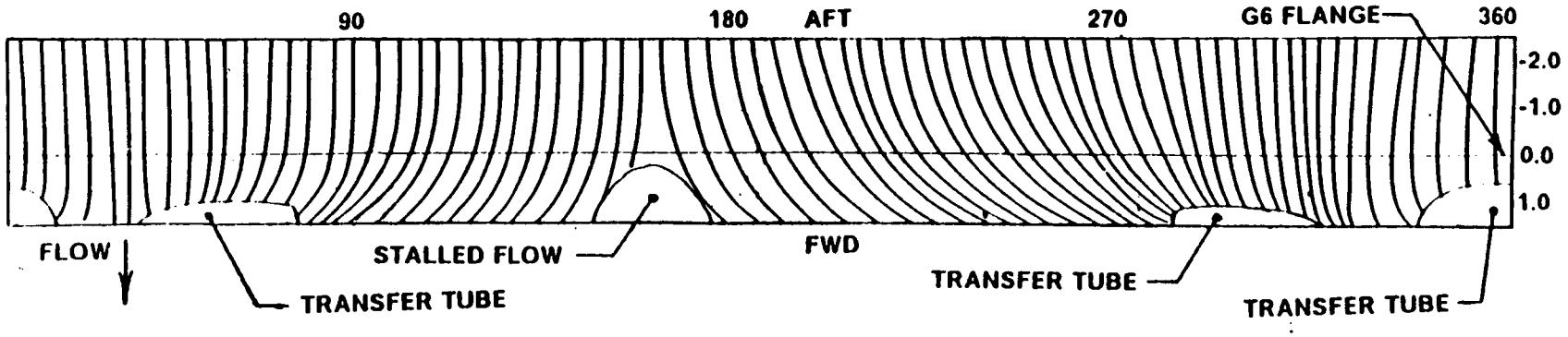

Phase II+ Configuration - No Struts/Posts

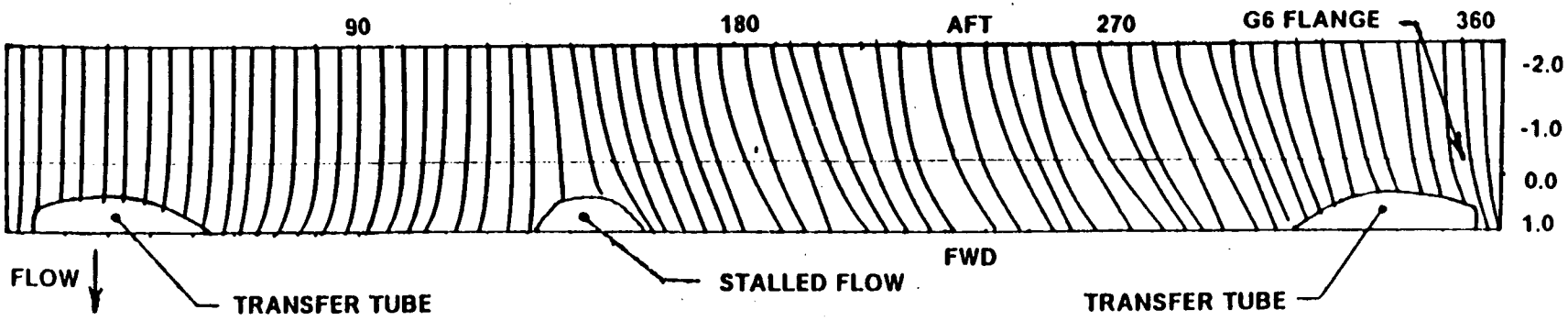

Figure 10. Expected HGM TAD Flow Streamlines

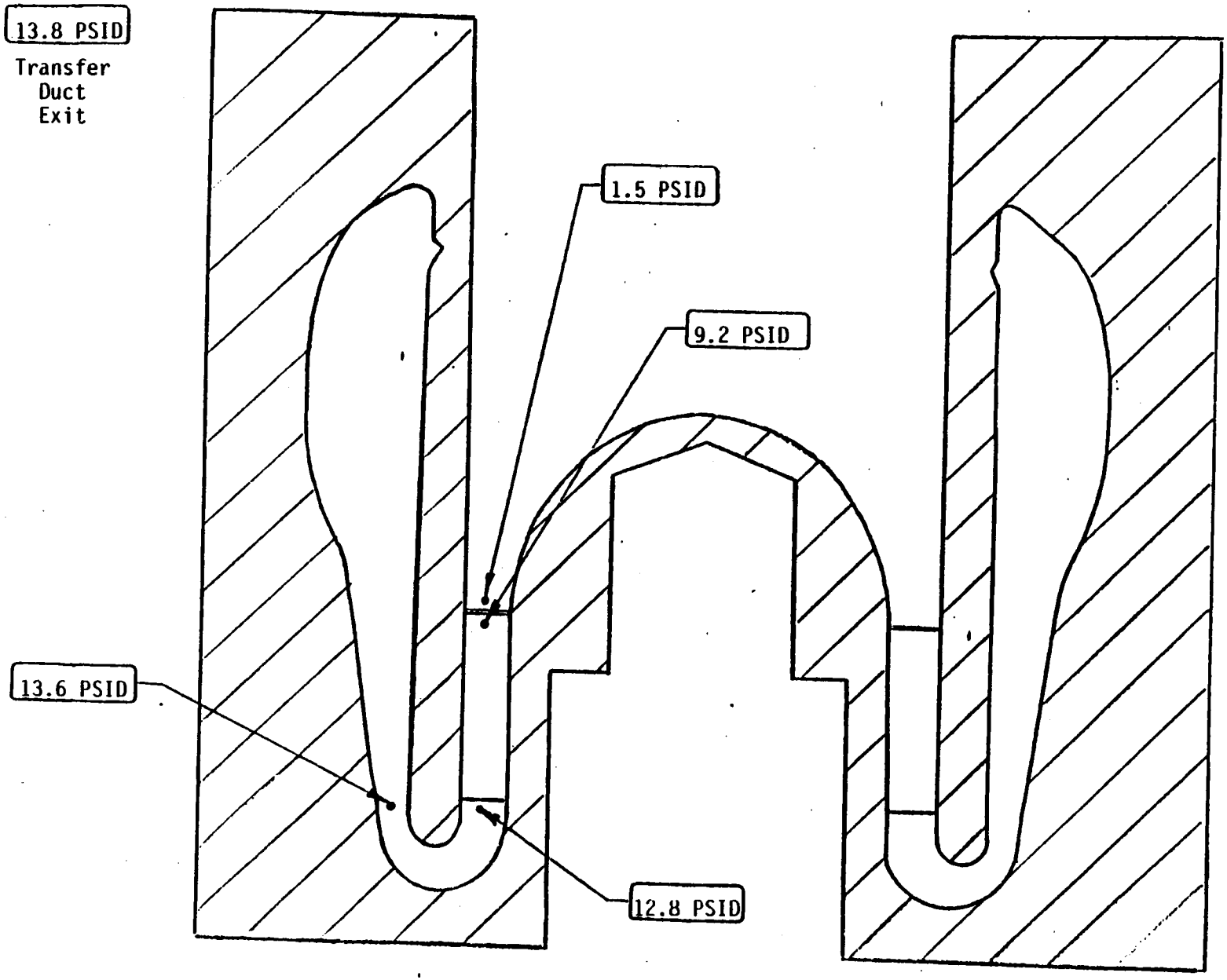

Fgiure 11. Estimated Fuel-Side Static Pressure Losses From the Bullnose Static Pressure - Phase II, No Diffuser Struts or Posts

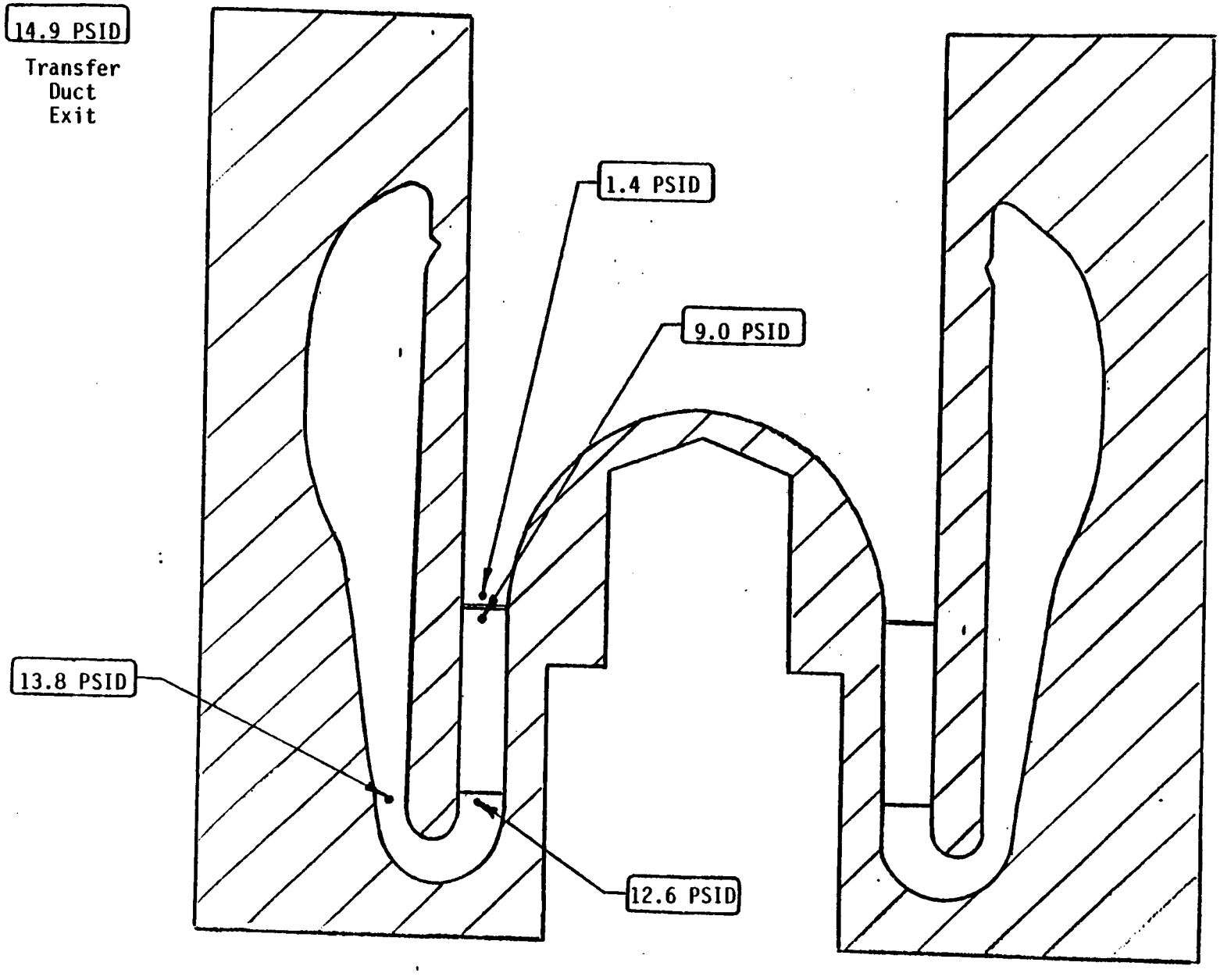

Figure 12. Estimated Fuel-Side Static Pressure Losses From the Bullnose Static Pressure - Phase II, With Diffuser Struts and Posts

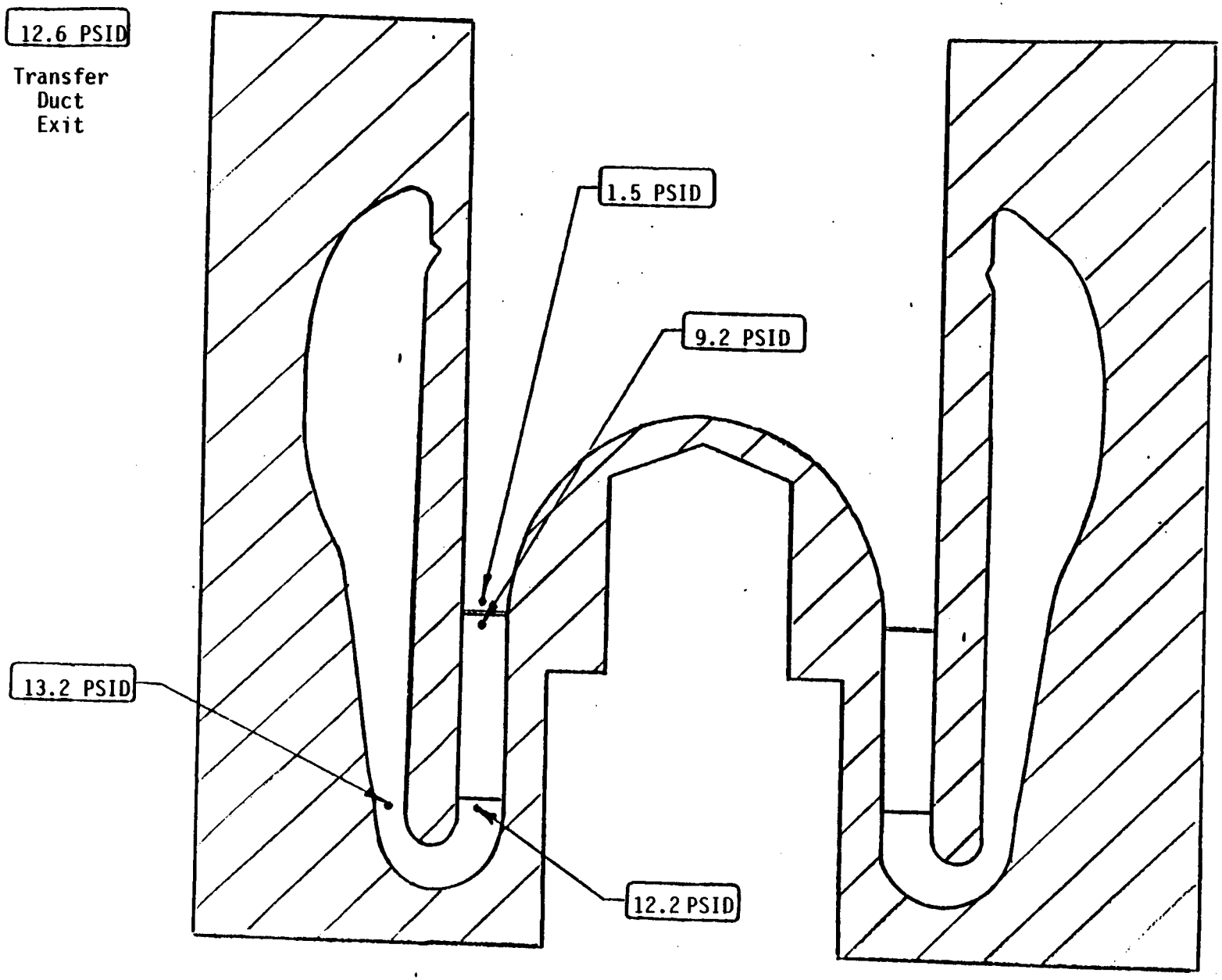

Figure 13. Estimated Fuel-Side Static Pressure Losses From the Bullnose Static Pressure - Phase II+, No Diffuser Struts or Posts

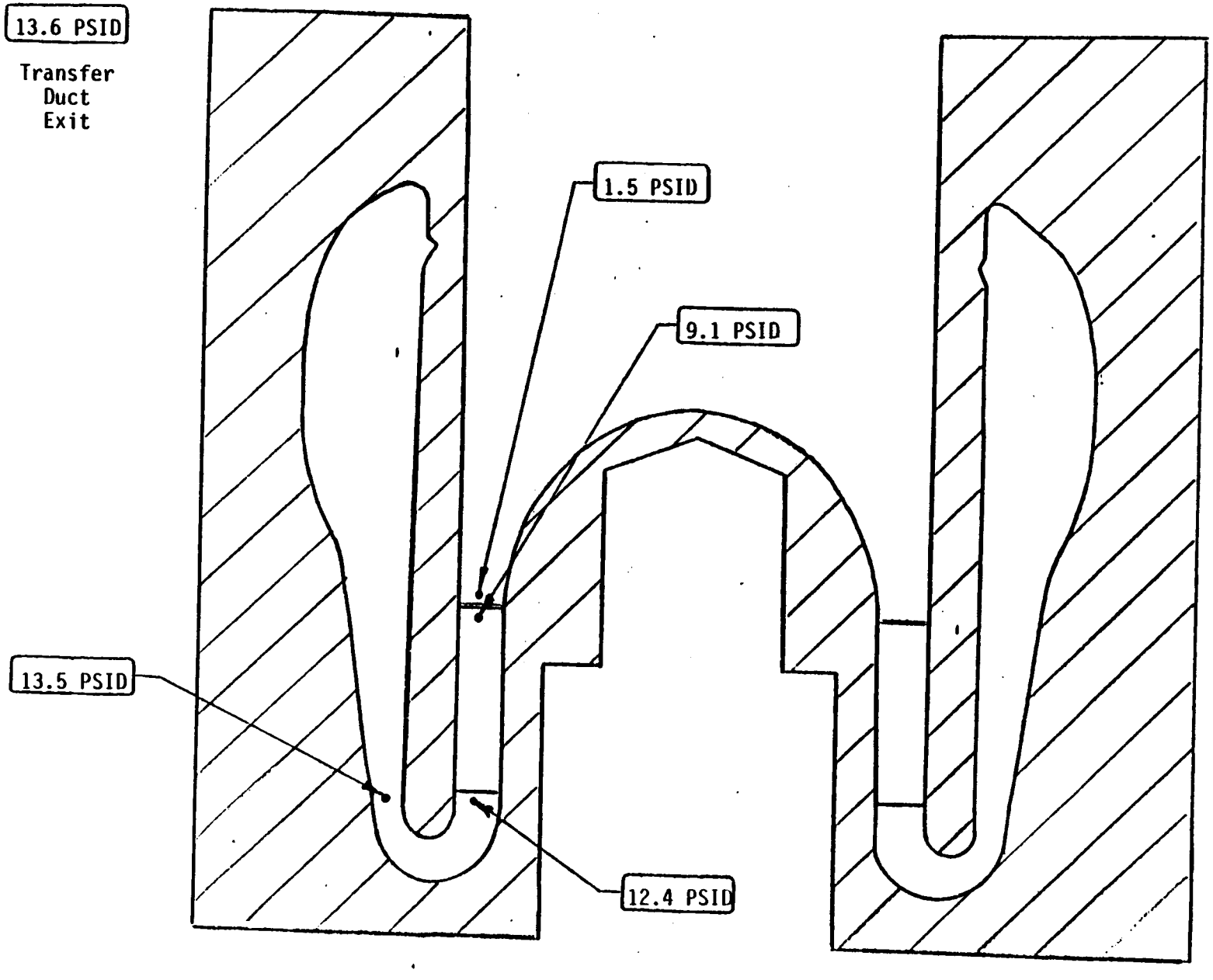

Figure 14. Estimated Fuel-Side Static Pressure Losses From the Bullnose Static Pressure - Phase II+, With Diffuser Struts and Posts

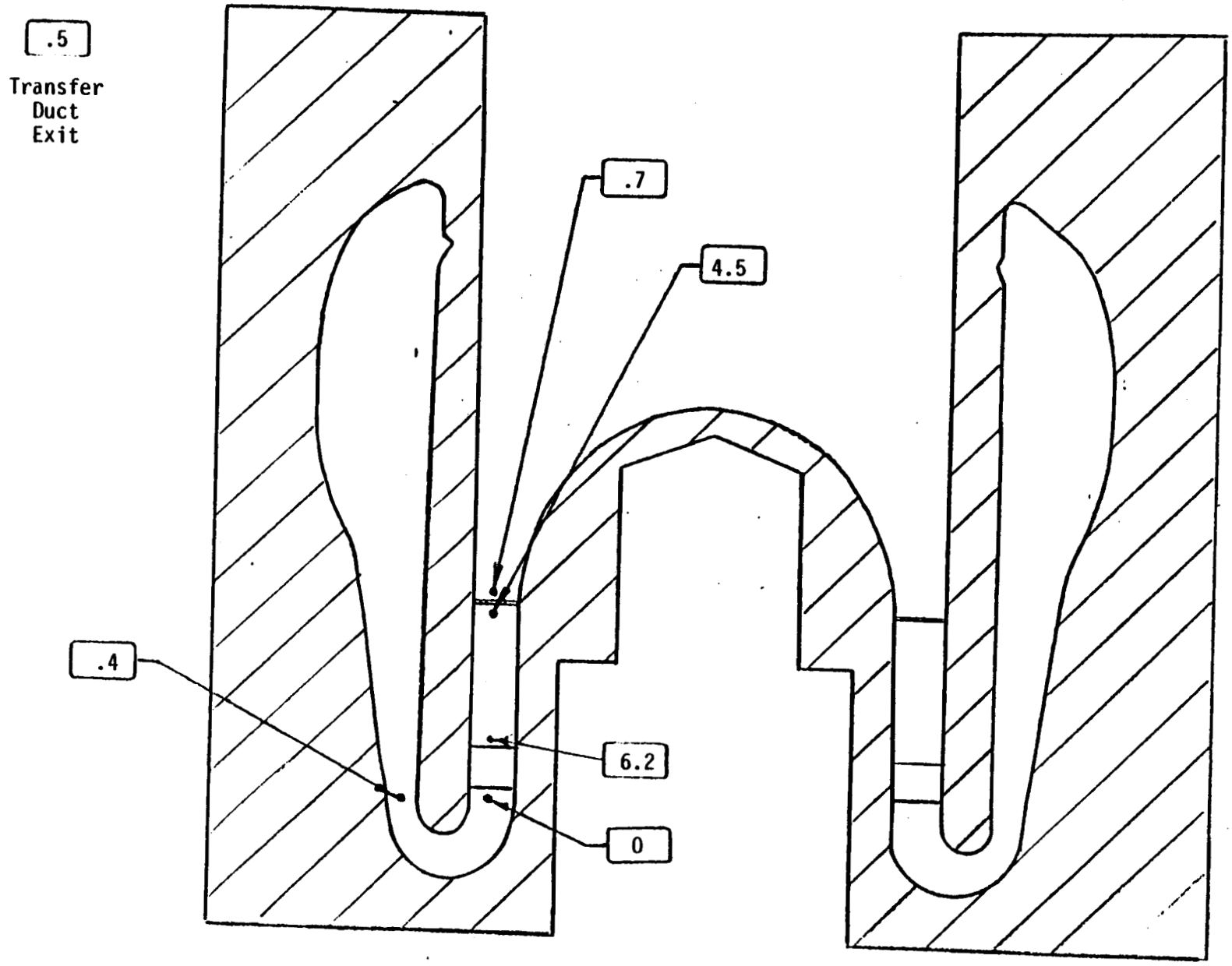

Figure 15. Estimated Fuel-Side Total Pressure Loss Coefficients - Phase II, No Diffuser Struts or Posts

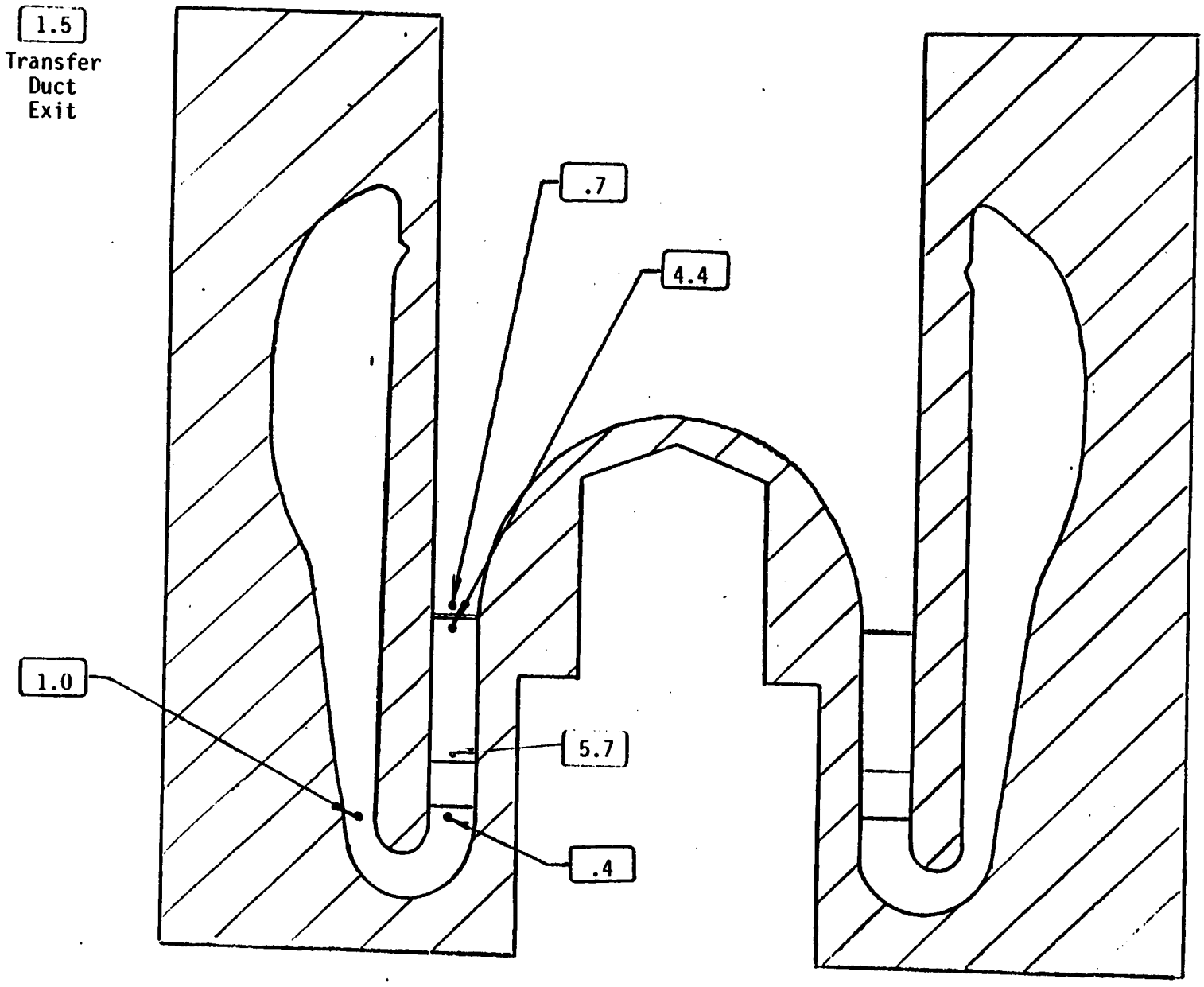

Figure 16. Estimated Fuel-Side Total Pressure Loss Coefficients - Phase II, With Diffuser Struts and Posts

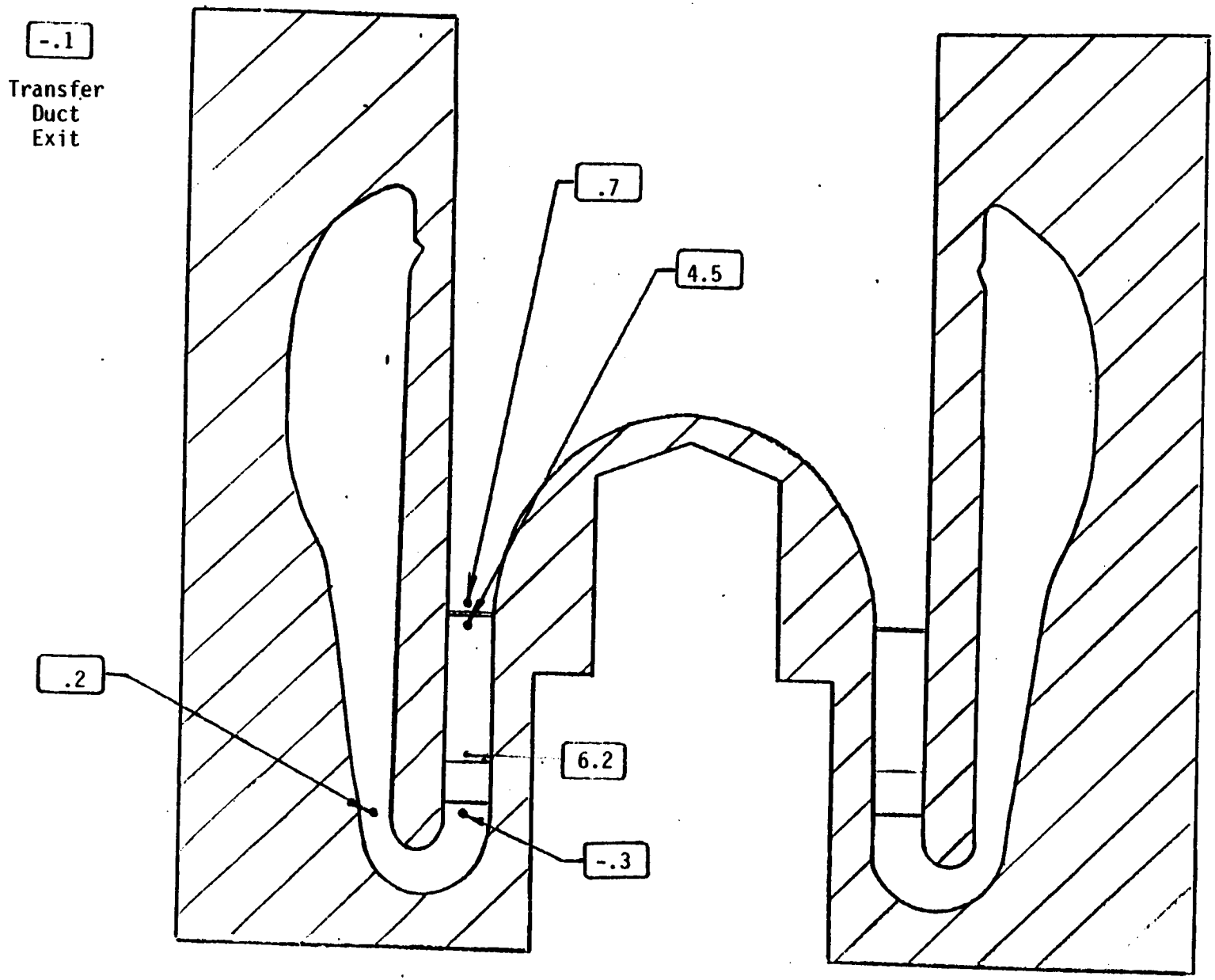

Figure 17. Estimated Fuel-Side Total Pressure Loss Coefficients - Phase II+, No Diffuser Struts or Posts

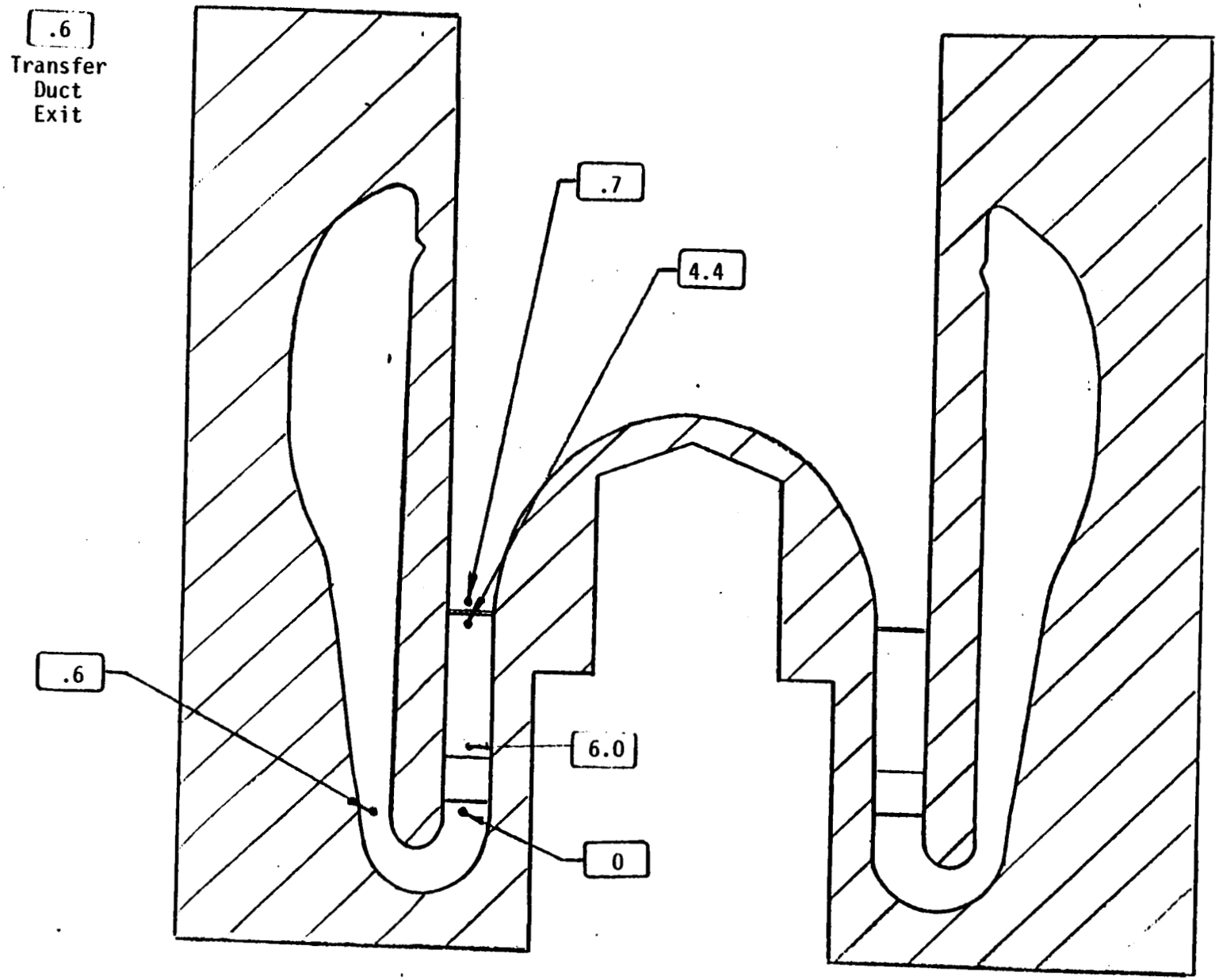

Figure 18. Estimated Fuel-Side Total Pressure Loss Coefficients - Phase II+, With Diffuser Struts and Posts

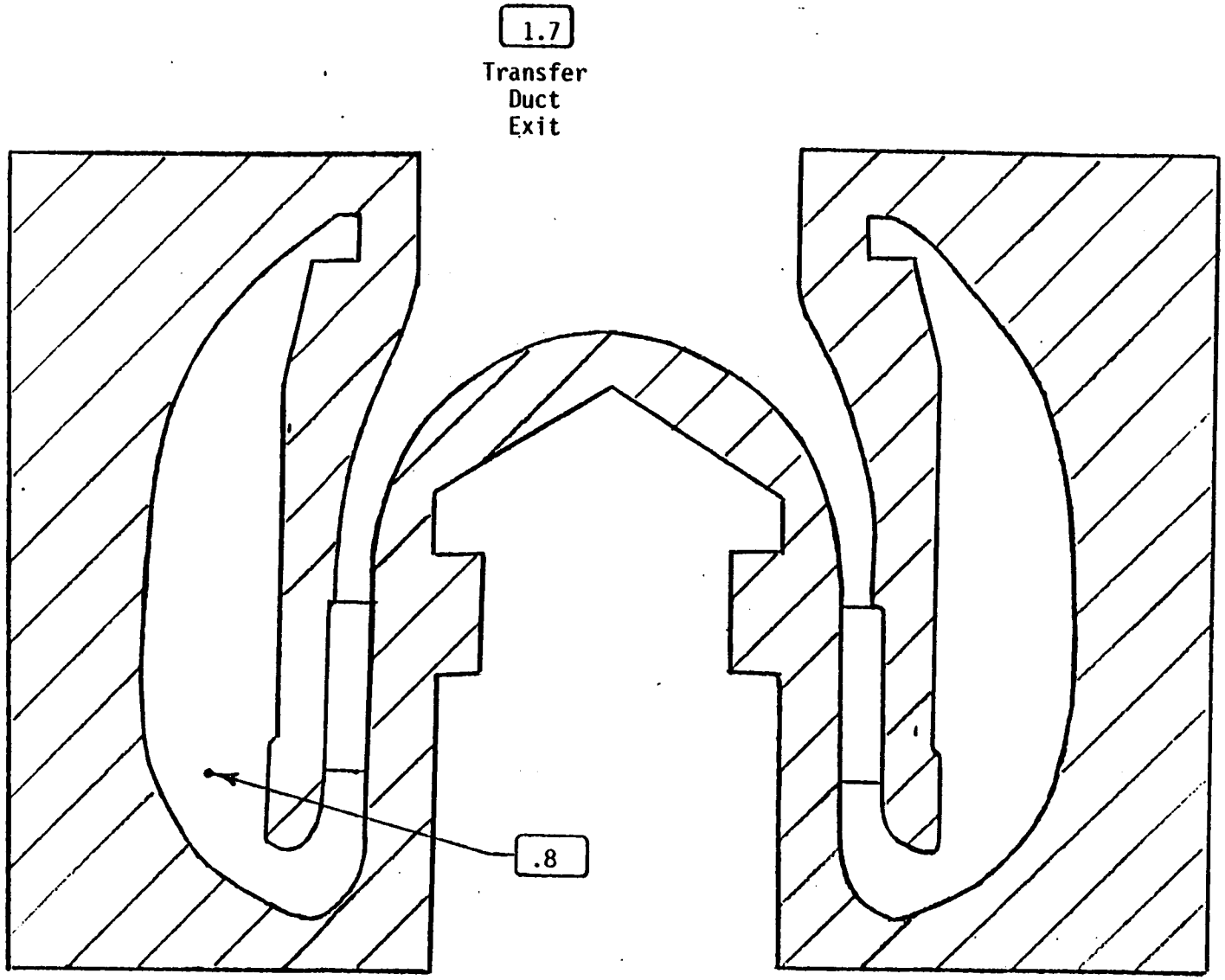

Figure 19. Estimated Oxidizer-Side Total Pressure Loss Coefficients - Phase II and II+

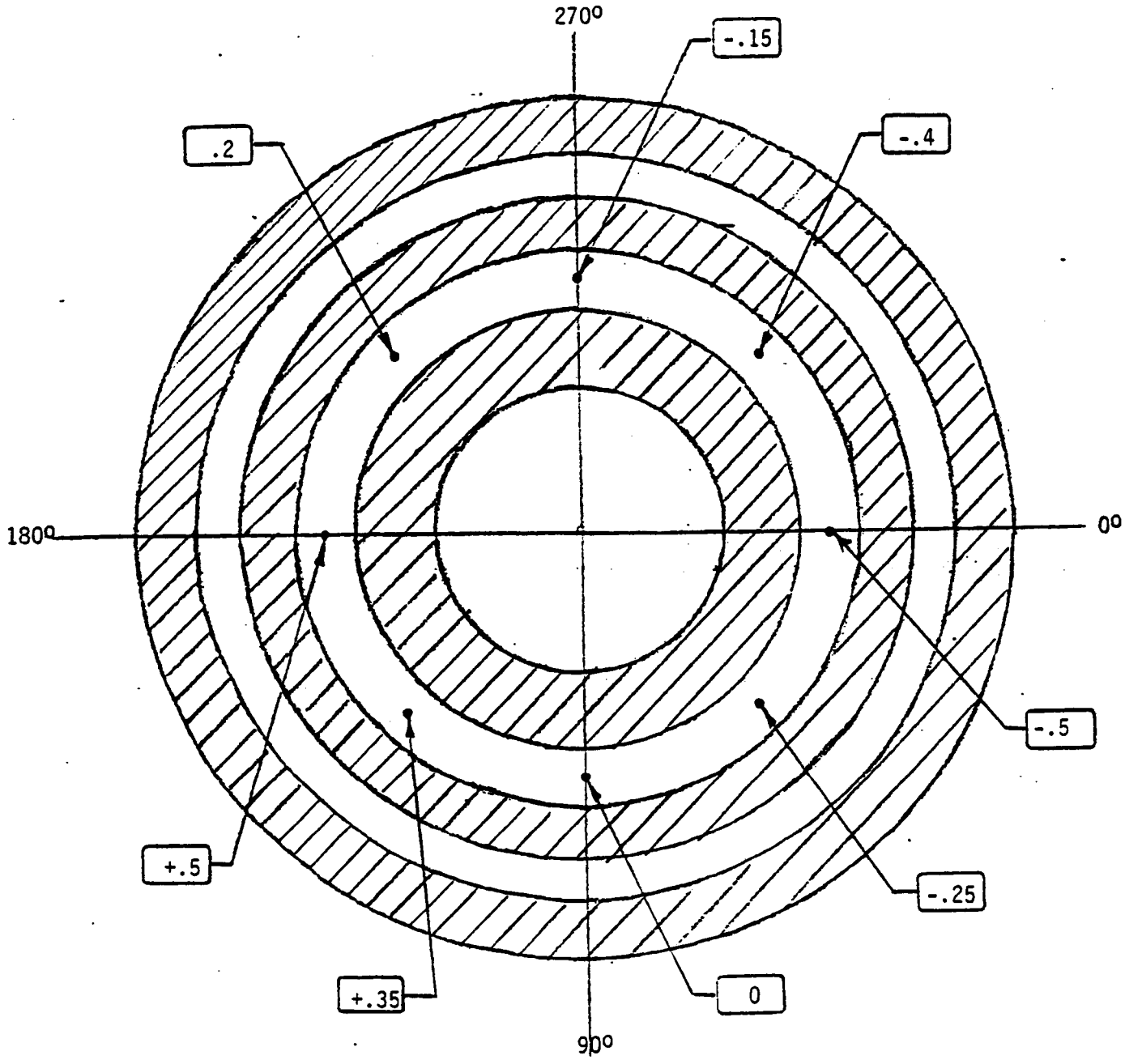

Figure 20. Estimated Fuel-Side Circumferential Turbine Exit Static Pressure Coefficients - Phase II, With Diffuser Struts and Posts

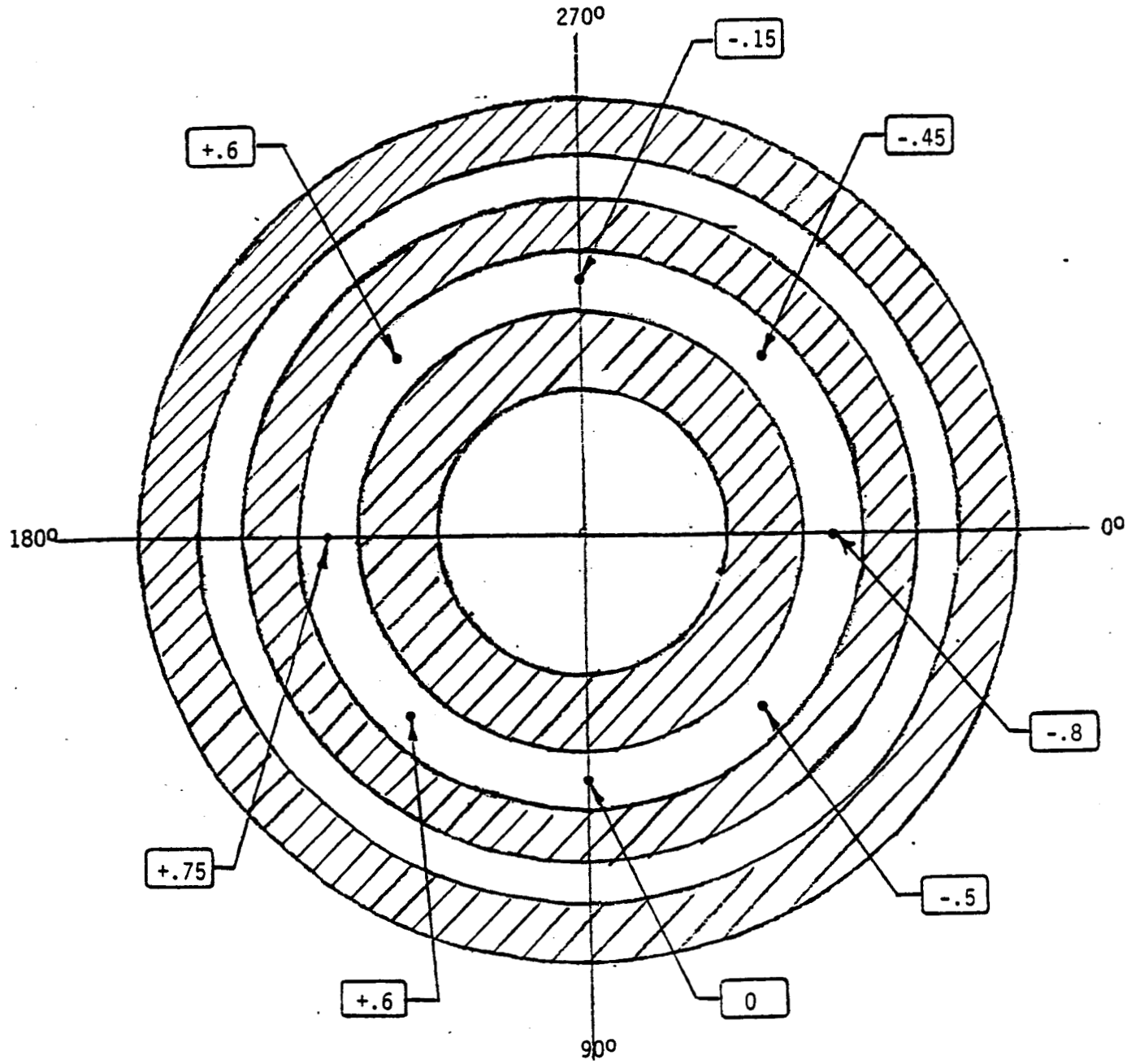

Figure 21. Estimated Fuel-Side Circumferential Turbine Exit Static Pressure Coefficients - Phase II, With Diffuser Struts and Posts

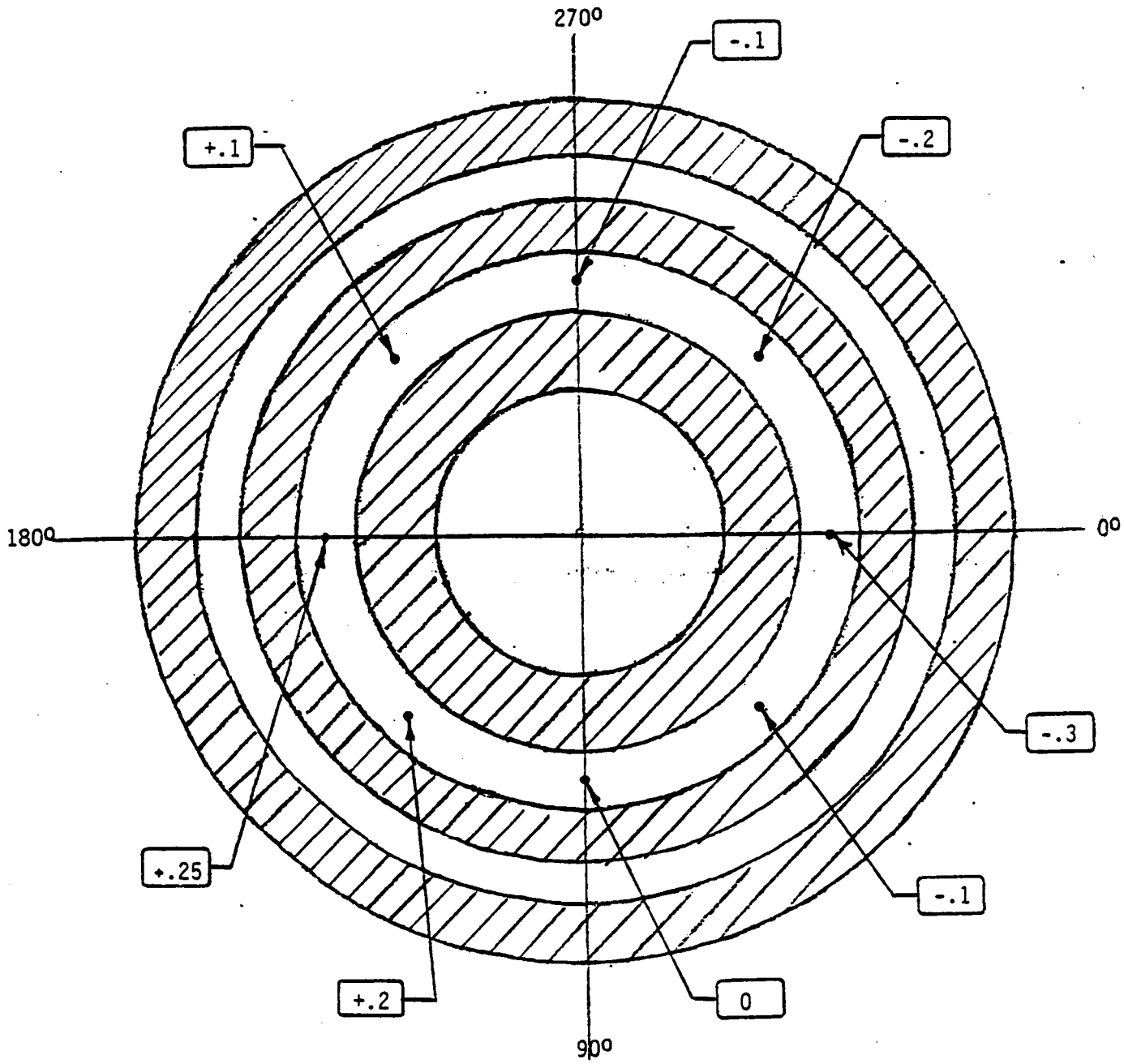

Figure 22. Estimated Fuel-Side Circumferential Turbine Exit Static Pressure Coefficients - Phase II+, No Diffuser Struts or Posts

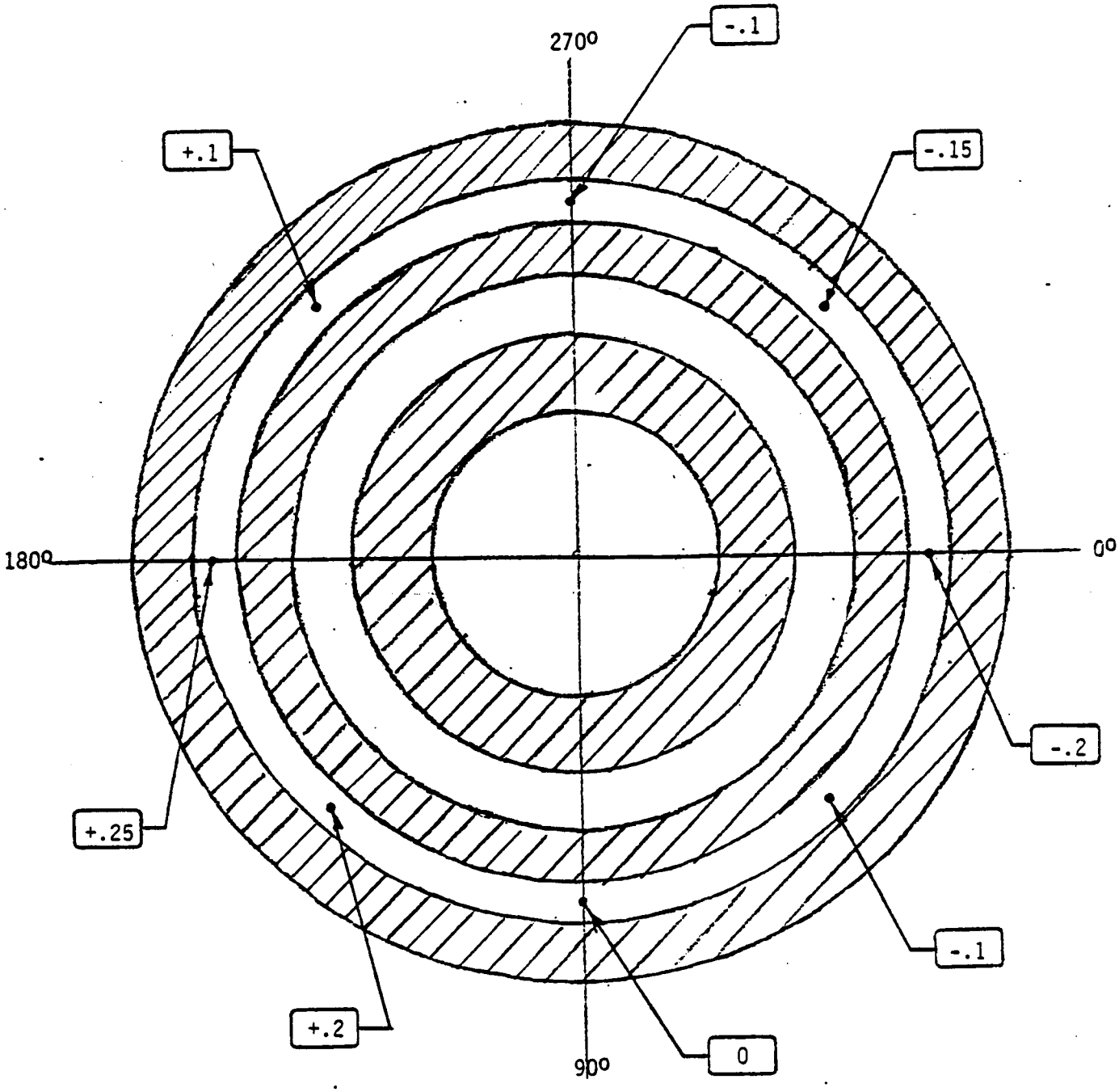

Figure 26. Estimated Fuel-Side Circumferential TAD Exit Static Pressure Coefficients - Phase II+, No Diffuser Struts or Posts

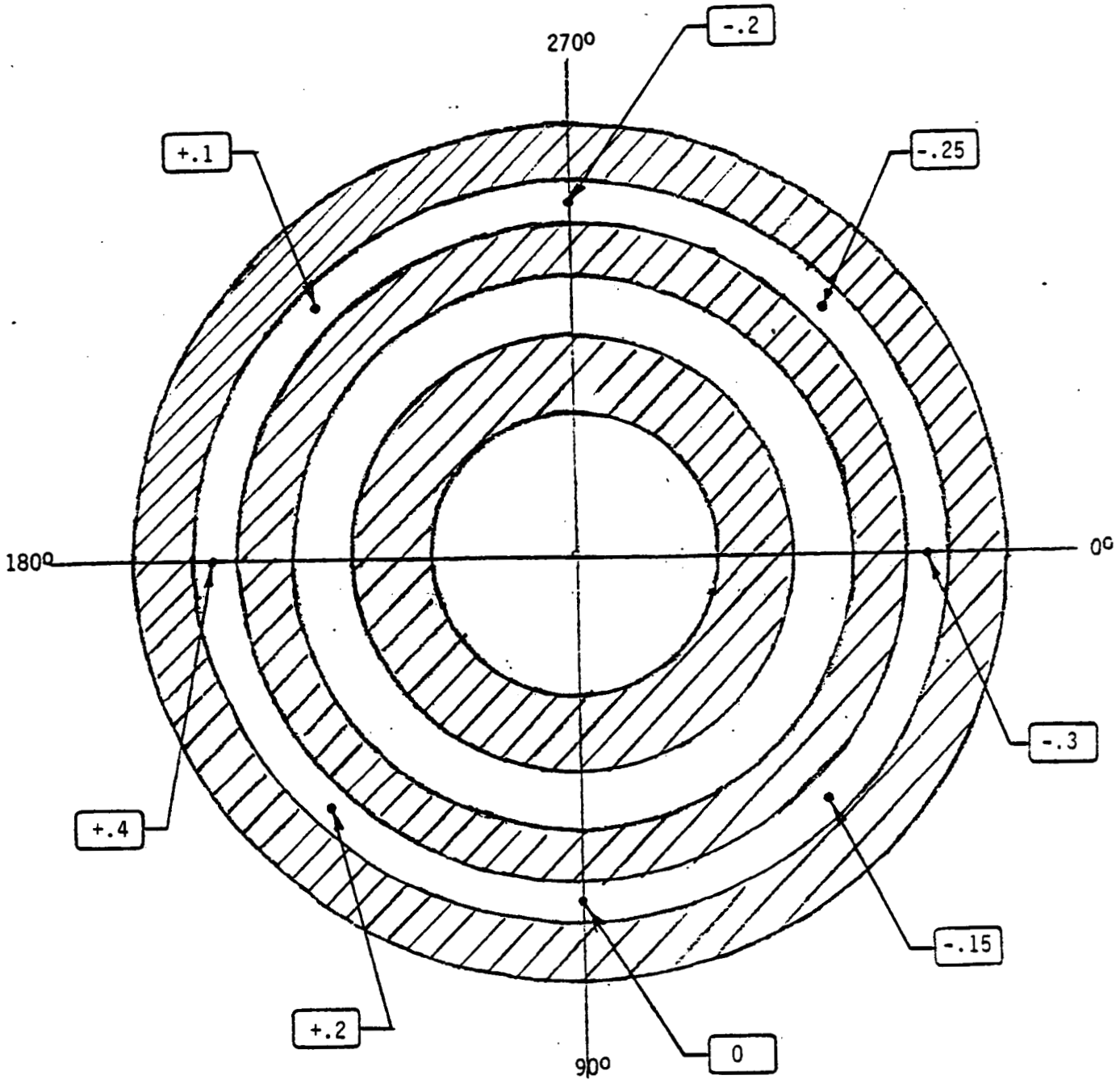

Figure 27. Estimated Fuel-Side Circumferential TAD Exit Static Pressure Coefficients - Phase II+, With Diffuser Struts and Posts

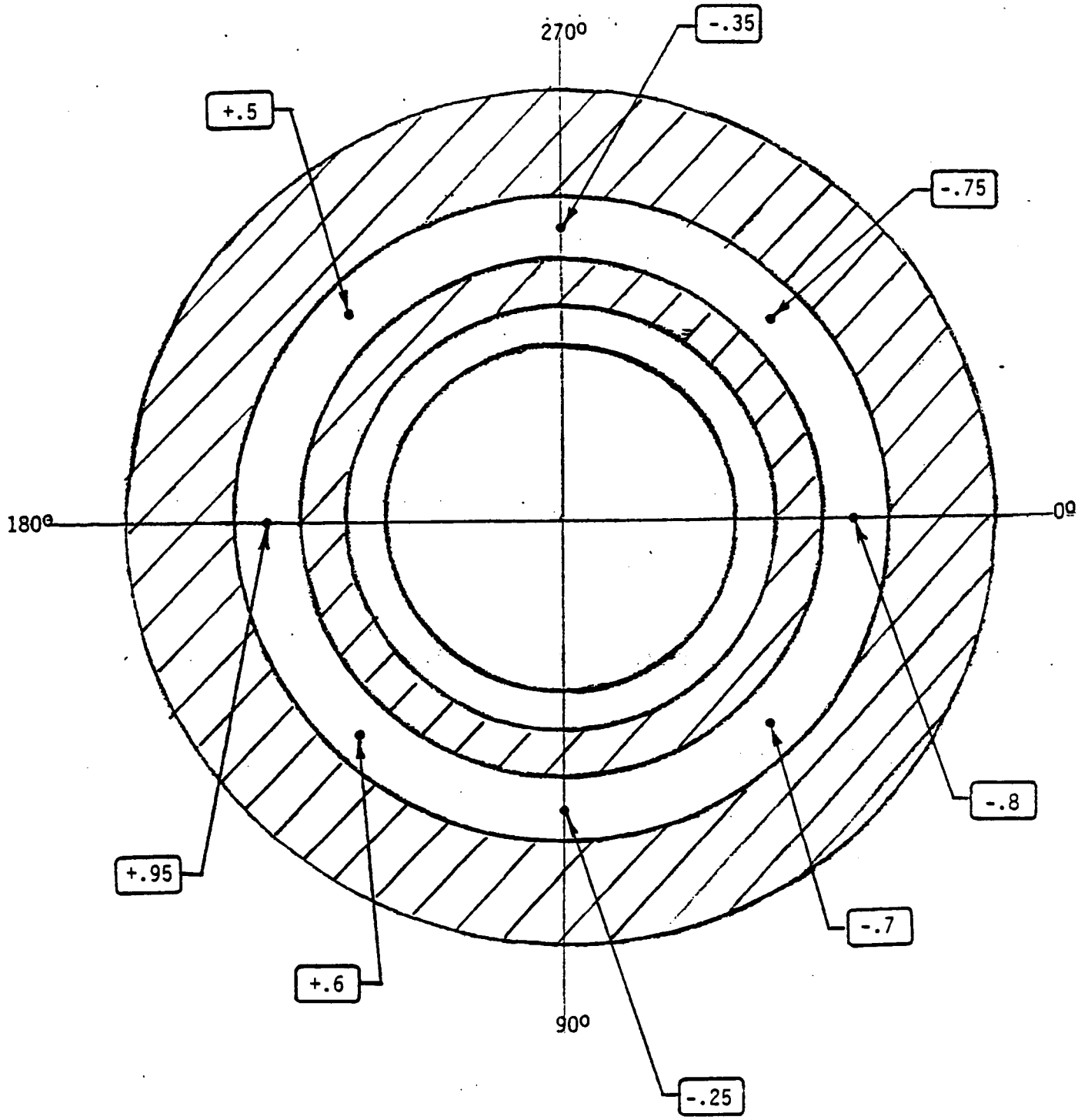

Figure 28. Estimated Fuel-Side Circumferential Fuel Bowl Static Pressure Coefficients - Phase II, With Diffuser Struts and Posts

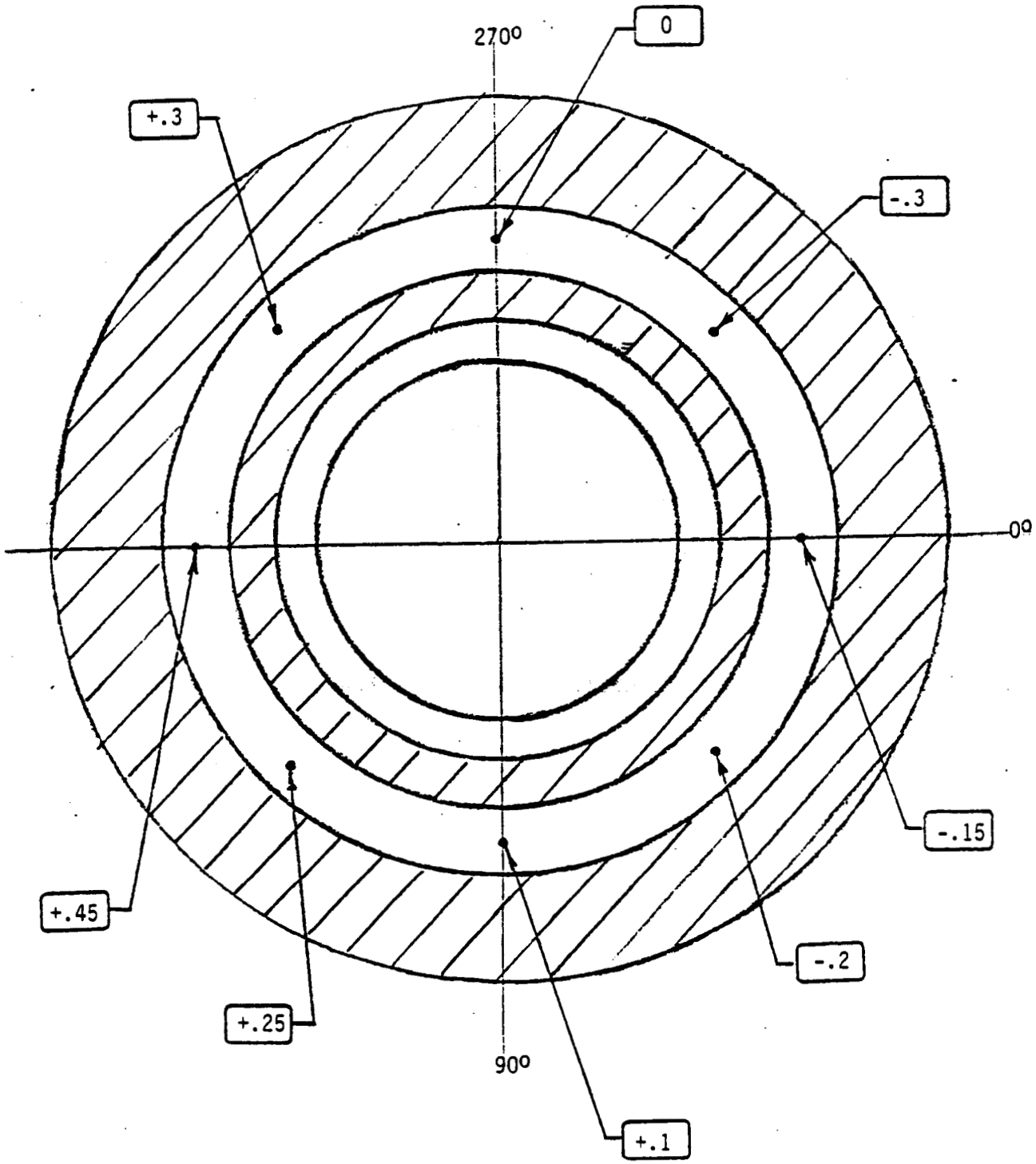

Figure 29. Estimated Fuel-Side Circumferential Fuel Bowl Static Pressure Coefficients - Phase II+, With Diffuser Struts and Posts

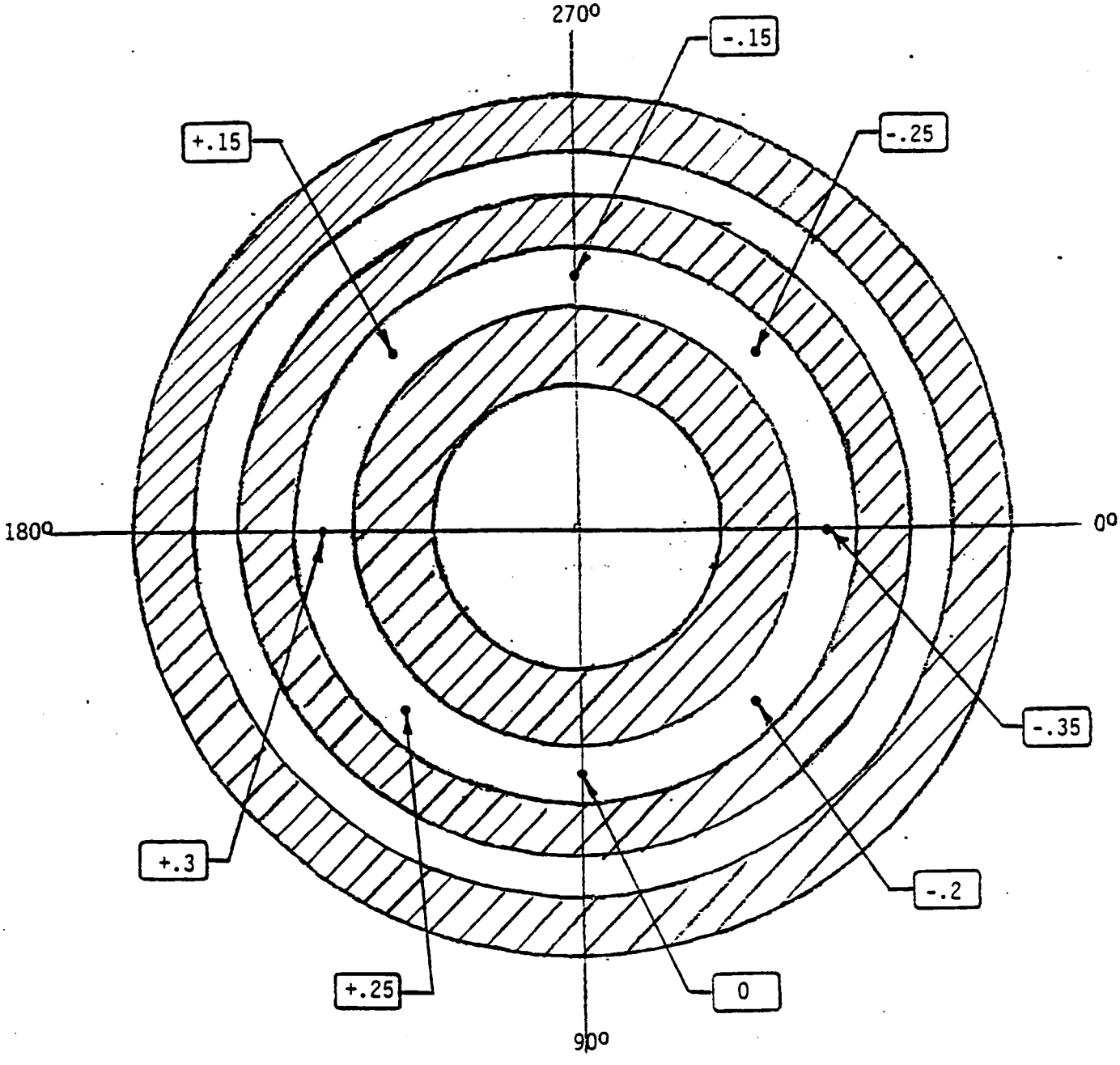

Figure 23. Estimated Fuel-Side Circumferential Turbine Exit Static Pressure Coefficients - Phase II+, With Diffuser Struts and Posts

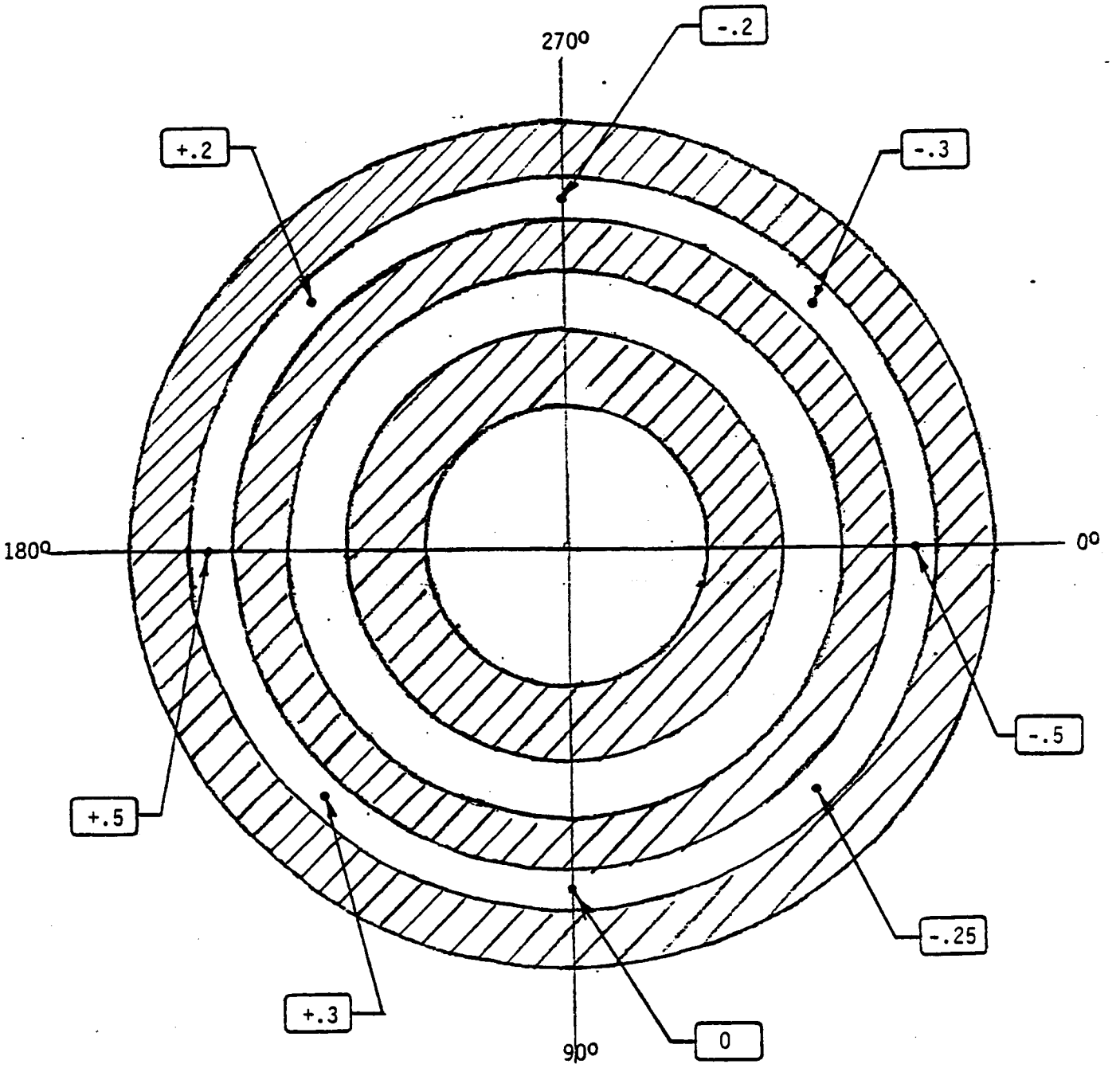

Figure 24. Estimated Fuel-Side Circumferential TAD Exit Static Pressure Coefficients - Phase II, No Diffuser Struts or Posts

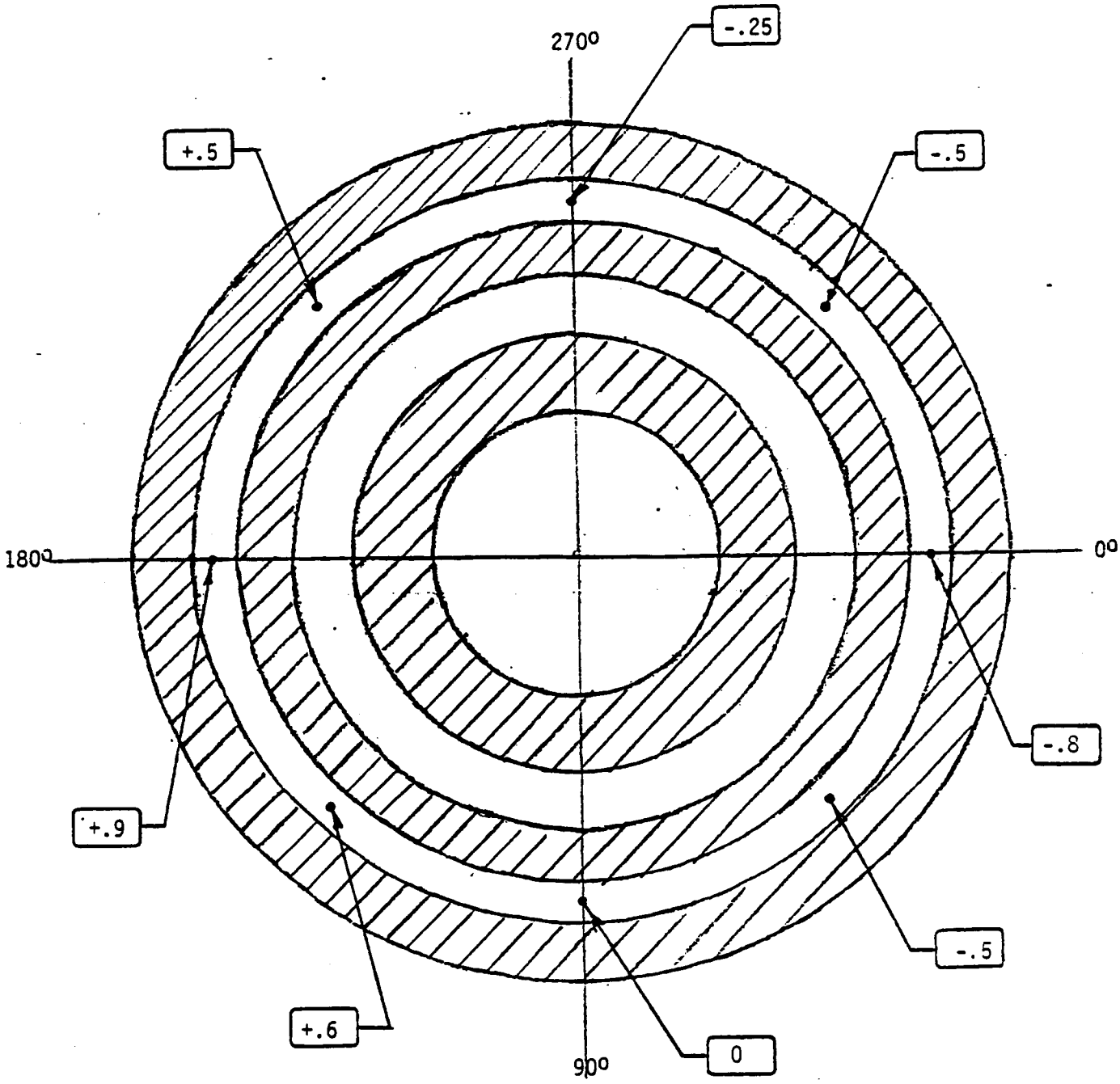

Figure 25. Estimated Fuel-Side Circumferential TAD Exit Static Pressure Coefficients - Phase II, With Diffuser Struts and Posts