9 NOVEMBER 1971

PRELIMINARY DESIGN OF A SPACE SHUTTLE ORBITER TEST BED

DESIGN CONCEPT REVIEW

NASA MARSHALL SPACE FLIGHT CENTER

CONTRACT NO. NAS 8-26016, SUPPLEMENTAL AGREEMENT NO. 22

MCDONNELL DOUGLAS CORPORATION
MDAC-EAST

INTRODUCTION

The National Aeronautics and Space Administration plans to conduct mission simulation tests to demonstrate feasibility of various thermal protection systems applicable to the Space Shuttle Orbiter. Testing will be performed at the George C. Marshall Space Flight Center, Huntsville, Alabama. The existing S-II Structural Test Facility is being modified to obtain the required test capability. Facility modifications, which include installation of an aerodynamic thermal simulation system, are scheduled to be completed by mid CY 1972.

Mission simulation tests of candidate Space Shuttle Orbiter thermal protection systems will be performed using an orbiter test bed. The NASA Marshall Space Flight Center has established a contract with McDonnell Douglas Astronautics Company - EAST (MDAC-EAST) to perform a technical study of four months duration for preliminary design of an orbiter test bed. This presentation summarizes technical study effort performed by MDAC-EAST in support of orbiter test bed design concepts, describes the design concept selected for preliminary design, and provides rationale for concept selection.

SPACE SHUTTLE ORBITER TEST BED
DESIGN CONCEPT REVIEW

PRESENTATION OUTLINE

- o STUDY PLAN
- o REVIEW STATEMENT OF WORK REQUIREMENTS
- o TEST BED/FACILITY INTERFACES
  - PHYSICAL INTERFACES
  - THERMAL-STRUCTURAL LOADS INTERFACES
  - TEST DATA ACQUISITION
- o TASKS
  - TEST OBJECTIVES
  - DESIGN CRITERIA
  - TEST REQUIREMENTS AND PLANNING
  - CONCEPTUAL DESIGNS
- o SELECTED DESIGN CONCEPTS
  - ORBITER TEST BED; NEW PRIMARY STRUCTURE
  - ORBITER TEST BED; TEST ITEM NO.1 PRIMARY STRUCTURE
- o SUPPORTING TECHNICAL DATA
- o SUMMARY

MCDONNELL DOUGLAS
MDAC-EAST
CORPORATION

STUDY PLAN

The MDAC-East plan for accomplishing the technical study is shown in this figure. Effort was initiated in early September. This figure shows study progress through 5 November.

The technical study comprises two major tasks. Task 1 involves preliminary design of an orbiter test bed using new primary structure. Task 2 addresses an alternate design concept that uses the structural assembly of existing Test Item No. 1 (Prototype 1) for test bed primary structure. Preliminary design effort associated with each task will produce a design data package, supporting thermal and structural analyses, design criteria and requirements, test requirements and planning, and a producibility analysis including a fixed price proposal for test bed fabrication.

STUDY PLAN
PRELIMINARY DESIGN OF A SPACE SHUTTLE ORBITER TEST BED

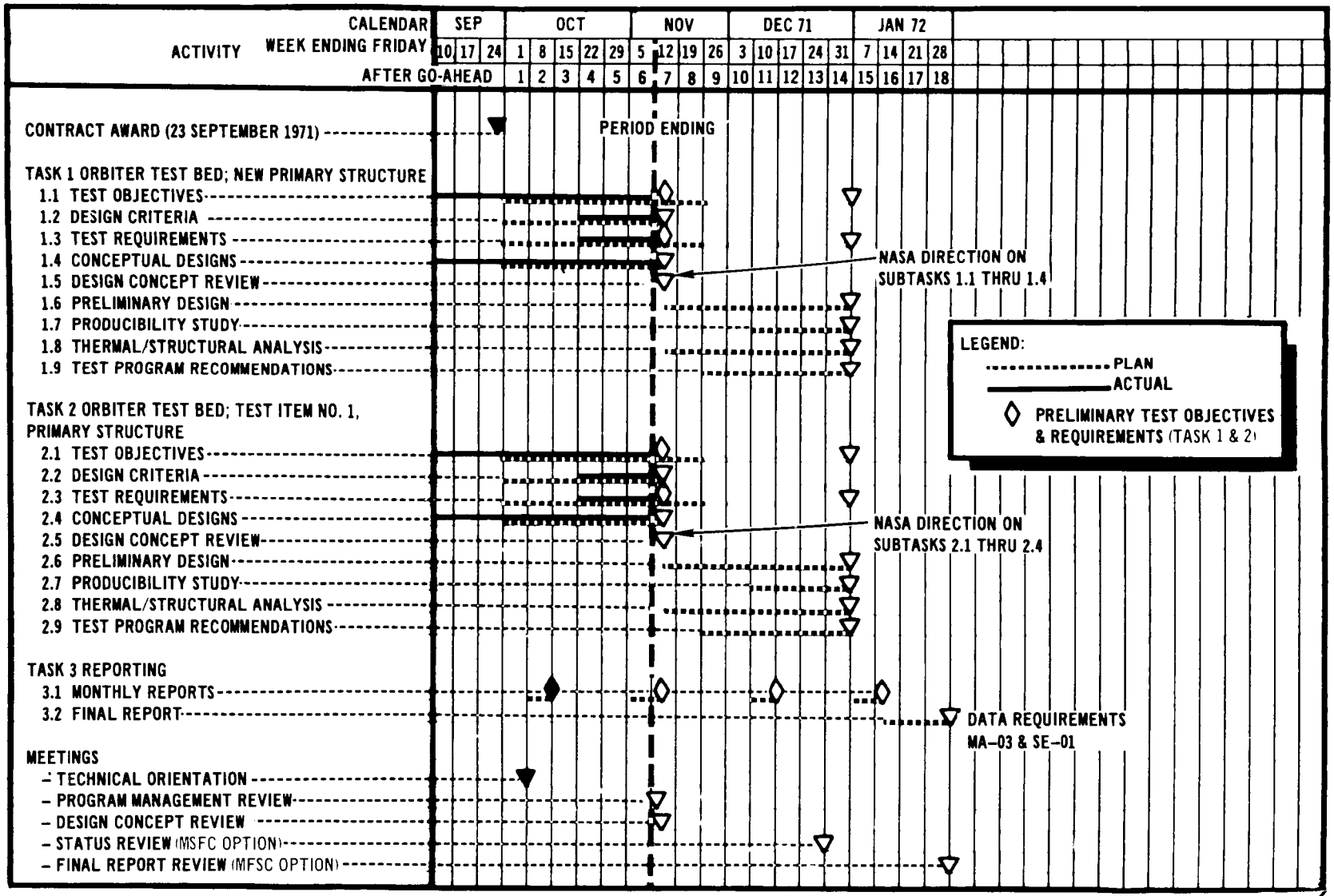

MCDONNELL DOUGLAS CORPORATION
MDAC-EAST

REQUIREMENTS FROM STATEMENT OF WORK

This figure lists requirements for the orbiter test bed as defined in the statement of work. All these requirements affect test bed design, however, the last requirement is particulary significant in that it is a major design driver. Test bed/facility interfaces resulting from this requirement are defined in greater detail by subsequent figures.

PRELIMINARY DESIGN
SPACE SHUTTLE ORBITER TEST BED

REQUIREMENTS FROM STATEMENT OF WORK

- TEST BED SHALL INCLUDE A PRIMARY STRUCTURE SECTION AND A THERMAL PROTECTION SYSTEM
- BASES FOR TEST BED PRIMARY STRUCTURE SECTION SHALL BE A NEW DESIGN, AND TEST ITEM NO. 1 STRUCTURAL ASSEMBLY (NASA-MSFC DWG. NO. 31M01218)
- THERMAL PROTECTION SYSTEM SHALL INCLUDE ATTACHMENT STRUCTURE THAT ACCEPTS FLIGHT WEIGHT, REUSABLE, METALLIC AND NONMETALLIC THERMAL PROTECTION SYSTEMS OF DIFFERENT DESIGNS
- A DOOR SHALL BE PROVIDED THROUGH THERMAL PROTECTION SYSTEM
- TEST BED SIZE SHALL BE CONSISTENT WITH NASA MARSHALL SPACE FLIGHT CENTER STRUCTURAL-THERMAL TEST FACILITY

TEST BED/FACILITY INTERFACES

The requirement that "the size of the test bed shall be consistent with the facility capability" results in limitations being imposed on the test bed by the planned structural-thermal test facility. This requirement has been interpreted as precluding test beds and tests that require facility modifications not obtainable through available facility adjustments. The imposed criteria of test bed/facility physical interfaces, thermal-structural loads interfaces, and test data acquisition are addressed by subsequent figures.

TEST BED / FACILITY INTERFACES

REQUIREMENT:	SIZE OF THE TEST BED SHALL BE CONSISTENT WITH THE FACILITY CAPABILITY
APPROACH:	TEST BED SHALL BE DESIGNED SUCH THAT FACILITY MODIFICATIONS (EXCLUDING ADJUSTMENTS) ARE NOT REQUIRED TO IMPLEMENT PROPOSED TESTING
CRITERIA:	PHYSICAL INTERFACES THERMAL - STRUCTURAL LOADS INTERFACES TEST DATA ACQUISITION

TEST BED/FACILITY PHYSICAL INTERFACES

The total physical interface definition for the structural-thermal test facility is incomplete, however, a basic facility interface definition document has been issued by MSFC. Close liaison with MSFC test facility designers will be maintained to acquire additional data required to assure compatibility of test bed/facility physical interfaces.

TEST BED/FACILITY PHYSICAL INTERFACES

TEST BED SHALL:

- o CONFORM TO STRUCTURAL-THERMAL TEST FACILITY MAXIMUM SPECIMEN STUDY (MSFC DWG. SK102771-1)
- o MATE WITH AFT LOADING FIXTURE (MSFC DWG. 90M04692)
- o FIT THROUGH 20 x 20 FT ROOF OPENING
- o MATE WITH UPPER LOAD FIXTURE (TBD)
- o NOT EXCEED TBD POUNDS (DRY WEIGHT) HOIST CAPACITY
- o HAVE RIGHT LATERAL SURFACE(s)
- o HAVE A HEATED PERIMETER LENGTH COMPATIBLE WITH MULTIPLE 13.0 INCH WIDE HEATER MODULES
- o HAVE HEATED ZONES CONSISTENT WITH HEATER CAGE GEOMETRY CAPABILITIES

TEST BED/FACILITY THERMAL-STRUCTURAL LOADS INTERFACES

Proposed thermal-structural loads for the test bed must be defined within capabilities of the test facility. Facility capabilities are looked upon as maximum operating limits that do not constrain the test program provided they equal or exceed test requirements. Test conditions will be defined to be realistic Space Shuttle environments. Using available facility definitions and specifications, and through close liaison with MSFC test personnel, proposed thermal-structural test condition requirements will be compared with facility capability to assure adequate margins.

TEST BED/FACILITY
THERMAL - STRUCTURAL LOADS INTERFACES

THERMAL-STRUCTURAL TEST PROGRAM SHALL:

- o BE COMPATIBLE WITH TEST FACILITY LOAD ALLOWABLES OF 3,456 KIP AXIAL (COMPRESSION) OR 200 KIP SHEAR AT 33' 6" ELEVATION (APPLIED INDIVIDUALLY OR EQUIVALENT COMBINATION)
- o UTILIZE AVAILABLE APPLIED LOADING CYLINDERS REACTION POINTS AT 37' 4" DIAMETER BOLT PATTERN IN SLAB
- o NOT PRODUCE INTERFERENCE BETWEEN DEFLECTED STRUCTURE AND HEATER CAGE
- o UTILIZE A MAXIMUM OF 36 THERMAL CONTROL ZONES
- o UTILIZE A TEMPERATURE DISTRIBUTION CONSISTENT WITH THE 1200°F, 1800°F, and 2500°F ZONING OF THE HEATER CAGE
- o UTILIZE EXISTING DATA ACQUISITION SYSTEM AS DESCRIBED IN "STRUCTURAL THERMAL TEST FACILITY DOCUMENT",SEPTEMBER 1971

ORBITER TEST BED OBJECTIVES

The objective of the orbiter test bed is to perform mission simulation tests to demonstrate feasibility of various thermal protection systems applicable to the Space Shuttle Orbiter. This figure identifies objectives for thermal-structural testing that are applicable to all orbiter test bed design concepts. These test objectives form the basis for detailed test requirements and planning that will be performed for the selected design concept. Subsequent figures expand the scope of these objectives. Further details are contained in the preliminary test requirements and planning document included in the supporting technical data package.

ORBITER TEST BED OBJECTIVES

PROGRAM OBJECTIVE:

PERFORM MISSION SIMULATION TESTS TO DEMONSTRATE FEASIBILITY OF VARIOUS THERMAL PROTECTION SYSTEMS APPLICABLE TO THE SPACE SHUTTLE ORBITER.

TEST OBJECTIVES:

- o VALIDATE THERMAL AND STRUCTURAL ANALYSES
- o VALIDATE SELECTED THERMO-STRUCTURE DESIGN CONCEPTS WITH RESPECT TO SPECIFIC DESIGN FEATURES, FABRICATION, REUSABILITY, AND INSPECTION
- o EVALUATE APPROACH TO TEST IMPLEMENTATION

ORBITER TEST BED
TEST OBJECTIVES

TEST OBJECTIVE: VALIDATE THERMAL AND STRUCTURAL ANALYSES

SCOPE:

METALLIC TPS

- o CONFIRM TPS PANEL AND SUPPORT STRUCTURE CAPABILITY TO ENDURE REPEATED MISSION SIMULATION PROFILE OF ASCENT, ENTRY, AND CRUISE ENVIRONMENTS
- o VERIFY PERFORMANCE OF TEST ARTICLE FOR SUPPORT STRUCTURE HEAT SHORT AND HEAT TRANSFER CHARACTERISTICS OF JOINT INSULATION TECHNIQUES
- o VERIFY THERMAL GRADIENT ANALYSIS IN TPS PANELS AND SUPPORT STRUCTURE
- o DETERMINE EFFECTS OF REPEATED MISSION SIMULATION ON EMITTANCE
- o DETERMINE DYNAMIC RESPONSE CHARACTERISTICS OF TPS PANELS AND SUPPORT STRUCTURE
- o CONFIRM PREDICTED THERMAL GROWTH AND DEFORMATION
- o DEMONSTRATE TPS AND PRIMARY STRUCTURE INTERACTION FROM THERMAL AND MECHANICAL LOADING ENVIRONMENT

NONMETALLIC TPS

- o CONFIRM TPS CAPABILITY TO ENDURE MISSION SIMULATION PROFILE OF ASCENT, ENTRY, AND CRUISE ENVIRONMENTS
- o VERIFY MAXIMUM PREDICTED BONDLINE TEMPERATURES
- o VERIFY THERMAL GRADIENT ANALYSIS
- o DETERMINE DYNAMIC RESPONSE CHARACTERISTICS OF TPS AND SUPPORT STRUCTURE
- o CONFIRM THERMAL GROWTH AND DEFORMATION PREDICTIONS
- o DEMONSTRATE TPS STRAIN COMPATIBILITY WHEN SUBJECTED TO MECHANICAL AND THERMAL LOADING

ORBITER TEST BED
TEST OBJECTIVES

TEST OBJECTIVE: VALIDATE THERMAL AND STRUCTURAL ANALYSES

SCOPE: (CONTINUED)

TEST BED STRUCTURE

- o CONFIRM PREDICTED STRUCTURAL CAPABILITY FOR REPEATED MISSION SIMULATION ENVIRONMENTS INCLUDING MECHANICAL, THERMAL, CRYOGENIC, OR PRESSURIZATION LOADINGS
- o VERIFY MAXIMUM TEST BED STRUCTURE TEMPERATURES
- o VERIFY PREDICTED THERMAL GRADIENTS IN PRIMARY STRUCTURE
- o VERIFY STRUCTURAL CHARACTERISTICS OF TEST BED

ORBITER TEST BED
TEST OBJECTIVES

TEST OBJECTIVE: VALIDATE SELECTED THERMO-STRUCTURE DESIGN CONCEPTS WITH RESPECT TO SPECIFIC DESIGN FEATURES, FABRICATION, REUSABILITY, AND INSPECTION

SCOPE: ASSESS THE FOLLOWING AREAS:

- THERMAL PROTECTION SYSTEM ATTACHMENT AND REMOVAL PROVISIONS
- THERMAL CONTROL PROVISIONS INCLUDING COATINGS AND INSULATION
- ADEQUACY OF SELECTED MATERIAL APPLICATIONS
- INTERCHANGEABILITY FEATURES OF DESIGN
- PRODUCIBILITY OF DESIGN
- ADEQUACY OF MANUFACTURING PROCESSES
- INSPECTION PROVISIONS FOR MANUFACTURING ACCEPTANCE AND PERIODIC SERVICE INSPECTIONS
- INITIAL COST
- REFURBISHMENT REQUIREMENTS AND COST
- WEIGHT

ORBITER TEST BED
TEST OBJECTIVES

TEST OBJECTIVE: EVALUATE APPROACH TO TEST IMPLEMENTATION

SCOPE: APPROACH TO TEST IMPLEMENTATION SHOULD BE EVALUATED IN THE FOLLOWING AREAS:

- o ADEQUACY OF CONTROL OF TEST BOUNDARY CONDITIONS
- o ADEQUACY OF CONTROL AND LEVELS OF TEST ENVIRONMENTS TO OBTAIN REALISTIC THERMO-STRUCTURES SYSTEM RESPONSE
- o ADEQUACY AND APPLICABILITY OF TEST INSTRUMENTATION, DATA ACQUISITION, AND DATA REDUCTION
- o ADEQUACY OF TEST PLANNING APPROACH

STRUCTURAL DESIGN CRITERIA

Structural design criteria for the orbiter test bed has been patterned after design criteria used for Space Shuttle vehicle design during the Phase B Study. Modifications will be made where applicable for test bed unique design requirements and test objectives. Specific structural and thermal requirements will be established based on the selected test bed concept. A summary of key structural design criteria is presented in subsequent figures. Further details are contained in the preliminary structural design criteria and requirements document included in the supporting technical data package.

ORBITER TEST BED

STRUCTURAL DESIGN CRITERIA

APPROACH

- STRUCTURAL DESIGN CRITERIA FOR THE ORBITER TEST BED IS BASICALLY THE SAME AS USED FOR SPACE SHUTTLE VEHICLE DESIGN DURING PHASE B STUDY
- GENERAL MODIFICATIONS HAVE BEEN MADE FOR APPLICATION TO ORBITER TEST BED
- ADDITIONAL MODIFICATIONS WILL BE MADE BASED ON SELECTED TEST BED CONCEPT DESIGN REQUIREMENTS AND ASSOCIATED TEST OBJECTIVES

ORBITER TEST BED
STRUCTURAL DESIGN CRITERIA SUMMARY

FACTORS

- o FACTOR OF SAFETY = 1.40
- o FATIGUE LIFE FACTORS:

DATA AVAILABILITY	SCATTER FACTOR
o MINIMUM GUARANTEED FATIGUE ALLOWABLES BASED ON SUFFICIENT DATA	3.0
o TYPICAL FATIGUE ALLOWABLES BASED ON LIMITED DATA	10.0

- o PANEL FLUTTER FACTOR = 1.50
- o PRESSURIZATION FACTORS

TYPE OF COMPONENT	PROOF FACTOR	BURST FACTOR
PERSONNEL COMPARTMENT	1.5	2.0
WINDOWS, DOORS, & HATCHES	2.0	3.0
HIGH PRESSURE VESSEL SYSTEMS	1.5	2.0

MCDONNELL DOUGLAS
MDAC-EAST CORPORATION

ORBITER TEST BED

STRUCTURAL DESIGN CRITERIA SUMMARY (CONTINUED)

COMBINED LOADING CRITERIA

- o LIMIT LOAD COMBINED WITH DESIGN HEATING EFFECTS WITHOUT DETRIMENTAL DEFLECTIONS
- o ULTIMATE LOAD COMBINED WITH DESIGN HEATING EFFECTS WITHOUT FAILURE
- o ULTIMATE MECHANICAL LOADS COMBINE WITH ULTIMATE PRESSURE LOADS, EXCEPT RELIEVING PRESSURES SHALL NOT EXCEED MINIMUM LIMIT VALUE

THERMAL ENVIRONMENT PREDICTION	METALLIC TPS (1)	NONMETALLIC TPS (2)
DESIGN FACTORS FOR HEATING RATES BASED ON:		
o THEORIES	1.00 h	1.00 h
o TEST DATA	AVERAGE FAIRING WITH 1.25 h	AVERAGE FAIRING WITH 1.0 h
o MATERIAL SELECTION	1.04 T_{DESIGN} °F	1.00 T_{DESIGN} °F

(1) USED FOR PHASE B FINAL DESIGN ANALYSIS VEHICLE

(2) USED FOR PHASE B 6 MONTHS EXTENSION (NASA-MSC-040A ORBITER)

MCDONNELL DOUGLAS
MDAC-EAST
CORPORATION

TEST REQUIREMENTS AND PLANNING

The orbiter test bed statement of work requires preparation of a test requirements document and a recommended test program plan including instrumentation requirements and instrument locations on the test bed. Our approach to meeting this requirement is to develop a test requirements and planning document that will include test objectives, test bed description, test setup description, test conditions, instrumentation and data acquisition, and a recommended plan for implementation. This figure describes the approach we will use for developing the test requirements and planning document. This approach is similar to techniques used for Phase C/D Space Shuttle test program planning. We have prepared a preliminary outline of the test requirements and planning document and it is included in the supporting technical data package. Only the test objectives portion of the document has been established since other portions are sensitive to the design concept selected.

TEST REQUIREMENTS AND PLANNING

OBJECTIVE:

- o DEVELOP A TEST PLAN THAT INTEGRATES TEST REQUIREMENTS, TEST CAPABILITIES, AND TEST IMPLEMENTATION TO EFFECTIVELY OBTAIN TEST PROGRAM OBJECTIVES.

APPROACH:

- o DELINEATE TEST OBJECTIVES
- o DETERMINE TEST REQUIREMENTS
- o IDENTIFY TEST RESOURCE REQUIREMENTS
- o CORRELATE RESOURCE REQUIREMENTS WITH FACILITY CAPABILITIES
- o INTEGRATE TEST OBJECTIVES, TEST BED DESIGN, TEST CONDITIONS, AND TEST FACILITY CAPABILITIES TO MAXIMIZE TEST PROGRAM EFFECTIVENESS
- o SELECT AND DOCUMENT TEST IMPLEMENTATION PLAN

ATMOSPHERIC PRESSURE EFFECT ON TESTING

This analysis was performed in support of test requirements and planning to determine effects of testing a metallic thermal protection system at ground level atmospheric pressure as compared with testing at simulated flight pressure.

Conclusions are; (1) if a flight weight insulation blanket is used unrealistic temperature gradients will be experienced, (2) if a heavier, test weight insulation blanket is used a slightly longer test time will result, and in addition, the flight weight blanket is not verified. Consequently, testing must be designed to enable verification of a flight weight blanket plus obtain realistic temperature gradients in the test bed. A single test to simultaneously accomplish both objectives does not appear feasible. Several tests may be required.

ATMOSPHERIC PRESSURE EFFECT ON TESTING

PURPOSE: COMPARE FLIGHT AND GROUND TEST AMBIENT PRESSURE CONDITIONS TO ASSESS EFFECT ON METALLIC TPS TEST RESULTS

ASSUMPTIONS:

- o PHASE B REAL-TIME REENTRY HEATING
- o ORBITER FUSELAGE BOTTOM ℄ , X/L = 0.75
- o MICROQUARTZ INSULATION - k = f(TEMP., PRESS.)

RESULT: CRYO-TANK MAX. TEMPERATURE EXCEEDS 300°F IN GROUND TEST AT AMBIENT PRESSURE WITH FLIGHT VEHICLE INSULATION BLANKET

CONCLUSION:

FLIGHT WEIGHT BLANKET	VS.	TEST WEIGHT BLANKET
o NON-REAL TEMP. GRADIENTS		o WEIGHT NOT VERIFIED
		o LONGER TEST TIME

MCDONNELL DOUGLAS CORPORATION
MDAC-EAST

ATMOSPHERIC PRESSURE EFFECT ON TESTING

CODE	CASE	SIMULATION	TPS INSUL. IN.	TPS INSUL. PSF	TIME TO MAX. TEMP. (MIN.)	MAX.	COMMENT
- - - - - -	A	FLIGHT	2.2	.64	47.	300°F	FLIGHT WT.
—— - ——	B	GROUND TEST *	2.2	.64	40.	460°F	FLIGHT WT.
—— - - ——	C	GROUND TEST *	4.3	1.25	61.	300°F	TEST WT.
		*AT ATM PRESS.					

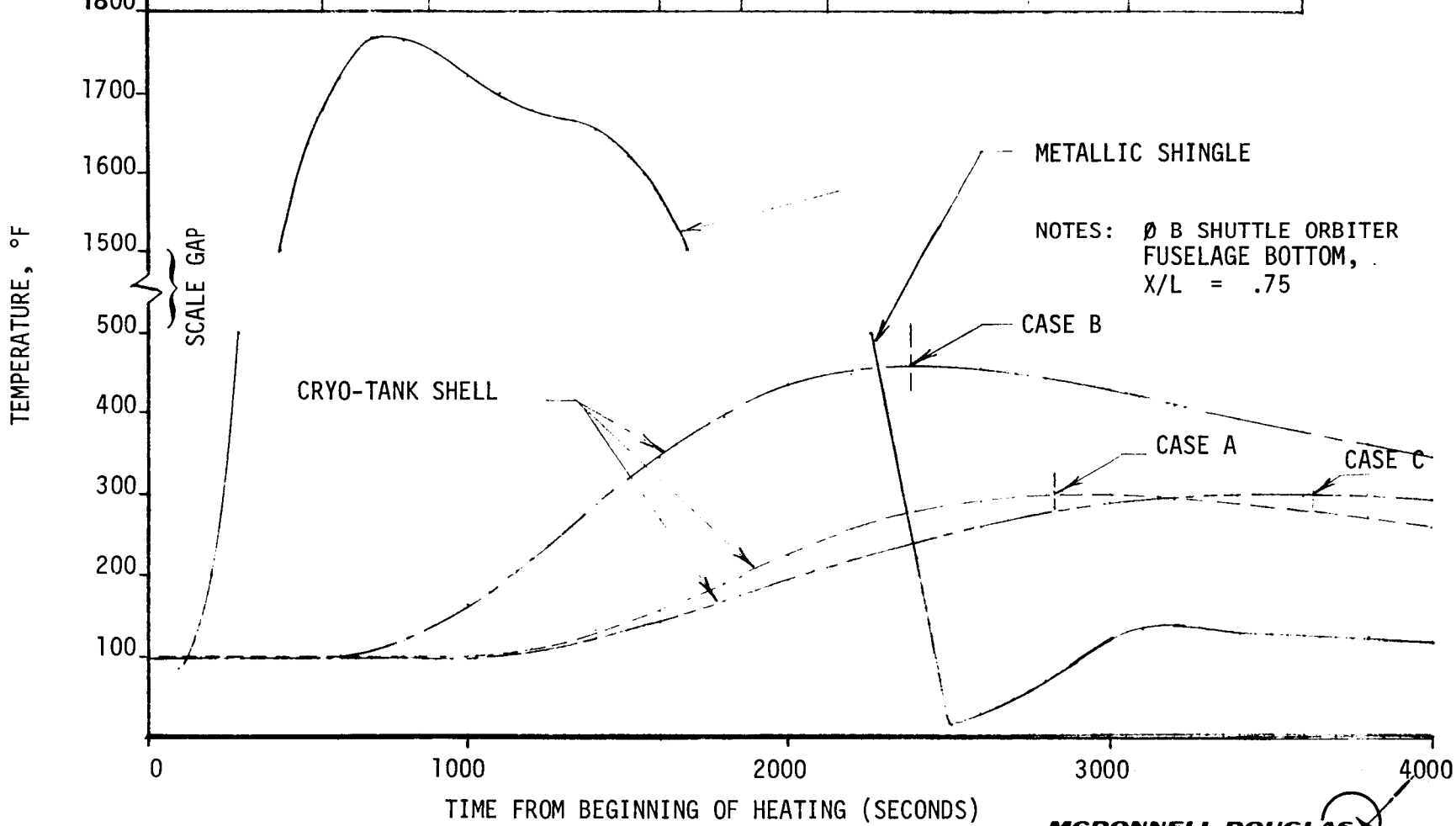

MCDONNELL DOUGLAS CORPORATION
MDAC-EAST

ABLATOR TESTING CONSIDERATIONS

Current design concepts for Space Shuttle Orbiter thermal protection systems include ablative materials. This figure summarizes results of a brief study of considerations associated with evaluation of ablative systems that was performed in support of test requirements and planning.

In our analysis, testing of ablators at atmospheric pressure using a radiant heater array can produce poor thermal environment simulation, degraded test facility performance, and high test system refurbishment costs. For these reasons it is felt that evaluation of ablative systems in the currently defined MSFC structural-thermal test facility does not appear practical.

ABLATOR TESTING CONSIDERATIONS

PERFORMANCE CHARACTERISTICS

- o ABLATORS PROVIDE PROTECTION FROM AERODYNAMIC HEATING THROUGH CHEMICAL PROCESS (ENDOTHERMIC), CHAR RADIANCE, TRANSPIRATION, AND HEAT STORAGE
- o ABLATORS ARE SIZED FOR PREDICTED COLD WALL HEATING RATES (CONVECTIVE)
- o EFFECTIVE HEAT OF ABLATION IS SENSITIVE TO AMBIENT PRESSURE, SOURCE ENTHALPY, BOUNDARY LAYER, AND SOURCE RADIATION
- o ABLATORS GENERATE QUANTITIES OF CONDENSABLE BY-PRODUCTS
- o USE OF A TOTALLY RADIANT HEAT SOURCE GIVES POOR THERMAL ENVIRONMENT SIMULATION
- o TESTING AT ATMOSPHERIC PRESSURE AFFECTS PERFORMANCE CHARACTERISTICS

TEST FACILITY CONSIDERATIONS

- o CONDENSABLE BY-PRODUCTS FROM ABLATORS WOULD DEGRADE EFFICIENCY OF HEATER MODULE QUARTZ LAMPS AND REFLECTORS
- o CONTROL OF HEATER MODULES BY HEAT FLUX OR CALIBRATED POWER LEVEL IS REQUIRED AS OPPOSED TO TEMPERATURE FEEDBACK
- o REFURBISHMENT OF ABLATOR AND CLEANING OF HEATER ARRAY COULD BE REQUIRED AFTER EACH MISSION SIMULATION TEST

CONCLUSION

- o TESTING OF ABLATIVE THERMAL PROTECTION SYSTEM IN CURRENTLY DEFINED MSFC STRUCTURAL-THERMAL TEST FACILITY DOES NOT APPEAR PRACTICAL

ORBITER VEHICLES STUDIED FOR TEST BED DESIGN CONCEPTS

The MDC Phase B Baseline Design Orbiter and the NASA-MSC Minimum Technology Design Orbiter were studied for test bed design concepts. Each vehicle offers a viable design concept for an orbiter thermo-structure system. In comparing the two vehicles with respect to major items affecting structure/thermal protection system, it will be noted that the vehicle design concepts differ significantly in basic approach to airframe structure design, and type of thermal protection system.

PRELIMINARY DESIGN

SPACE SHUTTLE ORBITER TEST BED

ORBITER VEHICLES STUDIED FOR TEST BED DESIGN CONCEPTS

- o MDC PHASE B BASELINE DESIGN
- o NASA-MSC MINIMUM TECHNOLOGY DESIGN

COMPARISON OF MAJOR ITEMS AFFECTING STRUCTURE/TPS

	PHASE B BASELINE DESIGN	MINIMUM TECHNOLOGY DESIGN
AIRFRAME STRUCTURE DESIGN APPROACH	MAIN PROPELLANT TANKS INTEGRATED INTO FUSELAGE STRUCTURE	CONVENTIONAL AIRCRAFT CONSTRUCTION (FRAMES, SKIN AND STRINGERS)
PROPELLANT TANKS	INTERNAL, INTEGRAL LH_2 AND LO_2 TANKS	EXTERNAL LH_2 AND LO_2 TANKS (SINGLE OR DUAL)
AIRFRAME STRUCTURE BASIC MATERIAL	ALUMINUM ALLOY TANKS, TITANIUM FRAMES, COMPOSITE MATERIAL STIFFENING ELEMENTS	MAXIMUM USE OF ALUMINUM
AIRFRAME TPS	REUSABLE METALLIC PANELS (COATED COLUMBIUM, HASTELLOY -X, TITANIUM)	MARK I ABLATIVE HEAT SHIELD BONDED DIRECTLY TO PRIMARY STRUCTURE
	CARBON-BONDED-CARBON NOSE CAP TITANIUM HOT STRUCTURE	MARK II REUSABLE SURFACE INSULATION BONDED DIRECTLY TO PRIMARY STRUCTURE

MCDONNELL DOUGLAS
MDAC-EAST CORPORATION

TEST BED DESIGN CONCEPTS STUDIED

The Orbiter Test Bed statement of work requires several test bed design concepts be studied for both new primary structure and Test Item No. 1 primary structure. Five test bed design concepts were identified early in the technical study. Three concepts involved new primary structure for the test bed; two concepts used Test Item No. 1 for primary structure.

The thermo-structure simulator concept comprised a specially designed fixture to simulate reactions of airframe primary structure to thermal and structural loading. This design concept precluded the opportunity to obtain useful test data on representative, flightweight Orbiter airframe structure. Consequently, it was eliminated in favor of test bed design concepts based on flightweight, primary structure.

The aerosurface design concept was of special interest because it addressed a rather complex thermo-structure design having high surface temperature gradients and relatively shallow structural depth. The aero-surface concept was eliminated from further study effort on the basis that it was not compatible with the heater cage. A layout drawing of the test bed within the heater cage showed that about 70 percent of the test bed's upper surface could not be subjected to elevated temperature.

The conventional aircraft structure design concept has been selected for preliminary design of an orbiter test bed using new primary structure. The design concept is described in the "Selected Design Concept" section of this presentation.

The nonintegral tank concept used Test Item No. 1 tank assembly and required a new primary structure for housing the tank assembly. This design concept was eliminated for several reasons. First, the basic tank assembly does not exhibit structural characteristics of a nonintegral tank, and rather extensive modifications would be required to simulate desired characteristics. Second, with the necessary addition of tank support structure, new primary structure, and thermal protection system standoff support structure, it was considered highly probable the resulting test bed size would exceed the maximum test bed envelope. This judgement was based on analysis, however, and was not substantiated by layout drawings. Third, of the two test bed design concepts studied that used Test Item No. 1 for test bed primary structure, the nonintegral tank concept was considered least representative of Orbiter baseline designs, and the most costly to fabricate.

The integral tank design concept has been selected for preliminary design of an orbiter test bed using Test Item No. 1 for primary structure. The design concept is described in the "Selected Design Concept" section of this presentation.

PRELIMINARY DESIGN

SPACE SHUTTLE ORBITER TEST BED

TEST BED DESIGN CONCEPTS STUDIED

NEW PRIMARY STRUCTURE FOR TEST BED

- THERMO-STRUCTURE SIMULATOR CONCEPT
- AEROSURFACE CONCEPT
- CONVENTIONAL AIRCRAFT STRUCTURE CONCEPT

TEST ITEM NO. 1 PRIMARY STRUCTURE FOR TEST BED

- NONINTEGRAL TANK CONCEPT
- INTEGRAL TANK CONCEPT

MCDONNELL DOUGLAS
MDAC-EAST
CORPORATION

TEST BED DESIGN CONCEPTS

The next (15) figures illustrate the depth test bed design concepts were studied during the early part of the study effort. Three design concepts are described. They are the aerosurface, conventional aircraft structure, and integral tank concepts. The first two concepts use new primary structure for the test bed; the third uses Test Item No. 1 for primary structure. A description of each design concept plus plan view and elevation view size comparisons with the maximum test bed envelope are shown. Comparisons of predicted surface temperatures with heater cage maximum temperatures are provided for the conventional aircraft structure and integral tank concepts. Predicted surface temperatures are shown for the MDC Phase B Baseline Design Orbiter wing. These temperatures are applicable to the aerosurface test bed design concept.

TEST BED DESIGN CONCEPT

AEROSURFACE CONCEPT

NEW PRIMARY STRUCTURE FOR TEST BED

DESCRIPTION:

REPRESENTATIVE MDC PHASE B BASELINE DESIGN ORBITER AERODYNAMIC SURFACE SHAPE

AEROSURFACE PRIMARY STRUCTURE CHARACTERISTICS

- o TWO OR THREE SPAR BENDING/TORQUE BOX WITH TRUSS AND/OR CORRUGATED SPAR AND RIB WEBS, AND SKIN AND STRINGER COVER PANELS
- o ONE PIECE ELEVON, TWO SPAR TORQUE BOX, RIBS, SKIN AND STRINGER COVER PANELS, TPS ON WINDWARD SURFACE

THERMAL PROTECTION SYSTEM

- o METALLIC TPS CHARACTERISTICS
  - PANELS (FLAT AND LEADING EDGE CURVATURE), RETAINERS, SUPPORT STRUCTURE, LOAD BEARING INSULATION, HIGH TEMPERATURE FASTENERS
  - PACKAGED, HIGH-TEMPERATURE INSULATION IMMEDIATELY INBOARD FROM PANELS
  - HOT STRUCTURE IN LIEU OF TPS WHERE LIGHTER WEIGHT OR LOWER COST RESULTS (SENSITIVE TO VEHICLE SURFACE TEMPERATURES TO BE SIMULATED)
- o NONMETALLIC TPS CHARACTERISTICS
  - CARBON-BONDED-CARBON AND/OR HIGH DENSITY ABLATOR LEADING EDGE, SUPPORT STRUCTURE, APPLICABLE ATTACHMENT PROVISIONS
  - INSULATION AND/OR ABLATOR BONDED OR FASTENED DIRECTLY TO PRIMARY STRUCTURE
  - INSULATION AND/OR ABLATOR BONDED OR FASTENED TO QUICK-OFF SUPPORT PANELS, SUPPORT STRUCTURE, LOAD BEARING INSULATION, SEALS, FASTENERS
  - HOT STRUCTURE IN LIEU OF TPS WHERE LIGHTER OR LOWER COST RESULTS (SENSITIVE TO VEHICLE SURFACE TEMPERATURES TO BE SIMULATED)

TEST BED DESIGN CONCEPT

AEROSURFACE CONCEPT - CONTINUED

DOOR THROUGH TPS

- o CANDIDATE FUNCTIONAL DOORS (SUBSCALE REPRESENTATION IF REQUIRED)
  - LANDING GEAR WELL, AIRBREATHING ENGINE COMPARTMENT, ACPS MOTOR
- o CANDIDATE TPS PENETRATIONS (OPTIONAL FEATURE)
  - EQUIPMENT OR SERVICE/INSPECTION ACCESS PROVISION

OTHER CANDIDATE FEATURES (OPTIONAL)

- o SIMULATED ACPS INSTALLATION (INTERNAL OR EXTERNAL POD MOUNTED)
- o SIMULATED THERMAL MASS OF STRUCTURAL - FUNCTIONAL COMPONENT (ELEVON ACTUATOR, HINGE)

PRELIMINARY DESIGN
SPACE SHUTTLE ORBITER TEST BED

SIZE COMPARISON

AEROSURFACE CONCEPT VS TEST BED ENVELOPE

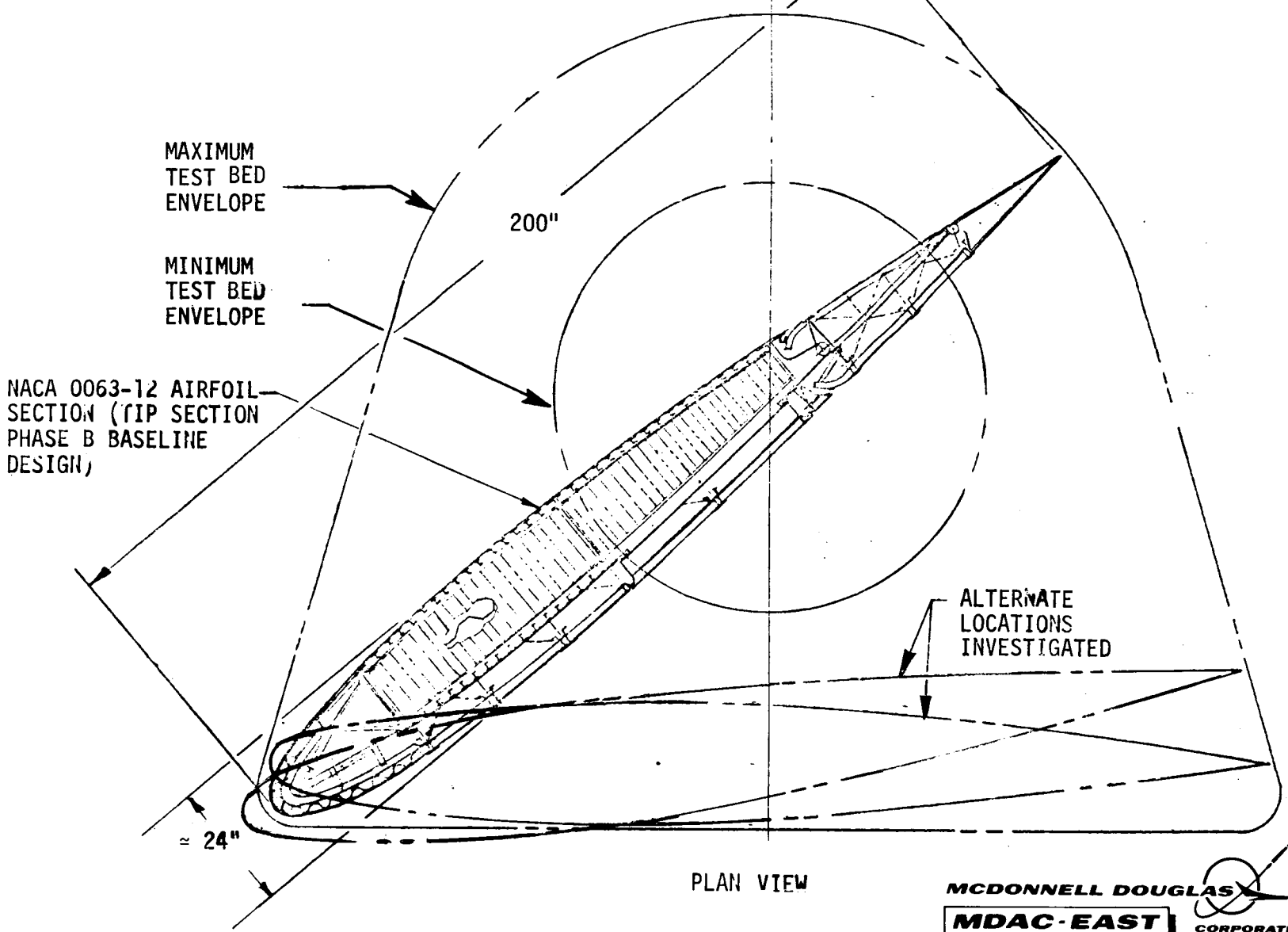

PLAN VIEW

MCDONNELL DOUGLAS
MDAC-EAST
CORPORATION

PRELIMINARY DESIGN
SPACE SHUTTLE ORBITER TEST BED

SIZE COMPARISON

AEROSURFACE CONCEPT VS TEST BED ENVELOPE

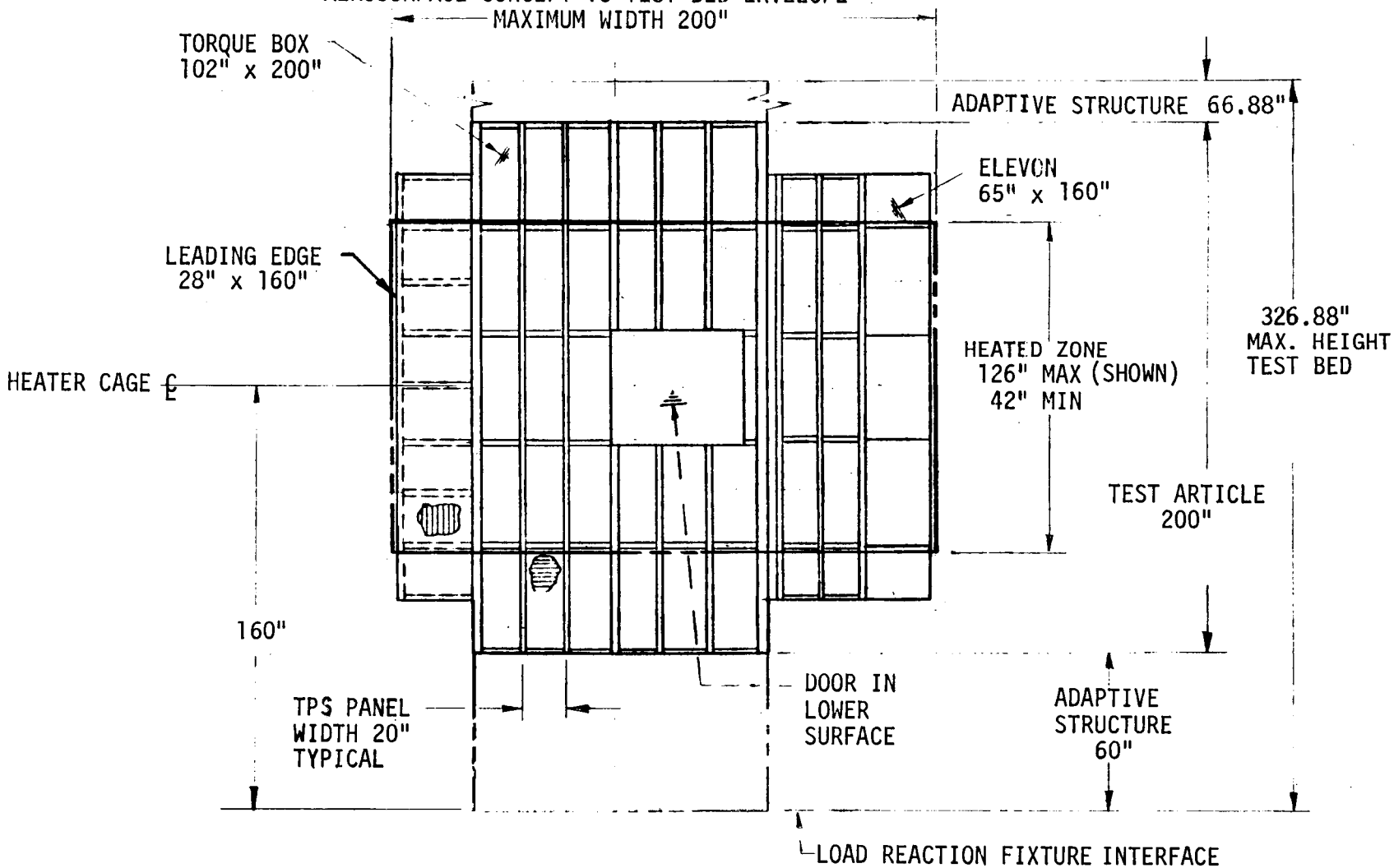

ELEVATION VIEW

MCDONNELL DOUGLAS
MDAC-EAST
CORPORATION

PRELIMINARY DESIGN
SPACE SHUTTLE ORBITER TEST BED

PREDICTED SURFACE TEMPERATURES

(ε = .86)

PHASE B BASELINE ORBITER WING

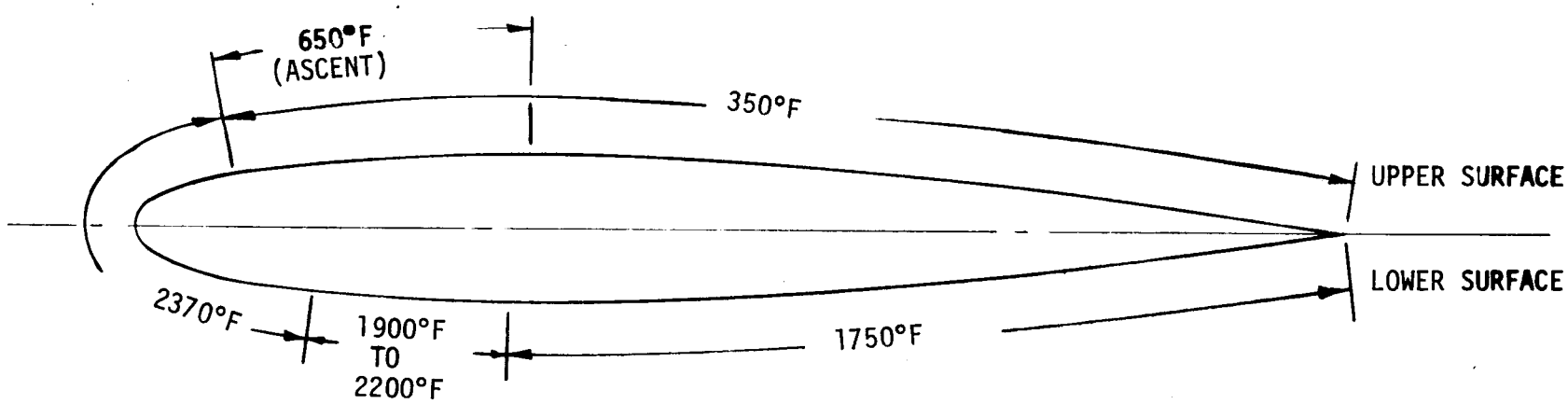

WING CROSS SECTION NEAR TIP

MCDONNELL DOUGLAS
MDAC-EAST
CORPORATION

TEST BED DESIGN CONCEPT

CONVENTIONAL AIRCRAFT STRUCTURE CONCEPT

NEW PRIMARY STRUCTURE FOR TEST BED

DESCRIPTION:

REPRESENTATIVE NASA-MSC 040A ORBITER FUSELAGE AERODYNAMIC SHAPE

AIRFRAME PRIMARY STRUCTURE CHARACTERISTICS

- o CONVENTIONAL AIRCRAFT CONSTRUCTION (EXPENDABLE, CRYOGENIC PROPELLANT TANKS CARRIED EXTERNALLY)
- o INTEGRAL CABIN

THERMAL PROTECTION SYSTEM

- o METALLIC TPS CHARACTERISTICS
  - PANELS, RETAINERS, SUPPORT STRUCTURE, LOAD BEARING INSULATION, HIGH TEMPERATURE FASTENERS
  - PACKAGED, HIGH-TEMPERATURE INSULATION IMMEDIATELY INBOARD FROM PANELS
  - HOT STRUCTURE IN LIEU OF TPS WHERE LIGHTER WEIGHT OR LOWER COST RESULTS (SENSITIVE TO VEHICLE SURFACE TEMPERATURES TO BE SIMULATED)
- o NONMETALLIC TPS CHARACTERISTICS
  - INSULATION AND/OR ABLATOR BONDED OR FASTENED DIRECTLY TO PRIMARY STRUCTURE
  - INSULATION AND/OR ABLATOR BONDED OR FASTENED TO QUICK-OFF SUPPORT PANELS, SUPPORT STRUCTURE, LOAD BEARING INSULATION, SEALS, FASTENERS
  - HOT STRUCTURE IN LIEU OF TPS WHERE LIGHTER WEIGHT OR LOWER COST RESULTS (SENSITIVE TO VEHICLE SURFACE TEMPERATURES TO BE SIMULATED)

TEST BED DESIGN CONCEPT

CONVENTIONAL AIRCRAFT STRUCTURE CONCEPT - CONTINUED

DOOR THROUGH TPS

- o CANDIDATE FUNCTIONAL DOORS (SUBSCALE REPRESENTATION IF REQUIRED)
  - LANDING GEAR WELL, AIRBREATHING ENGINE COMPARTMENT, ACPS MOTOR, INTERSTAGE ATTACHMENT, UMBILICAL, CREW TRANSFER OR INGRESS/EGRESS HATCH, PAYLOAD BAY, EXTERNAL TANK PROPELLANT TRANSFER LINE.
- o CANDIDATE TPS PENETRATIONS (OPTIONAL FEATURE)
  - EQUIPMENT OR SERVICE ACCESS PROVISION, ANTENNA WINDOW, VENT

OTHER CANDIDATE FEATURES (OPTIONAL)

- o LANDING GEAR OR AIRBREATHING ENGINE ATTACHMENT PROVISION FOR INTRODUCING CONCENTRATED LOAD INTO PRIMARY STRUCTURE
- o FUSELAGE EQUIPMENT COMPARTMENT WITH SIMULATION OF THERMAL MASS AND HEAT GENERATION OF REPRESENTATIVE EQUIPMENT INSTALLATION
- o THERMAL-STRUCTURAL FEATURES OR STRUCTURAL FRAMING FOR CREW COMPARTMENT FRONT OR SIDE TRANSPARENCY (TEST ARTICLE ENVELOPE RESTRICTION MAY ELIMINATE THIS FEATURE AS A CANDIDATE)

PRELIMINARY DESIGN
SPACE SHUTTLE ORBITER TEST BED

SIZE COMPARISON

NASA-MSC 040A ORBITER VS TEST BED ENVELOPE

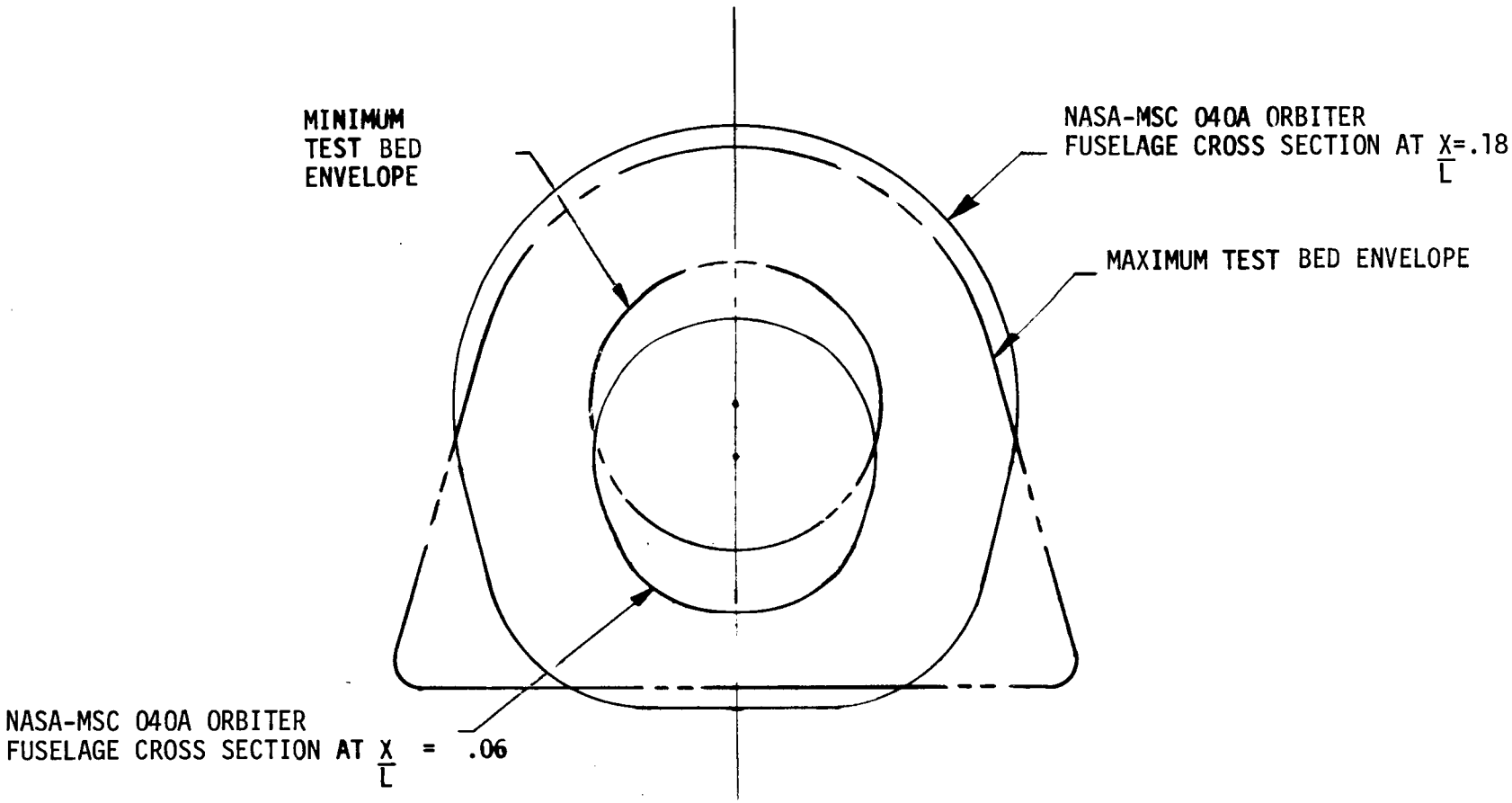

PLAN VIEW

MCDONNELL DOUGLAS CORPORATION
MDAC-EAST

PRELIMINARY DESIGN

SPACE SHUTTLE ORBITER TEST BED

SIZE COMPARISON

NASA MSC 040A ORBITER VS. TEST BED ENVELOPE

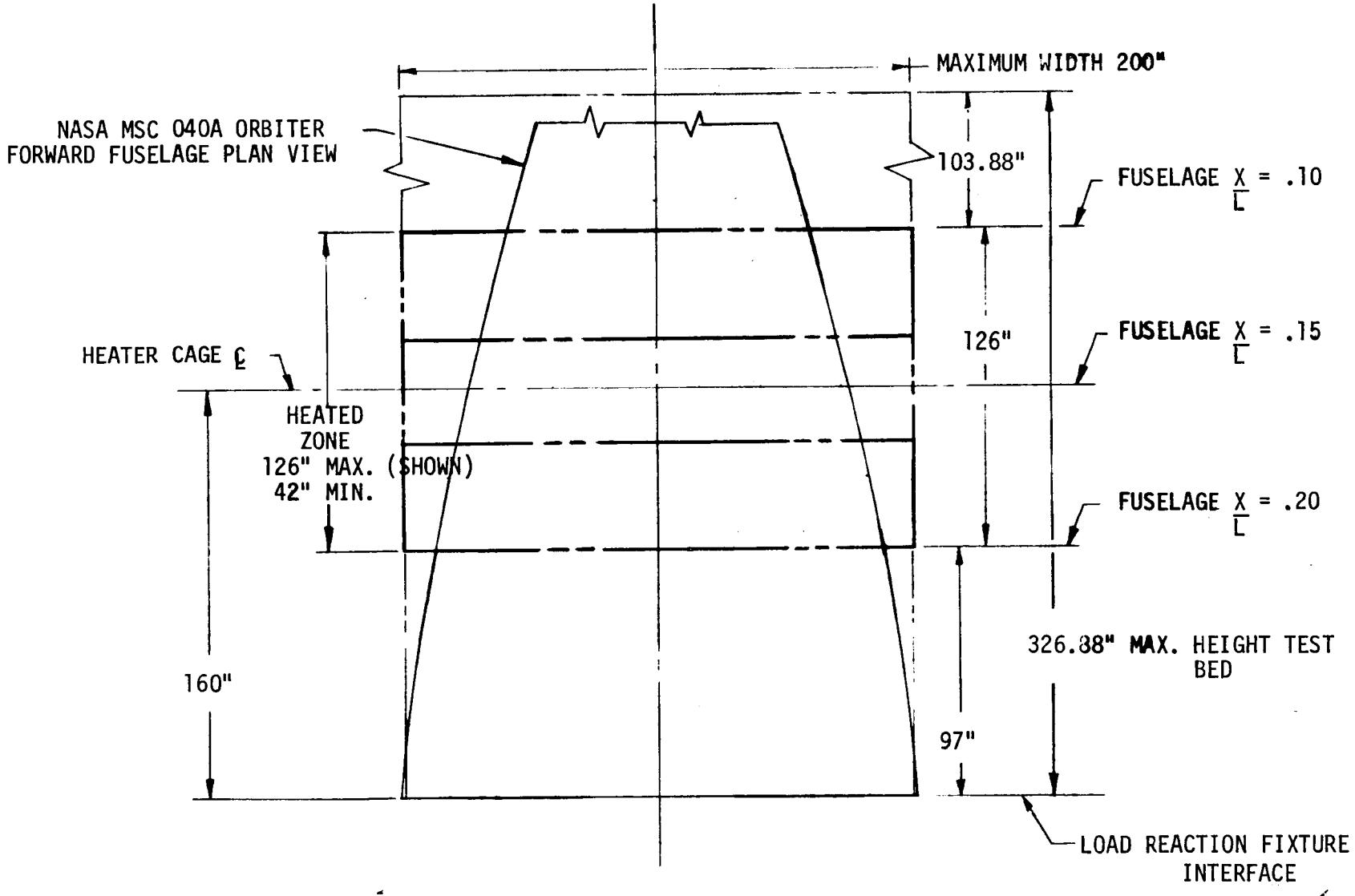

ELEVATION VIEW

MCDONNELL DOUGLAS
MDAC-EAST
CORPORATION

PRELIMINARY DESIGN
SPACE SHUTTLE ORBITER TEST BED

TEMPERATURE COMPARISON

PREDICTED SURFACE TEMPERATURES VS HEATER CAGE MAXIMUM TEMPERATURES
(ε= .8)

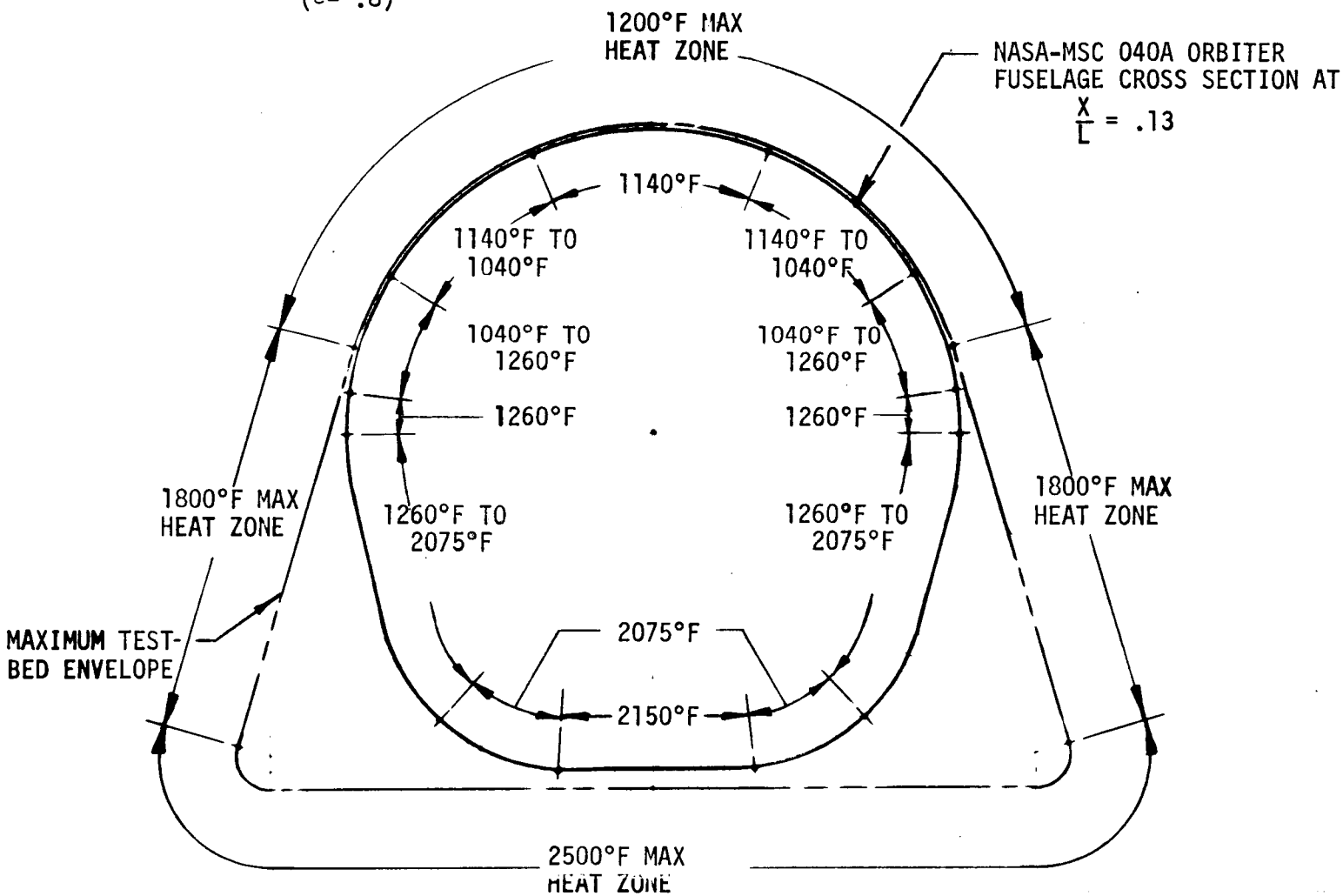

MCDONNELL DOUGLAS
MDAC-EAST
CORPORATION

TEST BED DESIGN CONCEPT

INTEGRAL TANK CONCEPT

TEST ITEM NO. 1 PRIMARY STRUCTURE FOR TEST BED

DESCRIPTION:

REPRESENTATIVE MDC PHASE B BASELINE DESIGN ORBITER FUSELAGE AERODYNAMIC SHAPE

AIRFRAME PRIMARY STRUCTURE CHARACTERISTICS

- o INTEGRALLY STIFFENED, INTERNAL CRYOGENIC PROPELLANT TANK WITH DISCRETE STIFFENING RINGS AT 20" SPACING
- o FUSELAGE FRAMES ATTACHED TO TANK STIFFENING RINGS

THERMAL PROTECTION SYSTEM

- o METALLIC TPS CHARACTERISTICS
  - PANELS, RETAINERS, SUPPORT STRUCTURE, LOAD BEARING INSULATION, HIGH TEMPERATURE FASTENERS
  - PACKAGED, HIGH-TEMPERATURE INSULATION IMMEDIATELY INBOARD FROM PANELS
  - HOT STRUCTURE IN LIEU OF TPS WHERE LIGHTER WEIGHT OR LOWER COST RESULTS (SENSITIVE TO VEHICLE SURFACE TEMPERATURES TO BE SIMULATED)
- o NONMETALLIC TPS CHARACTERISTICS
  - INSULATION AND/OR ABLATOR BONDED OR FASTENED TO QUICK-OFF SUPPORT PANELS, SUPPORT STRUCTURE, LOAD BEARING INSULATION, SEALS, FASTENERS
  - HOT STRUCTURE IN LIEU OF TPS WHERE LIGHTER WEIGHT OR LOWER COST RESULTS (SENSITIVE TO VEHICLE SURFACE TEMPERATURES TO BE SIMULATED)

TEST BED DESIGN CONCEPT

INTEGRAL TANK CONCEPT - CONTINUED

DOOR THROUGH TPS

- o CANDIDATE FUNCTIONAL DOORS (SUBSCALE REPRESENTATION IF REQUIRED)
  - LANDING GEAR WELL, AIRBEATHING ENGINE COMPARTMENT, ACPS MOTOR, INTERSTAGE ATTACHMENT, UMBILICAL, CREW TRANSFER OR INGRESS/EGRESS HATCH, PAYLOAD BAY
- o CANDIDATE TPS PENETRATIONS (OPTIONAL FEATURE)
  - EQUIPMENT OR SERVICE ACCESS PROVISION, ANTENNA WINDOW, VENT

OTHER CANDIDATE FEATURES (OPTIONAL)

- o LANDING GEAR OR AIRBREATHING ENGINE ATTACHMENT PROVISION FOR INTRODUCING CONCENTRATED LOAD INTO PRIMARY STRUCTURE
- o FUSELAGE EQUIPMENT COMPARTMENT WITH SIMULATION OF THERMAL MASS OF REPRESENTATIVE EQUIPMENT INSTALLATION
- o GROUND PURGE SYSTEM FOR CRYOGENIC PROPELLANT TANK EXTERNAL SURFACE AND FUSELAGE VOIDS (SIGNIFICANT IF FUSELAGE TPS DESIGN AFFECTS PURGE SYSTEM PERFORMANCE OR SIZING)
- o THERMAL - STRUCTURAL FEATURES OF STRUCTURAL FRAMING FOR CREW COMPARTMENT FRONT OR SIDE TRANSPARENCY (TEST ARTICLE ENVELOPE RESTRICTION MAY ELIMINATE THIS FEATURE AS A CANDIDATE)

PRELIMINARY DESIGN
SPACE SHUTTLE ORBITER TEST BED

SIZE COMPARISON

MDC PHASE B BASELINE DESIGN ORBITER VS TEST BED ENVELOPE

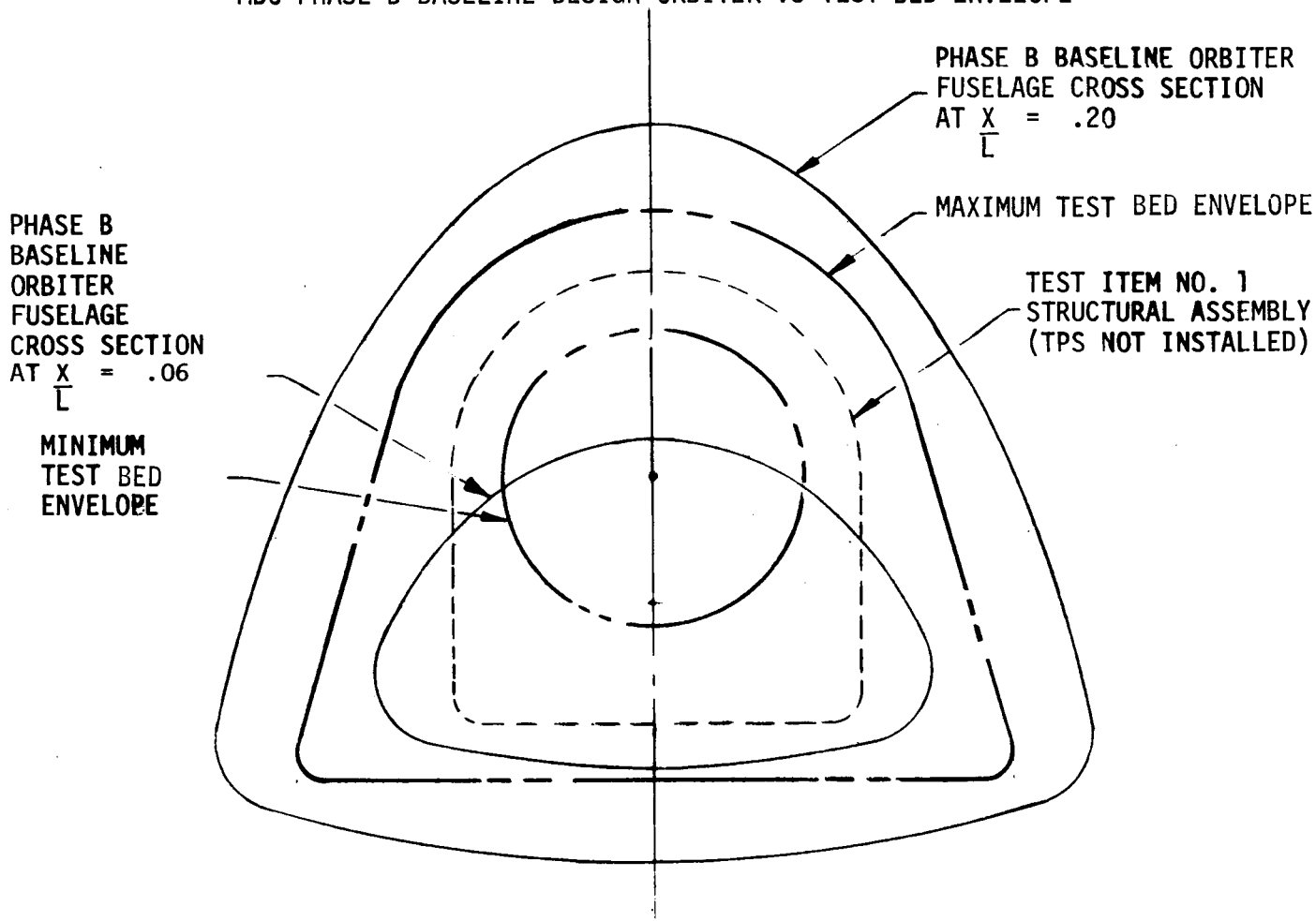

PLAN VIEW

MCDONNELL DOUGLAS CORPORATION
MDAC-EAST

PRELIMINARY DESIGN
SPACE SHUTTLE ORBITER TEST BED

SIZE COMPARISON

MDC PHASE B BASELINE DESIGN ORBITER VS MAXIMUM TEST BED ENVELOPE

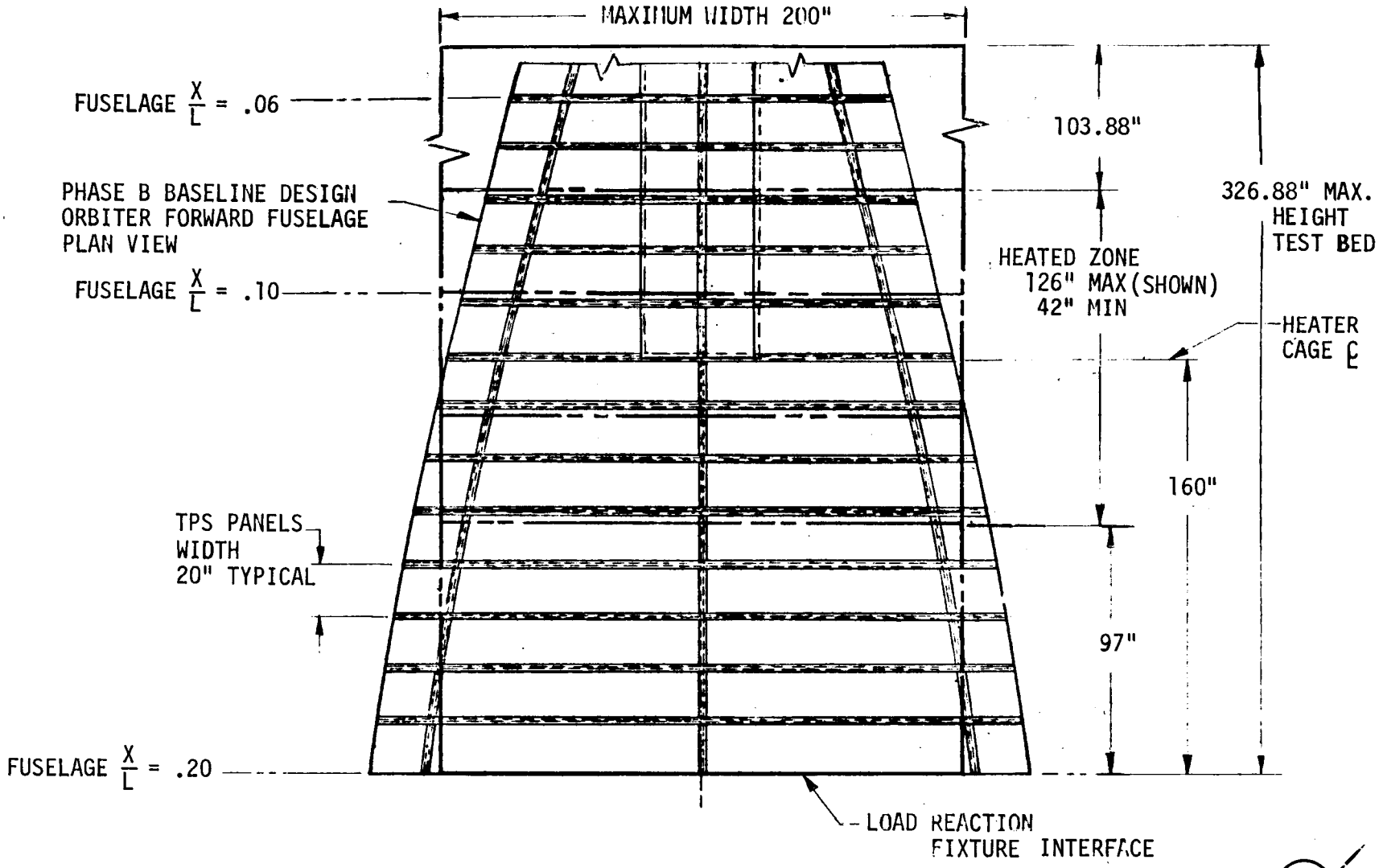

ELEVATION VIEW

MCDONNELL DOUGLAS CORPORATION
MDAC-EAST

PRELIMINARY DESIGN
SPACE SHUTTLE ORBITER TEST BED

TEMPERATURE COMPARISON

PREDICTED SURFACE TEMPERATUES VS HEATER CAGE MAXIMUM TEMPERATURES
(ε = .86)

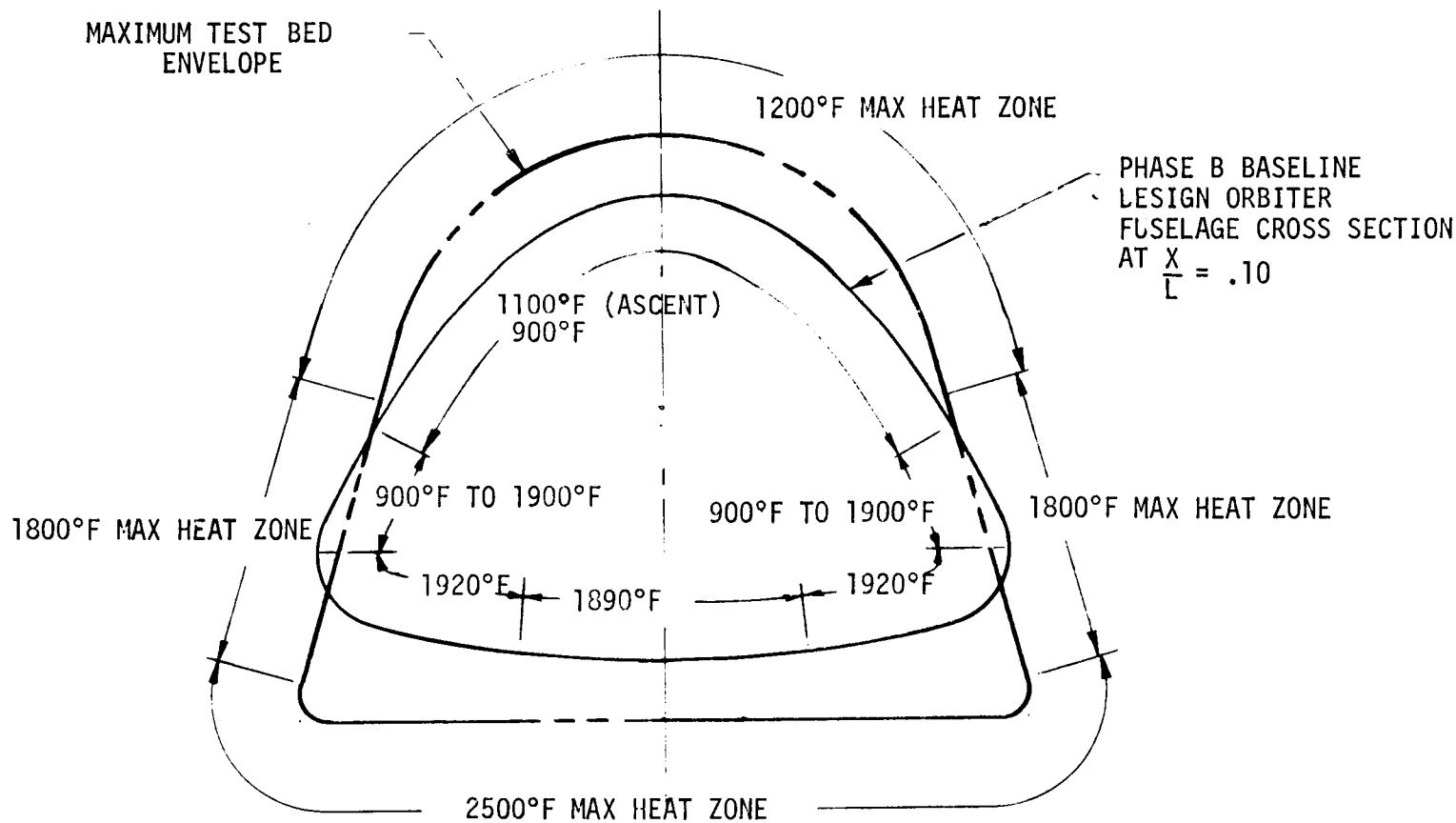

MCDONNELL DOUGLAS
MDAC-EAST
CORPORATION

SELECTED DESIGN CONCEPT
ORBITER TEST BED; NEW PRIMARY STRUCTURE

The test bed consists of a primary structure section, two adapter sections, and a thermal protection system. The adapter sections are of non-flight representative structure and are utilized to distribute concentrated loads from the loading frame to primary structure. The test bed is of constant cross section and its size comparison with the maximum test bed envelope is shown. Length of the TPS is 126 inches, which is the maximum heating array length, and the primary structure segment is 142.0 inches. A functional door, to open approximately 4 inches, is provided in the base of the primary structure and through the TPS. Access to the interior of the test bed is achieved through an adapter section.

SELECTED DESIGN CONCEPT
ORBITER TEST BED; NEW PRIMARY STRUCTURE

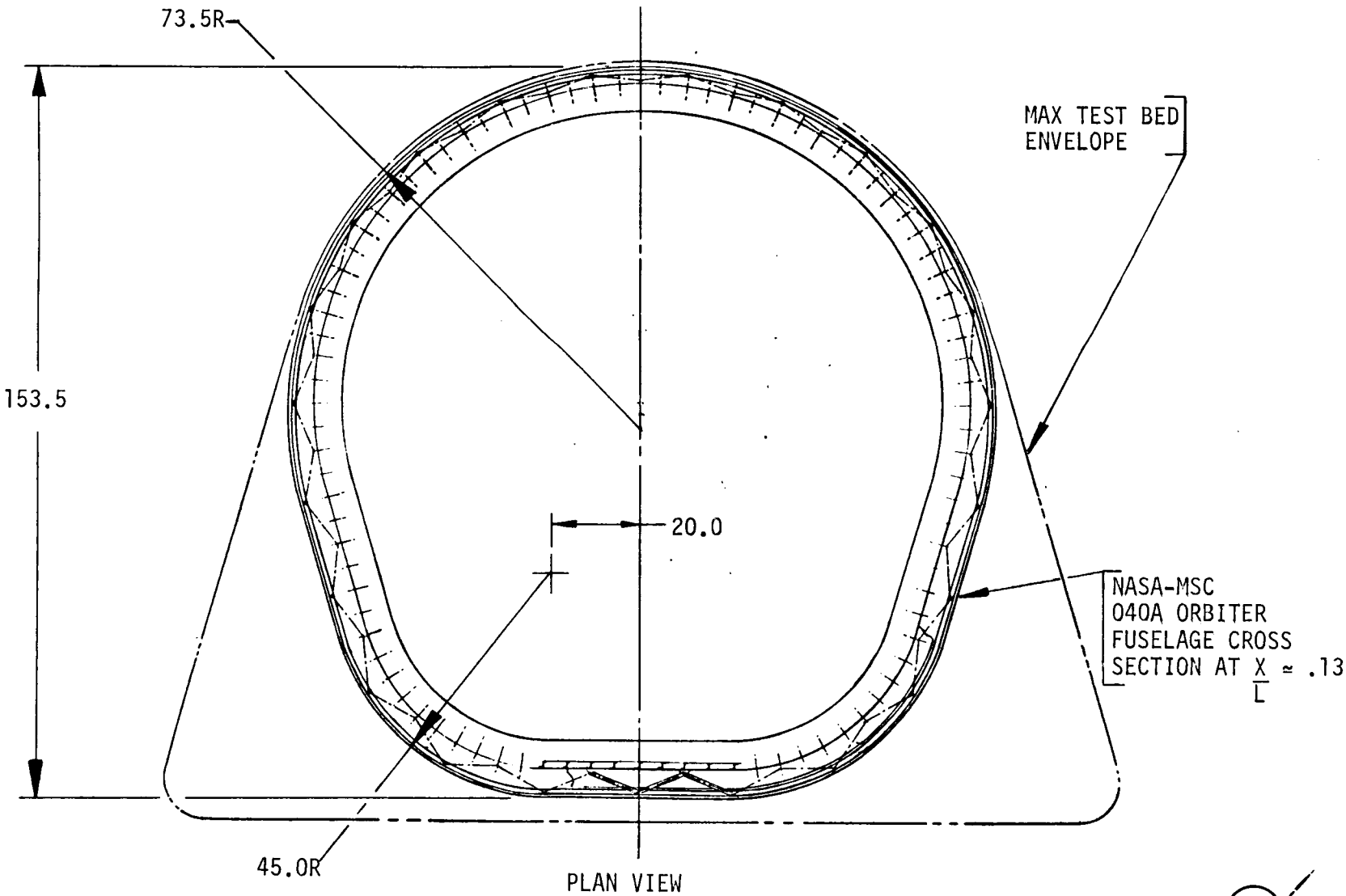

MCDONNELL DOUGLAS
MDAC-EAST
CORPORATION

SELECTED DESIGN CONCEPT
ORBITER TEST BED; NEW PRIMARY STRUCTURE

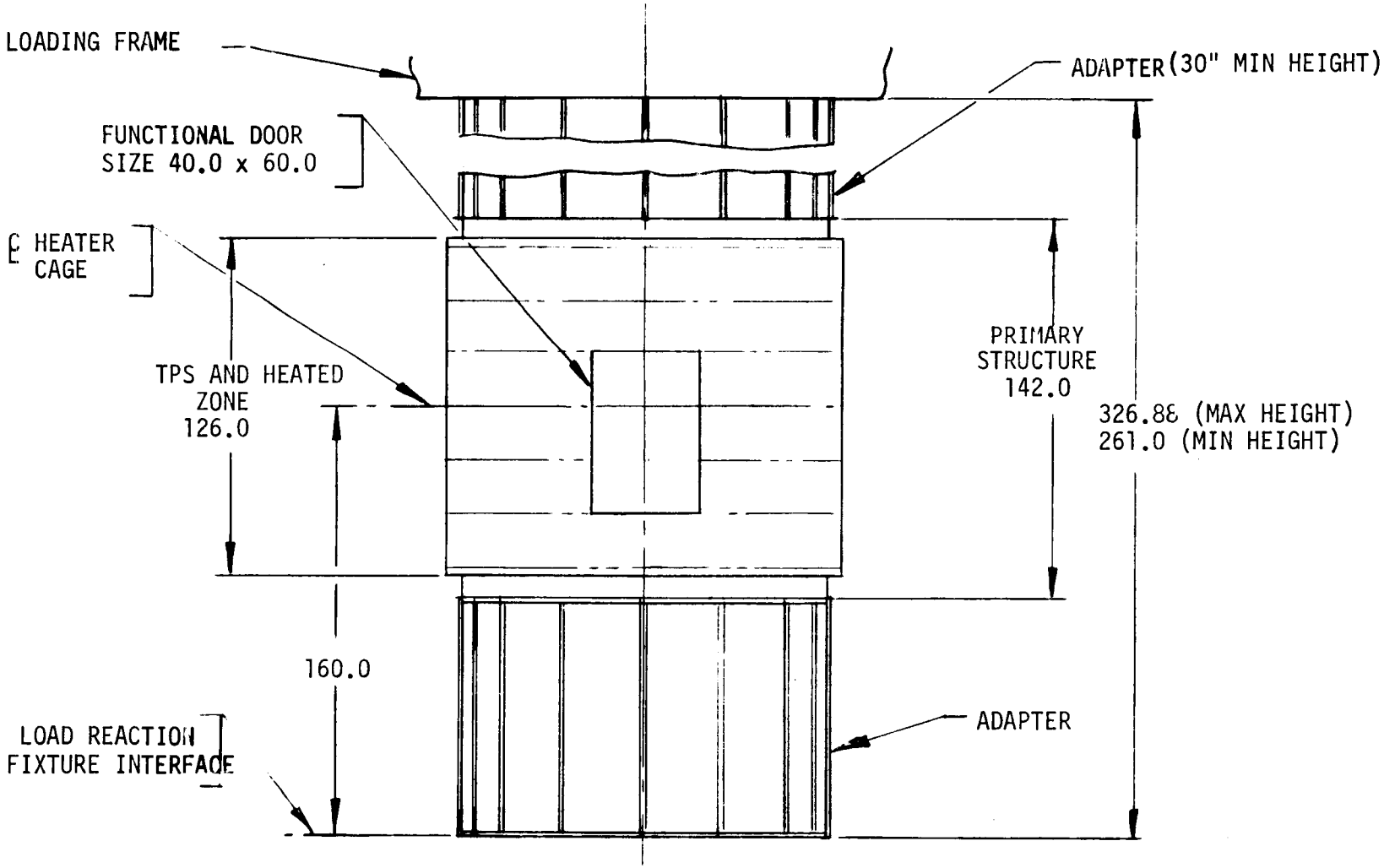

ELEVATION VIEW

MCDONNELL DOUGLAS
MDAC-EAST
CORPORATION

RATIONALE FOR CONCEPT SELECTION

ORBITER TEST BED; NEW PRIMARY STRUCTURE

Design reflects a current Space Shuttle Orbiter configuration utilizing conventional aircraft materials and construction for primary structure.

Forward fuselage section was chosen since it incorporates many desired features for a test bed, such as: 1) size and shape that is compatible with the test facility and heater cage without need to scale-down, 2) area of the orbiter having severe thermal environment on the upper as well as the lower surface, and 3) structural complexity including nose landing gear door and pressurized crew compartment.

A constant cross section test bed is recommended even though the vehicle has a variable cross section. This feature is necessary due to constraints of the heater array.

Test bed design offers the capability to test various candidate TPS approaches such as; 1) non-metallic fastened directly to primary structure outer skin, and, 2) metallic which requires a system of supports and beams to allow space for fibrous insulation and additional heat short standoff distance from primary structure.

RATIONALE FOR CONCEPT SELECTION
ORBITER TEST BED; NEW PRIMARY STRUCTURE

- FOLLOWS CURRENT SPACE SHUTTLE ORBITER THERMAL-STRUCTURAL APPROACH UTILIZING CONVENTIONAL AIRCRAFT STRUCTURE
- LOCATION OF TEST BED SECTION ON ORBITER HAS FEATURES DESIRED FOR TEST BED
- SHAPE OF TEST BED TAILORED TO HEATING ARRAY WITHOUT LOSS OF ORBITER THERMAL-STRUCTURAL IDENTITY
- DESIGN OFFERS VERSATILITY FOR VARIOUS TPS DESIGN CONCEPTS
- SIZE OF TEST BED IS BENEFICIAL FOR ASSESSMENT OF DESIGN PRODUCIBILITY, YET IS COMPATIBLE WITH TEST FACILITY SIZE CAPABILITIES

PRIMARY STRUCTURE SECTION

The primary structure for the test bed is proposed as conventional aircraft type semi-monocoque structure utilizing aluminum alloy skin, stringers and rings. The length of 142.0 inches is sufficient to mount a TPS the length of the heating array, and also accommodate adapter and closure rings. In the base of the structure, using fuselage orientation, a bay 40.0 x 60.0 x 12.0 deep is provided. A functional door with capability for a pressure seal, is to fit the opening of the bay. The door is envisaged as opening sufficiently far to verify integrity of concept yet not interfere with heater mdoules.

An inner pressure wall concept is used to create a cavity which can be pressure controlled to simulate pressure loading on the moldline skin. Concepts for this feature include a pressure liner, nonintegral pressure wall, and a shaped filler. The purpose of this feature is to decrease the pressurized volume for safety considerations.

SELECTED DESIGN CONCEPT
ORBITER TEST BED; NEW PRIMARY STRUCTURE

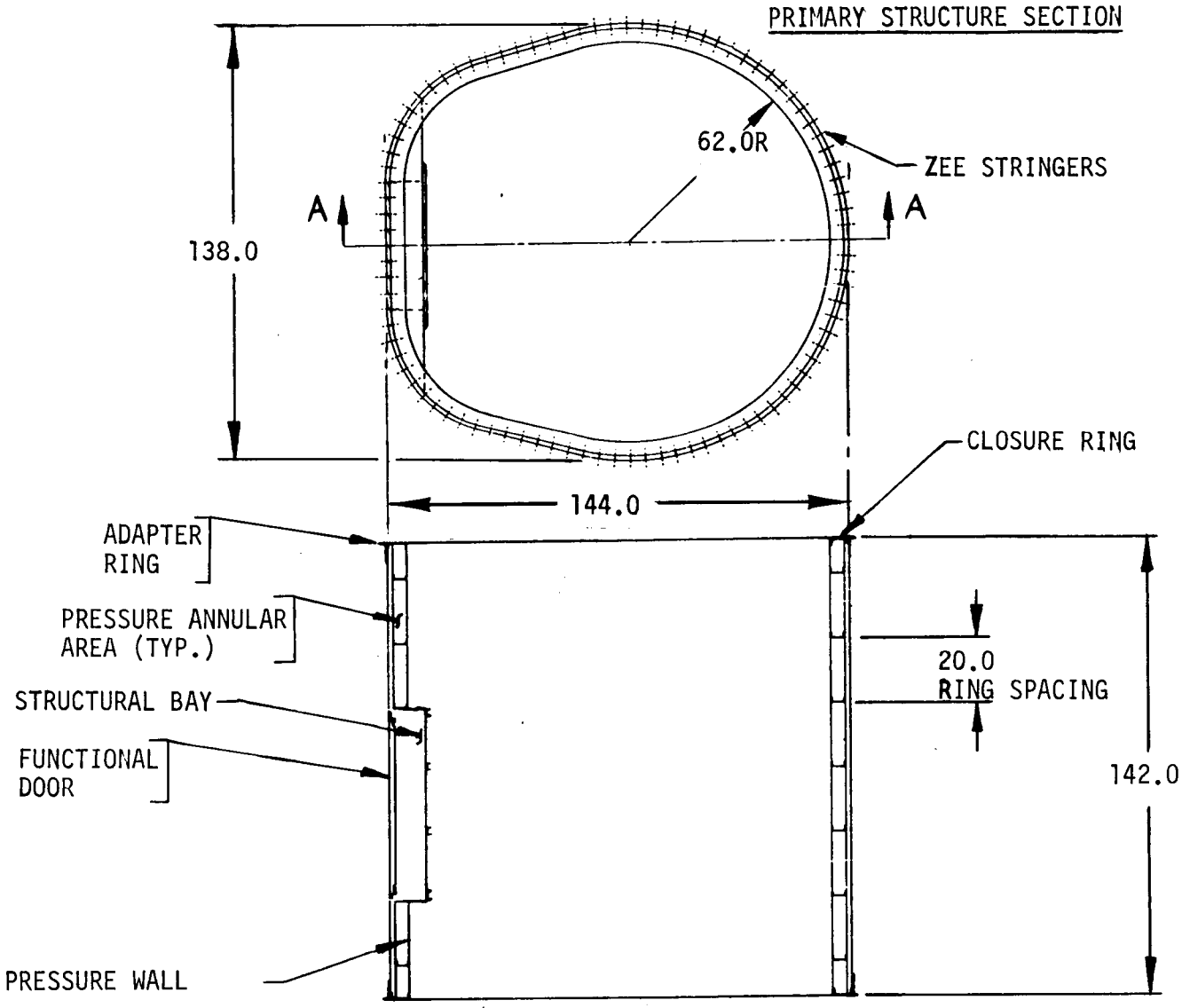

A-A

MCDONNELL DOUGLAS CORPORATION
MDAC-EAST

INSTALLATION OF METALLIC TPS

Metallic TPS consists of single face corrugated panels with corrugations longitudinally oriented. Size of panels will be consistent with Shuttle Orbiter panel sizes (e.g., length approximately 20.0 inches). Panels are supported along the fore and aft edges by transverse beams and retained by straps running parallel with the beams. Standoff struts attach the transverse beams to the primary structure and are of sufficient length to ensure a temperature gradient which will be compatible with structural thermal capability. Fibrous insulation packaged in metallic foil and contacting the structural skin will be installed beneath the entire TPS area. This insulation will be designed to limit temperature of the primary structure to 300°F. The TPS panels and substructure will be constructed from materials suitable for the maximum temperature to which it is exposed.

SELECTED DESIGN CONCEPT
ORBITER TEST BED; NEW PRIMARY STRUCTURE

INSTALLATION OF METALLIC TPS

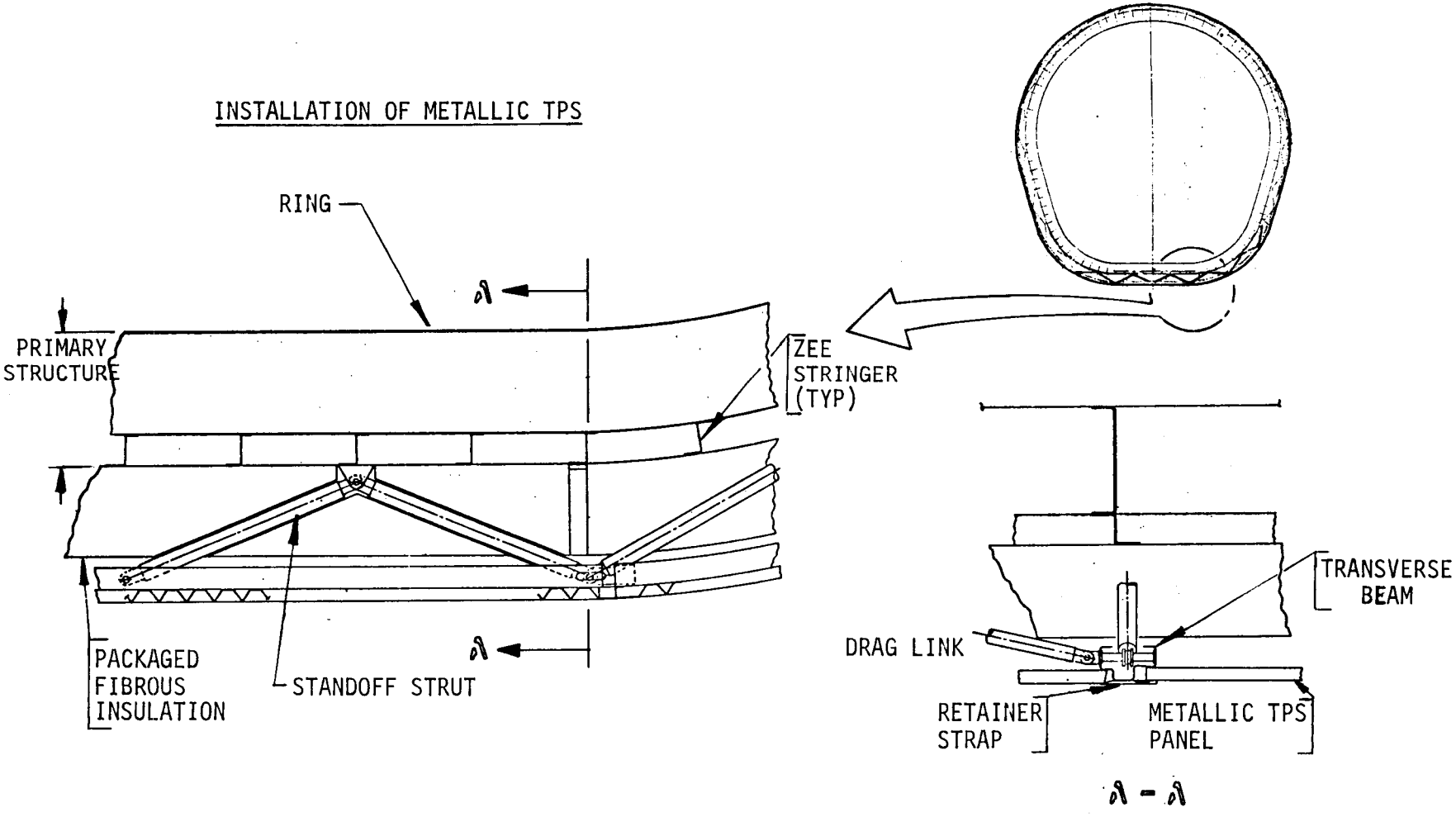

MCDONNELL DOUGLAS
MDAC-EAST
CORPORATION

INSTALLATION OF REUSABLE SURFACE INSULATION

Many variations of methods of attachment, tile size, joint configuration and weight saving artifices have been proposed for this thermal protection system. The following represents only one of these methods.

A typical panel is 6.0 x 6.0 inches and of such a thickness to limit the temperature of the primary structure to 300°F. Tiles are bonded to a strain isolation media (i.e., silicone sponge) which is in turn bonded to the structure. Relief holes are cut in the silicone sponge to lower unit weight and decrease the effective stiffness. The joint depicted is an "inclined" joint tapering from outer to inner surface which precludes hot gas penetration to bondline, and also provides positive location upon assembly. The tiles will be glass coated on every side except where bonded. This coating is impervious to liquid water and erosion resistant, yet is porous to allow venting of tiles.

SELECTED DESIGN CONCEPT
ORBITER TEST BED; NEW PRIMARY STRUCTURE

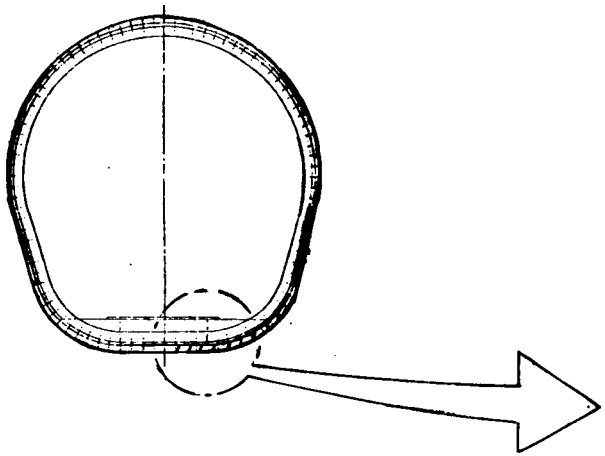

INSTALLATION OF REUSABLE SURFACE INSULATION

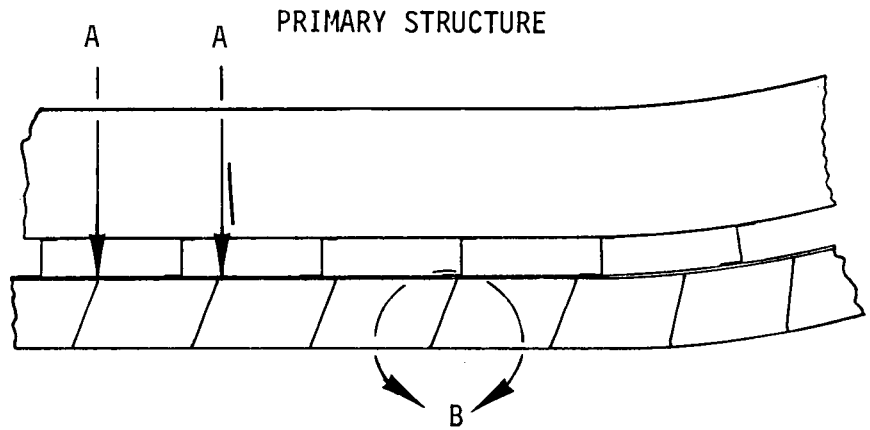

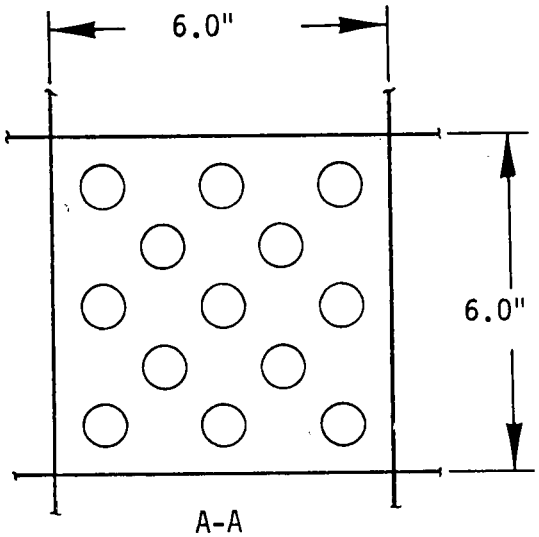

SHOWING RELIEF HOLE PATTERN
IN STRAIN ISOLATION MEDIA
AND TYP TILE SIZE

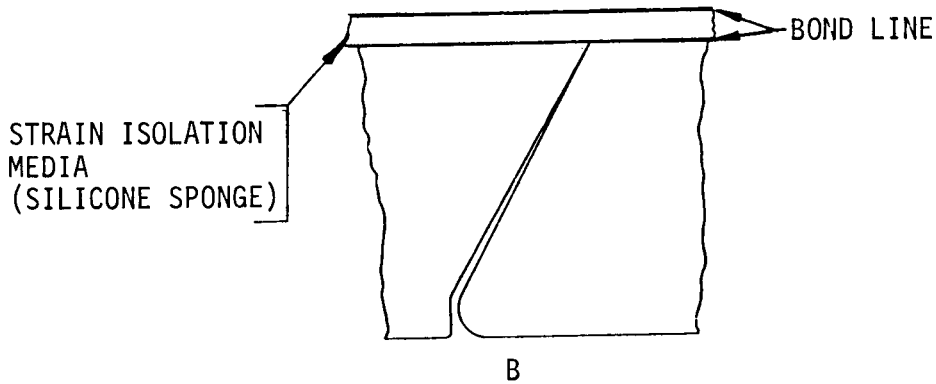

SHOWING TYP JOINT BETWEEN TILES

MCDONNELL DOUGLAS
MDAC-EAST
CORPORATION

BASE FOR ORBITER TEST BED; TEST ITEM NO. 1 PRIMARY STRUCTURE

TEST ITEM NO. 1 STRUCTURAL ASSEMBLY

MSFC DWG. 31M01218-1

NASA Test Article No. 1 simulates a reduced scale section of booster fuselage. The test item consists of a tank, end adapters, and a metallic thermal protection system. The tank is a cylindrical aluminum cyrogenic hydrogen tank with integrally machined longitudinal stiffeners, aluminum skirts welded to both ends, end domes, and circumferential rings bolted to tank stiffeners. Shear panels are bolted to the tank rings and support TPS on lower surface and sides. Upper TPS is supported by tank rings. Aluminum end adapters are attached to the tank and support the test bed in the test facility.

BASE FOR ORBITER TEST BED; TEST ITEM NO. 1 PRIMARY STRUCTURE

TEST ITEM NO. 1 STRUCTURAL ASSEMBLY

MSFC DWG. 31M01218-1

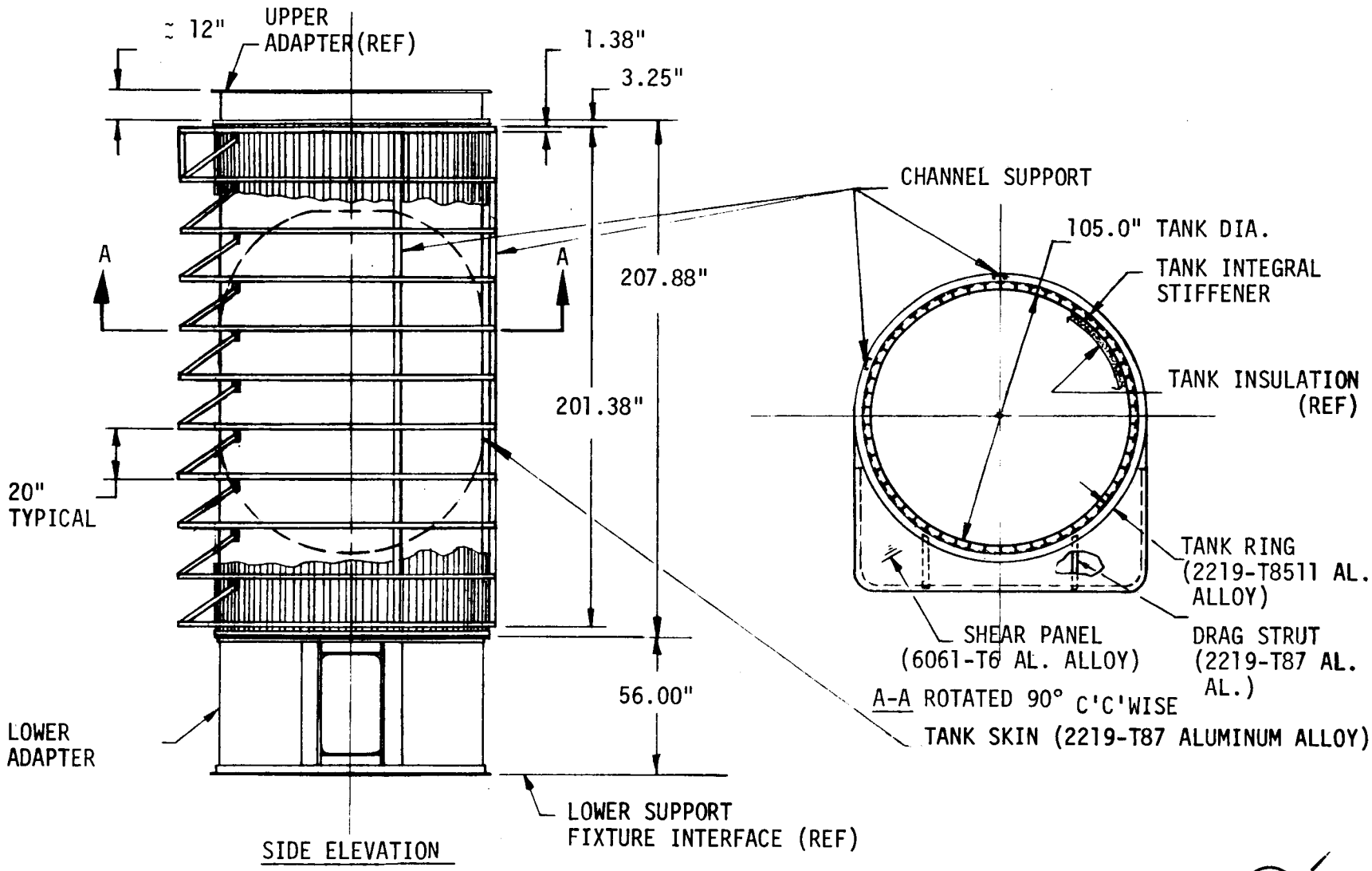

MCDONNELL DOUGLAS
MDAC-EAST
CORPORATION

MODIFICATIONS TO TEST ITEM NO. 1

The orbiter test bed study modifies NASA Test Item No. 1 to simulate a section of fuselage in the MDC Phase B Orbiter at approximately 10% length of fuselage. The metallic TPS of NASA Test Item No. 1 is not used because predicted Orbiter lower surface temperatures preclude use of Haynes 25 alloy. In addition, the vehicle cross sectional shape (vertical sides) does not simulate an Orbiter cross section. Shear panels of NASA Test Item No. 1 are replaced with a beam-support strut standoff arrangement attached to the tank rings to minimize heat shorts into the tank from the moldline panels.

The upper adapter of NASA Test Article No. 1 is attached at the upper end of the tank wall to apply loads from the test loading fixture into the tank wall. The lower adapter of NASA Test Article No. 1 is attached at the lower end of the tank wall to react loads from the tank into the aft loading fixture. These adapters are used pending strength analyses and establishment of load requirements. The mechanical interfaces between adapter and test fixture will also be determined when loads are specified.

No hot structure at the outer moldline is now shown, however, this could be integrated into the design if final testing temperatures permit use of titanium (material utilized as hot structure in MDC Phase B Orbiter). Modifications required to NASA Test Item No. 1 for use as an orbiter test bed are summarized in this figure.

SELECTION DESIGN CONCEPT

ORBITER TEST BED; TEST ITEM NO. 1 PRIMARY STRUCTURE

MODIFICATIONS TO TEST ITEM NO. 1

REMOVE FROM NASA TEST ITEM NO. 1 (31M01248)

- METALLIC TPS
- SHEAR PANELS (31M01250-1 & -2, 31M01253-1) AND DRAG STRUTS (31M01251-1 & -2, 31M01287-1 & -2)
- COULD REMOVE FWD & AFT TANK RINGS (31M01246-1) AND CHANNEL SUPPORTS (31M0129-1, 31M01295-1, 31M01313-1, 31M01314-1) (THESE PARTS NOT USED)
- POSSIBLY REPLACE OR MODIFY UPPER ADAPTER (31M01249-1) AND LOWER ADAPTER (31M01232-1) PENDING STRENGTH CHECK WHEN LOADS ARE KNOWN

ADD TO RESULTING ASSEMBLY

- BEAM-TRUSS STANDOFF ARRANGEMENT (PART OF TPS) - TIE TO TANK AT 7 TANK RINGS
- BULKHEADS - TIE TO TANK RINGS AT FORWARD AND AFT SIDE OF TPS IF PURGING IS DESIRED
- SIDEWALLS, END BULKHEADS, AND FITTINGS FOR GEARWELL SIMULATION
- LOWER SURFACE DOOR
- MOLDLINE TPS PANELS

SELECTED DESIGN CONCEPT

ORBITER TEST BED; TEST ITEM NO. 1 PRIMARY STRUCTURE

General arrangement of an orbiter test bed using Test Item No. 1 primary structure is shown in this figure. The use of NASA Test Item No. 1 tank assembly and upper and lower adapters gives an overall test bed length equal to NASA Test Article No. 1. Heater centerline location and lower reaction fixture height are used to determine TPS height. A 160 inch TPS height is required to shield the tank from the 126 inch maximum heated zone and to mate with existing tank rings. The TPS is supported at 9 existing rings on the NASA Test Item No. 1 tank assembly.

A door simulating a nose landing gear door is located in the lower surface. Width of 40 inches is approximately that of the Phase B Orbiter door. Length of 80 inches is chosen to provide TPS in the heated zone above and below the door to simulate door end sill conditions. A hinge and actuation system is provided similar to that designed for the MDC Phase B Orbiter. This system is capable of a 90° door opening. It may be desirable to use a simplified design providing only enough door opening for inspection.

Mechanical loads are applied by a loading fixture to the upper adapter.

The upper end and lower end of the TPS could be closed-off with solid bulkheads to allow purging of the cavity between the tank and TPS.

SELECTED DESIGN CONCEPT

ORBITER TEST BED; TEST ITEM NO. 1 PRIMARY STRUCTURE

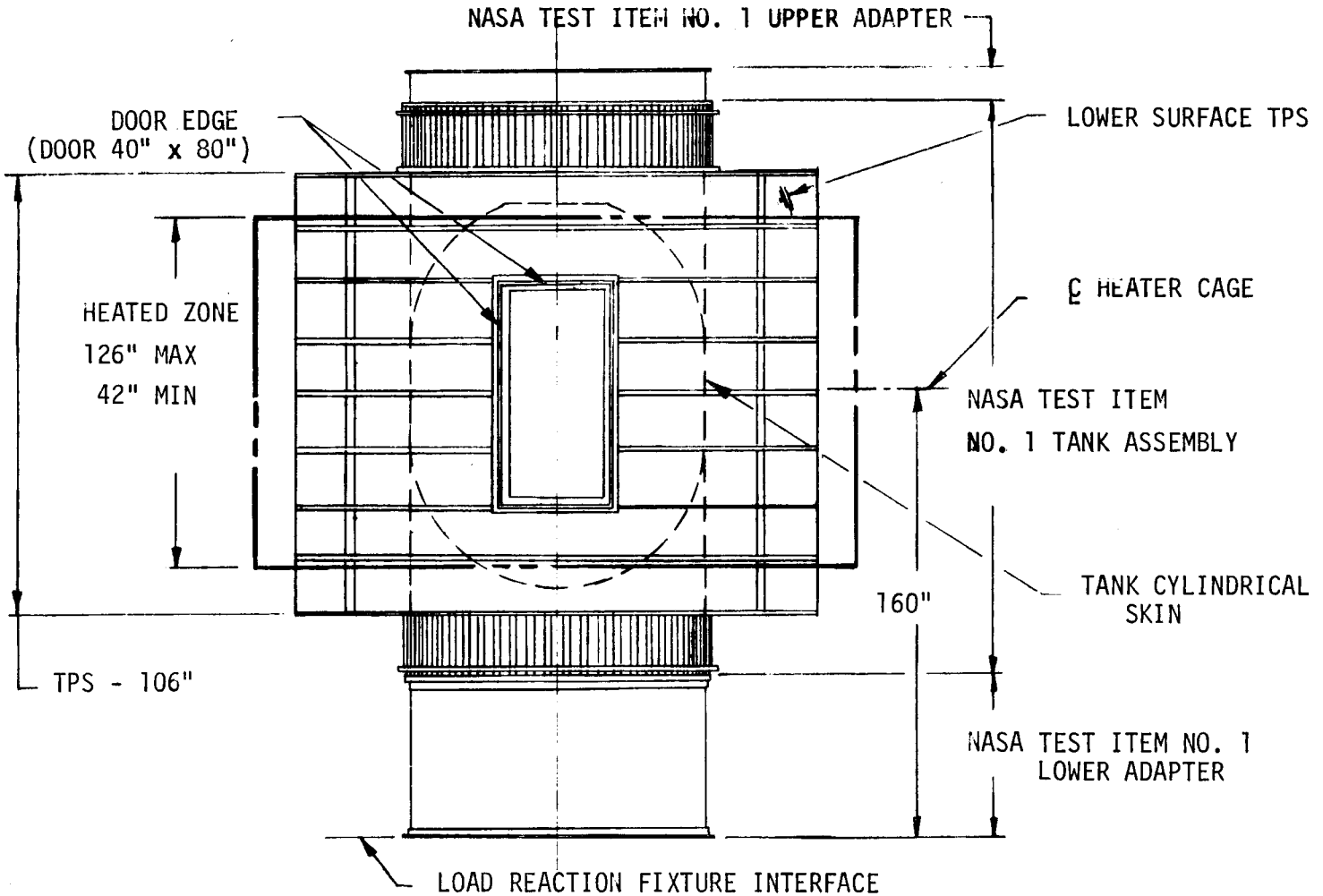

ELEVATION VIEW

MCDONNELL DOUGLAS
MDAC-EAST
CORPORATION

RATIONALE FOR CONCEPT SELECTION

ORBITER TEST BED; TEST ITEM NO. 1 PRIMARY STRUCTURE

Test Item No. 1 can be utilized for test bed primary structure to represent an integral tank concept similar to the MDC Phase B Baseline Design Orbiter. Structural modifications are required, such as removal of the lower ring skirts and beef-up of local areas, to implement usage.

Primary structure of Test Item No. 1 can be mechanically loaded to produce body bending, shear, and axial strain deformations that approximate those expected on a Space Shuttle Orbiter to properly simulate interaction of TPS and primary structure. A preliminary structural analysis has been performed to substantiate this capability. A summary of the analysis is included in the supporting technical data package. The non-flight weight thermal-mass characteristics can be accounted for in analytical studies, and by providing support strut thermal isolation (load bearing insulation) from structural heat-sink in the test bed.

Concepts for metallic and non-metallic TPS are adaptable to Test Item No. 1 by using a support system of standoff struts and support beams, typical of an integral tank concept, to form the desired aerodynamic shape.

RATIONALE FOR CONCEPT SELECTION
ORBITER TEST BED; TEST ITEM NO. 1 PRIMARY STRUCTURE

- o TEST BED IS REPRESENTATIVE OF ORBITER INTEGRAL TANK STRUCTURAL DESIGN CONCEPT
- o SIMULATION OF THERMAL-STRUCTURAL RESPONSE CHARACTERISTICS AND TPS INTERACTION CAN BE ACCOMPLISHED WITH SELECTIVE TEST ENVIRONMENT
- o INHERENT ADAPTABILITY TO TPS CONCEPTS TYPICAL OF ORBITER INTEGRAL TANK
- o CRYOGEN CAPABILITY FOR THERMAL TESTS AND PURGE SYSTEM DEVELOPMENT TESTS

INSTALLATION OF METALLIC TPS

The next two figures show possible TPS arrangements for an orbiter test bed using Test Item No. 1 primary structure. The cross secional fuselage shape is the maximum test bed envelope modified with a larger chine radius. This shape is generally representative of an orbiter cross section and was developed prior to obtaining information of the degree of adaptability of the heater elements to different shapes. It appears that it will be possible to reshape this section to be more representative of the Phase B Orbiter nose cross section. The tank was located from the lower moldline surface to provide a standoff distance similar to Phase B Orbiter design (based on metallic TPS panels). Both TPS arrangements are basically an outer moldline panel system supported off the tank rings by a transverse beam-support strut system. The beam-strut arrangement is an integral part of the thermal protection system. The interface between the thermal protection system and structure is at the support strut attachment to the tank ring.

The first figure shows a metallic panel TPS installation. Panels are attached to transverse beams at one end and are free to expand at the other. Edging members are provided on the longitudinal edges of the panels and are overlapped with appropriate gaps allowed for expansion. Fibrous insulation blankets (encased in metallic foil) are located inboard of the moldline panels and are supported off the transverse beam system.

The door in the lower surface is supported off a gearwell built onto the tank. The gearwell side walls are attached to tank longerons and the end gearwell bulkheads are attached to tank rings.

The door TPS panels are supported off the inner door structure by standoff posts to minimize heat shorts. Fibrous insulation is installed between the TPS panels and structural door. A hot gas spring seal is provided at the outer door surface sill and an elastomeric seal is provided at the inner door sill.

SELECTED DESIGN CONCEPT

ORBITER TEST BED; TEST ITEM NO. 1 PRIMARY STRUCTURE

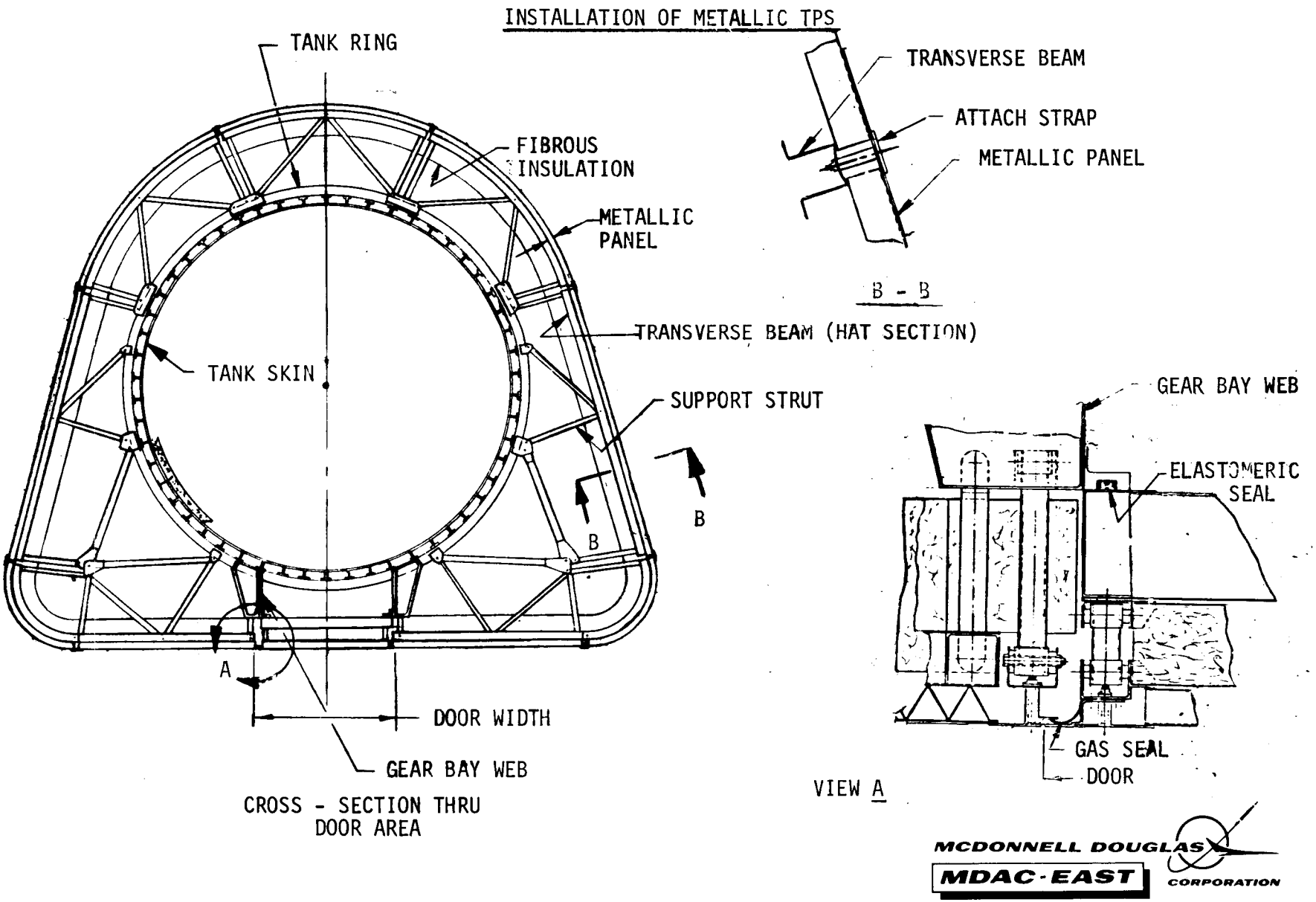

MCDONNELL DOUGLAS CORPORATION
MDAC-EAST

INSTALLATION OF REUSABLE SURFACE INSULATION

This figure shows a non-metallic TPS installation supported from an integral tank. Hardened compacted fiber (HCF) tiles are bonded to substrate panels with gaps between tiles for expansion. The panels are clamped along the panel transverse edges to a transverse beam system. Longitudinal edge members of panels are overlapped with designed expansion gaps.

HCF tiles are bonded directly to a built-up metallic door structure. An outer gas seal and an inner elastomeric seal is provided for door sealing. The door is supported off a gearwell built onto the tank.

HCF thickness and materials used for the substrate panels, transverse beam-support struts, door and gear - well will be selected based on test temperatures.

SELECTED DESIGN CONCEPT

ORBITER TEST BED; TEST ITEM NO. 1 PRIMARY STRUCTURE
INSTALLATION OF REUSABLE SURFACE INSULATION

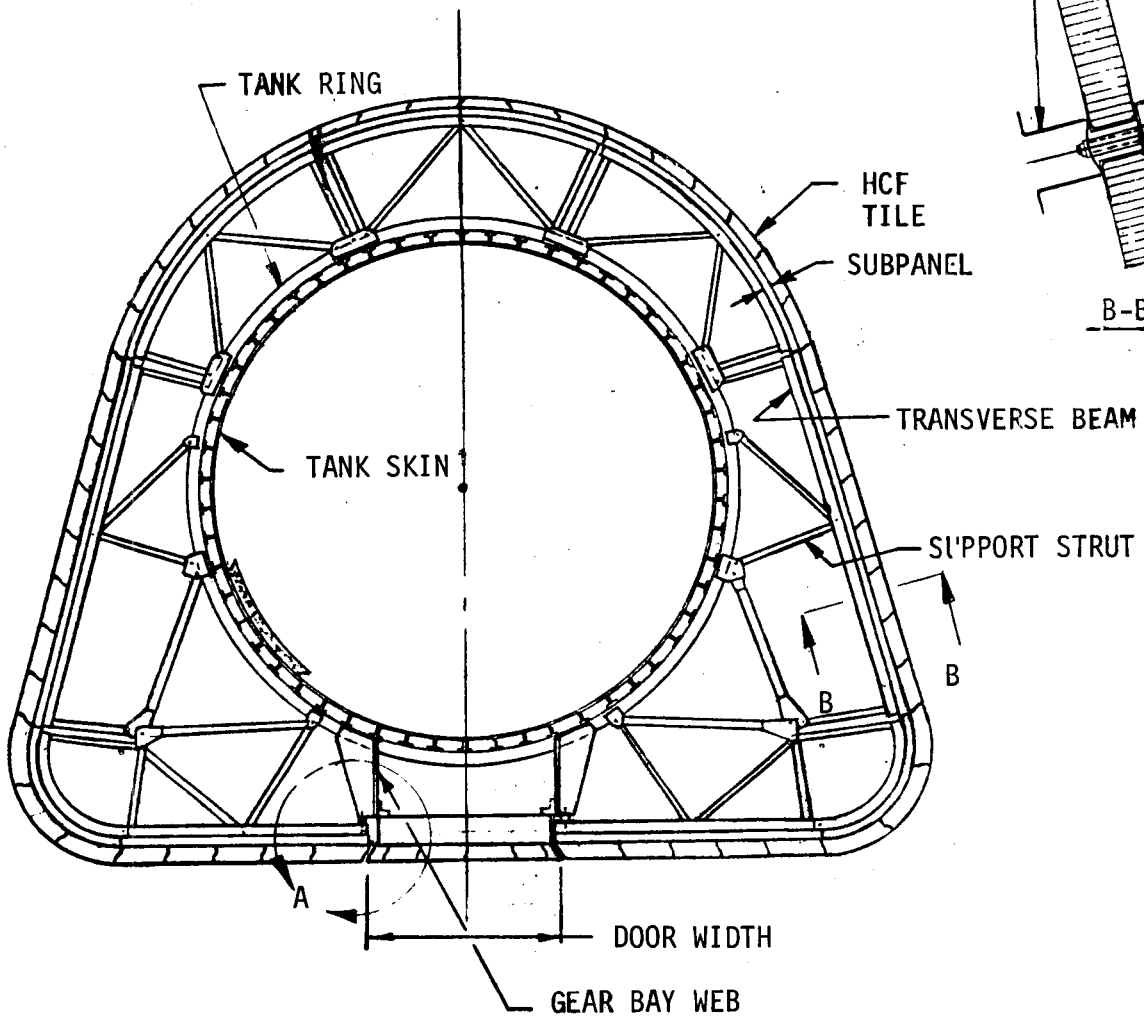

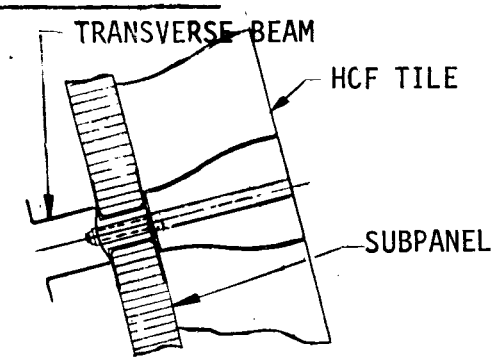

B-B

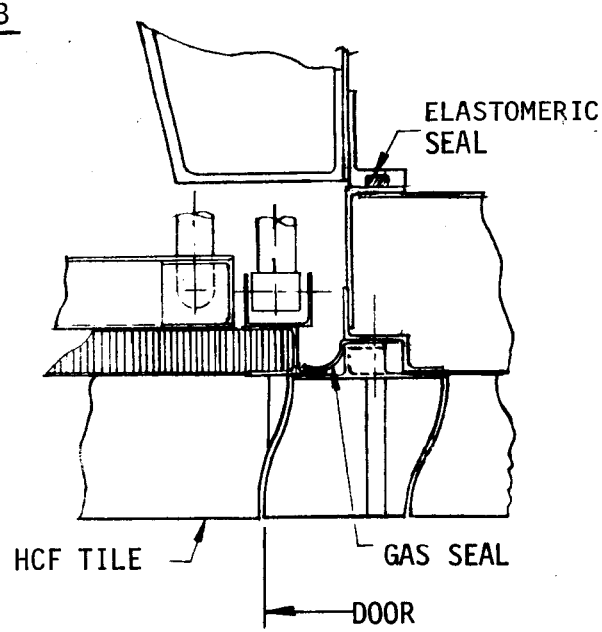

VIEW A

MCDONNELL DOUGLAS
MDAC-EAST
CORPORATION

DESIGN CONCEPT REVIEW
SUPPORTING TECHNICAL DATA

ENGINEERING DRAWINGS

- o 70J043002 ORBITER TEST BED - TEST ITEM NO. 1 INTEGRAL STRUCTURE
- o 70J043003 PROPOSED TEST ARTICLE - CONVENTIONAL AIRCRAFT STRUCTURE CONCEPT
- o 70J043004 HEATER ELEMENT GEOMETRY
- o 70J043005 WING TEST SPECIMEN CONCEPT - ORBITER TEST BED
- o 70J043006 TA-1 TEST ARTICLE HEATER GEOMETRY
- o 70J043007 AERO SECTION HEATED ZONE
- o 70J043008 PHASE B ORBITER - HEATER GEOMETRY FOR X/L = .10

DOCUMENTS

- o STRUCTURAL DESIGN CRITERIA AND REQUIREMENTS (PRELIMINARY)
- o TEST REQUIREMENTS AND PLANNING (PRELIMINARY)

SUPPORTING TECHNICAL ANALYSIS

- o COMPARISON OF THERMAL PROTECTION SYSTEM DEFORMATION CAUSED BY PRIMARY STRUCTURE MECHANICAL STRAIN (MDC PHASE B ORBITER VS TEST ITEM NO. 1)

PRELIMINARY DESIGN
SPACE SHUTTLE ORBITER TEST BED

SUMMARY

- o STUDY PLAN

  MDAC-EAST IS AT MID-POINT IN FOUR MONTHS TECHNICAL STUDY

  COMPLETED MILESTONES:

  - TECHNICAL ORIENTATION
  - PROGRAM MANAGEMENT REVIEW
  - DESIGN CONCEPT REVIEW

- o STATEMENT OF WORK REQUIREMENTS

  THE REQUIREMENT THAT "THE SIZE OF THE TEST BED SHALL BE CONSISTENT WITH THE (STRUCTURAL-THERMAL TEST) FACILITY CAPABILITY" HAS PROVEN TO BE A MAJOR DESIGN DRIVER

- o TEST BED/FACILITY INTERFACES

  SEVERAL PHYSICAL INTERFACE REQUIREMENTS ARE NOT AS YET DEFINED. CLOSE COORDINATION WITH MSFC TEST FACILITY DESIGNERS WILL BE MAINTAINED TO ASSURE TEST BED/FACILITY COMPATIBILITY.

- o TASKS

  TEST OBJECTIVES FOR TPS AND TEST BED PRIMARY STRUCTURE HAVE BEEN DEFINED TO EXTENT PRACTICAL PRIOR TO DECISION ON SELECTED DESIGN CONCEPT.

  DESIGN CRITERIA HAS BEEN ESTABLISHED (PATTERNED AFTER PHASE B SPACE SHUTTLE VEHICLE DESIGN CRITERIA) AND A PRELIMINARY STRUCTURAL DESIGN CRITERIA AND REQUIREMENTS DOCUMENT HAS BEEN PREPARED. ADDITIONAL CRITERIA WILL BE ESTABLISHED BASED ON SELECTED CONCEPT DESIGN REQUIREMENTS AND TEST OBJECTIVES.

  A PRELIMINARY TEST REQUIREMENTS AND PLANNING DOCUMENT HAS BEEN PREPARED TO EXTENT PRACTICAL PRIOR TO DECISION ON SELECTED DESIGN CONCEPT.

  FIVE TEST BED DESIGN CONCEPTS HAVE BEEN STUDIED. THREE CONCEPTS INVOLVE NEW PRIMARY STRUCTURE; TWO CONCEPTS USE TEST ITEM NO. 1 FOR PRIMARY STRUCTURE.

PRELIMINARY DESIGN
SPACE SHUTTLE ORBITER TEST BED

SUMMARY (CONTINUED)

- SELECTED DESIGN CONCEPTS

  A CONVENTIONAL AIRCRAFT STRUCTURE CONCEPT HAS BEEN SELECTED FOR ORBITER TEST BED PRELIMINARY DESIGN USING NEW PRIMARY STRUCTURE

  AN INTEGRAL TANK CONCEPT HAS BEEN SELECTED FOR ORBITER TEST BED PRELIMINARY DESIGN USING NASA TEST ITEM NO. 1 FOR PRIMARY STRUCTURE

- FUTURE EFFORT

  MDAC-EAST WILL PROCEED WITH PRELIMINARY DESIGN OF SELECTED ORBITER TEST BED CONCEPTS

  SCOPE OF EFFORT FOR REMAINDER OF TECHNICAL STUDY IS SUMMARIZED IN THE "STUDY PLAN" SECTION OF THIS PRESENTATION, AND IS DEFINED IN DETAIL IN MDC REPORT E0467, "PROPOSAL FOR PRELIMINARY DESIGN OF A SPACE SHUTTLE ORBITER TEST BED, VOLUME I TECHNICAL STUDY PLAN"