w 55
P-177

MCR-75-325 (Issue 2)
Contract NAS1-13916

Midterm Review

December 1975

Research Study to Identify Technology Requirements for Advanced Earth-Orbital Transportation Systems

(NASA-CR-183091) RESEARCH STUDY TO IDENTIFY TECHNOLOGY REQUIREMENTS FOR ADVANCED EARTH-ORBITAL TRANSPORTATION SYSTEMS (Martin Marietta Aerospace) 177 p

N90-70120

Unclas
00/16 0234044

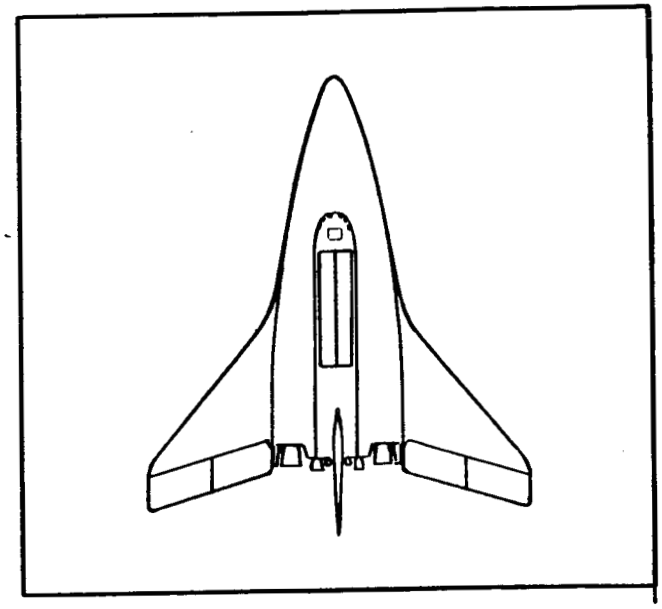

MARTIN MARIETTA

Small

#234044

TECHNOLOGY REQUIREMENTS FOR ADVANCED TRANSPORTATION SYSTEMS

MID-TERM REVIEW

11 DECEMBER 1975

NASA-LANGLEY RESEARCH CENTER
CONTRACT NAS1-13916
MCR-75-325 (ISSUE 2)

MARTIN MARIETTA

FOREWORD

THIS DOCUMENT PRESENTS INFORMATION PREPARED FOR THE MID-TERM REVIEW OF THE MARTIN MARIETTA AEROSPACE-DENVER DIVISION RESEARCH STUDY FOR IDENTIFYING TECHNOLOGY REQUIREMENTS FOR ADVANCED TRANSPORTATION SYSTEMS.

TABLE OF CONTENTS

		PAGE
I.	INTRODUCTION	5
II.	TASK 1 SUMMARY	13
III.	TASK 2 - VEHICLE CONCEPT DESIGNS	37
	A. GENERAL APPROACH AND PARAMETRIC STUDIES	37
	B. VTOHL VEHICLE CONCEPT	59
	C. SLED LAUNCH VEHICLE CONCEPT	79
	D. INFLIGHT FUELED VEHICLE CONCEPT	91
	E. VEHICLE CONCEPTS COMPARISON SUMMARY	105
IV.	TASK 2 - PROGRAM COST ANALYSIS	107
	A. APPROACH	107
	B. GUIDELINES AND RESULTS	117
	C. LIFE CYCLE COST METHODOLOGY AND RESULTS	143
V.	TASK 3 - TECHNOLOGY ASSESSMENT APPROACH	155
VI.	CONCLUDING REMARKS	173
	A. RESULTS OF STUDY TO DATE	175
	B. FUTURE WORK PLANS	177

MARTIN MARIETTA

I. INTRODUCTION

MARTIN MARIETTA

PROGRAM OBJECTIVES

THE PROGRAM OBJECTIVES, SUMMARIZED ON THIS CHART, ARE DEFINED IN THE STATEMENT OF WORK. FOCUS IS APPLIED TO THREE VEHICLE CONCEPTS FOR WHICH TECHNOLOGY IS EXAMINED. THESE CONCEPTS ARE SINGLE-STAGE-TO-ORBIT (SSTO), HYDROGEN FUELED, FULLY REUSABLE VEHICLES, ALL WITH HORIZONTAL LANDING CAPABILITY. THE THREE CONCEPTS ARE VERTICAL TAKEOFF, SLED LAUNCHED AND INFLIGHT FUELED SSTO VEHICLES.

FIGURES OF MERIT WILL BE DEVELOPED TO COMPARE THE RELATIVE VALUES OF VARIOUS VEHICLE CONCEPTS AS WELL AS VARIOUS POTENTIAL DEVELOPMENTS IN TECHNOLOGY AREAS.

FUTURE EARTH-ORBIT TRANSPORTATION SYSTEMS

- IDENTIFY AREAS OF TECHNOLOGY

  CRITICAL TO DEVELOPMENT OF SYSTEMS
  OFFER COST AND PERFORMANCE ADVANTAGE

- DETERMINE MOST EFFICIENT OPERATIONAL MODE

  VERTICAL TAKEOFF
  SLED LAUNCHED
  INFLIGHT FUELED

- DEFINE PERFORMANCE POTENTIAL AS FUNCTION OF TECHNOLOGY GROWTH

  "NORMAL" GROWTH
  ACCELERATED FUNDING

MARTIN MARIETTA

STUDY CONTENT AND SCHEDULE

THIS CHART IDENTIFIES THE MAJOR TASKS OF THIS STUDY AND THEIR SCHEDULE.

- FOUR TASKS

  1. IDENTIFICATION OF "NORMAL" TECHNOLOGY GROWTH EXPECTED FOR AN IOC OF 1995
  2. DESIGN AND DEFINITION OF PERFORMANCE POTENTIAL OF VEHICLE SYSTEMS
  3. ASSESSMENT OF ADVANCED TECHNOLOGY ACHIEVABLE WITH ACCELERATED FUNDING
  4. EXTENDED PERFORMANCE STUDIES TO IDENTIFY IMPACT OF ADVANCED TECHNOLOGY ON TOTAL SYSTEM PERFORMANCE

     IDENTIFY CRITICAL AND HIGH-YIELD TECHNOLOGIES

- DURATION OF STUDY

  START 21 MAY 1975, COMPLETE 7 JUNE 1975

  FINAL REPORT DRAFT 21 MARCH 1975

STUDY CONTENT AND SCHEDULE

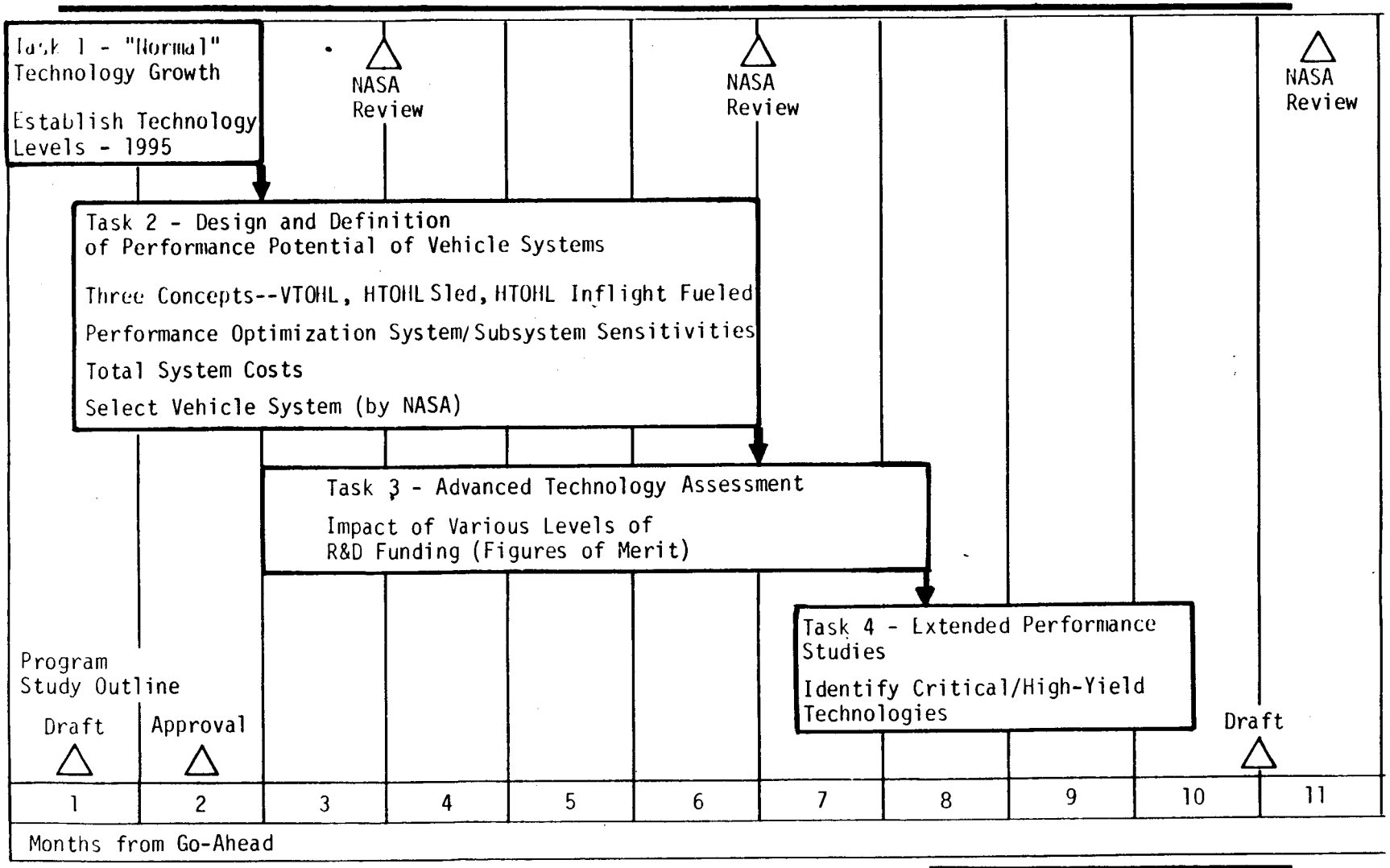

MARTIN MARIETTA

CURRENT ACCOMPLISHMENTS

TASK 1 (COMPLETED)

- PROJECTED TECHNOLOGY PARAMETERS QUANTITATIVELY FOR MATERIALS, STRUCTURES, PROPULSION
- ANALYZED THERMOSTRUCTURAL AND PROPULSION CONCEPTS
- EXAMINED GROWTH POTENTIAL IN OTHER TECHNOLOGY AREAS--AERO-AERO-THERMODYNAMICS, COMPUTERS, SUBSYSTEMS
- ANALYZED R&D FUNDING BY NASA AND DOD
- DOCUMENTED PROJECTIONS AND RATIONALE

TASK 2 (COMPLETED)

- EVALUATED VEHICLE DESIGN APPROACHES USING VARIOUS THERMO-STRUCTURAL AND PROPULSION CONCEPTS
- SELECTED DESIGN CONCEPTS FOR VEHICLES
- PERFORMED DESIGN ANALYSES, COMPLETED VEHICLE DRAWINGS
- PERFORMED COST ANALYSES

TASK 3 (CONTINUING)

- IDENTIFIED POTENTIAL TECHNOLOGY PARAMETERS AND PROGRAMS FOR ANALYSIS OF COST/PERFORMANCE/BENEFITS

MARTIN MARIETTA

II. TASK 1 - SUMMARY

MARTIN MARIETTA

PURPOSE OF TASK 1

TASK 1 - "NORMAL" TECHNOLOGY GROWTH

THIS TASK PROVIDES FOR THE ESTABLISHMENT OF THE TECHNOLOGY LEVELS, IN PERTINENT VEHICLE SYSTEM AREAS, ESTIMATED TO EXIST FOR A SINGLE-STAGE-TO-ORBIT CONCEPT THAT WOULD HAVE A FIRST OPERATIONAL FLIGHT IN 1995. TECHNOLOGY WILL THUS BE ROUGHLY 15 YEARS ADVANCED OVER THE SPACE SHUTTLE LEVEL. ASSUMPTIONS INCLUDE, BUT ARE NOT LIMITED TO (A) SPACE PROGRAMS PROCEEDING AS CURRENTLY PLANNED; (B) SOURCES OF TRANSFERRABLE TECHNOLOGY, SUCH AS COMMERCIAL AND MILITARY AIRCRAFT PROGRAMS, PROCEEDING AT CURRENT EXPECTED LEVELS; (C) EXISTING LEVELS, FOCUS AND TRENDS OF TECHNOLOGY PROGRAMS CONTINUE AS EXPECTED; (D) NO MAJOR DISASTERS OR WARS OCCUR DURING THIS TIME PERIOD.

OUR APPROACH TO TASK 1 HAS BEEN TO USE HISTORICAL DATA AND EXPERT JUDGMENTS OF FUTURE TECHNOLOGY CAPABILITIES AND R&D FUNDING TO PROJECT TECHNOLOGY GROWTH. MISSION OBJECTIVES AND AN OVERALL PROGRAM PLAN HAVE BEEN USED AS A BASIS FOR OUR TIMING OF THESE PROJECTIONS. SOURCES OF HISTORICAL DATA FOR TECHNOLOGY GROWTH AND R&D FUNDING INCLUDED CONGRESSIONAL RECORDS, GOVERNMENT TECHNOLOGY AND BUDGETARY DOCUMENTS, AND INDUSTRY REPORTS. EXPERT JUDGMENTS WERE USED TO INTERPRET, SUMMARIZE, AND PROJECT THESE DATA INTO THE FUTURE.

SCOPE OF TASK 1 ACTIVITIES

TASK 1 ADDRESSES "NORMAL" TECHNOLOGY GROWTH

PRIMARY EMPHASIS ON TECHNOLOGY DEVELOPMENTS WHICH HAVE STRONG IMPACT ON VEHICLE WEIGHT AND C.G. LOCATIONS

- MATERIALS, STRUCTURES } THERMOSTRUCTURAL CONCEPTS
- PROPULSION

SECONDARY EMPHASIS ON TECHNOLOGY RELATED TO "OTHER" VEHICLE SUB-SYSTEMS

- AERO-THERMODYNAMICS
- GUIDANCE AND NAVIGATION
- STABILITY AND CONTROL
- ELECTRICAL
- ENVIRONMENTAL CONTROL

R&D FUNDING BY NASA AND DOD RELATED TO SSTO TECHNOLOGY

MARTIN MARIETTA

TECHNOLOGY IMPACT OF VEHICLE DESIGN

AN INITIAL ASPECT OF TASK 1 WAS RECOGNITION OF PRIMARY WEIGHT AND C.G. DRIVERS. THIS CHART SHOWS THE PERCENTAGE OF DRY WEIGHT OF MAJOR VEHICLE COMPONENTS FOR THE VERTICAL TAKEOFF (VTO) CONCEPT. THE PERCENTAGES WHICH APPLY FOR THE STUDY CONFIGURATION (TASK 2) ARE SHOWN FOR COMPARISON WITH THE CORRESPONDING PROPOSAL CONFIGURATION. THE WING AND FIN PERCENTAGES HAVE INCREASED SIGNIFICANTLY TO MEET HYPERSONIC CONTROL CRITERIA.

PRIMARY WEIGHT AND C.G. DRIVERS ARE

- MATERIALS
- STRUCTURES
- PROPULSION

SECONDARY WEIGHT AND C.G. DRIVERS ARE

- AERO-THERMODYNAMICS
- PERFORMANCE OPTIMIZATION
- CONTROL SYSTEMS
- AERODYNAMICS
- COMPUTER TECHNOLOGY
- AUXILIARY POWER

VEHICLE COMPONENT WEIGHTS (PERCENTAGE OF DRY WEIGHTS) FOR VTOHL

SURFACE TPS	19.6	17.0
LANDING GEAR	3.6	5.5
ROCKET ENGINES AND ACCESSORIES	20.8	21.2
CARGO	14.6	15.9
DRY WEIGHT (POUNDS)	443,678	409,112

TASK 1 TECHNOLOGY PROJECTION IMPROVEMENTS

OUR APPROACH TO TASK 1 HAS BEEN TO USE HISTORICAL DATA AND EXPERT JUDGEMENTS OF FUTURE TECHNOLOGY CAPABILITIES AND R&D FUNDING TO PROJECT TECHNOLOGY GROWTH. MISSION OBJECTIVES AND AN OVERALL PROGRAM PLAN HAVE BEEN USED AS A BASIS FOR OUR TIMING OF THESE PROJECTIONS. SOURCES OF HISTORICAL DATA FOR TECHNOLOGY GROWTH AND R&D FUNDING INCLUDED CONGRESSIONAL RECORDS, GOVERNMENT TECHNOLOGY AND BUDGETARY DOCUMENTS, AND INDUSTRY REPORTS. EXPERT JUDGEMENTS WERE USED TO INTERPRET, SUMMARIZE, AND PROJECT THESE DATA INTO THE FUTURE.

SIGNIFICANT RESULTS OF TASK 1 PROJECTIONS ARE SUMMARIZED ON THIS CHART.

THE FOLLOWING FIVE CHARTS, SELECTED FROM THE QUARTERLY REVIEW OF TASK 1 RESULTS, SHOW HISTORICAL DATA AND PROJECTIONS FOR PRIMARY TECHNOLOGY AREAS. THESE HAVE BEEN USED AS A BASIS FOR DEVELOPING THE VEHICLE CONCEPTS IN TASK 2.

TASK 1 TECHNOLOGY PROJECTION IMPROVEMENTS

PRIMARY TECHNOLOGY AREAS

MATERIALS AND STRUCTURES

- REUSABLE SURFACE INSULATION (RSI) DENSITY AND TEMPERATURE LIMITS
- ADVANCED COMPOSITES WEIGHTS
  WING, ELEVON, FIN, THRUST STRUCTURE, LANDING GEAR
- INTEGRAL PROPELLANT TANKS WEIGHTS

PROPULSION

- SPECIFIC IMPULSE, CHAMBER PRESSURE
- ENGINE THRUST/WEIGHT RATIO
- BELL NOZZLES; DUAL POSITION
- LINEAR NOZZLES (MORE PARAMETRIC ANALYSIS NEEDED)
- SLUSH/TRIPLE POINT PROPELLANTS (MORE "LARGE SCALE" ANALYSIS NEEDED)
- RCS/OMS, AUXILIARY PROPULSION SPECIFIC IMPULSE/WEIGHT

SECONDARY TECHNOLOGY AREAS

- PERFORMANCE AND WEIGHT IMPROVEMENTS

OVERALL

- MAIN ENGINE ISP: IMPROVED 2% (≈ 20% DRY WEIGHT)
- OVERALL DRY WEIGHTS: IMPROVED 16%
- MORE EFFICIENT DESIGN, PRODUCTION AND OPERATIONS TECHNIQUES

MARTIN MARIETTA

SURFACE INSULATION HISTORY/PROJECTION

HISTORICAL DATA

1. GLASS PHENOLIC
2. DC 325
3. AVCOAT 5026-39
4. ESA 3560
5. ESA 5500
6. MA 25S
7. SLA 561 AND SLA 220
8. LI 1500
9. CARBON-CARBON
10. LI 900
11. NOMEX
12. AMES RSI-9
13. AMES RSI-22

RATIONALE FOR PROJECTIONS

- TREND IN HISTORICAL DATA
- CURRENT EFFORTS TO DEVELOP LIGHTWEIGHT TPS FOR SHUTTLE EXTERNAL TANKS (APPROXIMATELY 2 LB/FT^3)
- MAXIMUM, NOMINAL AND MINIMUM VALUES OF PROJECTED DENSITIES ARE SHOWN

SOURCES OF INFORMATION

- ASTRONAUTICS AND AERONAUTICS, FEBRUARY 1973
- MARTIN MARIETTA AEROSPACE ABLATOR DESIGN DATA RECORDS

SURFACE INSULATION HISTORY/PROJECTION

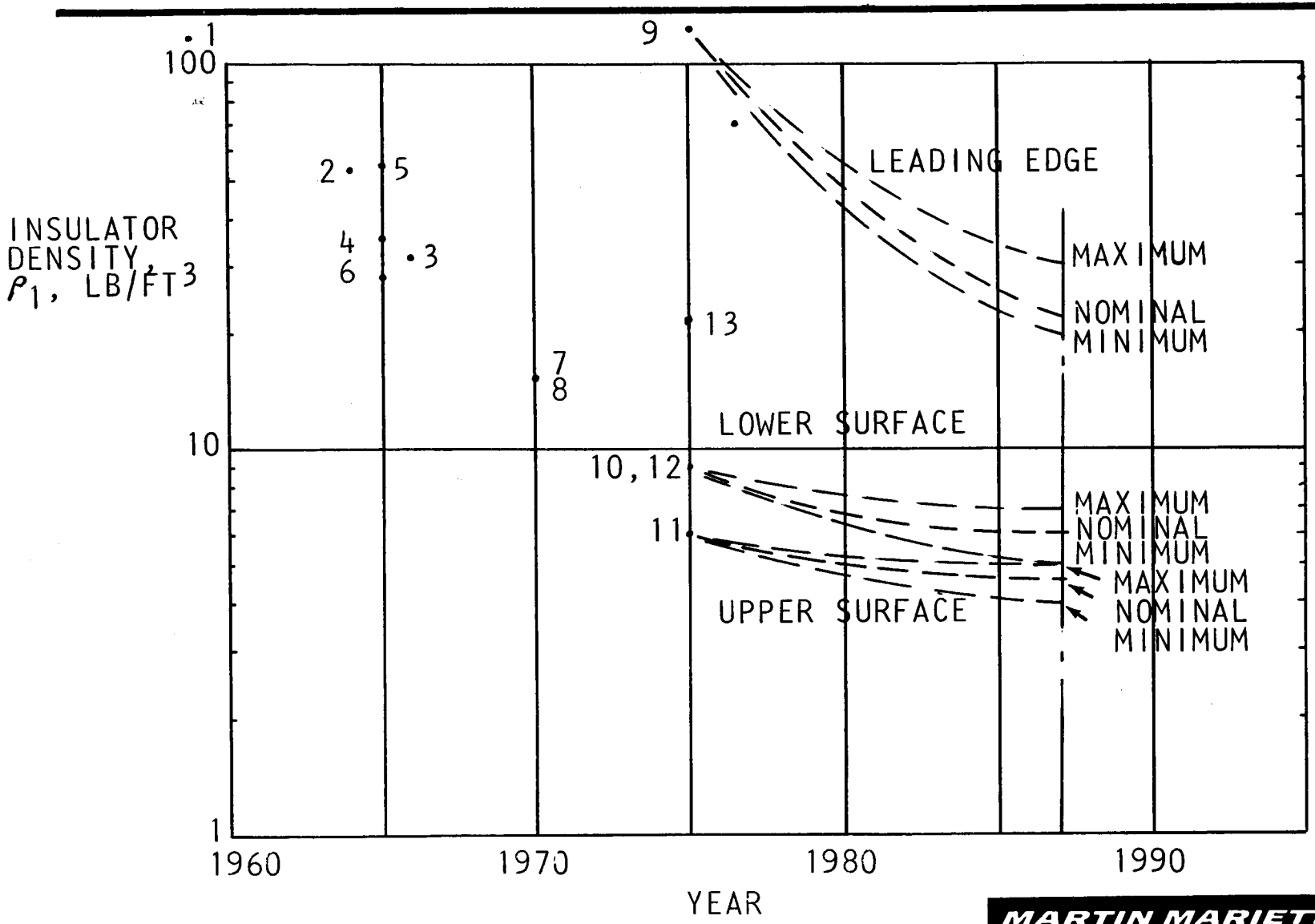

MARTIN MARIETTA

WING STRUCTURE WEIGHT HISTORY/PROJECTION

HISTORICAL DATA - AIRCRAFT AND SPACECRAFT

1. B-36J
2. B-47B
3. B-52A
4. YB-60
5. C-135A
6. B-58A
7. F-105A
8. F-104F
9. C-133B
10. A3J-1
11. XB-70A
12. F-102A
13. F-106B
14. F-108
15. F-101B
16. 880
17. 990
18. C-141A
19. F-111B
20. C-5A
21. 747
22. F-4D
23. F-15
24. SHUTTLE

INDEPTH STUDIES - SPACECRAFT

25. SHUTTLE PHASE B BOOSTER, MDAC/MMC
26. SHUTTLE PHASE B BOOSTER, NAR/GDC
27. SHUTTLE PHASE B ORBITER, MDAC/MMC
28. SHUTTLE PHASE B ORBITER, NAR
29. SHUTTLE PHASE C AND D PREPROPOSAL, GAC/MMC

RATIONALE FOR PROJECTIONS

- IMPROVEMENT IN ANALYTICAL METHODS FOR OPTIMIZATION
- USE OF ADVANCED COMPOSITE MATERIALS

SOURCES OF INFORMATION

- MMC REPORT 0436/20-199-68
- NASA CR-2420
- GDC-DCB-66-008 TECHNICAL REPORT
- SHUTTLE PHASE B FINAL REPORTS

WING STRUCTURE WEIGHT HISTORY/PROJECTION

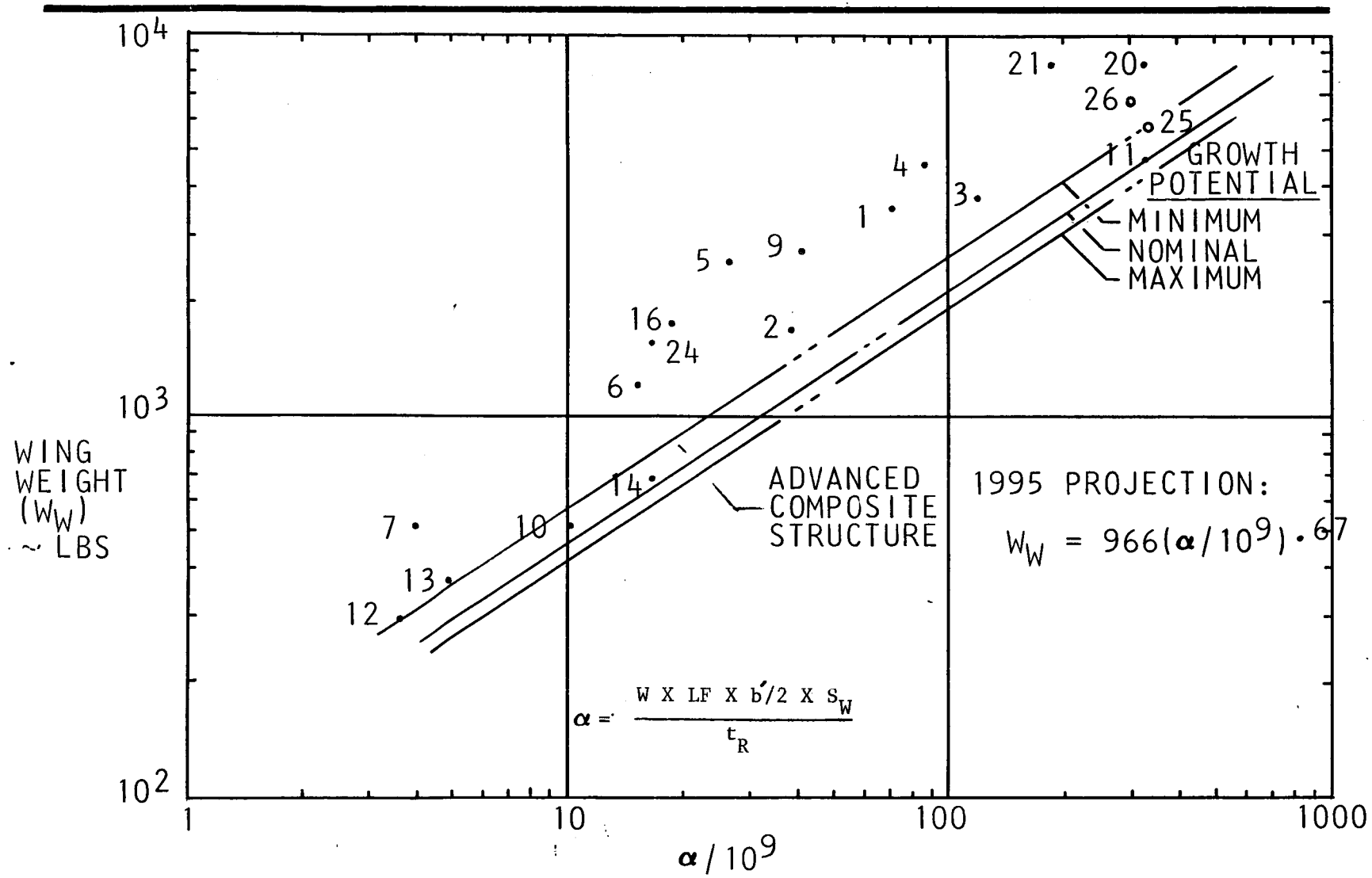

MARTIN MARIETTA

INTEGRAL PROPELLANT TANKS HISTORY/PROJECTION

HISTORICAL DATA - AEROSPACE

24A SHUTTLE ET OXIDIZER
24B SHUTTLE ET FUEL
33A SATURN SIVB OXIDIZER
33B SATURN SIVB FUEL
34A SATURN SII OXIDIZER
34B SATURN SII FUEL
35 SATURN S-IC OXIDIZER
36 TITAN I OXIDIZER

INDEPTH STUDIES - SPACECRAFT

25A SHUTTLE PHASE B BOOSTER OXIDIZER, MDAC/MMC
25B SHUTTLE PHASE B BOOSTER FUEL, MDAC/MMC

RATIONALE FOR PROJECTIONS

- HISTORICAL TRENDS
- LOWER LIMIT ESTABLISHED BY MEMBRANE TANK DESIGN

SOURCES OF INFORMATION

- MMC TITAN WEIGHT REPORTS

INTEGRAL PROPELLANT TANKS HISTORY/PROJECTION

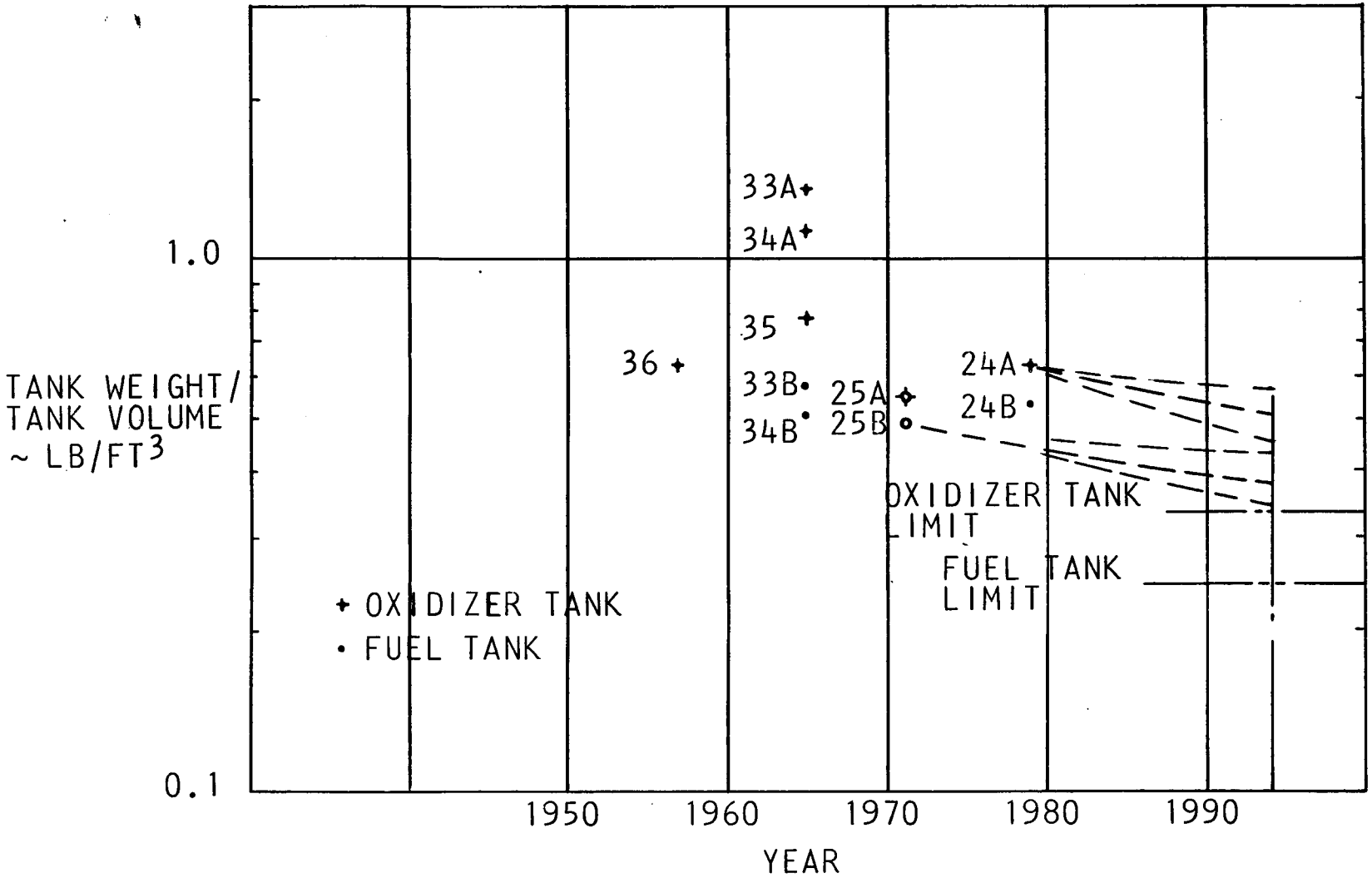

MARTIN MARIETTA

SPECIFIC IMPULSE HISTORY/PROJECTION

HISTORICAL DATA

1. DELTA, AJ10-118
2. SATURN, H-1
3. THOR, LR-79
4. M-1
5. AGENA, LR-81
6. CENTAUR, RL-10
7. SATURN, F-1
8. TRANSTAGE, AJ10-138
9. SATURN, J-2S
10. ATLAS, LR-105
11. ATLAS, LR-89
12. SHUTTLE, SSME
13. TITAN III, LR-91-11
14. TITAN III, LR-87-11
15. TITAN II, LR-91-5
16. SATURN, J-2
17. CENTAUR, RL-10

RATIONALE FOR PROJECTION

- NON-CRYOGENIC DATA USED ONLY TO SUGGEST TREND CHARACTERISTICS
- MINIMUM VALUE
  - EXPECTED SSME PRODUCT IMPROVEMENT
- NOMINAL VALUE
  - CHAMBER PRESSURE $\approx$ 4500 PSIA
  - MIXTURE RATIO = 6 OR 7
  - NOZZLE AREA RATIO $\approx$ 160
  - PERFORMANCE = 98% OF THEORETICAL
  - PROBABLE USE OF BOTH PROPELLANTS FOR COOLING
- MAXIMUM VALUE
  - CHAMBER PRESSURE $\geqq$ 5500 PSIA
  - MIXTURE RATIO = 6 OR 7
  - NOZZLE AREA RATIO $\approx$ 300 $\longrightarrow$ 400
  - PERFORMANCE = 98% OF THEORETICAL
  - PROBABLE USE OF BOTH PROPELLANTS FOR COOLING
  - PROBABLY NOT SSME TYPE (STAGED COMBUSION) CYCLE

SOURCES OF INFORMATION

- ENGINE MANUFACTURERS
- CPIA DATA
- NASA SHUTTLE
- TITAN - MARTIN MARIETTA CORPORATION

SPECIFIC IMPULSE HISTORY/PROJECTION

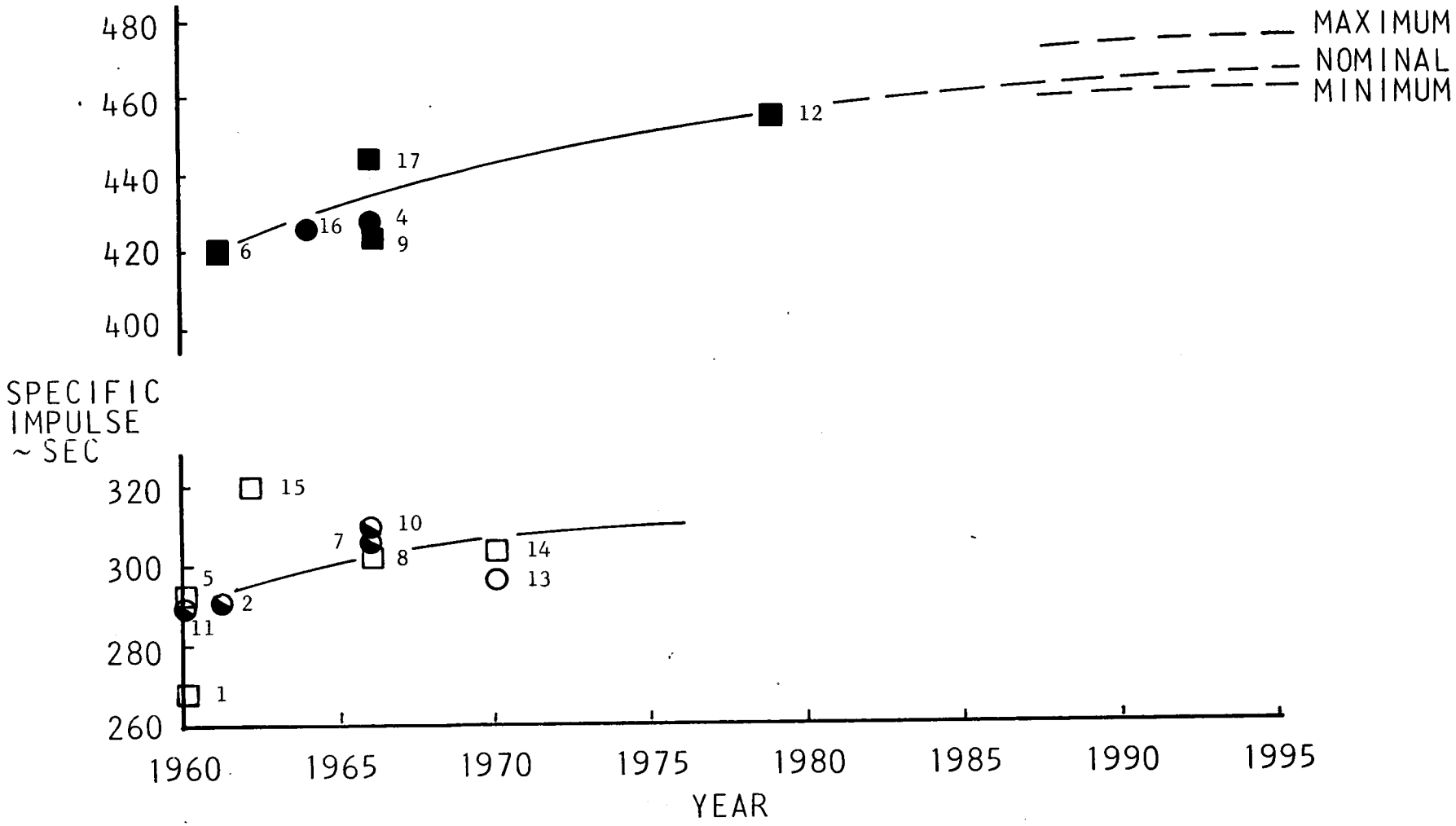

MARTIN MARIETTA

CHAMBER PRESSURE HISTORY/PROJECTION

HISTORICAL DATA

- SAME ENGINE IDENTIFICATIONS

RATIONALE FOR PROJECTIONS

- MINIMUM VALUE
  - EXPECTED POSSIBLE SSME IMPROVEMENT
- NOMINAL VALUE
  - OPTIMISTIC PUMP DESIGN LIMIT FOR STAGED COMBUSTION TYPE ENGINE CYCLE REQUIRING DIRECTED IMPROVEMENT EFFORTS IN SUCH AREAS AS MATERIALS, SEALS AND BEARINGS
  - PROBABLE USE OF BOTH PROPELLANTS FOR COOLING
- MAXIMUM VALUE
  - ASSUMES NEED TO FURTHER MINIMIZE ENGINE PHYSICAL SIZE
  - REQUIRES CONCENTRATED R&D EFFORT IN PUMP DESIGN, COOLING AND MATERIALS
  - PROBABLY NOT A STAGED COMBUSTION CYCLE

SOURCES OF INFORMATION

- SAME AS PREVIOUS SOURCES

CHAMBER PRESSURE HISTORY/PROJECTION

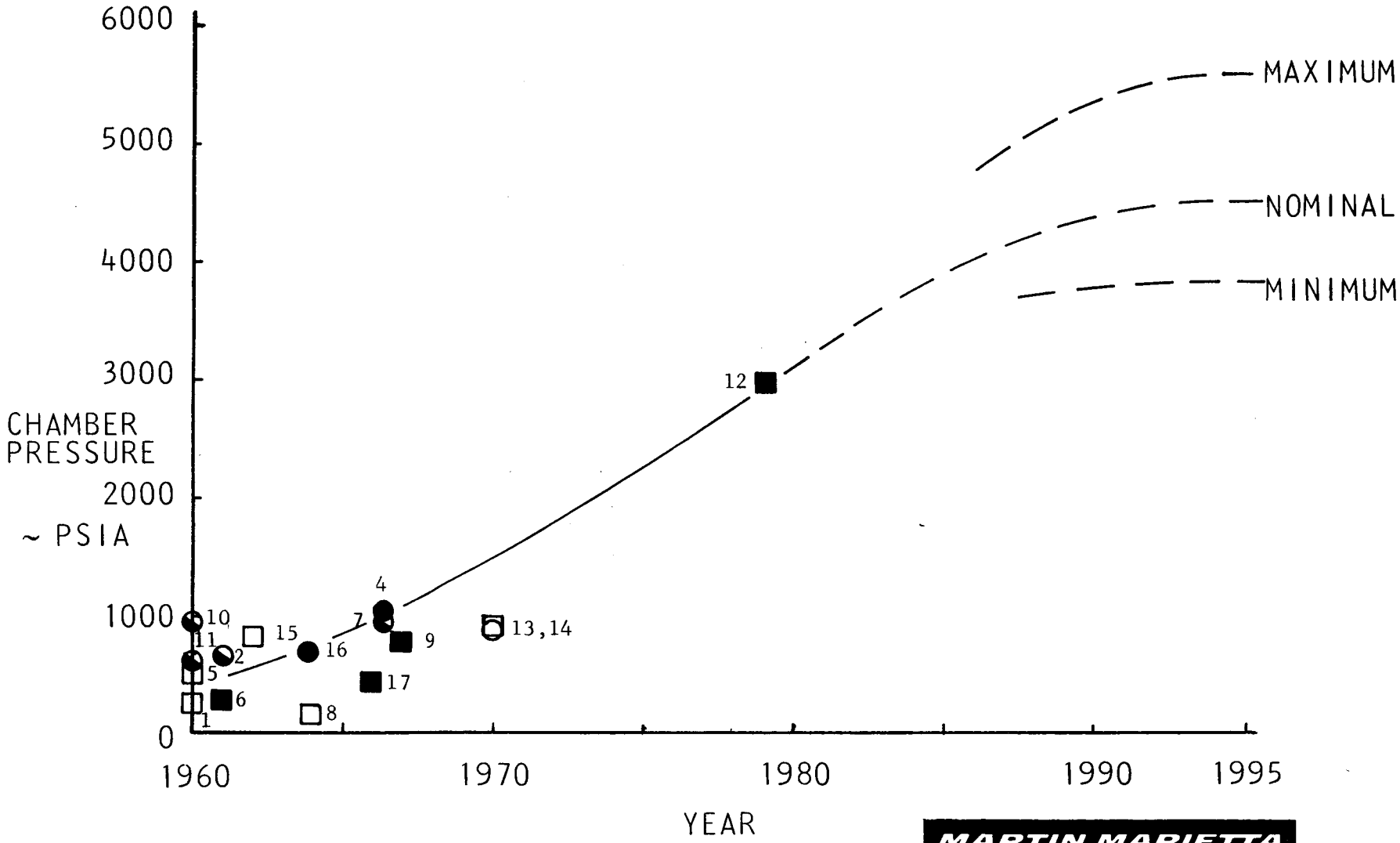

MARTIN MARIETTA

TASK 1 THERMOSTRUCTURAL CONCEPTS SELECTION

MATERIAL AND COMPONENT TECHNOLOGY PROJECTIONS ARE INTEGRATED INTO TWO THERMO-STRUCTURAL VEHICLE CONCEPTS.

CONCEPT I IS REPRESENTATIVE OF THE ONE USED IN THE PROPOSAL. THE INTEGRAL MULTIPLE LOBE PROPELLANT TANKS ARE COVERED WITH A STANDOFF ADVANCED COMPOSITE HONEYCOMB SUBPANEL WITH RSI BONDED TO THE EXTERIOR SURFACE. THE AEROSURFACES ARE ADVANCED COMPOSITE PRIMARY STRUCTURE WITH RSI AND STRAIN ISOLATOR BONDED TO THE SURFACE.

CONCEPT II IS AN INTEGRATED PROPELLANT TANK WING/BODY CONFIGURATION. THE INTEGRAL LH_2 TANK IS SHAPED TO LIFTING BODY CONFIGURATION AND RSI TILES WITH STRAIN ISOLATOR ARE BONDED DIRECT TO THE SANDWICH TANK WALLS. THE WALLS ARE STABILIZED BY INTERNAL TRUSS STRUCTURE. THE LO_2 TANKS FORM THE WINGS OF THE VEHICLE AND ARE HONEYCOMB SANDWICH SKINS INTERNALLY TRUSS STABILIZED WITH DIRECT BOND RSI/STRAIN ISOLATOR. THE VERTICAL FIN AS WELL AS THE AREA CONTROL SURFACES ARE ADVANCED COMPOSITE STRUCTURE WITH DIRECT BOND RSI/STRAIN ISOLATOR.

CONCEPT III IS AN INTEGRATED PROPELLANT TANK WING/BODY CONFIGURATION IDENTICAL TO CONCEPT II EXCEPT IT IS CONSTRUCTED OF HIGH TEMPERATURE ALLOYS AND DOES NOT HAVE AN EXTERNAL TPS.

TASK 1 THERMOSTRUCTURAL CONCEPTS SELECTION

TASK 1

THERMOSTRUCTURAL TECHNOLOGY PROJECTIONS

CANDIDATES FOR THERMOSTRUCTURAL CONCEPTS

I
- BODY: SUBPANEL MOUNTED RSI, INTEGRAL PROPELLANT TANKS
- WING AND FIN: DIRECT BOND RSI, ADVANCED COMPOSITE STRUCTURE

II
- BODY: DIRECT BOND RSI, INTEGRAL HONEYCOMB SANDWICH LH_2 TANK WALLS WITH INTERNAL TRUSS STABILIZATION
- WING: DIRECT BOND RSI, INTEGRAL HONEYCOMB SANDWICH LO_2 TANK WALLS WITH INTERNAL TRUSS STABILIZATION
- VERTICAL FIN: DIRECT BOND RSI, ADVANCED COMPOSITE STRUCTURE

III
- BODY: INTEGRAL HOT STRUCTURE HONEYCOMB SANDWICH LH_2 AND LO_2 TANK WALLS WITH INTERNAL TRUSS STABILIZATION
- WING: INTEGRAL HOT STRUCTURE HONEYCOMB SANDWICH LO_2 TANK WALLS WITH INTERNAL TRUSS STABILIZATION
- VERTICAL FIN: DIRECT BOND RSI, ADVANCED COMPOSITE STRUCTURE

MARTIN MARIETTA

MAIN ENGINE CONCEPTS SELECTION

THE MAIN ENGINE CONCEPTS CONSIDERED FOR TASK 2 EVALUATION INCLUDED CONVENTIONAL BELL NOZZLES, TWO POSITION BELL NOZZLES AND LINEAR NOZZLE CONFIGURATIONS. THE CONCEPTS SELECTED WERE BELL NOZZLE CONFIGURATIONS BASED ON THE PROJECTED NOMINAL TASK 1 PARAMETERS. TWO VERSIONS OF THE BASIC THROTTABLE ENGINE WERE UTILIZED AND HAD A DESIGN CHAMBER PRESSURE OF 4500 PSIA, A BASIC THRUST TO WEIGHT RATIO OF 83 MODIFIED TO REFLECT NOZZLE DIFFERENCES, AND A SPECIFIC IMPULSE EQUIVALENT TO 98% OF THEORETICAL FOR THE APPROPRIATE NOZZLE EXPANSION. ALL OF THE ENGINES HAD ESSENTIALLY THE SAME THRUST CHAMBERS, PUMPS, CONTROLS, ETC, AND DIFFERED ONLY IN NOZZLE CONFIGURATION. THE SINGLE POSITION NOZZLE ENGINES WERE OPTIMIZED FOR LOW ALTITUDE OPERATION WITH FIXED EXPANSION RATIO NOZZLES, 35:1 FOR THE VTOHL AND SLED LAUNCHED VEHICLES AND 50:1 FOR THE INFLIGHT FUELED VEHICLE. THE OTHERS HAD DUAL POSITION NOZZLES, THE MOVEABLE SECTION EXTENDING FROM AN EXPANSION RATIO OF 55 OUT TO 160:1. DURING OPERATION, THE ENGINES WERE THROTTLED AND SHUTDOWN AS NECESSARY TO LIMIT VEHICLE ACCELERATION TO 3G'S.

THE LINEAR ENGINE CONFIGURATION, CONSIDERED FOR TASK 2 EVALUATION, WAS A MULTIPLE SEGMENT, SPLIT COMBUSTOR DESIGN OPERATING AT A NOMINAL CHAMBER PRESSURE OF 3000 PSIA. A TOTAL OF TEN SETS OF SSME TYPE TURBOPUMP ASSEMBLIES, MOUNTED INTERNALLY BETWEEN THE UPPER AND LOWER NOZZLE SURFACES, WOULD SUPPLY PROPELLANTS TO TEN GROUPS OF COMBUSTOR SEGMENTS. THRUST VECTOR CONTROL WAS TO BE ACCOMPLISHED BY DIFFERENTIAL THROTTLING OF COMBUSTORS BOTH FOR PITCH AND YAW CONTROL. THROTTLING, OUTER COMBUSTOR SHUTDOWN AND SHUTDOWN OF COMBUSTOR GROUPS WAS TO BE USED TO LIMIT VEHICLE ACCELERATION. HOWEVER, BECAUSE INITIAL COMPUTATIONS BASED ON EXTREMELY LIMITED DATA INDICATED THAT THE BELL NOZZLE CONCEPTS WERE SUPERIOR, FURTHER CONSIDERATION OF LINEAR ENGINES WAS DEFERRED UNTIL ADEQUATE PARAMETRIC DATA BECOMES AVAILABLE.

MAIN ENGINE CONCEPTS SELECTION

BELL NOZZLE ENGINES

	FIXED NOZZLE CONFIGURATION		EXTENDIBLE NOZZLE CONFIGURATION	
AREA RATIO	35		55/160	
THRUST/WEIGHT	81.2		58.9	
	MR = 6	MR = 7	MR = 6	MR = 7
$I_{SP_{VAC}}$ (SEC)	441.4	436.1	466.4	463.5
$I_{SP_{SL}}$ (SEC)	408.2	404.0	399.5	395.5

LINEAR ENGINE

P_C = 3000 PSIA

F/W = 69.8

$\epsilon_{OVERALL}$ = 91

$I_{SP_{VAC}}$ = 475.0 SEC

$I_{SP_{SL}}$ = 391.5 SEC

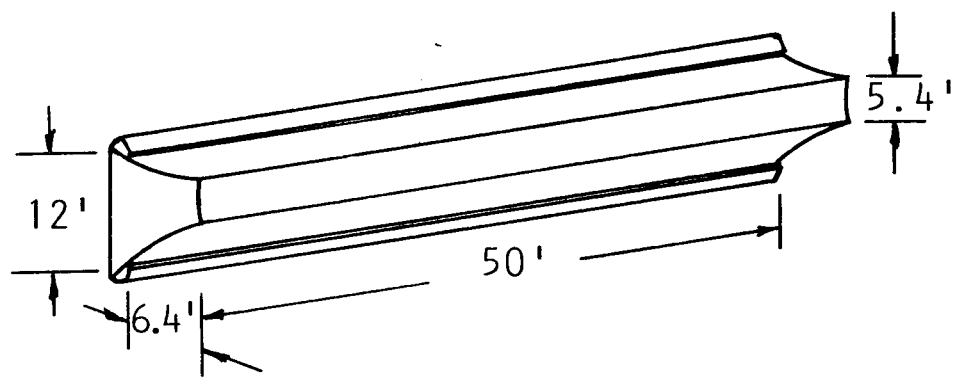

MARTIN MARIETTA

TASK 1 FUNDING PROJECTIONS

APPROACH

"TOP-DOWN"

- FUNDING RELATED TO SSTO WAS SELECTED AND PROJECTED FROM BUDGETARY PLANS
- RESULTS INDICATE LEVEL OF FUNDING OF NASA/DOD AND THEIR OFFICES FOR RESEARCH AND DEVELOPMENT WHICH SUPPORT SSTO "NORMAL" TECHNOLOGY GROWTH

"BOTTOMS-UP"

- FUNDING RELATED TO SSTO FOR SELECTED NASA RTOPS WAS SELECTED AND PROJECTED FOR SPECIFIC TECHNOLOGY AREAS
- RESULTS INDICATE LEVEL OF FUNDING APPLIED TO RESEARCH WHICH SUPPORTS SSTO "NORMAL" TECHNOLOGY GROWTH

METHODOLOGY

- ORGANIZE HISTORICAL DATA
- MAKE LINEAR PROJECTIONS BY APPLYING JUDGEMENT
- CALCULATE POLYNOMINAL REGRESSION CURVE FITS
- CALCULATE 95% PROBABILITY INTERVALS

TASK 1 FUNDING PROJECTIONS

	MATERIALS AND STRUCTURES	PROPULSION
TOPS-DOWN (1975)		
NASA	$13.9M	$19.4M
BOTTOMS-UP (1975)*		
NASA	$ 7.1M	$ 3.0M
DOD	$10.9M	$ 6.0M
	$18.0M	$ 9.0M
PROJECTED ANNUAL AVERAGE SPENDING FOR R&D	$19.5M	$10.2M

*SELECTED NASA RTOPS AND DOD R&D FOR TECHNOLOGY RELATED TO SSTO

MARTIN MARIETTA

III. TASK 2 - VEHICLE CONCEPT DESIGNS

A. GENERAL APPROACH AND PARAMETRIC STUDIES

MARTIN MARIETTA

RATIONALE AND SCOPE OF TASK 2

STUDY GUIDELINES AND TASK 1 "NORMAL" TECHNOLOGY PROJECTIONS WERE USED TO CONFIGURE THE THREE VEHICLES FOR TASK 2. THERMOSTRUCTURAL AND CONFIGURATION CONCEPTS WERE SELECTED FOR THE THREE VEHICLES BASED ON A PRELIMINARY ANALYSIS INVOLVING THREE THERMOSTRUCTURAL CONCEPTS AND TWO PROPELLANT TANKAGE CONCEPTS. VEHICLE ASCENT OPTIMIZATION WAS STUDIED TO DETERMINE INITIAL THRUST/WEIGHT, COMBINATIONS OF DUAL POSITION NOZZLE ENGINES AND FIXED NOZZLE ENGINES AS WELL AS ENGINE SHUTDOWN VERSUS THROTTLING EFFICIENCIES. THE VEHICLES WERE CONFIGURED TO THE REQUIREMENTS OF THE STUDY.

AIRLOADS WERE GENERATED FOR THE VTOHL VEHICLE FOR INPUT INTO THE FINITE ELEMENT STRUCTURES MODEL OF THE FUSELAGE TANK-WING ASSEMBLY TO PROVIDE INTERNAL VEHICLE LOADS FOR THE MAJOR STRUCTURES.

FINAL VEHICLE WEIGHTS WERE GENERATED AND COSTS OF EACH VEHICLE SYSTEM WERE ESTIMATED ALONG WITH FIGURES OF MERIT ANALYSIS. THE COMPLETE TASK 2 DATA PACKAGE IS INCLUDED IN THIS PRESENTATION.

TASK 2 HAS BEEN FOCUSED ON VEHICLE CONCEPTS WITH THE PURPOSE OF IDENTIFYING TECHNOLOGY REQUIREMENTS. THE RESULTS REFLECT WORK ACCOMPLISHED WITHIN PRESENT RESOURCES.

RATIONALE AND SCOPE OF TASK 2

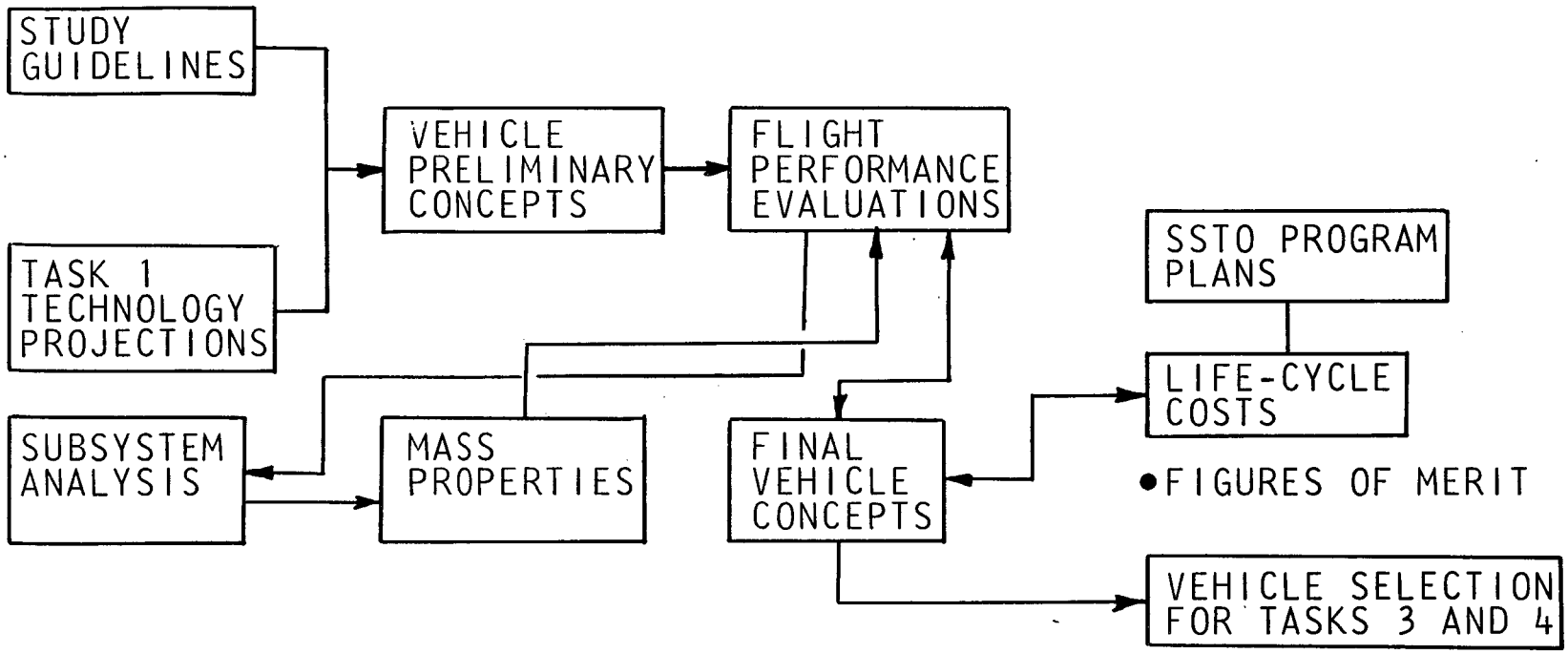

- AERO-THERMODYNAMICS
- AERODYNAMICS
- THERMOSTRUCTURAL
- PROPULSION
- VEHICLE SUBSYSTEMS

MARTIN MARIETTA

DESIGN CONCEPT COMPARISON APPROACH

PRELIMINARY COMPARISON OF VEHICLE THERMOSTRUCTURAL CONCEPTS WAS PERFORMED TO DETERMINE VEHICLE MINIMUM DRY WEIGHT. THE BASELINE VEHICLE IS SIZED WITH ALL ASCENT PROPELLANTS IN THE FUSELAGE AND USES AN EXTERNAL RSI-TPS TO LIMIT THE STRUCTURE TO A MAXIMUM TEMPERATURE OF +350°F. ALTERNATE I VEHICLE IS RENE 41 SANDWICH TANK SKINS WITH NO EXTERNAL TPS. A LONGER ENTRY TRAJECTORY IS USED TO PROVIDE A MAXIMUM TEMPERATURE OF THE RENE 41 SKINS OF +1600°F. ALTERNATE II VEHICLE USES RSI EXTERNAL TPS OVER TITANIUM SANDWICH TANK SKINS SIZED TO A MAXIMUM TEMPERATURE OF +500°F.

ALL VEHICLE TANKS ARE SIZED TO 20 PSI PRESSURE (LIMIT). ALTERNATES I AND II INCLUDE PART OF LOX IN WING TANKS.

DESIGN CONCEPT COMPARISON APPROACH

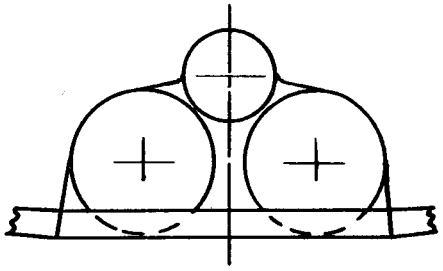

BASELINE

THERMOSTRUCTURE:

- BODY - ALUMINUM CLUSTERED TANKS, RSI/SUBPANEL TPS
- AEROSURFACES - BORSIC/ ALUMINUM COMPOSITE STRUCTURE, RSI/STRAIN ISOLATOR DIRECT BOND

TANK PRESSURE: 30 PSI (ULTIMATE)

MAXIMUM STRUCTURAL TEMPERATURE: 350°F

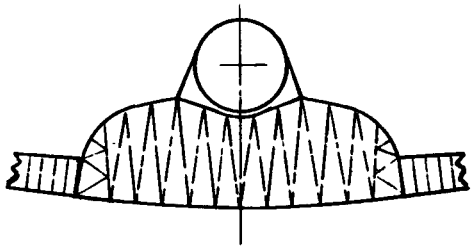

ALTERNATE I

THERMOSTRUCTURE: RENE 41 SANDWICH

TANK PRESSURE: 30 PSI (ULTIMATE)

MAXIMUM STRUCTURAL TEMPERATURE: 1600°F

ALTERNATE II

THERMOSTRUCTURE: TITANIUM SANDWICH, RSI/STRAIN ISOLATOR DIRECT BOND

TANK PRESSURE: 30 PSI (ULTIMATE)

MAXIMUM STRUCTURAL TEMPERATURE: 500°F

MARTIN MARIETTA

VTOHL - INTEGRAL MEMBRANE TANKAGE CONCEPT

THE BASELINE VTOHL VEHICLE UTILIZES MEMBRANE TANKAGE IN THE FUSELAGE WHICH ACHIEVES MINIMUM TANK WEIGHT FOR REACTING ULLAGE PLUS ACCELERATION HEAD PRESSURES AND VEHICLE EXTERNAL LOADS. THE TANK WEIGHTS OF THIS VEHICLE CONCEPT HAVE REALISTIC NON-OPTIMUM WEIGHT FACTORS OF 1.19 FOR THE LO_2 TANKS AND 1.43 FOR THE LH_2 TANKS.

THE ALUMINUM TANKAGE IS PROTECTED FROM THE ENTRY ENVIRONMENT BY ADVANCED COMPOSITE SUBPANEL MOUNTED REUSABLE SURFACE INSULATION (RSI).

THE AERODYNAMIC SURFACES ARE ADVANCED COMPOSITE STRUCTURE WITH BORSIC/ALUMINUM SKINS. THE SURFACES ARE PROTECTED FROM THE ENTRY ENVIRONMENT BY DIRECT BOND RSI (WITH STRAIN ISOLATOR). THE BORSIC/ALUMINUM SKINS PROVIDE A HIGHER HEAT SINK FOR THE RSI THICKNESS SIZING THAN GRAPHITE/EPOXY OR BORON/EPOXY SKINS WITH A RESULTING LOWER THERMOSTRUCTURE UNIT WEIGHT.

VTOHL-INTEGRAL MEMBRANE TANKAGE CONCEPT

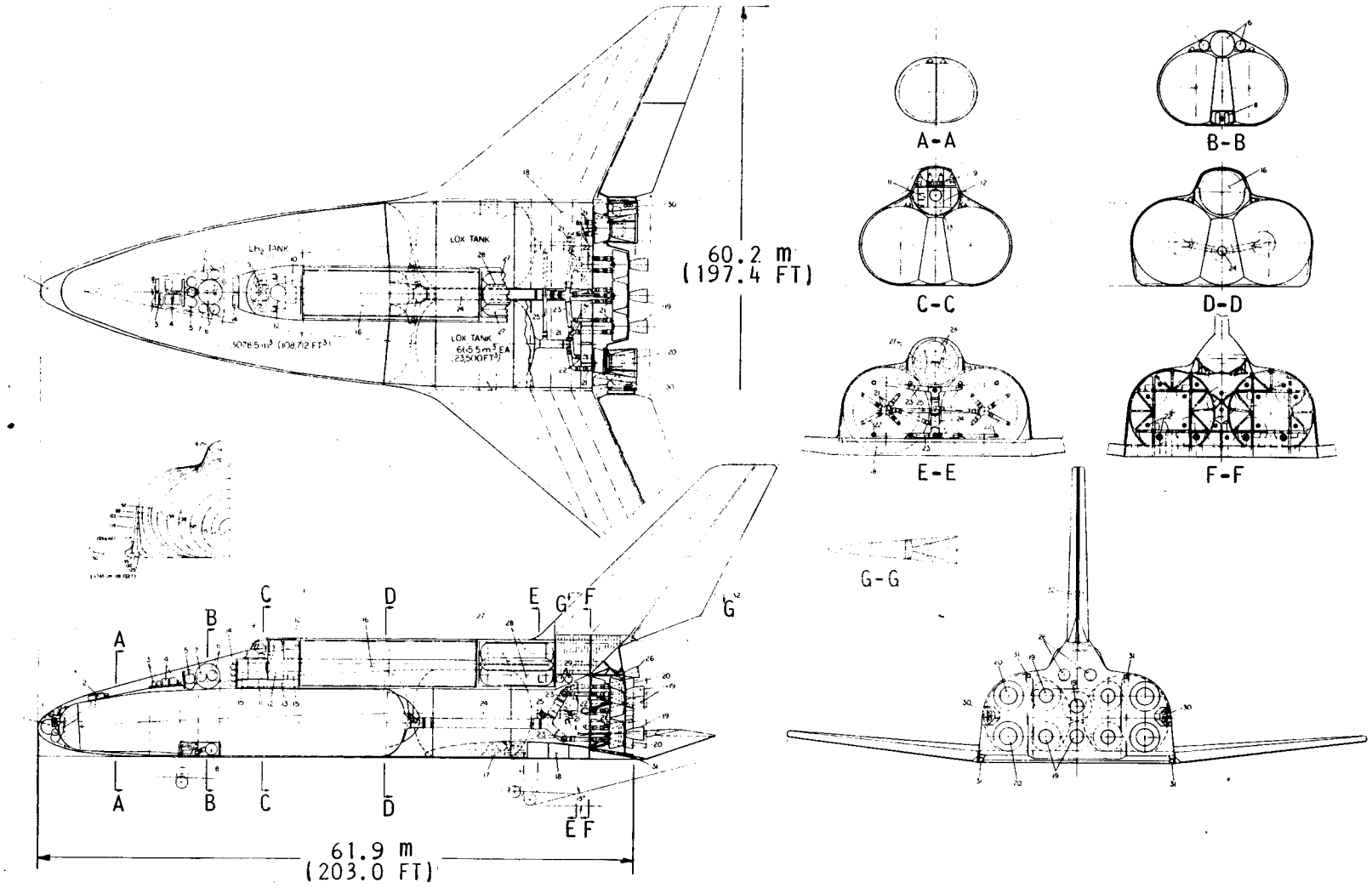

MARTIN MARIETTA

VTOHL - TRUSS SUPPORTED FLATTENED TANK CONCEPT

THE ALTERNATE THERMOSTRUCTURAL VEHICLE CONCEPT WAS SIZED WITH THE SAME PLANFORM AS THE BASELINE VEHICLE. THE POTENTIAL ADVANTAGE OF THE ALTERNATE VEHICLE IS IN HIGHER PACKAGING EFFICIENCY ACHIEVABLE BY FLATTENED TANKAGE AND COMMON BULKHEADS BETWEEN THE PROPELLANT TANKS. THE TANK WALLS CARRY TANK ULLAGE AND ACCELERATION HEAD PRESSURES IN BENDING BETWEEN TRUSS MEMBERS. HONEYCOMB SANDWICH PANELS WERE USED FOR THE SKIN BENDING PANELS TO MINIMIZE WEIGHT. THE TANKS ARE DESIGNED FOR A LIMIT PRESSURE OF 20 PSIG FOR ASCENT AND ENTRY.

.SSTO-VTOHL TRUSS SUPPORTED FLATTENED TANK CONCEPT

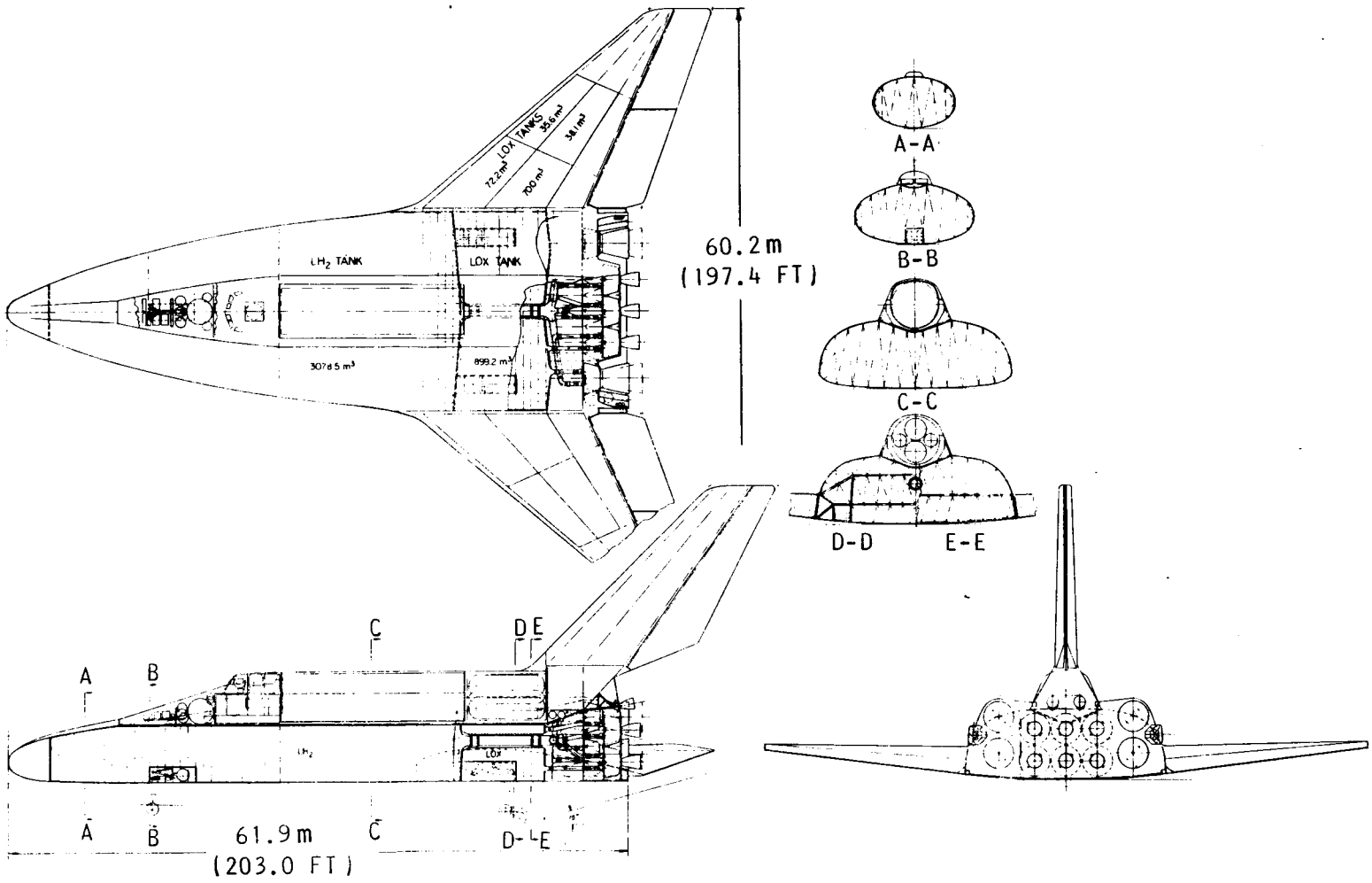

MARTIN MARIETTA

WEIGHT COMPARISON OF CONCEPTS

VEHICLE UNIT WEIGHT IS TABULATED FOR COMPARISON OF THE THREE CONCEPTS.

	UNIT WEIGHTS (LB/FT^2)		
	BASELINE VTOHL	ALTERNATE I RENE 41 SANDWICH T_{MAX} = 1600°F	ALTERNATE II TITANIUM SANDWICH T_{MAX} = 500°F
WING: EXPOSED WING	(6.283)	(13.744)	(8.544)
EXPOSED STRUCTURE	7.46	9.200	9.2
EXPOSED LO_2 TANKAGE	----	24.699	11.795
ELEVONS	3.733	3.995	3.865
CARRY-THROUGH STRUCTURE	9.569	7.475	7.231
BODY:	(4.26)	(8.250)	(4.858)
LH_2 TANK	2.666	7.901	4.255
BETWEEN TANKS	1.411	-----	-----
LO_2 TANK(S)	2.891	7.901	5.085
AFT SKIRT	1.929	4.136	4.0
TPS:		.316	
BODY	2.247		1.952
WING	.98		.98

WEIGHT COMPARISON OF CONCEPTS

FUNCTION DESCRIPTION	WEIGHT (POUNDS)		
	BASELINE	ALTERNATE I*	ALTERNATE II**
WING	51,813	94,977	62,573
FIN	11,607	11,607	11,607
BODY	78,816	195,601	115,166
INDUCED ENVIRONMENTAL PROTECTION	87,232	7,500	48,201
PROPELLANT SYSTEM	10,621	11,860	11,860
FIXED WEIGHT	173,537	173,537	173,537
MARGIN	33,669	41,813	34,600
DRY WEIGHT	447,295	536,895	457,545

*RENE 41 SANDWICH, T_{MAX} = 1600°F

**RSI/TITANIUM SANDWICH, T_{MAX} = 500°F

MARTIN MARIETTA

DIFFERENCES BETWEEN CONCEPTS

THE DIFFERENCES BETWEEN THE THREE VEHICLE CONCEPTS TEND TO MASK INDIVIDUAL POTENTIAL ADVANTAGES. THE ALTERNATE CONCEPTS HAVE AN ADVANTAGE OF HIGH VOLUMETRIC EFFICIENCY AND GOOD EXTERNAL BODY SHAPE FOR EITHER DIRECT BOND RSI (ALTERNATE II) OR RADIATION EQUILIBRIUM TEMPERATURE (ALTERNATE I). THE INDIVIDUAL EFFECT OF LO_2 PROPELLANT IN THE WINGS IS NOT DISTINGUISHABLE IN THIS STUDY.

THE BASELINE VEHICLE HAS ADVANTAGES IN CONVENTIONAL CONSTRUCTION, HIGH STRENGTH/WEIGHT AND MODULUS/WEIGHT MATERIALS, MINIMUM WELD LENGTH/SURFACE AREA RATIO AND GOOD TANK INSPECTION ACCESS FOR OVERALL HIGH RELIABILITY.

DIFFERENCES BETWEEN CONCEPTS

- BODY SHAPE
- BODY/WING THERMOSTRUCTURE
- LO_2 IN WING

} DIFFERENCES IN VEHICLE CONCEPTS MASK THE EFFECT OF LO_2 PROPELLANT IN WINGS

BASELINE	ALTERNATES I AND II
- RELATIVELY LOW VOLUMETRIC EFFICIENCY	+ HIGH VOLUMETRIC EFFICIENCY
+ CONVENTIONAL CONSTRUCTION	- MORE INDIVIDUAL COMPONENT PARTS
+ HIGH STRENGTH TO WEIGHT	- 5:1 WELD LENGTH RATIO
+ GOOD TANK INSPECTION DESIGN	- MORE COSTLY MATERIALS AND FABRICATION
+ MINIMUM WELD LENGTH/ SURFACE AREA	- LOCAL THERMAL STRESS PROBLEMS
	+ GOOD EXTERNAL BODY LINES

CONCLUSION: VEHICLE SELECTION BASED ON MINIMUM DRY WEIGHT.

MARTIN MARIETTA

APPROACH TO SIZING VEHICLES

THE VEHICLE SIZING CURVE SHOWS THE PERFORMANCE REQUIREMENTS AND THE VEHICLE CAPABILITIES.

ENGINE ARRANGEMENT AND THROTTLING VERSUS ENGINE SHUTDOWN SEQUENCE WERE VARIED TO MINIMIZE VEHICLE MASS RATIO (MR).

VEHICLE PARAMETERS AND PROCEDURES SELECTED FOR THE FINAL CONFIGURATIONS ARE:

	VTOHL	HTOHL/SLED	HTOHL/IFF
ROCKET ENGINE F/W	1.3	.95	.95
ROCKET ENGINE ARRANGEMENT	6 DUAL/ 4 SINGLE	4 DUAL/ 4 SINGLE	4 DUAL/ 4 SINGLE
ASCENT ACCELERATION LIMIT PROCEDURE	SHUTDOWN ENGINES IN PAIRS. DRAIN PROPELLANT RESIDUALS AT ENGINE SHUTDOWN.		
OPTIMIZE ASCENT PERFORMANCE	UTILIZE LIFTING ASCENT. OPTIMIZE ON DUAL POSITION ROCKET NOZZLE CUT IN ALTITUDE.		

THE VTO AND HTO/SLED CONCEPTS WERE ANALYZED BOTH WITH AND WITHOUT LOX IN WING TANKS.

APPROACH TO SIZING VEHICLES

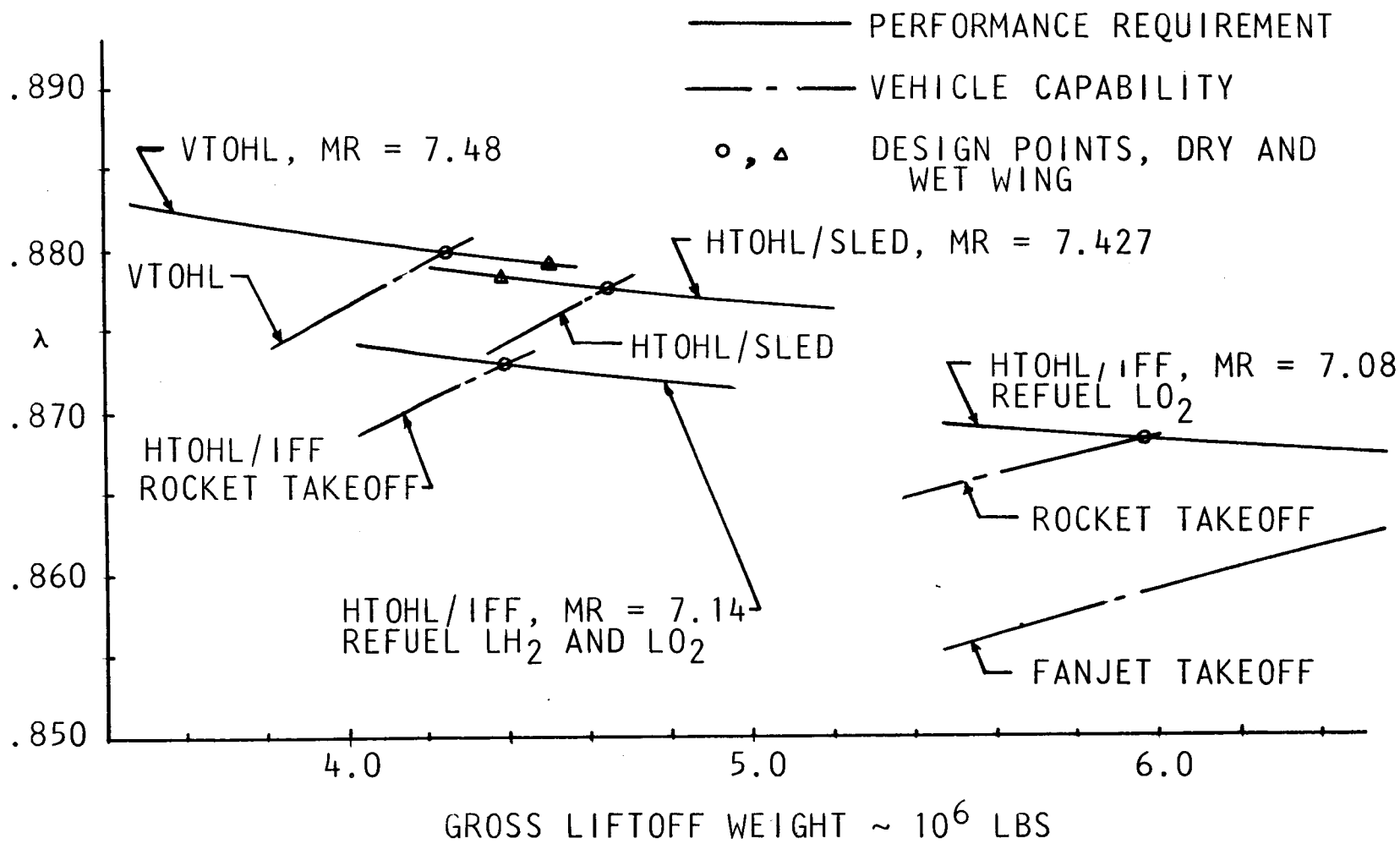

$$\lambda = \frac{\text{PROPELLANT WEIGHT}}{\text{GLOW} - (\text{PAYLOAD WEIGHT} + .5\ \text{ASCENT LOSSES})}$$

MARTIN MARIETTA

ASCENT PERFORMANCE CONSIDERATIONS

- TRAJECTORY EVALUATION

  POST FOR TARGETING AND OPTIMIZATION

- TARGET CONDITIONS

  - PERIGEE ALTITUDE — 50 NAUTICAL MILES
  - APOGEE ALTITUDE — 100 NAUTICAL MILES
  - INCLINATION — 28.6° (EAST LAUNCH)

- INDEPENDENT VARIABLES - SIX

VERTICAL	HORIZONTAL
- LIFT	- LOAD FACTOR
- DURATION OF CONSTANT LIFT	- DURATION OF CONSTANT LOAD FACTOR
- ONE ANGLE OF ATTACK	- TWO INERTIAL ANGLE OF ATTACK RATES
- THREE INERTIAL PITCH RATES	- DURATION OF ANGLE OF ATTACK RATES
	- ONE INERTIAL PITCH RATE

ASCENT PERFORMANCE CONSIDERATIONS

VEHICLE	IDEAL VELOCITY (FPS)	MASS RATIO
VTOHL	29,369	7.48
HTOHL/SLED	29,274	7.427
HTOHL/IFF	28,903	7.14

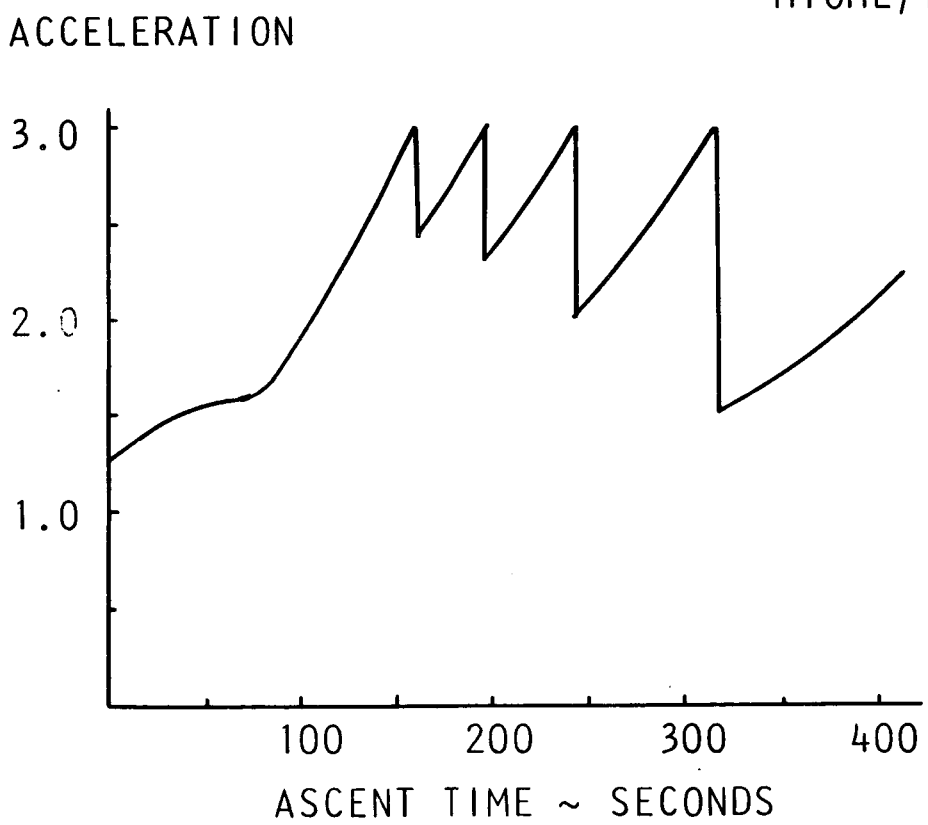

VTOHL ASCENT

- POST TRAJECTORY OPTIMIZATION

MARTIN MARIETTA

AEROSURFACE DESIGN CONSIDERATIONS

THE MINIMUM AERODYNAMIC DESIGN REQUIREMENTS RELATING TO TRIM RANGES, STABILITY AND CONTROL, AND LANDING SPEED HAVE BEEN MET OR EXCEEDED. THE AERODYNAMIC INFLUENCE OF THE FUSELAGE PARAMETERS OF NOSE SHAPE, LENGTH/DIAMETER RATIO, AND BODY LEADING EDGE RADII HAVE BEEN INCLUDED IN THE AEROSURFACE DESIGN. SUCH PHYSICAL PLANFORM PARAMETERS AS THEORETICAL AND EXPOSED AREAS, SWEEP ANGLES, TAPER RATIOS, AND CONTROL SURFACE DEFLECTIONS HAVE BEEN USED TO DETERMINE THE AEROSURFACE SIZING. IN ADDITION TO PURE AERODYNAMIC ANALYSIS OF THE CONFIGURATION, THE AEROTHERMAL IMPACT OF LEADING EDGE HEATING AND TRAILING EDGE PLUME IMPINGEMENT HAS BEEN CONSIDERED IN THE SELECTION OF LEADING AND TRAILING EDGE SWEEPS. THE EFFECT OF THE AEROSURFACE STRUCTURAL WEIGHT AND LONGITUDINAL POSITION UPON THE VEHICLE WEIGHT AND C.G. HAS BEEN INCLUDED IN THE ITERATIVE SIZING PROCESS.

AEROSURFACE DESIGN CONSIDERATIONS

AERODYNAMIC REQUIREMENTS

- HYPERSONIC TRIM RANGE - $20° \leq \alpha \leq 40°$
- SUBSONIC STABILITY - $C_{N_\beta} \geq .002$; LONGITUDINAL STATIC MARGIN $\geq 2\% \ \bar{C}$
- LANDING SPEED - 165 KTS AT $\alpha = 15°$

PHYSICAL PARAMETRICS

- THEORETICAL/EXPOSED AREAS
- FUSELAGE SHAPE
- LEADING AND TRAILING EDGE SWEEPS
- ROOT CHORD, TAPER RATIO
- FORE/AFT LOCATION
- CONTROL SURFACE SIZE

AERO-THERMODYNAMICS

- LEADING EDGE HEATING; PLUME IMPINGEMENT

MASS PROPERTIES

- WING/TAIL STRUCTURAL WEIGHTS AND C.G. IMPACT

MARTIN MARIETTA

SSTO-VTOHL ENTRY SURFACE ISOTHERMS AND TPS THICKNESSES

THE ISOTHERMS AND RSI THICKNESSES SHOWN ARE THE RESULT OF A MINIMUM TIME ENTRY TRAJECTORY COMPATIBLE WITH THE 3g CONSTRAINT. THE BOTTOM SURFACE ISOTHERMS AND THICKNESSES SHOW THE EFFECT OF TURBULENT BOUNDARY LAYER AT ABOUT 40% OF THE VEHICLE LENGTH. STUDY OF A 2.2g MAXIMUM ENTRY TRAJECTORY INDICATES THAT THE SURFACE CONDITION IS LAMINAR AND A SMALL REDUCTION (5%) IN TOTAL TPS WEIGHT COULD BE REALIZED.

SSTO-VTOHL ENTRY SURFACE ISOTHERMS AND TPS THICKNESSES

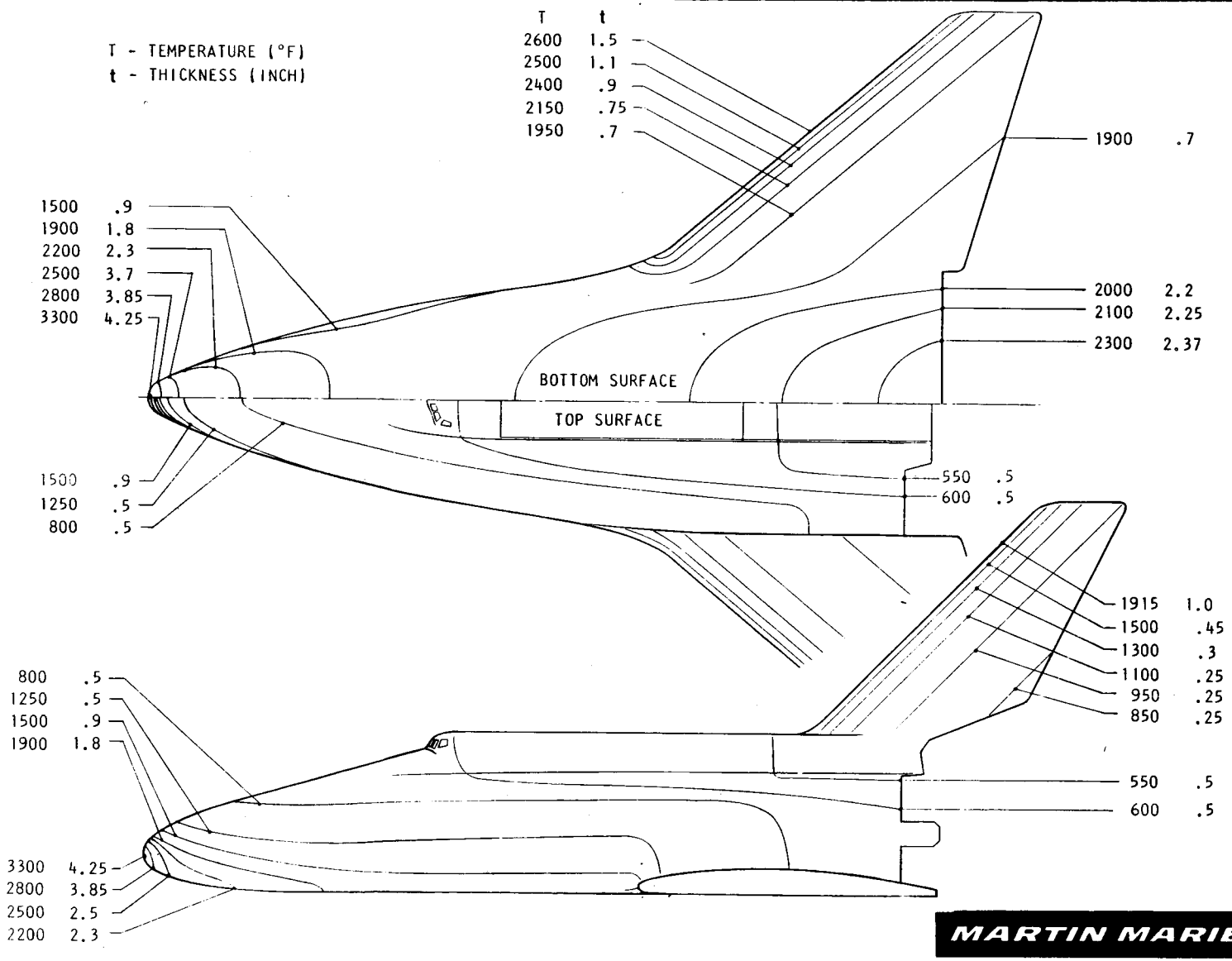

MARTIN MARIETTA

III B. VTOHL VEHICLE CONCEPT

MARTIN MARIETTA

VERTICAL TAKEOFF VEHICLE DESIGN APPROACH

THE INITIAL THRUST TO WEIGHT OF THE VTOHL VEHICLE WAS VARIED DURING INITIAL TRAJECTORY OPTIMIZING STUDIES AND 1.3 WAS SELECTED. THE NUMBER OF ENGINES WAS SELECTED BY USING AN APPROXIMATE SEA LEVEL THRUST RANGE OF 500,000 POUNDS TO 550,000 POUNDS EACH. THE RATIO OF SINGLE OR FIXED EXPANSION RATIO ENGINES TO DUAL EXPANSION RATIO ENGINES WAS SELECTED BY PERFORMANCE OPTIMIZATION. THE EXIT LOCATION OF THE ENGINES IS A COMPROMISE OF THE TWO EXIT LOCATIONS OF THE DUAL ENGINES WITH RESPECT TO THE EXIT OF THE FIXED POSITION ENGINE.

THE VEHICLE CONFIGURATION AND EQUIPMENT IS THE RESULT OF SEVERAL ARRANGEMENTS WITH THE GOAL OF ARRIVING AT THE LIGHTEST DRY WEIGHT CONFIGURATION WITH THE FORWARDMOST C.G.

THE ROCKET ENGINE PROPELLANT FEED SYSTEM IS DESIGNED TO MINIMIZE RESIDUALS. THE ENGINE SHUTDOWN SEQUENCE PROVIDES AN EXCELLENT MEANS OF GETTING RID OF TRAPPED PROPELLANT. AS EACH SET OF ENGINES IS SHUTDOWN, THE RESIDUAL PROPELLANTS IN THOSE LINES IS DRAINED BY MEANS OF THE UPSTREAM VALVE. SEVERAL THOUSAND POUNDS OF TRAPPED PROPELLANTS CAN BE PROGRESSIVELY DUMPED DURING ASCENT.

VERTICAL TAKEOFF VEHICLE DESIGN APPROACH

- INITIAL THRUST TO WEIGHT = 1.3
- ROCKET ENGINES POSITIONED FOR EFFECTIVE OPERATION IN BOTH POSITIONS OF THE DUAL NOZZLE ENGINES
- VEHICLE CONFIGURATION AND EQUIPMENT LOCATION IS ORIENTED FOR FORWARD C.G. LOCATION
- THE ROCKET ENGINE PROPELLANT SYSTEM IS DESIGNED TO MINIMIZE RESIDUALS

MARTIN MARIETTA

SSTO-VTOHL GENERAL ARRANGEMENT

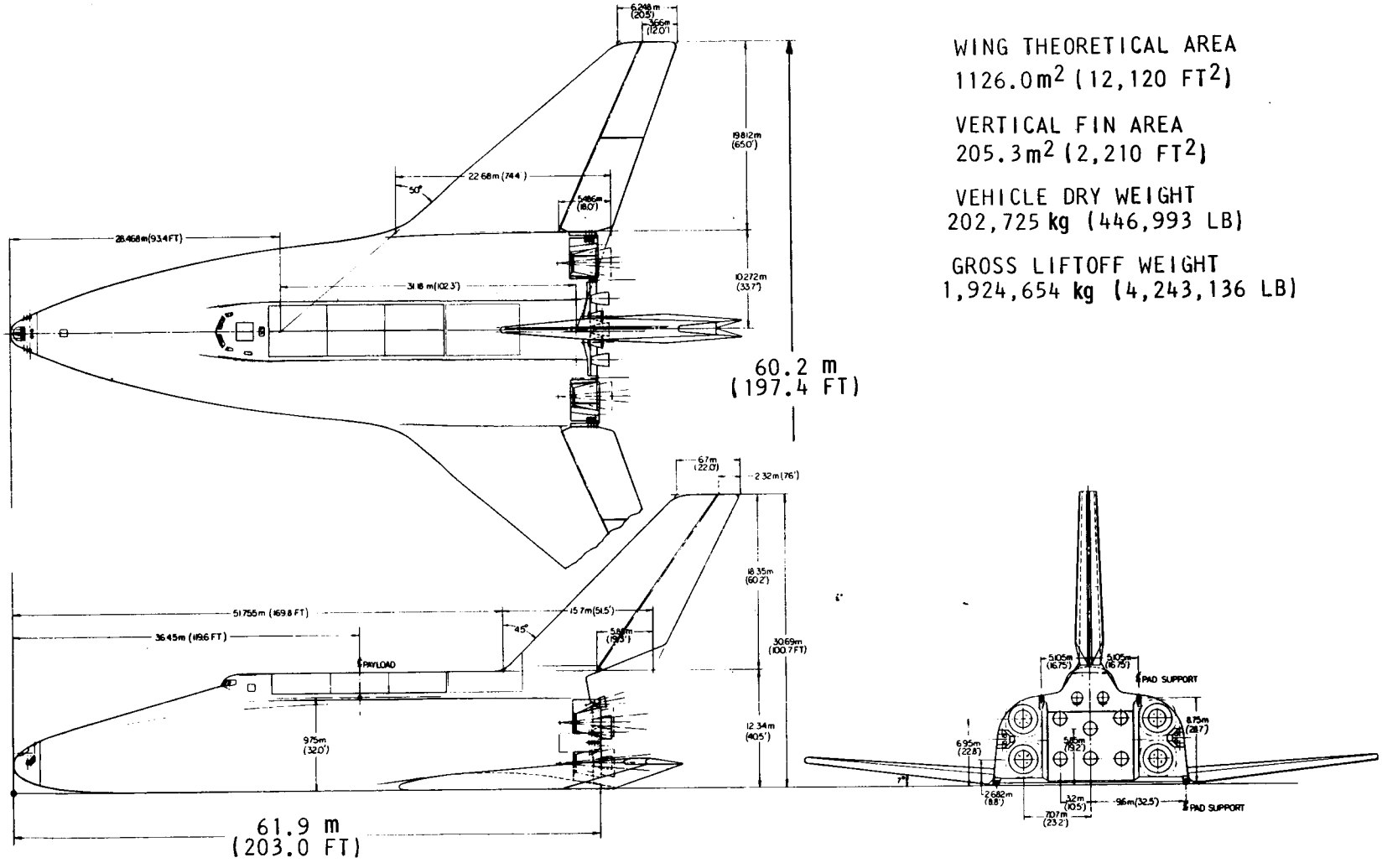

MARTIN MARIETTA

SSTO-VTOHL INBOARD PROFILE

THE CONFIGURATION IS MADE UP OF THE FOLLOWING:

FUSELAGE/TANK MODULE - MULTICELL LH_2 TANK CONNECTED TO TWO SEPARATE LO_2 TANKS EXTEND TO THE ENGINE MOUNT BEAM STRUCTURE WHICH TRANSMITS THE THRUST LOADS INTO THE SKIRTS. THE WING STRUCTURE IS CONTINUOUS THROUGH THE BODY AND RUNS THROUGH THE LOWER PART OF THE AFT SKIRT STRUCTURE, CONNECTING THE TWO SKIRTS. THE ENGINES ARE SIX FIXED POSITION 35:1 EXPANSION RATIO ENGINES, OFFSET BY TRUSS STRUCTURE TO THE REAR OF THE ENGINE MOUNT BEAMS, AND FOUR GIMBALED ENGINES WITH DUAL POSITION NOZZLES, 55:1 - 160:1, MOUNTED ON THE BEAM STRUCTURE.

CREW AND PAYLOAD MODULE - THE CREW COMPARTMENT/PAYLOAD BAY/VERTICAL TAIL MODULE IS MOUNTED TO THE FUSELAGE/TANK MODULE WITH A FIXED SUPPORT TO THE MAIN ENGINE MOUNT BULKHEAD IN THE AFT END AND A SLIDING SUPPORT AND SIDE LOAD LINK IN THE FORWARD END TO ALLOW FOR DIFFERENTIAL EXPANSION BETWEEN THE TWO ASSEMBLIES. THE CREW COMPARTMENT IS SIMILAR TO THE SHUTTLE EXCEPT FOR CONTAINING AN INTEGRAL DOCKING FACILITY. ALL OF THE PAYLOAD BAY, WHICH IS THE SAME SIZE AS IN THE SHUTTLE, CONTAINS THE TWO PAIRS OF TANKS FOR THE OMS SYSTEM AND THE TWO OMS ENGINES. THE VERTICAL TAIL MOUNTS ON THIS STRUCTURE ASSEMBLY.

EQUIPMENT - FOR IMPROVED VEHICLE BALANCE, MUCH OF THE EQUIPMENT IS LOCATED FORWARD (E.G., ELECTRICAL POWER AND HYDRAULIC POWER GENERATION COMPONENTS ARE LOCATED ON A PALLET FRAME ON THE UPPER FORWARD END OF THE HYDROGEN TANK). THE NOSE COMPARTMENT CONTAINS THE FORWARD RCS MODULE AND THE TWO AFT RCS MODULES ARE ATTACHED TO THE RESPECTIVE OUTBOARD SIDES OF THE ENGINE MOUNT BULKHEAD. THE MAIN LANDING GEAR IS ATTACHED TO THE FRONT SPAR OF THE WING CARRY-THROUGH STRUCTURE AND RETRACTS SIDEWAYS OF THE LO_2 TANKS. THE NOSE LANDING GEAR IS IN A BOXED-OFF CAVITY IN THE FORWARD END OF THE LH_2 TANK.

WING ASSEMBLY - THE WING ASSEMBLIES BOLT TO THE TORQUE BOX CARRY-THROUGH STRUCTURE AND THE FORWARD SPAR ATTACHES TO A BODY BULKHEAD.

TPS SYSTEM - THE MAXIMUM TEMPERATURE FOR THE TPS SYSTEM IS +3300°F. THE TPS SYSTEM FOR THE BODY IS RSI BONDED TO ADVANCED COMPOSITE SUBPANELS. THE TPS FOR THE AEROSURFACES AND THE CREW/PAYLOAD MODULE IS DIRECT BOND RSI/STRAIN ISOLATOR.

SSTO-VTOHL INBOARD PROFILE

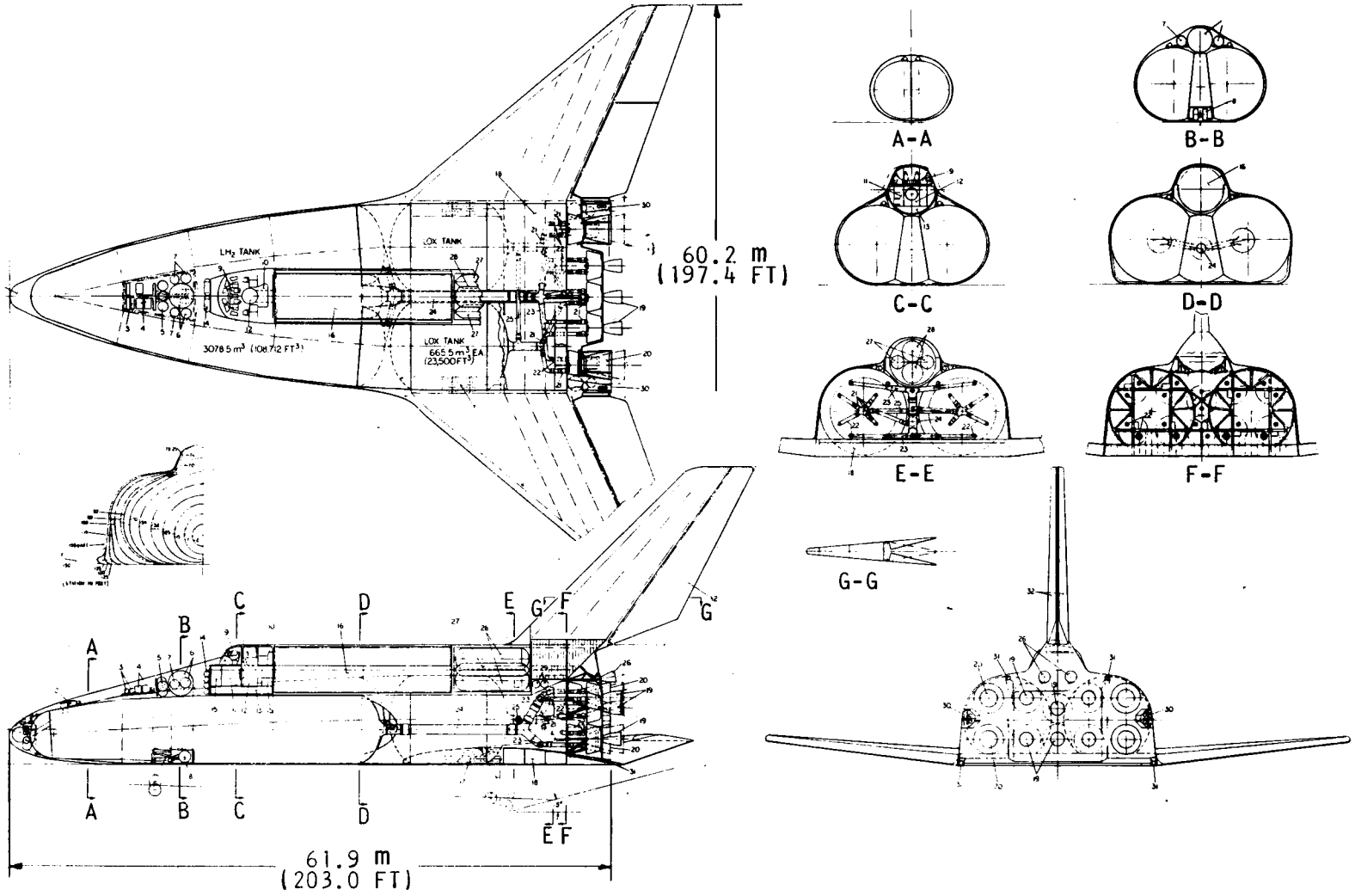

MARTIN MARIETTA

SSTO-VTOHL STRUCTURAL ARRANGEMENT

THE VEHICLE STRUCTURE IS MADE UP OF FOUR MAJOR ASSEMBLIES:

FUSELAGE/TANK MODULE - THE OUTER TWO LOBES OF THE LH_2 TANK MULTICELL TANK CONNECT TO THE TWO LO_2 TANKS BY MEANS OF TWO CYLINDRICAL SHELLS. THE LO_2 TANKS CONNECT TO TWO AFT CYLINDRICAL SHELLS THAT ATTACH TO THE ENGINE MOUNT BEAMS. THE FORWARD LANDING GEAR LOADS ARE REACTED BY AN INTERNAL LH_2 TANK BULKHEAD STRUCTURE AND THE MAIN LANDING GEAR LOADS ARE REACTED BY BULKHEADS IN THE AFT SKIRTS. LOADS FROM THE CREW AND PAYLOAD MODULE ARE REACTED BY LH_2 TANK BULKHEADS AND THE ENGINE MOUNT BEAMS. THE WING TORQUE BOX CARRY-THROUGH STRUCTURE IS LOCATED IN THE LOWER AFT SKIRT AREA.

CREW AND PAYLOAD MODULE - THE CREW, PAYLOAD, OMS TANKAGE AND FIN MOUNTING COMPARTMENTS REPRESENT ONE STRUCTURAL ASSEMBLY. LOADS ARE TRANSMITTED INTO THE FUSELAGE/TANK MODULE SIMILAR TO THE PRESENT SHUTTLE ORBITER/EXTERNAL TANK STRUCTURAL INTERFACE.

WING - THE EXPOSED WING ASSEMBLIES ARE CONNECTED TO THE WING CARRY-THROUGH STRUCTURE AND THE FORWARD SPAR IS CONNECTED TO THE LO_2 TANK FORWARD BULKHEAD.

FIN - THE FIN ASSEMBLY IS BOLTED TO THE CREW AND PAYLOAD MODULE. LOADS ARE TRANSMITTED INTO THE FIN MOUNTING SHELL.

SSTO-VTOHL STRUCTURAL ARRANGEMENT

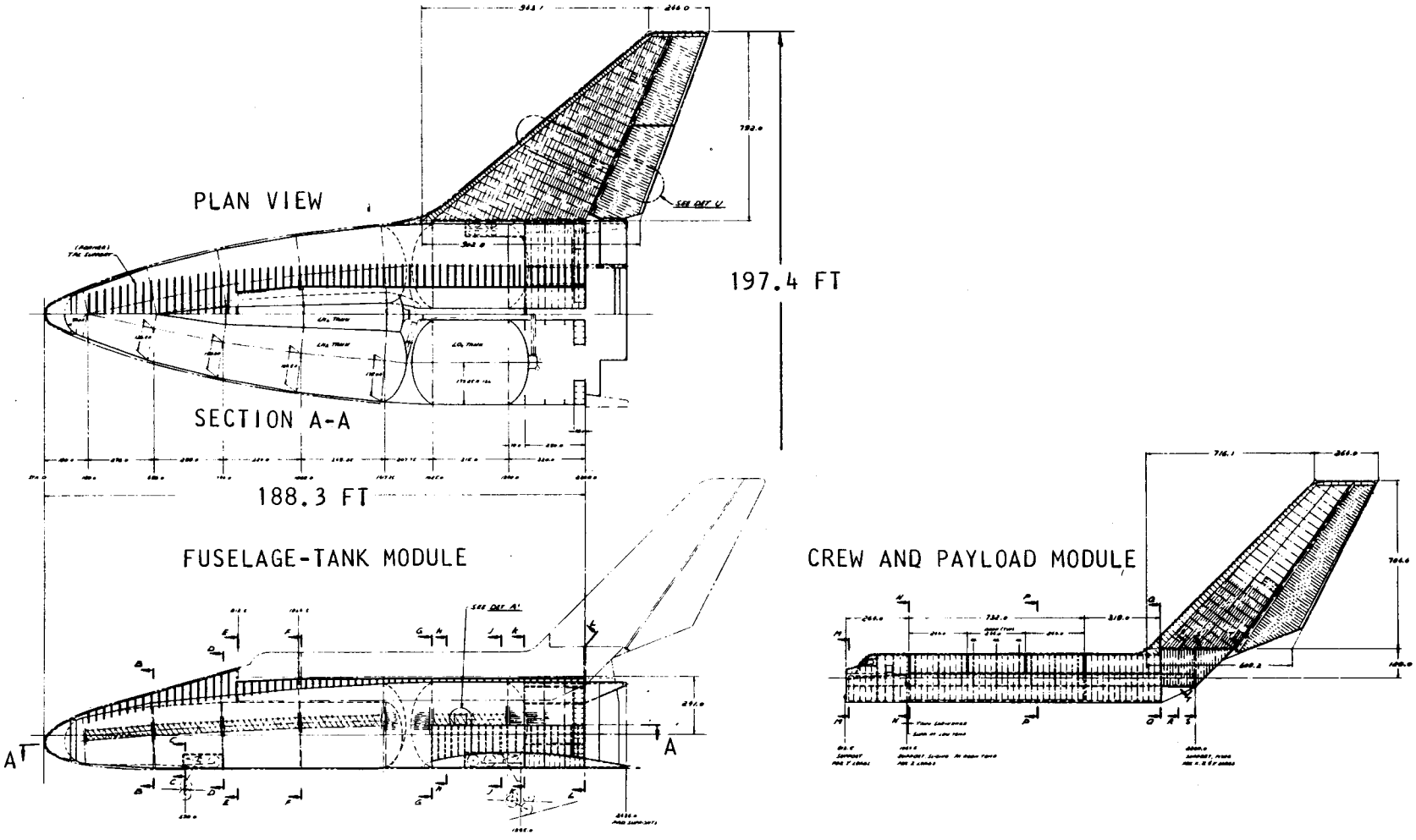

MARTIN MARIETTA

SSTO-VTOHL STRUCTURAL DETAILS

THE FUSELAGE SECTIONS SHOW THE MAJOR STRUCTURAL ATTACHMENT OF THE CREW AND PAYLOAD MODULE, PAD SUPPORTS, WING CARRY-THROUGH AND ROCKET ENGINES.

THE FORWARD PAYLOAD MODULE ATTACHMENT, WHICH CARRIES ONLY Z AXIS LOADS, INCORPORATES X AXIS MOVEMENT TO ALLOW DIFFERENTIAL THERMAL GROWTH BETWEEN THE MAJOR ASSEMBLIES.

THE AFT PAYLOAD MODULE ATTACHMENT SHOWS THE TWO FIXED ATTACHMENT POINTS THAT TRANSMIT X, Y AND Z AXIS LOADS.

THE WING CROSS SECTION SHOWS A TYPICAL WING RIB CONCEPT WITH THE MAIN WING TORQUE BOX AND ELEVEONS HAVING BORSIC/ALUMINUM ADVANCED COMPOSITE COVERS. THE RIB IS TRUSS CONSTRUCTION.

SSTO-VTOHL STRUCTURAL DETAILS

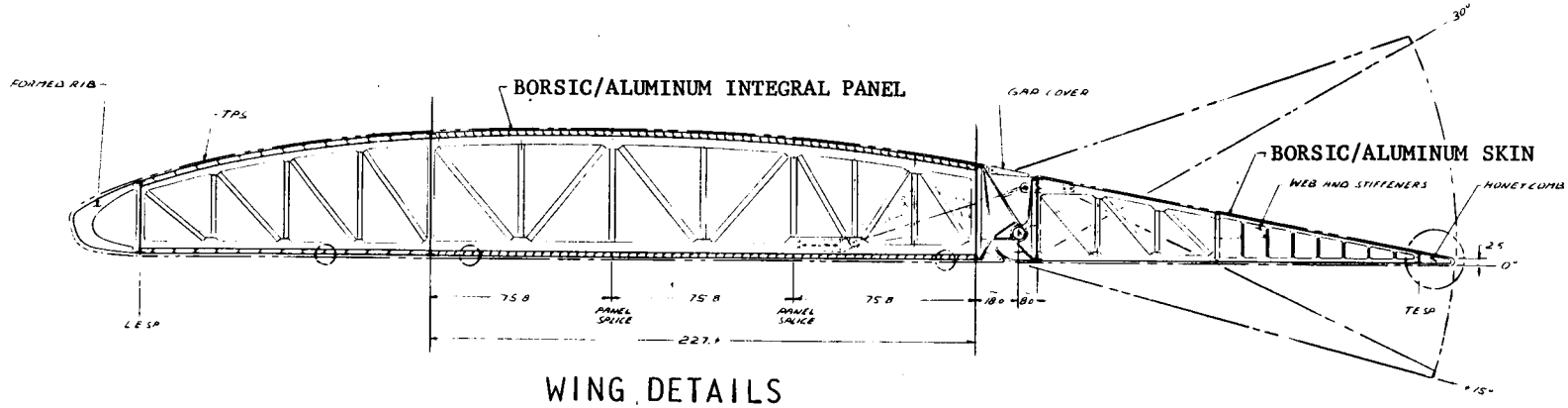

WING DETAILS

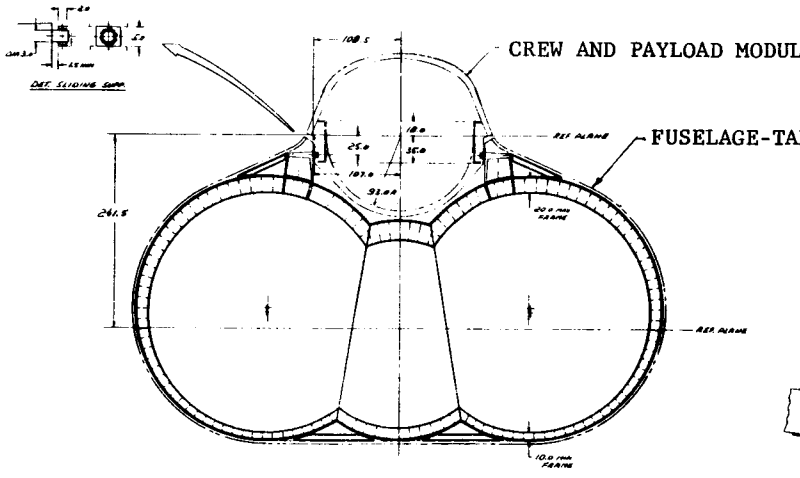

FORWARD PAYLOAD MODULE ATTACHMENT

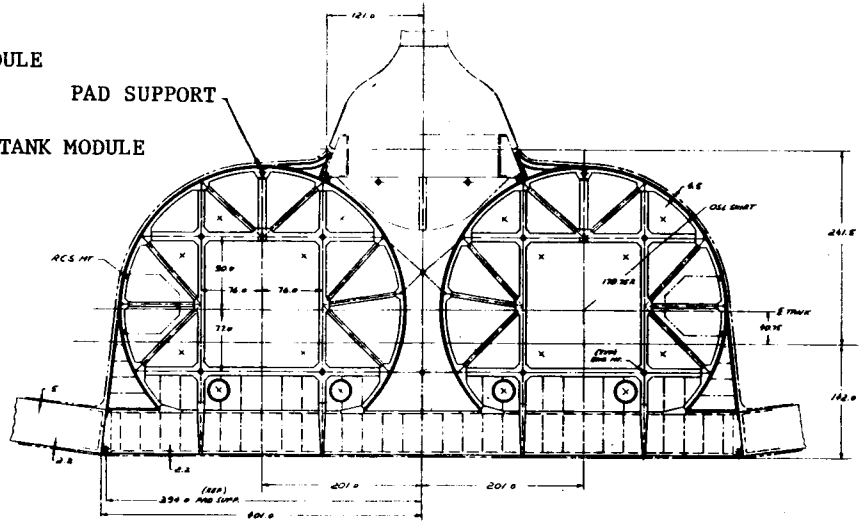

AFT PAYLOAD MODULE ATTACHMENT

MARTIN MARIETTA

SSTO-VTOHL TPS DETAILS

THE FUSELAGE/TANK MODULE PRESENTS AN IRREGULAR EXTERNAL SURFACE SHAPE WHICH IS COVERED BY A SUBPANEL MOUNTED RSI THERMAL PROTECTION SYSTEM. THE DETAIL SHOWS A TYPICAL SUBPANEL MOUNTING ARRANGEMENT WITH ISOGRID TANK NODE POINT RAIL ATTACHMENT.

THE LONGITUDINAL RAILS SUPPORT TWO SIDES OF THE ADVANCED COMPOSITE (GRAPHITE/EPOXY) SANDWICH SUBPANELS. THE RSI TILES BOND DIRECTLY TO THE SUBPANELS.

THE SUBPANEL CONCEPT PROVIDES 100% INSPECTION CAPABILITY FOR THE MAIN PROPELLANT TANK WALLS. EACH FOUR FOOT PANEL IS CONNECTED TO THE RAIL BY THREE QUICK RELEASE FASTENERS.

SSTO-VTOHL TPS DETAILS

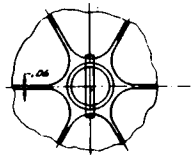

C-C
NODE POINT

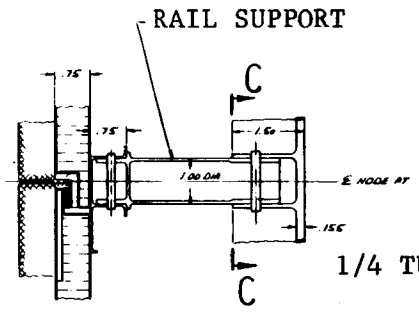

A-A

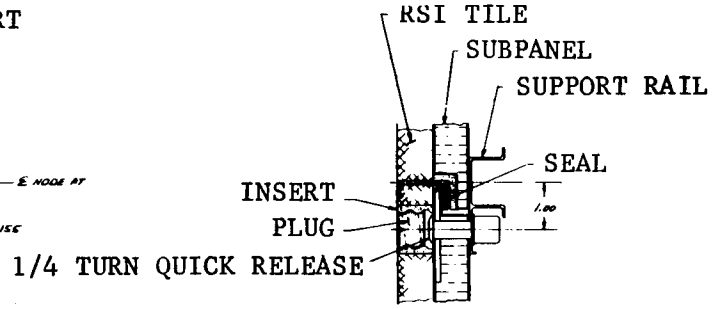

B-B

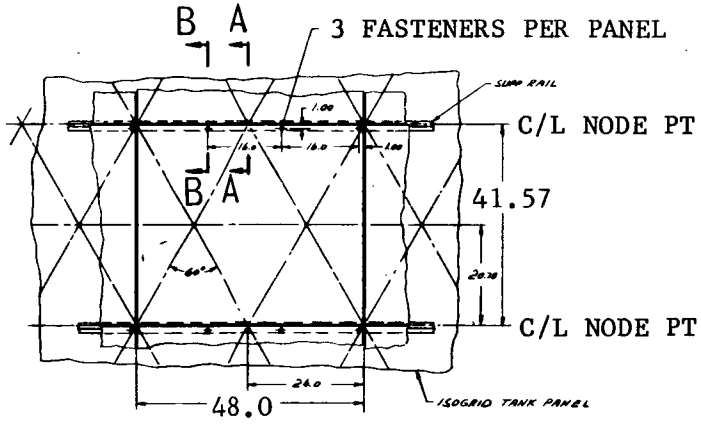

TYPICAL TPS PANEL

MARTIN MARIETTA

SSTO-VTOHL STRUCTURAL FINITE ELEMENT MODEL

THE VTOHL FUSELAGE-TANK MODULE WAS MATHEMATICALLY MODELED USING THE MDSFP (MARTIN MARIETTA-DENVER SPACE FRAME PROGRAM). THIS FINITE ELEMENT PROGRAM MAKES USE OF THE STIFFNESS METHOD TO FIRST COMPUTE DEFLECTIONS AND ROTATIONS AT EACH NODE POINT FOR THE APPLIED LOADING CONDITION AND THEN TO CALCULATE THE COMPATIBLE INTERNAL LOADS AND STRESSES IN EACH OF THE STRUCTURAL ELEMENTS. THE MODEL CONTAINS 239 NODE POINTS WITH 1356 DEGREES OF FREEDOM. TAKING ADVANTAGE OF SYMMETRY, ONLY ONE-HALF OF THE STRUCTURE WAS MODELED TO MINIMIZE COMPUTER COSTS. THE 25 NODE POINTS LOCATED ON THE PLANE OF SYMMETRY WERE FIXED IN THE Y, θ_X AND θ_Z DIRECTION SINCE THESE VALUES MUST BE ZERO FOR SYMMETRICAL STRUCTURE WITH A SYMMETRICAL LOADING. TWO X DEFLECTIONS AND ONE Z DEFLECTION WERE FIXED TO PROVIDE X, Z AND θ_Y OVERALL STABILITY.

TWELVE BULKHEAD STATIONS WERE USED WITH NODE POINTS TYPICALLY SPACED AT 30° INTERVALS CIRCUMFERENTIALLY. THE AFT BULKHEAD WAS MODELED IN SUFFICIENT DETAIL THAT THE ENGINE LOADS COULD BE APPLIED AT THE PROPER LOCATIONS. NODE POINTS WERE ALSO PROVIDED FOR THE CREW AND PAYLOAD MODULE, ATTACH LOADS AND LANDING GEAR LOADS. FORTY-TWO OF THE NODE POINTS WERE IN THE WING OUTBOARD OF THE ROOT RIB. A TOTAL OF 524 BEAM ELEMENTS (AXIAL, TWO BENDING, TWO SHEAR AND TORSIONAL STIFFNESS), 30 TRIANGULAR PLATES AND 269 QUADRILATERAL PLATES (AXIAL, INPLANE SHEAR AND INPLANE BENDING STIFFNESS) WERE USED. THE NUMBER OF TRIANGULAR PANELS WAS MINIMIZED SINCE QUADRILATERAL PANELS PROVIDE CONSIDERABLY MORE ACCURATE RESULTS FOR A GIVEN NUMBER OF NODE POINTS. SINCE THE QUADRILATERAL PLATES MUST LIE IN A PLANE, IT WAS NECESSARY TO USE MODIFIED WING DEPTHS TO DEFINE A SET OF UPPER NODE POINTS TO ELIMINATE THE PANEL CURVATURE. THE MAIN BEAM DEPTHS AND TORQUE BOX AREAS WERE CLOSELY APPROXIMATED.

FOR EACH LOADING CONDITION, THE APPLIED ENGINE, GEAR AND/OR AIRLOADS WERE DISTRIBUTED TO THE NODE POINTS TO GIVE THE PROPER MOMENT ABOUT THE VTOHL CENTER OF GRAVITY. THE WEIGHTS WERE ALSO DISTRIBUTED TO THE NODE POINTS AND THEN THE BALANCING INERTIAL REACTIONS WERE CALCULATED. THE RESULTANTS OF THE APPLIED AND INERTIAL REACTIONS WERE INPUT TO THE MDSFP FOR EACH OVERALL LOADING CONDITION. THE RESULTING INTERNAL STRESSES WERE REVIEWED TO INSURE THAT NO LARGE INACCURACIES EXISTED IN THE STRUCTURAL ELEMENT MECHANICAL PROPERTIES WHICH WERE INPUT TO THE PROGRAM. THIS WAS DONE TO INSURE THAT THE INTERNAL LOAD DISTRIBUTIONS WHICH WERE CALCULATED COULD BE CONSIDERED ACCURATE ENOUGH TO REVISE STRUCTURAL WEIGHT ESTIMATES AS REQUIRED.

SSTO-VTOHL STRUCTURAL FINITE ELEMENT MODEL

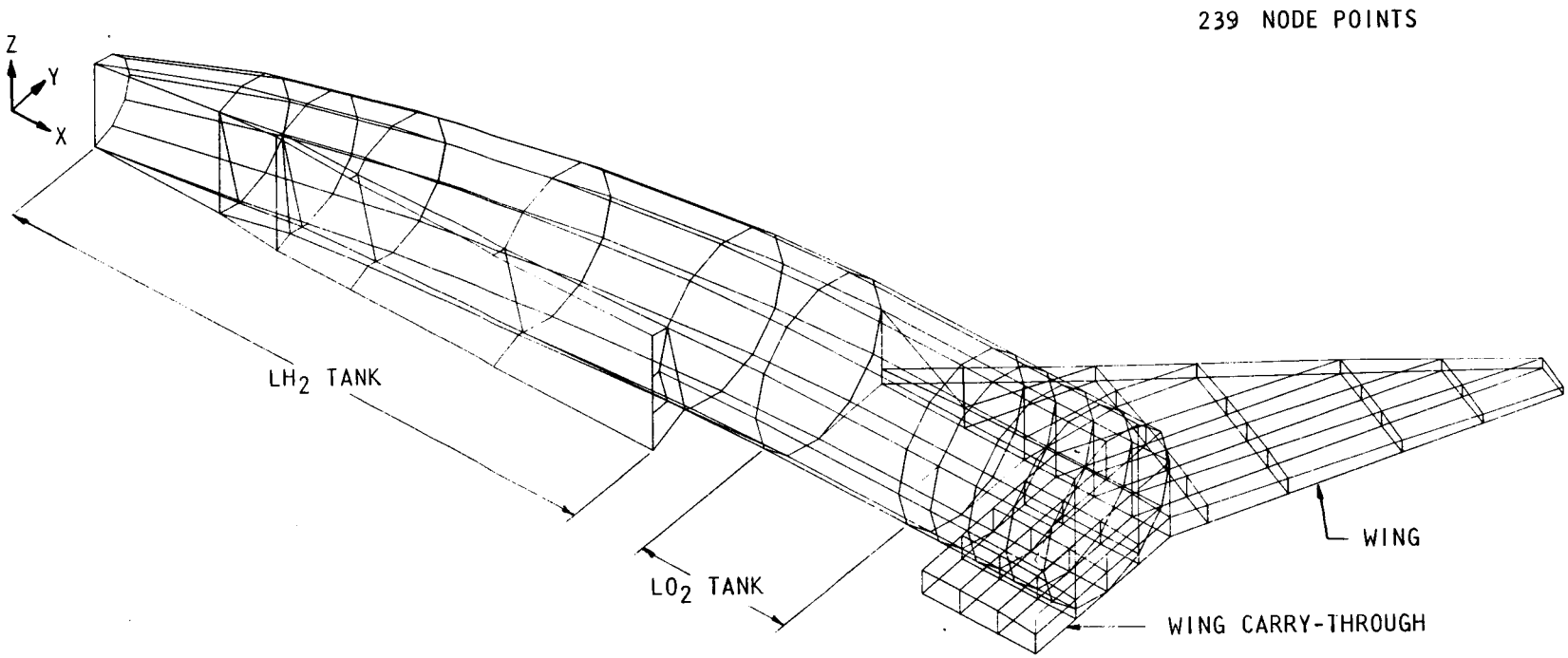

MARTIN MARIETTA

VTOHL VEHICLE INTERNAL LOADS SUMMARY

VEHICLE EXTERNAL LOADING CONDITIONS ARE SUMMARIZED BELOW:

	MAXIMUM $q\alpha$ HEADWIND	MAXIMUM n_x ASCENT	ENTRY	2.5g MANEUVER	TWO WHEEL LANDING
MACH NO.	1.53	5.93	16.0	0.6	
q (PSF)	639	104.5	122.4	290	
α (DEG)	3.57	7.4	30°	6.3	15.0
VEHICLE WEIGHT (POUNDS)	3,140,500	2,026,400	523,000	523,000	523,000
NORMAL AIRLOAD (POUNDS)	1,816,507	137,813	1,150,600	1,307,500	541,450
n_x	1.567	3.0			
n_z	.578	.068	2.2	2.5	1.794

THE INTERNAL LOADS SHOWN ON THE VIEWGRAPH ARE COMPATIBLE WITH THE STRUCTURAL UNIT WEIGHTS USED FOR THE TASK 2 DESIGN CONCEPTS. THE WING LOAD AT MAXIMUM $q\alpha$ IS LESS THAN THE LOAD CAPABILITY OF THE WING, INDICATING A SMALL REDUCTION IN DRY WEIGHT. THE VEHICLE CONCEPT TO BE DEVELOPED IN TASK 4 WILL TAKE ADVANTAGE OF CURRENT DESIGN ANALYSIS INFORMATION AS WELL AS ADVANCED TECHNOLOGY ASSESSMENTS.

VTOHL VEHICLE INTERNAL LOADS SUMMARY

	ULTIMATE LOAD (LB/IN)			
	LOADING CONDITION			
VEHICLE LOCATION	MAXIMUM $q\alpha$	MAXIMUM LONGITUDINAL ACCELERATION	2.5 g MANEUVER	TWO WHEEL LANDING
INNER TANK	2,505	1,031	535	377
AFT SKIRT	4,620	4,067	953	754
EXPOSED WING ROOT	13,440	2,590	6,860	1,135
EXPOSED WING MID SPAN	4,703	603	2,353	390

MARTIN MARIETTA

SSTO - VTOHL VEHICLE MASS PROPERTIES SUMMARY

	WEIGHT (LB)	C.G. (% OF BODY LENGTH)
DRY WEIGHT	446,993	73.3
LANDING WEIGHT WITHOUT PAYLOAD	457,774	73.0
PAYLOAD	65,000	
LANDING WEIGHT WITH PAYLOAD	522,774	71.2
ASCENT PROPELLANT	3,661,873	
GLOW	4,243,136	70.2

FOR VTOHL WITH LOX IN WING TANKS, GLOW $\approx 4.5 \times 10^6$ POUNDS

MARTIN MARIETTA

IIIC. SLED LAUNCH VEHICLE CONCEPT

MARTIN MARIETTA

SLED LAUNCHED VEHICLE DESIGN APPROACH

THE SLED IS A WATER BRAKED RAIL MOUNTED VEHICLE WITH LO_2/RP-1 PROPELLANTS AND TWO F-1 ENGINES. THE TOTAL RAIL LENGTH IS 14,000 FEET - 7,000 FEET FOR LAUNCH AND 7,000 FEET FOR DECELERATION AND BRAKING. THE SSTO-HTOHL VEHICLE ROCKET ENGINES ARE IGNITED AT THE START OF THE SLED RUN AND HAVE A LIFTOFF THRUST TO WEIGHT OF 0.95. THE VEHICLE MACH NUMBER AT LIFTOFF IS 0.60. MAXIMUM ACCELERATION ON THE SLED IS 1.32g.

THE PULL-UP MANEUVER OF THE FLIGHT VEHICLE IS LIMITED TO 1.28g TO MINIMIZE WING LOADING FOR BOTH INITIAL LIFTOFF AND MAXIMUM $q\alpha$.

SLED LAUNCHED VEHICLE DESIGN APPROACH

- 14,000 FOOT SLED TRACK
- MACH 0.60 VEHICLE SEPARATION
- 1.3g MAXIMUM SLED ACCELERATION
- INITIAL VEHICLE THRUST TO WEIGHT 0.95
- 1.28g PULLUP MANEUVER

MARTIN MARIETTA

SSTO-HTOHL SLED CONCEPT

THE LAUNCH SLED IS A LARGE FLAT LOW-DRAG BODY OF ABOUT 200 FEET IN LENGTH AND 72 FEET IN WIDTH. IT RIDES ON TWO RAILS WITH SLIDE SHOES WHICH ARE APPROPRIATELY LUBRICATED. IN THE AFT END, IT CONTAINS THE RP-1 AND LO_2 PROPELLANT TANKS AND TWO F-1 ROCKET ENGINES. THE SSTO SUPPORT STRUCTURE CONSISTS OF TWO COLLAPSIBLE TRIPODS IN THE REAR, WHICH TRANSMIT THE THRUST LOAD AND A SINGLE INVERTED V-STRUT IN THE FORWARD END PROVIDING A POSITIVE INCIDENCE TO THE SSTO VEHICLE.

SLED BRAKING AFTER LIFTOFF OR IN AN ABORT IS PROVIDED BY THREE WATER SCOOPS WITH APPROPRIATE WATER DUCTING, WHICH DUE TO A GRADUALLY DOWN SLOPING RAIL, ARE IMMERSED GRADUALLY INTO THE WATER-FILLED TROUGHS AND ARE DESIGNED TO GIVE CLOSE TO CONSTANT DECELERATION.

THE EMPTY SSTO IS TOWED ON ITS LANDING GEAR ONTO THE SLED PLATFORM, POSITIONING THE GEARS ON APPROPRIATE MARKINGS. THE MAIN GEARS WILL BE RESTING ON PLATFORMS WHICH CAN BE MOVED LATERALLY FOR FREE POSITIONING TO ALIGN THE AFT SUPPORT POINTS WITH THE NOW ERECTED AFT TRIPODS. BY LOWERING THE PLATFORMS, THE VEHICLE IS NOW LOCKED INTO THE AFT SUPPORTS. WITH AN AUXILIARY STRUT, THE FORWARD INVERTED V-STRUT FORMS A SCISSORS ARRANGEMENT AND ENGAGES THE FORWARD SUPPORT POINT IN THE VEHICLE. WITH A CABLE WINCH MECHANISM, THE SCISSORS STRUTS ARE ERECTED TO THE PROPER INCIDENCE AND THE SUPPORT STRUT LOCKED IN PLACE WHILE THE AUXILIARY STRUT IS RETRACTED. THE SSTO IS NOW IN LAUNCH POSITION AND READY FOR FUELING.

SSTO-HTOHL SLED CONCEPT

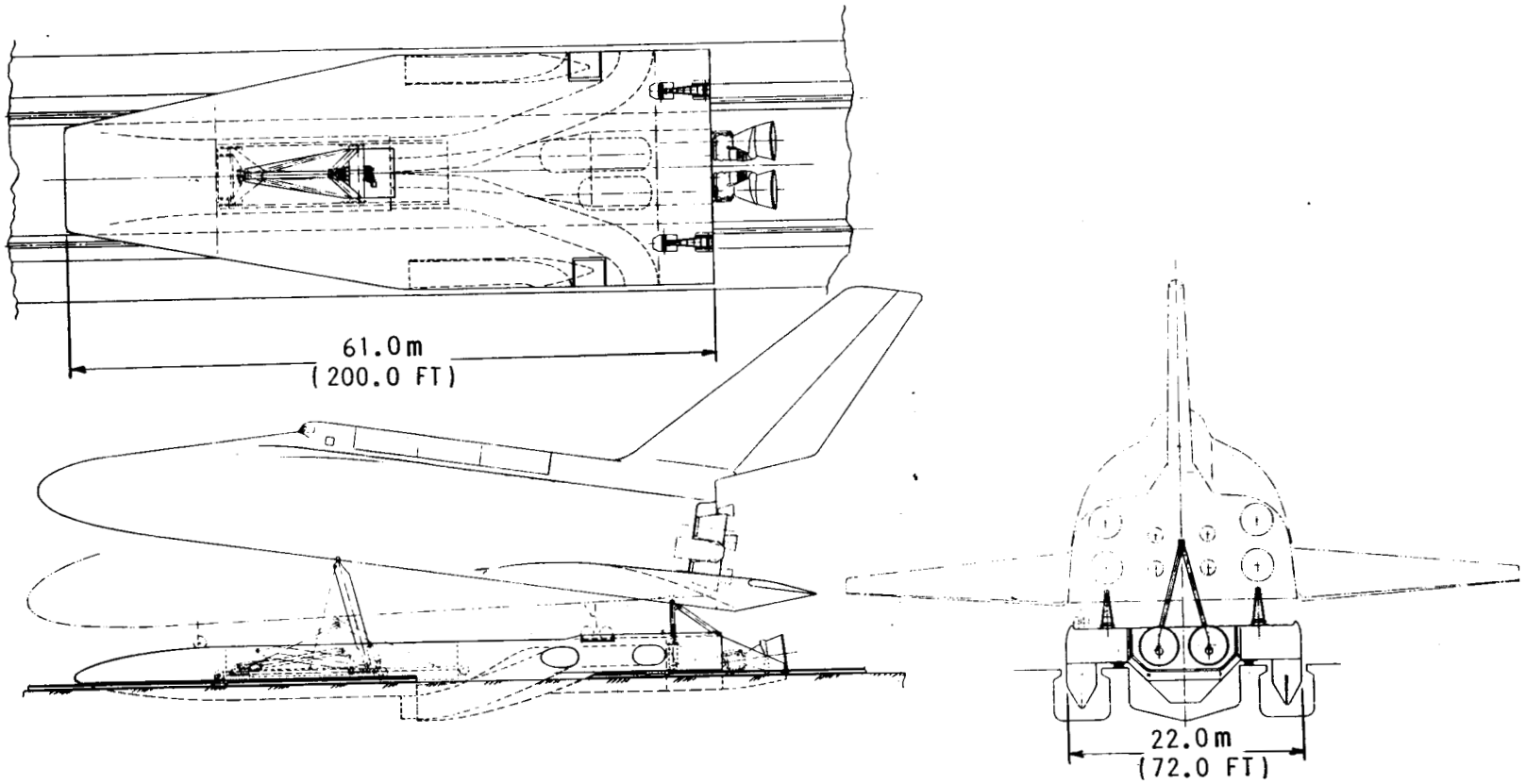

MARTIN MARIETTA

SSTO-HTOHL-SLED INBOARD PROFILE

THE CONFIGURATION IS SIMILAR TO THE VTOHL CONFIGURATION IN ALL ASPECTS, EXCEPT THE FOLLOWING:

- THE ENGINES ARE FOUR FIXED POSITION 35:1 EXPANSION RATIO ENGINES, OFFSET BY TRUSS STRUCTURE TO THE REAR OF THE ENGINE MOUNT BEAMS, AND FOUR GIMBALED ENGINES WITH DUAL POSITION NOZZLES 55:1 - 160:1, MOUNTED ON THE BEAM STRUCTURE.
- THE TWO AFT SLED SUPPORT POINTS ARE LOCATED ON THE REAR OF THE MAIN ENGINE MOUNT BULKHEAD/WING CARRY-THROUGH REAR SPAR, AND DIRECTLY BELOW THE OUTBOARD ENGINE THRUST BEAM. THE FORWARD SLED SUPPORT POINT IS ON A MAIN TANK FRAME THAT ALSO CARRIES THE FORWARD SUPPORT FITTING FOR THE CREW/PAYLOAD MODULE.

SSTO-HTOHL-SLED INBOARD PROFILE

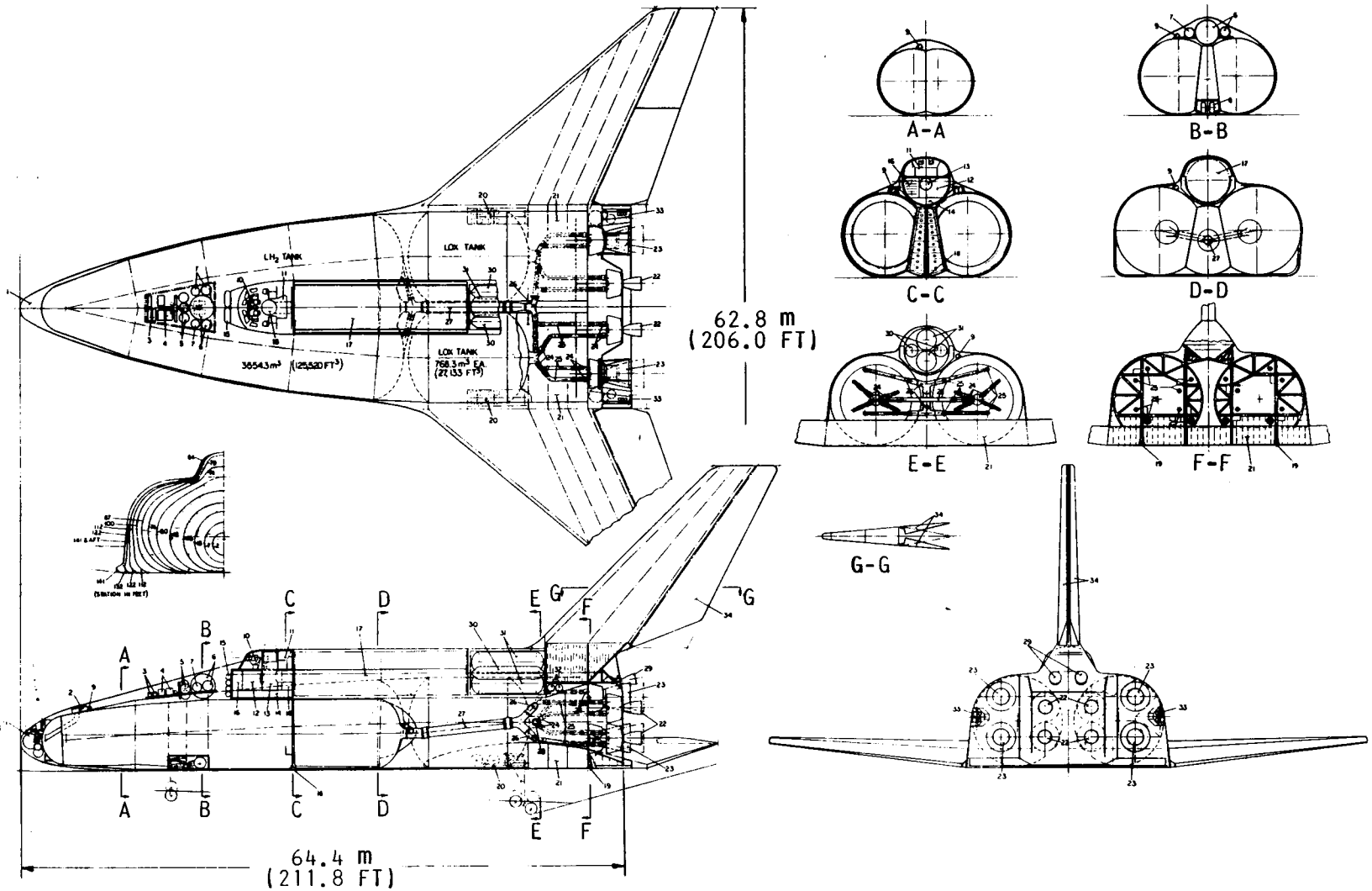

MARTIN MARIETTA

DESIGN AND TECHNOLOGY CONSIDERATIONS OF LO_2 PROPELLANT IN WINGS

THE ADVANTAGES OF USING THE WING VOLUME FOR LO_2 PROPELLANT ARE IN WING BENDING LOAD RELIEF AND OVERALL VEHICLE PACKAGING EFFICIENCY. THE WING BENDING LOAD RELIEF IS EFFICIENT ON THE HORIZONTAL TAKEOFF VEHICLES AND REDUCES THE OVERALL WING WEIGHT BY APPROXIMATELY 18%, RESULTING IN A VEHICLE DRY WEIGHT DECREASE OF APPROXIMATELY 13.5%.

TANK LEAK INSPECTION AND REPAIR IS COMPLICATED BY THE BOND-ON INSULATION TPS. USE OF A SUBPANEL MOUNTED RSI TPS SYSTEM WOULD ADD APPROXIMATELY 6,000 POUNDS TO THE TPS WEIGHT.

ALTHOUGH OUR DESIGN ACTIVITIES HAVE FOCUSED ON DRY WING CONCEPTS, SIGNIFICANT IMPROVEMENTS IN DRY WEIGHT HAVE BEEN SHOWN USING A WET WING FOR HORIZONTAL TAKEOFF VEHICLES. CRYOGENIC WET WINGS, HOWEVER, REQUIRE SPECIAL ATTENTION TO DESIGN AREAS INDICATED IN THIS CHART. WE HAVE CONSIDERED THESE TO BE BEYOND "NORMAL" TECHNOLOGY, TO BE FURTHER ADDRESSED IN TASKS 3 AND 4 IF HORIZONTAL TAKEOFF CONCEPTS ARE PURSUED.

DESIGN AND TECHNOLOGY CONSIDERATIONS OF LO_2 PROPELLANT IN WINGS

DESIGN

ADVANTAGES

- 13.5% DECREASE IN VEHICLE DRY WEIGHT DUE TO WING LOAD RELIEF AND HIGHER PACKAGING EFFICIENCY

DISADVANTAGES

- HIGH PRESSURE WING DESIGN REQUIREMENTS
- PROPELLANT UTILIZATION (LARGER RESIDUALS)
- PRELAUNCH SUPPORT OF FUELED WINGS
- BOND-ON INSULATION COMPLICATES TANK LEAKAGE INSPECTION AND REPAIR
- RSI STRAIN ISOLATOR REQUIREMENTS ARE INCREASED (E.G., LOW TEMPERATURE ENVIRONMENT)

TECHNOLOGY CONSIDERATIONS

- CRYOGENIC WING TANKAGE/TPS INTEGRATION
- PROPELLANT RESIDUALS

MARTIN MARIETTA

SSTO - HTOHL/SLED VEHICLE MASS PROPERTIES SUMMARY

	ALL PROPELLANTS IN FUSELAGE		37% LO_2 PROPELLANT IN EXPOSED WING	
	WEIGHT (LB)	C.G. (% OF FUSELAGE LENGTH)	WEIGHT (LB)	C.G. (% OF FUSELAGE LENGTH)
DRY WEIGHT	496,307	73.5	429,965	73.3
LANDING WEIGHT WITHOUT PAYLOAD	508,134	73.3	441,022	73.0
PAYLOAD	65,000		65,000	
LANDING WEIGHT WITH PAYLOAD	573,134	71.6	506,022	71.2
ASCENT PROPELLANT	4,006,819		3,621,640	
GLOW	4,643,368	70.1	4,193,809	70.3
SLED RUN PROPELLANT	221,181		200,000	
GROSS WEIGHT	4,864,549		4,393,809	

MARTIN MARIETTA

IIID. INFLIGHT FUELED VEHICLE CONCEPT

MARTIN MARIETTA

INFLIGHT FUELED VEHICLE DESIGN APPROACH

DESIGNS FOR VARIOUS TAKEOFF-TANKER RENDEZVOUS PROPULSION AND REFUELING CONCEPTS WERE COMPARED TO MINIMIZE VEHICLE DRY WEIGHT.

A 15,000 FOOT ALTITUDE, MACH 0.75 CRITERIA WAS SELECTED TO PROVIDE A HIGH ENOUGH DYNAMIC PRESSURE TO MAINTAIN CRUISE CONDITIONS DURING REFUELING.

ROCKET ENGINE THRUST TO WEIGHT OF 0.95 WAS SELECTED BASED ON TRAJECTORY OPTIMIZATION.

MINIMUM VEHICLE WING WEIGHT LIMITS THE PULL-UP MANEUVER TO SLIGHTLY OVER 1g (1.05g).

INFLIGHT FUELED VEHICLE DESIGN APPROACH

- 15,000 FOOT REFUELING ALTITUDE
- REFUEL LO_2 ONLY
- REFUEL LO_2 AND LH_2
- MACH 0.75 REFUELING SPEED
- OPTIMIZE TAKEOFF TO TANKER PROPULSION SYSTEM
- 0.95 THRUST TO WEIGHT AT RELEASE OF TANKER
- 1.05g PULLUP MANEUVER

MARTIN MARIETTA

PROPULSION SYSTEMS - CLIMB AND PROPELLANT TRANSFER

VARIOUS PROPULSION CONCEPTS WERE EVALUATED TO ESTABLISH THE BEST MEANS OF ACCOMPLISHING THE TAKEOFF, CLIMB AND PROPELLANT TRANSFER PHASES. THE CONCEPTS INCLUDED THROTTABLE MAIN ROCKETS, TURBOJETS, TURBOFANS AND A COMBINATION OF TURBOFANS SUPPLEMENTED BY A THROTTLED ROCKET. VARIOUS FUEL COMBINATIONS WERE ALSO EVALUATED.

IN EACH CASE, HARDWARE AND PROPELLANT WEIGHTS WERE CALCULATED FOR THE SYSTEMS ALLOWING FOR START, CHECKOUT, TAKEOFF, CLIMB TO 15,000 FEET, ACCELERATE AT ALTITUDE, RENDEZVOUS AND PROPELLANT TRANSFER. HARDWARE CONSIDERATIONS INCLUDED ADDITIONAL TANKAGE, VEHICLE GROWTH, PROPULSION SYSTEM INSTALLATION AND ENGINE WEIGHT AS WELL AS EFFECTS ON THE LANDING GEAR.

BECAUSE OF POSSIBLE HAZARDS ASSOCIATED WITH INFLIGHT TRANSFER OF LIQUID HYDROGEN, INITIAL COMPARISONS CONSIDERED LOX TRANSFER ONLY. A MINIMUM DRY WEIGHT VEHICLE DESIGN RESULTED USING A TURBOFAN SYSTEM SUPPLEMENTED WITH THRUST FROM ONE OF THE MAIN ROCKET ENGINES DURING FINAL LOX LOADING. HOWEVER, DUE TO THE NECESSITY OF CARRYING ALL LH_2 FROM THE GROUND UP, EVEN THE MINIMUM VEHICLE PROVED UNREASONABLY LARGE. CONSEQUENTLY, SUBSEQUENT INVESTIGATIONS CONSIDERED TRANSFERRING BOTH LOX AND LH_2, AND COMPARED THE TWO LIGHTEST CONCEPTS FROM THE INITIAL ANALYSES.

WHEN BOTH PROPELLANTS ARE TRANSFERRED TO THE SSTO FROM A TANKER AIRCRAFT, THE ALL ROCKET APPROACH PROVED TO BE ALMOST 8% LIGHTER IN DRY WEIGHT THAN THE ROCKET SUPPLEMENTED TURBOFAN CONCEPT. HOWEVER, THE TAKEOFF WEIGHT OF THE ALL ROCKET VERSION WAS 24% GREATER DUE TO THE GREATER AMOUNT OF PROPELLANTS REQUIRED.

PROPULSION SYSTEMS - CLIMB AND PROPELLANT TRANSFER

INITIAL CONCEPTS COMPARISON - LOX TRANSFER ONLY

SYSTEM	PROPELLANTS	Δ DRY WEIGHT (%)	Δ TAKEOFF WEIGHT (%)
ROCKET	LOX/LH_2 LOX/RP-1 LOX/RJ-5	BASELINE A - 0.5 - 0.8	BASELINE A + 34 + 35
TURBOJET	JP-4 RJ-5 LH_2	+ 8.9 + 8.9 +10.3	- 45 - 45 - 56
TURBOFAN	JP-4 RI-5 LH_2	+ 2.1 + 2.1 + 2.8	- 56 - 56 - 62
TURBOFAN PLUS ROCKET	JP-4 PLUS LOX/LH_2	- 3.9	- 59

FINAL CONCEPTS COMPARISON - TRANSFER BOTH LOX AND LH_2

ROCKET	LOX/LH_2	BASELINE B	BASELINE B
TURBOFAN PLUS ROCKET	JP-4 PLUS LOX/LH_2	+ 7.8	- 24

MARTIN MARIETTA

SSTO-HTOHL-IFF ROCKET TAKEOFF CONCEPT

THE CONFIGURATION IS SIMILAR TO THE VTOHL CONFIGURATION IN MOST ASPECTS, EXCEPT THE FOLLOWING:

LANDING GEAR - DUE TO HIGHER TAKEOFF WEIGHT, AN ADDITIONAL FOUR WHEEL BOOGY MAIN GEAR IS PROVIDED ON THE CENTER OF THE VEHICLE.

MAIN PROPULSION SYSTEM - THE ROCKET ENGINES ARE FOUR FIXED POSITION 50:1 EXPANSION RATIO ENGINES, OFFSET BY TRUSS STRUCTURE TO THE REAR OF THE ENGINE MOUNT BEAMS, AND FOUR GIMBALED ENGINES WITH DUAL POSITION NOZZLES 55:1 - 160:1, MOUNTED ON THE BEAM STRUCTURE. DUE TO THE REQUIREMENT TAKEOFF, CLIMB AND CRUISE WITH ONE ROCKET ENGINE, THE LO_2 FEEDLINE OF THIS ONE ROCKET ENGINE FEEDS FROM THE LOW POINT OF ONE OF THE LO_2 TANKS. AS THE LO_2 AND LH_2 TANKS ARE REFUELED WHILE PRESSURIZED, A VENT RELIEF VALVE, SET AT ABOUT NOMINAL TANK PRESSURE, IS PROVIDED IN THOSE TANKS.

REFUELING SYSTEM - BOTH LO_2 AND LH_2 ARE REFUELED. THE REFUELING PORTS ARE LOCATED SIDE BY SIDE ON TOP OF THE FORWARD END OF THE LH_2 TANK. THE LO_2 REFUELING BOOM IS CONNECTED FIRST AND IS CAPABLE, WHEN HOOKED UP, OF MAINTAINING A CERTAIN AMOUNT OF TENSION ON THE BOOM. THE LH_2 BOOM, ATTACHED TO THE LO_2 BOOM, IS ENGAGED SUBSEQUENTLY AND IS NOT STRESSED. THE PROPELLANT COUPLING IS SELF-CLOSING AND REDUNDANT SHUTOFF VALVES ARE PROVIDED. THE LO_2 REFUELING LINE OF 27 INCHES DIAMETER RUNS ON TOP OF THE LH_2 TANK SIDEWAYS OF THE PAYLOAD BAY TO THE FORWARD END OF THE LO_2 TANK. THE LH_2 LINE ENTERS THE LH_2 TANK RIGHT BEHIND THE FITTING AND SHUTOFF VALVE. A BOOM GUIDANCE SYSTEM IS REQUIRED.

SSTO-HTOHL-IFF ROCKET TAKEOFF CONCEPT

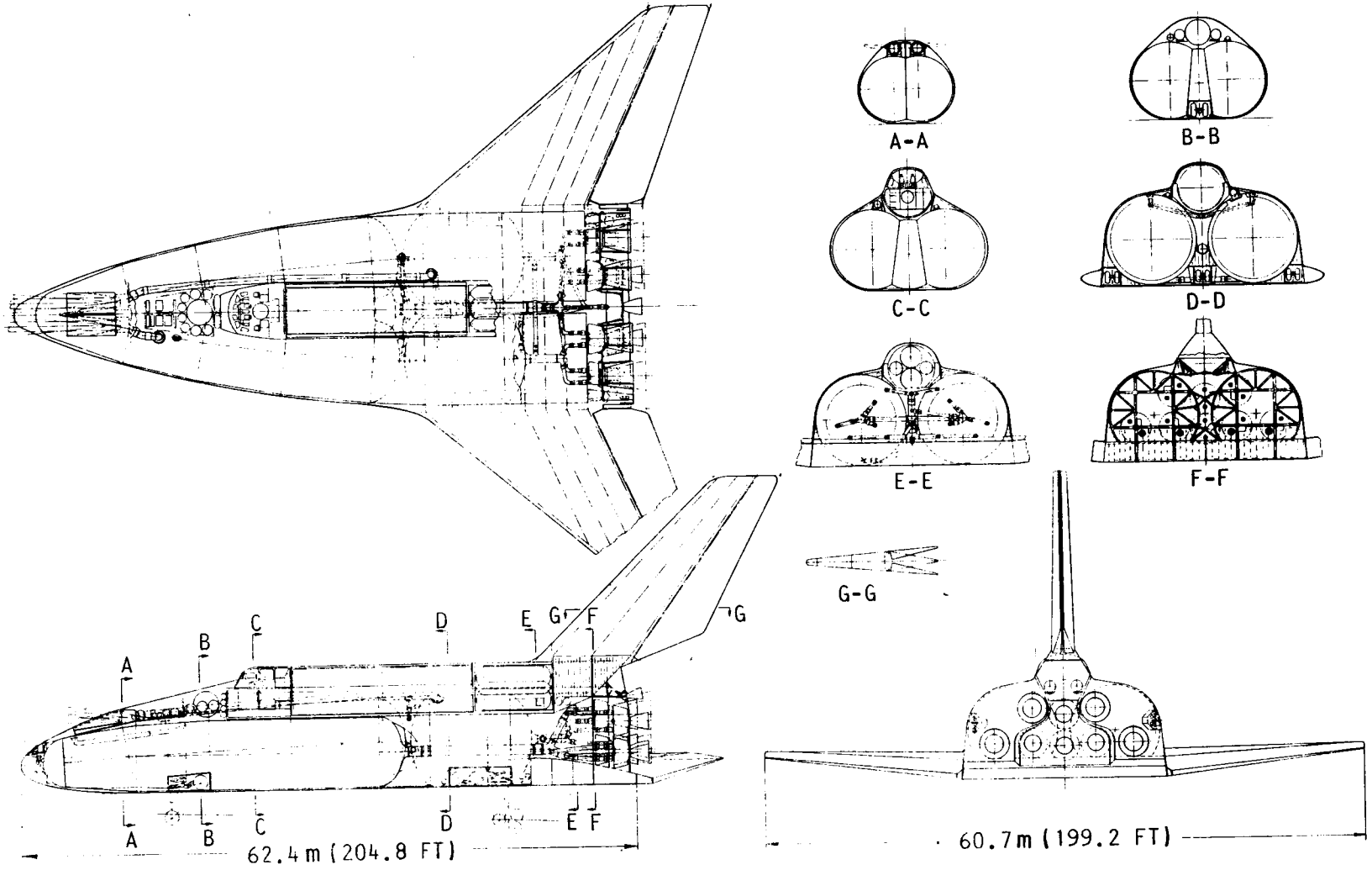

MARTIN MARIETTA

SSTO-HTOHL-IFF TURBOFAN TAKEOFF CONCEPT

THE CONFIGURATION IS SIMILAR TO THE VTOHL CONFIGURATION IN MOST ASPECTS, EXPECT THE FOLLOWING:

TURBOFAN ENGINE INSTALLATION - EIGHT HIGH BYPASS RATIO TURBOFAN ENGINES WITH ABOUT 50,000 POUNDS TAKEOFF THRUST EACH ARE INSTALLED IN BETWEEN PROPELLANT TANKS IN A RETRACTABLE MANNER. EACH ENGINE IS MOUNTED ON A VERTICAL PYLON STRUCTURE AND SURROUNDED BY A SQUARE CROSS SECTION NACELLE, THEN ALL EIGHT ATTACHED TO EACH OTHER TO FORM A CONTINUOUS UNIT. THE PYLONS ARE GUIDED THROUGH AN UPPER AND LOWER SHELF BEAM STRUCTURE, WHICH TAKE THE ENGINE THRUST LOAD INTO THE FUSELAGE STRUCTURE. EXTENSION AND RETRACTION ARE ACCOMPLISHED BY SYNCHRONIZED BALL-SCREW JACKS.

LANDING GEAR - DUE TO THE HIGH TAKEOFF WEIGHT, AN EIGHT WHEEL BOOGY MAIN GEAR WAS REQUIRED. IT IS LOCATED IN THE WINGS, ATTACHED CLOSE TO THE FRONT SPAR STRUCTURE AND RETRACTED AFT. THE RP-1 INTEGRAL FUEL TANKS FOR THE TURBOFAN ENGINES ARE LOCATED JUST OUTBOARD OF THE MAIN WHEEL WELL.

MAIN PROPULSION SYSTEM - THE ROCKET ENGINES ARE SIX FIXED POSITION 50:1 EXPANSION RATIO ENGINES, OFFSET BY TRUSS STRUCTURE TO THE REAR OF THE ENGINE MOUNT BEAMS, AND FOUR GIMBALED ENGINES WITH DUAL POSITION NOZZLES 55:1 - 160:1, MOUNTED ON THE BEAM STRUCTURE. DUE TO THE REQUIREMENT OF ROCKET THRUST ASSIST DURING THE LATTER PHASE OF THE REFUELING, THE LO_2 FEEDLINE OF THIS ONE ROCKET ENGINE FEEDS FROM THE LOW POINT OF ONE OF THE LO_2 TANKS. AS THE LO_2 TANKS ARE REFUELED WHILE PRESSURIZED, A VENT RELIEF VALVE, SET AT ABOUT NOMINAL TANK PRESSURE, IS PROVIDED.

REFUELING SYSTEM - THE REFUELING PORT FOR INFLIGHT TRANSFER OF LO_2 IS LOCATED BETWEEN TANKS ON THE LEFT HAND SHOULDER OF THE FUSELAGE NEXT TO THE PAYLOAD BAY. THE REFUELING BOOM FROM THE TANKER ENTERS THE RECEPTACLE FROM AN AVERAGE ANGLE OF 30 DEGREES. THE BOOM INTERNAL DIAMETER IS ABOUT .6 METERS (2 FEET). THE PROPELLANT COUPLING IS SELF-CLOSING AND REDUNDANT SHUTOFF VALUES ARE PROVIDED. A BOOM GUIDANCE SYSTEM IS REQUIRED.

SSTO-HTOHL-IFF TURBOFAN TAKEOFF CONCEPT

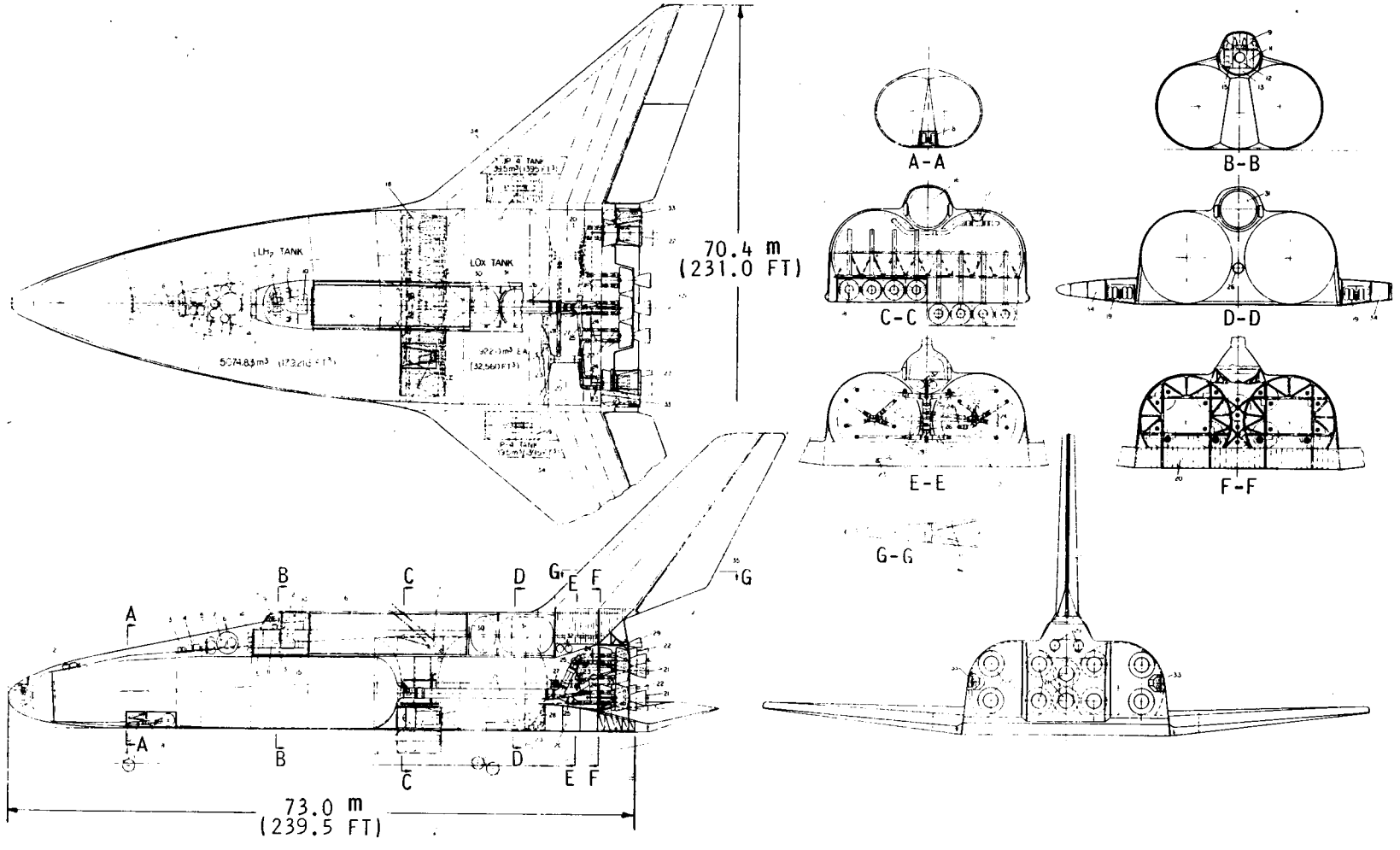

MARTIN MARIETTA

SSTO-HTOHL-IFF VEHICLE MASS PROPERTIES SUMMARY

	TURBOFAN TAKEOFF REFUEL LO_2	ROCKET TAKEOFF REFUEL LH_2 AND LO_2
DRY WEIGHT	743,362	480,595
LANDING WEIGHT WITHOUT PAYLOAD	757,176	491,519
PAYLOAD	4,000*	65,000
LANDING WEIGHT WITH PAYLOAD	822,176	556,519
ASCENT PROPELLANT	5,073,649	3,772,042
GLOW	5,978,196	4,387,811
TAKEOFF AND RENDEZVOUS PROPELLANT	249,532	318,761
RUNWAY WEIGHT	1,773,178	922,943

*FOR 65,000 POUND PAYLOAD, GLOW > 7 X 10^6 POUNDS

MARTIN MARIETTA

IFF TECHNOLOGY CONSIDERATIONS

EVALUATION OF THE INFLIGHT FUELED SSTO CONCEPT NECESSITATED INVESTIGATION INTO THE PHYSICAL AND OPERATIONAL REQUIREMENTS OF THE TANKER AIRCRAFT AND THE PROPELLANT TRANSFER MECHANISM. CURRENT INFLIGHT FUELING TECHNIQUES, ALTHOUGH GENERALLY APPLICABLE, MUST BE MODIFIED AND UPDATED TO EFFICIENTLY AND SAFELY RENDEZVOUS, HOOKUP AND TRANSFER THE LARGE QUANTITIES OF CRYOGENIC PROPELLANTS.

TIMELINE PENALTIES OR "HOLDS" THAT REFLECT ON THE ORBITAL VEHICLE SIZE OR DESIGN MUST BE ABSOLUTE MINIMUMS. EFFICIENT RENDEZVOUS AND HOOKUP REQUIRES PRECISION GUIDANCE AND NAVIGATIONAL INTEGRATION OF BOTH VEHICLES IN ADDITION TO AUTOMATIC DEPLOYMENT/ POSITIONING AND CONNECTION OF THE TRANSFER LINES. THE REQUIRED TWO LINES WILL BE MUCH MORE DIFFICULT TO CONNECT THAN ONE. THEY MUST BE STRUCTURALLY RIGID TO CARRY UNAVOIDABLE LONGITUDINAL LOADS. TOWING, HOWEVER, WOULD INTRODUCE UNACCEPTABLE LOCAL STRUCTURAL PENALTIES BECAUSE OF THE LARGE TENSION LOADS. THE TRANSFER LINES MUST ALSO BE MUTUALLY ALIGNED WITH SUITABLE PROVISIONS FOR THERMAL CONTRACTION AND HEAT TRANSFER. THE REQUIRED NO-LEAK DISCONNECTS AND THE HIGH CAPACITY PUMPS MUST BE DEVELOPED.

THE TANKER AIRCRAFT WILL BE QUITE LARGE AND COSTLY COMPARED TO EXISTING AIRCRAFT AND MAY REQUIRE RUNWAY MODIFICATIONS TO ALLOW HIGHER LANDING GEAR FOOTPRINT PRESSURES.

IFF TECHNOLOGY CONSIDERATIONS

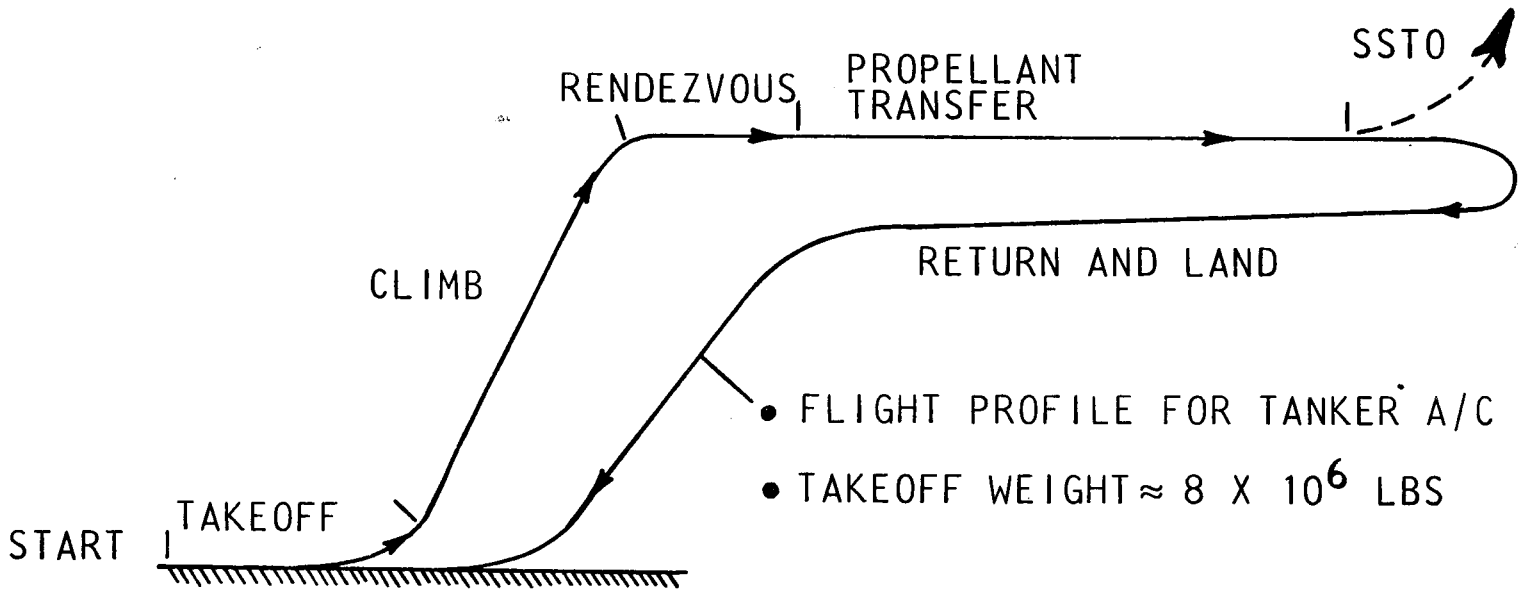

- FLIGHT PROFILE FOR TANKER A/C
- TAKEOFF WEIGHT $\approx 8 \times 10^6$ LBS

TECHNOLOGY AND OPERATIONAL CONSIDERATIONS

- GUIDANCE AND NAVIGATION FOR RENDEZVOUS AND FUEL TRANSFER
- INTEGRATED VEHICLE/ENGINE CONTROLS
- BOOM/TRANSFER LINES STRUCTURES, THERMAL CONTROL AND DEPLOYMENT
- HIGH FLOW RATE - LOW PRESSURE CRYOGENIC PUMPS
- LARGE NO-LEAK DISCONNECTS

MARTIN MARIETTA

VEHICLE CONCEPT COMPARISON SUMMARY

THE VEHICLE WEIGHT COMPARISON SHOWS DRY WING AND WET WING VEHICLES. NOTE THAT THE WET WING ADVANTAGE OF THE HTOHL VEHICLE REVERSES FOR THE VTOHL VEHICLE TO BECOME A DISADVANTAGE. THE HTOHL VEHICLE ACHIEVES THE DOUBLE ADVANTAGE OF PACKAGING EFFICIENCY COMBINED WITH LOAD RELIEF ON THE GROSS WEIGHT PULL-UP MANEUVER. THE WET WING ADVANTAGE SHOULD BE SIMILAR FOR THE HTOHL/IFF VEHICLE. THE TURBOFAN TAKEOFF INFLIGHT FUEL VEHICLE IS THE CONFIGURATION THAT IS REFUELED WITH LO_2 ONLY.

THE TECHNOLOGY CONSIDERATIONS OF THE THREE VEHICLES ARE THE VTOHL VEHICLE IS EXPECTED TO BE WITHIN NORMAL TECHNOLOGY GROWTH; THE HTOHL/SLED VEHICLE MUST FOCUS ATTENTION AND RESOURCES TO THE SLED AS WELL AS THE CRYOGENIC WING TANKAGE; THE HTOHL/IFF VEHICLE REQUIRES A TANKER AIRCRAFT OF 8 MILLION POUNDS GROSS IN ADDITION TO THE PROBLEMS OF RENDEZVOUS, RAPID TRANSFER OF BOTH PROPELLANTS, INTERNAL TANKAGE BAFFLING TO MINIMIZE FILLING DYNAMIC LOADS, AND THE CRYOGENIC WET WING TANKAGE DEVELOPMENT.

VEHICLE CONCEPT COMPARISON SUMMARY

- WEIGHTS COMPARISON

	VTOHL DRY WING	HTOHL/SLED DRY WING	HTOHL/SLED WET WING	HTOHL/IFF ROCKET T.O. DRY WING
DRY WEIGHT (POUNDS)	446,993	496,307	429,965	480,595
ASCENT PROPELLANT (POUNDS)	3,661,873	4,006,819	3,621,640	3,772,042
GLOW (POUNDS)	4,243,136	4,643,368	4,193,809	4,389,811
ALTERNATE CONCEPT	WET WING			TURBOFAN T.O.
GLOW (POUNDS)	4,500,000			>7,000,000

- TECHNOLOGY CONSIDERATIONS
  - VTOHL: EXPECTED TO BE WITHIN "NORMAL" TECHNOLOGY ACTIVITIES
  - HTOHL/SLED: CONCERNS - CRYOGENIC WET WING AND SLED TECHNOLOGIES
  - HTOHL/IFF: CONCERNS - RENDEZVOUS, PROPELLANT TRANSFER, CRYOGENIC WET WING AND TANKER AIRCRAFT TECHNOLOGIES

MARTIN MARIETTA

IV. TASK 2 - PROGRAM COST ANALYSIS

A. APPROACH

MARTIN MARIETTA

COST MODEL FLOW DIAGRAM

PROGRAMMED IN FORTRAN IV FOR THE CDC 6000 SERIES COMPUTER SYSTEM, COCOM II CALCULATES THE COST OF EACH WBS ELEMENT USING PREASSIGNED EQUATION FORMATS. EQUATIONS AND DATA ARE IN AN ARRAY/MATRIX FORMAT ENABLING THE PROGRAM TO DRAW ON DESIGN AND PRICING COEFFICIENTS, AND OTHER PROGRAMMATIC DATA. THE COST MODEL PROCEEDS THROUGH EACH COST ELEMENT, CALCULATING EACH ITEM AGAINST EITHER A CONSTRUCTED PRICING EQUATION OR A DISCRETE COST INPUT. THE OUTPUTS ILLUSTRATED ARE AVAILABLE FOR DETAILED LIFE CYCLE COST MODEL ANALYSES. THE DATA IS RETAINED FOR TRACEABILITY AND FURTHER ANALYSIS.

COST MODEL FLOW DIAGRAM

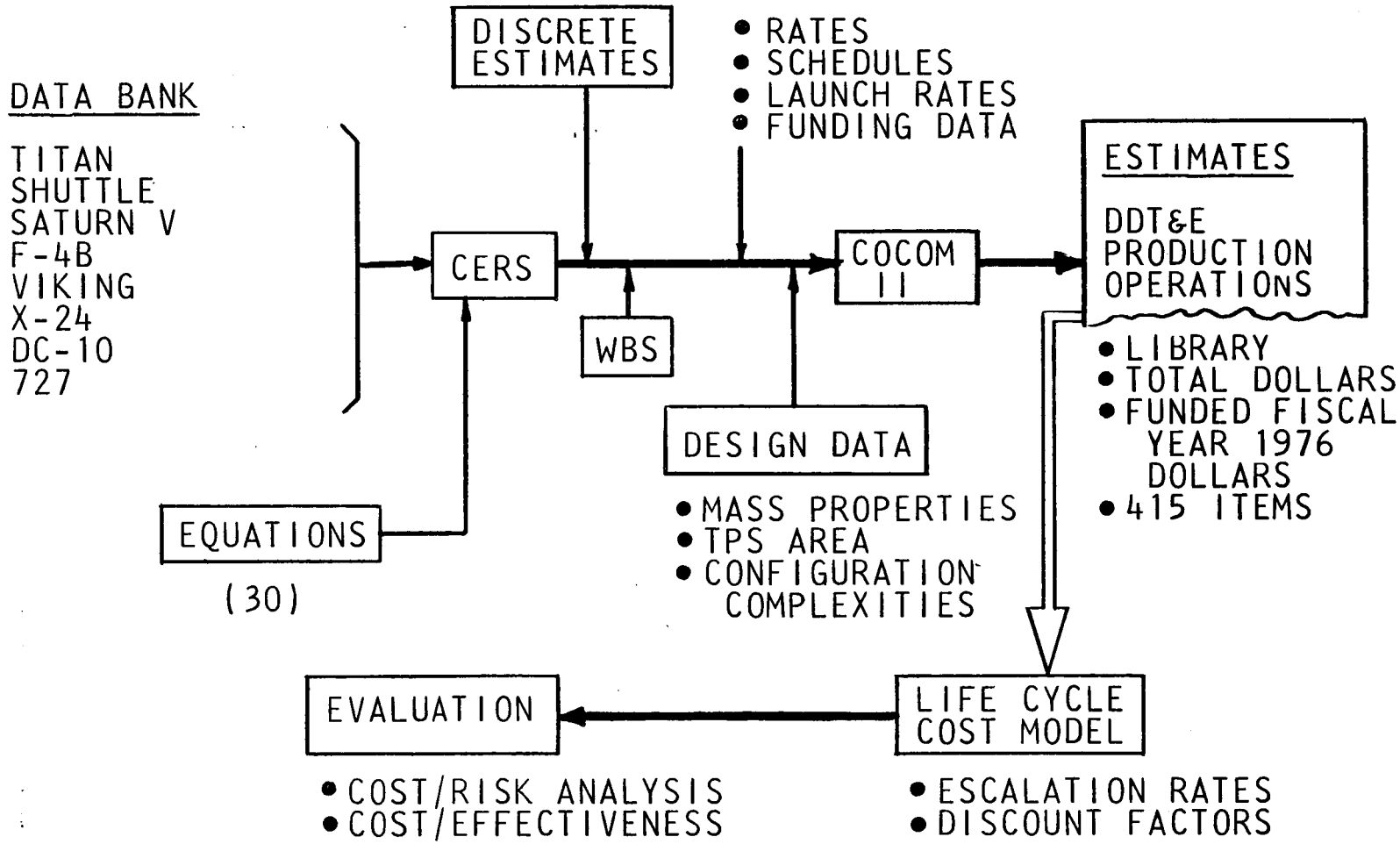

MARTIN MARIETTA

WORK BREAKDOWN STRUCTURE FOR SSTO SYSTEMS

THE WORK BREAKDOWN STRUCTURE (WBS) FOR THE SSTO SYSTEM IS BASED ON THE WBS FOR SPACE SHUTTLE. THIS CHART SUMMARIZES THE 419 ITEMS INCLUDED IN THE PRESENT SSTO WBS. THE SSTO COST MODEL HAS INCLUDED ITEMS DOWN TO LEVEL 7 FOR THE AIRFRAME SYSTEMS/ SUBSYSTEMS.

WORK BREAKDOWN STRUCTURE (WBS) FOR SSTO SYSTEMS

- 419 ITEMS ARE INCLUDED

LEVEL		
1	• SSTO SYSTEM	
2	• DESIGN AND DEVELOPMENT • PRODUCTION	• OPERATIONS
3	• PROGRAM MANAGEMENT • AIR VEHICLE	• SYSTEMS ENGINEERING • GSE, TESTS, FACILITIES, ETC
4-7 (SUMMARY)	• STRUCTURES • PROPULSION • AVIONICS • ECS • POWER • CREW • INTEGRATION, ASSEMBLY/CHECKOUT	• MANAGEMENT • SYSTEMS ANALYSIS • TEST HARDWARE • WIND TUNNEL • STATIC FIRE } TESTS • FLIGHT • TRAINING • LOGISTICS
CLASSES OF COSTS	• ENGINEERING • MATERIAL AND SUB-CONTRACT	• TOOLING • MANUFACTURING

MARTIN MARIETTA

SSTO SYSTEM DEVELOPMENT SCHEDULE

THIS CHART SHOWS A SUMMARY OF THE SSTO SYSTEM DEVELOPMENT PLAN.

ATP : AUTHORITY TO PROCEED

FMOF: FIRST MANNED ORBITAL FLIGHT

IOC : INITIAL OPERATIONAL CAPABILITY

O/D : OPERATIONAL DELIVERY

OV : ORBITAL VEHICLE

SUPPORTING R&D FOR SSTO WILL BE PERFORMED DURING THE NEXT 15 YEARS (1975 TO 1990). THESE ARE THE BASES FOR DESIGN AND MANUFACTURE OF SYSTEMS LEADING TO A FIRST FLIGHT IN 1994. A 15-YEAR FLIGHT PROGRAM DURATION IS CONSIDERED IN THE COSTING.

SSTO SYSTEM DEVELOPMENT SCHEDULE

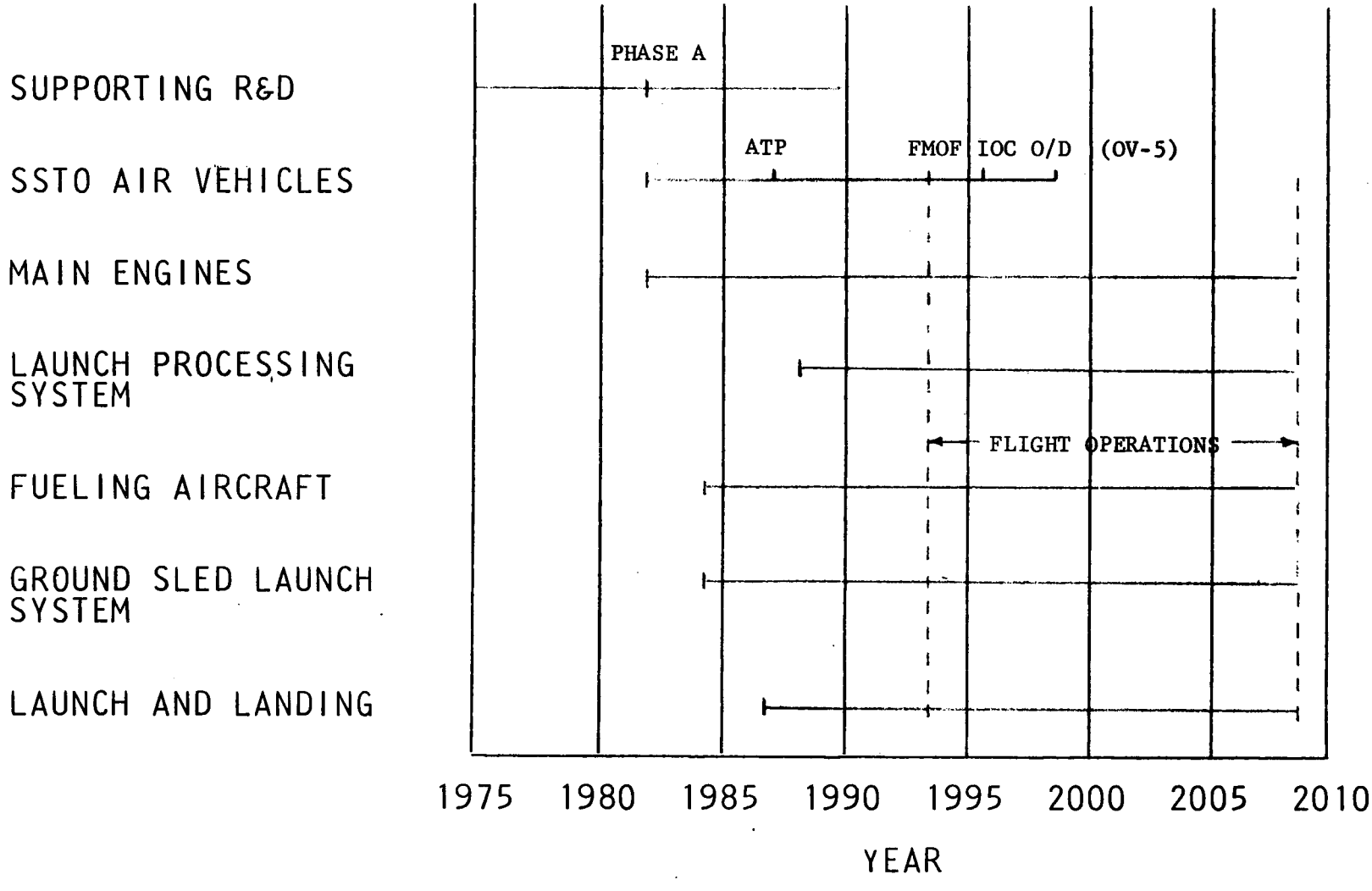

MARTIN MARIETTA

COST MODEL EQUATION

THE TWO BASIC EQUATIONS ILLUSTRATE THE CER AND THE DISCRETE COST INPUT ALGORITHMS.

THE ACCESS AREA COMPLEXITY FACTOR $F_1 = \left(\frac{4 \text{ X AREA OF HATCHES AND DOORS}}{\text{TOTAL WETTED AREA}}\right) + 1.$

THE DENSITY FACTOR $F_2 = \left(\frac{\text{TOTAL DRY WEIGHT, LBS}}{\text{TOTAL MOLD LINE VOLUME, FT}^3}\right)^{.25}$. THE DENSITY FACTOR IS USED IN THE DESIGN CER'S AND, AGAIN, THE LARGE SIZE OF THE VEHICLE MINIMIZES ITS EFFECT ON DESIGN AND DEVELOPMENT COSTS.

THE CONFIGURATION COMPLEXITY FACTOR $F_3 = 1$ FOR LAUNCH VEHICLES. THIS FACTOR REFLECTS VEHICLE COMPLEXITY, TYPE OF PARTS AND THEIR COMPLEXITY, AND IS TWO OR MORE FOR CURRENT AIRCRAFT.

THE MATERIAL FACTOR F_4 DEPENDS ON THE TYPE OF MATERIAL, RANGING FROM 1 FOR ALUMINUM STRUCTURES TO 2 FOR COMPOSITE STRUCTURES.

THE RATE CONSTANT R RELATES TO LABOR OR OVERHEAD RATES AND IS MULTIPLIED BY THE REFERENCE COST C_P IN HOURS OR DOLLARS. THE DESIGN PARAMETER W REPRESENTS EITHER WEIGHT OR AREA.

EACH OF THE ABOVE FACTORS AFFECTS THE ESTIMATING RELATIONSHIPS IN A DIFFERENT MANNER. SOME OF THE CER'S EXCLUDE ONE OR MORE OF THE FACTORS IF NOT PERTINENT TO THAT SECTION. IN SEVERAL INSTANCES, A SERIES OF FACTORS FOR SPACE SHUTTLE IS REDUCED AS MUCH AS 50% FOR SSTO.

COST MODEL EQUATION

$$C = F_1 \times F_2 \times F_3 \times F_4 \times R \times C_P(W)^{\alpha} \times (Q)^{\beta} \text{ OR } C = R \times C_P$$

WHERE:

F_1 = COMPLEXITY FACTOR - ACCESS AREA

F_2 = DENSITY FACTOR - RESULTANT

F_3 = CONFIGURATION COMPLEXITY FACTOR

F_4 = MATERIAL COMPLEXITY FACTOR

R = RATE CONSTANT

C_P = REFERENCE COST

W = DESIGN PARAMETER

α = SCALING EXPONENT

Q = PRODUCTION QUANTITY

β = LEARNING CURVE

MARTIN MARIETTA

IVB. GUIDELINES AND RESULTS

MARTIN MARIETTA

GENERAL COST ESTIMATING GUIDELINES

ESCALATION RATES OVER THE PAST FOUR YEARS VARIED BETWEEN 6% AND 12%. DATA RELATED TO MATERIAL AND SUBCONTRACT COSTS DERIVED IN 1971 WERE UPDATED TO 1975 AT THE RATE OF 8% PER YEAR. LABOR RATES WERE ALSO ESCALATED AT 32% PER YEAR. G&A RATES WERE NOT ESCALATED.

ADVANCED CER METHODOLOGY, RELATIVE TO SPACE SHUTTLE TECHNOLOGY, WAS DEVELOPED BY MCDONNELL/DOUGLAS (MDAC) ON THE OPTIMIZED PERFORMANCE COST/DESIGN METHODOLOGY (NASA 1969). THIS DATA WAS IMPROVED UPON DURING THE SPACE SHUTTLE PHASE A STUDY IN WHICH MARTIN MARIETTA PARTICIPATED AS A SUBCONTRACTOR.

ORDINARY PRIME CONTRACTOR APPROACH DICTATES A 50% PROGRAM SUBCONTRACT DIRECTION, WITH THE PRIME CONTRACTOR RETAINING THE MANAGEMENT, SYSTEMS ENGINEERING AND INTEGRATION TOGETHER WITH SEVERAL SUBSYSTEMS SUCH AS STRUCTURES, TPS, LANDING GEAR, ELECTRICAL, FINAL ASSEMBLY AND CHECKOUT.

VEHICLE DESIGN LIFE HAS BEEN SET AT 500 FLIGHTS WITH AN ENGINE LIFE OF 250 CYCLES. OUR LAUNCH INTERVAL OF 22.6 DAYS PER VEHICLE EASILY MEETS THE ENGINE DESIGN LIFE CRITERIA WITH 172 CYCLES MAXIMUM.

SEPARATION OF COST CLASSIFICATIONS IDENTIFIES POTENTIAL IMPROVEMENT AREAS. IDENTIFIABLE RATE STRUCTURES ALLOW FUTURE COST ESTIMATE UPDATES. WE USED A RATE TYPICAL OF A LARGE AIRCRAFT COMPANY IN THE 1971 TIME FRAME, UPDATED TO FISCAL YEAR 1976 BY ADDING 32%. OVERHEAD MAY HAVE ADVANCED AT A LESSER RATE THAN DIRECT LABOR DUE TO THE NATURE OF THE COST ELEMENTS; HOWEVER, THE DIFFERENCE CAN BE TREATED AS A SMALL CONTINGENCY.

THE OPERATIONAL SPACE SHUTTLE WBS WAS REWORKED TO CONFORM TO BUDGET STANDARDS AS OUTLINED IN JSC 07700, VOLUME XVI. A TASK OUTLINE WITH BUDGET ALLOCATIONS IS PRESENTED UNDER SEPARATE COVER.

GENERAL COST ESTIMATING GUIDELINES

- MAJOR PORTION OF COST DATA AVAILABLE FOR FISCAL YEAR 1972 PHASE A SHUTTLE
- FISCAL YEAR 1972 COSTS ESCALATED 32% FOR FISCAL YEAR 1976 BASE
- LARGE PRIME CONTRACTOR INVOLVEMENT
- DESIGN LIFE OF VEHICLES - 500 FLIGHTS (ENGINES - 250 CYCLES)
- ENGINES AND FACILITIES PRICED AS GFE
- LABOR AND OVERHEAD RATES TYPICAL OF AIRCRAFT INDUSTRY
- ALL COSTS IN FISCAL YEAR 1976 DOLLARS
- 10% FEE INCLUDED
- CLASSES OF COSTS

- ENGINEERING	$23.80/HOUR
- TOOLING	$20.50/HOUR
- MANUFACTURING	$16.55/HOUR
- MATERIALS, SUBCONTRACTS, GFE	27.5%, 3.5%, 0% OVERHEAD

- WBS ESTABLISHED FOR RDT&E, PRODUCTION AND OPERATIONAL PROGRAMS

MARTIN MARIETTA

RDT&E COST GUIDELINES

- SCHEDULE NOT RESTRICTIVE
- PROGRAM MANAGEMENT - 6% FACTOR
- SYSTEMS ENGINEERING AND INTEGRATION - 12% FACTOR
- FACILITY CONSTRUCTION
  - ASSUMES MAXIMUM USE OF EXISTING BASE FACILITIES
  - ADDS TWO PADS EACH AT KSC AND WTR
  - ADDS ONE ORBITER MAINTENANCE FACILITY EACH AT KSC AND WTR
- TEST PROGRAM
  - INCLUDES THE FOLLOWING HARDWARE
    - ONE AND ONE-HALF GROUND TEST ARTICLES
    - ONE FLIGHT TEST ARTICLE - REFURBISHED AND TRANSFERRED
    - ONE MOCKUP
  - NORMAL TESTS: STATIC FIRE, HORIZONTAL (TAXI) AND VERTICAL
- AGE - THREE SETS STRUCTURES AND HANDLING - MODIFIED SERVICING, TEST AND CHECKOUT
- SPARES - FLIGHT TEST SPARES ONLY

MARTIN MARIETTA

COST ESTIMATING RELATIONSHIPS, DDT&E PROGRAM

THREE SETS OF CERS THAT REPRESENT OUR APPROACH TO ESTIMATING ARE ILLUSTRATED BELOW. WE HAVE SELECTED VALUES OF COMPLEXITY FACTORS CONSISTENT WITH SSTO DESIGN AND TOOLING REQUIREMENTS. THE BODY STRUCTURE LABOR COSTS IN HOURS PER POUNDS ARE CORRELATED BY USING SIVB LOX/HYDROGEN TANKAGE AND F-4B AIRCRAFT PRODUCTION DATA. DESIGN COMPLEXITY FACTORS INCREASE STRUCTURES COSTS 2.4 AND TOOLING FACTORS 2.8 TIMES THE SIVB BASELINE. ENGINEERING TEST DOES NOT REQUIRE COST ADJUSTMENTS RELATED TO CONFIGURATION COMPLEXITY FACTORS.

COST ESTIMATING RELATIONSHIPS, DDT&E PROGRAM

	WEIGHT OR AREA	TOTAL (DOLLARS IN MILLIONS)	COSTS DOLLARS/ POUND	HOURS/ POUND
BODY STRUCTURE	116,299 LBS			
DESIGN		$ 58	$ 499	21
TEST		91	782	33
TOOLING		278	2,390	116
MATERIALS AND SUBCONTRACT		18	155	
AERODYNAMIC CONTROL SURFACE	63,420 LBS			
DESIGN		93	1,466	62
TEST		56	883	37
TOOLING		224	3,532	172
MATERIALS AND SUBCONTRACT		14	220	
THERMAL PROTECTION SYSTEM	45,166 SQ FT			
DESIGN		21	465	20
TEST		53	1,174	49
TOOLING		21	465	23
MATERIALS AND SUBCONTRACT		18	399	

APPLICABLE TO ALL SSTO CONCEPTS

MARTIN MARIETTA

DESIGN, DEVELOPMENT, TEST AND ENGINEERING COSTS

COST ELEMENT	VTO	HTO (SLED) DRY	HTO (SLED) WET*	IFF
	DOLLARS IN MILLIONS (FISCAL YEAR 1976)			
PROGRAM MANAGEMENT	$ 316	$ 396	$ 318	$ 332
SYSTEMS ENGINEERING AND INTEGRATION	564	618	566	591
AIR VEHICLE DESIGN	2,286	2,547	2,313	2,441
GROUND SUPPORT EQUIPMENT	296	314	314	296
TRAINING	172	182	182	172
SYSTEMS TEST AND EVALUATION				
**TEST HARDWARE	916	949	854	928
TEST OPERATIONS	390	411	411	390
SLED VEHICLE DESIGN		122	122	
LOGISTICS	45	48	48	45
FACILITIES	466	756	756	466
FEE	436	481	439	459
TOTAL	$5,886	$6,824	$6,323	$6,120

*LOX IN WING
**2.5 EQUIVALENT AIR VEHICLES

MARTIN MARIETTA

PRODUCTION COST GUIDELINES

- FOUR UNITS COSTED
- 95% LEARNING CURVE APPLIED - NO CREDIT FOR TEST ARTICLES
- FACTORS WERE DERIVED FROM TITAN EXPERIENCE
  - SUSTAINING TOOLING - 10%
  - SUSTAINING ENGINEERING - 8%
  - FINAL ASSEMBLY, INSTALLATION AND CHECKOUT - 25%
- NORMAL MANUFACTURING PRORATES CONSIDERED AS OVERHEAD

MARTIN MARIETTA

COST ESTIMATING RELATIONSHIPS (FIRST ARTICLE COSTS)-PRODUCTION

COSTS IN HOURS AND DOLLARS PER POUND ILLUSTRATED IN THE TABLE BELOW DEPICT THE SOLUTION OF DESIGN PARAMETERS, COSTS AND COMPLEXITY FACTORS USING OUR GENERAL EQUATION. DERIVATION OF HOURS PER UNIT VALUE CAN BE ARRIVED AT BY DIVIDING THE LABOR COSTS BY THE WEIGHT TIMES THE LABOR RATE ($18.55/HOUR). IT IS IMPORTANT TO NOTE THAT COMPARISONS OF HOURS PER POUND BETWEEN ELEMENTS ARE INVALID DUE TO EXPONENTIAL EQUATION RELATIONSHIP.

SIVB STRUCTURES COST PER POUND IS DISPLAYED TO PROVIDE A POINT OF CORRELATION WITH THE BODY STRUCTURE. GIVEN A COMPLEXITY FACTOR OF 1.8 FOR THE BODY STRUCTURE, BOTH RELATE TO 190 HOURS $(W)^{.766}$.

COST ESTIMATING RELATIONSHIPS (FIRST ARTICLE COSTS) PRODUCTION

SSTO - VTO	WEIGHT OR AREA	TOTAL DOLLARS IN MILLIONS	HOURS/ UNIT	MATERIALS DOLLARS/UNIT
CREW STATION	3,200 LB	$ 5.6	94	$125
BODY STRUCTURE	116,299 LB	48.4	22	31
AERODYNAMIC CONTROL SURFACES	63,420 LB	25.6	22	25
TPS	45,126 FT^2	49	6	128
LANDING GEAR	15,343 LB	5.8	21	22
SIVB STRUCTURES	19,165 LB		18	$ 16

MARTIN MARIETTA

PRODUCTION COSTS

VARIATIONS IN VEHICLE CONCEPT PRODUCTION COSTS DO NOT EXCEED 10%. THE BASIC CONCEPTS OF CONSTRUCTION ARE SIMILAR WITH THE EXCEPTION OF THE LOX IN THE WING (WET) CONCEPT. THE COSTS FOR THIS CONCEPT REFLECT THE LIGHTEST VEHICLE WEIGHT WITH SEVERAL ELEMENTS REMAINING FIXED, NAMELY, AVIONICS, ENVIRONMENTAL CONTROL AND LIFE SUPPORT. THE COSTS EXCLUDE SLED AND TANKER PRODUCTION COSTS. THE VERTICAL TAKEOFF VEHICLE PROPULSION COSTS REFLECT THE IMPACT OF TEN ENGINES VERSUS EIGHT FOR THE HTO AND IFF VEHICLE CONCEPTS.

PRODUCTION COSTS

COST ELEMENT	VTO	HTO (SLED) DRY	HTO (SLED) WET*	IFF
	DOLLARS IN MILLIONS (FISCAL YEAR 1976)			
STRUCTURES	$ 307	$ 368	$ 310	$ 346
THERMAL PROTECTION	39	51	37	39
LANDING GEAR	22	25	22	39
PROPULSION	320	252	282	251
AVIONICS	101	101	101	101
ECLS	28	28	28	28
POWER, HYDRAULICS	150	150	150	150
FINAL ASSEMBLY AND CHECKOUT	181	200	181	195
SUSTAINING ENGINEERING	41	46	41	45
SUSTAINING TOOLING	52	57	51	57
FEE	100	111	100	108
TOTAL	$1,341	$1,389	$1,273	$1,359
FIRST ARTICLE COST	$ 366	$ 379	$ 349	$ 371

*LOX IN WING

MARTIN MARIETTA

OPERATIONAL COST GUIDELINES

- COSTS IN FISCAL YEAR 1975 DOLLARS
- SPACE SHUTTLE PROGRAM, JSC 07700, VOLUME XVI, "COST PER FLIGHT PARAMETERS CONTROL DOCUMENT", USED FOR BASELINE VALUES (CHANGE 1, SEPTEMBER 1975)
  - DEFINES REQUIREMENTS
  - ESTABLISHES RESPONSIBILITIES
  - DEFINES PROCEDURES
  - EXCLUDES: PAYLOAD COSTS, ADMINISTRATIVE AND PROGRAM MANAGEMENT PERSONNEL, CERTAIN FACILITY, UTILITY AND GROUND SYSTEM OPERATIONAL COSTS
- SIXTEEN-DAY TURNAROUND TIME; 1710 TOTAL FLIGHT ATTEMPTS, FIFTEEN-YEAR OPERATIONS SPAN
- SRB/ET MANPOWER COSTS (36%) WERE ELIMINATED FOR SSTO (FROM SAMSO/AEROSPACE STUDY)

MARTIN MARIETTA

OPERATIONS COSTS PER FLIGHT

SPACE SHUTTLE OPERATIONS COSTS HAVE BEEN A BASIS FOR DERIVING SSTO OPERATIONS COSTS. THE SHUTTLE PROGRAM CONTROL DOCUMENT IS REFERENCED ON THE VIEWGRAPH. SHUTTLE COSTS ARE SHOWN FOR COMPARISON WITH SSTO COSTS. IN DERIVING SSTO COSTS, ANTICIPATED CHANGES IN WBS CONTROL AND COST ELEMENT STRUCTURE HAVE BEEN ANTICIPATED.

THE SHUTTLE BASELINE PROGRAM COST OF 10.45 MILLION WAS UPDATED TO FISCAL YEAR 1976 DOLLARS BY A FACTOR OF 32%. PROPELLANT QUANTITY REQUIREMENTS WERE DERIVED FROM NASA/KSC ENGINEERING INFORMATION. PROPELLANT AND GAS COSTS WERE DERIVED FROM INHOUSE DATA, LINDE CORPORATION AND THE USAF/SAMSO LAUNCH VEHICLE BRANCH. THE RELATIVE COSTS OF THE SSTO CONCEPTS VARY DIRECTLY WITH THE PROPELLANTS REQUIRED. OTHER VARIATIONS DEPEND UPON TANKER OPERATIONS, ENGINE QUANTITIES OR SLED OPERATIONS.

MANPOWER AND TASK ASSIGNMENTS OF NASA/KSC, NASA/JSC AND CONTRACTOR WORD STATEMENTS ON THE SPACE SHUTTLE PROGRAM FORM A BASIS FOR OUR ESTIMATES. IT IS IMPORTANT TO UNDERSTAND THE INCLUSIONS AND EXCLUSIONS IN DETAIL TO ARRIVE AT A VALID PROGRAM UNIT COST PER FLIGHT.

OPERATIONS COSTS PER FLIGHT

	SPACE SHUTTLE 1) FY '72 $	SPACE SHUTTLE 1) FY '76 $	VTO FY '76 $	HTO (SLED) FY '76 $ DRY	HTO (SLED) FY '76 $ WET*	IFF FY '76 $
KSC CIVIL SERVICE	.51	.67	.605	.605	.605	.605
LAUNCH OPERATIONS	2.00	2.75	2.852	3.05	2.95	3.004
FLIGHT OPERATIONS (JSC)	2.21	2.92	2.627	2.627	2.627	2.627
REFURBISHMENT	.42	.55	.300	.300	.3	.3
SOLID ROCKET BOOSTER	3.33	4.40				
EXTERNAL TANK	1.75	2.31				
ENGINES	.23	.30	.21	.168	.168	.168
SLED				.022	.022	
TANKER						.342
TOTALS	10.45	13.9	6.594	6.772	6.672	7.046

DOLLARS IN MILLIONS

1) CONTROL DOCUMENT, JSC 07700, VOLUME XVI

*LOX IN WING

MARTIN MARIETTA

COST RESULTS

DDT&E COST DIFFERENCES REFLECT SLED HARDWARE AND FACILITY COST INCREASES AND A LARGER, MORE COMPLEX IFF VEHICLE.

PRODUCTION COSTS INDICATE VERY LITTLE DIFFERENCE AMONG VEHICLE CONCEPTS. A SMALL VEHICLE UNIT COST OF ± $340 MILLION DOLLARS RESULTS FROM A CUMULATIVE AVERAGE FOR FOUR VEHICLES. THIS UNIT COST IS APPROXIMATELY THE SAME AS FOR THE CURRENT SPACE SHUTTLE.

OPERATIONS COST DIFFERENCES RESULT FROM SLED AND TANKER OPERATIONS BEING DIFFERENT FROM THE VTO COSTS. THE DDT&E AND PRODUCTION COSTS OF THE TANKER AIRCRAFT HAVE NOT BEEN CONSIDERED IN TASK 2 FOR THE INFLIGHT FUELED (IFF) CONCEPT.

LIFE CYCLE COST RESULTS

DOLLARS IN MILLIONS
(FISCAL YEAR 1976)

	VTO	HTO (SLED) DRY	HTO (SLED) WET*	IFF
DDT&E	$ 5,886	$ 6,824	$ 6,323	$ 6,120
PRODUCTION	1,341	1,389	1,273	1,360
OPERATIONS	11,276	11,580	11,409	12,049
TOTALS	$18,503	$19,793	$19,005	$19,529

*LOX IN WING

MARTIN MARIETTA

PERCENTAGE COSTS COMPARISONS

THIS CHART COMPARES PERCENTAGES OF OPERATIONS, DEVELOPMENT (DDT&E) AND FLEET (A/C) COSTS FOR SSTO AND SHUTTLE. THE SHUTTLE DATA ARE TAKEN FROM A NASA DOCUMENT WHEREAS THE SSTO DATA ARE RESULTS FROM OUR PRESENT COST ANALYSES.

OPERATIONS COSTS BECOME A LARGER PERCENT OF TOTAL COSTS AS THE NUMBER OF FLIGHTS INCREASE AND/OR AS DDT&E AND FLEET COSTS DECREASE. A GOAL IS TO INCREASE THE PERCENT OF OPERATIONS COSTS LEADING TO A SMALLER COST PER LAUNCH. FOR SSTO, FLEET COSTS ARE ONLY 7% OF TOTAL COSTS, PRIMARILY A RESULT OF PROJECTED RESEARCH AND DDT&E ACTIVITIES LEADING TO EFFICIENT EARTH-ORBITAL-TRANSPORTATION VEHICLE DESIGN AND MANUFACTURE.

PERCENTAGE COSTS COMPARISONS

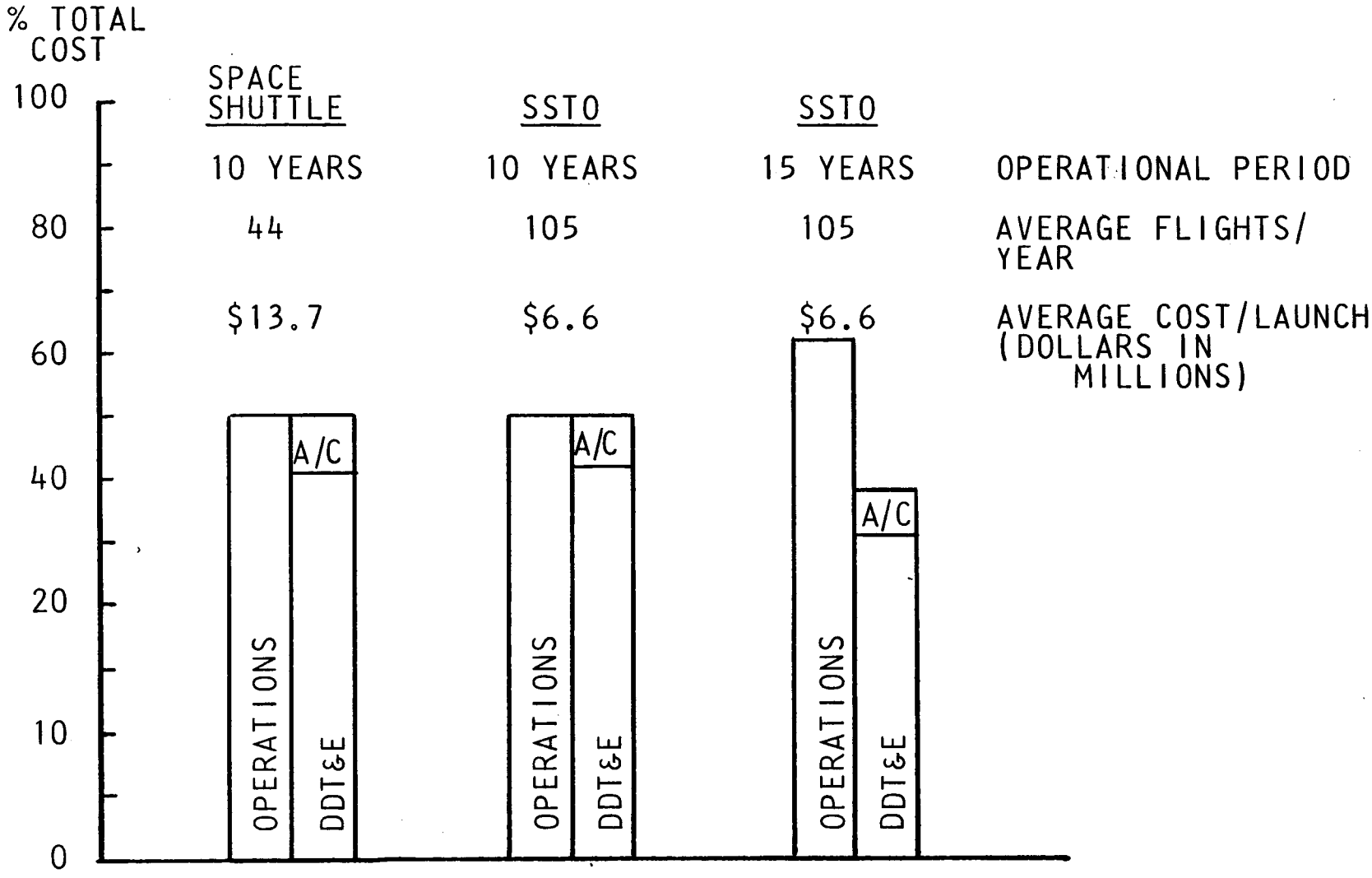

MARTIN MARIETTA

COST SENSITIVITIES

PRODUCTION COSTS

IF SCHEDULES AND PROGRAM VALUES WERE ORGANIZED TO OPTIMUM PRODUCTION VALUES AND ALL VEHICLES COULD BE BUILT ON AN ASSEMBLY LINE BASIS, THE LEARNING CURVE VALUES POSSIBLY COULD BE IMPROVED. A 10% IMPROVEMENT WOULD SAVE 21% OF THE PRODUCTION COSTS ($283 MILLION).

AS IMPORTANT AS THE COST RELATIVE TO OMITTING A VEHICLE IS THE COST OF ADDING A VEHICLE FOR INCREASED TRAFFIC OR OTHER MILITARY REASONS - $307 MILLION DOLLARS - IS CHEAPER THAN A SPACE SHUTTLE ORBITER.

OPERATIONS COSTS

INCREASING THE TRAFFIC MODEL TO THE DESIGN LIMIT OPTIMIZES THE PROGRAM VALUE OF A POUND OF PAYLOAD IN ORBIT TO THE HIGHEST DEGREE. A TURNAROUND TIME OF ELEVEN DAYS ALLOWS FOR 33.18 FLIGHTS PER YEAR PER ORBITER. EXTENSIONS OF THIS NUMBER TIMES FIVE ORBITERS TIMES FIFTEEN YEARS EQUALS 2489 FLIGHTS OR 166 FLIGHTS PER YEAR. THE TOTAL VALUE FOR 1710 FLIGHTS ($18.5 BILLIONS [1710 X 65K]) = $166. AT 2500 FLIGHTS, THE VALUE EQUALS $145/ POUND.

ASTRONAUT TRAINING, SIMULATOR OPERATIONS, MISSION CONTROL AND OTHER HOUSTON/JSC FUNCTIONS WERE REDUCED 10% FOR OUR ADVANCED CONCEPTS COST ESTIMATES DUE TO A HIGHER LAUNCH RATE. IN LINE WITH THE ADVENT OF AIRCRAFT PHILOSOPHY AND WITH STUDY DATA VALIDATING A NEW APPROACH, A 50% REDUCTION COULD REDUCE $2.3 BILLION FROM PROGRAM OPERATIONS COSTS.

THE COSTS PRESENTED ALWAYS REFLECT, TO THIS POINT, COSTS FOR LAUNCH ATTEMPTS. SUCCESSFUL LAUNCHES REFLECT MISSION SUCCESSES AND THE PREMISE OF INCREASING THIS PERCENTAGE 2.5% DOES DECREASE THE PROGRAM $3.5 MILLION OR $184,000 PER LAUNCH.

COST SENSITIVITIES

CHANGE	Δ COSTS (DOLLARS IN MILLIONS)
• LEARNING CURVE (FROM 95% TO 85%) (VTO)	- $ 283
• OMIT LAST VEHICLE (VTO)	- 307
• INCREASE TRAFFIC MODEL TO 2500 FLIGHTS + TURNAROUND TIME = 11 DAYS + $166/POUND TO $145/POUND	+ 5,141
• REDUCE JSC OPERATIONS 50%	- 2,348
• INCREASE SUCCESS RATIO TO 95% FROM 92.5%	- 315

MARTIN MARIETTA

IVC. LIFE CYCLE COST METHODOLOGY AND RESULTS

MARTIN MARIETTA

BASIC COSTS (FISCAL YEAR 1976 DOLLARS)

DDT&E + PRODUCTION + OPERATIONS

⇩

ESCALATION: AVERAGE PROJECTION 8%/YEAR

DISCOUNTING: 10% PER YEAR

COST VARIATIONS: +10%, -5%

⇩

LIFE CYCLE COSTS

- YEAR-BY-YEAR
- CUMULATIVE

MARTIN MARIETTA

LIFE CYCLE CUMULATIVE COSTS - VTOHL

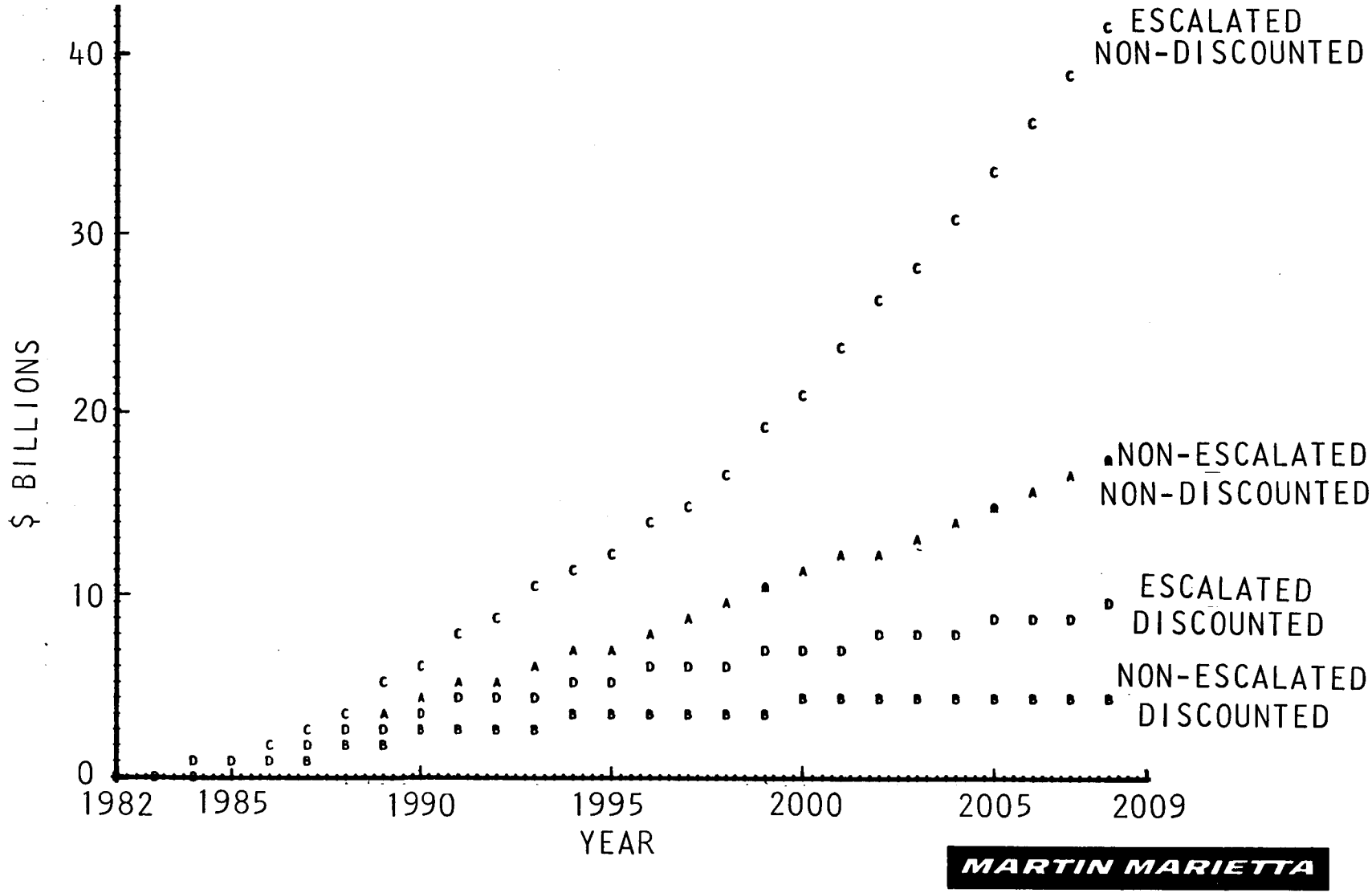

MARTIN MARIETTA

LIFE CYCLE CUMULATIVE COSTS - HTO (SLED)

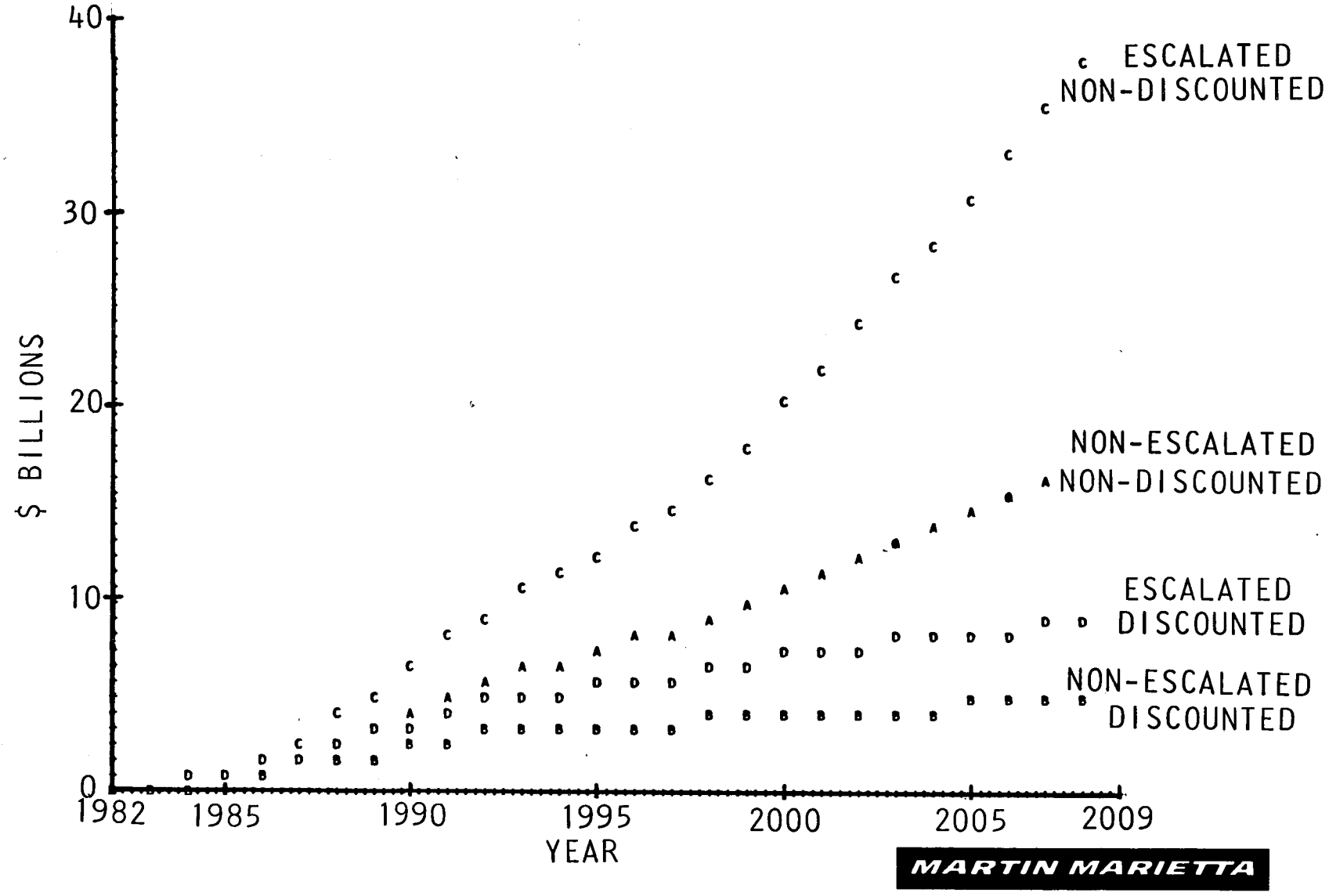

LIFE CYCLE CUMULATIVE COSTS - IFF

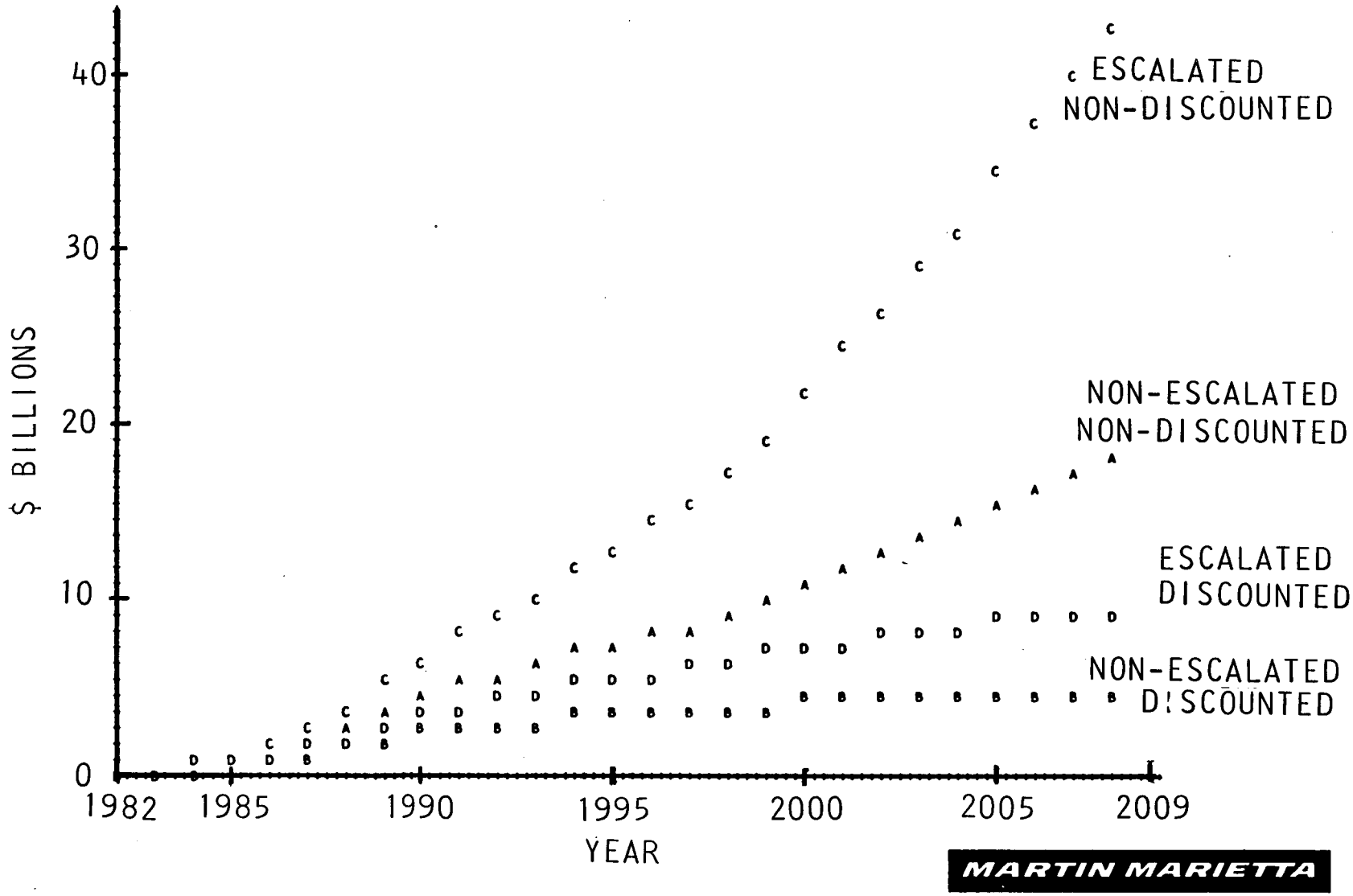

SUMMARY COMPARISON OF VEHICLE CONCEPTS, WEIGHTS AND COSTS

WEIGHTS AND COSTS ARE SUMMARIZED ON THIS CHART. DRY WEIGHT IS A FIGURE OF MERIT FOR COMPARING VEHICLE CONCEPTS. OUR RESULTS SHOW THIS PARAMETER IS LEAST FOR THE HTO (SLED) CONCEPT. TOTAL PROGRAM COSTS AND THE COST PER POUND OF PAYLOAD IN ORBIT, HOWEVER, ARE OTHER FIGURES OF MERIT. THESE ARE LEAST FOR THE VTOHL CONCEPT.

A MISSION SUCCESS FACTOR OF 95% IS USED FOR THE VTOHL. THIS IS BASED ON THE SPACE SHUTTLE MISSION SUCCESS FACTOR OF 92.5% INCREASED BY JUDGEMENT CONSIDERATIONS. IMPROVEMENTS ARE EXPECTED BECAUSE

- SSTO WILL HAVE AN ADDITIONAL 15 TO 20 YEARS EXPERIENCE IN TECHNOLOGY AND SHUTTLE FLIGHTS.
- SSTO WILL HAVE A HIGHER FLIGHT RATE THAN SHUTTLE AND, THEREFORE, EXPOSE AND SOLVE FLIGHT PROBLEMS IN A SHORTER TIME SPAN.
- SSTO WILL USE SHUTTLE TECHNOLOGY IN VARIOUS SUBSYSTEMS, THEREFORE, MINIMIZING NEW HIGH-RISK TECHNOLOGY ITEMS.
- THE VTOHL IS A SINGLE STAGE FLIGHT SYSTEM.

A MISSION SUCCESS FACTOR OF 92.5% IS USED FOR THE SLED AND IFF CONCEPTS BECAUSE THE SLED OR THE TANKER AIRCRAFT INTRODUCES RISKS WHICH MAY DEGRADE SUCCESS SIMILAR TO SHUTTLE ET/SRM STAGES.

SUMMARY COMPARISON OF VEHICLE CONCEPTS, WEIGHTS AND COSTS

	VTOHL	HTO (SLED) DRY WING	HTO (SLED) WET WING	IFF
DRY WEIGHT (POUNDS)	446,993	496,307	429,965	480,595
GLOW (POUNDS)	4,243,136	4,643,368	4,193,809	4,389,811
TOTAL PROGRAM COSTS				
FISCAL YEAR 1976 (DOLLARS IN BILLIONS)	18.5	19.8	19.0	19.5
ESCALATED 8% DISCOUNTED 10%	9.4	10.0		9.8
MERIT INDEX* (DOLLARS/POUND)				
FISCAL YEAR 1976 DOLLARS**	106.8	112.6	111.0	117.2
ESCALATED/DISCOUNTED	36.1	37.5		39.2

*(OPERATIONS COSTS)/(MISSION SUCCESS FACTOR)(NO. FLIGHTS)(PAYLOAD)

**CORRESPONDING SHUTTLE INDEX IS 231

MARTIN MARIETTA

V. TASK 3 - TECHNOLOGY ASSESSMENT APPROACH

MARTIN MARIETTA

TASK 3 OBJECTIVES

THE TASK 3 ADVANCED TECHNOLOGY ASSESSMENT HAS THE GOAL OF IDENTIFYING TECHNOLOGY AREAS (I.E., R&D PROGRAMS) OFFERING THE GREATEST POTENTIAL PAYOFF FROM R&D FUNDING. THIS FUNDING IS APPLIED TO TECHNOLOGY PROGRAMS FOCUSED ON ADVANCED EARTH-ORBIT TRANSPORTATION SYSTEMS. THE TECHNOLOGY AREAS TO BE PERTURBED ARE SELECTED BASED ON POTENTIAL IMPROVEMENTS IN TECHNOLOGY PARAMETERS WHICH LEAD TO SIGNIFICANT REDUCTIONS IN VEHICLE DRY WEIGHT.

TASK 3 OBJECTIVES

- IDENTIFY TECHNOLOGY AREAS OFFERING GREATEST POTENTIAL PAYOFF
- PERTURB PARAMETERS AND FUNDING
- DEFINE IMPACT OF VARIOUS R&D FUNDING LEVELS FOR FOCUSED PROGRAMS

MARTIN MARIETTA

RATIONALE AND SCOPE OF TASK 3

TECHNOLOGY PARAMETERS ARE SELECTED FIRST, BASED ON TASK 1 AND TASK 2 DATA, WHICH OFFER A POTENTIAL FOR SIGNIFICANT IMPROVEMENT IN VEHICLE DRY WEIGHT. THESE PARAMETERS RELATE TO THE PRIMARY TECHNOLOGY AREAS OF MATERIALS, STRUCTURES AND PROPULSION, AS WELL AS SECONDARY TECHNOLOGY AREAS TAKEN AS A WHOLE AND VEHICLE DESIGN CRITERIA AND DESIGN MARGIN REQUIREMENT. R&D PROGRAMS ARE THEN IDENTIFIED WHICH CAN BE IMPLEMENTED TO PURSUE THE IMPROVEMENTS IN THE TECHNOLOGY PARAMETERS. FOR THESE R&D PROGRAMS, THEIR SCOPE, TECHNOLOGY IMPROVEMENT AND COSTS ARE ESTIMATED AND BENEFITS ASSESSED USING FIGURES OF MERIT.

RATIONALE AND SCOPE OF TASK 3

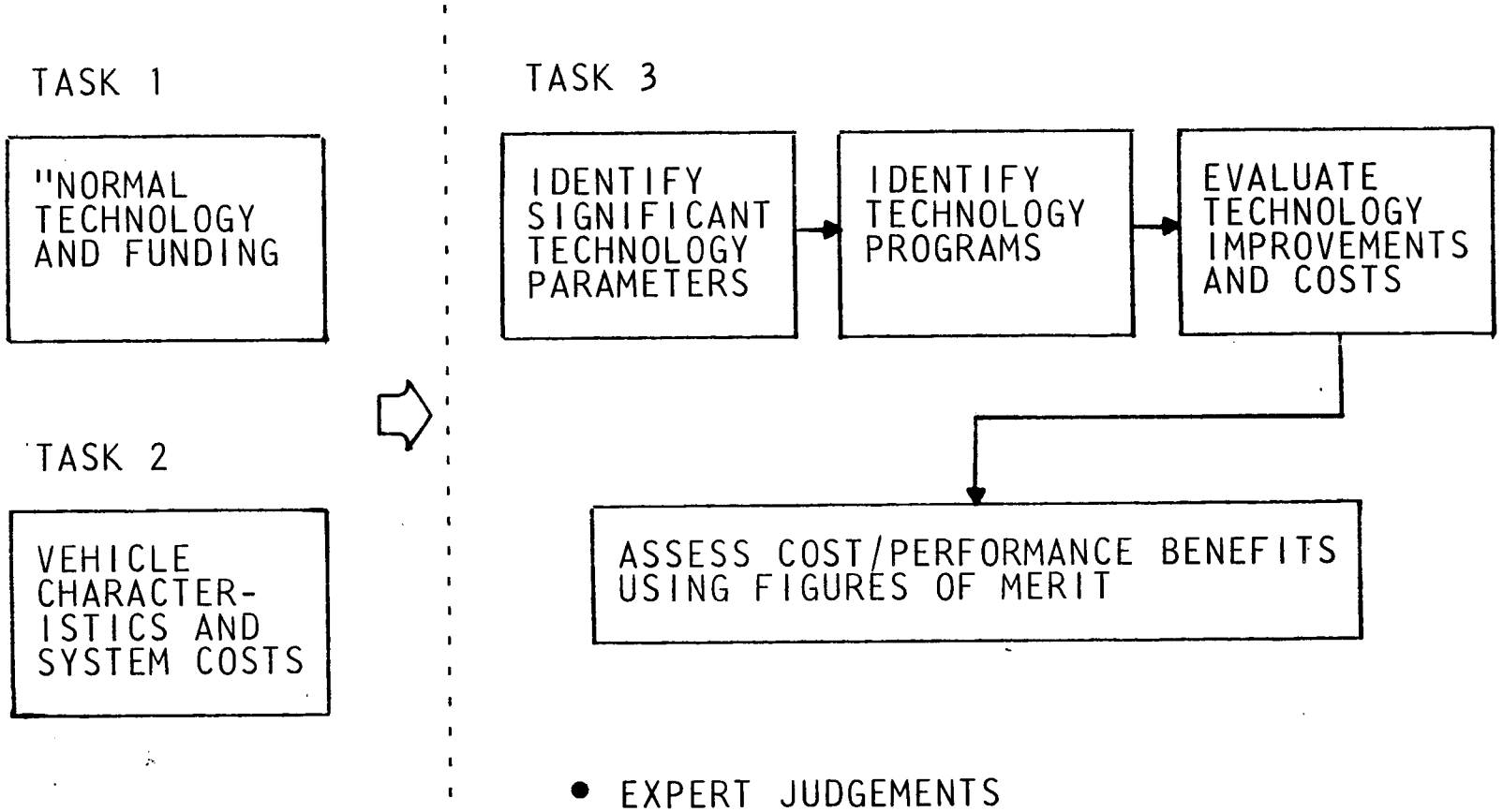

- EXPERT JUDGEMENTS
- DELPHI SUBJECTIVE EVALUATIONS

MARTIN MARIETTA

APPROACH TO SELECTING PERTURBED PARAMETERS

TASK 1	TASK 2
• "NORMAL' GROWTH PROJECTIONS	• VEHICLE CONCEPTS
• WEIGHT DRIVERS	• PERFORMANCE SENSITIVITIES

PRIMARY TECHNOLOGY AREAS

- MATERIALS AND STRUCTURES
- PROPULSION
- DESIGN CRITERIA

TASK 3 PARAMETERS

FOCUS: SIGNIFICANT DRY WEIGHT IMPROVEMENTS

BASIS: IMPROVED MATERIALS, FABRICATION, TESTING, DESIGNS

MARTIN MARIETTA

IDENTIFICATION OF PERTURBED PARAMETERS

PRIMARY DESIGN DRIVERS RELATE TO WEIGHT AND SPECIFIC IMPULSE PARAMETERS. ITEMS WHICH CONTRIBUTE SIGNIFICANT IMPACT TO VEHICLE DRY WEIGHT ARE LISTED ON THE LEFT OF THIS CHART. THESE PARAMETERS CAN BE PERTURBED TO YIELD BETTER PERFORMANCE WITH ACCELERATED R&D FUNDING APPLIED TO VARIOUS TECHNOLOGY AREAS. PARAMETER IMPROVEMENTS ARE EXPECTED BECAUSE WE BELIEVE MAJOR IMPROVEMENTS TO THE ITEMS SHOWN ON THE RIGHT CAN BE ACHIEVED.

PARAMETERS FOR TASK 3 CONSIDERATION WHICH ARE IDENTIFIED HERE APPLY GENERALLY TO ALL VEHICLE CONCEPTS. IF THE HORIZONTAL TAKEOFF VEHICLES WERE TO BE SELECTED FOR TASKS 3 AND 4 CONSIDERATION, ADDITIONAL TECHNOLOGY AREAS RELATED TO SLED OR PROPELLANT TRANSFER AND CRYOGENIC WET WINGS WILL BE ADDED.

IDENTIFICATION OF PERTURBED PARAMETERS

PARAMETERS

WEIGHTS

- TPS
- PROPELLANT TANKS
- WING, FIN AND OTHER STRUCTURES
- SYSTEMS/SUBSYSTEMS (SECONDARY TECHNOLOGY COMBINED)
- MARGIN REQUIREMENTS
- MAIN ENGINES
- PROPELLANT DENSITY

SPECIFIC IMPULSE

- MAIN ENGINES
- RCS/OMS

BASES FOR IMPROVEMENTS

- MATERIALS AND FABRICATION
- DESIGN TECHNOLOGY
- FLIGHT TRAJECTORY OPTIMIZATION
- MORE THOROUGH R&D TESTING
- IMPROVED CONFIGURATION/ INTEGRATION
- ENGINE CHAMBER PRESSURE
- COMBUSTION EFFICIENCY
- PUMP AND NOZZLE EFFICIENCY
- TRIPLE POINT/SLUSH PROPELLANTS

MARTIN MARIETTA

APPROACH TO SELECTING R&D PROGRAMS

TASK 3 PARAMETERS

+

GUIDELINES FOR SELECTING TECHNOLOGY PROGRAMS

⇨ TASK 3 TECHNOLOGY PROGRAMS

IDENTIFY PROGRAMS WHICH

- ADDRESS IMPROVEMENTS IN THE PARAMETERS
- REPRESENT A DEFINEABLE SET OF ACTIVITIES
- INCLUDE BROAD MATRIX OF REQUIRED ACTIVITIES

MARTIN MARIETTA

IDENTIFICATION OF R&D PROGRAMS

THE MATERIALS, STRUCTURES AND DESIGN OPTIMIZATION PROGRAMS ARE SELECTED TO SUPPORT IMPROVEMENTS IN THE MAJOR WEIGHT PARAMETERS. THE MISCELLANEOUS STRUCTURES R&D PROGRAM PURSUES IMPROVEMENTS IN VEHICLE AREAS SUCH AS STRUCTURAL INTERFACES WITH PAYLOAD AND SUBSYSTEMS, CREW COMPARTMENT INCLUDING DOCKING, INTER-TANK STRUCTURES AND ACCESS DOORS.

THE PROPULSION PROGRAMS ARE SELECTED TO SUPPORT IMPROVEMENTS IN ENGINE PERFORMANCE AND WEIGHT PARAMETERS FOR BOTH MAIN ENGINES AND RCS/OMS ENGINES. THE TRIPLE POINT/SLUSH PROPELLANTS R&D PROGRAM IS INCLUDED TO PURSUE IMPROVEMENTS WHICH CAN ACCRUE USING HIGHER DENSITY LOX/LH_2 PROPELLANTS.

THE DESIGN CRITERIA PROGRAM, SYSTEMS INTEGRATION, IS INCLUDED BECAUSE OF POTENTIALS IN REDUCING VEHICLE DRY WEIGHTS BY DEVELOPING A FIRM UNDERSTANDING OF DESIGN MARGIN REQUIREMENTS. THIS IS A SYSTEMS ENGINEERING R&D PROGRAM WHICH PROVIDES R&D INTEGRATION AND BENEFITS ASSESSMENTS. R&D GOALS, GUIDELINES, DESIGN CRITERIA AND MARGIN REQUIREMENTS, LEVEL-OF-EFFORT AND COST/PERFORMANCE/BENEFIT OF ALL THE RELATED ADVANCED TECHNOLOGY PROGRAMS ARE CONTROLLED AND RELATED TO VEHICLE CONCEPT DESIGNS IN THIS PROGRAM. THIS SYSTEMS INTEGRATION R&D PROGRAM ALSO INCLUDES ACTIVITIES SUCH AS TRAJECTORY OPTIMIZATIONS, PARAMETRIC CONFIGURATION WIND TUNNEL TESTING AND ANALYSIS OF VEHICLE CONCEPTS AND OPERATIONS.

THE SECONDARY TECHNOLOGIES PROGRAM PROVIDES FOR POTENTIAL VEHICLE BENEFITS BY REDUCING WEIGHTS IN SYSTEMS AND SUBSYSTEMS SUCH AS POWER AND DISTRIBUTION, AVIONICS AND ENVIRONMENTAL CONTROL.

IDENTIFICATION OF R&D PROGRAMS

MATERIALS, STRUCTURES AND DESIGN OPTIMIZATION

- THERMAL PROTECTION SYSTEMS
- PROPELLANT TANKS
- WING AND FIN STRUCTURES
- THRUST STRUCTURES
- MISCELLANEOUS STRUCTURES

PROPULSION

- MAIN ENGINE INJECTORS/CHAMBERS/NOZZLES
- MAIN ENGINE PUMPS
- MAIN ENGINE COOLING
- RCS/OMS INJECTORS/CHAMBERS/NOZZLES
- RCS/OMS PUMPS
- TRIPLE POINT/SLUSH PROPELLANTS

SECONDARY TECHNOLOGIES

- SYSTEMS/SUBSYSTEMS WEIGHT REDUCTION

DESIGN CRITERIA

- SYSTEMS INTEGRATION

MARTIN MARIETTA

APPROACH TO GENERATING COSTS/BENEFITS

TASK 3 TECHNOLOGY PARAMETERS & PROGRAMS

↓

INPUT DATA FORM FOR EACH PROGRAM → $ PROJECTIONS → FIGURES OF MERIT (FM)

NOMINAL ± 95% ESTIMATES

- PARAMETER IMPROVEMENT GOAL EFFECT ON DRY WEIGHT
- IDENTIFY MAJOR ELEMENTS OF PROGRAM
- MAN-YEARS, MATERIALS, FACILITIES ⇨ COST AT 2-YEAR INTERVALS
- DELPHI ESTIMATING TECHNIQUE

- $ VERSUS YEARS
- RISK ASSESSMENT

- FM = $\frac{\Delta W}{\$}$

↓

COMPARE RELATIVE MERITS OF PROGRAM

- BASIS FOR SELECTING MOST VIABLE PROGRAMS FOR TASK 4 CONSIDERATION

MARTIN MARIETTA

COMMENTS ON IMPORTANT TECHNOLOGIES

TASKS 1, 2 AND 3 ACTIVITIES TO DATE HAVE LED TO AN UNDERSTANDING OF IMPORTANT TECHNOLOGIES FOR SSTO RESEARCH AND DEVELOPMENT. THIS CHART IDENTIFIES TECHNOLOGIES WHICH SHOULD BE CONTINUED TO BE PURSUED AND EMPHASIZED. FURTHER DELINEATIONS OF THESE AREAS WILL BE MADE WHEN TASKS 3 AND 4 ARE COMPLETED.

COMMENTS ON IMPORTANT TECHNOLOGIES

- NEEDS FOR NEAR-TERM R&D ARE PRESENTED HERE BASED ON TASKS 1 AND 2 STUDIES
- TASKS 3 AND 4 WILL PROVIDE MORE DETAILED EVALUATIONS

MATERIALS AND STRUCTURES

- MATERIAL PROPERTIES OF COMPOSITES AND RSI
- COMPOSITE STRUCTURE FABRICATION
- RSI ASSEMBLY, INSPECTION, REFURBISHMENT TECHNIQUES

PROPULSION

- MAIN ENGINE PARAMETRICS (DUAL MODE, LINEAR, NOZZLES, TWO POSITION NOZZLES)
- ZERO NPSH AND HIGH PRESSURE PUMP TECHNOLOGY
- DEEP THROTTLING CAPABILITY
- SLUSH/TRIPLE POINT PROPELLANT FEASIBILITY

SYSTEMS INTEGRATION

- CONFIGURATION STUDIES WITH DUAL MODE PROPULSION AND RELAXED STATIC STABILITY REQUIREMENTS
- EVALUATIONS OF COST/PERFORMANCE BENEFITS OF R&D
- EVALUATIONS OF DESIGN MARGIN REQUIREMENTS
- FUTURE FACILITIES AND OPERATIONS REQUIREMENTS

MARTIN MARIETTA

VI. CONCLUDING REMARKS

MARTIN MARIETTA

RESULTS OF STUDY TO DATE

TASK 1

"NORMAL" TECHNOLOGY GROWTH PROJECTIONS SHOW OVERALL DRY WEIGHT IMPROVEMENTS . . .

16% - MATERIALS AND STRUCTURES

20% - MAIN ENGINE SPECIFIC IMPULSE

TASK 2

VTOHL VEHICLE SYSTEM IS LEAST COMPLEX AND MOST ECONOMICAL, THEREFORE SHOULD BE PURSUED

TASK 3

IMPORTANT AREAS FOR ADVANCED TECHNOLOGY ASSESSMENT ARE MATERIALS, STRUCTURES, PROPULSION AND SYSTEMS INTEGRATION

MARTIN MARIETTA

FUTURE WORK PLANS

TASK 3

- DEFINE THE TECHNOLOGY PROGRAMS
  - GOALS/COSTS
  - FIGURES OF MERIT
- COMPARE RESULTS
  - SELECT FOCUSED PROGRAMS

TASK 4

- DEFINE IMPACT OF FOCUSED PROGRAMS ON VEHICLE CONCEPT
- CALCULATE COST/PERFORMANCE BENEFITS
- IDENTIFY CRITICAL AND HIGH YIELD TECHNOLOGY AREAS

MARTIN MARIETTA