(NASA-CR-181490) SPACE SHUTTLE PHASE B EXTENSION MID-TERM REVIEW. VOLUME 2: MID-TERM PRESENTATION (Rockwell International Corp.) 117 p

N90-70121

Unclas
00/16 0235122

IBM

GD

AA

HONEYWELL

LIBRARY COPY

JUN 02 1989

LANGLEY RESEARCH CENTER
LIBRARY NASA, HAMPTON, VA.

SPACE SHUTTLE

PHASE B EXTENSION MID-TERM REVIEW

VOL II Mid-Term Presentation

SV71-40
1 SEPTEMBER 1971

#235122

9N-
235111

Total Pages 120

SV71-40

SPACE SHUTTLE PHASE B EXTENSION MID-TERM REVIEW

VOLUME II
MID-TERM PRESENTATION

1 September 1971

LIBRARY COPY

JUN 02 1989

LANGLEY RESEARCH CENTER
LIBRARY NASA, HAMPTON, VA.

INTRODUCTION

In July the Shuttle Phase B Program Definition Study with the Space Division of North American Rockwell (NAS9-10960) was extended by NASA for four months. The primary objective of the extension study was to evaluate merits of a phased Shuttle development program. In the phased program, the Shuttle orbiter would first be launched on an expendable booster in 1978. The fully reusable heat sink booster development would be delayed so that it would be used with the orbiter approximately four years later. It was anticipated that through this approach the peak annual funding requirements for Shuttle could be reduced without major increases in the total program cost relative to those predicted (for the fully reusable system) during the first 12 months of the Phase B study.

Other technical and programmatic trade studies were included in the Phase B extension. They were directed toward examination of (a) an improved orbiter design, (b) comparison of various expendable first stages for boosting the orbiter, (c) a "low technology/reduced capability" orbiter that would be used for initial flights and upgraded when the reusable booster was phased into the program, and (d) examination of various program development schedules. Each of the trade studies also was conducted with the view to reducing funding requirements and development risk.

On September 1 the results of the first two months of the Phase B extension were presented at NASA Headquarters in Washington by the Space Division and its team members (Convair Division of General Dynamics, IBM, Honeywell, American Airlines and General Electric). This is one of three documents which summarize the study results. Specifically contained here are copies of material used in the September 1 briefing. Supplementary or backup data and a summary and recommendations with supporting text are provided in the other two reports.

Presentation Outline

Introduction

MAJOR CONFIGURATION TRADES

LOW TECHNOLOGY/ LOW RISK SYSTEM

SCHEDULE & COST OPTIONS

SUMMARY

ØB Results

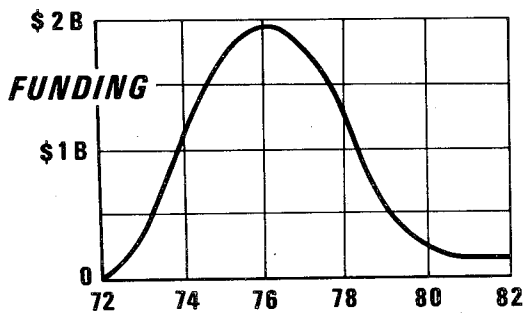

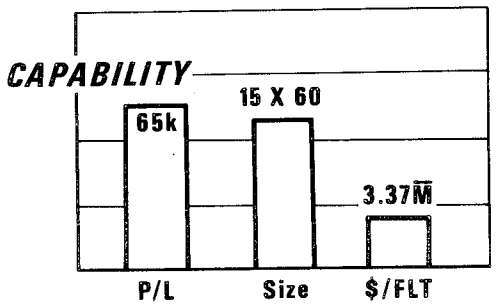

SCHEDULE

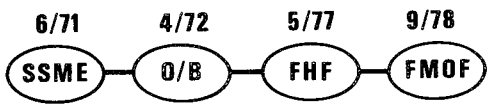

RISK

- TPS 1100 X Range
- Simultaneous O/B
- Large Vehicles
- New Eng Devel
- Fracture Mech

Space Division North American Rockwell

91SV13782

What is The Path?

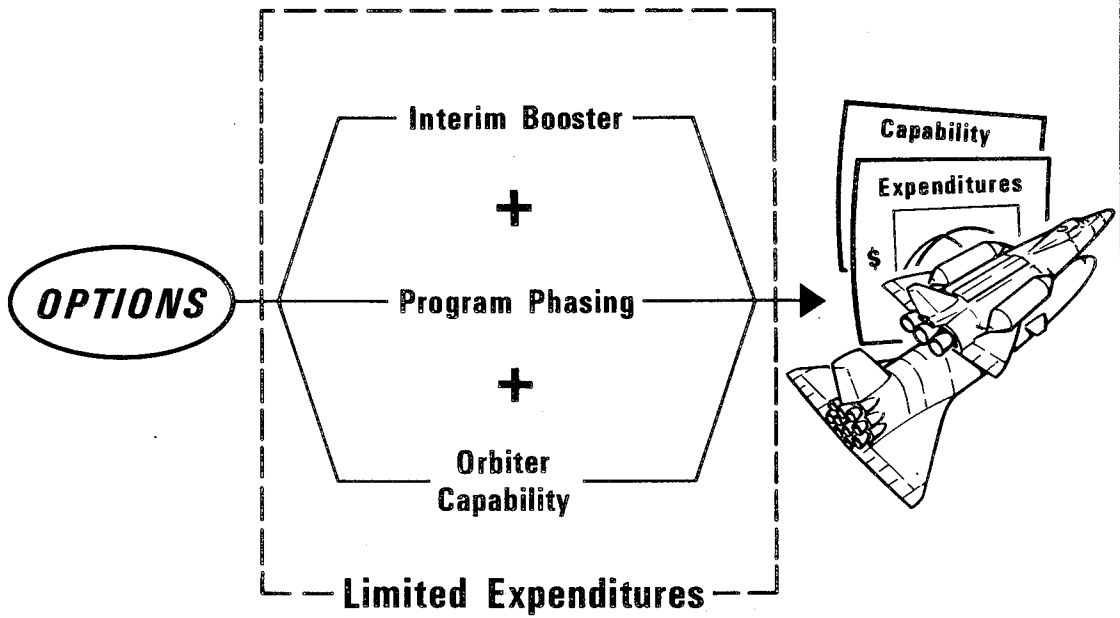

Space Division North American Rockwell

91SV13718

The Study Approach

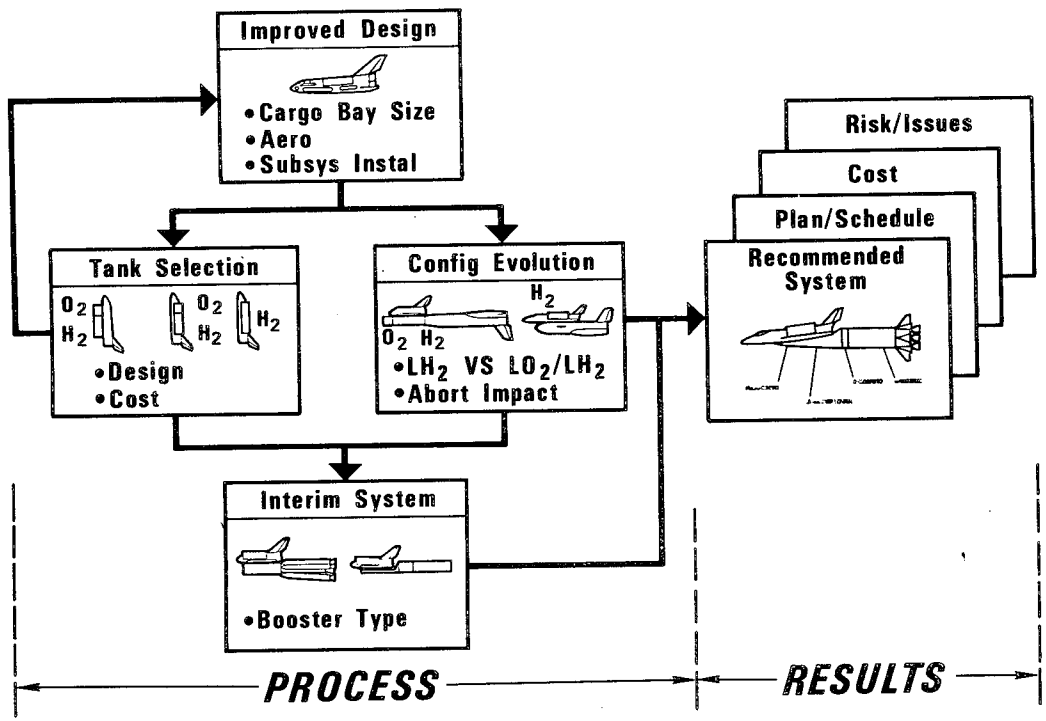

Space Division North American Rockwell

91SV13703

Major Vehicle Trade Studies

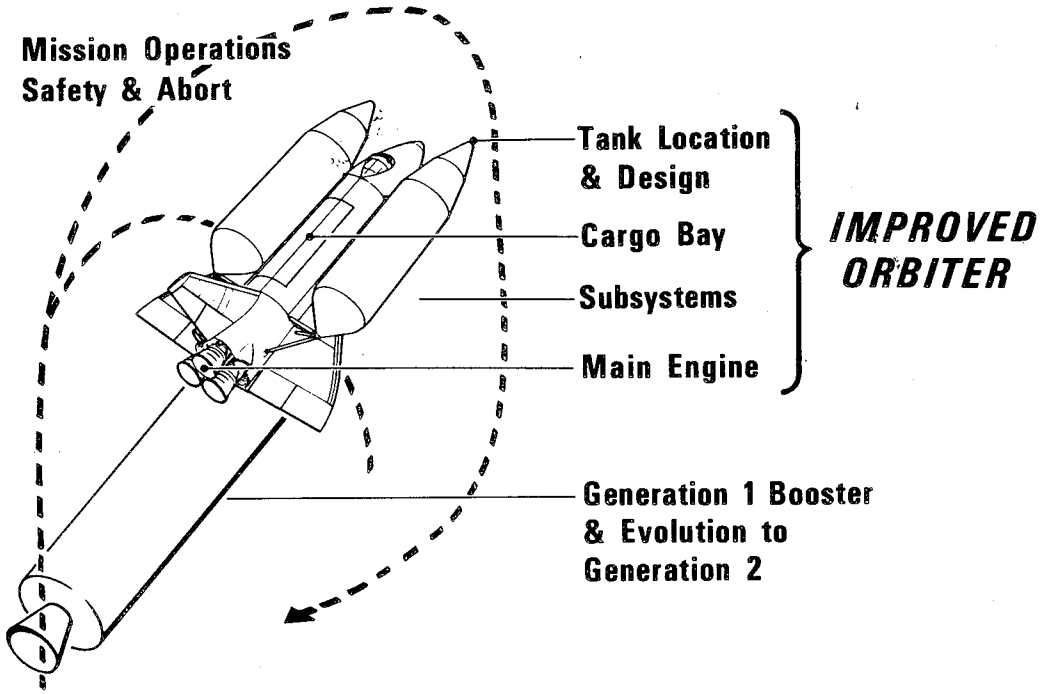

Space Division North American Rockwell

91SV13695

BASIS FOR PRESENTATION

91SV13694-1

ALTERNATE Configurations

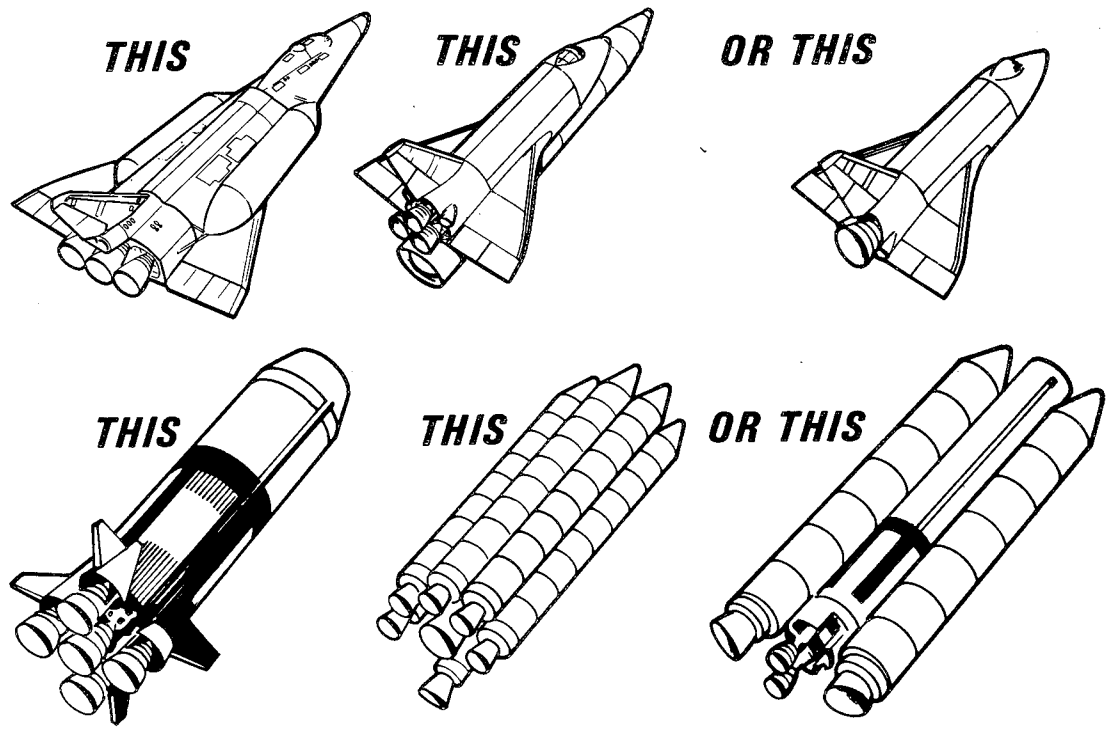

Space Division North American Rockwell

91SV13694

Presentation Outline

INTRODUCTION

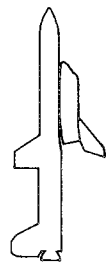

Major Configuration Trades

LOW TECHNOLOGY/ LOW RISK SYSTEM

SCHEDULE & COST OPTIONS

SUMMARY

MAJOR Differences In Requirements

Same Design Integrity	GENERATION 1	GENERATION 2
Utility	First Flt 1978 3 Flt/Year	1982 445 Over 10 Years
Capability	Payload Dia 12 or 15 ft Payload Lgth 40 or 60 ft Payload Up 45,000 lb Payload Down 25,000 lb Orbit 100 X 28.5°	Same as ϕB
Operations	Aero Capability For X Range Crew Size, Intact Abort, Rest as ϕB	as ϕB Mission Duration

Space Division North American Rockwell

91SV13690

Major Vehicle Trade Studies

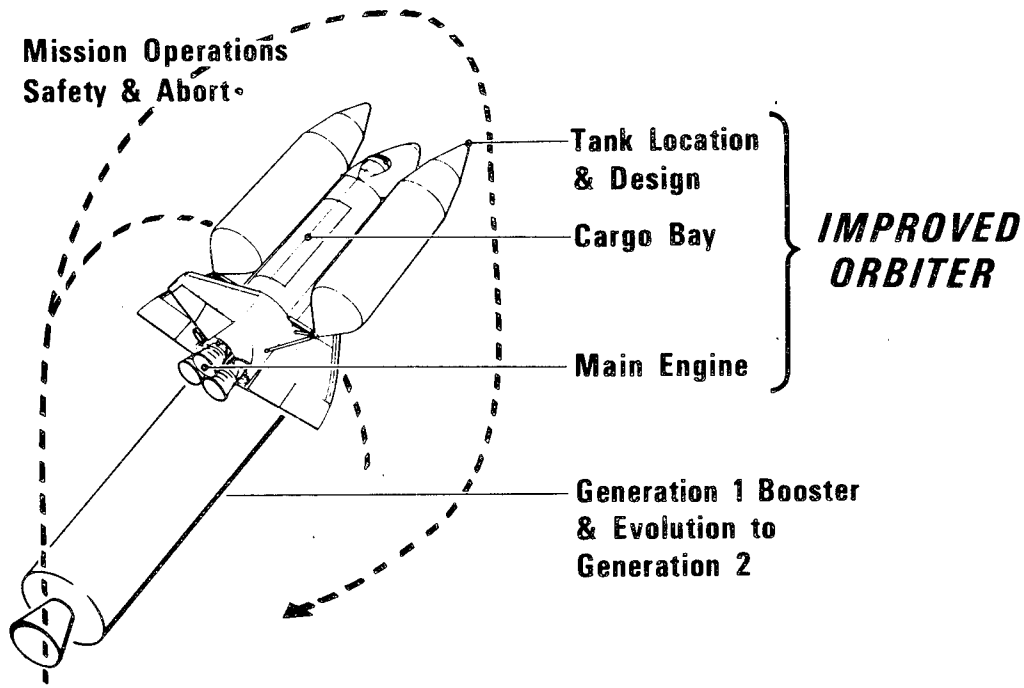

Space Division North American Rockwell

91SV13912

Interim Booster Combinations

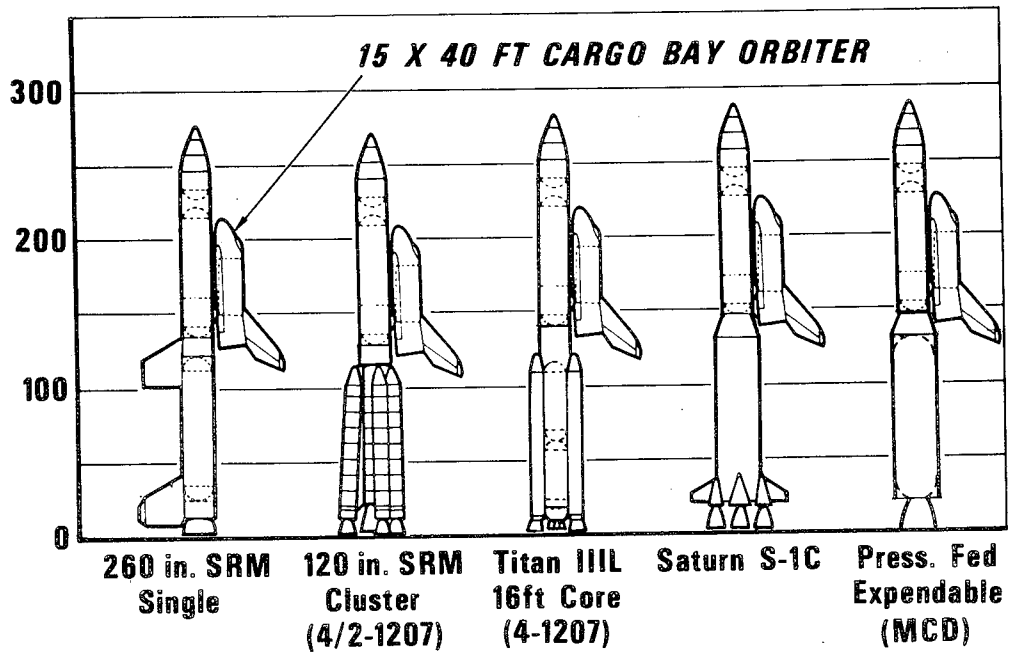

Space Division North American Rockwell

91SV13832

260 SRM Interim Booster

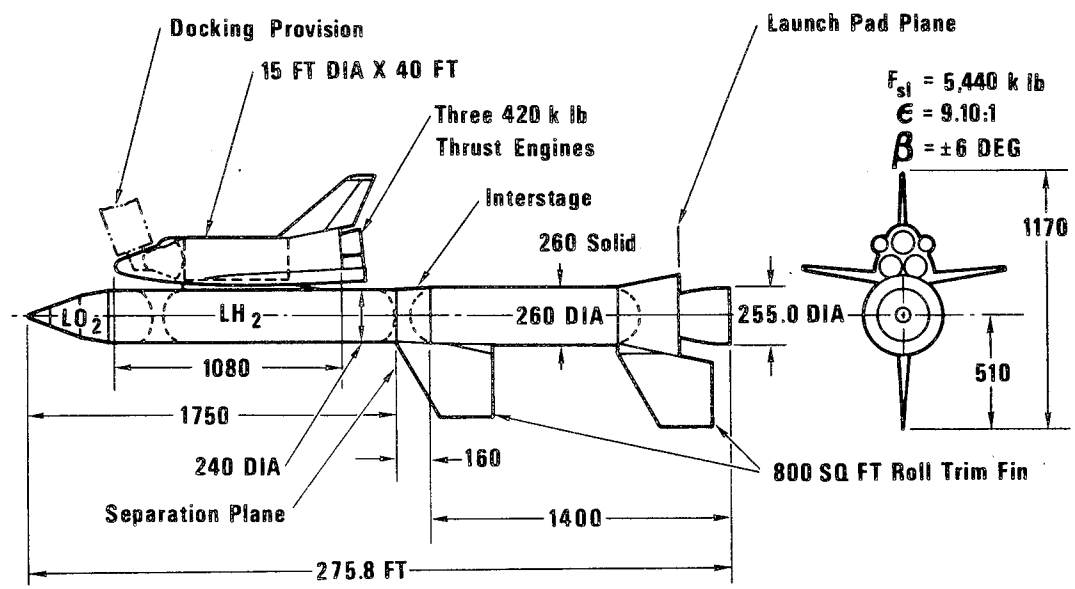

Space Division North American Rockwell

91SV13869

260 In. SRM Interim Booster (15 X 40 → 15 X 60)

(3 Engine Orbiter)

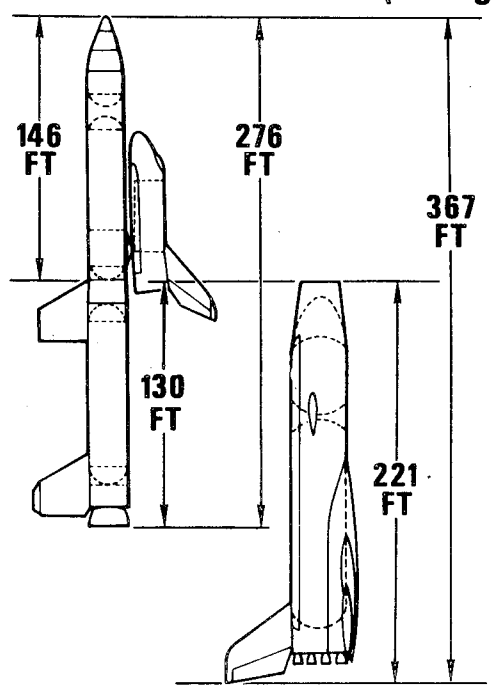

	Gen 1		Gen 2	
	B	Orb	B	Orb
Stage				
Gross Wt (m lb)	3.15	1.025	2.35	1.024
Dry Wt (k lb*)	330	140	376	148
Ext Tank				
Wt (k lb)		48		48
Main Engines				
Number	1	3	12	3
Thrust (k lb)	5440**	420	366**	420
Sys GLOW (m lb)	4.17		3.37	
P/L (Dn Wt)(k lb)	45 (25) Due E		40 (40) Polar	
OMS ΔV (fps)	900		650	

* Payload & Exp Tanks not Included
** Sea Level

Space Division North American Rockwell

91SV13824

260 SRM Interim Booster (15 X 40 → 15 X 60)*

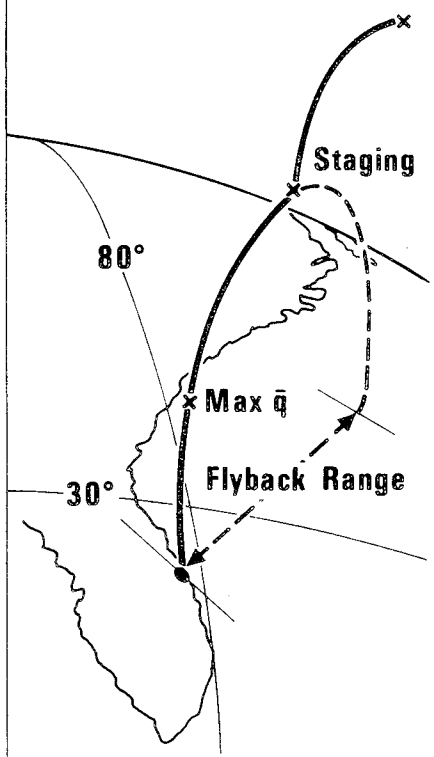

	Gen 1		Gen 2	
P/L (Dn Wt) (k lb)	45 (25) Due E		40 (40) Polar	
OMS ΔV (fps)	900		650	
	B	Orb	B	Orb
Max $\bar{q}$ (psf)	500	500	488	488
Staging V_R (fps)	5932	5932	7029	7029
Staging γ_R (deg)	19	19	16	16
Flyback (n mi)			195	

* (3) ENGINE ORBITER

Space Division North American Rockwell

91SV13825

120 in. SRM Interim Booster (15 X 40 → 15 X 60)

(3 Engine Orbiter)

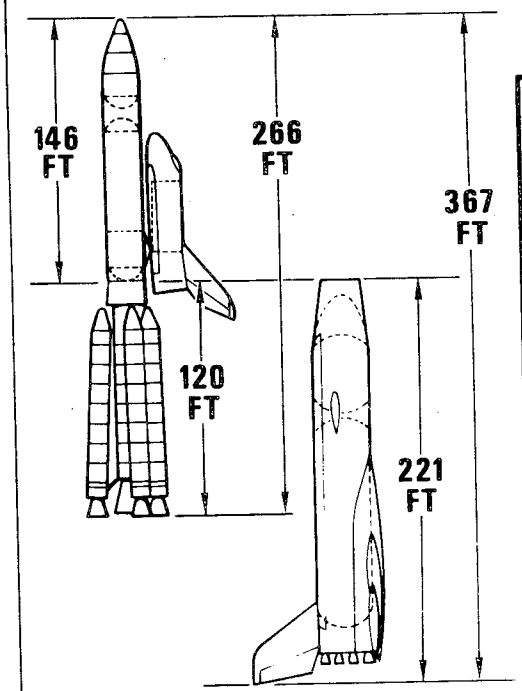

	Gen 1		Gen 2	
	B	Orb	B	Orb
Stage				
Gross Wt (m lb)	4.115	1.025	2.35	1.024
Dry Wt (k lb*)		140	376	148
Ext Tank				
Wt (k lb)		48		48
Main Engines				
Number	4/2	3	12	3
Thrust (k lb)	1600	420	366**	420
Sys GLOW (m lb)	5.14		3.37	
P/L (Dn Wt)(k lb)	45 (25) Due E		40 (40) Polar	
OMS ΔV (fps)	900		650	

* Payload & Exp Tanks not Included

** Sea Level

Space Division North American Rockwell

91SV13897

120 in. SRM Interim Booster (15 X 40 → 15 X 60)

(3 Engine Orbiter)

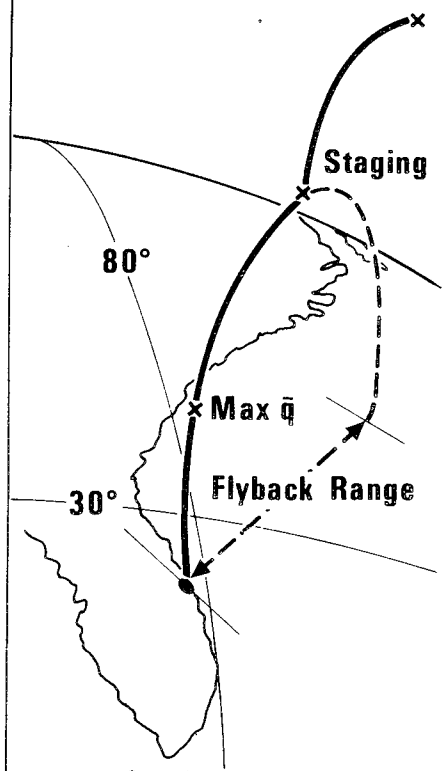

	Gen 1		Gen 2	
P/L (Dn Wt) (k lb)	45 (25) Due E		40 (40) Polar	
OMS ΔV (fps)	900		650	
	B	Orb	B	Orb
Max $\bar{q}$ (psf)	455	455	488	488
Staging V_R (fps)	7401	7401	7029	7029
Staging γ_R (deg)	8	8	16	16
Flyback (n mi)			195	

Space Division North American Rockwell

91SV13906

Segmented SRM Assembly

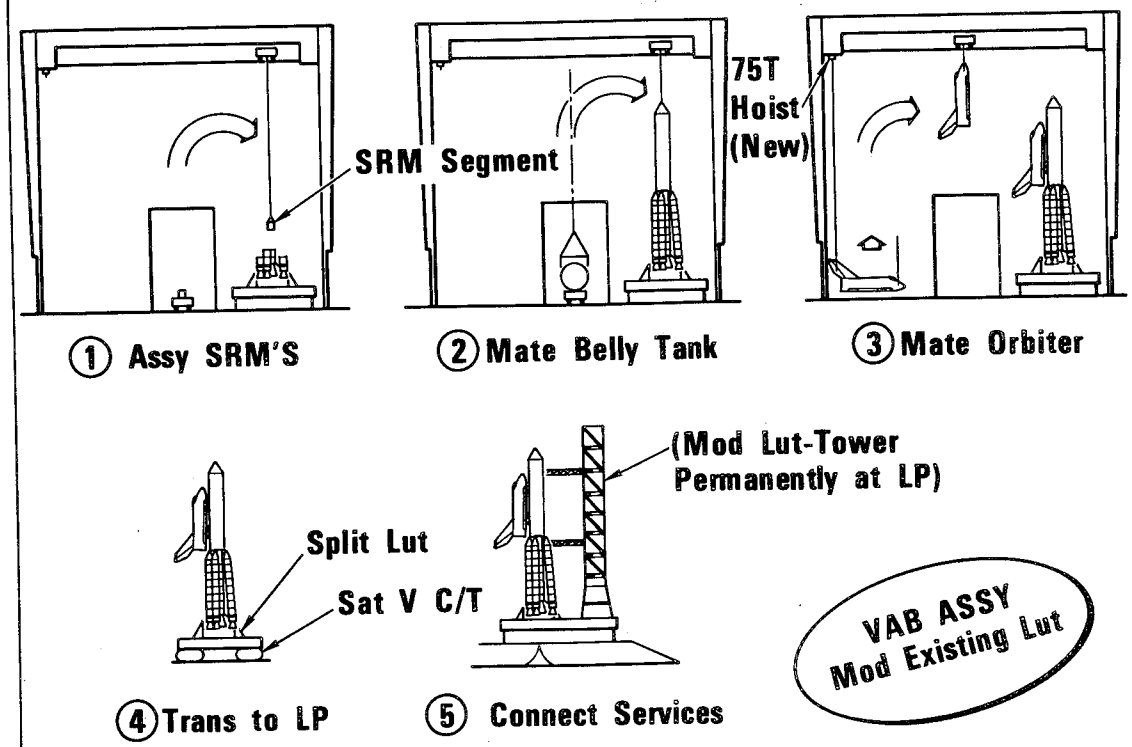

Space Division North American Rockwell

91SV13876A

Ascent Control Modes

SEPARATION

120 SRM

	STEPS
SEP	1. 1ST STAGE - EJECT 2. 2ND STAGE - SAME AS 260 IN. SRM

260 SRM

	STEPS	T/W
SEPARATION	1. PITCH UP COMM'D 2. O IGNITION 3. SEP WHEN $T_O/W_O \geq T_B/W_B$	0.9g 0.5 g

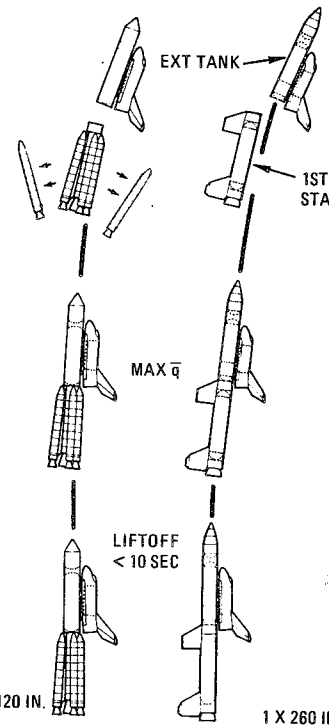

		FIN	MODE	AUX CONT
MAX $\bar{q}$	PITCH	NONE	TVC	NONE
	YAW	NONE	TVC	NONE
	ROLL	NONE	TVC	NONE

		FIN	MODE	AUX CONT
MAX $\bar{q}$	PITCH	NONE	TVC	NONE
	YAW	NONE	TVC	NONE
	ROLL	YES	ELEVONS	NONE

	PITCH	YAW	ROLL
LIFTOFF	TVC	TVC	TVC

	PITCH & YAW	ROLL
LIFTOFF	TVC	RCS ON VENTRAL FIN

Space Division North American Rockwell

91SV13887

SRM Comparison Summary

	4/2 X 1207	260 in.
SRM Wt (m lb)	4.12	3.15
Cost (B$) Peak Annual Program	 1.06 11.15	 1.08 11.27
Facil Impact	Assy Equip/Split Lut Launch Facil Cost = $23m	Assy Equip/Split Lut Activate Mfg Facil Launch Facil Cost = $84m Handling Difficulties
Control	120 in. SRMS	Orbiter Assist
Devel Status	On Going	R&D
Sched Impact	Defer ≃ 27 Mo	Defer ≃ 9 Mo

T-III L Interim Booster

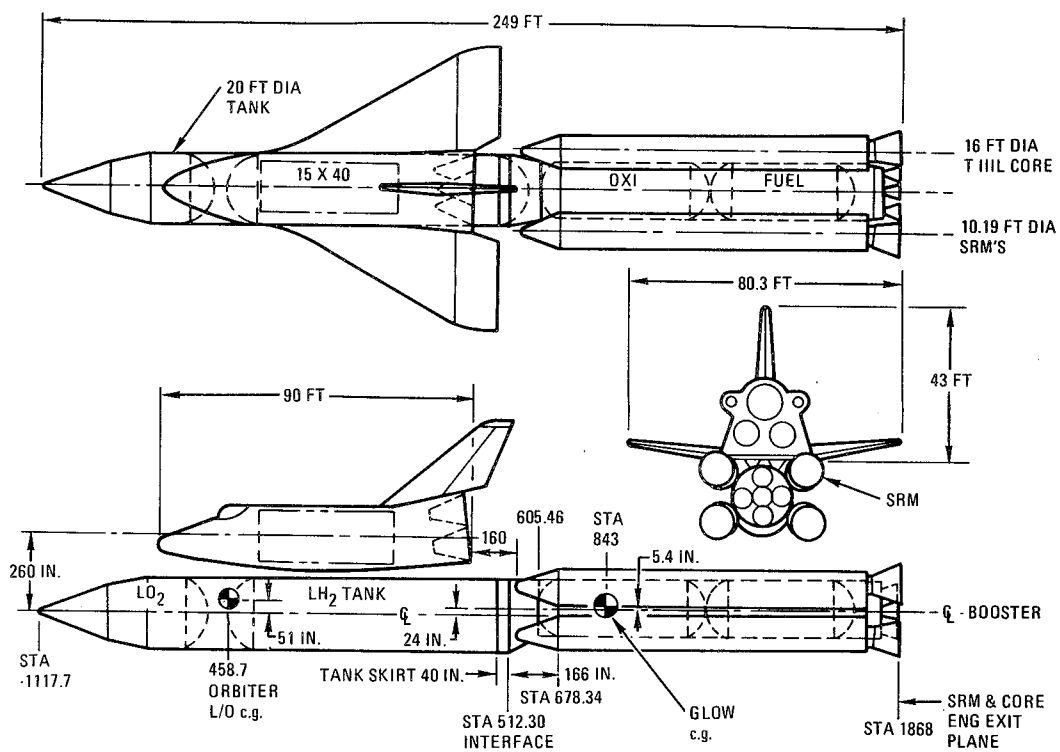

Space Division North American Rockwell

91SV13890

Titan III L Interim Booster (15 X 40 → 15 X 60)

(3 Engine Orbiter)

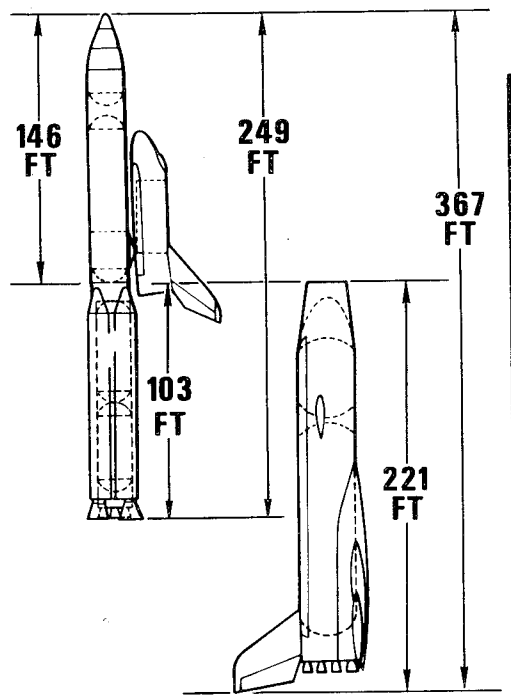

	Gen 1		Gen 2	
	B	Orb	B	Orb
Stage				
Gross Wt (m lb)	3.996	0.993	2.35	1.024
Dry Wt (k lb*)		140	376	148
Ext Tank				
Wt (k lb)		48		48
Main Engines				
Number	4/5	3	12	3
Thrust (k lb)	6773**	420	366**	420
Sys GLOW (m lb)	4.99		3.37	
P/L (Dn Wt)(k lb)	45 (25) Due E		40 (40) Polar	
OMS ΔV (fps)	900		650	

* Payload & Exp Tanks not Included

** Sea Level

Space Division North American Rockwell

91SV13898

Titan III L Interim Booster (15 X 40 → 15 X 60)

(3 Engine Orbiter)

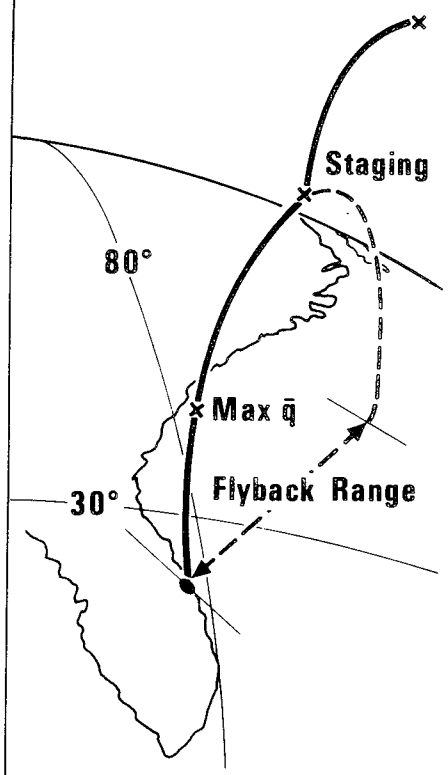

	Gen 1		Gen 2	
P/L (Dn Wt) (k lb)	45 (25) Due E		40 (40) Polar	
OMS ΔV (fps)	900		650	
	B	Orb	B	Orb
Max $\bar{q}$ (psf)	580	580	488	488
Staging V_R (fps)	5771	5771	7029	7029
Staging γ_R (deg)	5.9	5.9	16	16
Flyback (n mi)			195	

Space Division North American Rockwell

91SV13905

Saturn S-IC Interim Booster (15 X 40 → 15 X 60)

(3 Engine Orbiter)

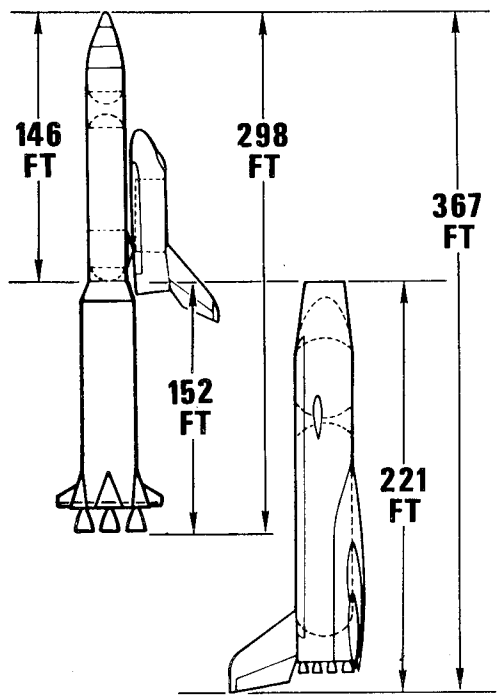

	Gen 1		Gen 2	
	B	Orb	B	Orb
Stage				
Gross Wt (m lb)	5.0	0.771	2.35	1.024
Dry Wt (k lb*)	352.9	140	376	148
Ext Tank				
Wt (k lb)		48		48
Main Engines				
Number	5	3	12	3
Thrust (k lb)	1522**	420	366**	420
Sys GLOW (m lb)	5.77		3.37	
P/L (Dn Wt)(k lb)	45 (25) Due E		40 (40) Polar	
OMS ΔV (fps)	900		650	

*Payload & Exp Tanks not Included

**Sea Level

Space Division North American Rockwell

91SV13899

Saturn S-IC Interim Booster (15 X 40 → 15 X 60)

(3 Engine Orbiter)

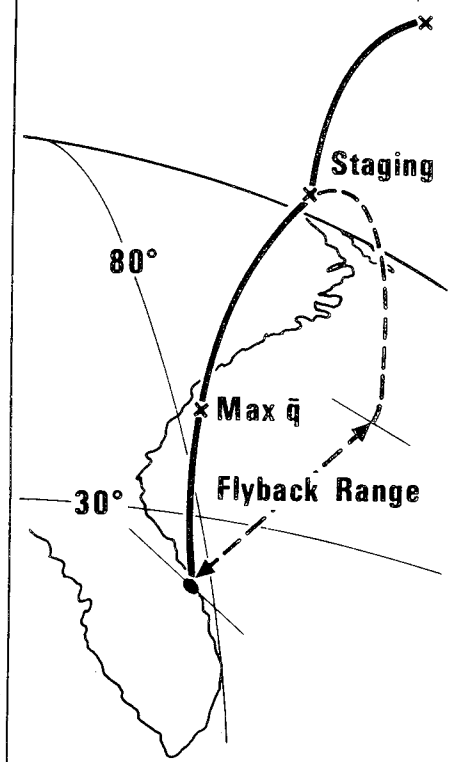

	Gen 1		Gen 2	
P/L (Dn Wt) (k lb)	45 (25) Due E		40 (40) Polar	
OMS ΔV (fps)	900		650	
	B	Orb	B	Orb
Max $\bar{q}$ (psf)	474	474	488	488
Staging V_R (fps)	9,413	9,413	7,029	7,029
Staging γ_R (deg)	10.9	10.9	16	16
Flyback (n mi)			195	

Space Division North American Rockwell

91SV13907

MCD (Press. Fed) Int Booster (15 X 40 → 15 X 60)

(3 Engine Orbiter)

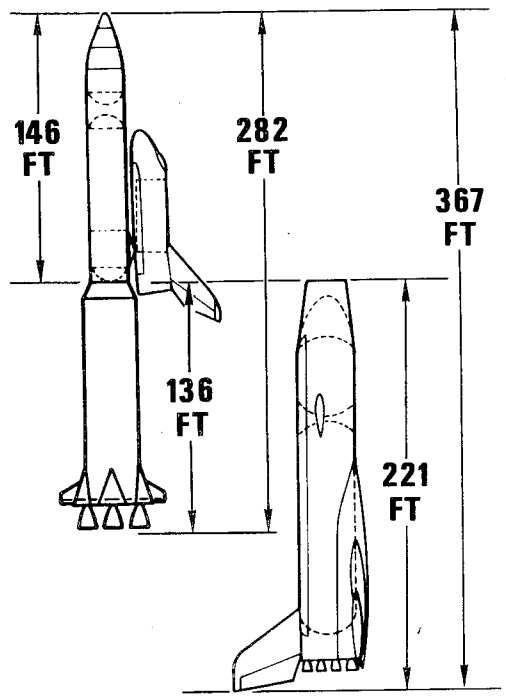

	Gen 1		Gen 2	
	B	Orb	B	Orb
Stage				
Gross Wt (m lb)	3.754	.993	2.35	1.024
Dry Wt (k lb*)	367	140	376	148
Ext Tank				
Wt (k lb)		48		48
Main Engines				
Number	7	3	12	3
Thrust (k lb)	881**	420	366**	420
Sys GLOW (m lb)	4.75		3.37	
P/L (Dn Wt)(k lb)	45 (25) Due E		40 (40) Polar	
OMS ΔV (fps)	900		650	

* Payload & Exp Tanks not Included

** Sea Level

Space Division North American Rockwell

91SV13900

MCD (Press. Fed) Int Booster (15 X 40 → 15 X 60)

(3 Engine Orbiter)

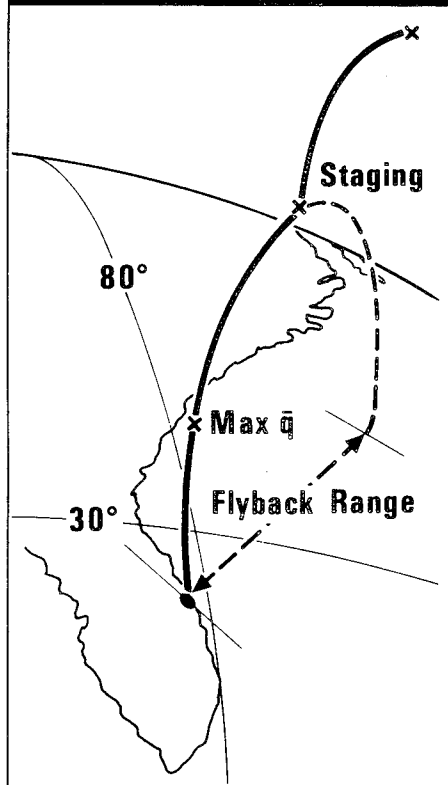

	Gen 1		Gen 2	
P/L (Dn Wt) (k lb)	45 (25) Due E		40 (40) Polar	
OMS ΔV (fps)	900		650	
	B	Orb	B	Orb
Max $\bar{q}$ (psf)	724	724	488	488
Staging V_R (fps)	6,276	6,276	7,029	7,029
Staging γ_R (deg)	12	12	16	16
Flyback (n mi)			195	

Space Division North American Rockwell

91SV13908

Interim Booster Comparison

Orbiter Compatible With All

May Defer Decision

	260 In. SRM	120 In. SRM	Titan IIIL	S-IC	Press. Fed
BLOW $\bar{M}$ LB / Cost $B	3.15 / 0.402	4.12 / 0.283	4.00 / 0.495	5.00 / 0.451	3.75 / 0.464
Cost $B Peak Annual (FY 78) / Prog	1.23 / 11.27	1.22 / 11.15	1.22 / 11.36	1.23 / 11.32	1.24 / 11.33
Facilities Impact (Booster)	Major 84\bar{M}$	Tools + Lut 23\bar{M}$	Tools + Lut 23\bar{M}$	Min	Solids/ Clusters
Control	Orb Assist (Gimbal)	SRM (Gimbal)	SRM (Gimbal)	Fins Adequate	LITVC
Devel Status	R&D	On-Going	Partial	Basically Complete	R&D
Schedule Impact — Decision Delayed (Mos)	9	18	6	18	6

Space Division North American Rockwell

91SV13888A

Interim Booster Summary

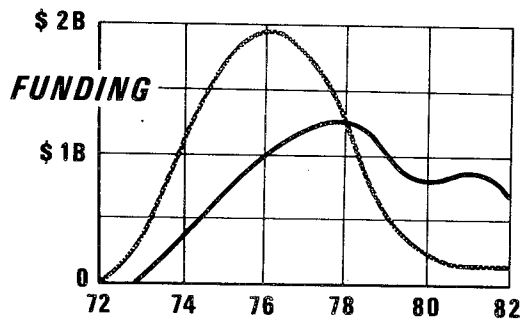

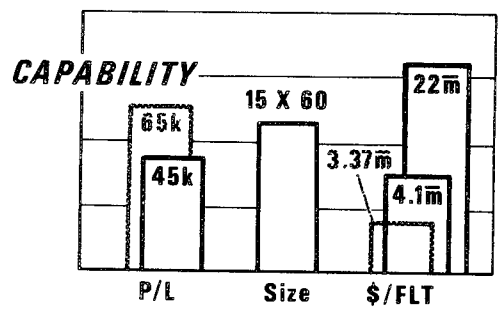

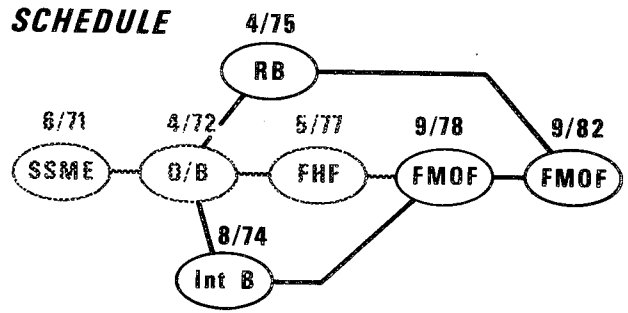

RISK

- ~~TPS 1100 X Range~~
- ~~Simultaneous O/B~~
- ~~Large Vehicles~~
- New Eng Devel
- ~~Fracture Mech~~

Int Booster Develop

Space Division North American Rockwell

91SV13881

External LH_2 or LO_2/LH_2 Trade

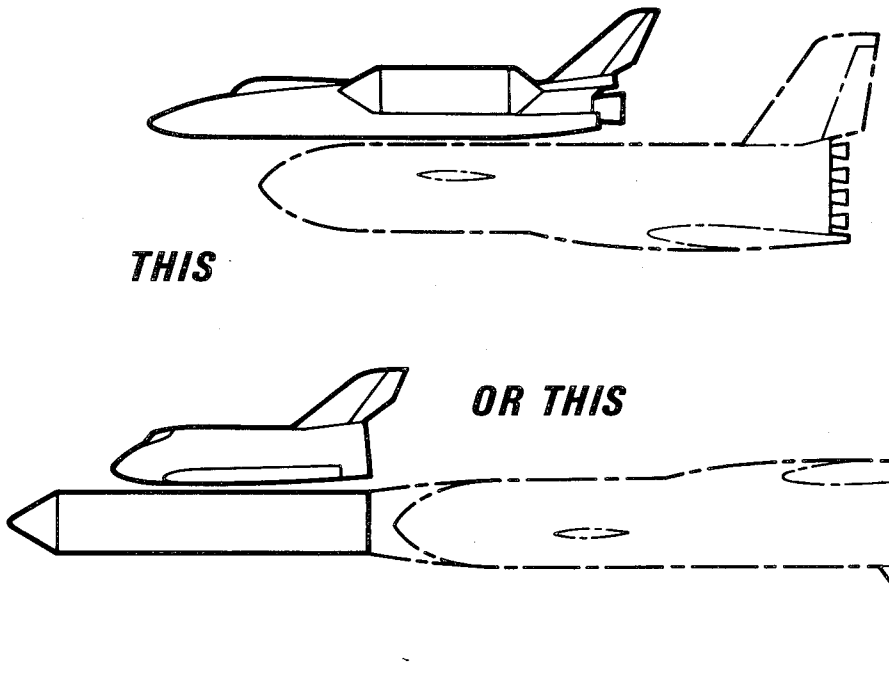

Space Division North American Rockwell

91SV13691

Some LH_2 Tanks Studied

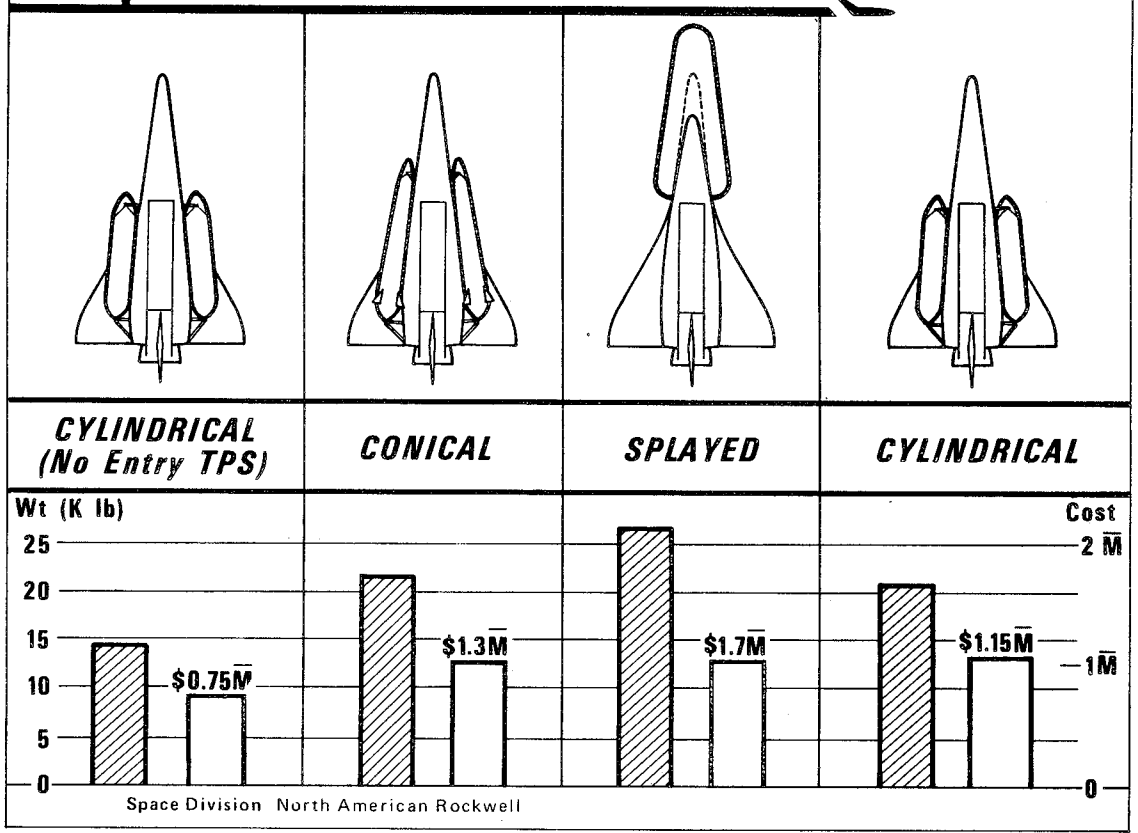

91SV13692

External LH_2 Tank Design Features

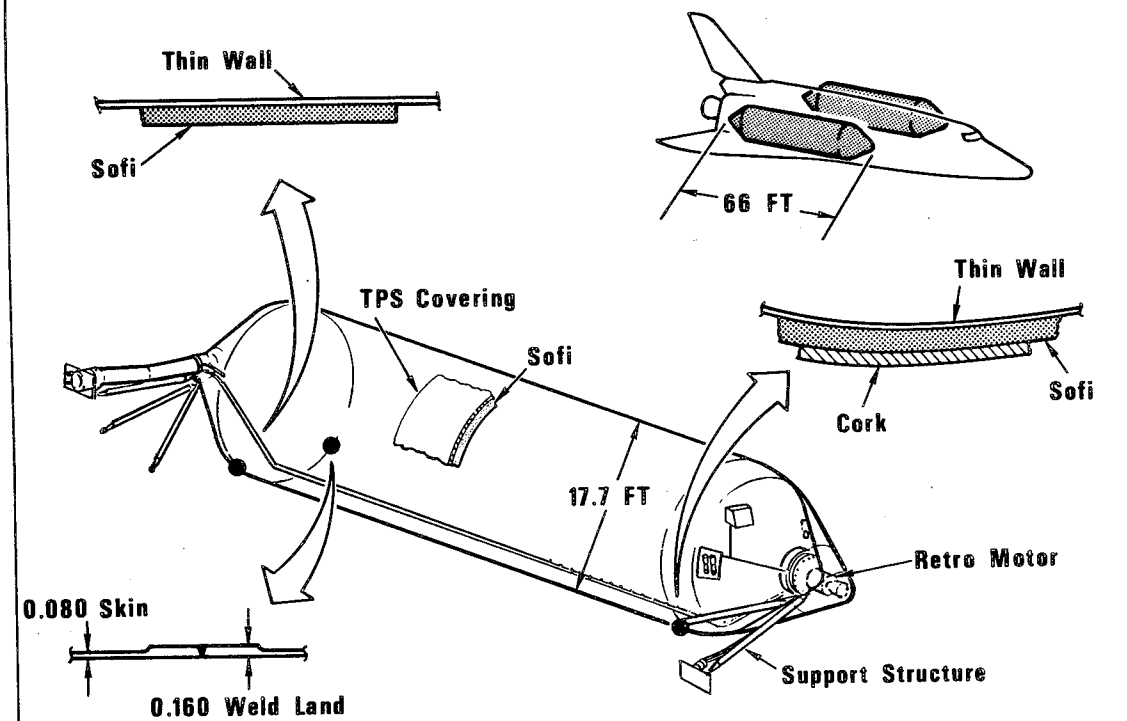

Space Division North American Rockwell

91SV13774

LH_2 Low Cost Configuration

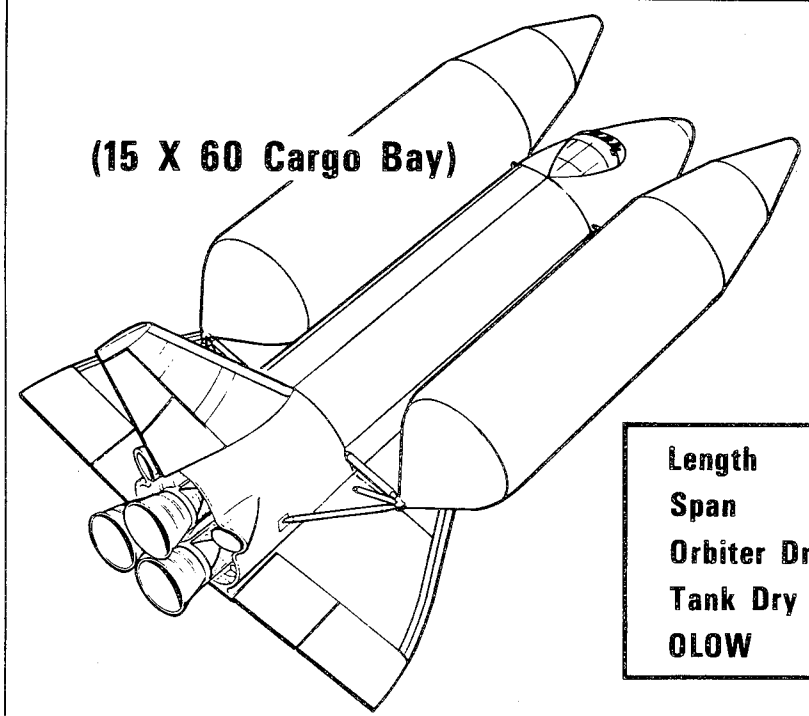

Length	126 ft
Span	78 ft
Orbiter Dry Wt	191 k lb
Tank Dry Wt	14.7 k lb
OLOW	1155 k lb

Space Division North American Rockwell

91SV13775

LO_2/LH_2 Tank Options

BASIC	SPECIAL	SIMPLE
① 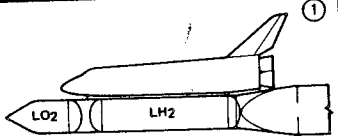 LH_2 TANK-MAIN STRUCTURE	④ 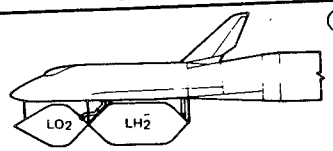 THIN WALL MONOCOQUE LH_2 TANK	⑦ 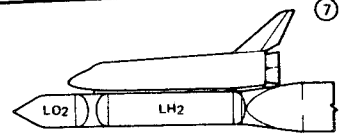 HEAVY WALL MONOCOQUE LH_2 TANK
② 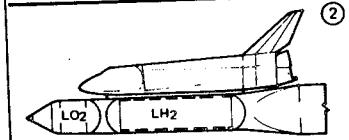 FLOATING LH_2 TANK	⑤ 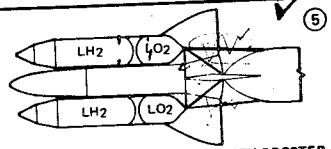 LO_2/LH_2 TANKS & ORBITER IN LINE WITH BOOSTER	⑧ 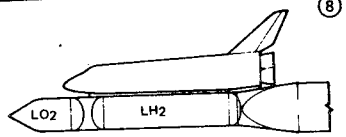 LH_2 TANK PRESSURIZED AT ALL TIMES
③ 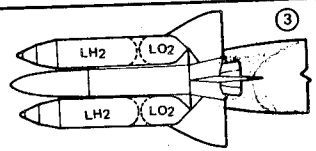 THIN WALL MONOCOQUE LH_2 TANK	⑥ 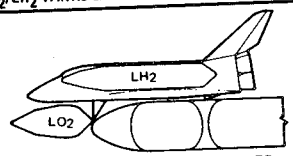 LO_2 TANK IN LINE WITH BOOSTER	⑨ 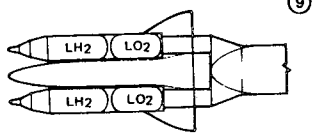 HEAVY WALL MONOCOQUE LH_2 TANK
⑪ 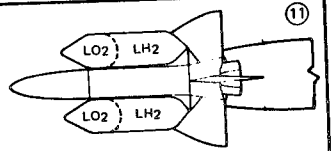 CHECK LH_2 SIDEWALL CAPABILITY/DESIGN	⑫ 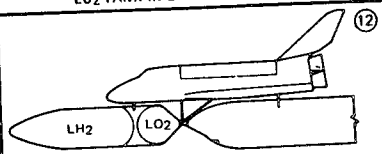 LO_2/LH_2 TANKS IN LINE WITH BOOSTER	⑩ 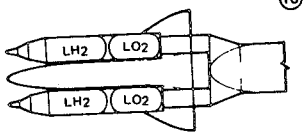 LH_2 TANK PRESSURIZED AT ALL TIMES

Space Division North American Rockwell

91SV13867

(15 FT X 40 FT Cargo Bay; Manipulators Installed)

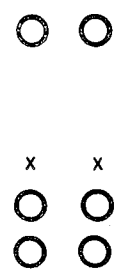

91SV13836-1

Tank costs only

Some LO_2/LH_2 Tank Arrangements Studied

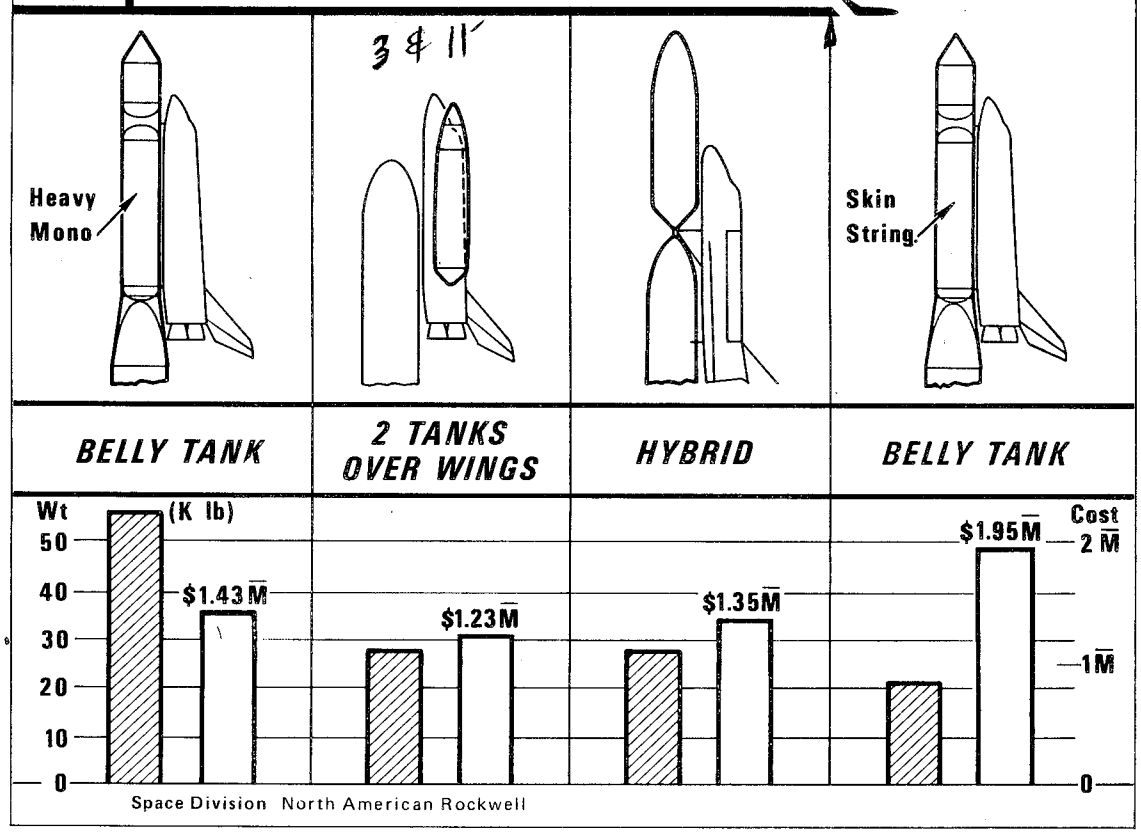

Space Division North American Rockwell

91SV13693

External LO_2 / LH_2 Tank Design Features

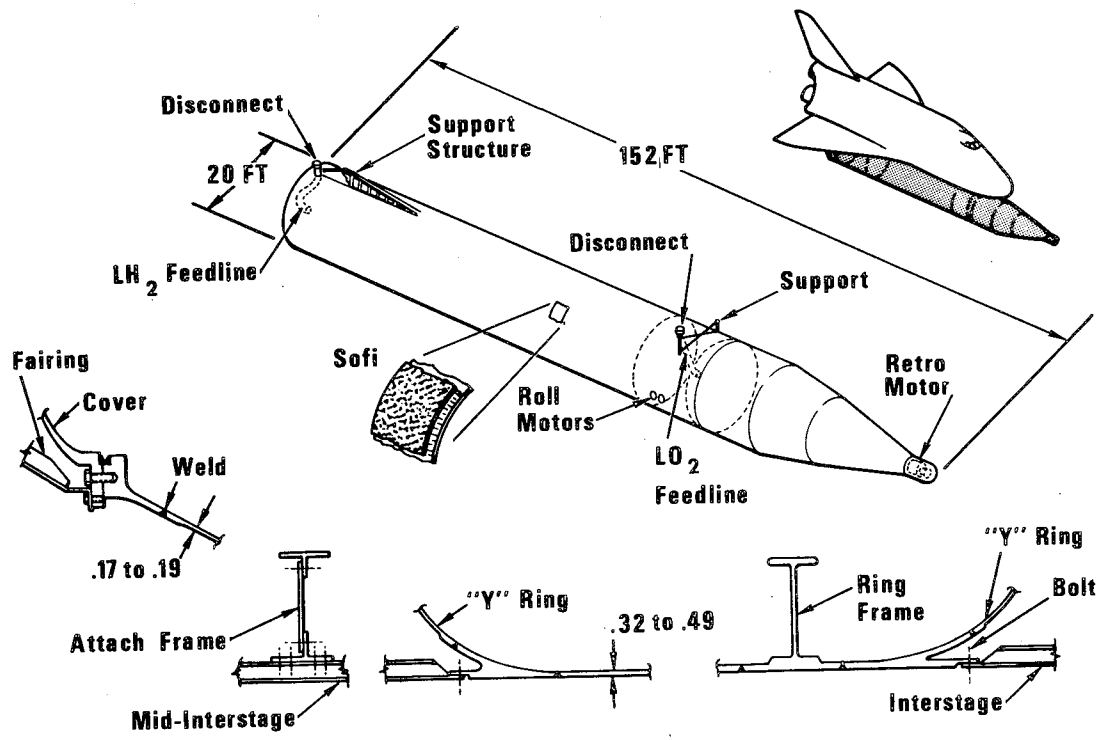

Space Division North American Rockwell

91SV13689

LO_2 / LH_2 Low Cost Configuration

(15 X 60 Cargo Bay)

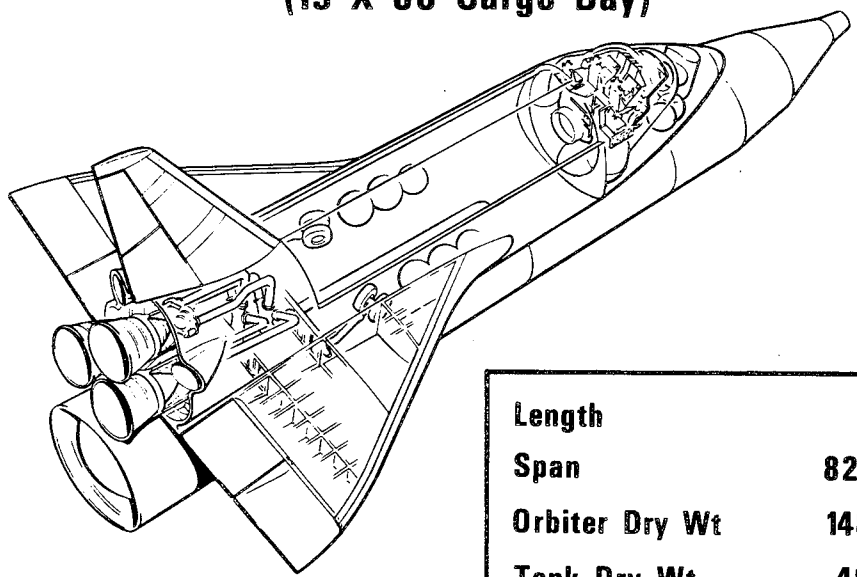

Length	110	ft
Span	82.25	ft
Orbiter Dry Wt	148	k lb
Tank Dry Wt	48	k lb
Gross Wt (Gen 1)	1034	k lb

Space Division North American Rockwell

91SV13776

LO_2 / LH_2 Orbiter vs LH_2

(15 FT X 60 FT Cargo Bay)

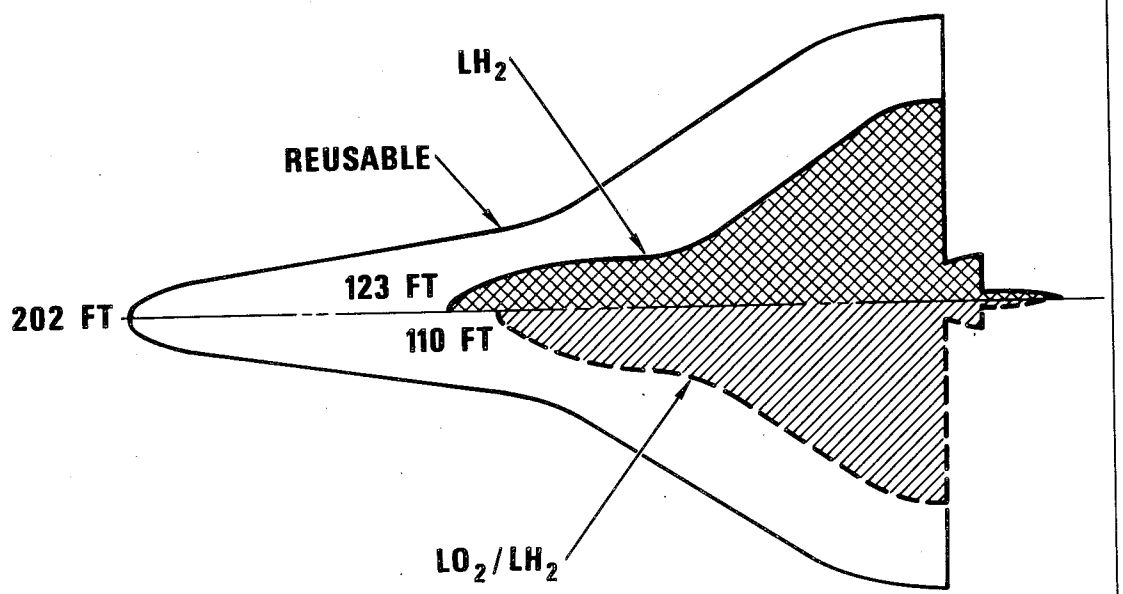

Space Division North American Rockwell

91SV13719

Technical *RISK* Comparison of Orbiters

	LO_2/LH_2	*LH_2*	*Reusable*	*All Three*
Weight Growth I_{sp} Degradation	Inc. Tank Min	Inc. Int LO_2 & Ext. LH_2 Tank/Med	Inc. Int Tanks/High	Larger Booster
Confidence in Aero/ Thermo Predictions	Based on Past Tests	Based on Past Tests	High Confidence	ϕC Equal Data –High Conf.
Adequate Abort Coverage/Risk	Launch Site Low	Launch Site Low	Launch Site Low	After Staging, once Around-Abort O.K.
Cost & Schedule Confidence	High	Med	Med	
Tank Fallout Problems	Min. Hazard	Min. Hazard	No Problem	NA
Turn Around Time-Maintainability	Best	Adeq.	Adeq.	Design Access to Subsys.
Structural Integrity Fracture Mechanics	Least	Moderate	Greatest	Same, Except for Tanks

Space Division North American Rockwell

91SV13859

LO_2/LH_2 Orbiter Vs LH_2

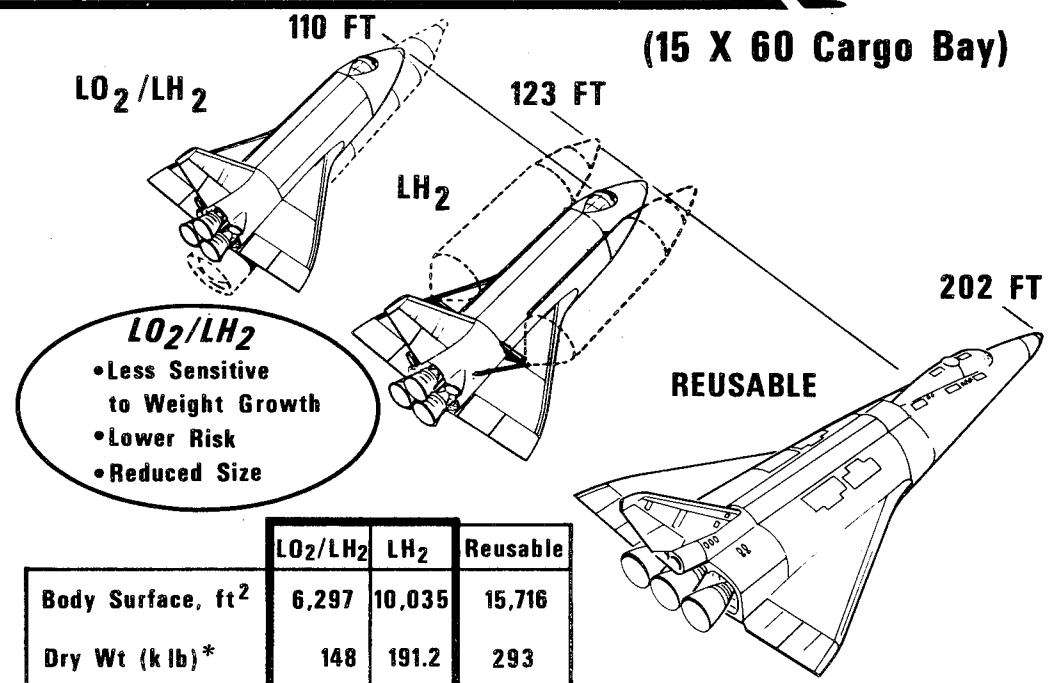

LO_2/LH_2

- Less Sensitive to Weight Growth
- Lower Risk
- Reduced Size

	LO_2/LH_2	LH_2	Reusable
Body Surface, ft^2	6,297	10,035	15,716
Dry Wt (k lb)*	148	191.2	293
3 Hi-Pc-F_{vac} Eng (k lb)	420	447.5	551

*Less Tanks & Payload

Space Division North American Rockwell

91SV13717

External OH vs H Tanks

	LO_2/LH_2 Selected Concept	LH_2	ϕB Baseline
GLOW - 1000 lb	3374	3595	4479
Orb Dry W-1000 lb	148	191	293
Cost Total Prog - $B Peak Annual - $B	 10.71 1.22(77)	 10.74 1.23(77)	 11.31 1.98(76)
Development Risk	Least Wt/ & Sensitivity Min Fract Mech	Medium	Highest

Space Division North American Rockwell

91SV13856

External Tank Summary

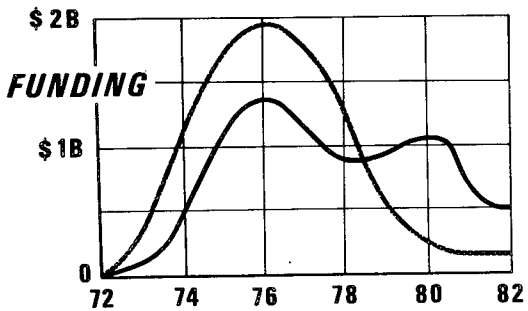

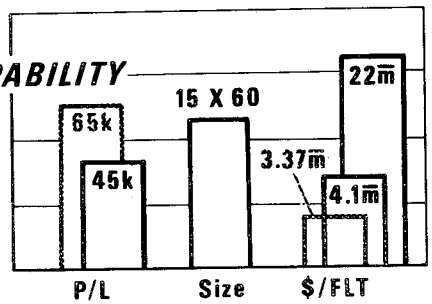

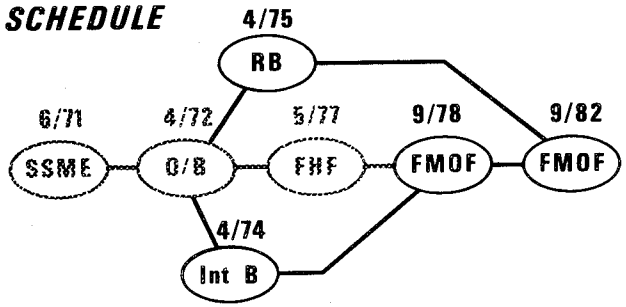

RISK

- TPS 1100 X Range
- Simultaneous O/B
- Large Vehicles
- New Eng Devel
- Fracture Mech

LO/LH
Tank Cost

Space Division North American Rockwell

91SV13783

Cargo Bay Size Trade

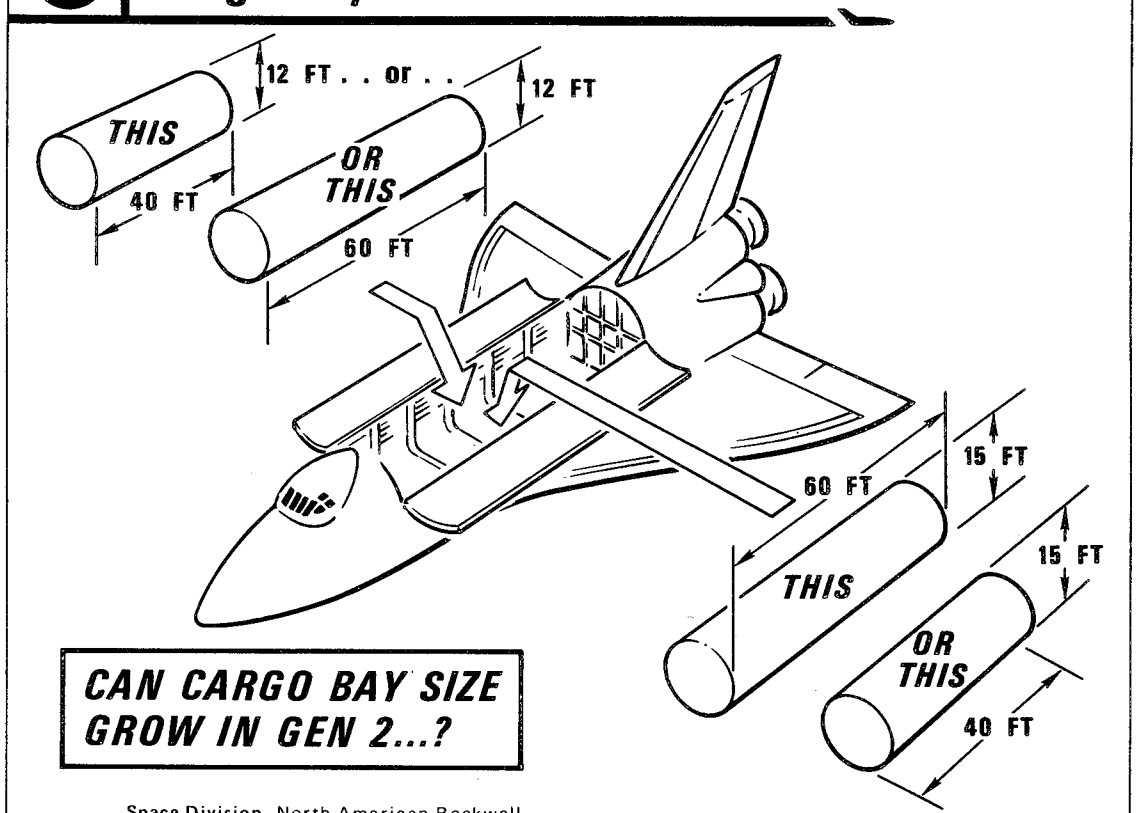

CAN CARGO BAY SIZE GROW IN GEN 2...?

Space Division North American Rockwell

91SV13798

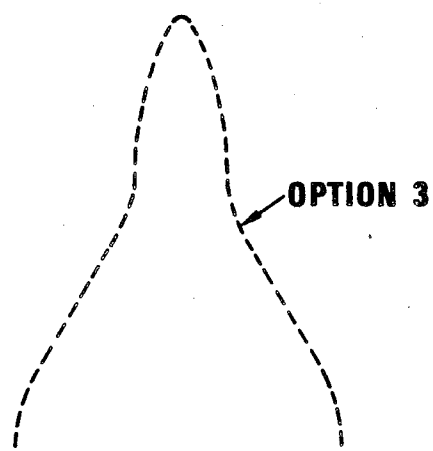

OPTION 3

Gen 1 & Gen 2 (2 Designs)—Common Features Where Possible

- **Increased Design & Development Testing**
- **Reduced Risk**

91SV13745-1

Cargo Bay Growth

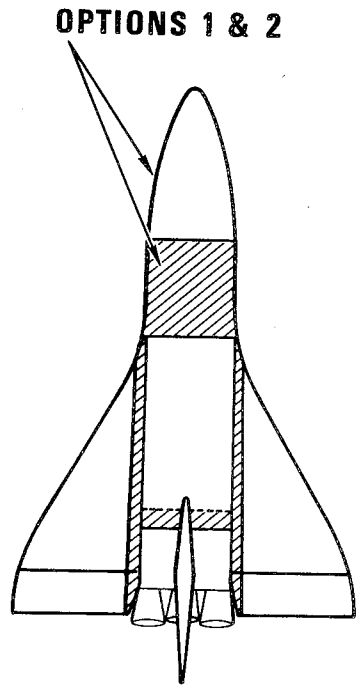

OPTION 1

Single Orbiter for Gen 1 & Gen 2

- Higher Initial Cost

OPTION 2

Compromise Gen 1 Orbiter 40 ft Cargo

- Stress & Size Wing for Gen 2
- 2 Wing Load Paths
- Fuselage Body Plug
- Penalty for Gen 1

Bay Size Effects

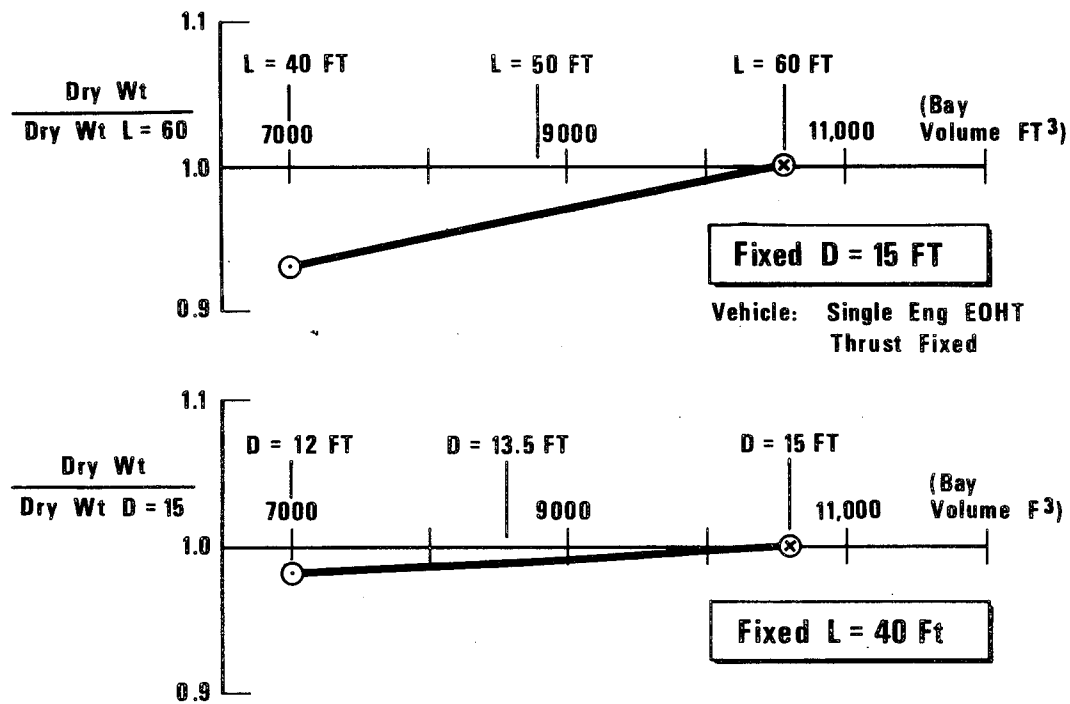

Space Division North American Rockwell

91SV13891

LO_2/LH_2 Orbiter Bay Size

	Bay Size	
	15 X 40	15 X 60
Body Volume FT^3	25,050	31,450
Body Surface FT	5,017	6,297
Wing Area FT^2	3,653	3,829
Dry Wt k lb (Less Tanks & Payload)	140	148
3 Hi Pc - F_{vac} k lb	404	420

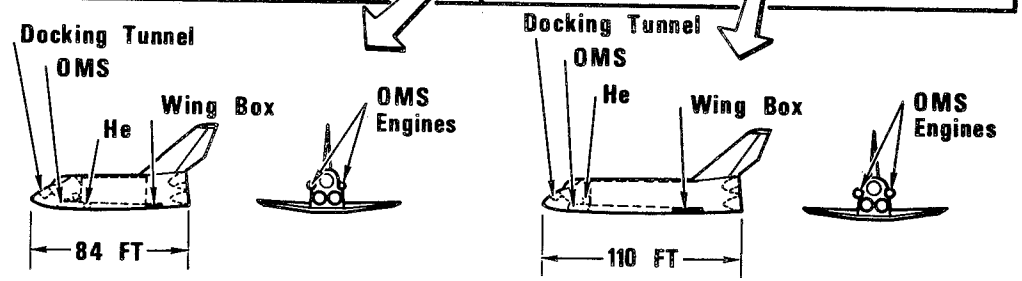

Space Division North American Rockwell

91SV13885

Cargo Bay Cost Effects

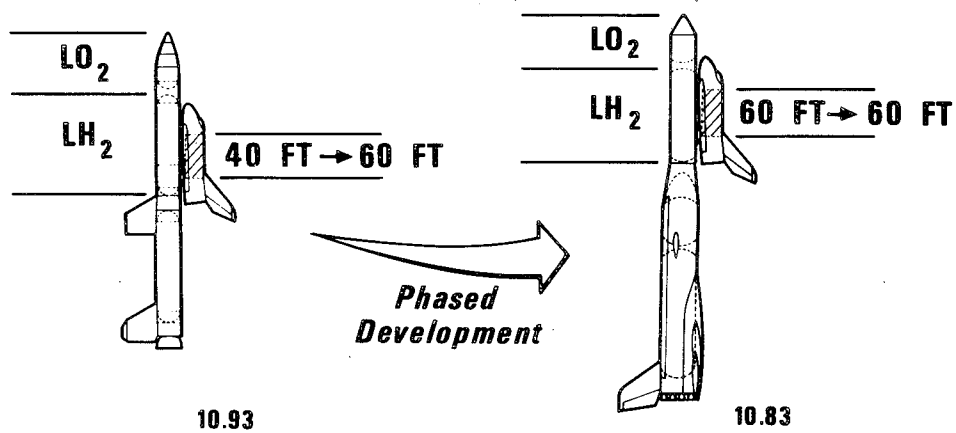

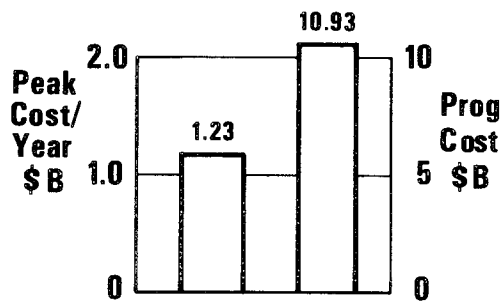

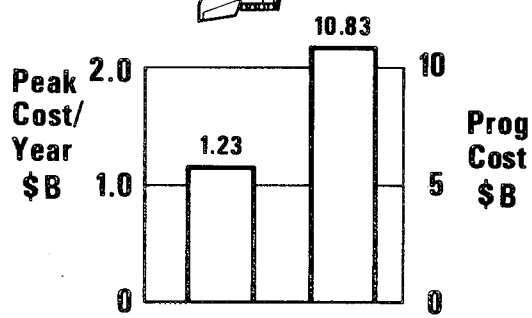

Space Division North American Rockwell

91SV13884

Initial Shuttle Missions

Full Capability Orbiter
(15 FT X 60 FT Cargo Bay; Manipulators Installed)

ON-ORBIT TASKS	1978	1979			1980			1981			1982	
	FLIGHT NO.											
	1	2	3	4	5	6	7	8	9	10	11	12
C/O & OPERATE MANIPULATORS	SOLELY FLT TEST	SOLELY FLT TEST	X	X	X	X	X	X	X	X		X
EVA			X	X	X							
DEPLOY & RETRIEVE PASSIVE MODULES			X	X								
C/O & DEPLOY SATELLITES				X	X		X	X	X	X		X
RENDEZVOUS				X	X	X			X	X		
C/O & OPERATE PAYLOAD MODULES				X	X						X	
RETRIEVE SATELLITES						X						
C/O & DEPLOY PROPULSIVE STAGES								X				
C/O & DEPLOY TUG									X	X		
RETRIEVE TUG									X	X		
SUPPORT NON-ASTRONAUT PERSONNEL											X	
ONBOARD SCIENTIFIC EXPERIMENTS											X	

← SCIENTIFIC MISSIONS BASED ON MSC REPT 70 FM195 →

Space Division North American Rockwell

91SV13836

Phased Development of On-Orbit Capabilities

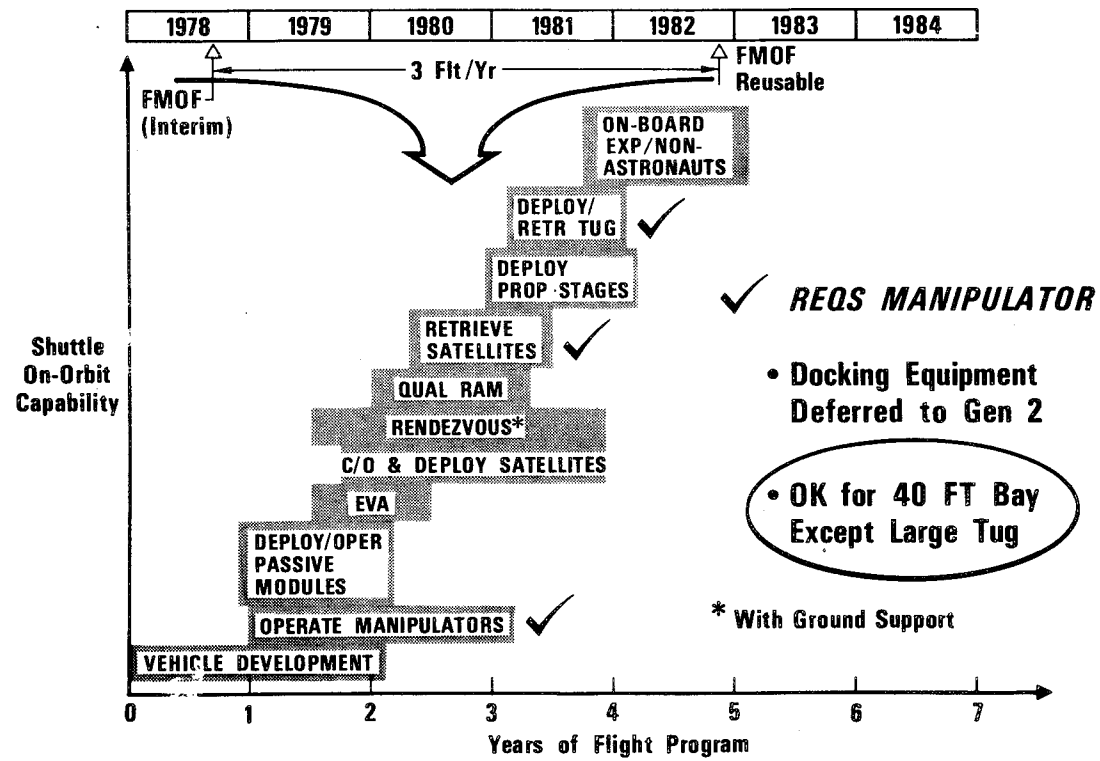

✓ *REQS MANIPULATOR*

- Docking Equipment Deferred to Gen 2

- OK for 40 FT Bay Except Large Tug

* With Ground Support

Space Division North American Rockwell

91SV13842A

Payload Handling & Retention

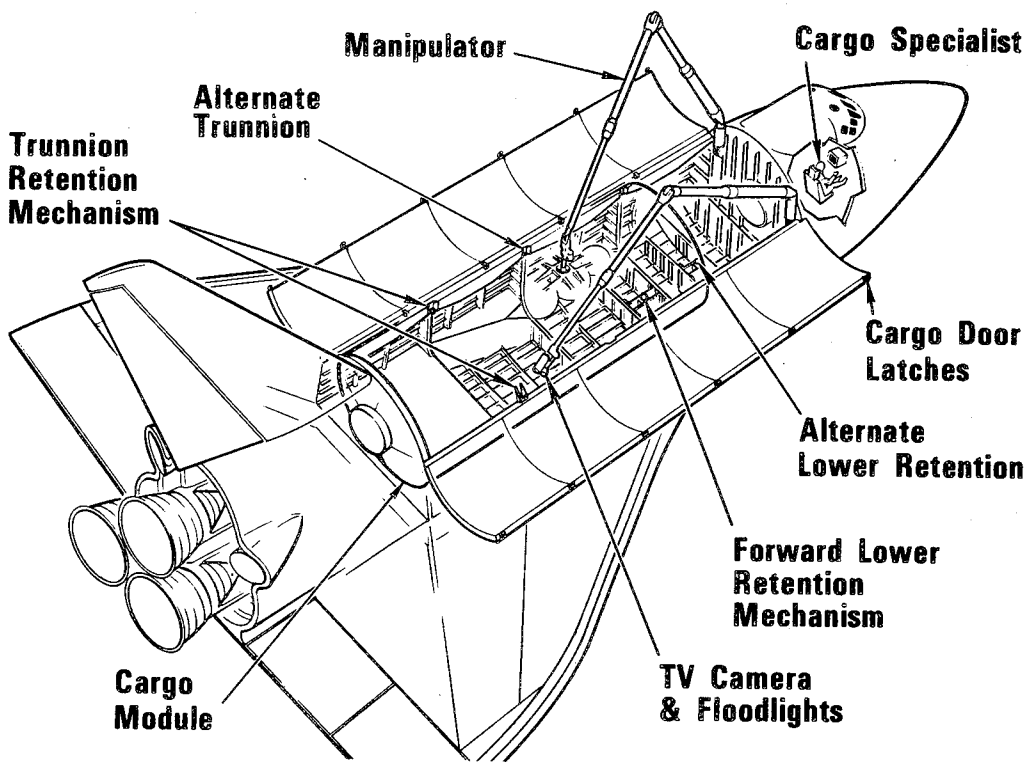

Space Division North American Rockwell

91SV13800

Cargo Bay Size Summary

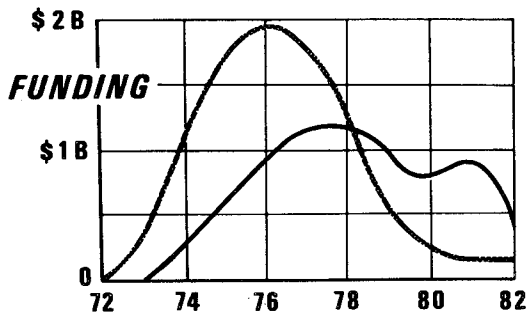

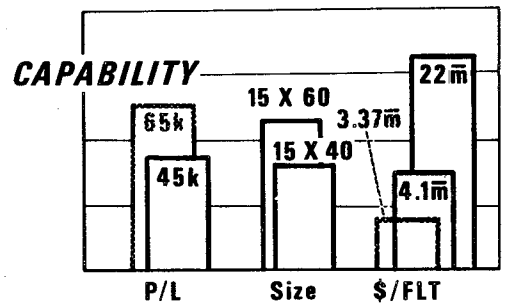

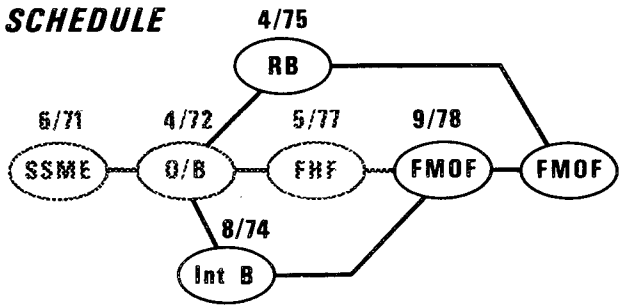

RISK

- TPS 1100 X Range
- Simultaneous O/B
- Large Vehicles
- New Eng Devel
- Fracture Mech

2 Orb Des
Gen 1 40
Gen 2 60

Space Division North American Rockwell

91SV13901

Abort Considerations

- *Weight & Size*
- *Abort Procedures*
- *Cost & Schedule*
- *Engine Size*

Post Abort Landing Areas

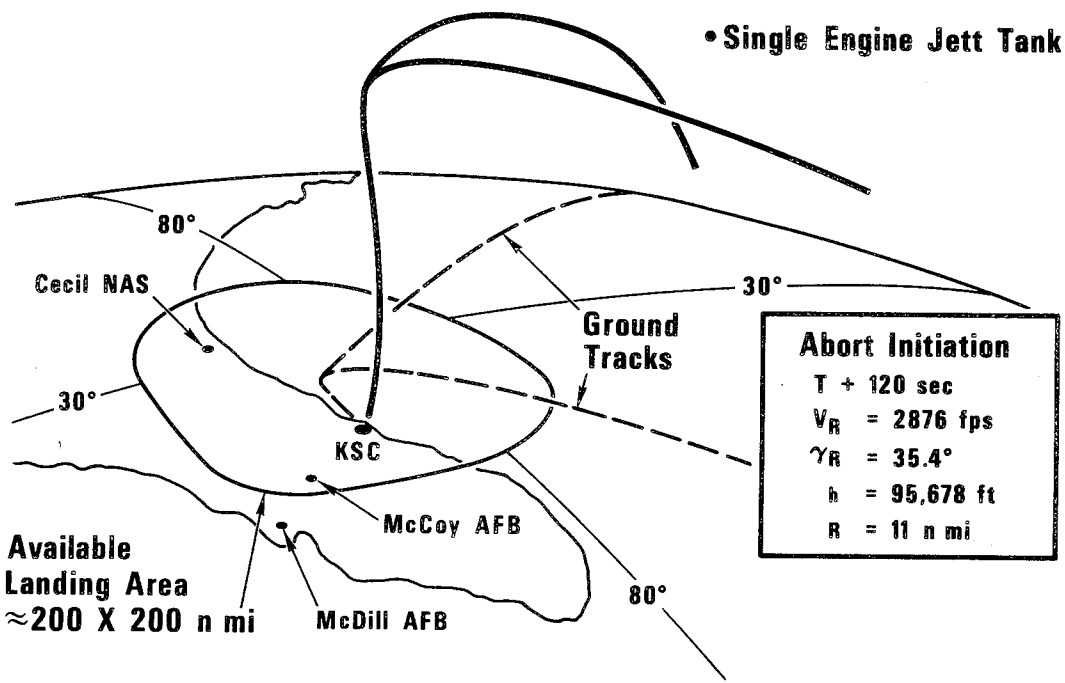

Space Division North American Rockwell

91SV13742A

Post Abort Landing Areas

- Single Engine Jett Tank
- Post Staging Environ Excessive

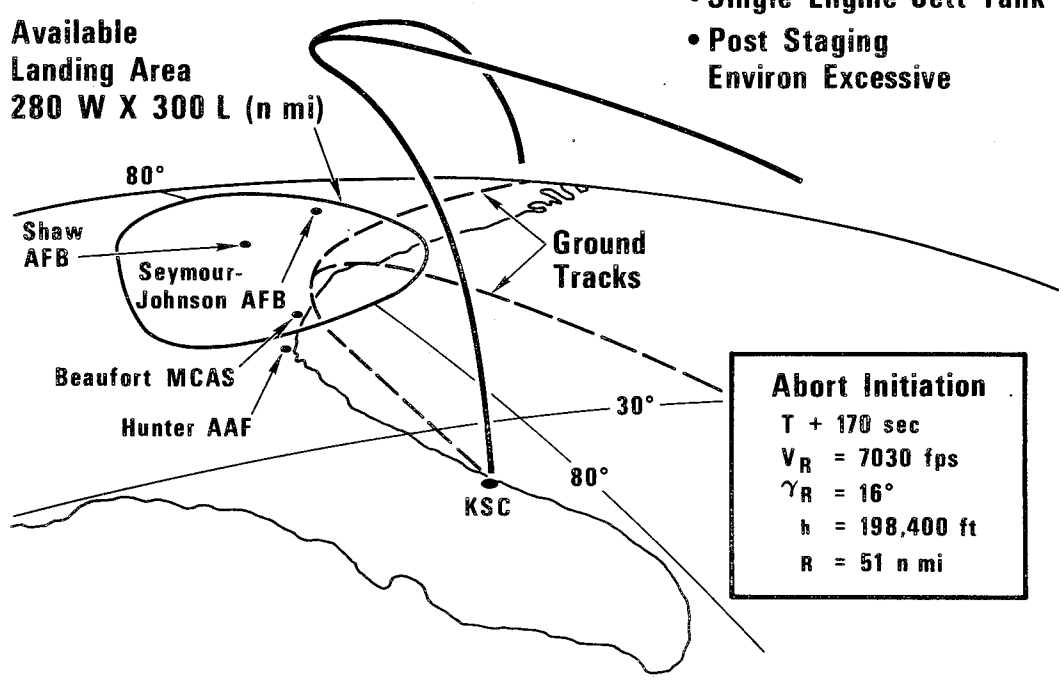

Abort Initiation

T + 170 sec
V_R = 7030 fps
γ_R = 16°
h = 198,400 ft
R = 51 n mi

Space Division North American Rockwell

91SV13743A

Abort Recommendations

No Once Around		Once Around	
SINGLE ENGINE		Multiple Engine	
K lb			
(1) Eng Fvac	605	404	(3) Eng Fvac
GLOW	3,241	3,242	GLOW
Orb Dry Wt	111	140	Orb Dry Wt
Cost $B			
Peak Annual	1.21	1.22	Peak Annual
Total Prog	10.64	10.72	Total Prog

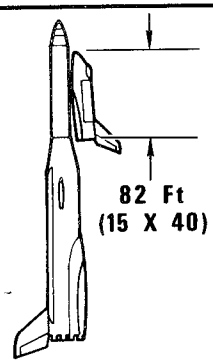

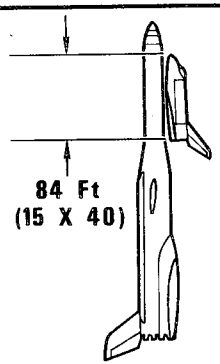

Abort Mode

Pre Normal Staging • Fly Orbiter Back to Launch Site Normal Staging or Later • Separate Orbiter & Land at Alt Site or Ditch	Pre Normal Staging • Fly Orbiter Back to Launch Site Normal Staging or Later • Abort Once Around

Alt Mode

✔ Multiple Engines
• Abort Once Around or Return Launch Site

Space Division North American Rockwell

91SV13911

Hi Pc Engine Expansion Ratio Trade

• *Delta Dry Wt*	150:1 (2-Position)	120:1 (2-Position)	90:1 (Fixed) ✓
Orbiter	0 (Ref)	-550 lb	-1,200 lb
HO Tank	0	+270 lb	+1,170 lb
Reuse Booster	0	+4,555 lb	+5,975 lb
Total ΔWt		+4,275 lb	+5,945 lb

• *Delta Cost*

Orbiter	0 (Ref)	-$ 3m̄	- $1m̄
HO Tank	0	+$ 1m̄	+$ 2m̄
Reuse Booster	0	+$ 13m̄	+$ 22m̄
SSME	0	-$ 5m̄	-$ 42m̄
Total ΔCost		+$ 5m̄	-$ 19m̄

Configuration Recommendations

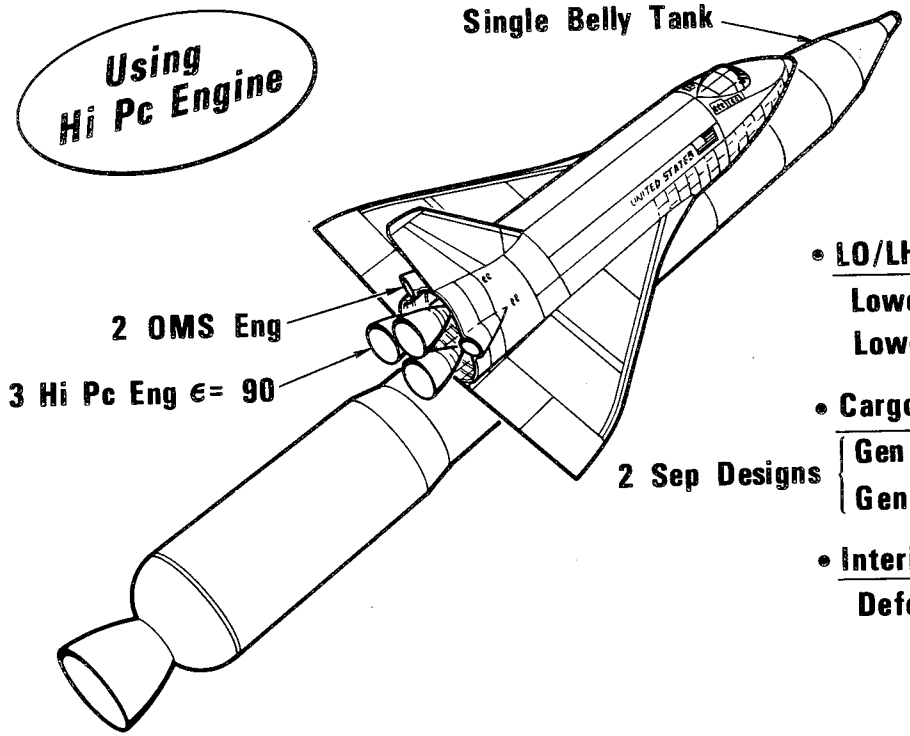

- **LO/LH Tank**
  - Lower Risk
  - Lower Peak $
- **Cargo Bay**
  - Gen 1 15 X 40
  - Gen 2 15 X 60
- **Interim Booster**
  - Defer Decision

Presentation Outline

INTRODUCTION

MAJOR CONFIGURATION TRADES

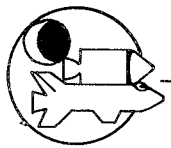

Low Technology/ Low Risk System

SCHEDULE & COST OPTIONS

SUMMARY

What are We Really Looking for ?

LOWEST COST
- Early $ Demands
- Peak Annual Funding
- Total Program
- Cost/Mission (Annual Ops Cost)

LEAST RISK
- Cost
- Technical
- FMOF Date

ADEQUATE CAPABILITY
- Cargo Bay Size (40 or 60)
- Payload Wt (45)
- Abort
- Ease of Growth to Full Capability

Requirements Deviations

Generation 1

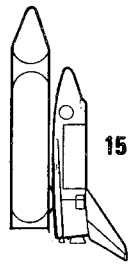

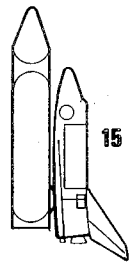

- 45k P/L Due East
- (3) J-2S Engines
- Expendable Booster
- No Once-Around Abort
- 200 n mi X-Range
- OMS Tank Size 900 fps

Generation 2 Requirement

- 15 X 60 FT
- 65k lb
- Hi Pc
- Reusable Booster
- Once-Around Abort
- 1100 n mi X-Range
- 2000 fps

200 N MI X-Range for Interim

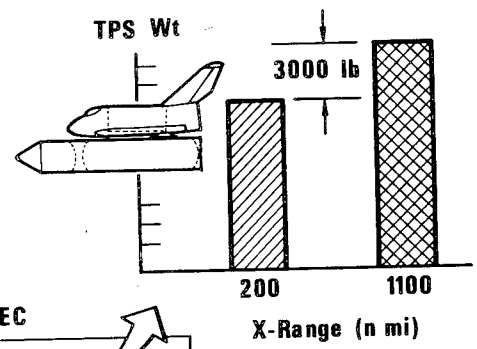

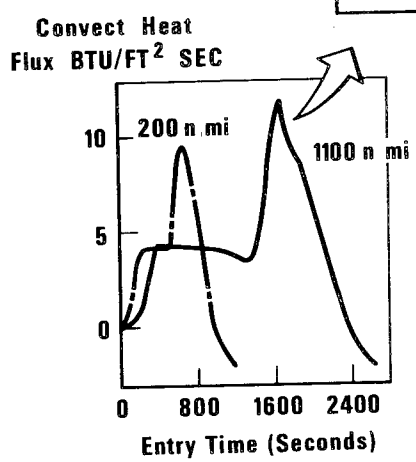

GEN 1

- **Low X-Range Allows Smaller Expendable Booster**

GEN 2

- **Increase X-Range to 1100 n mi**

Storable ACPS

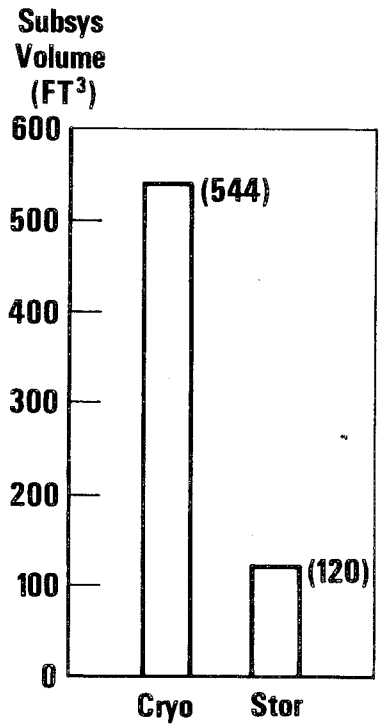

ACPS Eng Comparison

	Cyro	Stor
Thrust (lb)	1550	1550
I_{sp} (sec)	425	290
M.R.	4.0	1.6
ϵ	20	20
Eng Wt (lb)	31.7	27.5

91SV13860

Storable ACPS Change Reduces Prog Cost

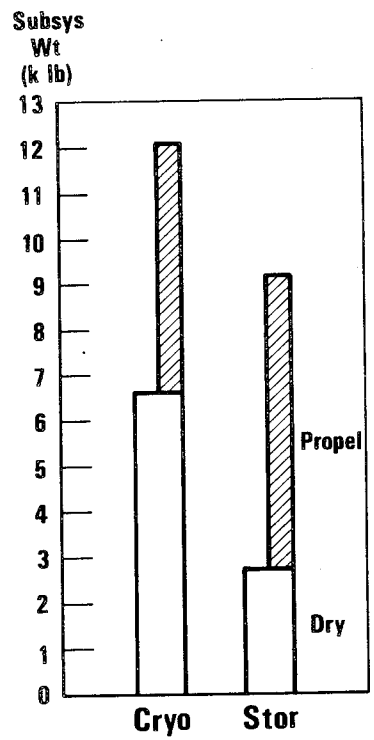

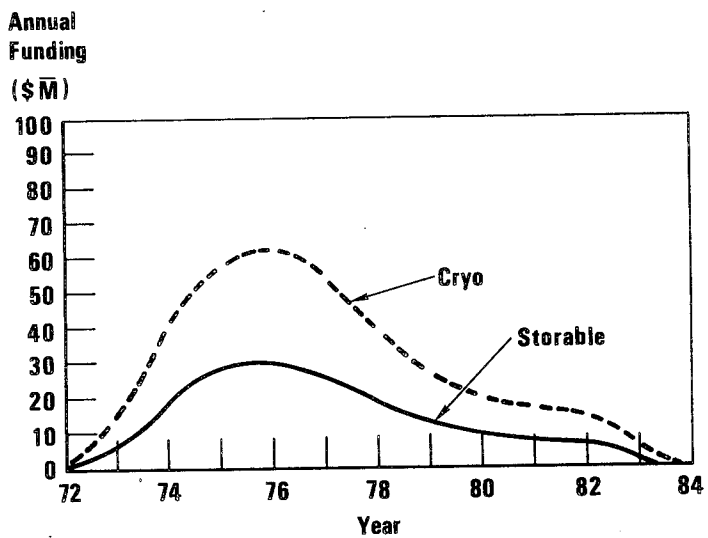

Space Division North American Rockwell

91SV13839

Cryo vs Storable OMS

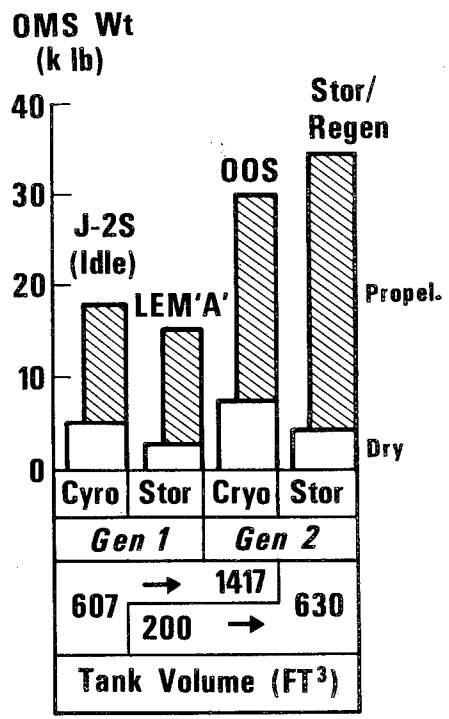

ENG CHARACT

	Cryo		Stor	
	J-2S (Idle)	OOS	LEM'A'	Stor Regen
T (k lb)	3.5	10	3.5	10
I_{sp} (sec)	418	464	306	311
ϵ	40	400	46	69
Wt (lb)	450	216	202	260

Space Division North American Rockwell

91SV13875

Storable OMS Reduces Sys Cost

- Cost Saving with Small Wt Penalty for Storable OMS

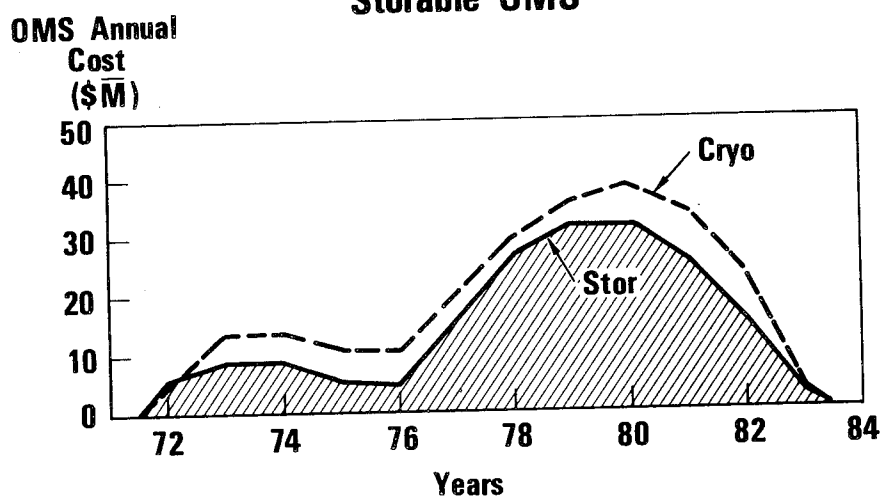

3000 psi Hyd System Lower Risk

3000 psi

- *Small WT Penalty*
- *More Experience*
- *Improves Stiffness Margin*

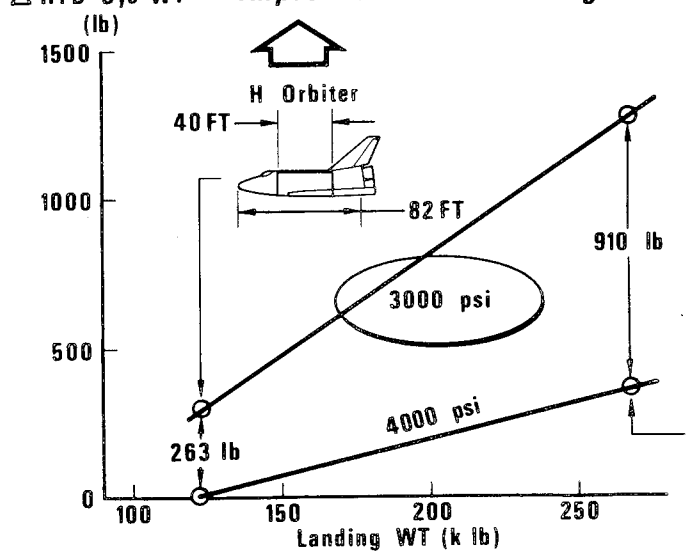

Subcontract Costs

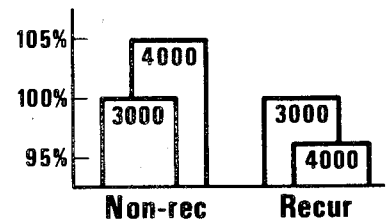

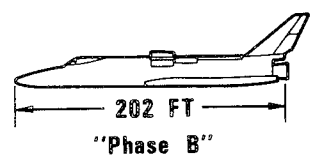

Space Division North American Rockwell

91SV13840

Avionic Changes for Lower Peak Funding

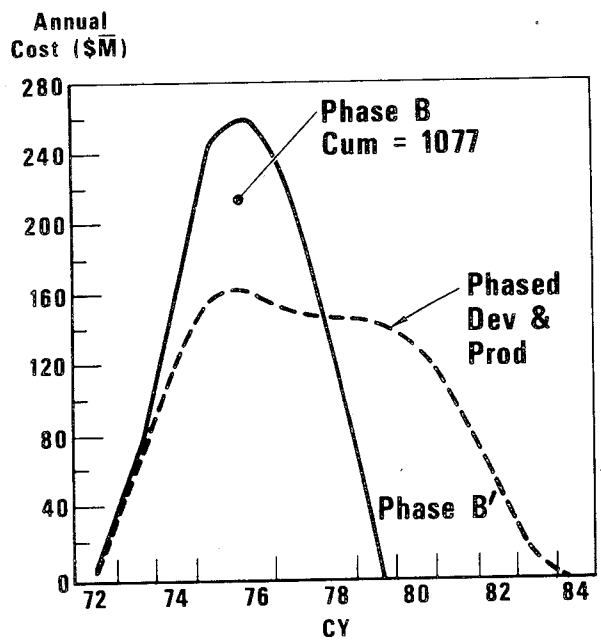

ϕB Avionics System Configuration

- DCM
- G&N
- Comm
- D&C

- 1970 Tech System Except Long Range PRS
- Reduce Redundancy for FHF
- Phase Develop Equip. For Mission Needs

J-2S Engine Reduces Peak Funding

	J-2S	Hi Pc
Length IN.	119	226
Diameter IN.	81	121
Thrust (vac k lb)	265	420
I_{sp} (vac sec)	436	459
M.R.	5.5	6.0
ϵ	40	150
Weight (lb)	3,800	6,200

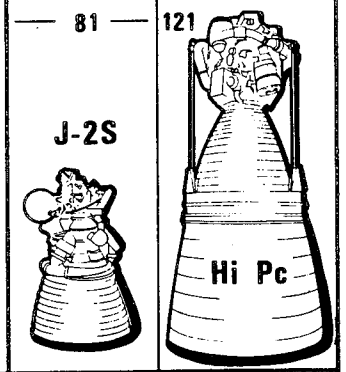

Engine Costs

	J-2S	Hi Pc
Non-Recur	58$\bar{m}$	394$\bar{m}$
Recurring	2$\bar{m}$	3$\bar{m}$

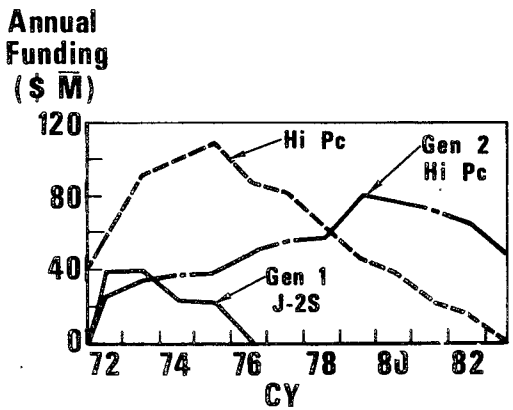

Space Division North American Rockwell

91SV13834

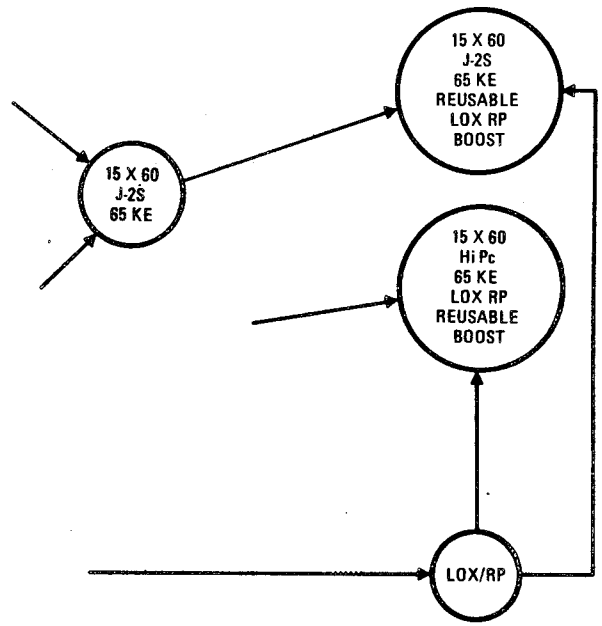
15 X 60
J-2S
65 KE
15 X 60
J-2S
65 KE
REUSABLE
LOX RP
BOOST
15 X 60
Hi Pc
65 KE
LOX RP
REUSABLE
BOOST
LOX/RP

91SV13886-2

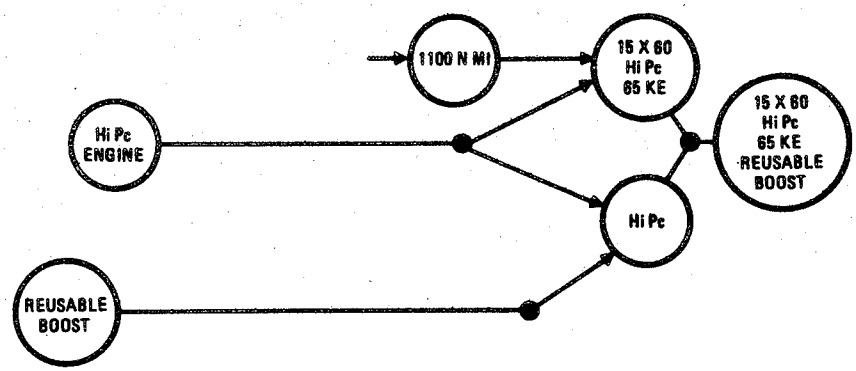
1100 N MI
15 X 60
Hi Pc
65 KE
Hi Pc
ENGINE
15 X 60
Hi Pc
65 KE
REUSABLE
BOOST
Hi Pc
REUSABLE
BOOST

91SV13886-1

Low Cost/Risk Program Options

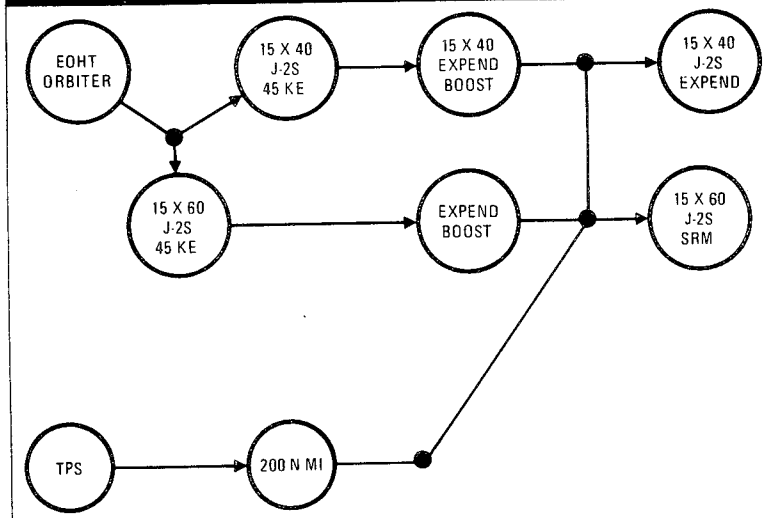

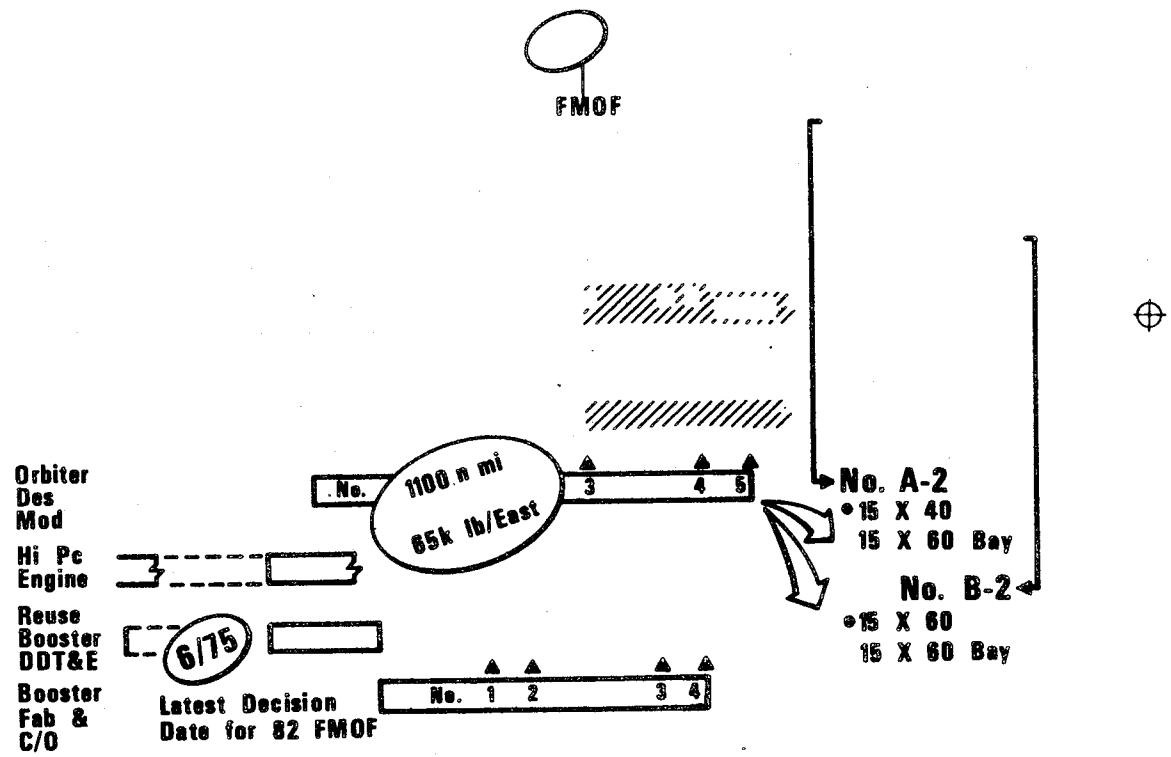
FMOF
Orbiter Des Mod
Hi Pc Engine
Reuse Booster DDT&E
Booster Fab & C/O
No.
1100 n mi
65k lb/East
3
4
5
6/75
Latest Decision Date for 82 FMOF
No.
1
2
3
4
No. A-2
•15 X 40
15 X 60 Bay
No. B-2
•15 X 60
15 X 60 Bay
91SV13863-1

LO_2/LH_2 Orbiter Program Options

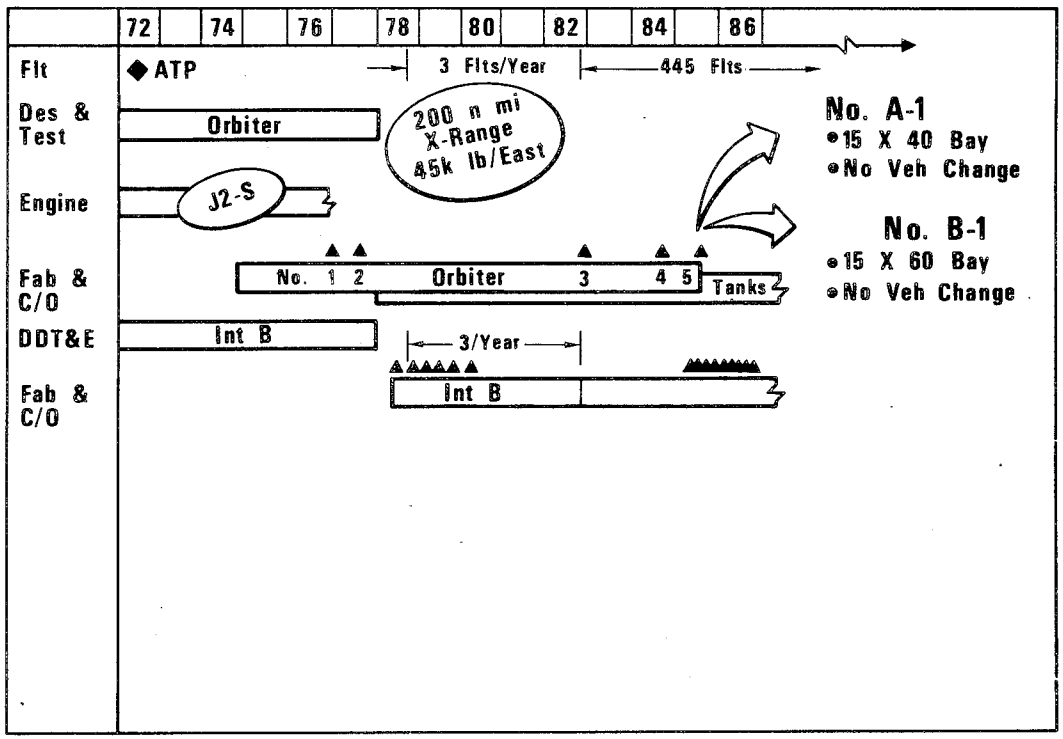

Space Division North American Rockwell

91SV13863

Low Tech Risk & Cost Configuration

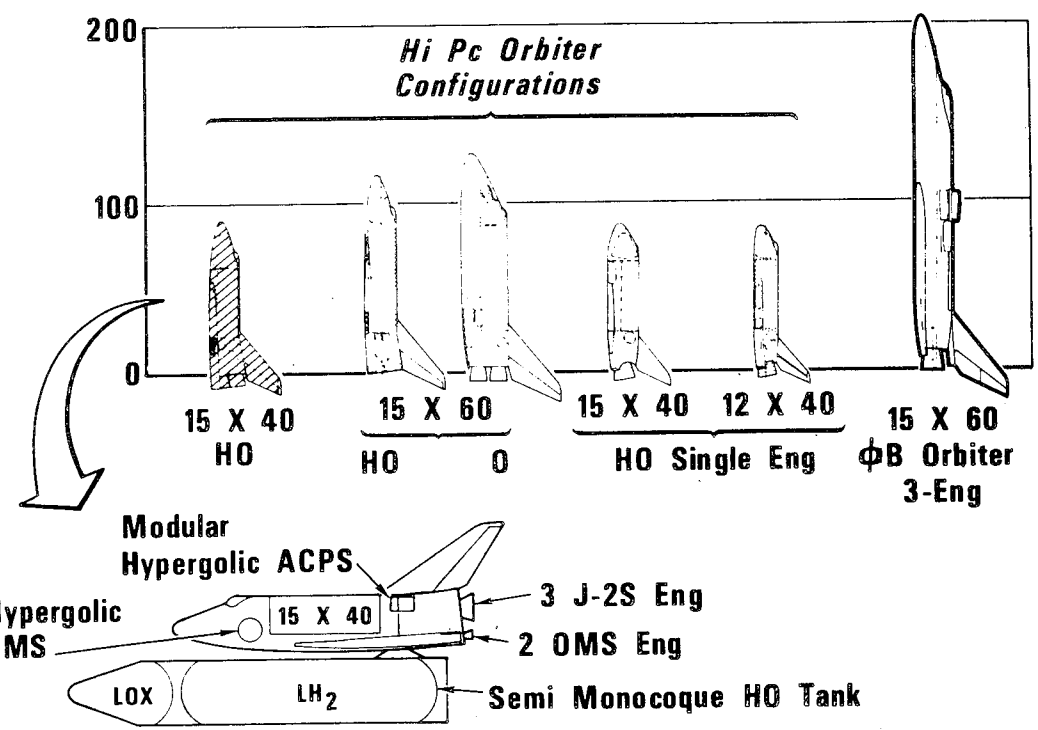

Space Division North American Rockwell

91SV13864

Orbiter Comparisons

- *HO Tank*
- *Dry Weight 38,230 lb*

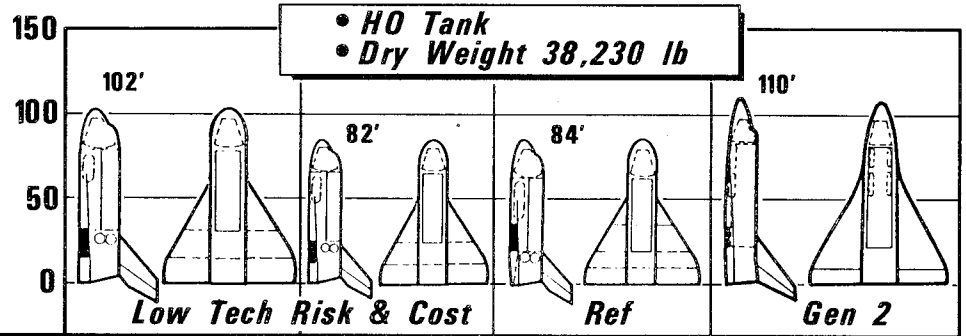

	Low Tech Risk & Cost		*Ref*	*Gen 2*
P.L.(E)	(15 X 60) 45k	(15 X 40) 45k	(15 X 40) 45k	(15 X 60) 65k
Engine	3/J-2S	3/J-2S	3/HiPc	3/Hi Pc
OMS Tank	900 fps	900 fps	2,000 fps	2,000 fps
Abort	X	X	✓	✓
Wing A	2,630	2,472	3,653	3,829
Body A	5,617	3,827	5,017	6,297
Body Vol	25,354	16,287	25,050	31,450
Dry Wt	104,700	96,700	139,950	148,400
Olow	916k	908k	1,060k	1,068k
Glow	5,058k	5,050k	4,478k	3,374k
Booster	4+2 120-7	4+2 120-7	260 IN.	Reusable

Space Division North American Rockwell

91SV13857

Abort: 3 J-2S Engines/One Eng Out

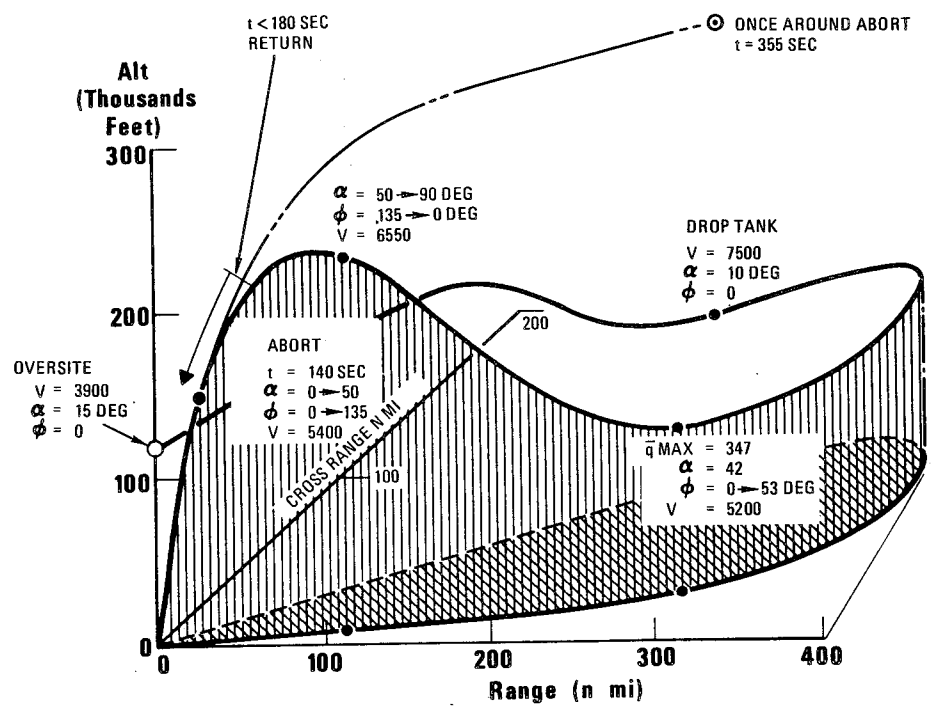

Space Division North American Rockwell

91SV13858

Shuttle Mission Compatibility Comparison

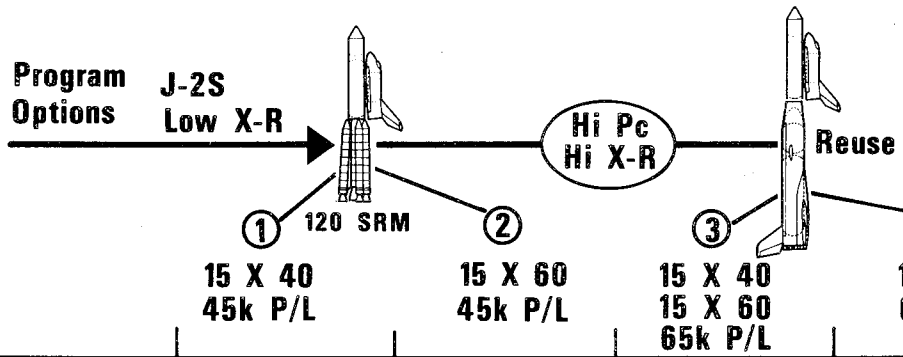

	1	2	3	4
	15 X 40 45k P/L	15 X 60 45k P/L	15 X 40 15 X 60 65k P/L	15 X 60 65k P/L
Fleming Mission Model With Tug in 1985				
Capture	85%	100%	100%	100%
Fleming Mission Model With Tug in 1979				
Capture	49%	71%	100%	100%

PROBLEM AREAS

60 Ft Long DOD Satellites
57k lb, 15 X 40 Tug

Space Division North American Rockwell

91SV13853

J-2S vs Hi Pc Expend Booster Comparison

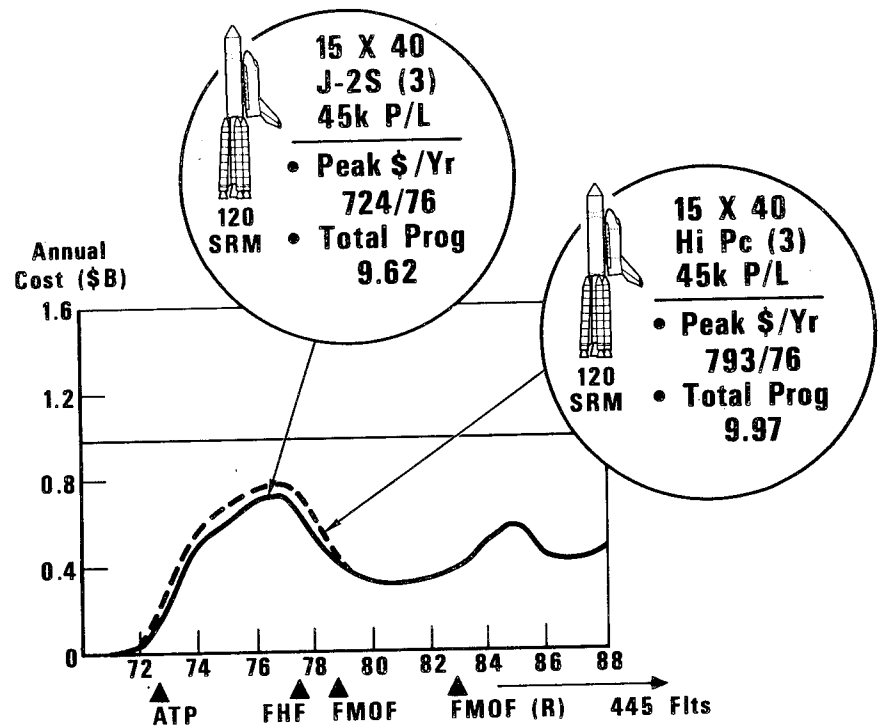

Space Division North American Rockwell

91SV13780

Expendable VS Phased Reusable Booster

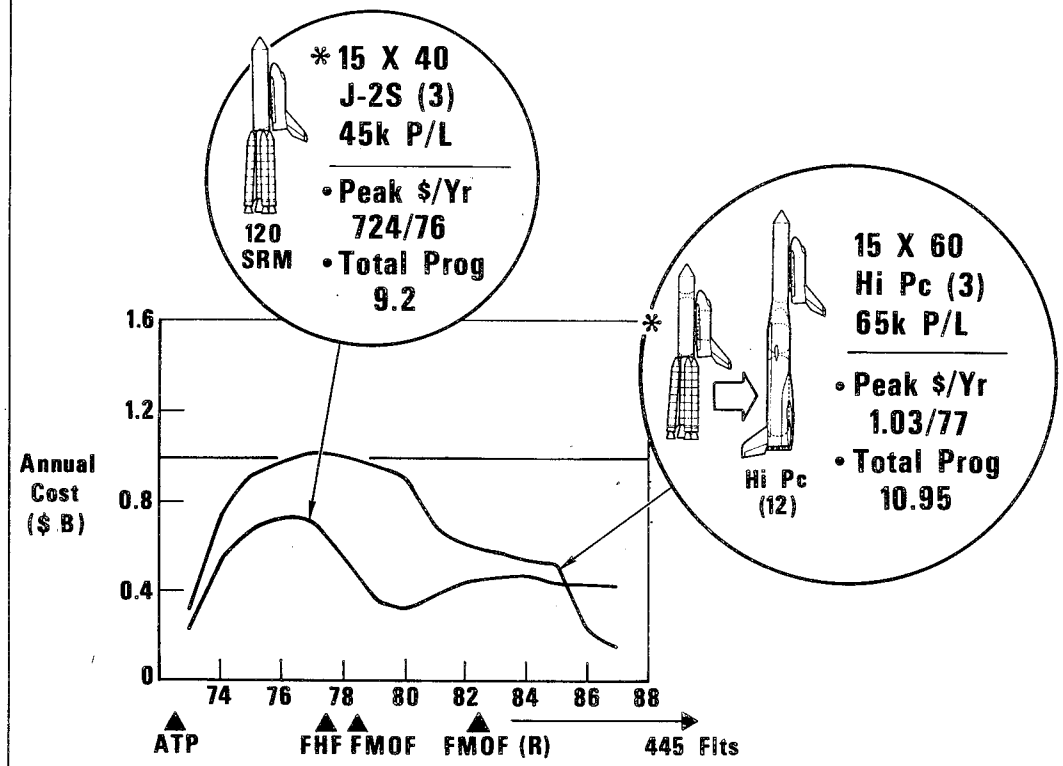

Space Division North American Rockwell

91SV13872

Subsystem Changes for Cost Reduction

AVIONICS

Sys — Full-Up System / *PHASED DEVELOP*

P/L ACCOMMODATION

Cargo Bay — 15 X 60 / *15 X 40*

Docking — Docking Equip / *MANIPULATORS*

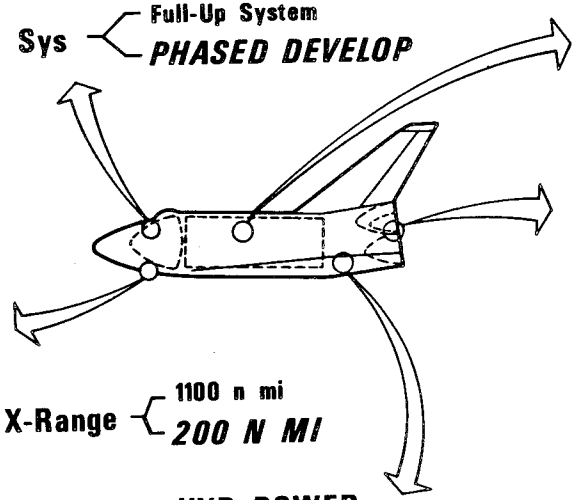

PROPULSION

Main Eng — Hi Pc / *J-2S*

OMS — Cryo / *STOR*

ACPS — Cryo / *STOR*

ABES — Full Capab / *FERRY ONLY*

TPS

X-Range — 1100 n mi / *200 N MI*

HYD POWER

Press. — 4000 psi / *3000 PSI*

Orbiter Subsystem Summary

Subsystem	Configuration
TPS	Size for 200 n m X-Range
MPS	J-2S (3)
OMS	Hypergolic NTO/A50 (2) Lem "A" Engs ΔV = 900fps
RCS	Hypergolic (29) Thrusters
ABES	Ferry Only
DCM	Phase B Sys
GN&C	Phase B Sys
Comm	Nav Aid Conventional No PRS Command Thrust Terminator in Booster
Displays & Control	Phase B Sys

Subsystem	Configuration
Pwr Dist & Cont	Phase B Sys Ex-cept Hardwire Cotl
Elec. Pwr Gen	Phase B
APU	Phase B (Resized)
Hyd Pwr (APU)	4 X 3000 psi
ECLSS	
Cabin Atmos	Phase B
Heat Sink	Phase B
Food & Waste	Apollo Phase B
Elec Cooling	Phase B
Crew Sys	Ejection Seats
P/L Deploy & Retrieval	Manipulators

Low Tech Subsystem Summary

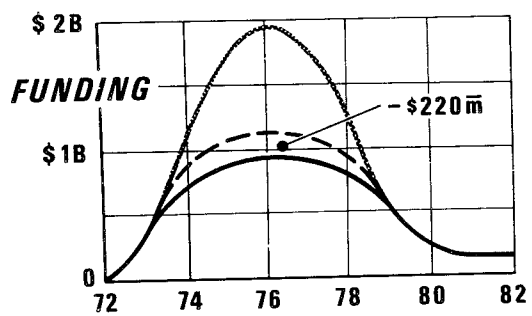

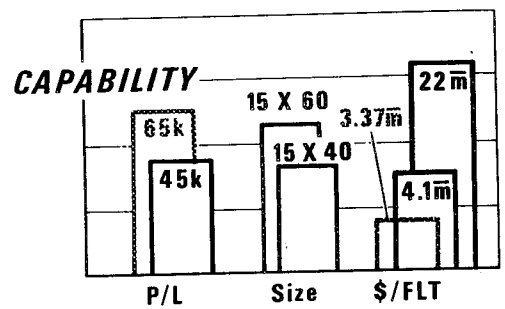

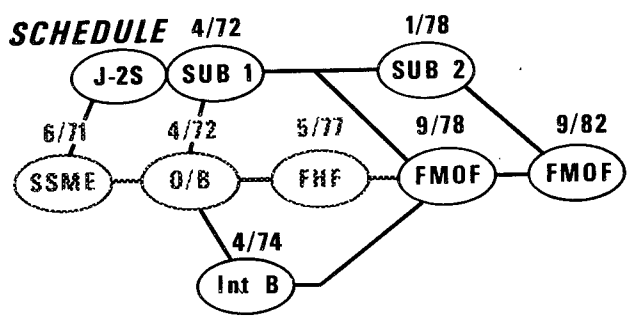

RISK

- TPS 1100 X Range
- Simultaneous O/B
- Large Vehicles
- New Eng Devel
- Fracture Mech

J-2S Develop

Space Division North American Rockwell

91SV13837

Presentation Outline

INTRODUCTION

MAJOR CONFIGURATION TRADES

LOW TECHNOLOGY/ LOW RISK SYSTEM

Schedule & Cost Options

SUMMARY

The Problem Evolution

ΦB Init
Fully Reusable FMOF 4/78 } ~ $12B, > $2B PAF

ΦB Final
Reusable W/EHT FMOF 9/78 } < $12B, ~ $1.6B PAF

ΦB'
Phased Development W/EOHT FMOF 9/78 } ~ $11B, ≥ $1.2B PAF

- Which Orbiter?
- Which Exp Booster?
- What Schedule?

< $ 1.0 PAF??

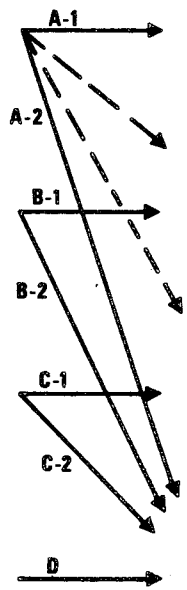

91SV13835-2

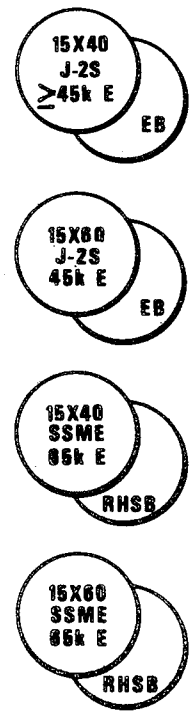

✓GENERATION 2

- Constants–
  - EOHT
  - Hi X-Range
  - 445 Flts
  - FMOF W/Unmod Gen 1 Orbiter
- Variables–
  - FMOF (9/80 → 9/84)
  - 2 Or 3 Orbiters
  - 3 Or 4 RHSB

915V13835-1

Options Exercised

GENERATION 1

- Constants–
  - EOHT
  - LOW X-Range TPS
  - FMOF 9/78
  - 2 Orbiters
- Variables–
  - Exp Booster
  - Launch Rate

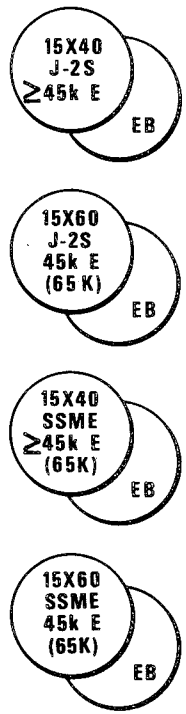

Key Results-Cost/Sched Study

Program Option	Early Funds Reqmts		Peak Funding		Total Program Cost	Approx Annual Cost >1985
	FY 73	FY 74	Amount	GFY		
A-1	$226M	$519M	$724M	1976	$9.62B	$500M
A-2	312	688	1080	1977	11.33	165
B-1	234	535	736	1976	9.72	500
B-2	302	689	1049	1977	11.16	165
C-1	325	704	1017	1977	10.85	165
C-2	343	739	1060	1977	11.15	165
D	333	719	1025	1977	10.95	165

Fee & Govt Prog Support Excluded From Above Figures

Space Division North American Rockwell

91SV13849

Typical Cost Phasing Adjustments

- Phased Engrg Costs to Match Detailed Estimate
- Loaded Material Costs per "Commitment" Funding Reqmts
- J-2S to SSME Cases
  - Loaded J-2S Develop Early
  - Start SSME Early & Stretch
- SSME Only Cases -- Advanced DDT&E $ Consistent with Detailed Plan
- SSME DDT&E $ for RHSB Engines Shifted to Later SSME Production
- Initiated Reusable Booster Design Earlier & Stretched
- Moved Expendable Booster DDT&E Forward (Start Six Months After Orbiter) & Stretched
- Used Unmodified Gen 1 Orbiter on Gen 2 FMOF
- Reduced Expendable Tank Production Rate Build-up
- Delayed Opnl Spares Procurement

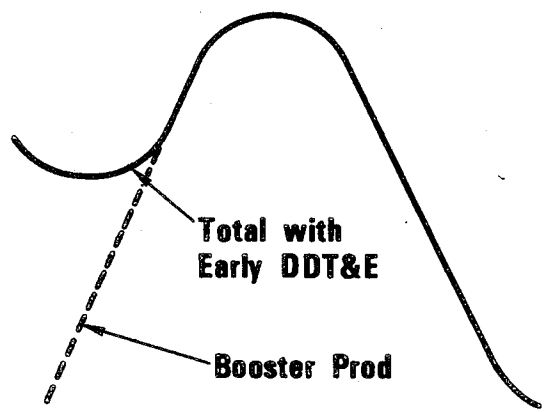

91SV13870-1

Typical Expendable Booster Phasing

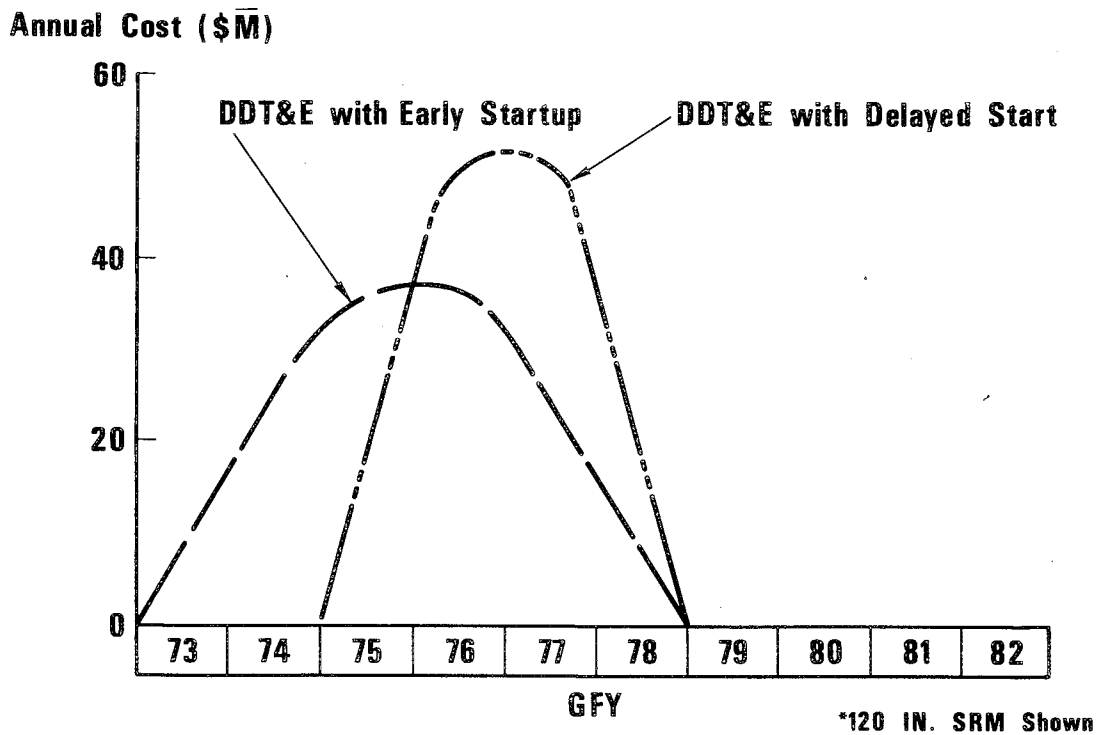

*120 IN. SRM Shown

Space Division North American Rockwell

91SV13870

Expendable Booster Costs

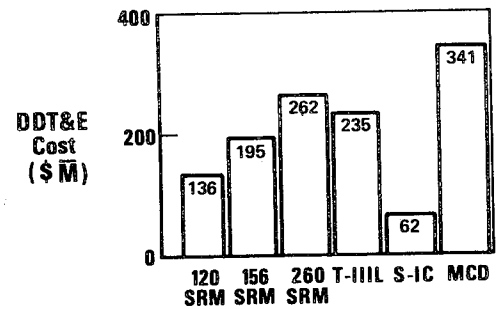

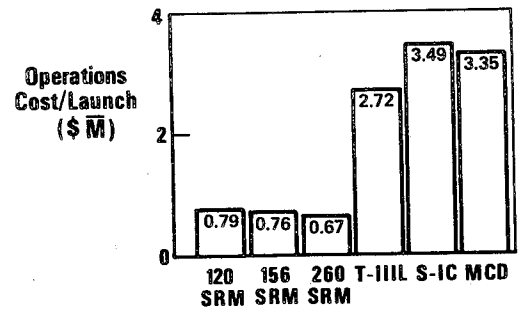

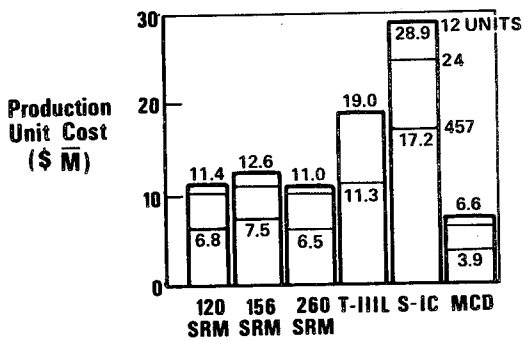

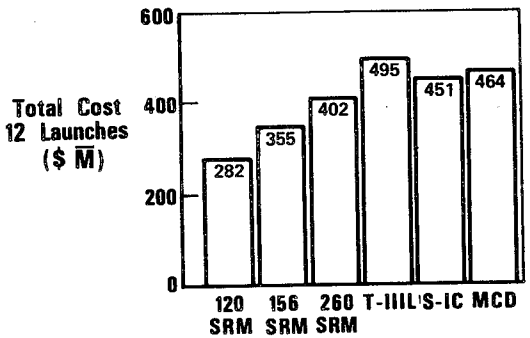

Space Division North American Rockwell

91SV13862

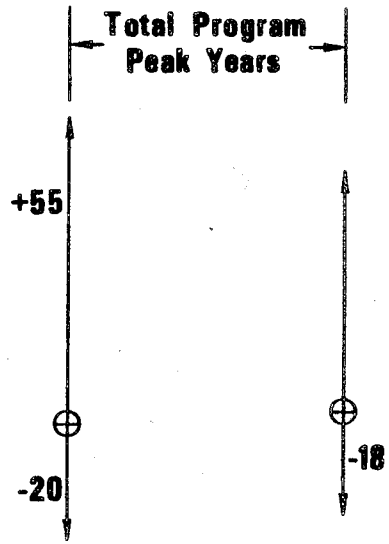

91SV13871-1

Expendable Booster Program Costs

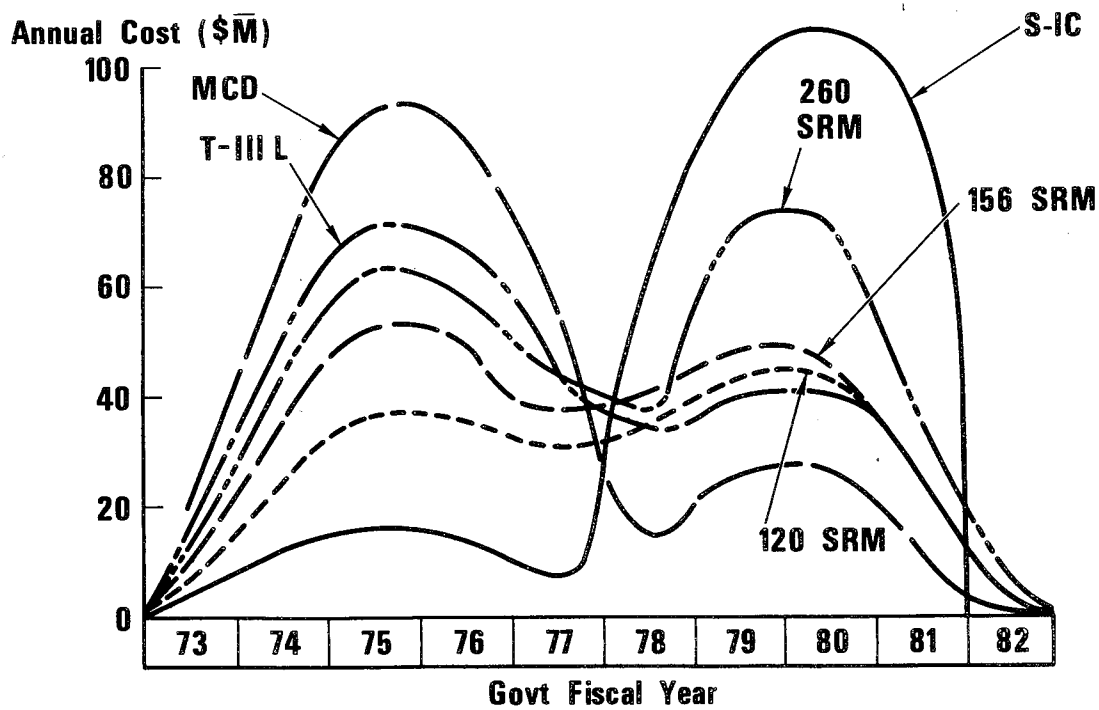

*Based on 12 Orbiter Launches

Space Division North American Rockwell

91SV13871

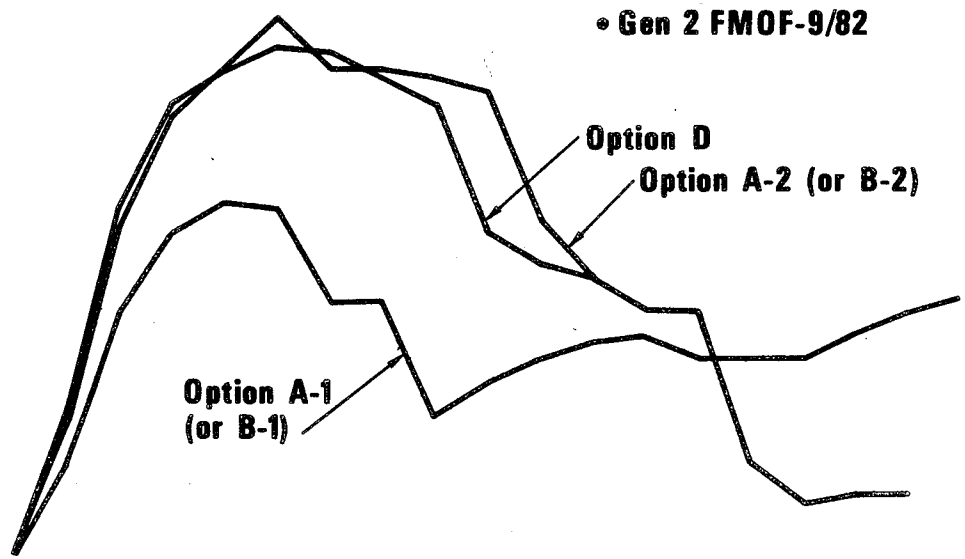

91SV13844-1

Funding Requirements vs "Targets"

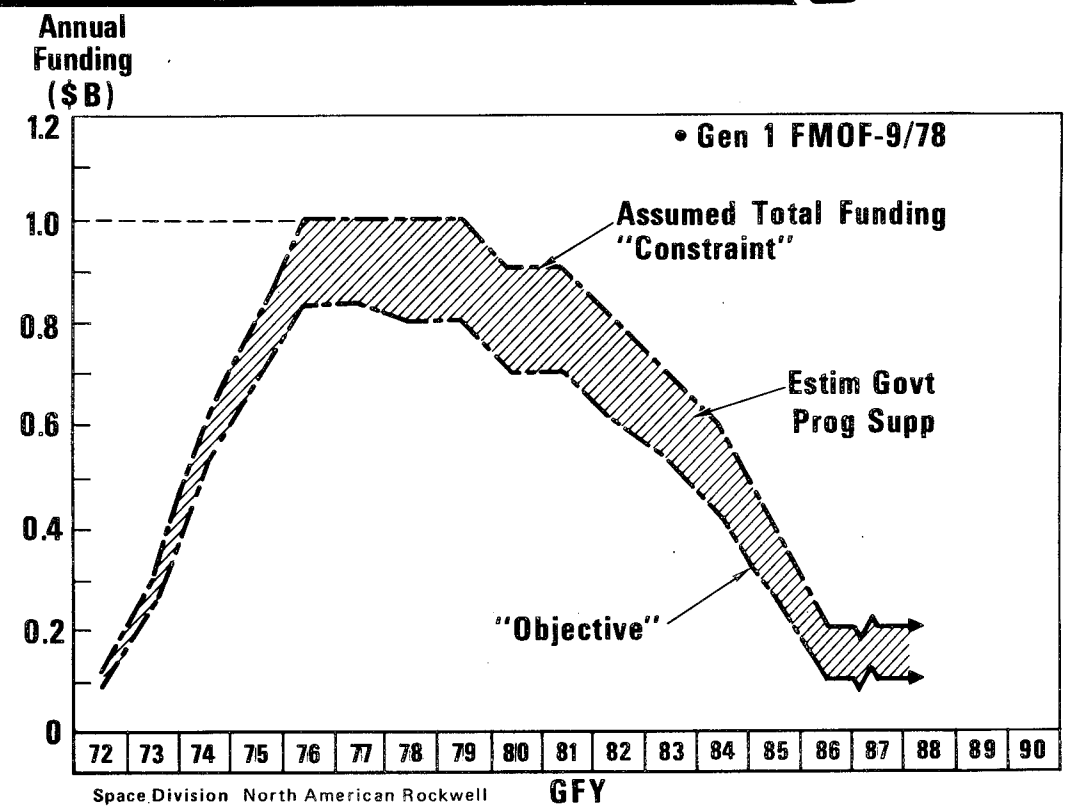

Space Division North American Rockwell

91SV13844

NASA Funding Categories

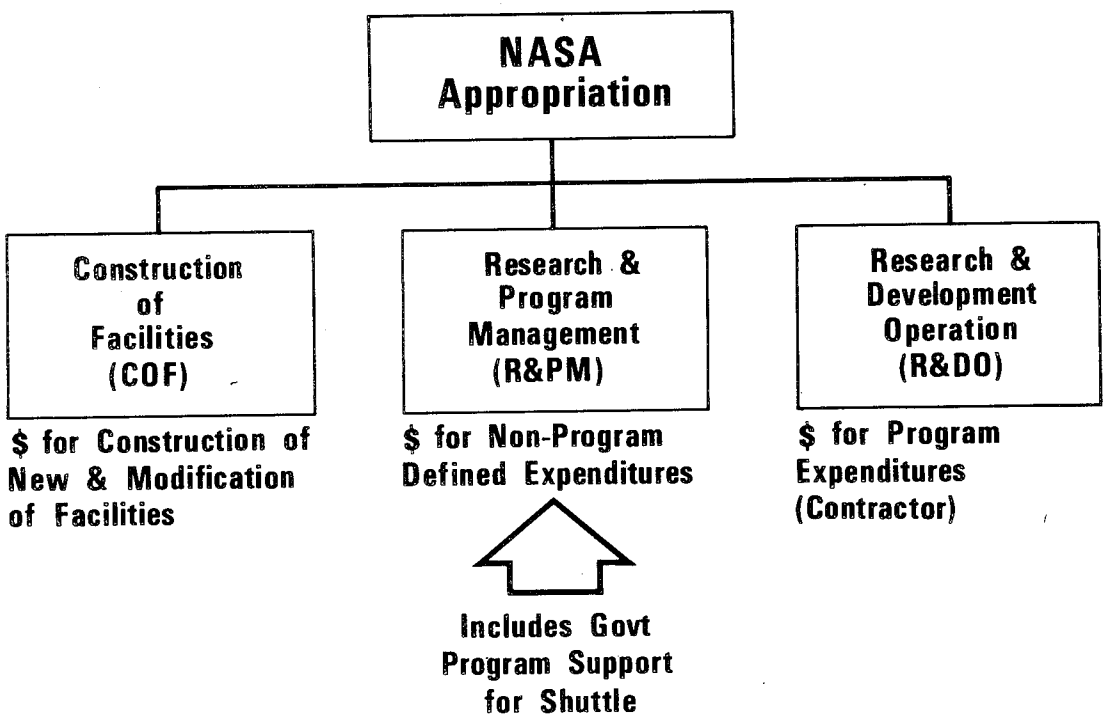

Space Division North American Rockwell

91SV13850

NASA R&PM Budget

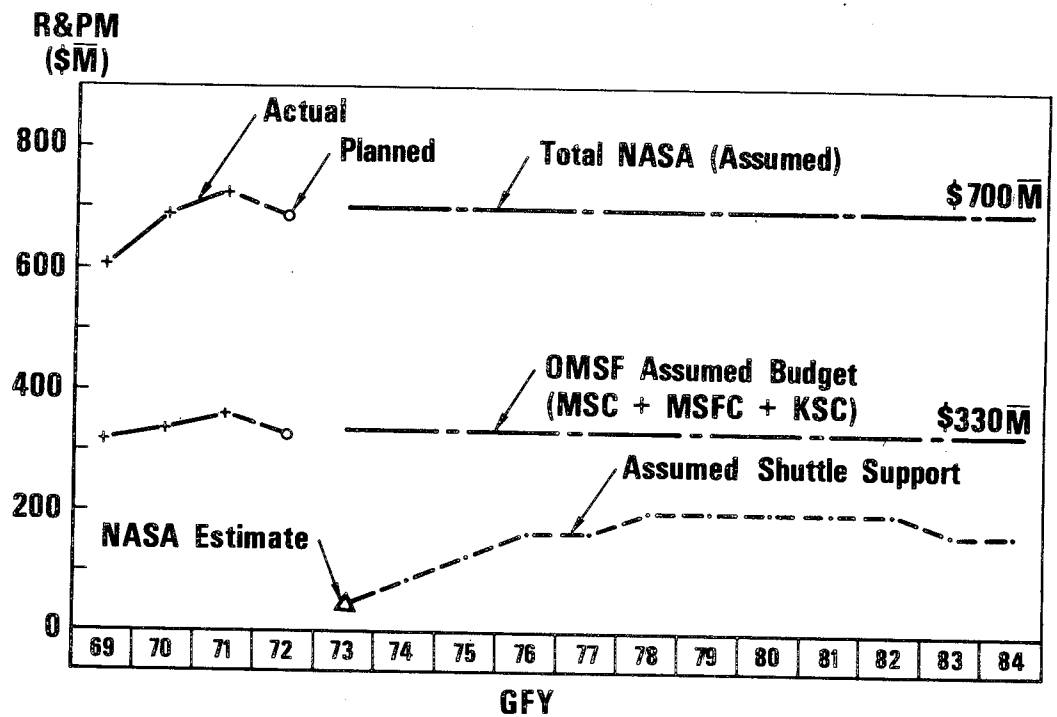

Space Division North American Rockwell

91SV13848

Funds Distribution / Phasing

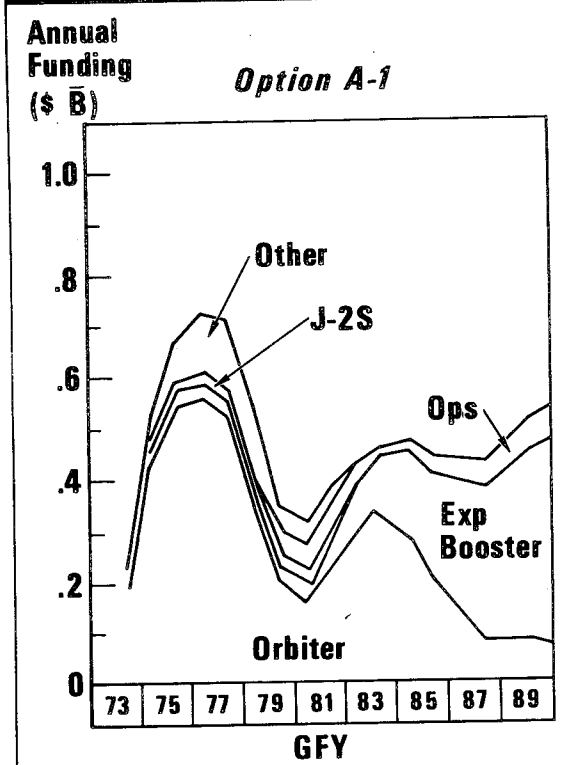

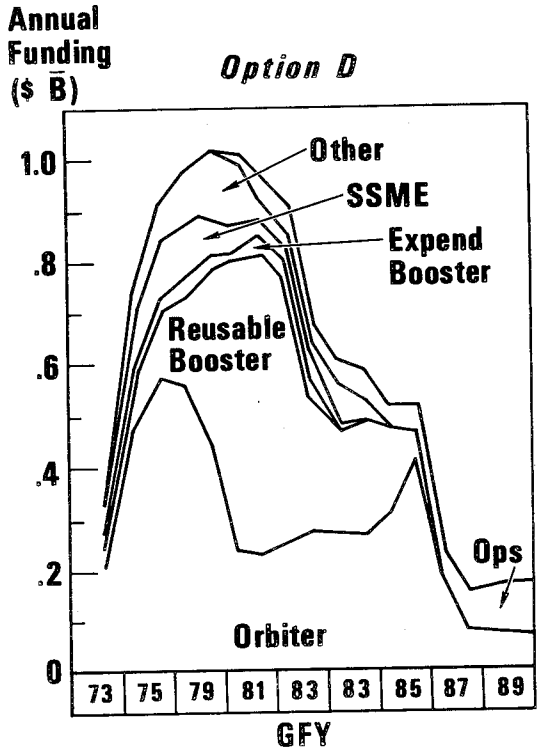

Space Division North American Rockwell

91SV13894

GFY 1973 Funding

	Detailed Estimate*		Cost/Sched Studies**	
	Submitted to NASA	As Revised by NASA	Minimum (Option A-1)	Maximum (Option C-2)
Orbiter	$280M	$228M	$212M	$212M
Reuse Booster	146	115	0	37
Exp Booster	–	–	12	12
SSME	80	80	0	63
Other	47	47	2	19
Total*** (w/o Govt Prog Supp)	$553M	$470M	$244M (226)	$370M (343)

* Based on Concurrent Orbiter/Booster Development (FMOF 9/78)

** Based on Phased Development (FMOF 9/78 & 9/82)

*** 8% Fee Included

91SV13877-1

Option A-2 Funding

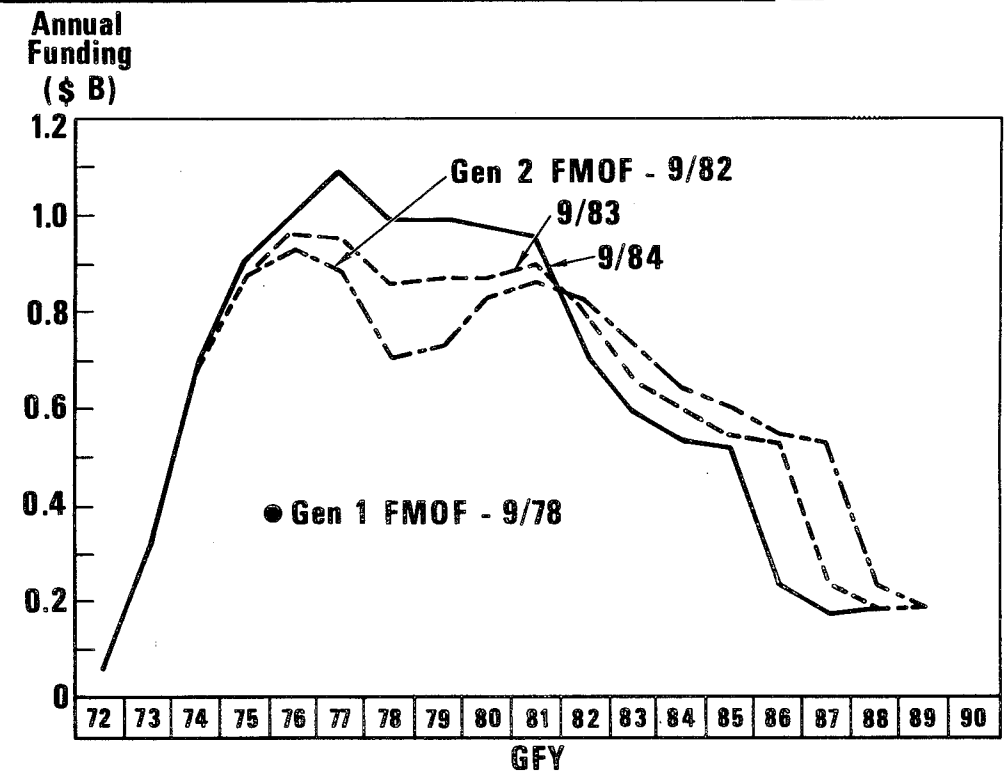

Space Division North American Rockwell

91SV13877

Gen 2 FMOF Effect on Funding

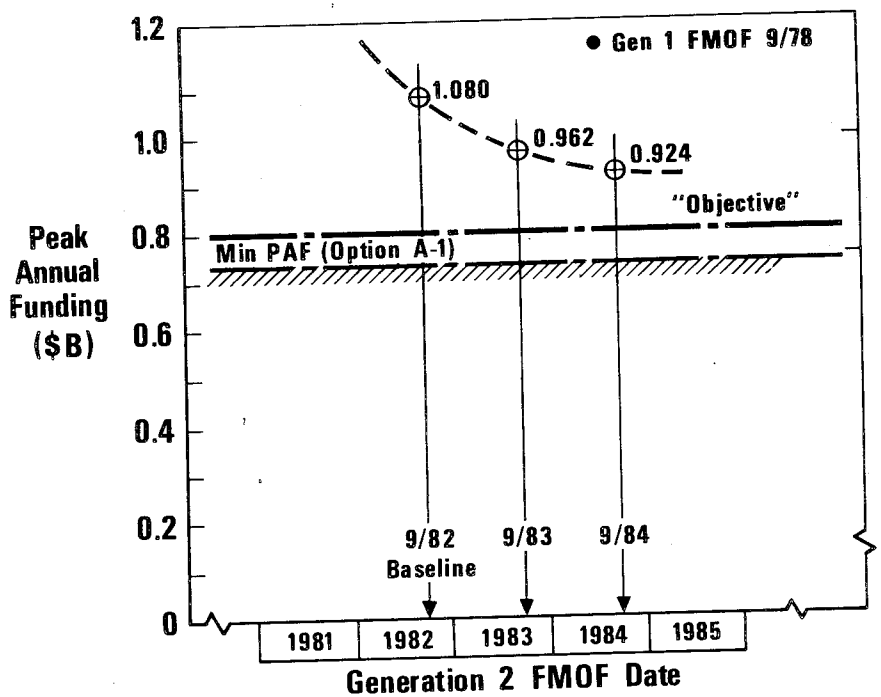

Space Division North American Rockwell

91SV13861

What are We Really Looking for ?

LOWEST COST
- Early $ Demands
- Peak Annual Funding
- Total Program
- Cost/Mission (Annual Ops Cost)

LEAST RISK
- Cost
- Technical
- FMOF Date

ADEQUATE CAPABILITY
- Cargo Bay Size (40 or 60)
- Payload Wt (45)
- Abort
- Ease of Growth to Full Capability

Program Options Ranking

Basis for Ranking		A-1	A-2	B-1	B-2	C-1	C-2	D
Cost	Early FY	1	3	1	3	3	3	3
	Peak	1	3	1	3	3	3	3
	Total	1	3	1	3	3	3	3
	Cost/Mission (Gen 2)	6	1	6	1	1	1	1
Risk	Cost	Exp Booster	Block Change	Exp Booster	Block Change	SSME	SSME & Blk Chg	SSME
	Technical	1	3	2	4	5	6	7
	FMOF Date	1	N/A	2	N/A	3	N/A	4
Capability	Cargo Size	4	4	1	1	4	4	1
	Payload Wt	6	1	6	1	1	1	1
	Abort	6	4	6	4	1	1	1
	Growth Ease	N/A	4	N/A	3	N/A	2	1

Space Division North American Rockwell

91SV13904

"Block Change" Development Requirements

Program Option	Deferred Subsys	Aero Anal & W.T. Tests		Structure		Propulsion		Horiz Flt Test
		Orbiter	Mated Veh	Des & Anal	Test	Des & Anal	Test	
A-1	✓	Not Applicable						
A-2	✓	✓	✓	✓	✓	✓	✓	✓
B-1	✓	Not Applicable						
B-2	✓		✓	✓	✓	✓	✓	
C-1	✓		✓					
C-2	✓	✓	✓	✓	✓			✓
D	✓		✓					

Space Division North American Rockwell

91SV13847

Phased Shuttle Program Comparison

J-2S vs Hi Pc

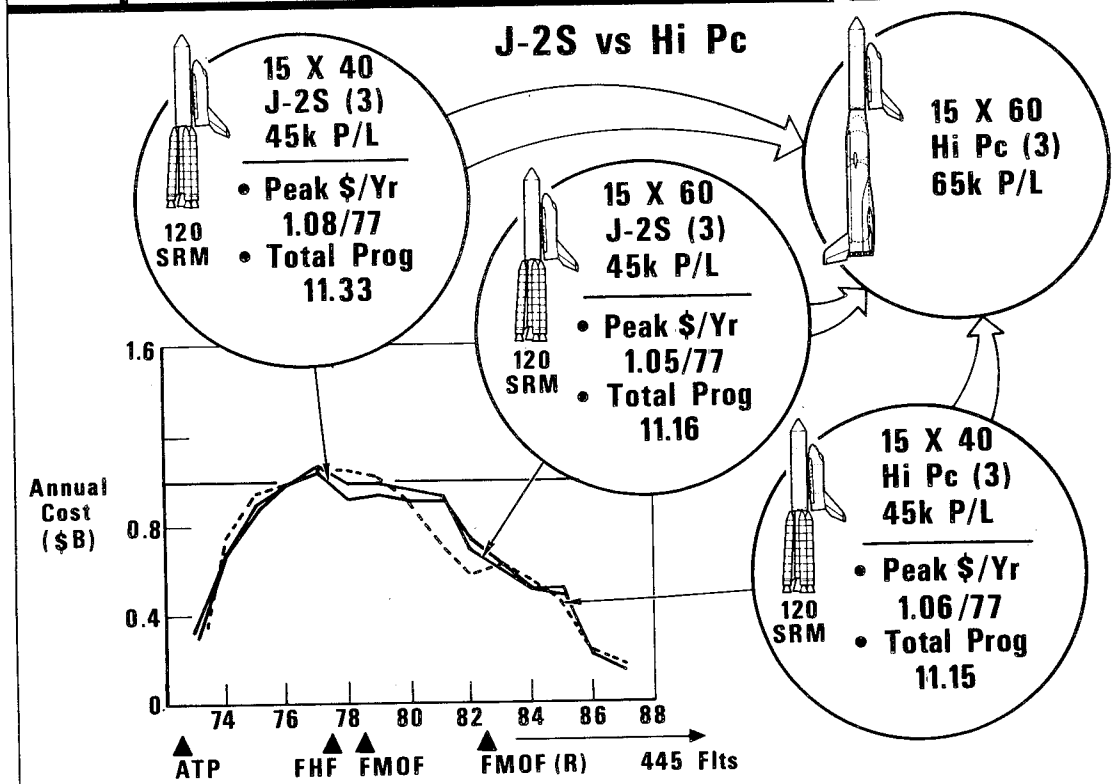

Space Division North American Rockwell

91SV13779

Presentation Outline

INTRODUCTION

MAJOR CONFIGURATION TRADES

LOW TECHNOLOGY LOW RISK SYSTEM

SCHEDULE & COST OPTIONS

Summary

Summary - Program Options

- ✓ All Options Exercised will Satisfy $1B PAF "Constraint" (Excluding Govt Prog Supp) with 9/78 FMOF
- ✓ Expendable Booster Choice has Negligible Effect on Prog Costs (4 Years ≤ Gen 1 ≤ 6 Years)
- ✓ If Govt Prog Supp Included, $1B PAF Met Only By –
  - Options A-1 & B-1 (J-2S & Exp Boosters Only)
  - Approx 2-Year Delay in Gen 1 FMOF
- ✓ Delay of Gen 2 FMOF 1-2 Years can Reduce PAF to ≤ $900M (w/o Govt Supp)
- ✓ Program Start-up Appears Reasonable
  - FY 73 ~ $300M (Supported by Detailed Estim)
  - FY 74 ~ $700M

Config Recommendations-Low Tech Orbiter

Subsystems

- LEM 'A' OMS
- 200 n mi X-Range
- 15 X 40 Bay
- Storable ACPS
- 3000 psi Hyd

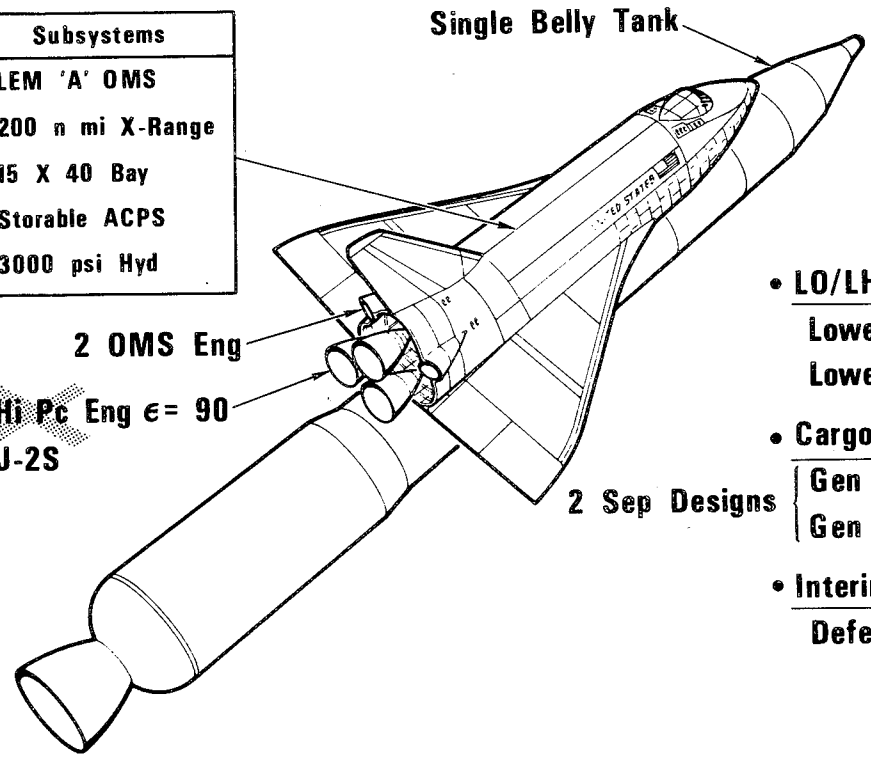

- **LO/LH Tank**
  - Lower Risk
  - Lower Peak
- **Cargo Bay**
  - Gen 1 15 X 40
  - Gen 2 15 X 60
- **Interim Booster**
  - Defer Decision

Space Division North American Rockwell

91SV13880