REPORT MDC J4663

MIDTERM ORAL REVIEW

TECHNOLOGY STUDY FOR ADVANCED SUPERSONIC CRUISE VEHICLES

NAS1-16147

29-30 OCTOBER 1980

NATIONAL AERONAUTICS AND SPACE ADMINISTRATION

LANGLEY RESEARCH CENTER

LANGLEY STATION, HAMPTON, VIRGINIA

(NASA-CR-180091) TECHNOLOGY STUDY FOR ADVANCED SUPERSONIC CRUISE VEHICLES: MIDTERM ORAL REVIEW (Douglas Aircraft Co.) 145 p

N90-70400

Unclas

00/05 0234045

DOUGLAS AIRCRAFT COMPANY

MCDONNELL DOUGLAS CORPORATION

MIDTERM ORAL REVIEW

TECHNOLOGY STUDY FOR ADVANCED SUPERSONIC CRUISE VEHICLES

NAS1-16147

29-30 OCTOBER 1980

NATIONAL AERONAUTICS AND SPACE ADMINISTRATION

LANGLEY RESEARCH CENTER

LANGLEY STATION, HAMPTON, VIRGINIA

9-GEN-25837C

MIDTERM ORAL REVIEW PROGRAM

EXECUTIVE SUMMARY	W. T. ROWE
HIGH-SPEED AERODYNAMICS	H. R. WELGE
LOW-SPEED AERODYNAMICS	H. R. WELGE
INLET TEST PROGRAM	H. R. WELGE
ENGINE COMPANY AND AIRFRAME INTEGRATION-STUDIES	E. S. JOHNSON
BASELINE REFINEMENTS	W. T. ROWE
CONTROL SYSTEMS SIMULATION	J. B. FEATHER
ADVANCED STRUCTURES AND MATERIALS APPLICATIONS	J. E. FISCHLER

9-AST-6629C

EXECUTIVE SUMMARY

W. T. ROWE

80-AST-6076 A

1980 REFINED AERODYNAMIC CONFIGURATION

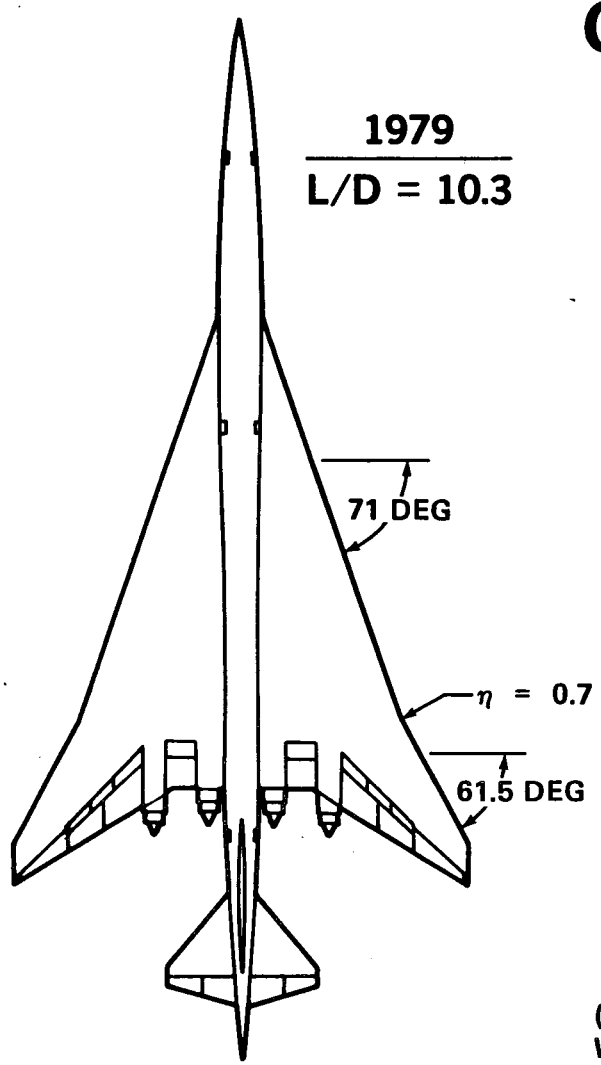

INCREASE PAYLOAD FROM
225 TO 308 PASSENGERS (37%)

INCREASE WING AREA FROM
873.3 m^2 (9400 FT^2) TO
929 m^2 (10,000 FT^2)

INCREASE TOGW FROM
319,788 kg (705,000 LB)
TO 340,200 kg (750,000 LB)

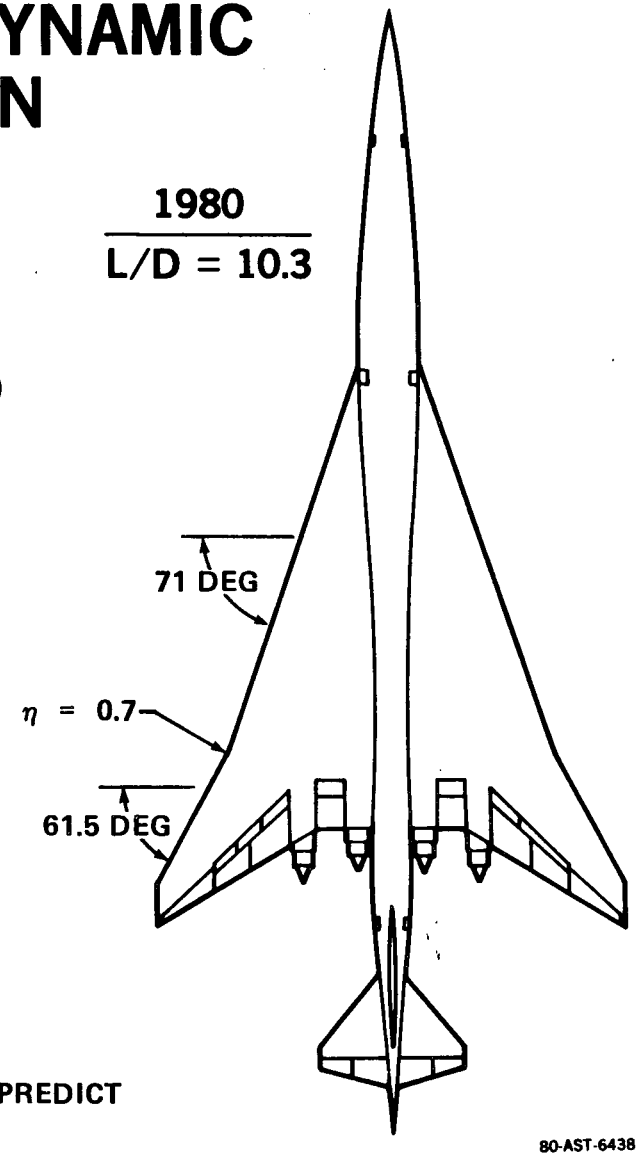

(L/D BASED ON METHODS WHICH PREDICT
WIND-TUNNEL DATA)

80-AST-6438

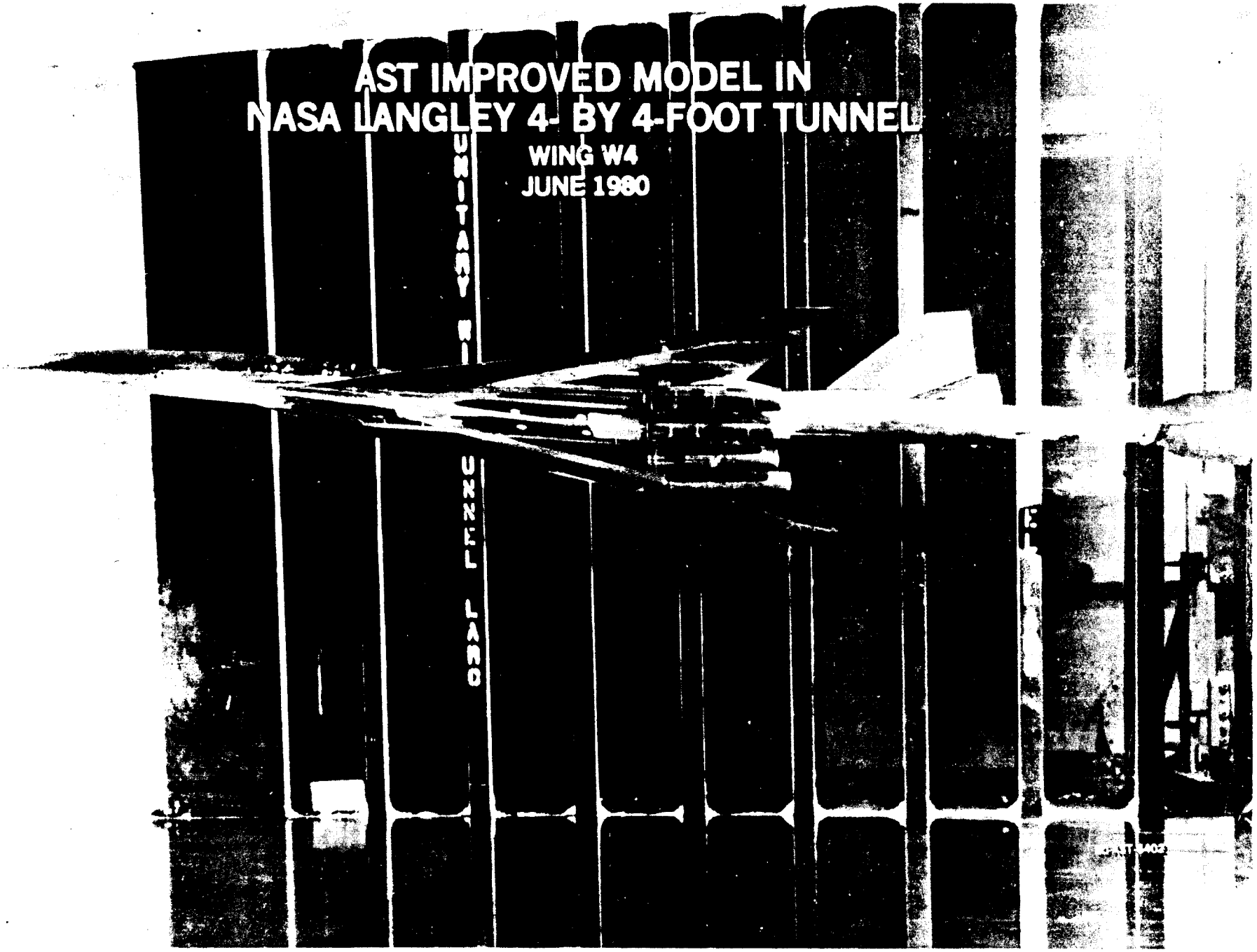

AST IMPROVED MODEL IN
NASA LANGLEY 4- BY 4-FOOT TUNNEL
WING W4
JUNE 1980

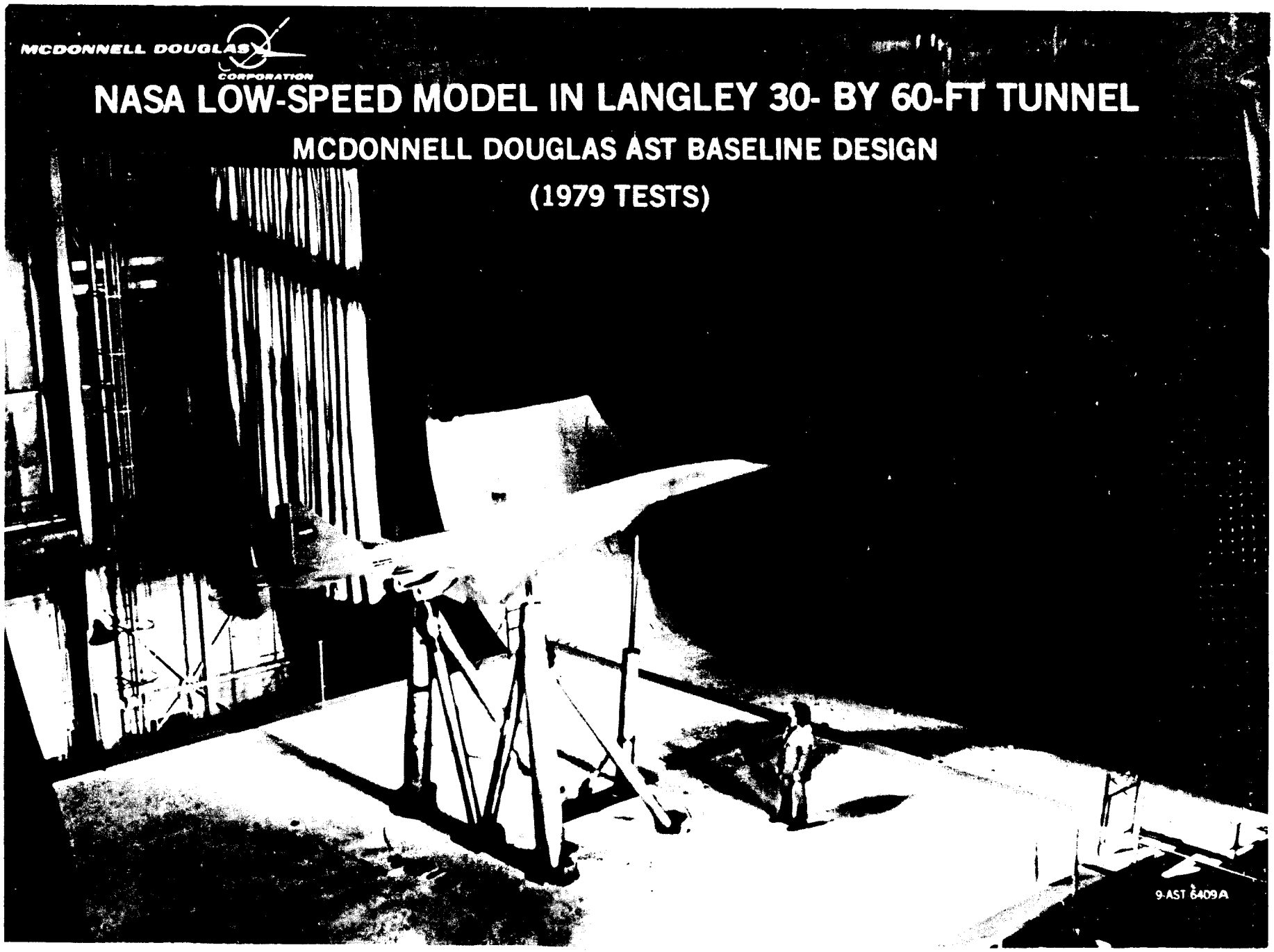
MCDONNELL DOUGLAS
CORPORATION
NASA LOW-SPEED MODEL IN LANGLEY 30- BY 60-FT TUNNEL
MCDONNELL DOUGLAS AST BASELINE DESIGN
(1979 TESTS)
9-AST 6409A

LEADING EDGE SLATS

AST INBOARD WING SECTIONS

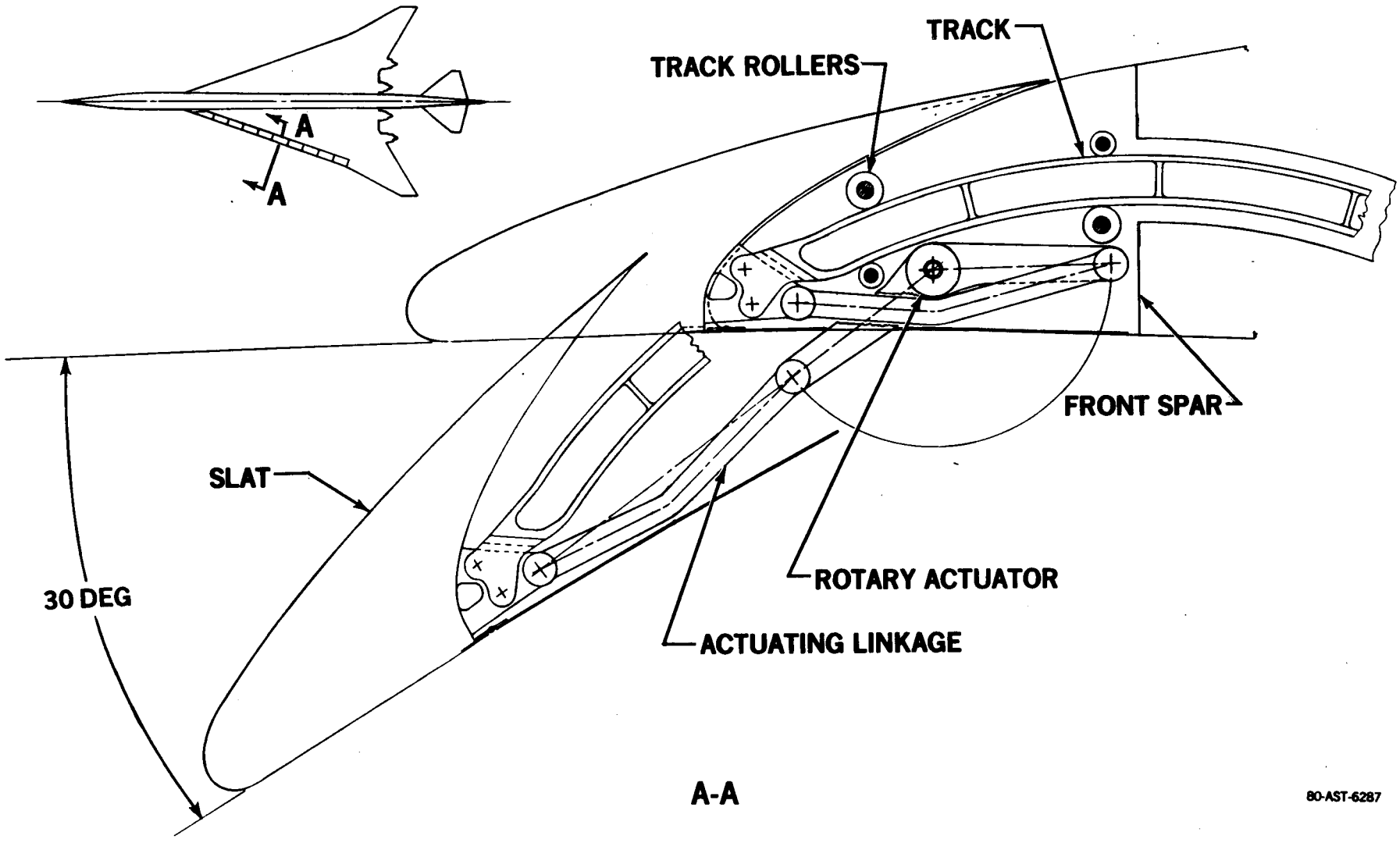

A-A

80-AST-6287

LEADING EDGE SLATS

AST OUTER WING SECTIONS

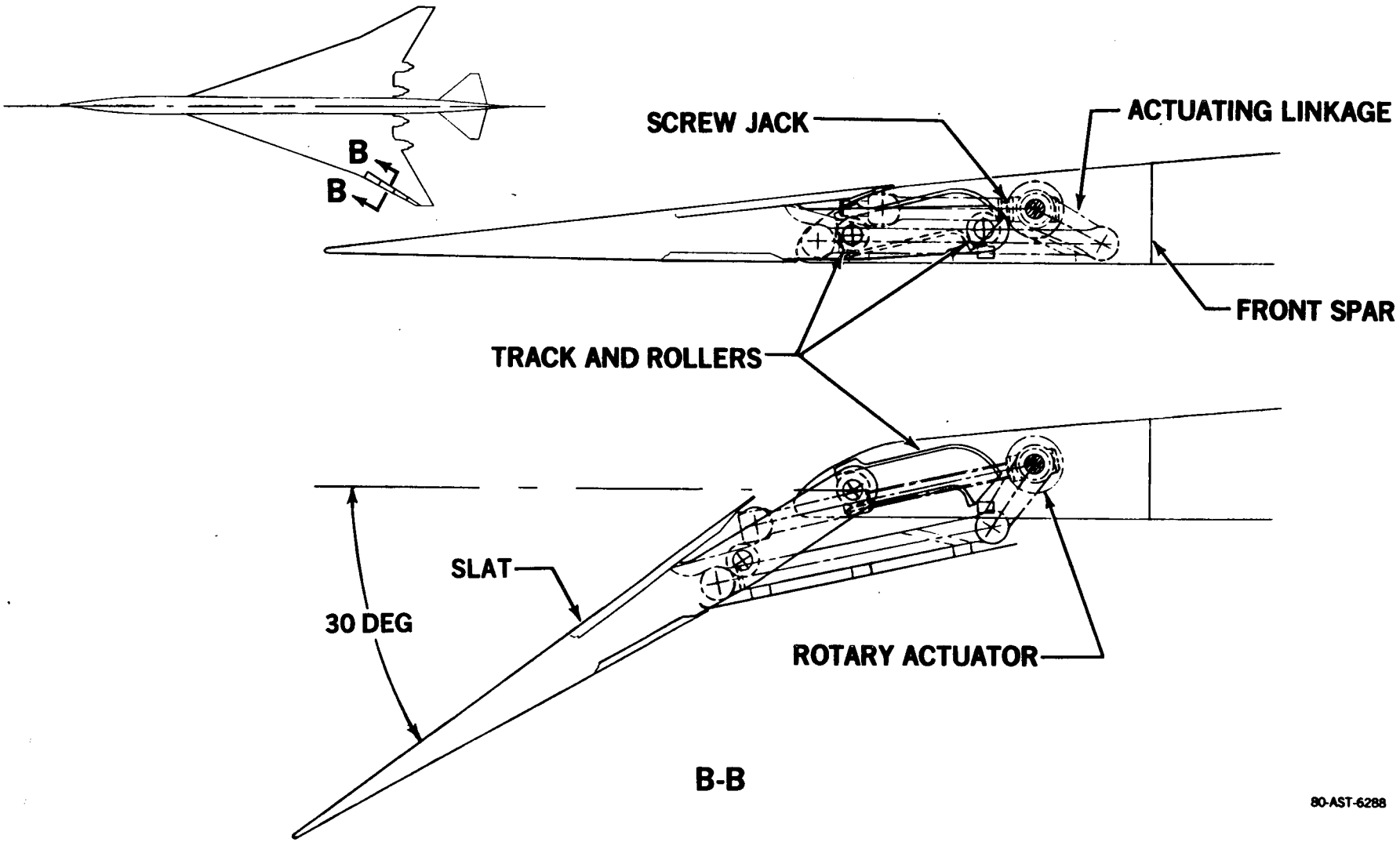

80-AST-6288

COMPARISON OF INLETS FOR LOW - SPEED TEST

(DIMENSIONS IN CENTIMETERS)

BASIC TRANSLATING CENTERBODY "P" INLET

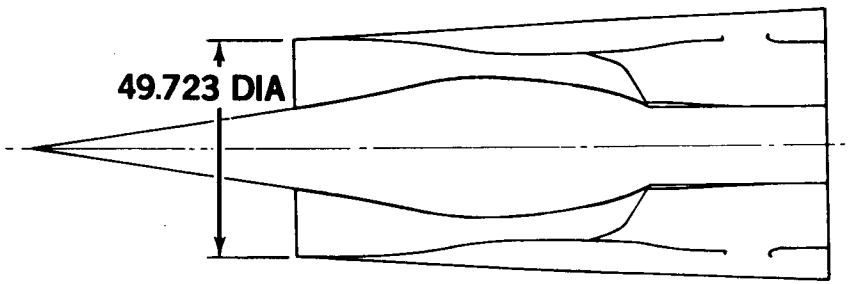

EXISTING INLET

PERFORMANCE COWL AND "P" CENTERBODY INLET

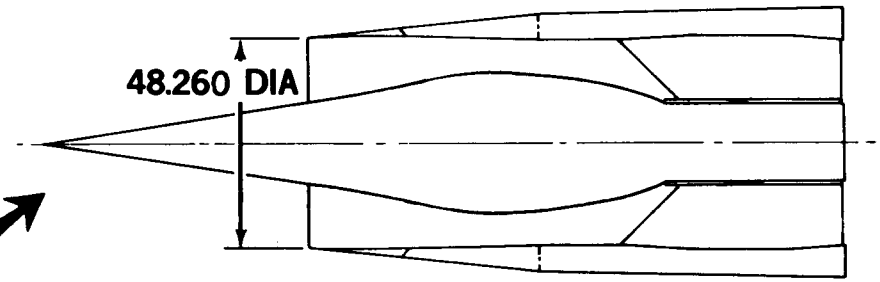

COMMON REAR COWL

ACOUSTIC COWL AND "P" CENTERBODY INLET

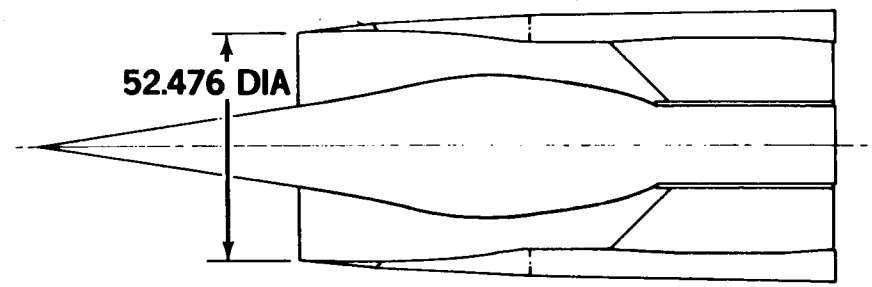

RECOMMENDED TEST COWLS

80-AST-6137

LOW-SPEED INLET TEST STATUS

OCTOBER 1980

GEOMETRY OF INLET AND LIP DEFINED; MODEL DRAWINGS 95 PERCENT COMPLETE

INSTRUMENTATION DEFINED

TEST PLAN DEFINED AND REVIEWED WITH NASA

INITIAL DISCUSSION CONDUCTED ON METHOD OF MODEL SUPPORT AND FAN AIRFLOW CALIBRATION

FABRICATION 75 PERCENT COMPLETE

80-AST-6409A

SUMMARY OF CONTROLS TASKS

AUGMENTATION SYSTEMS FOR LANDING APPROACH DEFINED

SYSTEM RESPONSES CHECKED USING LINEAR TECHNIQUES

FIXED-BASE, NONLINEAR SIMULATION USED
FOR EVALUATION

MOVING-BASE SIMULATOR USED FOR ADDITIONAL
PILOT EVALUATION

80-AST-6394

AST

WING ACCESS PANEL ASSEMBLY

SPF/DB SANDWICH ELONGATED TRIANGLE OR RECTANGULAR PATTERN

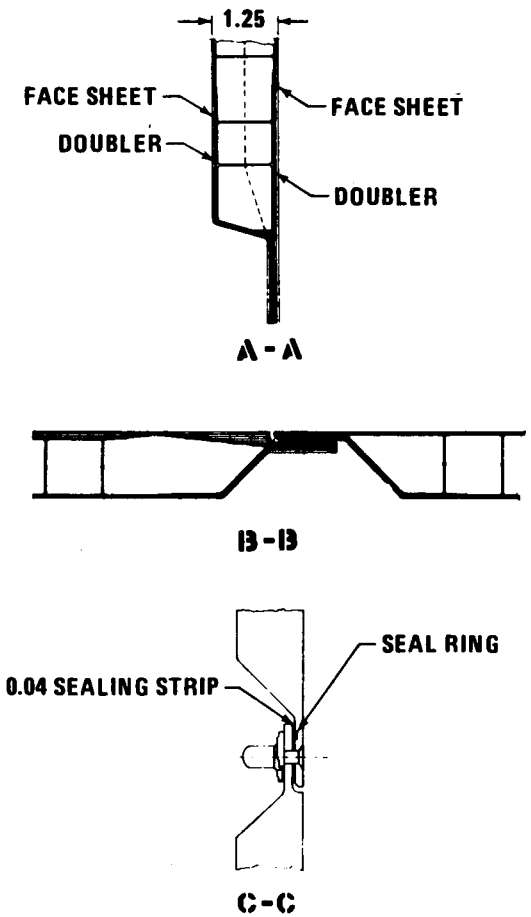

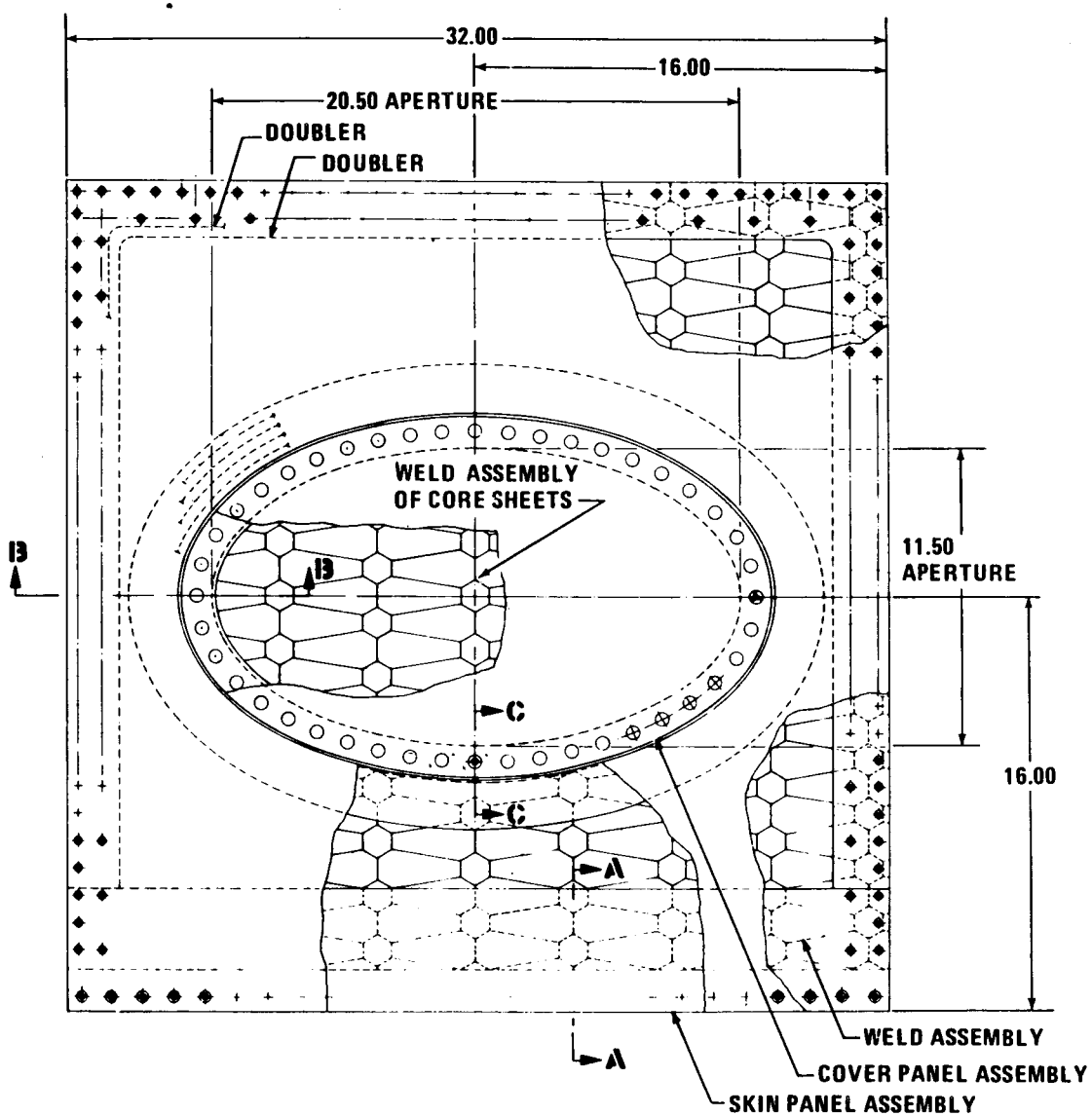

80-GEN-23793B

TEST STRUCTURE FUSELAGE/WING BOX

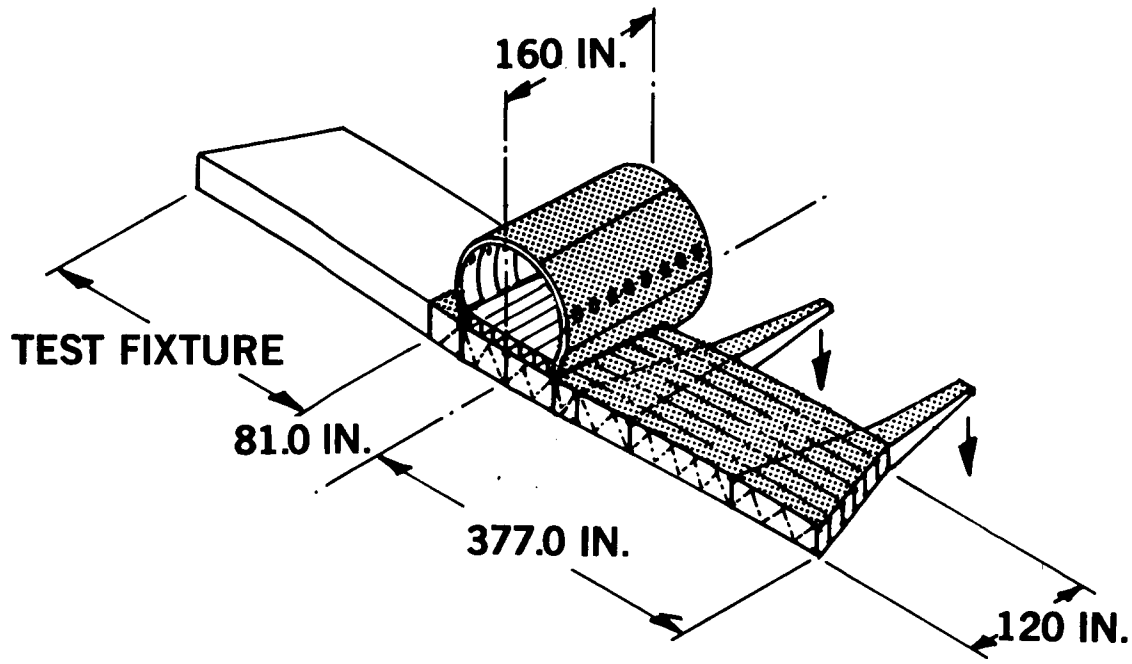

80-AST-6270

MCDONNELL DOUGLAS CORPORATION

MDC DEVELOPMENT

WING TRAILING-EDGE SECTION

SPF/DB SANDWICH (RECTANGULAR PATTERN)

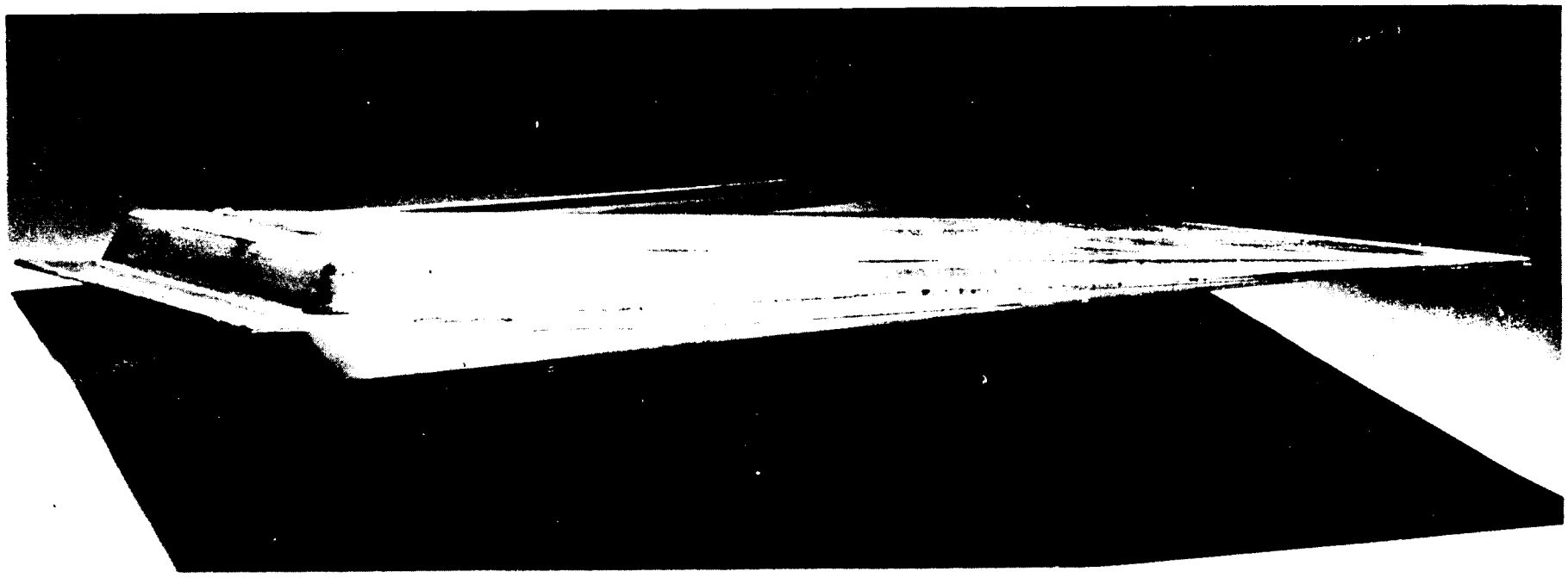

80-AST-6375

MCDONNELL DOUGLAS CORPORATION

MDC DEVELOPMENT

T-38 MAIN LANDING GEAR DOOR

SPF/DB SANDWICH (RECTANGULAR PATTERN)

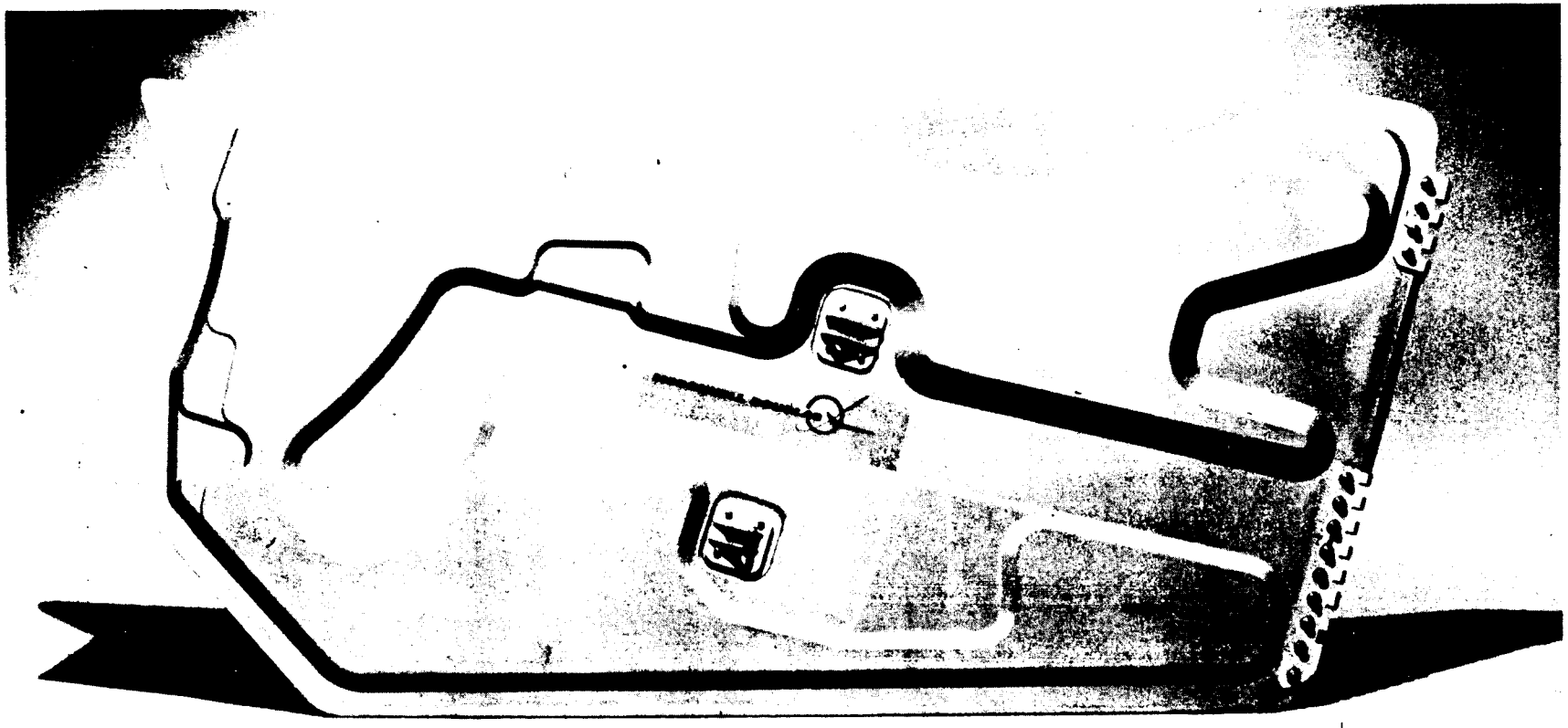

80-GEN-24662A

MDC AST NOZZLE PERFORMANCE

12-LOBE/24-TUBE SUPPRESSOR/EJECTOR

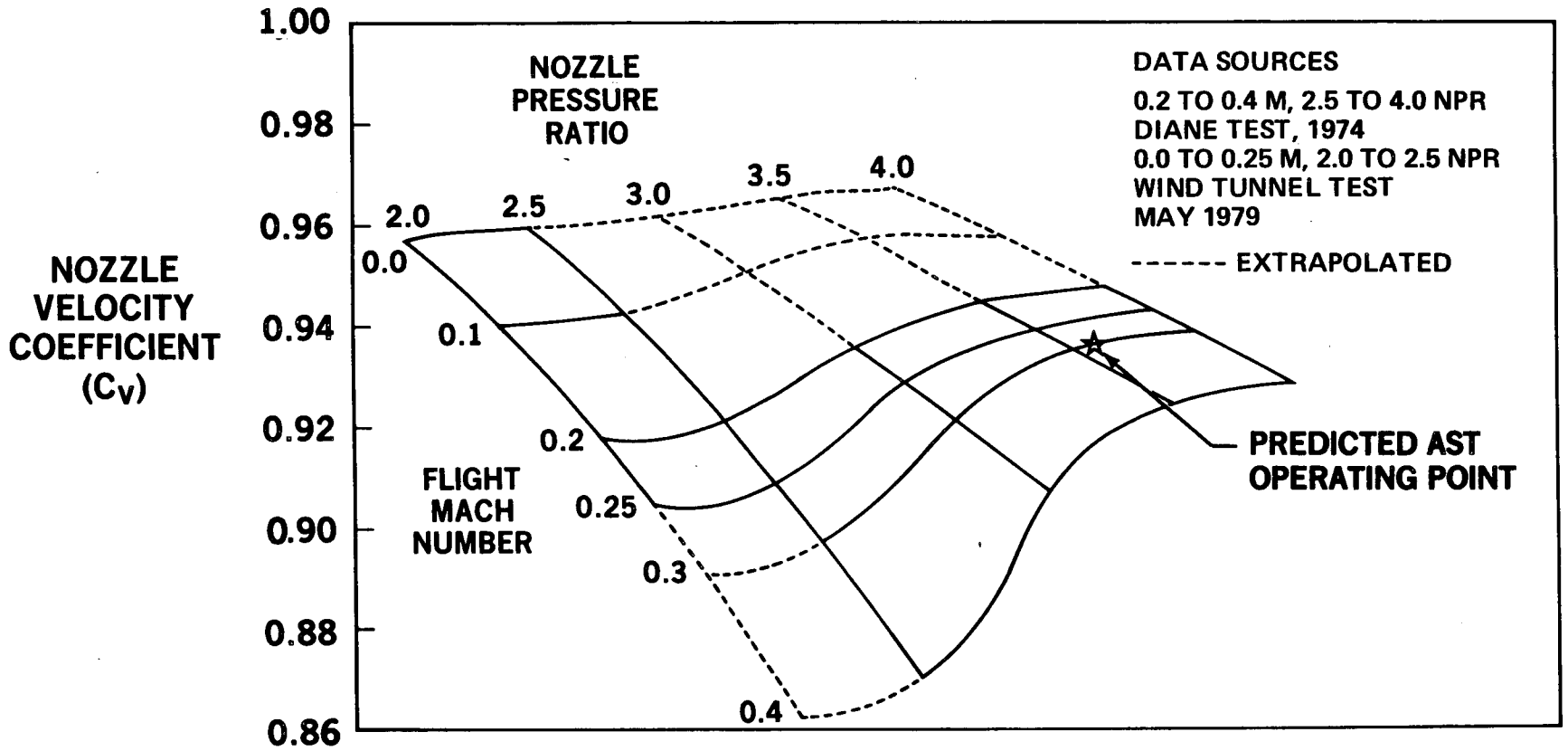

80-AST-6309 A

HS-125 FLIGHT TEST SUPPRESSION RESULTS

EPNL CONICAL — DAC 12L/24T + EJ
NOZZLES SCALED TO 37.5 INCHES
172 KNOTS

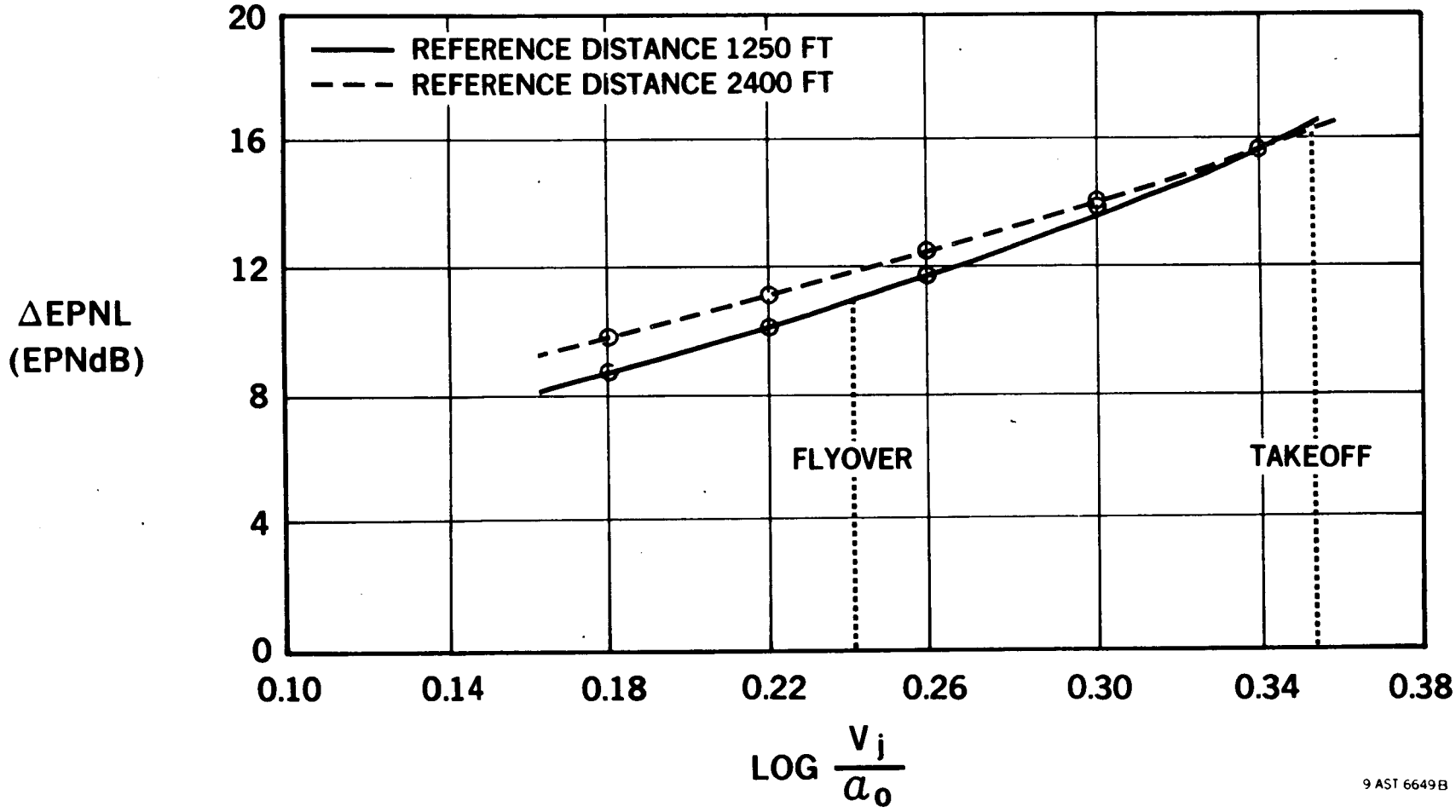

9 AST 6649B

AST GENERAL ARRANGEMENT

308 PASSENGERS

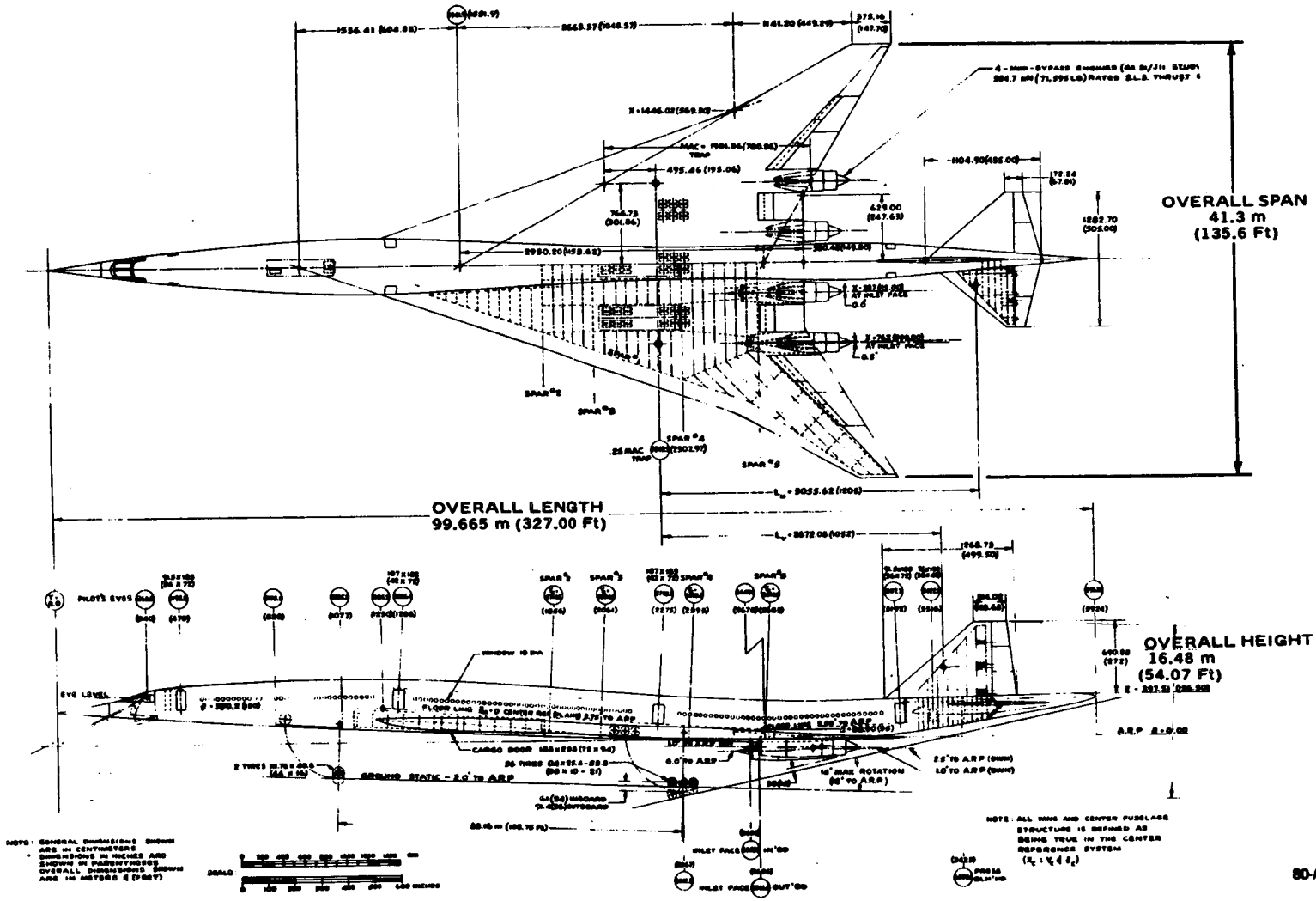

80-AST-6080

MCDONNELL DOUGLAS CORPORATION

AST MODEL D-3233-2.2.-1

RANGE PERFORMANCE

MTOGW = 340,200 kg (750,000 LB)

SPF/DB SANDWICH, COMPOSITES, BICONE INLET

308 PASSENGERS

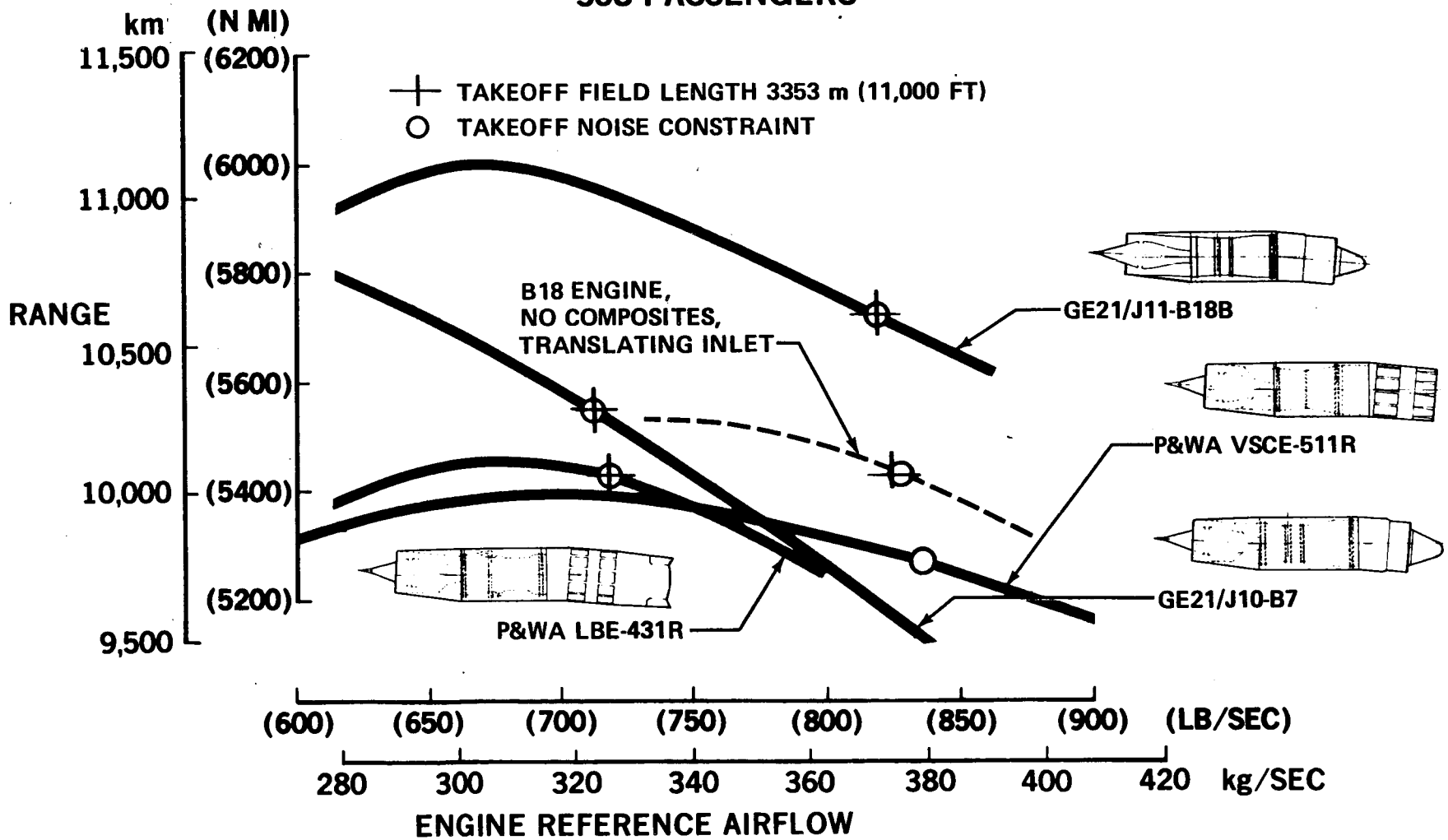

80-AST-6374-2C

FUEL EFFICIENCY COMPARISON

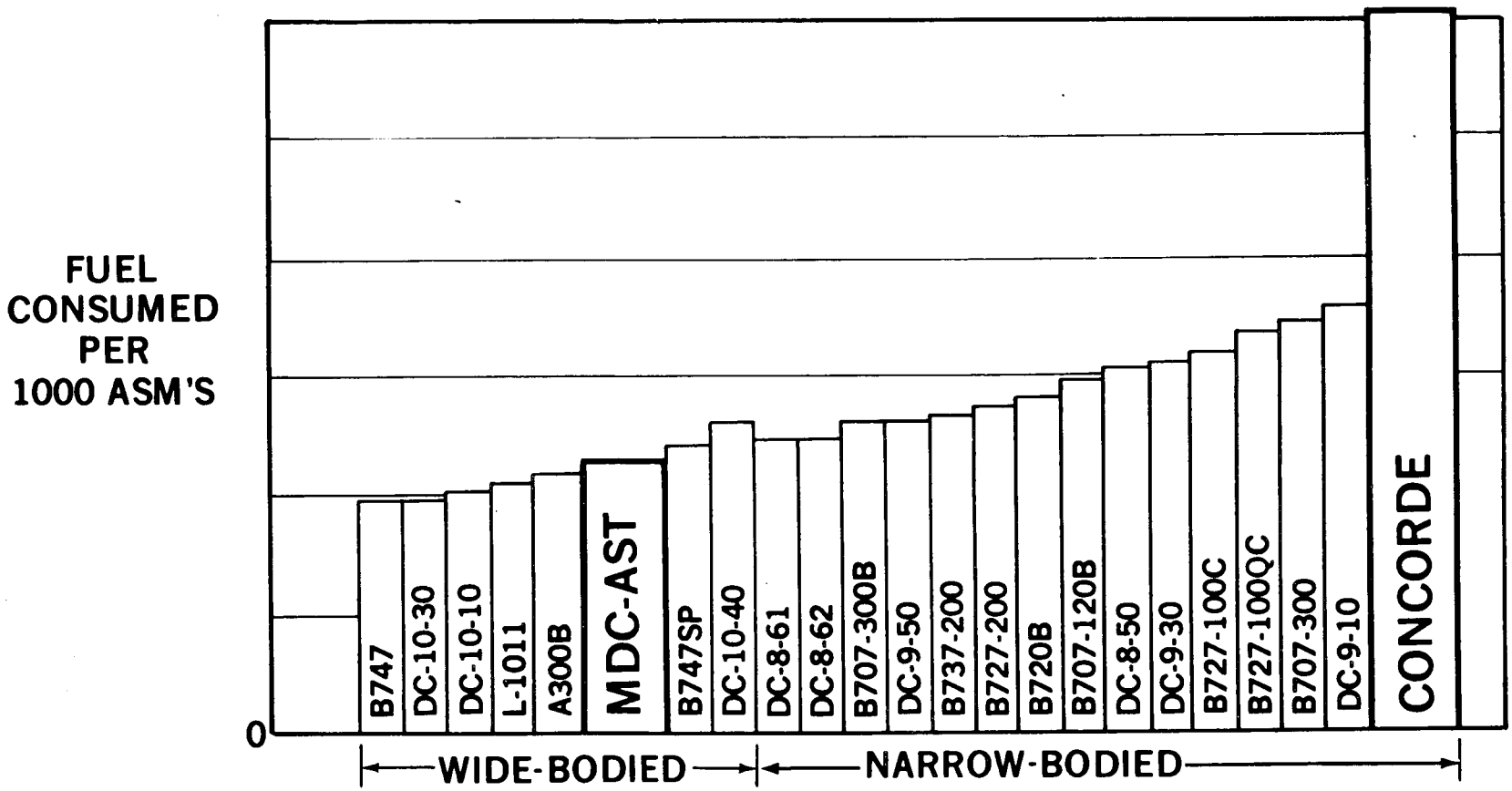

SOURCES:
CAB FOURTH QUARTER 1978 (SUBSONIC AIRCRAFT)
DOUGLAS (AST, CONCORDE)

9 AST 6738-1

AST-1J WITH B18B ENGINES

COMPARATIVE DIRECT OPERATING COSTS

1979 DOLLARS

FUEL AT 62 CENTS/GALLON

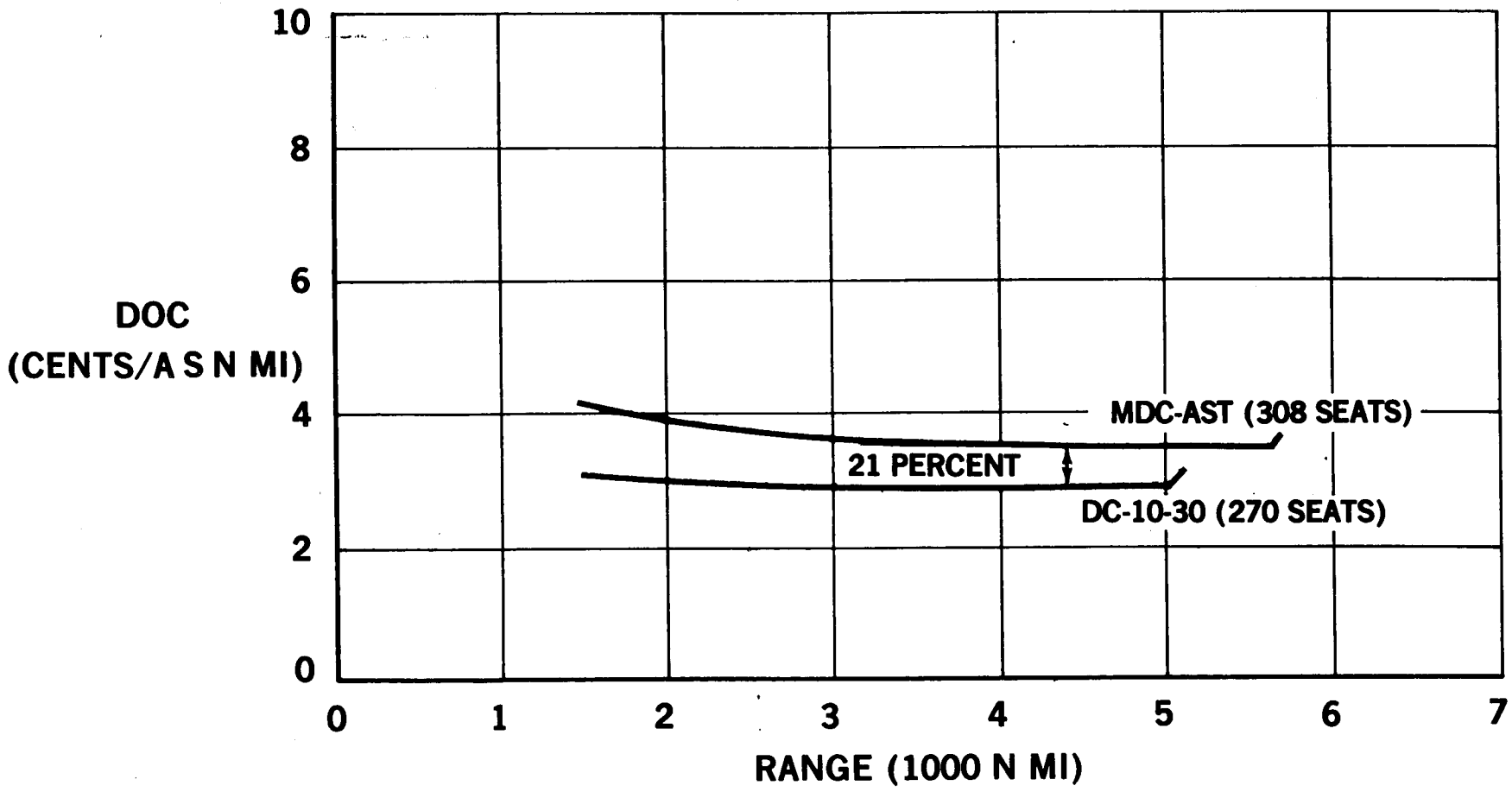

9-AST-6562B

AST-1J WITH B18B ENGINES

COMPARATIVE TOTAL OPERATING COSTS

1979 DOLLARS
FUEL AT 62 CENTS/GALLON

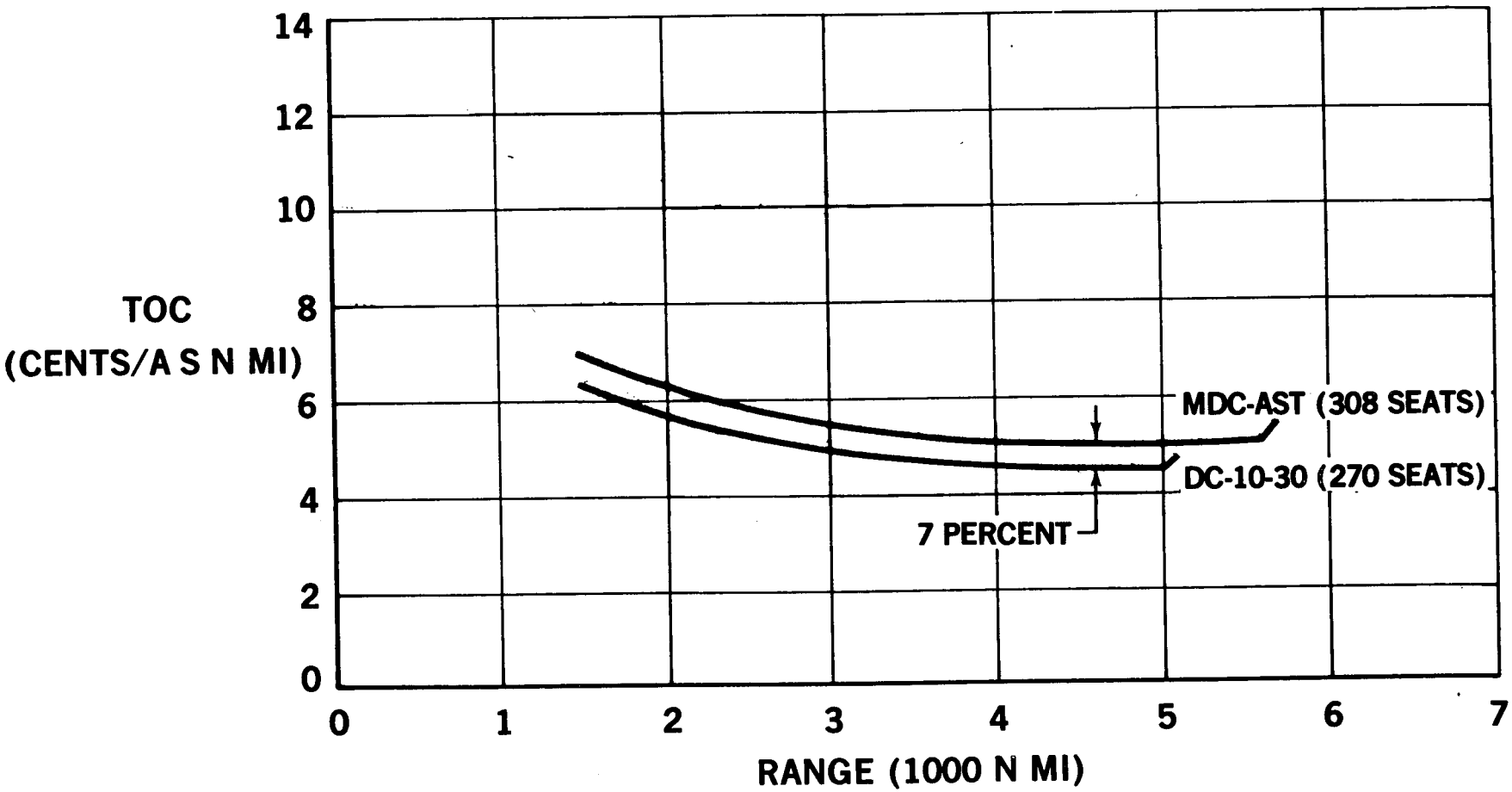

9-AST-6563 B

REVENUE DISTRIBUTION — 1979 NORTH ATLANTIC

SCHEDULED PASSENGER SERVICE

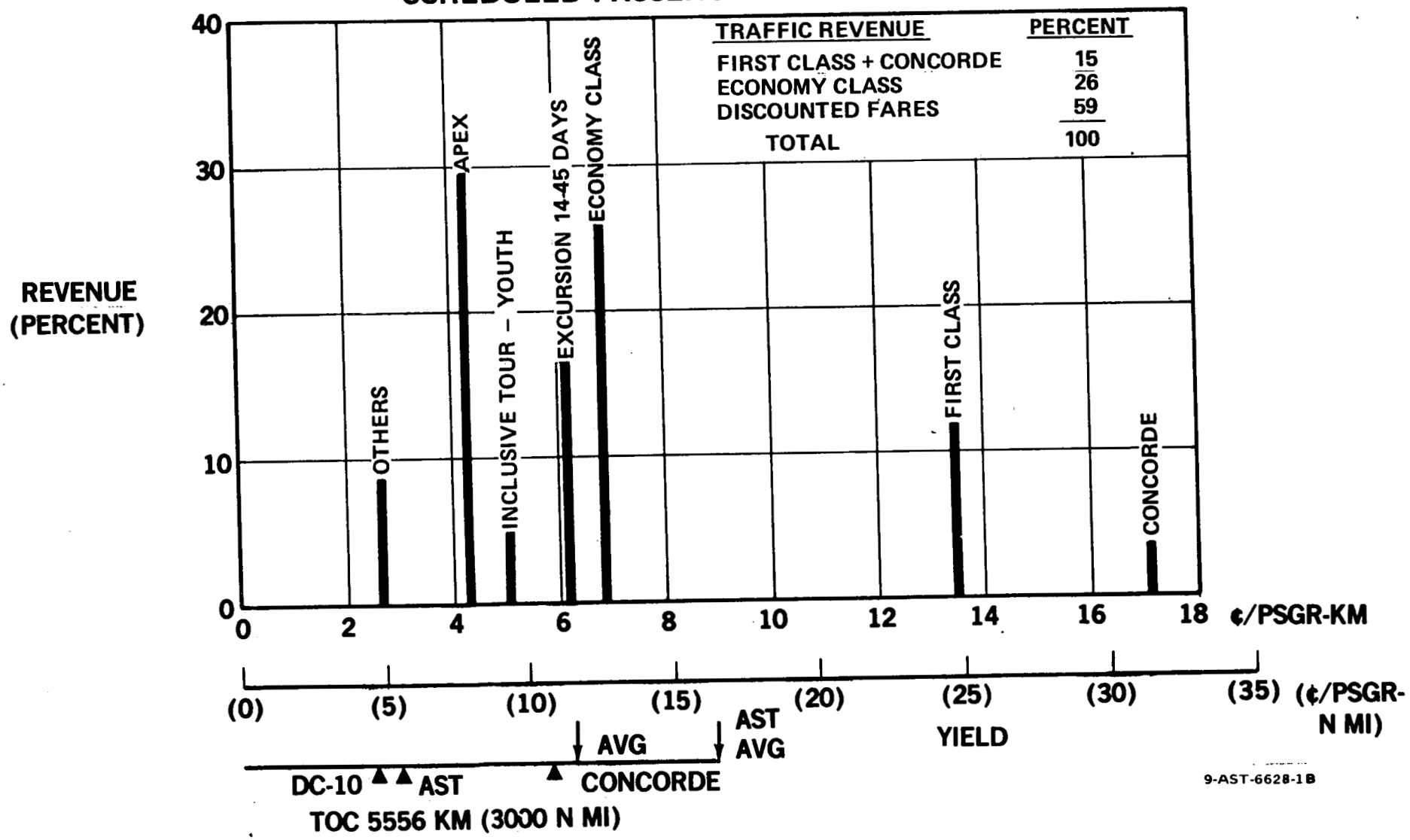

CRITICAL TECHNOLOGY ITEMS

DEVELOPMENT LEADING TO FABRICATION AND TEST OF TITANIUM WING AND FUSELAGE MAJOR ASSEMBLIES

- FABRICATE (INCLUDING DEVELOPMENT OF EFFICIENT ATTACHMENTS) AND SERVICE-TEST MAJOR AIRCRAFT SPF/DB COMPONENTS
- FABRICATE AND TEST SMALL, MEDIUM, AND LARGE SPF/DB SANDWICH ASSEMBLIES

NOISE-SUPPRESSION TESTING

- COANNULAR IN-FLIGHT — MODERATE AND LARGE SCALE
- IMPROVED MECHANICAL IN-FLIGHT — MODERATE SCALE
- MECHANICAL IN-FLIGHT — LARGE SCALE

HIGH SPEED

- FABRICATE AND TEST NEW HIGH-SPEED WING TO VALIDATE 10-PERCENT L/D IMPROVEMENT
- TEST WING/FUSELAGE TO VALIDATE IMPROVED NACELLE INTEGRATION PROCEDURES
- FABRICATE AND TEST HIGH-SPEED MODEL TO VALIDATE FUSELAGE CLOSURE AND UPSWEEP
- OPTIMIZE TAIL TWIST — HIGH-SPEED MODEL TESTS

LOW SPEED

- DESIGN, TEST, AND EVALUATE SLAT HIGH-LIFT SYSTEM AT HIGH REYNOLDS NUMBERS
- DESIGN AND TEST IMPROVED LATERAL CONTROL SYSTEMS

INLET TESTING

- ACOUSTIC LINER AND BICONE LEAF SEAL — MODEL SCALE
- LOW-SPEED ACOUSTIC AND PERFORMANCE UP TO CHOKE — MODEL SCALE
- LOW- AND HIGH-SPEED INLET PERFORMANCE — MODEL SCALE
- LOW- AND HIGH-SPEED VALIDATION OF INLET PERFORMANCE — LARGE SCALE

NOZZLE TESTING

- SUBSONIC AND SUPERSONIC PERFORMANCE — MODEL SCALE
- ACOUSTIC LINER RESEARCH — MODEL SCALE
- LOW- AND HIGH-SPEED FLIGHT VALIDATION — LARGE SCALE

CONFIGURATION INTEGRATION — TO EVALUATE SCALE OF TECHNOLOGY READINESS

80-AST-6060 B

HIGH-SPEED AERODYNAMICS

H. R. WELGE

80-AST-6382

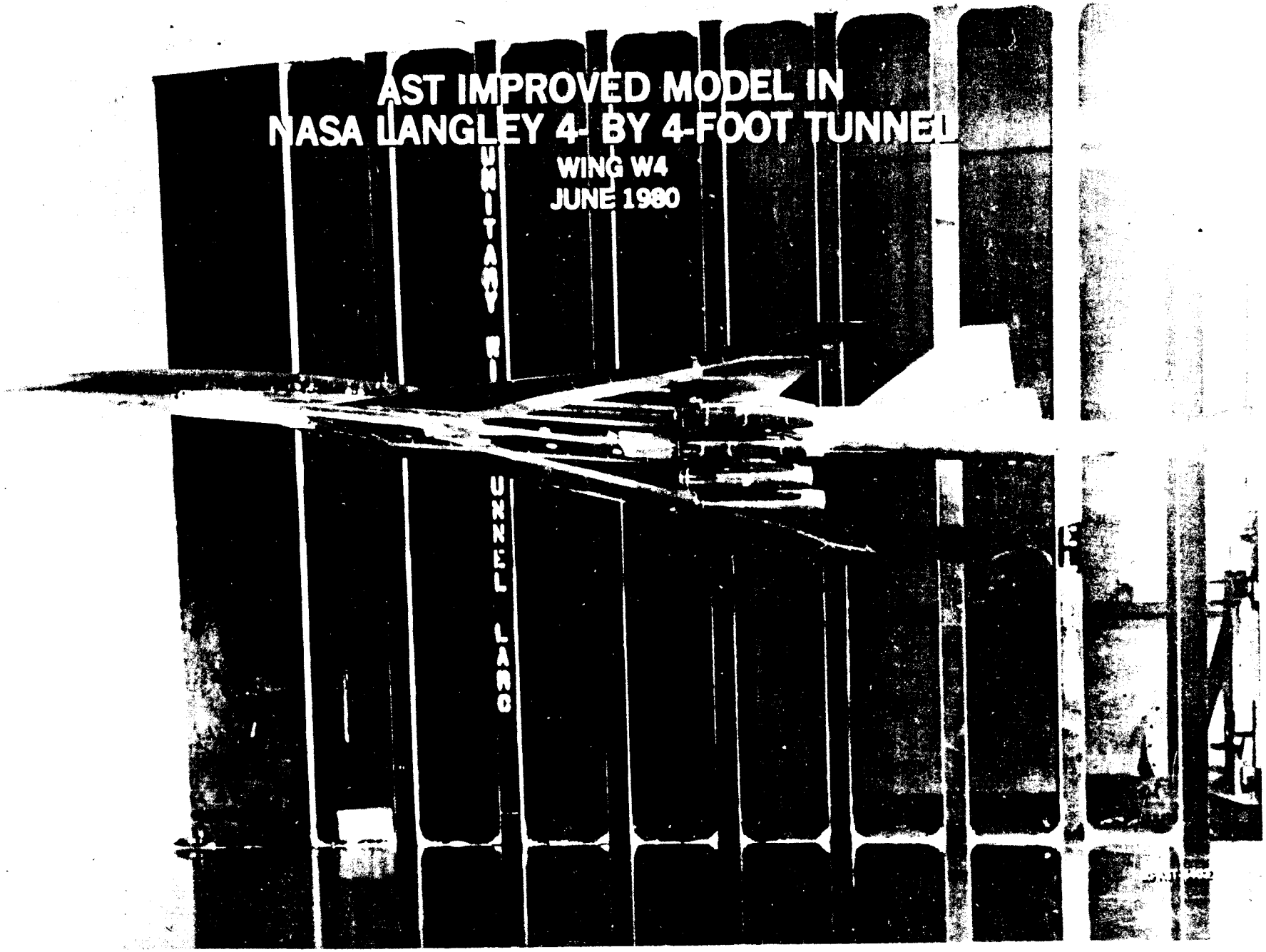

AST IMPROVED MODEL IN
NASA LANGLEY 4- BY 4-FOOT TUNNEL

WING W4
JUNE 1980

TEST OBJECTIVES

ESTABLISH WING W2 DRAG FOR COMPARISON TO ARC 9 x 7 — COMPLETED

VERIFY TLE CORRECTION — COMPLETED

VERIFY BASIC WING W4 PERFORMANCE

VALIDATE REFINED NACELLE INSTALLATION PROCEDURE

OBTAIN EXPANDED HORIZONTAL TAIL DRAG DATABASE

OBTAIN EXPANDED NACELLE-ON-WING PRESSURE DATABASE

CHECK NACELLE ALIGNMENT

80-AST-6383A

COMPARISON OF ARC 9 x 7 AND LRC 4 x 4 DATA B1-W2

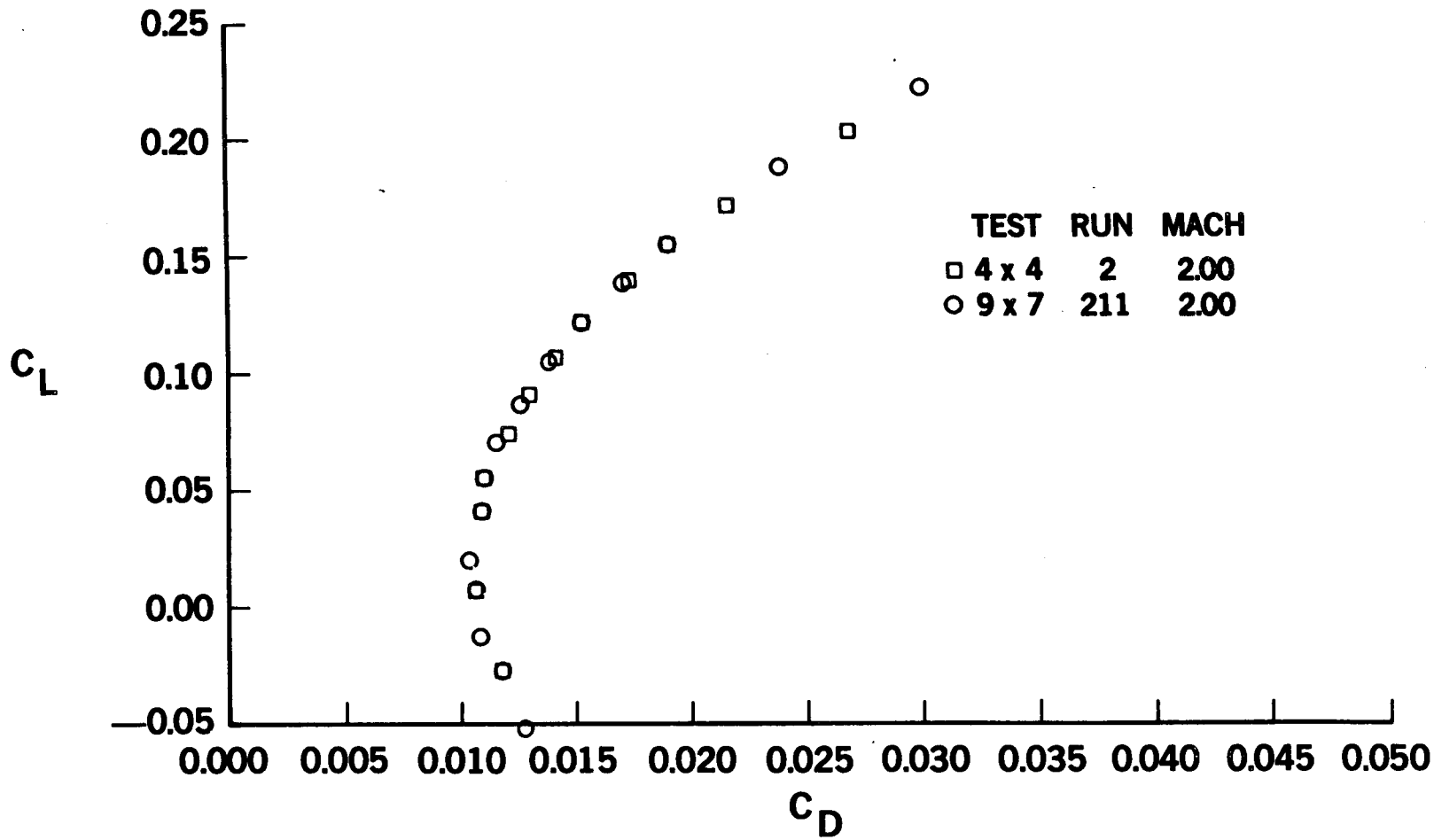

80-AST-6378

COMPARISON OF ARC 9 x 7 AND LRC 4 x 4 DATA B1-W2

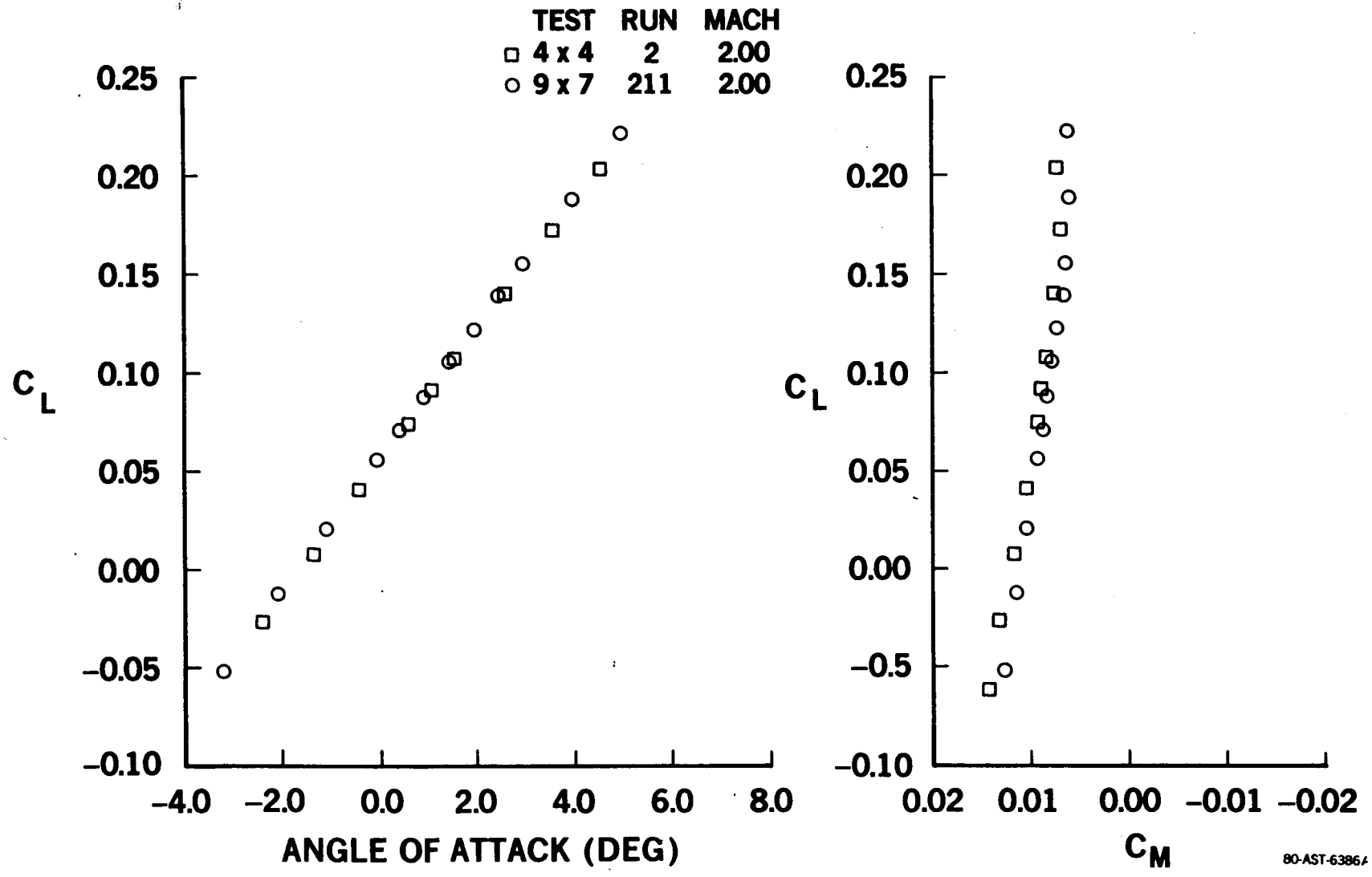

TRANSONIC LEADING EDGE (TLE) CORRECTION

SEMI-EMPIRICAL CORRECTION OF WOODWARD FOR IMPROVED DRAG PREDICTION

$$\Delta C_D = C_L^2 \left(\frac{\Delta a}{C_L}\right)$$

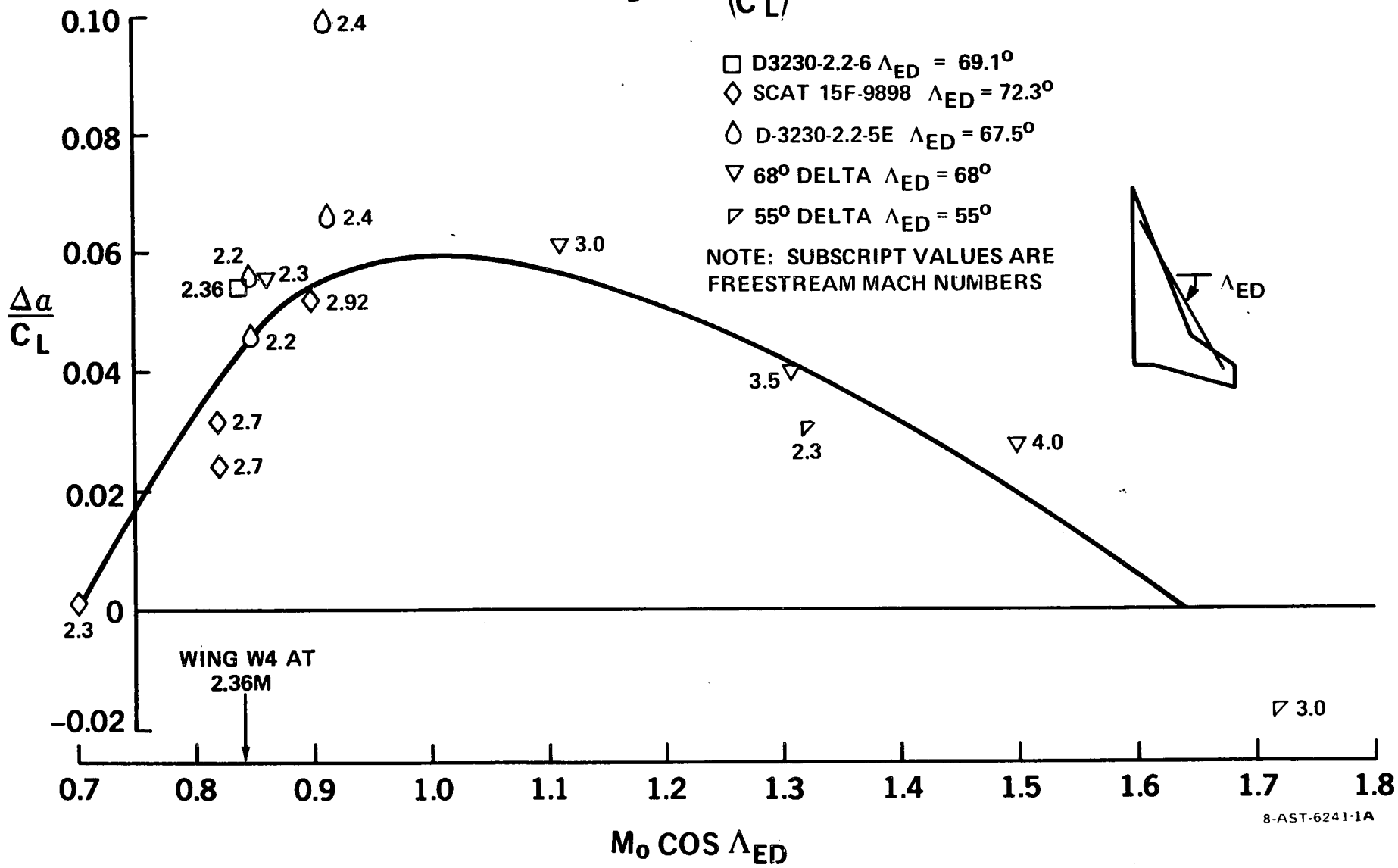

VERIFICATION OF TLE CORRECTION

B1-W4

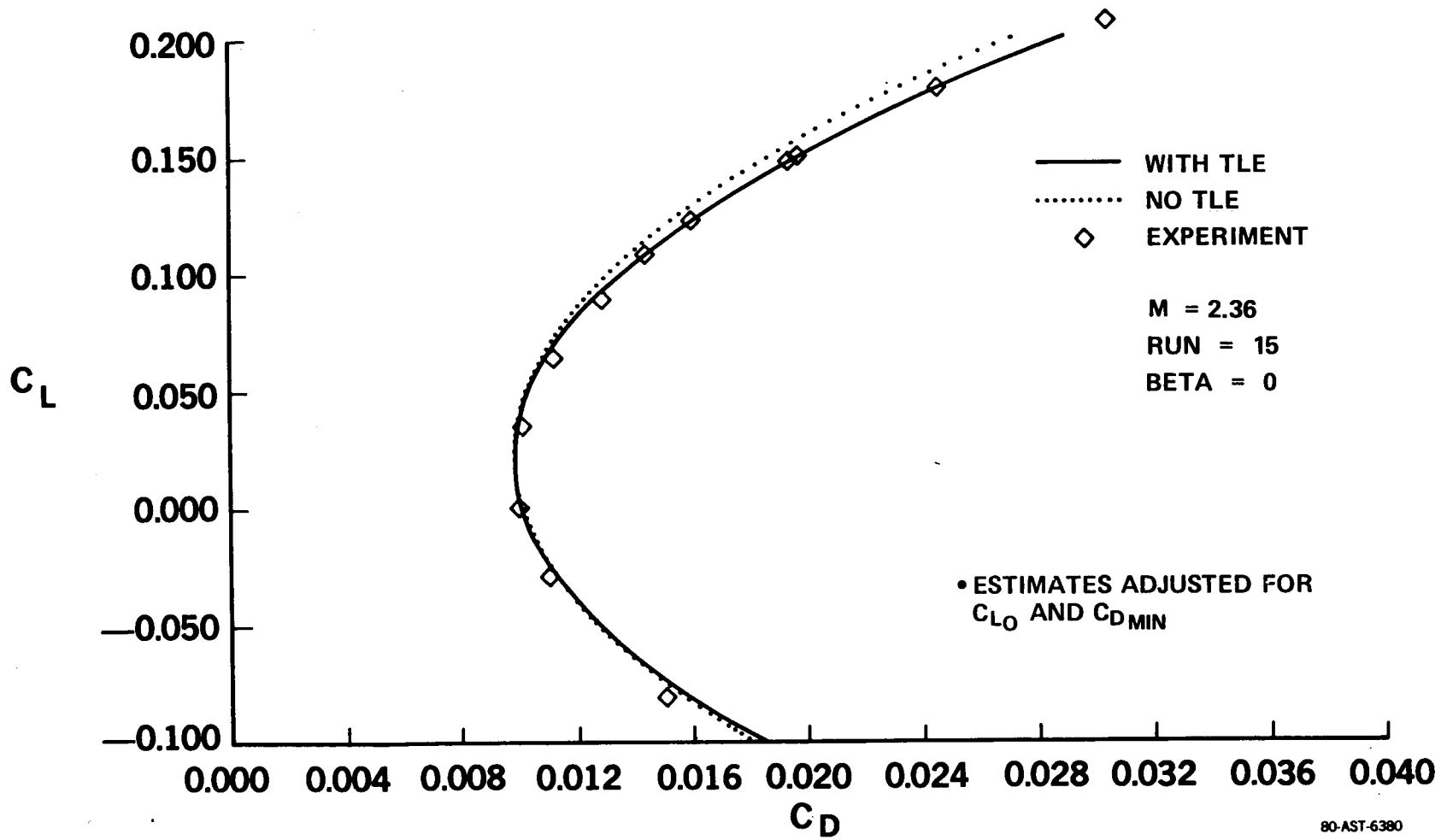

COMPARISON OF B1-W4 DATA TO ESTIMATE

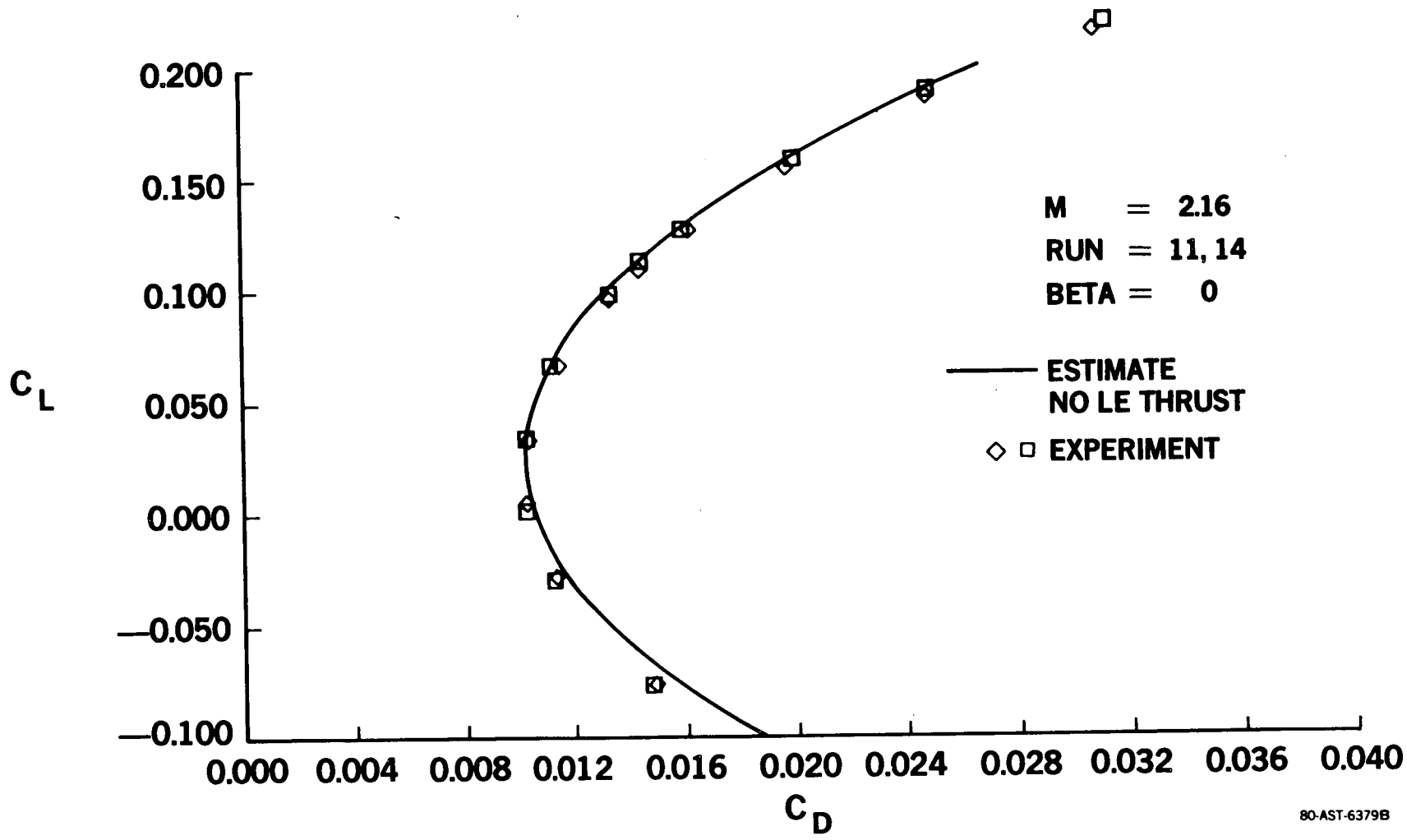

COMPARISON OF B1-W4 DATA TO ESTIMATE

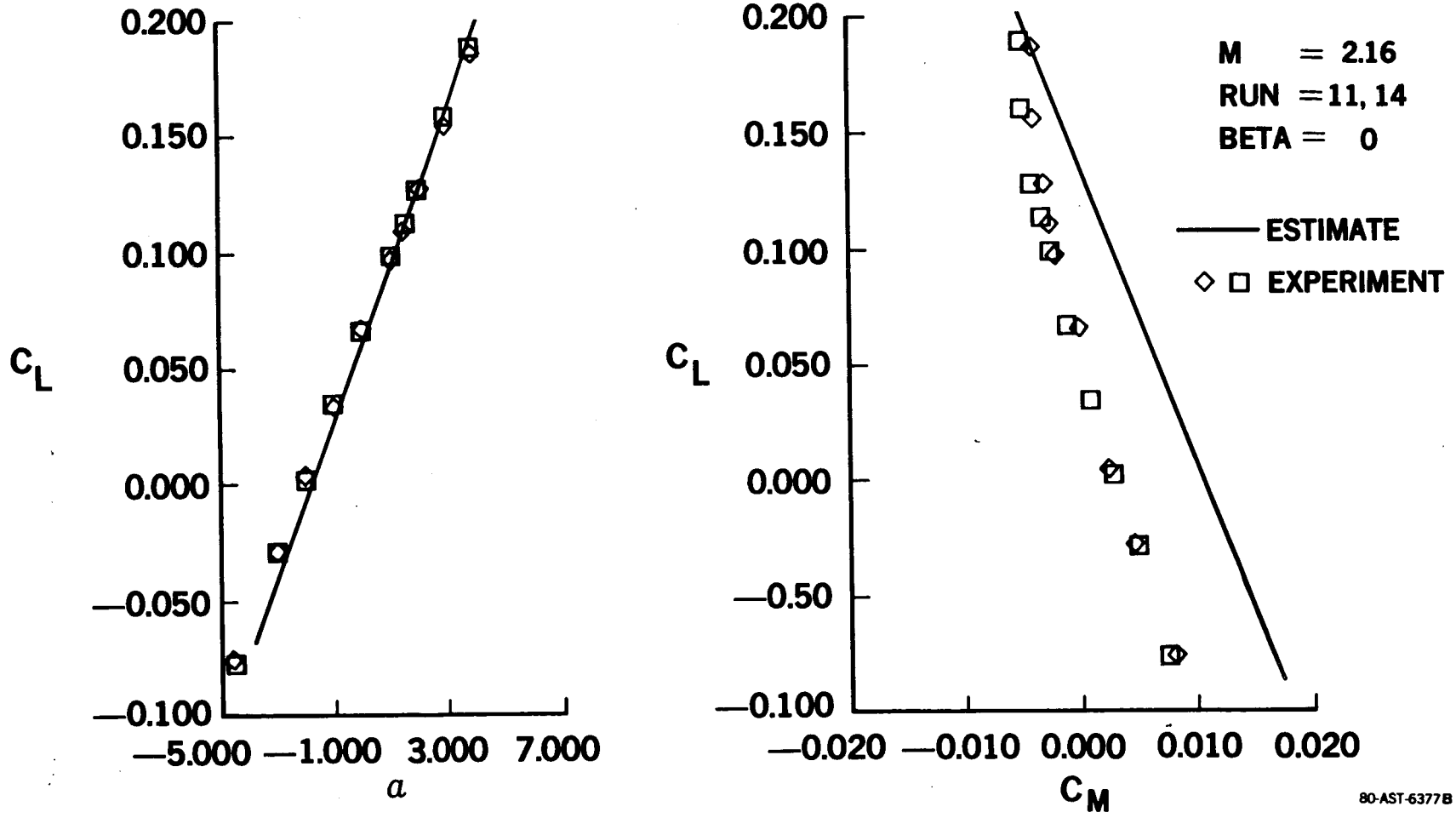

CAMBER SURFACE DEVIATIONS FOR WING W4

JUNE 1980

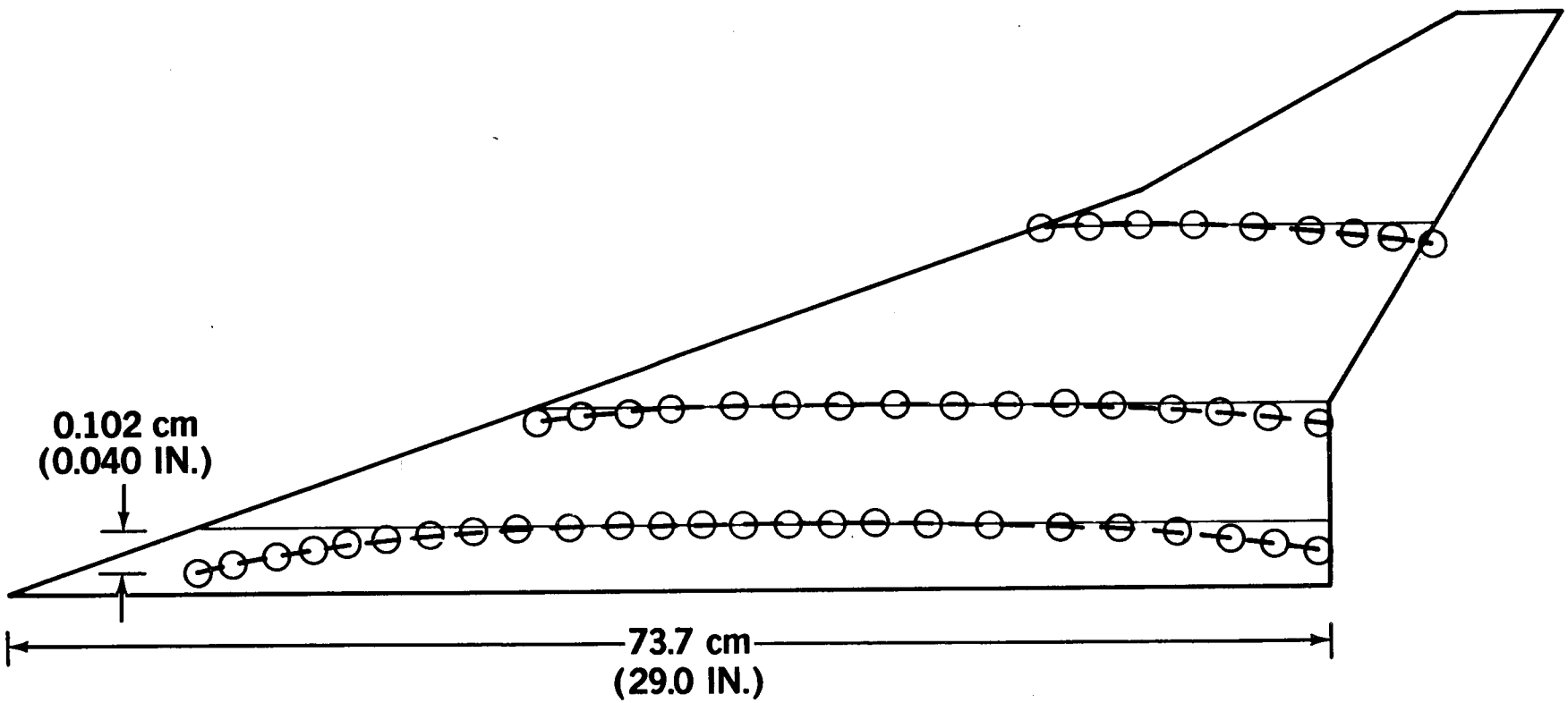

80-AST-6387

LEADING EDGE THRUST DESIGN STUDY PLANFORMS

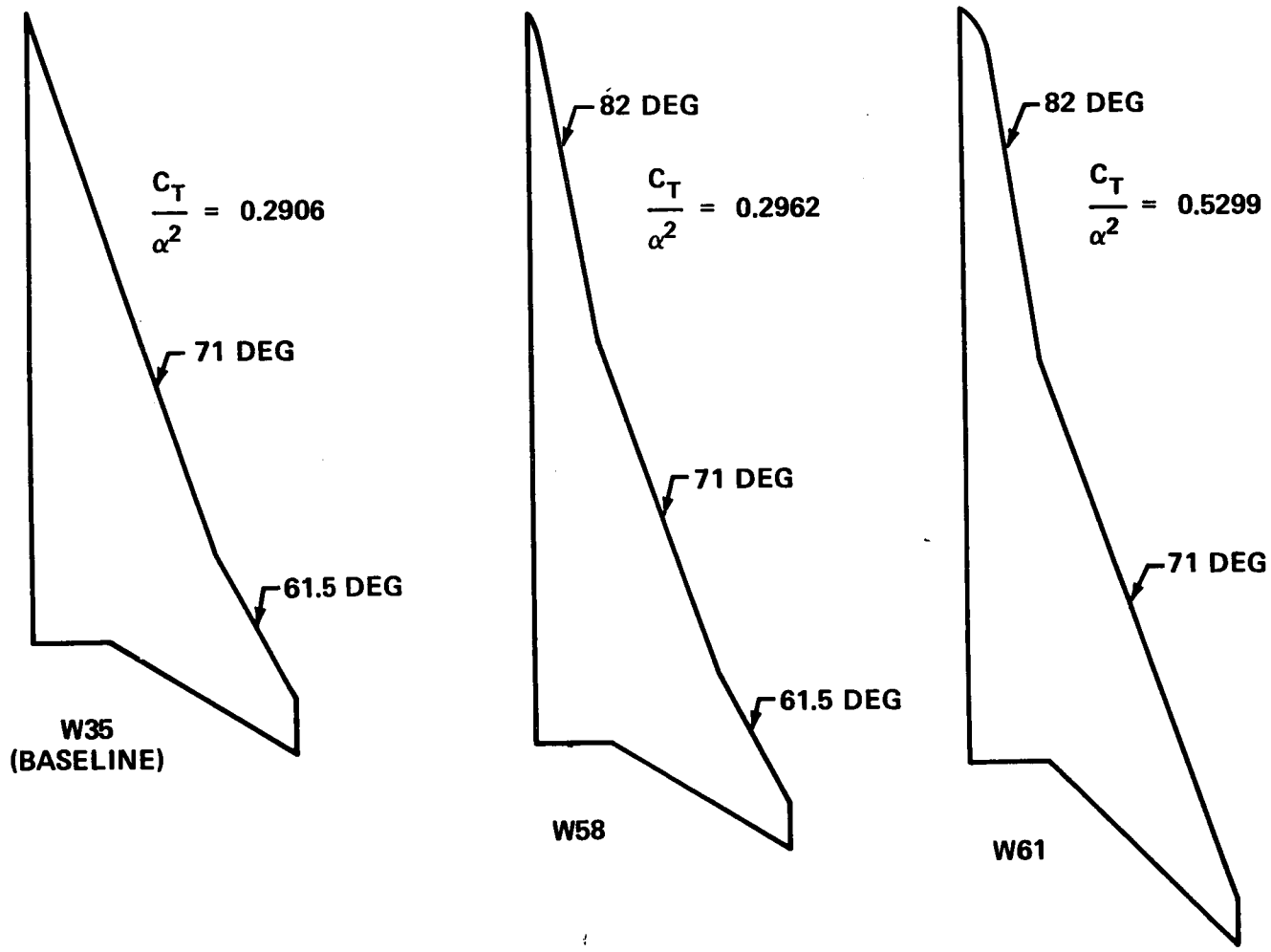

80-AST-6384A

DESIGN WING FOR LEADING EDGE THRUST BY SPECIFYING C_L

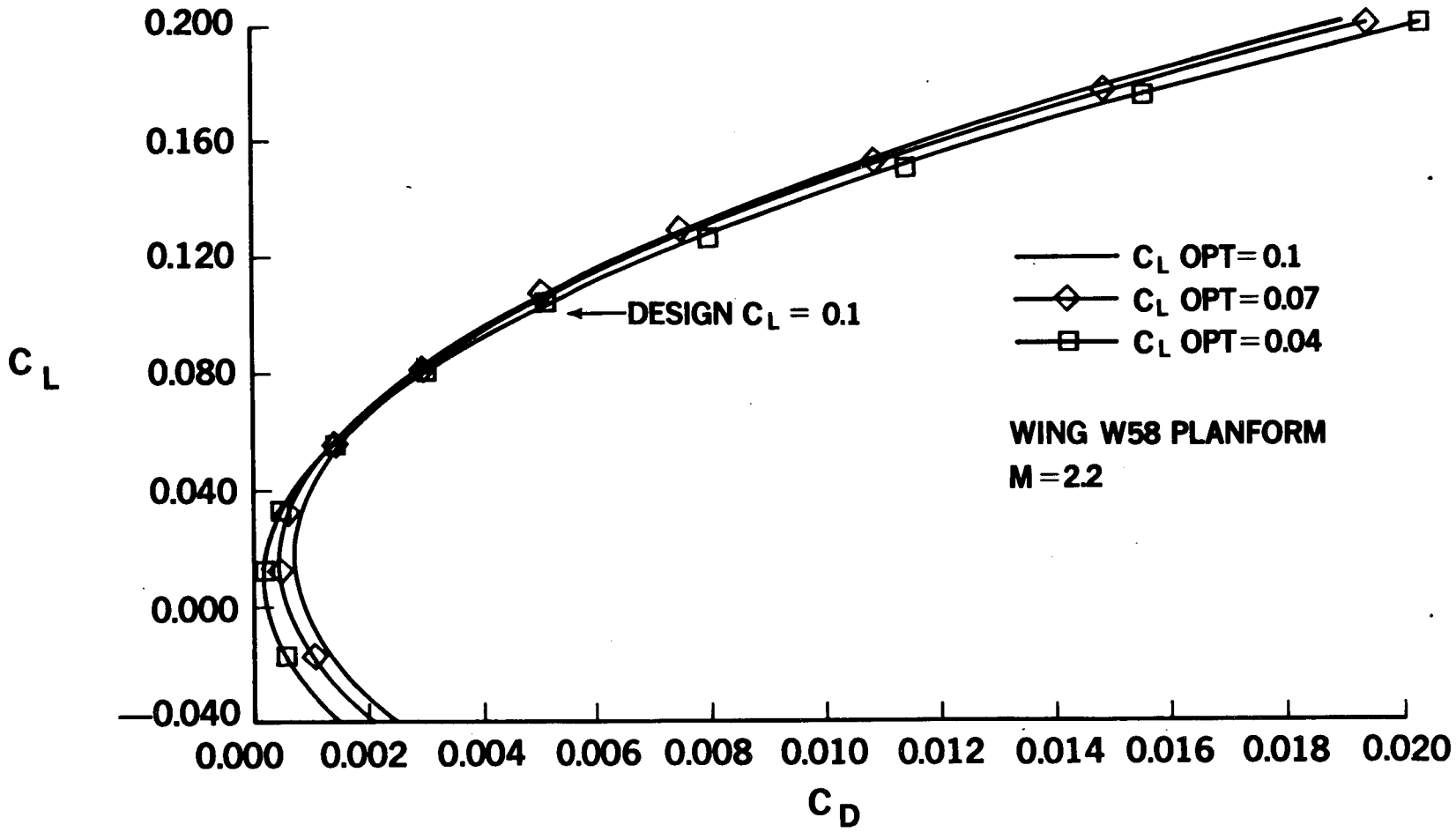

80-AST-6388 A

DESIGN WING CAMBER FOR LEADING EDGE THRUST BY SPECIFYING LOADING

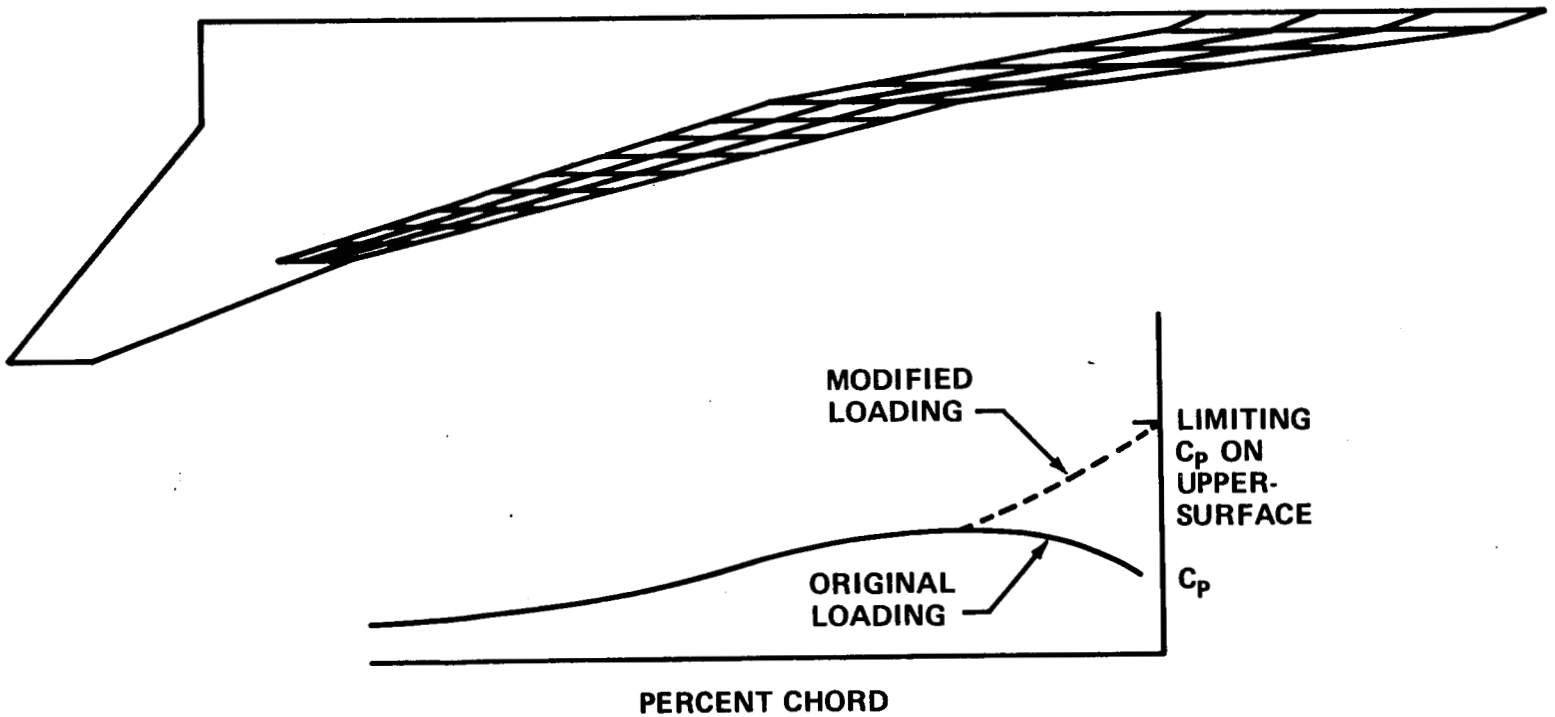

80-AST-6385

DESIGN WING FOR LEADING EDGE THRUST BY SPECIFYING LOADING

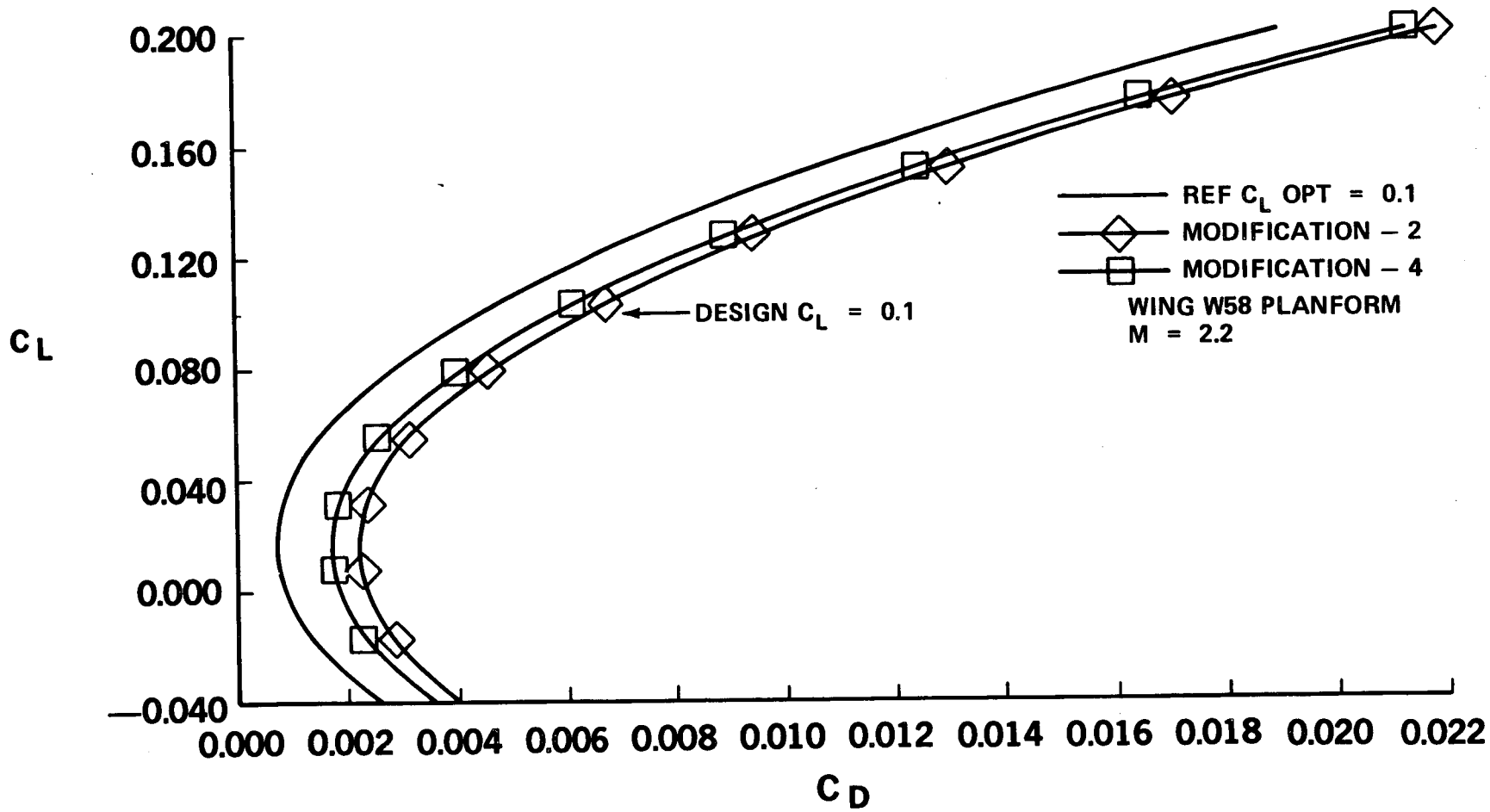

80-AST-6390A

LEADING EDGE THRUST WING DESIGN STUDY: SCIF-2 PLANFORM (NASA)

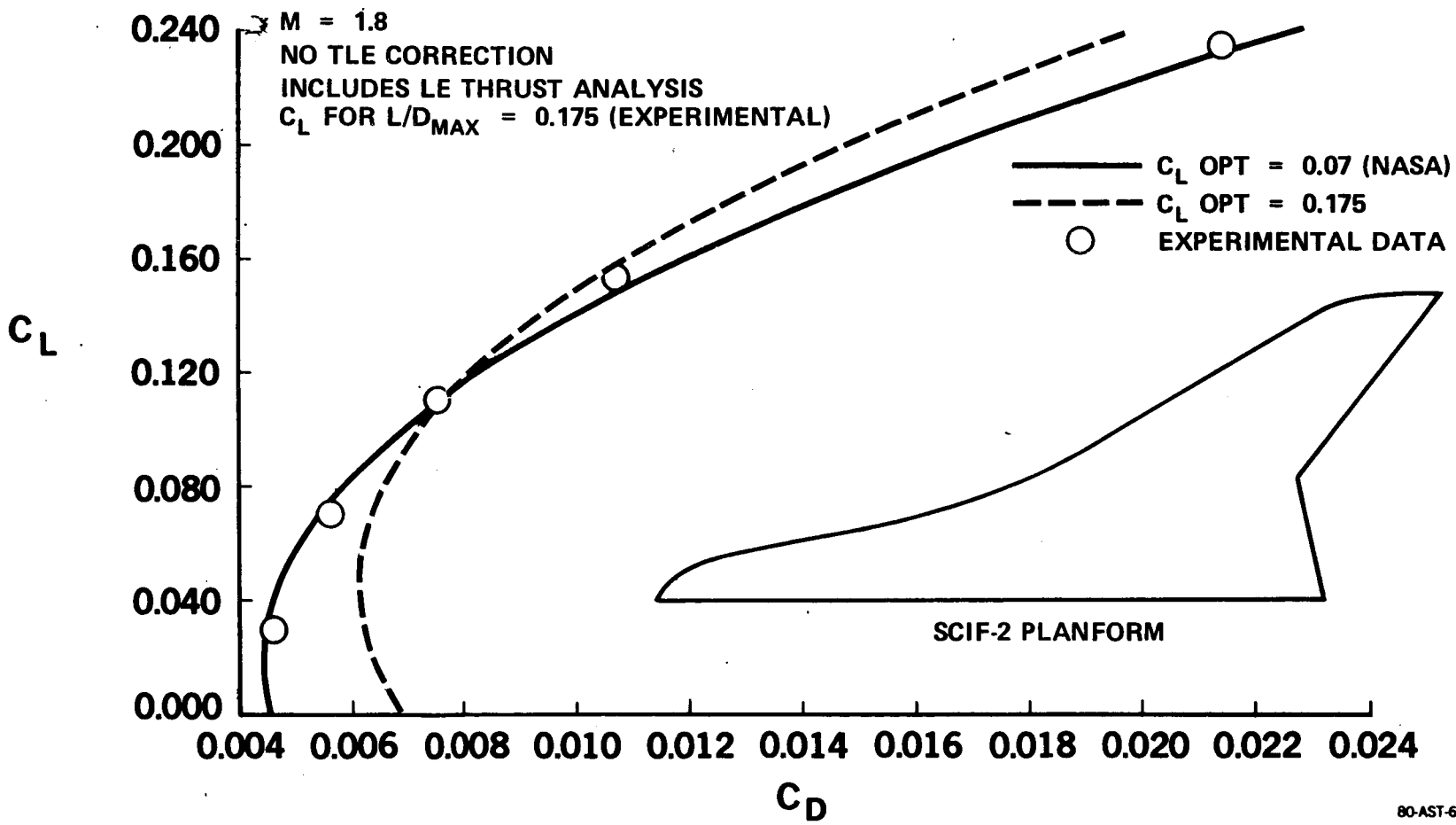

80-AST-6389

RESULTS OF LEADING EDGE THRUST WING DESIGN STUDY

ANALYSIS METHOD HAS BEEN DEVELOPED AND VERIFIED USING DOUGLAS EXPERIMENTAL DATA BASE AND NASA ANALYSIS PROGRAM

IDENTIFIED NO CRUISE PERFORMANCE IMPROVEMENT FOR AN AST CONFIGURATION AS COMPARED TO PRESENT DESIGNS

LEADING EDGE THRUST ANALYSIS PROVIDES A SIGNIFICANT IMPROVEMENT IN OFF-DESIGN ANALYSIS CAPABILITY

LEADING EDGE THRUST WINGS MAY STILL HAVE BENEFITS FOR FIGHTER-TYPE AIRCRAFT THAT REQUIRE SIGNIFICANT MANEUVERING CAPABILITY

80-AST-6381A

LOW-SPEED AERODYNAMICS

H. R. WELGE

80-AST-6456

MCDONNELL DOUGLAS CORPORATION

NASA LOW-SPEED MODEL IN LANGLEY 30- BY 60-FT TUNNEL

MCDONNELL DOUGLAS AST BASELINE DESIGN

(1979 TESTS)

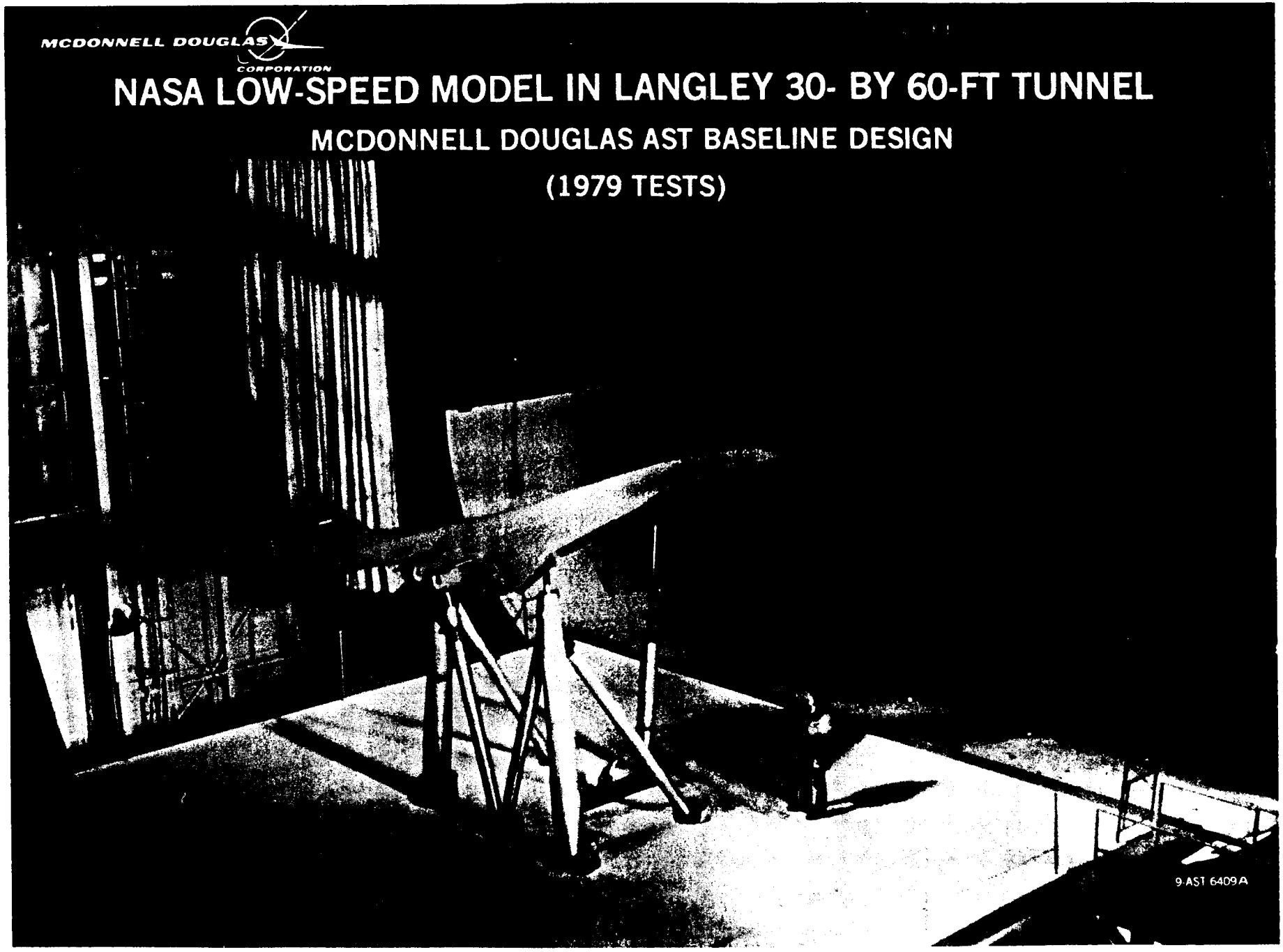

UNTRIMMED LOW-SPEED LIFT/DRAG RATIO

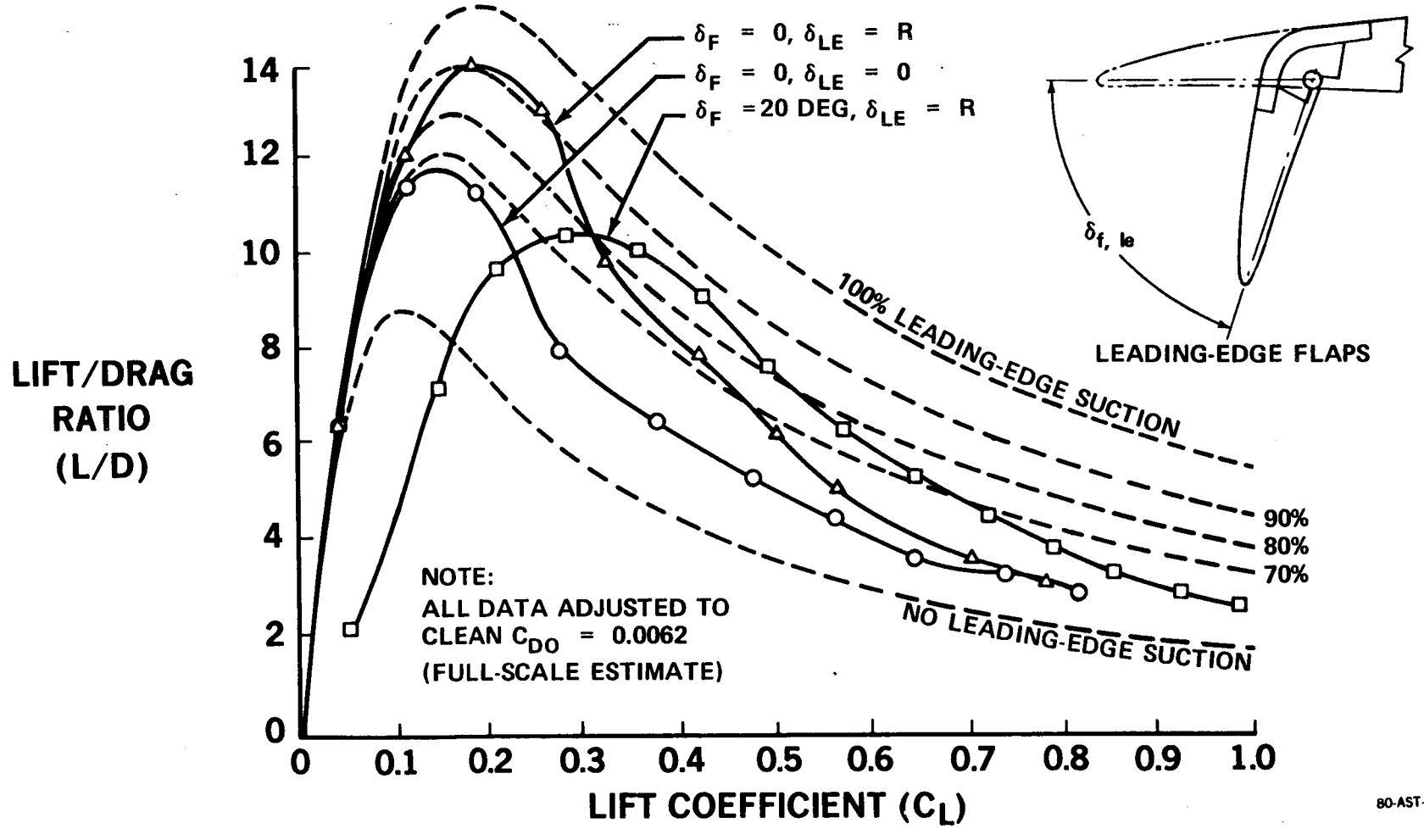

80-AST-6450

TWO-DIMENSIONAL METHODS COMPARISON

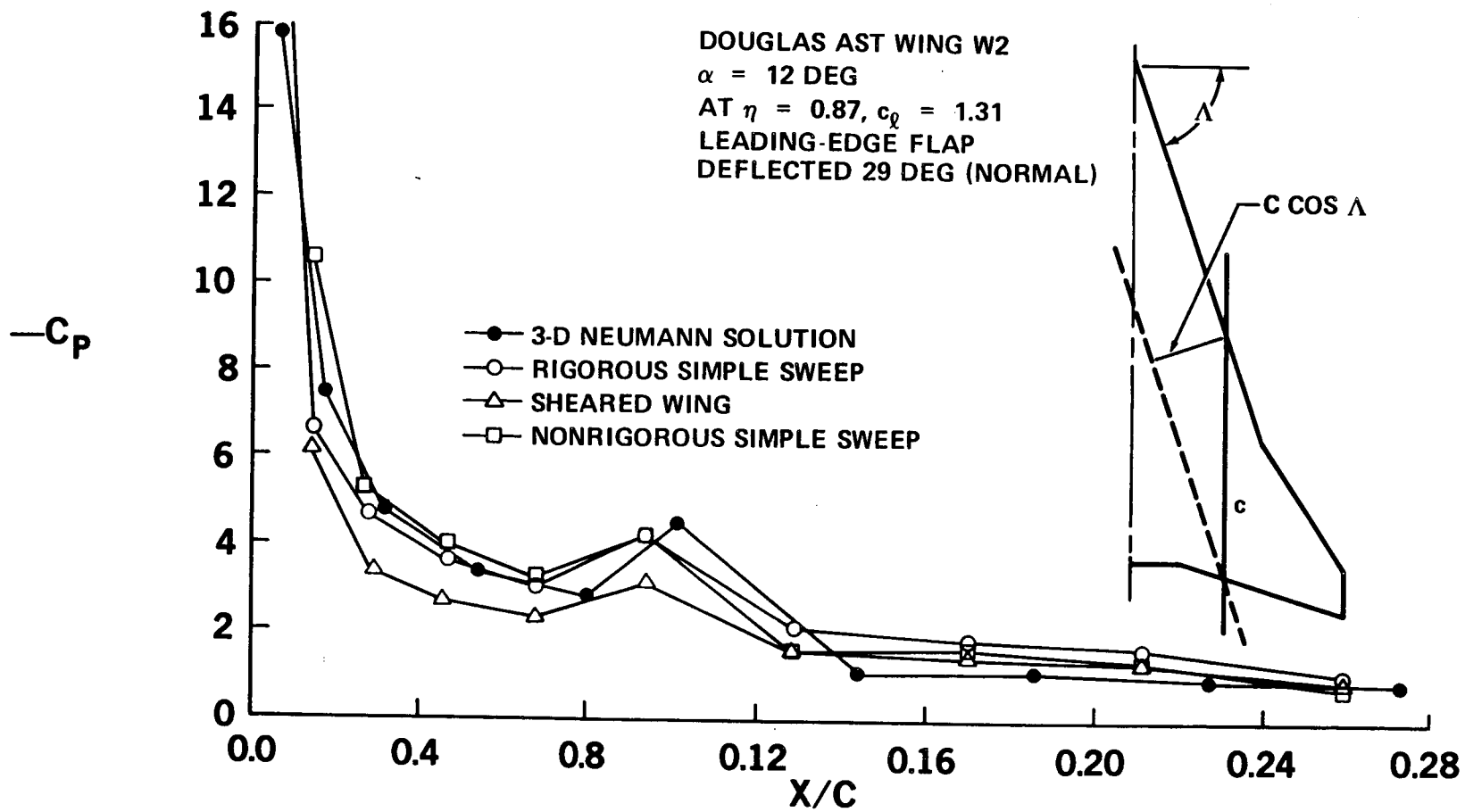

80-AST-6453

NOMINAL SLAT DEFLECTION SCHEDULE AND ANTICIPATED TESTING LIMITS

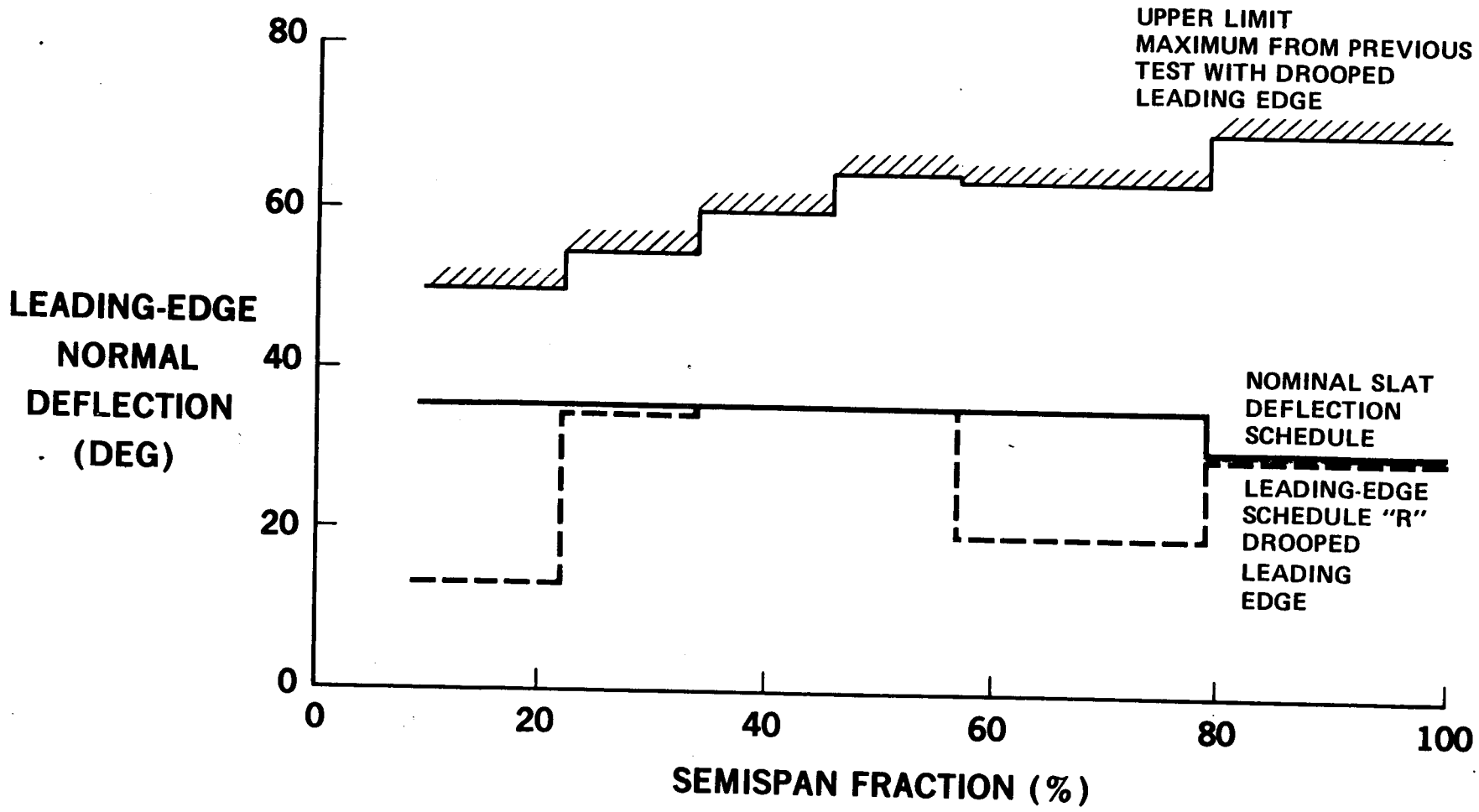

80-AST-6451A

TWO-DIMENSIONAL POTENTIAL FLOW SOLUTION AT 34-PERCENT SEMISPAN

$\delta_N = 35$ DEG $\quad C_{\ell N} = 4.4$

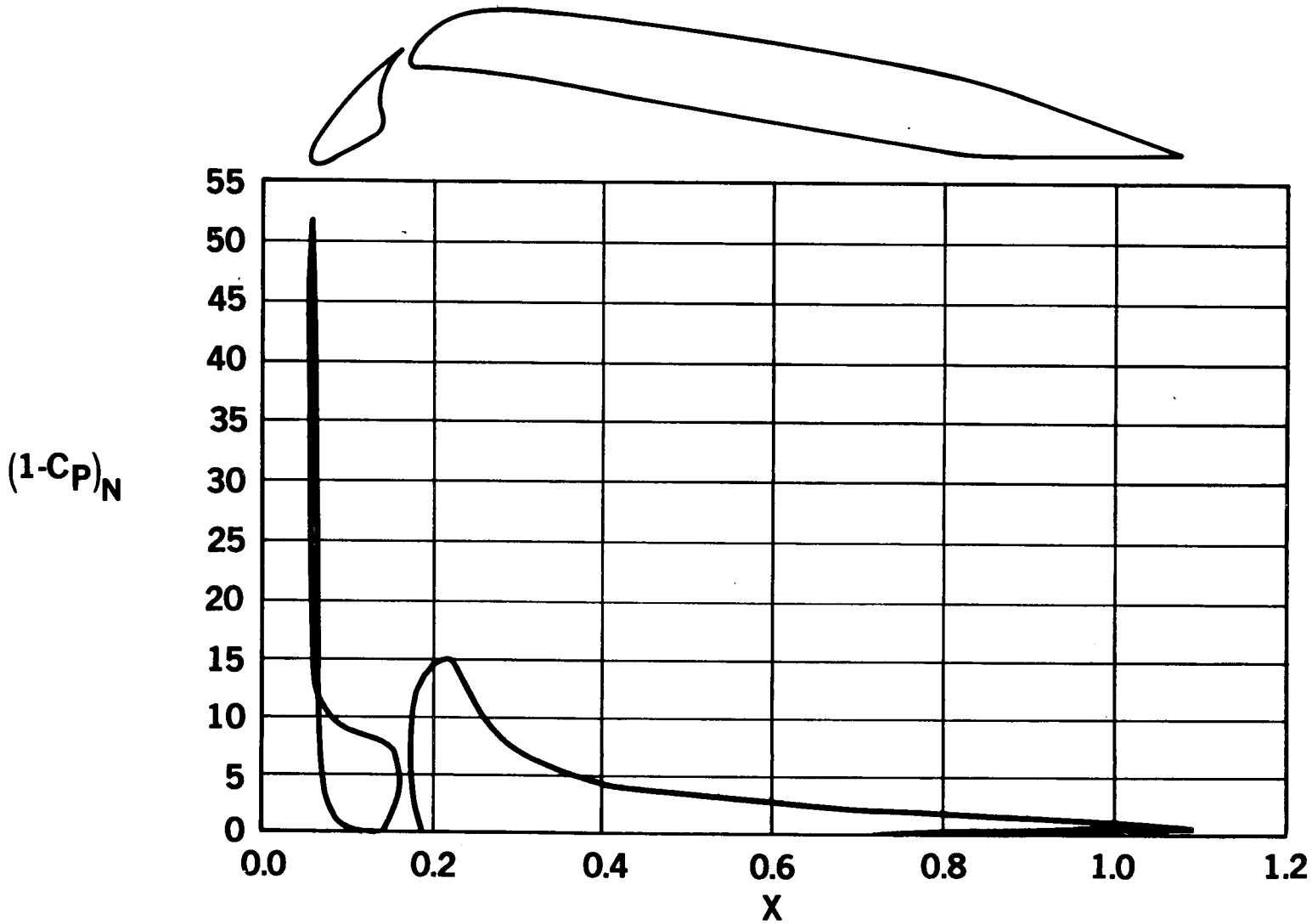

80-AST-6446

TWO-DIMENSIONAL POTENTIAL FLOW SOLUTION AT 68-PERCENT SEMISPAN

$\delta_N = 35$ DEG, $c_{\ell N} = 3.2$

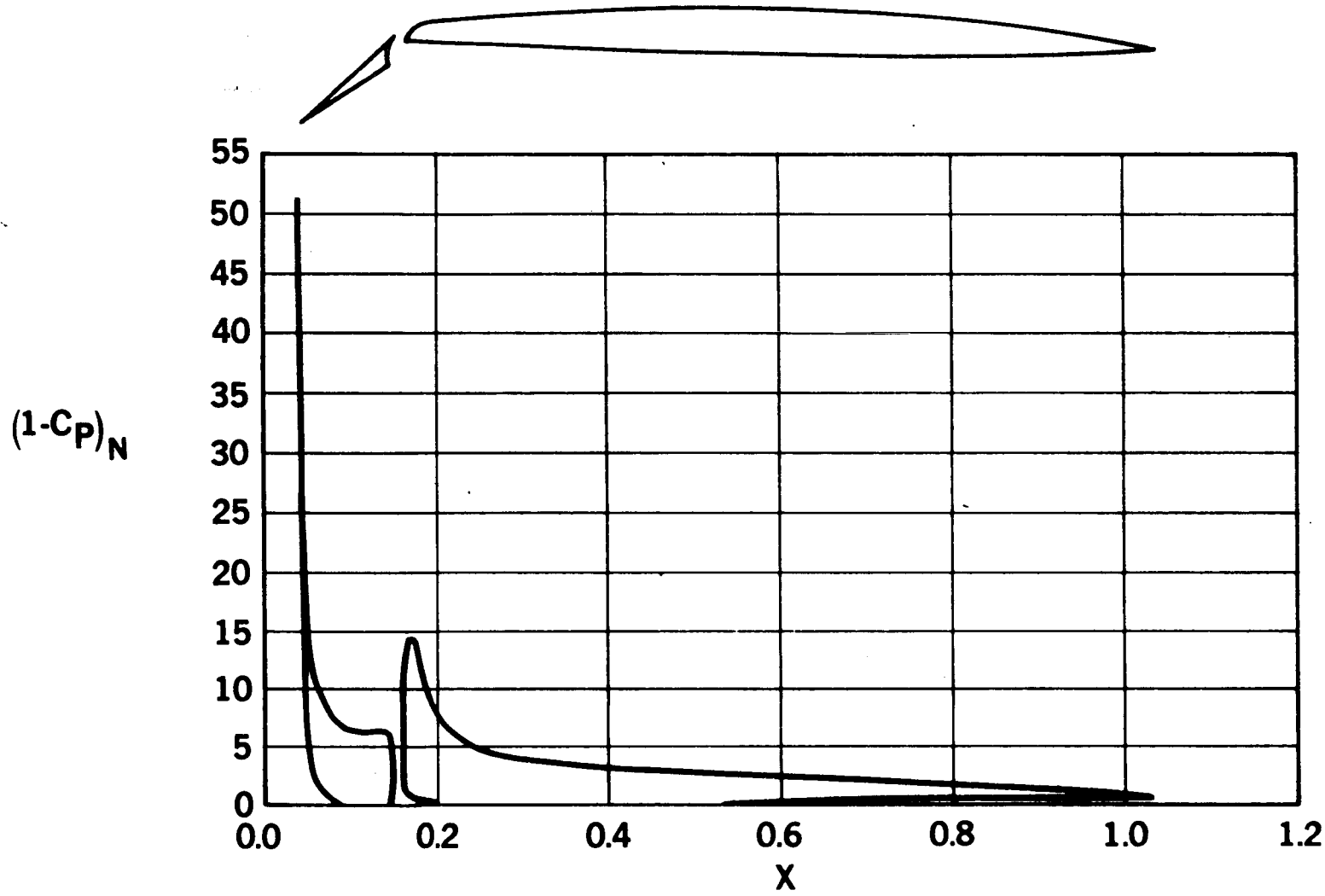

80 AST 6448

LEADING-EDGE NORMAL WUSS GEOMETRY AT ALL SPAN STATIONS

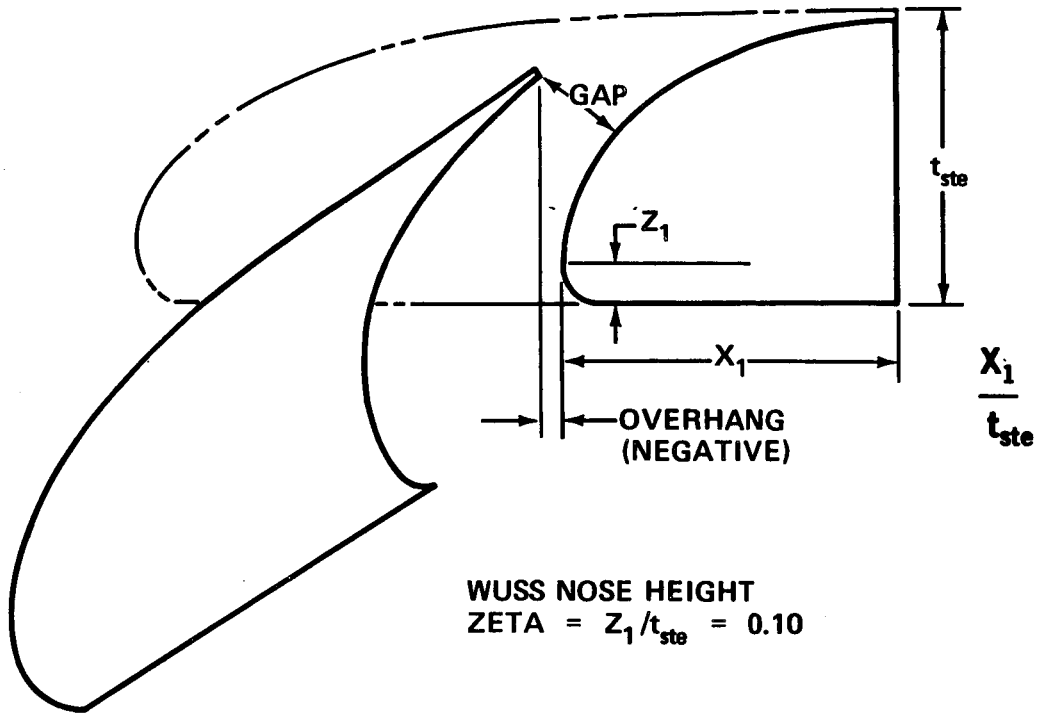

WUSS NOSE HEIGHT
ZETA = Z_1/t_{ste} = 0.10

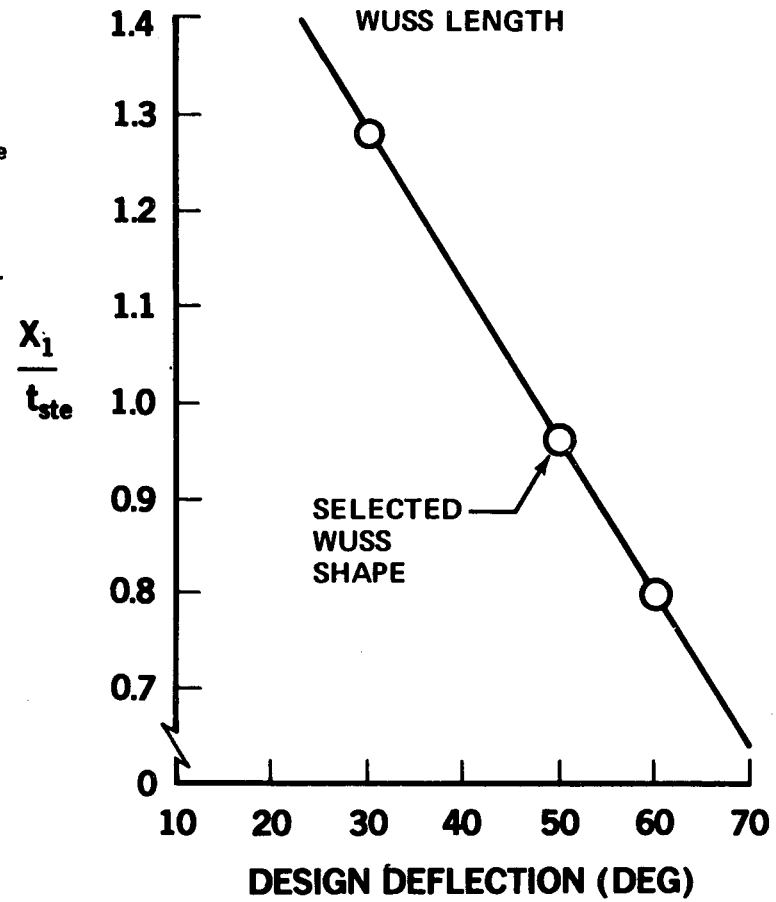

80-BST-6454A

SLAT NORMAL RIGGING LIMITS

NASA – DOUGLAS AST LOW-SPEED MODEL
NORMAL DEFLECTION 35 DEG

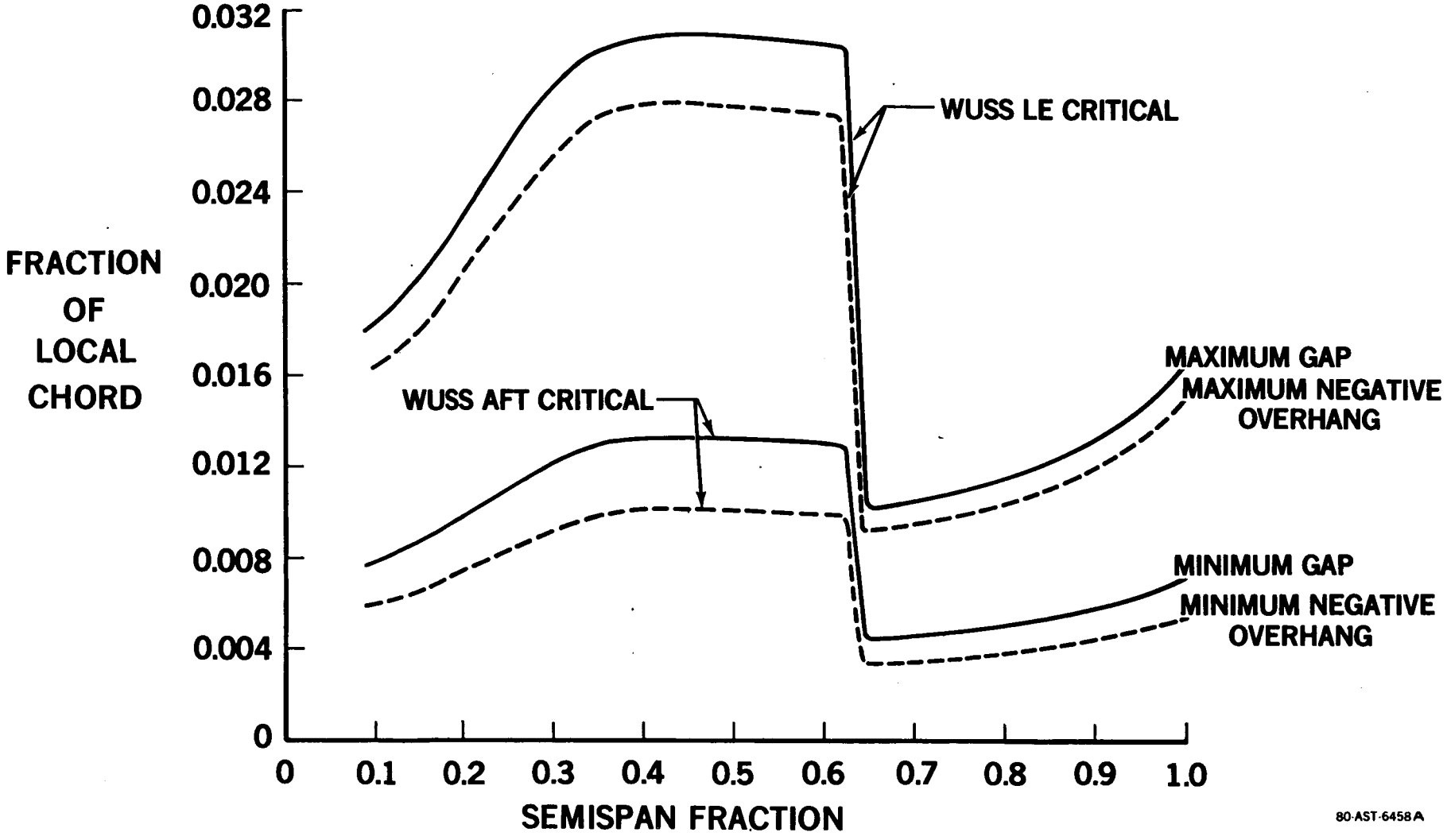

80-AST-6458A

STREAMWISE AIRFOIL SECTION CUTS

NOMINAL DEFLECTIONS

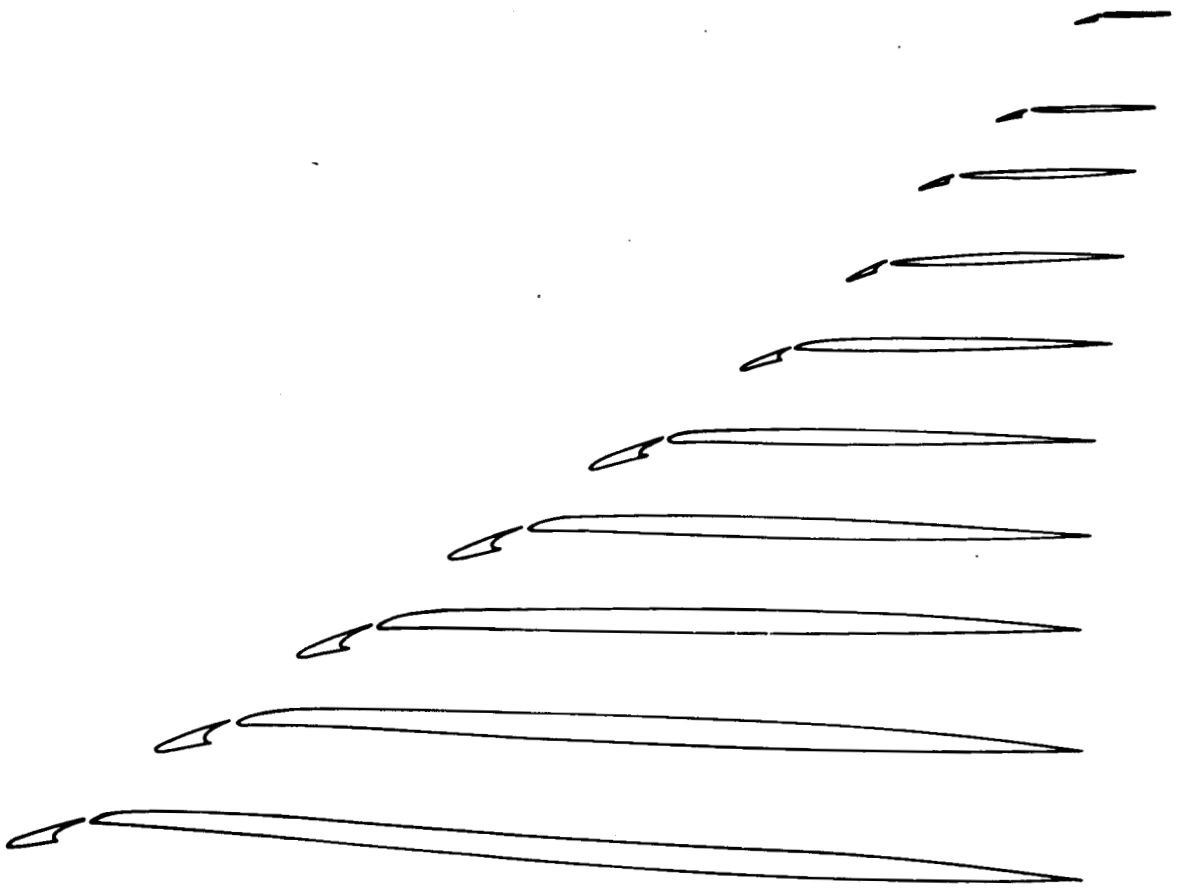

80-AST-6452

LEADING EDGE SLATS

AST INBOARD WING SECTIONS

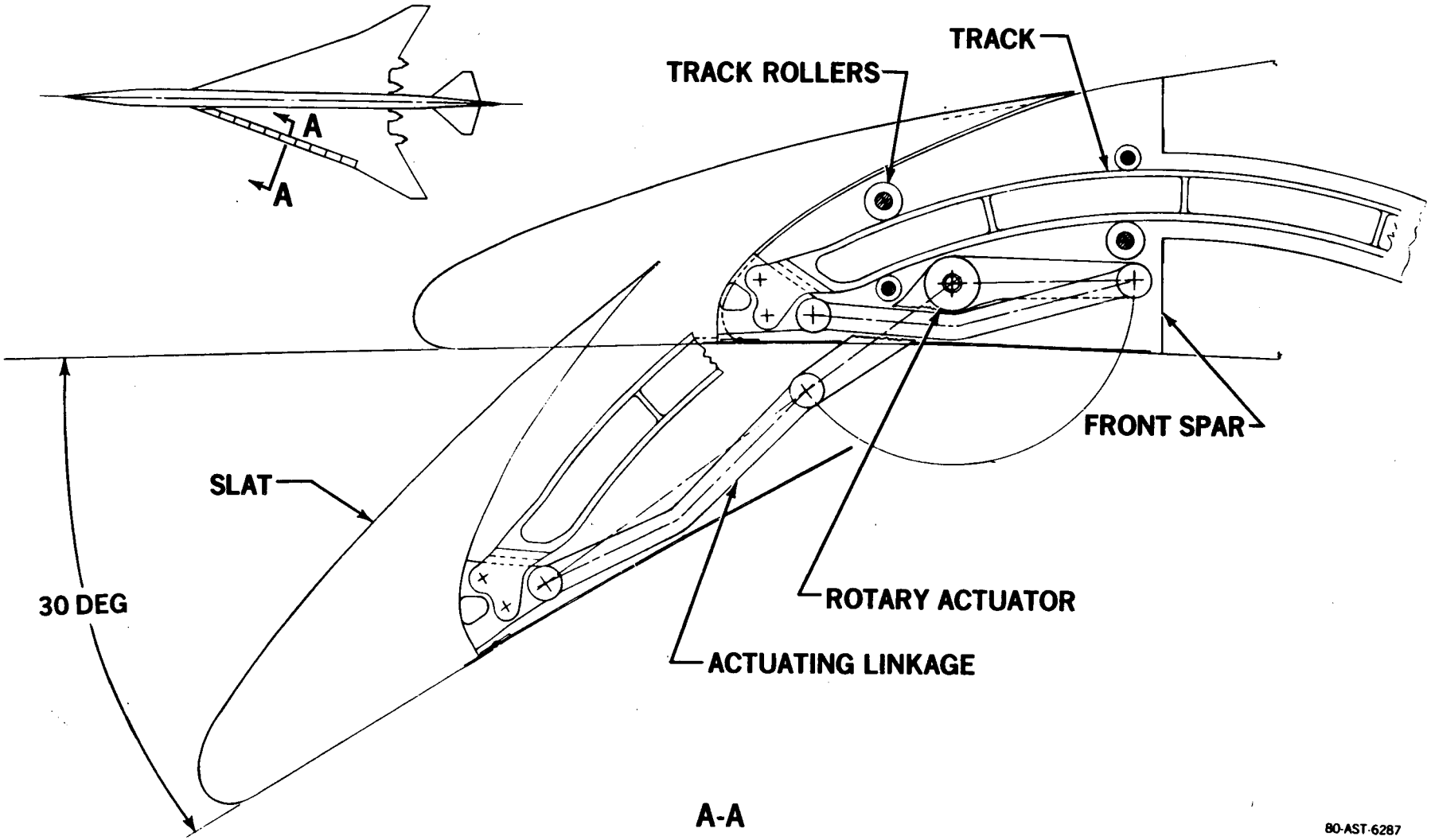

80-AST-6287

LEADING EDGE SLATS

AST OUTER WING SECTIONS

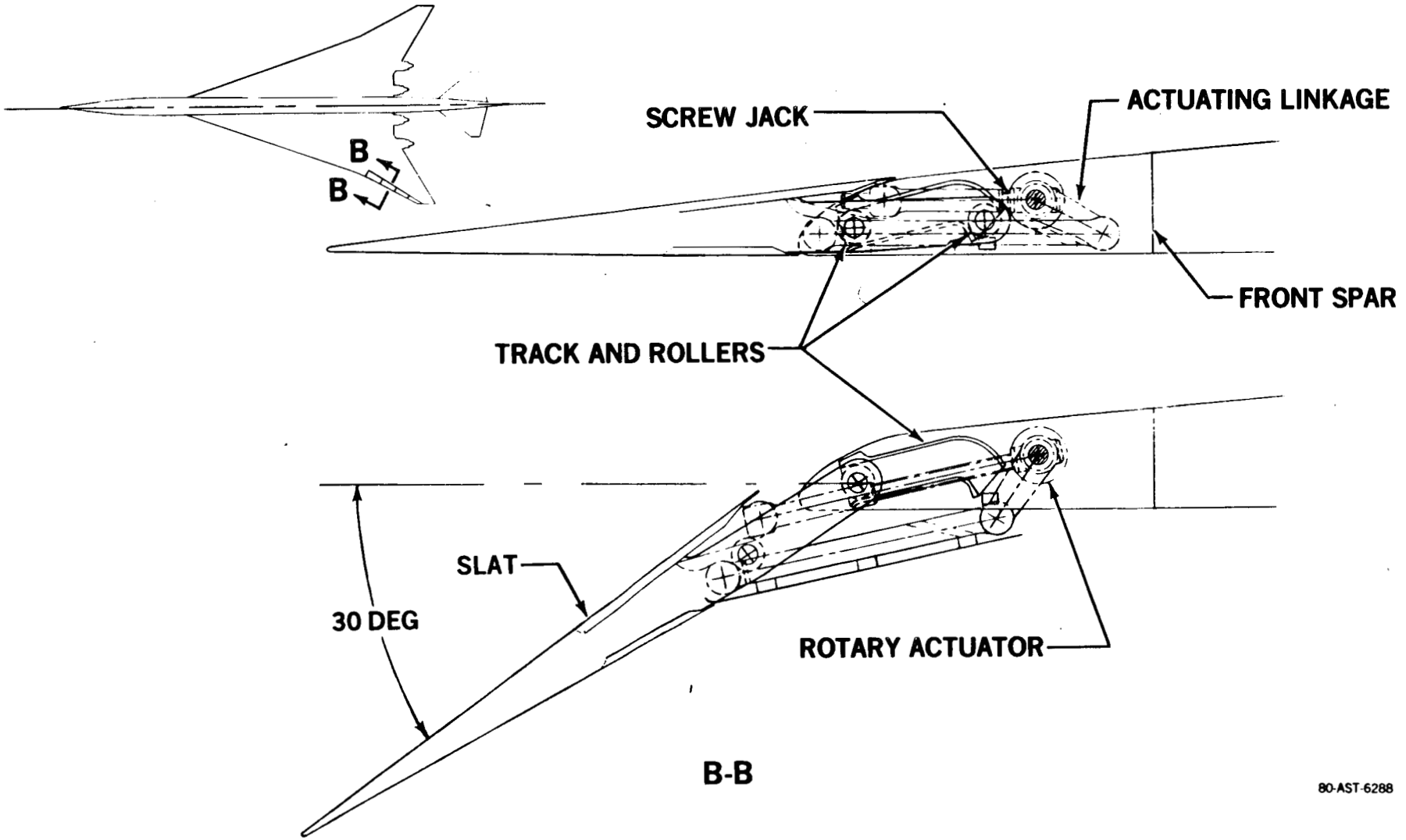

80-AST-6288

THREE-DIMENSIONAL SLAT DEFINITION FOR NEUMANN ANALYSIS

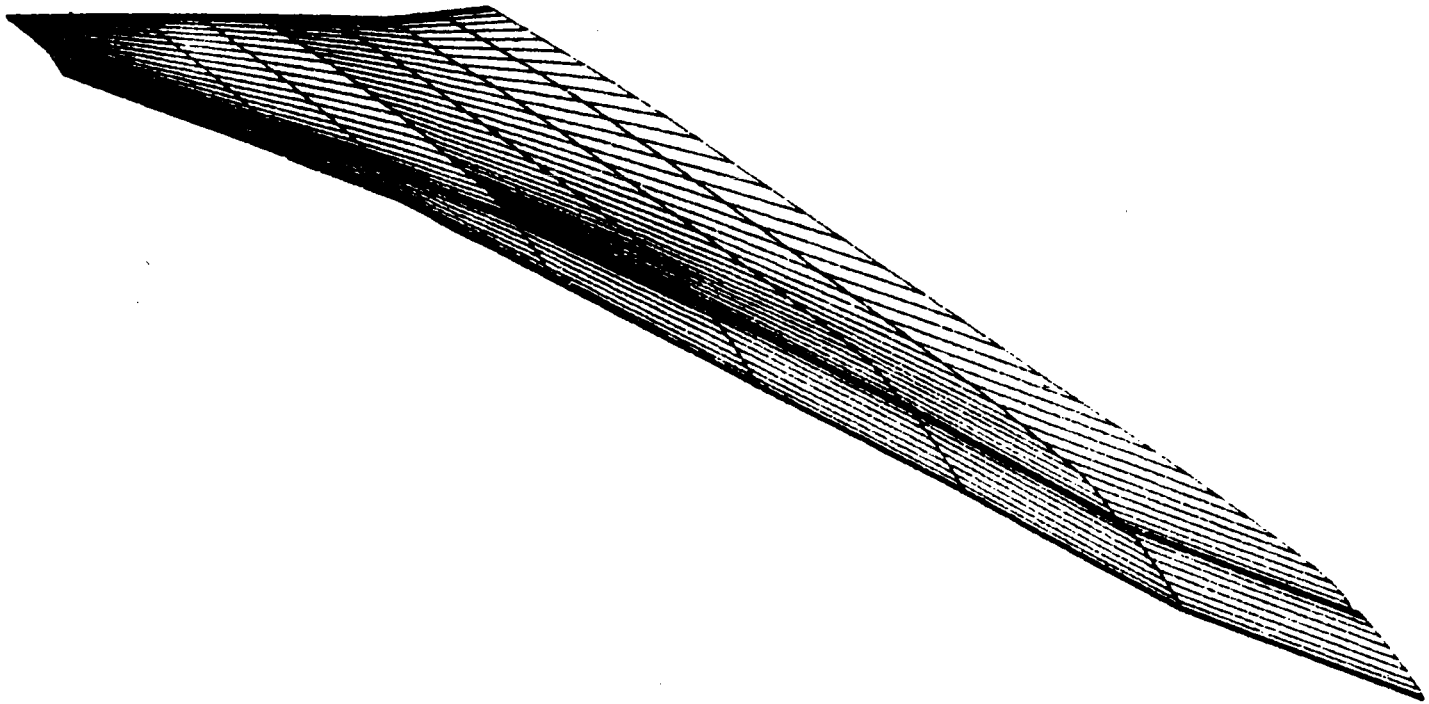

80-AST-6455

LOW-SPEED AERODYNAMICS STATUS

PRELIMINARY TWO-DIMENSIONAL AERODYNAMIC ANALYSIS COMPLETED

MECHANICAL ACTUATION SYSTEM DEVELOPED WITHIN AIR-FOIL CONTOUR CAPABLE OF DRIVING THE SLATS TO THE NOMINAL DEFLECTION ANGLES

THREE-DIMENSIONAL AERODYNAMIC ANALYSIS CURRENTLY UNDERWAY

80-AST-6049

INLET TEST PROGRAM

H. R. WELGE

80-AST-6410

LOW-SPEED INLET TEST PROGRAM

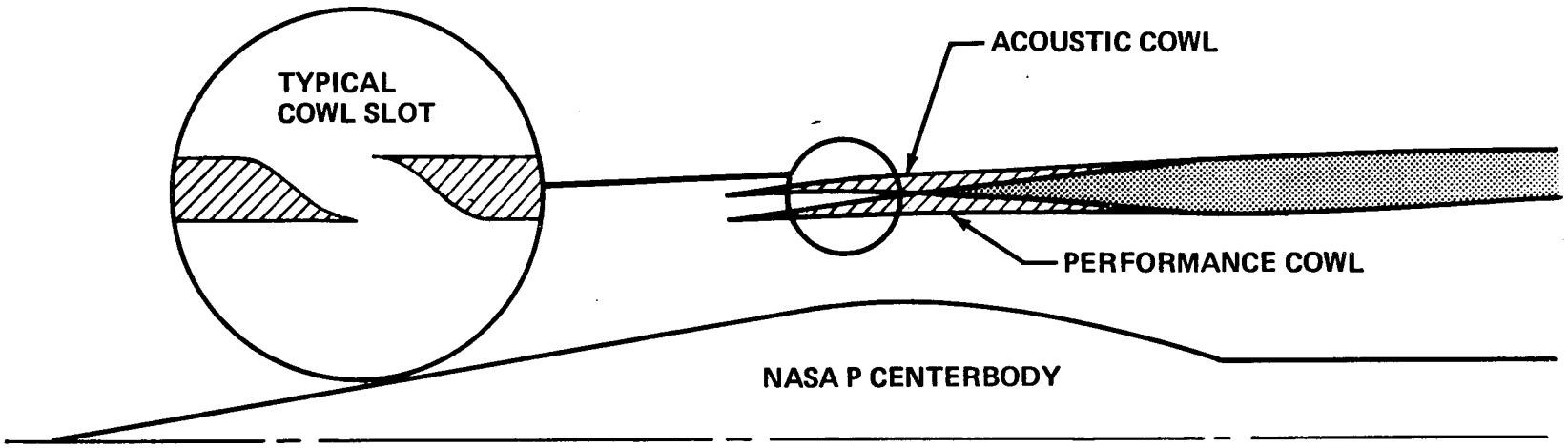

- JOINT NASA LEWIS — MDC DOUGLAS TEST PROGRAM
- MODIFIED NASA P INLET MODEL
- TO INVESTIGATE TRANSLATING COWL EFFECTS ON INLET AIRFLOW, PRESSURE RECOVERY, AND NOISE
- INCORPORATES VARIABLE AUXILIARY SLOT WIDTH AND COWLS TAILORED FOR PERFORMANCE AND ACOUSTIC TESTING

80-GEN-20331B

COMPARISON OF INLETS FOR LOW - SPEED TEST

(DIMENSIONS IN CENTIMETERS)

BASIC TRANSLATING CENTERBODY "P" INLET

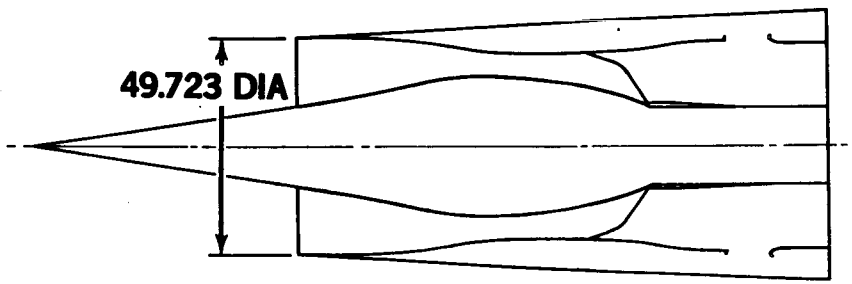

EXISTING INLET

PERFORMANCE COWL AND "P" CENTERBODY INLET

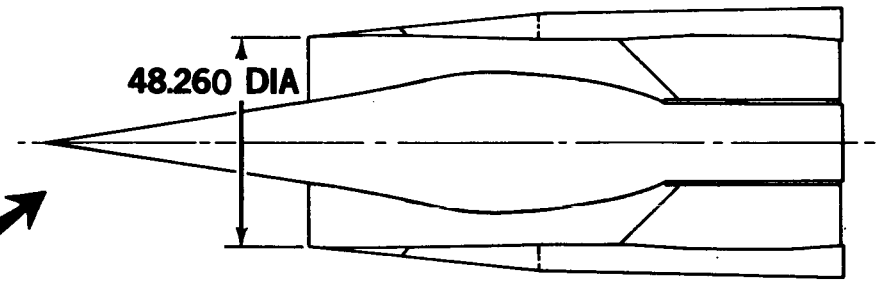

COMMON
REAR COWL

ACOUSTIC COWL AND "P" CENTERBODY INLET

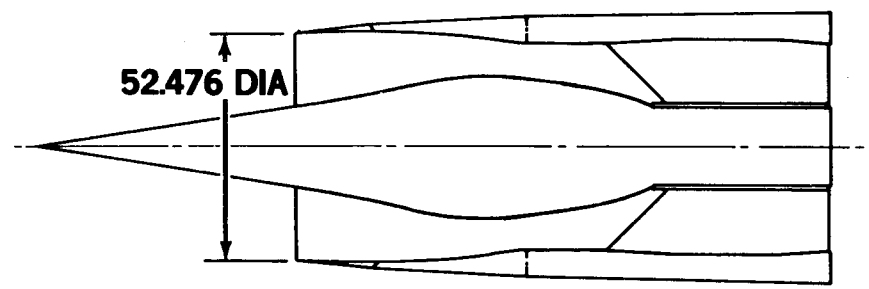

RECOMMENDED TEST COWLS

80-AST-6137

SCHEMATIC INLET CHARACTERISTICS

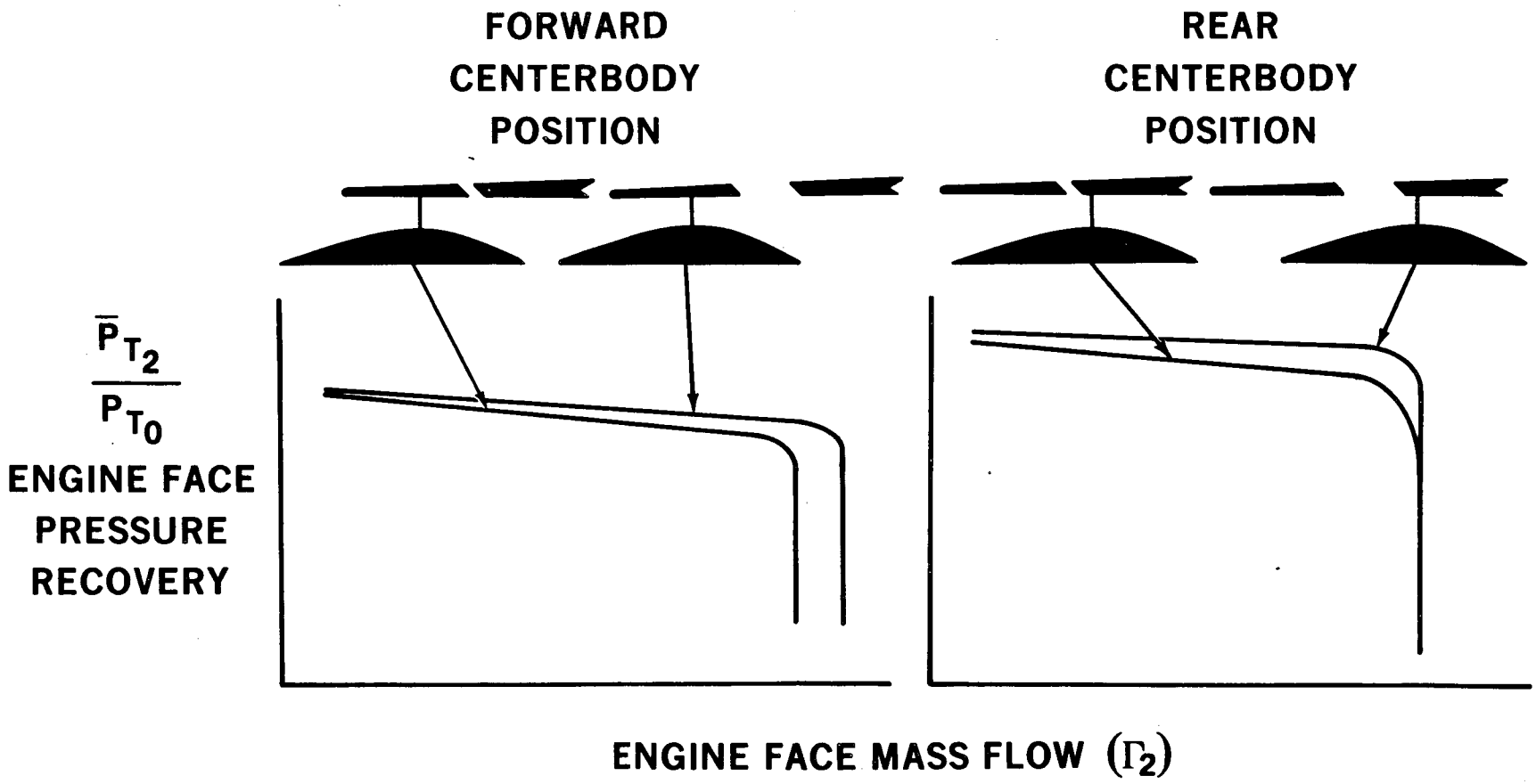

80-AST-6323

PERFORMANCE INLET AREA DISTRIBUTION

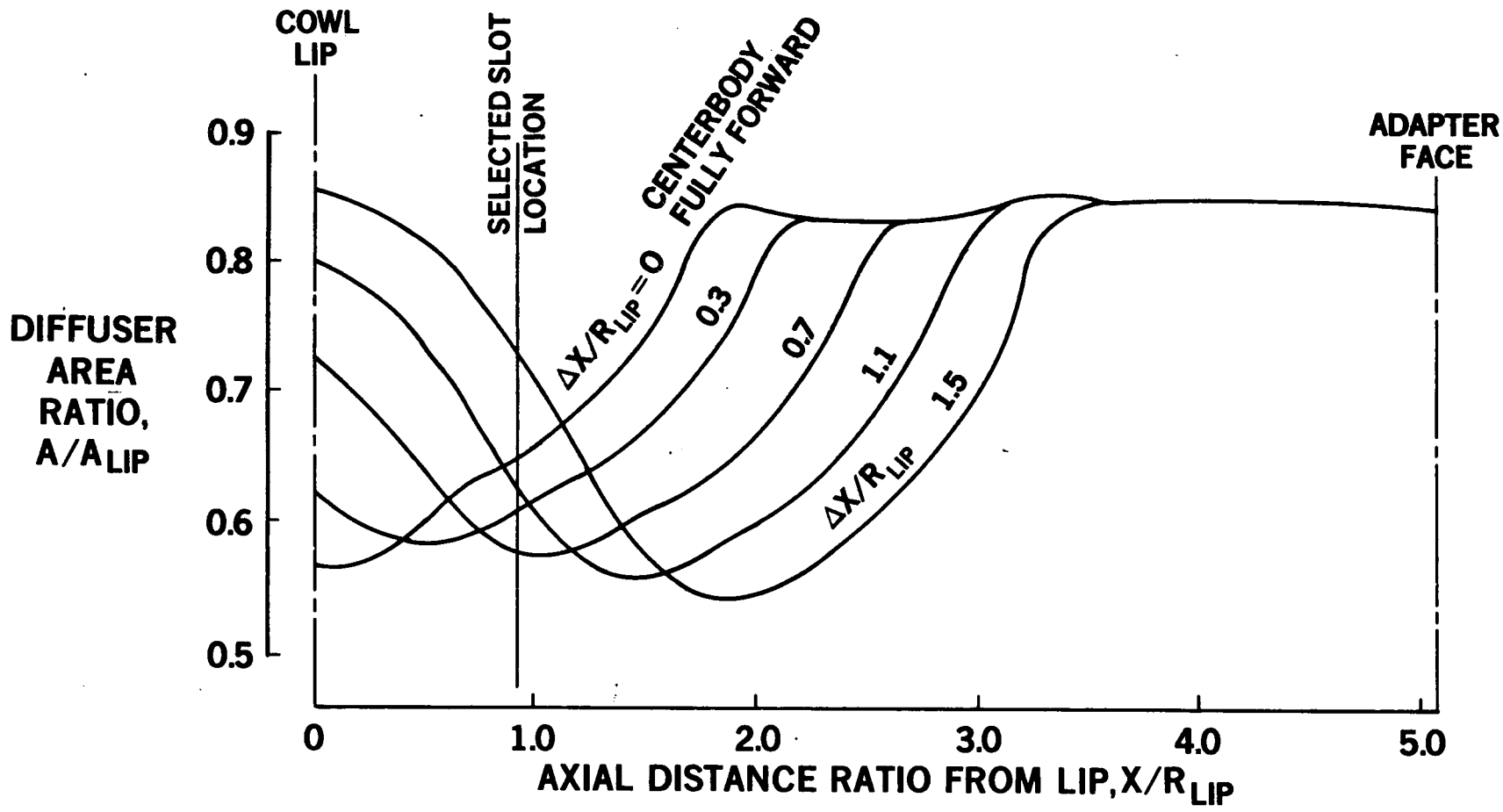

80-AST-6110 A

THEORETICAL PRESSURE DISTRIBUTION AROUND THE TRANSLATED LIP UNDER LOW ENGINE MASS FLOW CONDITIONS

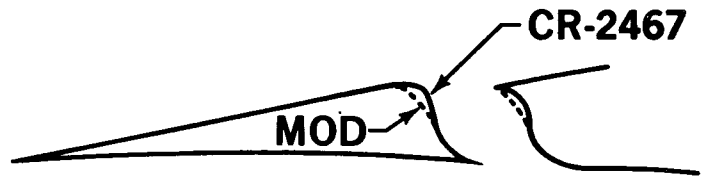

SLOW WIDTH 5.08 cm (2.0 IN.)

$\frac{V_{\text{ENGINE FACE}}}{V_{\text{FREE STREAM}}} = 0.5$ (OFF DESIGN)

INCOMPRESSIBLE PRESSURE COEFFICIENT BASED ON ENGINE FACE CONDITIONS

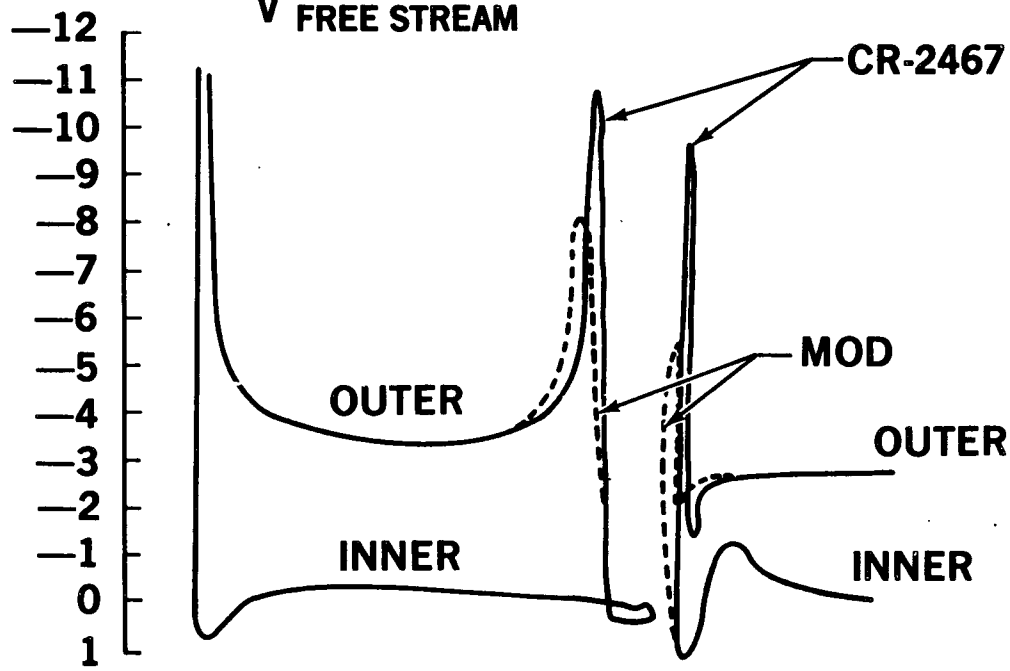

80-AST-6405

THEORETICAL PRESSURE DISTRIBUTION AROUND THE TRANSLATED LIP: DESIGN CONDITIONS

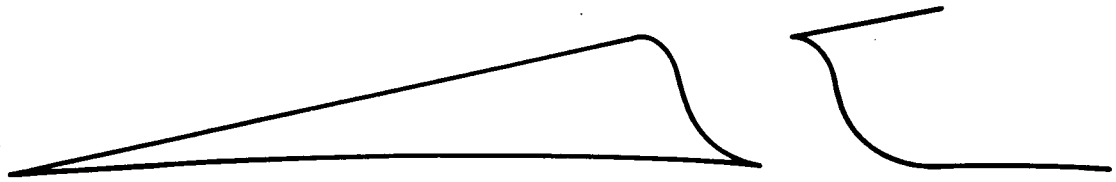

SLOT WIDTH 5.08 cm (2.0 IN.)

$$\frac{V_{\text{ENGINE FACE}}}{V_{\text{FREE STREAM}}} = 2.0 \text{ [TYPICAL TAKEOFF]}$$

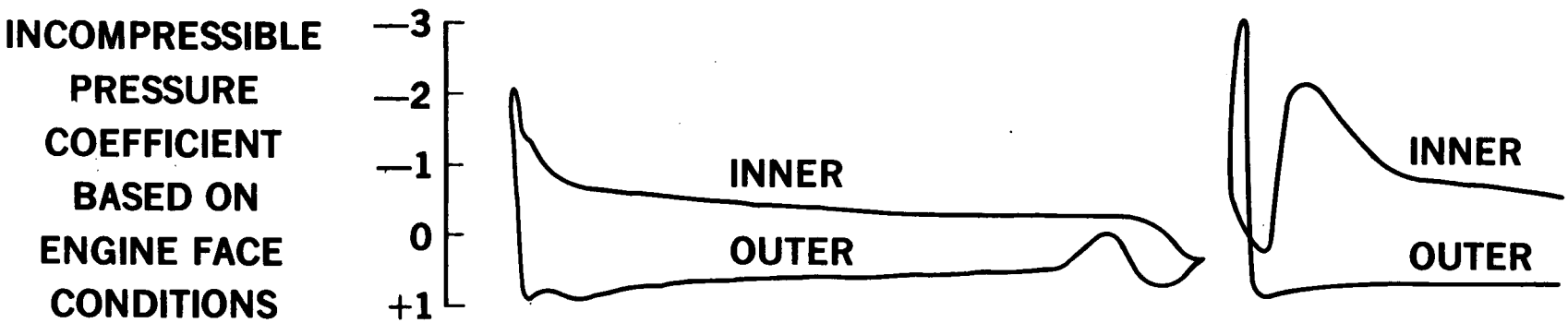

80-AST-6404A

OPTIMUM SLOT TRANSLATION BASED ON BALANCING PRESSURE PEAKS

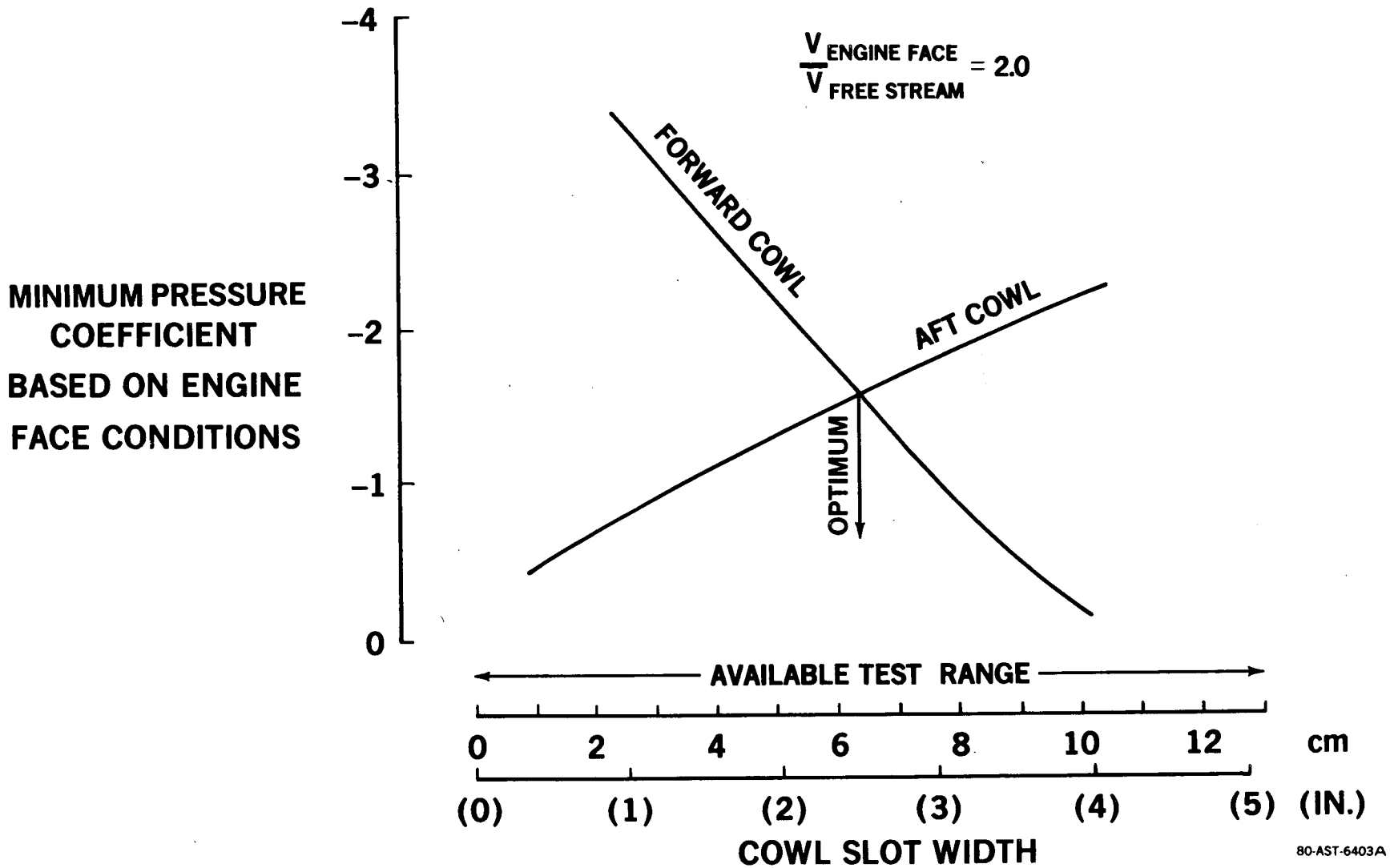

TEST PLAN SUMMARY
NASA LEWIS 9- BY 15-FOOT TUNNEL

PERFORMANCE TESTS:	NUMBER RUNS
BASELINE PERFORMANCE, COWL SLOT SHUT, CALIBRATE THROAT RAKES	21
SELECT OPTIMUM SLOT WIDTH	36
COMPLETE BASIC PERFORMANCE	21
	78

ACOUSTIC TESTS AT 0, 0.12, AND 0.2 MACH	SLOT	NUMBER CB POSITIONS	$N_1/\sqrt{\theta}$ (PERCENT)*
HARDWALL BASELINE	CLOSED	4	76 — 100
	OPEN	4	76 — 100
ACOUSTIC	CLOSED	8	76 — 100
	OPEN	4	76 — 100

*FULL RANGE OF $N_1/\sqrt{\theta}$ NOT RUN AT ALL CB LOCATIONS

80-AST-6408

LOW-SPEED INLET TEST STATUS

OCTOBER 1980

GEOMETRY OF INLET AND LIP DEFINED; MODEL DRAWINGS 95 PERCENT COMPLETE

INSTRUMENTATION DEFINED

TEST PLAN DEFINED AND REVIEWED WITH NASA

INITIAL DISCUSSION CONDUCTED ON METHOD OF MODEL SUPPORT AND FAN AIRFLOW CALIBRATION

FABRICATION 75 PERCENT COMPLETE

80-AST-6409A

ENGINE COMPANY AND AIRFRAME INTEGRATION STUDIES

E. S. JOHNSON

80-AST-6430

ENGINES STUDIED

GENERAL ELECTRIC

- GE21/J11 STUDY B18
- GE21/J11 STUDY B18B
- GE21/J11 STUDY B25B
- GE21/J10 STUDY B7 (TWO INLETS)

PRATT & WHITNEY AIRCRAFT

- VSCE-511R
- VSCE-522
- LBE-431R (TWO INLETS)

80-AST-6432

GROUND RULES

750,000-LB TOGW

308 PASSENGERS

ALL ENGINES — BICONE INLET

11,000-FT TOFL (MAXIMUM)

$\overline{<}$FAR PART 36 NOISE (108 EPNdB TRADED)

SELECTED ENGINES — TRANSLATING CENTERBODY INLET

NORMAL TAKEOFF TRAJECTORY

CUTBACK ~ 5 SEC BEFORE MONITOR

CLIMB T/D RATIO >1.1 AT 1.6 M INLET STARTED

ALL-SUPERSONIC MISSION

F_N (TAKEOFF) 1100 FT = 47,872 LB

F_N (CUTBACK) 1250 FT = 33,511 LB

80-AST-6431

GE21/J11 STUDY B18 AND B18B ENGINE SIZING

0.3 M, STANDARD + 18°F DAY,
$A_8 = 6935\ cm^2$ (1075 IN.^{2})
GE NOISE WITH 4-dB SUPPRESSOR

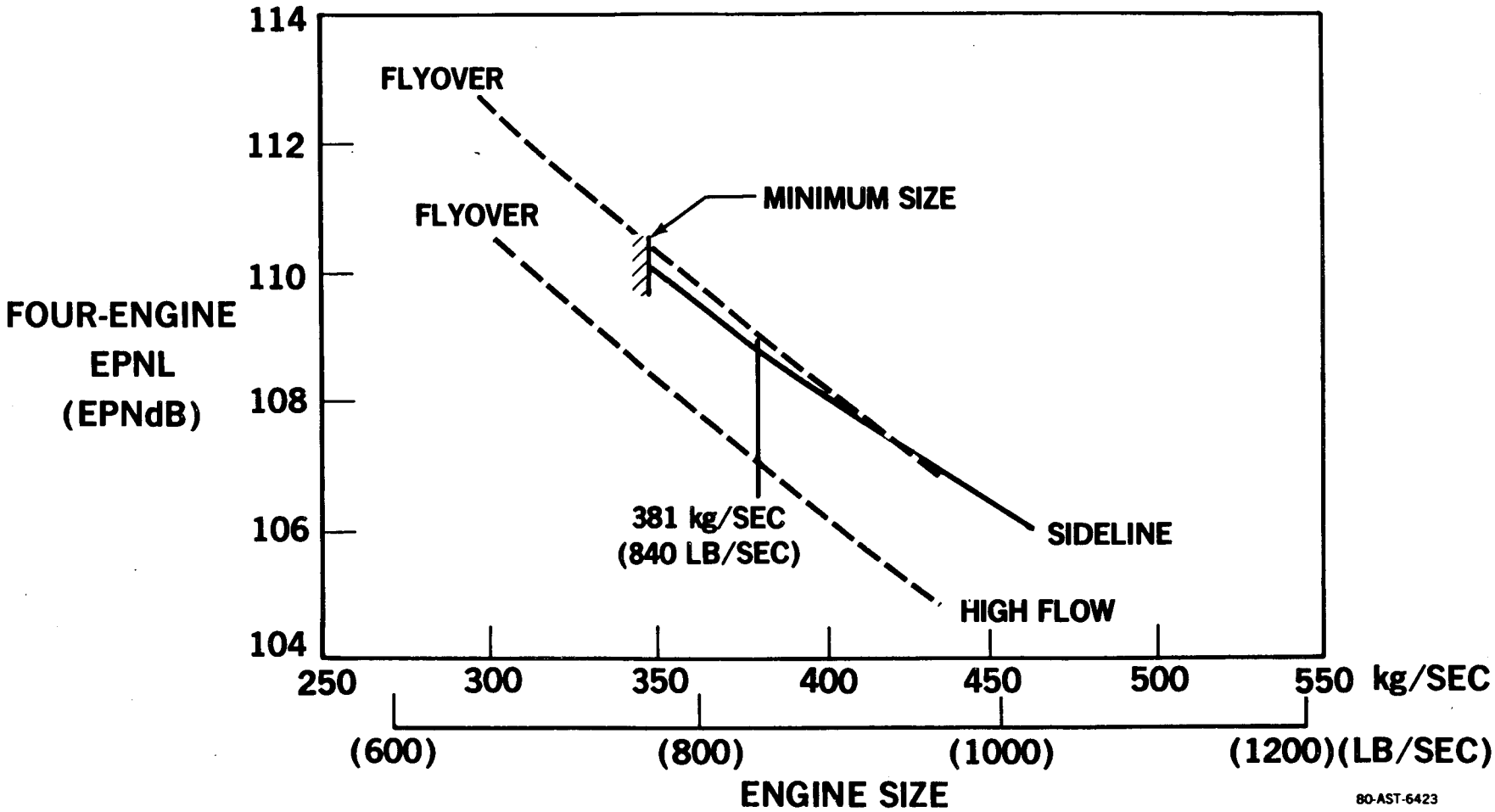

GE21/J11 STUDY B18 AND B18B ENGINE SIZING

BASED ON GE NOISE WITH 4-dB SUPPRESSOR
0.3 M, STANDARD +18°F DAY

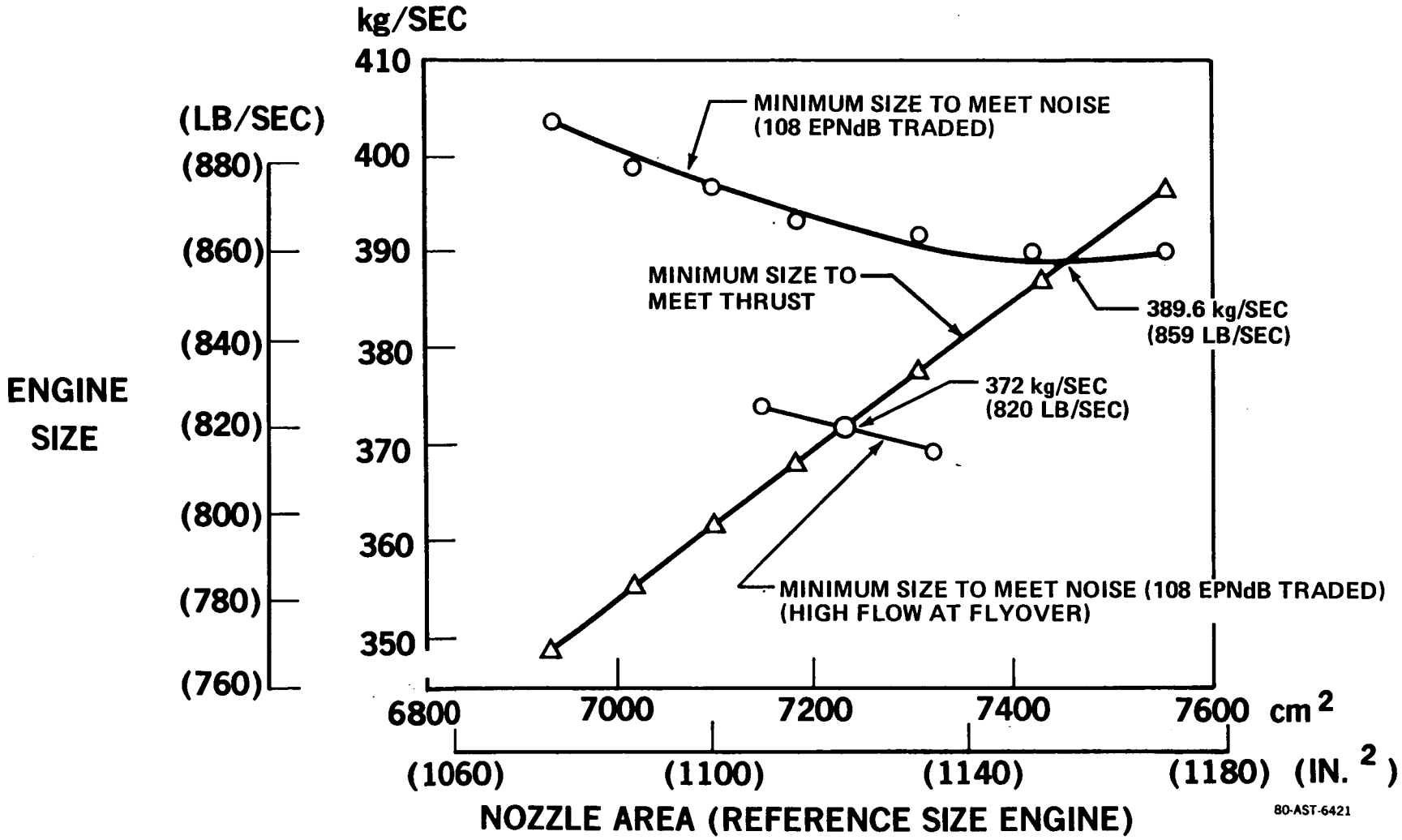

GE21/J11 STUDY B25B ENGINE SIZING

0.3 M, STANDARD + 18°F DAY
GE NOISE, SUPPRESSED
$A_8 = 7452\ cm^2$ (1155 IN.^{2})

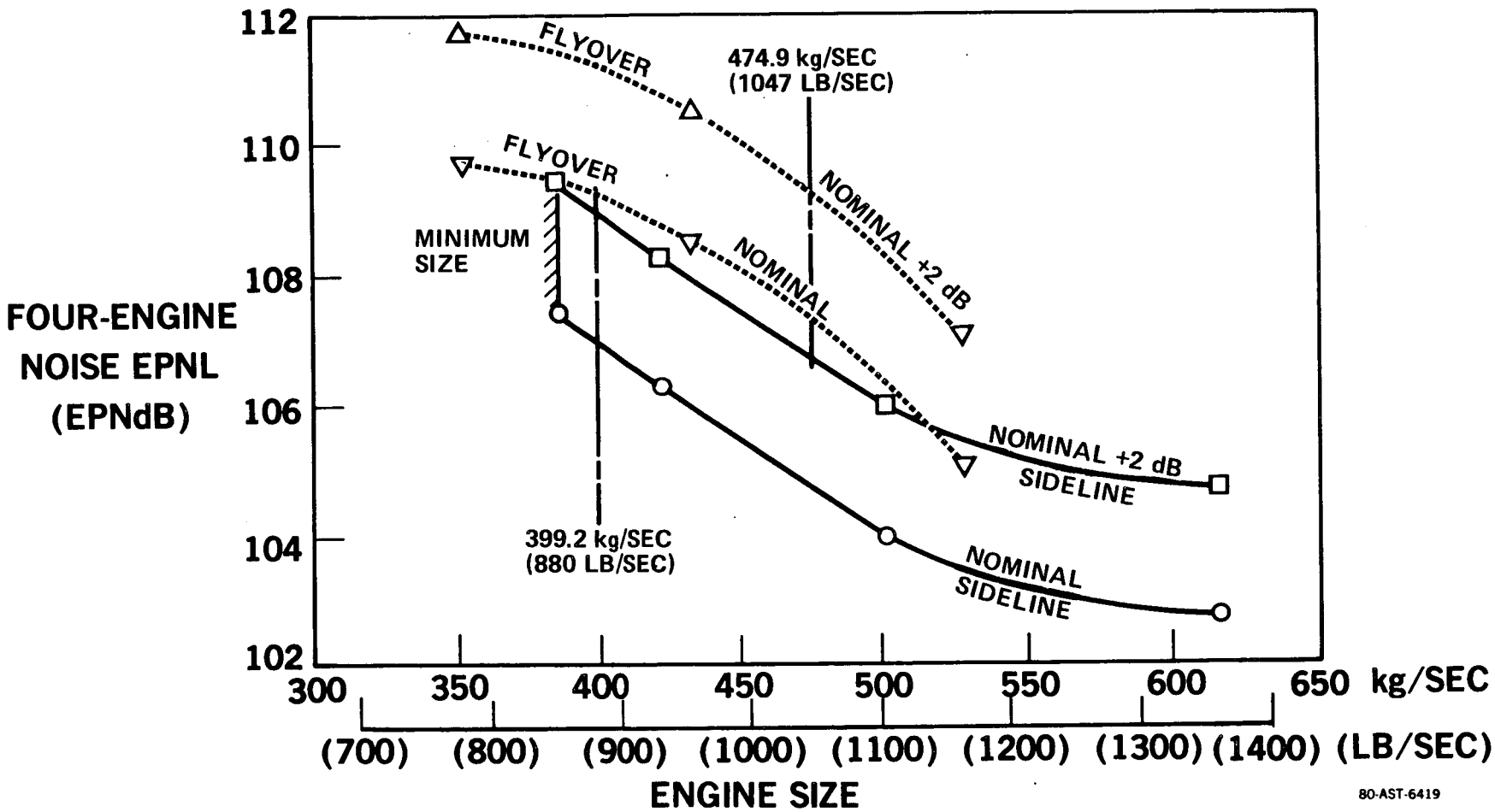

80-AST-6419

GE21/J11 STUDY B25B ENGINE SIZING

0.3 M, STANDARD + 18°F DAY
GE NOISE, SUPPRESSED

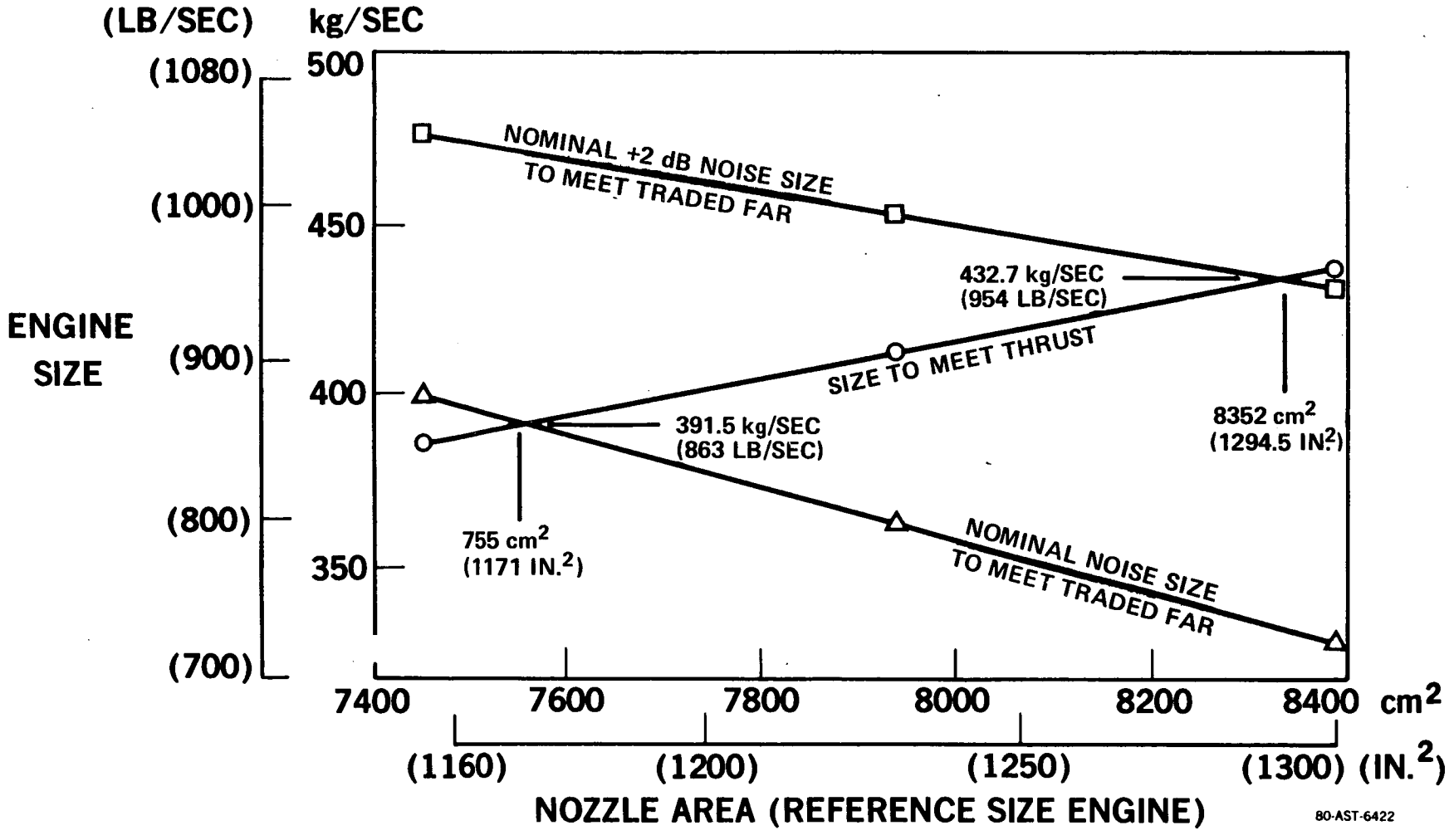

GE21/J10 STUDY B7 ENGINE SIZING

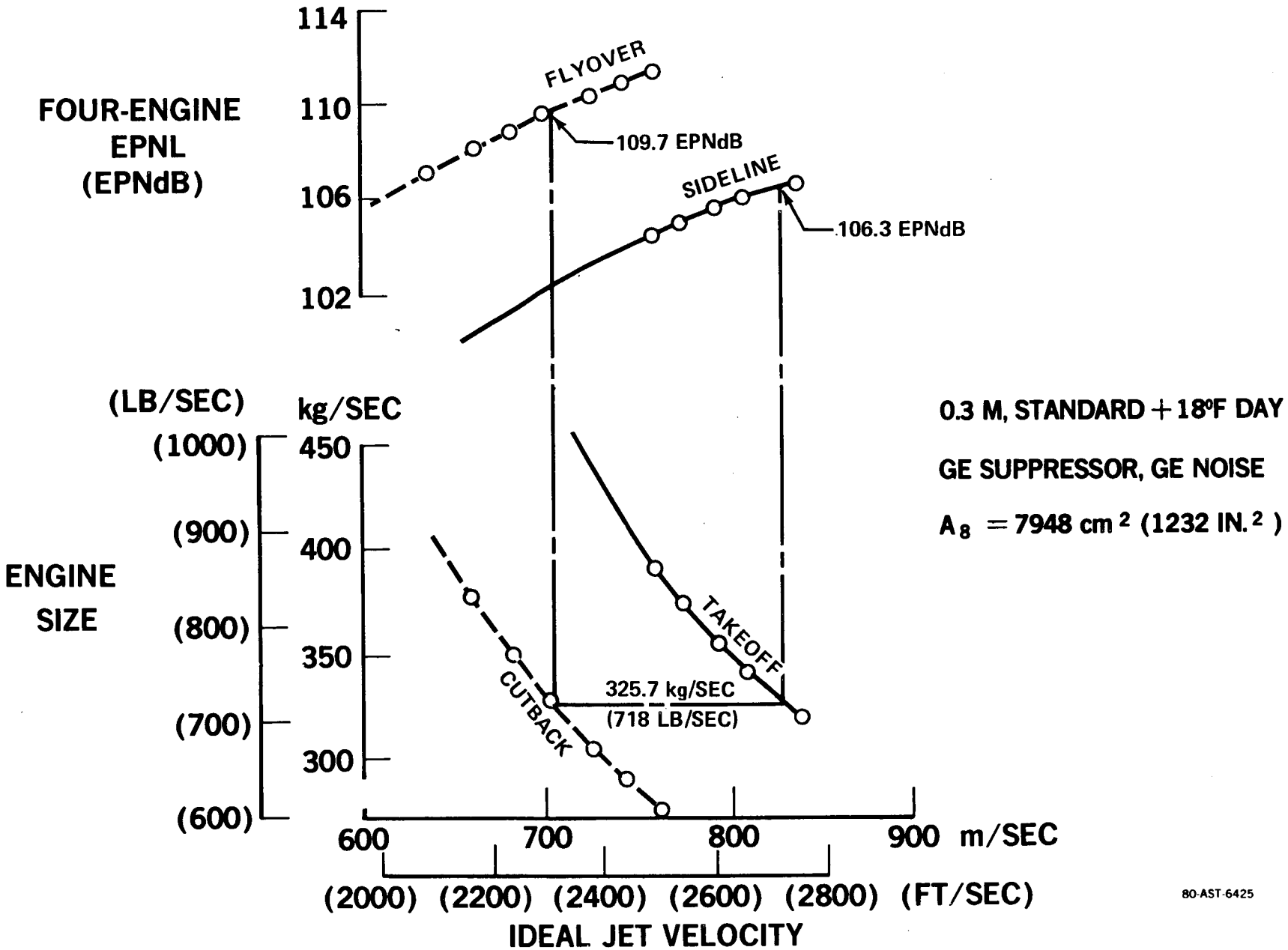

GE21/J10 STUDY B7 ENGINE SIZING

0.3 M, STANDARD + 18°F DAY
GE SUPPRESSOR, GE NOISE

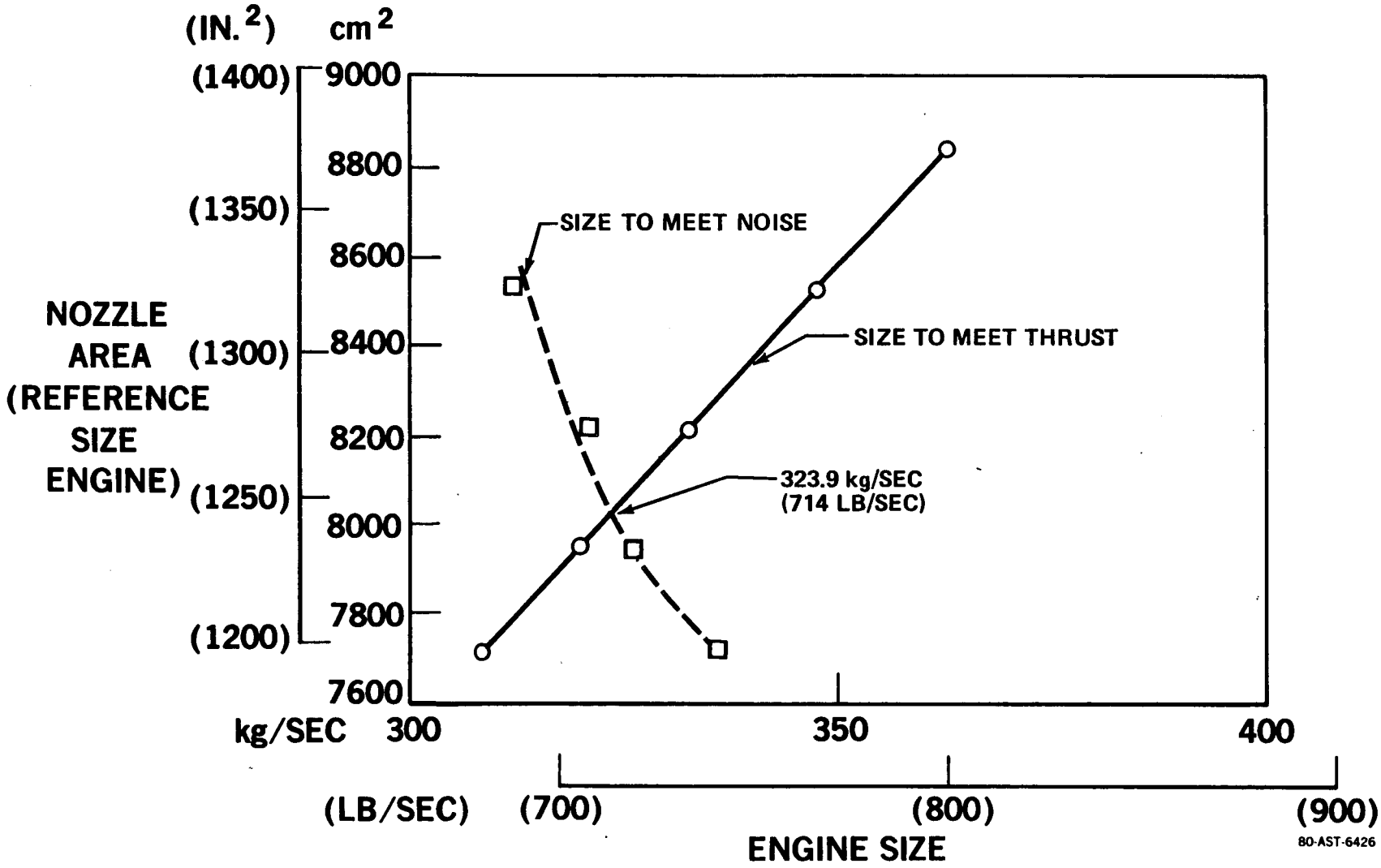

P&WA VSCE-511R ENGINE SIZING

VARIABLE FPR AT FLYOVER
P&WA NOISE
0.3 M, STANDARD + 18°F DAY

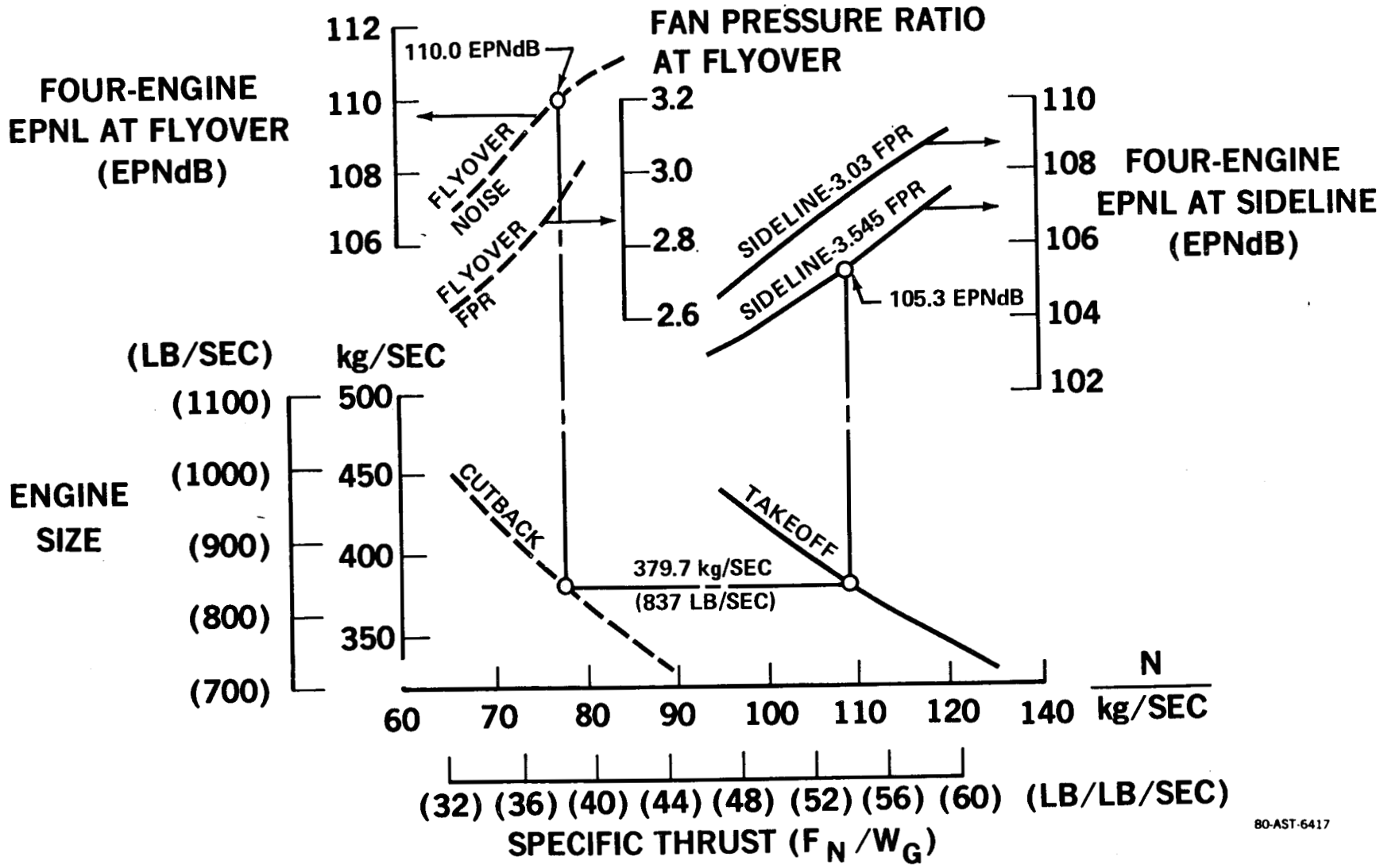

80-AST-6417

P&WA LBE-431B ENGINE SIZING

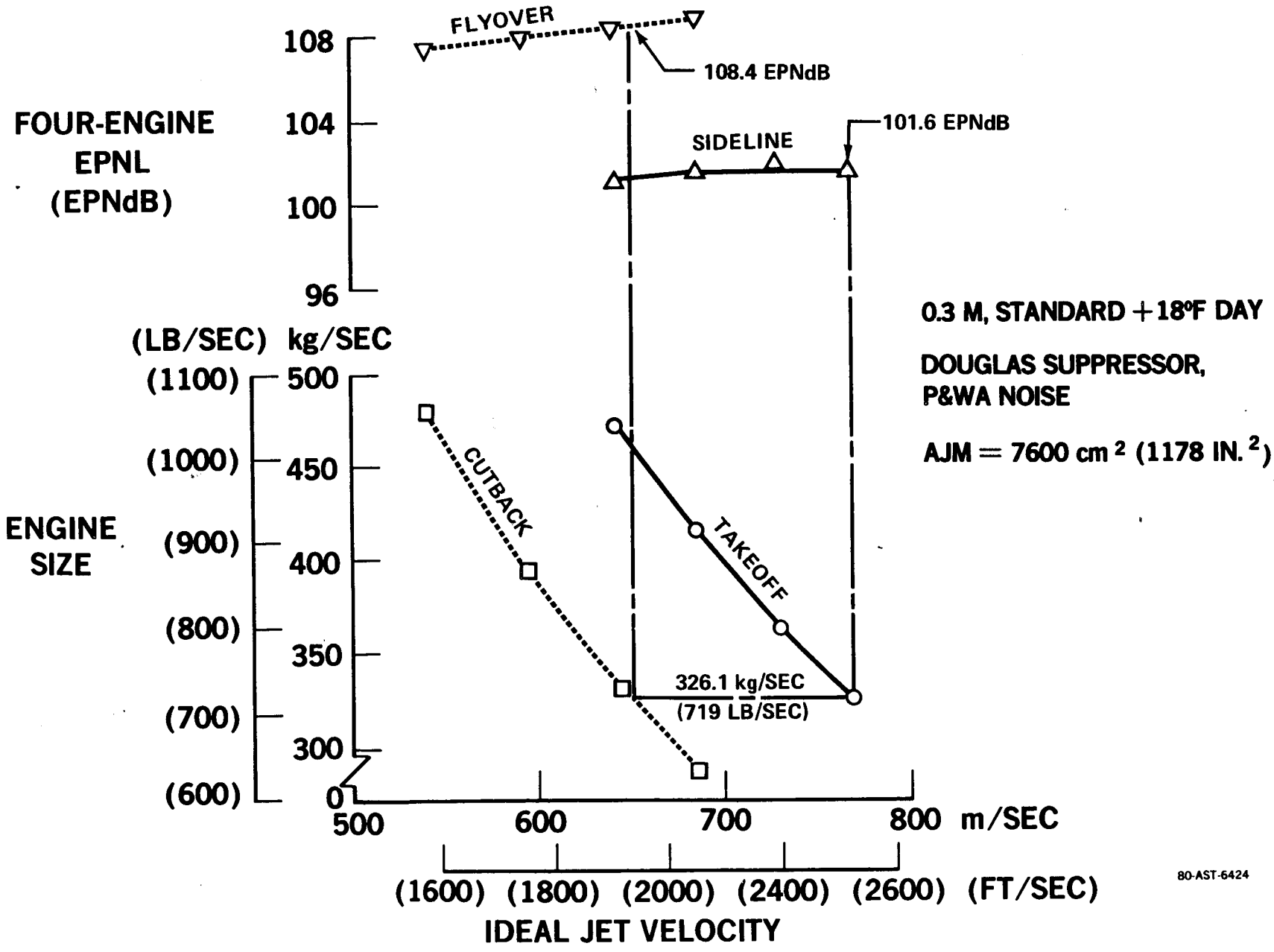

P&WA LBE-431R ENGINE SIZING FOR TAKEOFF

0.3 M, STANDARD + 18°F DAY

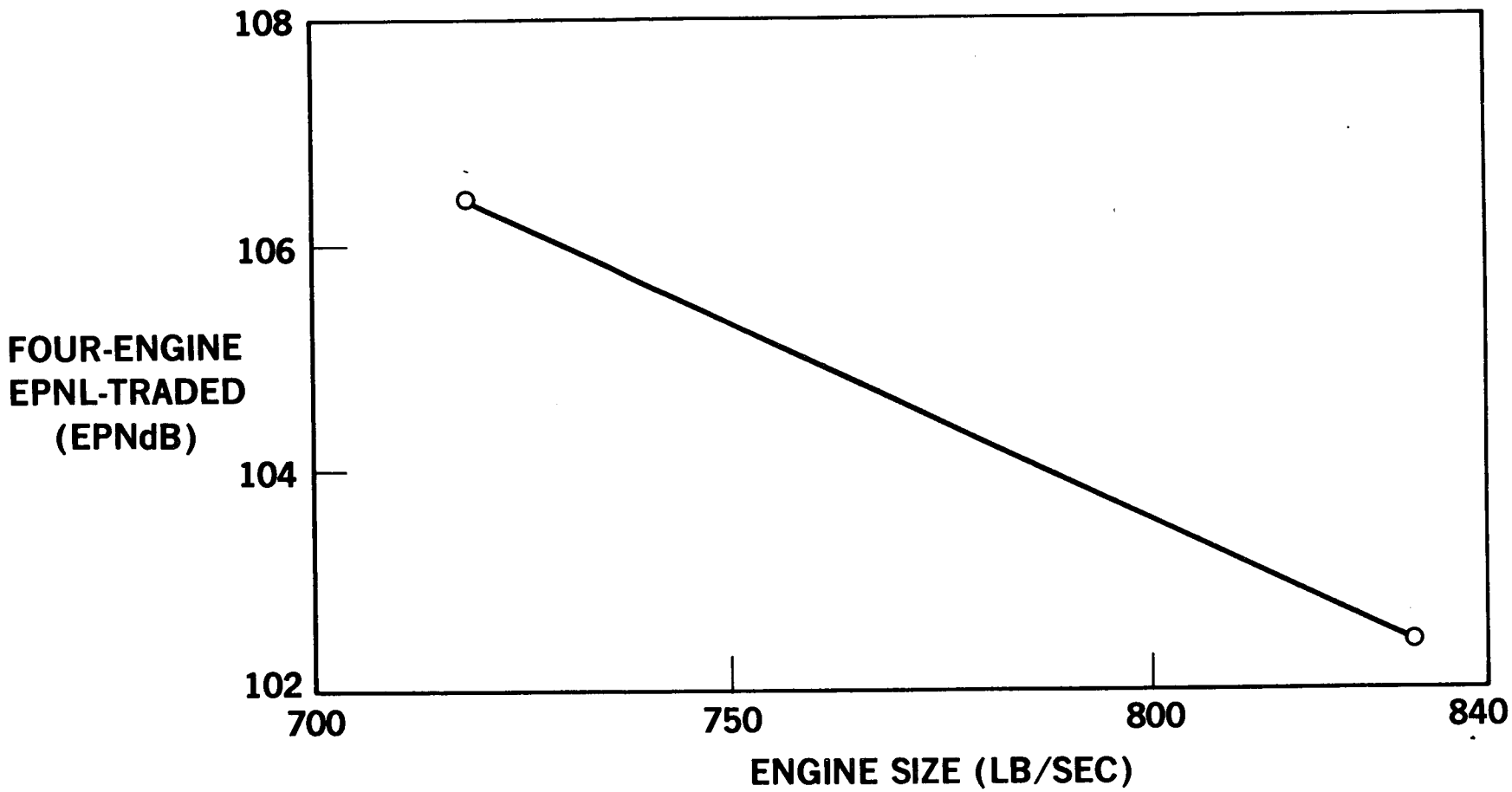

80-AST-6427

GE AND P&WA ENGINES NOISE SIZING

ENGINE	SIZE LB/SEC	NOISE SIDELINE (1100-FT ALTITUDE)	NOISE FLYOVER (1250-FT ALTITUDE)	SUPPRESSOR
VSCE-511R	837	105.3 (THROTTLED)	110.0	NO
VSCE-522	960	104.1 (THROTTLED)	110.0	NO
LBE-431R	719	101.6	108.4	YES (DOUGLAS)
GE21/J11 STUDY B18 AND B18B	859 820 (HIGH FLOW AT FLYOVER)	107.8 109.0	108.2 107.0	YES
GE21/J11 STUDY B25B	863	107.0	109.0	YES
GE21/J10 STUDY B7	714	106.3	109.3	YES

80-AST-6437

P&WA VSCE-511R ENGINE SIZING INCLUDING APPROACH

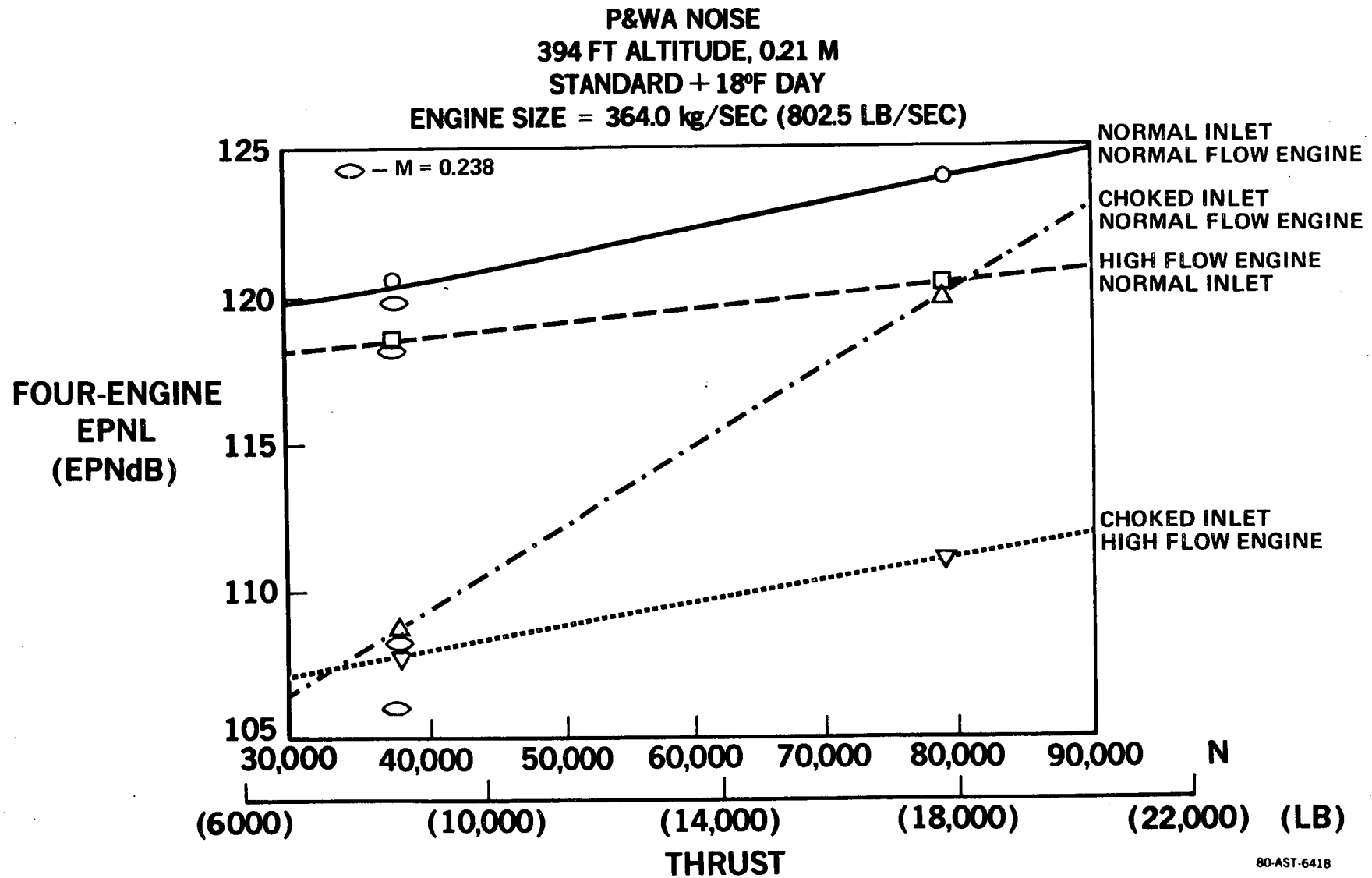

P&WA VSCE-511R APPROACH

ASSUMPTIONS

- 450,000-LB MAXIMUM LANDING WEIGHT
- CHOKED INLET
- HIGH FLOWED ENGINE
- 394 FT OVER MONITOR
- STANDARD +18°F DAY
- 837 LB/SEC ENGINE SIZE
- TRAJECTORIES

  (A) 3 DEGREE G/S, 20 DEGREE FLAP, ZERO DECEL
  (B) 3 DEGREE G/S, 20 DEGREE FLAP, 20 KN DECEL
  (C) 3 DEGREE G/S, 20 DEGREE FLAP, 40 KN DECEL
  (D) 6 DEGREE G/S, 20 DEGREE FLAP, ZERO DECEL

RESULTS

- TRAJECTORIES (B), (C), AND (D) NOISE < 108 EPNdB
- TRAJECTORY (A) REQUIRES ENGINE OVERSIZE TO 850 PPS TO MEET TRADED FAR PART 36

80-AST-6434

INLET COMPARISON, P&WA LBE-431R ENGINE

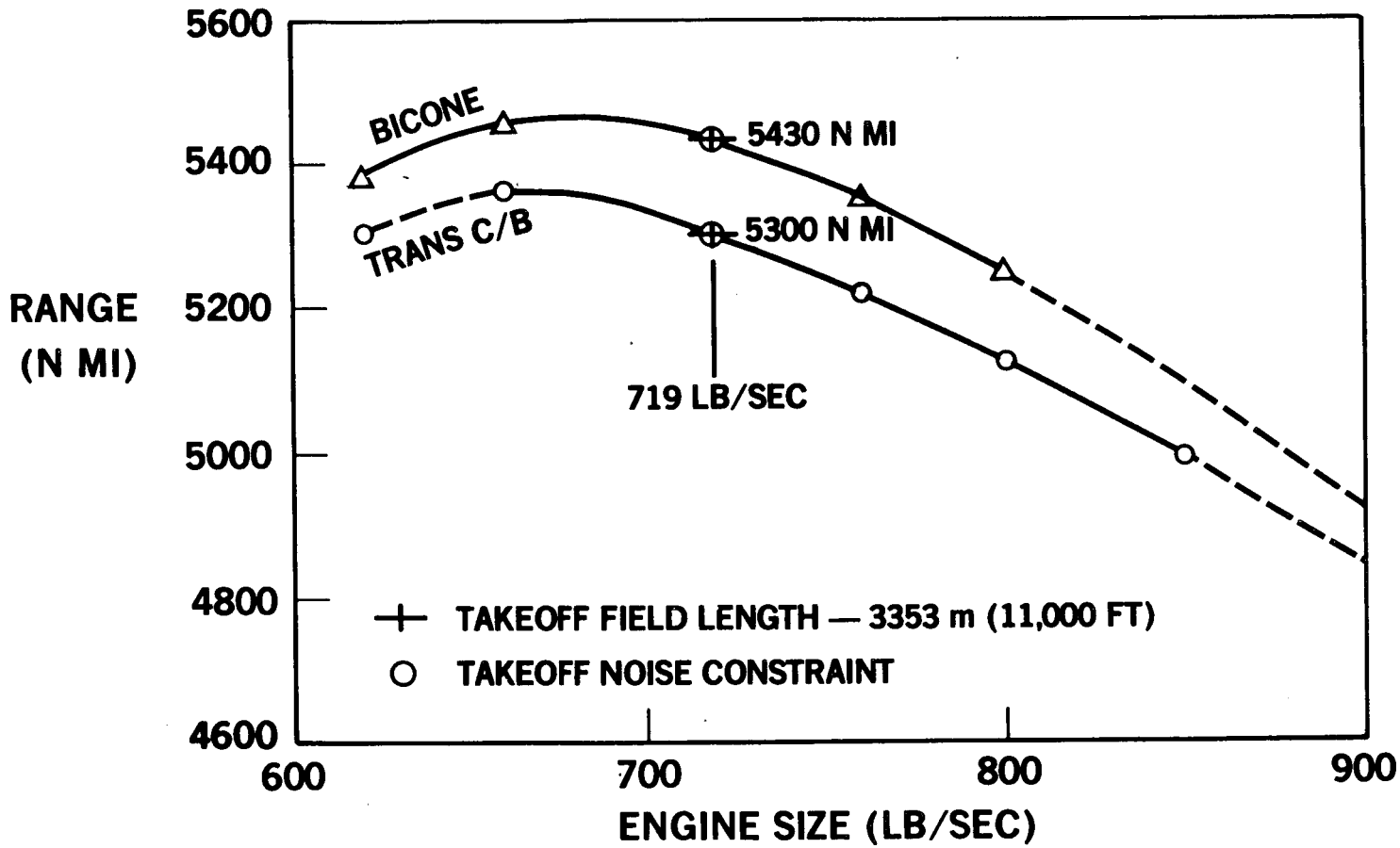

80-AST-6420

INLET COMPARISON, GE 21/J10 STUDY B7 ENGINE

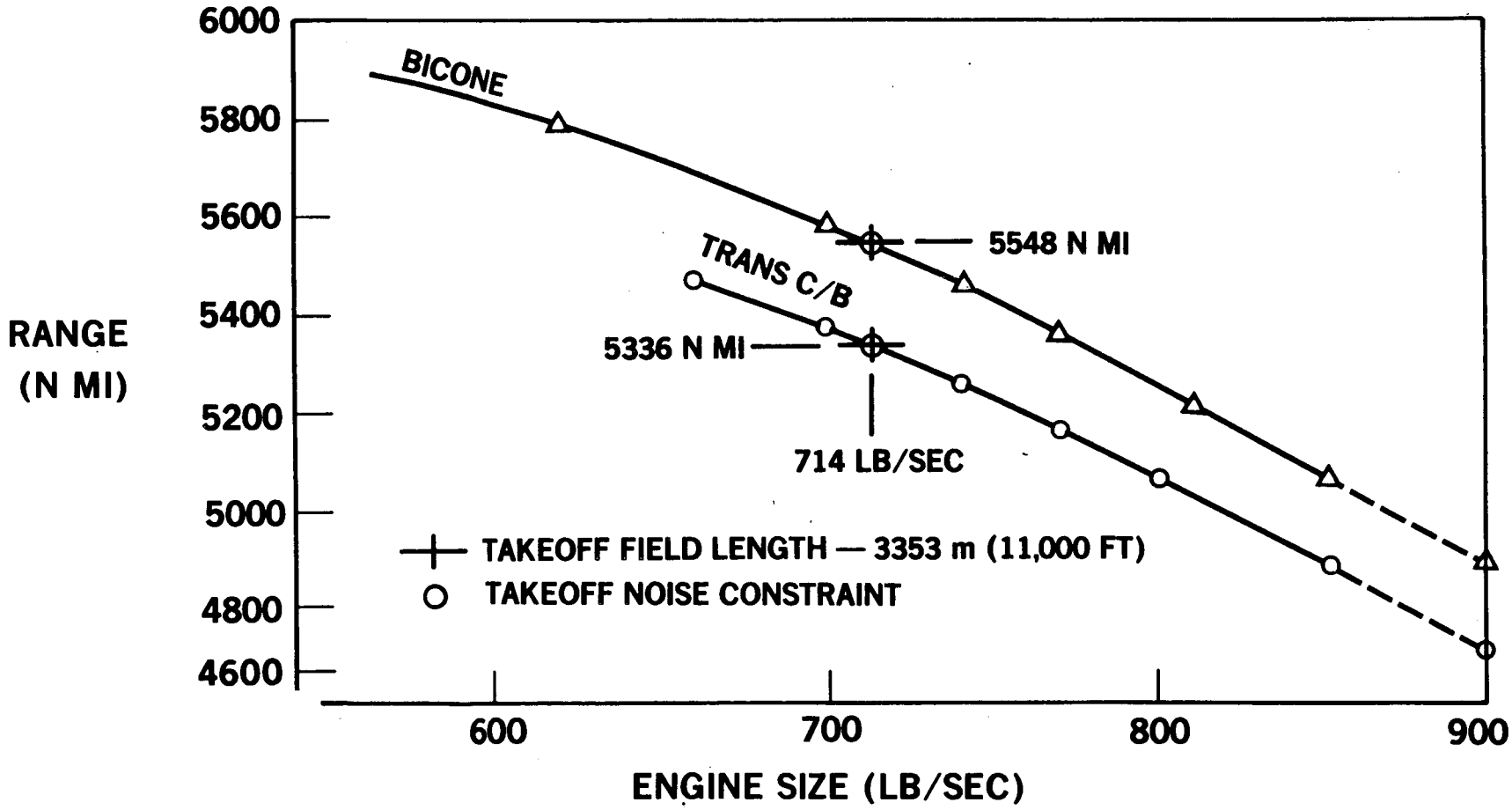

80-AST-6428

RANGE PERFORMANCE, GE21/J11 STUDY
B18 AND B18B ENGINE

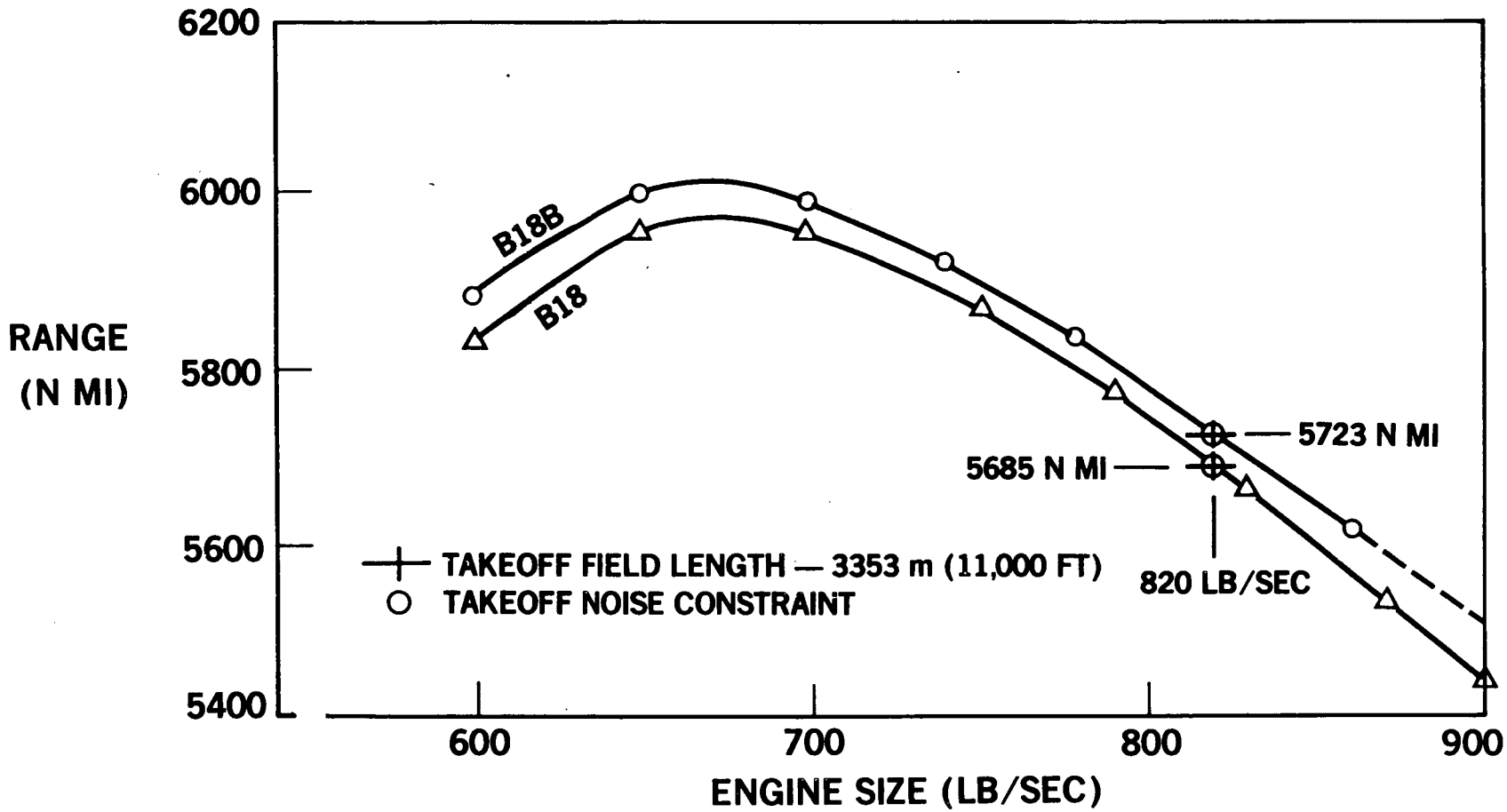

80-AST-6429

GE 21/J11 STUDY B25B ENGINE

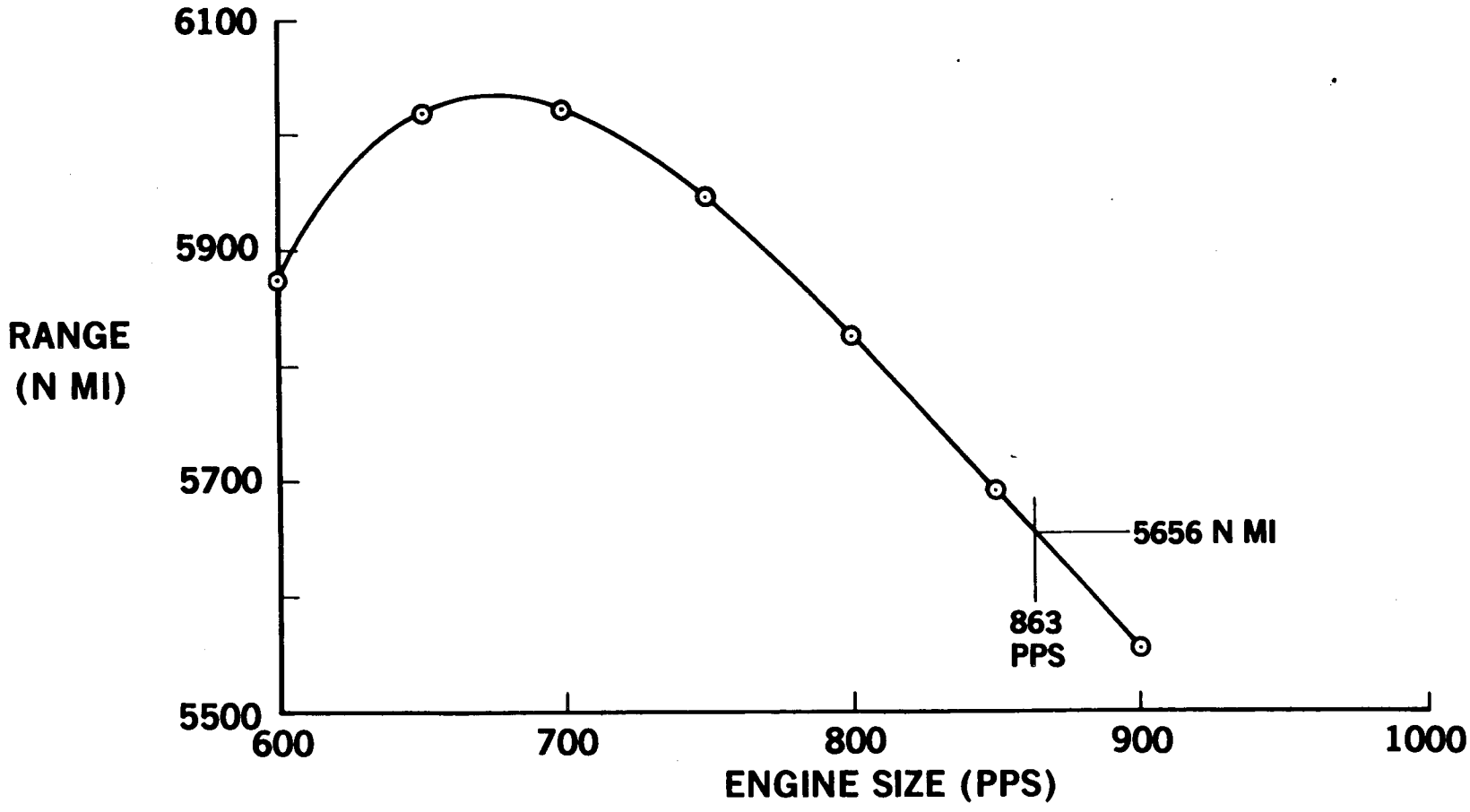

80-AST-6463

RANGE PERFORMANCE — P&WA VSCE ENGINES

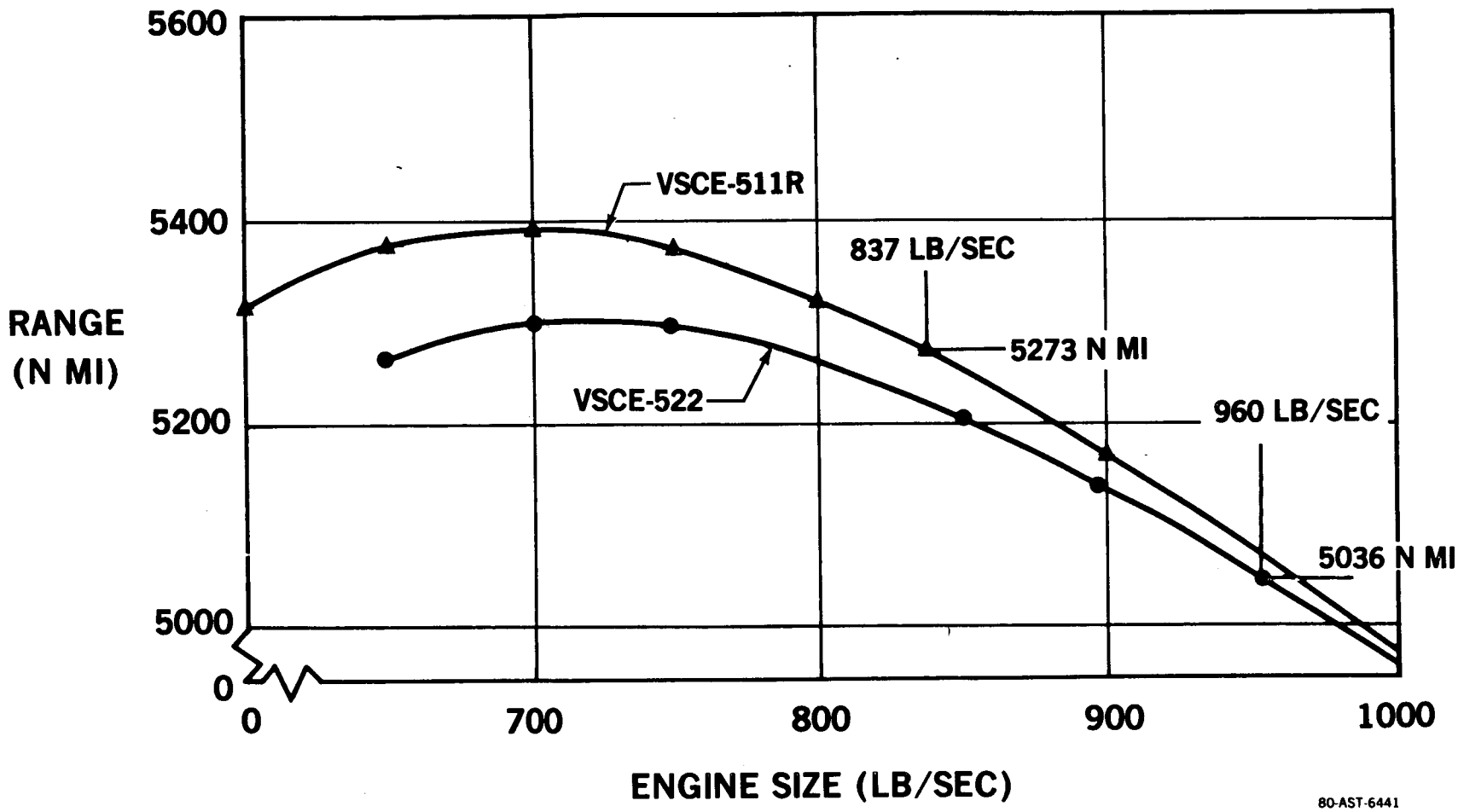

MCDONNELL DOUGLAS CORPORATION

AST MODEL D-3233-2.2.-1

RANGE PERFORMANCE

MTOGW = 340,200 kg (750,000 LB)

SPF/DB SANDWICH, COMPOSITES, BICONE INLET

308 PASSENGERS

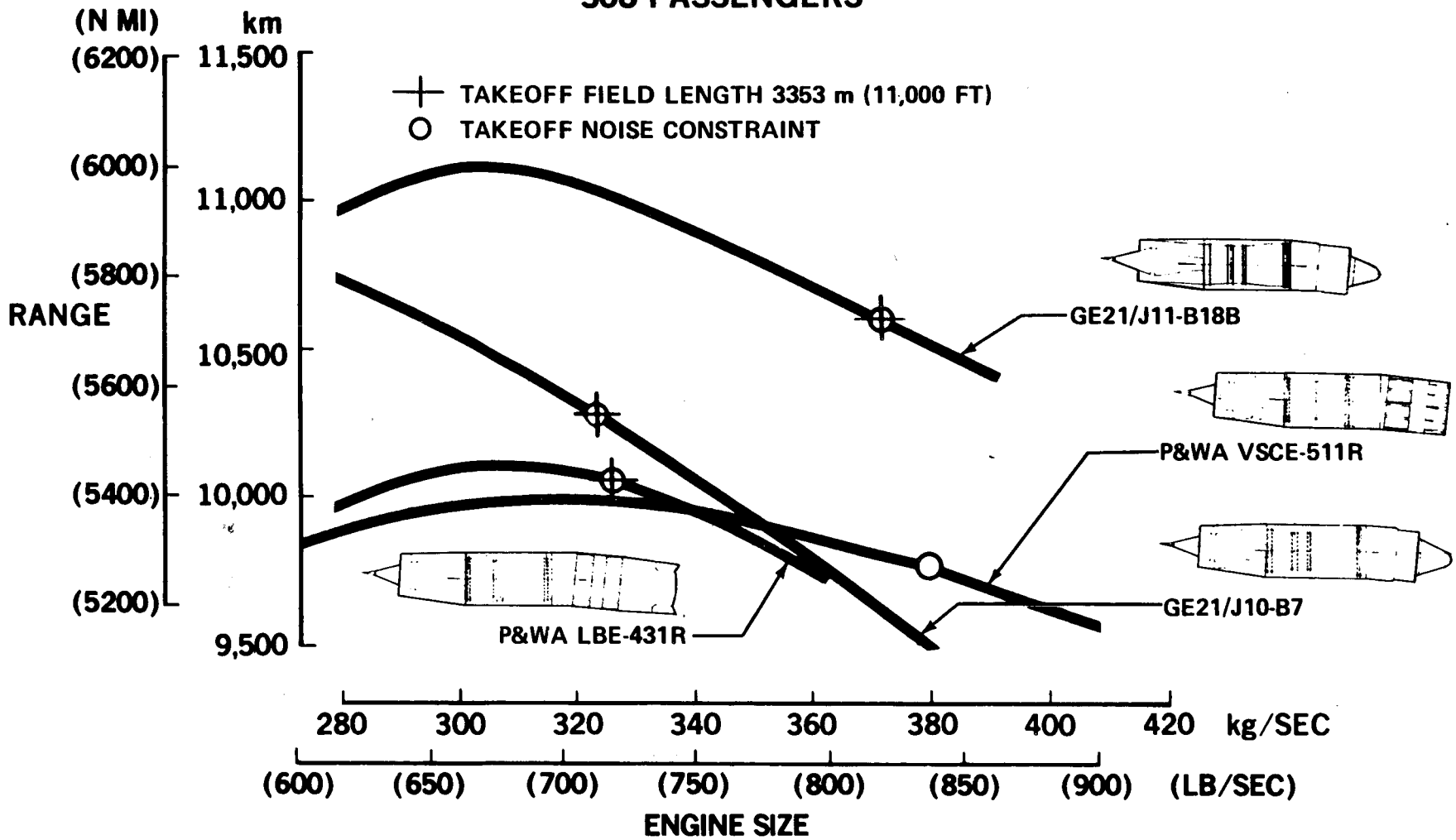

80-AST-6374-3A

ENGINE MISSION PERFORMANCE SUMMARY

ENGINE	GE B18	GE B18B	GE B7	GE B25B	P&WA 511R	P&WA 522	P&WA 431R
SIZE — LB/SEC	820	820	714	863	837	960	719
CLIMB SFC	1.216	1.240	1.274	1.203	1.580	1.376	1.354
2.2 CRUISE SFC	1.277	1.270	1.298	1.270	1.333	1.339	1.318
L/D MIDCRUISE RANGE (N MI)	10.321 5679	10.316 5723	10.320 5548	10.320 5656	10.183 5273	10.291 5036	10.295 5429
MAXIMUM RANGE/ENGINE	5968/674	6005/670	5900/560	6035/676	5392/690	5296/705	5460/680

80-AST-6436A

P&WA AST CANDIDATE ENGINES

NEAR-TERM TECHNOLOGY UPDATE

REVIEWED PREDICTED COMPONENT EFFICIENCIES

- RESULTED IN IMPROVED COMPONENT η THROUGHOUT ENGINE
- VSCE DUCT BURNER η IMPROVED 2.5 POINTS

REVIEWED PROJECTED MATERIALS CAPABILITIES

- RESULTED IN MAXIMUM COMPRESSOR DISCHARGE TEMPERATURE REDUCTION OF 50°F
- MAXIMUM COMBUSTOR EXIT TEMPERATURE INCREASED 100°F TO 2600°F

REVIEWED COOLING CAPABILITIES

- REDUCED COOLING AIR REQUIRED, INCORPORATED HEAT EXCHANGER FOR PRECOOLING TURBINE FIRST VANE AIR

REVIEWED APPLICABILITY OF MIXER

- MECHANICAL MIXER INCORPORATED IN LBE

80-AST-6433

P&WA AST CANDIDATE ENGINES

NEAR-TERM TECHNOLOGY UPDATE

	LOW-BYPASS ENGINE		VARIABLE-STREAM-CONTROL ENGINE	
	-431R	-432	-511R	-512
AERO DESIGN PT				
WAT2	710	710	750	750
FPR	3.53	3.41	3.3	3.25
OPR	16.6	15.3	13.6	13.0
BPR	0.2	0.3	0.85	1.0
TCA	15 PERCENT	12 PERCENT	15 PERCENT	13 PERCENT
MIXER	—	YES	—	—
HEAT EXCHANGER	—	YES	—	YES
DUCT BURNER	NA	NA	92	94.5

80-AST-6435

NEAR-TERM TECHNOLOGY UPDATE

VSCE PERFORMANCE COMPARISON

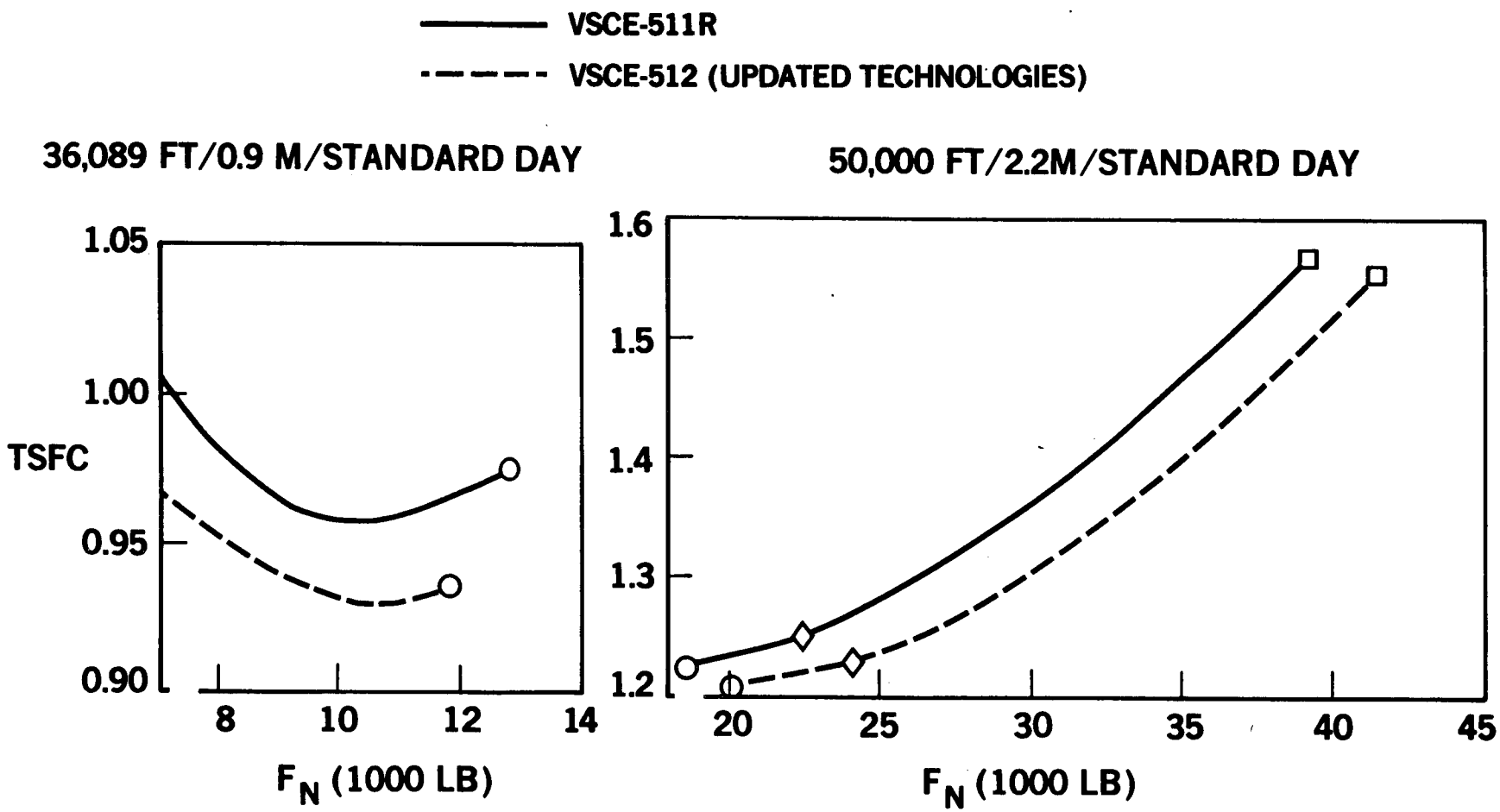

80-AST-6415

NEAR-TERM TECHNOLOGY UPDATE

LBE PERFORMANCE COMPARISON

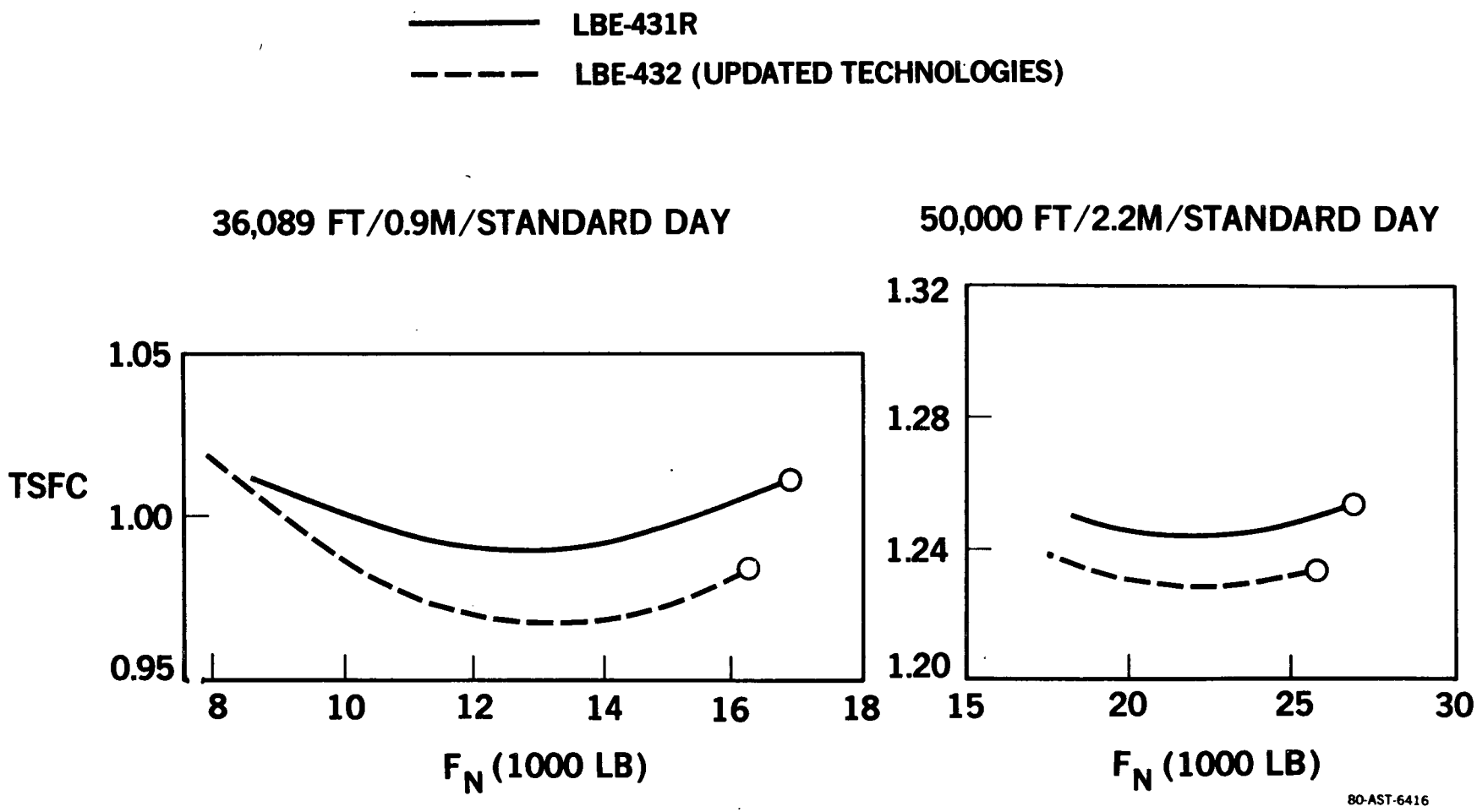

BASELINE REFINEMENTS

W. T. ROWE

80-AST-6140A

AST GENERAL ARRANGEMENT

308 PASSENGERS

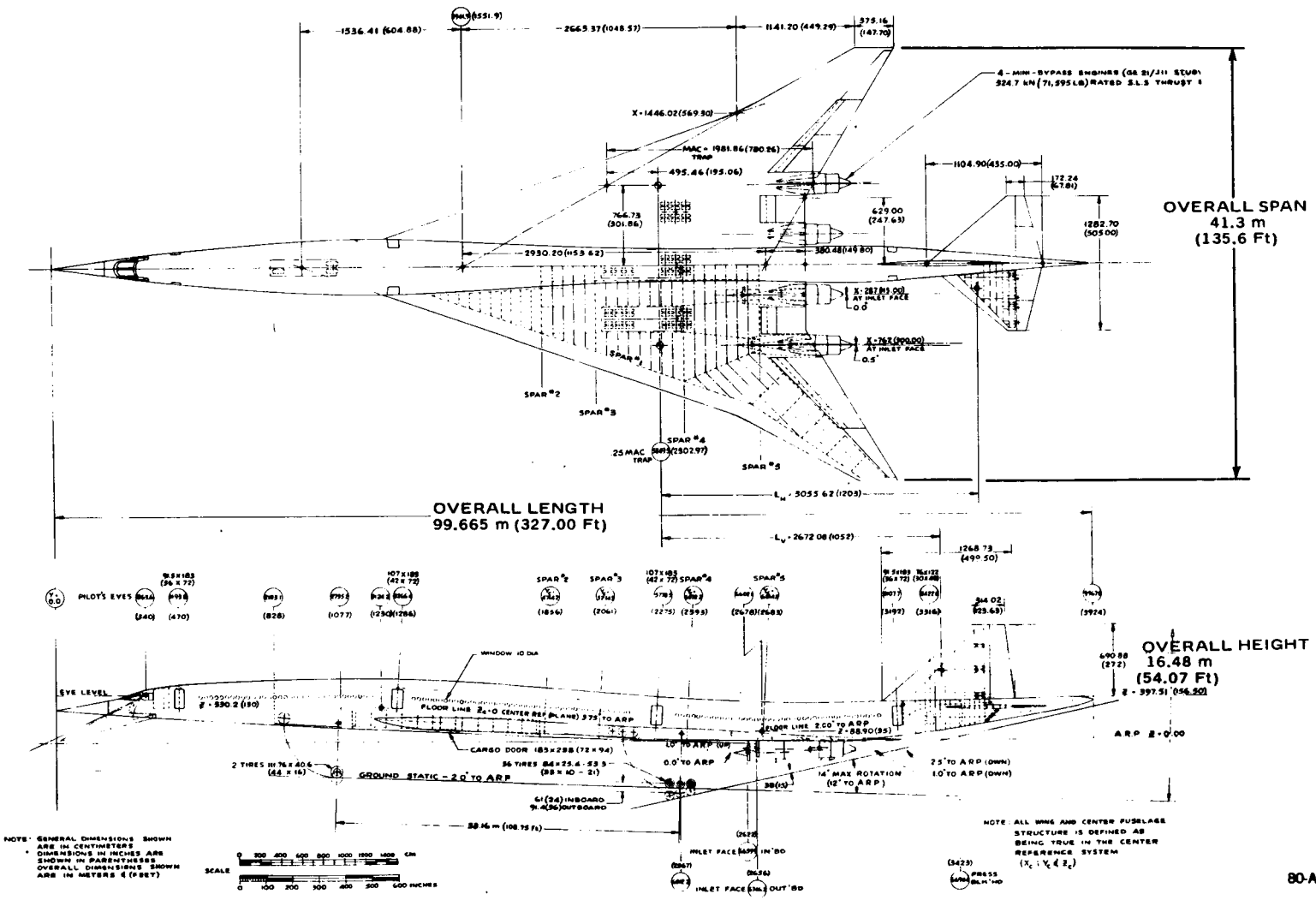

NOTE: GENERAL DIMENSIONS SHOWN ARE IN CENTIMETERS
* DIMENSIONS IN INCHES ARE SHOWN IN PARENTHESES
OVERALL DIMENSIONS SHOWN ARE IN METERS & (FEET)

NOTE: ALL WING AND CENTER FUSELAGE STRUCTURE IS DEFINED AS BEING TRUE IN THE CENTER REFERENCE SYSTEM (X_c, Y_c & Z_c)

80-AST-6080

BASELINE COMPONENT SELECTION FOR COMPOSITE APPLICATION

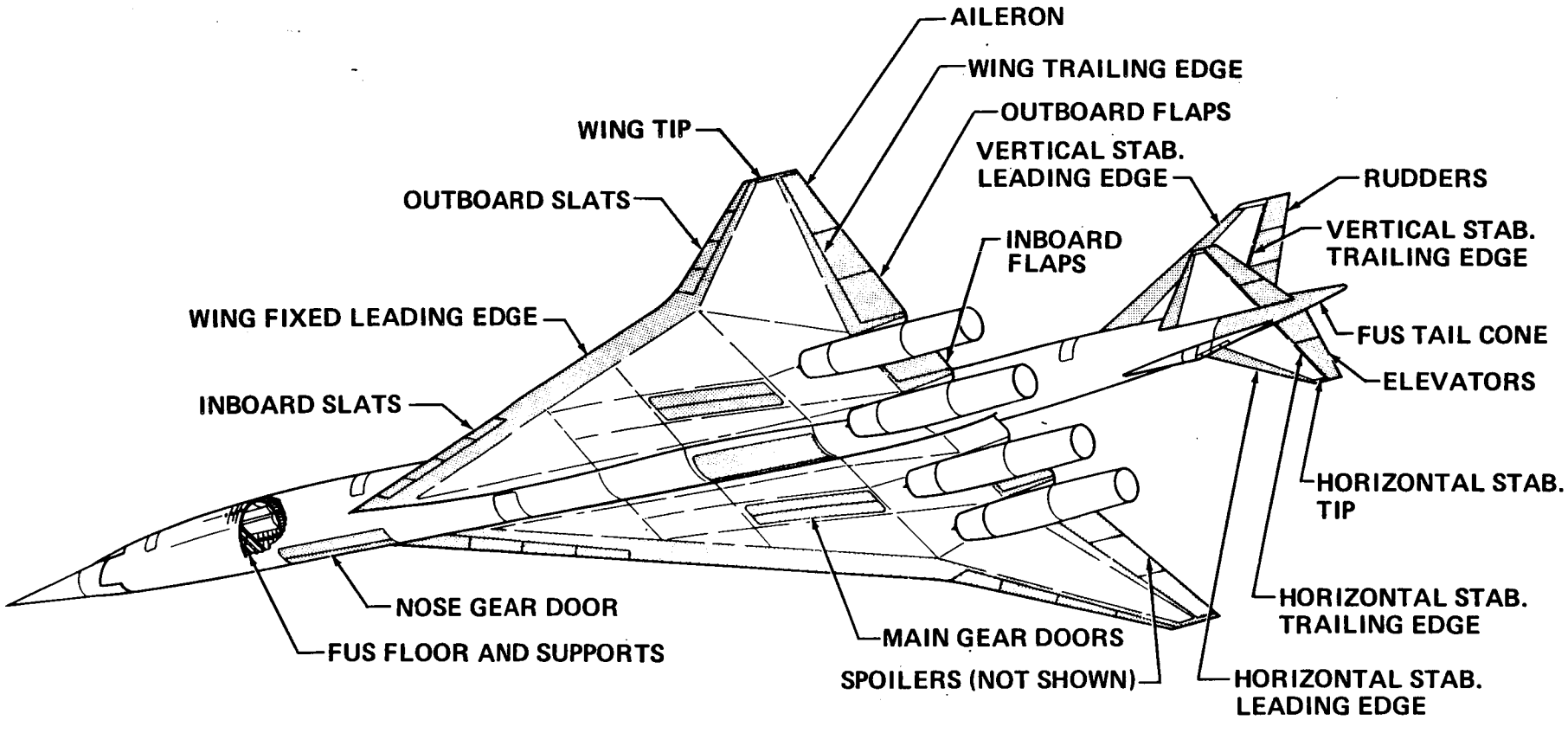

PR5-AST-4696B

TRANSLATING CENTERBODY INLET

M 2.2 DESIGN

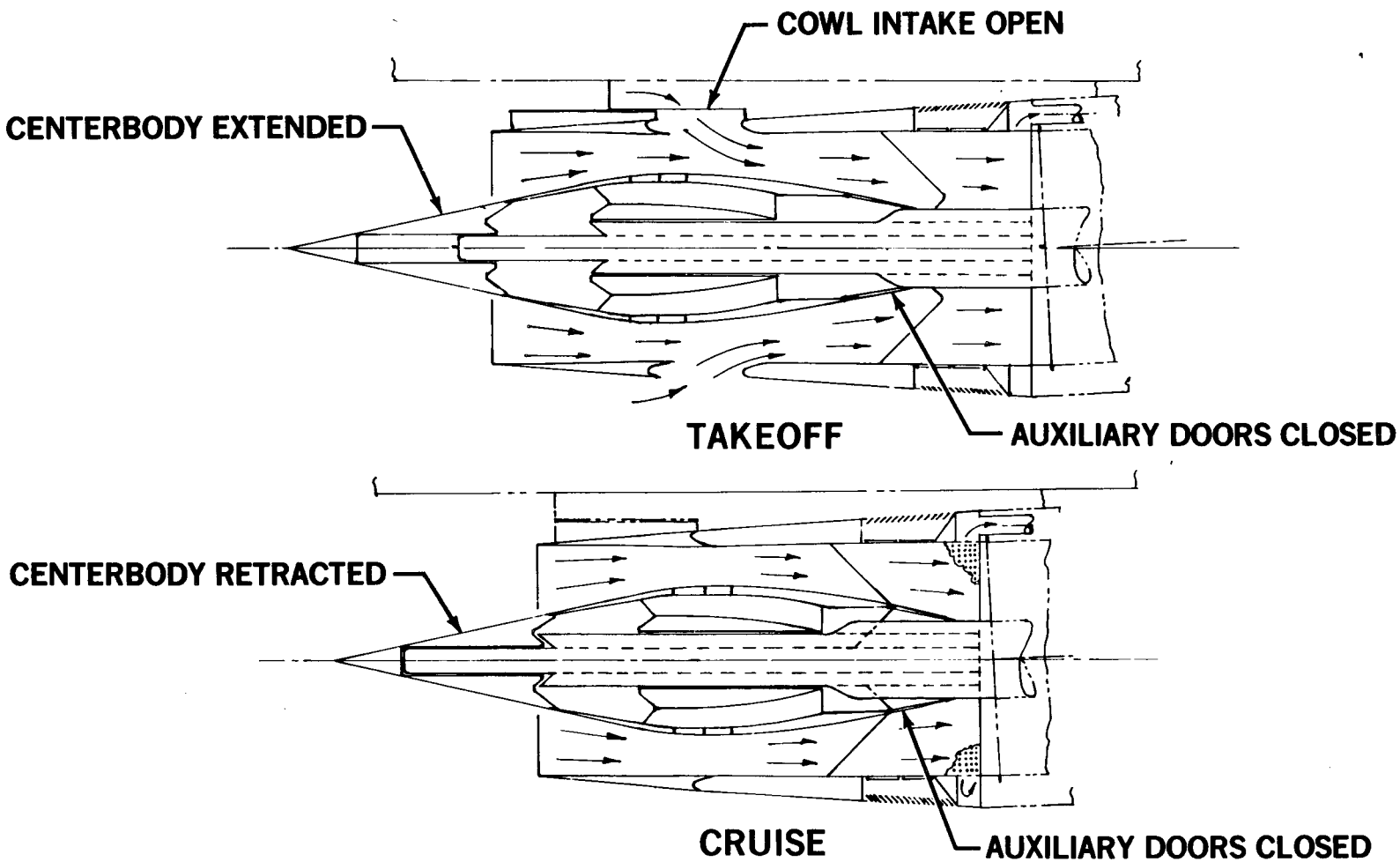

8-AST-6314

BICONE INLET

M 2.2 DESIGN

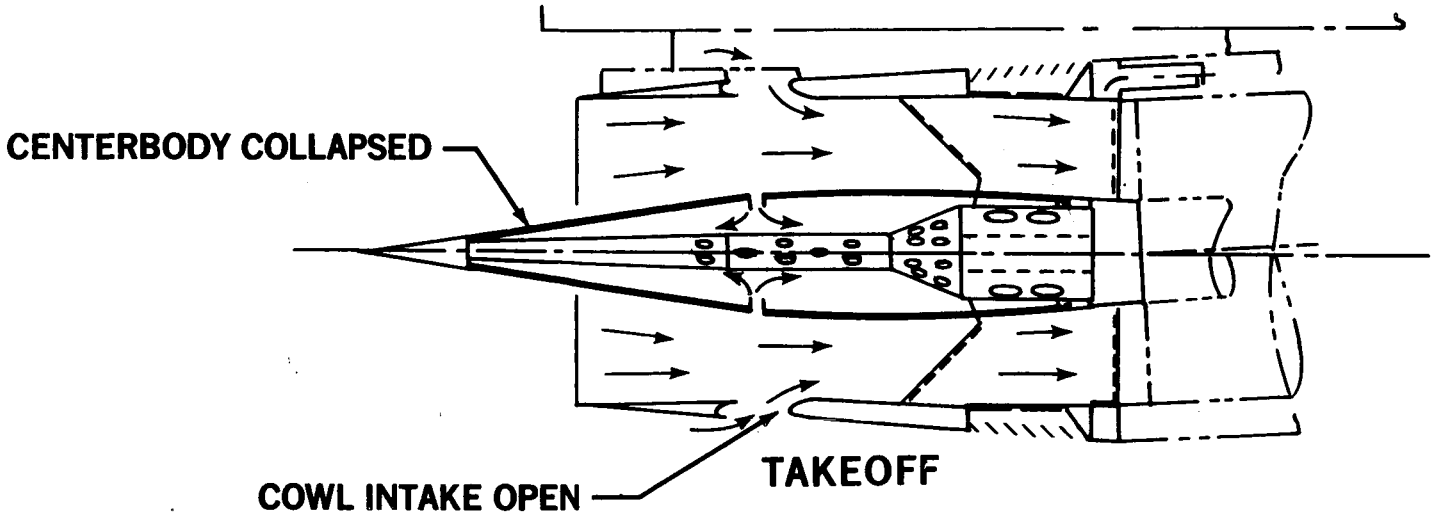

TAKEOFF

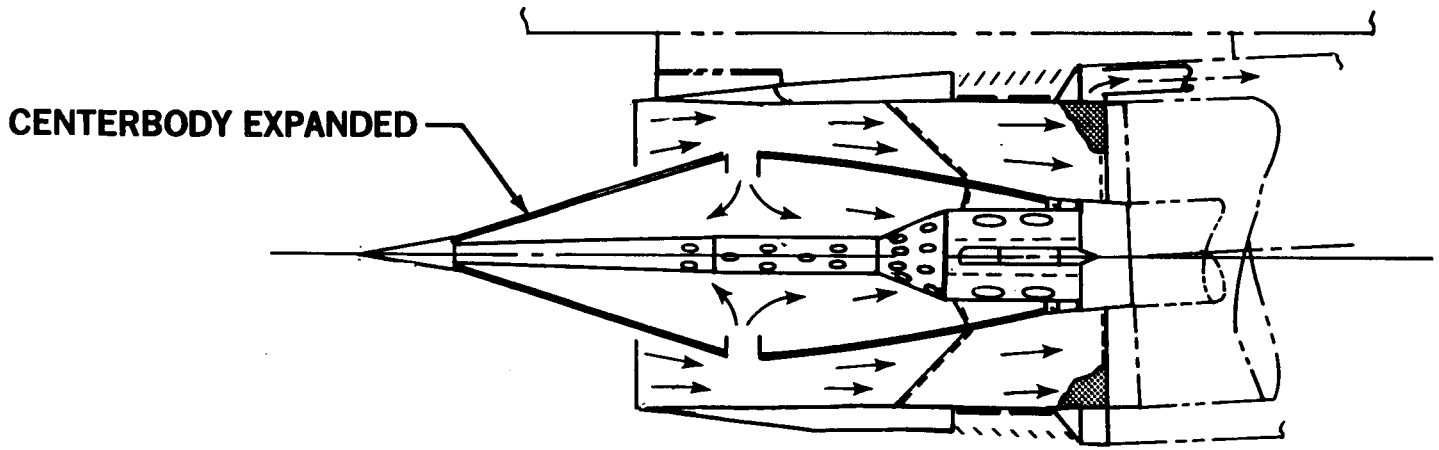

CRUISE

8-AST-6204A

WEIGHT SUMMARY, D3233-2.2-1C

308 PASSENGERS, 340,200 kg (750,000 LB) TOGW
B-18 ENGINE, SPF/DB SANDWICH STRUCTURE

	REFERENCE		COMPOSITE SECONDARY STRUCTURE AND BICONE INLET		WEIGHT SAVINGS	
	kg	(LB)	kg	(LB)	kg	(LB)
WING	33,069*	(72,903)*	31,347	(69,108)	1,722	(3,795)
HORIZONTAL TAIL	1,855	(4,089)	1,752	(3,863)	103	(226)
VERTICAL TAIL	1,424	(3,145)	1,353	(2,982)	74	(163)
FUSELAGE	19,474	(42,932)	18,956	(41,791)	515	(1,141)
LANDING GEAR	16,451	(36,267)	16,451	(36,267)		
FLIGHT CONTROLS	4,237	(9,340)	4,237	(9,340)		
INLET AND NACELLE	5,790	(12,760)	4,630	(10,208)	1,160	(2,552)
PROPULSION	24,950	(54,996)	24,950	(54,996)		
FUEL SYSTEM	1,733	(3,820)	1,733	(3,820)		
EMERGENCY POWER UNIT	431	(950)	431	(950)		
INSTRUMENTS	561	(1,237)	561	(1,237)		
HYDRAULIC SYSTEM	2,578	(5,684)	2,578	(5,684)		
PNEUMATIC SYSTEM	637	(1,405)	637	(1,405)		
ELECTRICAL SYSTEM	2,231	(5,116)	2,321	(5,116)		
NAVIGATION AND COMMUNICATION SYSTEM	1,274	(2,809)	1,274	(2,809)		
FURNISHINGS	12,666	(27,924)	12,666	(27,924)		
AIR-CONDITIONING	2,261	(4,985)	2,261	(4,985)		
ICE PROTECTION	222	(489)	222	(489)		
HANDLING PROVISIONS	41	(90)	41	(90)		
MANUFACTURER'S EMPTY WEIGHT	131,975	(290,941)	128,401	(283,064)	3,574	(7,877)
OPERATIONAL ITEMS	3,963	(8,738)	3,963	(8,738)		
OPERATIONAL EMPTY WEIGHT	135,938	(299,679)	132,364	(291,802)		

*INCLUDES 330-kg (739-LB) FLUTTER/STRUCTURAL INCREMENT

80-AST-6407

AST MODEL D-3233-2.2-1

RANGE PERFORMANCE

MTOGW 340,200 kg (750,000 LB)
SPF/DB 308 PASSENGERS
GE21/J11-B18 ENGINE

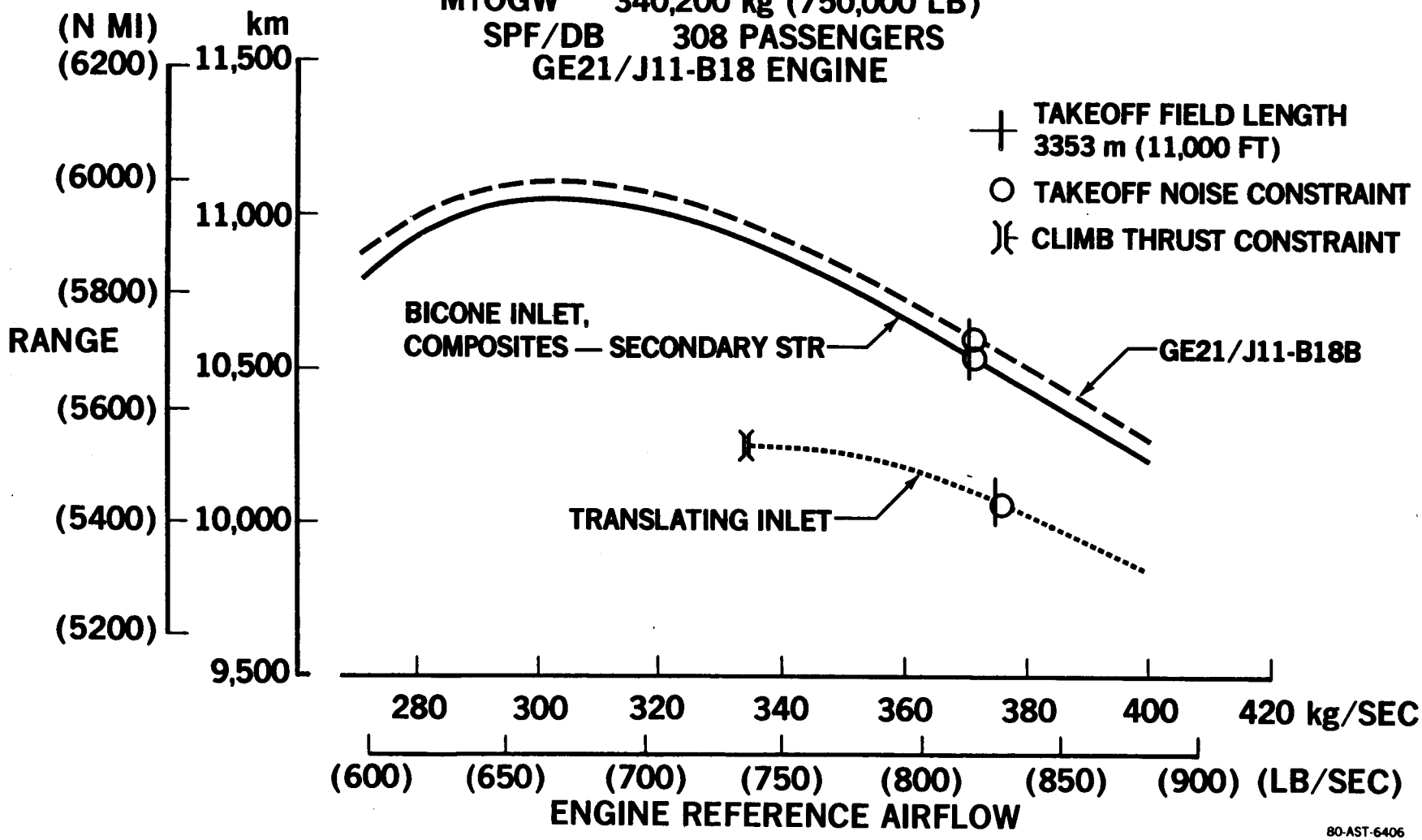

80-AST-6406

MCDONNELL DOUGLAS CORPORATION

AST MODEL D-3233-2.2.-1

RANGE PERFORMANCE

MTOGW = 340,200 kg (750,000 LB)

SPF/DB SANDWICH, COMPOSITES, BICONE INLET

308 PASSENGERS

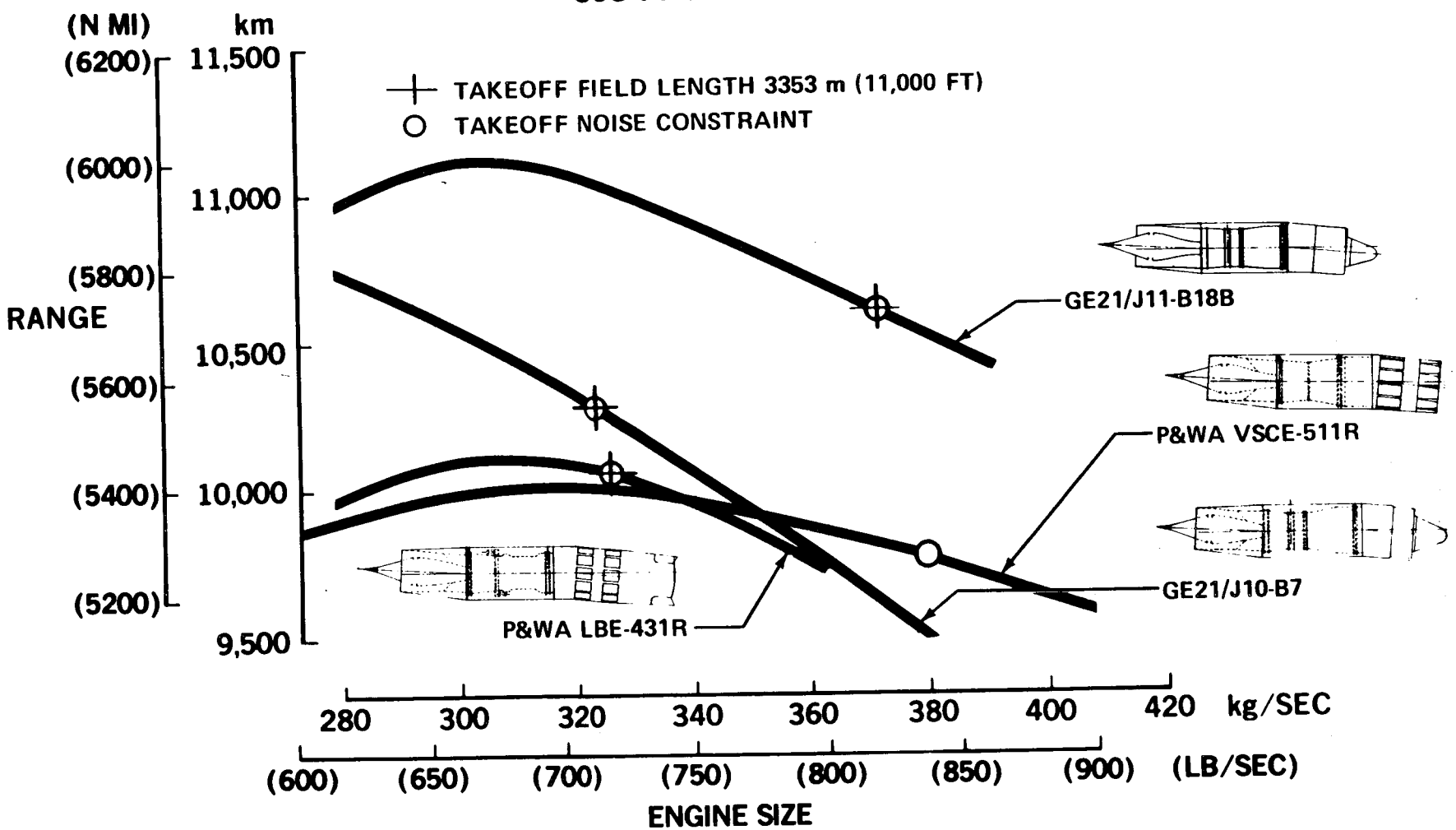

80 AST 6374-3A

MCDONNELL DOUGLAS ADVANCED SUPERSONIC TRANSPORT

AST SEATING COMPARISON

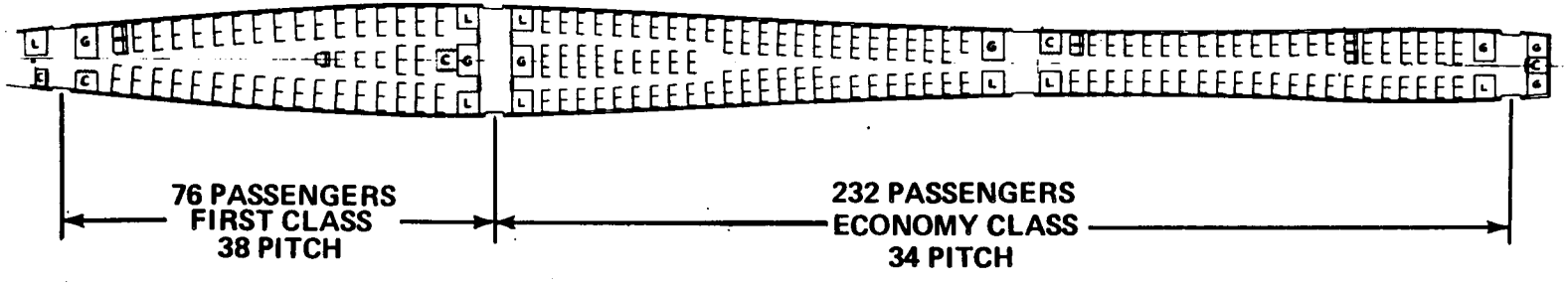

308 PASSENGERS

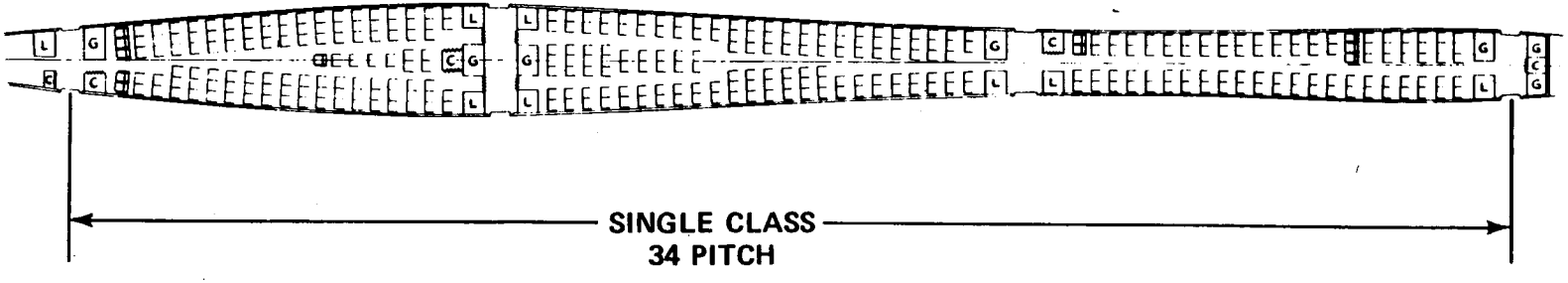

350 PASSENGERS

80-AST-6079-1

AST MODEL D-3233-2.2-1

RANGE PERFORMANCE

MTOGW 340,200 kg (750,000 LB)
SPF/DB 308 PASSENGERS
GE21/J11-B18 ENGINE

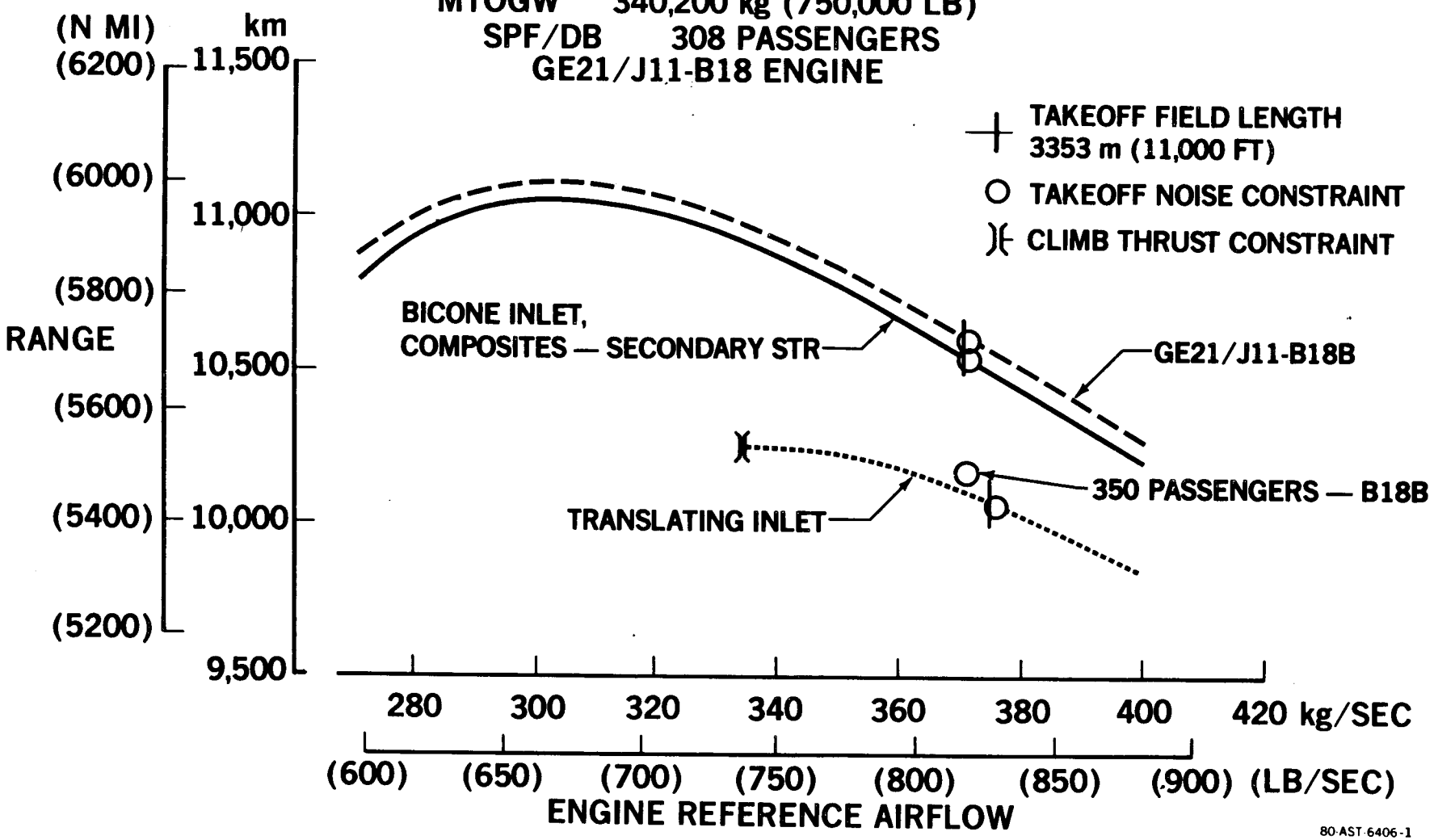

80-AST-6406-1

FUEL EFFICIENCY COMPARISON

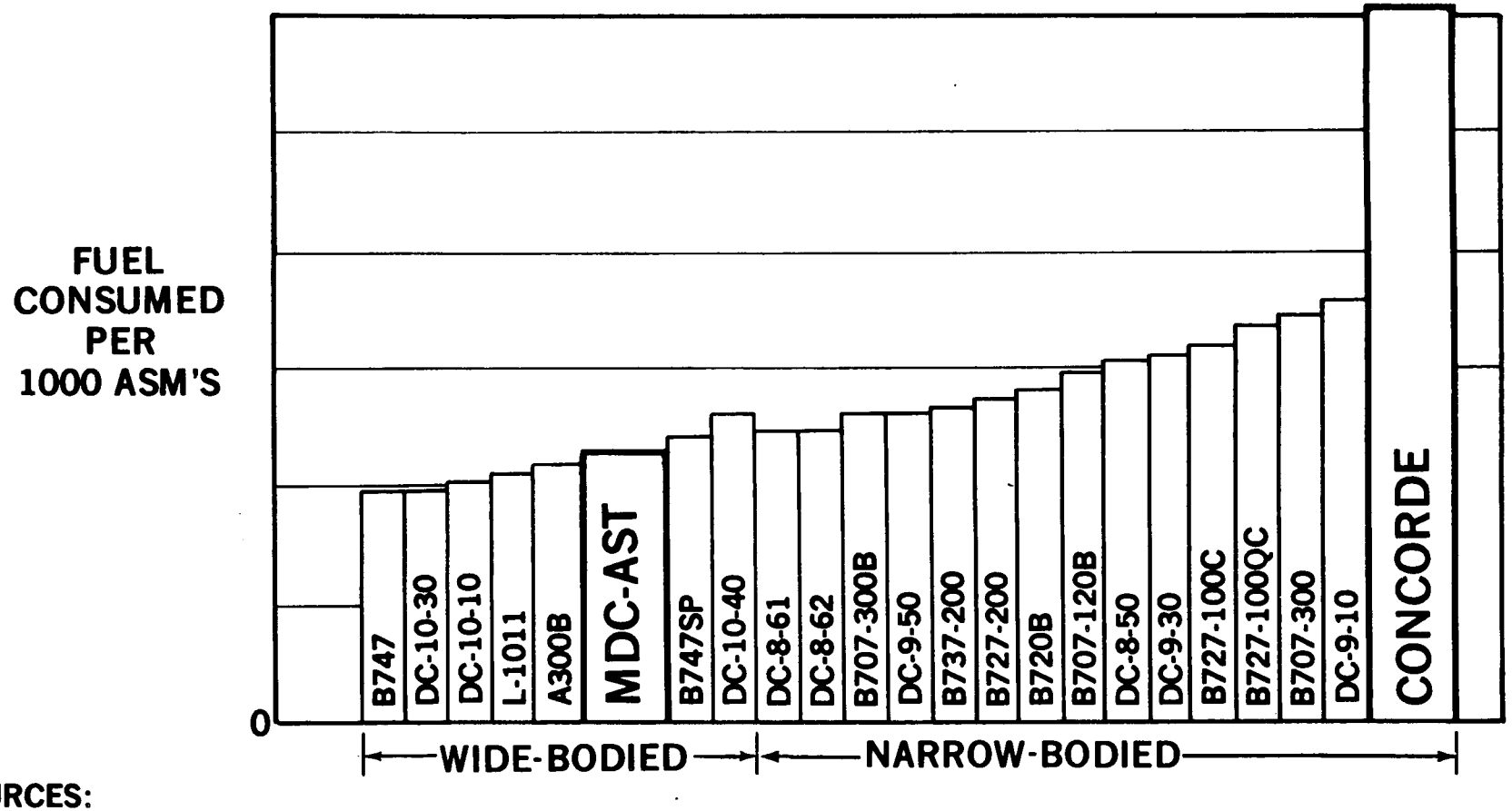

SOURCES:
CAB FOURTH QUARTER 1978 (SUBSONIC AIRCRAFT)
DOUGLAS (AST, CONCORDE)

9-AST-6738-1

CONTROL SYSTEMS SIMULATION

J. B. FEATHER

80-AST-6398

OBJECTIVES OF MOVING-BASE SIMULATOR TESTS

LANDING APPROACH

PILOT RATINGS

- UNAUGMENTED
- FULL AUGMENTED SYSTEM
- LONGITUDINAL HSAS
- LATERAL HSAS

RIDE QUALITIES EVALUATIONS

- COCKPIT
- CENTER OF GRAVITY
- AFT FUSELAGE STATION

80-AST-6392

UNAUGMENTED AIRCRAFT CHARACTERISTICS

LINEAR SYSTEM CHARACTERISTICS ROOTS

- LONGITUDINAL — UNSTABLE ROOT, $T_2 = 2.5$ SEC
- LATERAL — VERY OSCILLATORY DUTCH ROLL, LARGE SIDESLIP

COMPUTED ACCELERATIONS AT PILOT STATION EXCESSIVE DUE TO LONG FUSELAGE AND HIGH PITCH ANGLE

80-AST-6397

TIME RESPONSES FOR 3-SECOND PULSE INPUTS

FIXED-BASE UNAUGMENTED

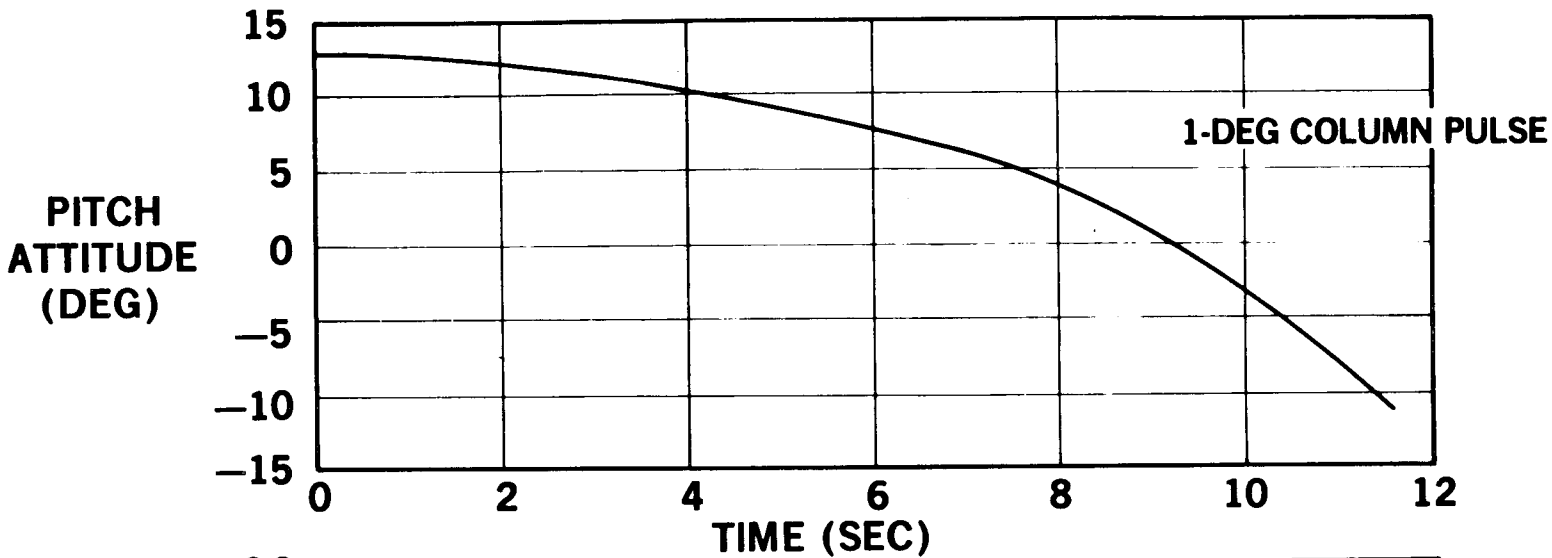

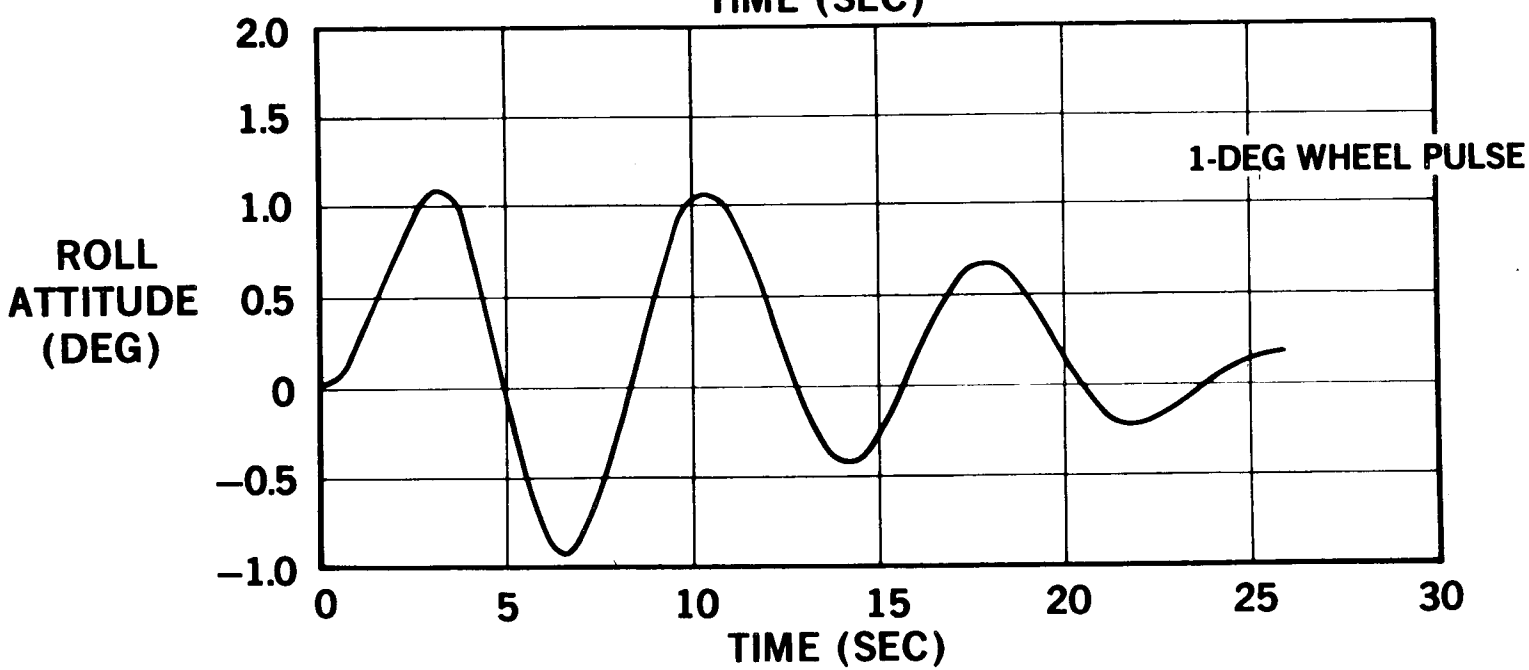

80-AST-6401

ROLL AXIS ORIENTATION

LANDING APPROACH

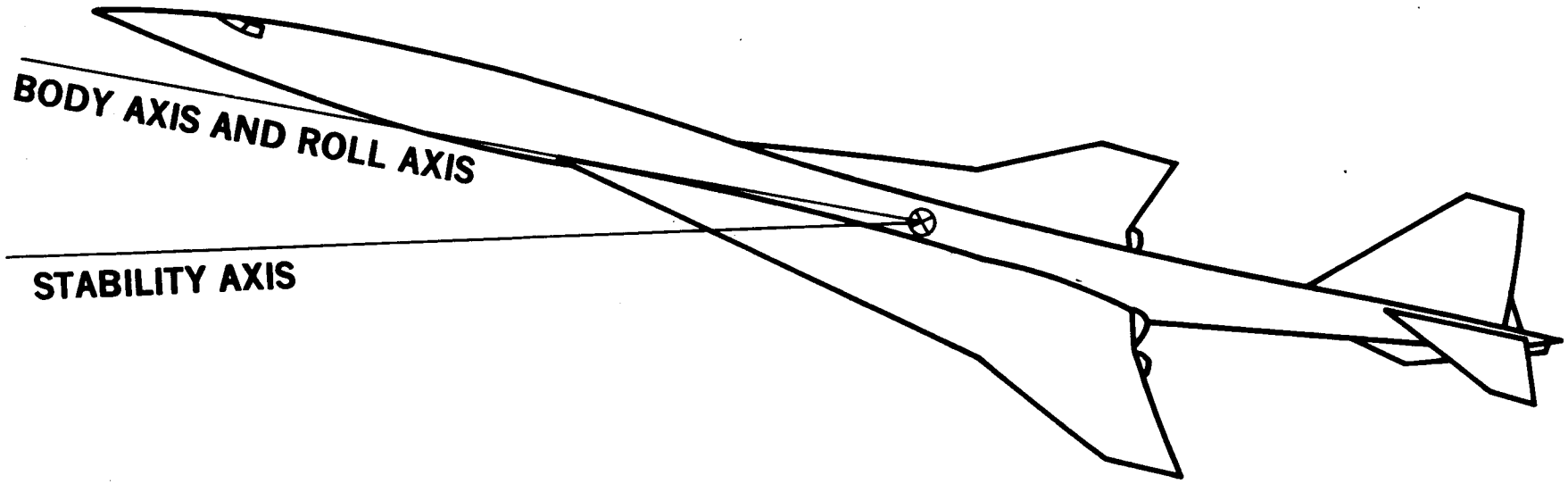

80-AST-6457

ESTIMATED CROSSWIND LANDING CAPABILITY

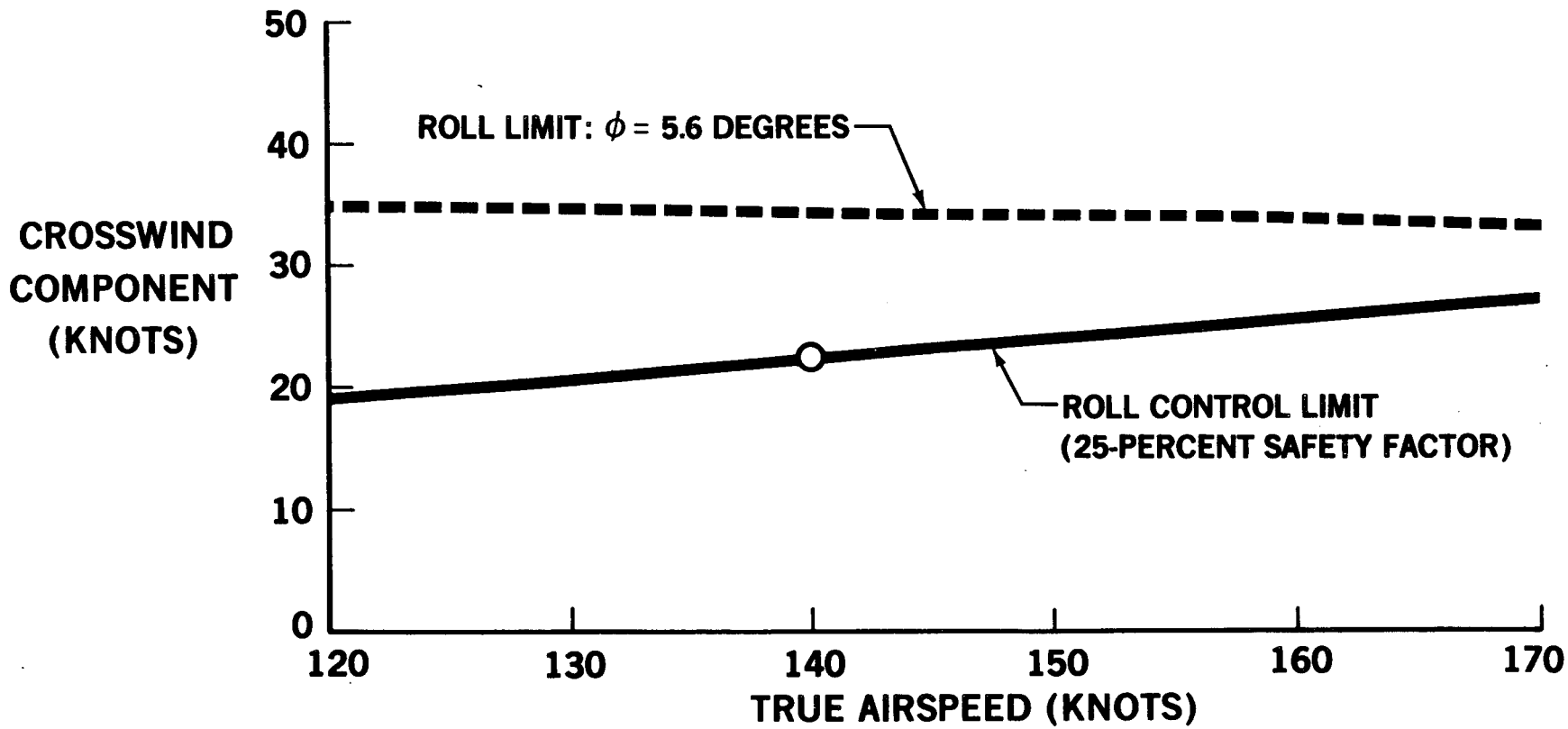

80-AST-6440

ESTIMATED CENTER-OF-GRAVITY LIMITS

UNAUGMENTED

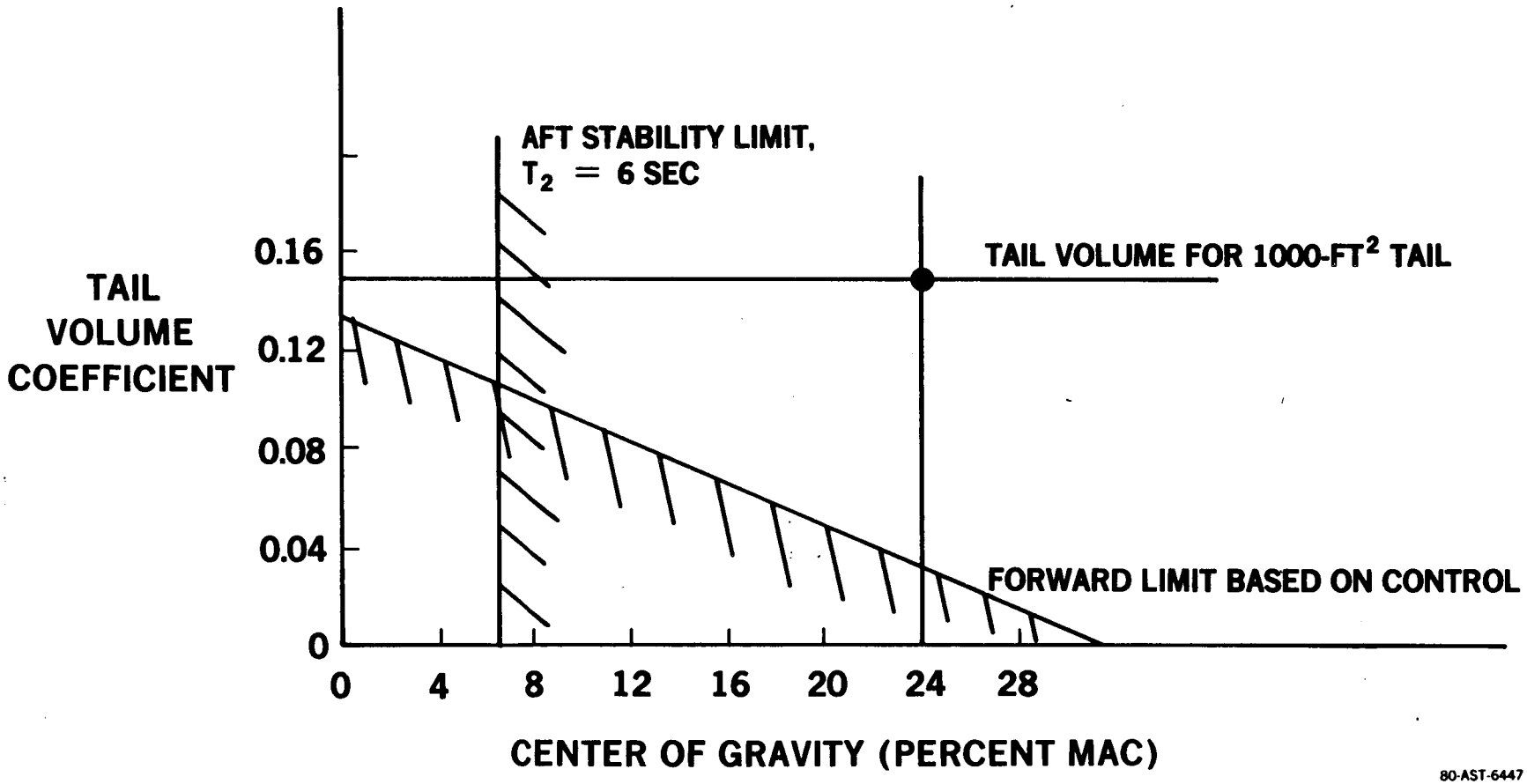

80-AST-6447

AUGMENTATION SYSTEM METHODOLOGY

LINEAR SYSTEM DEVELOPMENT

- MODEL FOLLOWING USED IN LONGITUDINAL (UNSTABLE) AND LATERAL (UNDERDAMPED) AXES
- CONTROL LAWS DEFINED AND EVALUATED

NONLINEAR SIMULATOR EVALUATIONS

- FIXED-BASE SIMULATOR

MOVING-BASE SIMULATOR TEST

80-AST-6399

AUGMENTATION SYSTEMS DEVELOPMENT

LONGITUDINAL

- SYSTEM STABILIZED
- RESPONSES IMPROVED
- AUGMENTATION SYSTEM PROVIDES LEVEL 1 SHORT-PERIOD ROOTS

LATERAL

- ROLL OSCILLATION TENDENCY REDUCED
- SIDESLIP ANGLE DURING TURN REDUCED

80-AST-6393

TIME RESPONSES FOR 3-SECOND PULSE INPUTS

FIXED-BASE

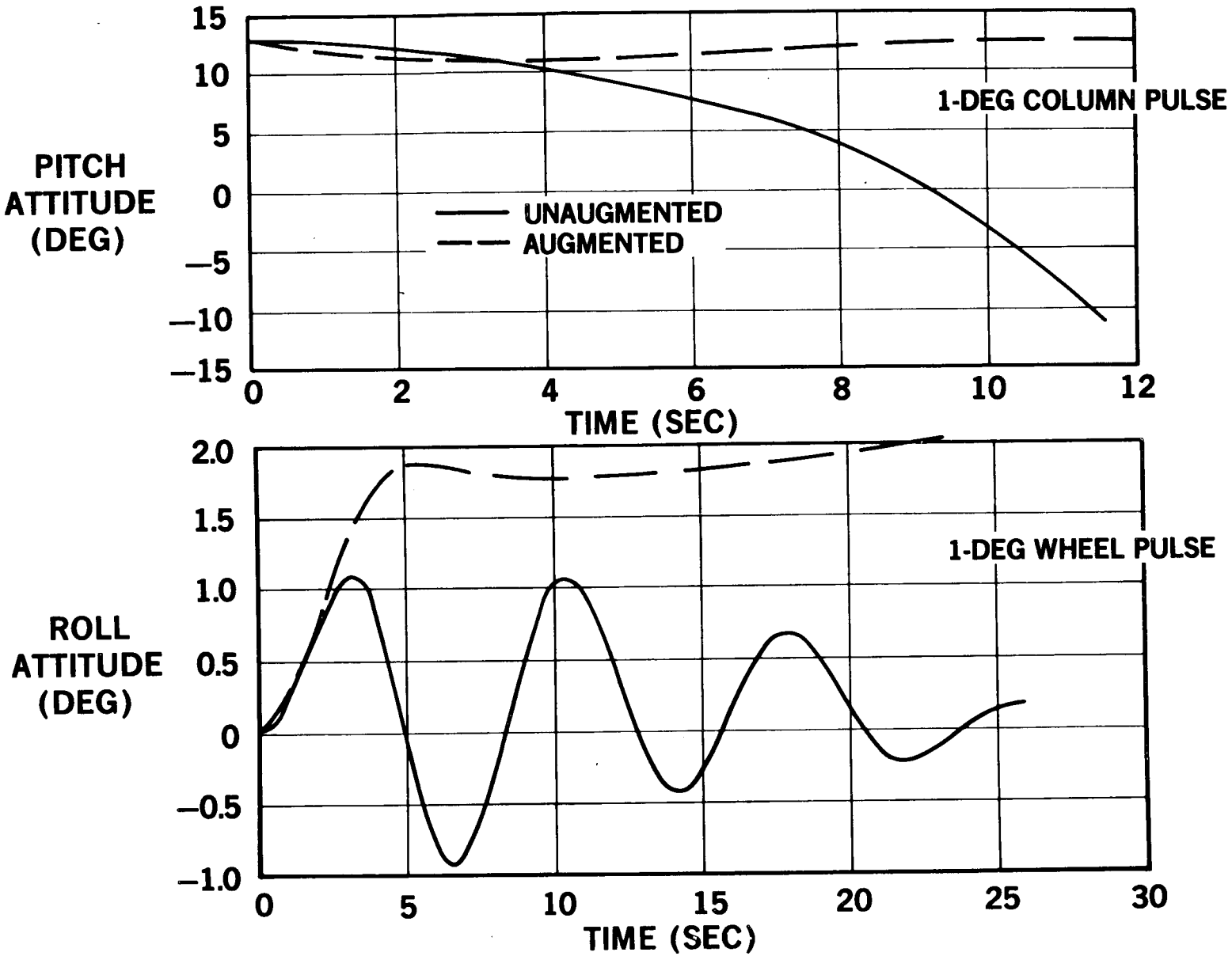

80-AST-6400

ANALYTICAL PILOT RATING CRITERION

PITCH TRACKING TASK

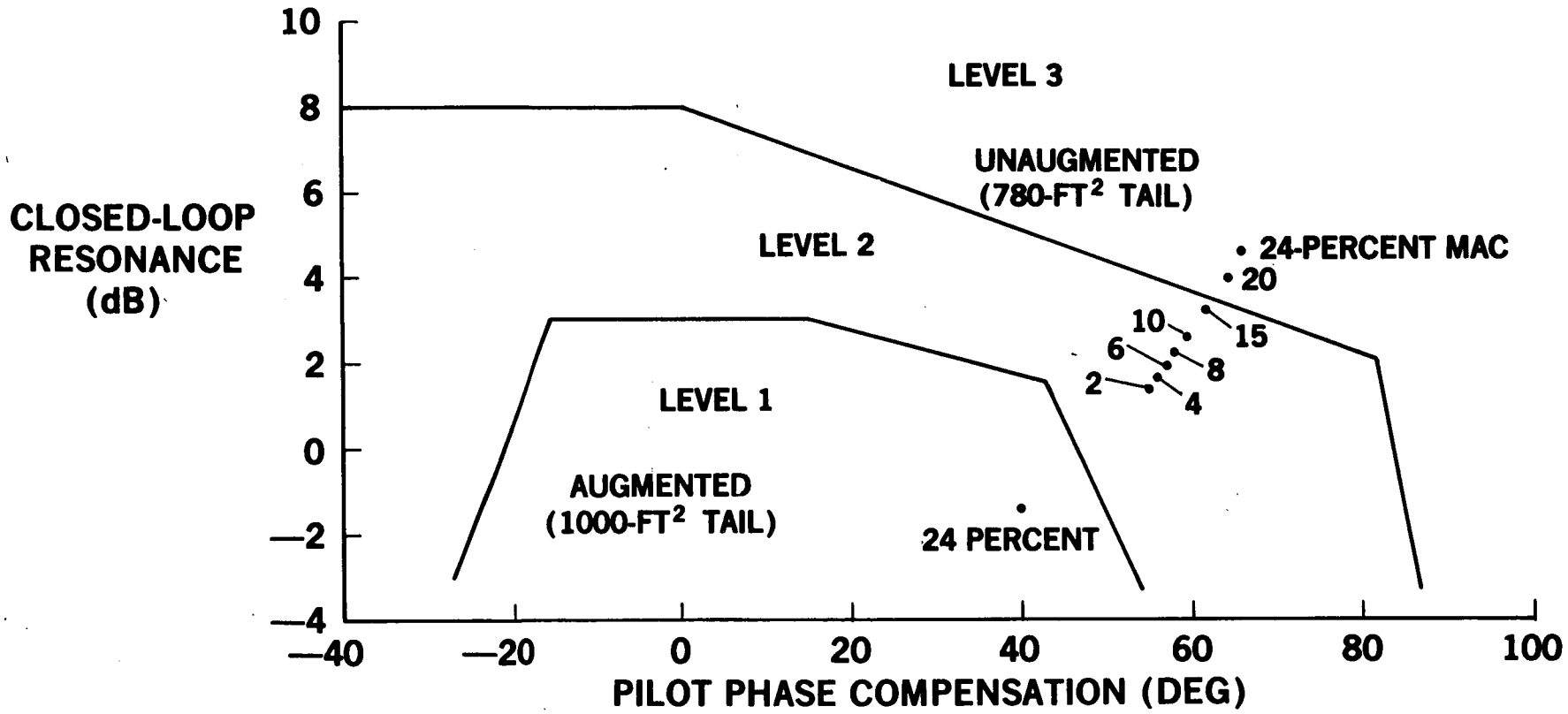

80-AST-6439

FIXED-BASE SIMULATOR TESTS

NONLINEAR, 6 DOF

EVALUATION OF AUGMENTATION SYSTEMS

- CONFIRMED LINEAR ANALYSIS
- MODIFIED AS RESULT OF PILOT COMMENTS
- EVALUATION IN GUST ENVIRONMENT

RESULTS OF FIXED-BASE TESTS PROVIDED SYSTEM FOR MOVING-BASE SIMULATOR

80-AST-6396

MOVING-BASE SIMULATOR EVALUATION PLAN

OBTAIN PILOT RATINGS

EVALUATE RIDE QUALITIES

LANDING APPROACH TASKS

- G/S TRACKING
- PITCH MANEUVER
- CROSSWIND CAPABILITY
- GUST EVALUATION

80-AST-6395

MOVING-BASE SIMULATOR

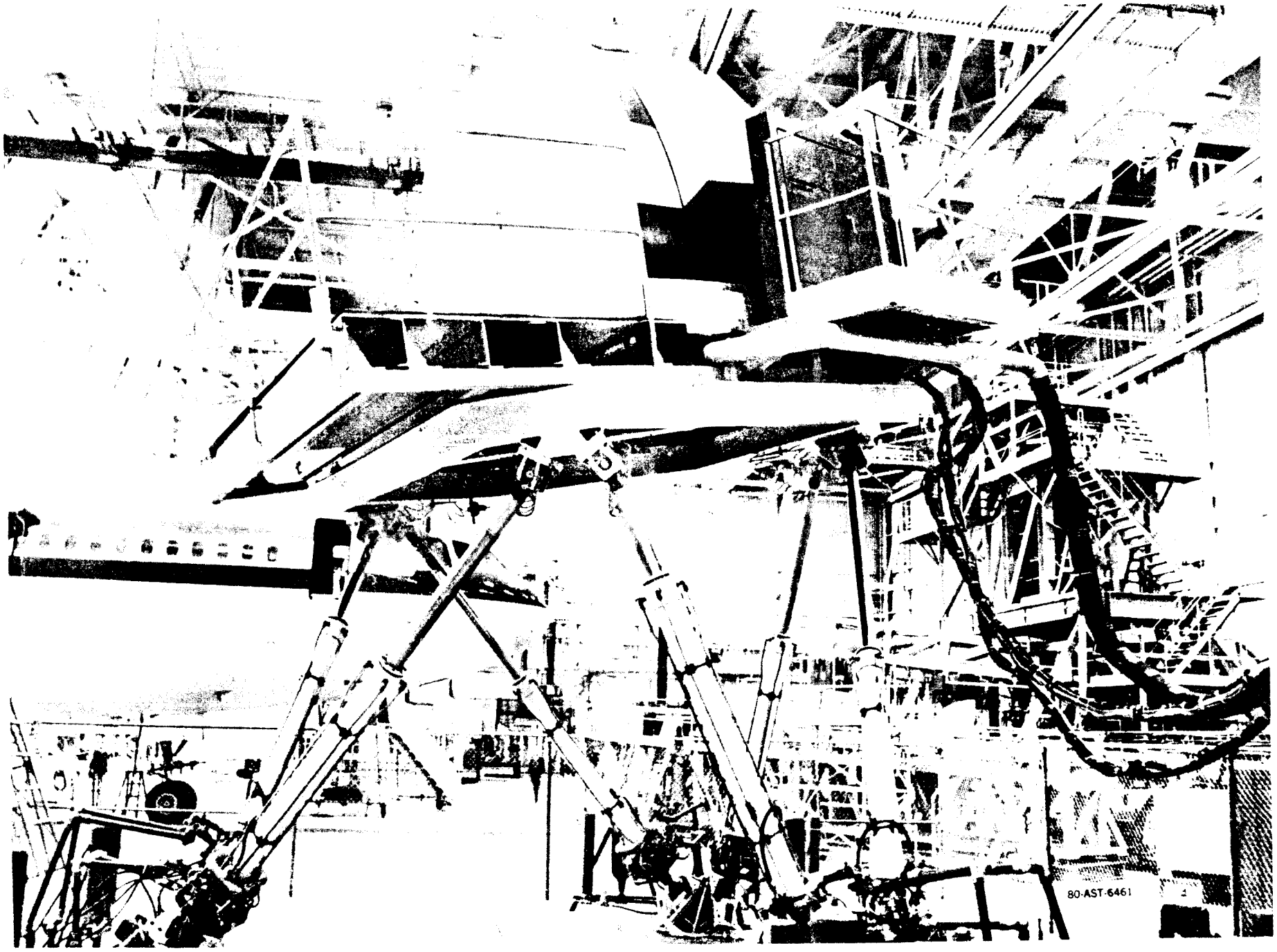

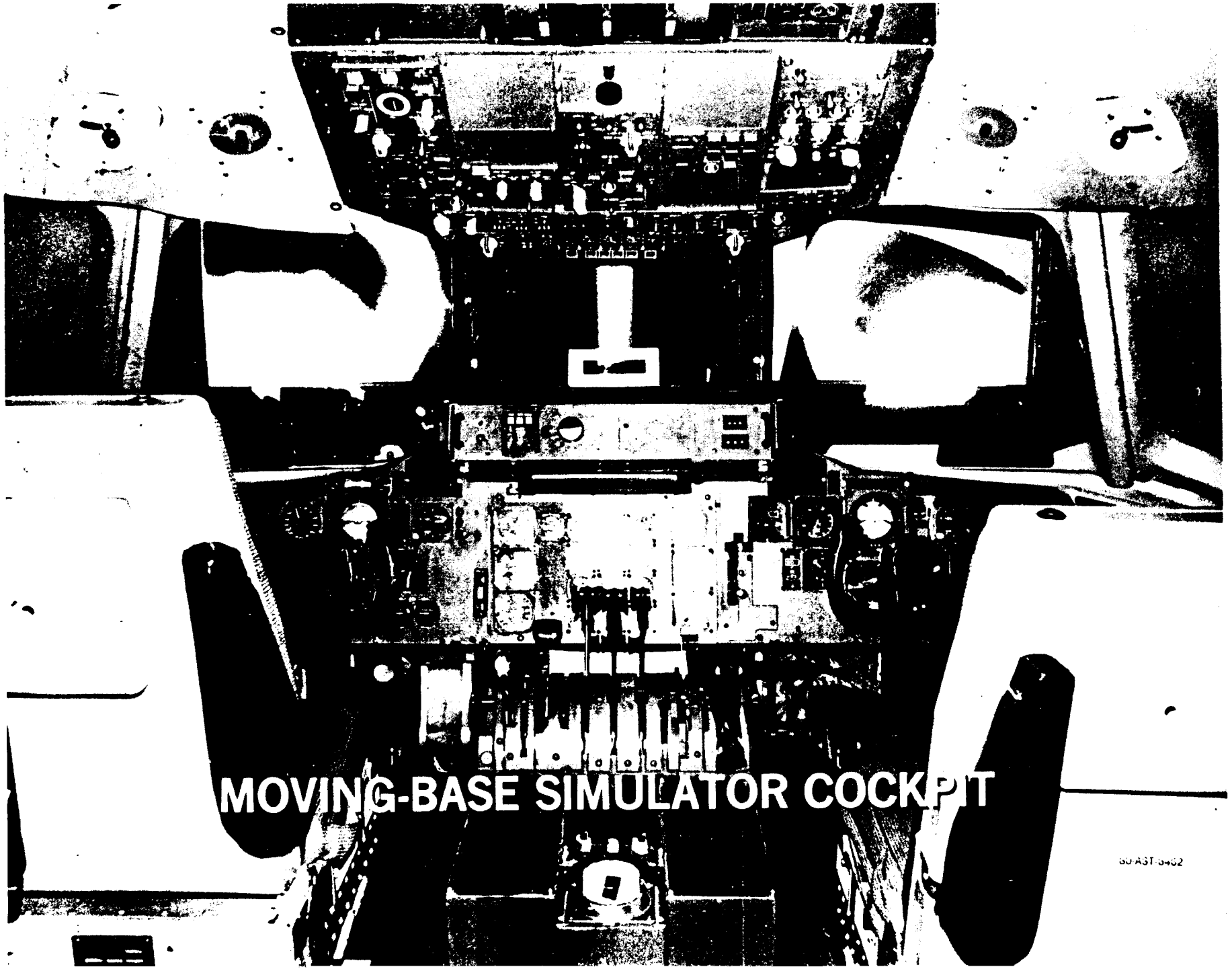

MOVING-BASE SIMULATOR COCKPIT

GG-AST-6462

TYPICAL SIMULATOR TIME HISTORIES

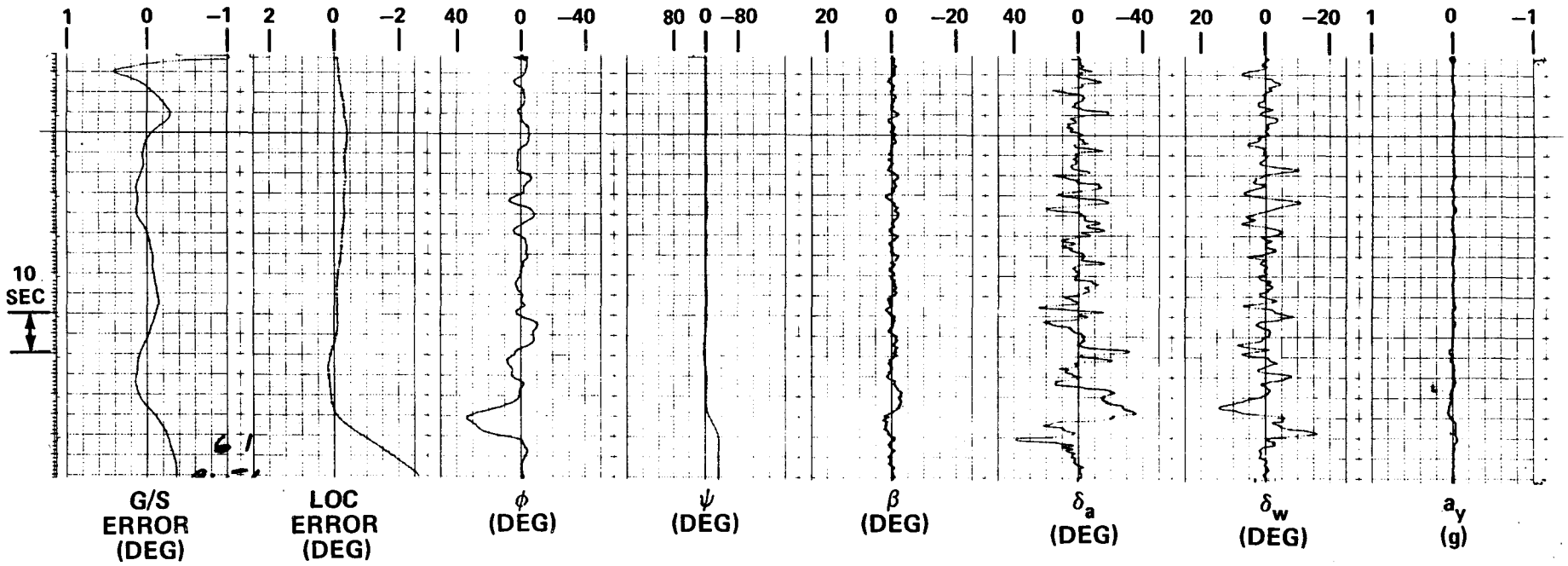

80-AST-6443A

TYPICAL SIMULATOR TIME HISTORIES

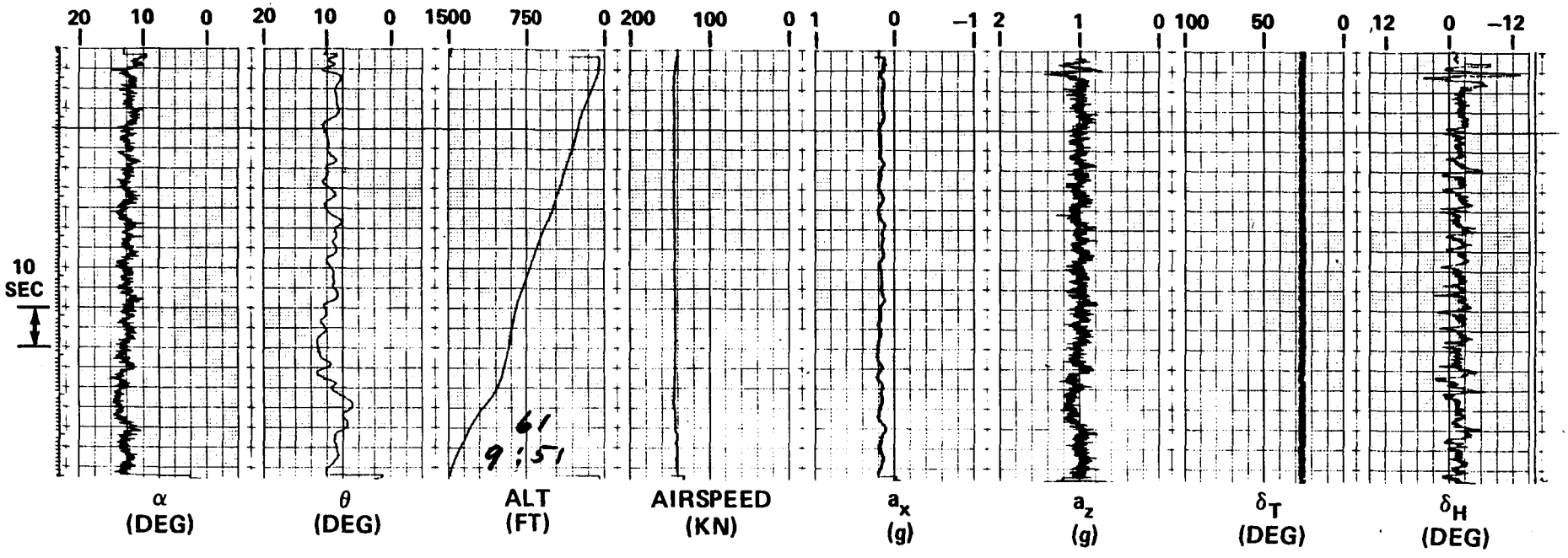

80-AST-6444A

PRELIMINARY MOVING BASE RESULTS

- UNAUGMENTED CONFIGURATION IS UNSATISFACTORY WITH AND WITHOUT TURBULENCE
- FULL AUGMENTATION SYSTEMS PROVIDE SATISFACTORY TO ACCEPTABLE PILOT RATINGS
- MODERATE TO HEAVY TURBULENCE DEGRADES AUGMENTED CONFIGURATION
- MAXIMUM CROSSWIND AT LANDING — 22 KNOTS
- LATERAL AND LONGITUDINAL HSAS ALMOST AS ADEQUATE AS FULL-UP SYSTEM

80-AST-6445

SUMMARY OF CONTROLS TASKS

AUGMENTATION SYSTEMS FOR LANDING APPROACH DEFINED

SYSTEM RESPONSES CHECKED USING LINEAR TECHNIQUES

FIXED-BASE, NONLINEAR SIMULATION USED FOR EVALUATION

MOVING-BASE SIMULATOR USED FOR ADDITIONAL PILOT EVALUATION

80-AST-6394

FUTURE TASKS

REDUCE MOVING-BASE DATA

ESTABLISH PILOT RATINGS AND COMPARE WITH OTHER RATING METHODS

OBTAIN GUST AND CROSSWIND PERFORMANCE

EVALUATE OTHER FLIGHT CONDITIONS ON SIMULATOR

80 AST 6391

ADVANCED STRUCTURES AND MATERIALS APPLICATIONS

J. E. FISCHLER

9-GEN-25838B

SPF/DB SANDWICH PHASES OF FABRICATION

FOUR-SHEET SANDWICH

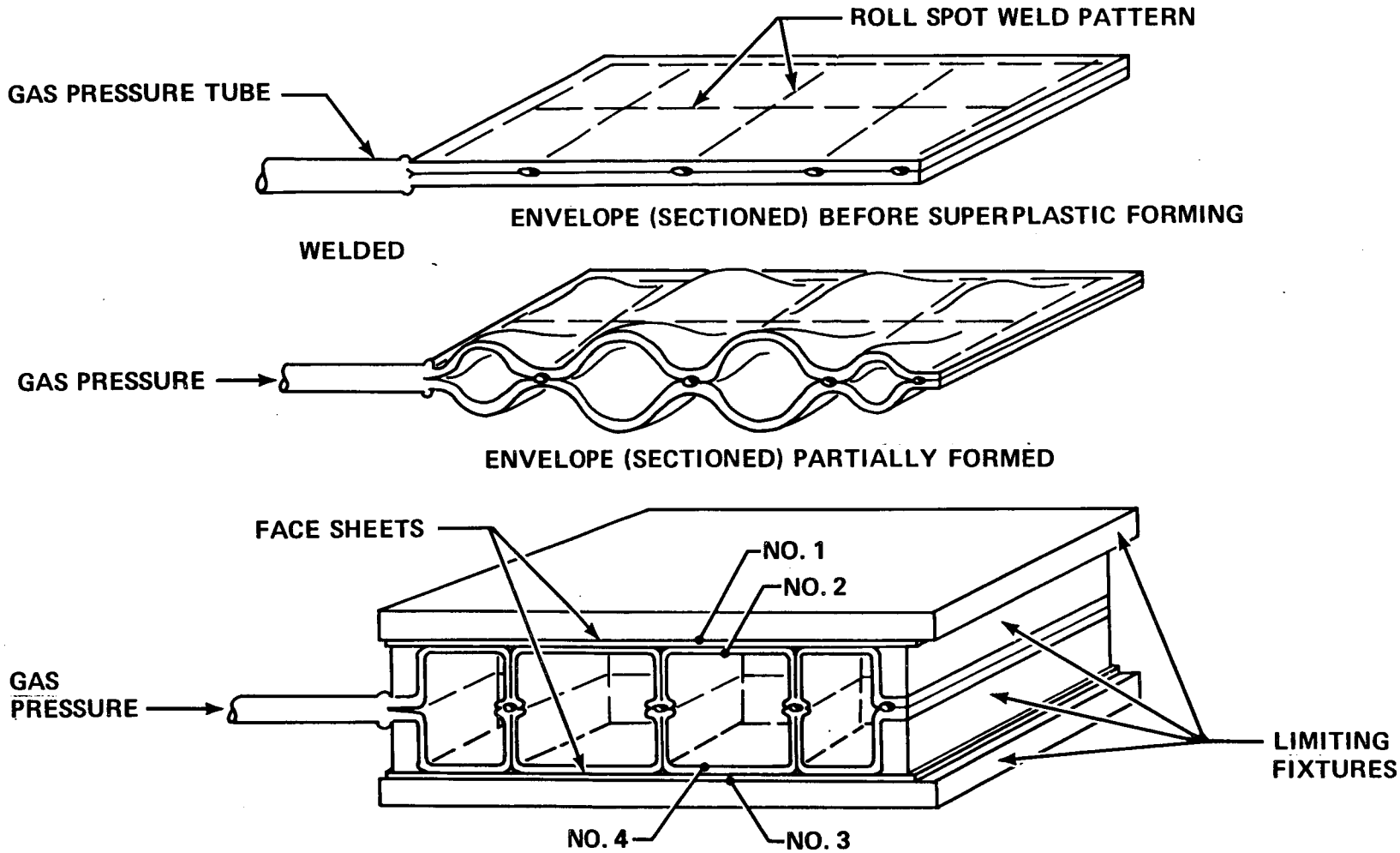

8-GEN-20276E

PROCESSING ASPECTS OF MDC PROPRIETARY SPF/DB SANDWICH

- NO EMBRITTLING PARTING AGENT IN THE INTERIOR CORE
- PERMITS SKIN THICKNESS VARIATIONS WITHOUT EXPENSIVE TOOLING
- PROCESS HAS BEEN PROVEN FOR 2, 3, AND 4 SHEET CONSTRUCTIONS
- CAN FACILITATE EDGE ATTACHMENTS, ACCESS DOORS, AND VERY RAPID CHANGES IN THICKNESS
- BLOWING FROM THE CENTER LOCKS ALL THE PARTS TOGETHER

8-AST-6215A

MCDONNELL DOUGLAS CORPORATION

STRUCTURAL ASPECTS OF MDC PROPRIETARY SPF/DB SANDWICH

- ABILITY TO FORM SMALL CELLS AND TRANSVERSE WEBS, THEREFORE MORE EFFICIENTLY CARRY BIAXIAL AND SHEAR LOADS
- CAN MAKE THE FACE AND CORE TO ANY DESIRED CONFIGURATION AND THICKNESSES — TAILOR (OPTIMIZE)
- TRUSS CORE SANDWICH IS LESS EFFICIENT IN TRANSVERSE SHEAR THAN WEBS IN TRANSVERSE SHEAR
- ACHIEVED TWO-TO-FOUR LIFETIMES IN FATIGUE
- ACHIEVED 143,000 PSI IN COMPRESSION — DID NOT BUCKLE

TEST STRUCTURE

FORWARD FUSELAGE

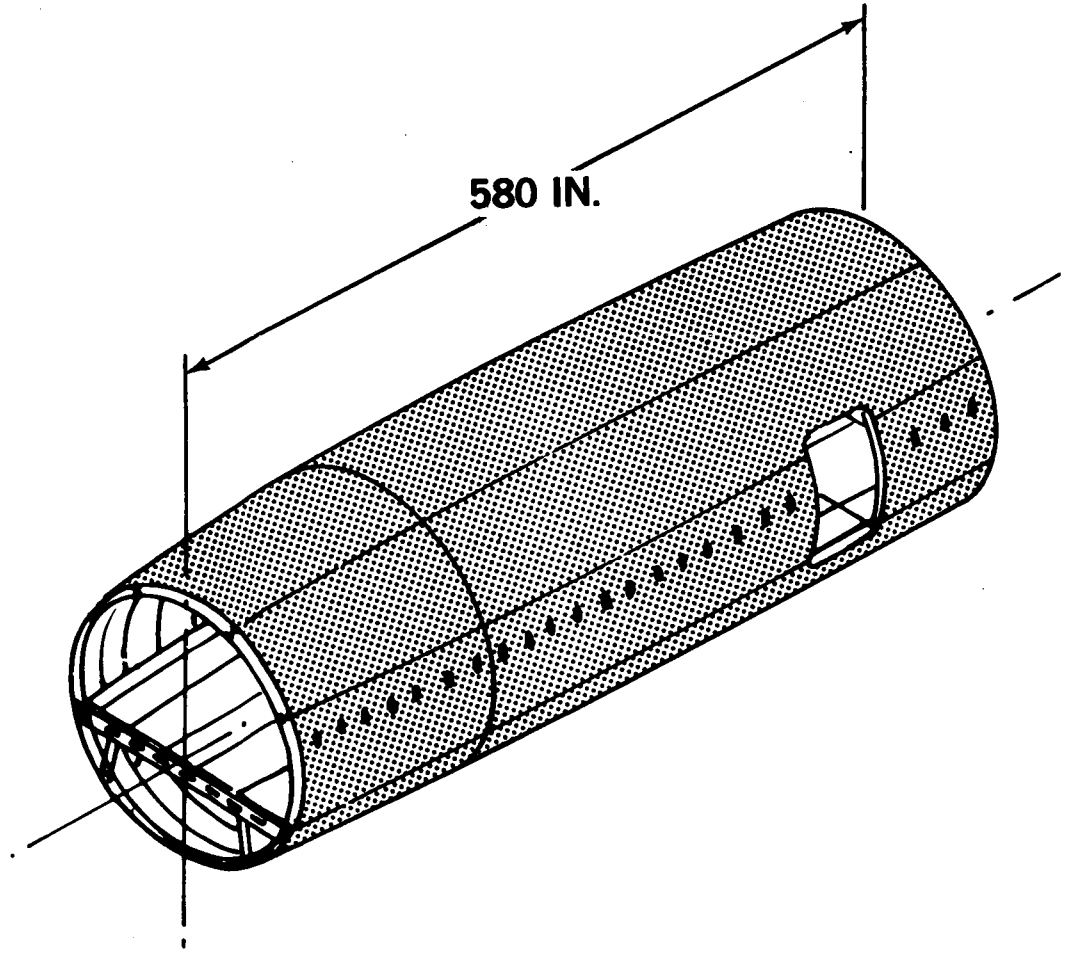

80-AST-6272 A

TEST STRUCTURE

FORWARD FUSELAGE

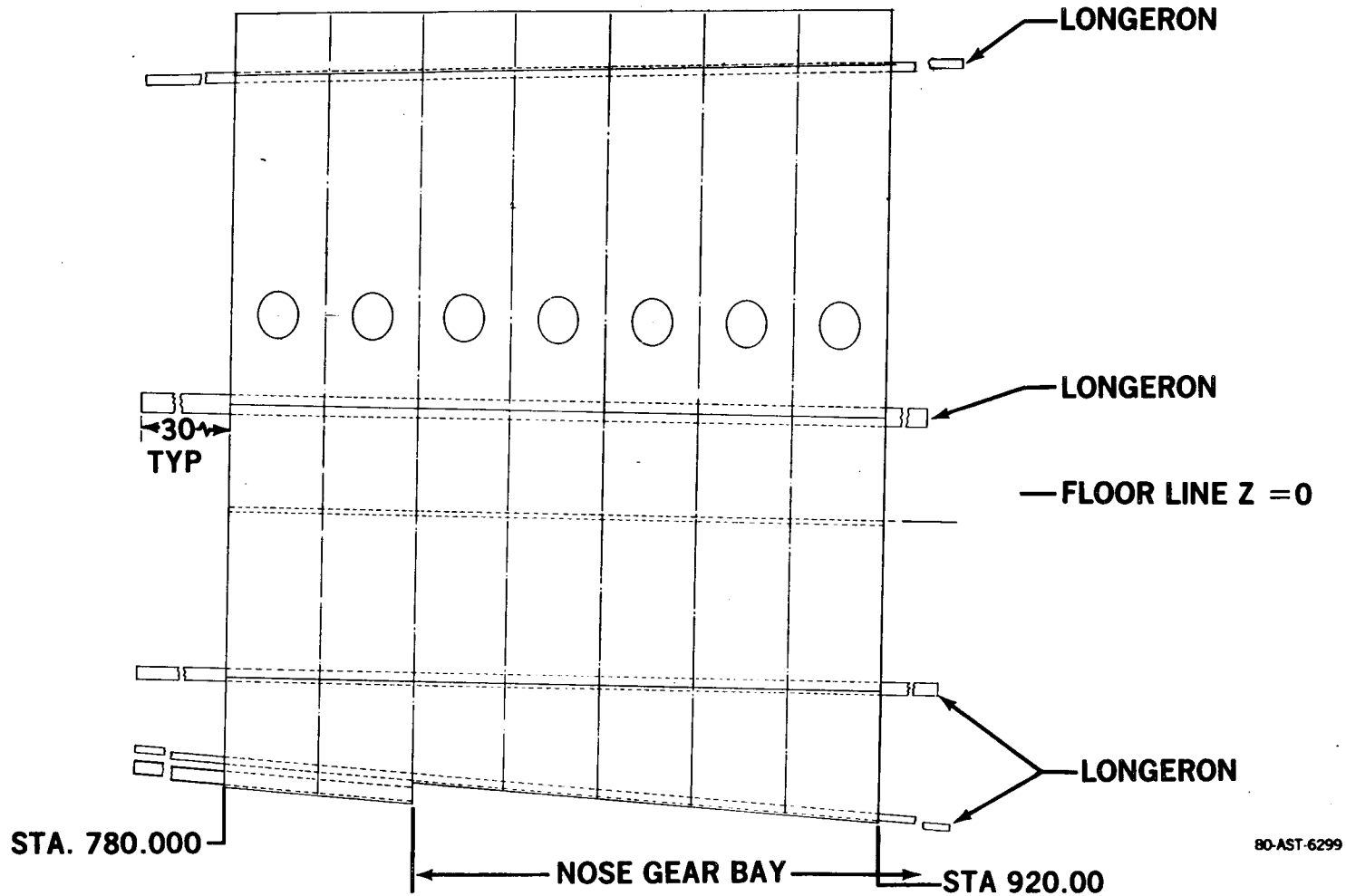

TEST STRUCTURE

FRAME/FLOOR BEAM

FLOOR BEAM MATERIAL
ALUMINUM
OR
SPF/DB TITANIUM
OR
COMPOSITES

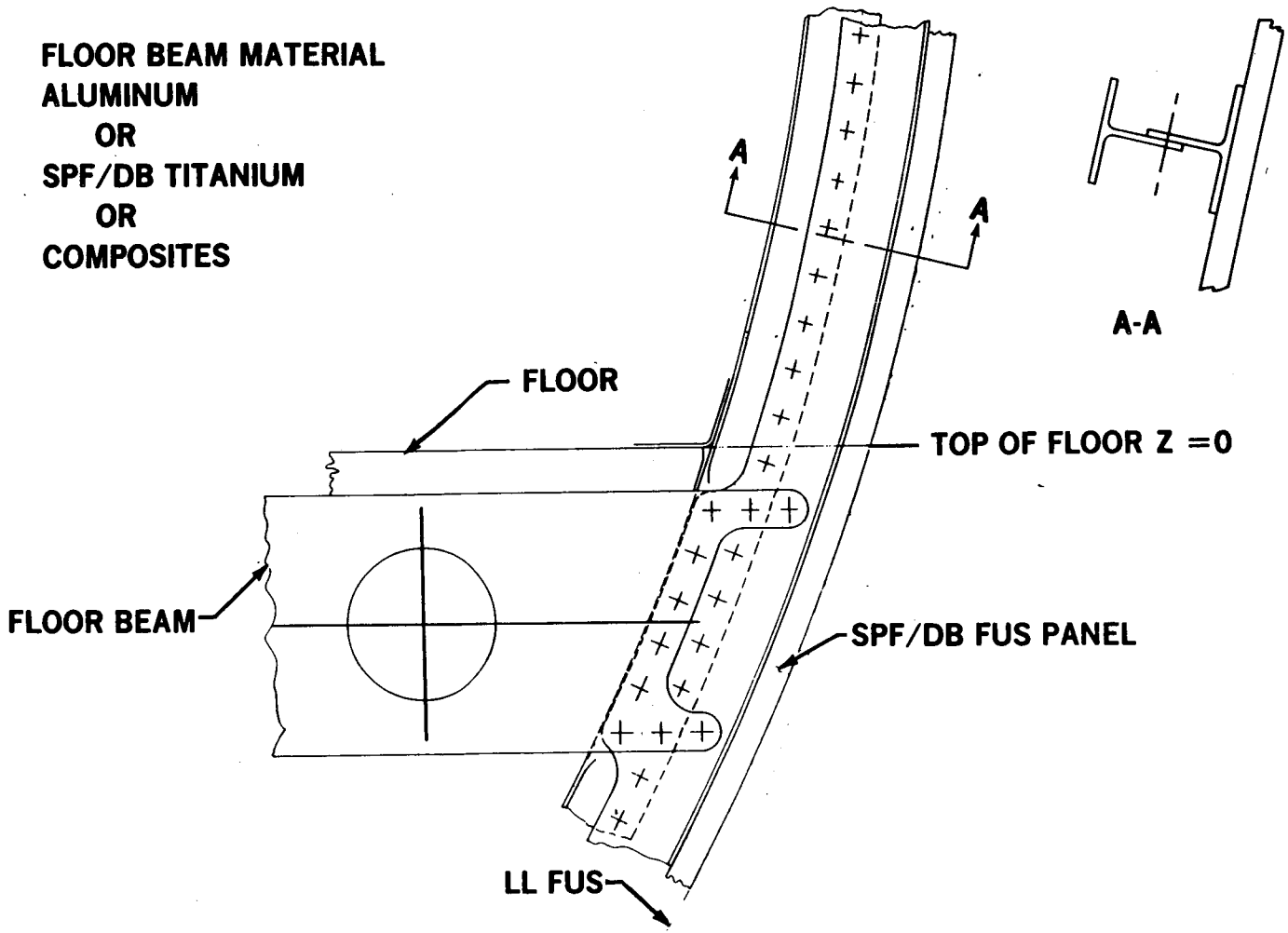

80-AST-6300-1

TEST STRUCTURE

FRAME AND NOSE GEAR DOOR

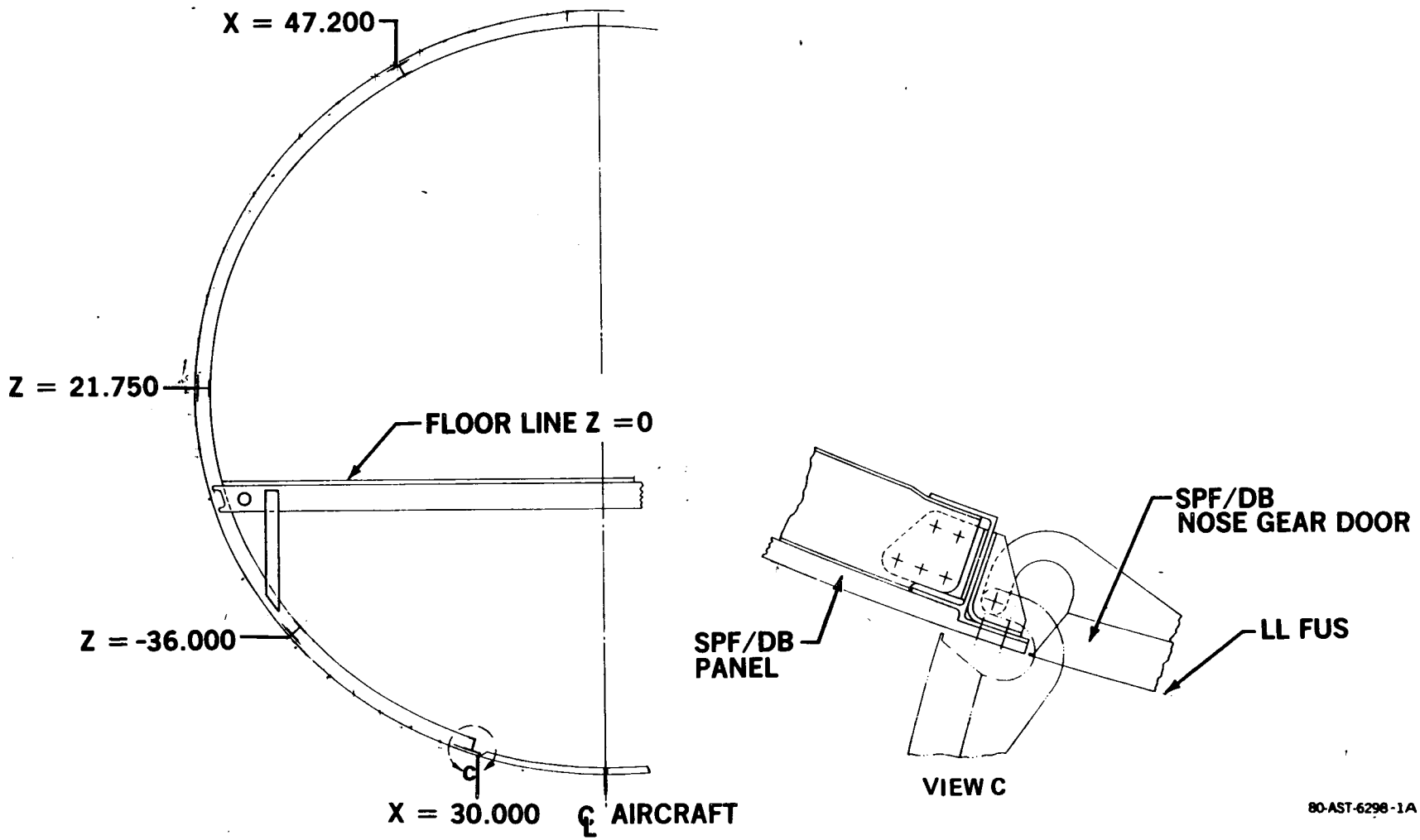

TEST STRUCTURE FUSELAGE/WING BOX

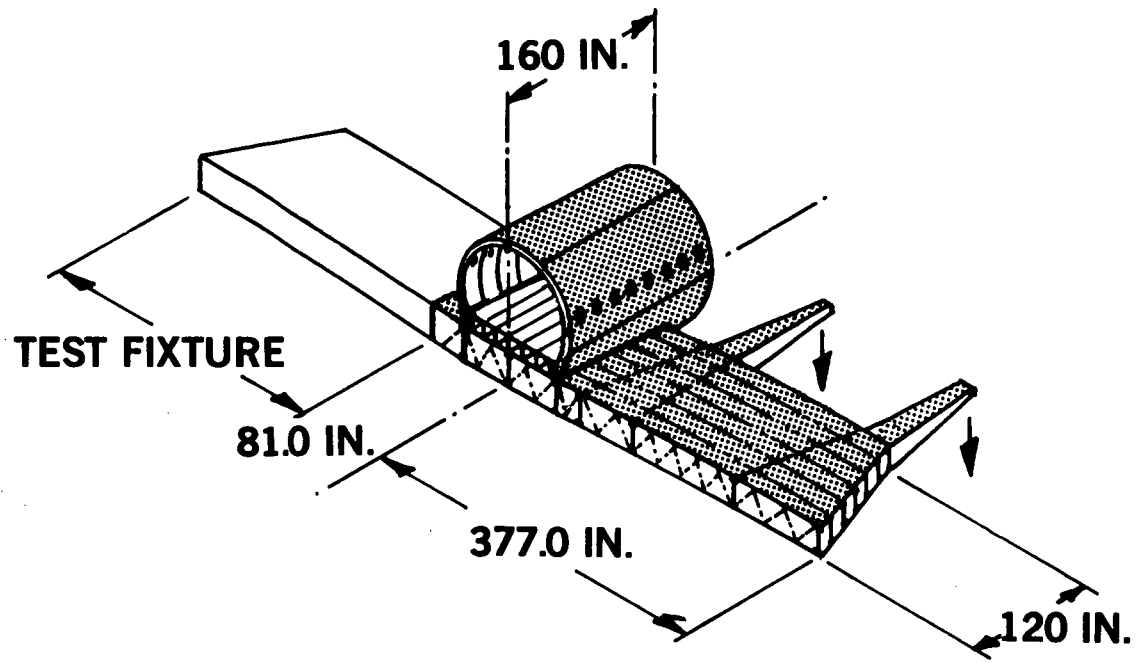

80-AST-6270

TEST STRUCTURE

WING/AFT FUSELAGE INTERSECTION

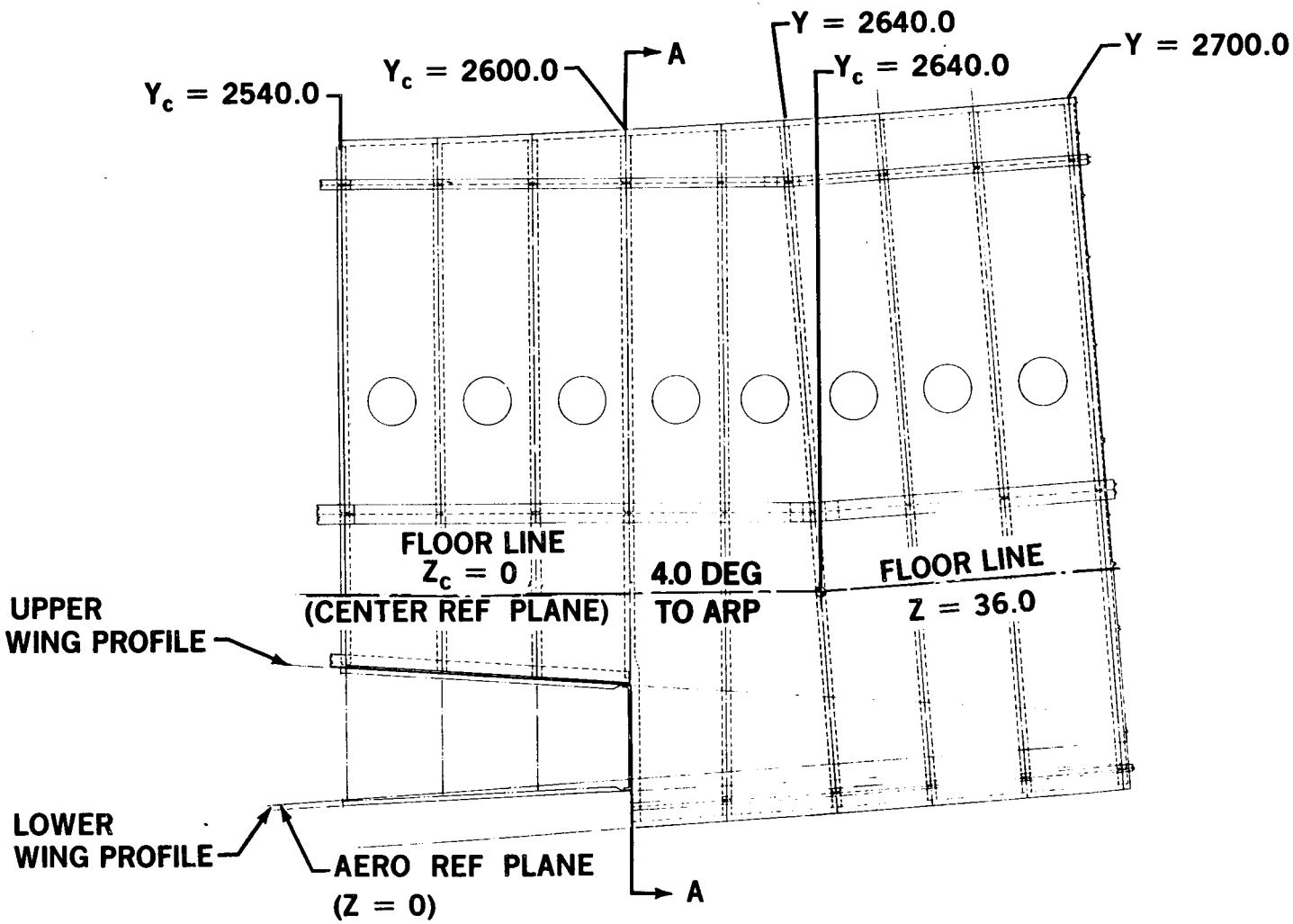

80-AST-6296

TEST STRUCTURE

FRAME/REAR SPAR SECTION

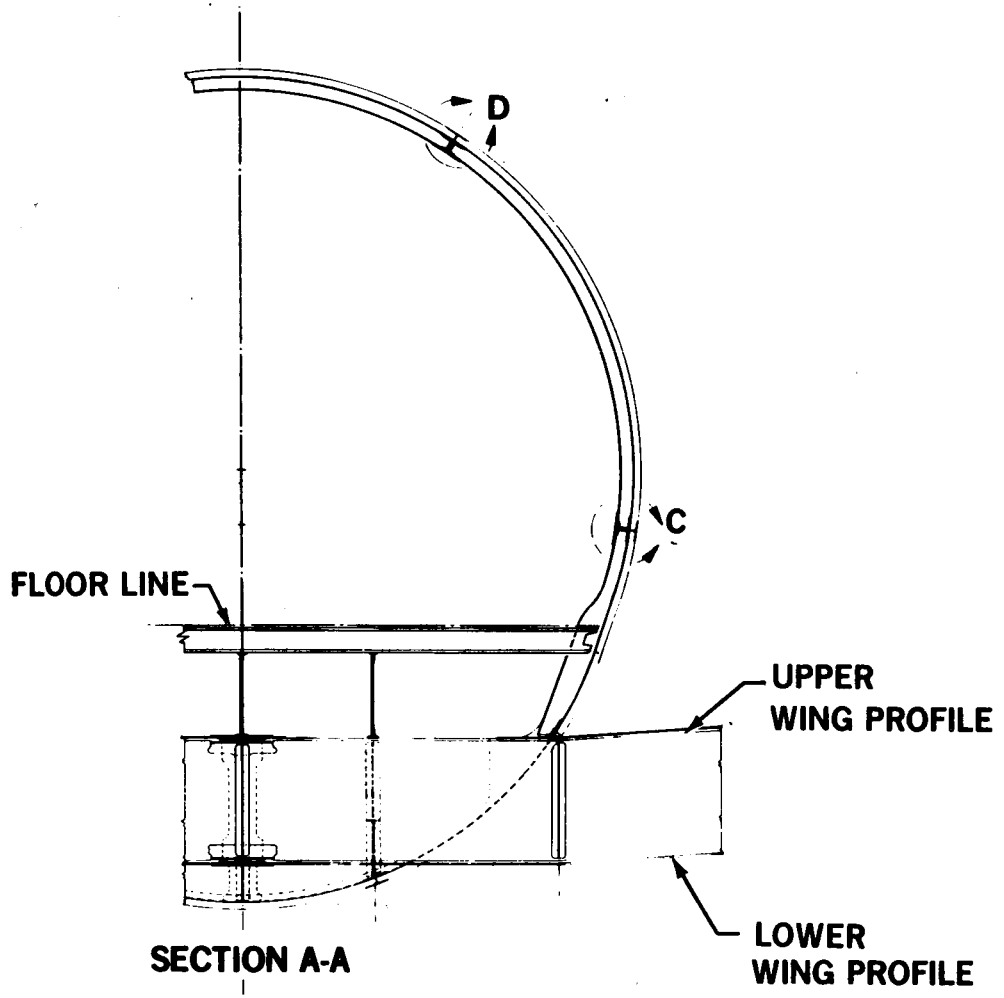

80-AST-6297-1

TEST STRUCTURE

TYPICAL FRAME/LONGERON JOINT

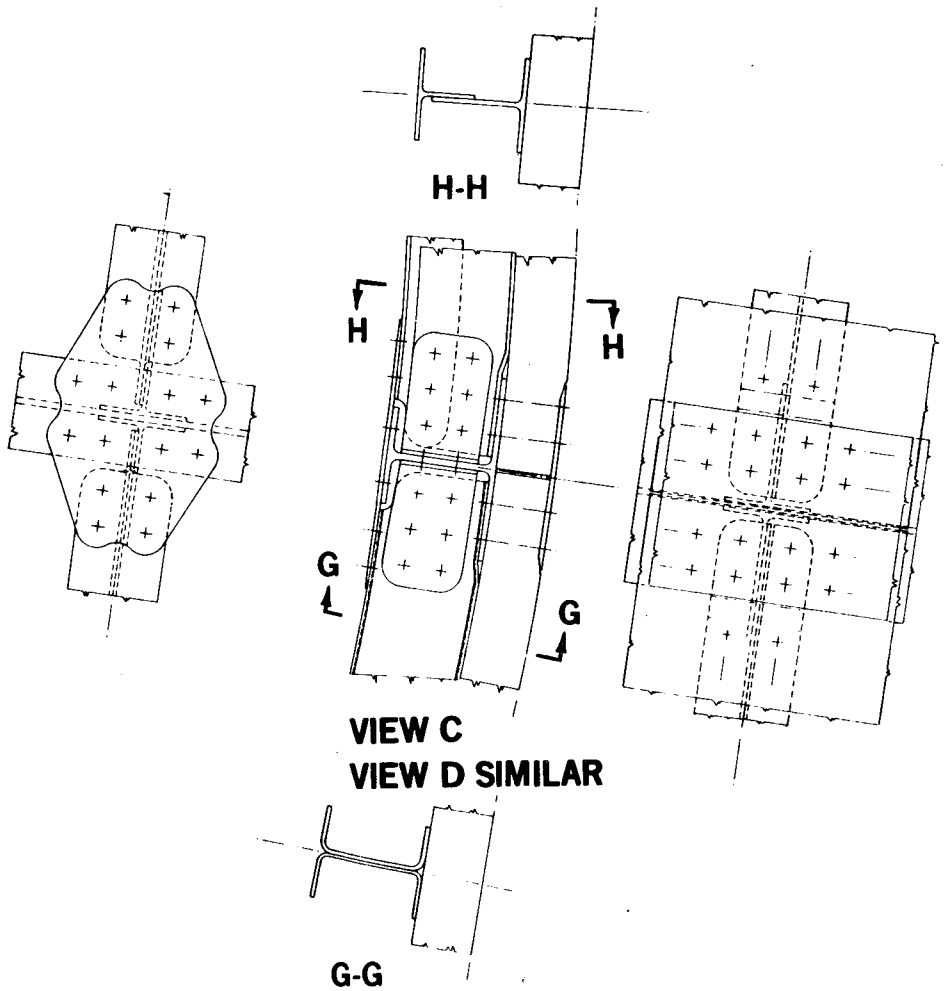

80-AST-6301

MCDONNELL DOUGLAS CORPORATION

AST

INNER WING BOX SECTION-TYPICAL

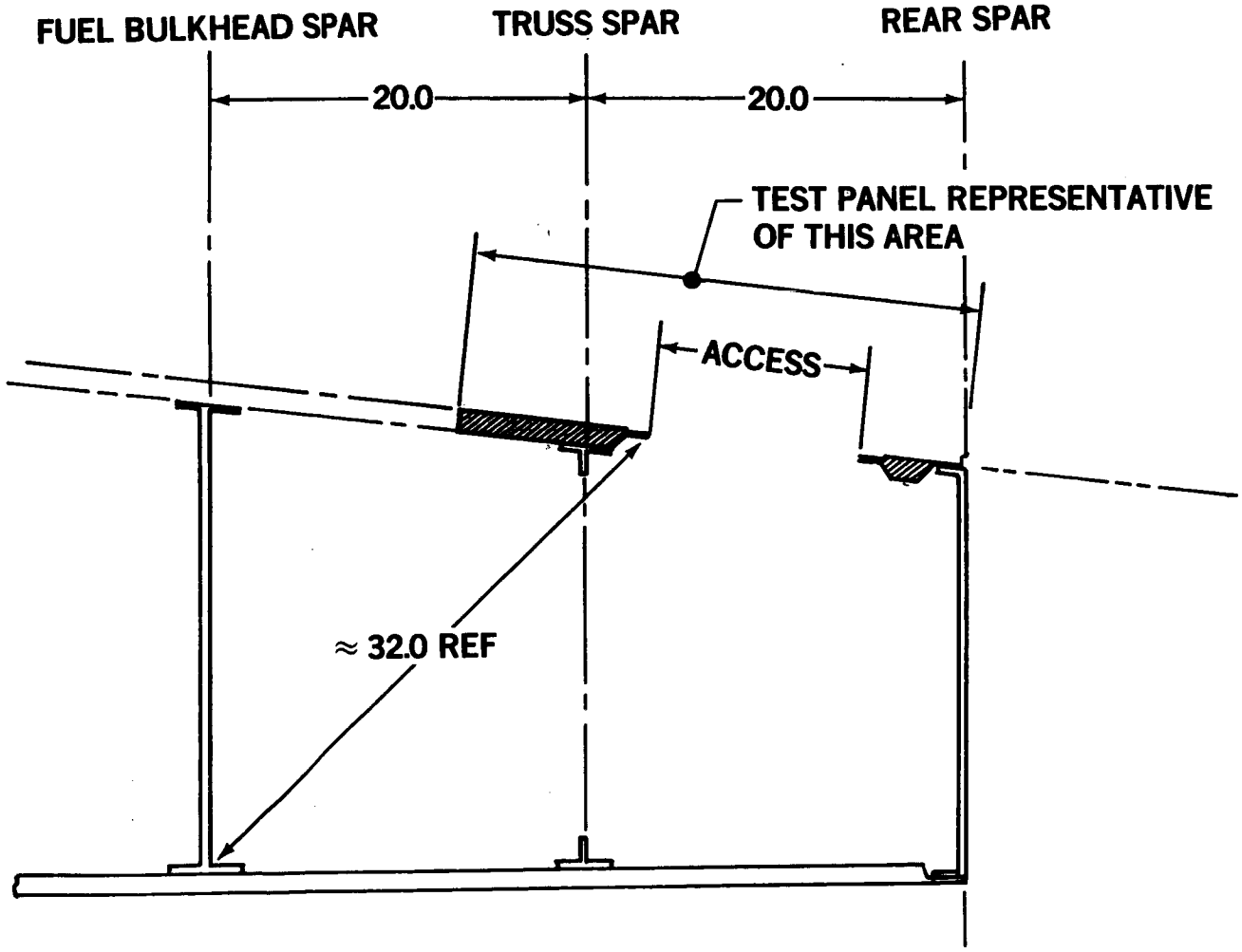

80-GEN-23796 A

MCDONNELL DOUGLAS CORPORATION

AST

MALE SHOULDER WIDTH PREDICTION

1990

SHOULDER WIDTH SEATED — NUDE

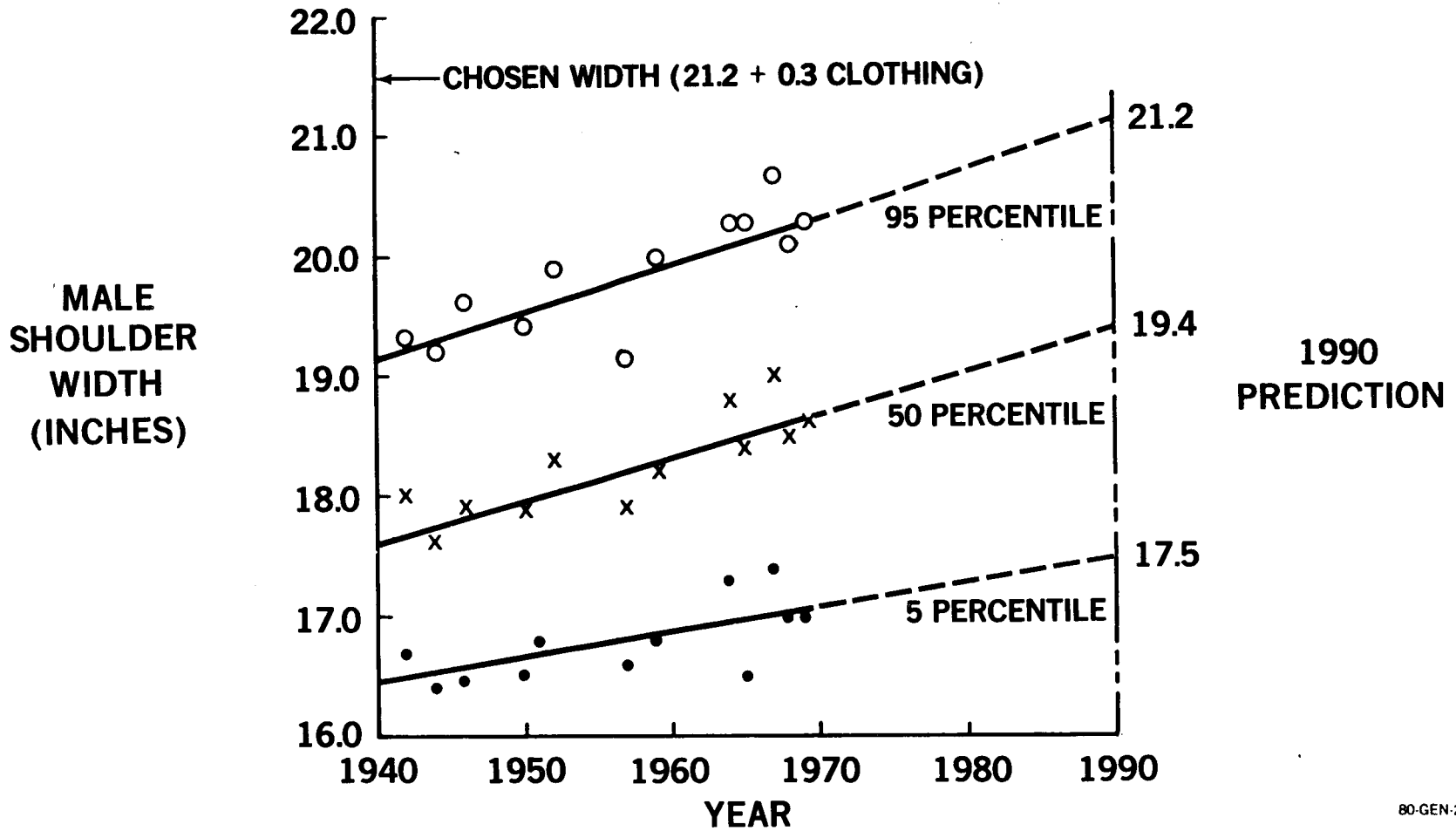

DATA: HUMAN FACTORS ENGINEERING, DAC, 17 MARCH 1978

80-GEN-23795 A

PROJECTED ACCESS HOLE SIZE

(WING ASSEMBLY AND INSPECTION)
MALE TORSO SIZES: YEAR 1990

SHOULDER BREADTH (IN.)	1968	1990	PERCENT INCREASE
95 PERCENTILE	20.30	21.2	4.4
50 PERCENTILE	18.70	19.4	3.7
5 PERCENTILE	16.40	17.5	6.7

ASSUME THICKNESS OF UPPER TORSO (CHEST) INCREASES AT SAME RATE AS SHOULDER BREADTH:

CHEST THICKNESS (IN.)	1968	1990	PERCENT INCREASE
95 PERCENTILE	10.7	11.2	4.4
50 PERCENTILE	9.0	9.33	3.7
5 PERCENTILE	7.7	8.22	6.5

MAXIMUM SIZE HOLE COMPATIBLE WITH EXISTING STRUCTURE = 1990 (95 PERCENTILE)

SHOULDER, 21.20 + 0.3 INCHES (LIGHT CLOTHING) = 21.50 INCHES

CHEST, 11.20 + 0.3 INCHES (LIGHT CLOTHING) = 11.50 INCHES

ACCESS HOLE SIZE CHOSEN = 21.50 BY 11.50 ELLIPSE

REF: MALE AND FEMALE GROWTH RATES 1940-1990, DAC HUMAN FACTORS, 17 MARCH 1978

ACCESS HOLE DC-10 WING (1968) 18.62 BY 9.38 ELLIPTICAL

80-GEN-23794

AST

WING ACCESS PANEL ASSEMBLY

SPF/DB SANDWICH ELONGATED TRIANGLE OR RECTANGULAR PATTERN

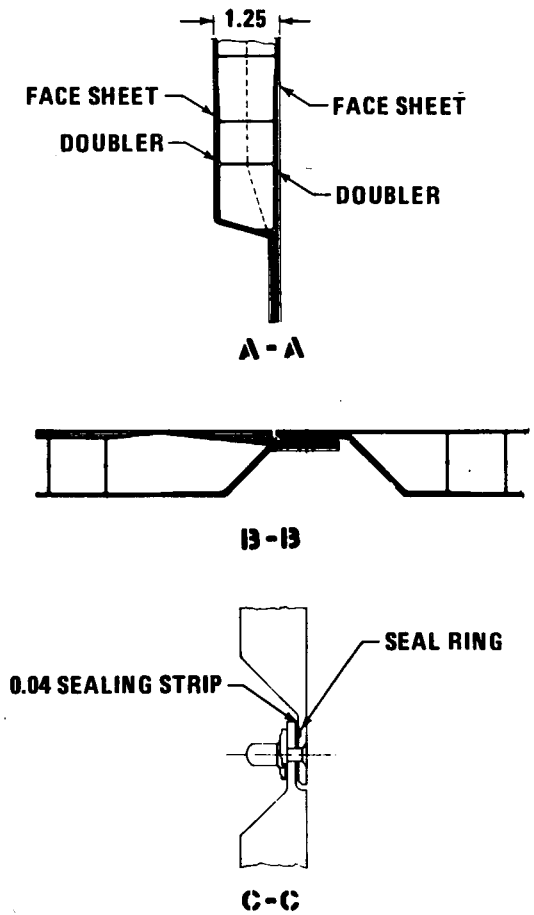

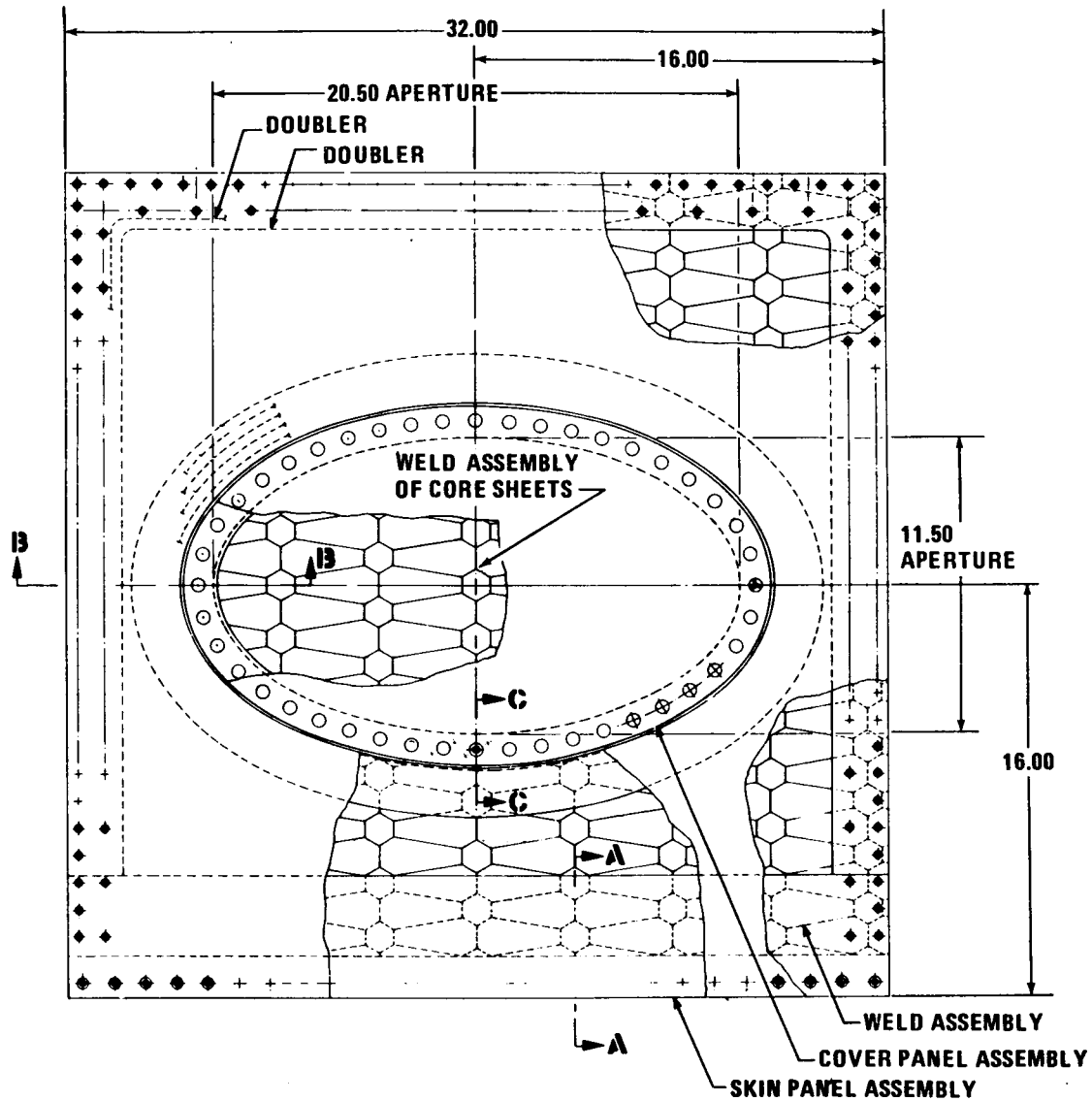

80-GEN-23793B

WING ACCESS PANEL ASSEMBLY
SPF/DB SANDWICH

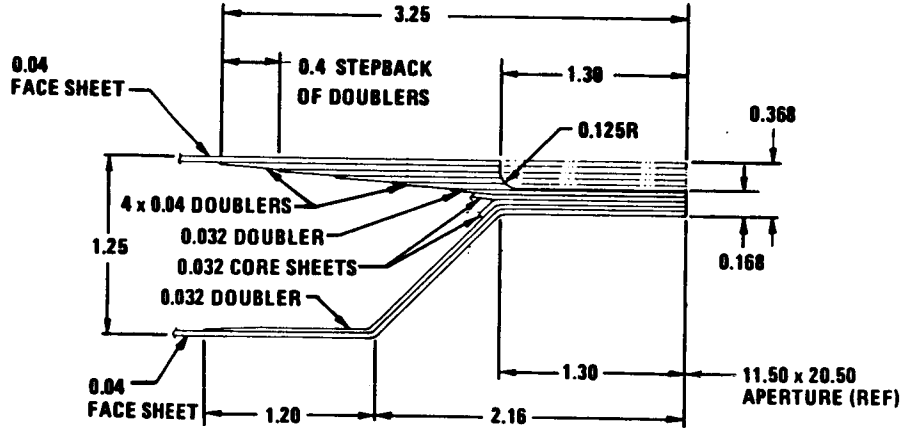

DETAIL OF APERTURE DOUBLERS AND PAN
ENLARGEMENT OF SECTION B-B

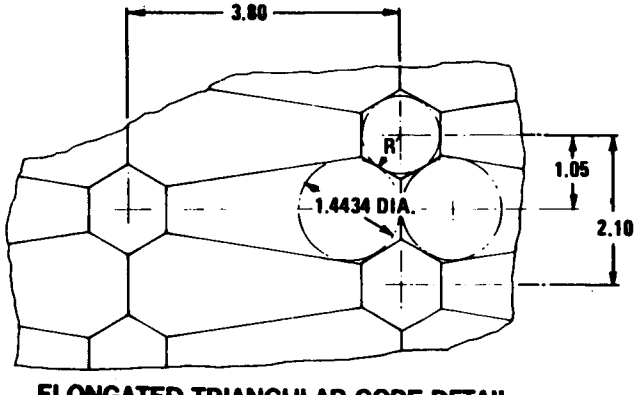

ELONGATED TRIANGULAR CORE DETAIL

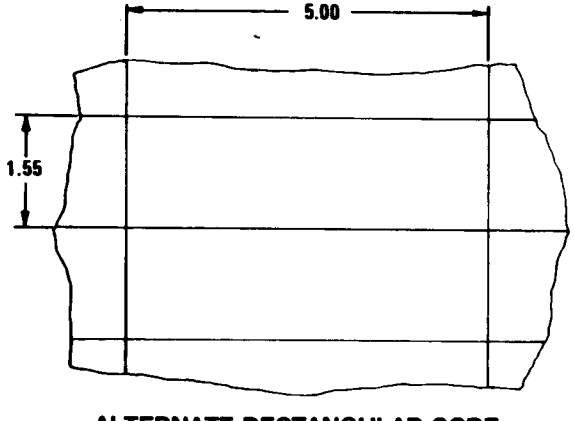

ALTERNATE RECTANGULAR CORE

80-GEN-23797A

COMPRESSION TEST PANEL — WING SPF/DB RECTANGULAR CORE SANDWICH

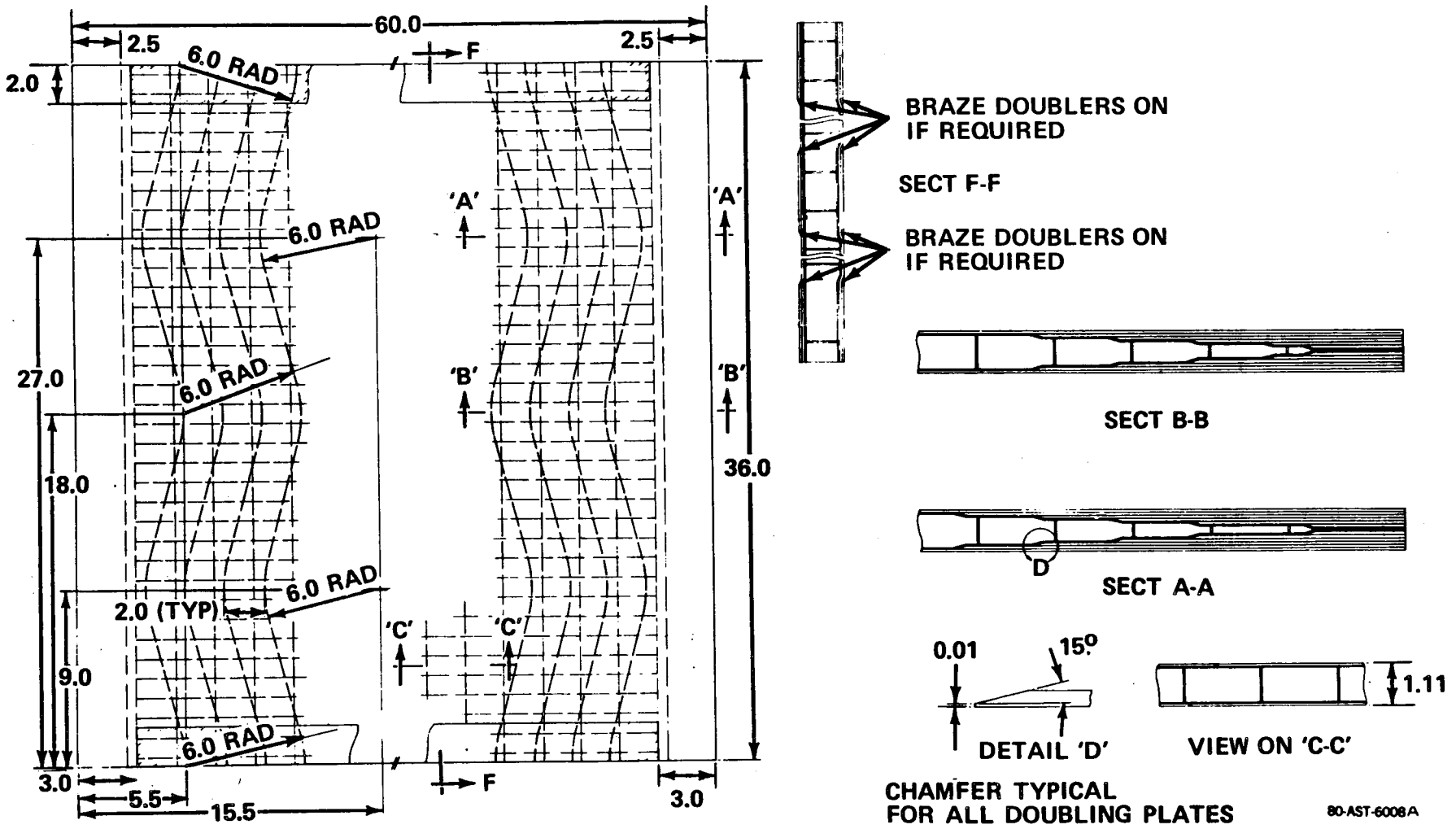

MCDONNELL DOUGLAS CORPORATION

MDC DEVELOPMENT

SECTION OF FILAMENT-REINFORCED PANEL

SPF/DB SANDWICH (RECTANGULAR PATTERN)

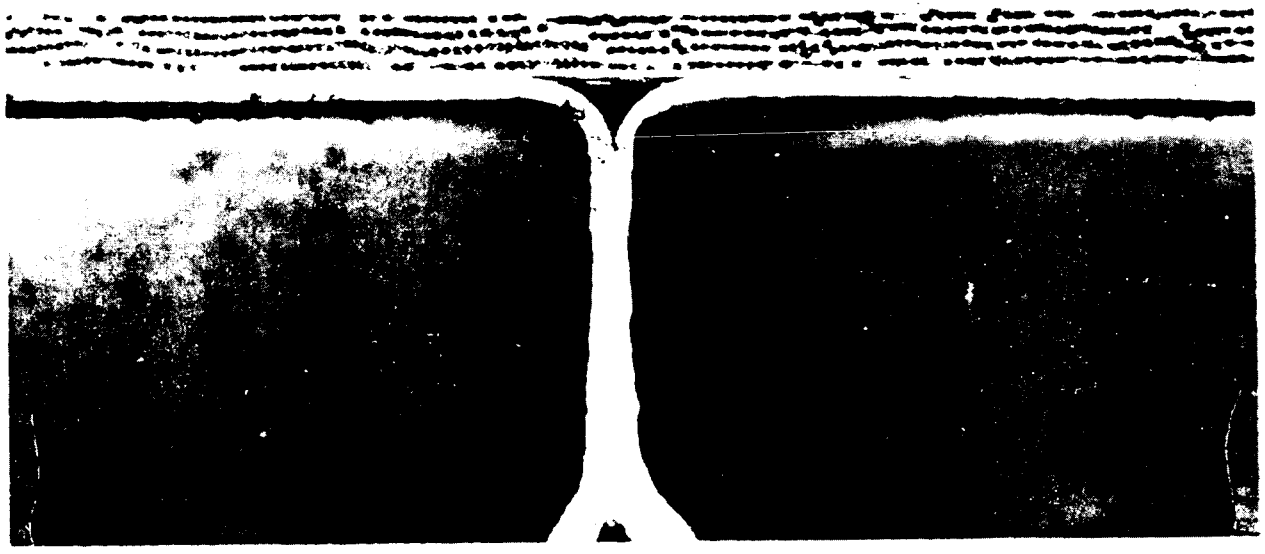

80-GEN-22473A

MCDONNELL DOUGLAS CORPORATION

MDC DEVELOPMENT

FILAMENT-REINFORCED PANEL

SPF/DB SANDWICH (RECTANGULAR PATTERN)

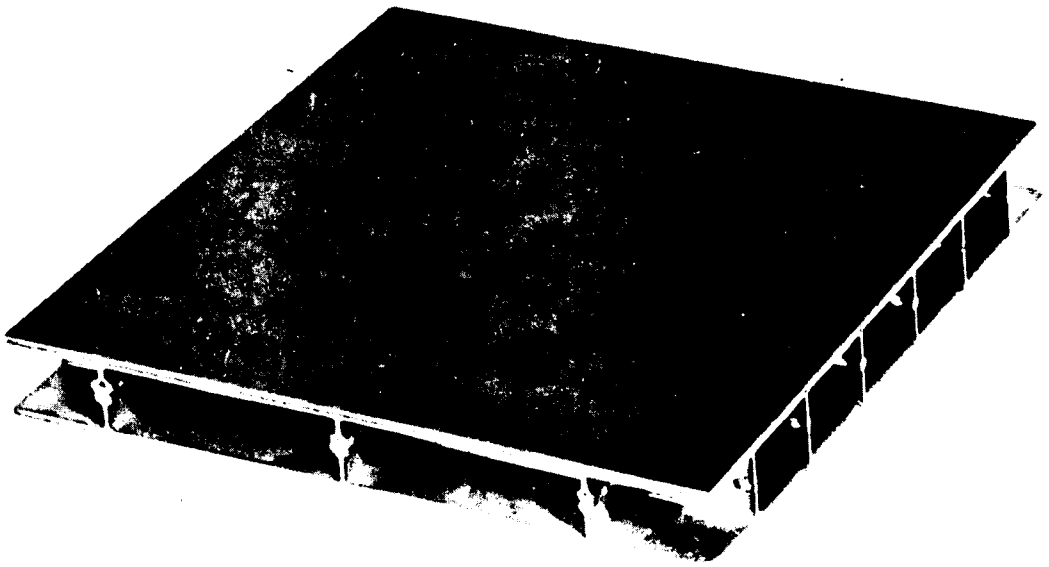

80-GEN-22474A

MCDONNELL DOUGLAS CORPORATION

MDC DEVELOPMENT

WING TRAILING-EDGE SECTION

SPF/DB SANDWICH (RECTANGULAR PATTERN)

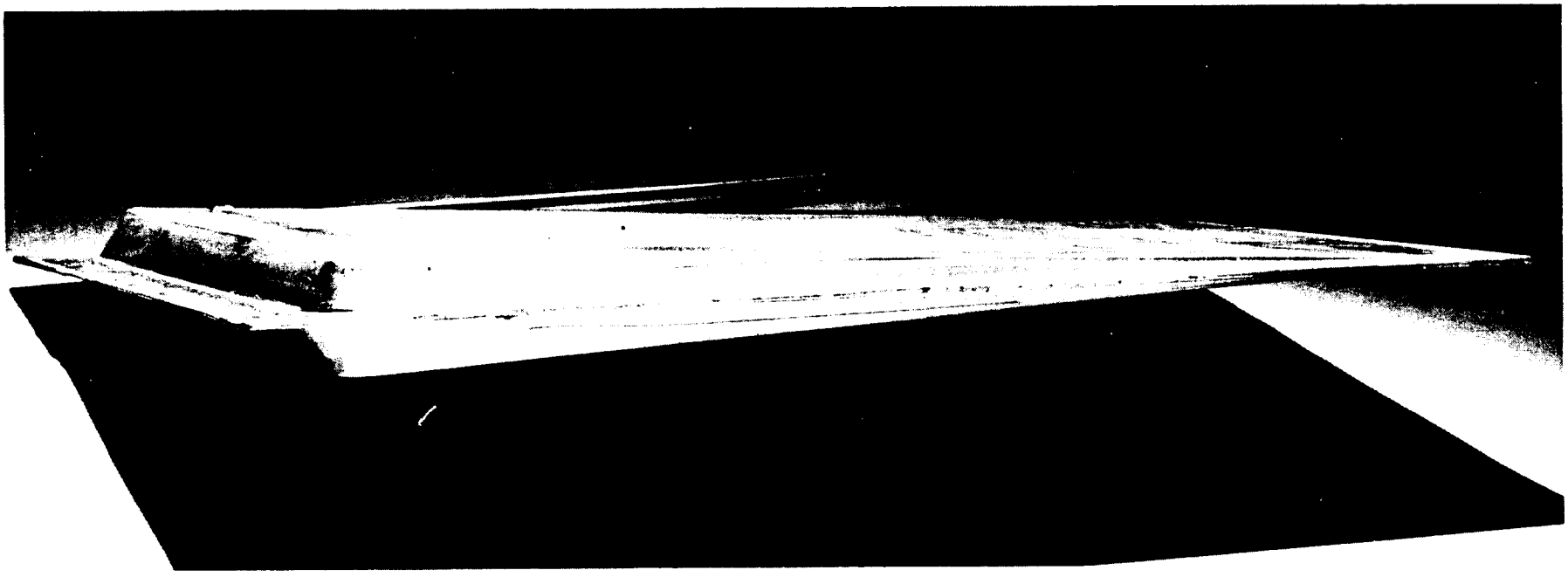

80-AST-6375

MCDONNELL DOUGLAS CORPORATION

MDC DEVELOPMENT

T-38 MAIN LANDING GEAR DOOR

SPF/DB SANDWICH (RECTANGULAR PATTERN)

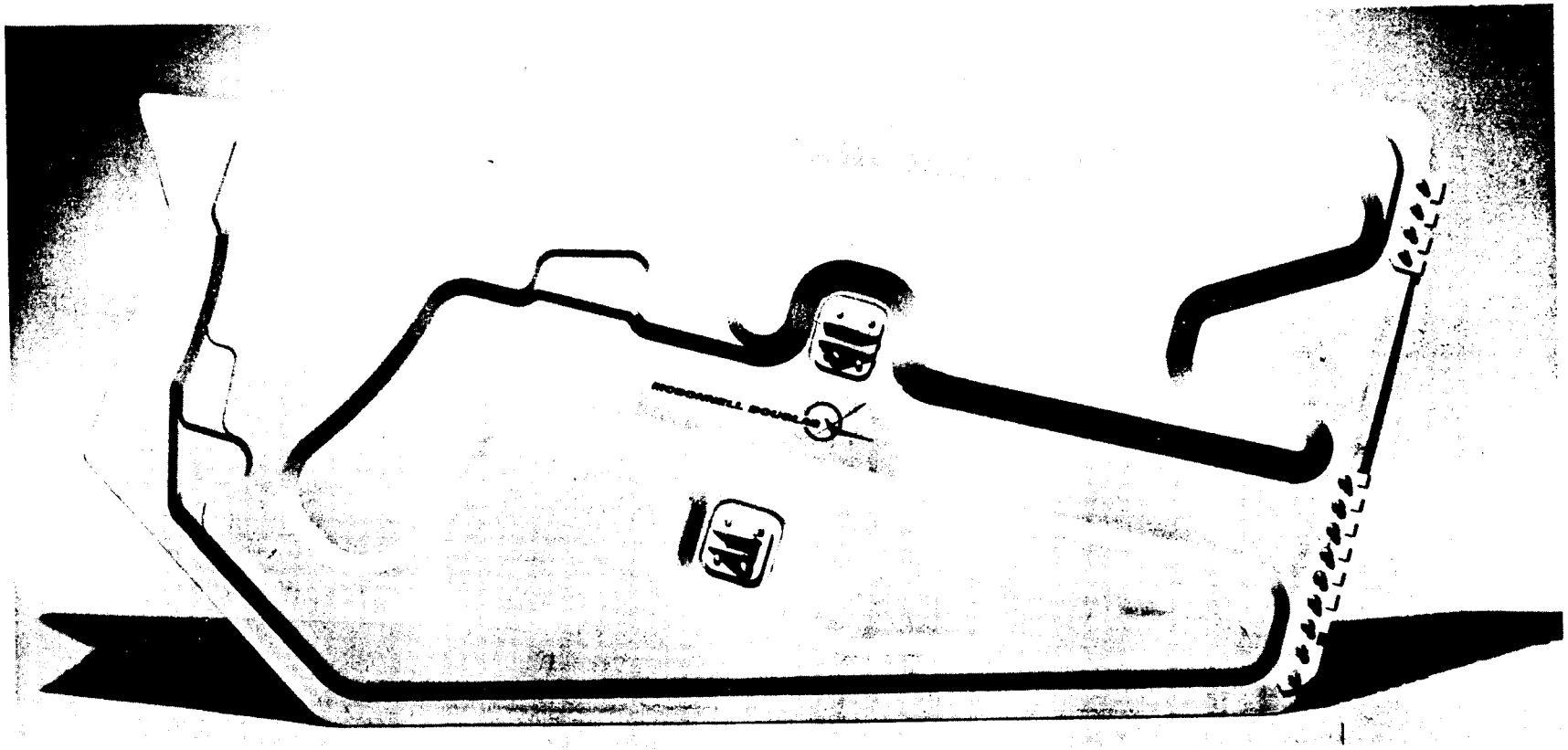

80-GEN-24662A

SUMMARY

SMALL-ELEMENT FABRICATION AND TESTING OF TITANIUM SPF/DB SANDWICH USING THE MDC PROCESS HAS BEEN DEMONSTRATED

FUSELAGE AND WING DESIGN CONCEPT STUDIES SHOW THE NEED FOR LARGE PANELS AND EFFICIENT EDGE MEMBERS

A REPRESENTATIVE SPF/DB SANDWICH WING PANEL WITH ACCESS DOOR, EDGE DOUBLERS, AND ATTACHMENTS IS BEING DEVELOPED (DESIGN, FABRICATION, AND TEST)

SPINOFFS ARE:

- FILAMENT-REINFORCED PANEL
- WING TRAILING EDGE
- T-38 MAIN LANDING GEAR DOOR SPF/DB SANDWICH

RECOMMEND IMMEDIATE INITIATION OF LARGE STRUCTURAL ASSEMBLIES FOR WEIGHT AND COST VALIDATION

80-AST-6446A