# National Space Transportation System Reference

Volume 1

Systems and Facilities

June 1988

LIBRARY
National Aeronautics and Space Administration
Washington, D.C.

NASA

## CONTENTS


| | Page |
|---|---|
| **SPACE TRANSPORTATION SYSTEM** | 1 |
| Space Shuttle Program | 1 |
| Space Shuttle Requirements | 1 |
| Launch Sites | 4 |
| Background and Status | 5 |
| Mission Profile | 8 |
| Aborts | 13 |
| Return to Launch Site | 14 |
| Transatlantic Landing Abort | 15 |
| Abort to Orbit | 16 |
| Abort Once Around | 16 |
| Contingency Abort | 16 |
| Orbiter Ground Turnaround | 16 |
| **ORBITER MANUFACTURING AND ASSEMBLY** | 25 |
| **OPERATIONAL IMPROVEMENTS AND MODIFICATIONS** | 27 |
| Orbiter | 27 |
| Orbital Maneuvering System/Reaction Control System AC-Motor-Operated Valves | 27 |
| Primary RCS Thrusters | 27 |
| Fuel Cell Power Plants | 27 |
| Auxiliary Power Units | 27 |
| Main Landing Gear | 28 |
| Nose Wheel Steering | 29 |
| Thermal Protection System | 29 |
| Wing Modification | 29 |
| Midfuselage Modifications | 30 |
| General-Purpose Computers | 30 |
| Inertial Measurement Units | 30 |
| Crew Escape Systems | 30 |
| Emergency Egress Slide | 31 |
| 17-Inch Orbiter/External Tank Disconnects | 31 |
| Space Shuttle Main Engine Margin Improvement Program | 31 |
| SSME Flight Program | 33 |
| Solid Rocket Motor Redesign | 33 |
| Original Versus Redesigned Field Joint | 33a |
| Original Versus Redesigned SRM Case-to-Nozzle Joint | 33b |
| Nozzle | 33b |
| Factory Joint | 33c |
| Propellant | 33d |
| Ignition System | 33d |
| Ground Support Equipment | 33d |
| Design Analysis Summary | 33d |
| Verification/Certification Test | 33e |
| Non-destructuve Evaluation | 33g |
| Contingency Planning | 33h |
| Independent Oversight | 33h |
| **SOLID ROCKET BOOSTERS** | 35 |
| Hold-Down Posts | 40 |
| SRB Ignition | 41 |
| Electrical Power Distribution | 42 |
| Hydraulic Power Units | 42 |
| Thrust Vector Control | 46 |
| SRB Rate Gyro Assemblies | 48 |
| SRB Separation | 48 |
| Range Safety System | 48 |
| SRB Descent and Recovery | 55 |
| **EXTERNAL TANK** | 59 |
| Liquid Oxygen Tank | 60 |
| Intertank | 61 |
| Liquid Hydrogen Tank | 61 |
| Thermal Protection System | 62 |
| ET Hardware | 62 |
| Range Safety System | 64 |
| **SPACE SHUTTLE COORDINATE SYSTEM** | 65 |

| | Page |
|---|---|
| **ORBITER STRUCTURE** | 67 |
| Forward Fuselage | 69 |
| Crew Compartment | 71 |
| Airlock | 79 |
| Forward Fuselage and Crew Compartment Windows | 86 |
| Wing | 88 |
| Midfuselage | 92 |
| Payload Bay Doors | 94 |
| Aft Fuselage | 105 |
| Orbital Maneuvering System/Reaction Control System Pods | 109 |
| Body Flap | 109 |
| Vertical Tail | 111 |
| **ORBITER PASSIVE THERMAL CONTROL** | 115 |
| **ORBITER PURGE, VENT AND DRAIN SYSTEM** | 117 |
| **ORBITER FLIGHT CREW ESCAPE SYSTEMS** | 123 |
| Inflight Crew Escape System | 123 |
| Emergency Egress Slide | 132 |
| Secondary Emergency Egress | 132 |
| **CREW EQUIPMENT** | 137 |
| Food System and Dining | 137 |
| Shuttle Orbiter Medical System | 153 |
| Operational Bioinstrumentation System | 157 |
| Radiation Equipment | 158 |
| Crew Apparel | 162 |
| Sleeping Provisions | 162 |
| Personal Hygiene Provisions | 169 |
| Housekeeping | 172 |
| Sighting Aids | 173 |
| Microcassette Recorder | 177 |
| Photographic Equipment | 177 |
| Wicket Tabs | 178 |
| Reach Aid | 178 |
| Restraints and Mobility Aids | 179 |
| Crew Equipment Stowage | 182 |
| Exercise Equipment | 184 |
| Sound Level Meter | 186 |
| Air Sampling System | 186 |
| **SPACE SHUTTLE ORBITER SYSTEMS** | 187 |
| Thermal Protection System | 187 |
| Reinforced Carbon-Carbon | 188 |
| High-Temperature Reusable Surface Insulation Tiles | 190 |
| Fibrous Refractory Composite Insulation Tiles | 194 |
| Low-Temperature Reusable Surface Insulation Tiles | 194 |
| Advanced Flexible Reusable Surface Insulation Blankets | 195 |
| Felt Reusable Surface Insulation | 195 |
| Thermal Barriers | 195 |
| Tile Identification | 197 |
| Flags and Letters | 197 |
| Rewaterproofing | 197 |
| Main Propulsion System | 199 |
| Orbiter Main Propulsion System Helium Subsystem | 205 |
| Main Propulsion System Propellant Management Subsystem | 210 |
| External Tank | 218 |
| Space Shuttle Main Engines | 221 |
| Pogo Suppression System | 224 |
| Space Shuttle Main Engine Controllers | 225 |
| Malfunction Detection | 231 |
| Orbiter Hydraulic Systems | 233 |
| Thrust Vector Control | 236 |
| Helium, Oxidizer and Fuel Flow Sequence | 238 |
| Orbiter/External Tank Separation System | 253 |
| 17-Inch Disconnect | 253 |
| External Tank Separation System | 253 |
| Orbiter Umbilical Doors | 260 |
| Orbital Maneuvering System | 265 |

Page

Helium Pressurization ..... 267
Propellant Storage and Distribution ..... 272
Engine Bipropellant Valve Assembly ..... 278
Engine Thrust Chamber Assembly ..... 278
OMS Thrusting Sequence ..... 278
Engine Thrust Vector Control System ..... 279
Thermal Control ..... 281
OMS-RCS Interconnect ..... 282
OMS-to-RCS Gauging Sequence ..... 282
Abort Control Sequences ..... 285
OMS Engine Fault Detection and Identification ... 286
OMS Gimbal Actuator FDI ..... 287
Reaction Control System ..... 289
Pressurization System ..... 291
Propellant System ..... 297
RCS Quantity Monitor ..... 297
Engine Propellant Feed ..... 298
RCS Engines ..... 303
Heaters ..... 303
RCS Jet Selection ..... 304
Electrical Power System ..... 313
Power Reactant Storage and Distribution ..... 315
Fuel Cell Power Plants ..... 325
Electrical Power Distribution and Control ..... 336
Environmental Control and Life Support System ..... 351
Crew Compartment Cabin Pressurization ..... 354
Cabin Air Revitalization ..... 363
Water Coolant Loop System ..... 369
Active Thermal Control System ..... 376
Supply and Waste Water ..... 389
Waste Collection System ..... 399
Waste Water Tank ..... 410
Airlock Support ..... 411
Crew Altitude Protection System ..... 431
Radioisotope Thermoelectric Generator Cooling and Gaseous Nitrogen Purge for Payloads ..... 431
Auxiliary Power Units ..... 435

Page

Water Spray Boilers ..... 453
Hydraulic System ..... 461
Landing Gear System ..... 479
Main Landing Gear Brakes ..... 491
Nose Wheel Steering ..... 499
Caution and Warning System ..... 505
Orbiter Lighting System ..... 515
Panel Lighting ..... 519
Instrument Lighting ..... 521
Numeric Lighting ..... 521
Exterior Floodlights ..... 522
Smoke Detection and Fire Suppression ..... 525
Payload Deployment and Retrieval System ..... 533
Payload Retention Mechanisms ..... 551
Communications ..... 557
Space Flight Tracking and Data Network ..... 557
Tracking and Data Relay Satellite System ..... 558
Orbiter Communications ..... 570
S-Band System ..... 573
Ku-Band System ..... 582
Ku-Band Rendezvous Radar ..... 588
Payload Communication System ..... 591
Ultrahigh Frequency System ..... 594
Audio System ..... 598
Instrumentation ..... 611
Pulse Code Modulation Master Unit ..... 615
Network Signal Processor ..... 615
Ground Command Interface Logic ..... 616
General-Purpose Computer and Communication Interface ..... 617
Master Timing Unit ..... 617
Operational Recorders ..... 617
Payload Recorder ..... 620
Teleprinter ..... 622
Text and Graphics System ..... 622
Closed-Circuit Television System ..... 622

Page

Orbiter Experiments Support System for OV-102 (Columbia) . . . 628
Shuttle Infrared Leeside Temperature Sensing . . 631
Shuttle Entry Air Data System . . . 632
Shuttle Upper Atmosphere Mass Spectrometer . 632
Aerodynamic Coefficient Identification Package . . . 634
High-Resolution Accelerometer Package . . . 638
Modular Auxiliary Data System . . . 639
Avionics Systems . . . 645
Data Processing System . . . 645
Software . . . 647
GPCs . . . 650
Mass Memory Units . . . 656
Multifunction CRT Display System . . . 657
Master Timing Unit . . . 660
Computer Data Bus Network . . . 664
Multiplexers/Demultiplexers . . . 670
Master Events Controllers . . . 676
Data Bus Isolation Amplifiers . . . 676
Backup Flight Control . . . 676
Guidance, Navigation and Control . . . 681
Flight Control System Hardware . . . 685
Navigation Aids . . . 685
Inertial Measurement Units . . . 685
Star Trackers . . . 695
Crewman Optical Alignment Sight . . . 701
TACAN . . . 705
Air Data System . . . 711
Microwave Scan Beam Landing System . . . 719
Radar Altimeter . . . 725
Accelerometer Assemblies . . . 728
Orbiter Rate Gyro Assemblies . . . 731
Solid Rocket Booster Rate Gyro Assemblies . . . 733
Rotational Hand Controller . . . 734
Translational Hand Controller . . . 740
Control Stick Steering Push Button Light Indicators . . . 742

Page

Rudder Pedals . . . 743
Speed Brake/Thrust Controller . . . 745
Body Flap Switch . . . 748
RHC/Panel Enable/Inhibit . . . 750
Trim Switches . . . 750
Aerosurface Servoamplifiers . . . 750
Digital Autopilot . . . 759
Rendezvous Thrusting Maneuvers . . . 767
Component Locations . . . 768
Dedicated Display Systems . . . 773
Attitude Director Indicator . . . 776
Horizontal Situation Indicator . . . 778
Alpha Mach Indicator . . . 784
Altitude/Vertical Velocity Indicator . . . 785
Surface Position Indicator . . . 786
Flight Control System Push Button Indicators . 788
Reaction Control System Command Lights . . . 789
G-Meter . . . 789
Head-up Display . . . 789

**MISSION EVENTS SUMMARY** . . . 793
Terminal Count . . . 793
First Stage . . . 798
Second Stage . . . 802
Ascent Abort Modes . . . 804
Return to Launch Site . . . 806
Transatlantic Landing . . . 808
Abort to Orbit . . . 808
Abort Once Around . . . 809
Contingency Abort . . . 810
Manual Thrust Vector Control . . . 810
Orbit Insertion . . . 810
On Orbit . . . 811
On-Orbit Checkout . . . 814
Deorbit . . . 814
Entry . . . 817

**DISPLAYS AND CONTROLS** . . . 833

Page

**SPACE TRANSPORTATION SYSTEM PAYLOADS** .... 837
Payload Assist Module .... 837
Inertial Upper Stage .... 841
Airborne Support Equipment .... 842
IUS Structure .... 842
Equipment Support Section .... 844
IUS Avionics Subsystem .... 844
IUS Solid Rocket Motors .... 846
IUS Reaction Control System .... 846
IUS-to-Spacecraft Interfaces .... 848
Flight Sequence .... 848
Spacelab .... 851
Pressurized Module, or Laboratory .... 851
Instrument Pointing Subsystem .... 854
Pallet Only .... 856
Electrical Power .... 857
Command and Data Management System .... 865
Mass Memory Unit .... 865
Data Display Systems .... 868
Closed-Circuit Television .... 869
Pressurized Module Intercom .... 871
Pressurized Module Environmental Control Subsystem and Life Support .... 873
Pressurized Module/Tunnel Air Loop .... 874
Pressurized Module Active Thermal Control Subsystem .... 875
Pressurized Module Caution and Warning .... 875
Pressurized Module Emergency Conditions .... 875
Pallet-Only Environmental Control Subsystem .... 876
Getaway Special Program .... 877

**NASA CENTERS AND RESPONSIBILITIES** .... 879
John F. Kennedy Space Center .... 879
Orbiter Processing Facility .... 881
Orbiter Modification and Refurbishment Facility .... 886
Logistics Facility .... 886
Vehicle Assembly Building .... 886
External Tank Processing .... 887

Page

Space Shuttle Main Engine Workshop .... 888
Solid Rocket Booster Processing .... 889
Hypergolic Maintenance and Checkout Facility .... 891
Orbiter Mating .... 891
Space Shuttle Vehicle Testing .... 891
Mobile Launcher Platform .... 892
Crawler-Transporter .... 894
Launch Complexes 39-A and 39-B .... 895
Fixed Service Structure .... 896
Rotating Service Structure .... 899
Sound Suppression Water System .... 900
Space Shuttle Main Engine Hydrogen Burnoff System .... 901
Flame Deflector System .... 901
Propellant Storage and Distribution .... 902
Payload Processing .... 903
Processing Facilities at Cape Canaveral Air Force Station .... 906
Radioisotope Thermoelectric Generator Storage Building .... 907
Vertical Processing Facility .... 907
Payload Hazardous Servicing Facility .... 907
Payload Changeout Room .... 908
Vertical Processing/Integration Operations .... 909
Horizontal Cargo Processing Facilities .... 910
Spacelab Assembly/Checkout Area .... 912
Spacelab Processing/Integration Operations .... 912
Small, Self-Contained Payload (Getaway Special) Processing .... 913
Life Sciences Payloads .... 913
Department of Defense Payloads .... 914
Launch Control Center .... 914
Launch Processing System .... 914
Launch Pad Operations After Rollout .... 915
Flight Readiness Firing and External Tank Tanking Tests .... 916
Terminal Countdown Demonstration Test .... 916
Prelaunch Propellant Load .... 916

| | Page |
|---|---|
| Final Prelaunch Preparations | 917 |
| Launch Countdown | 917 |
| Solid Rocket Booster Retrieval, Disassembly and Refurbishment | 917 |
| Solid Rocket Booster Disassembly Facility Operations | 919 |
| Parachute Refurbishment Facility | 920 |
| Shuttle Landing Facility | 920 |
| Towing Tractors | 924 |
| Lyndon B. Johnson Space Center | 925 |
| Mission Control Center | 927 |
| Flight Control Rooms | 927 |
| Multipurpose Support Room | 929 |
| Payload Operations Control Centers | 929 |
| Communications | 929 |
| Mission Control Support Areas | 930 |
| Flight Crew Complement and Crew Training | 931 |
| Training Facilities | 932 |
| Test Facilities | 933 |
| Off-Site Contributors | 934 |
| George C. Marshall Space Flight Center | 937 |
| Payload Operations Control Center | 938 |
| Spacelab Training Facilities | 939 |
| National Space Technology Laboratories | 941 |
| Goddard Space Flight Center | 943 |
| **ORBITER APPROACH AND LANDING TEST PROGRAM** | 947 |
| **SPACE SHUTTLE FLIGHT TEST PROGRAM** | 949 |
| **SHUTTLE CARRIER AIRCRAFT** | 949 |
| **SPACE SHUTTLE CHRONOLOGY** | 951 |
| **SPACE TRANSPORTATION SYSTEM CONTRACTORS** | 971 |
| **ACRONYMS AND ABBREVIATIONS** | 991 |
| **METRIC CONVERSION TABLE** | 999 |
| **NEWSROOM REFERENCES** | 1001 |

# SPACE TRANSPORTATION SYSTEM

## SPACE SHUTTLE PROGRAM

The space shuttle is developed by the National Aeronautics and Space Administration. NASA coordinates and manages the space transportation system (NASA's name for the overall shuttle program), including intergovernmental agency requirements and international and joint projects. NASA also oversees the launch and space flight requirements for civilian and commercial use.

The space shuttle system consists of four primary elements: an orbiter spacecraft, two solid rocket boosters, an external tank to house fuel and oxidizer and three space shuttle main engines.

The orbiter is built by Rockwell International's Space Transportation Systems Division, Downey, Calif., which also has responsibility for the integration of the overall space transportation system. Both orbiter and integration contracts are under the direction of NASA's Johnson Space Center in Houston, Texas.

The solid rocket booster motors are built by the Wasatch Division of Morton Thiokol Corporation, Brigham City, Utah, and are assembled, checked out and refurbished by United Space Booster Inc. Booster Production Company, Kennedy Space Center, Cape Canaveral, Fla. The external tank is built by Martin Marietta Corporation at its Michoud facility, New Orleans, La.; and the space shuttle main engines are built by Rockwell's Rocketdyne Division, Canoga Park, Calif. These contracts are under the direction of NASA's George C. Marshall Space Flight Center in Huntsville, Ala.

## SPACE SHUTTLE REQUIREMENTS

The shuttle will transport cargo into near Earth orbit 100 to 217 nautical miles (115 to 250 statute miles) above the Earth. This cargo (called payload) is carried in a bay 15 feet in diameter and 60 feet long.

Major system requirements are that the orbiter and the two solid rocket boosters be reusable.

Other features of the shuttle:

— The orbiter has carried a flight crew of up to eight persons. A total of 10 persons could be carried under emergency conditions.

— The basic mission is seven days in space.

— The crew compartment has a shirt-sleeve environment, and the acceleration load is never greater than 3 g's.

— In its return to Earth, the orbiter has a cross-range maneuvering capability of 1,100 nautical miles (1,265 statute miles).

The space shuttle is launched in an upright position, with thrust provided by the three space shuttle engines and the two solid rocket boosters. After about two minutes, the two boosters are spent and are separated from the external tank. They fall into the ocean at predetermined points and are recovered for reuse.

The space shuttle main engines continue firing for about eight minutes. They shut down just before the craft is inserted into orbit. The external tank is then separated from the orbiter. It follows a ballistic trajectory into a remote area of the ocean but is not recovered.

There are 38 primary reaction control system engines and six vernier reaction control system engines located on the orbiter. The first utilization of selected primary reaction control system engines occurs at orbiter/external tank separation. The selected primary reaction control system engines are used in the separation sequence to provide an attitude hold for separation. Then they move the orbiter away from the external tank to ensure orbiter clearance from the arc of the rotating external tank. Finally, they return to an attitude hold prior to the initiation of the firing of the orbital maneuvering system engines to place the orbiter into orbit.

The primary and/or vernier reaction control system engines

| | Overall Shuttle | Orbiter |
|---|---|---|
| Length | 184.2 feet | 122.17 feet |
| Height | 76.6 feet | 56.67 feet |
| Wingspan | – | 78.06 feet |
| Approximate weight | | |
| • Gross lift-off, which will vary depending on payload weight and onboard consumables | 4.5 million pounds | – |
| • Nominal end of mission landing with payload, which will vary depending on payload return weight | – | 230,000 pounds |
| Thrust (sea level) | | |
| • Solid rocket boosters | 3,300,000 pounds of thrust each in vacuum | – |
| • Orbiter main engines | – | 393,800 pounds of thrust each at sea level at 104 percent |
| Cargo bay | | |
| • Length | – | 60 feet |
| • Diameter | – | 15 feet |

are used normally on orbit to provide attitude pitch, roll and yaw maneuvers as well as translation maneuvers.

The two orbital maneuvering system engines are used to place the orbiter on orbit, for major velocity maneuvers on orbit and to slow the orbiter for re-entry, called the deorbit maneuver. Normally, two orbital maneuvering system engine thrusting sequences are used to place the orbiter on orbit, and only one thrusting sequence is used for deorbit.

The orbiter's velocity on orbit is approximately 25,405 feet per second. The deorbit maneuver decreases this velocity approximately 300 feet per second for re-entry.

In some missions, only one orbital maneuvering system thrusting sequence is used to place the orbiter on orbit. This is referred to as direct insertion. Direct insertion is a technique used in some missions where there are high-performance requirements, such as a heavy payload or a high orbital altitude. This technique utilizes the space shuttle main engines to achieve the desired apogee (high point in an orbit) altitude, thus conserving orbital maneuvering system propellants. Following jettison of the external tank, only one orbital maneuvering system thrusting sequence is required to establish the desired orbit altitude.

For deorbit, the orbiter is rotated tailfirst in the direction of the velocity by the primary reaction control system engines. Then the orbital maneuvering system engines are used to decrease the orbiter's velocity.

During the initial entry sequence, selected primary reaction control system engines are used to control the orbiter's attitude (pitch, roll and yaw). As aerodynamic pressure builds up, the orbiter flight control surfaces become active and the primary reaction control system engines are inhibited.

During entry, the thermal protection system covering the entire orbiter provides the protection for the orbiter to survive the extremely high temperatures encountered during entry. The thermal protection system is reusable (it does not burn off or ablate during entry).

The unpowered orbiter glides to Earth and lands on a runway like an airplane. Nominal touchdown speed varies from 184 to 196 knots (213 to 226 miles per hour).

The main landing gear wheels have a braking system for stopping the orbiter on the runway, and the nose wheel is steerable, again similar to a conventional airplane.

There are two launch sites for the space shuttle. The Kennedy Space Center in Florida is used for launches to place the orbiter in equatorial orbits (around the equator), and the Vandenberg Air Force Base launch site in California will be used for launches that place the orbiter in polar orbit missions.

Landing sites are located at the Kennedy Space Center and Vandenberg Air Force Base. Additional landing sites are provided at Edwards Air Force Base in California and White Sands, N.M.

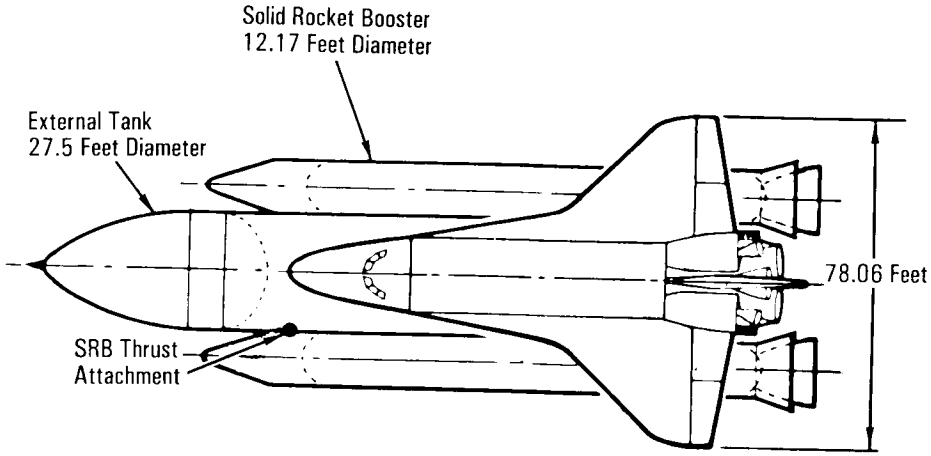


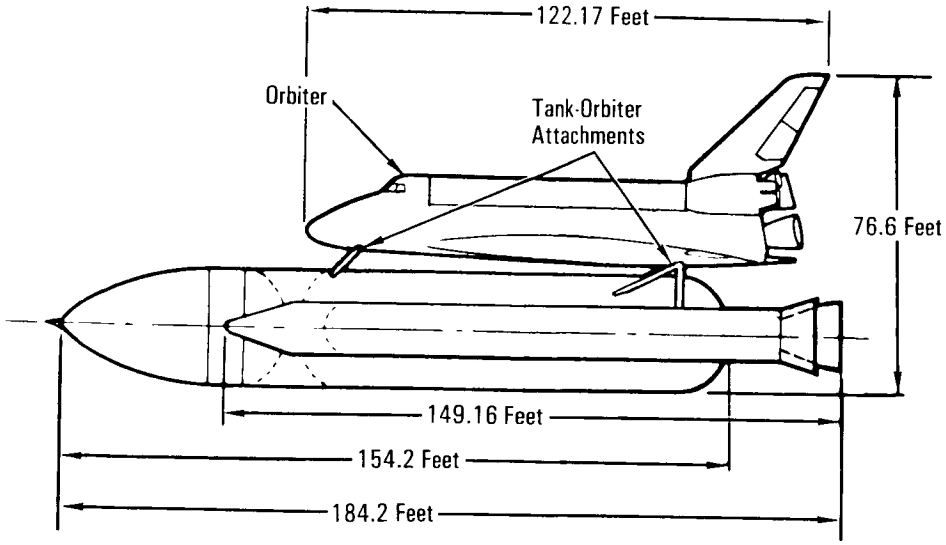


| Orbiter Weight in Pounds (Approximate) | | |
|---|---|---|
| Orbiter Vehicle (OV) | Total Dry Weight With Three Space Shuttle Main Engines | Total Dry Weight Without Three Space Shuttle Main Engines |
| OV-102 Columbia | 178,289 | 157,289 |
| OV-103 Discovery | 171,419 | 151,419 |
| OV-104 Atlantis | 171,205 | 151,205 |
| Solid Rocket Booster Weights in Pounds (Approximate) | | |
| 1,300,000, Each at Launch (Propellant Weight 1,100,000, Each). Inert Weight 192,000, Each. | | |
| External Tank Weight in Pounds (Approximate) | | |
| 1,655,600 With Propellants. Inert Weight 66,000. | | |

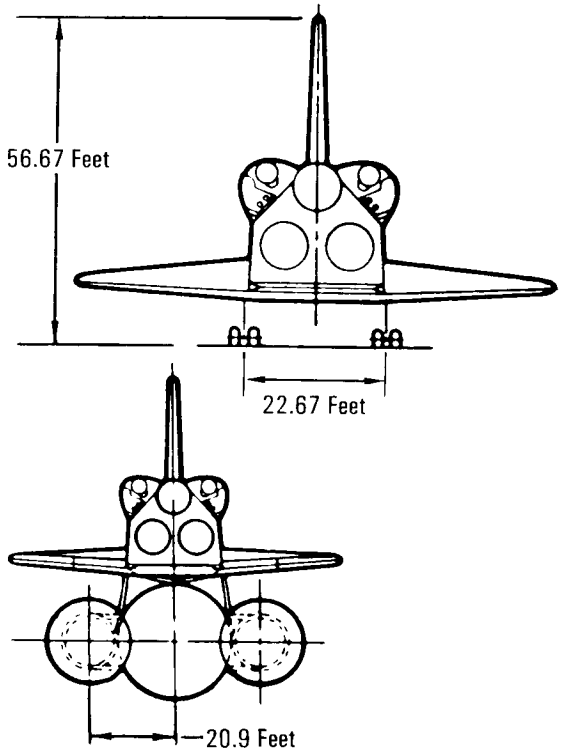


*Space Shuttle Statistics*

Contingency landing sites are also provided in the event the orbiter must return to Earth in an emergency.

## LAUNCH SITES

Space shuttles destined for equatorial orbits are launched from the Kennedy Space Center, and those requiring polar orbital planes will be launched from Vandenberg Air Force Base.

Orbital mechanics and the complexities of mission requirements, plus safety and the possibility of infringement on foreign air and land space, prohibit polar orbit launches from the Kennedy Space Center.

Kennedy Space Center launches have an allowable path no less than 35 degrees northeast and no greater than 120 degrees southeast. These are azimuth degree readings based on due east from Kennedy Space Center as 90 degrees.

A 35-degree azimuth launch places the spacecraft in an orbital inclination of 57 degrees. This means the spacecraft in its orbital trajectories around the Earth will never exceed an Earth latitude higher or lower than 57 degrees north or south of the equator.

A launch path from the Kennedy Space Center at an azimuth of 120 degrees will place the spacecraft in an orbital inclination of 39 degrees (it will be above or below 39 degrees north or south of the equator).

These two azimuths—35 and 120 degrees—represent the launch limits from the Kennedy Space Center. Any azimuth angles further north or south would launch a spacecraft over a habitable land mass, adversely affect safety provisions for abort or vehicle separation conditions, or present the undesirable possibility that the solid rocket boosters or external tank could land on foreign land or sea space.

Launches from the Vandenberg Air Force Base have an allowable launch path suitable for polar insertions south, southwest and southeast.

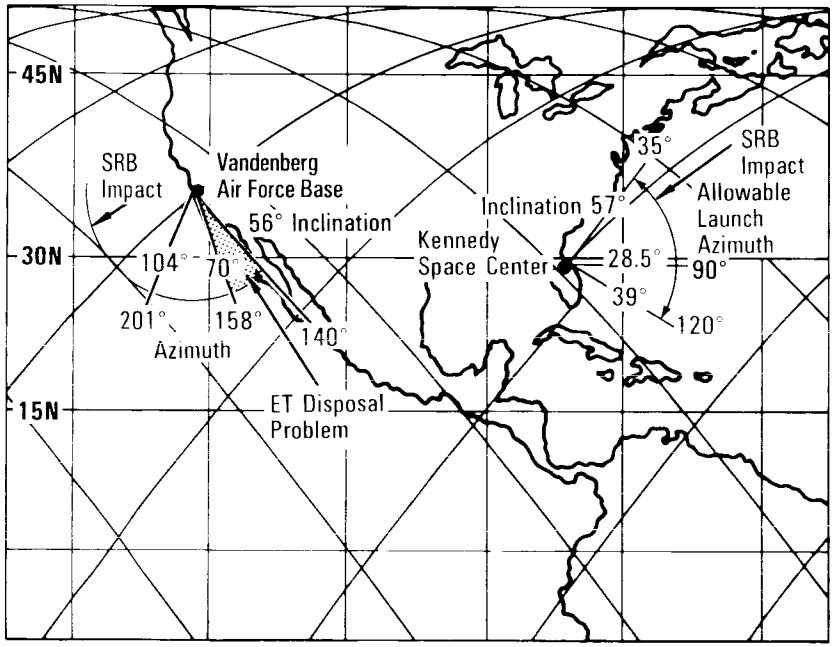


*Space Shuttle Launch Sites*

The launch limits at Vandenberg Air Force Base are 201 and 158 degrees. At a 201-degree launch azimuth, the spacecraft would be orbiting at a 104-degree inclination. Zero degrees would be due north of the launch site, and the orbital trajectory would be within 14 degrees east or west of the north-south pole meridian. At a launch azimuth of 158 degrees, the spacecraft would be orbiting at a 70-degree inclination, and the trajectory would be within 20 degrees east or west of the polar meridian. Like the Kennedy Space Center, Vandenberg Air Force Base has allowable launch azimuths that do not pass over habitable areas or involve safety, abort, separation and political considerations.

Mission requirements and payload weight penalties also are major factors in selecting a launch site.

The Earth rotates from west to east at a speed of approximately 900 nautical miles per hour (1,035 miles per hour). A launch to the east uses the Earth's rotation somewhat as a spring-

board. The Earth's rotational rate is also the reason the orbiter has a cross-range capability of 1,100 nautical miles (1,265 statute miles) to provide the abort once around capability in polar orbit launches.

Attempting to launch and place a spacecraft in polar orbit from the Kennedy Space Center to avoid habitable land mass would be uneconomical because the shuttle's payload would be reduced severely—down to approximately 17,000 pounds. A northerly launch into polar orbit of 8 to 20 degrees azimuth would necessitate a path over a land mass; and most safety, abort, and political constraints would have to be waived. This prohibits polar orbit launches from the Kennedy Space Center.

The following orbital-insertion inclinations and payload weights exemplify the space shuttle's capabilities.

NASA's latest assessment of orbiter ascent and landing weights incorporates currently approved modifications to all vehicle elements, including crew escape provisions, and assumes a maximum space shuttle main engine throttle setting of 104 percent. It is noted that the resumption of space shuttle flights initially requires more conservative flight design criteria and additional instrumentation, which reduces the following basic capabilities by approximately 1,600 pounds:

1. Kennedy Space Center eastern test range satellite deploy missions. The basic cargo-lift capability for a due east (28.5 degrees) launch is 55,000 pounds to a 110-nautical-mile (126-statute-mile) orbit using OV-103 (Discovery) or OV-104 (Atlantis) to support a four-day satellite deploy mission. This capability will be reduced approximately 100 pounds for each additional nautical mile of altitude desired by the customer.

   The payload capability for the same satellite deploy mission with a 57-degree inclination is 41,000 pounds.

   The performance for intermediate inclinations can be estimated by allowing 500 pounds per degree of plane change between 28.5 and 57 degrees.

   If OV-102 is used, the cargo-lift weight capability must be decreased by approximately 8,400 pounds. This weight difference is attributed to an approximately 7,150-pound difference in inert weight, 850 pounds of orbiter experiments, 300 pounds of additional thermal protection system and 100 pounds to accommodate a fifth cryogenic liquid oxygen and liquid hydrogen tank set for the power reactant storage and distribution system.

2. Vandenberg Air Force Base western test range satellite deploy missions. Using OV-103 or OV-104, the cargo-lift weight capability is 29,600 pounds for a 98-degree launch inclination and 110-nautical-mile (126-statute-mile) polar orbit. Again, an increase in altitude costs approximately 100 pounds per nautical mile. NASA assumes also that the advanced solid rocket motor will replace the filament-wound solid rocket motor case previously used for western test range assessments.

   This same mission at 68 degrees inclination (minimum western test range inclination based on range safety limitations) is 49,600 pounds.

   Performance for intermediate inclinations can be estimated by allowing 660 pounds for each degree of plane change between inclinations of 68 and 98 degrees.

3. Landing weight limits. All the space shuttle orbiters are currently limited to a total vehicle landing weight of 240,000 pounds for abort landings and 230,000 pounds for nominal end-of-mission landings.

   It is noted that each additional crew person beyond the five-person standard is chargeable to the cargo weight allocation and reduces the payload capability by approximately 500 pounds. (This is an increase of 450 pounds to account for the crew escape equipment.)

## BACKGROUND AND STATUS

On July 26, 1972, NASA selected Rockwell's Space Trans-

portation Systems Division in Downey, Calif., as the industrial contractor for the design, development, test and evaluation of the orbiter. The contract called for fabrication and testing of two orbiters, a full-scale structural test article, and a main propulsion test article. The award followed years of NASA and Air Force studies to define and assess the feasibility of a reusable space transportation system.

NASA previously (March 31, 1972) had selected Rockwell's Rocketdyne Division to design and develop the space shuttle main engines. Contracts followed to Martin Marietta for the external tank (Aug. 16, 1973) and Morton Thiokol's Wasatch Division for the solid rocket boosters (June 27, 1974).

In addition to the orbiter DDT&E contract, Rockwell's Space Transportation Systems Division was given contractual responsibility as system integrator for the overall shuttle system.

Rockwell International's Launch Operations, part of the Space Transportation Systems Division, was under contract to NASA's Kennedy Space Center for turnaround, processing, prelaunch testing, and launch and recovery operations from STS-1 through the STS-11 mission.

On Oct. 1, 1983, the Lockheed Space Operations Company was awarded the space shuttle processing contract at Kennedy Space Center for turnaround processing, prelaunch testing, and launch and recovery operations.

The first orbiter spacecraft, Enterprise (OV-101), was rolled out on Sept. 17, 1976. On Jan. 31, 1977, it was transported overland from Rockwell's assembly facility at Palmdale, Calif., to the Dryden Flight Research Facility at Edwards Air Force Base (36 miles) for the approach and landing test program.

The nine-month-long ALT program was conducted from February through November 1977 at NASA's Dryden Flight Research Facility and demonstrated that the orbiter could fly in the atmosphere and land like an airplane, except without power-gliding flight.

The ALT program involved ground tests and flight tests.

The ground tests included taxi tests of the 747 shuttle carrier aircraft with the Enterprise mated atop the SCA to determine structural loads and responses and assess the mated capability in ground handling and control characteristics up to flight takeoff speed. The taxi tests also validated 747 steering and braking with the orbiter attached. A ground test of orbiter systems followed the unmanned captive tests. All orbiter systems were activated as they would be in atmospheric flight; this was the final preparation for the manned captive-flight phase.

Five captive flights of the Enterprise mounted atop the SCA with the Enterprise unmanned and Enterprise systems inert were conducted to assess the structural integrity and performance-handling qualities of the mated craft.

Three manned captive flights that followed the five unmanned captive flights included an astronaut crew aboard the orbiter operating its flight control systems while the orbiter remained perched atop the SCA. These flights were designed to exercise and evaluate all systems in the flight environment in preparation for the orbiter release (free) flights. They included flutter tests of the mated craft at low and high speed, a separation trajectory test and a dress rehearsal for the first orbiter free flight.

In the five free flights the astronaut crew separated the spacecraft from the SCA and maneuvered to a landing at Edwards Air Force Base. In the first four such flights the landing was on a dry lake bed; in the fifth, the landing was on Edwards' main concrete runway under conditions simulating a return from space. The last two free flights were made without the tail cone, which is the spacecraft's configuration during an actual landing from Earth orbit. These flights verified the orbiter's pilot-guided approach and landing capability; demonstrated the orbiter's subsonic terminal area energy management autoland approach capability; and verified the orbiter's subsonic airworthiness, integrated system operations and selected subsystems in preparation for the first manned orbital flight. The flights demonstrated the orbiter's ability to approach and land safely with a minimum gross weight and using several center-of-gravity configurations.

For all of the captive flights and the first three free flights, the orbiter was outfitted with a tail cone covering its aft section to reduce aerodynamic drag and turbulence. The final two free flights were without the tail cone, and the three simulated space shuttle main engines and two orbital maneuvering system engines were exposed aerodynamically.

The final phase of the ALT program prepared the spacecraft for four ferry flights. Fluid systems were drained and purged, the tail cone was reinstalled and elevon locks were installed. The forward attachment strut was replaced to lower the orbiter's cant from 6 to 3 degrees. This reduces drag to the mated vehicles during the ferry flights.

After the ferry flight tests, OV-101 was returned to the NASA hangar at the Dryden Flight Research Facility and modified for vertical ground vibration tests at the Marshall Space Flight Center, Huntsville, Ala.

On March 13, 1978, the Enterprise was ferried atop the SCA to NASA's Marshall Space Flight Center. At the Marshall Space Flight Center, Enterprise was mated with the external tank and solid rocket boosters and subjected to a series of vertical ground vibration tests. These tested the mated configuration's critical structural dynamic response modes, which were assessed against analytical math models used to design the various element interfaces.

These were completed in March 1979. On April 10, 1979, the Enterprise was ferried to the Kennedy Space Center, mated with the external tank and solid rocket boosters and transported via the mobile launcher platform to Launch Complex 39-A. At Launch Complex 39-A, the Enterprise served as a practice and launch complex fit-check verification tool representing the flight vehicles.

It was ferried back to NASA's Dryden Flight Research Facility at Edwards Air Force Base in California on Aug. 16, 1979, and then returned overland to Rockwell's Palmdale final assembly facility on Oct. 30, 1979. Certain components were refurbished for use on flight vehicles being assembled at Palmdale. The Enterprise was then returned overland to NASA's Dryden Flight Research Facility on Sept. 6, 1981.

During May and June 1983, Enterprise was ferried to the Paris, France, Air Show as well as to Germany, Italy, England and Canada before returning to the Dryden Flight Research Facility.

From April to October 1984, Enterprise was ferried to Vandenberg Air Force Base and to Mobile, Ala., where it was taken by barge to New Orleans, La., for the United States 1984 World's Fair.

In November 1984 it was ferried to Vandenberg Air Force Base and used as a practice and fit-check verification tool. On May 24, 1985, Enterprise was ferried from Vandenberg Air Force Base to NASA's Dryden Flight Research Facility.

On Sept. 20, 1985, Enterprise was ferried from NASA's Dryden Flight Research Facility to the Kennedy Space Center. On Nov. 18, 1985, Enterprise was ferried from the Kennedy Space Center to Dulles Airport, Washington, D.C., and became the property of the Smithsonian Institution. The Enterprise was built as a test vehicle and is not equipped for space flight.

The second orbiter, Columbia (OV-102), was the first to fly into space. It was transported overland on March 8, 1979, from Palmdale to NASA's Dryden Flight Research Facility for mating atop the shuttle carrier aircraft and ferried to the Kennedy Space Center. It arrived on March 25, 1979, to begin preparations for the first flight into space.

The structural test article, after 11 months of extensive testing at Lockheed's facility in Palmdale, was returned to Rockwell's Palmdale facility for modification to become the second orbiter available for operational missions. It was redesignated OV-099, the Challenger.

The main propulsion test article (MPTA-098) consisted of an orbiter aft fuselage, a truss arrangement that simulated the orbiter's midfuselage and the shuttle main propulsion system

(three space shuttle main engines and the external tank). This test structure is at the National Space Technology Laboratories in Mississippi. A series of static firings was conducted from 1978 through 1981 in support of the first flight into space.

On Jan. 29, 1979, NASA contracted with Rockwell to manufacture two additional orbiters, OV-103 and OV-104 (Discovery and Atlantis), convert the structural test article to space flight configuration (Challenger) and modify Columbia from its developmental configuration to that required for operational flights.

Challenger (OV-099) was delivered to the Kennedy Space Center from Rockwell's Palmdale, Calif., assembly facility on July 5, 1982.

NASA named the first four orbiter spacecraft after famous sailing ships. In the order they became operational, they are:

— Columbia (OV-102), after a sailing frigate launched in 1836, one of the first Navy ships to circumnavigate the globe. Columbia also was the name of the Apollo 11 command module that carried Neil Armstrong, Michael Collins and Edward (Buzz) Aldrin on the first lunar landing mission, July 20, 1969.

— Challenger (OV-099), also a Navy ship, which from 1872 to 1876 made a prolonged exploration of the Atlantic and Pacific oceans. It also was used in the Apollo program for the Apollo 17 lunar module.

— Discovery (OV-103), after two ships, the vessel in which Henry Hudson in 1610-11 attempted to search for a northwest passage between the Atlantic and Pacific oceans and instead discovered Hudson Bay and the ship in which Capt. Cook discovered the Hawaiian Islands and explored southern Alaska and western Canada.

— Atlantis (OV-104), after a two-masted ketch operated for the Woods Hole Oceanographic Institute from 1930 to 1966, which traveled more than half a million miles in ocean research.

In April 1983, under contract to NASA, Rockwell's Space Transportation Systems Division, Downey, Calif., began the construction of structural spares for completion in 1987. The structural spares program consisted of an aft fuselage, crew compartment, forward reaction control system, lower and upper forward fuselage, midfuselage, wings (elevons), payload bay doors, vertical stabilizer (rudder/speed brake), body flap and one set of orbital maneuvering system/reaction control system pods.

Discovery (OV-103) was delivered to the Kennedy Space Center from Rockwell's Palmdale assembly facility on Nov. 9, 1983.

Columbia (OV-102) was delivered to Rockwell's Palmdale assembly facility for modifications on Jan. 30, 1984, and was returned to the Kennedy Space Center on July 14, 1985, for return to flight.

Atlantis (OV-104) was delivered to the Kennedy Space Center from Rockwell's Palmdale assembly facility on April 3, 1985.



On Sept. 12, 1985, Rockwell International's Shuttle Operations Company, Houston, Texas, was awarded the space transportation systems operation contract at NASA's Johnson Space Center to perform mission support operations for Johnson Space Center, consolidating work previously performed under 22 contracts by 16 different contractors.

On July 31, 1987, NASA awarded Rockwell's Space Transportation Systems Division, Downey, Calif., a contract to build a replacement space shuttle orbiter using the structural spares. The replacement orbiter will be assembled at Rockwell's Palmdale, Calif., assembly facility and is scheduled for completion in 1991. This orbiter is designated OV-105.

## MISSION PROFILE

In the launch configuration, the orbiter and two solid rocket boosters are attached to the external tank in a vertical (nose-up) position on the launch pad. Each solid rocket booster is attached at its aft skirt to the mobile launcher platform by four bolts.

**MAIN ENGINE CUTOFF, EXTERNAL TANK SEPARATION**

Altitude: 59 Nautical Miles (68 Statute Miles); Velocity: 25,581 Feet per Second (17,440 mph) About Eight Minutes After Launch (Just Before Orbit Insertion)

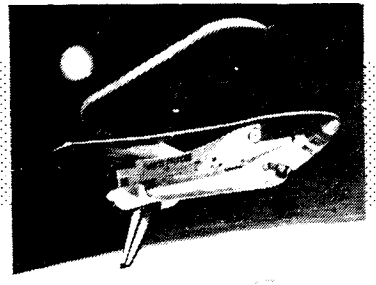

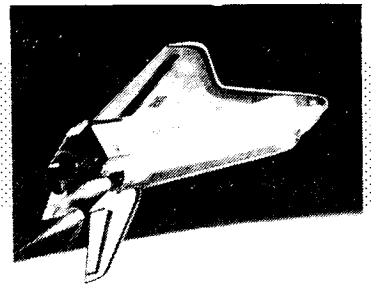

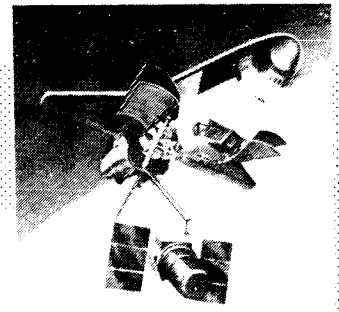

**ORBITAL OPERATIONS**

Mission: Nominal Seven Days: 100 to 217 Nautical-Mile (115 to 250 Statute-Mile) Orbits; 25,405 Feet per Second (17,321 mph)

**ORBIT INSERTION AND CIRCULARIZATION**

Altitude Varies According to Mission

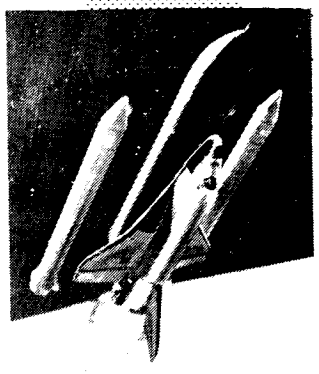

**SRB SEPARATION**

Two Minutes After Launch

**DEORBIT**

Velocity Decreased Nominal (300 Feet per Second, 204 mph) From Earth Orbit Operations

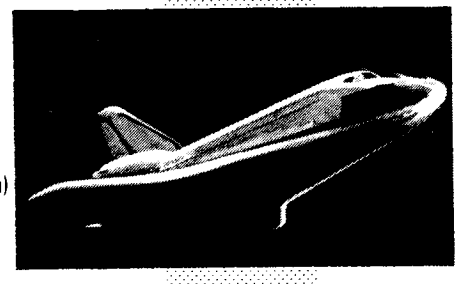

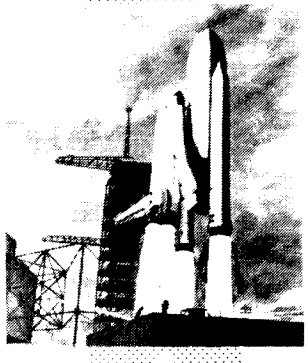

**LAUNCH**

Maximum Dynamic Pressure About 60 Seconds After Launch

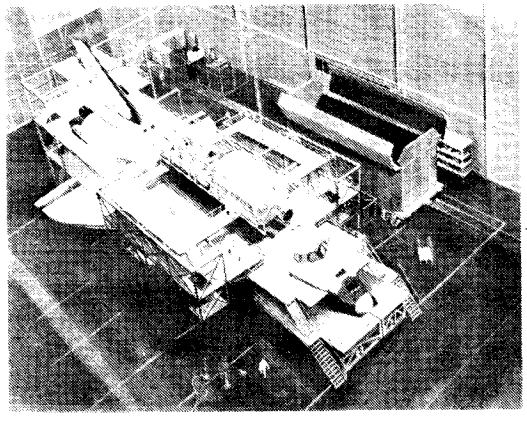

**TURNAROUND**

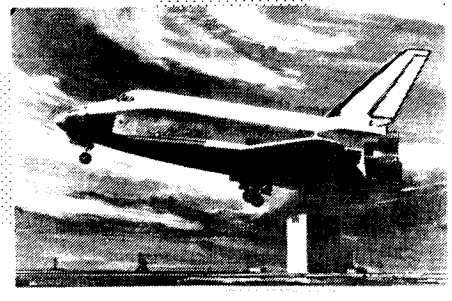

**LANDING**

Touchdown Speed 184 to 196 Knots (213 to 226 mph)

*Shuttle Mission Profile*

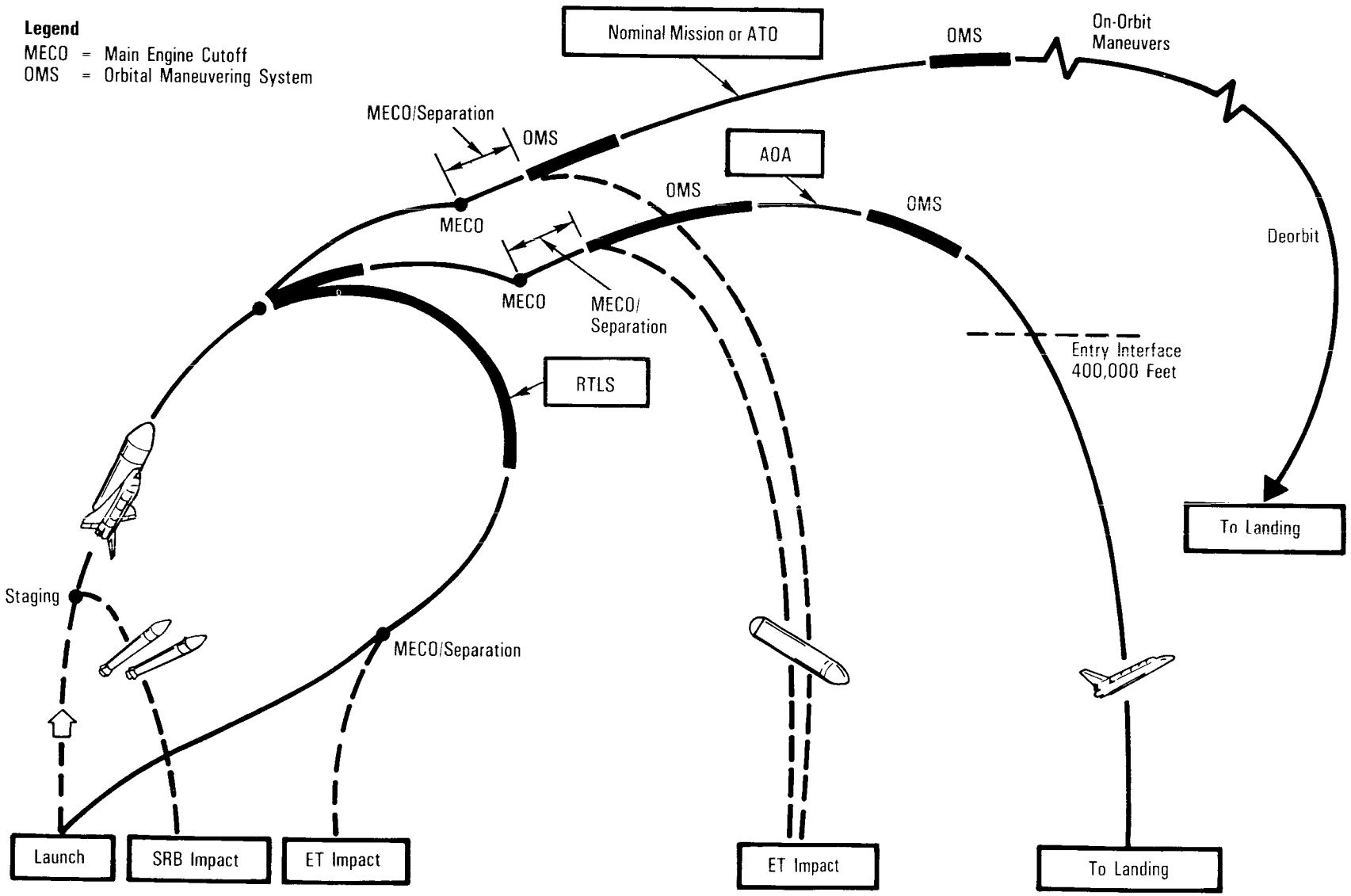


*Abort and Normal Mission Profile*

Emergency exit for the flight crew on the launch pad up to 30 seconds before lift-off is by slidewire. There are seven 1,200-foot-long slidewires, each with one basket. Each basket is designed to carry three persons. The baskets, 5 feet in diameter and 42 inches deep, are suspended beneath the slide mechanism by four cables. The slidewires carry the baskets to ground level. Upon departing the basket at ground level, the flight crew progresses to a bunker that is designed to protect it from an explosion on the launch pad.

At launch, the three space shuttle main engines—fed liquid hydrogen fuel and liquid oxygen oxidizer from the external tank—are ignited first. When it has been verified that the engines are operating at the proper thrust level, a signal is sent to ignite the solid rocket boosters. At the proper thrust-to-weight ratio, initiators (small explosives) at eight hold-down bolts on the solid rocket boosters are fired to release the space shuttle for lift-off. All this takes only a few seconds.

Maximum dynamic pressure is reached early in the ascent, nominally approximately 60 seconds after lift-off.

Approximately a minute later (two minutes into the ascent phase), the two solid rocket boosters have consumed their propellant and are jettisoned from the external tank. This is triggered by a separation signal from the orbiter.

The boosters briefly continue to ascend, while small motors fire to carry them away from the space shuttle. The boosters then turn and descend, and at a predetermined altitude, parachutes are deployed to decelerate them for a safe splashdown in the ocean. Splashdown occurs approximately 141 nautical miles (162 statute miles) from the launch site. The boosters are recovered and reused.

Meanwhile, the orbiter and external tank continue to ascend, using the thrust of the three space shuttle main engines. Approximately eight minutes after launch and just short of orbital velocity, the three space shuttle engines are shut down (main engine cutoff), and the external tank is jettisoned on command from the orbiter.

The forward and aft reaction control system engines provide attitude (pitch, yaw and roll) and the translation of the orbiter away from the external tank at separation and return to attitude hold prior to the orbital maneuvering system thrusting maneuver.

The external tank continues on a ballistic trajectory and enters the atmosphere, where it disintegrates. Its projected impact is in the Indian Ocean (except for 57-degree inclinations) in the case of equatorial orbits (Kennedy Space Center launch) and in the extreme southern Pacific Ocean in the case of a Vandenberg Air Force Base launch.

Normally, two thrusting maneuvers using the two orbital maneuvering system engines at the aft end of the orbiter are used in a two-step thrusting sequence: to complete insertion into Earth orbit and to circularize the spacecraft's orbit. The orbital maneuvering system engines are also used on orbit for any major velocity changes.

In the event of a direct-insertion mission, only one orbital maneuvering system thrusting sequence is used.

The orbital altitude of a mission is dependent upon that mission. The nominal altitude can vary between 100 to 217 nautical miles (115 to 250 statute miles).

The forward and aft reaction control system thrusters (engines) provide attitude control of the orbiter as well as any minor translation maneuvers along a given axis on orbit.

At the completion of orbital operations, the orbiter is oriented in a tailfirst attitude by the reaction control system. The two orbital maneuvering system engines are commanded to slow the orbiter for deorbit.

The reaction control system turns the orbiter's nose forward for entry. The reaction control system controls the orbiter until atmospheric density is sufficient for the pitch and roll aerodynamic control surfaces to become effective.

Entry interface is considered to occur at 400,000 feet altitude

approximately 4,400 nautical miles (5,063 statute miles) from the landing site and at approximately 25,000 feet per second velocity.

At 400,000 feet altitude, the orbiter is maneuvered to zero degrees roll and yaw (wings level) and at a predetermined angle of attack for entry. The angle of attack is 40 degrees. The flight control system issues the commands to roll, pitch and yaw reaction control system jets for rate damping.

The forward reaction control system engines are inhibited prior to entry interface, and the aft reaction control system engines maneuver the spacecraft until a dynamic pressure of 10 pounds per square foot is sensed, which is when the orbiter's ailerons become effective. The aft reaction control system roll engines are then deactivated. At a dynamic pressure of 20 pounds per square foot, the orbiter's elevators become active, and the aft reaction control system pitch engines are deactivated. The orbiter's speed brake is used below Mach 10 to induce a more positive downward elevator trim deflection. At approximately Mach 3.5, the rudder becomes activated, and the aft reaction control system yaw engines are deactivated at 45,000 feet.

Entry guidance must dissipate the tremendous amount of energy the orbiter possesses when it enters the Earth's atmosphere to assure that the orbiter does not either burn up (entry angle too steep) or skip out of the atmosphere (entry angle too shallow) and that the orbiter is properly positioned to reach the desired touchdown point.

During entry, energy is dissipated by the atmospheric drag on the orbiter's surface. Higher atmospheric drag levels enable faster energy dissipation with a steeper trajectory. Normally, the angle of attack and roll angle enable the atmospheric drag of any flight vehicle to be controlled. However, for the orbiter, angle of attack was rejected because it creates surface temperatures above the design specification. The angle of attack scheduled during entry is loaded into the orbiter computers as a function of relative velocity, leaving roll angle for energy control. Increasing the roll angle decreases the vertical component of lift, causing a higher sink rate and energy dissipation rate. Increasing the roll rate does raise the surface temperature of the orbiter, but not nearly as drastically as an equal angle of attack command.

If the orbiter is low on energy (current range-to-go much greater than nominal at current velocity), entry guidance will command lower than nominal drag levels. If the orbiter has too much energy (current range-to-go much less than nominal at the current velocity), entry guidance will command higher-than-nominal drag levels to dissipate the extra energy.

Roll angle is used to control cross range. Azimuth error is the angle between the plane containing the orbiter's position vector and the heading alignment cylinder tangency point and the plane containing the orbiter's position vector and velocity vector. When the azimuth error exceeds a computer-loaded number, the orbiter's roll angle is reversed.

Thus, descent rate and downranging are controlled by bank angle. The steeper the bank angle, the greater the descent rate and the greater the drag. Conversely, the minimum drag attitude is wings level. Cross range is controlled by bank reversals.



The entry thermal control phase is designed to keep the backface temperatures within the design limits. A constant heating rate is established until below 19,000 feet per second.

The equilibrium glide phase shifts the orbiter from the rapidly increasing drag levels of the temperature control phase to the constant drag level of the constant drag phase. The equilibrium glide flight is defined as flight in which the flight path angle, the angle between the local horizontal and the local velocity vector, remains constant. Equilibrium glide flight provides the maximum downrange capability. It lasts until the drag acceleration reaches 33 feet per second squared.

The constant drag phase begins at that point. The angle of attack is initially 40 degrees, but it begins to ramp down in this phase to approximately 36 degrees by the end of this phase.

In the transition phase, the angle of attack continues to ramp down, reaching the approximately 14-degree angle of attack at the

entry terminal area energy management interface, at approximately 83,000 feet altitude, 2,500 feet per second, Mach 2.5 and 52 nautical miles (59 statute miles) from the landing runway. Control is then transferred to TAEM guidance.

During the entry phases described, the orbiter's roll commands keep the orbiter on the drag profile and control cross range.

TAEM guidance steers the orbiter to the nearest of two heading alignment cylinders, whose radii are approximately 18,000 feet and which are located tangent to and on either side of the runway centerline on the approach end. In TAEM guidance, excess energy is dissipated with an S-turn; and the speed brake can be utilized to modify drag, lift-to-drag ratio and flight path angle in high-energy conditions. This increases the ground track range as the orbiter turns away from the nearest HAC until sufficient energy is dissipated to allow a normal approach and landing guidance phase capture, which begins at 10,000 feet altitude. The orbiter also can be flown near the velocity for maximum lift over drag or wings level for the range stretch case. The spacecraft slows to subsonic velocity at approximately 49,000 feet altitude, about 22 nautical miles (25.3 statute miles) from the landing site.

At TAEM acquisition, the orbiter is turned until it is aimed at a point tangent to the nearest HAC and continues until it reaches way point 1. At WP-1, the TAEM heading alignment phase begins. The HAC is followed until landing runway alignment, plus or minus 20 degrees, has been achieved. In the TAEM prefinal phase, the orbiter leaves the HAC; pitches down to acquire the steep glide slope; increases airspeed; banks to acquire the runway centerline; and continues until on the runway centerline, on the outer glide slope and on airspeed. The approach and landing guidance phase begins with the completion of the TAEM prefinal phase and ends when the spacecraft comes to a complete stop on the runway.

The approach and landing trajectory capture phase begins at the TAEM interface and continues to guidance lock-on to the steep outer glide slope. The approach and landing phase begins at about 10,000 feet altitude at an equivalent airspeed of 290, plus or minus 12, knots 6.9 nautical miles (7.9 statute miles) from touchdown. Autoland guidance is initiated at this point to guide the orbiter to the minus 19- to 17-degree glide slope (which is over seven times that of a commercial airliner's approach) aimed at a target 0.86 nautical mile (1 statute mile) in front of the runway. The spacecraft's speed brake is positioned to hold the proper velocity. The descent rate in the later portion of TAEM and approach and landing is greater than 10,000 feet per minute (a rate of descent approximately 20 times higher than a commercial airliner's standard 3-degree instrument approach angle).

At 1,750 feet above ground level, a preflare maneuver is started to position the spacecraft for a 1.5-degree glide slope in preparation for landing with the speed brake positioned as required. The flight crew deploys the landing gear at this point.

The final phase reduces the sink rate of the spacecraft to less than 9 feet per second. Touchdown occurs approximately 2,500 feet past the runway threshold at a speed of 184 to 196 knots (213 to 226 mph).



## ABORTS

Selection of an ascent abort mode may become necessary if there is a failure that affects vehicle performance, such as the failure of a space shuttle main engine or an orbital maneuvering system. Other failures requiring early termination of a flight, such as a cabin leak, might require the selection of an abort mode.

There are two basic types of ascent abort modes for space shuttle missions: intact aborts and contingency aborts. Intact aborts are designed to provide a safe return of the orbiter to a planned landing site. Contingency aborts are designed to permit flight crew survival following more severe failures when an intact abort is not possible. A contingency abort would generally result in a ditch operation.

There are four types of intact aborts: abort to orbit, abort once around, transatlantic landing and return to launch site.

The ATO mode is designed to allow the vehicle to achieve a temporary orbit that is lower than the nominal orbit. This mode requires less performance and allows time to evaluate problems and then choose either an early deorbit maneuver or an orbital maneuvering system thrusting maneuver to raise the orbit and continue the mission.

The AOA is designed to allow the vehicle to fly once around the Earth and make a normal entry and landing. This mode generally involves two orbital maneuvering system thrusting sequences, with the second sequence being a deorbit maneuver. The entry sequence would be similar to a normal entry.

The TAL mode is designed to permit an intact landing on the other side of the Atlantic Ocean. This mode results in a ballistic trajectory, which does not require an orbital maneuvering system maneuver.

The RTLS mode involves flying downrange to dissipate propellant and then turning around under power to return directly to a landing at or near the launch site.

There is a definite order of preference for the various abort modes. The type of failure and the time of the failure determine which type of abort is selected. In cases where performance loss is the only factor, the preferred modes would be ATO, AOA, TAL and RTLS, in that order. The mode chosen is the highest one that can be completed with the remaining vehicle performance. In the case of some support system failures, such as cabin leaks or vehicle cooling problems, the preferred mode might be the one that will end the mission most quickly. In these cases, TAL or RTLS might be preferable to AOA or ATO. A contingency abort is never chosen if another abort option exists.

The Mission Control Center-Houston is prime for calling these aborts because it has a more precise knowledge of the orbiter's position than the crew can obtain from onboard systems. Before main engine cutoff, Mission Control makes periodic calls to the crew to tell them which abort mode is (or is not) available. If ground communications are lost, the flight crew has onboard methods, such as cue cards, dedicated displays and display information, to determine the current abort region.

Which abort mode is selected depends on the cause and timing of the failure causing the abort and which mode is safest or improves mission success. If the problem is a space shuttle main engine failure, the flight crew and Mission Control Center select the best option available at the time a space shuttle main engine fails.

If the problem is a system failure that jeopardizes the vehicle, the fastest abort mode that results in the earliest vehicle landing is chosen. RTLS and TAL are the quickest options (35 minutes), whereas an AOA requires approximately 90 minutes. Which of these is selected depends on the time of the failure with three good space shuttle main engines.

The flight crew selects the abort mode by positioning an *abort mode* switch and depressing an *abort* push button.



**RETURN TO LAUNCH SITE.** The RTLS abort mode is designed to allow the return of the orbiter, crew, and payload to the launch site, Kennedy Space Center, approximately 25 minutes after lift-off. The RTLS profile is designed to accommodate the loss of thrust from one space shuttle main engine between lift-off and approximately four minutes 20 seconds, at which time not enough main propulsion system propellant remains to return to the launch site.

An RTLS can be considered to consist of three stages—a powered stage, during which the space shuttle main engines are still thrusting; an ET separation phase; and the glide phase, during which the orbiter glides to a landing at the Kennedy Space Center. The powered RTLS phase begins with the crew selection of the RTLS abort, which is done after solid rocket booster separation. The crew selects the abort mode by positioning the *abort* rotary switch to *RTLS* and depressing the *abort* push button. The time at which the RTLS is selected depends on the reason for the abort. For example, a three-engine RTLS is selected at the last moment, approximately three minutes 34 seconds into the mission; whereas

an RTLS chosen due to an engine out at lift-off is selected at the earliest time, approximately two minutes 20 seconds into the mission (after solid rocket booster separation).

After RTLS is selected, the vehicle continues downrange to dissipate excess main propulsion system propellant. The goal is to leave only enough main propulsion system propellant to be able to turn the vehicle around, fly back towards the Kennedy Space Center and achieve the proper main engine cutoff conditions so the vehicle can glide to the Kennedy Space Center after external tank separation. During the downrange phase, a pitch-around maneuver is initiated (the time depends in part on the time of a space shuttle main engine failure) to orient the orbiter/external tank configuration to a heads up attitude, pointing toward the launch site. At this time, the vehicle is still moving away from the launch site, but the space shuttle main engines are now thrusting to null the downrange velocity. In addition, excess orbital maneuvering system and reaction control system propellants are dumped by continuous orbital maneuvering system and reaction control system engine thrustings to improve the orbiter weight and center of gravity for the glide phase and landing.

The vehicle will reach the desired main engine cutoff point with less than 2 percent excess propellant remaining in the external tank. At main engine cutoff minus 20 seconds, a pitch-down maneuver (called powered pitch-down) takes the mated vehicle to the required external tank separation attitude and pitch rate. After

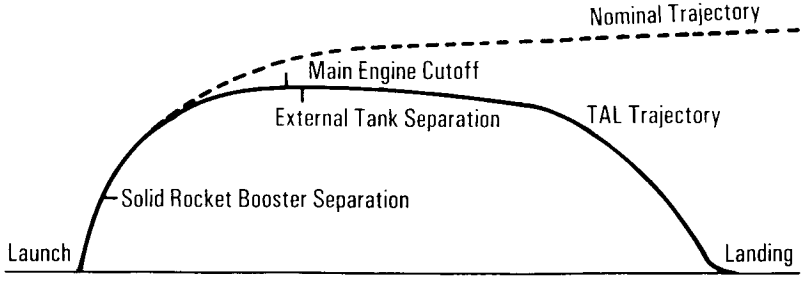


*Transatlantic Landing Abort Option*

main engine cutoff has been commanded, the external tank separation sequence begins, including a reaction control system translation that ensures that the orbiter does not recontact the external tank and that the orbiter has achieved the necessary pitch attitude to begin the glide phase of the RTLS.

After the reaction control system translation maneuver has been completed, the glide phase of the RTLS begins. From then on, the RTLS is handled similarly to a normal entry.

**TRANSATLANTIC LANDING ABORT.** The TAL abort mode was developed to improve the options available when a space shuttle main engine fails after the last RTLS opportunity but before the first time that an AOA can be accomplished with only two space shuttle main engines or when a major orbiter system failure, for example, a large cabin pressure leak or cooling system failure, occurs after the last RTLS opportunity, making it imperative to land as quickly as possible.

In a TAL abort, the vehicle continues on a ballistic trajectory across the Atlantic Ocean to land at a predetermined runway. Landing occurs approximately 45 minutes after launch. The landing site is selected near the nominal ascent ground track of the orbiter in order to make the most efficient use of space shuttle main engine propellant. The landing site also must have the necessary runway length, weather conditions and U.S. State Department approval. Currently, the three landing sites that have been identified for a due east launch are Moron,, Spain; Dakar, Senegal; and Ben Guerur, Morocco (on the west coast of Africa).

To select the TAL abort mode, the crew must place the *abort* rotary switch in the *TAL/AOA* position and depress the *abort* push button before main engine cutoff. (Depressing it after main engine cutoff selects the AOA abort mode.) The TAL abort mode begins sending commands to steer the vehicle toward the plane of the landing site. It also rolls the vehicle heads up before main engine cutoff and sends commands to begin an orbital maneuvering system propellant dump (by burning the propellants through the orbital maneuvering system engines and the reaction control system engines). This dump is necessary to increase vehicle perfor-

mance (by decreasing weight), to place the center of gravity in the proper place for vehicle control, and to decrease the vehicle's landing weight.

TAL is handled like a nominal entry.

**ABORT TO ORBIT.** An ATO is an abort mode used to boost the orbiter to a safe orbital altitude when performance has been lost and it is impossible to reach the planned orbital altitude. If a space shuttle main engine fails in a region that results in a main engine cutoff under speed, the Mission Control Center will determine that an abort mode is necessary and will inform the crew. The orbital maneuvering system engines would be used to place the orbiter in a circular orbit.

**ABORT ONCE AROUND.** The AOA abort mode is used in cases in which vehicle performance has been lost to such an extent that either it is impossible to achieve a viable orbit or not enough orbital maneuvering system propellant is available to accomplish the orbital maneuvering system thrusting maneuver to place the orbiter on orbit and the deorbit thrusting maneuver. In addition, an AOA is used in cases in which a major systems problem (cabin leak, loss of cooling) makes it necessary to land quickly. In the AOA abort mode, one orbital maneuvering system thrusting sequence is made to adjust the post-main engine cutoff orbit so a second orbital maneuvering system thrusting sequence will result in the vehicle deorbiting and landing at the AOA landing site (White Sands, N.M.; Edwards Air Force Base; or the Kennedy Space Center). Thus, an AOA results in the orbiter circling the Earth once and landing approximately 90 minutes after lift-off.

After the deorbit thrusting sequence has been executed, the flight crew flies to a landing at the planned site much as it would for a nominal entry.

**CONTINGENCY ABORT.** Contingency aborts are caused by loss of more than one main engine or failures in other systems. Loss of one main engine while another is stuck at a low thrust setting may also necessitate a contingency abort. Such an abort would maintain orbiter integrity for in-flight crew escape if a landing cannot be achieved at a suitable landing field.

Contingency aborts due to system failures other than those involving the main engines would normally result in an intact recovery of vehicle and crew. Loss of more than one main engine may, depending on engine failure times, result in a safe runway landing. However, in most three-engine-out cases during ascent, the orbiter would have to be ditched. The in-flight crew escape system would be used before ditching the orbiter.

## ORBITER GROUND TURNAROUND

Spacecraft recovery operations at the nominal end-of-mission landing site are supported by approximately 160 space shuttle Launch Operations team members. Ground team members wearing self-contained atmospheric protective ensemble suits that protect them from toxic chemicals approach the spacecraft as soon as it stops rolling. The ground team members take sensor measurements to ensure the atmosphere in the vicinity of the spacecraft is not explosive. In the event of propellant leaks, a wind machine truck carrying a large fan will be moved into the area to create a turbulent airflow that will break up gas concentrations and reduce the potential for an explosion.



A ground support equipment air-conditioning purge unit is attached to the right-hand orbiter T-0 umbilical so cool air can be directed through the orbiter's aft fuselage, payload bay, forward fuselage, wings, vertical stabilizer, and orbital maneuvering system/reaction control system pods to dissipate the heat of entry.

A second ground support equipment ground cooling unit is connected to the left-hand orbiter T-0 umbilical spacecraft Freon coolant loops to provide cooling for the flight crew and avionics during the postlanding and system checks. The spacecraft fuel cells remain powered up at this time. The flight crew will then exit the spacecraft, and a ground crew will power down the spacecraft.

At the Kennedy Space Center, the orbiter and ground support equipment convoy move from the runway to the Orbiter Processing Facility.

If the spacecraft lands at Edwards Air Force Base, the same procedures and ground support equipment are used as at the

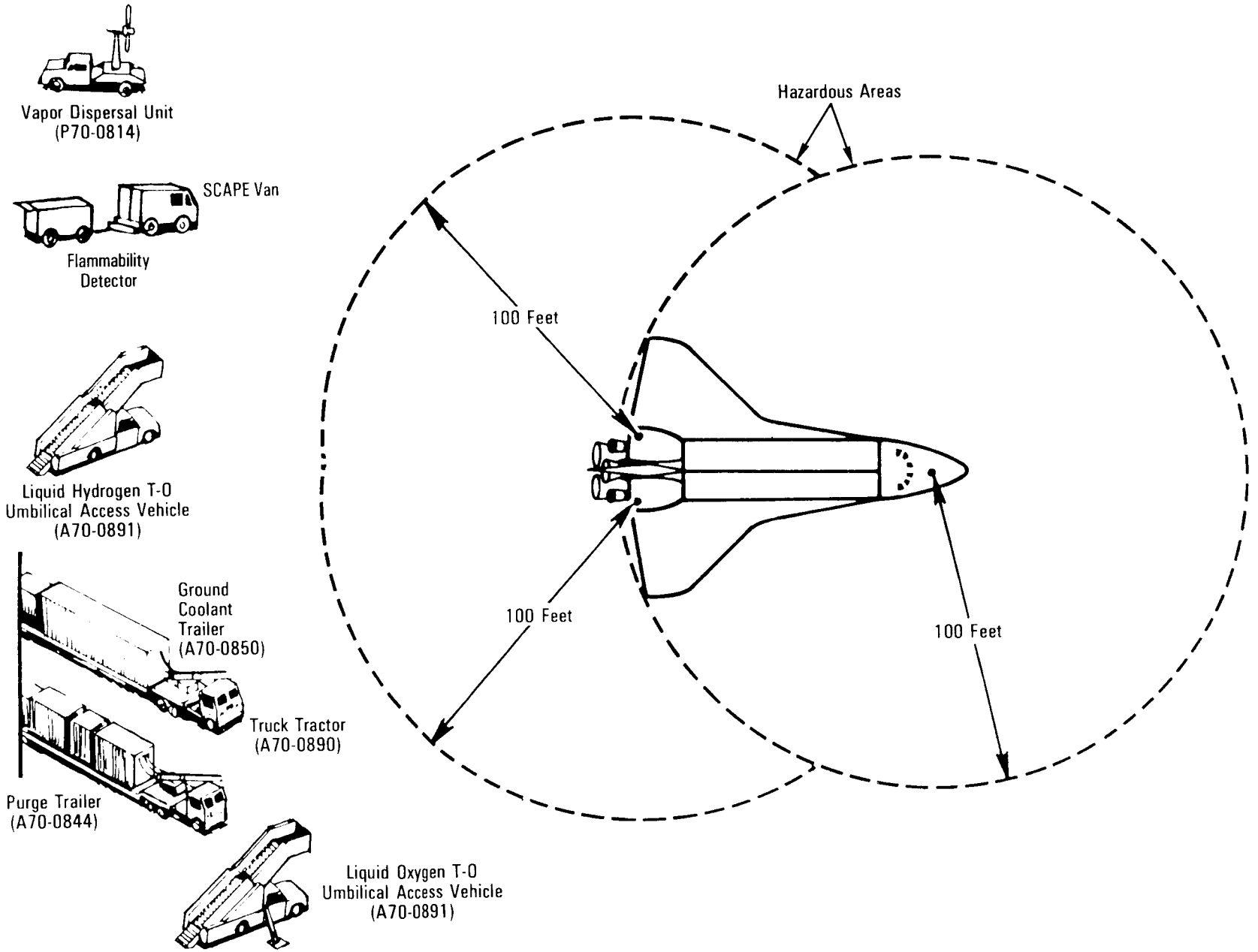


*Orbiter Hazardous Areas at Landing and Convoy Positions*

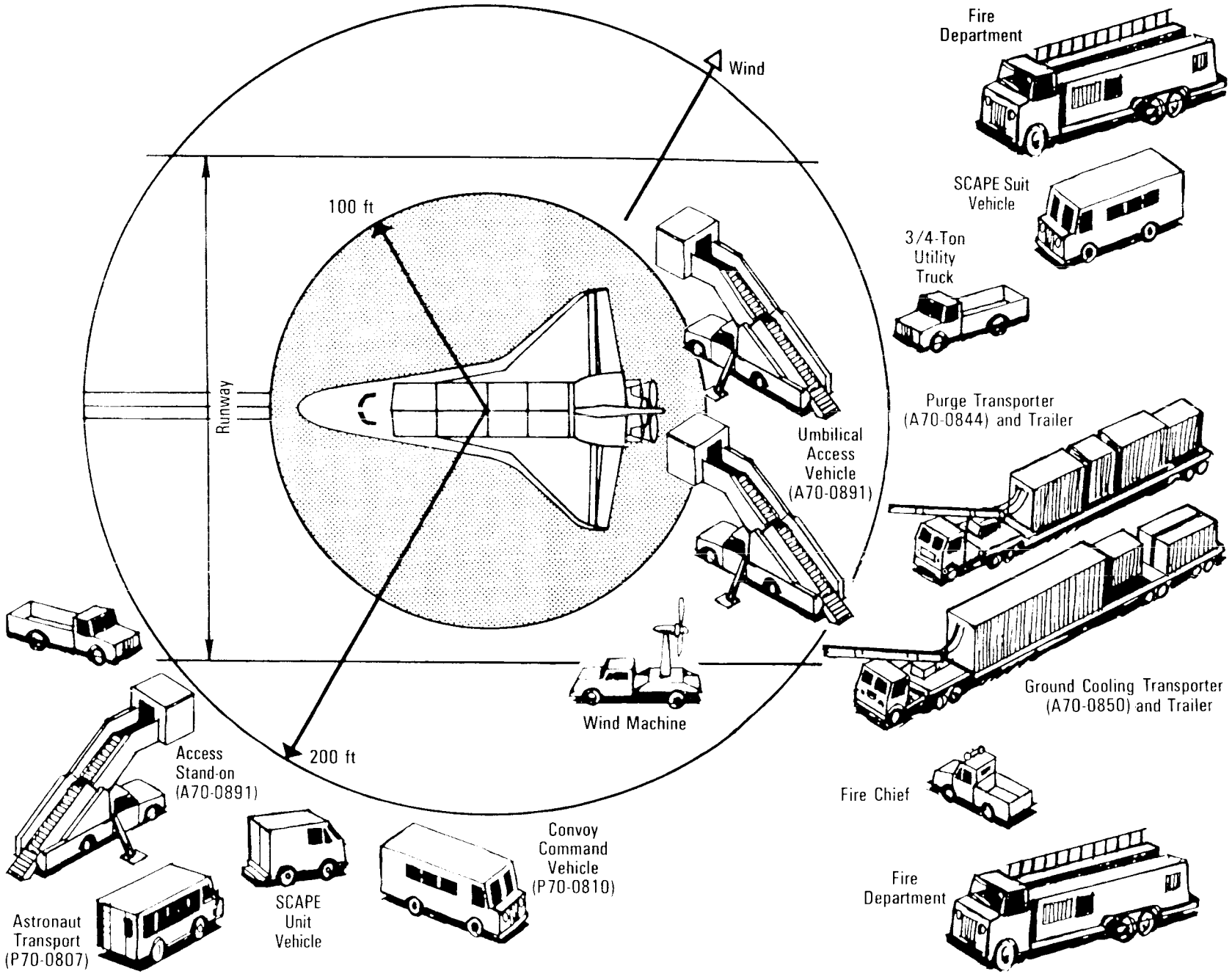


*Orbiter Landing and Safing Preparations*

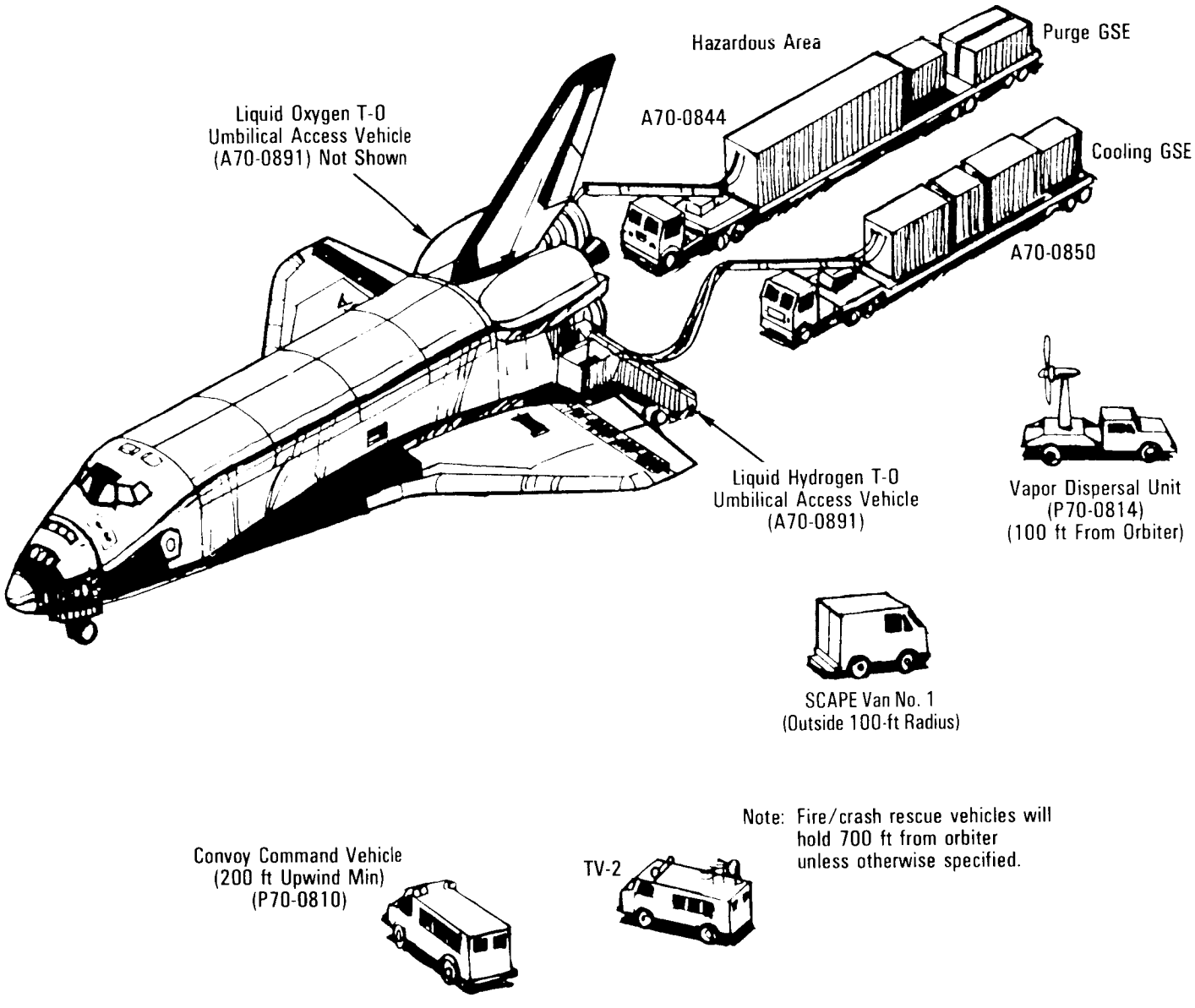


Note: Fire/crash rescue vehicles will hold 700 ft from orbiter unless otherwise specified.

*Orbiter Safing Operations*

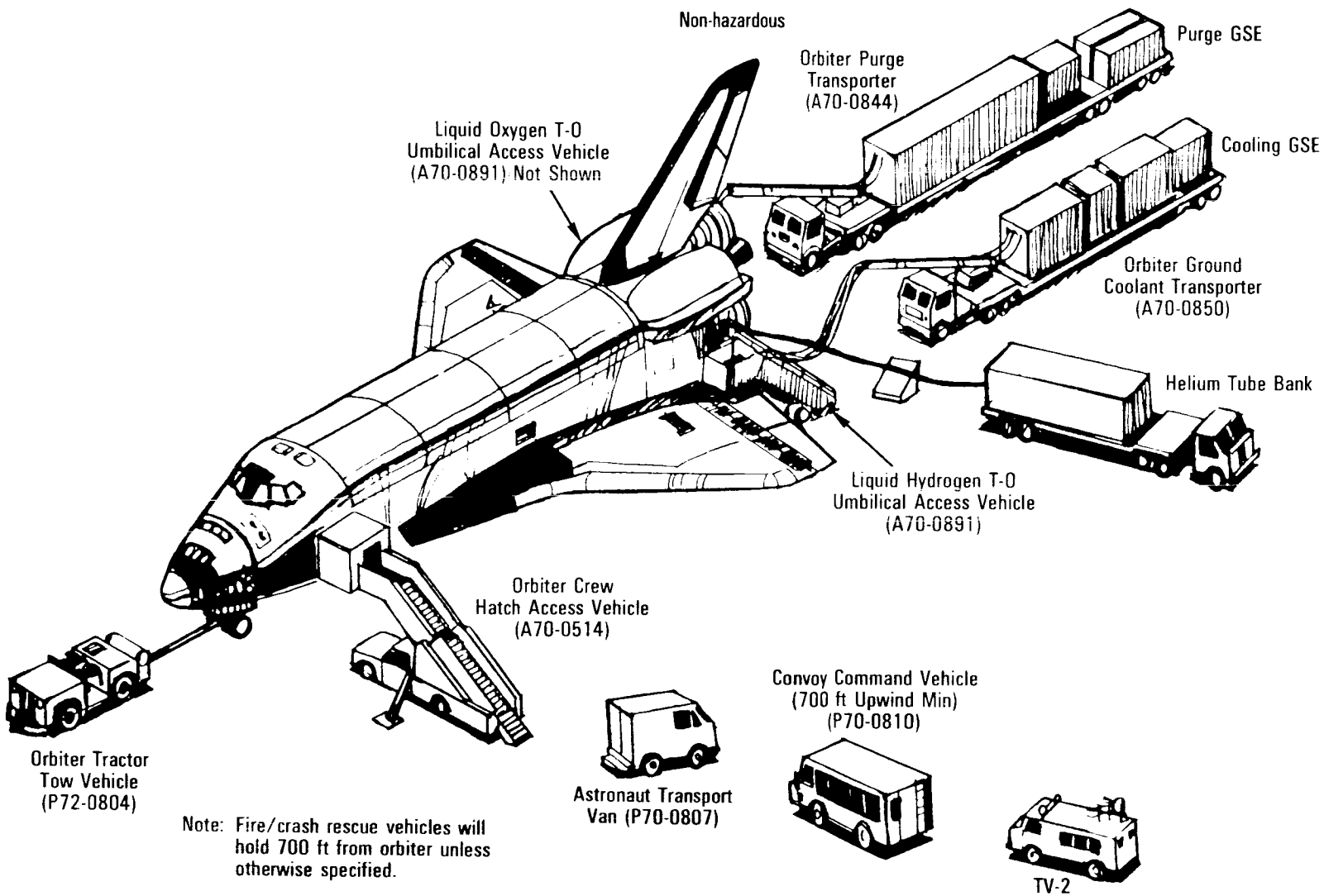


Note: Fire/crash rescue vehicles will hold 700 ft from orbiter unless otherwise specified.

*Orbiter Power-Down and Crew Egress*

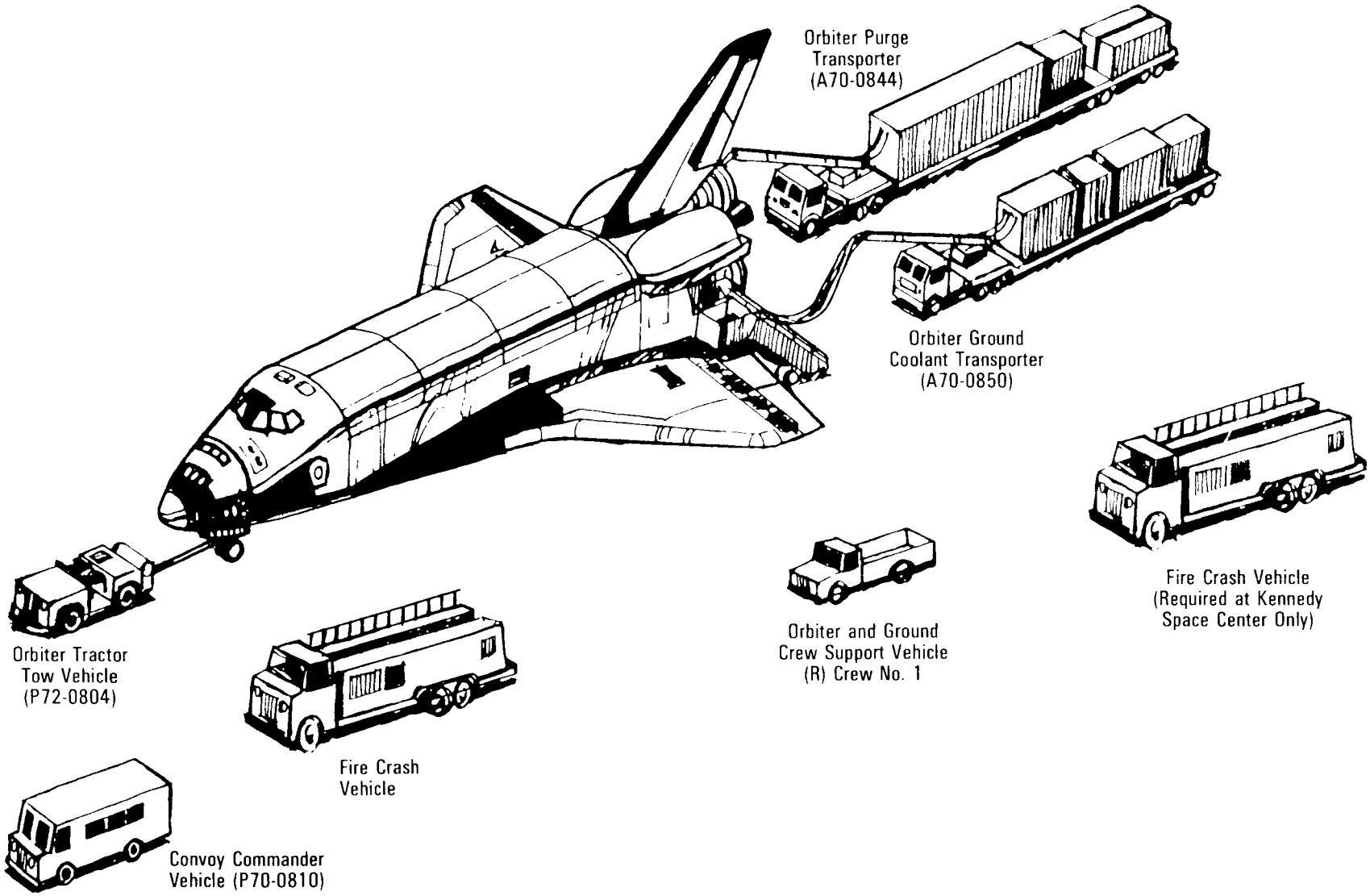


*Typical Convoy Tow Configuration*

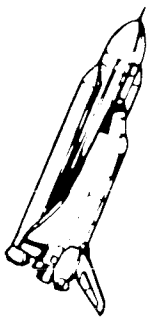

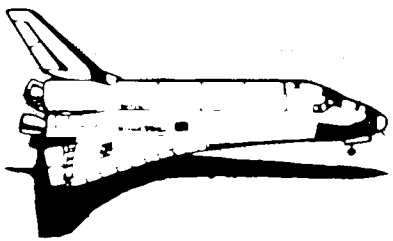

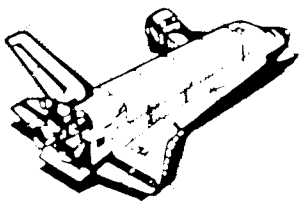

**Landing**

- Safety Inspection
- Connect Ground Support Equipment
- Crew Exchange

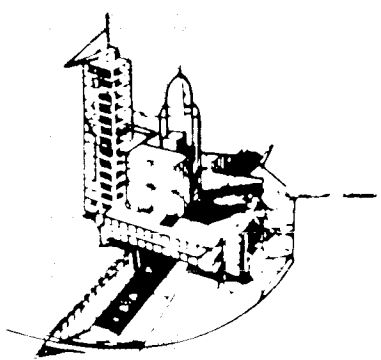

**Prelaunch**

- Move to Pad
- Interface Verification
- Payload Installation (Optional at Pad)
- Propellant Loading
- Crew Ingress
- System Check

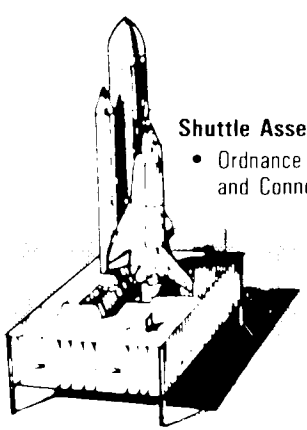

**Shuttle Assembly**

- Ordnance Installation and Connection

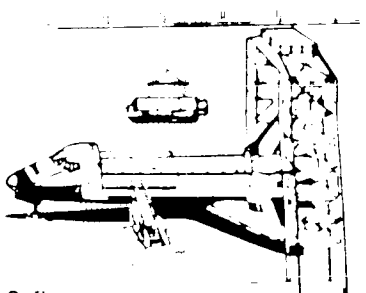

**Orbiter Safing**

- Maintenance and Checkout
- Payload Installation (Optional at Orbiter Processing Facility)
- Functional Verification

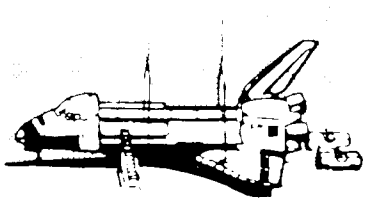

**Premate Preparation**

*Kennedy Space Center Ground Turnaround Sequence*

Kennedy Space Center after the orbiter has stopped on the runway. The orbiter and ground support equipment convoy move from the runway to the orbiter mate and demate facility at Edwards Air Force Base. After detailed inspection, the spacecraft is prepared to be ferried atop the shuttle carrier aircraft from Edwards Air Force Base to the Kennedy Space Center. For ferrying, a tail cone is installed over the aft section of the orbiter.

In the event of a landing at an alternate site, a crew of about eight team members will move to the landing site to assist the astronaut crew in preparing the orbiter for loading aboard the shuttle carrier aircraft for transport back to the Kennedy Space Center. For landings outside the U.S., personnel at the contingency landing sites will be provided minimum training on safe handling of the orbiter with emphasis on crash rescue training, how to tow the orbiter to a safe area, and prevention of propellant conflagration.

Upon its return to the Orbiter Processing Facility at the Kennedy Space Center, the orbiter is safed (ordnance devices safed), the payload (if any) is removed, and the orbiter payload bay is reconfigured from the previous mission for the next mission. Any required maintenance and inspections are also performed while the orbiter is in the OPF. A payload for the orbiter's next mission may be installed in the orbiter's payload bay in the OPF or may be installed in the payload bay when the orbiter is at the launch pad.

The spacecraft is then towed to the Vehicle Assembly Building and mated to the external tank. The external tank and solid rocket boosters are stacked and mated on the mobile launcher platform while the orbiter is being refurbished. Space shuttle orbiter connections are made and the integrated vehicle is checked and ordnance is installed.

The mobile launcher platform moves the entire space shuttle system on four crawlers to the launch pad, where connections are made and servicing and checkout activities begin. If the payload was not installed in the OPF, it will be installed at the launch pad followed by prelaunch activities.

Space shuttle launches from Vandenberg Air Force Base will utilize the Vandenberg launch facility (SL6), which was built but never used for the manned orbital laboratory program. This facility was modified for space transportation system use.

The runway at Vandenberg was strengthened and lengthened from 8,000 feet to 12,000 feet to accommodate the orbiter returning from space.

When the orbiter lands at Vandenberg Air Force Base, the same procedures and ground support equipment and convoy are used as at Kennedy Space Center after the orbiter stops on the runway. The orbiter and ground support equipment are moved from the runway to the Orbiter Maintenance and Checkout Facility at Vandenberg Air Force Base. The orbiter processing procedures used at this facility are similar to those used at the OPF at the Kennedy Space Center.

Space shuttle buildup at Vandenberg differs from that of the Kennedy Space Center in that the vehicle is integrated on the launch pad. The orbiter is towed overland from the Orbiter Maintenance and Checkout Facility at Vandenberg to launch facility SL6.

SL6 includes the launch mount, access tower, mobile service tower, launch control tower, payload preparation room, payload changeout room, solid rocket booster refurbishment facility, solid rocket booster disassembly facility, and liquid hydrogen and liquid oxygen storage tank facilities.

The solid rocket boosters start the on-the-launch-pad buildup followed by the external tank. The orbiter is then mated to the external tank on the launch pad.

The launch processing system at the launch pad is similar to the one used at the Kennedy Space Center.

Kennedy Space Center Launch Operations has responsibility for all mating, prelaunch testing and launch control ground activities until the space shuttle vehicle clears the launch pad tower.

Responsibility is then turned over to NASA's Johnson Space Center Mission Control Center-Houston. The Mission Control Center's responsibility includes ascent, on-orbit operations, entry, approach and landing until landing runout completion, at which time the orbiter is handed over to the postlanding operations at the landing site for turnaround and relaunch. At the launch site the solid rocket boosters and external tank are processed for launch and the solid rocket boosters are recycled for reuse.

## ORBITER MANUFACTURING AND ASSEMBLY

The structures of the orbiter were manufactured at various companies under contract to Rockwell International's Space Transportation Systems Division, Downey, Calif.

The upper and lower forward fuselage, crew compartment, forward reaction control system and aft fuselage were manufactured at Rockwell's Space Transportation Systems Division facility in Downey and were transported overland from Downey to Rockwell's Palmdale, Calif., assembly facility.

The midfuselage was manufactured by General Dynamics, San Diego, Calif., and transported overland to Rockwell's Palmdale assembly facility.

The wings (including elevons) were manufactured by Grumman, Bethpage, Long Island, N.Y., and transported by ship from New York via the Panama Canal to Long Beach, Calif., and then transported overland to Rockwell's Palmdale assembly facility.

The vertical tail (including rudder/speed brake) were manufactured by Fairchild Republic, Farmingdale, Long Island, N.Y., and transported overland to Rockwell's Palmdale assembly facility.

The payload bay doors were manufactured at Rockwell International's Tulsa, Okla., facility and transported overland to Rockwell's Palmdale assembly facility.

The body flap was manufactured at Rockwell International's Columbus, Ohio, facility and transported overland to Rockwell's Palmdale assembly facility.

The aft orbital maneuvering system/reaction control system pods were manufactured by McDonnell Douglas, St. Louis, Mo., and transported by aircraft to Rockwell's Palmdale assembly facility. They were also transported by aircraft from Rockwell's Palmdale assembly facility to the Kennedy Space Center.

Approximately 250 major subcontractors supplied various systems and components to Rockwell's Palmdale assembly facility.

Rockwell's Palmdale assembly facility is where all the individual parts, pieces and systems came together and were assembled and tested. Upon completion, the spacecraft was turned over to NASA for transport overland from Palmdale to Edwards Air Force Base, California. NASA's Dryden Flight Research Facility at Edwards Air Force Base is the site of the mate-demate facility for mating or demating the spacecraft and the shuttle carrier aircraft.

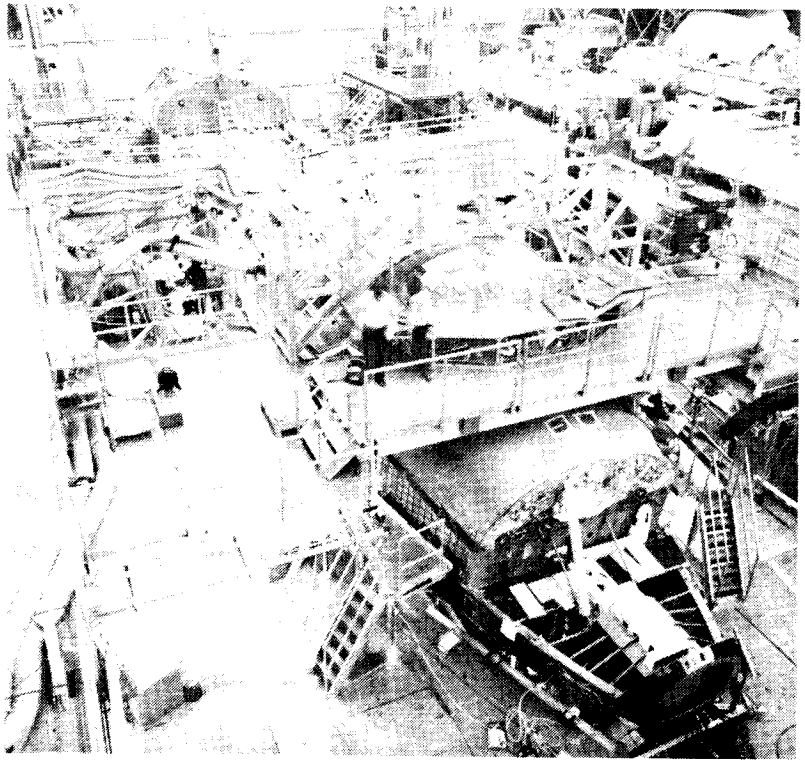

*Orbiter Assembly at Rockwell's Palmdale, Calif., Assembly Facility*

For mating atop the shuttle carrier aircraft, the orbiter is raised horizontally in the mate facility until the shuttle carrier aircraft can be towed under the orbiter. The orbiter is then lowered and attached to two aft and one forward attach points on the shuttle carrier aircraft. These attach points on the orbiter are the same attach points where the external tank is attached to the orbiter.

For ferry flights of the orbiters after delivery from Palmdale, dummy orbital maneuvering system/reaction control system pods were used along with a tail cone installed over the aft section of the orbiter to streamline airflow.

The space shuttle main engines were manufactured by Rockwell International's Rocketdyne Division in Canoga Park, Calif. They are shipped separately from Rocketdyne to the National Space Technology Laboratories, then to the Kennedy Space Center.

## OPERATIONAL IMPROVEMENTS AND MODIFICATIONS

Many of the changes and upgrades in the space shuttle systems and components were under way before the 51-L accident as part of NASA's continual improvement and upgrade program. However, NASA has taken advantage of the space shuttle program downtime since the accident to accelerate the testing and integration of these improvements and upgrades as well as fixes required as a result of the accident.

### ORBITER

The following identifies the major improvements or modifications of the orbiter. Approximately 190 other modifications and improvements were also made.

**ORBITAL MANEUVERING SYSTEM/REACTION CONTROL SYSTEM AC-MOTOR-OPERATED VALVES.** The 64 valves operated by ac motors in the OMS and RCS were modified to incorporate a "sniff" line for each valve to permit monitoring of nitrogen tetroxide or monomethyl hydrazine in the electrical portion of the valves during ground operations. This new line reduces the probability of floating particles in the electrical microswitch portion of each valve, which could affect the operation of the microswitch position indicators for onboard displays and telemetry. It also reduces the probability of nitrogen tetroxide or monomethyl hydrazine leakage into the bellows of each ac-motor-operated valve.

**PRIMARY RCS THRUSTERS.** The wiring of the fuel and oxidizer injector solenoid valves was wrapped around each of the 38 primary RCS thrust chambers to remove electrical power from these valves in the event of a primary RCS thruster instability.

**FUEL CELL POWER PLANTS.** End-cell heaters on each fuel cell power plant were deleted because of potential electrical failures and replaced with Freon coolant loop passages to maintain uniform temperature throughout the power plants. In addition, the hydrogen pump and water separator of each fuel cell power plant were improved to minimize excessive hydrogen gas entrained in the power plant product water. A current measurement detector was added to monitor the hydrogen pump of each fuel cell power plant and provide an early indication of hydrogen pump overload.

The starting and sustaining heater system for each fuel cell power plant was modified to prevent overheating and loss of heater elements. A stack inlet temperature measurement was added to each fuel cell power plant for full visibility of thermal conditions.

The product water from all three fuel cell power plants flows to a single water relief control panel. The water can be directed from the single panel to the environmental control and life support system's potable water tank A or to the fuel cell power plant water relief nozzle. Normally, the water is directed to water tank A. In the event of a line rupture in the vicinity of the single water relief panel, water could spray on all three water relief panel lines, causing them to freeze and preventing water discharge.

The product water lines from all three fuel cell power plants were modified to incorporate a parallel (redundant) path of product water to ECLSS potable water tank B in the event of a freeze-up in the single water relief panel. If the single water relief panel freezes up, pressure would build up and discharge through the redundant paths to water tank B.

A water purity sensor (pH) was added at the common product water outlet of the water relief panel to provide a redundant measurement of water purity (a single measurement of water purity in each fuel cell power plant was provided previously). If the fuel cell power plant pH sensor failed in the past, the flight crew had to sample the potable water.

**AUXILIARY POWER UNITS.** The APUs that have been in use to date have a limited life. Each unit was refurbished after 25 hours of operation because of cracks in the turbine housing, deg-

radation of the gas generator catalyst (which varied up to approximately 30 hours of operation) and operation of the gas generator valve module (which also varied up to approximately 30 hours of operation). The remaining parts of the APU were qualified for 40 hours of operation.

Improved auxiliary power units are scheduled for delivery in late 1988. A new turbine housing increases the life of the housing to 75 hours of operation (50 missions); a new gas generator increases its life to 75 hours; a new standoff design of the gas generator valve module and fuel pump deletes the requirement for a water spray system that was required previously for each APU upon shutdown after the first OMS thrusting period or orbital checkout; and the addition of a third seal in the middle of the two existing seals for the shaft of the fuel pump/lube oil system (previously only two seals were located on the shaft, one on the fuel pump side and one on the gearbox lube oil side) reduces the probability of hydrazine leaking into the lube oil system.

The deletion of the water spray system for the gas generator valve module and fuel pump for each APU results in a weight reduction of approximately 150 pounds for each orbiter. Upon the delivery of the improved units, the life-limited APUs will be refurbished to the upgraded design.

In the event that a fuel tank valve switch in an auxiliary power unit is inadvertently left on or an electrical short occurs within the valve electrical coil, additional protection is provided to prevent overheating of the fuel isolation valves.

**MAIN LANDING GEAR.** The following modifications were made to improve the performance of the main landing gear elements:

1. The thickness of the main landing gear axle was increased to provide a stiffer configuration that reduces brake-to-axle deflections and precludes brake damage experienced in previous landings. The thicker axle should also minimize tire wear.

2. Orifices were added to hydraulic passages in the brake's piston housing to prevent pressure surges and brake damage caused by a wobble/pump effect.

3. The electronic brake control boxes were modified to balance hydraulic pressure between adjacent brakes and equalize energy applications. The anti-skid circuitry previously used to reduce brake pressure to the opposite wheel if a flat tire was detected has now been removed.

4. The carbon-lined beryllium stator discs in each main landing gear brake were replaced with thicker discs to increase braking energy significantly.

5. A long-term structural carbon brake program is in progress to replace the carbon-lined beryllium stator discs with a carbon configuration that provides higher braking capacity by increasing maximum energy absorption.

6. Strain gauges were added to each nose and main landing gear wheel to monitor tire pressure before launch, deorbit and landing.



Other studies involve arresting barriers at the end of landing site runways (except lake bed runways), installing a skid on the landing gear that could preclude the potential for a second blown tire on the same gear after the first tire has blown, providing "roll on rim" for a predictable roll if both tires are lost on a single or multiple gear and adding a drag chute.

Studies of landing gear tire improvements are being conducted to determine how best to decrease tire wear observed after previous Kennedy Space Center landings and how to improve crosswind landing capability.

Modifications were made to the Kennedy Space Center shuttle landing facility runway. The full 300-foot width of 3,500-foot sections at both ends of the runway were ground to smooth the runway surface texture and remove cross grooves. The modi-

fied corduroy ridges are smaller than those they replaced and run the length of the runway rather than across its width. The existing landing zone light fixtures were also modified, and the markings of the entire runway and overruns were repainted. The primary purpose of the modifications is to enhance safety by reducing tire wear during landing.

**NOSE WHEEL STEERING.** The nose wheel steering system was modified on Columbia (OV-102) for the 61-C mission, and Discovery (OV-103) and Atlantis (OV-104) are being similarly modified before their return to flight. The modification allows a safe high-speed engagement of the nose wheel steering system and provides positive lateral directional control of the orbiter during rollout in the presence of high crosswinds and blown tires.

**THERMAL PROTECTION SYSTEM.** The area aft of the reinforced carbon-carbon nose cap to the nose landing gear doors has sustained damage (tile slumping) during flight operations from impact during ascent and overheating during re-entry. This area, which previously was covered with high-temperature reusable surface insulation tiles, will now be covered with reinforced carbon-carbon.

The low-temperature thermal protection system tiles on Columbia's midbody, payload bay doors and vertical tail were replaced with advanced flexible reusable surface insulation blankets.

Because of evidence of plasma flow on the lower wing trailing edge and elevon landing edge tiles (wing/elevon cove) at the outboard elevon tip and inboard elevon, the low-temperature tiles are being replaced with fibrous refractory composite insulation (FRC1-12) and high-temperature (HRSI-22) tiles along with gap fillers on Discovery and Atlantis. On Columbia only gap fillers are installed in this area.

**WING MODIFICATION.** Before the wings for Discovery and Atlantis were manufactured, a weight reduction program was instituted that resulted in a redesign of certain areas of the wing

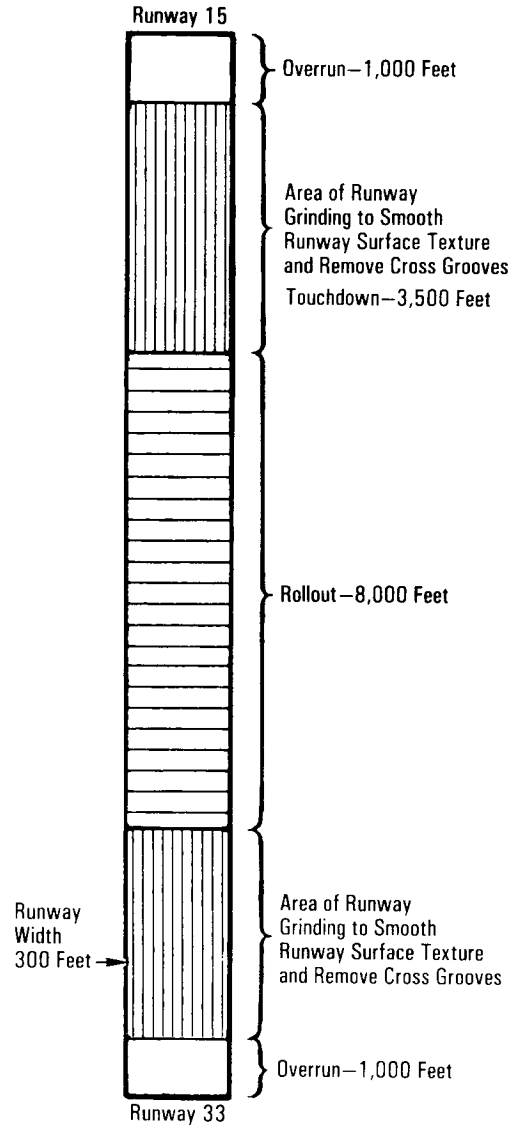


*Shuttle Landing Facility Runway Modifications at Kennedy Space Center*

structure. An assessment of wing air loads from actual flight data indicated greater loads on the wing structure than predicted. To maintain positive margins of safety during ascent, structural modifications were incorporated into certain areas of the wings.

**MIDFUSELAGE MODIFICATIONS.** Because of additional detailed analysis of actual flight data concerning descent-stress thermal-gradient loads, torsional straps were added to tie all the lower midfuselage stringers in bays 1 through 11 together in a manner similar to a box section. This eliminates rotational (torsional) capabilities to provide positive margins of safety.

Also, because of the detailed analysis of actual descent flight data, room-temperature vulcanizing silicone rubber material was bonded to the lower midfuselage from bays 4 through 11 to act as a heat sink, distributing temperatures evenly across the bottom of the midfuselage, reducing thermal gradients and ensuring positive margins of safety.

**GENERAL-PURPOSE COMPUTERS.** New upgraded general-purpose computers (AP-101S) will replace the existing GPCs aboard the space shuttle orbiters in late 1988 or early 1989. The upgraded computers allow NASA to incorporate more capabilities into the orbiters and apply advanced computer technologies that were not available when the orbiter was first designed. The new computer design began in January 1984, whereas the older design began in January 1972. The upgraded GPCs provide 2.5 times the existing memory capacity and up to three times the existing processor speed with minimum impact on flight software. They are half the size, weigh approximately half as much, and require less power to operate.

**INERTIAL MEASUREMENT UNITS.** The new high-accuracy inertial navigation system will be phased in to augment the present KT-70 inertial measurement units in 1988-89. These new IMUs will result in lower program costs over the next decade, ongoing production support, improved performance, lower failure rates and reduced size and weight. The HAINS IMUs also contain an internal dedicated microprocessor with memory for processing and storing compensation and scale factor data from the vendor's calibration, thereby reducing the need for extensive initial load data for the orbiter's computers. The HAINS is both physically and functionally interchangeable with the KT-70 IMU.

**CREW ESCAPE SYSTEM.** The in-flight crew escape system is provided for use only when the orbiter is in controlled gliding flight and unable to reach a runway. This would normally lead to ditching. The crew escape system provides the flight crew with an alternative to water ditching or to landing on terrain other than a landing site. The probability of the flight crew surviving a ditching is very small.

The hardware changes required to the orbiters would enable the flight crew to equalize the pressurized crew compartment with the outside pressure via a depressurization valve opened by pyrotechnics in the crew compartment aft bulkhead that would be manually activated by a flight crew member in the middeck of the crew compartment; pyrotechnically jettison the crew ingress/egress side hatch in the middeck of the crew compartment; and bail out from the middeck of the orbiter through the ingress/egress side hatch opening after manually deploying the escape pole through, outside and down from the side hatch opening. One by one, each crew member attaches a lanyard hook assembly, which surrounds the deployed escape pole, to his parachute harness and egresses through the side hatch opening. Attached to the escape pole, the crew member slides down the pole and off the end. The escape pole provides a trajectory that takes the crew members below the orbiter's left wing.

Changes were also made in the software of the orbiter's general-purpose computers. The software changes were required for the primary avionics software system and the backup flight system for transatlantic-landing and glide-return-to-launch-site aborts. The changes provide the orbiter with an automatic-mode input by the flight crew through keyboards on the commander's and/or pilot's panel C3, which provides the orbiter with an automatic stable flight for crew bailout.

Note that the side hatch jettison feature could be used in a landing emergency.

**EMERGENCY EGRESS SLIDE.** The emergency egress slide provides orbiter flight crew members with a means for rapid and safe exit through the orbiter middeck ingress/egress side hatch after a normal opening of the side hatch or after jettisoning the side hatch at the nominal end-of-mission landing site or at a remote or emergency landing site.

The emergency egress slide replaces the emergency egress side hatch bar, which required the flight crew members to drop approximately 10.5 feet to the ground. The previous arrangement could have injured crew members or prevented an already-injured crew member from evacuating and moving a safe distance from the orbiter.

**17-INCH ORBITER/EXTERNAL TANK DISCONNECTS.** Each mated pair of 17-inch disconnects contains two flapper valves: one on the orbiter side and one on the external tank side. Both valves in each disconnect pair are opened to permit propellant flow between the orbiter and the external tank. Prior to separation from the external tank, both valves in each mated pair of disconnects are commanded closed by pneumatic (helium) pressure from the main propulsion system. The closure of both valves in each disconnect pair prevents propellant discharge from the external tank or orbiter at external tank separation. Valve closure on the orbiter side of each disconnect also prevents contamination of the orbiter main propulsion system during landing and ground operations.

Inadvertent closure of either valve in a 17-inch disconnect during main engine thrusting would stop propellant flow from the external tank to all three main engines. Catastrophic failure of the main engines and external tank feed lines would result.

To prevent inadvertent closure of the 17-inch disconnect valves during the space shuttle main engine thrusting period, a latch mechanism was added in each orbiter half of the disconnect. The latch mechanism provides a mechanical backup to the normal fluid-induced-open forces. The latch is mounted on a shaft in the flowstream so that it overlaps both flappers and obstructs closure for any reason.

In preparation for external tank separation, both valves in each 17-inch disconnect are commanded closed. Pneumatic pressure from the main propulsion system causes the latch actuator to rotate the shaft in each orbiter 17-inch disconnect 90 degrees, thus freeing the flapper valves to close as required for external tank separation.

A backup mechanical separation capability is provided in case a latch pneumatic actuator malfunctions. When the orbiter umbilical initially moves away from the ET umbilical, the mechanical latch disengages from the ET flapper valve and permits the orbiter disconnect flapper to toggle the latch. This action permits both flappers to close.

## SPACE SHUTTLE MAIN ENGINE MARGIN IMPROVEMENT PROGRAM

Improvements to the SSMEs for increased margin and durability began with a formal Phase II program in 1983. Phase II focused on turbomachinery to extend the time between high-



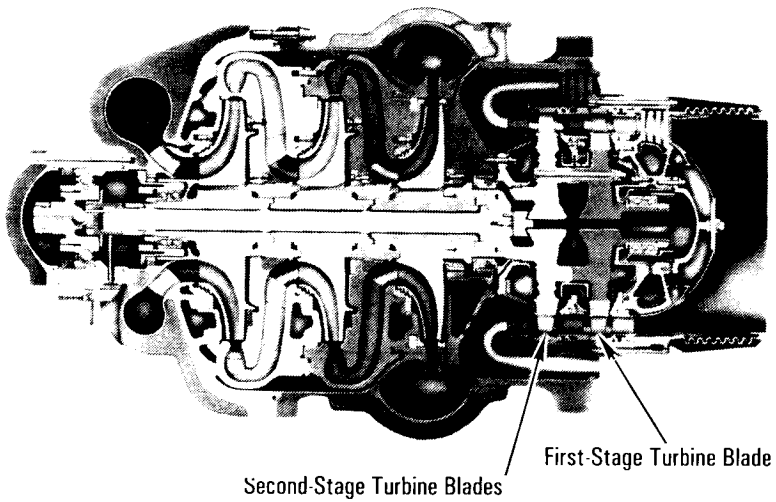


*Phase II—High-Pressure Fuel Turbopump*

pressure turbopump overhauls by reducing the operating temperature in the high-pressure fuel turbopump and by incorporating margin improvements to the HPFT rotor dynamics (whirl), turbine blade and HPFT bearings. Phase II certification was completed in 1985, and all the changes have been incorporated into the SSMEs for the STS-26 mission.

In addition to the Phase II improvements, additional changes in the SSME have been incorporated to further extend the engines' margin and durability. The main changes were to the high-pressure turbomachinery, main combustion chamber, hydraulic actuators and high-pressure turbine discharge temperature sensors. Changes were also made in the controller software to improve engine control.

Minor high-pressure turbomachinery design changes resulted in margin improvements to the turbine blades, thereby extending the operating life of the turbopumps. These changes included applying surface texture to important parts of the fuel turbine blades to improve the material properties in the pressure of hydrogen and incorporating a damper into the high-pressure oxidizer turbine blades to reduce vibration.

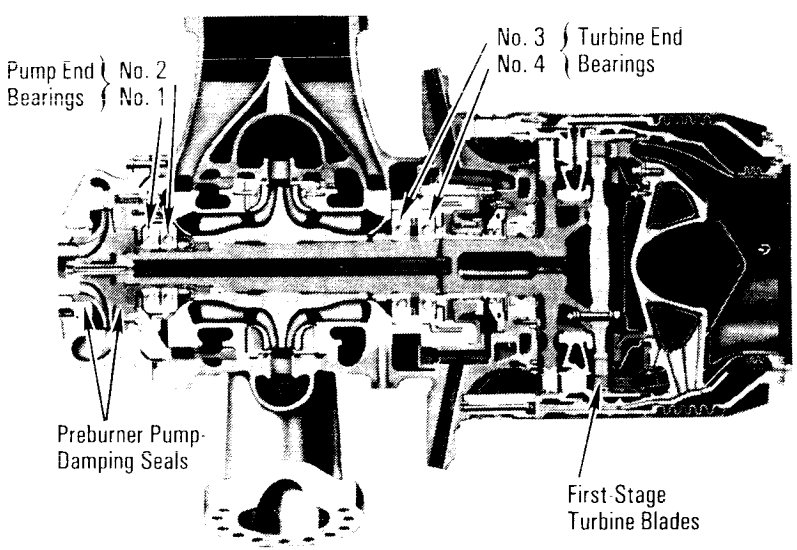


*Phase II—High-Pressure Oxidizer Turbopump*

Main combustion chamber life has been increased by plating a welded outlet manifold with nickel. Margin improvements have also been made to five hydraulic actuators to preclude a loss in redundancy on the launch pad. Improvements in quality have

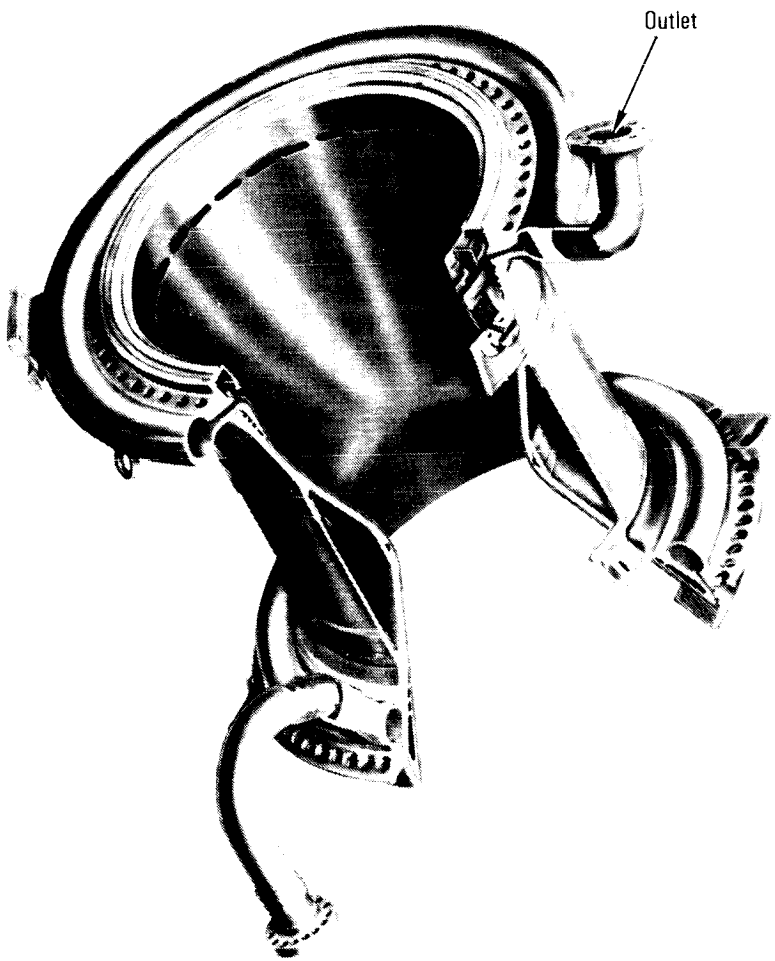


*Main Combustion Chamber*

been incorporated into the servo-component coil design along with modifications to increase margin. To address a temperature sensor in-flight anomaly, the sensor has been redesigned and extensively tested without problems.

To certify the improvements to the SSMEs and demonstrate their reliability through margin (or limit testing), an aggressive ground test program was initiated in December 1986. From December 1986 to December 1987, 151 tests and 52,363 seconds of operation (equivalent to 100 shuttle missions) were performed. The SSMEs have exceeded 300,000 seconds total test time, the equivalent of 615 space shuttle missions. These hot-fire ground tests are performed at the single-engine test stands at the NASA National Space Technology Laboratories in Mississippi and at Rockwell International's Rocketdyne Division's Santa Susana Field Laboratory in California.

## SSME FLIGHT PROGRAM

By January 1986, there had been 25 flights (75 engine launches with three SSMEs per flight) of the SSMEs. A total of 13 engines were flown, and SSME reusability was demonstrated. One engine (serial number 2012) has been flown 10 times; 10 other engines have flown between five and nine times. Two off-nominal conditions were experienced on the launch pad and one during flight. Two fail-safe shutdowns occurred on the launch pad during engine start but before solid rocket booster ignition. In each case, the controller detected a loss of redundancy in the hydraulic actuator system and commanded engine shutdown in keeping with the launch commit criteria. Another loss of redundancy occurred in flight with a loss of a redline temperature sensor and its backup. The engine was commanded to shut down, but the other two engines safely delivered the space shuttle to orbit. A major upgrade of these components was implemented to prevent a recurrence of these conditions and will be incorporated for STS-26.

## SOLID ROCKET MOTOR REDESIGN

On June 13, 1986, President Reagan directed NASA to implement, as soon as possible, the recommendations of the "Presidential Commission on the Space Shuttle Challenger Accident." NASA developed a plan to provide a redesigned solid rocket motor. The primary objective of the redesign effort was to provide an SRM that is safe to fly. A secondary objective was to minimize impact on the schedule by using existing hardware, to the extent practical, without compromising safety. A joint redesign team was established that included participation from Marshall Space Flight Center, Morton Thiokol and NASA centers as well as individuals from outside NASA.

An "SRM Redesign Project Plan" was developed to formalize the methodology for SRM redesign and requalification. The plan provided an overview of the organizational responsibilities and relationships, the design objectives, criteria and process; the verification approach and process; and a master schedule. The companion "Development and Verification Plan" defined the test program and analyses required to verify the redesign and the unchanged components of the SRM.

All aspects of the existing SRM were assessed, and design changes were required in the field joint, case-to-nozzle joint, noz-



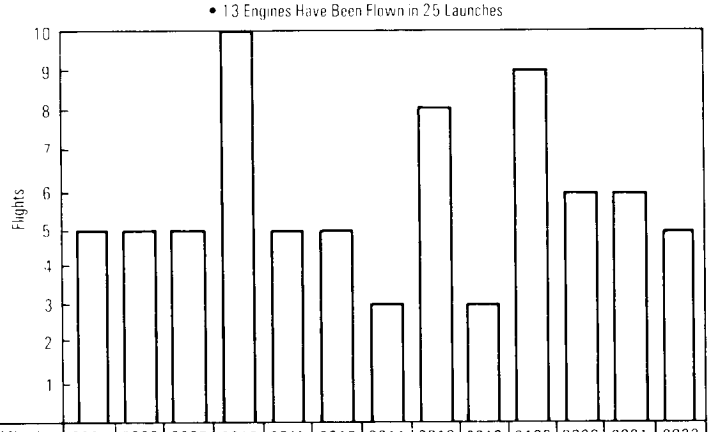


| Engine Serial Number | 2005 | 2006 | 2007 | 2012 | 2015 | 2017 | 2011 | 2018 | 2019 | 2109 | 2020 | 2021 | 2023 |
|---|---|---|---|---|---|---|---|---|---|---|---|---|---|
| First Launch Date | 4/81 | 4/81 | 4/81 | 4/83 | 4/83 | 4/83 | 11/83 | 11/83 | 11/83 | 2/84 | 4/84 | 8/84 | 10/84 |

*SSME Flight Experience Demonstrates Reusability (Through Feb. 1, 1986)*

zle, factory joint, propellant grain shape, ignition system and ground support equipment. No changes were made in the propellant, liner or castable inhibitor formulations. Design criteria were established for each component to ensure a safe design with an adequate margin of safety. These criteria focused on loads, environments, performance, redundancy, margins of safety and verification philosophy.

The criteria were converted into specific design requirements during the Preliminary Requirements Reviews held in July and August 1986. The design developed from these requirements was assessed at the Preliminary Design Review held in September 1986 and baselined in October 1986. The final design was approved at the Critical Design Review held in October 1987. Manufacture of the redesigned solid rocket motor test hardware and the first flight hardware began prior to the PDR and continued in parallel with the hardware certification program. The Design Certification Review will review the analyses and test results versus the program and design requirements to certify the redesigned SRM is ready to fly.

**ORIGINAL VERSUS REDESIGNED SRM FIELD JOINT.**

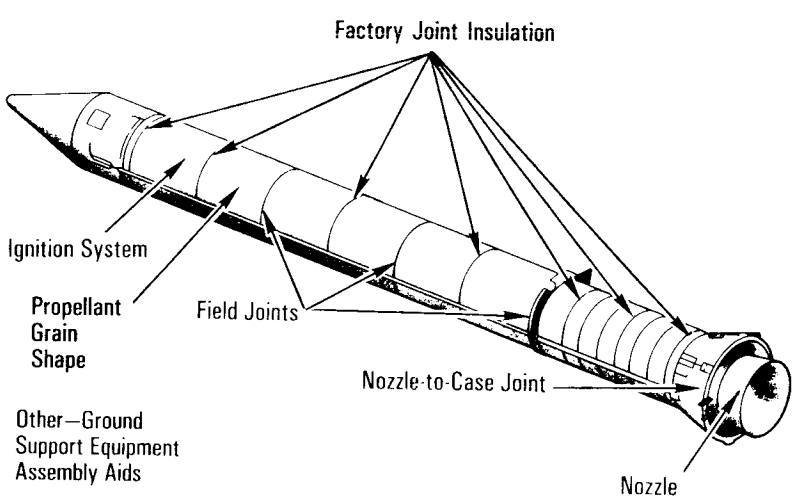


*Solid Rocket Booster Redesign and Reassessment*

The SRM field-joint metal parts, internal case insulation and seals were redesigned and a weather protection system was added.

In the STS 51-L design, the application of actuating pressure to the upstream face of the O-ring was essential for proper joint sealing performance because large sealing gaps were created by pressure-induced deflections, compounded by significantly reduced O-ring sealing performance at low temperature. The major change in the motor case is the new tang capture feature to provide a positive metal-to-metal interference fit around the circumference of the tang and clevis ends of the mating segments. The interference fit limits the deflection between the tang and clevis O-ring sealing surfaces caused by motor pressure and structural loads. The joints are designed so that the seals will not leak under twice the expected structural deflection and rate.

The new design, with the tang capture feature, the interference fit and the use of custom shims between the outer surface of the tang and inner surface of the outer clevis leg, controls the O-ring sealing gap dimension. The sealing gap and the O-ring seals are designed so that a positive compression (squeeze) is always on



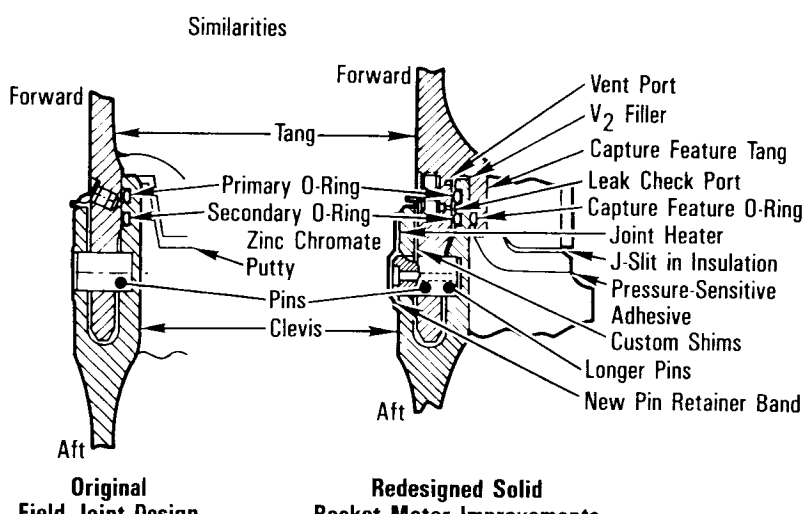


*Field Joint Comparison*

the O-rings. The minimum and maximum squeeze requirements include the effects of temperature, O-ring resiliency and compression set, and pressure. The clevis O-ring groove dimension has been increased so that the O-ring never fills more than 90 percent of the O-ring groove and pressure actuation is enhanced.

The new field-joint design also includes a new O-ring in the capture feature and an additional leak check port to ensure that the primary O-ring is positioned in the proper sealing direction at ignition. This new or third O-ring also serves as a thermal barrier in case the sealed insulation is breached.

The field-joint internal case insulation was modified to be sealed with a pressure-actuated flap called a J-seal, rather than with putty as in the STS 51-L configuration.

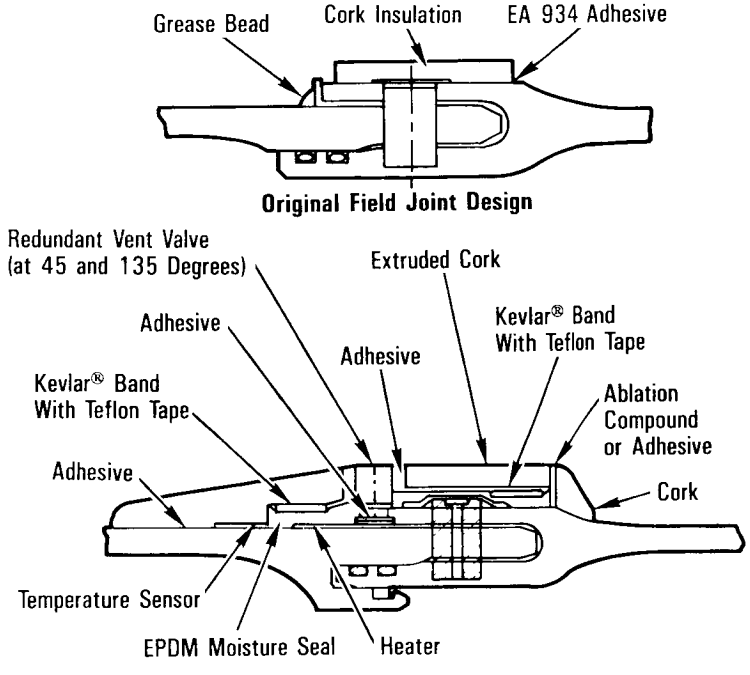


*Field Joint Protection System*

Longer field-joint-case mating pins, with a reconfigured retainer band, were added to improve the shear strength of the pins and increase the metal parts' joint margin of safety. The joint safety margins, both thermal and structural, are being demonstrated over the full ranges of ambient temperature, storage compression, grease effect, assembly stresses and other environments. External heaters with integral weather seals were incorporated to maintain the joint and O-ring temperature at a minimum of 75 F. The weather seal also prevents water intrusion into the joint.

**ORIGINAL VERSUS REDESIGNED SRM CASE-TO-NOZZLE JOINT.** The SRM case-to-nozzle joint, which experienced several instances of O-ring erosion in flight, has been redesigned to satisfy the same requirements imposed upon the case field joint. Similar to the field joint, case-to-nozzle joint modifications have been made in the metal parts, internal insulation and O-rings. Radial bolts with Stato-O-Seals were added to minimize the joint sealing gap opening. The internal insulation was modified to be sealed adhesively, and a third O-ring was included. The third O-ring serves as a dam or wiper in front of the primary O-ring to prevent the polysulfide adhesive from being extruded into the primary O-ring groove. It also serves as a thermal barrier in case the polysulfide adhesive is breached. The polysulfide adhesive replaces the putty used in the 51-L joint. Also, an additional leak check port was added to reduce the amount of trapped air in the joint during the nozzle installation process and to aid in the leak check procedure.

**NOZZLE.** The internal joints of the nozzle metal parts have been redesigned to incorporate redundant and verifiable O-rings at each joint. The nozzle steel fixed housing part has been redesigned to permit the incorporation of the 100 radial bolts that attach the fixed housing to the case's aft dome. Improved bonding techniques are being used for the nozzle nose inlet, cowl/boot and aft exit cone assemblies. The distortion of the nose inlet assembly's metal-part-to-ablative-parts bond line has been eliminated by increasing the thickness of the aluminum nose inlet housing and improving the bonding process. The tape-wrap angle of the carbon cloth fabric in the areas of the nose inlet and throat assembly parts was changed to improve the ablative insulation erosion toler-

ance. Some of these ply-angle changes were in progress prior to STS 51-L. The cowl and outer boot ring has additional structural support with increased thickness and contour changes to increase their margins of safety. Additionally, the outer boot ring ply configuration was altered.

**FACTORY JOINT.** Minor modifications were made in the case factory joints by increasing the insulation thickness and layup to increase the margin of safety on the internal insulation. Longer pins were also added, along with a reconfigured retainer band and new weather seal to improve factory joint performance and increase the margin of safety. Additionally, the O-ring and O-ring groove size was changed to be consistent with the field joint.

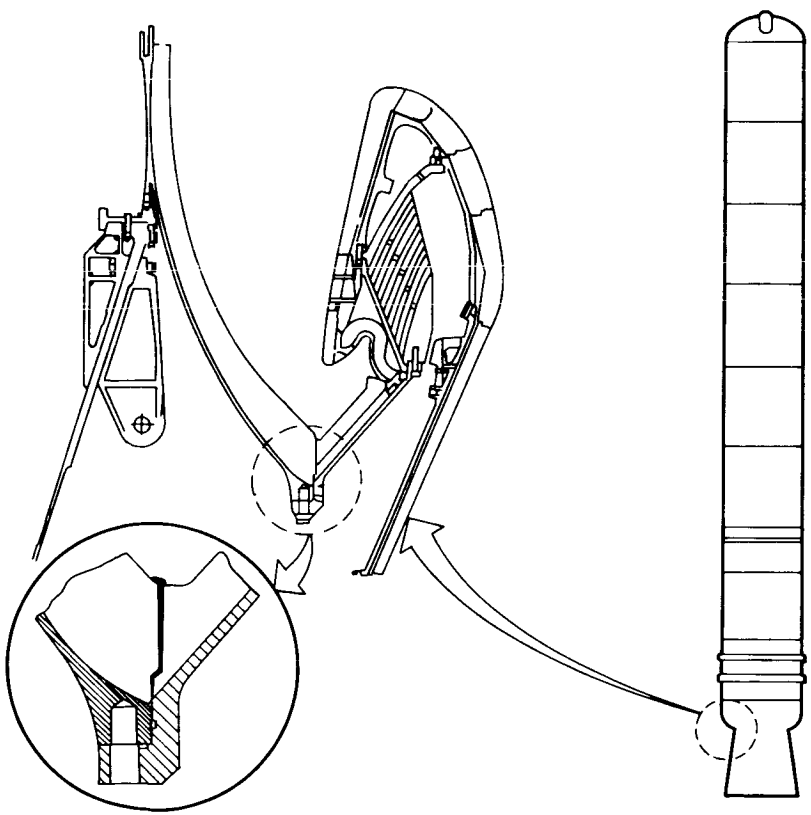

*Nozzle-to-Case Joint*

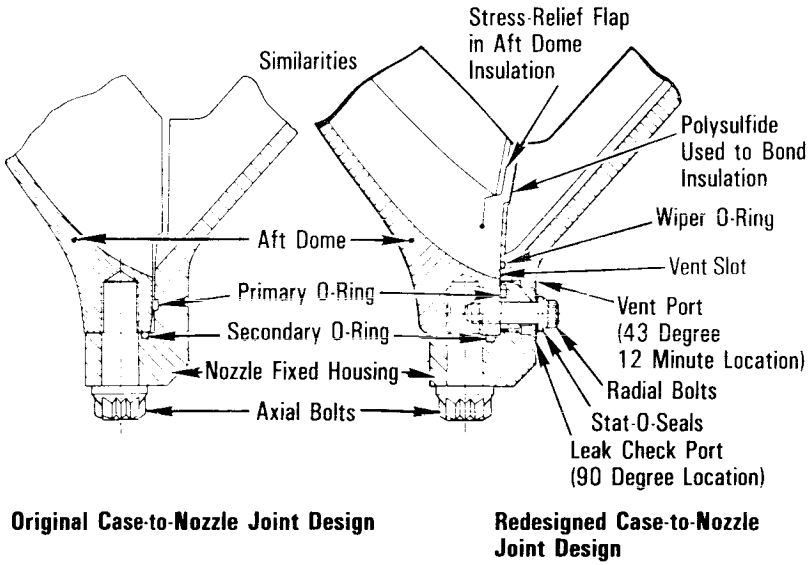


*Case-to-Nozzle Joint Design*



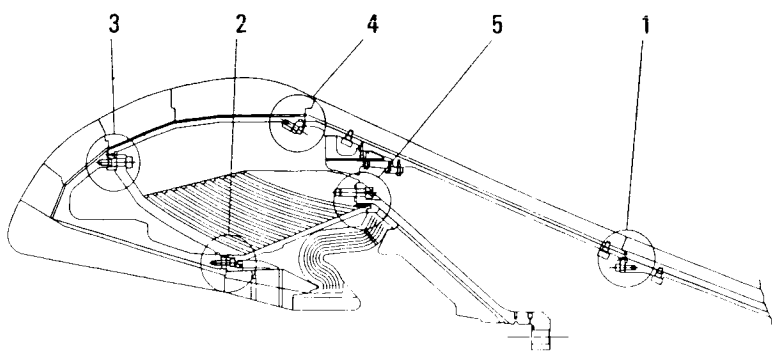


Joint 1 — Forward to Aft Exit Cone
Joint 2 — Nose-Inlet Assembly to Flex Bearing
Joint 3 — Nose-Inlet Assembly to Throat Assembly
Joint 4 — Throat Assembly to Forward Exit Cone
Joint 5 — Fixed Housing Assembly to Flex Bearing

*Redesigned Solid Rocket Motor Nozzle Internal Seals*

**PROPELLANT.** The motor propellant forward transition region was recontoured to reduce the stress fields between the star and cylindrical portions of the propellant grain.

**IGNITION SYSTEM.** Several minor modifications were incorporated into the ignition system. The aft end of the igniter steel case, which contains the igniter nozzle insert, was thickened to eliminate a localized weakness. The igniter internal case insulation was tapered to improve the manufacturing process. Finally, although vacuum putty is still being used at the joint of the igniter and case forward dome, it was changed to eliminate asbestos as one of its constituents.

**GROUND SUPPORT EQUIPMENT.** The ground support equipment has been redesigned to (1) minimize the case distortion during handling at the launch site, (2) improve the segment tang and clevis joint measurement system for more accurate reading of case diameters to facilitate stacking, (3) minimize the risk of O-ring damage during joint mating and (4) improve leak testing of the igniter, case and nozzle field joints. A GSE assembly aid guides the segment tang into the clevis and rounds the two parts with each other. Other GSE modifications include transportation monitoring equipment and lifting beam.

**DESIGN ANALYSIS SUMMARY.** Improved, state-of-the-art analyses related to structural strength, loads, stress, dynamics, fracture mechanics, gas and thermal dynamics, and material characterization and behavior were performed to aid the field joint, nozzle-to-case joint and other designs. Continuing these analyses will ensure that the design integrity and system compatibility adhere to design requirements and operational use. These analyses will be verified by tests, whose results will be correlated with pretest predictions.

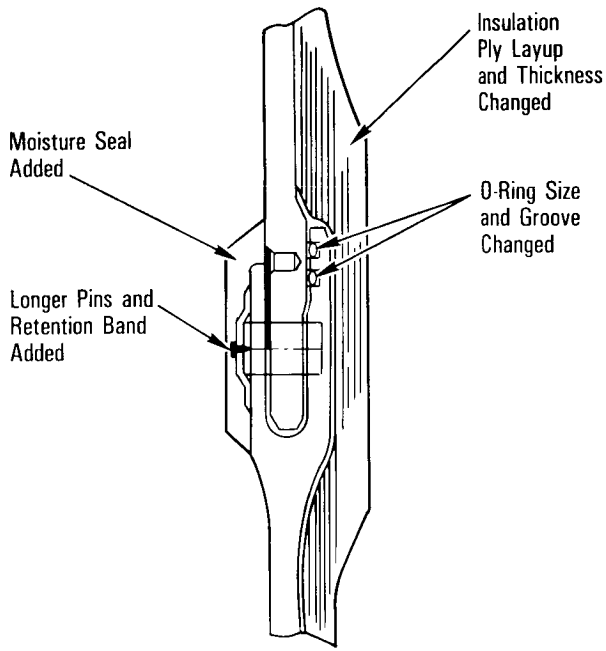


*Redesigned Factory Joint*

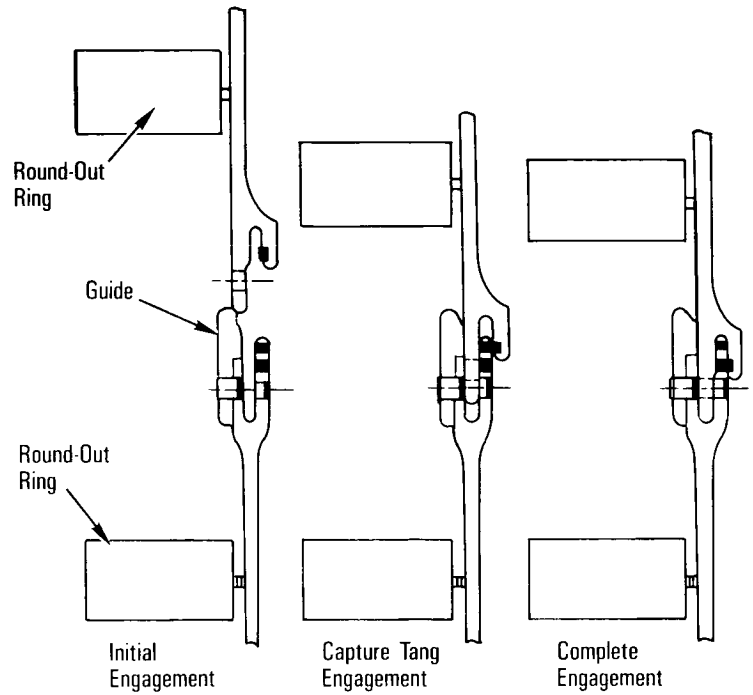


*Ground Support Equipment Assembly Aids*

**VERIFICATION/CERTIFICATION TEST.** The verification program demonstrates that the redesigned solid rocket motor meets all design and performance requirements, and that failure modes and hazards have been eliminated or controlled. The verification program encompasses the following program phases: development, certification, acceptance, preflight checkout, flight and postflight.

Redesigned SRM certification is based on formally documented results of development motor tests, qualification motor tests and other tests and analyses. The certification tests are conducted under strict control of environments, including thermal and structural loads; assembly, inspection and test procedures; and Safety, Reliability, Maintainability and Quality Assurance surveillance to verify that flight hardware meets the specified performance and design requirements. The "Development and Verification Plan" stipulates the test program, which follows a rigorous sequence wherein successive tests build on the results of previous tests leading to formal certification.

The test activities include laboratory and component tests, subscale tests, full-scale simulation and full-scale motor static test firings. Laboratory and component tests are used to determine component properties and characteristics. Subscale motor firings are used to simulate gas dynamics and thermal conditions for components and subsystem design. Full-scale hardware simulators are used to verify analytical models; determine hardware assembly characteristics; determine joint deflection characteristics; determine joint performance under short-duration hot-gas tests, including joint flaws and flight loads; and determine redesigned hardware structural characteristics.

Fourteen full-scale joint assembly demonstration vertical mate/demate tests, with eight interspersed hydrotests to simulate flight hardware refurbishment procedures, were completed early for the redesigned capture-feature hardware. Assembly loads were as expected, and the case growth was as predicted with no measurable increase after three hydroproof tests.

Flight-configuration aft and center segments were fabricated, loaded with live propellant, and used for assembly test article stacking demonstration tests at Kennedy Space Center. These tests were pathfinder demonstrations for the assembly of flight hardware using newly developed GSE.

In a long-term stack test, a full-scale casting segment, with live propellant, has been mated vertically with a J-seal insulation segment and is undergoing temperature cycling. This will determine the compression set of the J-seal, aging effects and long-term propellant slumping effects.

The structural test article (STA-3), consisting of flight-type forward and aft motor segments and forward and aft skirts, was subjected to extensive static and dynamic structural testing, including maximum prelaunch, lift-off and flight (maximum dynamic pressure) structural loads.

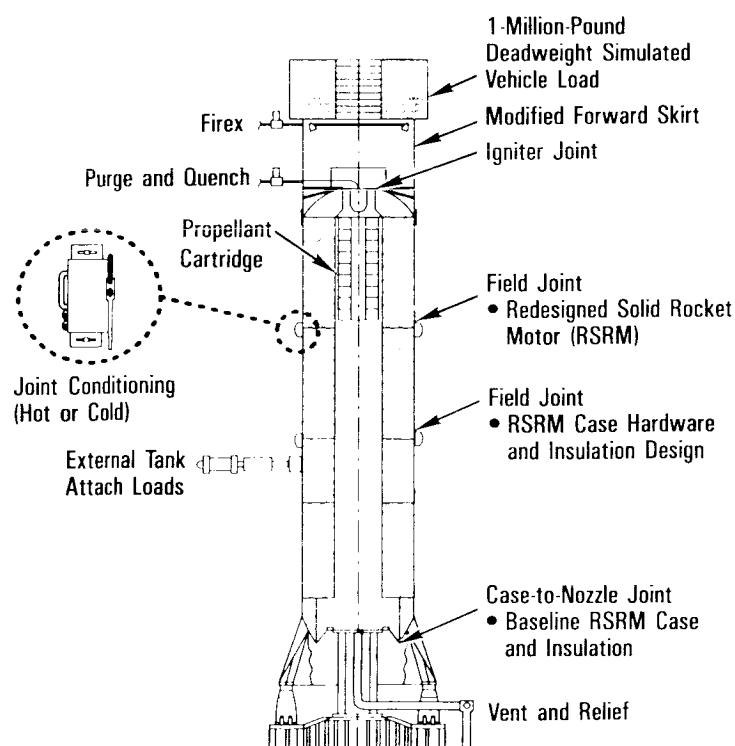


*Transient Pressure Test Article (TPTA) Configuration*

Redesigned SRM certification includes testing the actual flight configuration over the full range of operating environments and conditions. The joint environment simulator, transient pressure test article, and the nozzle joint environment simulator test programs all utilize full-scale flight design hardware and subject the redesigned SRM design features to the maximum expected operating pressure, maximum pressure rise rate and temperature extremes during ignition tests. Additionally, the TPTA is subjected to ignition and lift-off loads as well as maximum dynamic pressure structural loads.

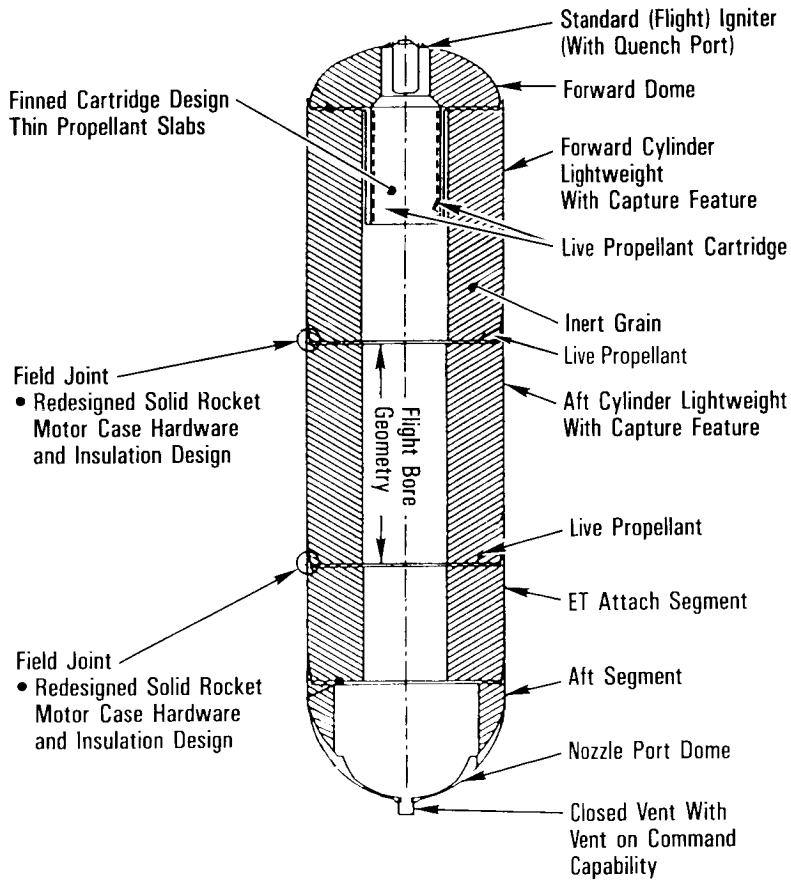


*Joint Environment Simulation (JES) Configuration*

Four TPTA tests have been completed to subject the redesigned case field and case-to-nozzle joints to the above-described conditions. The field and case-to-nozzle joints were temperature-conditioned to 75 F and contained various types of flaws in the joints so that the primary and secondary O-rings could be pressure-actuated, joint rotation and O-ring performance could be evaluated and the redesigned joints could be demonstrated as fail safe.

Six of the seven joint environment simulator tests have been completed. The JES test program initially used the STS 51-L configuration hardware to evaluate the joint performance with prefabricated blowholes through the putty. The JES-1 test series, which consisted of two tests, established a structural and performance data base for the STS 51-L configuration with and without a replicated joint failure. The JES-2 series, two tests, also used the STS 51-L case metal-part joint but with a bonded labyrinth and U-seal insulation that was an early design variation of the J-seal. Tests were conducted with and without flaws built into the U-seal joint insulation; neither joint showed O-ring erosion or blowby. The JES-3 series, three tests, uses almost exact flight configura-

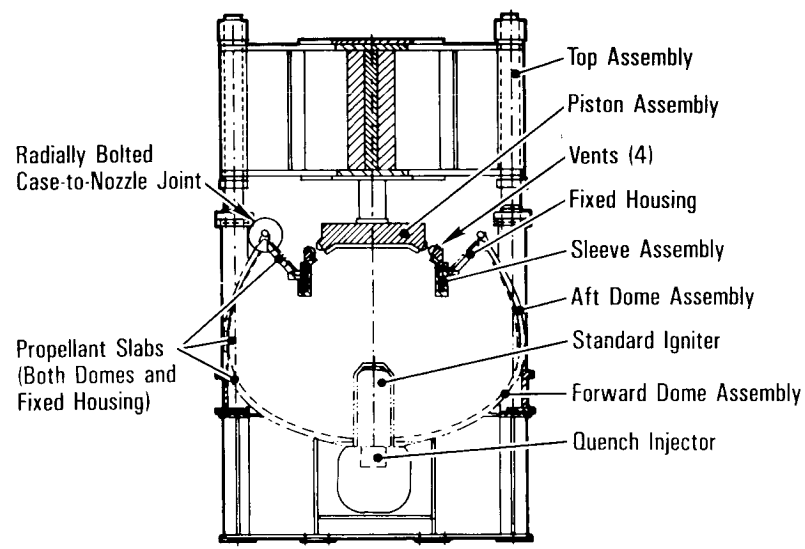


*Nozzle Joint Environment Simulator Configuration*

tion hardware, case field-joint capture feature with interference fit and J-seal insulation.

Four of five nozzle JES tests have been successfully conducted. The STS 51-L hardware configuration hydrotest confirmed predicted case-to-nozzle-joint deflection. The other three tests used the radially bolted redesigned SRM configuration.

Seven full-scale, full-duration motor static tests are being conducted to verify the integrated redesigned SRM performance. These include one engineering test motor used to (1) provide a data base for STS 51-L-type field joints, (2) evaluate new seal material, (3) evaluate the ply-angle change in the nozzle parts, (4) evaluate the effectiveness of graphite composite stiffener rings to reduce joint rotation and (5) evaluate field-joint heaters. There were two development motor tests and three qualification motor tests for final flight configuration and performance certification. There will be one flight production verification motor that contains intentionally induced defects in the joints to demonstrate joint performance under extreme worse case conditions. The QM-7 and QM-8 motors will be subjected to lift-off and maximum dynamic pressure structural loads, QM-7 will be temperature-conditioned to 90 F, and QM-8 will be temperature-conditioned to 40 F.

An assessment was conducted to determine the full-duration static firing test attitude necessary to certify the design changes completely. The assessment included establishing test objectives, defining and quantifying attitude-sensitive parameters, and evaluating attitude options. Both horizontal and vertical (nozzle up and down) test attitudes were assessed. In all three options, consideration was given to testing with and without externally applied loads. This assessment determined that the conditions influencing the joint and insulation behavior could best be tested to design extremes in the horizontal attitude. In conjunction with the horizontal attitude for the redesigned SRM full-scale testing, it was decided to incorporate externally applied loads. A second horizontal test stand for certification of the redesigned SRM was constructed at Morton Thiokol. This new stand, designated as the T-97 Large Motor Static Test Facility, is being used to simulate environmental stresses, loads and temperatures experienced during an actual shuttle launch and ascent. The new test stand also provides redundancy for the existing stand.

**NON-DESTRUCTIVE EVALUATION.** The shuttle 51-L and Titan 34D-9 vehicle failures, both of which occurred in 1986, resulted in major reassessments of each vehicle's design, processing, inspection and operations. While the shuttle SRM insulation/propellant integrity was not implicated in the 51-L failure, the intent is to preclude a failure similar to that experienced by Titan. The redesigned SRM field joint is quite tolerant of unbonded insulation. It has sealed insulation to prevent hot combustion products from reaching the insulation-to-case bond line. The bonding processes have been improved to reduce contamination potential, and the new geometry of the tang capture feature inherently provides more isolation of the edge insulation area from contaminating agents. A greatly enhanced NDE program for the redesigned SRM has been incorporated. The enhanced non-destructive testing

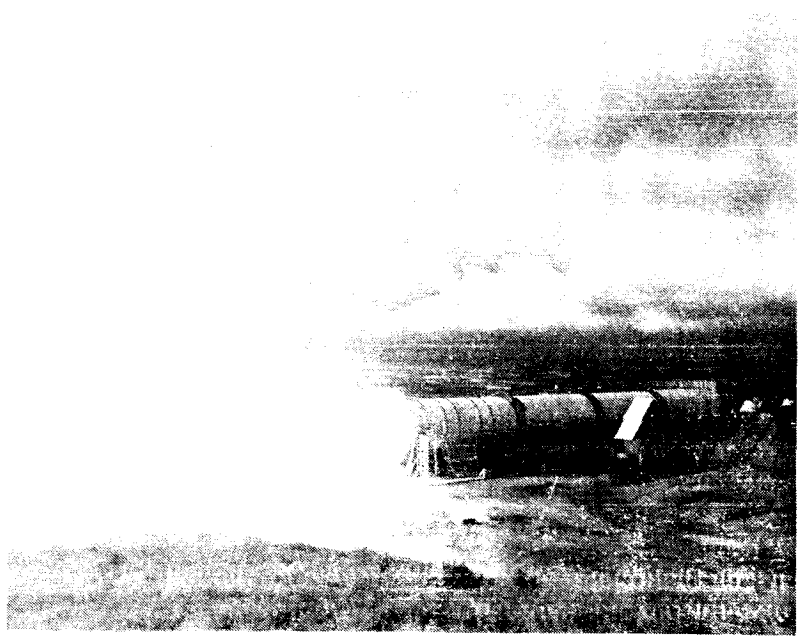

*Full-Duration Test Firing*

includes ultrasonic inspection and mechanical testing of propellant and insulation bonded surfaces. All segments will again be X-rayed for the first flight and near-term subsequent flights.

**CONTINGENCY PLANNING.** To provid additional program confidence, both near- and long-term contingency planning was implemented. Alternative designs, which might be incorporated into the flight program at discrete decision points, include field-joint graphite-composite overwrap bands and alternative seals for the field joint and case-to-nozzle joint. Alternative designs for the nozzle include a different composite layup technique and a steel nose inlet housing.

Alternative designs with long-lead-time implications were also developed. These designs focus on the field joint and case-to-nozzle joint. Since fabrication of the large steel components dictates the schedule, long-lead procurement of maximum-size steel ingots was initiated. This allowed machining of case joints to either the new baseline or to an alternative design configuration. Ingot processing continued through forging and heat treating. At that time, the final design was selected. A principal consideration in this configuration decision was the result of verification testing on the baseline configuration.

**INDEPENDENT OVERSIGHT.** As recommended in the "Presidential Commission Report" and at the request of the NASA administrator, the National Research Council established an Independent Oversight Panel chaired by Dr. H. Guyford Stever, who reports directly to the administrator. Initially, the panel was given introductory briefings on the shuttle system requirements, implementation and control, the original design and manufacturing of the SRM, Mission 51-L accident analyses and preliminary plans for the redesign. The panel has met with major solid rocket motor manufacturers and vendors, and has visited some of their facilities. The panel frequently reviewed the redesigned SRM design criteria, engineering analyses and design, and certification program planning. Panel members continuously review the design and testing for safe operation, selection and specifications for material, and quality assurance and control. The panel has continued to review the design as it progresses through certification and review the manufacturing and assembly of the first flight redesigned SRM. Panel members have participated in major program milestones, Project Requirements Review, and Preliminary Design Review; they will also participate in future reviews. Six written reports have been provided by the panel to the NASA administrator.

In addition to the NRC, the redesign team has a design review group of 12 expert senior engineers from NASA and the aerospace industry. They have advised on major program decisions and serve as a "sounding board" for the program.

Additionally, NASA requested the four other major solid rocket motor companies—Aerojet Strategic Propulsion Company, Atlantic Research Corporation, Hercules Incorporated and United Technologies Corporation's Chemical Systems Division—to participate in the redesign efforts by critiquing the design approach and providing experience on alternative design approaches.

## SOLID ROCKET BOOSTERS

The two SRBs provide the main thrust to lift the space shuttle off the pad and up to an altitude of about 150,000 feet, or 24 nautical miles (28 statute miles). In addition, the two SRBs carry the entire weight of the external tank and orbiter and transmit the weight load through their structure to the mobile launcher platform. Each booster has a thrust (sea level) of approximately 3,300,000 pounds at launch. They are ignited after the three space shuttle main engines' thrust level is verified. The two SRBs provide 71.4 percent of the thrust at lift-off and during first-stage ascent. Seventy-five seconds after SRB separation, SRB apogee occurs at an altitude of approximately 220,000 feet, or 35 nautical miles (41 statute miles). SRB impact occurs in the ocean approximately 122 nautical miles (141 statute miles) downrange.

The SRBs are the largest solid-propellant motors ever flown and the first designed for reuse. Each is 149.16 feet long and 12.17 feet in diameter.

Each SRB weighs approximately 1,300,000 pounds at launch. The propellant for each solid rocket motor weighs approximately 1,100,000 pounds. The inert weight of each SRB is approximately 192,000 pounds.

Primary elements of each booster are the motor (including case, propellant, igniter and nozzle), structure, separation systems, operational flight instrumentation, recovery avionics, pyrotechnics, deceleration system, thrust vector control system and range safety destruct system.

Each booster is attached to the external tank at the SRB's aft frame by two lateral sway braces and a diagonal attachment. The forward end of each SRB is attached to the external tank at the forward end of the SRB's forward skirt. On the launch pad, each booster also is attached to the mobile launcher platform at the aft skirt by four bolts and nuts that are severed by small explosives at lift-off.

During the downtime following the Challenger accident, detailed structural analyses were performed on critical structural elements of the SRB. Analyses were primarily focused in areas where anomalies had been noted during postflight inspection of recovered hardware.

One of the areas was the attach ring where the SRBs are connected to the external tank. Areas of distress were noted in some of the fasteners where the ring attaches to the SRB motor case. This situation was attributed to the high loads encountered during water impact. To correct the situation and ensure higher strength margins during ascent, the attach ring was redesigned to encircle the motor case completely (360 degrees). Previously, the attach ring formed a C and encircled the motor case 270 degrees.

Additionally, special structural tests were performed on the aft skirt. During this test program, an anomaly occurred in a critical weld between the hold-down post and skin of the skirt. A redesign was implemented to add reinforcement brackets and fittings in the aft ring of the skirt.

These two modifications added approximately 450 pounds to the weight of each SRB.

The propellant mixture in each SRB motor consists of an ammonium perchlorate (oxidizer, 69.6 percent by weight), aluminum (fuel, 16 percent), iron oxide (a catalyst, 0.4 percent), a polymer (a binder that holds the mixture together, 12.04 percent), and an epoxy curing agent (1.96 percent). The propellant is an 11-point star-shaped perforation in the forward motor segment and a double-truncated-cone perforation in each of the aft segments and aft closure. This configuration provides high thrust at ignition and then reduces the thrust by approximately a third 50 seconds after lift-off to prevent overstressing the vehicle during maximum dynamic pressure.

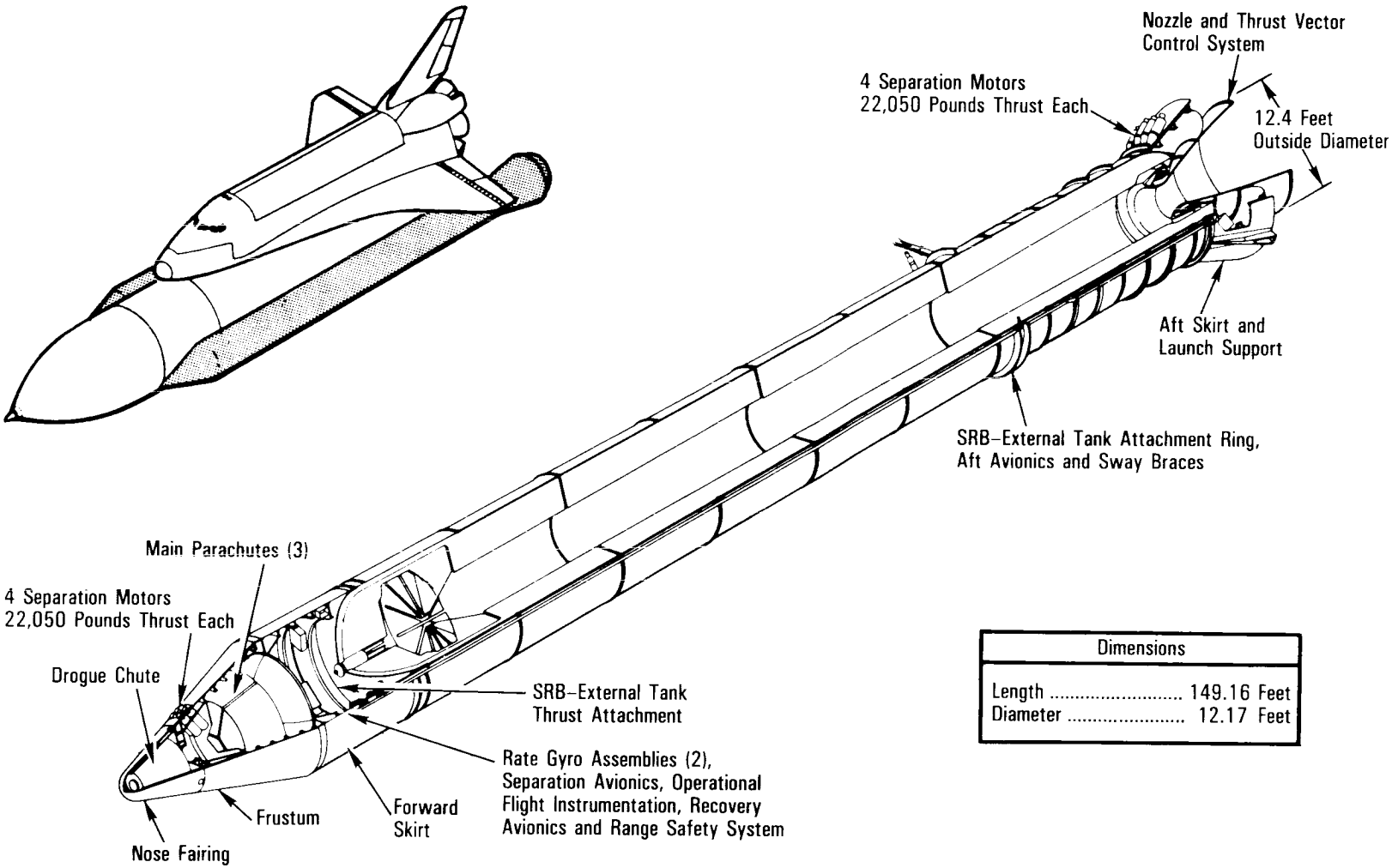


| Dimensions | |
|---|---|
| Length | 149.16 Feet |
| Diameter | 12.17 Feet |

*Solid Rocket Booster*

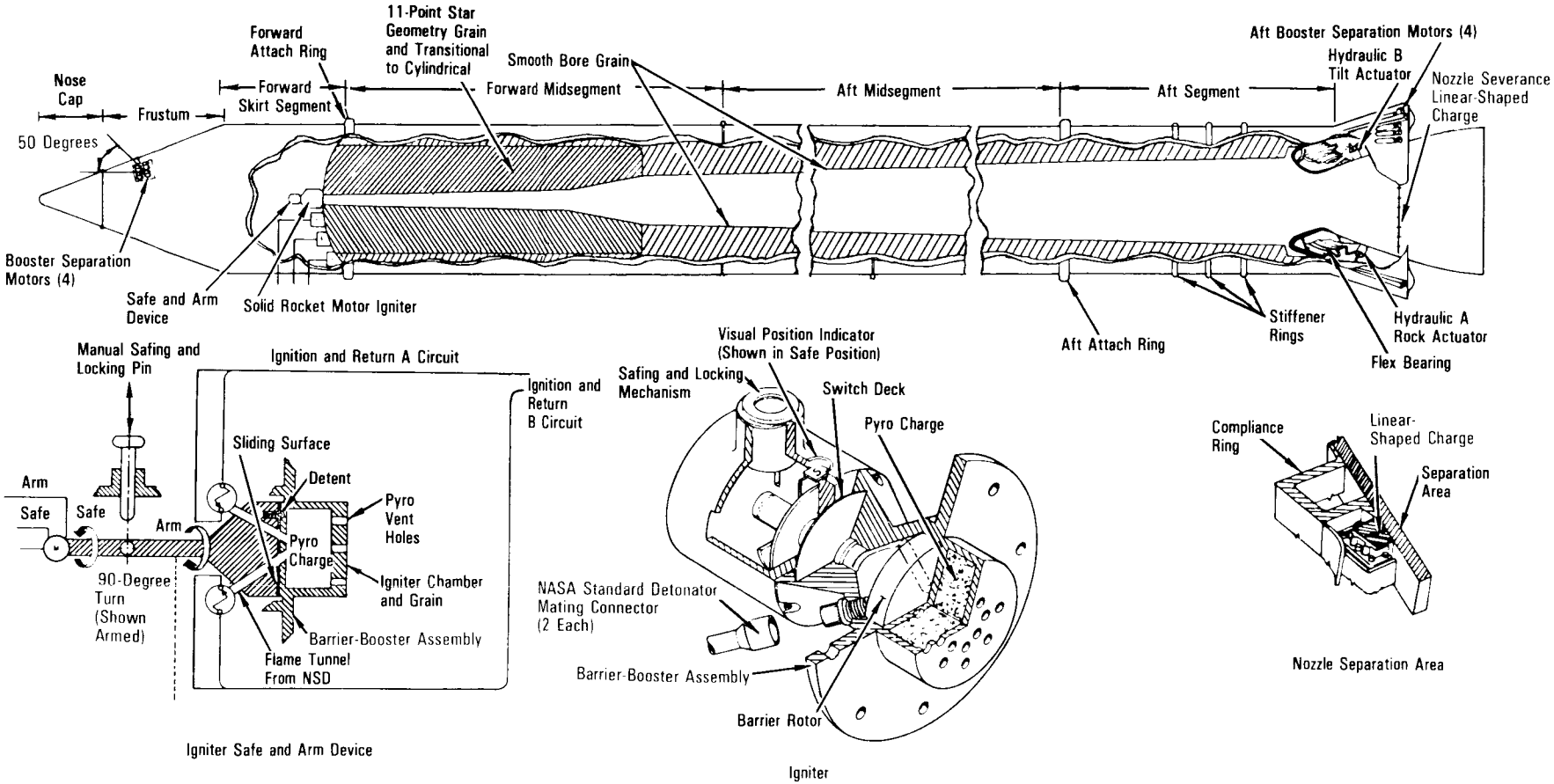


*Motor Segments, Safe and Arm Device, Igniter and Nozzle Severance*

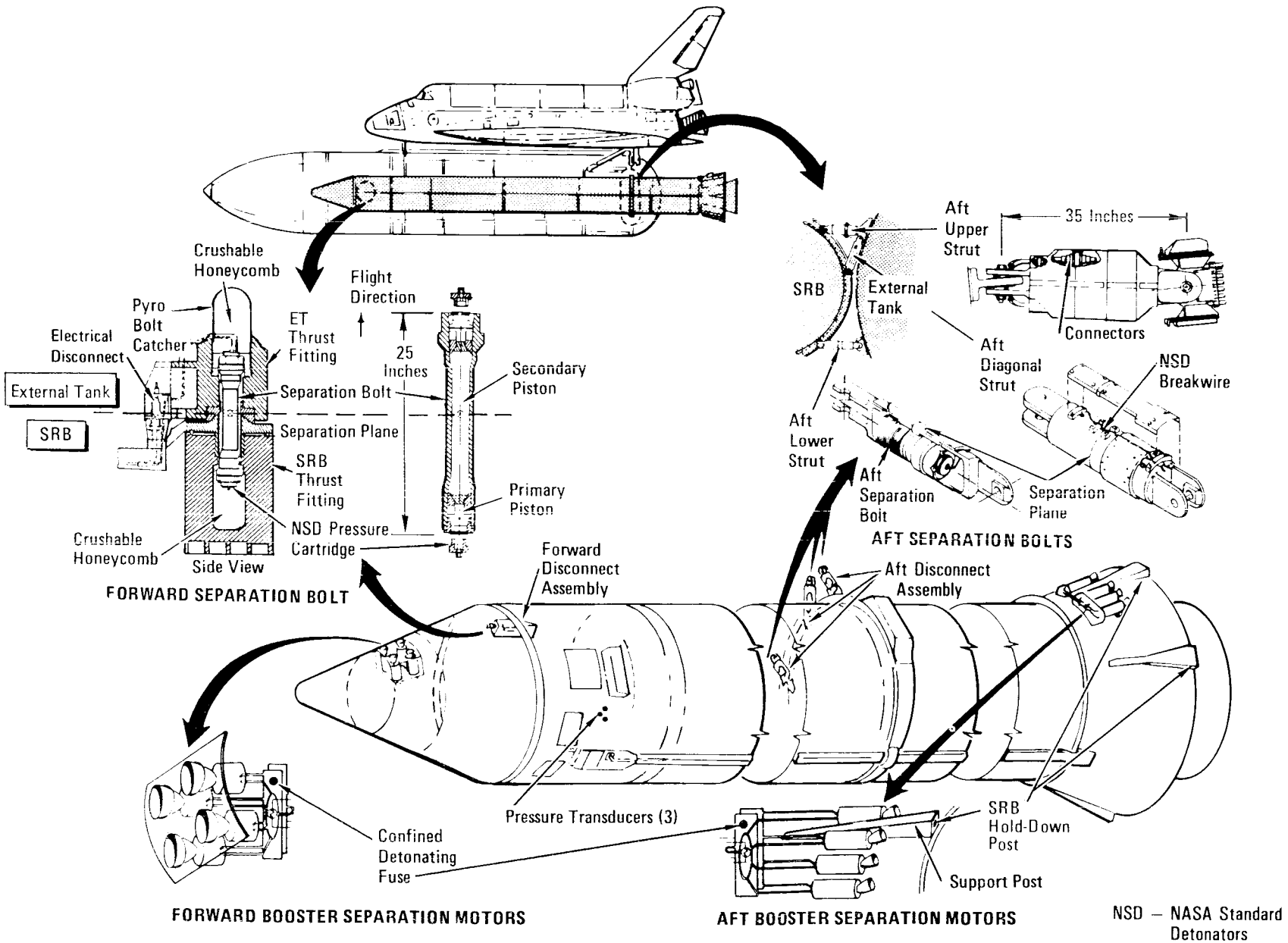


*Separation System Elements*

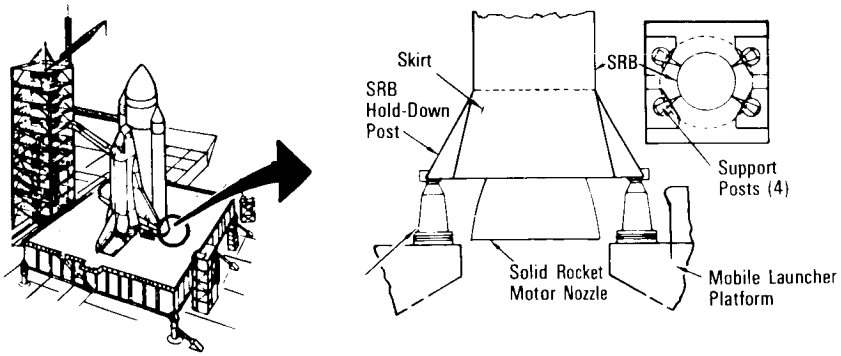


*SRB Hold-Down Configuration*

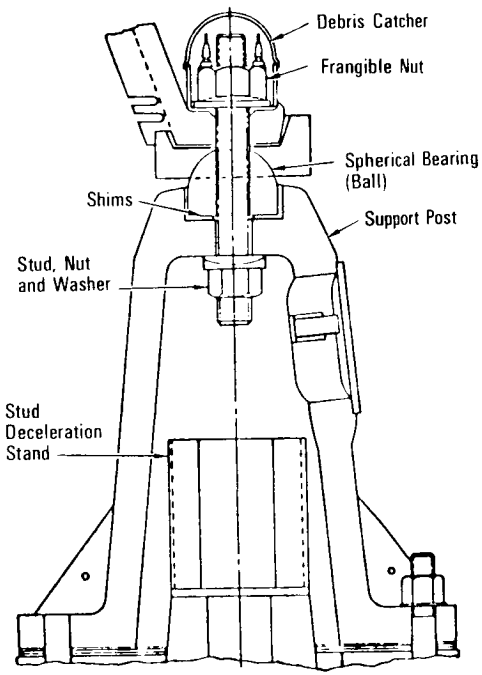


*SRB Support/Hold-Down Post*

The SRBs are used as matched pairs and each is made up of four solid rocket motor segments. The pairs are matched by loading each of the four motor segments in pairs from the same batches of propellant ingredients to minimize any thrust imbalance. The segmented-casing design assures maximum flexibility in fabrication and ease of transportation and handling. Each segment is shipped to the launch site on a heavy-duty rail car with a specially built cover.

The nozzle expansion ratio of each booster beginning with the STS-8 mission is 7-to-79. The nozzle is gimbaled for thrust vector (direction) control. Each SRB has its own redundant auxiliary power units and hydraulic pumps. The all-axis gimbaling capability is 8 degrees. Each nozzle has a carbon cloth liner that erodes and chars during firing. The nozzle is a convergent-divergent, movable design in which an aft pivot-point flexible bearing is the gimbal mechanism.

The cone-shaped aft skirt reacts the aft loads between the SRB and the mobile launcher platform. The four aft separation motors are mounted on the skirt. The aft section contains avionics, a thrust vector control system that consists of two auxiliary power units and hydraulic pumps, hydraulic systems and a nozzle extension jettison system.

The forward section of each booster contains avionics, a sequencer, forward separation motors, a nose cone separation system, drogue and main parachutes, a recovery beacon, a recovery light, a parachute camera on selected flights and a range safety system.

Each SRB has two integrated electronic assemblies, one forward and one aft. After burnout, the forward assembly initiates the release of the nose cap and frustum and turns on the recovery aids. The aft assembly, mounted in the external tank/SRB attach ring, connects with the forward assembly and the orbiter avionics systems for SRB ignition commands and nozzle thrust vector control. Each integrated electronic assembly has a multiplexer/demultiplexer, which sends or receives more than one message, signal or unit of information on a single communication channel.

Eight booster separation motors (four in the nose frustum and four in the aft skirt) of each SRB thrust for 1.02 seconds at

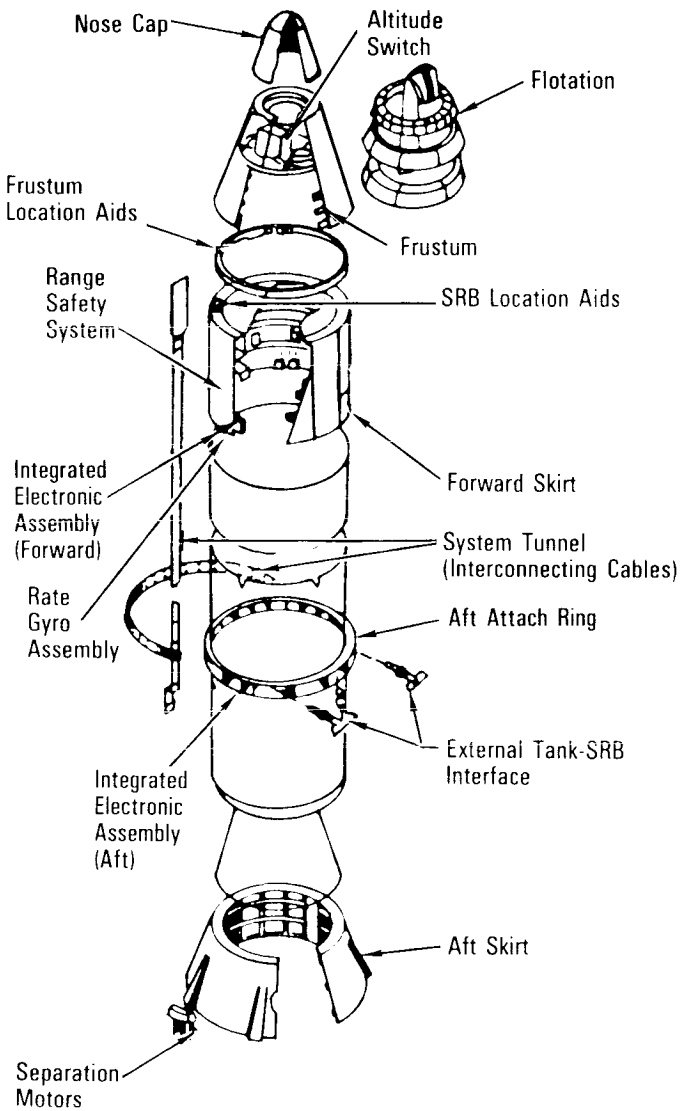


*Solid Rocket Booster—Exploded View*

SRB separation from the external tank. Each solid rocket separation motor is 31.1 inches long and 12.8 inches in diameter.

Location aids are provided for each SRB, frustum/drogue chutes and main parachutes. These include a transmitter, antenna, strobe/converter, battery and salt water switch electronics. The location aids are designed for a minimum operating life of 72 hours and when refurbished are considered usable up to 20 times. The flashing light is an exception. It has an operating life of 280 hours. The battery is used only once.

The SRB nose caps and nozzle extensions are not recovered.

The recovery crew retrieves the SRBs, frustum/drogue chutes, and main parachutes. The nozzles are plugged, the solid rocket motors are dewatered, and the SRBs are towed back to the launch site. Each booster is removed from the water, and its components are disassembled and washed with fresh and deionized water to limit salt water corrosion. The motor segments, igniter and nozzle are shipped back to Thiokol for refurbishment.

Each SRB incorporates a range safety system that includes a battery power source, receiver/decoder, antennas and ordnance.



## HOLD-DOWN POSTS

Each solid rocket booster has four hold-down posts that fit into corresponding support posts on the mobile launcher platform. Hold-down bolts hold the SRB and launcher platform posts together. Each bolt has a nut at each end, but only the top nut is frangible. The top nut contains two NASA standard detonators, which are ignited at solid rocket motor ignition commands.

When the two NSDs are ignited at each hold-down, the hold-down bolt travels downward because of the release of tension in the bolt (pretensioned before launch), NSD gas pressure and gravity. The bolt is stopped by the stud deceleration stand, which contains sand. The SRB bolt is 28 inches long and is 3.5 inches in diameter. The frangible nut is captured in a blast container.

The solid rocket motor ignition commands are issued by the orbiter's computers through the master events controllers to the hold-down pyrotechnic initiator controllers on the mobile

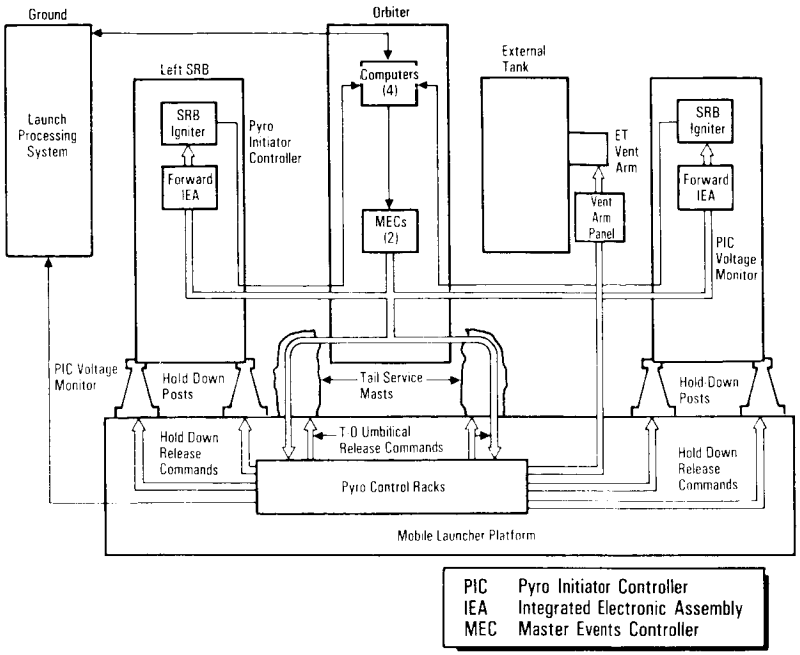


*Solid Rocket Ignition, Hold-Down Release and Umbilical Retract Commands*

launcher platform. They provide the ignition to the hold-down NSDs. The launch processing system monitors the SRB hold-down PICs for low voltage during the last 16 seconds before launch. PIC low voltage will initiate a launch hold.

## SRB IGNITION

SRB ignition can occur only when a manual lock pin from each SRB safe and arm device has been removed. The ground crew removes the pin during prelaunch activities. At T minus five minutes, the SRB safe and arm device is rotated to the arm position. The solid rocket motor ignition commands are issued when the three SSMEs are at or above 90-percent rated thrust, no SSME fail and/or SRB ignition PIC low voltage is indicated and there are no holds from the LPS.

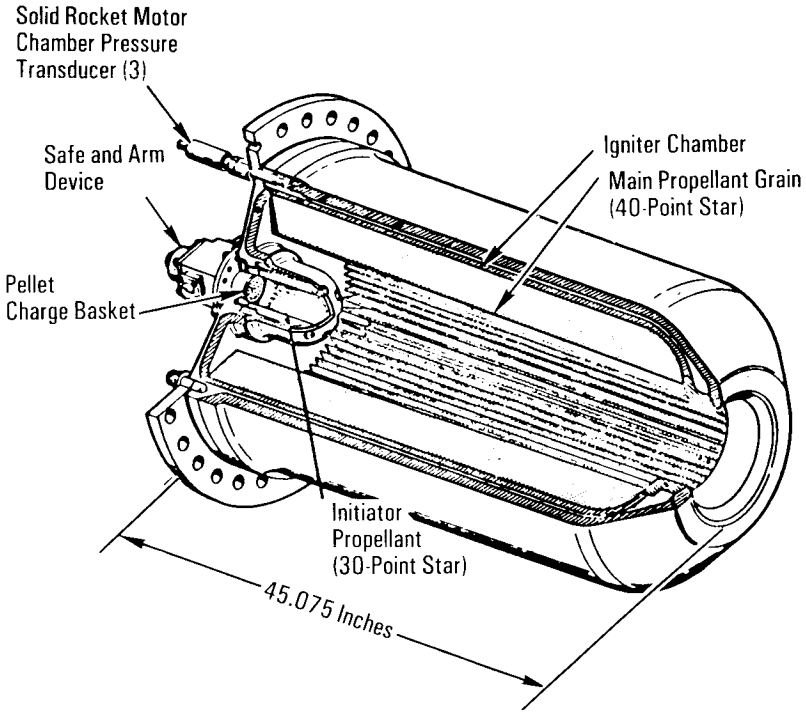


*Solid Rocket Motor Igniter*

The solid rocket motor ignition commands are sent by the orbiter computers through the MECs to the safe and arm device NSDs in each SRB. A PIC single-channel capacitor discharge device controls the firing of each pyrotechnic device. Three signals must be present simultaneously for the PIC to generate the pyro firing output. These signals—arm, fire 1 and fire 2—originate in the orbiter general-purpose computers and are transmitted to the MECs. The MECs reformat them to 28-volt dc signals for the PICs. The arm signal charges the PIC capacitor to 40 volts dc (minimum of 20 volts dc).

The fire 2 commands cause the redundant NSDs to fire through a thin barrier seal down a flame tunnel. This ignites a pyro booster charge, which is retained in the safe and arm device

behind a perforated plate. The booster charge ignites the propellant in the igniter initiator; and combustion products of this propellant ignite the solid rocket motor initiator, which fires down the length of the solid rocket motor igniting the solid rocket motor propellant.

The GPC launch sequence also controls certain critical main propulsion system valves and monitors the engine-ready indications from the SSMEs. The MPS start commands are issued by the onboard computers at T minus 6.6 seconds (staggered start—engine three, engine two, engine one—all approximately within 0.25 of a second), and the sequence monitors the thrust buildup of each engine. All three SSMEs must reach the required 90-percent thrust within three seconds; otherwise, an orderly shutdown is commanded and safing functions are initiated.

Normal thrust buildup to the required 90-percent thrust level will result in the SSMEs being commanded to the lift-off position at T minus three seconds as well as the fire 1 command being issued to arm the SRBs. At T minus three seconds, the vehicle base bending load modes are allowed to initialize (movement of approximately 25.5 inches measured at the tip of the external tank, with movement towards the external tank).

At T minus zero, the two SRBs are ignited, under command of the four onboard computers; separation of the four explosive bolts on each SRB is initiated (each bolt is 28 inches long and 3.5 inches in diameter); the two T-0 umbilicals (one on each side of the spacecraft) are retracted; the onboard master timing unit, event timer and mission event timers are started; the three SSMEs are at 100 percent; and the ground launch sequence is terminated.

The solid rocket motor thrust profile is tailored to reduce thrust during the maximum dynamic pressure region.

## ELECTRICAL POWER DISTRIBUTION

Electrical power distribution in each SRB consists of orbiter-supplied main dc bus power to each SRB via SRB buses A, B and C. Orbiter main dc buses A, B and C supply main dc bus power to corresponding SRB buses A, B and C. In addition, orbiter main dc bus C supplies backup power to SRB buses A and B, and orbiter bus B supplies backup power to SRB bus C. This electrical power distribution arrangement allows all SRB buses to remain powered in the event one orbiter main bus fails.

The nominal dc voltage is 28 volts dc, with an upper limit of 32 volts dc and a lower limit of 24 volts dc.

## HYDRAULIC POWER UNITS

There are two self-contained, independent HPUs on each SRB. Each HPU consists of an auxiliary power unit, fuel supply module, hydraulic pump, hydraulic reservoir and hydraulic fluid manifold assembly. The APUs are fueled by hydrazine and generate mechanical shaft power to a hydraulic pump that produces hydraulic pressure for the SRB hydraulic system. The two separate HPUs and two hydraulic systems are located on the aft end of each SRB between the SRB nozzle and aft skirt. The HPU components are mounted on the aft skirt between the rock and tilt actuators. The two systems operate from T minus 28 seconds until SRB separation from the orbiter and external tank. The two independent hydraulic systems are connected to the rock and tilt servoactuators.

The APU controller electronics are located in the SRB aft integrated electronic assemblies on the aft external tank attach rings.

The APUs and their fuel systems are isolated from each other. Each fuel supply module (tank) contains 22 pounds of hydrazine. The fuel tank is pressurized with gaseous nitrogen at 400 psi, which provides the force to expel (positive expulsion) the fuel from the tank to the fuel distribution line, maintaining a positive fuel supply to the APU throughout its operation.

The fuel isolation valve is opened at APU startup to allow fuel to flow to the APU fuel pump and control valves and then to the gas generator. The gas generator's catalytic action decomposes the fuel and creates a hot gas. It feeds the hot gas exhaust product

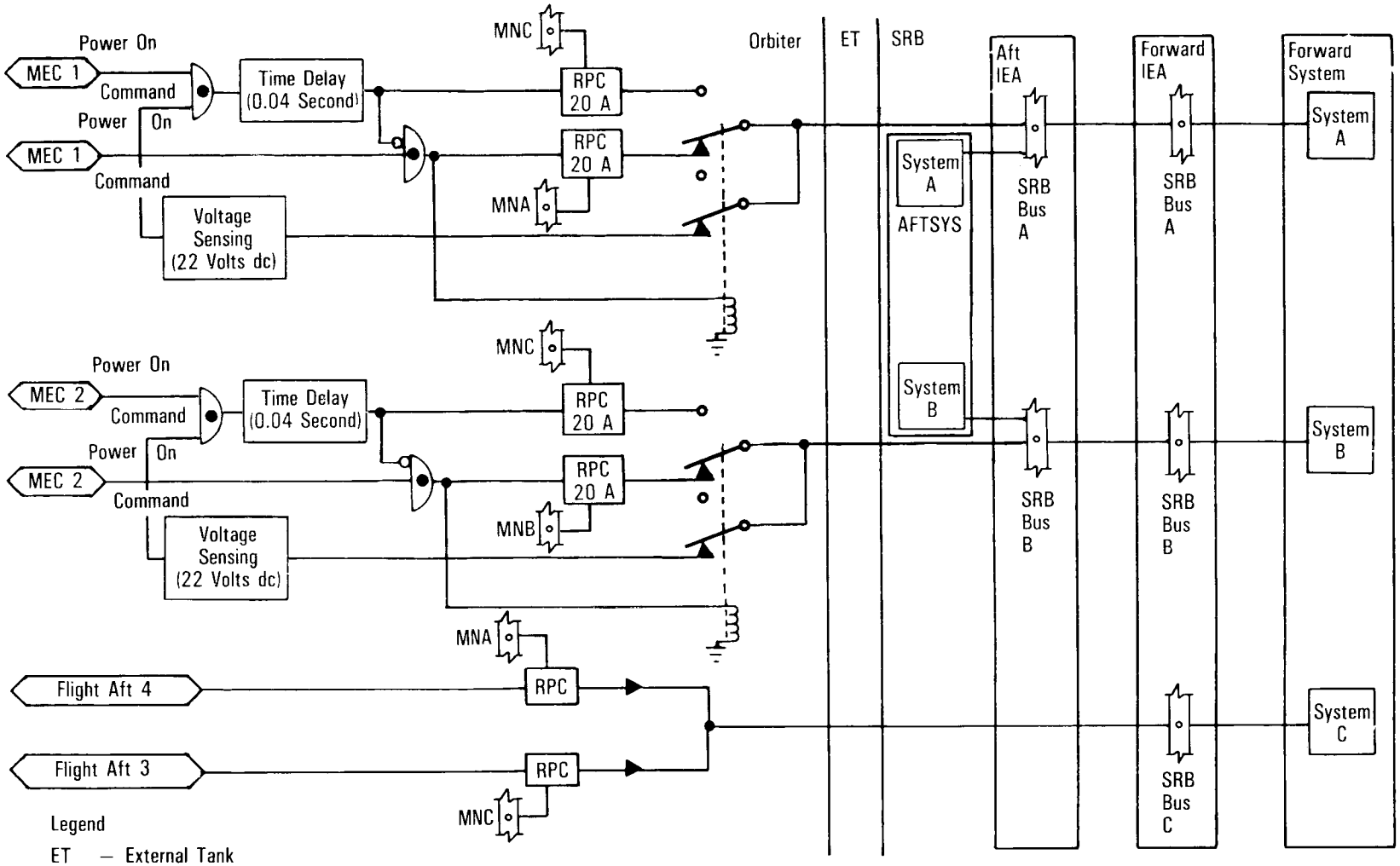


Legend

ET — External Tank
IEA — Integrated Electronic Assembly
MEC — Master Events Controller
RPC — Remote Power Controller
SRB — Solid Rocket Booster

*SRB Electrical Power Distribution*

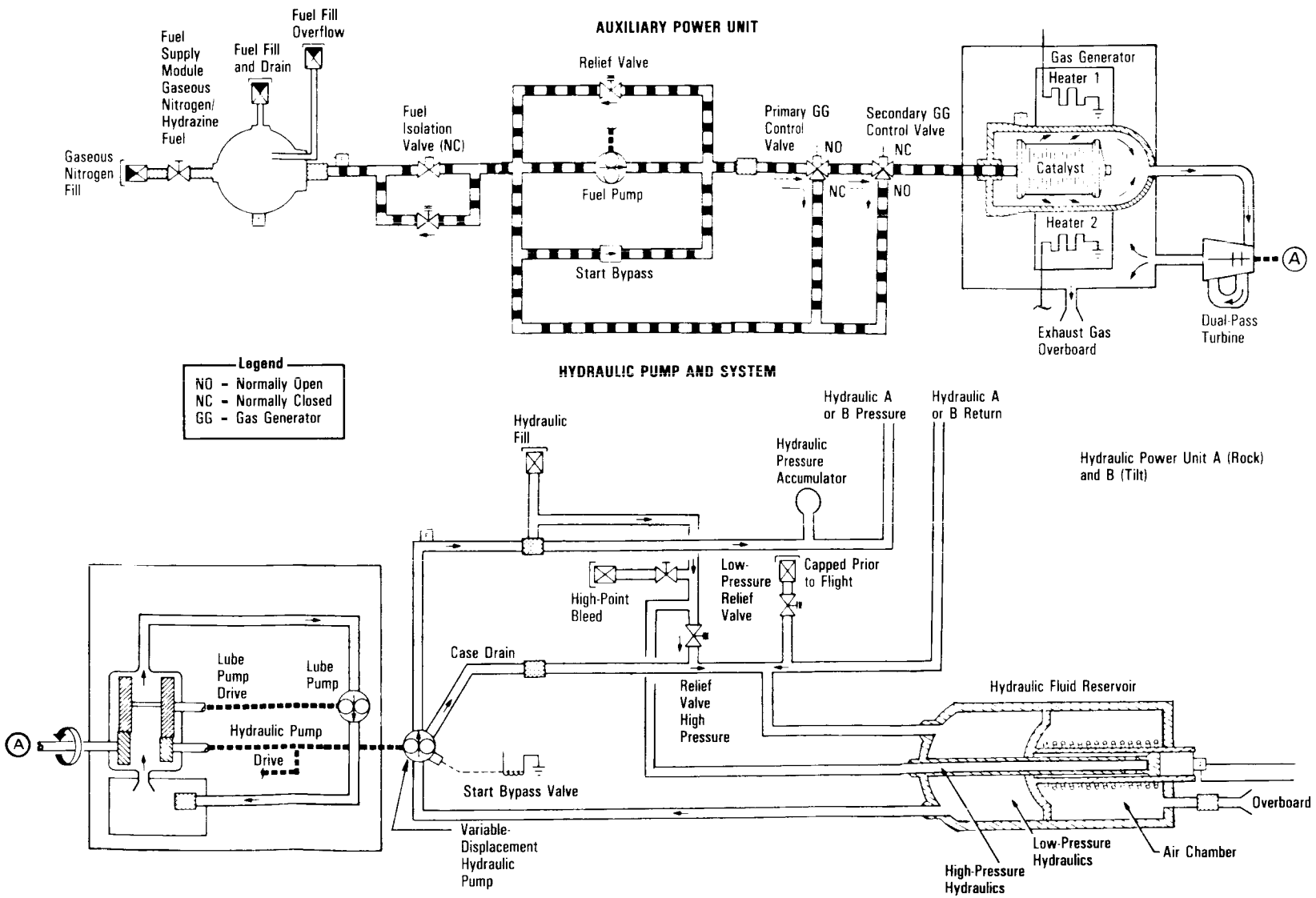


*Auxiliary Power Unit and Hydraulic Pump System*

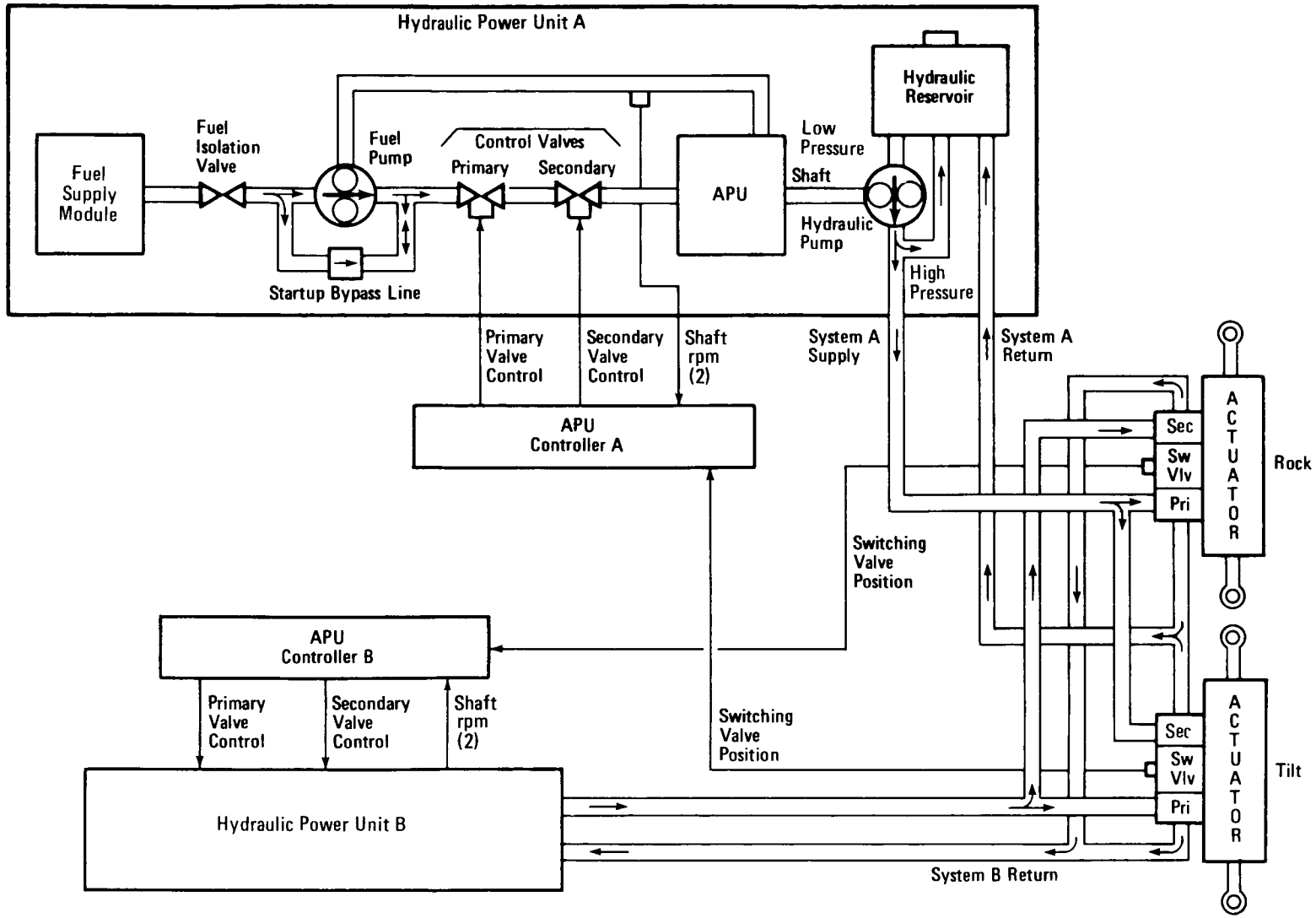


*Hydraulic Power Unit System*

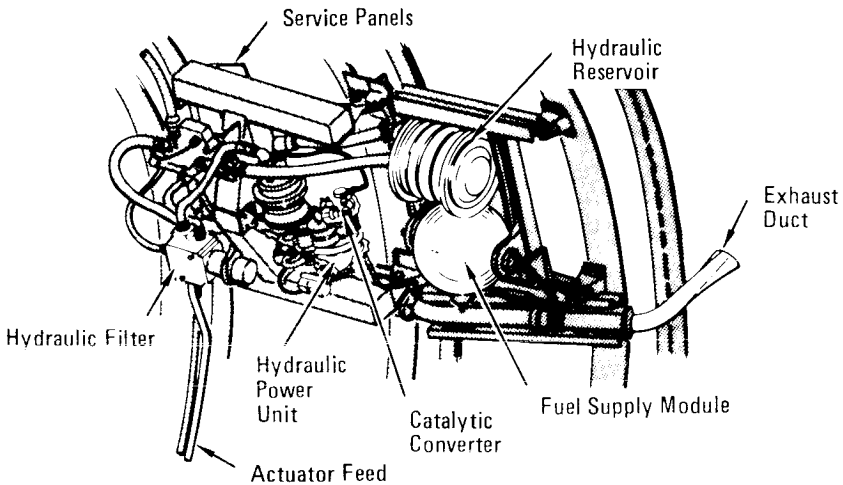


*SRB Auxiliary Power Unit/Hydraulic Power Unit Location*

to the APU two-stage gas turbine. Fuel flows primarily through the startup bypass line until the APU speed is such that the fuel pump outlet pressure is greater than the bypass line's. Then all the fuel is supplied to the fuel pump.

The APU turbine assembly provides mechanical power to the APU gearbox. The gearbox drives the APU fuel pump, hydraulic pump and lube oil pump. The APU lube oil pump lubricates the gearbox. The turbine exhaust of each APU flows over the exterior of the gas generator, cooling it, and is then directed overboard through an exhaust duct.

When the APU speed reaches 100 percent, the APU primary control valve closes, and the APU speed is controlled by the APU controller electronics. If the primary control valve logic fails to the open state, the secondary control valve assumes control of the APU at 112-percent speed.

Each HPU on an SRB is connected to both servoactuators on that SRB. One HPU serves as the primary hydraulic source for the servoactuator, and the other HPU serves as the secondary hydraulics for the servoactuator. Each sevoactuator has a switching valve that allows the secondary hydraulics to power the actuator if the primary hydraulic pressure drops below 2,050 psi. A switch contact on the switching valve will close when the valve is in the secondary position. When the valve is closed, a signal is sent to the APU controller that inhibits the 100-percent APU speed control logic and enables the 112-percent APU speed control logic. The 100-percent APU speed enables one APU/HPU to supply sufficient operating hydraulic pressure to both servoactuators of that SRB.

The APU 100-percent speed corresponds to 72,000 rpm, 110-percent to 79,200 rpm, and 112-percent to 80,640 rpm.

The hydraulic pump speed is 3,600 rpm and supplies hydraulic pressure of 3,050, plus or minus 50, psi. A high-pressure relief valve provides overpressure protection to the hydraulic system and relieves at 3,750 psi.

The APUs/HPUs and hydraulic systems are reusable for 20 missions.



## THRUST VECTOR CONTROL

Each SRB has two hydraulic gimbal servoactuators: one for rock and one for tilt. The servoactuators provide the force and control to gimbal the nozzle for thrust vector control.

The space shuttle ascent thrust vector control portion of the flight control system directs the thrust of the three shuttle main engines and the two SRB nozzles to control shuttle attitude and trajectory during lift-off and ascent. Commands from the guidance system are transmitted to the ATVC drivers, which transmit signals proportional to the commands to each servoactuator of the main engines and SRBs. Four independent flight control system channels and four ATVC channels control six main engine and four SRB ATVC drivers, with each driver controlling one hydraulic port on each main and SRB servoactuator.

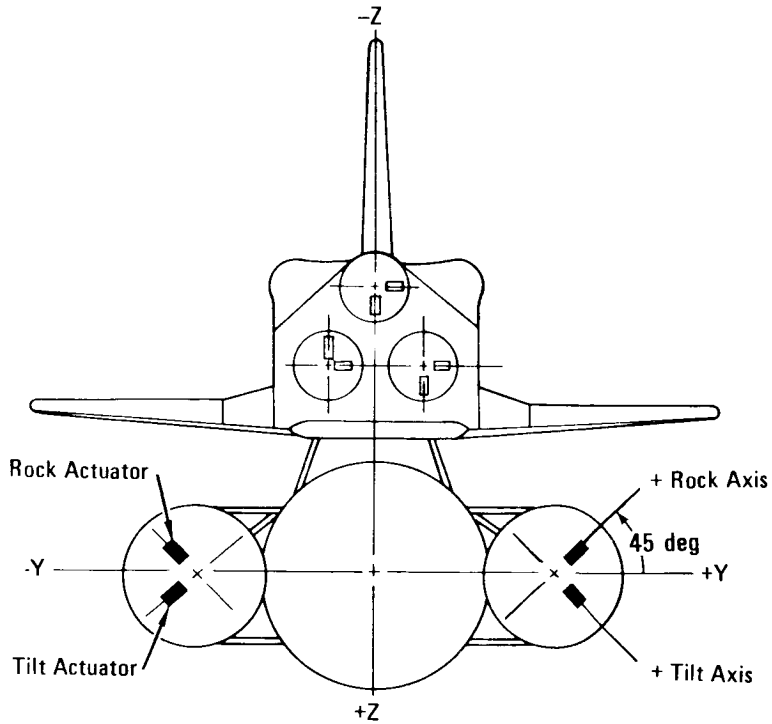


*SRB Actuator Orientation*

Each SRB servoactuator consists of four independent, two-stage servovalves that receive signals from the drivers. Each servovalve controls one power spool in each actuator, which positions an actuator ram and the nozzle to control the direction of thrust.

The four servovalves in each actuator provide a force-summed majority voting arrangement to position the power spool. With four identical commands to the four servovalves, the actuator force-sum action prevents a single erroneous command from affecting power ram motion. If the erroneous command persists for more than a predetermined time, differential pressure sensing activates a selector valve to isolate and remove the defective servovalve hydraulic pressure, permitting the remaining channels and servovalves to control the actuator ram spool.

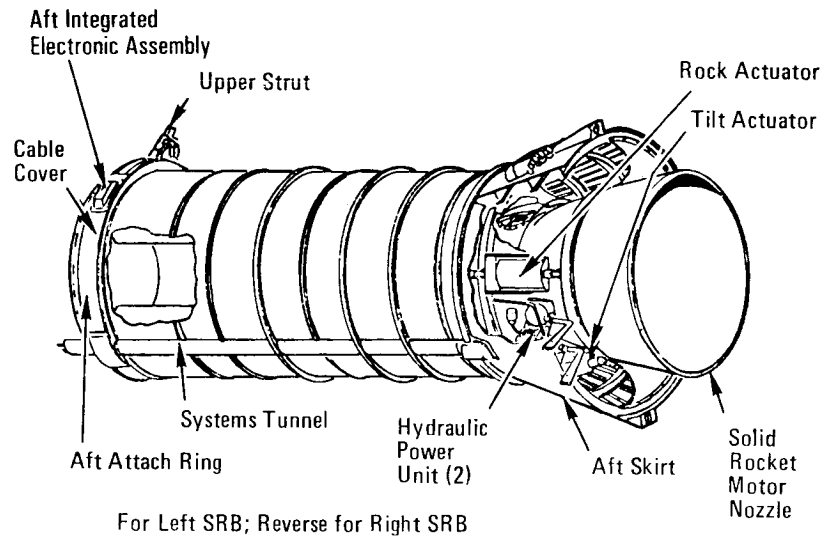


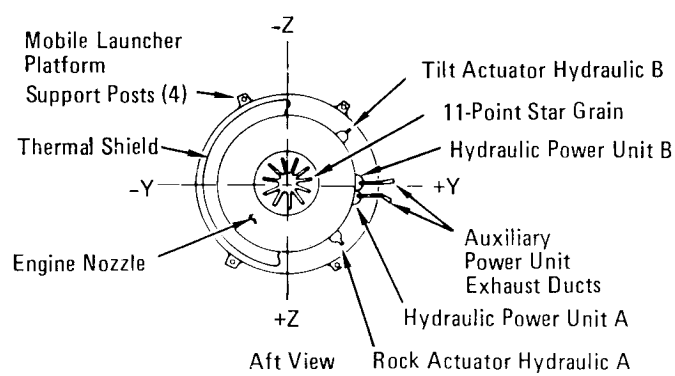


*SRB Thrust Vector Control Component Location*

Failure monitors are provided for each channel to indicate which channel has been bypassed. An isolation valve on each channel provides the capability of resetting a failed or bypassed channel.

Each actuator ram is equipped with transducers for position feedback to the thrust vector control system. Within each servoactuator ram is a splashdown load relief assembly to cushion the nozzle at water splashdown and prevent damage to the nozzle flexible bearing.

## SRB RATE GYRO ASSEMBLIES

Each SRB contains two RGAs, with each RGA containing one pitch and one yaw gyro. These provide an output proportional to angular rates about the pitch and yaw axes to the orbiter computers and guidance, navigation and control system during first-stage ascent flight in conjunction with the orbiter roll rate gyros until SRB separation. At SRB separation, a switchover is made from the SRB RGAs to the orbiter RGAs.

The SRB RGA rates pass through the orbiter flight aft multiplexers/demultiplexers to the orbiter GPCs. The RGA rates are then mid-value-selected in redundancy management to provide SRB pitch and yaw rates to the user software. The RGAs are designed for 20 missions.

## SRB SEPARATION

SRB separation is initiated when the three solid rocket motor chamber pressure transducers are processed in the redundancy management middle value select and the head-end chamber pressure of both SRBs is less than or equal to 50 psi. A backup cue is the time elapsed from booster ignition.

The separation sequence is initiated, commanding the thrust vector control actuators to the null position and putting the main propulsion system into a second-stage configuration (0.8 second from sequence initialization), which ensures the thrust of each SRB is less than 100,000 pounds. Orbiter yaw attitude is held for four seconds, and SRB thrust drops to less than 60,000 pounds.

The SRBs separate from the external tank within 30 milliseconds of the ordnance firing command.

The forward attachment point consists of a ball (SRB) and socket (ET) held together by one bolt. The bolt contains one NSD pressure cartridge at each end. The forward attachment point also carries the range safety system cross-strap wiring connecting each SRB RSS and the ET RSS with each other.

The aft attachment points consist of three separate struts: upper, diagonal and lower. Each strut contains one bolt with an NSD pressure cartridge at each end. The upper strut also carries the umbilical interface between its SRB and the external tank and on to the orbiter.

There are four booster separation motors on each end of each SRB. The BSMs separate the SRBs from the external tank. The solid rocket motors in each cluster of four are ignited by firing redundant NSD pressure cartridges into redundant confined detonating fuse manifolds.

The separation commands issued from the orbiter by the SRB separation sequence initiate the redundant NSD pressure cartridge in each bolt and ignite the BSMs to effect a clean separation.



## RANGE SAFETY SYSTEM

The shuttle vehicle has three RSSs. One is located in each SRB and one in the external tank. Any one or all three are capable of receiving two command messages (arm and fire) transmitted from the ground station. The RSS is used only when the shuttle vehicle violates a launch trajectory red line.

An RSS consists of two antenna couplers, command receivers/decoders, a dual distributor, a safe and arm device with two NSDs, two confined detonating fuse manifolds, seven CDF assemblies and one linear-shaped charge.

The antenna couplers provide the proper impedance for radio frequency and ground support equipment commands. The command receivers are tuned to RSS command frequencies and

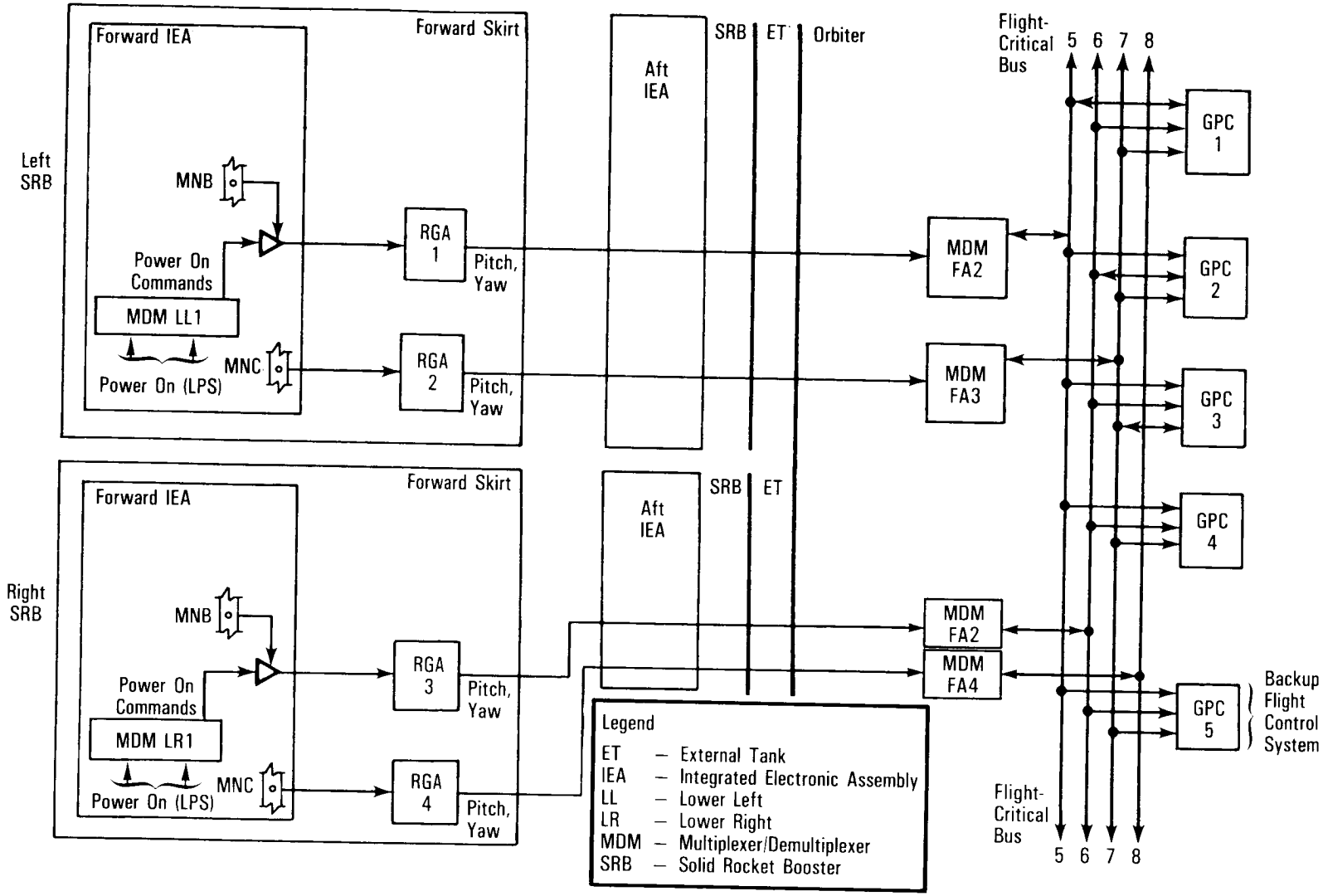


*SRB Rate Gyro Assembly*

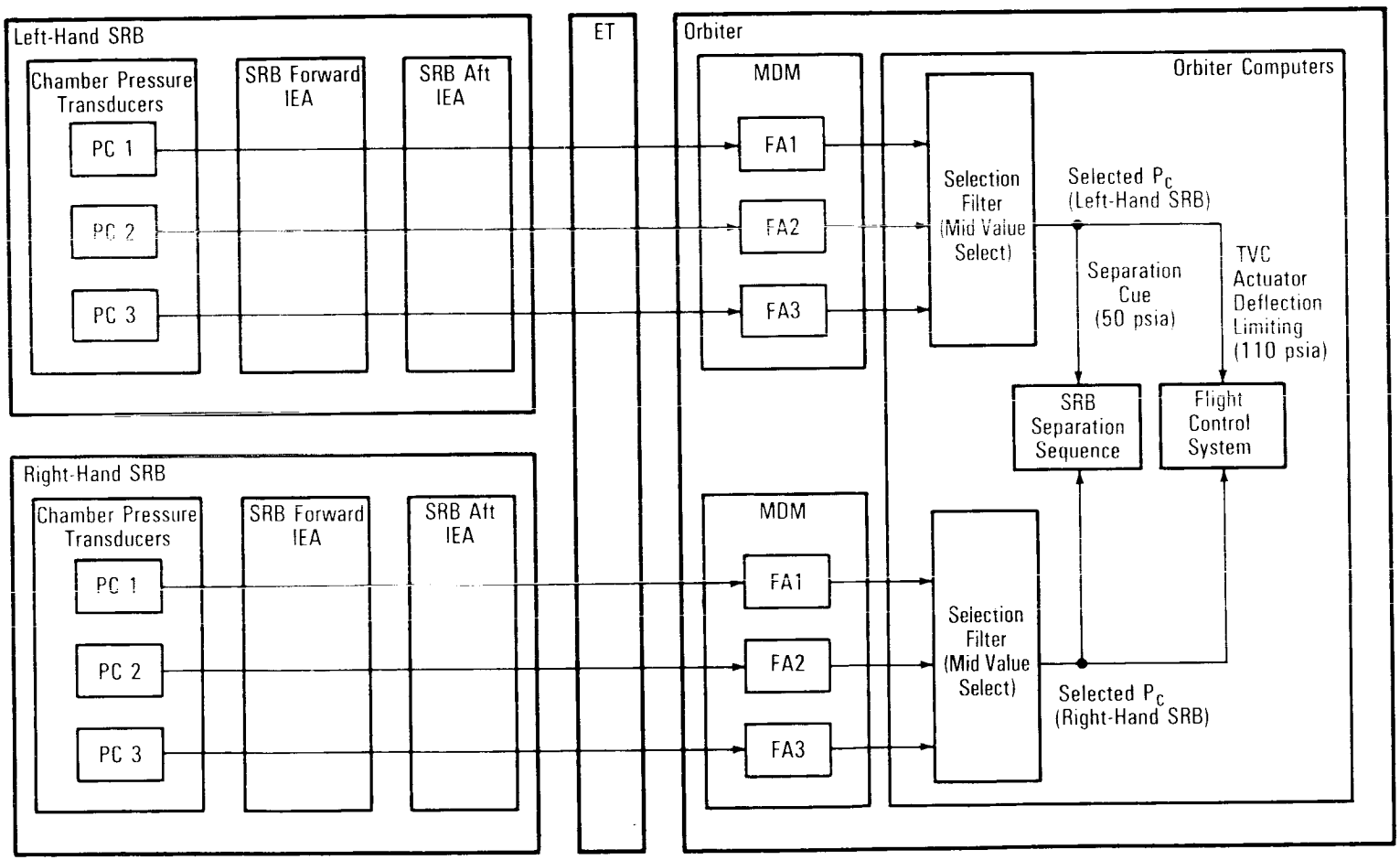


Legend

ET — External Tank
IEA — Integrated Electronic Assembly
FA — Flight Aft
MDM — Multiplexer/Demultiplexer
TVC — Thrust Vector Control

*Solid Rocket Motor Chamber Pressure Data Flow*

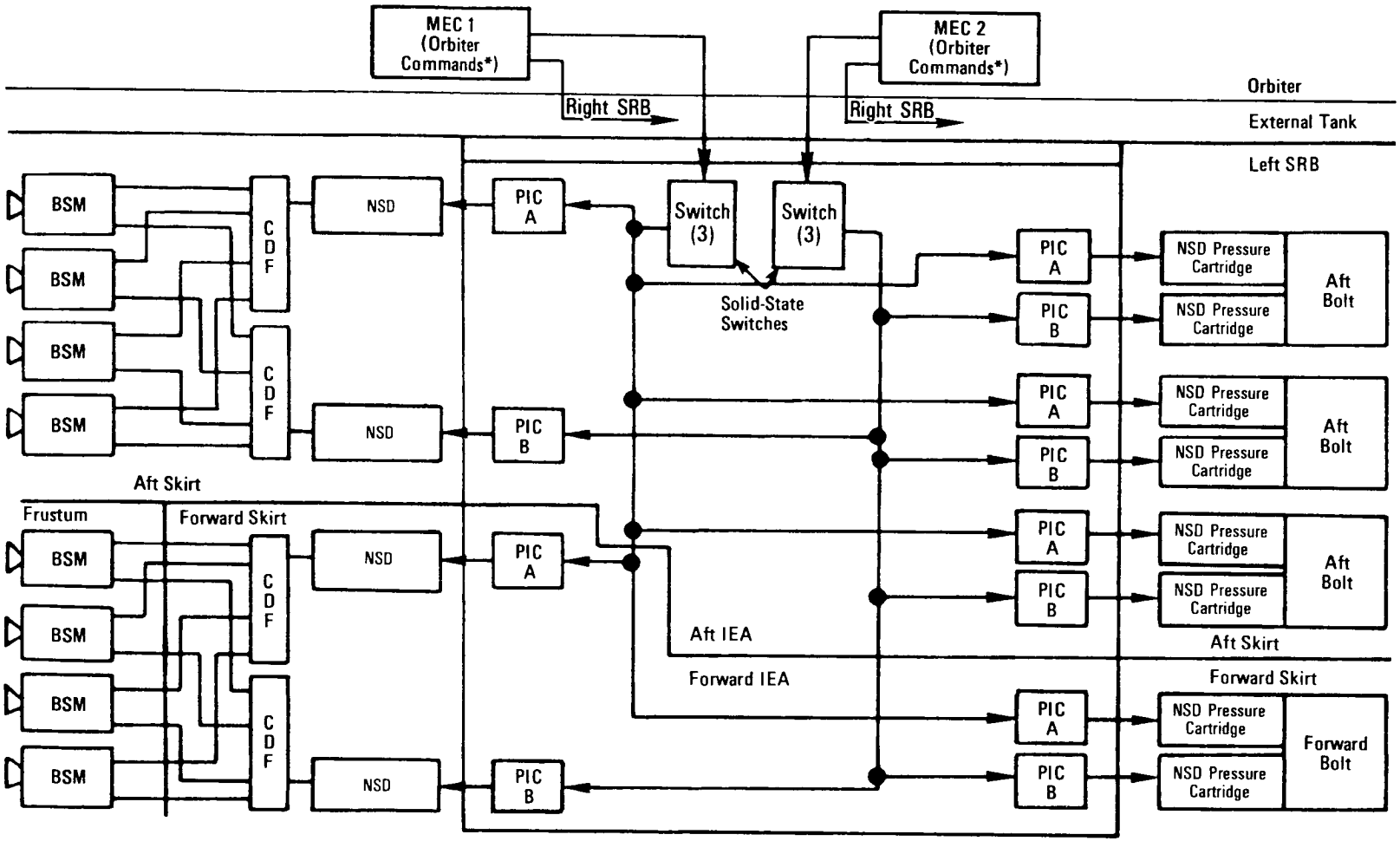


*Separation Commands: Arm, Fire 1, Fire 2

Legend

BSM – Booster Separation Motor
CDF – Confined Detonating Fuse
IEA – Integrated Electronic Assembly
MEC – Master Events Controller
NSD – NASA Standard Detonator

*SRB Separation System*

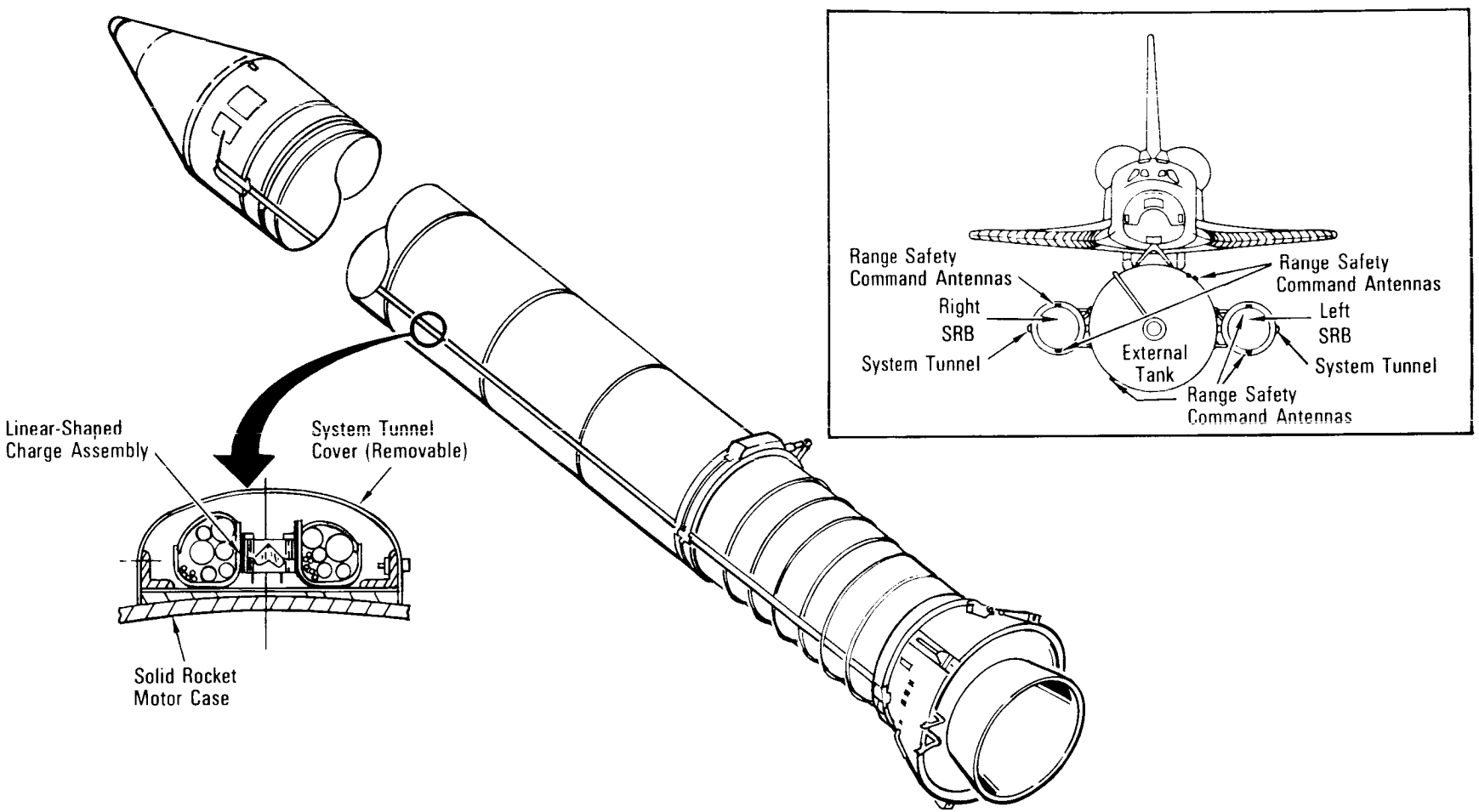


*SRB Range Safety System*

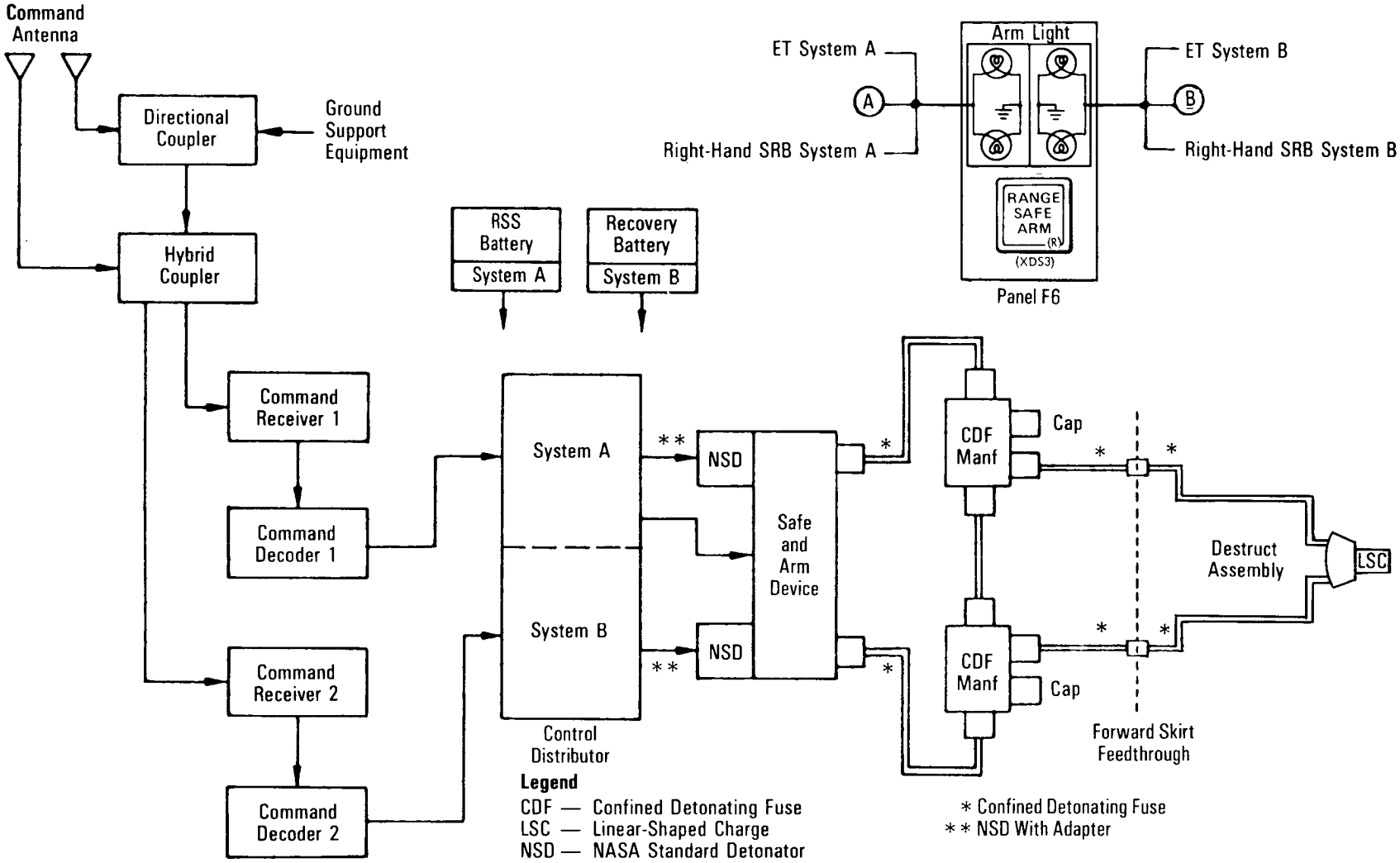


*SRB Range Safety System*

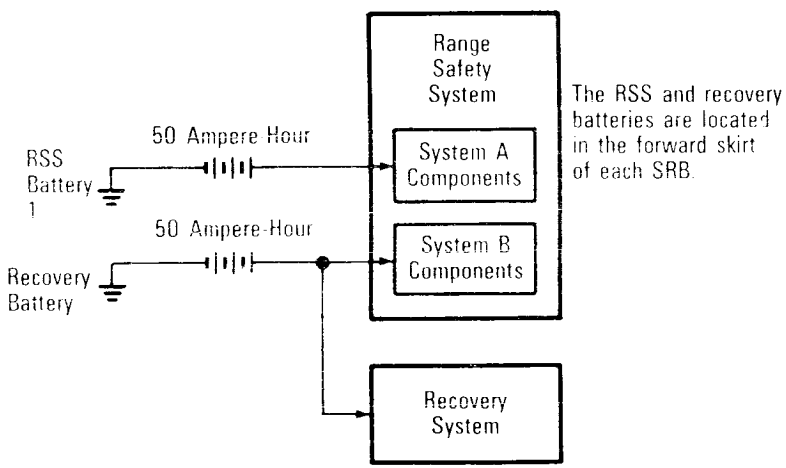


*SRB Battery Power*

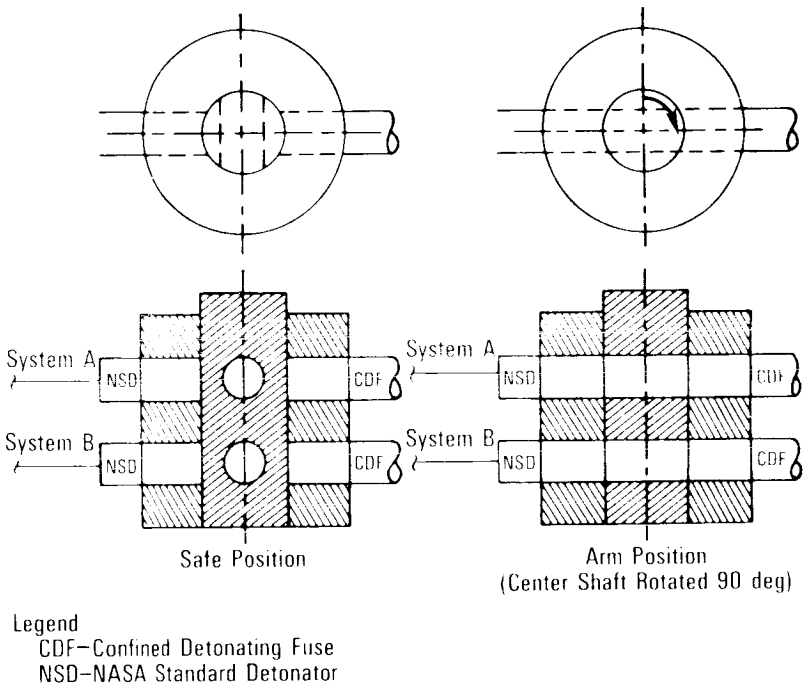


*Range Safety System Safe and Arm Device (Simplified)*

provide the input signal to the distributors when an RSS command is sent. The command decoders use a code plug to prevent any command signal other than the proper command signal from getting into the distributors. The distributors contain the logic to supply valid destruct commands to the RSS pyrotechnics.

The NSDs provide the spark to ignite the CDF, which in turn ignites the LSC for shuttle vehicle destruction. The safe and arm device provides mechanical isolation between the NSDs and the CDF before launch and during the SRB separation sequence.

The first message, called arm, allows the onboard logic to enable a destruct and illuminates a light on the flight deck display and control panel at the commander and pilot station. The second message transmitted is the fire command.

The SRB distributors in the SRBs and the ET are cross-strapped together. Thus, if one SRB received an arm or destruct signal, the signal would also be sent to the other SRB and the ET.

Electrical power from the RSS battery in each SRB is routed to RSS system A. The recovery battery in each SRB is used to power RSS system B as well as the recovery system in the SRB. The SRB RSS is powered down during the separation sequence, and the SRB recovery system is powered up. Electrical power for the ET RSS system A and system B is independently supplied by two RSS batteries on the ET.

## SRB DESCENT AND RECOVERY

The recovery sequence begins with the operation of the high-altitude baroswitch, which triggers the functioning of the pyrotechnic nose cap thrusters. This ejects the nose cap, which deploys the pilot parachute. This occurs at 15,704 feet altitude 225 seconds after separation. The 11.5-foot-diameter conical ribbon pilot parachute provides the force to pull the lanyard activating the zero-second cutter, which cuts the loop securing the drogue retention straps. This allows the pilot chute to pull the drogue pack from the SRB, causing the drogue suspension lines to deploy from their stored position. At full extension of the 12 95-foot suspension lines, the drogue deployment bag is stripped away from the canopy, and the 54-foot-diameter conical ribbon drogue parachute inflates to its initial reefed condition. The drogue disreefs twice after specified time delays, and it reorients/stabilizes the SRB for main chute deployment. The drogue parachute can withstand a load of 270,000 pounds and weighs approximately 1,200 pounds.

After the drogue chute has stabilized the vehicle in a tailfirst attitude, the frustum is separated from the forward skirt by a charge triggered by the low-altitude baroswitch at an altitude of 5,975 feet 248 seconds after separation. It is then pulled away from the SRB by the drogue chute. The main chutes' suspension lines are pulled out from deployment bags that remain in the frustum. At full extension of the lines, which are 204 feet long, the three main chutes are pulled from the deployment bags and inflate to their first reefed condition. The frustum and drogue parachute continue on a separate trajectory to splashdown. After specified time delays, the main chutes' reefing lines are cut and the chutes inflate to their second reefed and full open configurations. The main chute cluster decelerates the SRB to terminal conditions. Each of the 136-foot-diameter, 20-degree conical ribbon parachutes can withstand a load of 180,000 pounds and weighs 2,180 pounds. The nozzle extension is severed by pyrotechnic charge either at apogee or 20 seconds after low baroswitch operation.

Water impact occurs 295 seconds after separation at a velocity of 81 feet per second. The water impact range is approximately 140 miles off the eastern coast of Florida. Because the parachutes provide for a nozzlefirst impact, air is trapped in the empty (burned out) motor casing, causing the booster to float with the forward end approximately 30 feet out of the water.

The main chutes are released from the SRB at impact using the parachute release nut ordnance system. Residual loads in the main chutes deploy the parachute attach fittings with the redundant flotation tethered to each fitting. The drogue and frustum; each main chute, with its flotation; and the SRB are buoyant. The SRB recovery aids are the radio beacon and flashing lights, which become operable at frustum separation. The radio transponder in each SRB has a range of 8.9 nautical miles (10.35 statute miles), and the flashing light has a nighttime range of 4.9 nautical miles (5.75 statute miles).

Various parameters of SRB operation are monitored and displayed on the orbiter flight deck control and display panel and are transmitted to ground telemetry.

The prime contractor for the SRB motors is Morton Thiokol Corporation, Wasatch Division, Brigham City, Utah. United Space Booster Inc. Booster Production Company is prime contractor for SRB assembly, checkout and refurbishment for all non-solid-rocket-motor components and for SRB integration. Companies supplying various components for the SRBs are Pioneer Parachute Co., Manchester, Conn. (parachutes); Abex Corp., Oxnard, Calif. (hydraulic pumps); Arde Inc., Mahwah, N.J. (hydrazine fuel modules); Arkwin Industries Inc., Westbury, N.Y. (hydraulic reservoirs); Aydin Vector Division, Newtown, Pa. (integrated electronic assemblies); Bendix Corp., Teterboro, N.J. (integrated electronic assemblies); Consolidated Controls Corp., El Segundo, Calif. (fuel isolation valves, hydrazine); Eldec Corp., Lynnwood, Wash. (integrated electronic assemblies); Explosive Technology, Fairfield, Calif. (CDF manifolds); Martin Marietta, Denver, Colo. (pyro initiator controllers); Moog Inc., East Aurora, N.Y. (servoactuators); Sperry Rand Flight Systems, Phoenix, Ariz. (multiplexers/demultiplexers); Teledyne, Lewisburg, Tenn. (location aid transmitters); United Technology Corp., Sun-

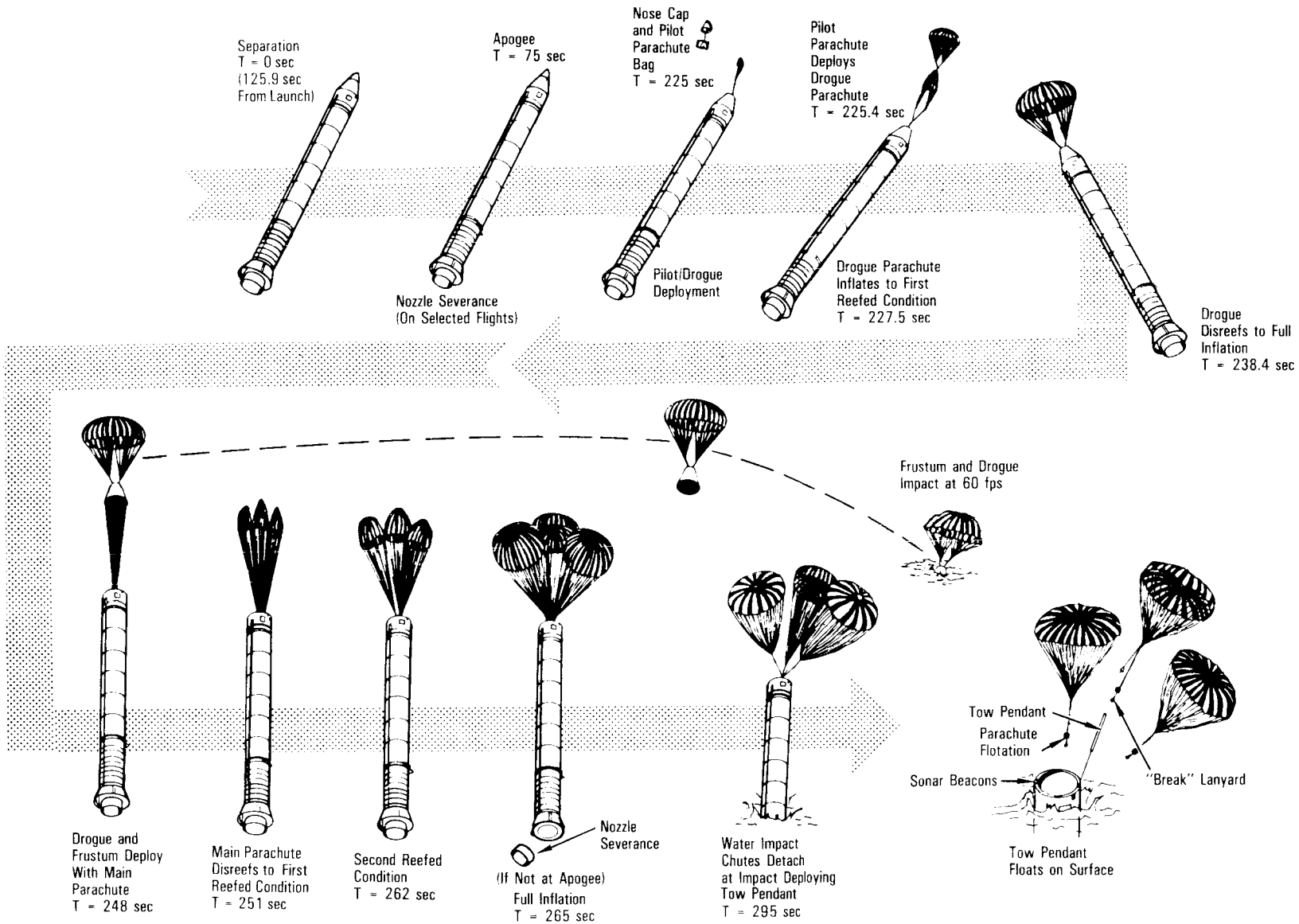


*SRB Descent and Splashdown*

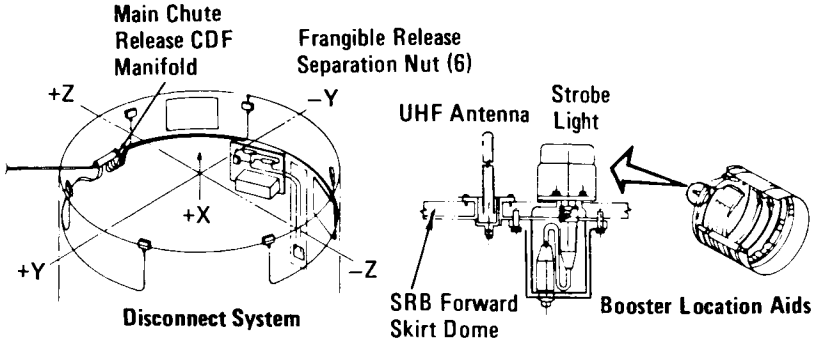


*SRB Parachute Release and Retrieval Aids*

nyvale, Calif. (separation motors); Sundstrand, Rockford, Ill. (auxiliary power units); Motorola Inc., Scottsdale, Ariz. (range safety receivers).

## EXTERNAL TANK

The external tank contains the liquid hydrogen fuel and liquid oxygen oxidizer and supplies them under pressure to the three space shuttle main engines in the orbiter during lift-off and ascent. When the SSMEs are shut down, the ET is jettisoned, enters the Earth's atmosphere, breaks up, and impacts in a remote ocean area. It is not recovered.

The largest and heaviest (when loaded) element of the space shuttle, the ET has three major components: the forward liquid oxygen tank, an unpressurized intertank that contains most of the electrical components, and the aft liquid hydrogen tank. The ET is 153.8 feet long and has a diameter of 27.6 feet.

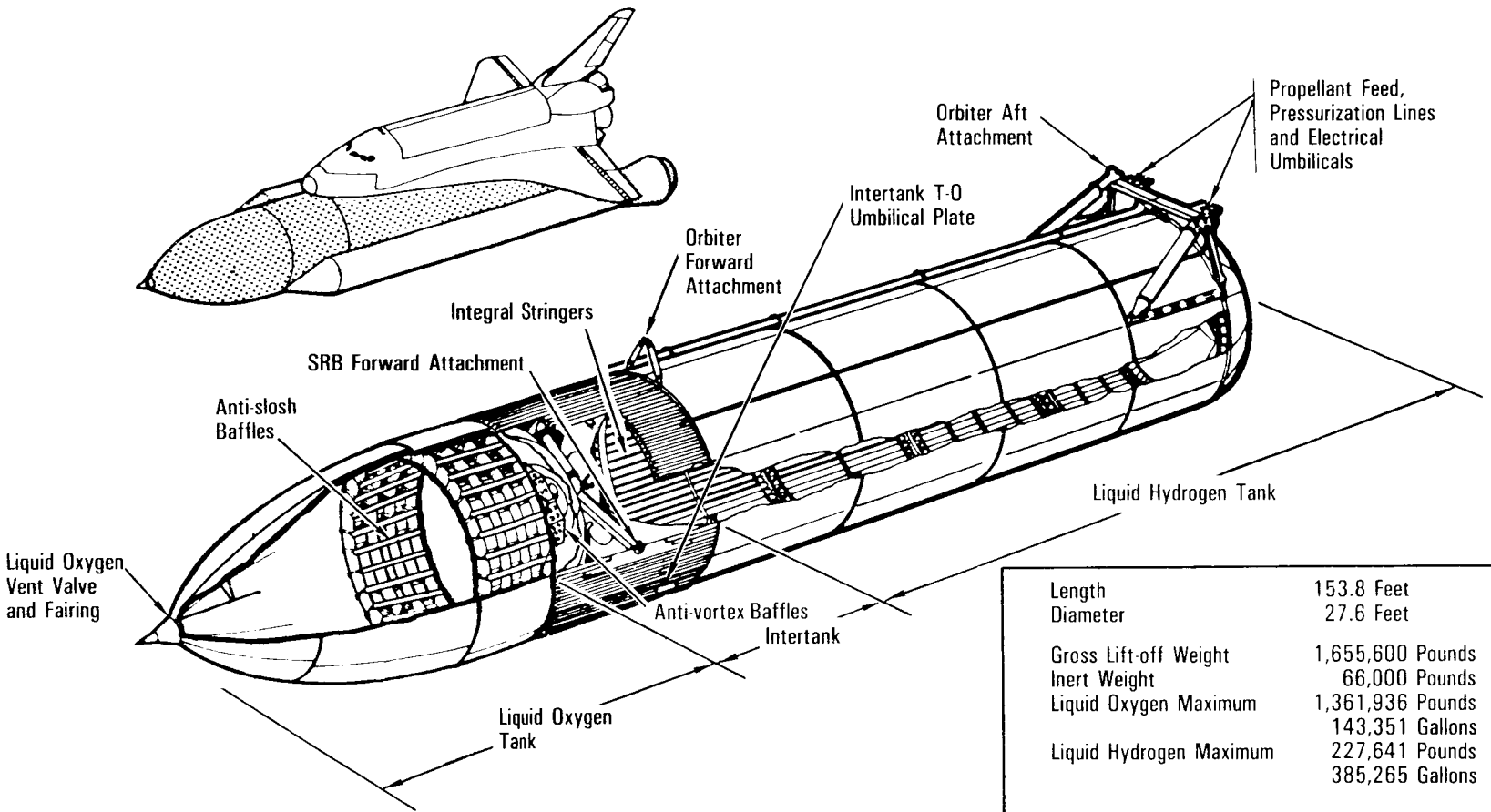


| | |
|---|---|
| Length | 153.8 Feet |
| Diameter | 27.6 Feet |
| Gross Lift-off Weight | 1,655,600 Pounds |
| Inert Weight | 66,000 Pounds |
| Liquid Oxygen Maximum | 1,361,936 Pounds |
| | 143,351 Gallons |
| Liquid Hydrogen Maximum | 227,641 Pounds |
| | 385,265 Gallons |

(All Weights Approximate)

*Lightweight External Tank*

Beginning with the STS-6 mission, a lightweight ET was introduced. Although future tanks may vary slightly, each will weigh approximately 66,000 pounds inert. The last heavyweight tank, flown on STS-7, weighed approximately 77,000 pounds inert. For each pound of weight reduced from the ET, the cargo-carrying capability of the space shuttle spacecraft is increased almost one pound. The weight reduction was accomplished by eliminating portions of stringers (structural stiffeners running the length of the hydrogen tank), using fewer stiffener rings and by modifying major frames in the hydrogen tank. Also, significant portions of the tank are milled differently to reduce thickness, and the weight of the ET's aft solid rocket booster attachments were reduced by using a stronger, yet lighter and less expensive titanium alloy. Earlier several hundred pounds were eliminated by deleting the anti-geyser line. The line paralleled the oxygen feed line and provided a circulation path for liquid oxygen to reduce accumulation of gaseous oxygen in the feed line while the oxygen tank was being filled before launch. After propellant loading data from ground tests and the first few space shuttle missions was assessed, the anti-geyser line was removed for STS-5 and subsequent missions. The total length and diameter of the ET remain unchanged.

The ET is attached to the orbiter at one forward attachment point and two aft points. In the aft attachment area, there are also umbilicals that carry fluids, gases, electrical signals and electrical power between the tank and the orbiter. Electrical signals and controls between the orbiter and the two solid rocket boosters also are routed through those umbilicals.

## LIQUID OXYGEN TANK

The liquid oxygen tank is an aluminum monocoque structure composed of a fusion-welded assembly of preformed, chem-milled gores, panels, machined fittings and ring chords. It operates in a pressure range of 20 to 22 psig. The tank contains anti-slosh and anti-vortex provisions to minimize liquid residuals and damp fluid motion. The tank feeds into a 17-inch-diameter feed line that conveys the liquid oxygen through the intertank, then outside the ET to the aft right-hand ET/orbiter disconnect umbili-

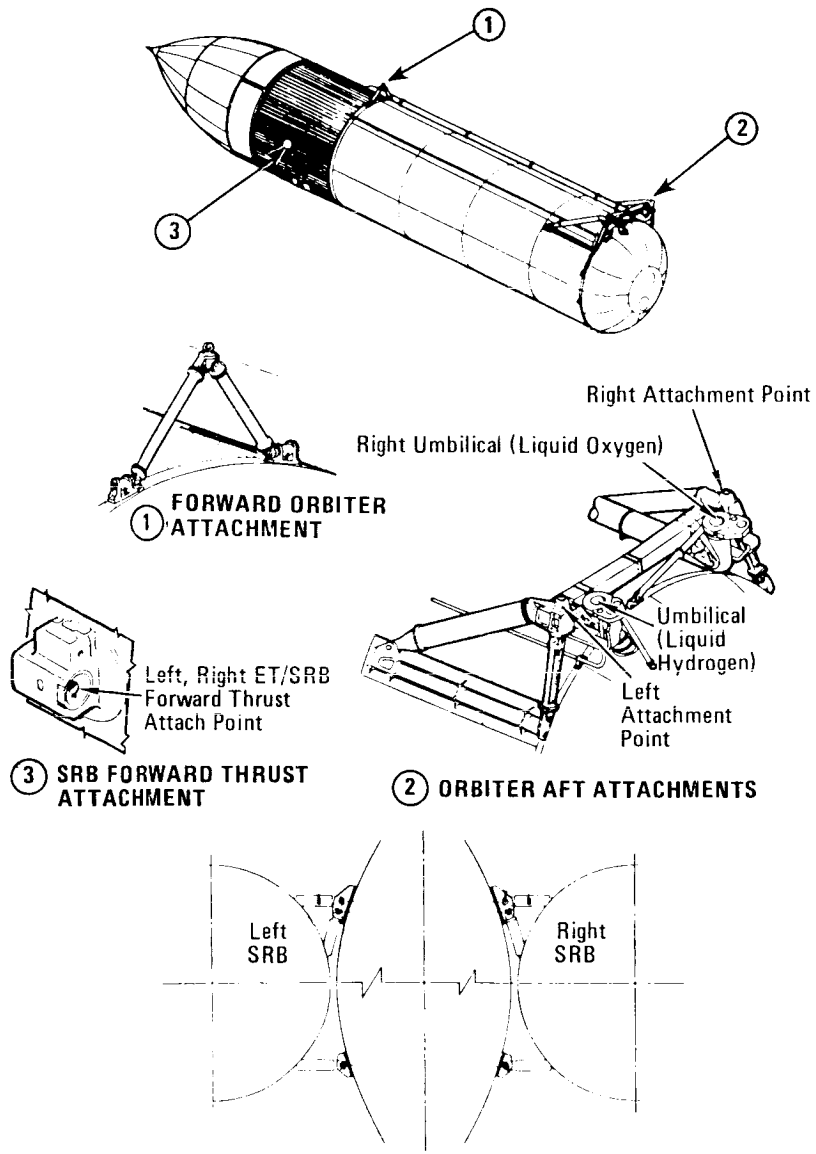


*Orbiter/External Tank Attachment Points*

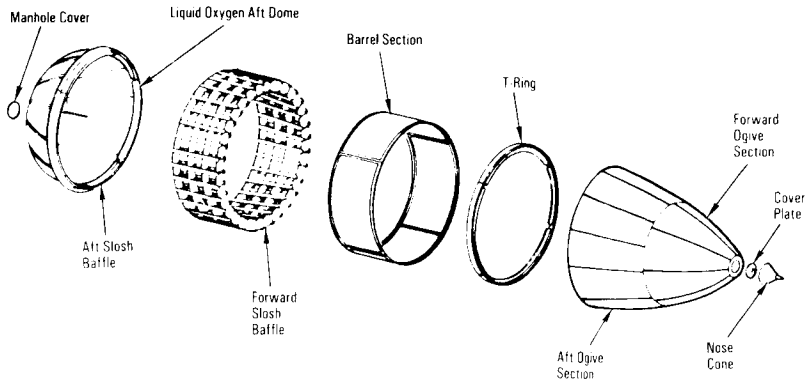


*Liquid Oxygen Tank Structure*

cal. The 17-inch-diameter feed line permits liquid oxygen to flow at approximately 2,787 pounds per second with the SSMEs operating at 104 percent or permits a maximum flow of 17,592 gallons per minute. The liquid oxygen tank's double-wedge nose cone reduces drag and heating, contains the vehicle's ascent air data system (for nine tanks only) and serves as a lightning rod. The liquid oxygen tank's volume is 19,563 cubic feet. It is 331 inches in diameter, 592 inches long and weighs 12,000 pounds empty.

## INTERTANK

The intertank is a steel/aluminum semimonocoque cylindrical structure with flanges on each end for joining the liquid oxygen and liquid hydrogen tanks. The intertank houses ET instrumentation components and provides an umbilical plate that interfaces with the ground facility arm for purge gas supply, hazardous gas detection and hydrogen gas boiloff during ground operations. It consists of mechanically joined skin, stringers and machined panels of aluminum alloy. The intertank is vented during flight. The intertank contains the forward SRB-ET attach thrust beam and fittings that distribute the SRB loads to the liquid oxygen and liquid hydrogen tanks. The intertank is 270 inches long, 331 inches in diameter and weighs 12,100 pounds.

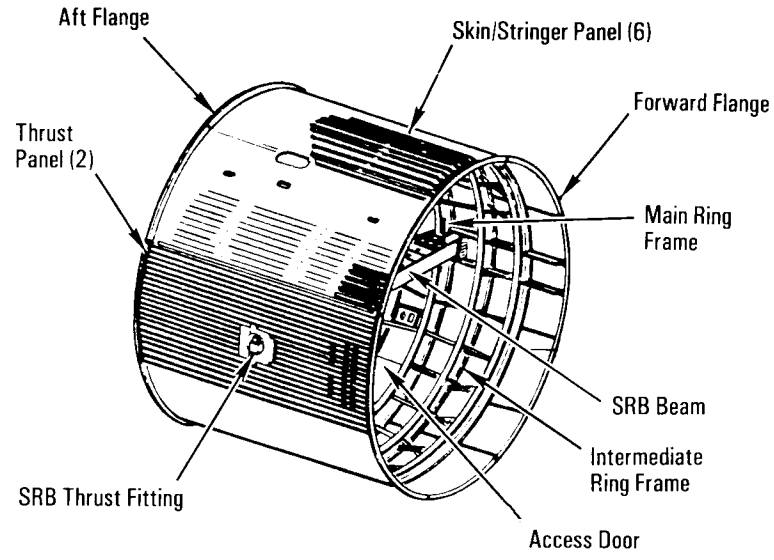


*Intertank Structure*



## LIQUID HYDROGEN TANK

The liquid hydrogen tank is an aluminum semimonocoque structure of fusion-welded barrel sections, five major ring frames, and forward and aft ellipsoidal domes. Its operating pressure range is 32 to 34 psia. The tank contains an anti-vortex baffle and siphon outlet to transmit the liquid hydrogen from the tank through a 17-inch line to the left aft umbilical. The liquid hydrogen feed line flow rate is 465 pounds per second with the SSMEs at 104 percent or a maximum flow of 47,365 gallons per minute. At the forward end of the liquid hydrogen tank is the ET/orbiter forward attachment pod strut, and at its aft end are the two ET/orbiter aft attachment ball fittings as well as the aft SRB-ET stabilizing strut attachments. The liquid hydrogen tank is 331 inches in diameter, 1,160 inches long, and has a volume of 53,518 cubic feet and a dry weight of 29,000 pounds.

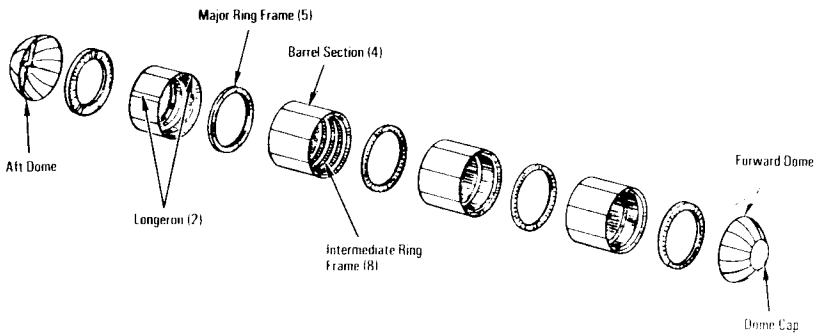


*Liquid Hydrogen Tank Structure*

## THERMAL PROTECTION SYSTEM

The ET thermal protection system consists of sprayed-on foam insulation and premolded ablator materials. The system also includes the use of phenolic thermal insulators to preclude air liquefaction. Thermal isolators are required for liquid hydrogen tank attachments to preclude the liquefaction of air-exposed metallic attachments and to reduce heat flow into the liquid hydrogen. The thermal protection system weighs 4,823 pounds.

## ET HARDWARE

The external hardware, ET/orbiter attachment fittings, umbilical fittings, electrical and range safety system weigh 9,100 pounds.

Each propellant tank has a vent and relief valve at its forward end. This dual-function valve can be opened by ground support equipment for the vent function during prelaunch and can open during flight when the ullage (empty space) pressure of the liquid hydrogen tank reaches 38 psig or the ullage pressure of the liquid oxygen tank reaches 25 psig.

The liquid oxygen tank contains a separate, pyrotechnically operated, propulsive tumble vent valve at its forward end. At separation, the liquid oxygen tumble vent valve is opened, providing impulse to assist in the separation maneuver and more positive control of the entry aerodynamics of the ET.

There are eight propellant-depletion sensors, four each for fuel and oxidizer. The fuel-depletion sensors are located in the bottom of the fuel tank. The oxidizer sensors are mounted in the orbiter liquid oxygen feed line manifold downstream of the feed line disconnect. During SSME thrusting, the orbiter general-purpose computers constantly compute the instantaneous mass of the vehicle due to the usage of the propellants. Normally, main engine cutoff is based on a predetermined velocity; however, if any two of the fuel or oxidizer sensors sense a dry condition, the engines will be shut down.

The locations of the liquid oxygen sensors allow the maximum amount of oxidizer to be consumed in the engines, while allowing sufficient time to shut down the engines before the oxidizer pumps cavitate (run dry). In addition, 1,100 pounds of liquid hydrogen are loaded over and above that required by the 6-1 oxidizer/fuel engine mixture ratio. This assures that MECO from the depletion sensors is fuel-rich; oxidizer-rich engine shutdowns can cause burning and severe erosion of engine components.



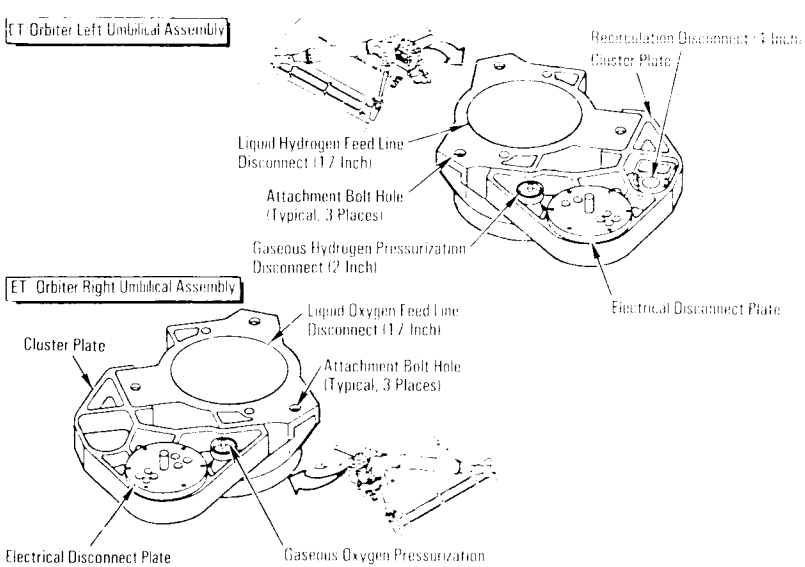


*External Tank/Orbiter 17-Inch Disconnects*

Four pressure transducers located at the top of the liquid oxygen and liquid hydrogen tanks monitor the ullage pressures.

Each of the two aft external tank umbilical plates mate with a corresponding plate on the orbiter. The plates help maintain alignment among the umbilicals. Physical strength at the umbilical plates is provided by bolting corresponding umbilical plates together. When the orbiter GPCs command external tank separation, the bolts are severed by pyrotechnic devices.

The ET has five propellant umbilical valves that interface with orbiter umbilicals: two for the liquid oxygen tank and three for the liquid hydrogen tank. One of the liquid oxygen tank umbilical valves is for liquid oxygen, the other for gaseous oxygen. The liquid hydrogen tank umbilical has two valves for liquid and one for gas. The intermediate-diameter liquid hydrogen umbilical is a recirculation umbilical used only during the liquid hydrogen chill-down sequence during prelaunch.

The ET also has two electrical umbilicals that carry electrical power from the orbiter to the tank and the two SRBs and provide information from the SRBs and ET to the orbiter.

A swing-arm-mounted cap to the fixed service structure covers the oxygen tank vent on top of the ET during the countdown and is retracted about two minutes before lift-off. The cap siphons off oxygen vapor that threatens to form large ice on the ET, thus protecting the orbiter's thermal protection system during launch.

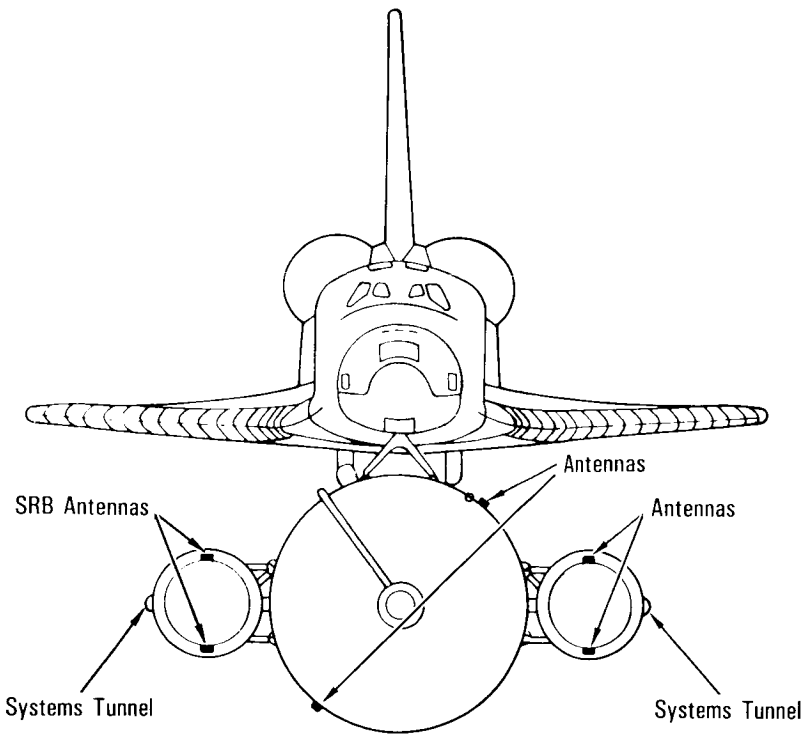


*External Tank Range Safety System Antennas*

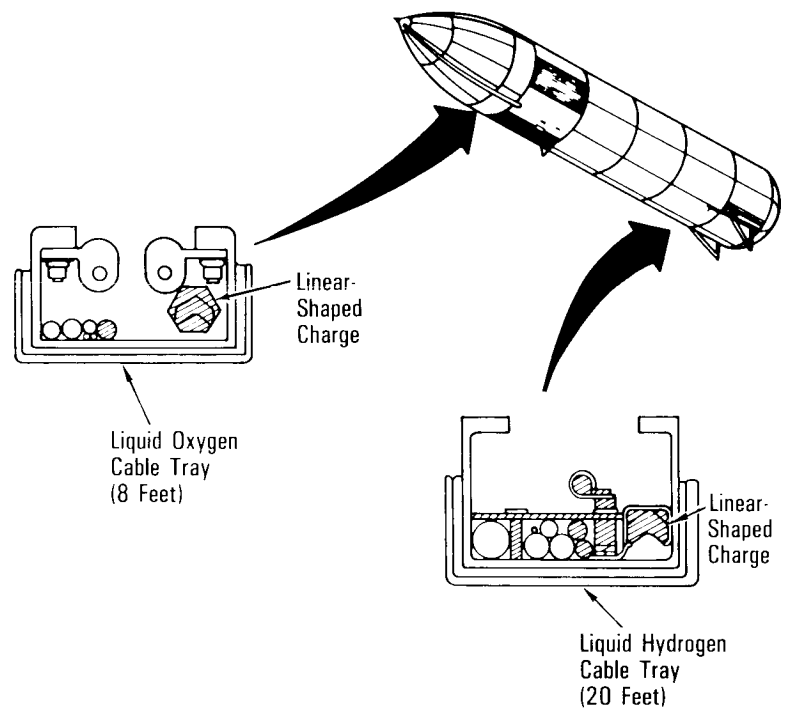


*External Tank Range Safety System Linear-Shaped Charges*

## RANGE SAFETY SYSTEM

A range safety system provides for dispersing tank propellants if necessary. It includes a battery power source, a receiver/decoder, antennas and ordnance.

Various parameters are monitored and displayed on the flight deck display and control panel and are transmitted to the ground.

The contractor for the external tank is Martin Marietta Aerospace, New Orleans, La. The tank is manufactured at Michoud, La. Motorola, Inc., Scottsdale, Ariz., is the contractor for range safety receivers.

## SPACE SHUTTLE COORDINATE SYSTEM

The space shuttle coordinate reference system is a means of locating specific points on the shuttle. The system is measured in inches and decimal places; $X_O$ designates the longitudinal (forward and aft) axis, $Y_O$ the lateral (inboard and outboard) axis and $Z_O$ the vertical (up and down) axis. The subscript "o" indicates orbiter; similar reference systems are used for the external tank (T), solid rocket booster (B), and overall space shuttle system (S).

In each coordinate system, the X-axis zero point is located forward of the nose tip; that is, the orbiter nose tip location is 236 inches aft of the zero point (at $X_O$ 236), the external tank nose cap tip location is at $X_T$ 322.5, and the solid rocket booster nose tip location is at $X_B$ 200. In the orbiter, the horizontal $X_O$, $Y_O$ reference plane is located at $Z_O$ 400, which is 336.5 inches above the external tank horizontal $X_T$, $Y_T$ reference plane located at $Z_T$ 400. The solid rocket booster horizontal $X_B$, $Y_B$ reference plane is located at $Z_B$ 0 and coincident with the external tank horizontal plane at $Z_T$ 400. The solid rocket booster vertical $X_B$, $Z_T$ planes are located at $+Y_S$ 250.5 and $-Y_S$ 250.5. Also, the orbiter, external tank, and shuttle system center X, Z planes coincide.

From the X = 0 point, aft is positive and forward is negative for all coordinate systems. Looking forward, each shuttle element Y-axis point right of the center plane (starboard) is positive and each Y-axis point left of center (port) is negative. The Z axis of each point within all elements of the shuttle except the SRBs is positive, with Z = 0 located below the element. In the SRBs each Z-coordinate point below the $X_B$, $Y_B$ reference plane is negative and each point above that plane is positive.

The shuttle system and shuttle element coordinate systems are related as follows: the external tank $X_T$ 0 point coincides with $X_S$ 0, the SRB $X_B$ 0 point is located 543 inches aft, and the $Y_O$, $Z_O$ reference plane is 741 inches aft of $X_S$ 0.

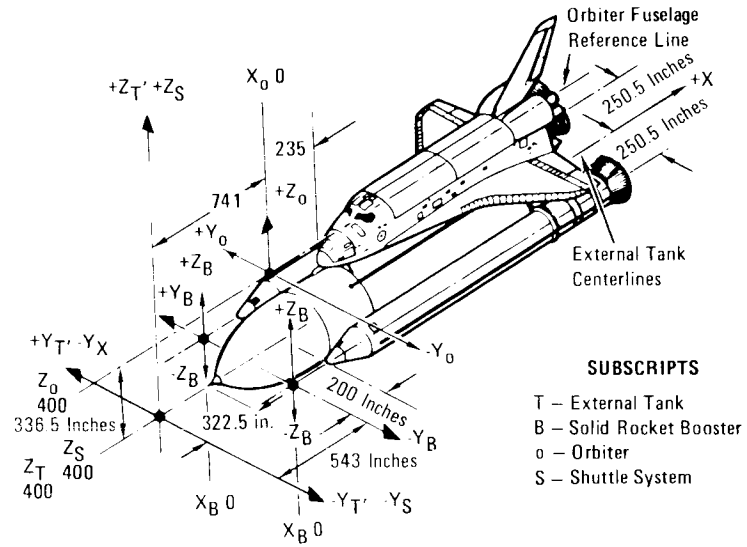


*Coordinate Systems*

## ORBITER STRUCTURE

The orbiter structure is divided into nine major sections: the forward fuselage, which consists of upper and lower sections that fit clamlike around a pressurized crew compartment; wings; midfuselage; payload bay doors; aft fuselage; forward reaction control system; vertical tail; orbital maneuvering system/reaction control system pods; and body flap. The majority of the sections are constructed of conventional aluminum and protected by reusable surface insulation.

The forward fuselage structure is composed of 2024 aluminum alloy skin-stringer panels, frames and bulkheads.

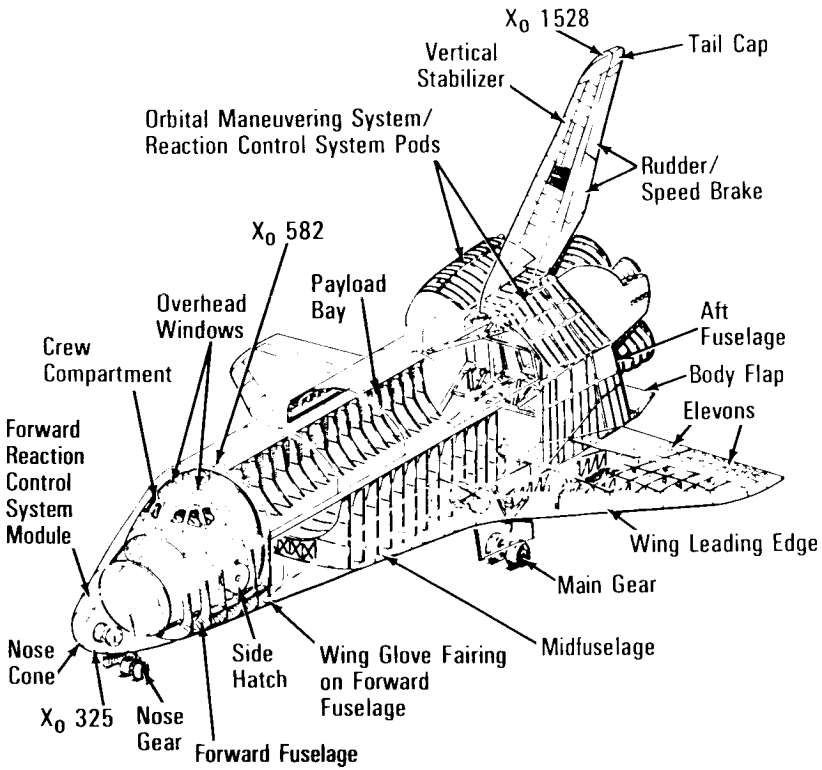


*Orbiter*

The crew compartment is supported within the forward fuselage at four attachment points and is welded to create a pressure-tight vessel. The three-level compartment has a side hatch for normal passage and hatches in the airlock to permit extravehicular and intravehicular activities. The side hatch can be jettisoned.

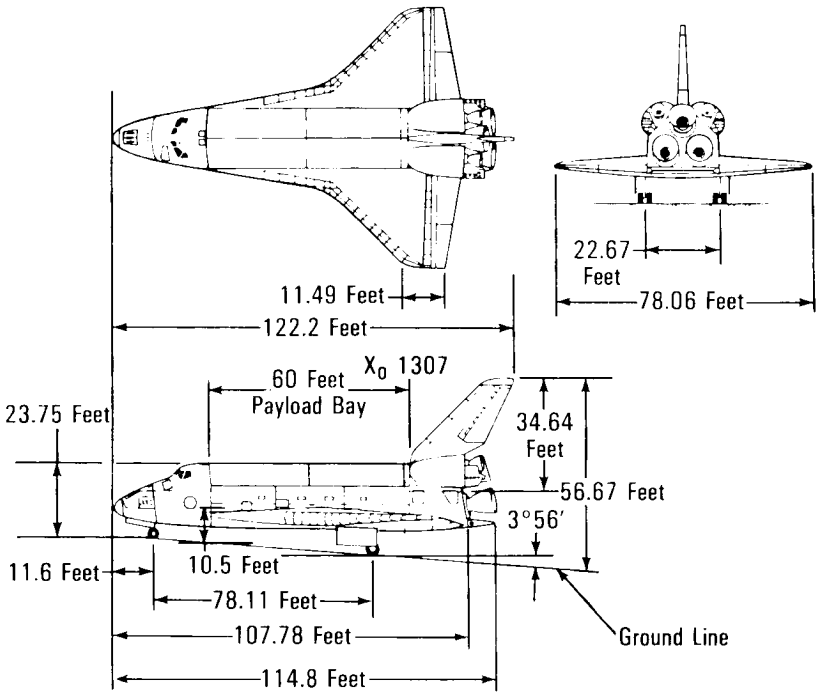


| Minimum Ground Clearances | Feet |
|---|---|
| Body Flap | 12.07 |
| Main Gear Door | 2.85 |
| Nose Gear Door | 2.95 |
| Wing Tip | 11.92 |

*Orbiter Dimensions*

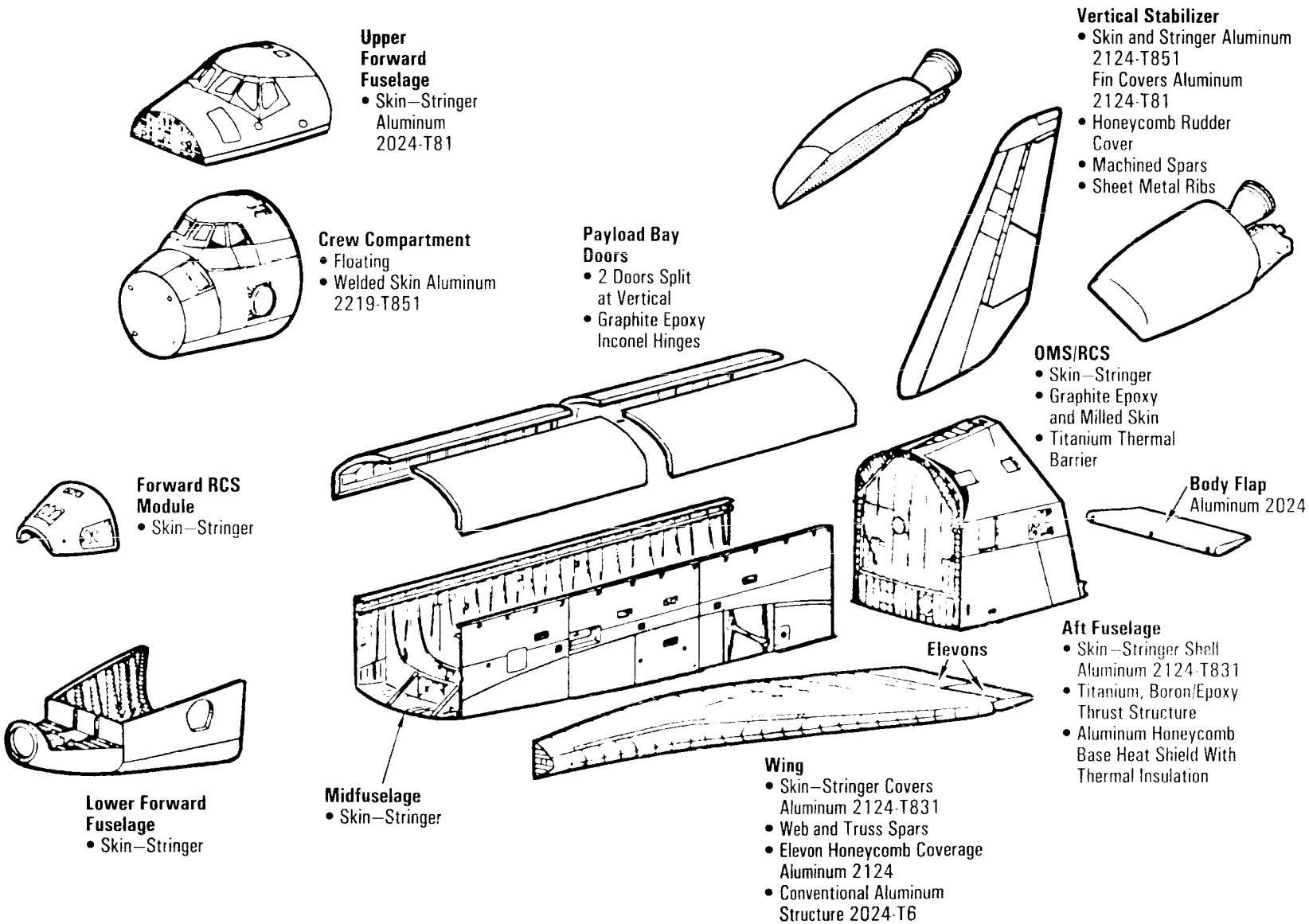


*Orbiter Structural Elements*

The midfuselage is a 60-foot section of primary load-carrying structure between the forward and aft fuselages. It includes the wing carry-through structure and the payload bay doors. The skins consist of integral-machined aluminum panels and aluminum honeycomb sandwich panels. The frames are constructed from a combination of aluminum panels with riveted or machined integral stiffeners and a truss structure center section. The upper half of the midfuselage consists of structural payload bay doors hinged along the side and split at the top centerline. The doors are graphite epoxy frames and honeycomb panel construction.

The aft fuselage includes a truss-type internal structure of diffusion-bonded elements that transfer the main engine thrust loads to the midfuselage and external tank. (In OV-105, the truss-type internal structure is of a forging construction.) The aft fuselage's external surface is of standard construction except for the removable OMS/RCS pods, which are constructed of graphite epoxy skins and frames. An aluminum bulkhead shield with reusable insulation at the rear of the orbiter protects the rear portion of the aft fuselage.

The wing is constructed of a conventional aluminum alloy, using a corrugated spar web, truss-type ribs and riveted skin-stringer and honeycomb covers. The elevons are constructed of aluminum honeycomb and are split into two segments to minimize hinge binding and interaction with the wing.

The vertical tail, a conventional aluminum alloy structure, is a two-spar, multirib, integrally machined skin assembly. The tail is attached to the aft fuselage by bolted fittings at the two main spars. The rudder/speed brake assembly is divided into upper and lower sections, which are split longitudinally and actuated individually to serve as both rudder and speed brake.

These major structural assemblies are mated and held together by rivets and bolts. The midfuselage is joined to the forward and aft fuselage primarily by shear ties, with the midfuselage overlapping the bulkhead caps at stations $X_O$ 582 and $X_O$ 1307. The wing is attached to the midfuselage and aft fuselage primarily by shear ties, except in the area of the wing carry-through, where the upper panels are attached with tension bolts. The vertical tail is attached to the aft fuselage with bolts that work in both shear and tension. The body flap, which has aluminum honeycomb covers, is attached to the lower aft fuselage by four rotary actuators.

## FORWARD FUSELAGE

The forward fuselage consists of the upper and lower fuselages. It houses the crew compartment and supports the forward

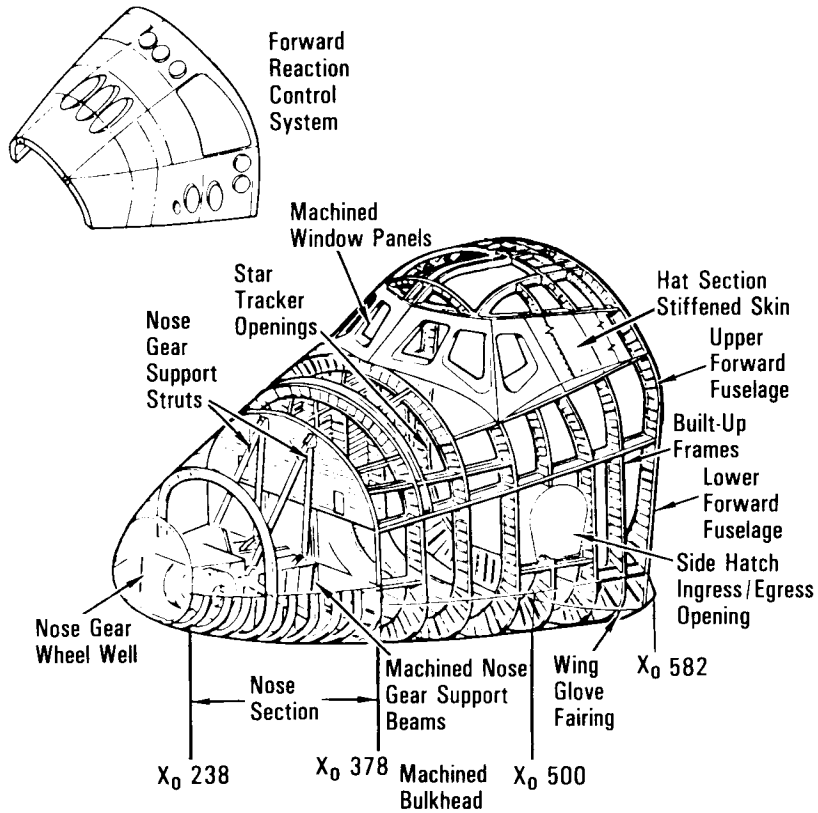


*Forward Fuselage Structure*

reaction control system module, nose cap, nose gear wheel well, nose gear and nose gear doors.

The forward fuselage is constructed of conventional 2024 aluminum alloy skin-stringer panels, frames and bulkheads. The panels are single curvature and stretch-formed skins with riveted stringers spaced 3 to 5 inches apart. The frames are riveted to the skin-stringer panels. The major frames are spaced 30 to 36 inches apart. The $Y_O$ 378 upper forward bulkhead is constructed of flat aluminum and formed sections riveted and bolted together; the lower is a machined section. The bulkhead provides the interface fitting for the nose section.

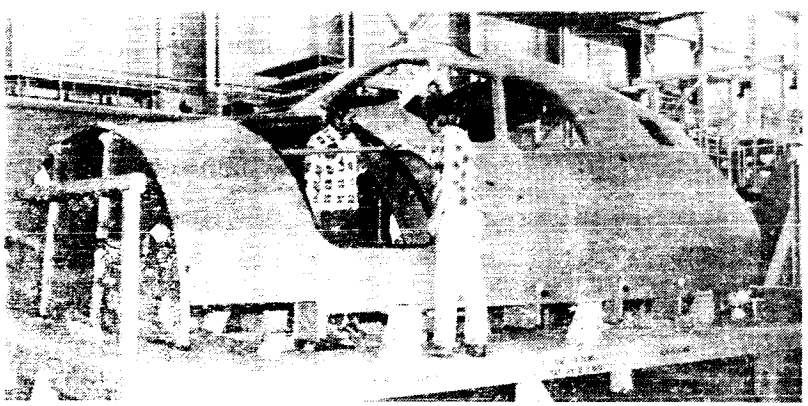

*Upper Forward Fuselage*

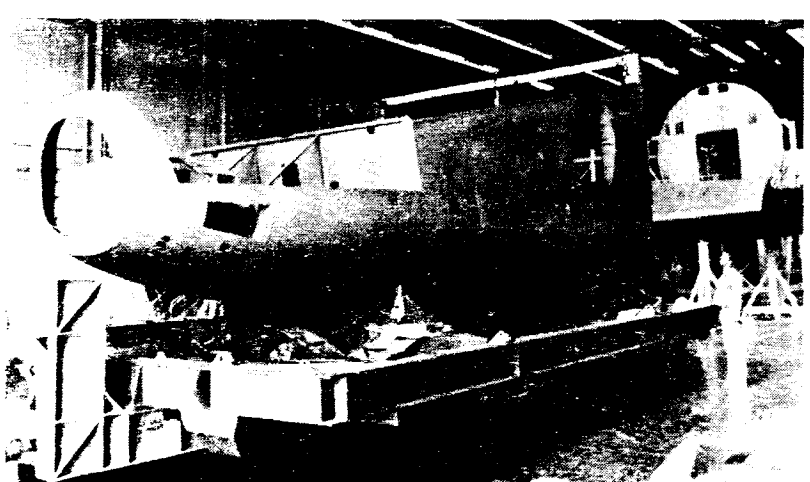

*Lower Forward Fuselage*

The nose section contains large machined beams and struts. The structure for the nose landing gear wheel well consists of two support beams, two upper closeout webs, drag-link support struts, nose landing gear strut and actuator attachment fittings, and the nose landing gear door fittings. The left and right landing gear doors are attached by hinge fittings in the nose section. The doors are constructed of aluminum alloy honeycomb, and although the doors are the same length, the left door is wider than the right.

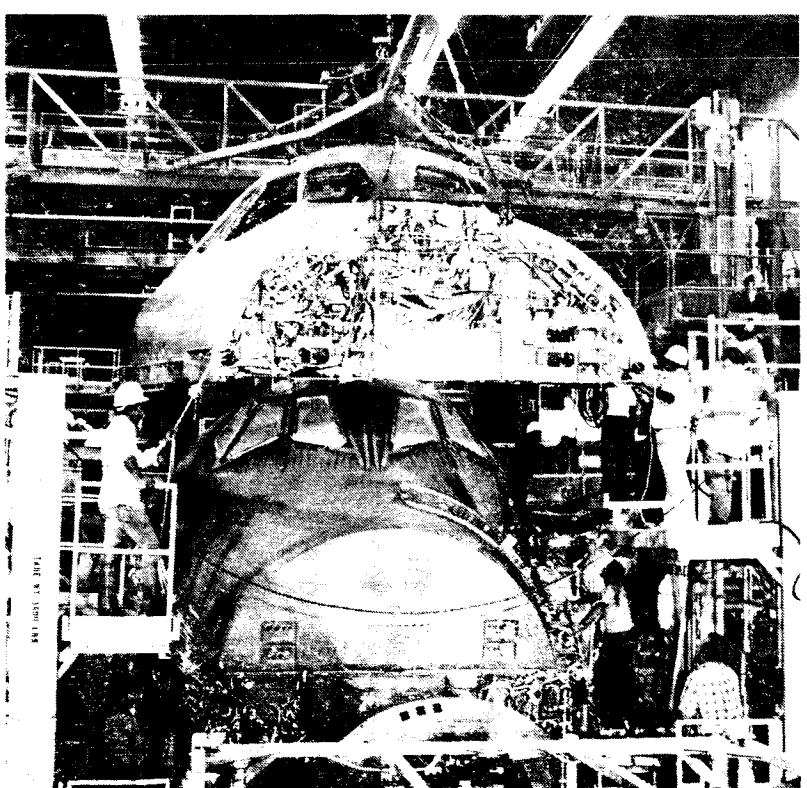

*Upper Forward Fuselage Being Mated to Lower Forward Fuselage*

Each door has an up-latch fitting at the forward and aft ends to lock the door closed when the gear is retracted, and each has a pressure seal in addition to a thermal barrier. Lead ballast in the nose wheel well and on the $X_O$ 378 bulkhead provides weight and center-of-gravity control. The nose wheel well will accommodate 1,350 pounds of ballast, and the $X_O$ 378 bulkhead will accommodate a maximum of 2,660 pounds.

The forward fuselage carries the basic body-bending loads (a tendency to change the radius of a curvature of the body) and reacts nose landing gear loads.

The forward fuselage is covered with reusable insulation, except for the six windshields, two overhead windows and side hatch window areas around the forward RCS engines. The nose cap is also a reusable thermal protection system. It is constructed of reinforced carbon-carbon and has thermal barriers at the nose cap-structure interface.

The forward fuselage skin has structural provisions for installing antennas, deployable air data probes and the door eyelet openings for the two star trackers. Two openings are required in the upper forward fuselage for star tracker viewing. Each opening has a door for environmental control.

The forward orbiter/external tank attach fitting is at the $X_O$ 378 bulkhead and the skin panel structure aft of the nose gear wheel well. Purge and vent control is provided by flexible boots between the forward fuselage and crew compartment around the windshield windows, overhead observation window, crew hatch window and star tracker openings. The forward fuselage is isolated from the payload bay by a flexible membrane between the forward fuselage and crew compartment at $X_O$ 582.

Six forward outer pane windshields are installed on the forward fuselage. They are described in the section on windows. The window structural frames in the forward fuselage are five-axis machined parts.

The forward RCS module is constructed of conventional 2024 aluminum alloy skin-stringer panels and frames. The panels are composed of single-curvature and stretch-formed skins with riveted stringers. The frames are riveted to the skin-stringer panels. The forward RCS module is secured to the forward fuselage nose section and forward bulkhead of the forward fuselage with 16 fasteners, which permit the installation and removal of the module. The components of the forward RCS are mounted and attached to the module, which will have a reusable thermal protection cover, in addition to thermal barriers installed around it and the RCS engine interfaces and the interface-attachment area to the forward fuselage.

The forward fuselage and forward RCS module are built by Rockwell's Space Transportation Systems Division, Downey, Calif.

## CREW COMPARTMENT

The three-level crew compartment is constructed of 2219 aluminum alloy plate with integral stiffening stringers and internal framing welded together to create a pressure-tight vessel. The compartment has a side hatch for normal ingress and egress, a

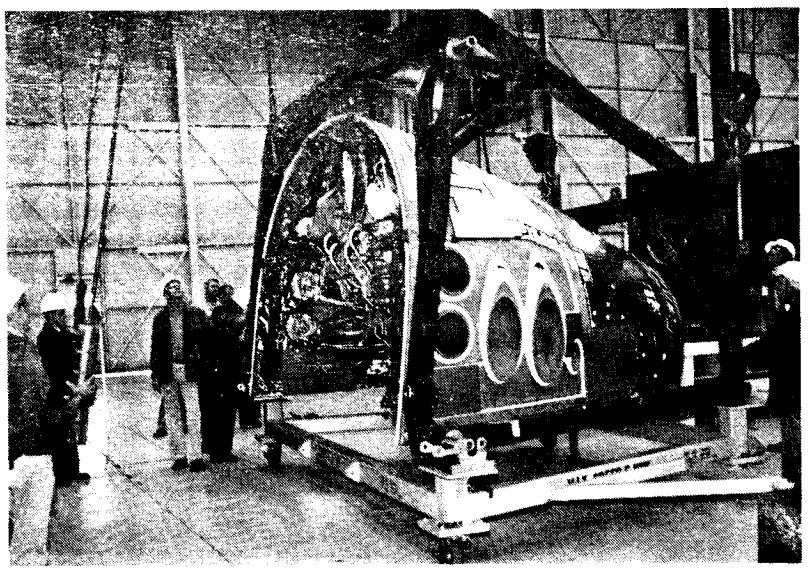

*Forward RCS Module*

hatch into the airlock from the middeck, and a hatch from the airlock through the aft bulkhead into the payload bay for extravehicular activity and payload bay access.

Redundant pressure window panes are provided in the six forward windshields, the two overhead viewing windows, the two aft viewing windows and the side hatch windows; they are described in the window section. Approximately 300 penetrations in the pressure shell are sealed with plates and fittings. A large removable panel in the aft bulkhead provides access to the interior of the crew compartment during initial fabrication and assembly and provides for airlock installation and removal. The compartment supports the environmental control and life support system; avionics; guidance, navigation and control equipment; inertial measurement units; displays and controls; star trackers; and crew accommodations for sleeping, waste management, seats and an optional galley.

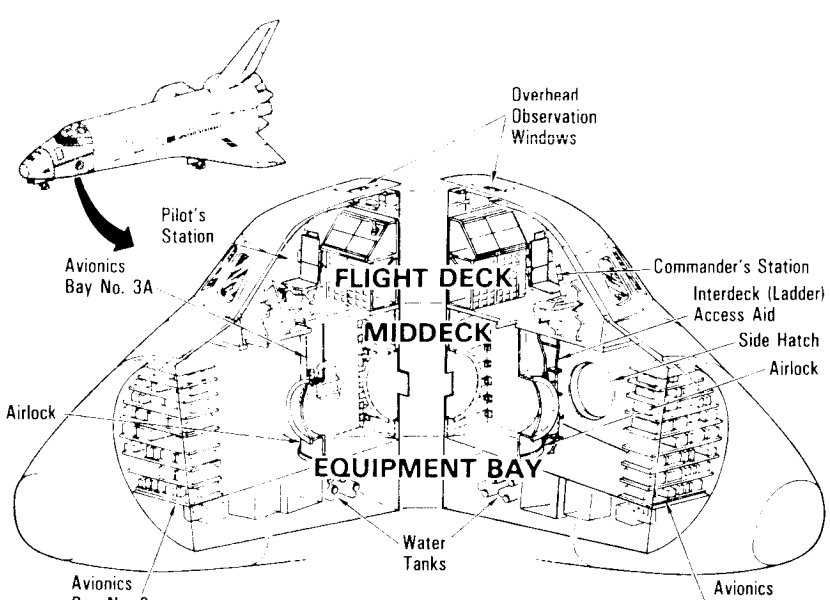


*Crew Compartment and Arrangement*

The crew compartment is supported within the forward fuselage at only four attach points to minimize the thermal conductivity between them. The two major attach points are located at the aft end of the crew compartment at the flight deck floor level. The

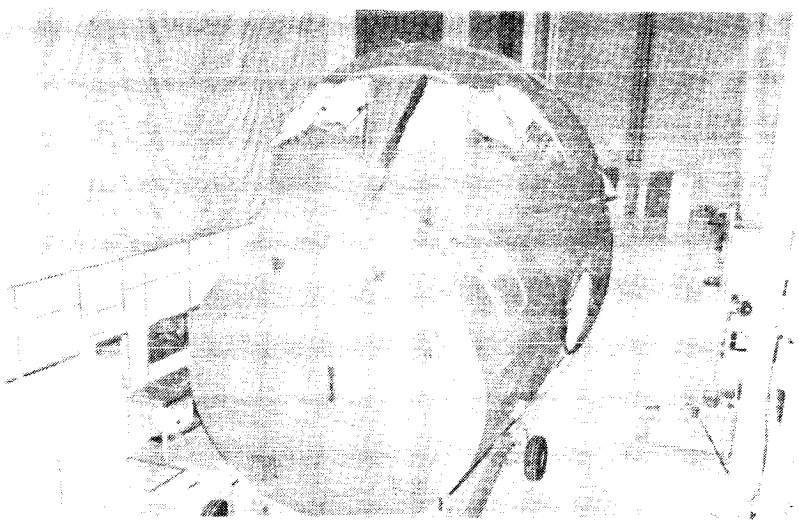

*Crew Compartment*

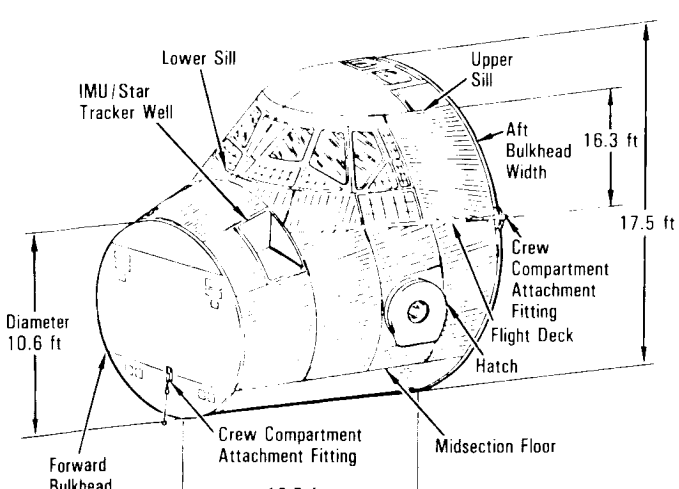


*Crew Compartment*

vertical load reaction link is on the centerline of the forward bulkhead. The lateral load reaction is on the lower segment of the aft bulkhead.

The compartment is configured to accommodate a crew of four on the flight deck and three in the middeck. In OV-102, four can be accommodated in the middeck. The crew cabin arrangement consists of a flight deck, middeck and lower level equipment bay.

The crew compartment is pressurized to 14.7 psia, plus or minus 0.2 psia, and is maintained at an 80-percent nitrogen and 20-percent oxygen composition by the ECLSS, which provides a shirt-sleeve environment for the flight crew. The crew compartment is designed for 16 psia.

The crew compartment's volume with the airlock in the middeck is 2,325 cubic feet. If the airlock is in the payload bay, the crew compartment's cabin volume is 2,625 cubic feet.

The flight deck is the uppermost compartment of the cabin. The commander's and pilot's work stations are positioned side by side in the forward portion of the flight deck. These stations have controls and displays for maintaining autonomous control of the vehicle throughout all mission phases. Directly behind and to the sides of the commander and pilot centerline are the mission specialist seats.

The commander's and pilot's seats have two shoulder harnesses and a lap belt for restraints. The shoulder harnesses have an inertia reel lock/unlock feature. The unlocked position allows the shoulder harness to move. The commander and pilot can move their seats along the orbiter's Z (vertical) and X (longitudinal) axes so they can reach and see controls better during the ascent and entry phases of flight. Seat movement for each axis is provided by a single ac motor. The total travel distance for the Z and X axes is 10 and 5 inches, respectively. Seat adjustment controls are located on the left side of the seat pan and consist of a three-position toggle switch for power bus selection and one spring-loaded, three-position toggle switch each to control horizontal and vertical seat movement. To operate the seat, the commander and pilot position the *pwr buss sel* switch to *AC2* or *AC3* for power; to move the seat along the horizontal axis, the commander and pilot position the



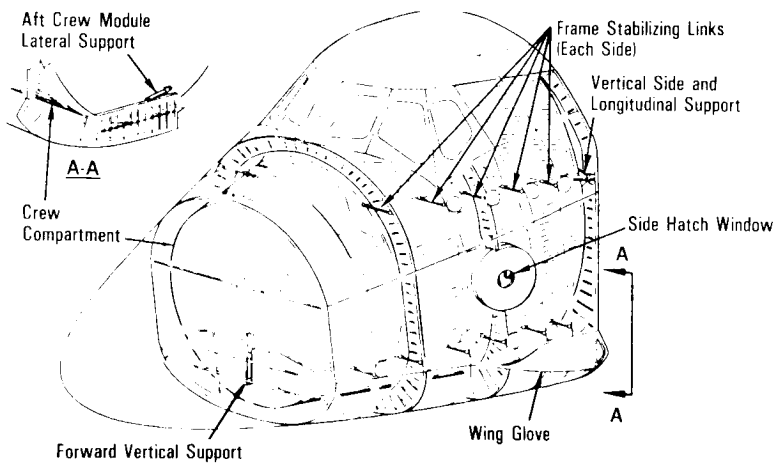


*Crew Compartment—Forward Fuselage Interface*

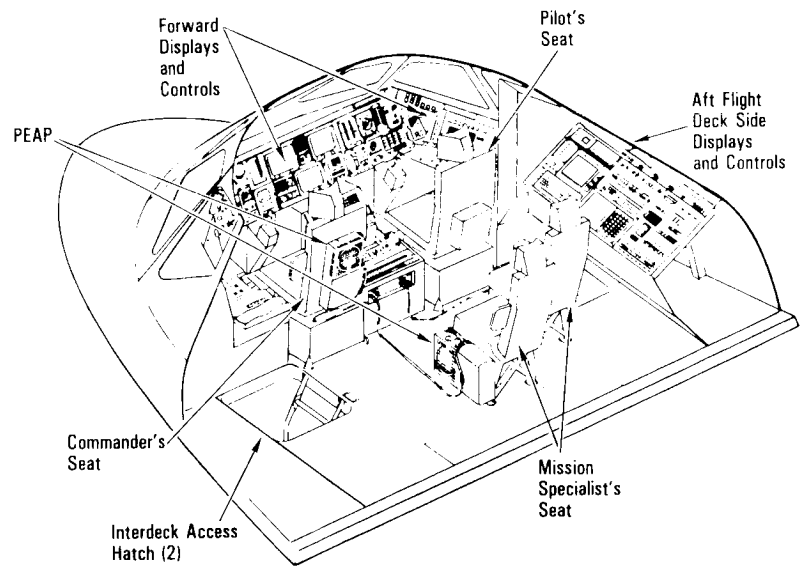


*Crew Compartment Flight Deck*

*horiz contr* switch to *fwd* to move the seat forward and to *aft* to move the seat aft. Similarly, to move the seat along the vertical axis, the commander and pilot position the *vert contr* switch to *up* to move the seat upward and to *down* to move the seat down. The commander and pilot can position the *pwr buss sel* switch to *off*, removing power from the seat. If the seat motors fail, the seat can

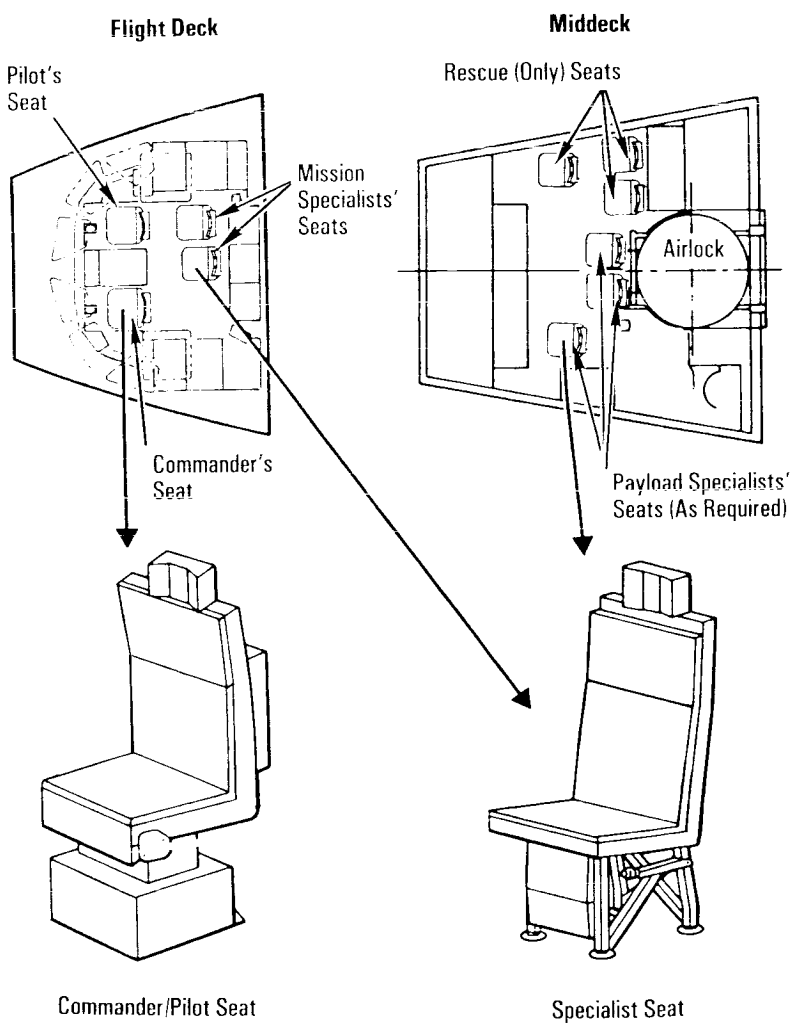


*Crew Seats*

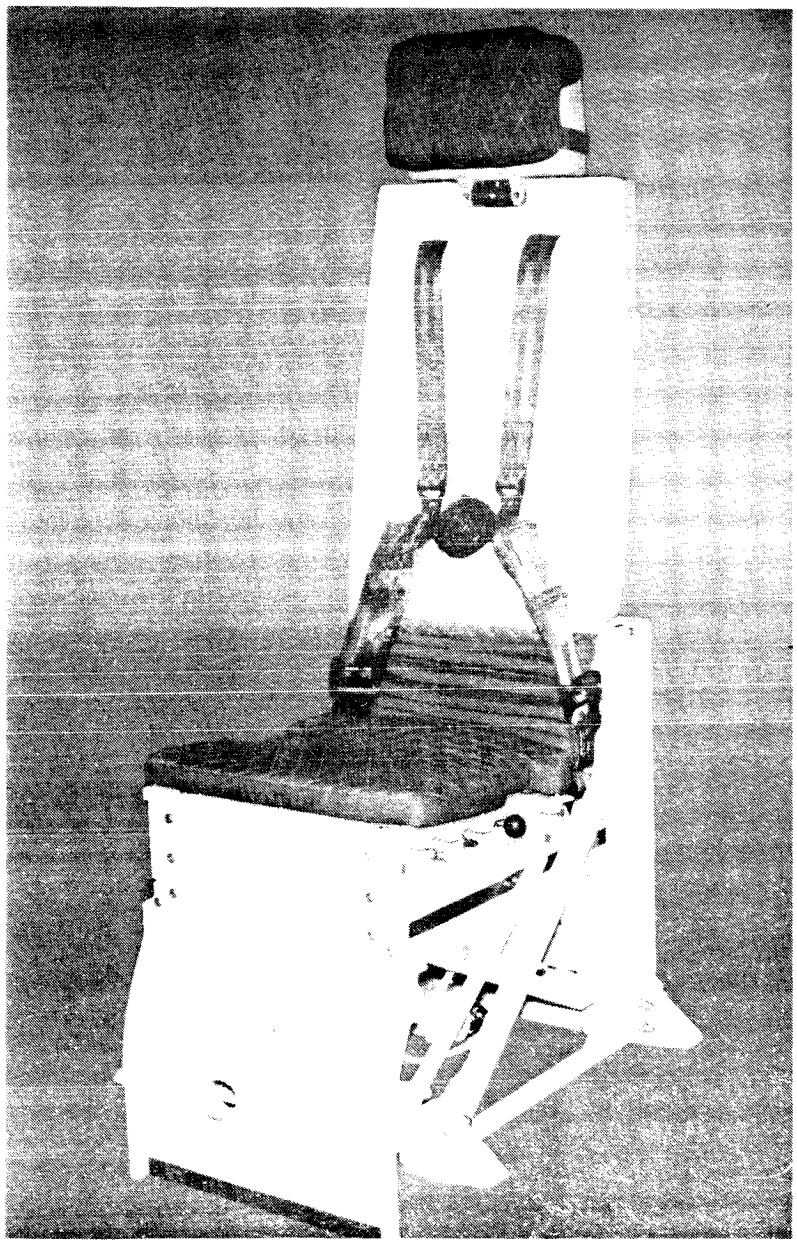

*Commander's/Pilot's Seat*

be adjusted manually. However, manual seat adjustment can only take place on orbit and is accomplished with a special seat adjustment tool provided in the in-flight maintenance tool kit. Manual horizontal and vertical seat adjustment controls are located under the seat pan cushion and on the aft side of the fixed seat structure. The seat adjustment tool is a ratchet-driven, 3/16-inch allen wrench, which is inserted into the vertical or horizontal manual adjustment to move the seat along the Z or X axis. The seats accommodate stowage of in-flight equipment and have removable seat cushions and mounting provisions for oxygen and communications connections to the crew altitude protection system.

Each mission and payload specialist's seat has two shoulder harnesses and a lap belt for restraints. The specialists' seats have

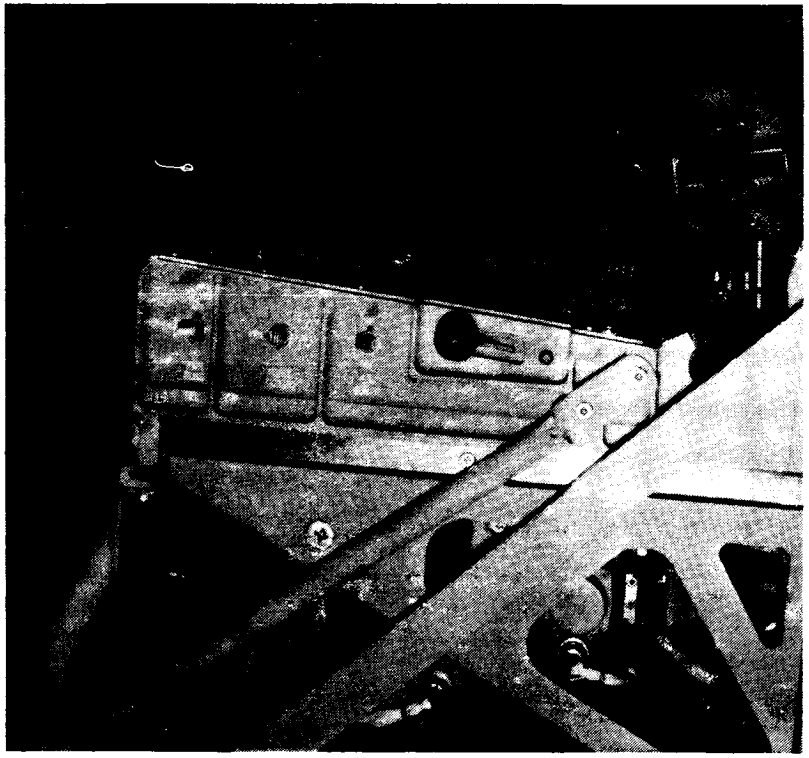

*Commander's/Pilot's Seat Power and Controls*

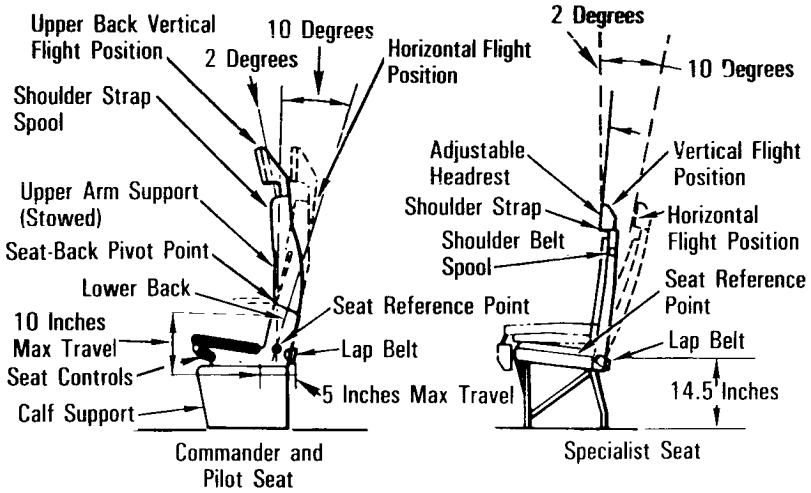


*Flight Seats*

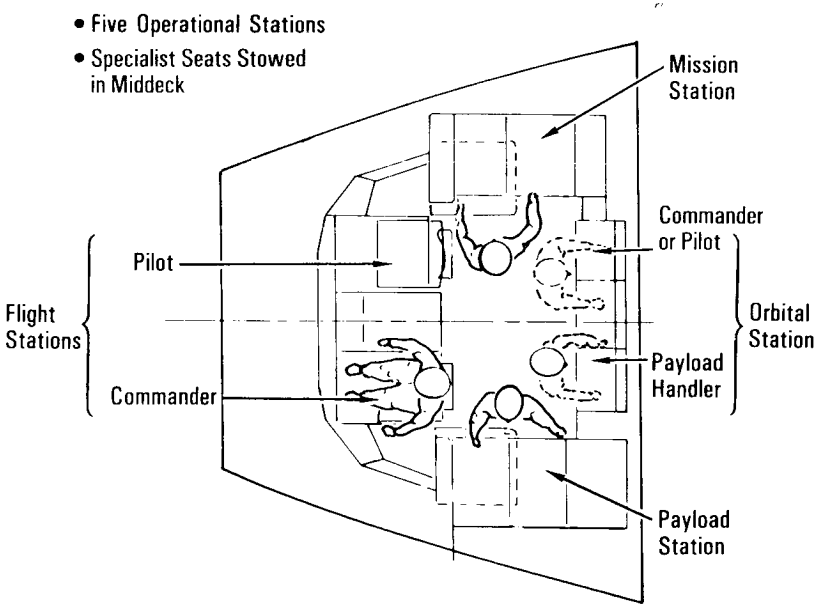


*Flight Deck Station—Orbital Operations*

controls to manually lock and unlock the tilt of the seat back. Each seat has removable seat cushions and mounting provisions for oxygen and communications connections to the CAPS. The specialists' seats are removed and stowed in the middeck on orbit. No tools are required since the legs of each seat have quick-disconnect fittings. Each seat is 25.5 inches long, 15.5 inches wide and 11 inches high when folded for stowage.

The aft flight deck has two overhead and aft viewing windows for viewing orbital operations. The aft flight deck station also contains displays and controls for executing attitude or translational maneuvers for rendezvous, stationkeeping, docking, payload deployment and retrieval, payload monitoring, remote manipulator system controls and displays, payload bay door operations and closed-circuit television operations.

The forward flight deck, which includes the center console and seats, is approximately 24 square feet. However, the side console controls and displays add approximately 3.5 square feet more. If the center console is subtracted from the 24 square feet, this would amount to approximately 5.2 square feet.

The aft flight deck is approximately 40 square feet.

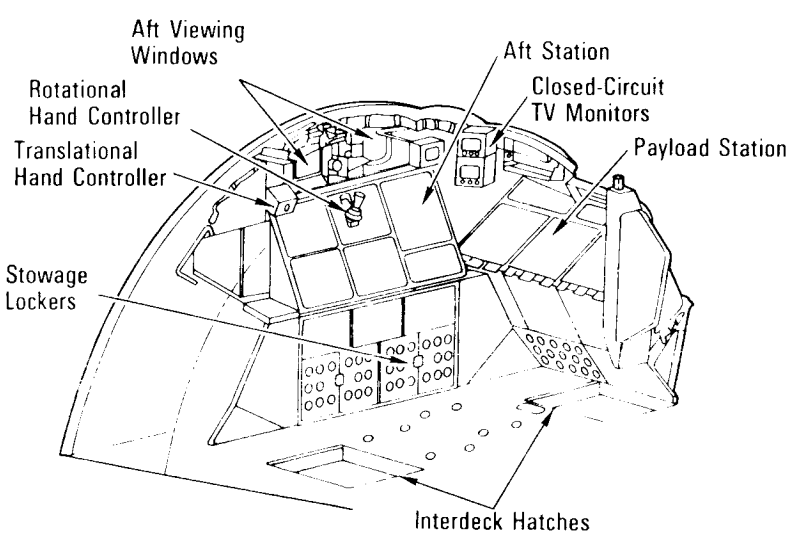


*Aft Flight Station*

Directly beneath the flight deck is the middeck. Access to the middeck is through two interdeck openings, which measure 26 by 28 inches. Normally, the right interdeck opening is closed and the left is open. A ladder attached to the left interdeck access allows easy passage in 1-g conditions. The middeck provides crew accommodations and contains three avionics equipment bays. The two forward avionics bays utilize the complete width of the cabin and extend into the middeck 39 inches from the forward bulkhead. The aft bay extends into the middeck 39 inches from the aft bulkhead on the right side of the airlock. Just forward of the waste management system is the side hatch. The completely stripped middeck is approximately 160 square feet; the gross mobility area is approximately 100 square feet.

The side hatch in the middeck is used for normal crew entrance/exit and may be operated from within the crew cabin middeck or externally. It can be jettisoned for emergencies, as discussed in the escape system section. It is attached to the crew cabin tunnel by hinges, a torque tube and support fittings. The hatch opens outwardly 90 degrees down with the orbiter horizontal or 90 degrees sideways with the orbiter vertical. It is 40 inches in diameter and has a 10-inch clear-view window in the center of the hatch. The window consists of three panes of glass. The side hatch has a pressure seal that is compressed by the side hatch latch mechanisms when the hatch is locked closed. A thermal barrier of

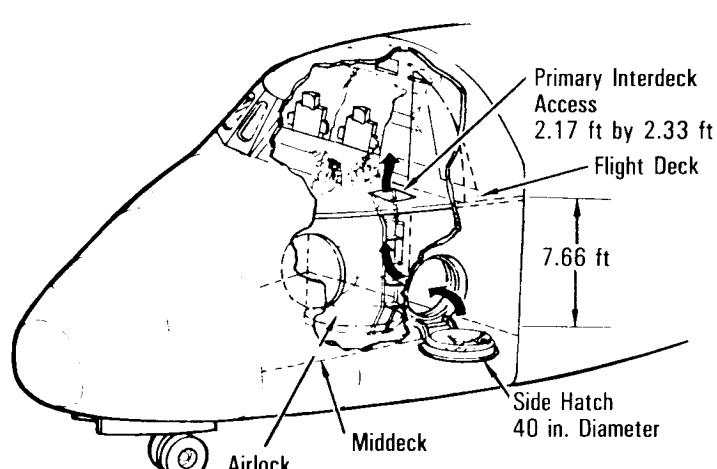


*Normal Ingress and Egress*

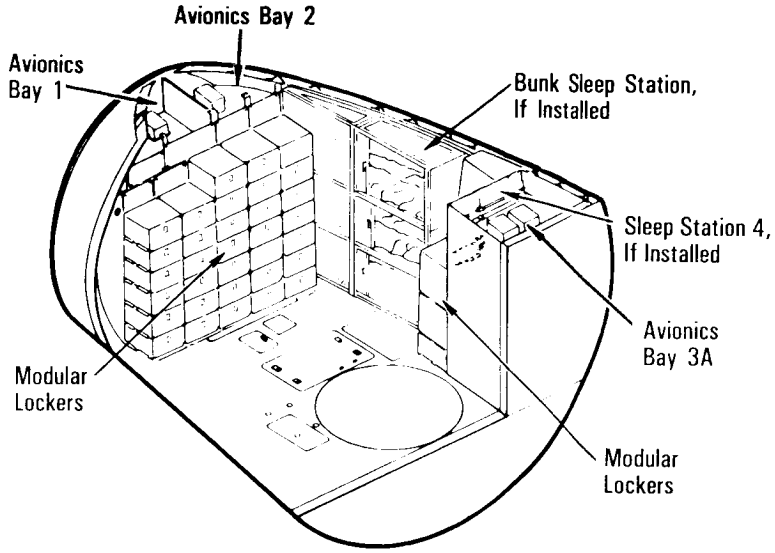


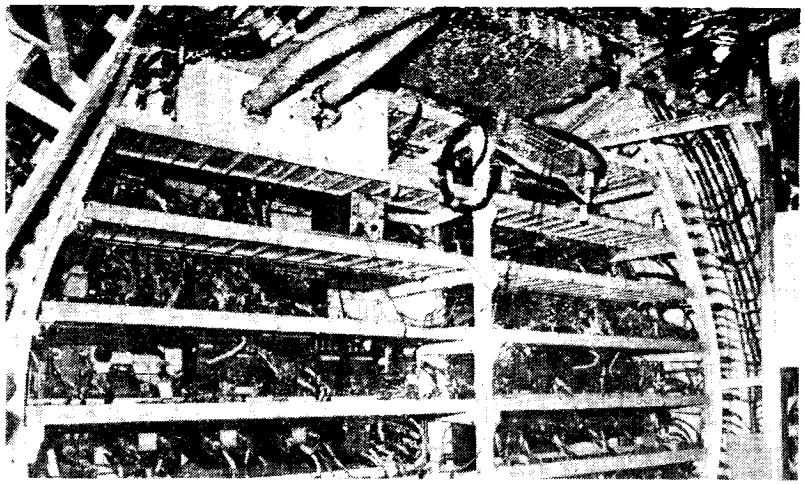

*Avionics Bays 1 and 2*



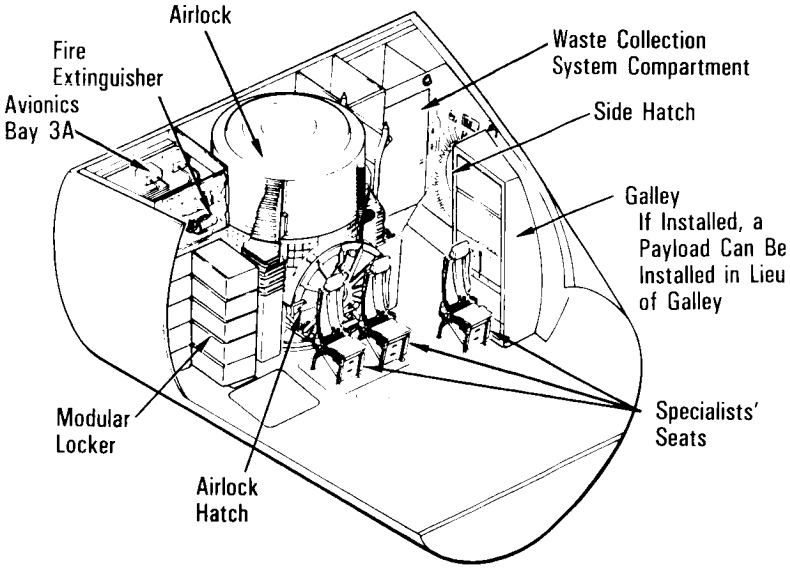


*Crew Compartment Middeck*

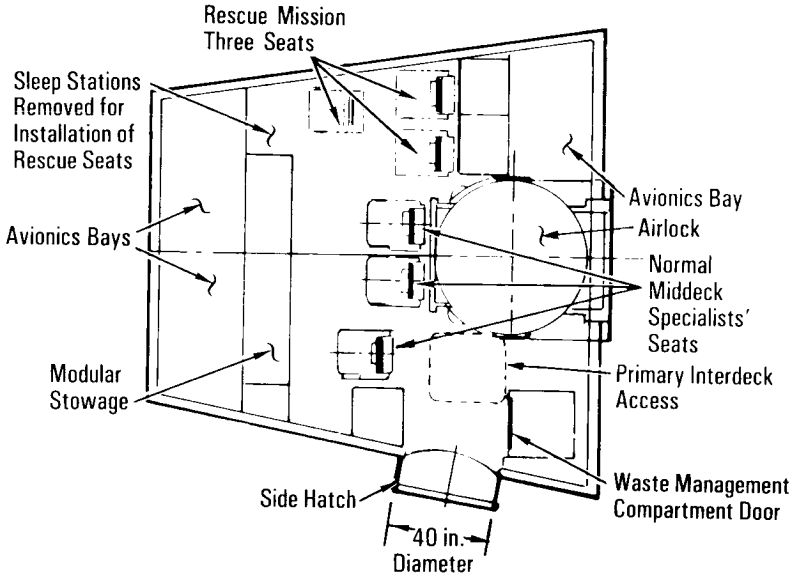


*Middeck—Rescue Configuration*

Inconel wire mesh spring with a ceramic fiber braided sleeve is installed between the reusable surface insulation tiles on the forward fuselage and the side hatch. The total weight of the side hatch is 294 pounds.

Depending on the mission requirements, bunk sleep stations and a galley can be installed in the middeck. In addition, three or four seats of the same type as the mission specialists' seats on the flight deck can be installed in the middeck. Three seats over the normal three could be installed in the middeck for rescue missions if the bunk sleep stations were removed.

The waste management system, located in the middeck, can also accommodate payloads in the pressurized crew compartment environment.

The middeck also provides a stowage volume of 140 cubic feet. Accommodations are included for dining, sleeping, maintenance, exercising and data management. On the orbiter centerline, just aft of the forward avionics equipment bay, an opening in the ceiling provides access to the inertial measurement units.

The middeck floor contains removable panels that provide access to the ECLSS equipment. The middeck equipment bay below the middeck floor houses the major components of the waste management and air revitalization systems, such as pumps, fans, lithium hydroxide, absorbers, heat exchangers and ducting. This compartment has space for stowing lithium hydroxide canisters and five separate spaces for crew equipment stowage with a volume of 29.92 cubic feet.

Modular stowage lockers are used to store the flight crew's personal gear, mission-necessary equipment, personal hygiene equipment and experiments. The modular lockers are made of sandwich panels of Kevlar/epoxy and a non-metallic core. This reduced the lockers' weight by 83 percent compared to all-aluminum lockers, a reduction of approximately 150 pounds. There are 42 identical boxes, which are 11 by 18 by 21 inches.

An airlock, located in the middeck, is composed of machined aluminum sections welded together to form a cylinder with hatch mounting flanges. The upper cylindrical section and bulkheads are constructed of aluminum honeycomb. Two semicylindrical aluminum sections are welded to the airlock's primary structure to house the ECLSS and electrical support equipment. Each semicylindrical section has three feedthrough plates for plumbing and cable routings from the orbiter to the airlock.

Normally, two extravehicular mobility units are stowed in the airlock. The EMU is an integrated space suit assembly and life support system that enables flight crew members to leave the pressurized orbiter crew cabin and work outside the cabin in space.

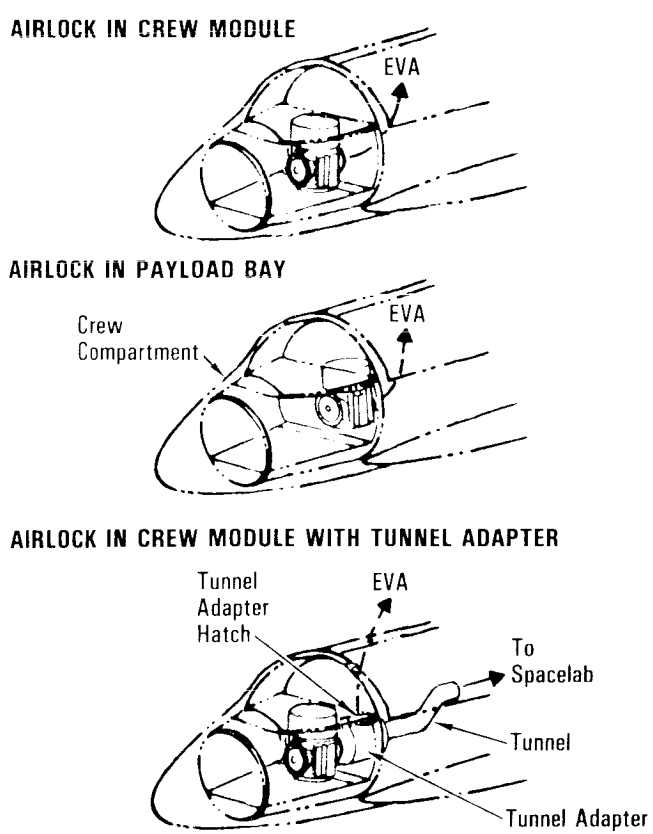


*Airlock Configuration*

## AIRLOCK

The airlock is normally located inside the middeck of the spacecraft's pressurized crew cabin. It has an inside diameter of 63 inches, is 83 inches long and has two 40-inch-diameter D-shaped openings that are 36 inches across. It also has two pressure-sealing hatches and a complement of airlock support systems. The airlock's volume is 150 cubic feet.

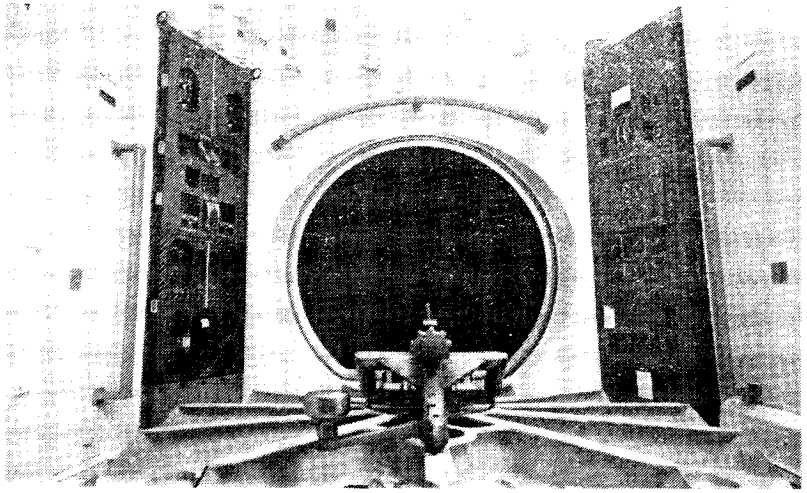

*Airlock Internal View*

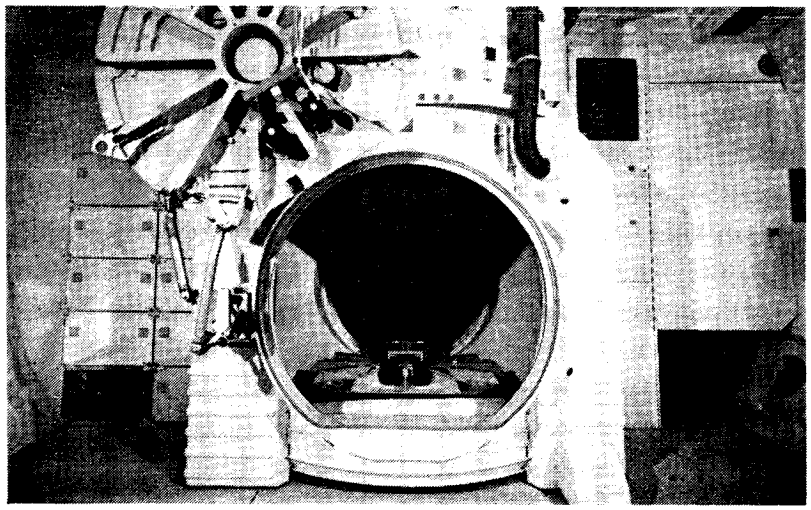

*Airlock View From Middeck*

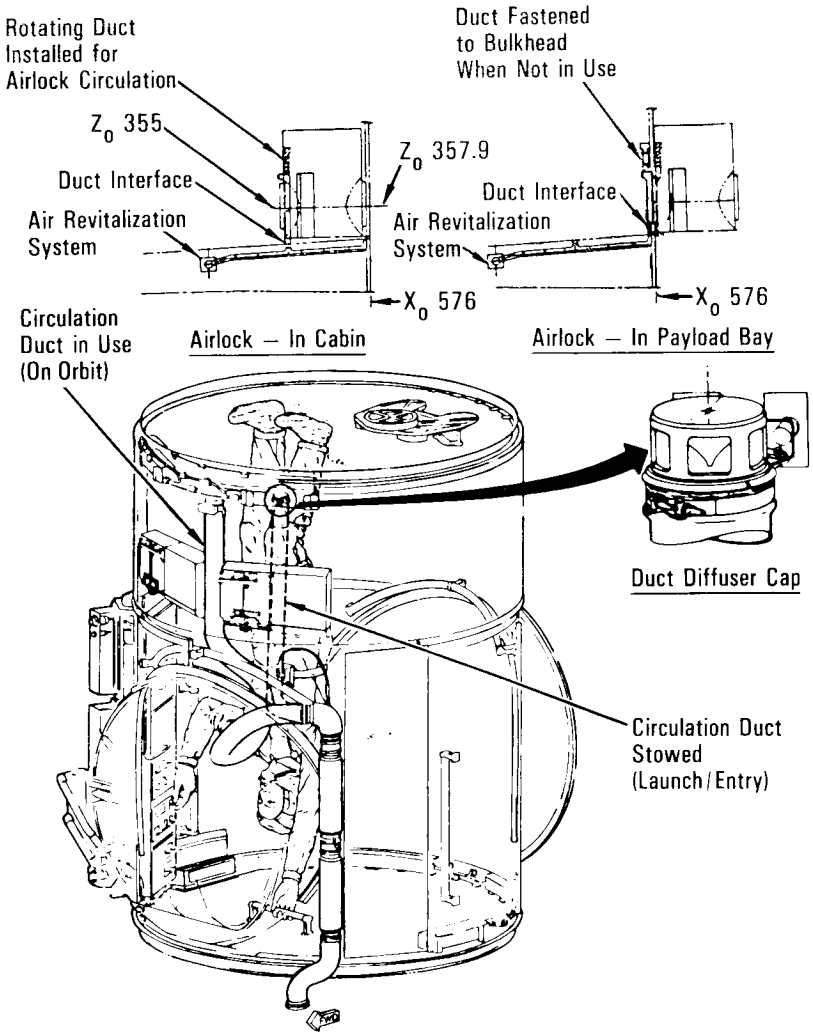


*Airlock in Middeck Without Spacelab Tunnel Adapter*

The airlock is sized to accommodate two fully suited flight crew members simultaneously. Support functions include airlock depressurization and repressurization, extravehicular activity equipment recharge, liquid-cooled garment water cooling, EVA equipment checkout, donning and communications. The EVA gear, checkout panel and recharge stations are located on the internal walls of the airlock.

The airlock hatches are mounted on the airlock. The inner hatch is mounted on the exterior of the airlock (orbiter crew cabin middeck side) and opens into the middeck. The inner hatch isolates the airlock from the orbiter crew cabin. The outer hatch is mounted inside the airlock and opens into the airlock. The outer hatch isolates the airlock from the unpressurized payload bay when closed and permits the EVA crew members to exit from the airlock to the payload bay when open.

Airlock repressurization is controllable from the orbiter crew cabin middeck and from inside the airlock. It is performed by equalizing the airlock's and cabin's pressure with equalization valves mounted on the inner hatch. The airlock is depressurized from inside the airlock by venting the airlock's pressure overboard. The two D-shaped airlock hatches open toward the primary pressure source, the orbiter crew cabin, to achieve pressure-assist sealing when closed.

Each hatch has six interconnected latches and a gearbox/actuator, a window, a hinge mechanism and hold-open device, a differential pressure gauge on each side and two equalization valves.

The 4-inch diameter window in each airlock hatch is used for crew observation from the cabin/airlock and the airlock/payload bay. The dual window panes are made of polycarbonate plastic and mounted directly to the hatch by means of bolts fastened through the panes. Each hatch window has dual pressure seals, with seal grooves located in the hatch.

Each airlock hatch has dual pressure seals to maintain pressure integrity. One seal is mounted on the airlock hatch and the other on the airlock structure. A leak check quick disconnect is installed between the hatch and the airlock pressure seals to verify hatch pressure integrity before flight.

The gearbox with latch mechanisms on each hatch allows the flight crew to open and close the hatch during transfers and EVA operations. The gearbox and the latches are mounted on the low-pressure side of each hatch; with a gearbox handle installed on both sides to permit operation from either side of the hatch.

Three of the six latches on each hatch are double-acting and have cam surfaces that force the sealing surfaces apart when the latches are opened, thereby acting as crew assist devices. The latches are interconnected with push-pull rods and an idler bellcrank that is installed between the rods for pivoting the rods. Self-aligning dual rotating bearings are used on the rods for attachment to the bellcranks and the latches. The gearbox and hatch open support struts are also connected to the latching system by the same rod/bellcrank and bearing system. To latch or unlatch the hatch, the gearbox handle must be rotated 440 degrees.



The hatch actuator/gearbox is used to provide the mechanical advantage to open and close the latches. The hatch actuator lock lever requires a force of 8 to 10 pounds through an angle of 180 degrees to unlatch the actuator. A minimum rotation of 440 degrees with a maximum force of 30 pounds applied to the actuator handle is required to operate the latches to their fully unlatched positions.

The hinge mechanism for each hatch permits a minimum opening sweep into the airlock or the crew cabin middeck. The inner hatch (airlock to crew cabin) is pulled or pushed forward to the crew cabin approximately 6 inches. The hatch pivots up and to the right side. Positive locks are provided to hold the hatch in both an intermediate and a full-open position. A spring-loaded handle on the latch hold-open bracket releases the lock. Friction is also provided in the linkage to prevent the hatch from moving if released during any part of the swing.

The outer hatch (airlock to payload bay) opens and closes to the contour of the airlock wall. The hatch is hinged to be pulled first into the airlock and then forward at the bottom and rotated

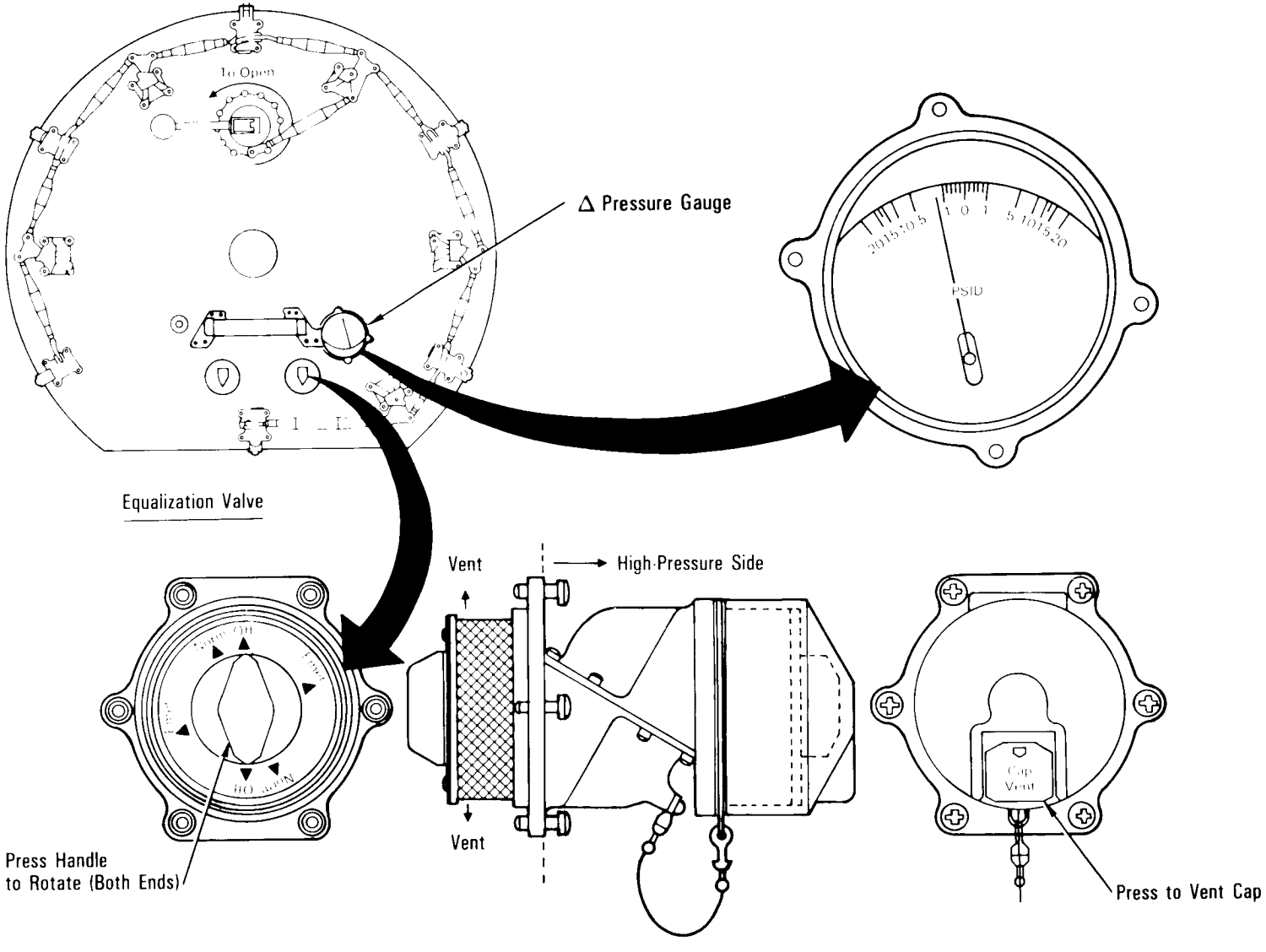


*Airlock Repressurization*

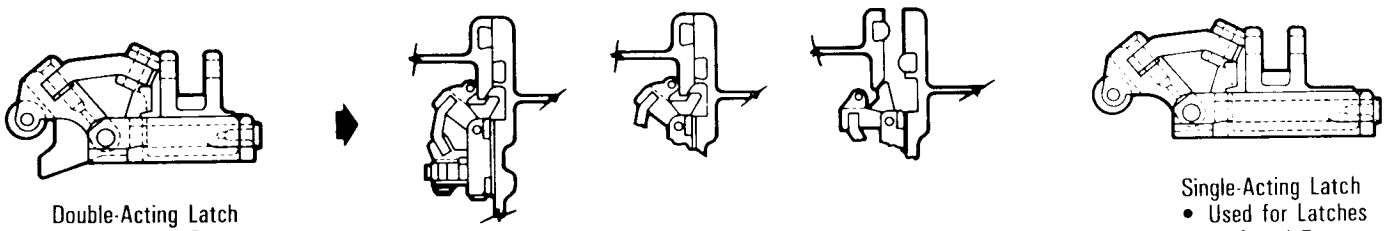

Double-Acting Latch
- Has Kicker Cam to Break Seal
- Used for Latches
- 2, 4 and 6

Single-Acting Latch
- Used for Latches 1, 3 and 5

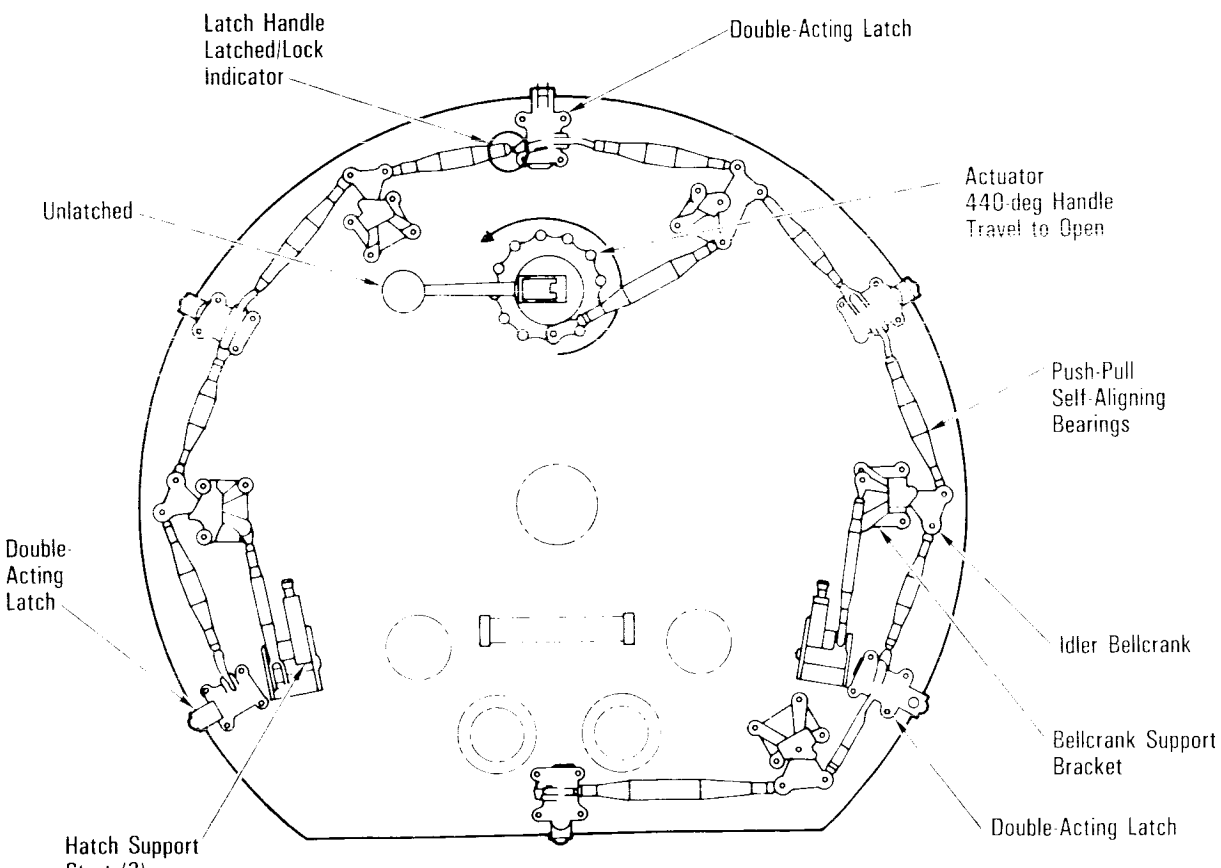


*Airlock Hatch Latches*

down until it rests with the low-pressure (outer) side facing the airlock ceiling (middeck floor). The linkage mechanism guides the hatch from the closed/open, open/closed position with friction restraint throughout the stroke. The hatch has a hold-open hook that snaps into place over a flange when the hatch is fully open. The hook is released by depressing the spring-loaded hook handle and pushing the hatch toward the closed position. To support and protect the hatch against the airlock ceiling, the hatch incorporates two deployable struts. The struts are connected to the hatch linkage mechanism and are deployed when the hatch linkage is rotated open. When the hatch latches are rotated closed, the struts are retracted against the hatch.

The airlock hatches can be removed in flight from the hinge mechanism using pip pins, if required.

The airlock air circulation system provides conditioned air to the airlock during non-EVA periods. The airlock revitalization system duct is attached to the outside airlock wall at launch. Upon airlock hatch opening in flight, the duct is rotated by the flight crew through the cabin/airlock hatch, installed in the airlock and held in place by a strap holder. The duct has a removable air diffuser cap, installed on the end of the flexible duct, which can adjust the air flow from 216 pounds per hour. The duct must be rotated out of the airlock before the cabin/airlock hatch is closed for airlock depressurization. During the EVA preparation period, the duct is rotated out of the airlock and can be used for supplemental air circulation in the middeck.

To assist the crew member before and after EVA operations, the airlock incorporates handrails and foot restraints. Handrails are located alongside the avionics and ECLSS panels. Aluminum alloy handholds mounted on each side of the hatches have oval configurations 0.75 by 1.32 inches and are painted yellow. They are bonded to the airlock walls with an epoxyphenolic adhesive. Each handrail has a clearance of 2.25 inches between the airlock wall and the handrail to allow the astronauts to grip it while wearing a pressurized glove. Foot restraints are installed on the airlock floor nearer the payload bay side. The ceiling handhold is installed nearer the cabin side of the airlock. The foot restraints can be rotated 360 degrees by releasing a spring-loaded latch and lock in every 90 degrees. A rotation release knob on the foot restraint is designed for shirt-sleeve operation and, therefore, must be positioned before the suit is donned. The foot restraint is bolted to the floor and cannot be removed in flight. It is sized for the EMU boot. The crew member first inserts his foot under the toe bar and then rotates his heel from inboard to outboard until the heel of the boot is captured.

There are four floodlights in the airlock.

If the airlock is relocated to the payload bay from the middeck, it will function in the same manner as in the middeck. Insulation is installed on the airlock's exterior for protection from the extreme temperatures of space.

For Spacelab pressurized module missions, the airlock remains in the crew compartment middeck, and a tunnel adapter that mates with the airlock and the Spacelab tunnel is installed in the payload bay.

The airlock tunnel adapter, hatches, tunnel extension and tunnel permit the flight crew members to transfer from the spacecraft's pressurized middeck crew compartment to Spacelab's pressurized shirt-sleeve environment.

In addition, the airlock, tunnel adapter and hatches permit the EVA flight crew members to transfer from the airlock/tunnel adapter in the space suit assembly into the payload bay without depressurizing the crew cabin and Spacelab.

The Spacelab tunnel and Spacelab are accessed via the tunnel adapter, which is located in the payload bay and is attached to the airlock at orbiter station $X_O$ 576 and the tunnel extension at $X_O$ 660. The tunnel adapter has an inside diameter of 63 inches at its widest section and tapers in the cone area at each end to two 40-inch-diameter D-shaped openings 36 inches across. A 40-inch-diameter D-shaped opening 36 inches across is located at the top of the tunnel adapter. Two pressure-sealing hatches are located in the tunnel adapter, one in the upper area of the tunnel

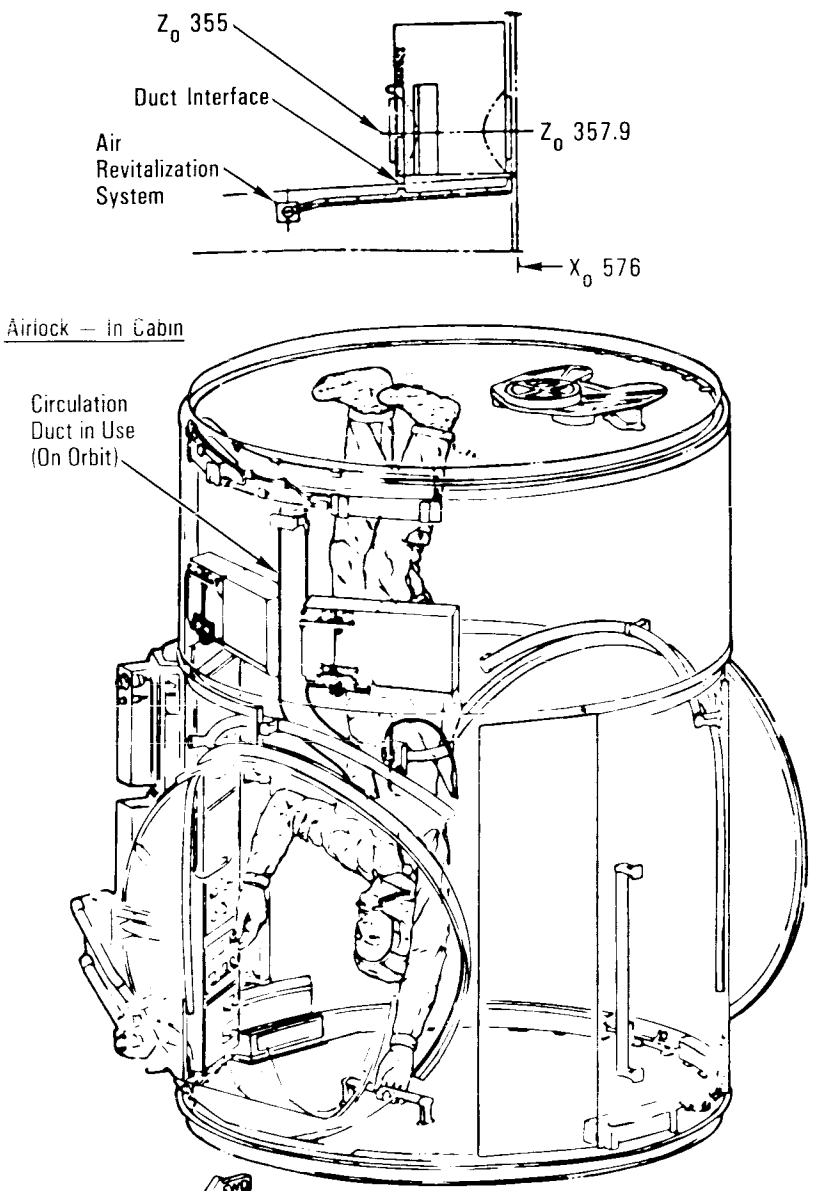


*Airlock With Tunnel Adapter for Spacelab*

adapter and one in the aft end of the tunnel adapter. The tunnel adapter is a welded structure constructed of 2219 aluminum with 2.4- by 2.4-inch exposed structural ribs on the exterior surface and external waffle skin stiffening.

The hatch located on the middeck side of the airlock is mounted on the exterior of the airlock and opens into the middeck. The hatch isolates the airlock from the crew cabin. The hatch located in the tunnel adapter's aft end isolates the tunnel adapter/airlock from the tunnel extension, tunnel and Spacelab. This hatch opens into the tunnel adapter. The hatch located in the tunnel adapter at the upper D-shaped opening isolates the airlock/tunnel adapter from the unpressurized payload bay when closed and permits the EVA crew members to exit from the airlock/tunnel adapter to the payload bay when open. This hatch opens into the tunnel adapter.

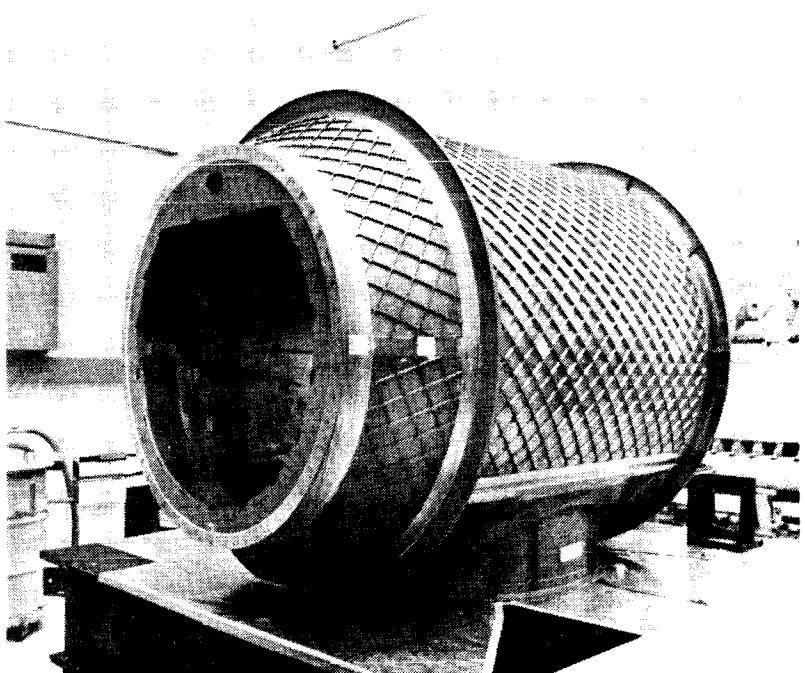

*Tunnel Adapter*

The hinge mechanism for each hatch permits a minimum opening sweep into the tunnel adapter or the spacecraft crew cabin middeck. The airlock crew cabin hatch in the middeck is pulled/pushed forward to the middeck approximately 6 inches. The hatch pivots up and right. Positive locks are provided to hold the latch in both an intermediate and a full-open position. A spring-loaded handle on the latch hold-open bracket releases the lock. Friction is provided in the linkage to prevent the hatch from moving if released during any part of the swing.

The aft hatch is hinged to be pulled first into the tunnel adapter and then forward at the bottom. The top of the hatch is rotated towards the tunnel and downward until the hatch rests with the Spacelab side facing the tunnel adapter floor. The linkage mechanism guides the hatch from the closed/open, open/closed position with friction restraint throughout the stroke. The hatch is held in the open position by straps and Velcro.

The upper (EVA) hatch in the tunnel adapter opens and closes to the left wall of the tunnel adapter. The hatch is hinged to be pulled first into the tunnel adapter and then forward at the hinge area and rotated down until it rests against the port wall of the tunnel adapter. The linkage mechanism guides the hatch from the closed/open, open/closed position with friction restraint throughout the stroke. The hatch is held in the open position by straps and Velcro.

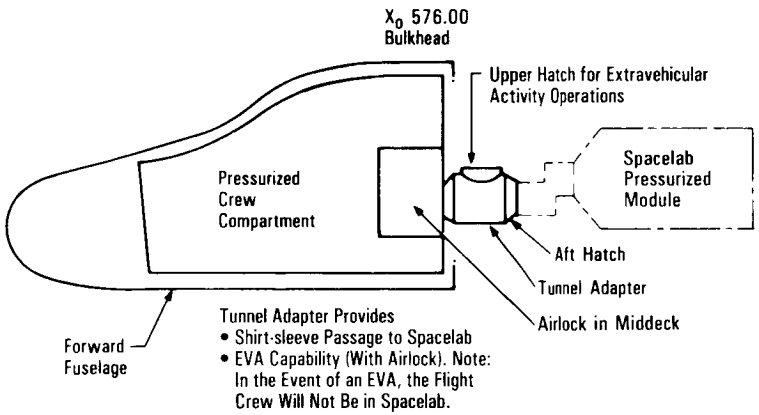


*Airlock/Tunnel Adapter*

The hatches can be removed in flight from the hinge mechanisms via pip pins, if required.

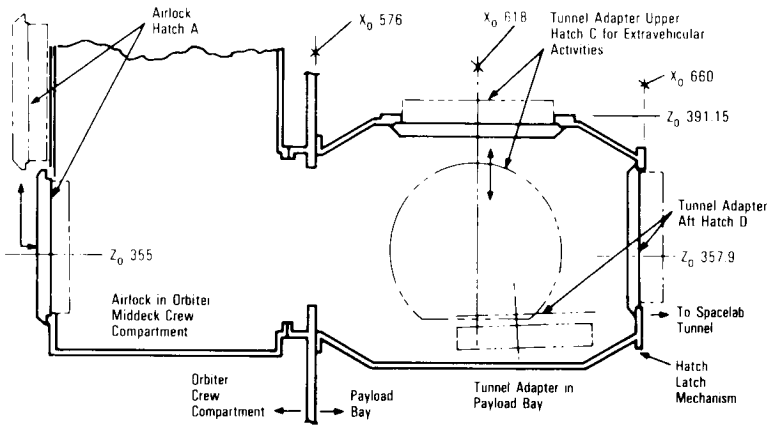


*Airlock and Tunnel Adapter Hatch Mechanical Systems*

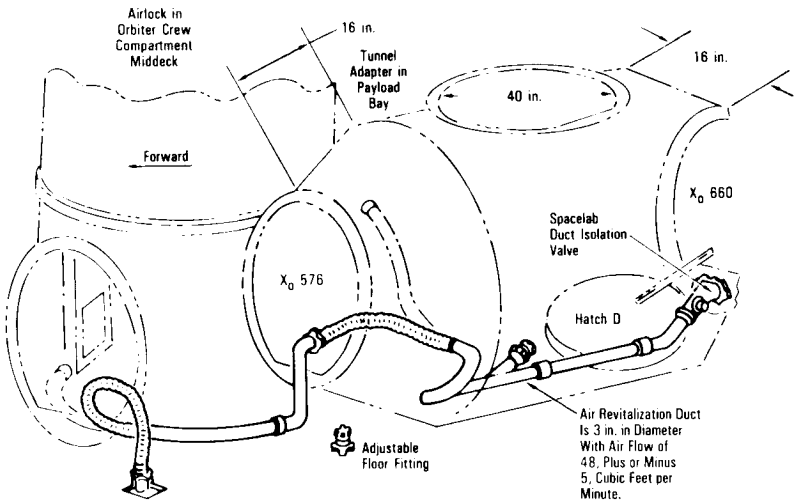


*Environmental Control and Life Support System Air Circulation Duct Routing*

The crew compartment, bunk sleep stations (if installed), airlock and modular stowage lockers are built by Rockwell's Space Transportation Systems Division, Downey, Calif. The original crew seat contractor was AMI of Colorado Springs, Colo., but later Rockwell's Space Transportation Systems Division. The Spacelab pressurized module tunnel adapter and tunnel contractor is McDonnell Douglas Astronautics, Huntington Beach, Calif.

## FORWARD FUSELAGE AND CREW COMPARTMENT WINDOWS

The orbiter windows provide visibility for entry, landing and on-orbit operations. For atmospheric flight, the flight crew needs forward, left and right viewing areas. On-orbit mission phases require visibility for rendezvous, docking and payload-handling operations.

The six windows located at the forward flight deck commander and pilot stations provide forward, left and right viewing. The two overhead windows and two payload-viewing windows at the aft station location on the flight deck provide rendezvous, docking and payload viewing. There is also a window in the middeck side hatch.

The six planform-shaped forward windows are the thickest pieces of glass ever produced in the optical quality for see-through viewing. Each consists of three individual panes. The innermost pane is constructed of tempered aluminosilicate glass to withstand the crew compartment pressure. It is 0.625 of an inch thick. Aluminosilicate glass is a low-expansion glass that can be tempered to provide maximum mechanical strength. The exterior of this pane, called a pressure pane, is coated with a red reflector coating to reflect the infrared (heat portion) rays while transmitting the visible spectrum.

The center pane is constructed of low-expansion, fused silica glass because of its high optical quality and excellent thermal shock resistance. This pane is 1.3 inches thick.

The inner and outer panes are coated with a high-efficiency, anti-reflection coating to improve visible light transmission. These windows withstand a proof pressure of 8,600 psi at 240 F and 0.017 relative humidity.

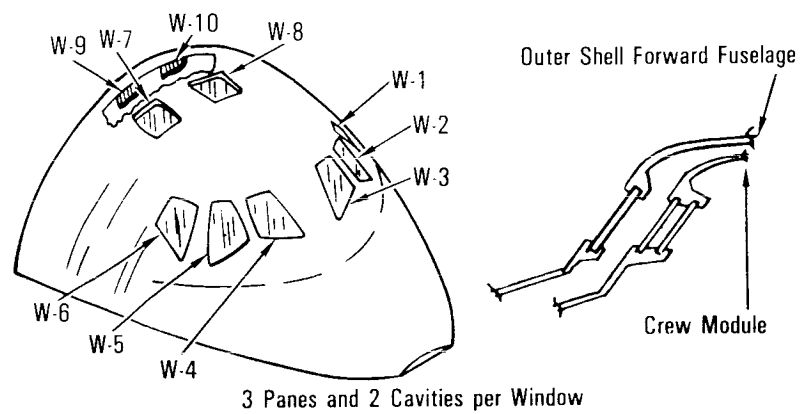


*Flight Deck Windows*



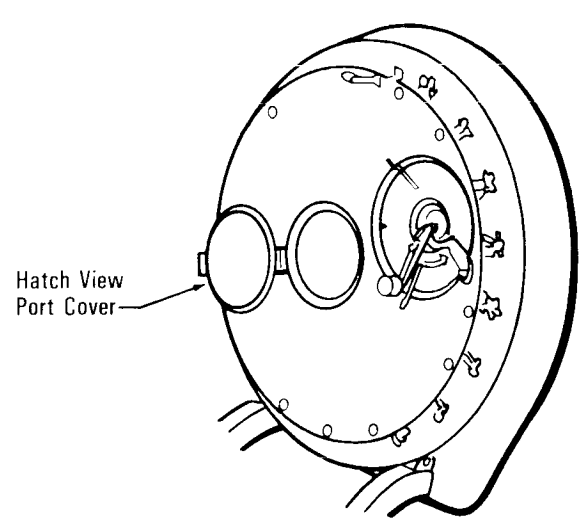


*Side Hatch (Interior View)*

The outer pane is made of the same material as the center pane and is 0.625 of an inch thick. The exterior is uncoated, but the interior is coated with high-efficiency, anti-reflection coating. The outer surface withstands approximately 800 F.

Each of the forward six windows' outer panes measures 42 inches diagonally, and the center and inner panes each measure 35 inches diagonally. The outer panes of the forward six windows are mounted and attached to the forward fuselage. The center and inner panes are mounted and attached to the crew compartment. Redundant seals are employed on each window. No sealing/bonding compounds are used.

The two overhead windows at the flight deck aft station are identical in construction to the six forward windows except for thickness. The inner and center panes are 0.45 of an inch thick, and the outer pane is 0.68 of an inch thick. The outer pane is attached to the forward fuselage, and the center and inner panes are attached to the crew compartment. The two overhead windows' clear view area is 20 by 20 inches. The left-hand overhead window provides the crew members with a secondary emergency egress. The inner and center panes open into the crew cabin, and the outer pane is jettisoned up and over the top of the orbiter. This provides a secondary emergency exit area of 20 by 20 inches.

On the aft flight deck, each of the two windows for viewing the payload bay consists of only two panes of glass, which are identical to the forward windows' inner and center panes. The outer thermal panes are not installed. Each pane is 0.3 of an inch thick. The windows are 14.5 by 11 inches. Both panes are attached to the crew compartment.

The side hatch viewing window consists of three panes of glass identical to the six forward windows. The inner pane is 11.4 inches in diameter and 0.25 of an inch thick. The center pane is 11.4 inches in diameter and 0.5 of an inch thick. The outer pane is 15 inches in diameter and 0.3 of an inch thick.

During orbital operations, the large window areas of transparency expose the flight crew to sun glare; therefore, window shades and filters are provided to preclude or minimize exposure. Shades are provided for all windows, and filters are supplied for the aft and overhead viewing windows. The window shades and filters are stored in the middeck of the orbiter crew compartment. Attachment mechanisms and devices are provided for their installation at each window on the flight deck.

The forward station window shades (W-1 through W-6) are fabricated from Kevlar/epoxy glass fabric with silver and Inconel-coated Teflon tape on the outside surface and paint on the inside surface. When the shade is installed next to the inner window pane, a silicone rubber seal around the periphery deforms to prevent light leakage. The shade is held in place by the shade installation guide, the hinge plate and the Velcro keeper.

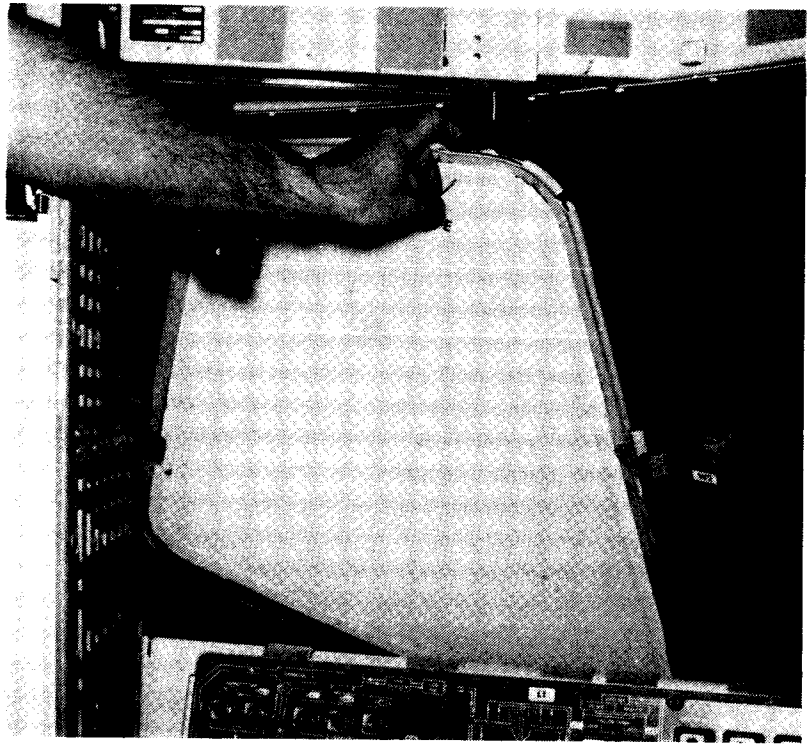

*Window Shade*

The overhead window shades (W-7 and W-8) are nearly the same as the forward shades; but the rubber seal is deleted, and the shade is sealed and held in place by a separate seal around the window opening, a hinge plate and secondary frame, and Velcro retainer. The overhead window filters are fabricated from Lexan and are used interchangeably with the shades.

The aft window shades (W-9 and W-10) are the same as the overhead window shades except that a 0.63-inch-wide strip of Nomex Velcro has been added around the perimeter of the shade. The shade is attached to the window by pressing the Velcro strip to the pile strip around the window opening. The aft window filters are the same as the overhead window filters except for the addition of the Velcro hook strip. The filters and shades are used interchangeably.

The side hatch window cover is permanently attached to the window frame and is hinged to allow opening and closing.

The contractor for the windows is Corning Glass Co., Corning, N.Y.

## WING

The wing is an aerodynamic lifting surface that provides conventional lift and control for the orbiter. The left and right wings consist of the wing glove; the intermediate section, which includes the main landing gear well; the torque box; the forward spar for mounting the reusable reinforced carbon-carbon leading edge structure thermal protection system; the wing/elevon interface; the elevon seal panels; and the elevons.

The wing is constructed of conventional aluminum alloy with a multirib and spar arrangement with skin-stringer-stiffened covers or honeycomb skin covers. Each wing is approximately 60 feet long at the fuselage intersection and has a maximum thickness of 5 feet.

The forward wing box is an extension of the basic wing that aerodynamically blends the wing leading edge into the midfuselage wing glove. The forward wing box is a conventional design of aluminum ribs, aluminum tubes and tubular struts. The upper and lower wing skin panels are stiffened aluminum. The leading edge spar is constructed of corrugated aluminum.

The intermediate wing section consists of the conventional aluminum multiribs and aluminum tubes. The upper and lower skin covers are constructed of aluminum honeycomb. A portion of the lower wing surface skin panel includes the main landing gear door. The intermediate section houses the main landing gear compartment and reacts a portion of the main landing gear loads. A structural rib supports the outboard main landing gear door hinges and the main landing gear trunnion and drag link. The support for the inboard main landing gear trunnion and drag link attachment is provided by the midfuselage. The main landing gear door is conventional aluminum honeycomb.

The four major spars are constructed of corrugated aluminum to minimize thermal loads. The forward spar provides the attachment for the thermal protection system reusable reinforced carbon-carbon leading edge structure. The rear spar provides the attachment interfaces for the elevons, hinged upper seal panels, and associated hydraulic and electrical system components. The upper and lower wing skin panels are stiffened aluminum.

The elevons provide orbiter flight control during atmospheric flight. The two-piece elevons are conventional aluminum multirib and beam construction with aluminum honeycomb skins for compatibility with the acoustic environment and thermal interaction. The elevons are divided into two segments for each wing, and each segment is supported by three hinges. The elevons are attached to the flight control system hydraulic actuators at points along their forward extremities, and all hinge moments are reacted at these points. Each elevon travels 40 degrees up and 25 degrees down.

The transition area on the upper surface between the torque box and the movable elevon consists of a series of hinged panels that provide a closeout of the wing-to-elevon cavity. These panels are of Inconel honeycomb sandwich construction outboard of

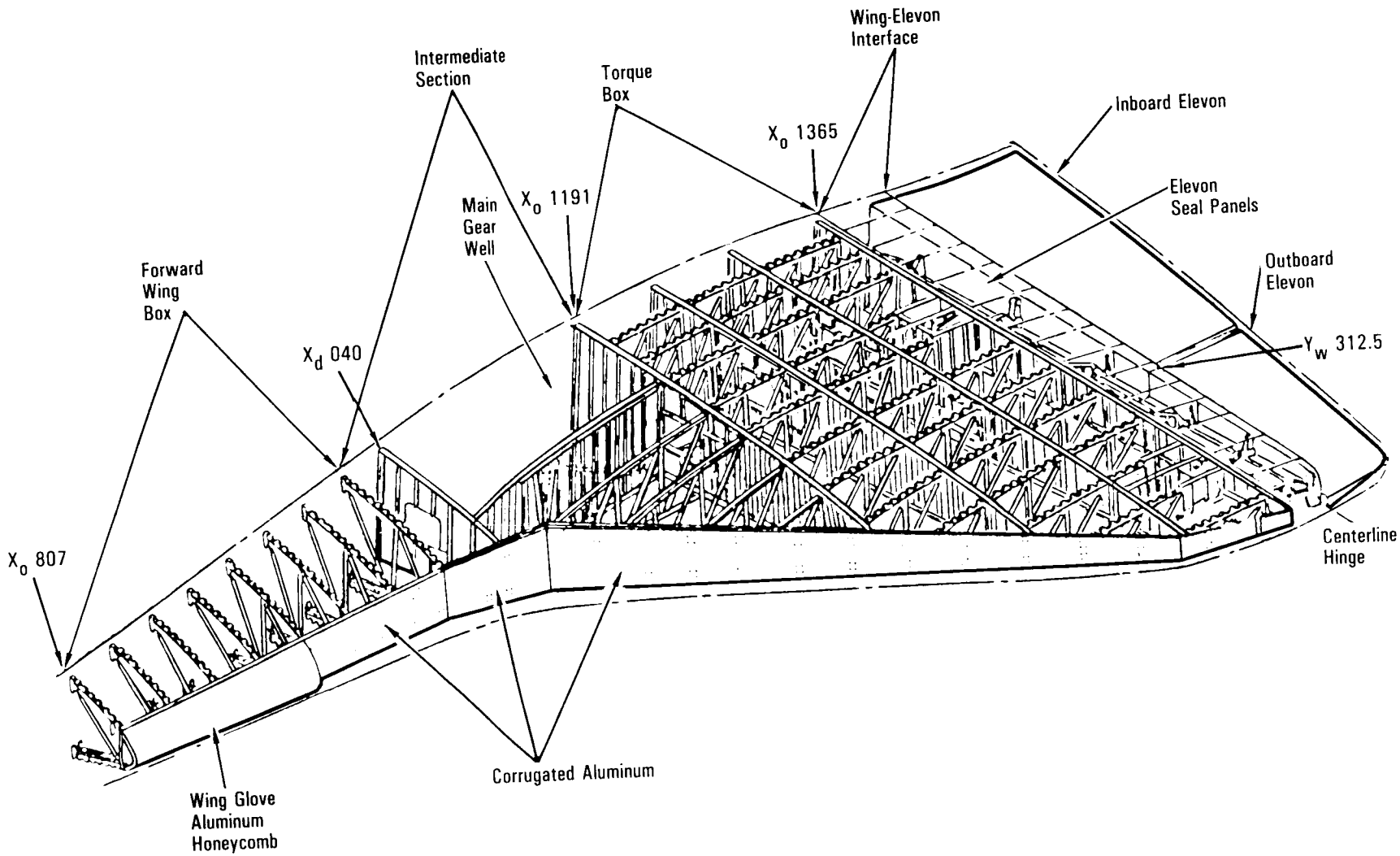


*Wing Configuration*

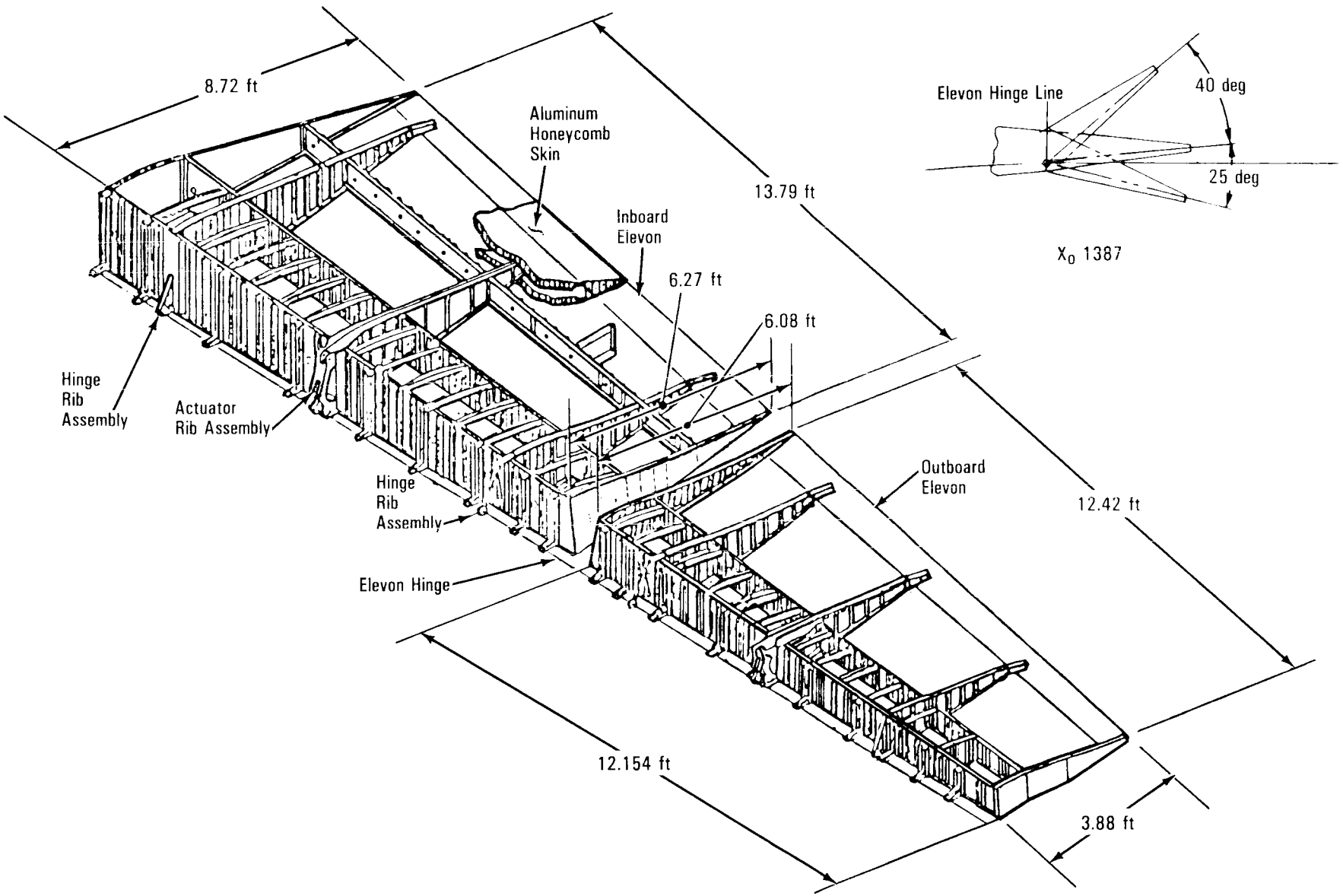


*Elevon Construction*

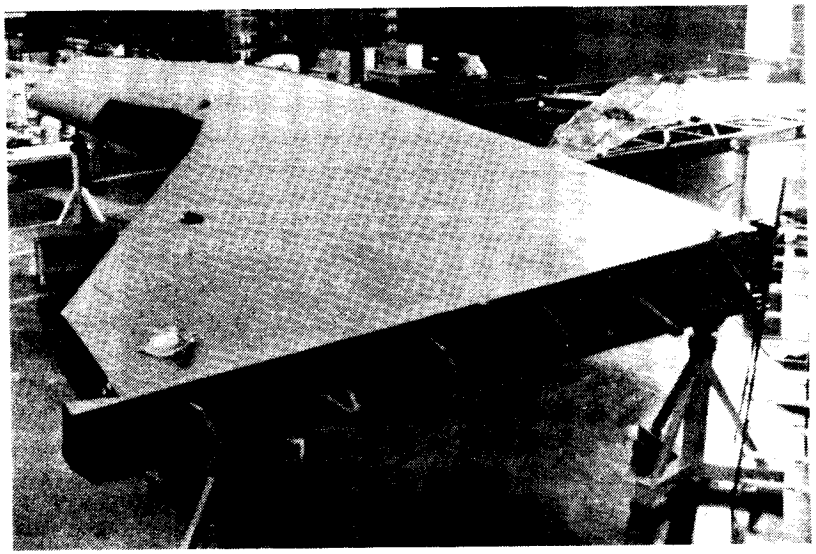

*Left Wing*

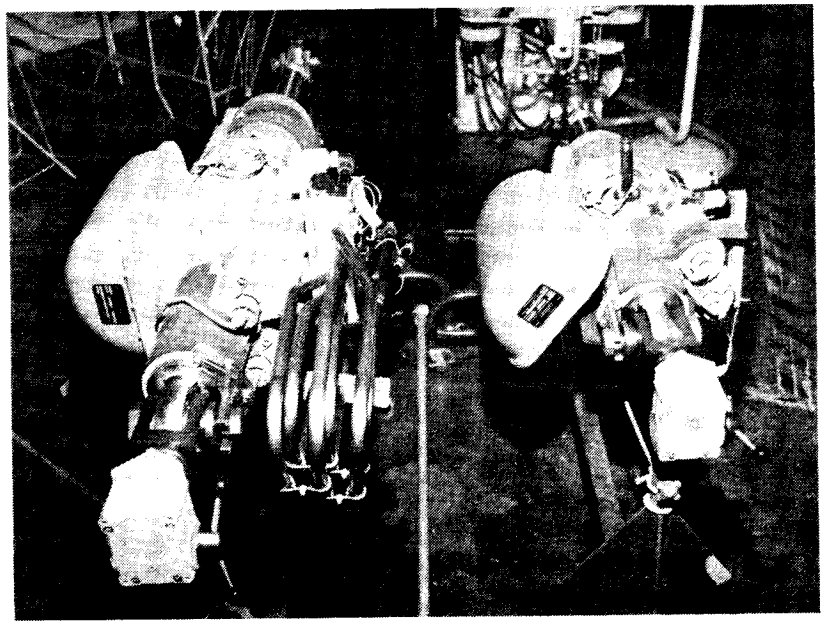

*Elevon Actuators*



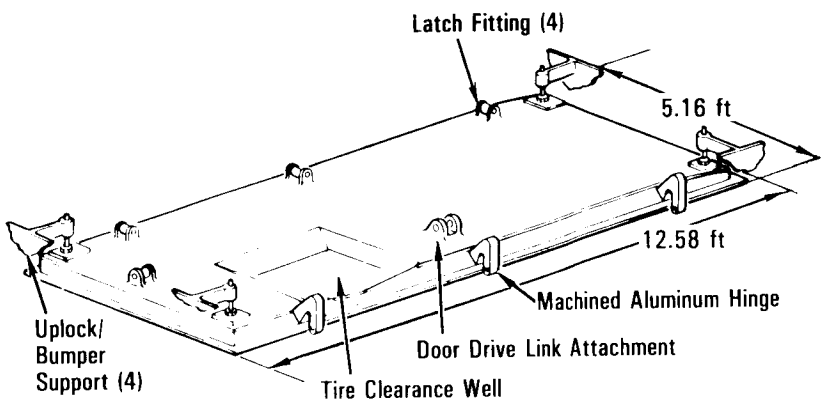


*Main Landing Gear Door Construction*

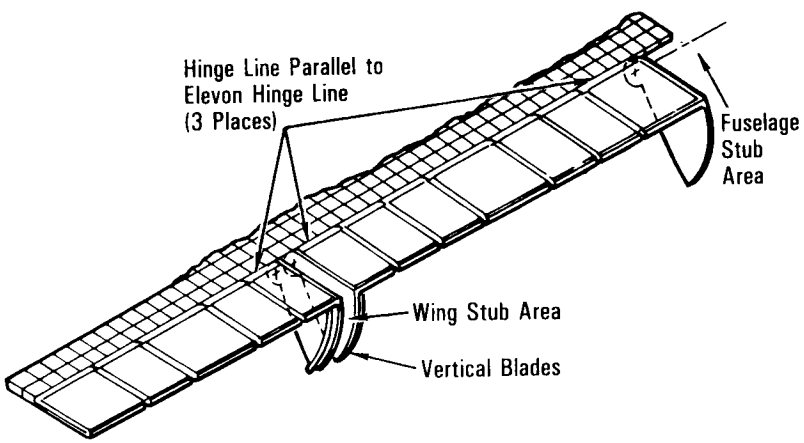


*Wing Seal Panel Arrangement*

wing station $Y_W$ 312.5 and of titanium honeycomb sandwich construction inboard of wing station $Y_W$ 312.5. The upper leading edge of each elevon incorporates titanium rub strips. The rub strips are of titanium honeycomb construction and are not covered with the thermal protection system reusable surface insulation. They provide the sealing surface area for the elevon seal panels.

The exposed areas of the wings, main landing gear doors and elevons are covered with reusable surface insulation thermal protection system materials except for the elevon seal panels.

Thermal seals are provided on the elevon lower cove area along with thermal spring seals on the upper rub panels. Pressure seals and thermal barriers are provided on the main landing gear doors.

The wing is attached to the fuselage with a tension bolt splice along the upper surface. A shear splice along the lower surface in the area of the fuselage carry-through completes attachment interface.

Prior to the manufacturing of the wings for Discovery (OV-103) and Atlantis (OV-104), a weight reduction program resulted in a redesign of certain areas of the wing structure. An assessment of wing air loads was made from actual flight data that indicated greater loads on the wing structure. As a result, to maintain positive margins of safety during ascent, structural modifications were incorporated into certain areas of the wings. The modifications consisted of the addition of doublers and stiffeners.

The wing, elevon and main landing gear door contractor is Grumman Corp., Bethpage, N.Y.

## MIDFUSELAGE

The midfuselage structure interfaces with the forward fuselage, aft fuselage and wings. It supports the payload bay doors, hinges, tie-down fittings, forward wing glove, and various orbiter system components and forms the payload bay area.

The forward and aft ends of the midfuselage are open, with reinforced skin and longerons interfacing with the bulkheads of the forward and aft fuselages. The midfuselage is primarily an aluminum structure 60 feet long, 17 feet wide and 13 feet high. It weighs approximately 13,502 pounds.

The midfuselage skins are integrally machined by numerical control. The panels above the wing glove and the wings for the forward eight bays have longitudinal T-stringers. The five aft bays have aluminum honeycomb panels. The side skins in the shadow of the wing are also numerically control machined but have vertical stiffeners.

Twelve main-frame assemblies stabilize the midfuselage structure. The assemblies consist of vertical side elements and horizontal elements. The side elements are machined; whereas the horizontal elements are boron/aluminum tubes with bonded titanium end fittings, which reduced the weight by 49 percent (approximately 305 pounds).



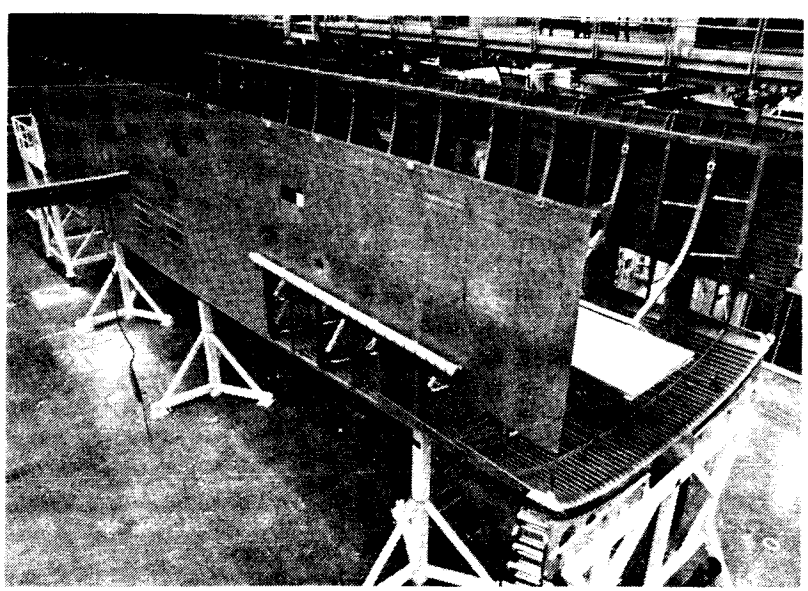

*Midfuselage*

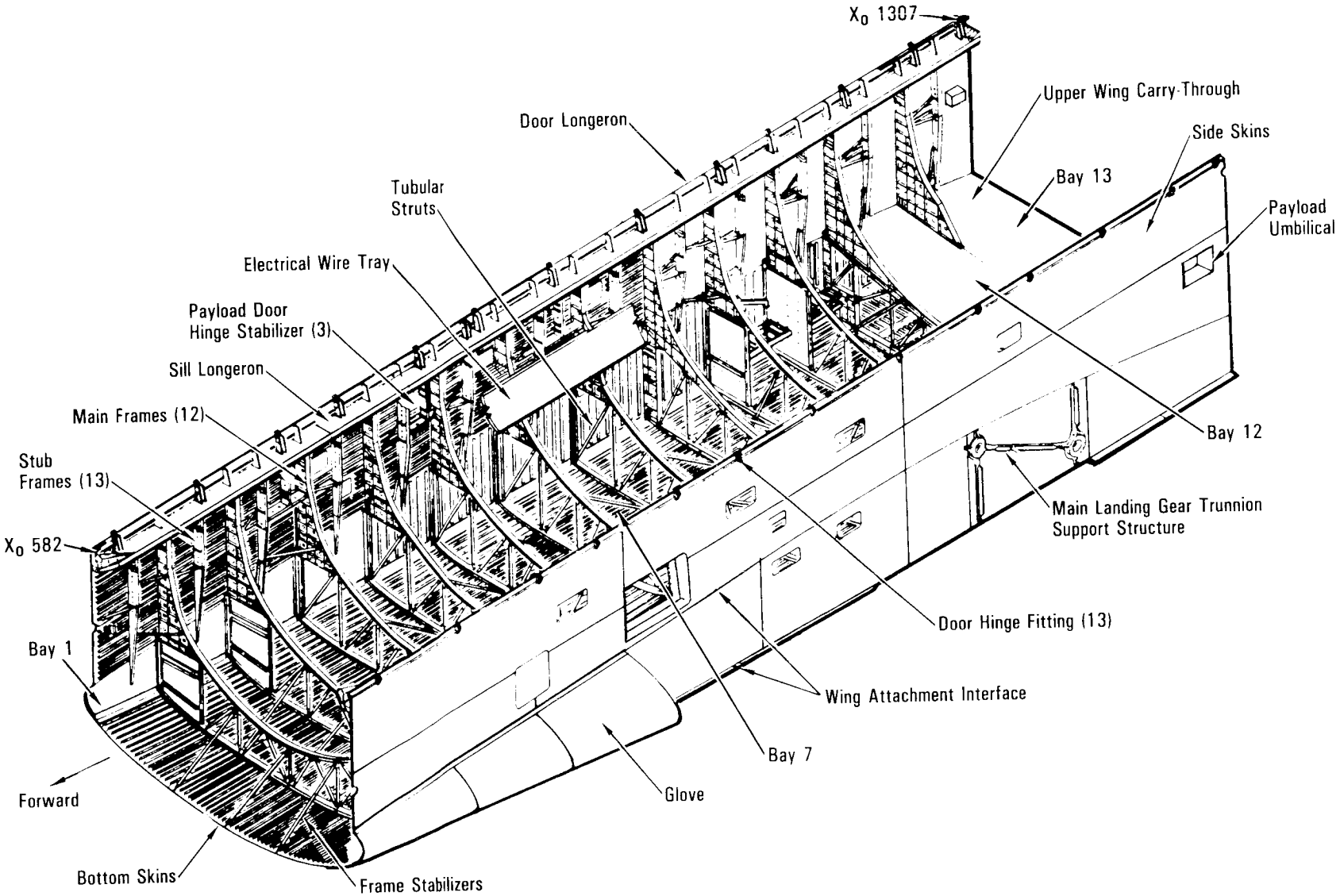


*Midfuselage Structure*

In the upper portion of the midfuselage are the sill and door longerons. The machined sill longerons not only make up the primary body-bending elements, but also take the longitudinal loads from payloads in the payload bay. The payload bay door longerons and associated structure are attached to the 13 payload bay door hinges. These hinges provide the vertical reaction from the payload bay doors. Five of the hinges react the payload bay door shears. The sill longeron also provides the base support for the payload bay manipulator arm (if installed) and its stowage provisions, the Ku-band rendezvous antenna, the antenna base support and its stowage provisions, and the payload bay door actuation system.

The side wall forward of the wing carry-through structure provides the inboard support for the main landing gear. The total lateral landing gear loads are reacted by the midfuselage structure.

The midfuselage also supports the two electrical wire trays that contain the wiring between the crew compartment and aft fuselage.

Plumbing and wiring in the lower portion of the midfuselage are supported by fiberglass milk stools.

The remainder of the exposed areas of the midfuselage is covered with the reusable surface insulation thermal protection system.

Because of additional detailed analysis of actual flight data concerning descent stress thermal gradient loads, torsional straps were added to the lower midfuselage stringers in bays 1 through 11. The torsional straps tie all stringers together similarly to a box section, which eliminates rotational (torsional) capabilities to provide positive margins of safety.

Also, because of additional detailed analysis of actual flight data during descent, room-temperature vulcanizing silicone rubber material was bonded to the lower midfuselage from bay 4 through 12 to act as a heat sink and distribute temperatures evenly across the bottom of the midfuselage, which will reduce thermal gradients and ensure positive margins of safety.

The contractor for the midfuselage is General Dynamics Corp., Convair Aerospace Division, San Diego, Calif.

## PAYLOAD BAY DOORS

The payload bay doors are opened shortly after orbit is achieved to allow exposure of the environmental control and life support system radiators for heat rejection of the orbiter's systems. The payload bay doors consist of port and starboard doors hinged at each side of the midfuselage and latched mechanically at the forward and aft fuselage and at the split-top centerline. Thermal seals on the doors provide a relatively air-tight payload compartment when the doors are closed and latched. During prelaunch and postlanding, the purge, vent and drain system permits purging of undesirable gases and maintains a positive delta pressure for venting of payloads within the payload area when the doors are closed.

The port and starboard doors are 60 feet long with a combined area of approximately 1,600 square feet. Each door is made up of five segments that are interconnected by circumferential



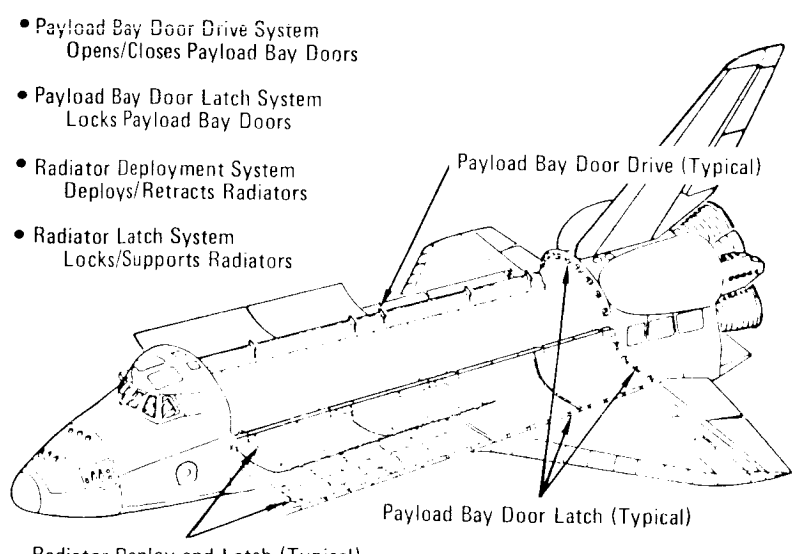


*Payload Bay Door and Radiator Mechanisms*

expansion joints. Each door hinges on 13 Inconel 718 external hinges (five shear and eight idlers). The lower half of each hinge attaches to the midfuselage sill longeron. The hinges rotate on bearings with dual rotational surfaces. There are five shear hinges and eight floating hinges. The floating hinges allow fore and aft movement of the door panels for thermal expansion.

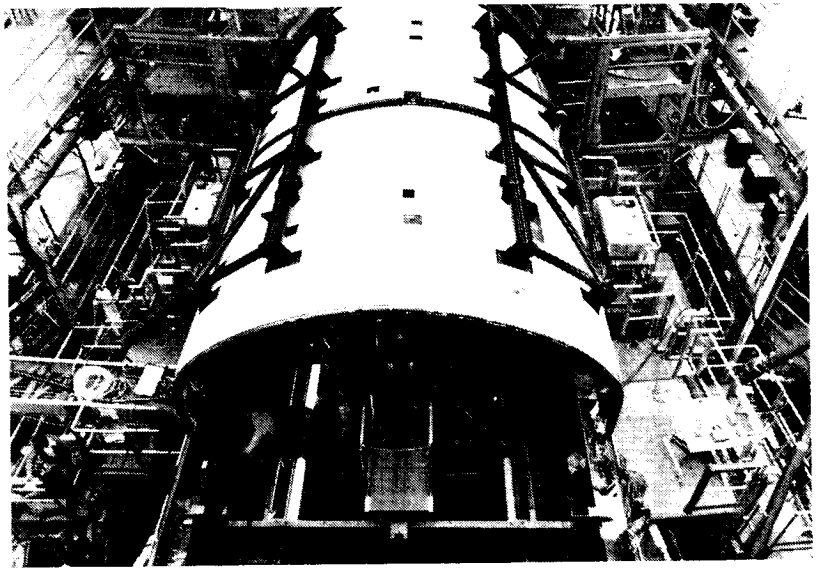

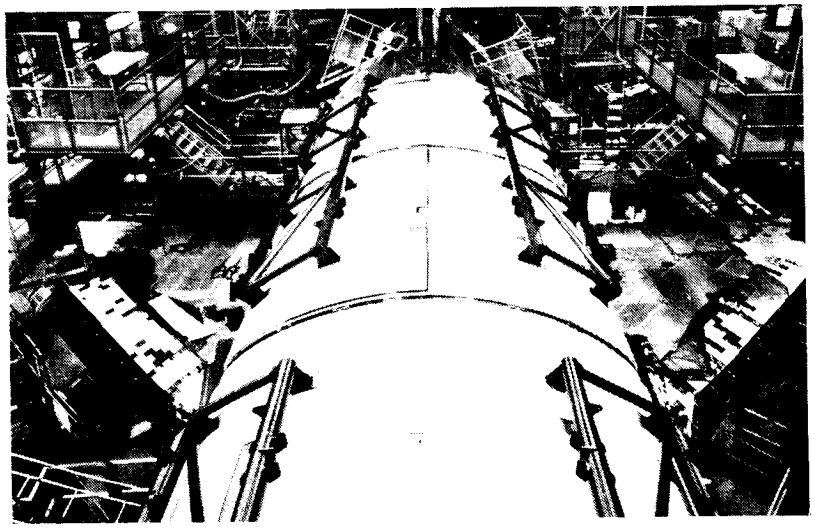

*Payload Bay Doors*

Each door actuation system provides the mechanism to drive each door side to the open or closed position. Each mechanism consists of an electromechanical power drive unit and six rotary gear actuators, which are connected by torque tubes to each other and to the power drive unit. Linkages transmit torque from the rotary actuators to the doors.

The forward 30-foot sections of both doors incorporate radiators that can be deployed; they are hinged and latched to the door inner surface in order to reject the excess heat of the Freon-21 coolant loops from both sides of the radiator panels when the doors are open. An electromechanical actuation system on the door unlatches and deploys the radiators when open and latches and stows the radiators when closed. The radiators may be left in the stowed position for a given flight and will only radiate the excess heat from the one side. Fixed radiator panels are installed on the forward end of the aft payload bay doors and radiate from one side only. Kitted fixed radiator panels may be installed on the aft end of the aft payload bay doors when required by a specific mission; they also will radiate from only one side.

During payload bay door closure, the aft flight deck payload bay door crewman optical alignment sight is used to check door alignment.

When the payload bay doors are closed, they are fixed at the aft fuselage bulkhead and allowed to move longitudinally at the forward fuselage. The doors also accommodate vehicle torsional loads (a force that causes a body, such as a shaft, to twist about its longitudinal axis), aerodynamic pressure loads and payload bay vent lag pressures. The payload bay is not a pressurized area.

Thermal and pressure seals are used to close the gaps at the forward and aft fuselage interface, door centerline and circumferential expansion joints.

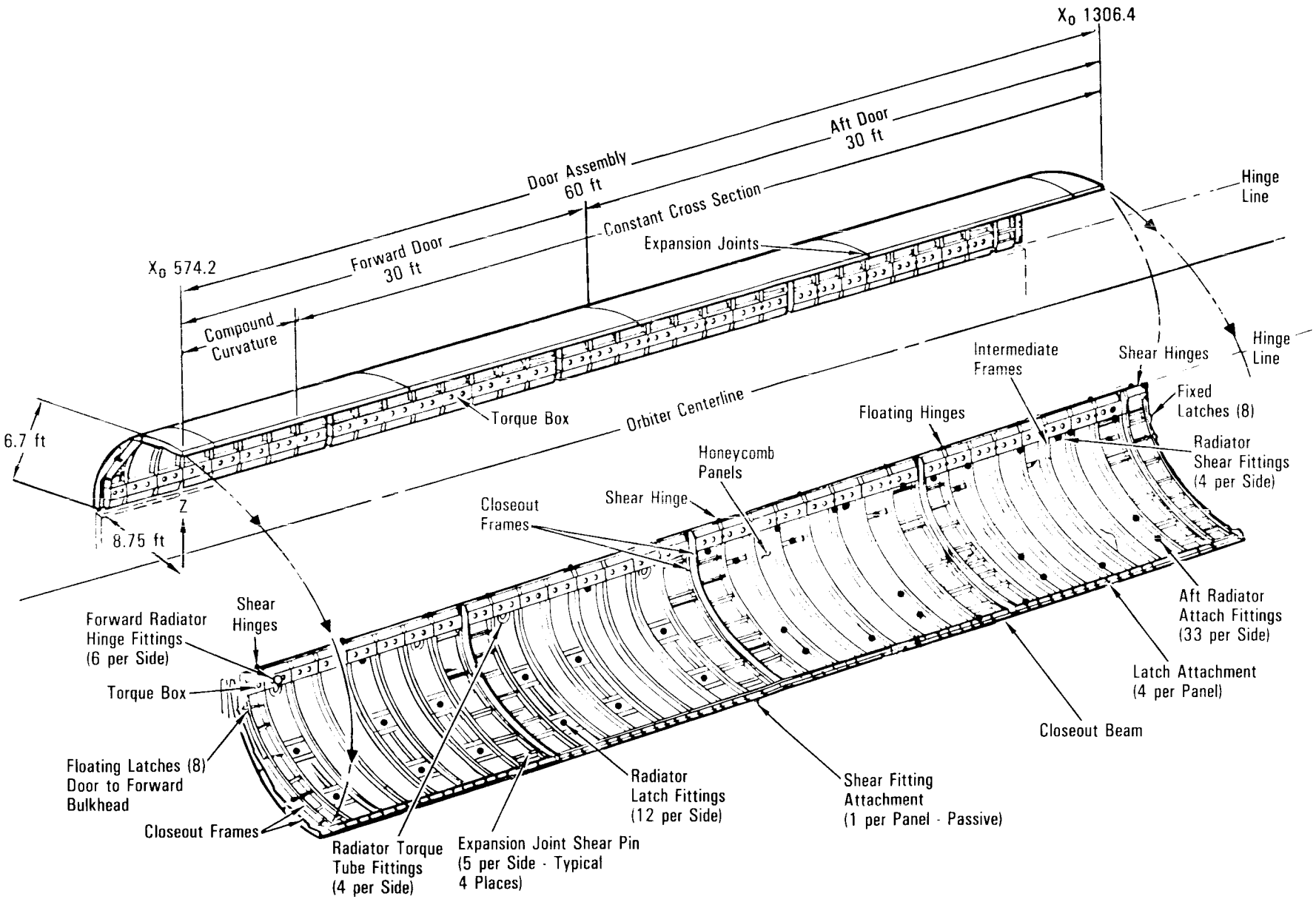


*Payload Bay Doors*

The doors are 60 feet long. Each consists of five segments interconnected by expansion joints. The chord of each half of these curved doors is approximately 10 feet, and the doors are 15 feet in diameter.

The doors are constructed of graphite epoxy composite material, which reduces the weight by 23 percent over that of aluminum honeycomb sandwich. This is a reduction of approximately 900 pounds, which brings the weight of the doors down to approximately 3,264 pounds. The payload bay doors are the largest aerospace structure to be constructed from composite material.

The composite doors will withstand 163-decibel acoustic noise and a temperature range of minus 170 to plus 135 F.

The doors are made up of subassemblies consisting of graphite epoxy honeycomb sandwich panels, solid graphite epoxy laminate frames, expansion joint frames, torque box, seal depressor, centerline beam intercostals, gussets, end fittings and clips. There are also aluminum 2024 shear pins, titanium fittings, and Inconel 718 floating and shear hinges. The assembly is joined by mechanical fasteners. Lightning strike protection is provided by aluminum mesh wire bonded to the outer skin.

Extravehicular activity handholds are attached in the torque box areas.

The payload bay doors are covered with reusable surface insulation.

The left door with attached systems weighs approximately 2,375 pounds and the right weighs about 2,535 pounds. The right door contains the centerline latch active mechanisms, which accounts for the weight difference. These weights do not include the radiator panel system, which adds 833 pounds per door.

The *PL bay door open/stop/close* switch on panel R13 initiates the payload bay door power and control system through the aft flight deck data processing system, general-purpose computer and associated cathode ray tube display and keyboard. The normal operational mode for opening and closing the payload bay door bulkhead latches, centerline latches and payload bay doors is through keyboard entries in an automatic mode in which the latches are cycled and the doors controlled in a predetermined sequence. If a problem occurs in the predetermined automatic sequence, a manual keyboard capability permits selection of automatic sequence groupings that can be commanded individually. The *open* position of the switch on panel R13 provides the signals to a GPC to initiate and sustain the automatic or keyboard manual bulkhead latches and door opening sequence. The *close* position accomplishes the same as the *open* position except for the

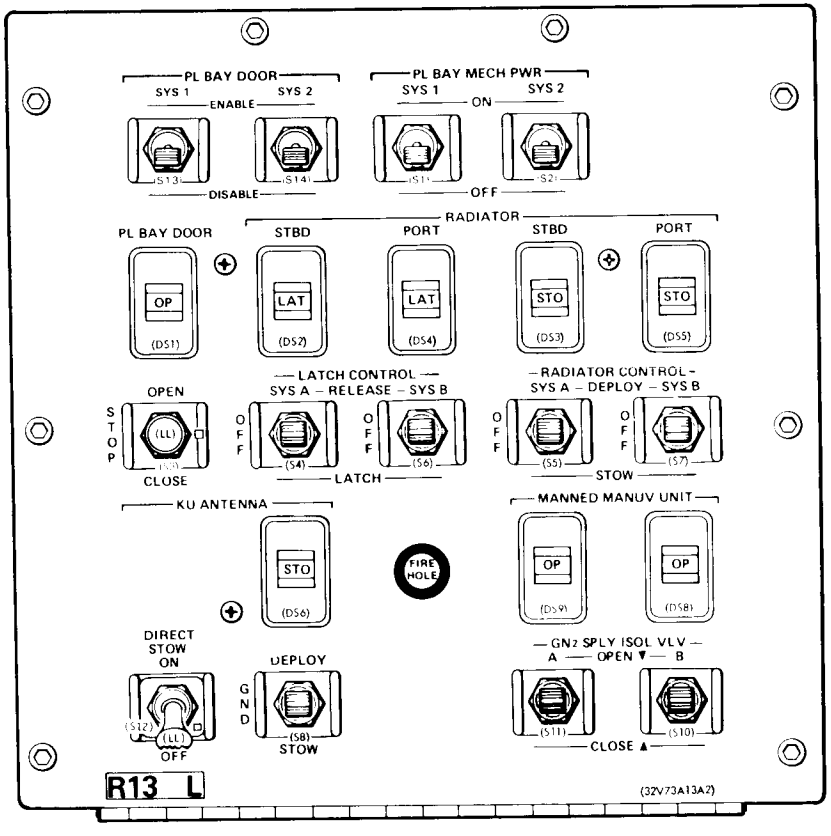


*Panel R13L*

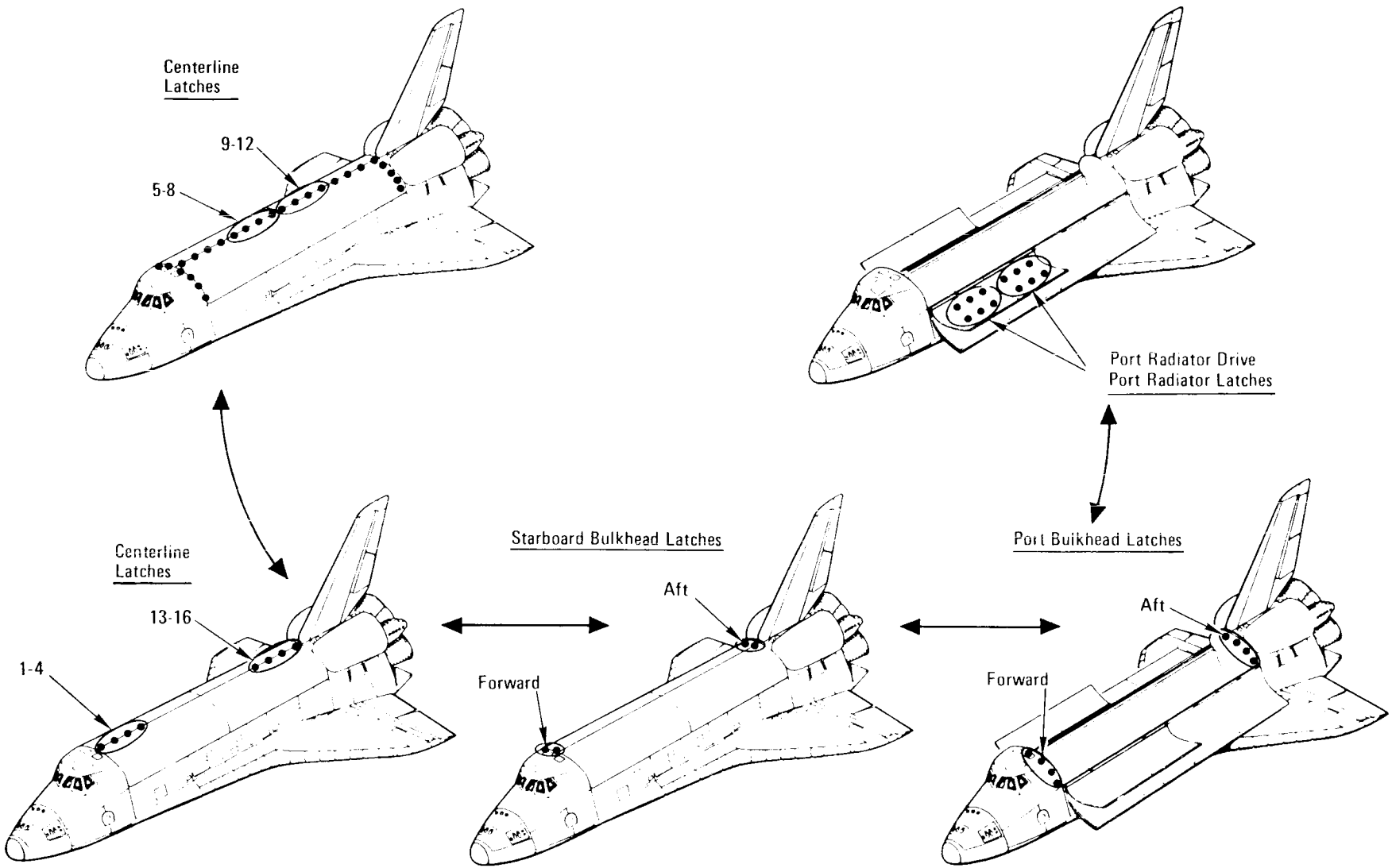


*Payload Bay Door and Radiator Latches*

closing sequence. The *stop* position removes the open and close signals, stopping the sequence in progress.

The *PL bay door* talkback indicator on panel R13 is functional only in the automatic sequence and would remain in its initial state in the manual keyboard mode. The signal source for the talkback indicator is a combination of ready-to-latch and door-open limit switch inputs that are processed by software to establish the talkback indicator state. The talkback indicator indicates *op* when the bulkhead latches, centerline latches and doors are open; *cl* when the doors are closed and the centerline and bulkhead latches are closed; and barberpole when the bulkhead and centerline latches and doors are in transit or are stopped between open and closed.

When closed, the doors are latched to the forward and aft bulkheads and along the upper centerline of the doors. The latching system consists of 16 bulkhead latches (eight aft and eight forward) and 16 payload bay door centerline latches. The forward and aft bulkhead latches are in groups of four ganged latch hooks. The centerline latches are also in groups of four ganged latches. Each centerline latch gang incorporates four latches, bellcranks, push rods, levers, rollers and an electromechanical actuator.

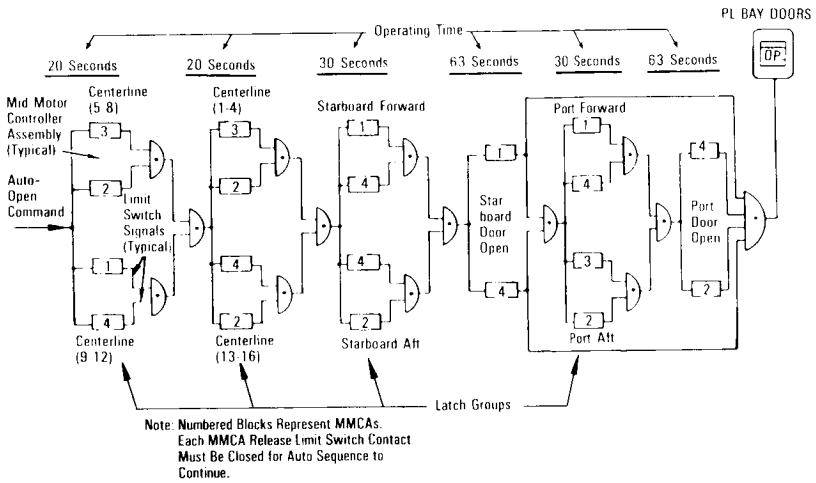


*Simplified Payload Bay Door Auto-Open Signal Flow*

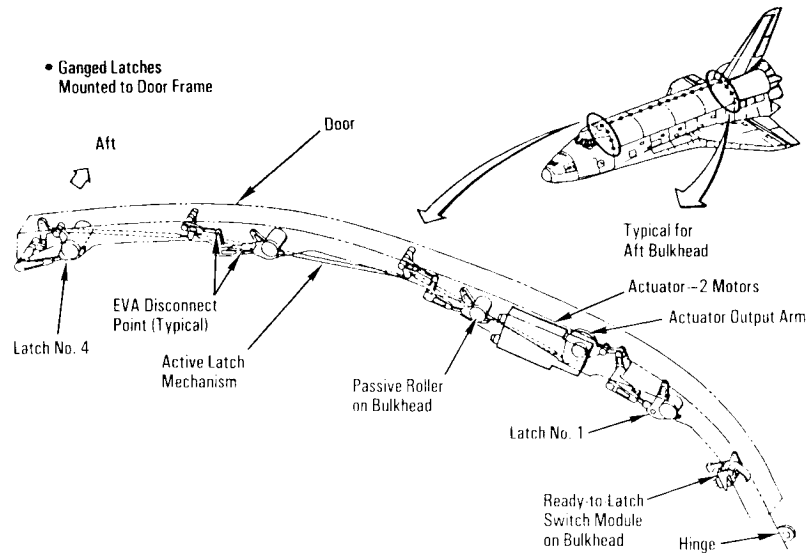


*Typical Bulkhead Circular Latch System*



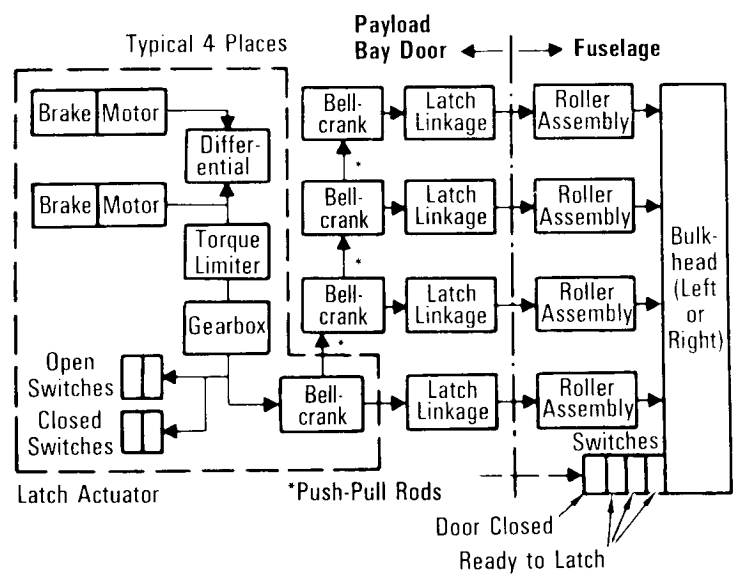


*Payload Bay Door Bulkhead Latch Mechanical Block Diagram*

The forward and aft bulkhead latches are arranged in groups of four ganged latches. Each group is opened or closed by an electromechanical actuator with two redundant, three-phase ac reversible motors that receive ac power from mid motor controller assemblies when commanded in the automatic predetermined sequence or by manual keyboard entries. In the automatic mode, the forward and aft bulkhead latches operate simultaneously.

The forward and aft bulkhead latch groups consist of two ac reversible motors. These groups also control an actuator output arm, which positions active latch mechanisms and disengages or engages four latch hooks on four corresponding passive rollers on the bulkhead. The two ac motors of a bulkhead latch group are commanded through limit switches to open or close that group of latches. When the ac motor is in operation, the brake associated with that motor is released and is applied when power is removed from the motor. The limit switches apply or remove ac power from the motor when that latch group reaches its open or closed position. When both motors are operating, the latch group operating time is 30 seconds; it is 60 seconds when only one motor is operating. In addition, each MMCA has its own timer set to twice the normal operating time to allow for single-motor operation of a bulkhead latch group without causing a sequence fail signal *PLB doors* CRT message and *SM alert*.

During latching operations for a bulkhead group, the payload bay door comes in contact with a bulkhead switch module striker when the door is nearly closed. A two-out-of-three voting logic of the ready-to-latch switches precludes premature start signals to the bulkhead latch motors. The ready-to-latch switch then activates the bulkhead latch ac motors, which latches the door closed. The door-closed limit switches turn the ac motors off. The

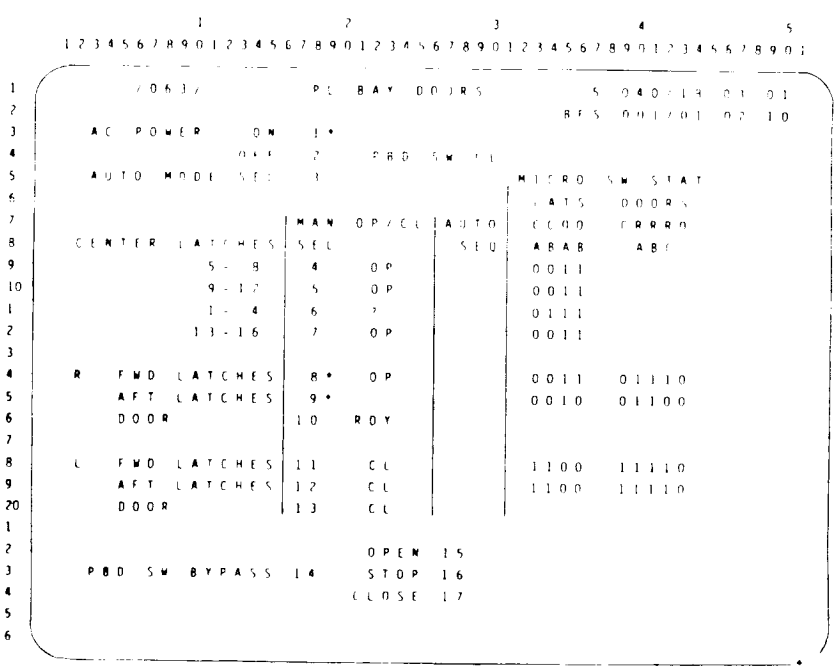


*Payload Bay Door Deployment and Closure System, Cathode Ray Tube Display*

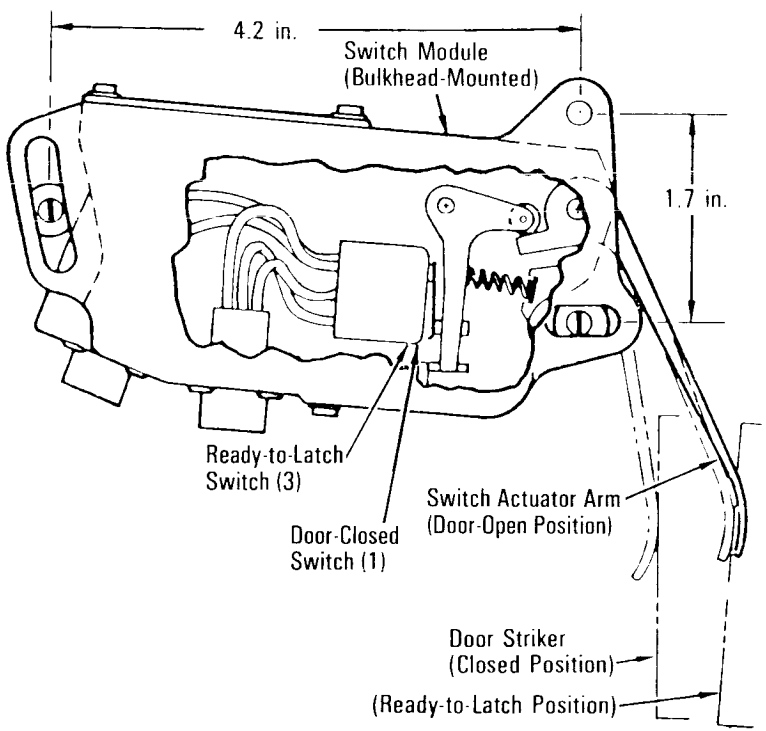


*Payload Bay Door Ready-to-Latch Switch Module, Bulkhead Latches*

limit switch contact closures are sent to the CRT display under *micro-sw stat* (switch status), which permits the flight crew to observe the change in the status of the microswitches. Telemetry can also monitor the microswitch status. Torque limiters in each bulkhead latch group permit slippage if a limit switch fails to turn off the ac motors or the mechanism jams during latching operations in order to prevent damage to the motors or mechanisms. Extravehicular activity disconnects are provided to permit an EVA flight crew member to close the door latch manually from inside the payload bay if the mechanism jams when the doors close.

The payload bay door centerline latch groups are controlled automatically in a predetermined sequence or manually by individual latch groups through keyboard entries in a manner similar to the bulkhead latch groups. The 16 centerline latches are arranged into groups of four, similar to the bulkhead latches.

Each centerline latch group consists of two ac reversible electric motors that drive a rotary shaft and bellcrank and four hooks to engage a corresponding passive roller to latch the door closed or disengage the passive roller to unlatch the door. All 16 centerline hook assemblies contain alignment rollers to eliminate payload bay door overlap due to thermal distortion. Passive shear fittings in each centerline latch group align door closure and cause the fore and aft shear loads to react once the doors are closed.

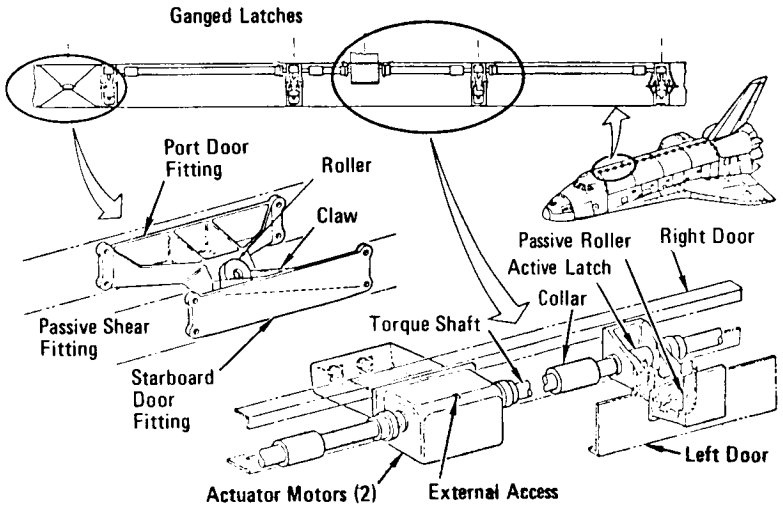


*Payload Bay Door Upper Centerline Latch System*

The centerline latch group ac reversible motors are automatically turned off by limit switches when the latches are opened or closed. Each motor has a brake that operates similarly to the brakes in the bulkhead motors. When both motors are operating, the nominal operating time is 20 seconds. If only one motor is operating, the time is 40 seconds. Each mid motor controller assembly has its own timer set to twice the normal operating time to allow single-motor operation of the centerline latch group without causing a sequence fail signal *PLB doors* CRT message and *SM alert*.

Torque limiters in the centerline latch groups allow slippage if limit switches fail to turn off an electrical drive motor or the mechanisms jam to prevent damage to the motors or mechanism.

EVA disconnects in a centerline latch group can be used to isolate a jammed latch from the group.

The payload bay doors are driven by a rotary actuator con-

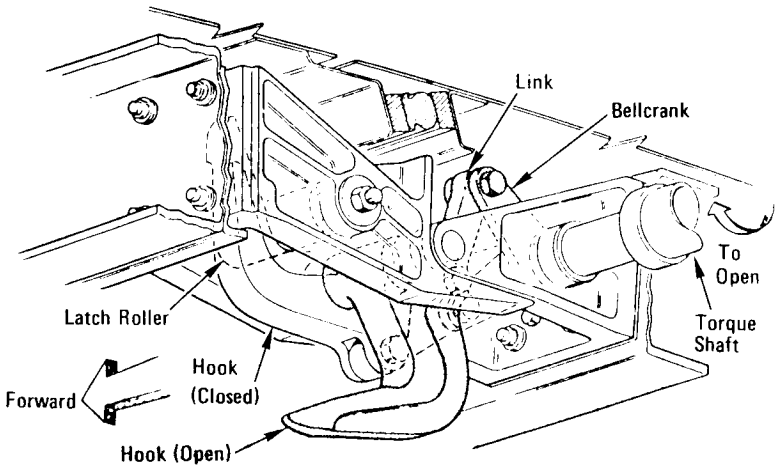


*Centerline Door Latch Hook (Typical) Open Position*

sisting of two electrical three-phase reversible ac motors per power drive unit. There is one power drive unit for right doors and one for the left doors.

The power drive unit drives a 55-foot-long torque shaft. The shaft turns the rotary actuators, which causes the push rod, bellcrank and link to push the doors open. The same arrangement pulls the doors closed.

The payload bay door opening and closing sequence is controlled automatically through in a predetermined sequence or manually through keyboard entries. The starboard doors must be opened first and closed last due to the arrangement of the centerline latching mechanism and the structural and seal overlap. Limit switches on each power drive unit turn the ac motors off when the doors are open or closed. Each ac motor has an associated brake that operates similarly to the bulkhead and centerline latch motors. When both motors are operating, the nominal time for payload bay door opening or closing is 63 seconds. If only one

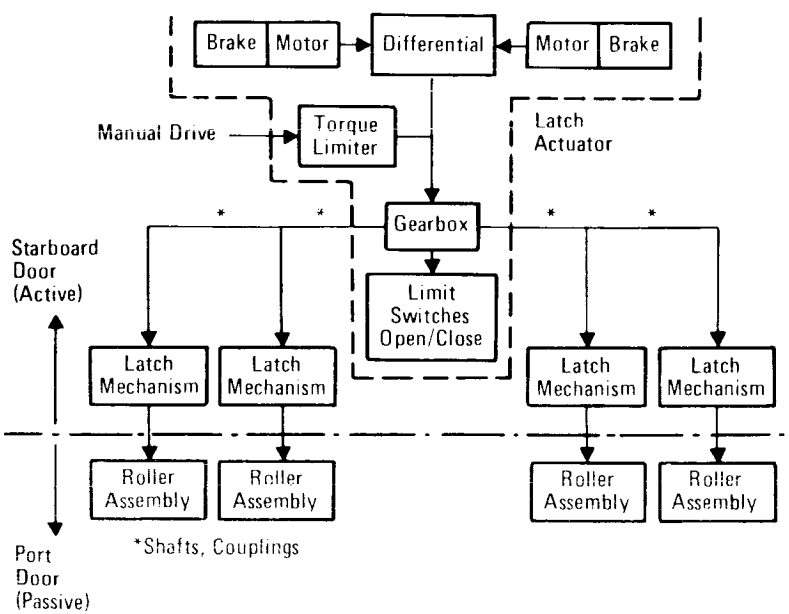


*Payload Bay Doors Centerline Latch Mechanical Block Diagram*

motor is operating, the time is 126 seconds. Each MMCA has its own timer set to twice the normal operating time to allow single-motor operation of the payload bay doors without causing a sequence fail signal *PLB doors* CRT message and an *SM alert*.

Torque limiters are incorporated into the rotary actuators to

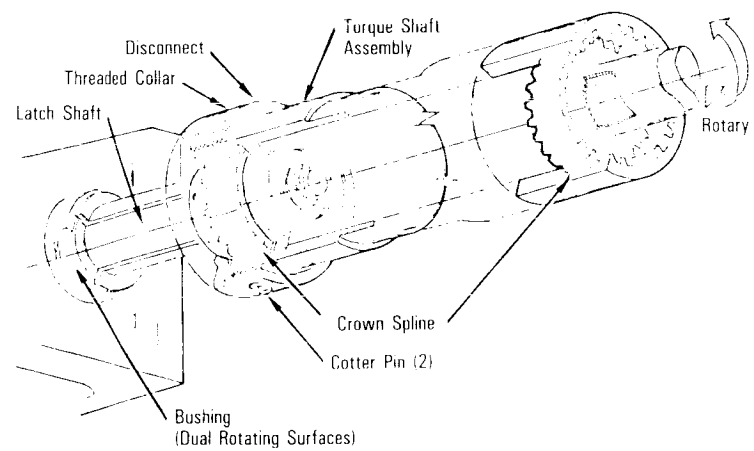


*Extravehicular Activity Disconnect of Torque Shaft From Actuator and Latch Assembly of Centerline Latches*



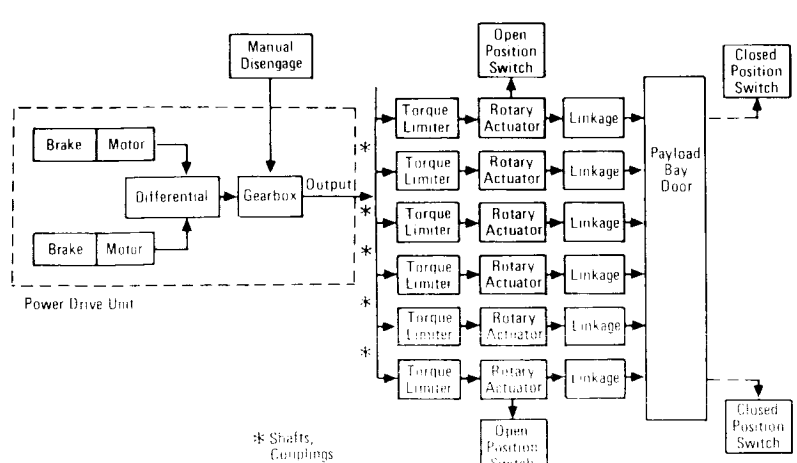


*Payload Bay Door Drive System Control Mechanical Block Diagram*

avoid damaging the drive motors or mechanisms if limit switches fail to turn off an electrical drive motor or the mechanisms jam.

Two bolts on the bellcrank and the bolt connecting the link to the rotary actuator can be EVA disconnect points if the linkage fails when the doors close. The power drive unit can be disengaged manually on the ground or on orbit.

The payload bay doors open through an angle of 175.5 degrees.

Two radiator panels on each forward payload bay door can be deployed when the doors are opened on orbit and stowed when the doors are closed before entry, or they can be left in the stowed position for a given flight. Freon-21 coolant loop 1 flows through the left-hand radiator panels, and the No. 2 loop flows through the right-hand panels. On orbit, the panels radiate excess heat collected by the Freon-21 coolant loops from heat exchangers and cold plates throughout the orbiter. Coolant flows through the radiators from aft to forward. The radiator panels mounted on the forward end of the aft payload bay doors are fixed to the bay doors.

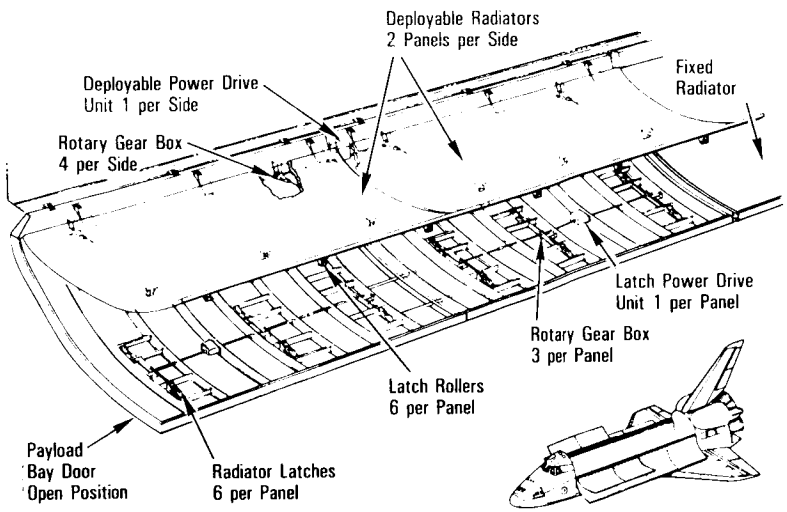


*Payload Bay Door Deployable Radiator Mechanism*

The radiator deploy and stow operation is controlled manually from the aft flight deck panel R13. The *PL bay mech* (payload bay mechanisms) *pwr*, *radiator latch* and *radiator control sys* switches control the panels. Four indicators show the radiator latch and deploy status.

When the payload bay doors are fully open, the *PL bay mech sys 1* and *sys 2* switches are positioned to *on*. The *sys 1* and *sys 2* switches positioned to *on* provide ac bus power to both right- and left-side radiator latch control actuators.

The *radiator latch control sys A* switch positioned to *release* applies ac power to one ac reversible drive motor on each starboard and port panel. When each motor is in operation, the brake is removed. Each ac drive motor rotates a torque shaft, which operates push rods that unlatch six latches on each of the two right and two left radiator panels. The linkages and latches are attached to the payload bay doors, and passive rollers are attached to the radiator panels. The operating time for releasing the latches with one motor is approximately 52 seconds. Limit switches remove power from the ac motors. The brake is applied for each motor. The *radiator stdb* (starboard) and *port* talkback indicators above the *latch control sys A* and *B* switches indicate *rel* when the corresponding latches are released and barberpole when in transit. When the *radiator latch control sys B* switch is positioned to *release*, ac power is applied to the remaining ac reversible drive motor on each right panel and each left panel. This remaining ac

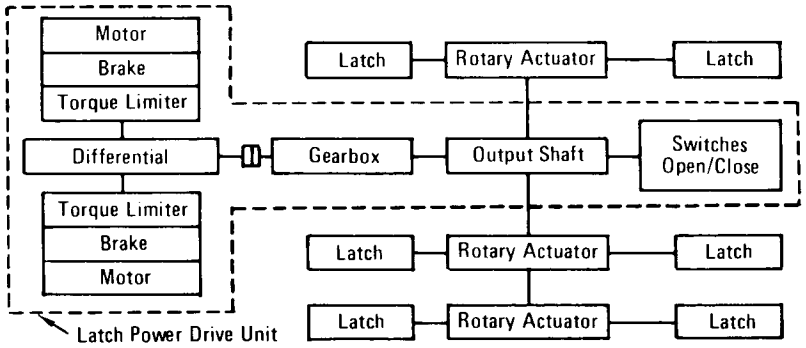


*Deployable Radiator Latch System Block Diagram*

drive motor will operate the same rotating shaft and unlatch the same six latches on each of the two right and two left radiator panels. Separate limit switches remove power from these ac motors. The *radiator stdb* and *port* talkback indicators above the *latch control sys A* and *B* switches indicate *rel* when the corresponding latches are released and barberpole when in transit and have the same operating time as in system A. If both switches were positioned to *rel* simultaneously, the operating time would be approximately 26 seconds.

Positioning the *radiator latch control sys A* and/or *B* switch to *latch* reverses the action and latches the radiator panels to the payload bay doors. The talkback indicators indicate *lat* when the panels are latched and barberpole when in transit.

The *off* position of the *radiator latch control sys A* and/or *B* switch removes power from the corresponding control system, which stops the motors and latch system movement.

Torque limiters in the power drive system prevent damage to the system in the event of jamming or binding during operation.

The *radiator control sys A* switch positioned to *deploy* applies ac power to one ac reversible drive motor on the right panel and one ac reversible drive motor on the left panel. The motors are not operable until the MMCAs have received two signals from the radiator panel unlatch drives, which prevents inadvertent deployment of the radiators while still latched. When power is applied to the left and right motors, the brake is removed and the rotary actuator shaft rotates and pushes the respective radiator panels away from the payload bay doors to the deployed position. Separate limit switches turn the ac motors off and apply the brake for each motor. The operating time for deployment with one motor is 86 seconds. The *radiator stdb* and *port* talkback indicators above the *radiator control sys A* and *B* switches indicate *dpy* when the corresponding panels are deployed and barberpole when in transit. When the *radiator control sys B* switch is positioned to *deploy*, ac power is applied to the remaining ac reversible drive motor on the right radiator panel and the remaining ac reversible drive motor on the left panel. This remaining ac drive motor operates the same rotary actuator shaft and pushes the respective radiator panel away from the payload bay doors to the deployed position. Separate limit switches turn the ac motors off. The *radiator stdb* and *port* talkback indicators above the *radiator control sys A* and *B* switches indicate *dpy* when the corresponding panels are deployed and barberpole when in transit and have the same operating time as in system A. If both switches are positioned to deploy simultaneously, the operating time is 43 seconds.

Positioning the *radiator control sys A* and/or *B* switch to *stow* reverses the action, stowing the radiators to the payload bay doors. The talkback indicators indicate *sto* when the panels are stowed and barberpole in transit.

The *off* position of the *radiator control sys A* and/or *B* switch removes power from the corresponding control system, stopping the motors and radiator panel movement.

When the radiators are deployed, they are 35.5 degrees from the payload bay doors.



Torque limiters on the power drive system prevent damage to the system in the event of jamming or binding during operation.

Each rotary crank can be disengaged from the rotary actuator (via EVA operations) by retracting a shear pin. Retraction

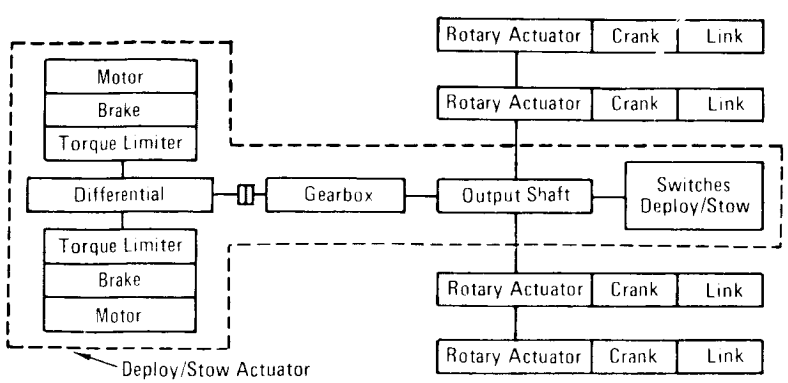


*Deployable Radiator Deploy/Stow Control*

allows the crank to rotate around an alternate pivot and permits the crew to stow the panels if the system fails. If the power drive unit fails, all four shear pins must be removed to allow manual

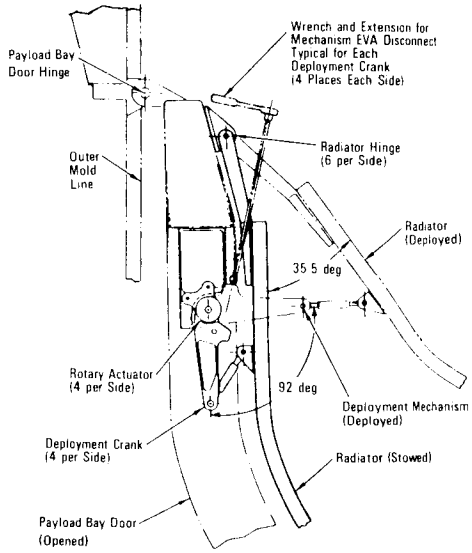


*Payload Bay Door Deployable Radiator Deployed*

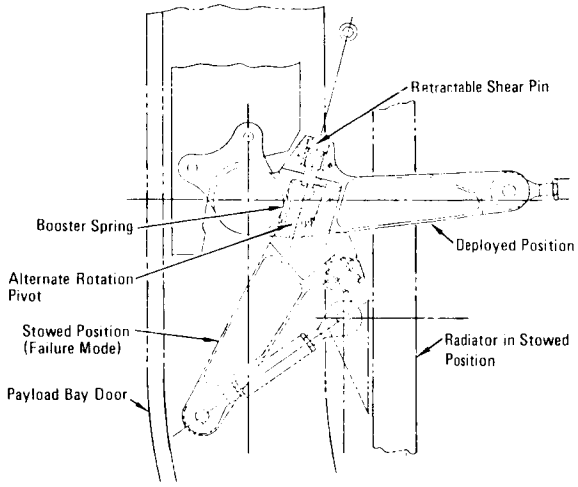


*Payload Bay Door Deployable Radiator Mechanism Disconnect Features*

stowing of the radiators. The pins are accessible when the radiators are fully deployed. No disengagement is planned if the radiators fail to deploy.

The contractors are Rockwell's Tulsa Division, Tulsa, Okla. (payload bay doors); Curtiss Wright, Caldwell, N.J. (payload bay door power drive unit, rotary actuators, drive shafts, torque tubes and couplings, radiator deploy/latch actuator and latch mechanism); Hoover Electric, Los Angeles, Calif. (payload bay door electromechanical rotary actuators); Vought Corp., Dallas, Texas (radiators); Rockwell's Space Transportation Systems Division, Downey, Calif. (latches, linkages and actuators).

## AFT FUSELAGE

The aft fuselage consists of an outer shell, thrust structure and internal secondary structure. It is approximately 18 feet long, 22 feet wide and 20 feet high.

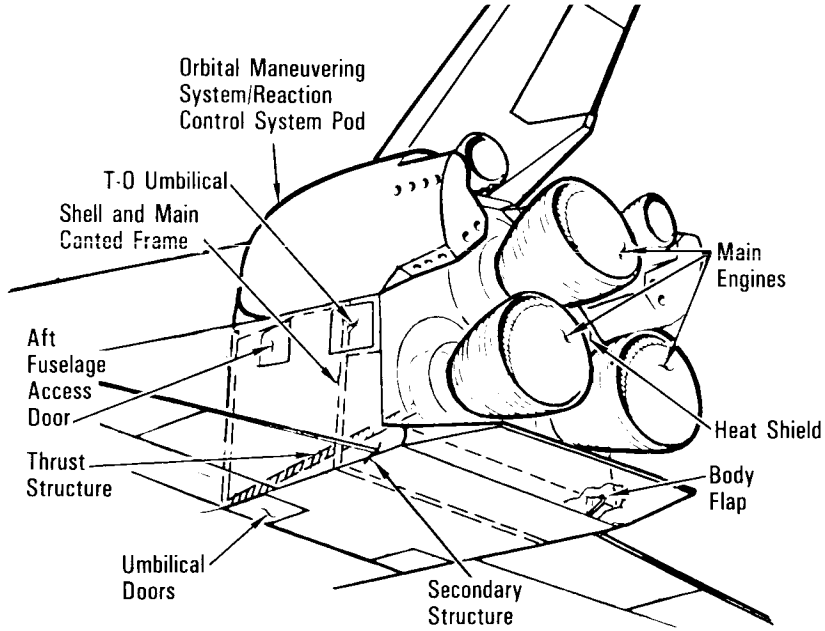


*Aft Fuselage Structure*

The aft fuselage supports and interfaces with the left-hand and right-hand aft orbital maneuvering system/reaction control system pods, the wing aft spar, midfuselage, orbiter/external tank rear attachments, space shuttle main engines, aft heat shield, body flap, vertical tail and two T-0 launch umbilical panels.

The aft fuselage provides the load path to the midfuselage main longerons, main wing spar continuity across the forward bulkhead of the aft fuselage, structural support for the body flap, and structural housing around all internal systems for protection from operational environments (pressure, thermal and acoustic) and controlled internal pressures during flight.

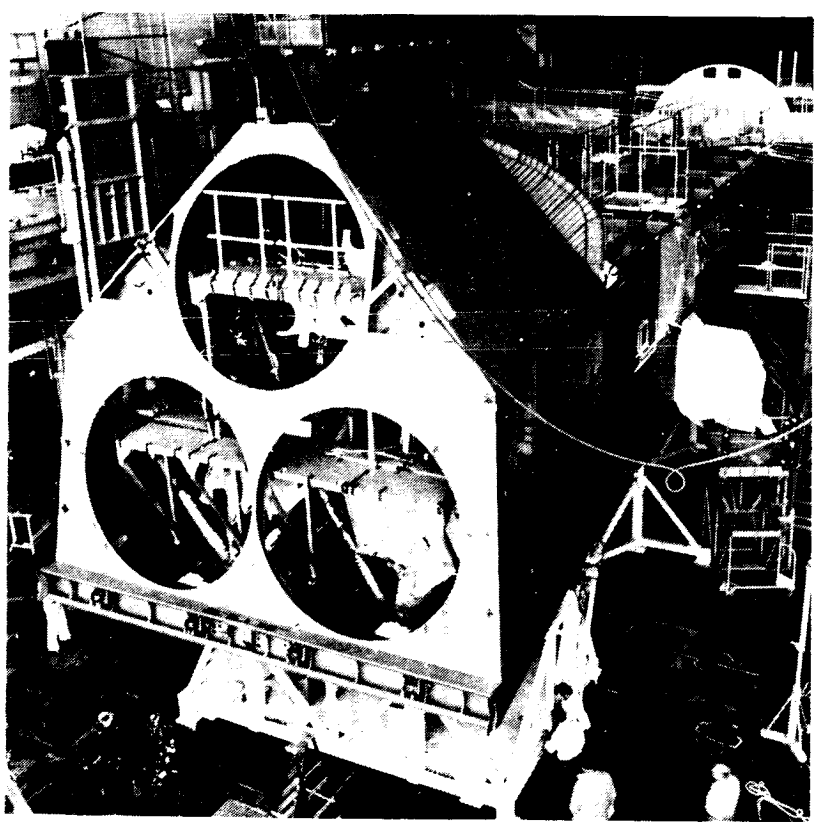

*Aft and Midfuselage*

The forward bulkhead closes off the aft fuselage from the midfuselage and is composed of machined and beaded sheet metal aluminum segments. The upper portion of the bulkhead attaches to the front spar of the vertical tail.

The internal thrust structure supports the three SSMEs. The upper section of the thrust structure supports the upper SSME, and the lower section of the thrust structure supports the two lower SSMEs. The internal thrust structure includes the SSMEs, load reaction truss structures, engine interface fittings and the actuator support structure. It supports the SSMEs, the SSME low-pressure turbopumps and propellant lines. The two orbiter/external tank aft attach points interface at the longeron fittings.

The internal thrust structure is composed mainly of 28 machined, diffusion-bonded truss members. In diffusion bonding,

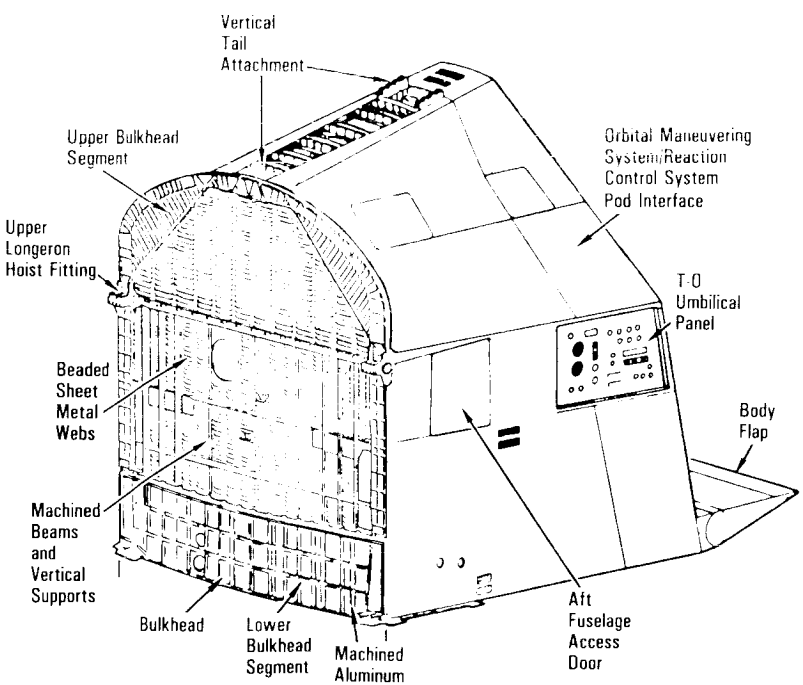


*Aft Fuselage*

titanium strips are bonded together under heat, pressure and time. This fuses the titanium strips into a single hollow, homogeneous mass that is lighter and stronger than a forged part. In looking at the cross section of a diffusion bond, one sees no weld line. It is a homogeneous parent metal, yet composed of pieces joined by diffusion bonding. (In OV-105, the internal thrust structure is a forging.) In selected areas, the titanium construction is reinforced with boron/epoxy tubular struts to minimize weight and add stiffness. This reduced the weight by 21 percent, approximately 900 pounds.

The upper thrust structure of the aft fuselage is of integral-machined aluminum construction with aluminum frames except for the vertical fin support frame, which is titanium. The skin panels are integrally machined aluminum and attach to each side of the vertical fin to react drag and torsion loading.

The outer shell of the aft fuselage is constructed of integral-machined aluminum. Various penetrations are provided in the shell for access to installed systems. The exposed outer areas of the aft fuselage are covered with reusable thermal protection system.

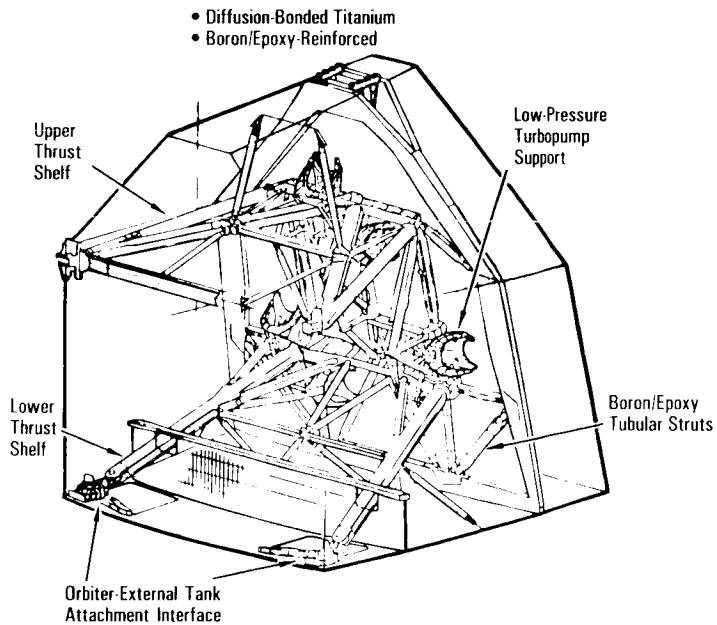


*Aft Fuselage Internal Structure*

The secondary structure of the aft fuselage is of conventional aluminum construction except that titanium and fiberglass are used for thermal isolation of equipment. The aft fuselage secondary structures consist of brackets, buildup webs, truss members, and machined fittings, as required by system loading and support constraints. Certain system components, such as the avionics shelves, are shock-mounted to the secondary structure. The secondary structure includes support provisions for the auxiliary power units, hydraulics, ammonia boiler, flash evaporator and electrical wire runs.

The two external tank umbilical areas interface with the orbiter's two aft external tank attach points and the external tank's liquid oxygen and hydrogen feed lines and electrical wire runs. The

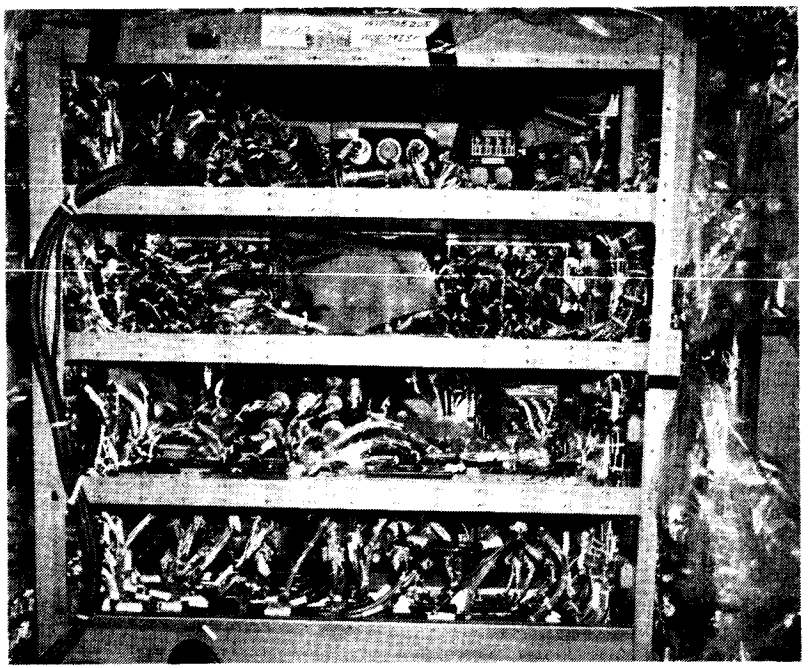

*Aft Avionics Bays*

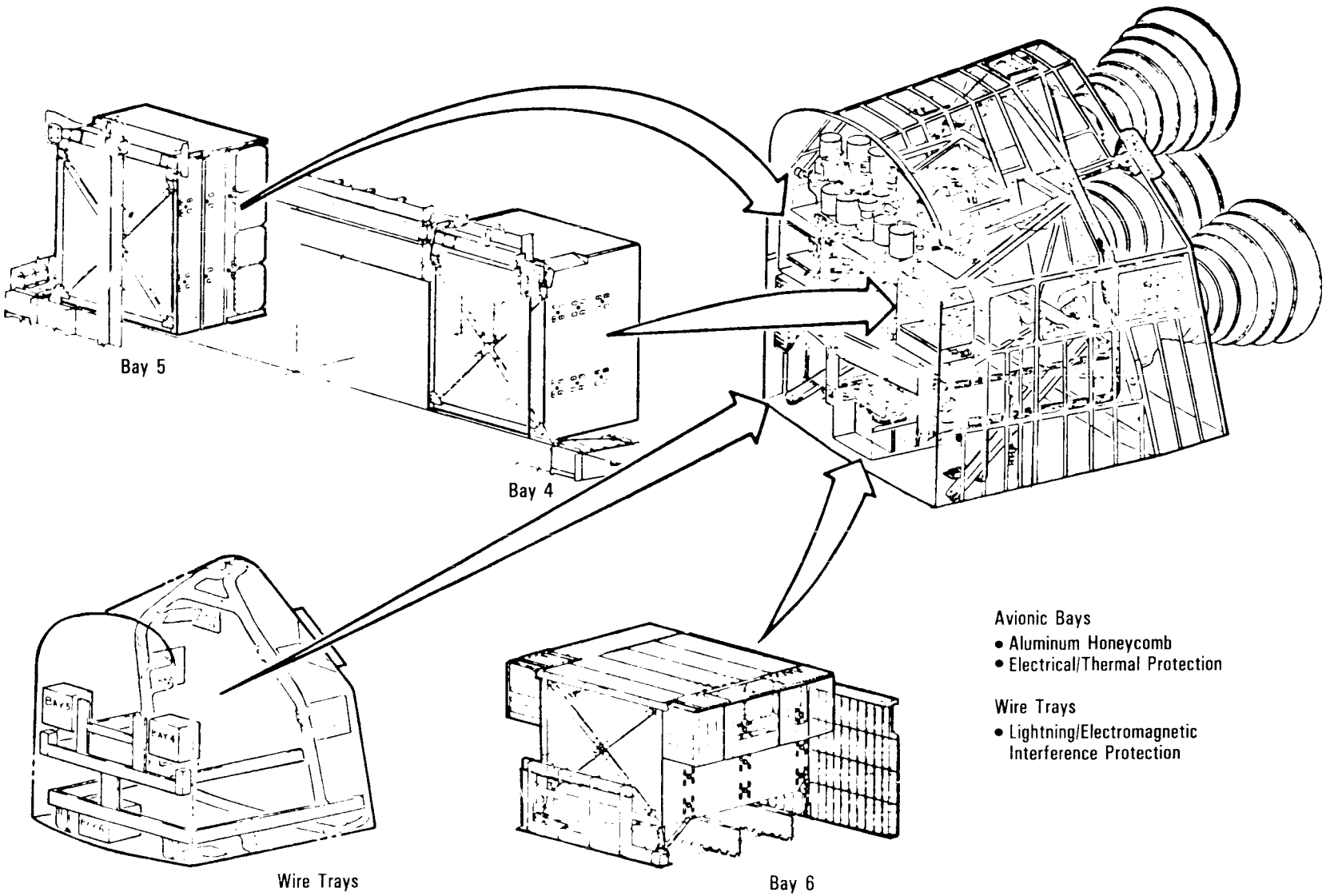


*Aft Fuselage Avionics Provisions*

umbilicals are retracted, and the umbilical areas are closed off after external tank separation by an electromechanically operated beryllium door at each umbilical. Thermal barriers are employed at each umbilical door. The exposed area of each closed door is covered with reusable surface insulation.

The aft fuselage heat shield and seal provide a closeout of the orbiter aft base area. The aft heat shield consists of a base heat shield of machined aluminum. Attached to the base heat shield are domes of honeycomb construction that support flexible and sliding seal assemblies. The engine-mounted heat shield is of Inconel honeycomb construction and is removable for access to the main engine power heads. The heat shield is covered with a reusable thermal protection system except for the Inconel segments.

## ORBITAL MANEUVERING SYSTEM/REACTION CONTROL SYSTEM PODS

The orbital maneuvering system/reaction control system left- and right-hand pods are attached to the upper aft fuselage left and right sides. Each pod is fabricated primarily of graphite epoxy composite and aluminum. Each pod is 21.8 feet long and 11.37 feet wide at its aft end and 8.41 feet wide at its forward end, with a surface area of approximately 435 square feet. Each pod is divided into two compartments: the OMS and the RCS housings. Each pod houses all the OMS and RCS propulsion components and is attached to the aft fuselage with 11 bolts. The pod skin panels are graphite epoxy honeycomb sandwich. The forward and aft bulkhead aft tank support bulkhead and floor truss beam are machined aluminum 2124. The centerline beam is 2024 aluminum sheet with titanium stiffeners and graphite epoxy frames. The OMS thrust structure is conventional 2124 aluminum construction. The cross braces are aluminum tubing, and the attach fittings at the forward and aft fittings are 2124 aluminum. The intermediate fittings are corrosion-resistant steel. The RCS housing, which attaches to the OMS pod structure, contains the RCS thrusters and associated propellant feed lines. The RCS housing is constructed of aluminum sheet metal, including flat outer skins. The curved outer skin panels are graphite epoxy honeycomb sandwich. Twenty-four doors in the skins provide access to the OMS and RCS and attach points.

The two graphite epoxy pods per spacecraft reduce the weight by 10 percent, approximately 450 pounds. The pods will withstand 162-decibel acoustic noise and a temperature range from minus 170 to plus 135 F.

The exposed areas of the OMS/RCS pods are covered with a reusable thermal protection system, and a pressure and thermal seal is installed at the OMS/RCS pod aft fuselage interface. Thermal barriers are installed, and they interface with the RCS thrusters and reusable thermal protection system.

## BODY FLAP

The body flap thermally shields the three SSMEs during entry and provides the orbiter with pitch control trim during its atmospheric flight after entry.

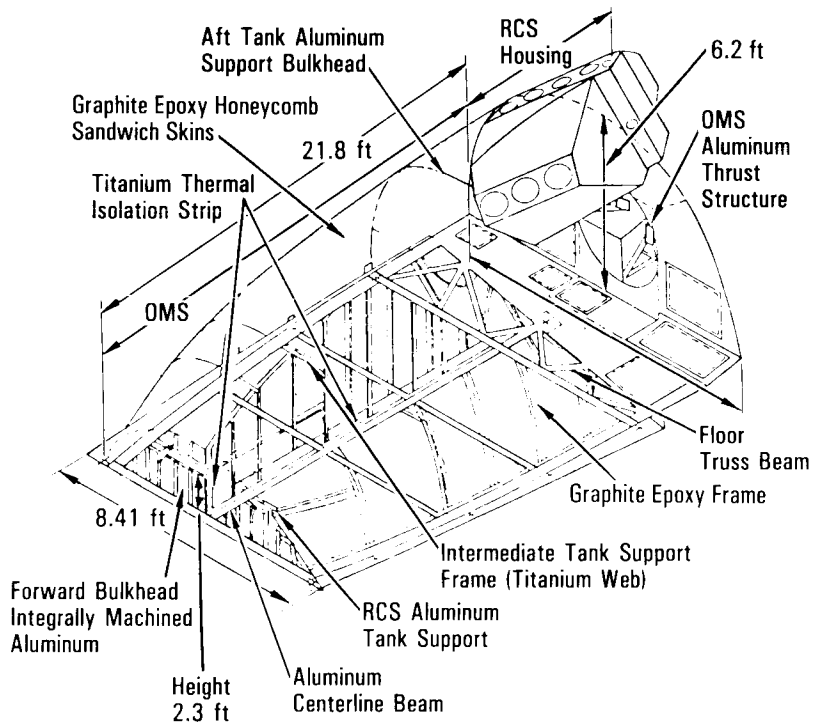


*Aft Orbital Maneuvering System/Reaction Control System Pod*

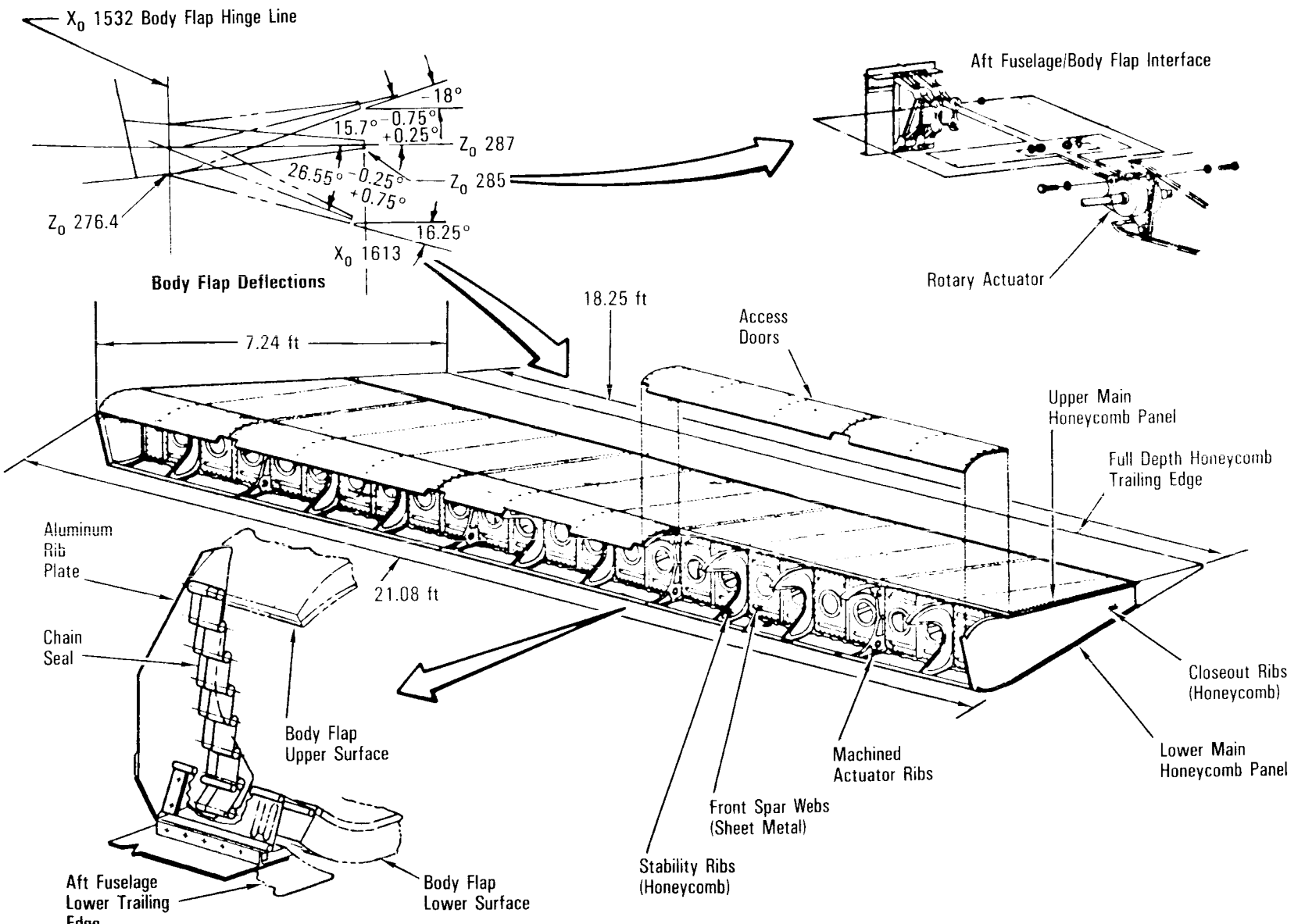
$X_0$ 1532 Body Flap Hinge Line
18°
15.7° -0.75° +0.25°
$Z_0$ 287
26.55° -0.25° +0.75°
$Z_0$ 285
$Z_0$ 276.4
16.25°
$X_0$ 1613
Body Flap Deflections
Aft Fuselage/Body Flap Interface
Rotary Actuator
18.25 ft
7.24 ft
Access Doors
Upper Main Honeycomb Panel
Full Depth Honeycomb Trailing Edge
Aluminum Rib Plate
21.08 ft
Chain Seal
Body Flap Upper Surface
Closeout Ribs (Honeycomb)
Machined Actuator Ribs
Lower Main Honeycomb Panel
Front Spar Webs (Sheet Metal)
Stability Ribs (Honeycomb)
Aft Fuselage Lower Trailing Edge
Body Flap Lower Surface

*Body Flap*

The body flap is an aluminum structure consisting of ribs, spars, skin panels and a trailing edge assembly. The main upper and lower forward honeycomb skin panels are joined to the ribs, spars and honeycomb trailing edge with structural fasteners. The removable upper forward honeycomb skin panels complete the body flap structure.

The upper skin panels aft of the forward spar and the entire lower skin panels are mechanically attached to the ribs. The forward upper skin consists of five removable access panels attached to the ribs with quick-release fasteners. The four integral-machined aluminum actuator ribs provide the aft fuselage interface through self-aligning bearings. Two bearings are located in each rib for attachment to the four rotary actuators located in the aft fuselage, which are controlled by the flight control system and the hydraulically actuated rotary actuators. The remaining ribs consist of eight stability ribs and two closeout ribs constructed of chemically milled aluminum webs bonded to aluminum honeycomb core. The forward spar web is of chemically milled sheets with flanged holes and stiffened beads. The spar web is riveted to the ribs. The trailing edge includes the rear spar, which is composed of piano-hinge half-cap angles, chemically milled skins, honeycomb aluminum core, closeouts and plates. The trailing edge attaches to the upper and lower forward panels by the piano-hinge halves and hinge pins. Two moisture drain lines and one hydraulic fluid drain line penetrate the trailing edge honeycomb core for horizontal and vertical drainage.

The body flap is covered with a reusable thermal protection system and an articulating pressure and thermal seal to its forward cover area on the lower surface of the body flap to block heat and air flow from the structures.

The aft fuselage is built by Rockwell's Space Transportation Systems Division, Downey, Calif. The OMS/RCS pods are built by McDonnell Douglas, St. Louis, Mo. The body flap is built by Rockwell's Columbus, Ohio, division.

## VERTICAL TAIL

The vertical tail consists of a structural fin surface, the rudder/speed brake surface, a tip and a lower trailing edge. The rudder splits into two halves to serve as a speed brake.

The vertical tail structure fin is made of aluminum. The main torque box is constructed of integral-machined skins and strings, ribs, and two machined spars. The fin is attached by two tension tie bolts at the root of the front spar of the vertical tail to the forward bulkhead of the aft fuselage and by eight shear bolts at the root of the vertical tail rear spar to the upper structural surface of the aft fuselage.

The rudder/speed brake control surface is made of conventional aluminum ribs and spars with aluminum honeycomb skin panels and is attached through rotating hinge parts to the vertical tail fin.

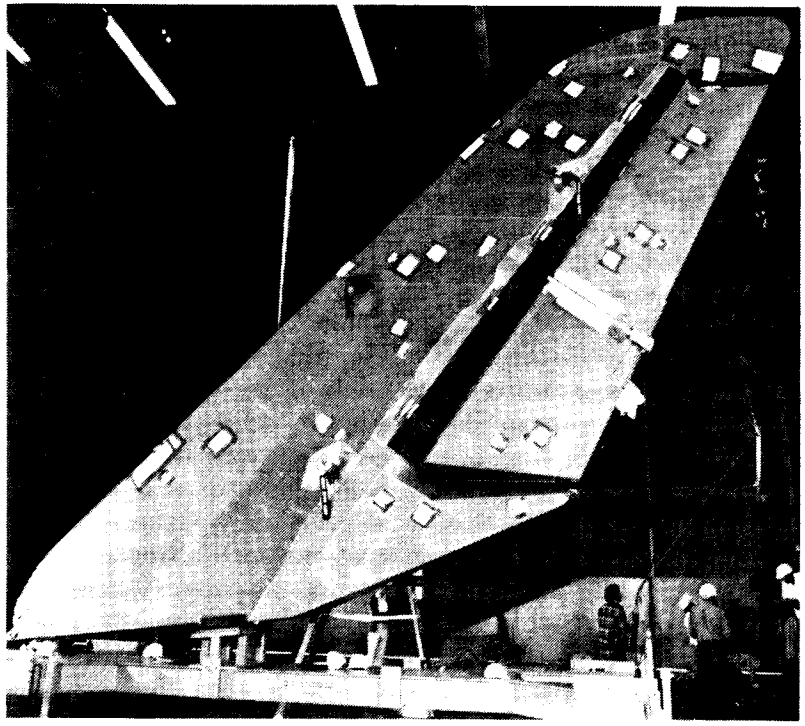

*Vertical Tail With Rudder/Speed Brake*

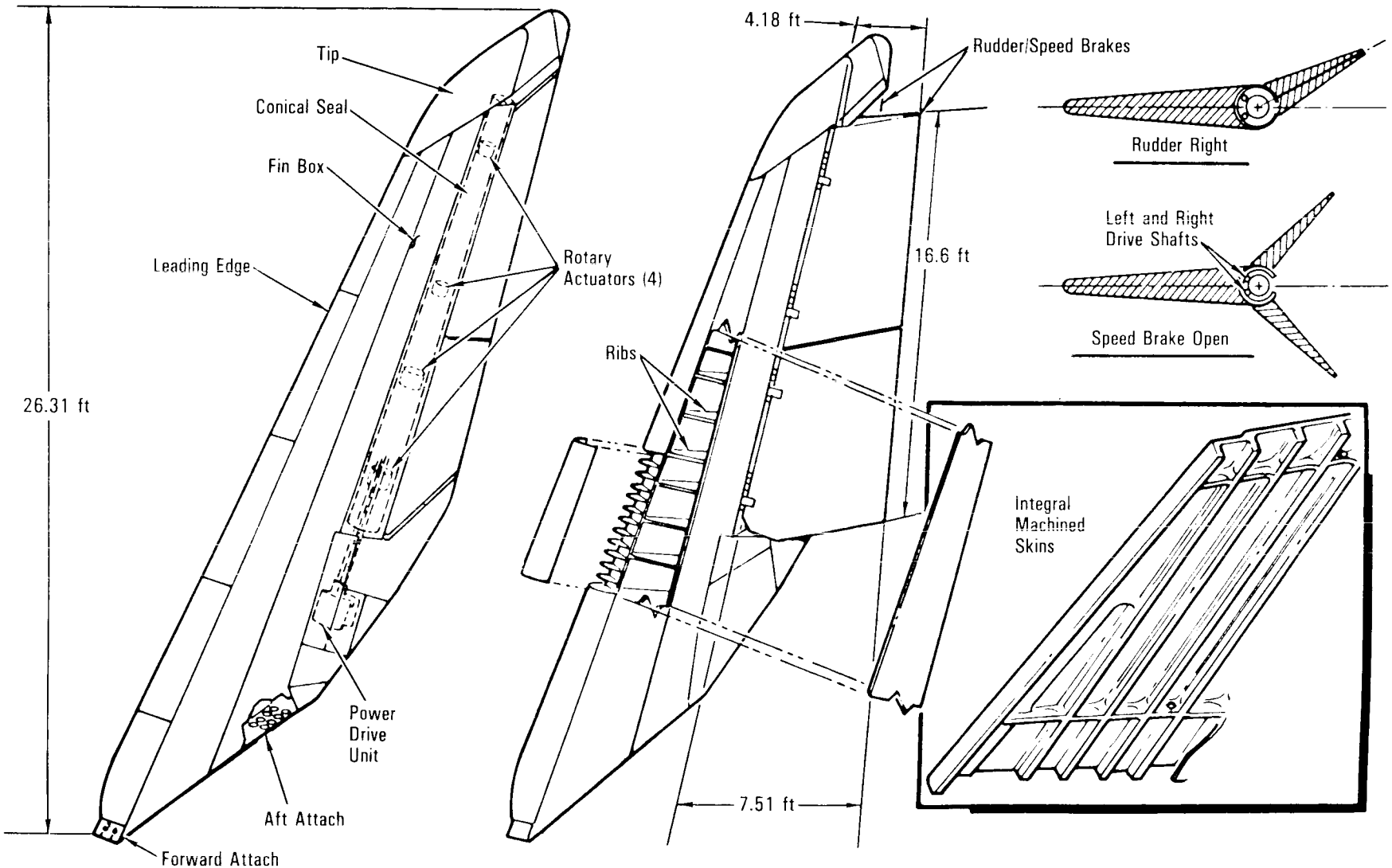


*Vertical Tail*

The lower trailing edge area of the fin, which houses the rudder/speed brake power drive unit, is made of aluminum honeycomb skin.

The hydraulic power drive unit/mechanical rotary actuation system drives left- and right-hand drive shafts in the same direction for rudder control of plus or minus 27 degrees. For speed brake control, the drive shafts turn in opposite directions for a maximum of 49.3 degrees each. The rotary drive actions are also combined for joint rudder/speed brake control. The hydraulic power drive unit is controlled by the orbiter flight control system.

The vertical tail structure is designed for a 163-decibel acoustic environment with a maximum temperature of 350 F.

All-Inconel honeycomb conical seals house the rotary actuators and provide a pressure and thermal seal that withstands a maximum of 1,200 F.

The split halves of the rudder panels and trailing edge contain a thermal barrier seal.

The vertical tail and rudder/speed brake are covered with a reusable thermal protection system. A thermal barrier is also employed at the interface of the vertical stabilizer and aft fuselage.

The contractor for the vertical tail and rudder/speed brake is Fairchild Republic, Farmingdale, N.Y.

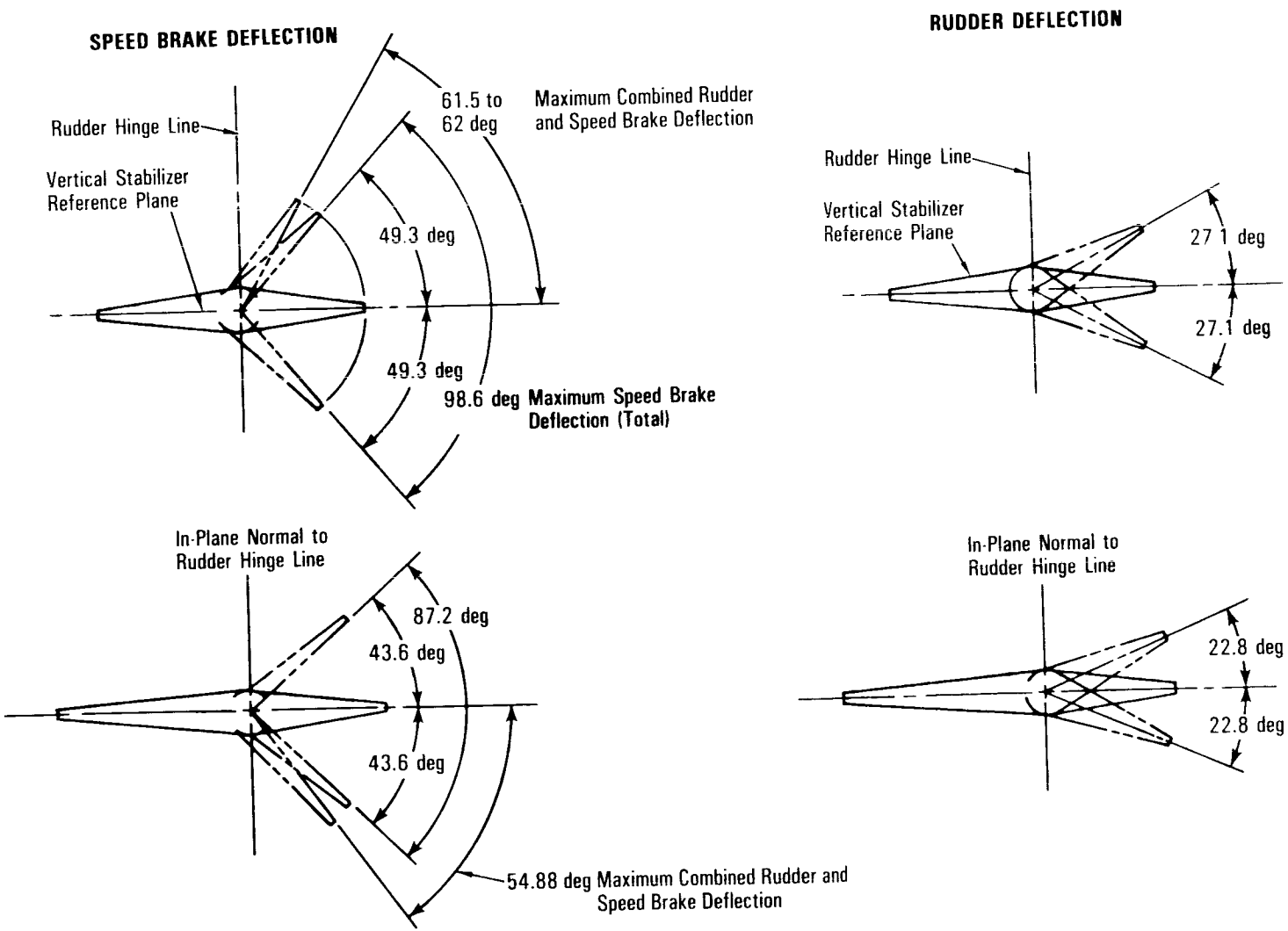


*Rudder/Speed Brake Deflections*

## ORBITER PASSIVE THERMAL CONTROL

A passive thermal control system helps maintain the temperature of the orbiter spacecraft, systems and components within their temperature limits. This system uses available orbiter heat sources and heat sinks supplemented by insulation blankets, thermal coatings and thermal isolation methods. Heaters are provided on components and systems in areas where passive thermal control techniques are not adequate. (The heaters are described under the various systems.)

The insulation blankets are of two basic types: fibrous bulk and multilayer. The bulk blankets are fibrous materials with a density of 2 pounds per cubic foot and a sewn cover of reinforced acrylic film Kapton. The cover material has 13,500 holes per square foot for venting. Acrylic film tape is used for cutouts, patching and reinforcements. Tufts throughout the blankets minimize billowing during venting.

The multilayer blankets are constructed of alternate layers of perforated acrylic film Kapton reflectors and Dacron net separators. There are 16 reflector layers in all, the two cover halves counting as two layers. Covers, tufting and acrylic film tape are similar to that used for the bulk blankets.

The contractors are Hi-Temp Insulation Inc., Camarillo, Calif. (fibrous insulation); Scheldahl, Northfield, Minn. (cover materials and inner layers); Apex Mills, Los Angeles, Calif. (separators).

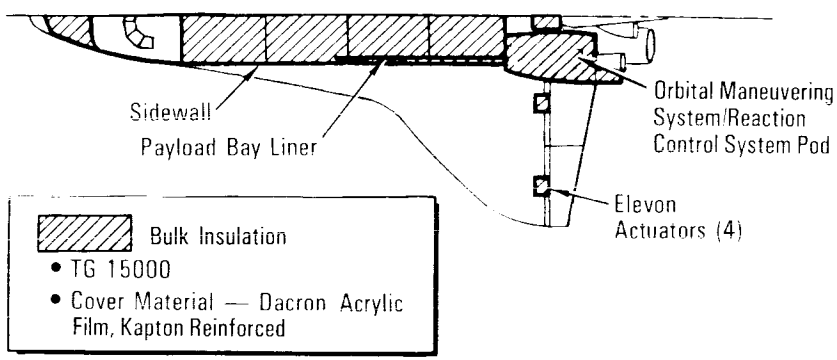


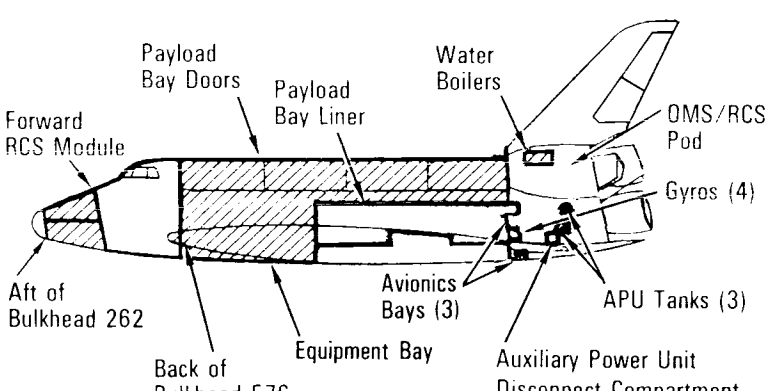


**BULK INSULATION**

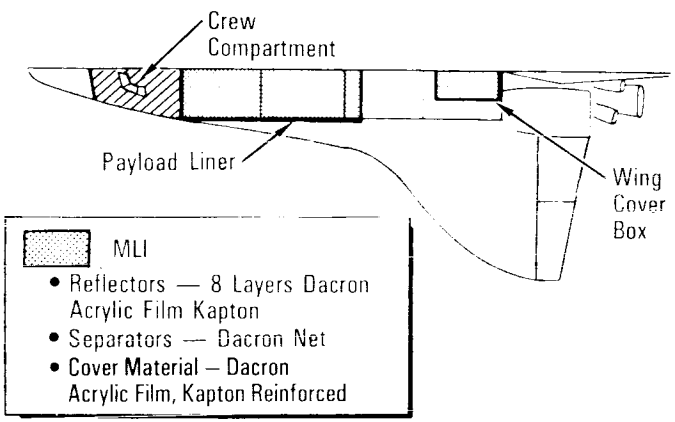


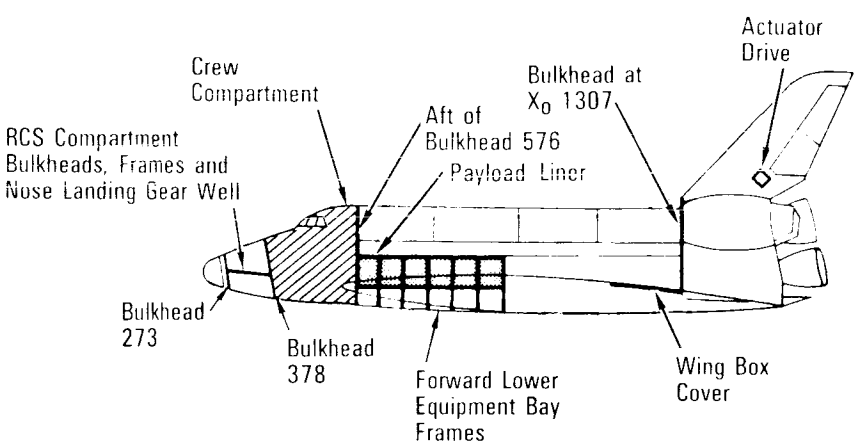


**MULTILAYER INSULATION**

## ORBITER PURGE, VENT AND DRAIN SYSTEM

The purge, vent and drain system on the orbiter is designed to perform the following functions: provide unpressurized compartments with gas purge for thermal conditioning and prevent accumulation of hazardous gases, vent the unpressurized compartments during ascent and entry, drain trapped fluids (water and hydraulic fluid) and condition window cavities to maintain visibility.

Three purge circuits are connected by the T-0 umbilical to ground equipment before launch during the preflight countdown and postlanding phases. Purge gas (cool, dry air and gaseous nitrogen) is provided to three sets of distribution plumbing: the forward fuselage, orbital maneuvering system/reaction control system pods, wings and vertical stabilizer; the midfuselage; and the aft fuselage. The purge gas makes all the unpressurized volumes inert, maintains constant humidity and temperature, forces out any hazardous gases and ensures that external contaminants cannot enter.

The active vent system provides the flow area to control pressure during purge, depressurization during ascent, molecular venting in orbit and repressurization during entry.

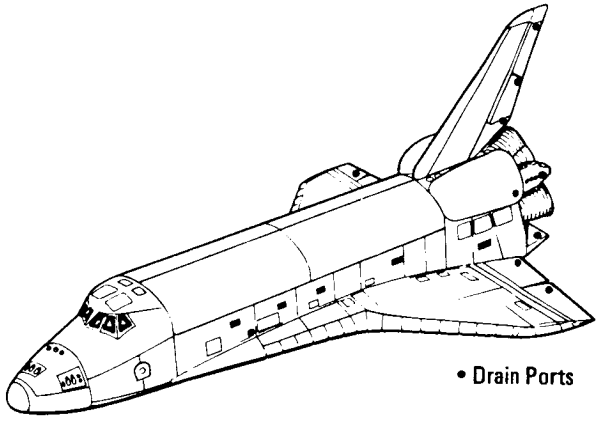


*Drain System*

The vent and purge system is controlled exclusively through guidance, navigation and control software. The active ports are positioned by the software on the basis of mission time or mission events during ascent, entry and aborts and by crew inputs on the CRT and keyboard in the crew compartment flight deck.

There are 18 active vents in the orbiter fuselage, nine on each side. Each vent has a door that can be positioned for a specific purpose at various phases of flight. For identification, each door is numbered, starting at the nose of the orbiter. Each compartment has a dedicated vent on the left and right side of the orbiter for redundancy.

Internal vents are used to vent compartments that have no vent doors of their own, such as the nose wheel well, the two main wheel wells and the vertical tail section. Passive vents are used to back up vent 7 of the forward wing compartment, which responds to a delta pressure to open a check valve (passive vent) during ascent to vent the wing to the midbody if vent 7 fails; or, on descent, the midfuselage pressurizes the wing if vent 7 fails at a delta pressure of 0.72 to 1 psid. The aft bulkhead ($X_O$ 1307) has 14 one-way check valves that vent the payload bay into the aft fuselage at a delta pressure of 0.004 to 0.04 psid. Vent 8 vents the OMS/RCS pods, which are joined by a duct that enables the pod to vent through the opposite side of the vehicle if vent 8 fails to open.

All vent doors are driven by an electromechanical actuator. Vent doors located near each other share common actuators and controls. Vents 1 and 2, 4 and 7, and 8 and 9 share drive mechanisms on the left and right side. The 18 doors are divided into six groups of four ac motors each and are staggered so that all 24 motors do not run at the same time. All vent doors are driven inward, and each door has a pressure seal and thermal seal. The normal opening or closing time of a door with two motors operating is five seconds.

Vent doors 1, 2, 8 and 9 have purge positions that control flow from the forward and aft volumes, respectively. Vent 6 has

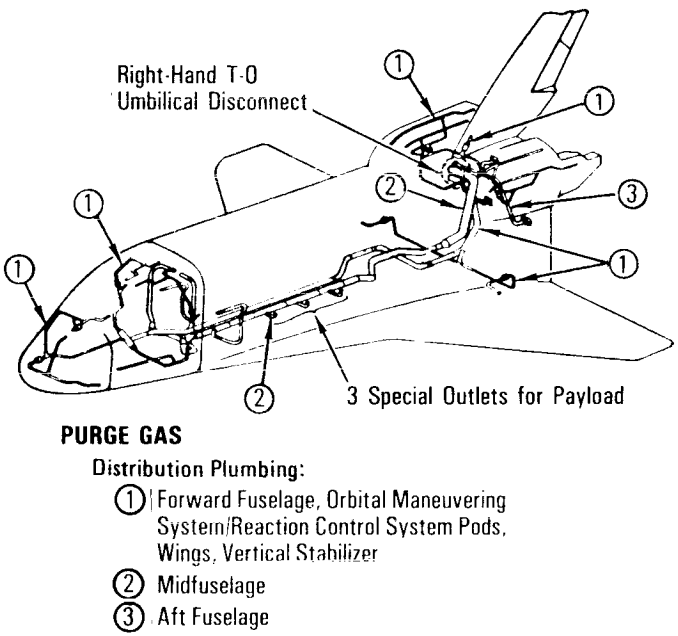


*Purge Gas System*

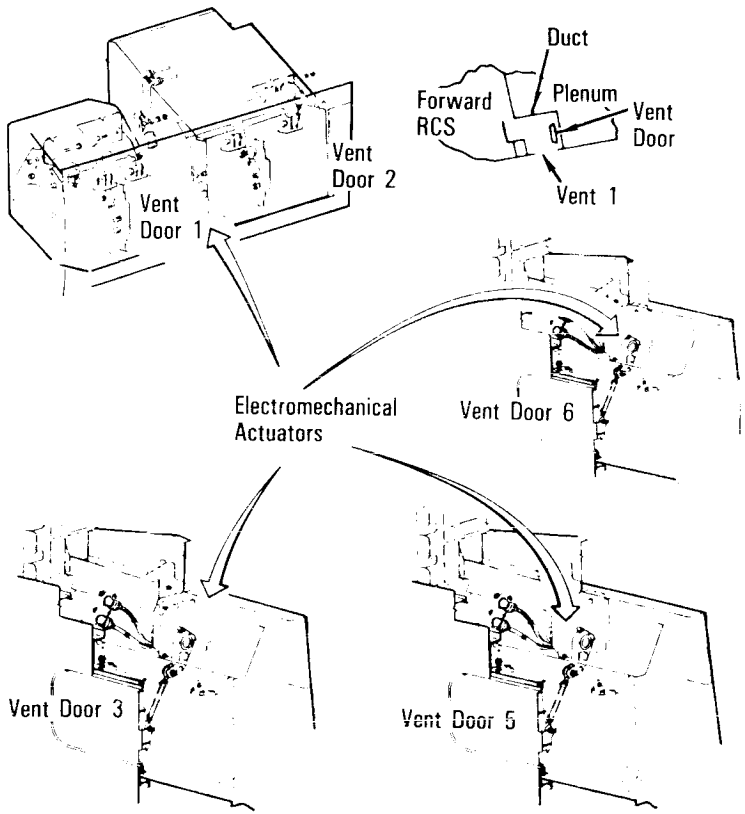


*Vent Doors (1, 2, 3, 5 and 6)*



two purge positions and a closed position that accommodates the different purge flow rates available to the payloads and payload bay. These doors are in the purge position before launch.

Two minutes 20 seconds before launch, the launch processing system reduces the purge flow in anticipation of closing vent 6. At T minus 35 seconds, vent 6 is closed. At T minus 25 seconds, the onboard general-purpose computers are enabled and take over the sequences.

At T minus 10 seconds, the vents are configured for launch. Vents 3, 4, 5, 6 and 7 are closed to limit sound pressure levels in the payload bay. Vents 1, 2, 8 and 9 are opened. If a launch abort occurs from T minus 10 seconds to T minus zero, the vent doors

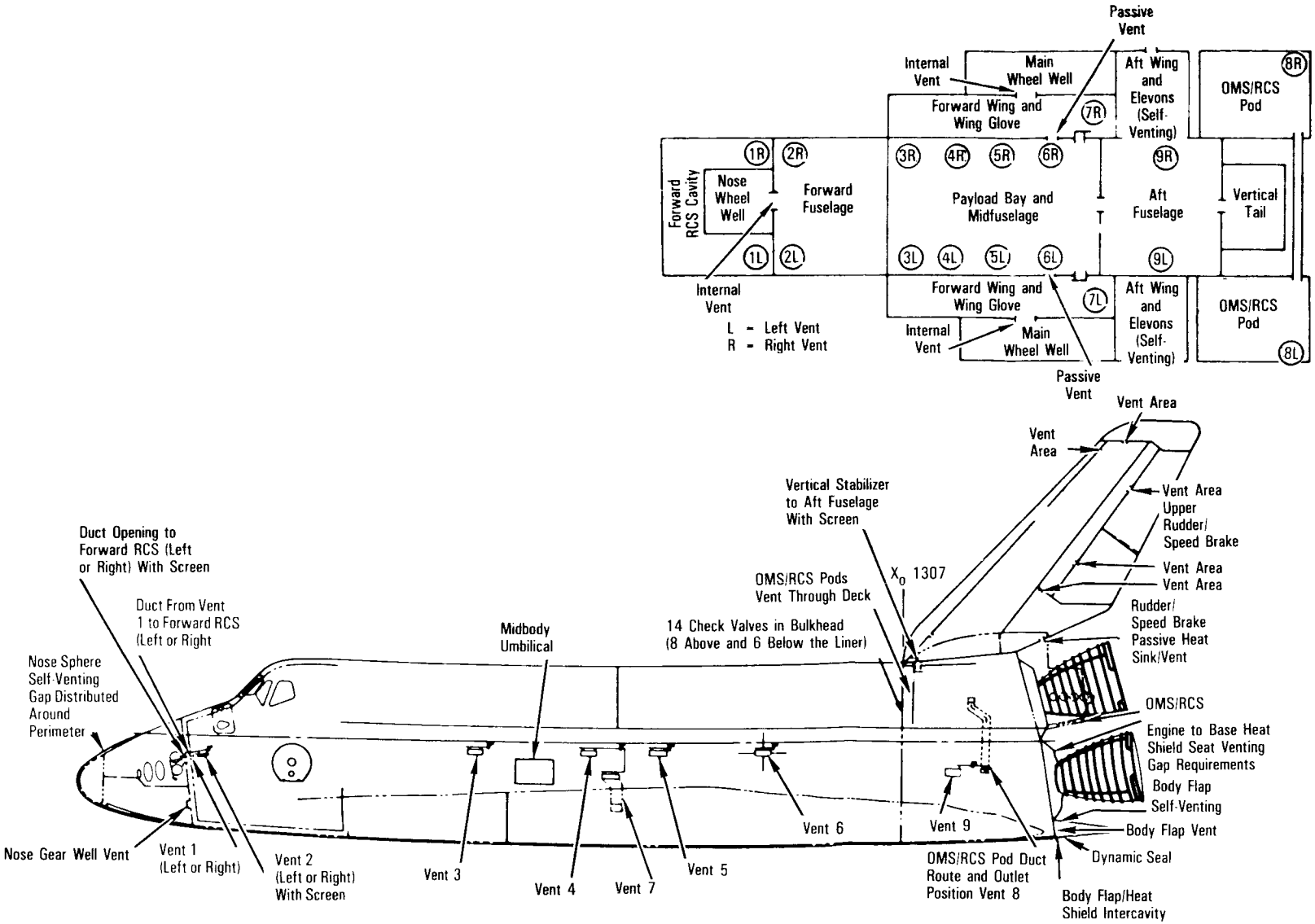
Passive Vent
Internal Vent
Main Wheel Well
Aft Wing and Elevons (Self-Venting)
OMS/RCS Pod
8R
Forward Wing and Wing Glove
7R
1R
2R
3R
4R
5R
6R
9R
Forward RCS Cavity
Nose Wheel Well
Forward Fuselage
Payload Bay and Midfuselage
Aft Fuselage
Vertical Tail
1L
2L
3L
4L
5L
6L
9L
Internal Vent
L - Left Vent
R - Right Vent
Forward Wing and Wing Glove
7L
Aft Wing and Elevons (Self-Venting)
OMS/RCS Pod
Internal Vent
Main Wheel Well
8L
Passive Vent
Vent Area
Vent Area
Vertical Stabilizer to Aft Fuselage With Screen
Vent Area Upper Rudder/ Speed Brake
Duct Opening to Forward RCS (Left or Right) With Screen
OMS/RCS Pods Vent Through Deck
$X_0$ 1307
Vent Area
Vent Area
Duct From Vent 1 to Forward RCS (Left or Right
Midbody Umbilical
14 Check Valves in Bulkhead (8 Above and 6 Below the Liner)
Rudder/ Speed Brake Passive Heat Sink/Vent
Nose Sphere Self-Venting Gap Distributed Around Perimeter
OMS/RCS
Engine to Base Heat Shield Seat Venting Gap Requirements
Body Flap Self-Venting
Body Flap Vent
Vent 6
Vent 9
Nose Gear Well Vent
Vent 1 (Left or Right)
Vent 2 (Left or Right) With Screen
Vent 3
Vent 4
Vent 7
Vent 5
OMS/RCS Pod Duct Route and Outlet Position Vent 8
Dynamic Seal
Body Flap/Heat Shield Intercavity

*Vent System*

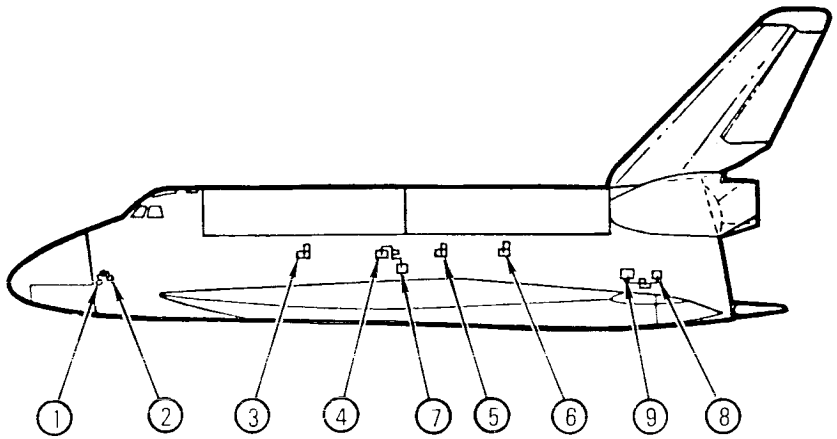


| Vent No.* | Compartment Vented | Vent Door Subsystem |
|---|---|---|
| 1 | Forward RCS | Forward |
| 2 | Forward Fuselage | |
| 7 | Wing | Payload Bay and Wing |
| 4 | Midfuselage | |
| 5 | Midfuselage | Payload Bay |
| 3 | Midfuselage | |
| 6 | Midfuselage | |
| 8 | OMS Pod | Aft |
| 9 | Aft Fuselage | |

*Left-Hand and Right-Hand

*Orbiter Vent Doors*

reposition to the prelaunch configuration. At T minus four seconds, any vent door out of configuration and not overridden causes the onboard GPCs to call a hold.

At T plus 10 seconds, all vent doors are commanded open. At T plus 80 seconds, vent doors 8 and 9 are commanded closed to prevent hazardous gases from entering the aft fuselage; at T plus 122 seconds, vents 8 and 9 are commanded open. All vent doors remain open during the remainder of ascent and on-orbit operations.

In preparation for entry, the onboard operational sequence software (OPS 3) closes all vent doors. The doors remain closed until the velocity of the orbiter reaches 2,400 feet per second, when all vents are opened by the onboard GPCs.

At the end of the mission, after the orbiter stops on the runway, vent doors 1, 2, 6, 8 and 9 are configured to their purge positions for ground cooling.

The purge and vent ducting is now made of Kevlar/epoxy (115 pieces up to 11 inches in diameter), which replaced the fiberglass or aluminum ducts and reduced the weight of the ducts 33 percent, or approximately 200 pounds.



The window cavity conditioning system prevents moisture from entering into the windshields and the cavities of the overhead and payload-viewing windows. It also depressurizes and repressurizes these cavities during flight and supplies the purge conditioning to dry them during ground operations. The side hatch window is self-contained.

A hazardous gas detection system detects hazardous levels of explosive or toxic gases. The onboard orbiter sample lines duct the compartment gases to the ground support equipment at the T-0 right-hand umbilical panel and to the ground-based mass spectrometer for analysis at the launch pad.

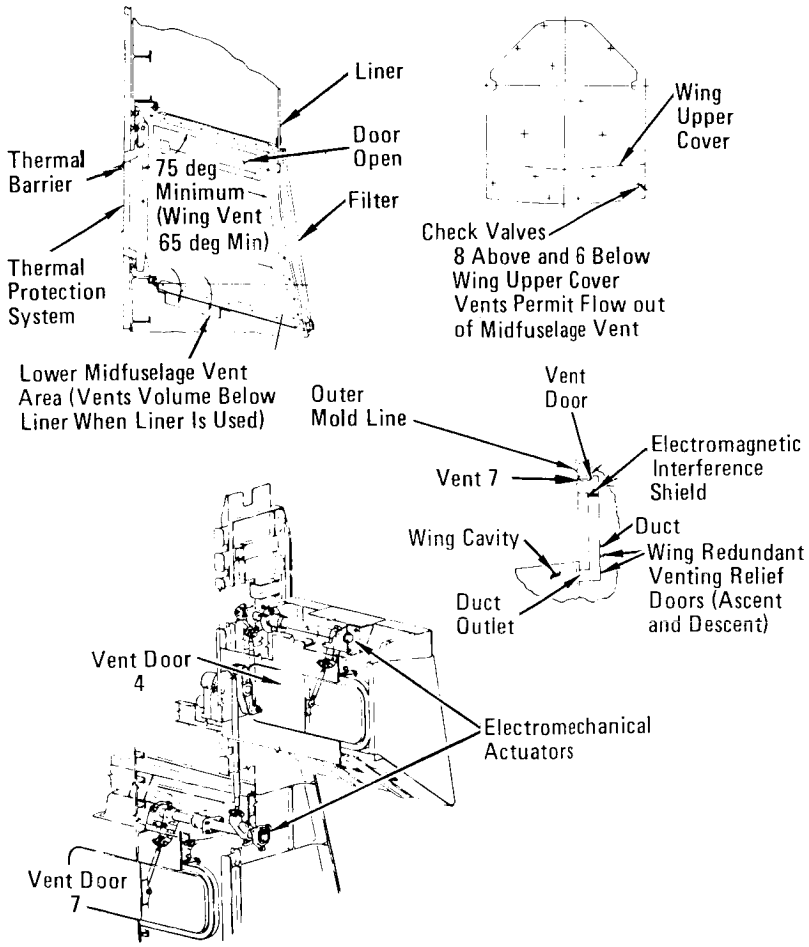


*Vent Doors (4 and 7)*

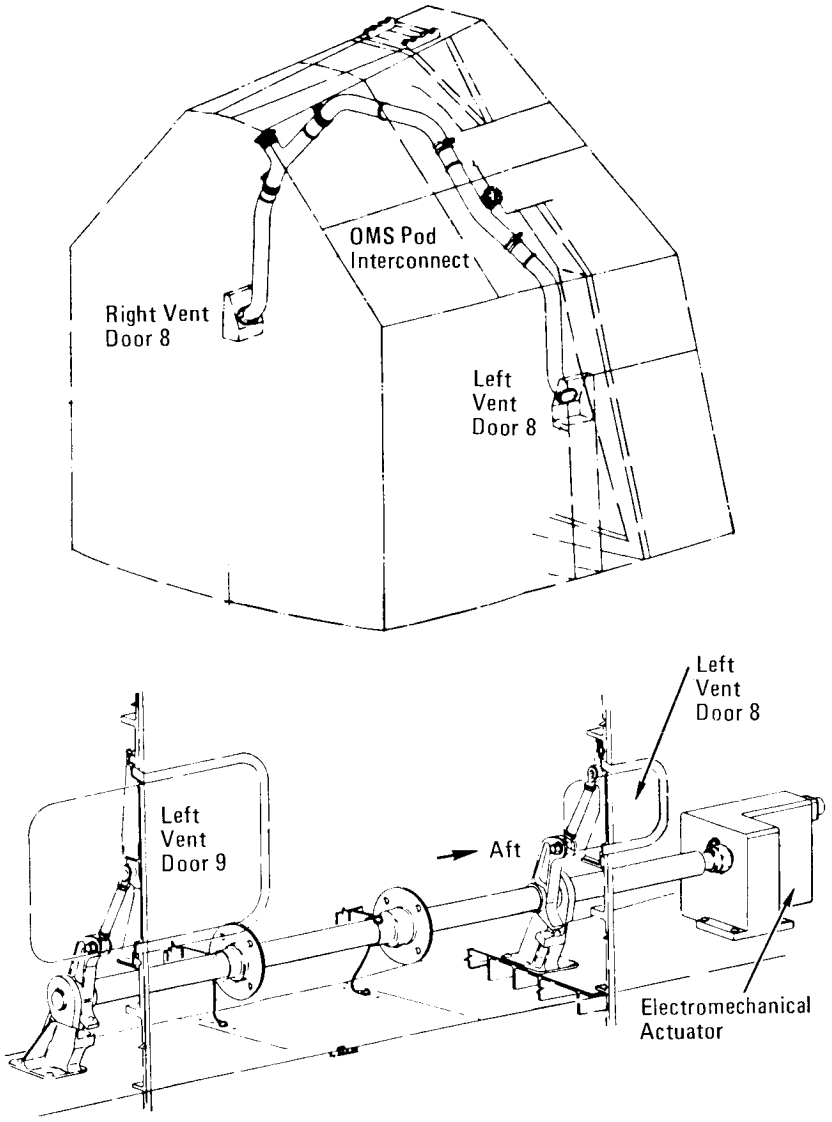


*Vent Doors (8 and 9)*

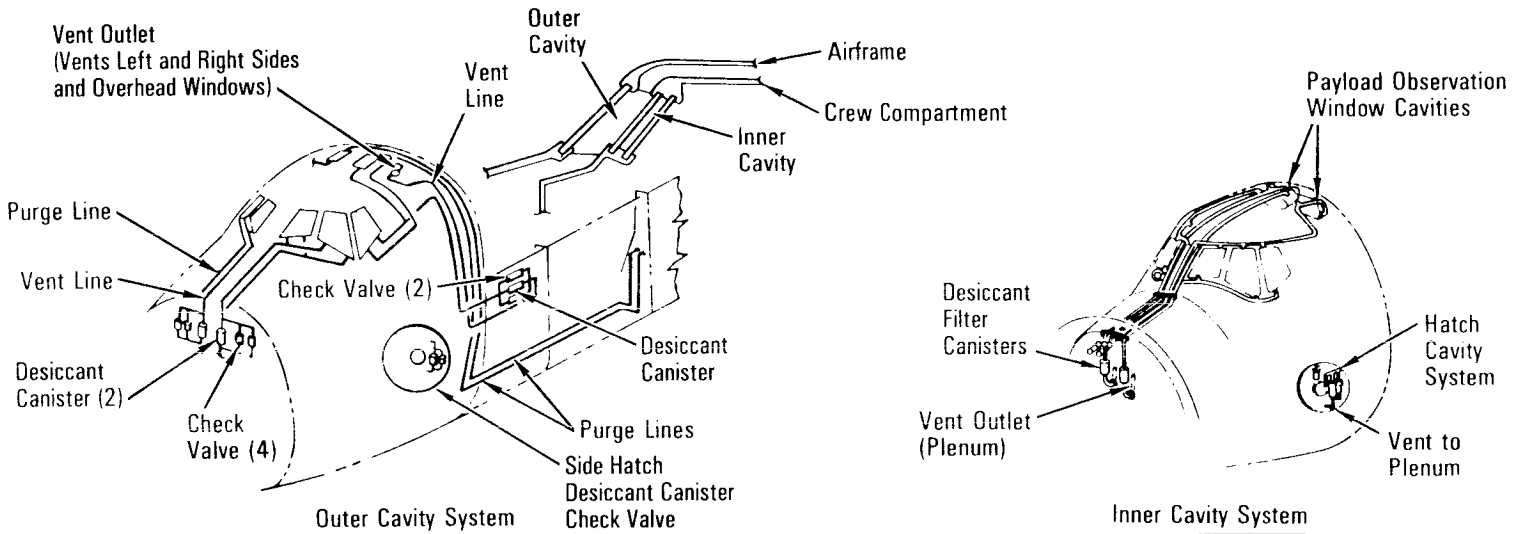


*Window Cavity Conditioning System*

## IN-FLIGHT CREW ESCAPE SYSTEM

The in-flight crew escape system is provided for use only when the orbiter would be in controlled gliding flight and unable to reach a runway. This condition would normally lead to ditching. The crew escape system provides the flight crew with an alternative to water ditching or to landing on terrain other than a landing site. The probability of the flight crew surviving a ditching is very slim.

The hardware changes required to the orbiters enable the flight crew to equalize the pressurized crew compartment with the outside pressure via the depressurization valve opened by pyrotechnics in the crew compartment aft bulkhead that would be manually activated by a flight crew member in the middeck of the crew compartment; pyrotechnically jettison the crew ingress/egress side hatch manually in the middeck of the crew compartment; and bail out from the middeck through the ingress/egress side hatch opening after manually deploying the escape pole through, outside and down from the side hatch opening. One by one, each flight crew member attaches a lanyard hook assembly, which surrounds the deployed escape pole, to his or her parachute harness and egresses through the side hatch opening. Attached to the escape pole, the crew member slides down the pole and off the end. The escape pole provides each crew member with a trajectory that takes the crew member below the orbiter's left wing.

Changes were also made in the software of the orbiter's general-purpose computers. The software changes were required

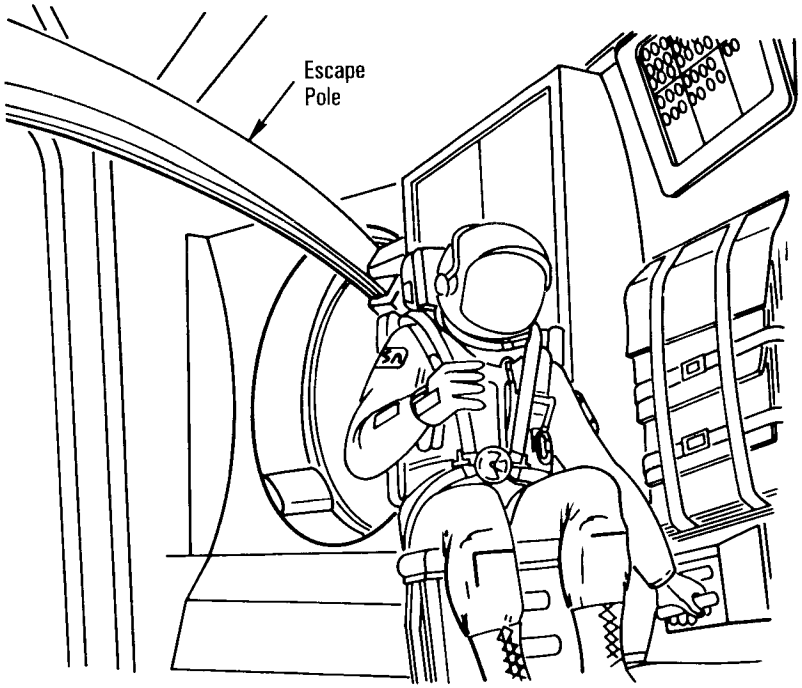


*Side Hatch Jettison T-Handle*

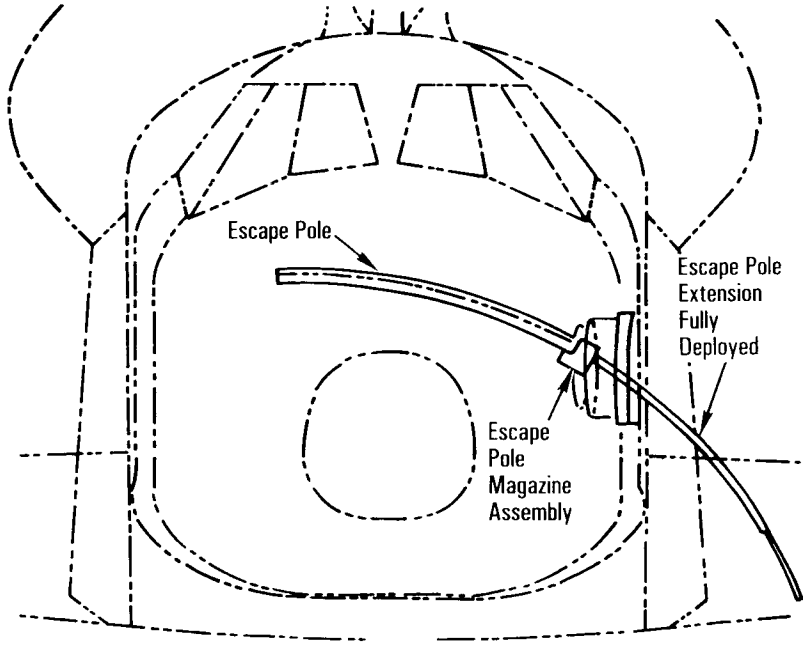


*Side View of Escape Pole Fully Deployed Through Side Hatch*

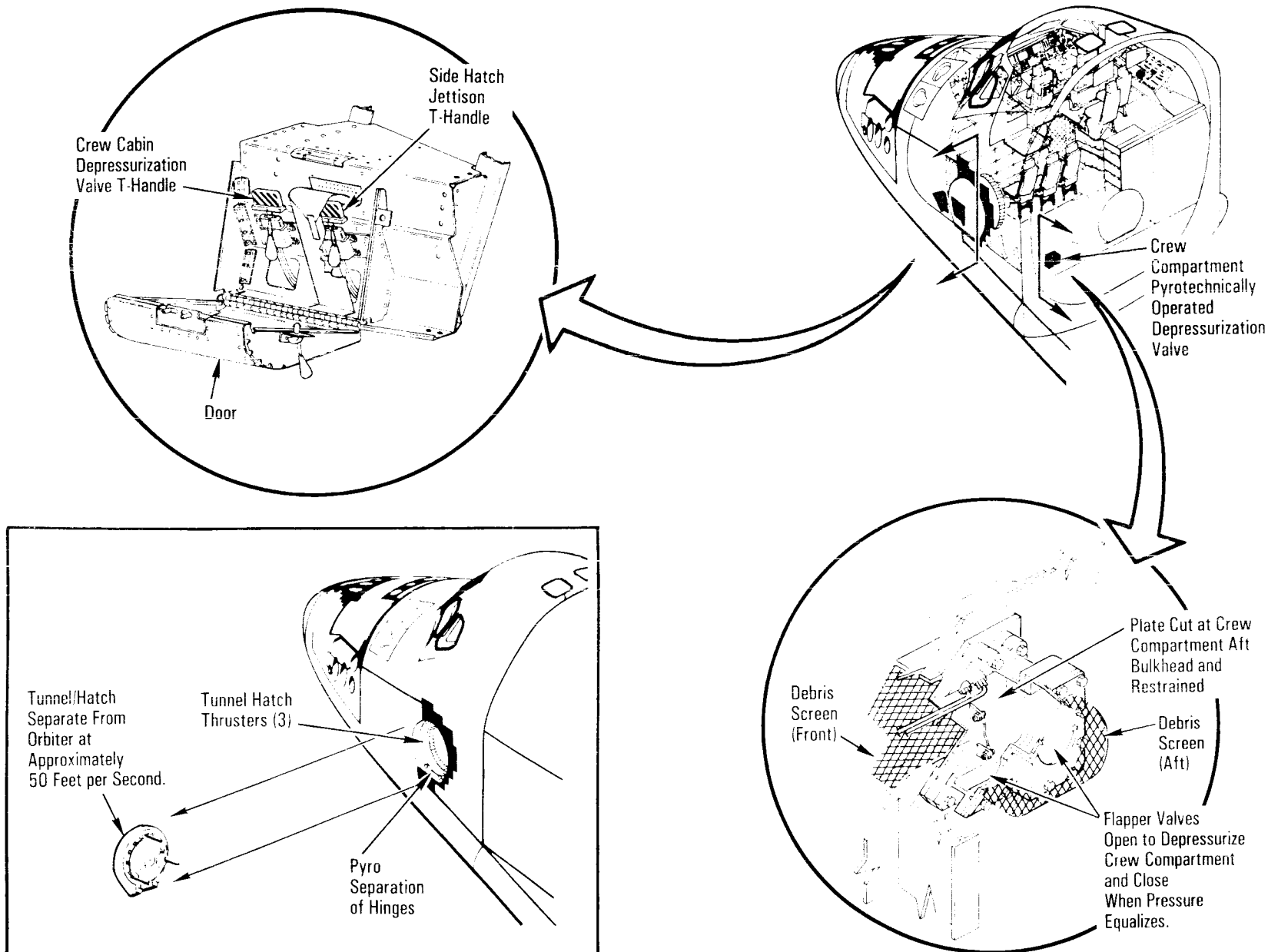


*Side Hatch Jettison*

for the primary avionics software system and the backup flight system for transatlantic-landing and glide-return-to-launch-site abort modes. The changes provide the orbiter with an automatic-mode input by flight crew members through keyboards at the commander's and/or pilot's panel C3, which provides the orbiter with an automatic stable flight for crew bailout. This software

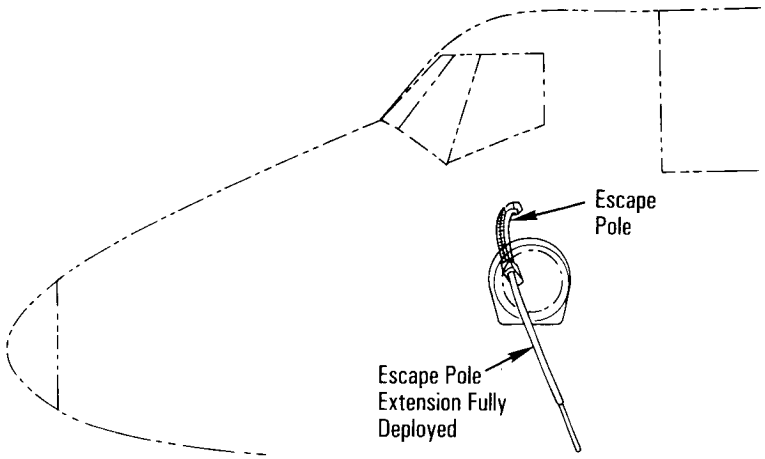


*Side View of Escape Pole Deployed Through Side Hatch*

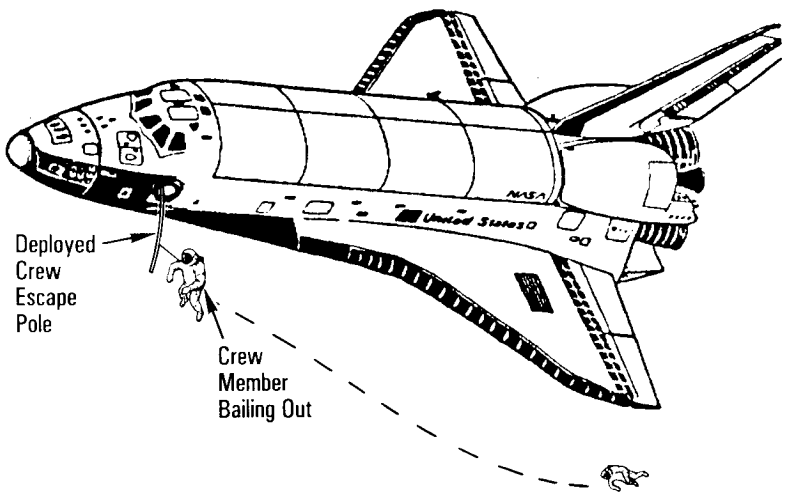


*Crew Bailout Mode—Crew Escape Pole*

change, which is required to allow the flight crew commander's departure, automatically controls the orbiter's velocity and angle of attack to the desired bailout conditions.

The crew would make the escape decision at an altitude of approximately 60,000 feet and would immediately make an input to the flight control system software autopilot mode.

When the orbiter descends to an altitude of approximately 30,000 feet, its airspeed must be decreased to approximately 200 knots (230 mph). At approximately 25,000 feet, a crew member in the middeck (referred to as the jump master and seated in the for-

*U.S. Navy Parachutist Deploying on Escape Pole From C-141 Aircraft at Edwards Air Force Base, California*

ward left seat in the middeck) raises a cover on the left side of the crew compartment middeck at floor level and pulls the T-handle, which activates the pyrotechnics for the depressurization valve at the crew compartment $X_O$ 576 aft bulkhead. This equalizes the crew compartment cabin and outside pressure before the side hatch is jettisoned.

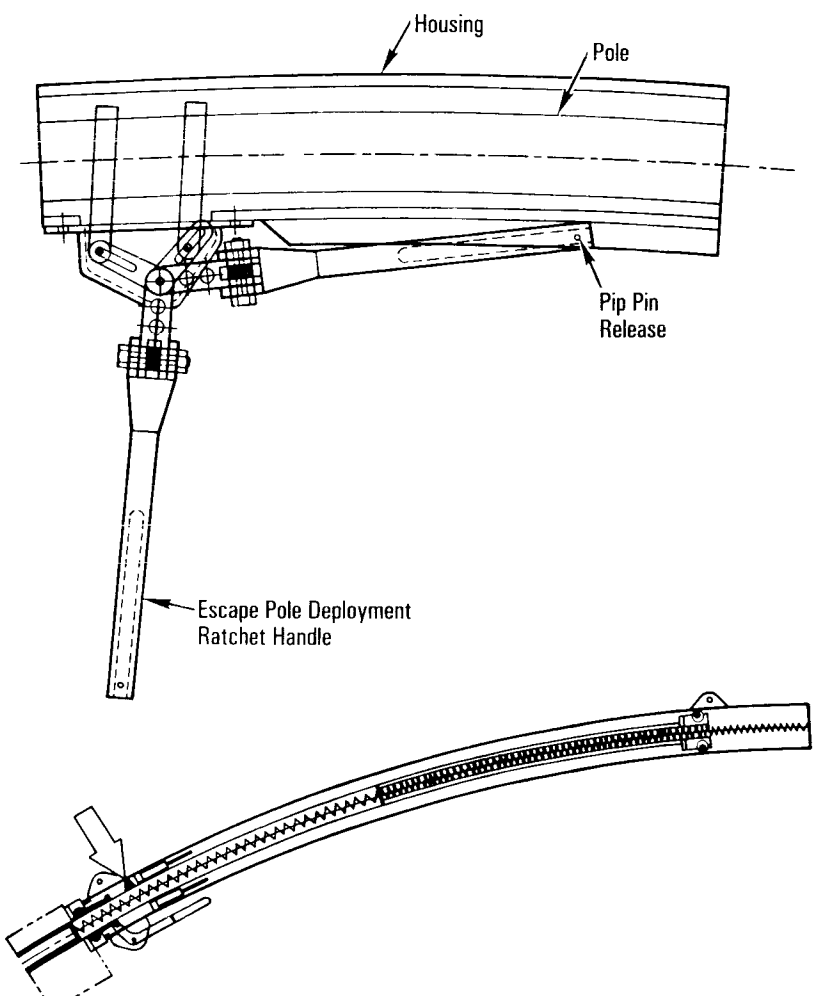


*Escape Pole Stowed*

At approximately 25,000 feet, the software for the automatic autopilot mode changes the orbiter's angle of attack to approximately 15 degrees. This angle of attack must remain nearly constant for approximately three minutes until the orbiter reaches an altitude of approximately 2,000 feet.

At approximately 25,000 feet, the jump master jettisons the side hatch by pulling the hatch jettison T-handle next to the depressurization T-handle. When the T-handle is pulled, pyrotechnics separate the hatch assembly by severing the side hatch hinge, and three pyrotechnic thrusters jettison the tunnel/hatch from the orbiter at a velocity of approximately 50 feet per second.

The jump master pulls the pip pin on the escape pole and pulls the ratchet handle down, which permits the two telescoping sections of the escape pole to be deployed through the hatch opening by spring tension.

A magazine assembly located near the side hatch contains a



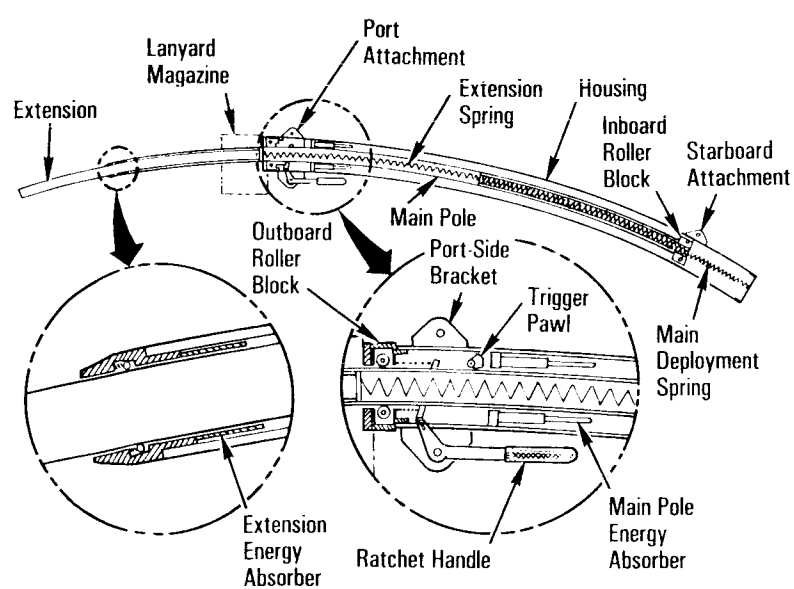


*Escape Pole Deployment*

lanyard assembly for each flight crew member. Each lanyard assembly consists of a hook attached to a Kevlar strap that surrounds the escape pole. Five roller bearings on each strap surround the pole and permit the lanyard to roll freely down the pole.

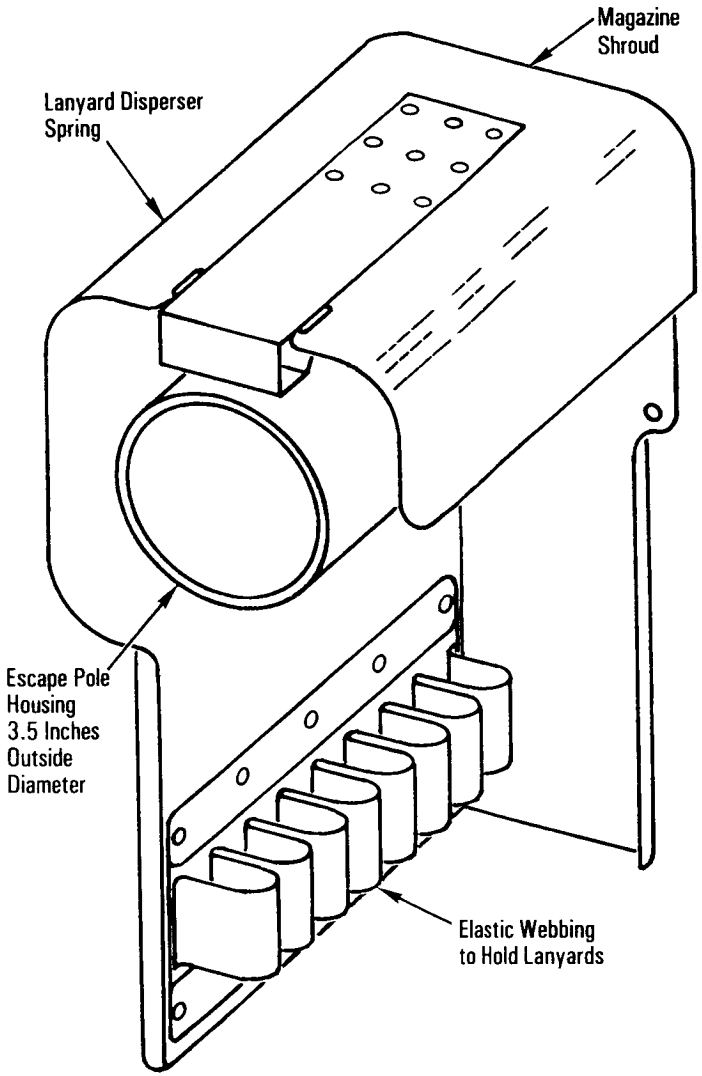


*Escape Pole Magazine Assembly*

Each flight crew member positions himself or herself at the hatch opening and attaches himself or herself to the escape pole via the lanyard hook assembly and jumps out the hatch opening.

Each lanyard assembly incorporates an energy absorber rated at 1,000 pounds. The Kevlar strap consists of two sections of permanent Nomex thread stitching and a section of breakaway Kevlar thread stitching. When the crew member exits the side hatch on the escape pole, the breakaway Kevlar thread stitching can break away, providing the crew member with an energy absorber. The crew member slides down the escape pole and off the end into a free-fall. The escape pole extends downward 9.8 feet from the side hatch and provides the crew member with a trajectory that will carry him or her beneath the orbiter's left wing.

It would take approximately 90 seconds for a maximum crew of eight to bail out. After the first crew member bails out from the middeck, the remaining crew members follow at approximately 12-second intervals until all are out by approximately 10,000 feet altitude.



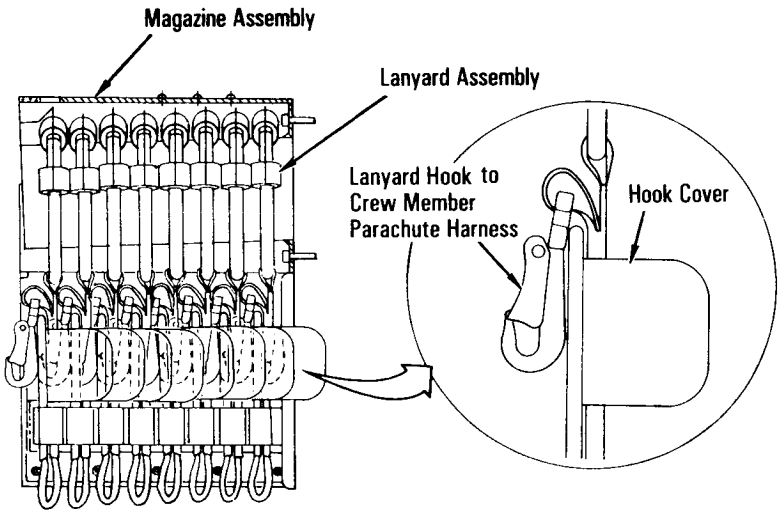


*Escape Pole Magazine Assembly With Lanyards*

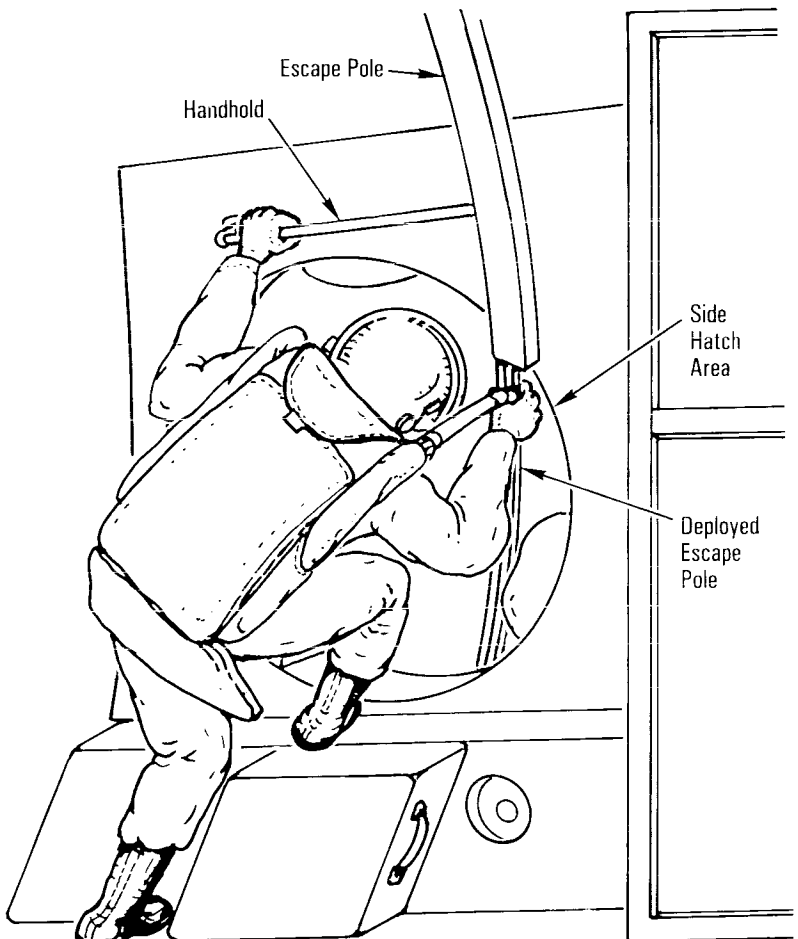


*Crew Bailout on Deployed Escape Pole From Middeck*

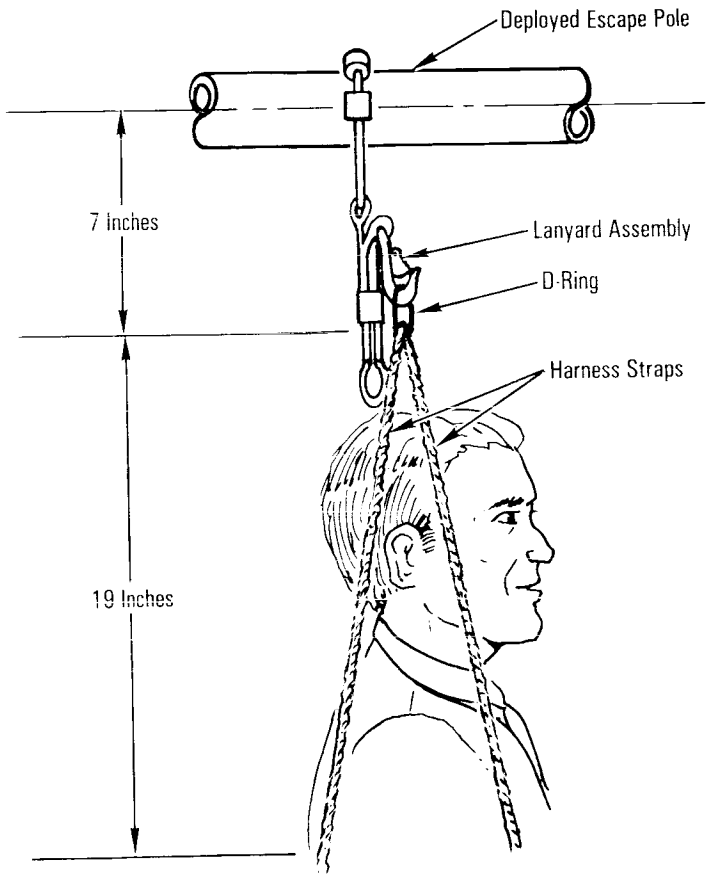


*Escape Pole Magazine Assembly*
*Lanyard Assembly*

A handhold was added in the middeck next to the side hatch to permit the crew members to position themselves through the side hatch opening for bailout.

The escape pole is constructed of aluminum and steel. The arched housing for the pole is 126.75 inches long and is attached to the middeck ceiling above the airlock hatch and at the 2 o'clock position at the side hatch for deployment during launch and entry. The escape pole telescopes from the middeck housing through the side hatch in two sections. The primary extension is 73 inches long, and the end extension is 32 inches long. The diameter of the housing is 3.5 inches. The two telescoping sections are slightly smaller in diameter. The escape pole weighs approximately 241 pounds—248 pounds with attachments.

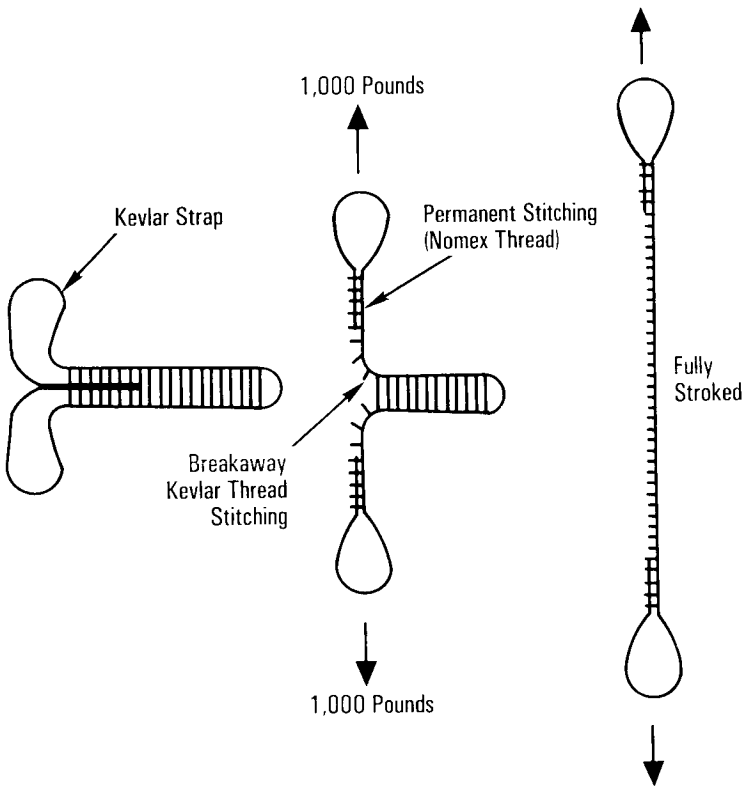


*Escape Pole Magazine Assembly, Lanyard Assembly Energy Absorber*

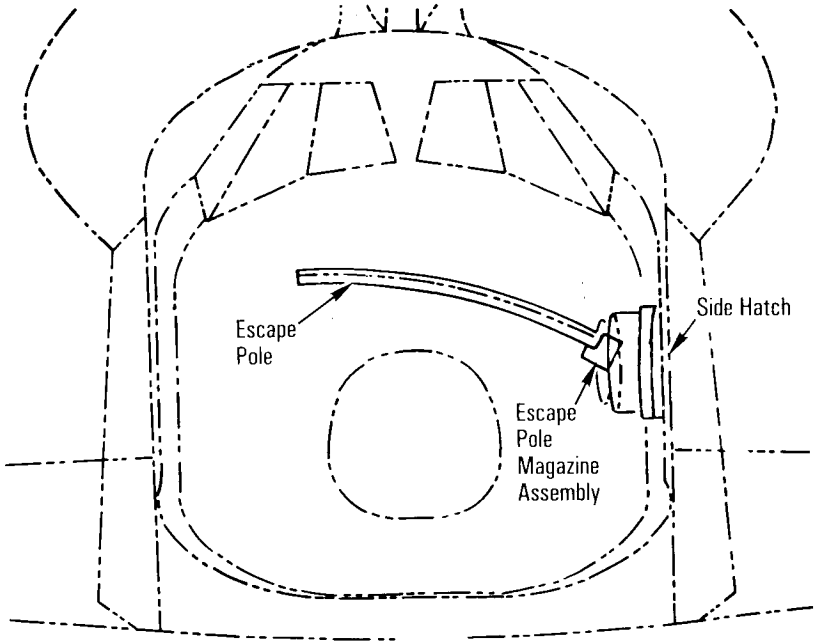


*Escape Pole Ascent/Descent Position, Middeck Side View*

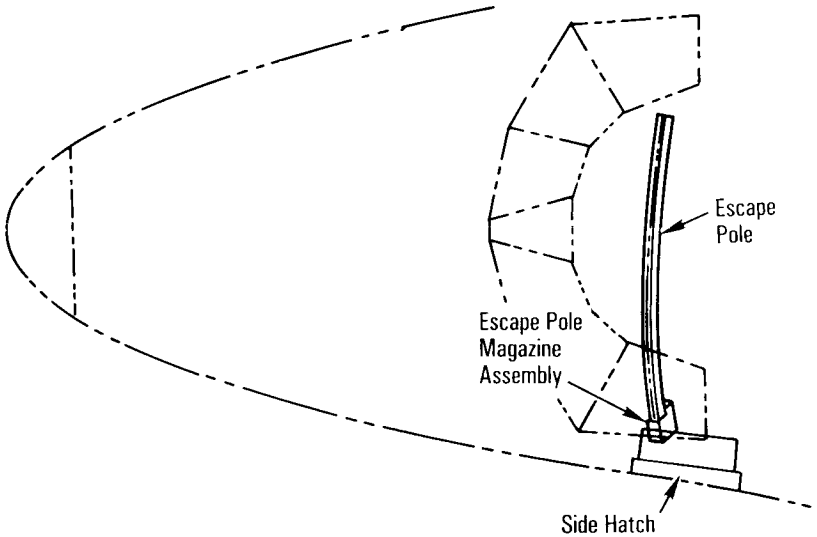


*Escape Pole Ascent/Descent Position, Middeck Top View*

On orbit, the escape pole's primary stowage position requires unpinning the escape pole at the starboard and port attachments, rotating the pole so it is flat against the middeck ceiling and strapping it to the ceiling. An alternate on-orbit stowage approach also requires unpinning the escape pole at the starboard and port attachments, rotating it so it is flat against the middeck ceiling and strapping it to the ceiling.

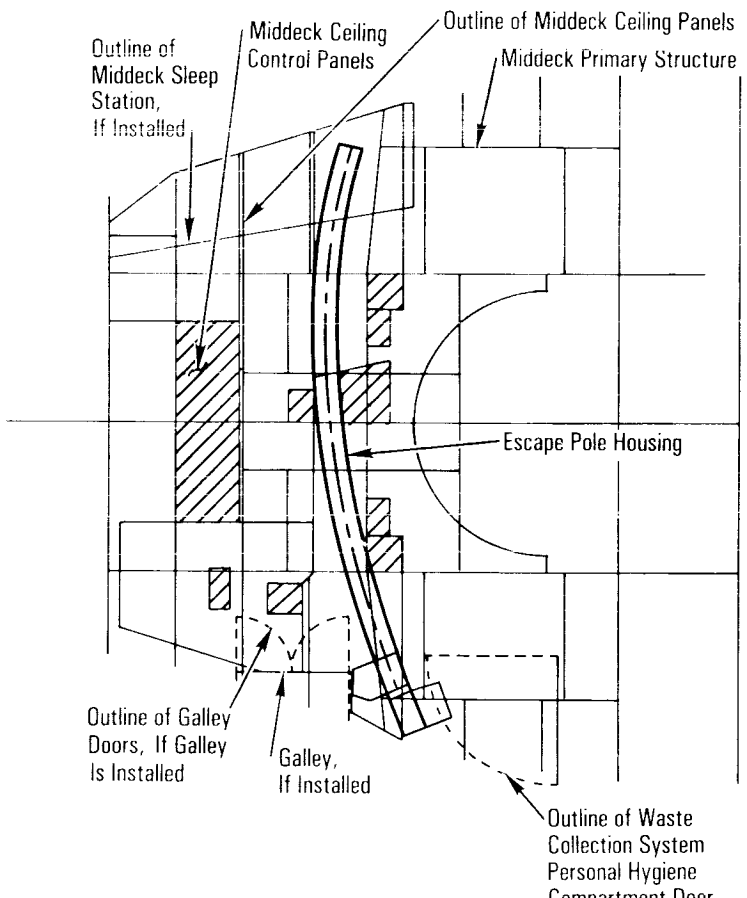


This primary stowage position requires unpinning the escape pole at the starboard and port attachments and rotating it to make the escape pole flat against the middeck ceiling and strapping it to the middeck ceiling.

*Escape Pole Primary On-Orbit Stowage Position*

The side hatch water coolant lines for side hatch thermal conditioning were modified to accommodate the installation of the side hatch pyrotechnic separation system.

The flight crew members' seats were also modified to accom-

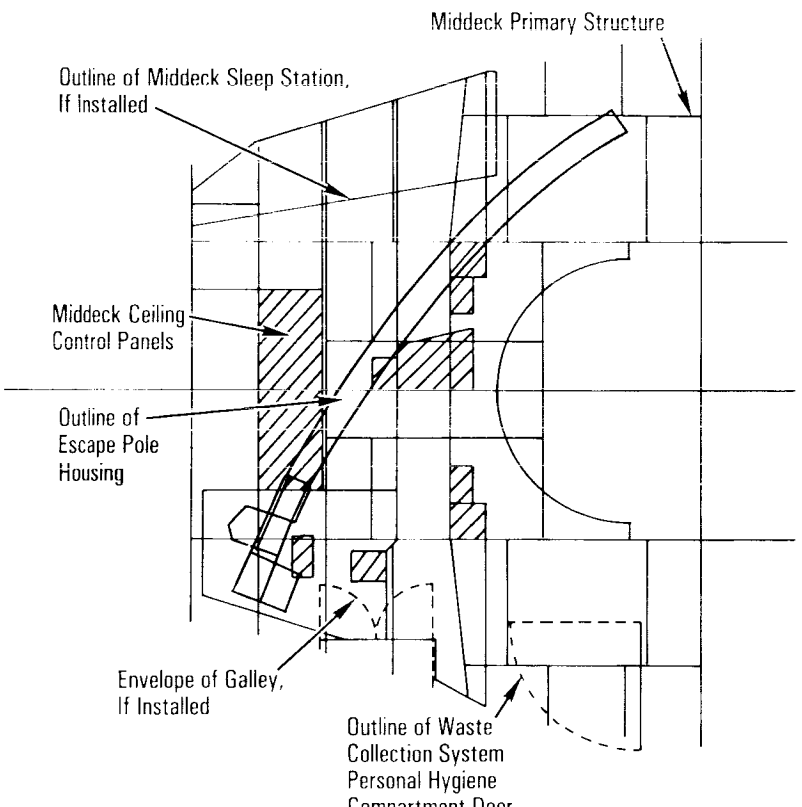


This alternate stowage position requires unpinning the escape pole at the starboard and port attachments and rotating it to make the escape pole flat against the middeck ceiling and then strapping the pole to the middeck ceiling, if the crew desires.

*Escape Pole Alternate On-Orbit Stowage Position*

T = 0.8 Second

*Crew Member Free-fall*

T = 1.1 Seconds

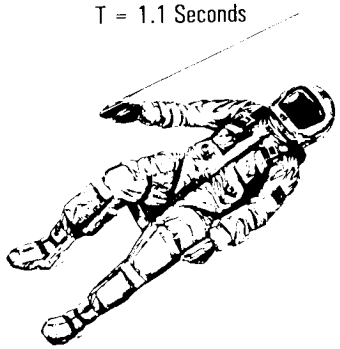

*Crew Member Free-fall*

T = 2.0 Seconds

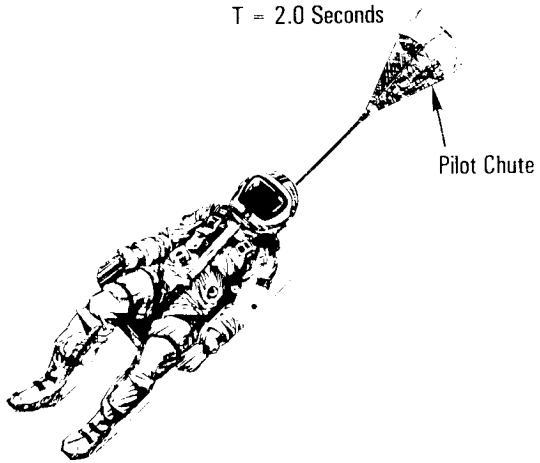


*Pilot Chute Deployment*

T = 2.1 Seconds

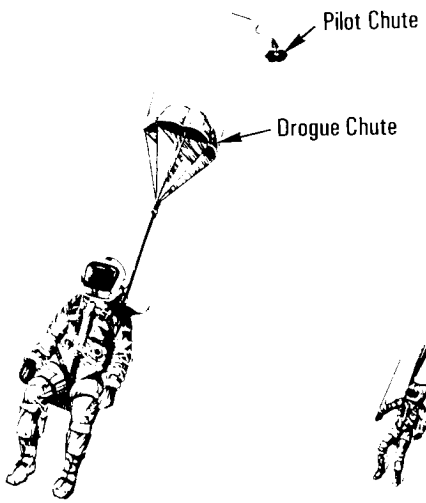


*Drogue Chute Deployed*

T = 4.0 Seconds

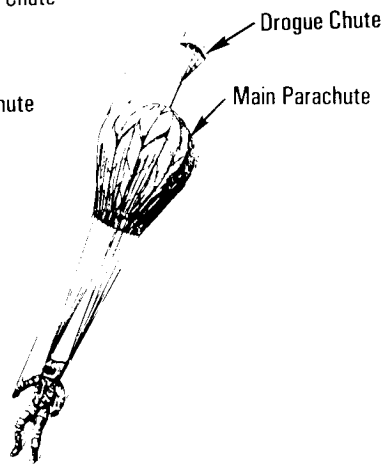


*Main Parachute Deployment*

T = 6.0 Seconds

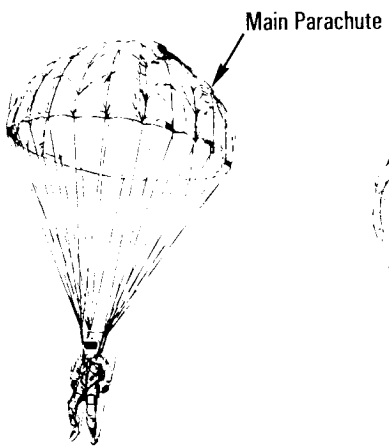


*Main Parachute Fully Deployed*

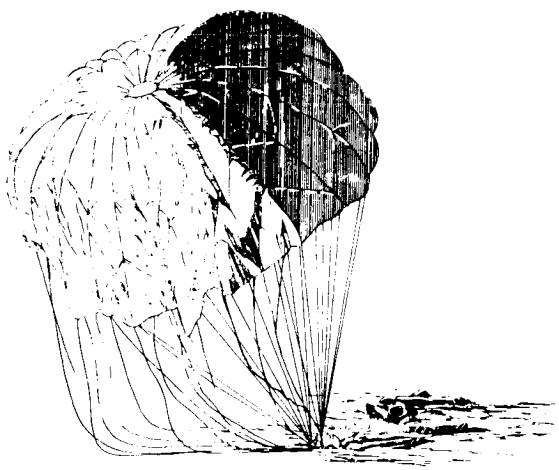

*Crew Member Landing at Sea*

modate the seat/crew altitude protection system suit for each crew member.

The pyrotechnically operated crew compartment depressurization valve consists of two flapper valves with debris screens on the crew compartment side and payload bay side that open to depressurize the crew compartment and close when the pressure equalizes.

It is noted that the hatch jettison features could be used in a landing emergency.

The crew member's altitude protection suit includes an emergency oxygen system, pilot and drogue parachutes that are operated automatically and have manual backup, a main parachute that is operated automatically and has manual backup, a seawater activation release system, flotation devices, a life raft and survival equipment. The crew altitude protection suit and its associated equipment weigh approximately 70 pounds.

The side hatch jettison thruster contractor is OEA, Denver, Colo. The pyrotechnics contractor for the hatch tunnel, hinge and the energy transfer system lines is Explosive Technology, Fairfield, Calif. The escape pole is government-furnished equipment that is supplied by NASA's Johnson Space Center, Houston, Texas, as is the crew altitude protection suit.

## EMERGENCY EGRESS SLIDE

The emergency egress slide provides the orbiter flight crew members with a rapid and safe emergency egress through the orbiter middeck ingress/egress side hatch after a normal opening of the side hatch or after jettisoning of the side hatch at the nominal end-of-mission landing site or at a remote or emergency landing site.

The emergency egress slide replaces the emergency egress side hatch bar, which required the flight crew members to drop approximately 10.5 feet to the ground. This drop could cause injury to the flight crew members and prevent an injured flight crew member from moving to a safe distance from the orbiter.

The emergency egress slide will support return-to-launch-site, transatlantic-landing, abort-once-around and normal end-of-mission landings.

The system will be activated manually by the flight crew rotating the slide from the middeck through the egress side hatch opening onto the side hatch if the hatch has not been jettisoned or through the egress side hatch opening if the hatch has been jettisoned. The flight crew pulls a lanyard to inflate the slide with a self-contained air bottle supply. The slide allows the safe egress of the flight crew members to the ground within 60 seconds after the side hatch is fully opened or jettisoned; accommodates the egress of the flight crew members wearing the launch and entry crew altitude protection system; accommodates the egress of incapacitated crew members; withstands and remains functional in the egress environment for a minimum of six minutes after deployment; and can be released from the side hatch to permit fire truck access.

The slide is installed inside the middeck below the side hatch where it will not inhibit ingress/egress when the system is not required and not interfere with normal on-orbit operations.

The egress slide contractor is Inflatable Systems Inc., a division of OEA, Denver, Colo.

## SECONDARY EMERGENCY EGRESS

The left-hand flight deck overhead window provides the flight crew with a secondary emergency egress route. The left overhead window consists of three panes of glass: an inner pane attached to the crew compartment and a center and outer pane attached to the upper forward fuselage.

When the secondary emergency egress path is utilized, pulling the T-handle located forward of the flight deck center console (between the commander and pilot) activates the overhead window jettison system. When initiated, the center and outer panes are jettisoned as a unit, upward and aft. A time delay in the pyro-

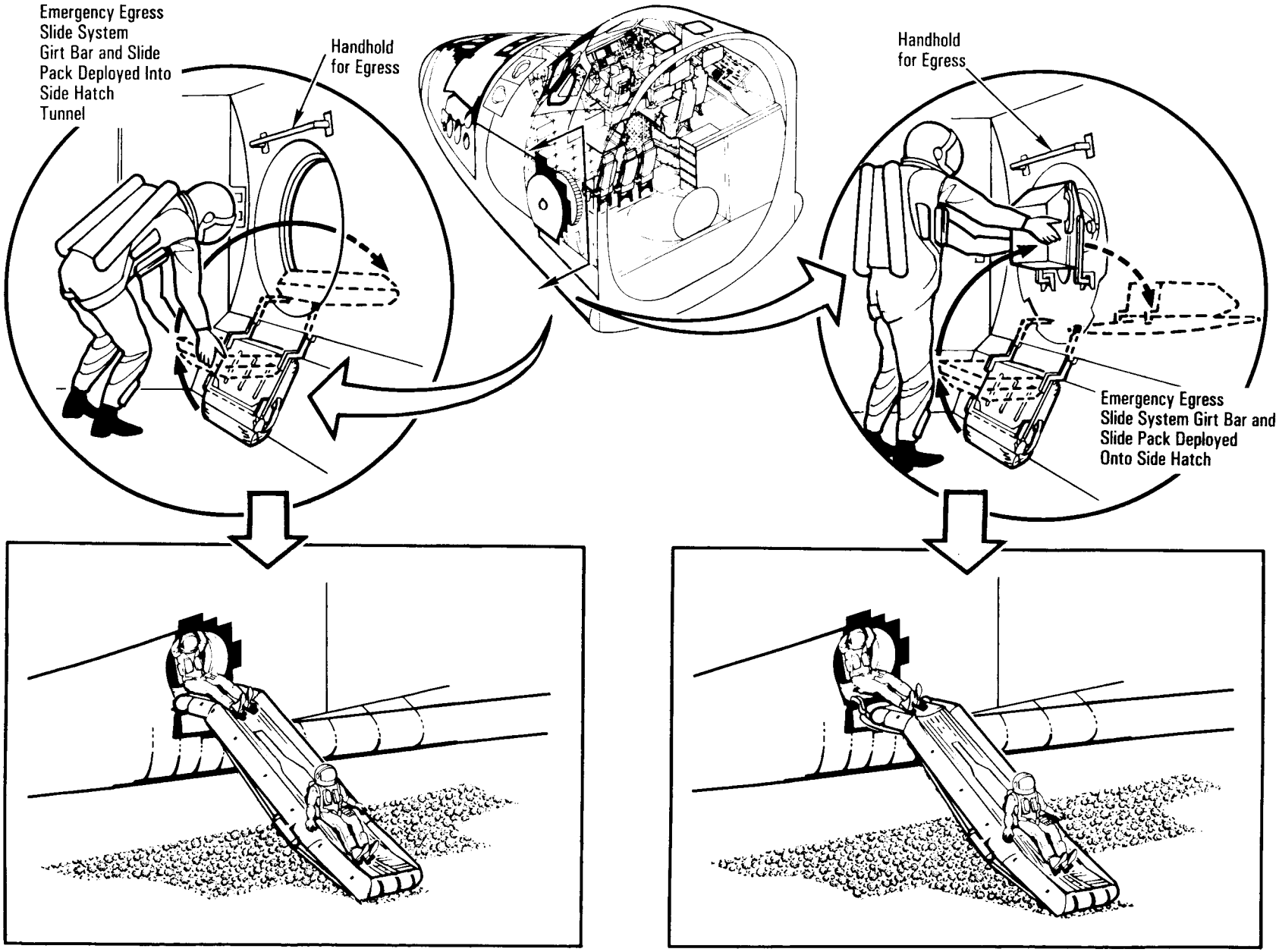


Emergency Egress Slide Deployed With Hatch Jettisoned

Emergency Egress Slide Deployed Without Hatch Jettisoned

*Egress Slide*

technic firing circuit delays the initiation of the jettisoning of the inner pane 0.3 of a second after the center and outer panes are jettisoned. Upon the initiation of the jettisoning of the inner window pane, it rotates downward and aft into the crew compartment aft flight deck on hinges located at the aft portion of the window frame. A capture device attenuates the opening rate and holds the window in position.

The overhead window jettison system consists primarily of expanding tube assemblies, mild detonating fuses, frangible bolts and associated initiators.

The left overhead window jettison system can be initiated from the outside of the orbiter on the right side of the forward fuselage by ground personnel.

Emergency ground descent devices are stowed on the overhead aft flight deck adjacent to the left overhead window. One device is provided for each flight crew member. The emergency ground descent device enables flight crew members to lower themselves to the ground over the side of the orbiter.

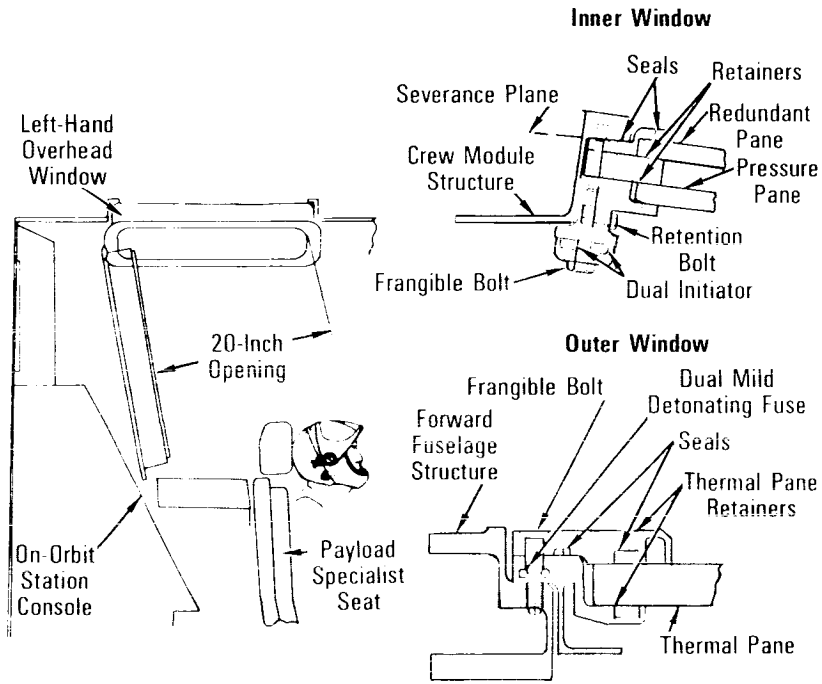


*Flight Deck Emergency Egress Window Exit*

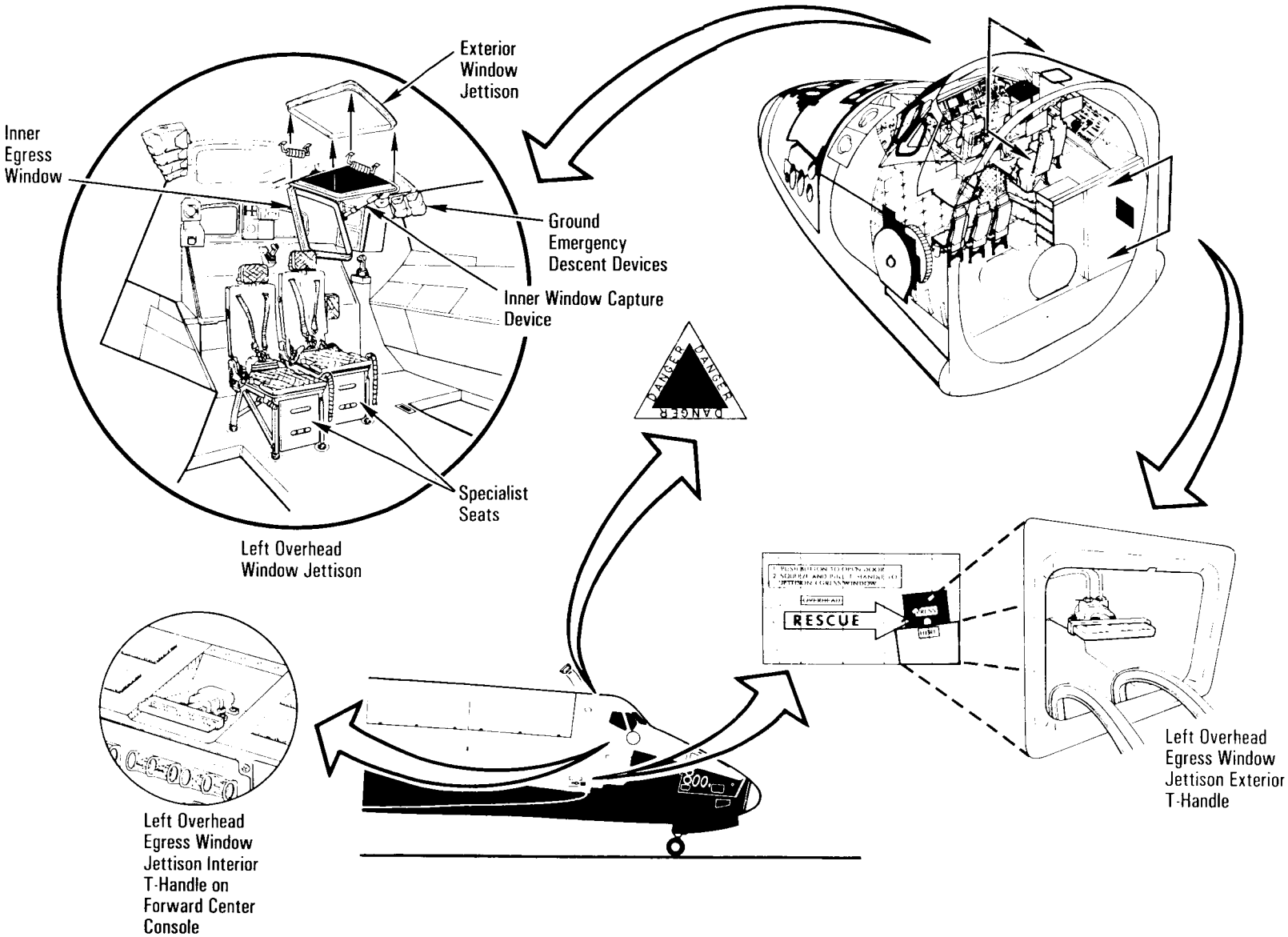


*Secondary Emergency Egress*
*Left Overhead Window Jettison*

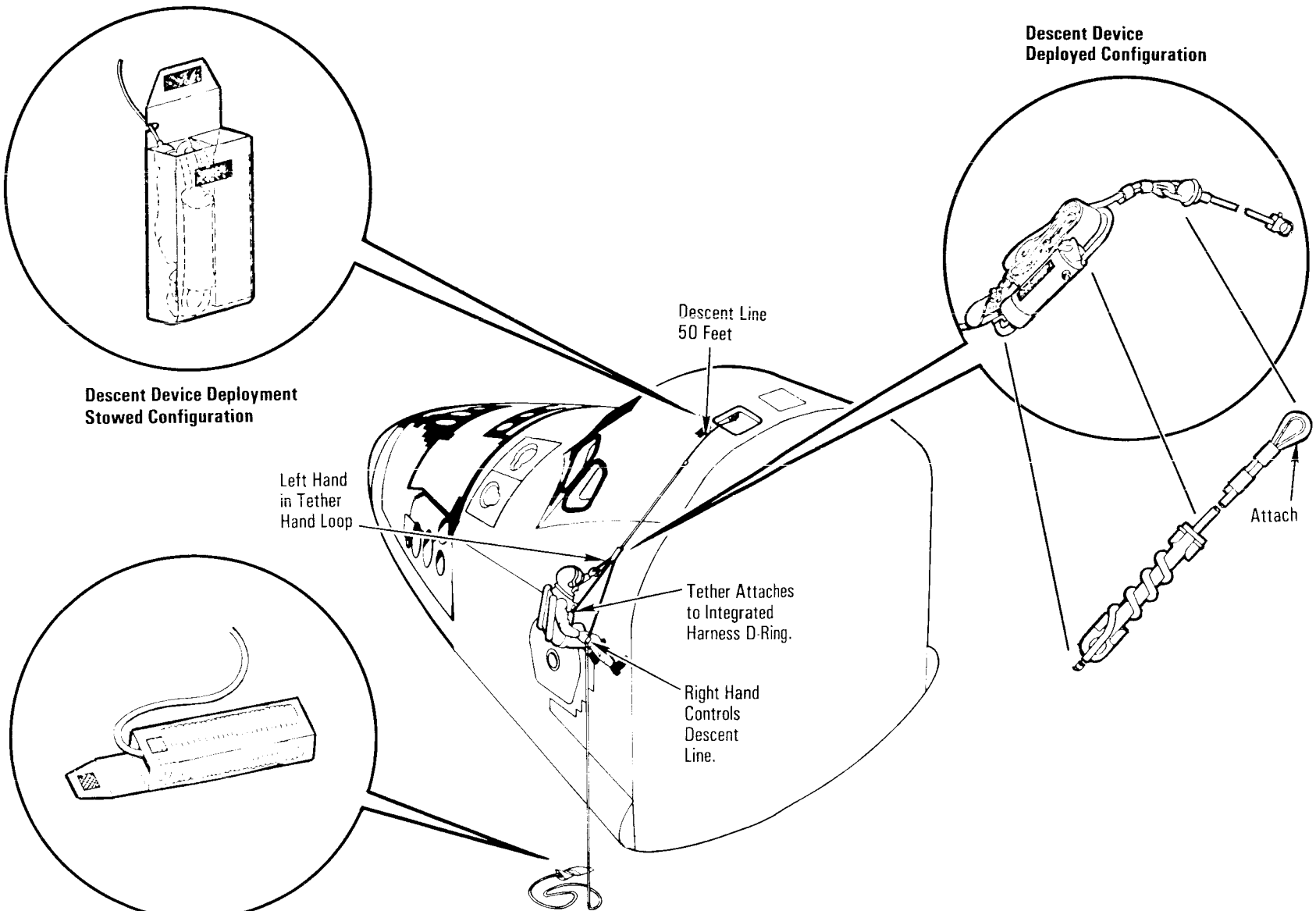




*Secondary Emergency Egress Descent Devices*

## FOOD SYSTEM AND DINING

The middeck of the orbiter is equipped with facilities for food stowage, preparation, and dining for each crew member. The food supply is categorized as either menu food or pantry food. Menu food consists of three daily meals per crew member and provides an average energy intake of approximately 2,700 calories per crew member per day. The pantry food is a two-day contingency food supply that also contains food for snacks and beverages between meals and for individual menu changes. It provides an average energy intake of 2,100 calories per crew member per day. The types of food include fresh, thermostabilized, rehydratable, irradiated, intermediate-moisture, and natural-form food and beverages.

If a payload is installed in the middeck in lieu of the galley, the food preparation system is limited. It consists of the water dispenser, food warmer, food trays and food system accessories.

The water dispenser provides the flight crew with ambient and chilled water for drinking and reconstituting food. The water dispenser consists of a housing assembly, rehydration station, hygiene water quick disconnect and water lines. Two flex lines 10 feet long connect the housing assembly to the ambient and

*Food Types and Preparation Requirements*

| Food Types | Packaging | Preparation Requirements |
|---|---|---|
| • Fresh—Fruits (apples, oranges, bananas, etc.), vegetable sticks (carrots, celery), bread, breakfast rolls and cheese | • Fruits—without wrappers<br>• Vegetable sticks—plastic Zip-lock bags<br>• Bread, breakfast rolls and cheese—original manufacturer wrapper | Ready-to-eat |
| • Thermostabilized—Thermal/heat-processed foods canned or packaged in laminated foil pouches (cheese spread, tuna, beef with barbecue sauce, etc.) | • Cans<br>• Foil-backed plastic pouches | Heat (if required) and remove easy-open, full-panel pullout lid or open with can opener<br>Heat (if required), cut open with scissors |
| • Rehydratable food—Dehydrated food reconstituted with water (scrambled eggs, beef patty, chicken and noodles, etc.) | • Plastic container | Rehydrate, heat (if required), cut open with scissors or knife |
| • Rehydratable beverages—Coffee, lemonade, orange drink, etc. | • Plastic container | Rehydrate, heat (if required), drink from the rehydration valve using a plastic straw with probe, which is inserted in the valve |
| • Irradiated—Foods exposed to ionizing radiation for preservation (meats, etc.) | • Foil-backed plastic pouch | Heat (if required), cut open with scissors |
| • Intermediate moisture—Foods preserved by controlling moisture (dried apricots, peaches, etc.) | • Plastic pouch (bite-size) | Cut open with scissors (ready-to-eat) |
| • Natural form—Nuts, cookies, etc. | • Plastic pouch | Cut open with scissors (ready-to-eat) |

The menu food items for a typical crew member day require approximately 20 packages consisting of the following food types:

- 4 to 7 rehydratables
- 1 to 4 thermostabilized or irradiated
- 8 beverages
- 4 ready-to-eat

*Shuttle Standard Menu (Sample)*

| Meal | Day 1 | Day 2 | Day 3 | Day 4 |
|---|---|---|---|---|
| A | Dried pears (IM)<br>Sausage patty (R)<br>Scrambled eggs (R)<br>Corn flakes (R)<br>Cocoa (B)<br>Orange-pineapple drink (B) | Dried peaches (IM)<br>Granola (R)<br>Breakfast roll (NF)<br>Vanilla instant breakfast (B)<br>Orange-grapefruit drink (B) | Dried apricots (IM)<br>Seasoned scrambled eggs (R)<br>Bran flakes (R)<br>Cocoa (B)<br>Orange juice mix (B) | Dried pears (IM)<br>Beef patty (R)<br>Breakfast roll (NF)<br>Grapefruit drink (B) |
| B | Ham (T)<br>Bread (NF)<br>Diced peaches (T)<br>Pecan cookies (NF)<br>Apple drink (2X) (B) | Salmon (T)<br>Bread (NF)<br>Diced pears (T)<br>Butter cookies (NF)<br>Lemonade (2X) (B) | Peanut butter (T)<br>Jelly (T)<br>Bread (NF)<br>Fruit cocktail (T)<br>Fruitcake (T)<br>Tea w/lemon and sugar (2X) (B) | Ham (T)<br>Cheese spread (T)<br>Bread (NF)<br>Pineapple (T)<br>Cashews (NF)<br>Strawberry drink (2X) (B) |
| C | Chicken a la king (T)<br>Chicken and rice (R)<br>Asparagus (R)<br>Chocolate pudding (T)<br>Grape drink (B) | Beef w/BBQ sauce (T)<br>Potatoes au gratin (R)<br>Green beans w/mushrooms (R)<br>Butterscotch pudding (T)<br>Orange drink (B) | Frankfurters (T)<br>Potato patty (R)<br>Green beans and broccoli (R)<br>Strawberries (R)<br>Vanilla pudding (T)<br>Tropical punch (B) | Meatballs w/BBQ (T)<br>Rice pilaf (R)<br>Italian vegetables (R)<br>Chocolate pudding (T)<br>Apple drink (B) |

| | Day 5 | Day 6 | Day 7 | |
|---|---|---|---|---|
| A | Dried peaches (IM)<br>Sausage patty (R)<br>Mexican scrambled eggs (R)<br>Granola w/raisins (R)<br>Cocoa (B)<br>Orange-pineapple drink (B) | Dried apricots (IM)<br>Beef patty (R)<br>Seasoned scrambled eggs (R)<br>Chocolate instant breakfast (B)<br>Orange-grapefruit drink (B) | Dried peaches (IM)<br>Beef patty (R)<br>Mexican scrambled eggs (R)<br>Granola w/blueberries (R)<br>Orange juice mix (B) | |
| B | Dried beef (NF)<br>Bread (NF)<br>Applesauce (T)<br>Peanuts (NF)<br>Tea w/lemon and sugar (2X) (B) | Tuna (T)<br>Bread (NF)<br>Lemon pudding (T)<br>Shortbread cookies (NF)<br>Almonds (NF)<br>Apple drink (2X) (B) | Chicken salad spread (T)<br>Bread (NF)<br>Vanilla pudding (T)<br>Chocolate-covered cookies (NF)<br>Lemonade (2X) (B) | |
| C | Turkey and gravy (T)<br>Turkey tetrazzini (R)<br>Cauliflower w/cheese (R)<br>Brownies (NF)<br>Lemonade (B) | Ground beef w/spice sauce (T)<br>Potato patty (R)<br>Broccoli au gratin (R)<br>Diced pears (T)<br>Orange drink (B) | Shrimp cocktail (R)<br>Beef and gravy (T)<br>Macaroni and cheese (R)<br>Green beans w/mushrooms (R)<br>Peach ambrosia (R)<br>Tea w/lemon and sugar (B) | |

Abbreviations: T—thermostabilized, IM—intermediate moisture, R—rehydratable, NF—natural form, B—beverage (rehydratable)

*Sample Contingency/Pantry*

| | |
|---|---|
| **Beverages (166)** | |
| Apricot-peach drink | 7 |
| Citrus drink | 7 |
| Cocoa | 10 |
| Coffee (B) | 16 |
| Coffee (S) | 8 |
| Coffee (C&S) | 20 |
| Grapefruit drink | 7 |
| Instant breakfast, chocolate | 2 |
| Instant breakfast, vanilla | 2 |
| Lemonade | 21 |
| Orange juice mix | 20 |
| Orange-mango drink | 25 |
| Tea | 7 |
| Tea with lemon and artificial sweetener | 14 |
| **Snacks (133)** | |
| Almonds | 10 |
| Apricots (intermediate moisture) | 7 |
| Dried beef | 7 |
| Butter cookies | 10 |
| Candy-coated chocolates | 10 |
| Candy-coated peanuts | 17 |
| Candy-coated mints | 14 |
| Cashews | 13 |
| Granola bars | 7 |
| Jelly | 3 |
| Peaches (intermediate moisture) | 7 |
| Peanut butter | 1 |
| Peanuts | 13 |
| Soda crackers | 14 |
| Drinking Water Containers | 14 |

| | |
|---|---|
| **Rehydratables (45)** | |
| Chicken consomme | 7 |
| Chicken rice soup | 7 |
| Cream of mushroom soup | 7 |
| Turkey tetrazzini | 7 |
| Shrimp cocktail | 7 |
| Green beans with mushrooms | 4 |
| Italian vegetables | 3 |
| Broccoli au gratin | 3 |
| **Thermostabilized Food (24)** | |
| Beef steak | 7 |
| Frankfurters | 4 |
| Turkey and gravy | 7 |
| Ham salad spread | 2 |
| Tuna salad spread | 2 |
| Chicken salad spread | 1 |
| Turkey salad spread | 1 |
| **Fresh Food Locker** | |
| Apples | |
| • red | 9 |
| • green | 14 |
| Bread, whole wheat | 6 loaves |
| Carrott sticks | 2 |
| Celery sticks | 2 |
| Cheese | 2 |
| Crackers | 14 |
| Oranges | 7 |
| Breakfast rolls | 24 |

chilled potable water system. Both lines have quick disconnects. A 12-foot-long flex line with a quick disconnect and water-dispensing valve supplies water for personal hygiene. The water selector valve *amb* position provides ambient water to the rehydration station between 65 and 75 F. The *off* position prevents water from flowing to the rehydration station (it does not shut off water flow to the personal hygiene water outlet quick disconnect). The *chd* water position provides chilled water to the rehydration station between 45 and 55 F.

Depressing the hygiene water valve handle allows a constant flow of ambient water. Releasing the handle prevents water flow. The locked-open position allows a constant flow of ambient water without holding the handle.

The rehydration station is an electronic dispensing system that interfaces directly with food and beverage packages to provide rehydration capability and drinking water for flight crew members. The system dispenses 2, 3, 4 and 8 ounces of water through a replaceable needle. A spare needle is stowed at the rear of the rehydration unit and another in the in-flight maintenance middeck locker. The needles are removed and installed with a 3/8-inch open-end wrench. Depressing the *pwr* push button at the rehydration station provides power to the electronic rehydration system and an indicating light is illuminated within the switch upon activation. Depressing the *pwr* push button again deactivates the system. The *water quantity* rotary switch's *2*, *3*, *4* and *8* positions provide 2, 3, 4 and 8 ounces of water, respectively. The needle must be inserted into the package before depressing the *fill* push button to prevent free water from being dispensed into the crew cabin environment. Depressing the *fill* push button activates the electronic filling mechanism when the water quantity selection has been made. A light comes on within the *fill* switch during filling and goes out when filling is complete. The operation is automatically deactivated. The bypass valve provides a continuous flow of water to the food rehydration unit when the handle is depressed or lifted to the up locked-open position.

The rehydratable food container is inserted into the rehydration station, the water dispenser needle penetrates the rubber septum on the rehydratable container, and the specified amount of water is discharged into the container. The rehydrated food is mixed and heated, if required. The rehydrated food container is

*Available Shuttle Food and Beverage List*

**Foods**

Almonds (NF)
Applesauce (T)
Apricots, dried (IM)
Asparagus (R)

Barbecue beef with sauce (R)
Beef almondine (R)
Beef with BBQ sauce (T)
Beef and gravy (T)
Beef, ground with spice sauce (T)
Beef patty (R)
Beef steak (T)
Beef stroganoff with noodles (R)
Bran flakes (R)
Bread (NF)
Breakfast roll (NF)
Broccoli au gratin (R)
Brownies (NF)
Butter cookies (NF)
Butterscotch pudding (T)

Candy-coated chocolates (NF)
Candy-coated peanuts (NF)
Cashews (NF)
Cauliflower with cheese (R)
Cheese spread (T)
Chicken a la king (T)
Chicken consomme (R)
Chicken and rice (R)
Chicken salad spread (T)
Chili macaroni with beef (R)
Chocolate-covered cookie (NF)
Chocolate mints (NF)
Chocolate pudding (T)
Corn, green beans and pasta (R)
Corn flakes (R)

Dried beef (IM)

Eggs, scrambled (R)
Eggs, seasoned scrambled (R)
Eggs, Mexican scrambled (R)

Frankfurters (T)
Fruit bars, in suit (IM)
Fruitcake (T)
Fruit cocktail (T)

Graham crackers (NF)
Granola cereal (R)
Granola cereal with blueberries (R)
Granola cereal with raisins (R)
Granola bar (NF)
Green beans and broccoli (R)
Green beans with mushrooms (R)

Ham (T)
Ham salad sandwich spread (T)

Italian vegetables (R)

Jam/jelly (IM)

Lemon pudding (T)
Life Savers (NF)

Macadamia nuts (NF)
Macaroni and cheese (R)
Meatballs with BBQ sauce (T)
Mushroom soup (R)

Noodles and chicken (R)

Oatmeal with raisins and spice (R)

Peach ambrosia (R)
Peaches, diced (T)
Peaches, dried (IM)
Peanut butter (T)
Peanuts (NF)
Pears, diced (T)
Pears, dried (IM)
Pecan cookies (NF)
Pineapple (T)
Potatoes au gratin (R)
Potato patty (R)

Rice Krispies (R)
Rice pilaf (R)

Salmon (T)
Sausage patty (R)
Shortbread cookies (NF)
Shrimp cocktail (R)
Shrimp creole (R)
Soda crackers (NF)
Spaghetti with meat sauce (R)
Spinach, creamed (R)
Strawberries (R)
Sweet 'n' sour chicken (R)

Teriyaki chicken (R)
Trail mix (NF)
Tuna (T)
Tuna salad spread (T)
Turkey and gravy (T)
Turkey salad spread (T)
Turkey tetrazzini (R)

Vanilla pudding (T)

**Beverages**

Apple drink
Cherry drink with artificial sweetener
Citrus drink
Cocoa
Coffee, black
Coffee with artificial sweetener
Coffee with cream
Coffee with cream and artificial sweetener
Coffee with cream and sugar
Coffee with sugar
Grape drink
Grape drink with artificial sweetener
Grapefruit drink
Instant breakfast, chocolate
Instant breakfast, strawberry
Instant breakfast, vanilla
Lemonade
Lemonade with artificial sweetener
Lemon-lime drink
Orange drink
Orange drink with artificial sweetener
Orange juice mix
Orange-grapefruit drink
Orange-mango drink
Orange-pineapple drink
Peach drink
Pineapple drink
Strawberry drink
Tea
Tea with artificial sweetener
Tea with cream
Tea with lemon
Tea with lemon and artificial sweetener
Tea with lemon and sugar
Tea with sugar
Tropical punch
Tropical punch with artificial sweetener

**Condiments**

Catsup
Mustard
Pepper
Salt
Hot pepper sauce
Mayonnaise
Taco sauce

Abbreviations: T—thermostabilized, IM—intermediate moisture, R—rehydratable, FD—freeze-dried, NF—natural form.

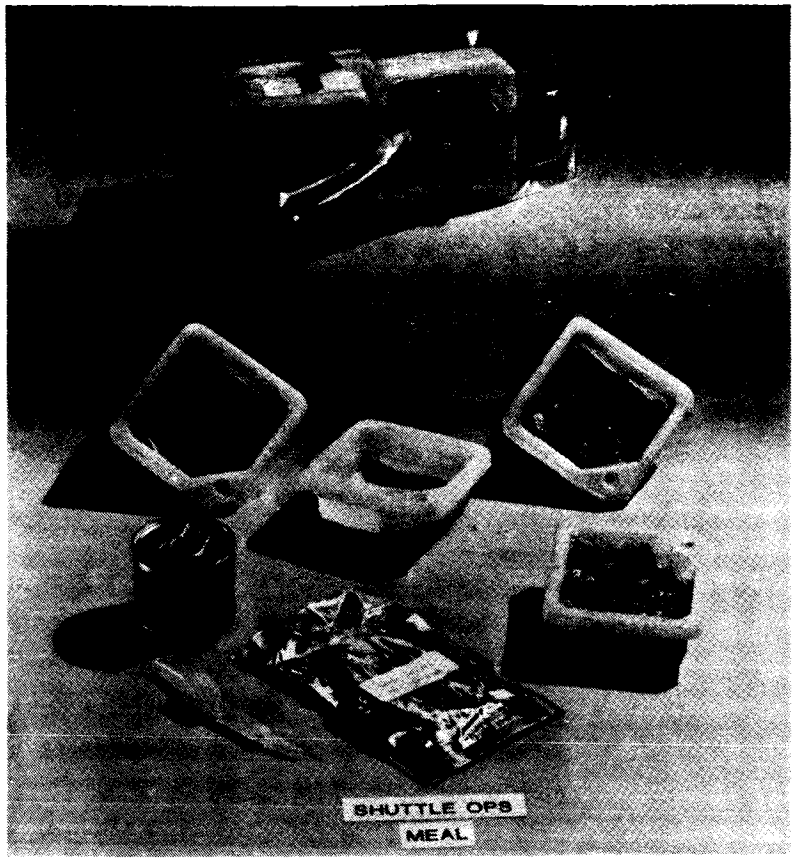


*Menu Food*

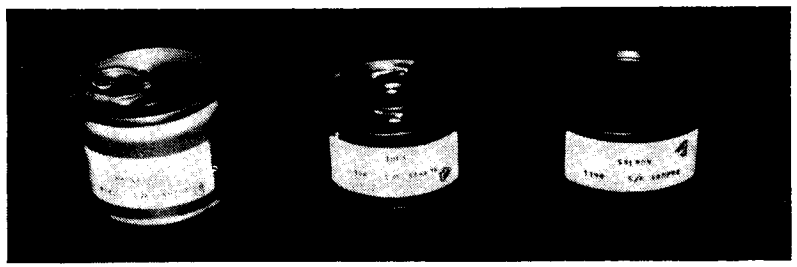

*Food in Cans*

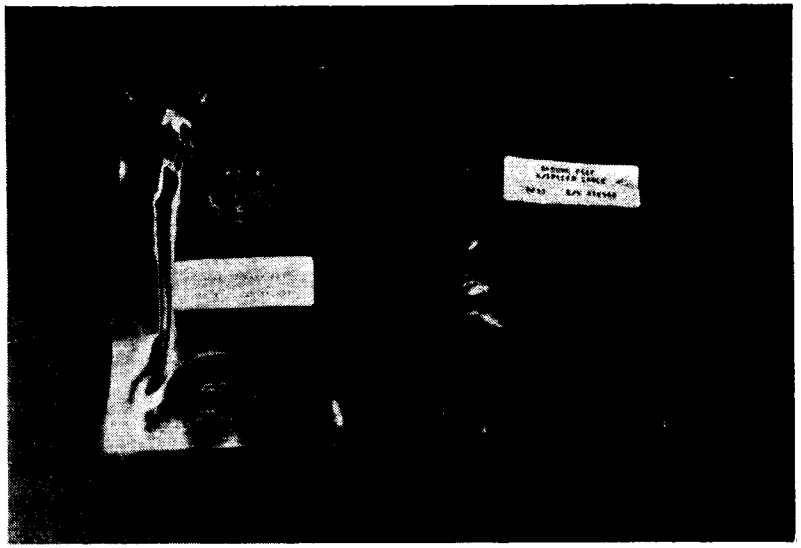

*Thermostabilized Food (Foil-Backed Plastic Packages)*

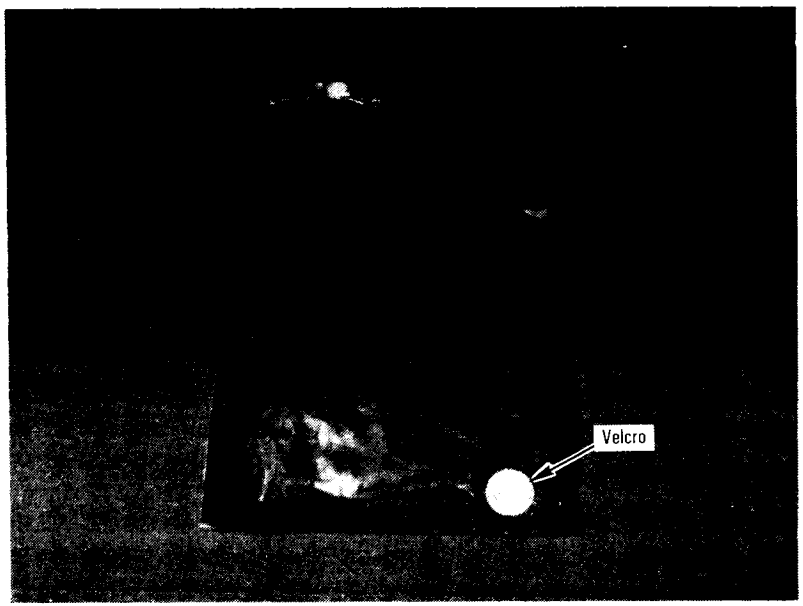


*Thermostabilized Food (Foil-Backed Plastic Packages)*

*Natural Form*

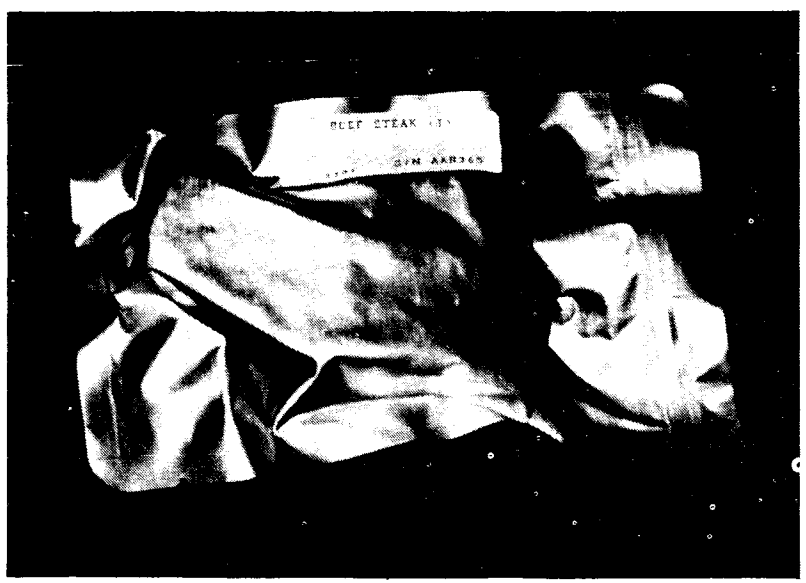

*Irradiated Food*

*Food System Accessories*

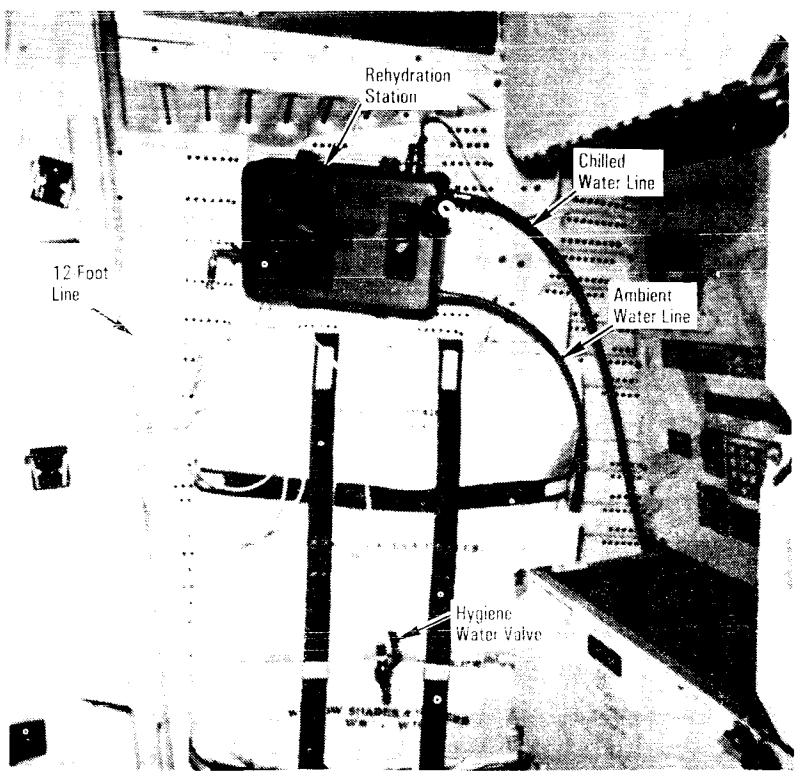


*Water Dispenser*

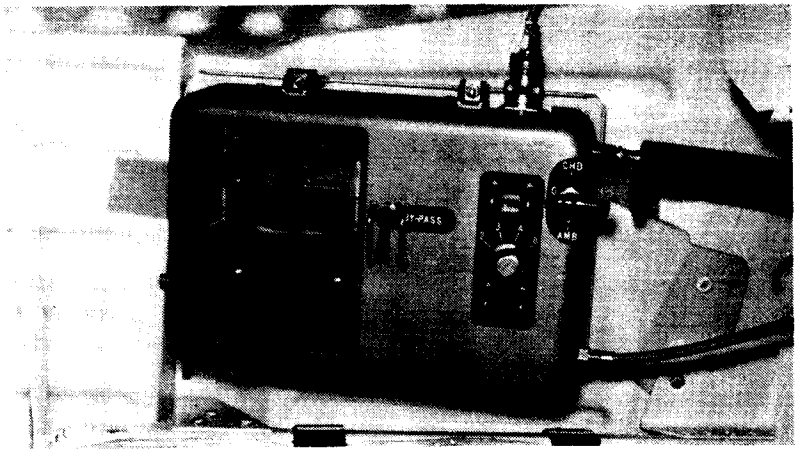

*Water Dispenser*

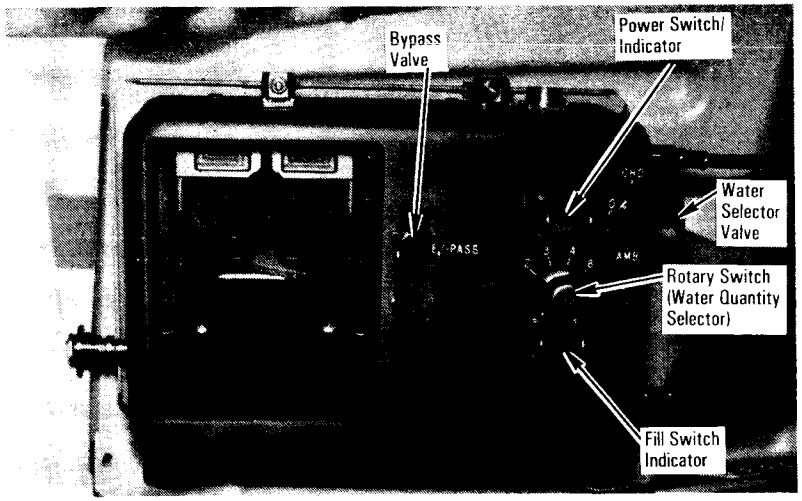


*Water Dispenser Controls*

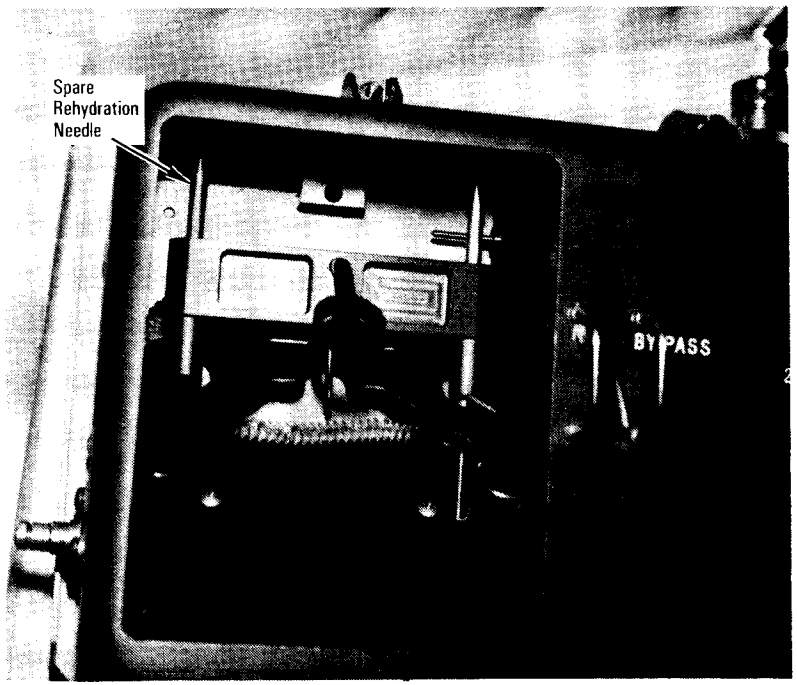


*Water Dispenser*

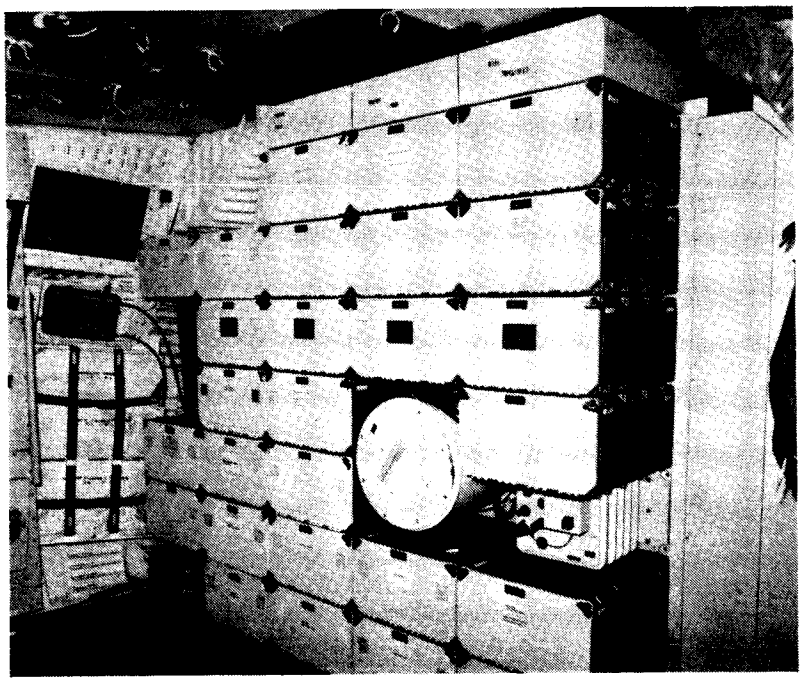

*Water Dispenser Use Location*

opened by grasping the center portion of the lid liner with the fingers, piercing the liner with a knife or scissors and pulling the liner up to aspirate air. While grasping the center of the liner, the astronaut swings container in a gentle forward and backward semicircular motion to place food contents at the bottom of the container. The inside edge of the lid liner (three sides) is cut with a knife or scissors to expose the food.

The rehydratable beverage container is inserted into the rehydration station, the water dispenser needle penetrates the rubber septum on the rehydratable container, and the specified amount of water is discharged into the container. The rehydratable beverage is mixed and heated, if required. A plastic clip is affixed to the straw in the closed position, the probe end of the straw is inserted into the container rubber septum, the straw is placed in the mouth, the clip is released, and the beverage is drunk. All straws are color-coded for each crew member.

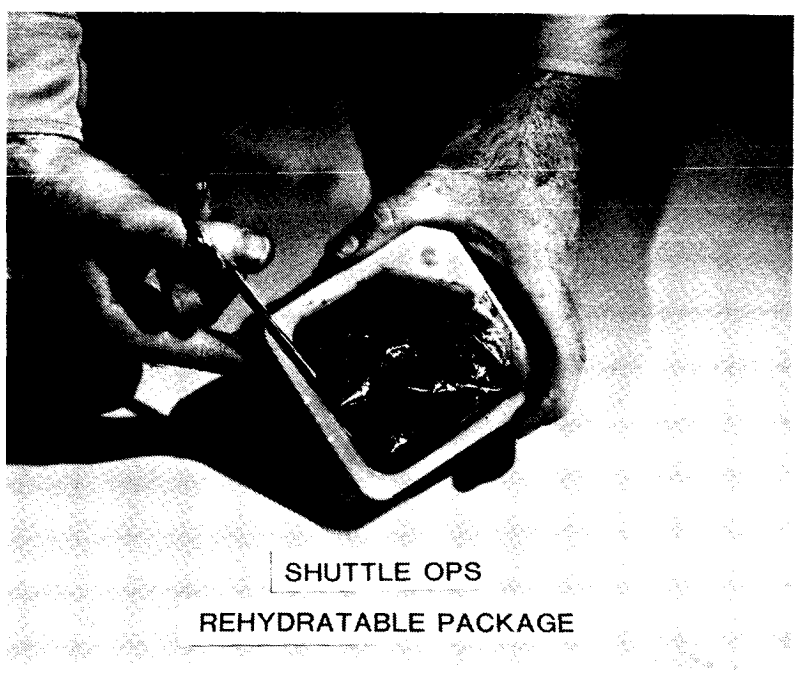


*Rehydratable Food Procedure*

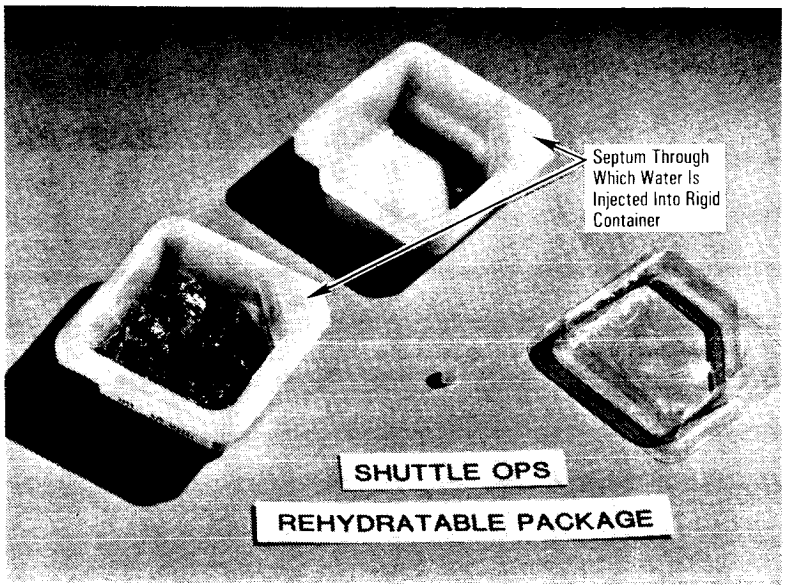


*Rehydratable Food*



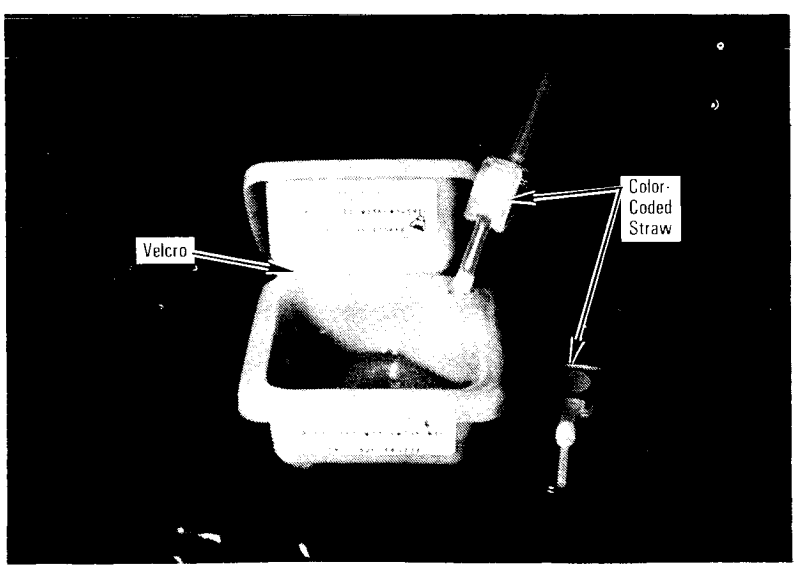


*Rehydratable Drink*

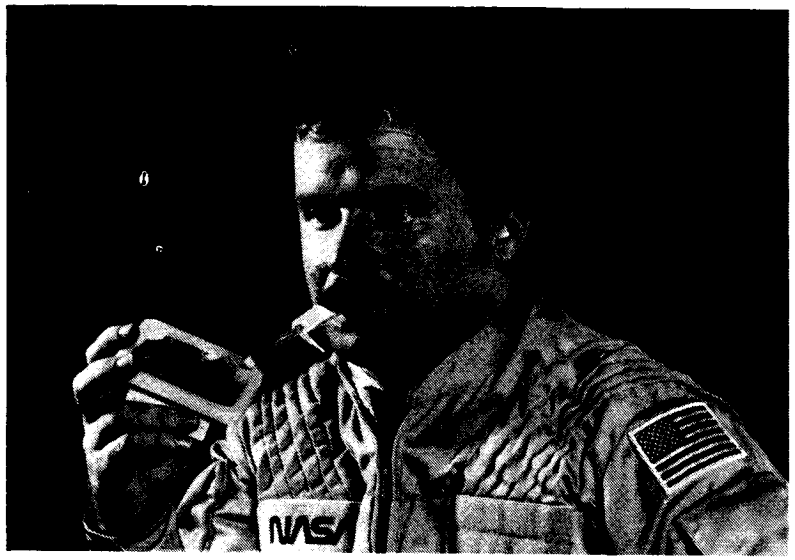


*Rehydratable Beverage Drinking Procedure*

Food trays are kept in a middeck stowage locker (or in the galley, if installed) at launch and are removed and installed in the use locations during preparations for the first meal. The tray is a clear, anodized aluminum sheet that restrains food and accessories during dining. The trays are color-coded for each crew member. Velcro on the bottom of the food trays allows them to be attached to the front of the middeck lockers (or the galley door, if installed) for food preparation or dining. The straps will also hold the trays on the crew member's leg for dining. A cutout on the tray allows three rehydratable food packages to be secured to the tray. Another cutout with rubber strips adapts to various-sized food packages, including cans, pouches and rehydratable food packages. Two magnetic strips hold eating utensils and two 0.75-inch-wide binder clips on the tray retain such things as condiment packets and wipes. Accessories used during food preparation and dining include condiments, gum and candy, vitamins, wet wipes, dry wipes, drinking containers, drinking straws, utensils and a reentry kit that contains salt tablets and long straws.

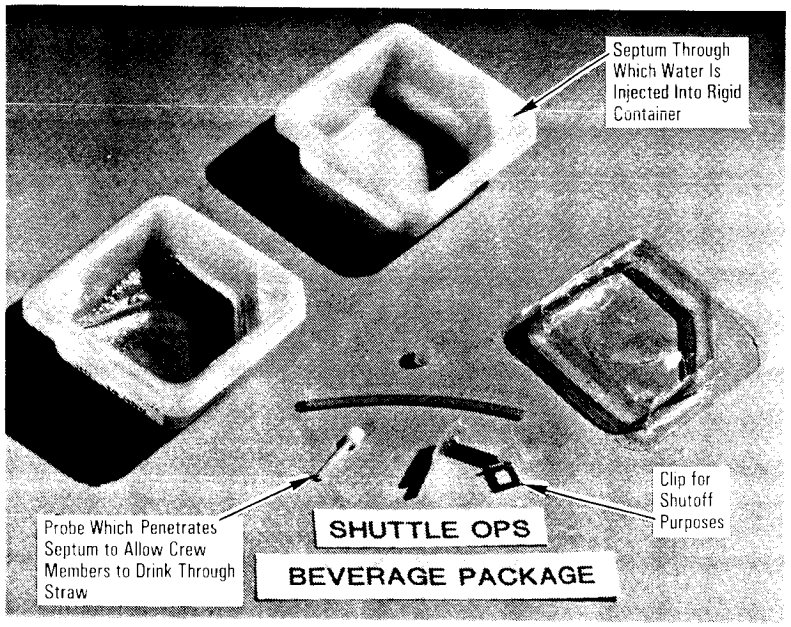


*Rehydratable Drink*

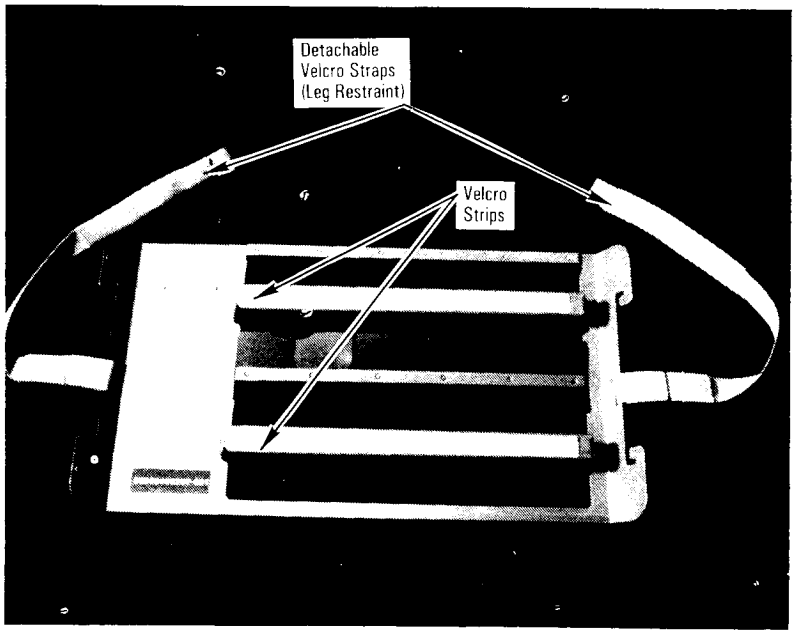


*Food Tray (Back View)*

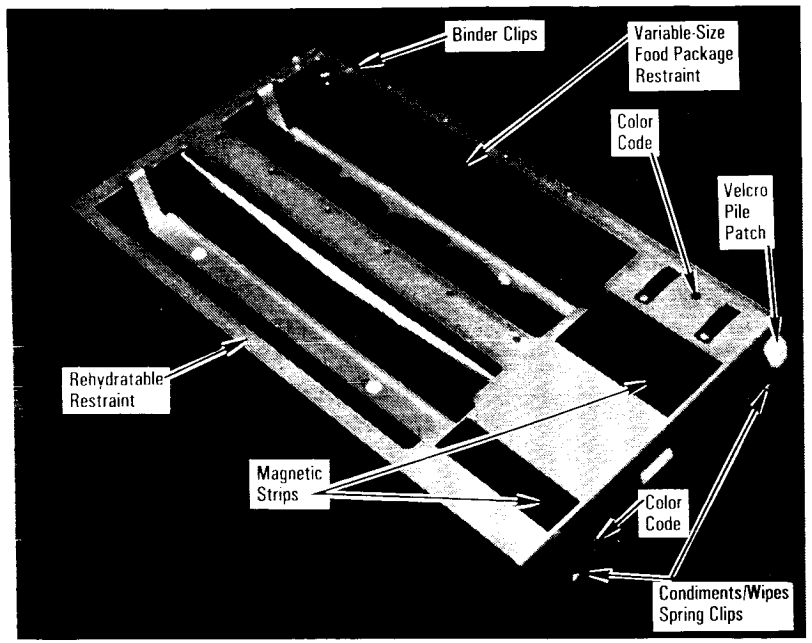


*Food Trays*

*Food Tray Using Leg Restraints*

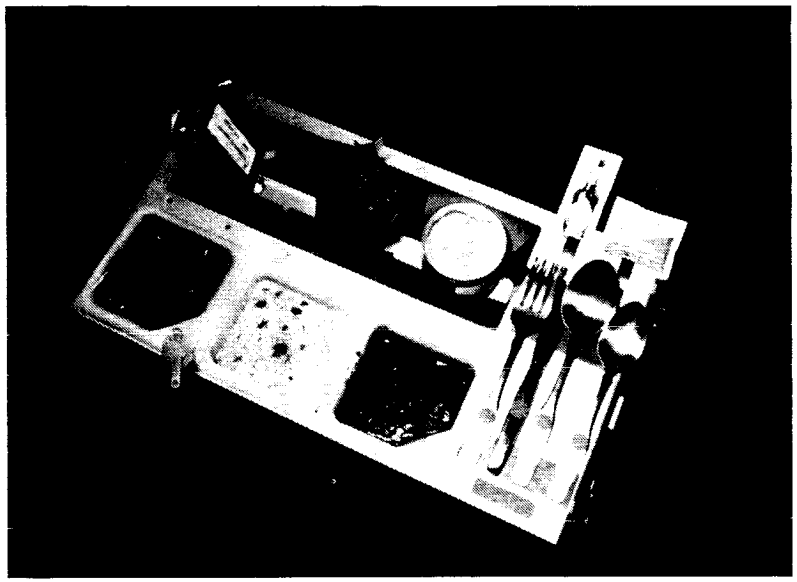

*Food Tray Ready for a Meal*



Condiments include salt, pepper, taco sauce, hot pepper sauce, catsup, mayonnaise and mustard. The salt and pepper are liquids stored in small plastic squeeze bottles. The remaining condiments are packaged in individual, sealed, flexible plastic pouches. Vitamin tablets supplement dietary requirements. Wet wipes are packaged in 21 individual packets per dispenser for cleaning utensils after dining. A light spring action retains and positions wipes for dispensing. Empty beverage containers of rigid plastic for drinking and storing water are carried in crew members' clothing and can be filled at the water dispenser. Approximately five to 10 different color-coded straws are provided for each crew member (depending on the flight's duration) for drinking beverages and water. Additional straws are kept in the pantry beverages and various menu locker trays. Color-coded utensils include a knife, two spoons (large and small), a fork and a can opener for each crew member. They are stowed with a soft plastic holder that has a Velcro snap cover. Dry wipes are packaged in a 30-wipe container that can be attached to the crew cabin wall with Velcro for cleanup after dining. The re-entry kit consists of one package con-

taining eight salt tablets for each crew member and long straws (four per crew member). Two salt tablets are to be taken with 8 ounces of water or other beverage by each crew member four times before entry. The re-entry kit may be stowed in one of three locations depending on space available—with the accessories, near the last meal to be consumed on orbit or with the pantry beverages.

The food warmer is a portable heating unit that can warm a meal for at least four crew members within one hour when the galley is not flown. It is stowed in a middeck locker at launch and is removed and installed during meal preparation activity. The food is heated by thermal conduction on a hot plate (element). The warmer is thermostatically controlled between 165 and 175 F. The case is constructed of aluminum with an exterior envelope of 13 by 18 by 6 inches. It has latches and is lined with clear urethane foam insulation coated with room-temperature vulcanizing compound. The case has straps for handling and on-orbit installation. The exterior contains controls and displays, a power connector that interfaces with the power cable and Velcro attachment. A hinged element is sandwiched between two aluminum plates and is contained by a fiberglass frame. The aluminum plates have spring-bungee restraints for foil-backed food packages on one side. An on/off switch provides two-phase ac power to the unit and a light indicates the warmer is operating. The power cable is 156 inches long and attaches to a middeck ac utility outlet. The cable is stowed inside the case at launch.

A maximum of 14 packages can be installed on the side of the spring bungees and eight on the other side. Rehydratable beverages should be placed on the side opposite the spring bungees, and the foam on the other side is additionally relieved to prevent the packages from popping out in zero gravity. When 14 rehydratable packages are heated, no foil-backed food pouches can be heated. A maximum of six foil-backed food pouches can be heated in conjunction with 12 rehydratable packages. When foil-backed pouches are heated, only four rehydratable packages can be heated on the side of the spring bungees. The foil-backed pouches are stacked three deep. Four rehydratable packages are inserted in the outer recessed foam cutouts. At the bottom of the

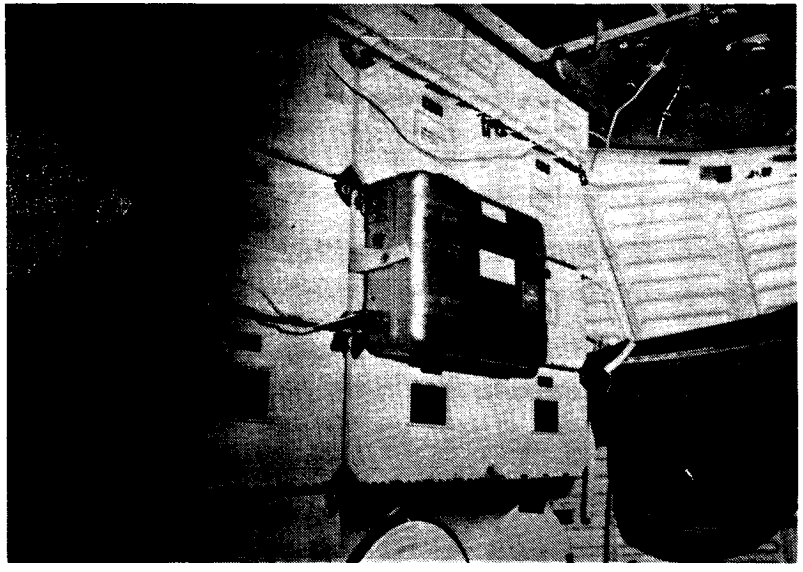

*Food Warmer Components*



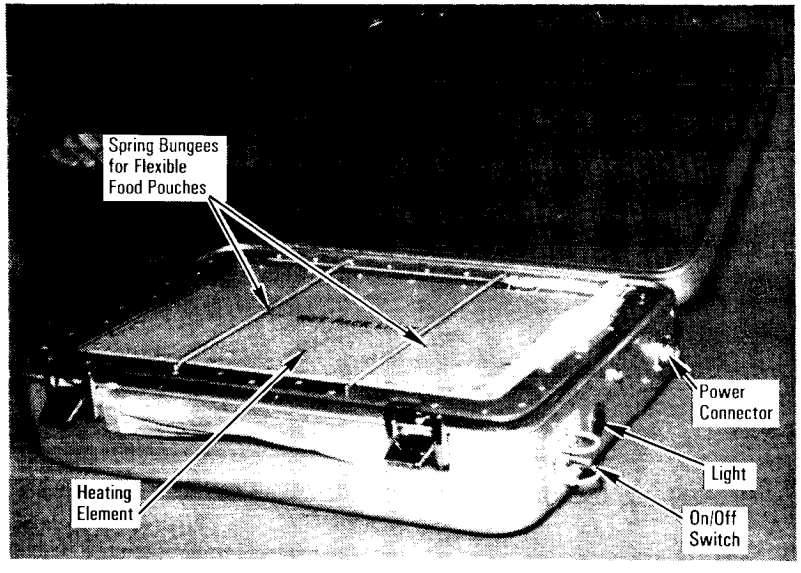


*Food Warmer*

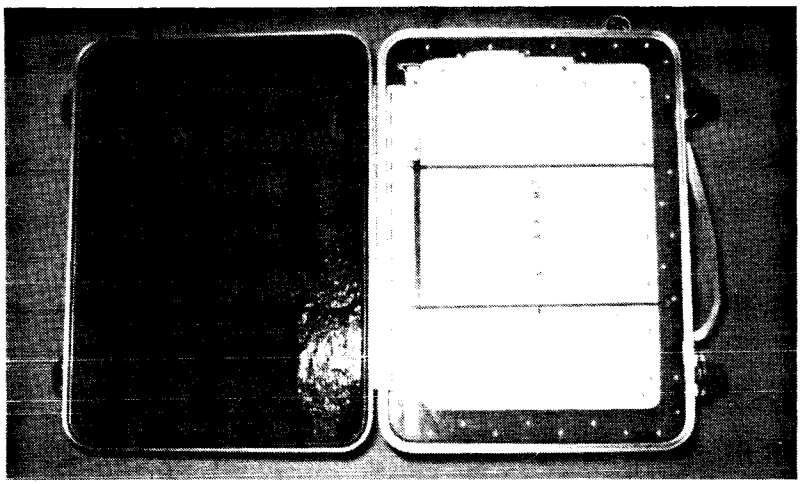

*Food Warmer—Empty*

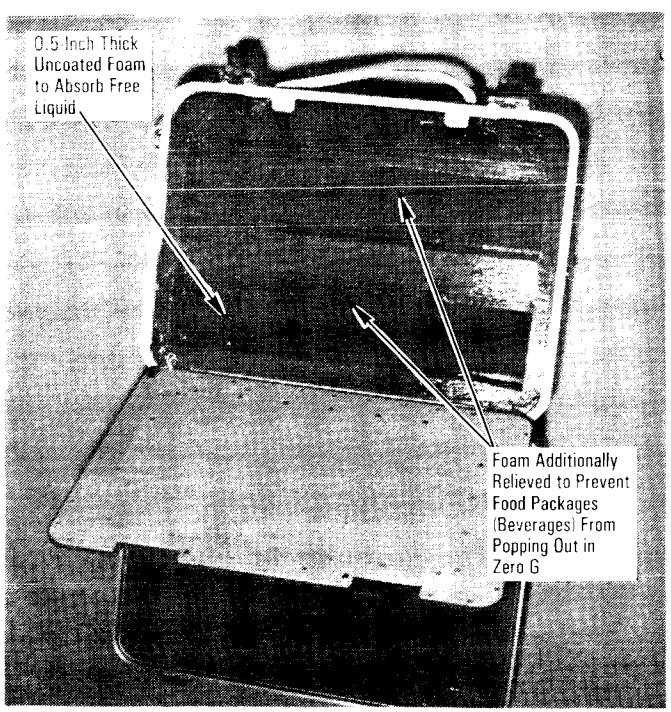


*Food Warmer With Both Pouches and Packages*

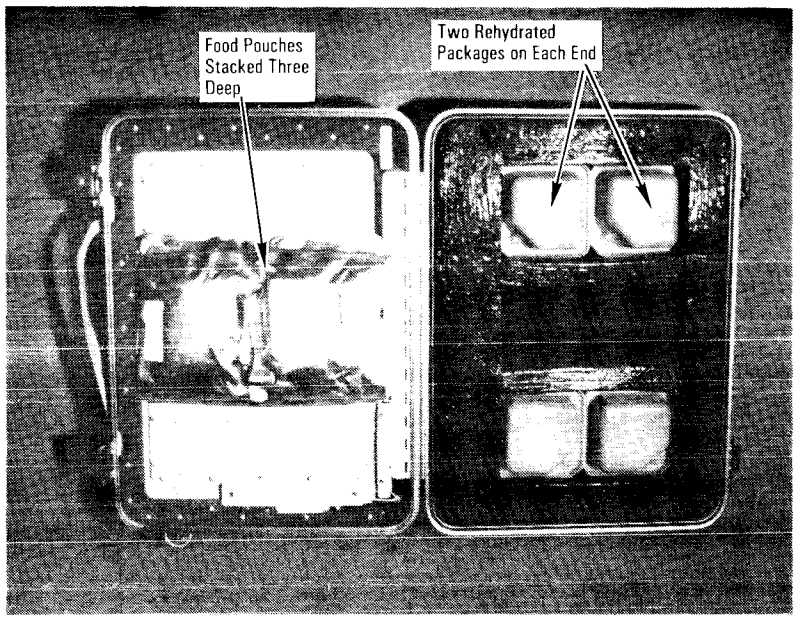


*Food Warmer With Hydratable Packages in Place for Heating*



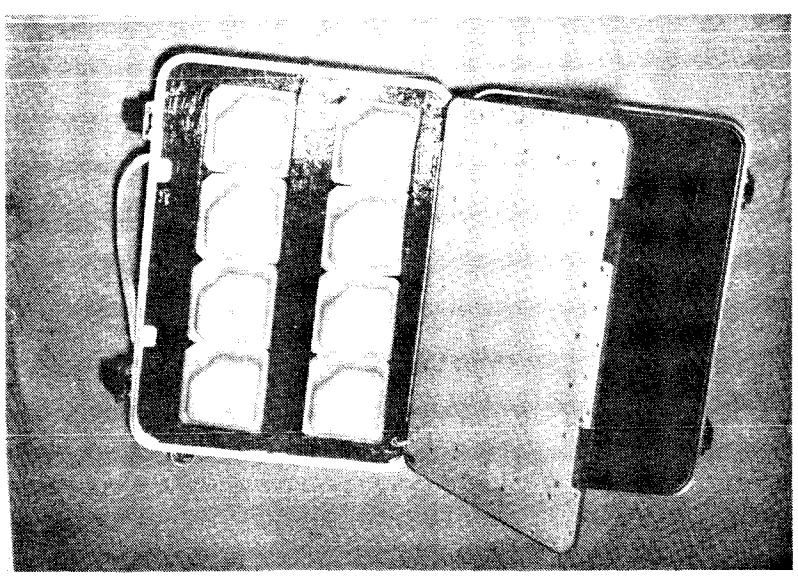

*Possible Food Warmer Location*

cutouts, 0.5-inch-thick uncoated foam absorbs moisture or spilled liquids.

The galley is a multipurpose facility that provides a centralized location for one individual to handle all food preparation activities for a meal. The galley has facilities for heating food, rehydrating food and stowing food system accessories and food trays. The galley consists of a rehydration station, oven, food trays and food system accessories.

The oven is divided into two principal compartments—a lower compartment designed for heating at least 14 rehydratable food containers inserted on tracks and an upper compartment

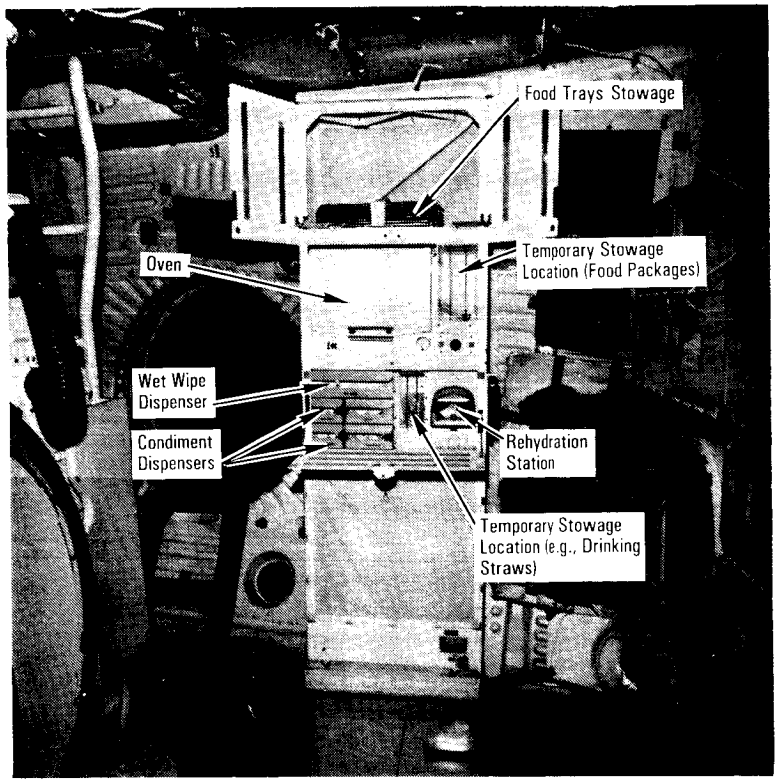


*Galley System Components*

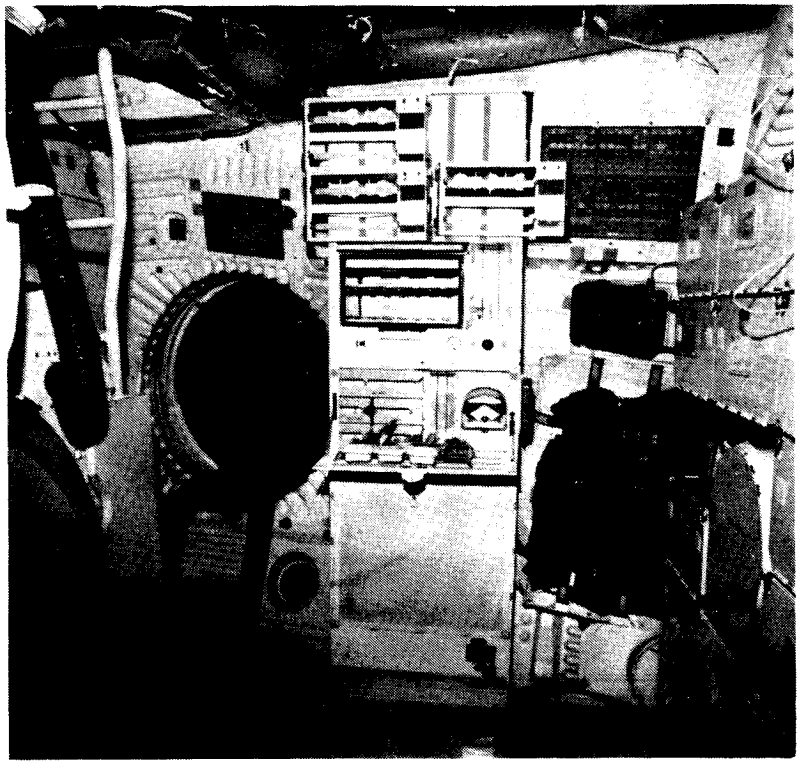

*Food Tray Use Location in Galley (If Installed)*

designed to accept a variety of food packages, including the rehydratable containers. At least seven food pouches can be heated in the upper compartment and are held against the heat sink by four spring-loaded plates. The oven has a heating range of 145 to 185 F. During launch and entry, the oven door is held closed by a restraining strap, which is removed from the door by releasing the snap for on-orbit operations. An on/off switch enables and removes power to three fans.

The rehydration station dispensing system interfaces directly with food and beverage packages, providing rehydration capability and drinking water for crew members. A gauge indicates hot water temperatures of 100 to 220 F. The *volume/ounces* switch

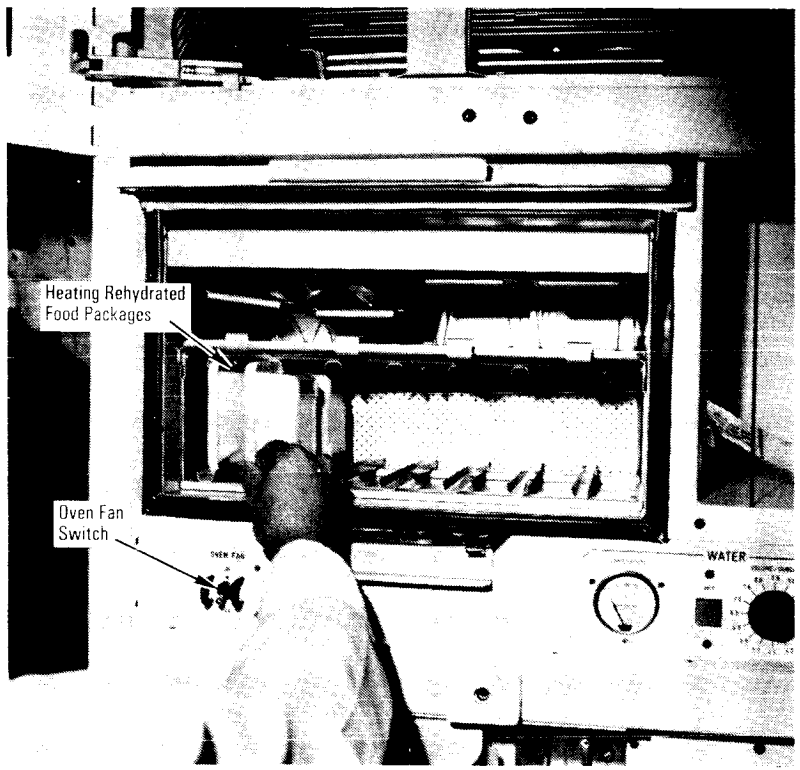


*Galley Oven Fan Switch*

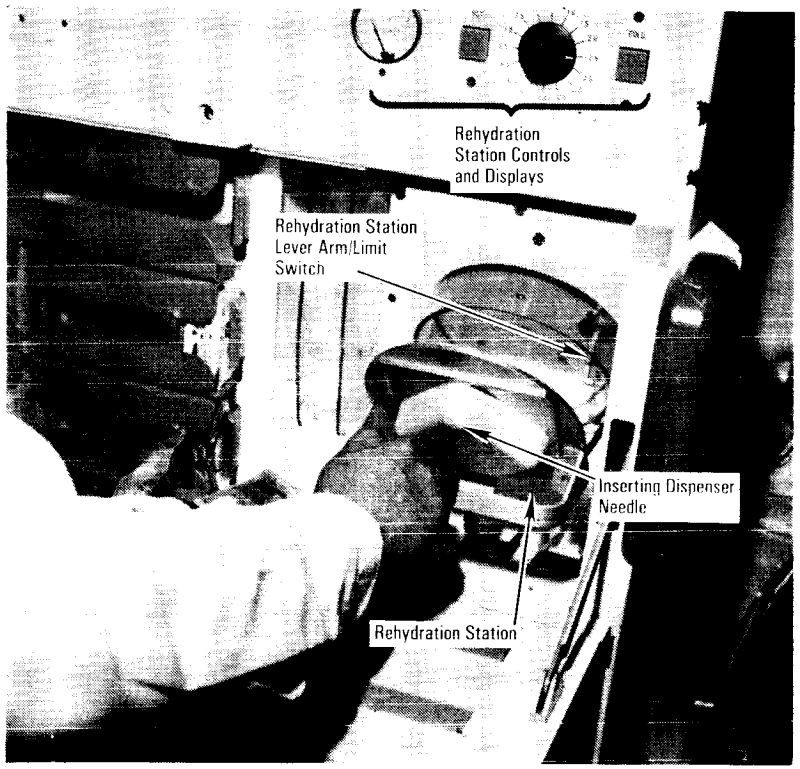


*Galley Rehydration Station*

selects the volume of water to be dispensed by the rehydration station in 0.5-ounce increments from 0.5 of an ounce to 8 ounces. The yellow *hot* push button indicator allows hot water to be dispensed when it is depressed and is illuminated when energized. When the selected volume of water has been dispensed, the push button will begin to flash on and off. The light will be extinguished when the food package is retracted, releasing the hydration station lever arm/limit switch. The rehydration station lever arm/limit switch serves as an interlock so water can be dispensed only when a food package is connected to the needle. The food package makes contact with the rehydration station lever, which activates the limit switch (note that the flight crew does not physically actuate the lever). The blue *cold* push button indicator allows cold water to be dispensed when it is depressed and is illuminated when energized. When the selected volume of water has been dispensed, the push button will begin to flash on and off. The light will be extinguished when the food package is retracted, releasing the rehydration station lever arm/limit switch.

The galley light is located on the upper left-hand side of the galley structure surface and has a single light brightness control. Moving the knob clockwise from *off* applies power to the light and provides variable brightness control.

Two condiment dispensers are attached to the galley by Velcro tabs on the back of the dispensers. The dispensers are avail-

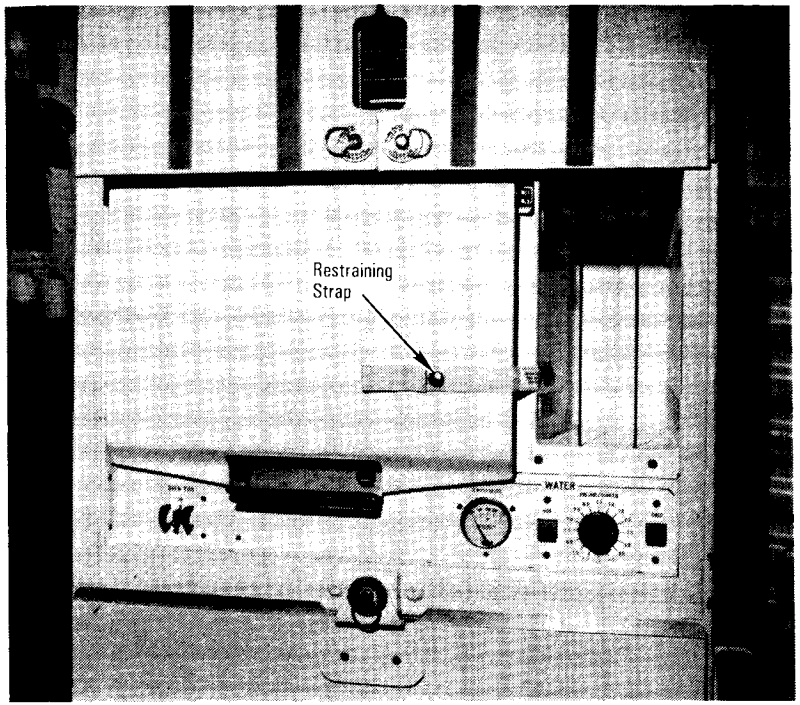


*Galley Oven Launch / Entry Restraining Strap*

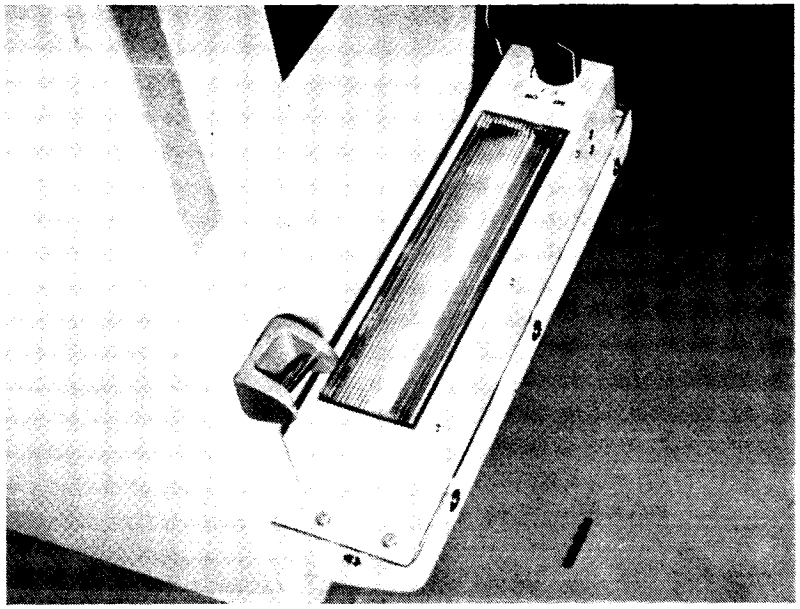

*Galley Light*



able for holding individual packets, such as catsup, taco sauce, mayonnaise and mustard, on the front panel below the oven. The dispensers are open-ended boxes designed to hold the stack of packets together so they may be individually removed as needed. A slide plate keeps the packets from becoming loose as the items are depleted.

A single dispenser for holding individual packets of wet wipes is located on the front panel below the oven and is slightly different in design than the condiment dispensers.

Dispensers for liquid salt and pepper and vitamins can be restrained by clips conveniently located below the rehydration station.

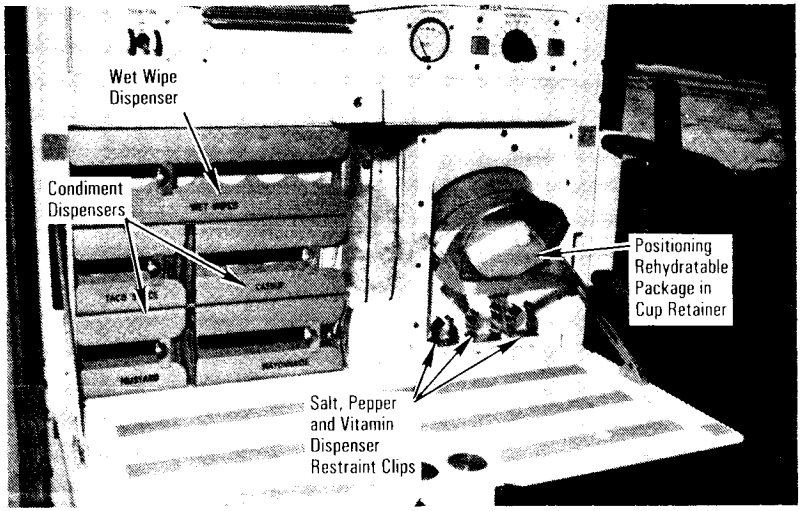


*Galley Food System Accessories*

Food trays and food system accessories are the same as those used on flights without the galley.

On the upper left-hand corner of the galley behind a Teflon cloth panel is an MV3 valve that has *emer off* and *on* positions. The *on* position serves as the nominal open position of the manual shutoff valve, and *emer off* serves as a manual shutoff valve for the ambient temperature water supply to the galley.

On the upper right-hand corner of the galley behind a Teflon cloth panel are test connectors, a *dc power bus A* and *B* switch and a flush port quick-disconnect test port. The two test connectors serve as a hookup for ground support equipment. The *dc power bus A* switch's *on* position activates the galley oven heaters, rehydration station system and one of six water tank strip heaters; the *off* position deactivates the heaters. The *dc power bus B* switch's *on* position activates five of the six galley water tank strip heaters, and the *off* position deactivates them. The flush port quick disconnect serves as the galley water system GSE flush port.

On the lower left-hand side of the galley is an auxiliary port water quick disconnect that allows the crew members to obtain ambient potable water when the MV3 valve is off or hygiene water when the 12-foot flex line and water dispensing valve are attached to the quick disconnect.

Three one-hour meal periods are scheduled for each day of the mission. This hour includes actual eating time and the time required to clean up. Breakfast, lunch and dinner are scheduled as close to the usual hours as possible. Dinner is scheduled at least two to three hours before crew members begin preparations for their sleep period.

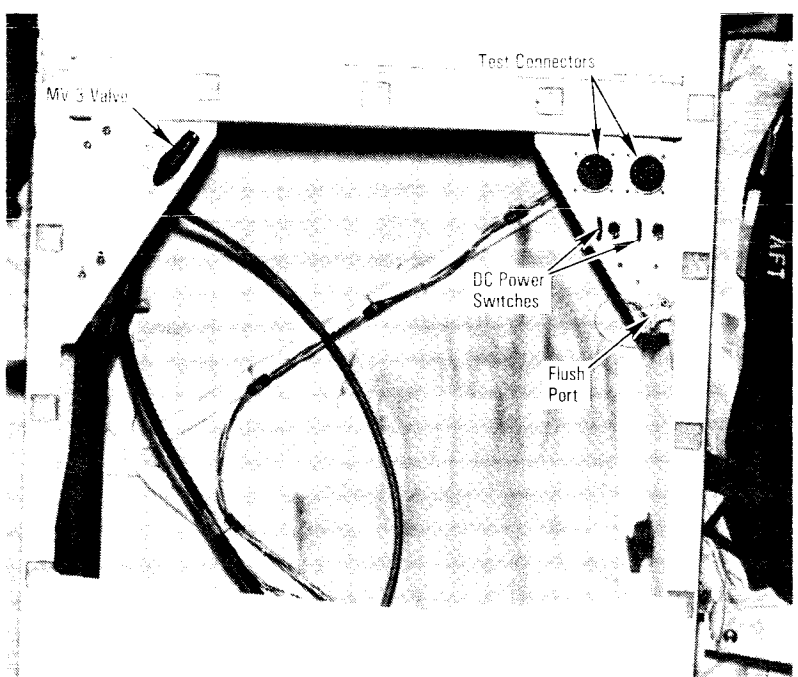


*Galley Controls for Water, Power and Miscellaneous Systems*

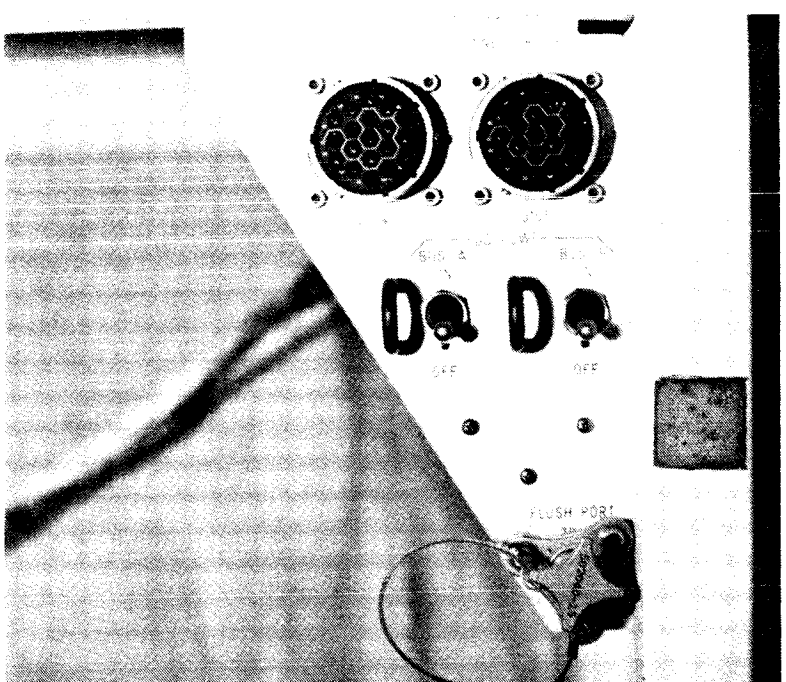


*Galley Controls for Water, Power and Miscellaneous Systems*

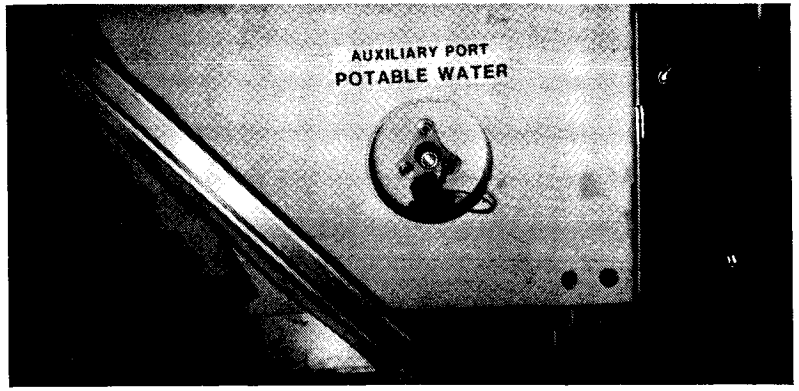


*Galley Auxiliary Water Control*

*Galley Personal Hygiene Station*

## SHUTTLE ORBITER MEDICAL SYSTEM

The shuttle orbiter medical system is required to provide medical care in flight for minor illnesses and injuries. It also provides support for stabilizing severely injured or ill crew members until they are returned to Earth. The SOMS consists of two separate packages: the medications and bandage kit and the emergency medical kit. The MBK is blue and the EMK is also blue with red Velcro.

The medical kits are stowed in a modular locker in the middeck of the crew compartment. If the kits are required on orbit, they are unstowed and installed on the locker doors with Velcro.

Each kit contains pallets. The MBK pallet designators are D, E and F. The D pallet contains oral medications consisting of pills,

*Medications and Bandage Kit*

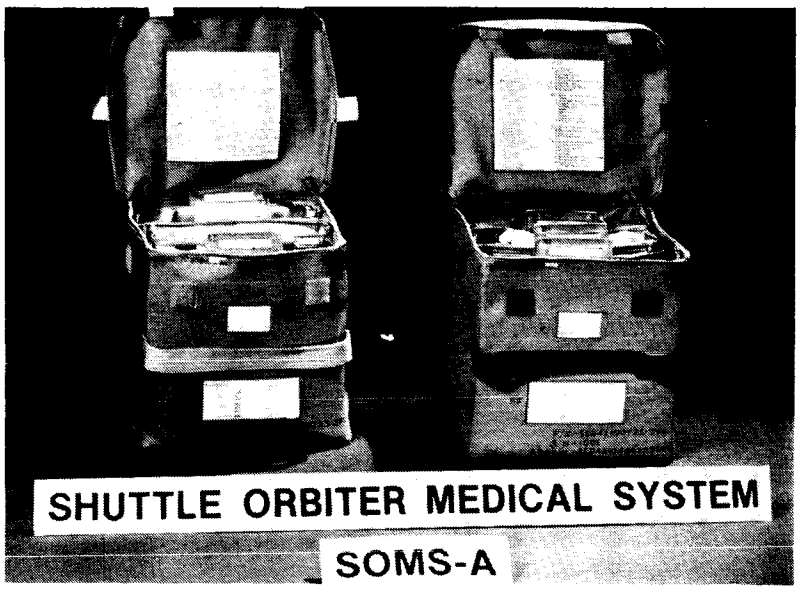


*Shuttle Orbiter Medical System*

*Emergency Medical Kit*

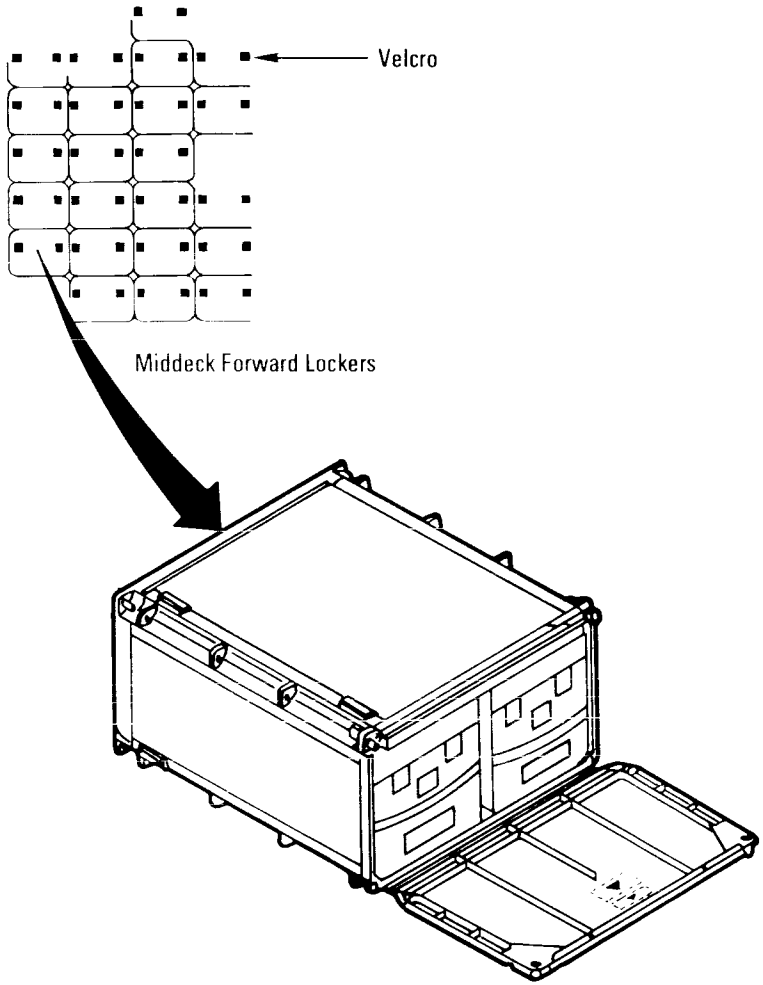


Stowage of both medical kits is in a middeck forward locker. Either or both of the medical kits may be attached to any of the middeck forward locker doors. The kits each have a patch of Velcro on the bottom to match the Velcro on the outside of the locker doors.

*Medical Kits*

capsules and suppositories. The E pallet contains bandage materials for covering or immobilizing body parts. The F pallet contains medications to be administered by topical application.

*Pallet A: EMK Injectables*

| Item | Use |
|---|---|
| Epinephrine 1:1,000 | Treatment for acute shock due to allergy or drug reaction |
| Benadryl 50 mg/mL | Anti-histamine |
| Isoproterenol 1:5,000 | Treatment for shock, cardiac arrest and cardiac arrhythmia |
| Atropine 0.4 mg/mL | • Reduces salivation and bronchial secretions<br>• Reduces spasm of gastrointestinal tract |
| Lidocaine 40 mg/mL | Treatment of cardiac arrhythmia |
| Xylocaine 2% with Epinephrine | Local anesthetic |
| Xylocaine 2% plain | Local anesthetic |
| Heparin 1,000 units/mL | Anti-coagulant |
| Morphine sulfate 10mg/mL | Narcotic, causes drowsiness and alleviates pain |
| Decadron 4 mg/mL | Anti-inflammatory (temporary) |
| Bupivacaine 0.75% with Epinephrine | Long-lasting local anesthetic |
| Valium 5 mg/mL | Tranquilizer, symptomatic relief of tension and anxiety |
| Compazine 5 mg/mL | Tranquilizer, prevents vomiting |
| Phenergan 25 mg/mL | Treatment of motion sickness and nausea |

*Pallet B: EMK Emergency Items*

| Item | Use |
|---|---|
| Needles, 22-gauge, 1.5 inches | Injection, aspiration |
| Tubex injector | Injector mechanism used with injectable drug cartridges |
| Syringe, 10 cc | Injection, aspiration |
| Alcohol wipes | Anti-septic for skin |
| Povidone iodine swabs | Anti-septic swabs |
| Irrigation solution, 100 cc | General |
| Ace bandage | Elastic bandage |
| Tape | Adhesive tape to hold bandages in place |
| Heparin locks | Used to maintain an open line in a vein in the event intravenous medication is required |
| Suture 4-0 Ethilon | For sewing up skin |
| Suture 4-0 Dexon | For closing tissues under skin |
| Urine test package | Analyze urine for protein, sugar, blood, pH, acetone and bilirubin |
| Forceps | For holding tissue during examination or suturing |
| Tweezers | Removing foreign bodies |
| Hemostats | Clamp blood vessels |
| Scissors | Cutting sutures |
| Needle holder | Holds suture needle |
| Sterile drape | To cover field around wound |
| Scalpel, No. 10 and 11 | Cutting tissue |

*Pallet C: EMK Diagnostic/Therapeutic Items*

| Item | Use |
|---|---|
| Blood pressure cuff and stethoscope | Taking blood pressure measurements |
| Tourniquet and cotton balls | For the compression of blood vessels to control circulation and prevent access of blood to a part of the body; cotton balls for cleaning or applying medication |
| Oral airway and cricothyrotomy set | Oral airway for allowing flow of air through the mouth into the lungs of an unconscious patient. Cricothyrotomy set for establishing an artificial airway through the neck into the windpipe |
| Nasostat | Tube and balloon used for stopping nose bleeds; used with syringe to pump air into balloon |
| Disposable thermometer | For measuring body temperature by mouth |
| Tongue depressor | Wooden blades for examination of mouth |
| Otoscope specula | Conical tubes used for examination of ears |
| Otoscope | Light source to which specula are attached |
| Penlight | Additional illumination |
| Sterile gloves | Minor surgery |
| Ophthalmoscope | Used with otoscope for looking into eyes |
| Fluorescein strips | Paper strips treated with dye used to stain foreign bodies in eyes |
| Blue filter | Used with fluorescein strips to look for foreign bodies in the eye |

*Pallet G: EMK Microbiological Test Kit*

| Item | Use |
|---|---|
| Throat culture kit | Inoculation materials used for specifically identifying beta-hemolytic streptococcus infections (strep throat) in the throat. Testing materials will identify beta-hemolytic streptococcus only |
| Wound culture kit | Inoculation materials used for growing cultures from wounds for possible identification. Anti-biotic sensitivity can also be performed |
| Urine culture kit | Inoculation materials used for growing cultures from urine for possible identification. Anti-biotic sensitivity can also be performed |

*Pallet D: MBK Oral Medications*

| Item | Use |
|---|---|
| Nitroglycerin tablets, 0.4 mg | Vasodilator for relief of angina pectoris |
| Digoxin, 0.25 mg | Cardiac stimulant for treatment of arrhythmia |
| Dexedrine tablets, 5 mg | Stimulant |
| Dalmane capsules, 30 mg | Hypnotic agent useful in all types of insomnia |
| Lomotil tablets | To slow intestinal activity in diarrhea |
| Tetracycline capsules, 250 mg | Anti-biotic, broad spectrum. Particularly useful in treating respiratory and urinary tract infections |
| Amoxicillin capsules, 250 mg | Anti-biotic, broad spectrum. Effective against both gram-positive and gram-negative organisms |
| Keflex capsules, 250 mg | Anti-biotic for treatment of respiratory and urinary tract infections of skin and soft tissues |
| Aspirin | For headaches and fever |
| Tylenol | Provides enhanced analgesia |
| Parafon forte | Muscle relaxant, treatment of sprains and strains |
| Pyridium capsules, 200 mg | Relieves pain and burning due to urinary tract infection |
| Codeine, 15 mg | Analgesic for relief of pain |
| Compazine suppository, 25 mg | Tranquilizer, prevents vomiting |
| Scop/Dex capsules, 0.4 mg/5 mg | Prevention of motion sickness |
| Phenergan suppository, 25 mg | For treatment of nausea and prevention of motion sickness |
| Benadryl, 25 mg | Anti-histamine for upper respiratory cough, hay fever, hives, other allergic symptoms, nasal irritation and discharge, muscle cramps |
| Terbutaline, 2.5 mg | Bronchodilator |
| Actifed tablets | Anti-histamine and decongestant for cold symptoms, hay fever, runny nose, itchiness, asthma, sinusitis, inflammation of eustachian tubes, inner ear congestion, aviator's ear |

The EMK pallet designators are A, B, C and G. The A pallet contains medications to be administered by injection. The B pallet contains items for performing minor surgeries. The C pallet contains diagnostic/therapeutic items consisting of instruments for measuring and inspecting the body. The G pallet contains a microbiological test kit for testing for bacterial infections.

*Pallet E: MBK Bandage Items*

| Item | Use |
|---|---|
| Cotton swabs | Clean cuts, apply topical medications, remove foreign bodies from eyes, etc. |
| 3-inch Kling | Elastic bandage used on joints or where it is difficult to fit bandage |
| Mylanta tablets | Reduce stomach acidity and gas |
| Tape | Hold bandages in place |
| Roll gauze | Bandage to hold dressing in place |
| Alcohol wipes | Anti-septic for skin |
| Providone iodine swabs | Anti-septic for skin |
| Bandaids | Protects small cuts, injuries or punctures |
| Steristrips | Pieces of tape to hold larger cuts closed |
| Finger splint | Immobilizes broken or sprained fingers |
| Benzoin swabs | When wiped on skin, forms tacky surface to which tape can adhere |
| Gauze, 4 inches x 4 inches | Sterile gauze pads to be placed directly over cuts, bruises or burns |
| Eye patch, adaptic | To cover injured eye |
| Toothache kit | Pain killer and cotton pack for toothache |
| Cavit tube | Temporary filling material for teeth |
| Ace bandage | Elastic bandage |

The diagnostic equipment on board and information from the flight crew will allow diagnosis and treatment of injuries and illnesses through consultation with flight surgeons in the Mission Control Center in Houston.

## OPERATIONAL BIOINSTRUMENTATION SYSTEM

The operational bioinstrumentation system provides an amplified electrocardiograph analog signal from either of two designated flight crew members to the orbiter avionics system, where it is converted to digital tape and transmitted to the ground in real time or stored on tape for dump at a later time. The designated flight crew members wear the OBS during the ascent and entry phases. On-orbit use will be limited to contingency situations.

*Pallet F: MBK Non-Injectables*

| Item | Use |
|---|---|
| Afrin nose spray | Nasal decongestant |
| Cortisporin otic solution | Anti-biotic ear drops |
| Kerlix dressing | Used for large dressing |
| Betadine | Anti-septic for skin |
| Anusol-HC cream | Treatment for hemorrhoids |
| Polysporin | Skin anti-biotic |
| Mycolog cream | For itching of skin |
| Kenalog cream | Anti-inflammatory for skin |
| Sulfacetamide | Bacteriostatic for eyes |
| Ophthocort | Eye ointment, anti-microbial |
| Proparacaine | Surface anesthesia in eye, nose and throat |
| Artificial tears | For minor irritation or dryness of eyes, foreign body on surface of eye |
| Blistex | Chapped lips |
| Magnifying glass | Examining eyes |
| Triangular bandage | For wrapping or immobilizing |
| Surgical masks | Covering nose and mouth |



The OBS electrodes are attached to the skin with electrode paste to establish electrical contact. The electrode is composed of a plastic housing containing a non-polarizable pressed pellet. The housing is attached to the skin with double-sided adhesive tape and the pellet contacts the skin. There are three electrodes on the harness marked LC (lower chest), UC (upper chest) and G (ground).

The ECG signal conditioner is a hybrid microcircuit with variable gain (adjusted for each crew member before flight). It provides a zero- to 5-volt output and has an on/off switch within the input plug, which is actuated when the intravehicular activity biomed cable is plugged in. The unit has batteries that will not be replaced in flight.

The IVA biomed cable connects to the signal conditioner and is routed under the IVA clothing to connect to the biomed seat

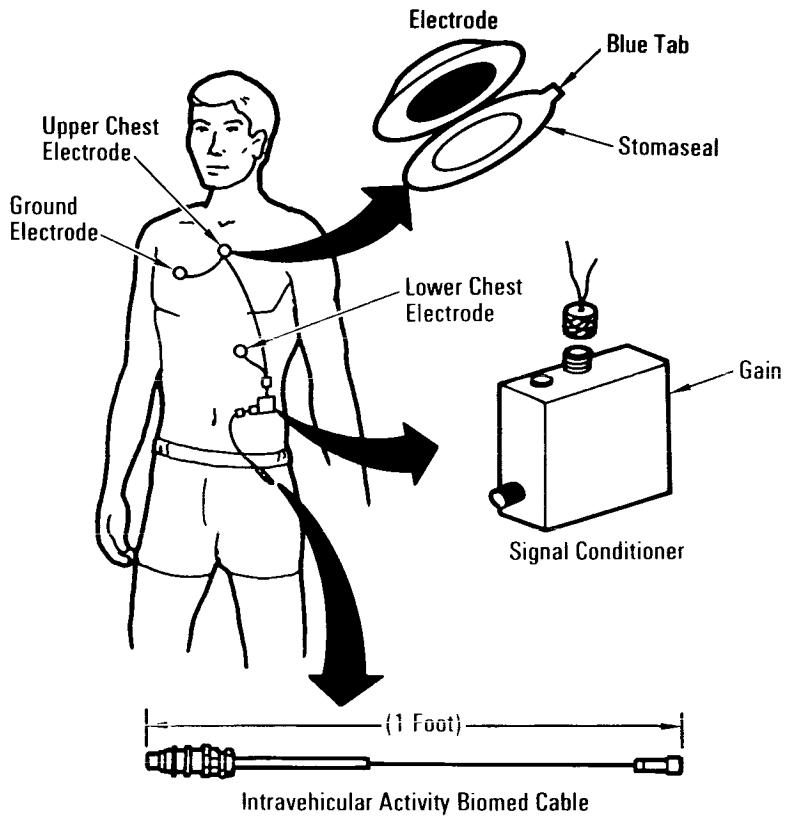


*Operational Bioinstrumentation System*

cable. The biomed seat cable is routed to one of the biomed input connectors located on panel A11, A15 or M062M. Rotary control switches on panel R10 provide circuits from the biomed outlets to the orbiter's network signal processor for downlink or recording. The two rotary switches on panel R10 are *biomed channel 1* and *channel 2. Extravehicular activity* positions provide circuits for the EVA UHF transceiver.

The electrode application kit contains components to aid in the application of electrodes. The components include wet wipes, double-sided adhesive tape, overtapes, electrode paste and a cue card illustrating electrode placement.

## RADIATION EQUIPMENT

The harmful biological effects of radiation must be minimized through mission planning based on calculated predictions and monitoring of dosage exposures. Preflight requirements include a projection of mission radiation dosage, an assessment of the probability of solar flares during the mission and a radiation exposure history of flight crew members. In-flight requirements include the carrying of passive dosimeters by the flight crew members and, in the event of solar flares or other radiation contingencies, the readout and reporting of the active dosimeters.

There are four types of active dosimeters: pocket dosimeter high, pocket dosimeter low, pocket dosimeter FEMA and high-rate dosimeter. All four function in the same manner and contain a quartz fiber positioned to zero by electrostatic charging before flight. The unit discharges according to the amount of radiation received; and as the unit discharges, the quartz moves. The position of the fiber along a scale is noted visually. The PDH unit's range is zero to 100 rads. The PDF and PDL units' ranges are zero to 200 millirads and the HRD unit's range is zero to 600 rads.

The rad is a unit based on the amount of energy absorbed and is defined as any type of radiation that is deposited in the absorbing media, and radiation absorbed by man is expressed in roentgen equivalent in man, or rems. The rem is determined by multiplying rads times a qualifying factor that is a variable depending on wavelength, source, etc. For low-inclination orbits (35 degrees and lower), the qualifying factor is approximately equal to one; therefore, the rem is approximately equal to the rad. In space transportation system flights, the doses received have ranged from 0.05 to 0.07 rem, well below flight crew exposure limits.

The flight crew's passive dosimeters are squares of fine-ground photo film sandwiched between plastic separators in a

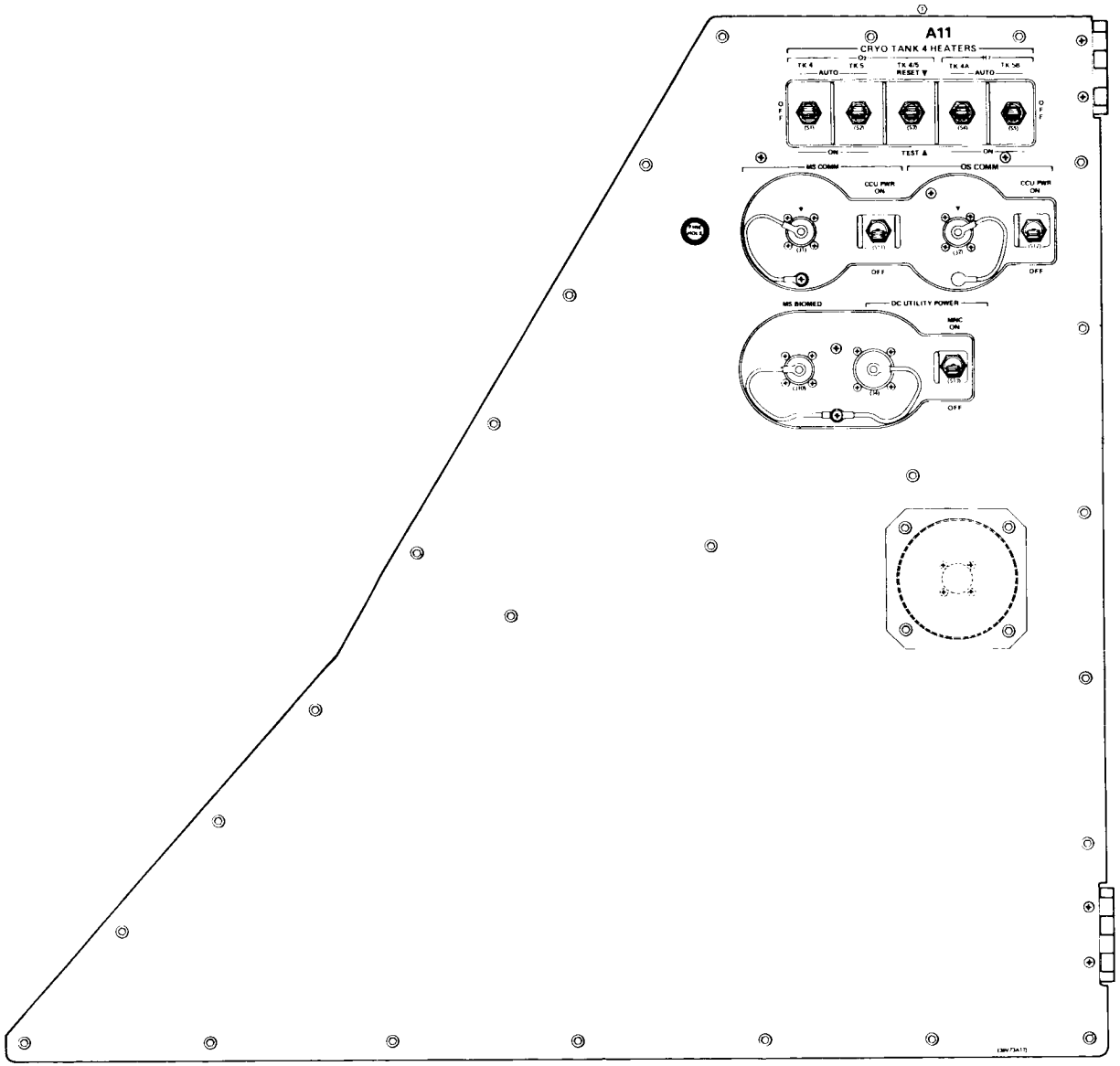
A11
CRYO TANK 4 HEATERS
O2
H2
TK 4
TK 5
TK 4/5
RESET
TK 4A
TK 5B
AUTO
AUTO
OFF
OFF
ON
TEST
ON
MS COMM
OS COMM
CCU PWR
ON
CCU PWR
ON
OFF
OFF
MS BIOMED
DC UTILITY POWER
MPAC
ON
OFF

*Panel A11*

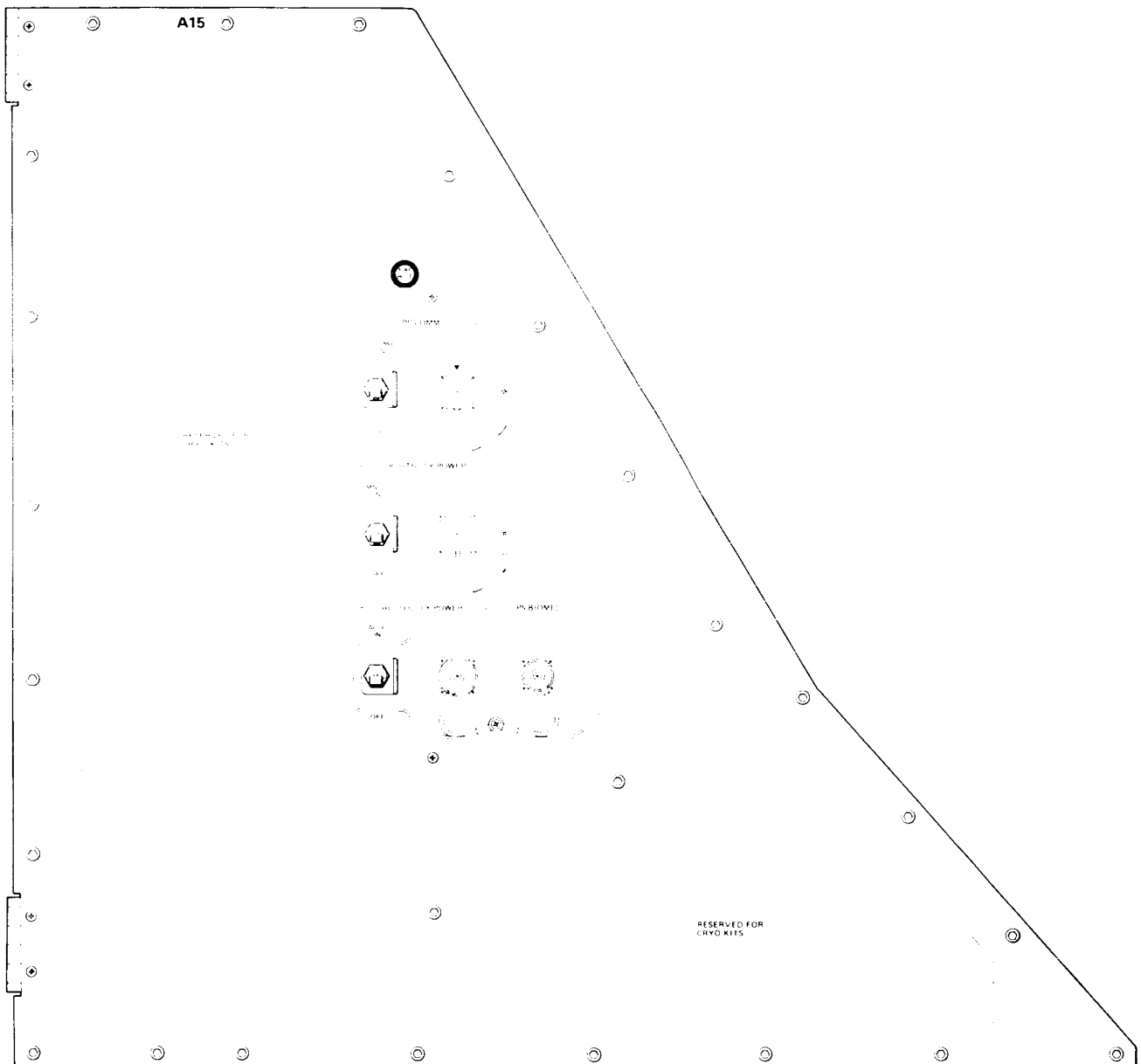


*Panel A15*

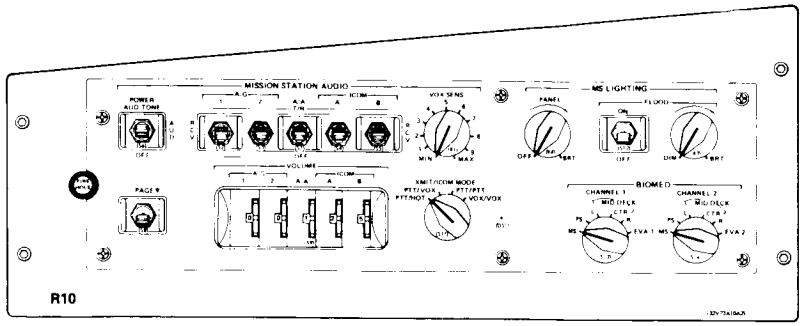


*Panel R10*

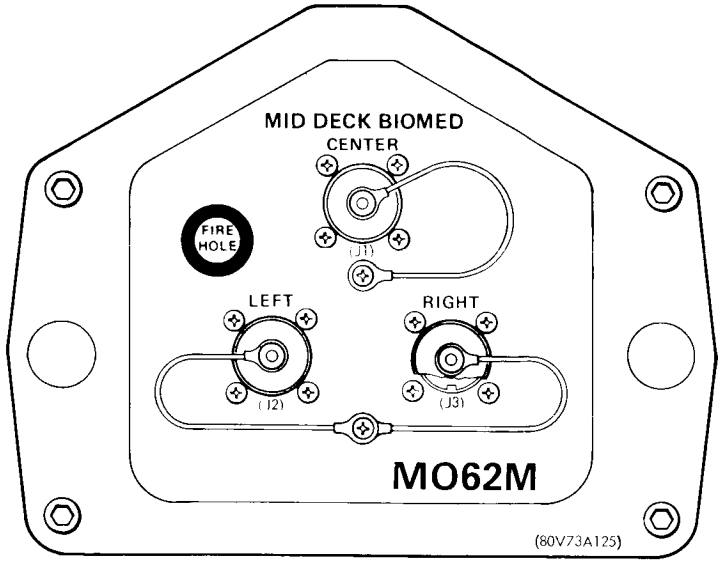


*Panel M062M*

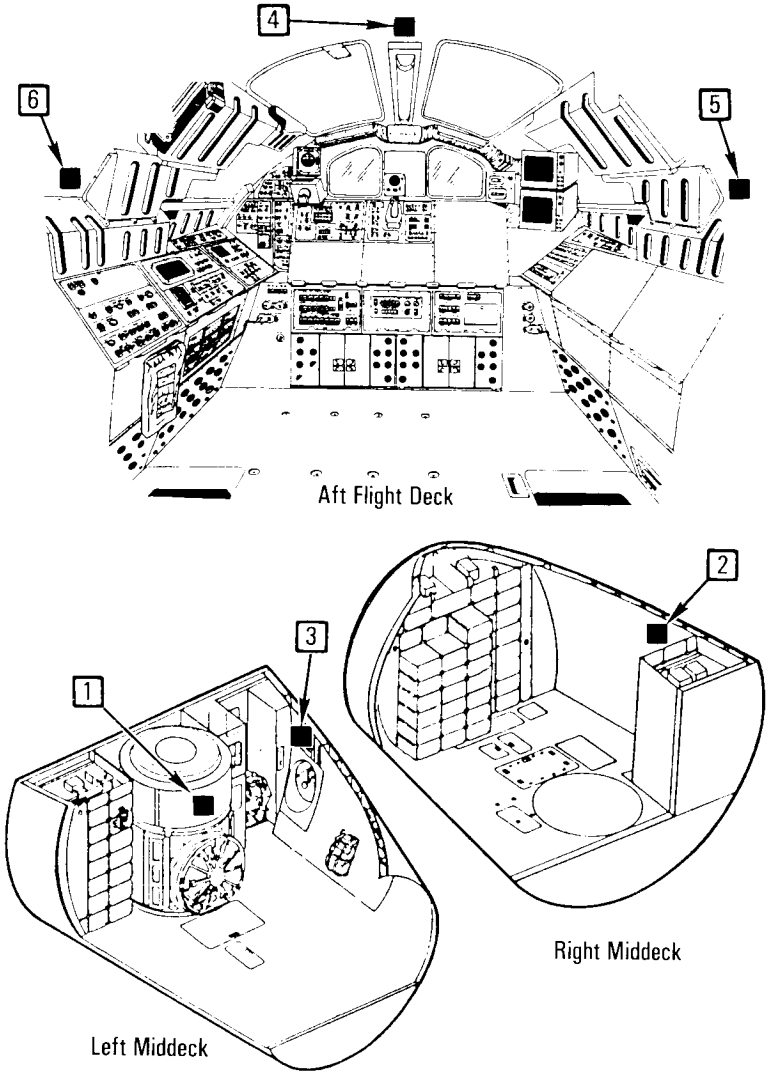


*Passive Dosimeter Locations in Crew Compartment*

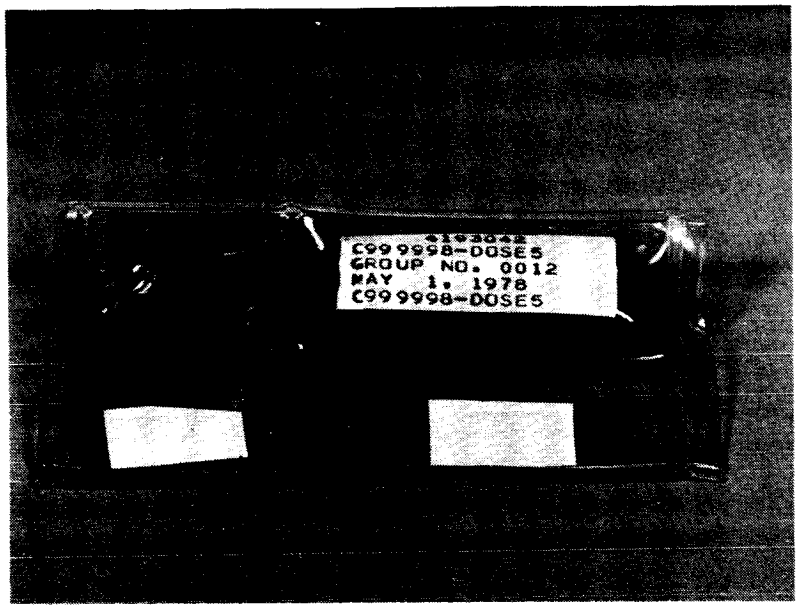


*Crew Equipment—Dosimeter*

light-proof package. Radiation striking the silver halide causes spots on the film, which can be analyzed after the flight. Included in the badge dosimeters are thermoluminescent dosimeter chips, which are analyzed on Earth.

Passive radiation dosimeters are placed in the crew compartment before launch by ground support personnel and removed after landing for laboratory analysis. Each flight crew member carries a passive dosimeter at all times during the mission. The remaining dosimeters are stowed in a pouch in a middeck modular locker. If a radiation contingency arises, the PDL, PDH, HRD and PDF active dosimeters will be unstowed, read, and recorded for downlink to the ground.

## CREW APPAREL

During launch and entry, crew members wear the crew altitude protection system, which consists of a helmet; communications cap; pressure garment; anti-exposure, anti-gravity suit; gloves; and boots.

The crew wears escape equipment over the CAPS during launch and entry. It consists of an emergency oxygen system; parachute harness, parachute pack with automatic opener, pilot chute, drogue chute and main canopy; a life raft; 2 liters of emergency drinking water; flotation devices; and survival vest pockets containing a radio/beacon, signal mirror, shroud cutter, pen gun flare kit, sea dye marker, smoke flare and beacon. Manual activation of the parachute automatic opening sequences is provided, as well as manual release of the parachute main canopy.

On orbit, optional clothing and equipment include underwear, urine collection devices, eyeglasses, communications headset, emesis bag, flashlight, Swiss army knife, kneeboard, pens and pencils, stowage bags, watches and food and drink containers.

Crew clothing and equipment used during on-orbit activities include flight suits, IVA trousers, IVA jackets, IVA shirts, sleep shorts, IVA soft slippers, underwear, scissors/lanyard, pocket dosimeter and pocket food.

Crew clothing is designed for use by 90 percent of the male and female population, the 5th to 95th percentile.

## SLEEPING PROVISIONS

Sleeping provisions for flight crew members consist of sleeping bags, sleep restraints or rigid sleep stations. The sleeping arrangements can consist of a mix of bags and sleep restraints or rigid sleep stations on a given mission. During a mission with one shift, all crew members sleep simultaneously. If all crew members sleep simultaneously, at least one crew member will wear a communication headset to ensure reception of ground calls and orbiter caution and warning alarms.

If sleeping bags are used, they are installed on the starboard middeck wall and deployed for use on orbit.

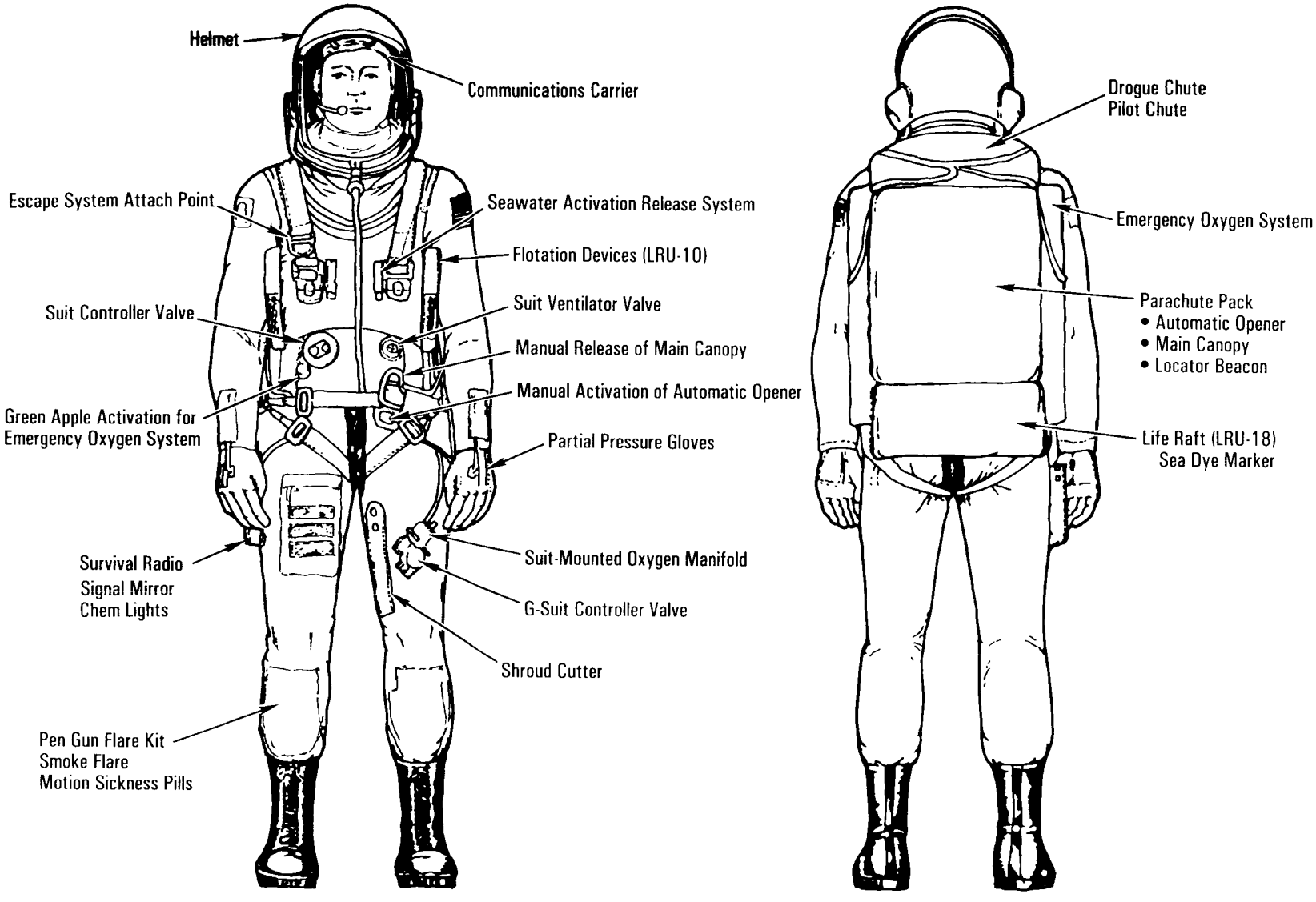


*Crew Altitude Protection Suit*

*Launch and Entry Apparel*

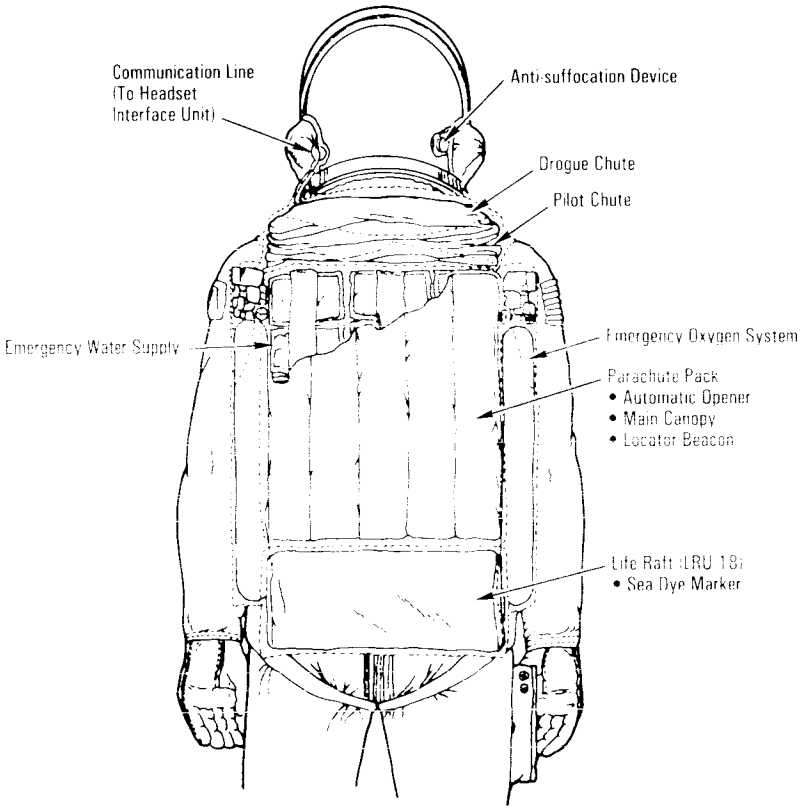


*Crew Altitude Protection System*

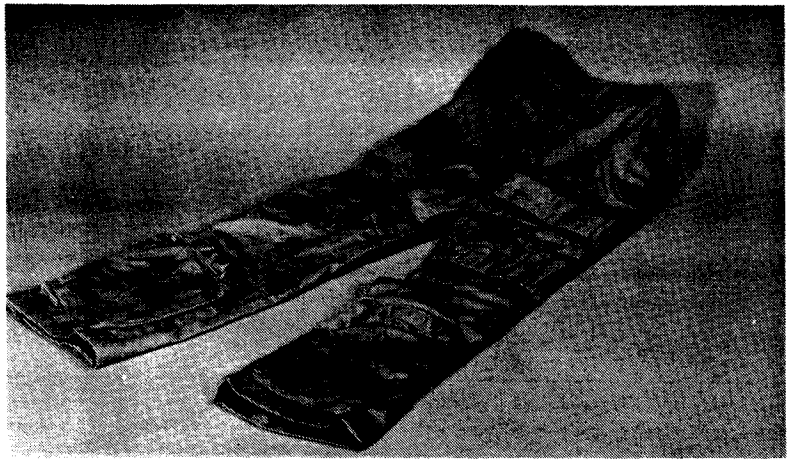

*Crew Clothing—Intravehicular Activity Trousers*

*Crew Clothing—Intravehicular Activity Jacket*

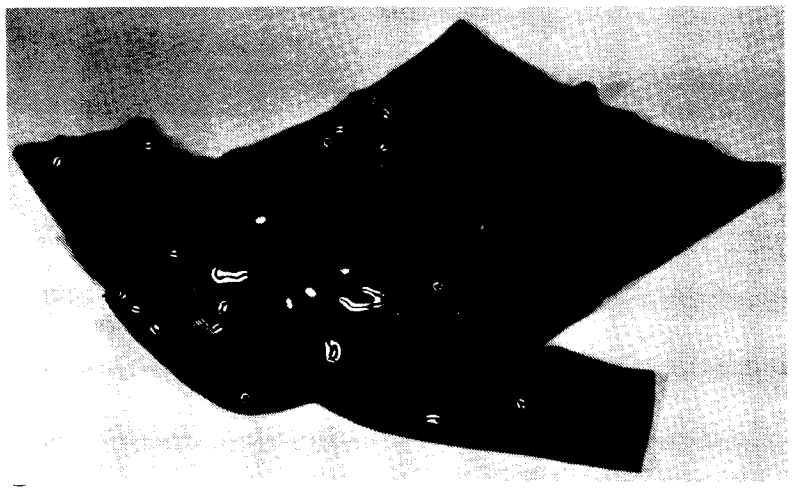

*Crew Clothing—Intravehicular Activity Shirt*

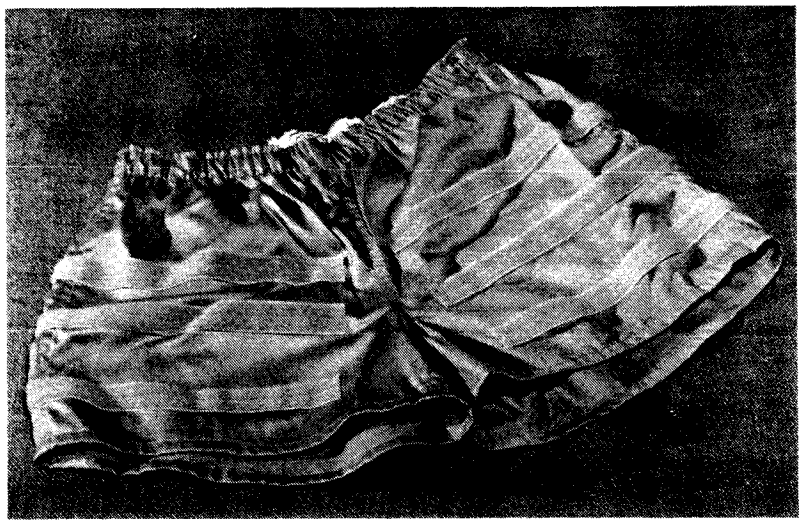

*Crew Clothing—Sleep Shorts*

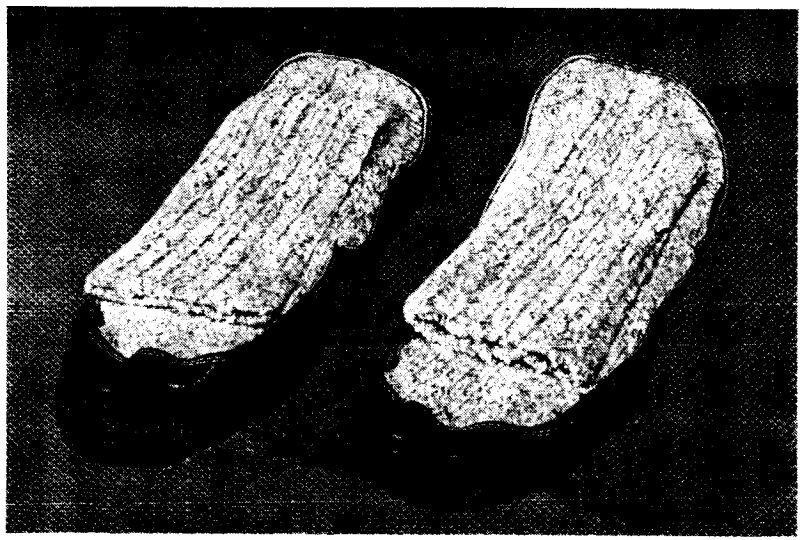

*Crew Clothing—Intravehicular Activity Soft Shoe Slippers*

*Crew Clothing—Female Underwear*



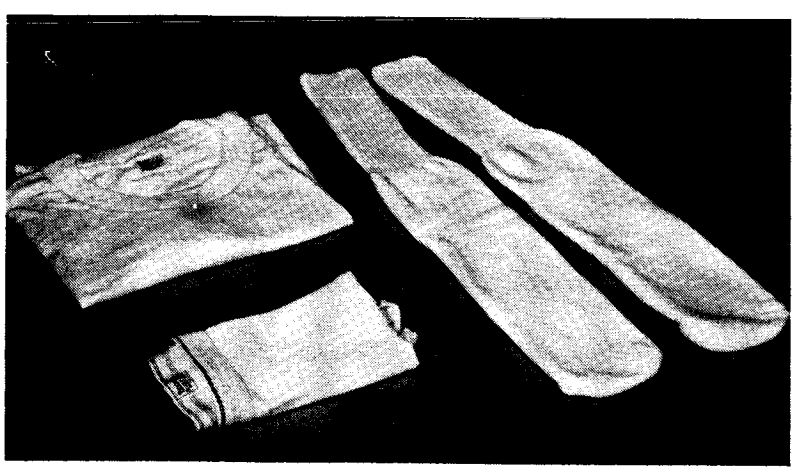

*Crew Clothing—Male Underwear*

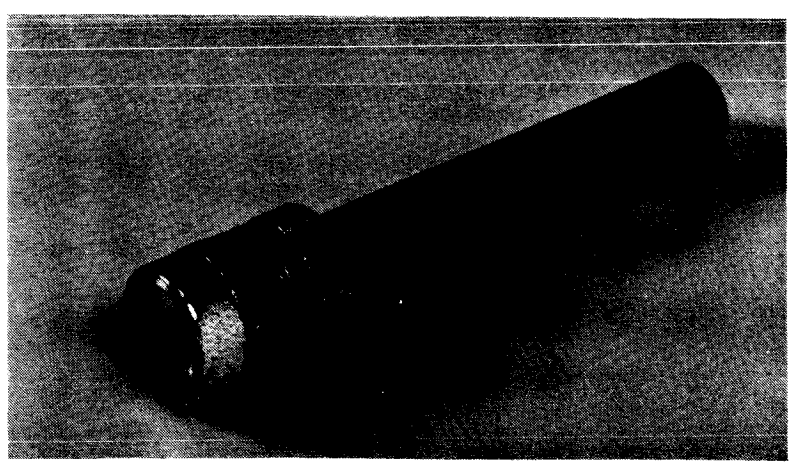

*Crew Equipment—Flashlight*

*Crew Equipment—Sunglasses and Pouch*

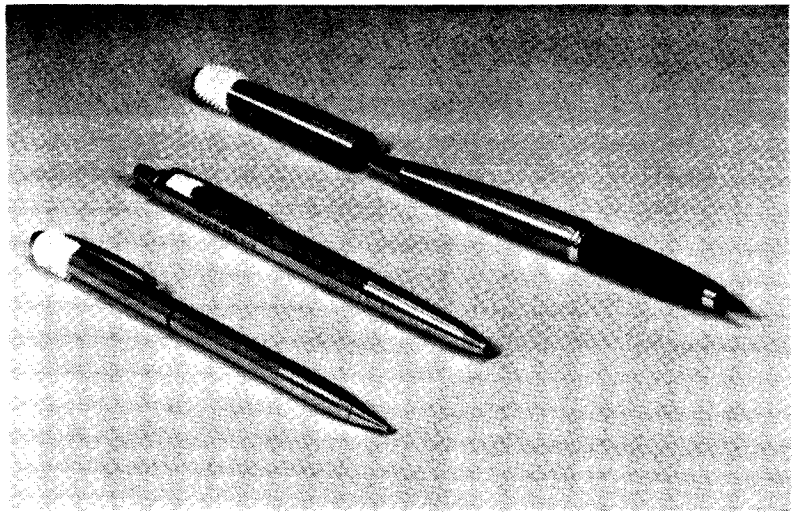

*Crew Equipment—Pens and Pencils*



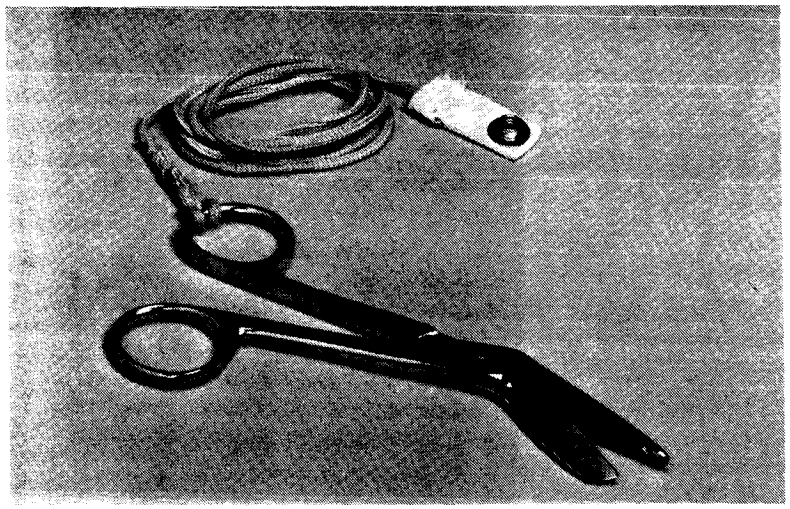

*Crew Equipment—Scissors and Lanyard*

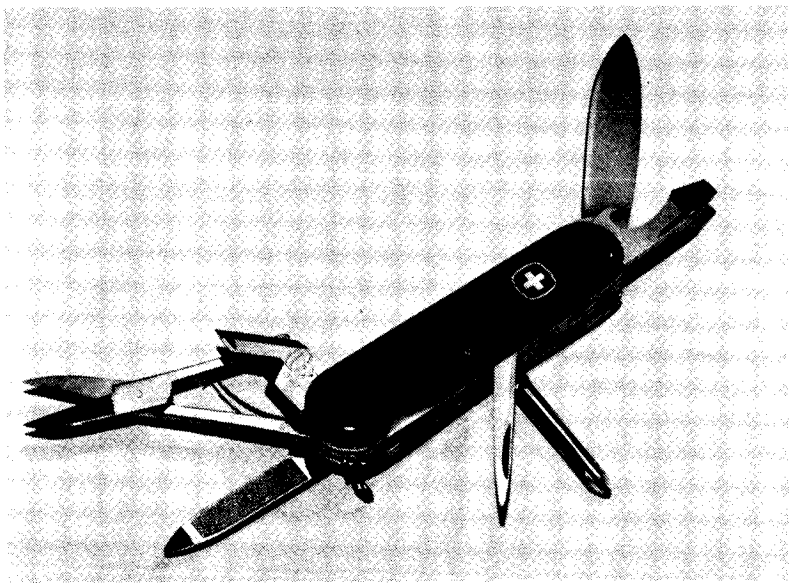

*Crew Equipment—Swiss Army Knife*

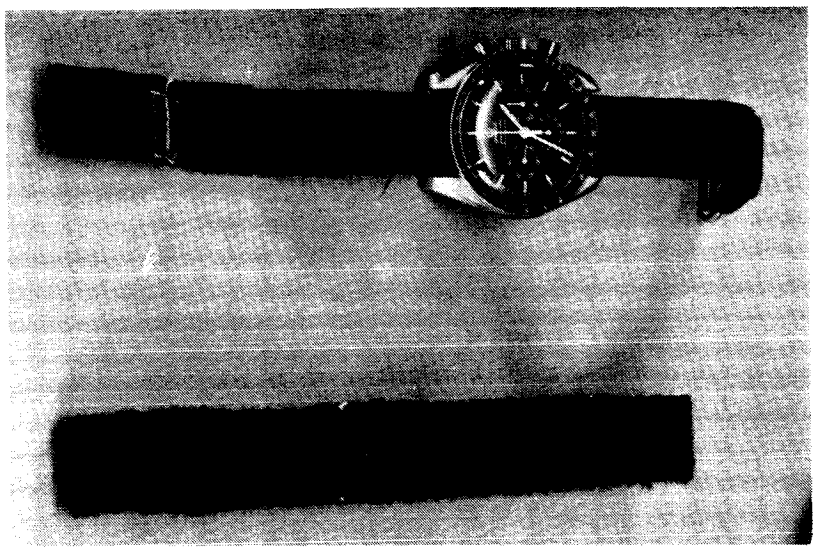

*Crew Equipment—Watch and Watchband*

*Crew Equipment—Pocket Food Items*

If the rigid sleep station is used on a mission, it is installed on the starboard side of the middeck. There are two types of rigid sleep stations. One sleep station type accommodates three crew members and the other accommodates four.

If the rigid sleep station is not installed for a mission, a sleeping bag is furnished each crew member. Each sleeping bag contains a support pad with adjustable restraining straps and a reversible/removable pillow and head restraint. Apollo sleeping bags may be provided for the crew members on request. The Apollo sleeping bag is constructed of beta material and is perforated for thermal comfort.

Six adjustable straps permit the sleeping bag to be adjusted to its proper configuration. Three helical springs above the adjustable straps on one side of the bay relieve loads exerted by the crew member on the crew compartment structure. Six pip pins allow the bag to be attached to the middeck locker face in either a horizontal or vertical configuration. Two elastic adjustable straps restrain the upper and lower parts of the body in the bag. Velcro strips on the ends of both sides of the head restraint attach it to the pillow. A double zipper arrangement permits the sleeping bag to be opened and closed from the bottom to the top of the bag. One zipper on each side of the sleeping bag allows the bag to be attached to a support pad for better rigidity.

The Apollo beta cloth sleeping bag has four adjustable straps with pip pins that are connected to any two lockers in the middeck separated by a distance equal to a four-tiered locker configuration. For torso restraint, a single two-piece strap is provided and a single zipper opens the bag. The bags are stowed in a middeck locker during launch and entry.

A sleep kit is provided for each crew member and is stowed in the crew member's clothing locker during launch and entry. Each kit contains eye covers and ear plugs for use as required during the sleep period.

The three- or four-tier rigid sleep stations contain a sleeping bag, personal stowage provisions, a light and a ventilation inlet

and outlet in each of the tiers. The cotton sleeping bag is installed on the ground in each tier and held in place by six spring clips. The light in each tier is a single fluorescent fixture with a brightness control knob and an *off* position. The air ventilation inlet duct is an air diffuser similar to an automobile ventilation duct. It is adjusted by moving the vane control knob. The air ventilation outlet duct is located in the fixed panel at each tier and is opened or closed by moving the vane control knob. The air inlet is located at the crew member's head. The outlet is at the feet. All crew members' heads are toward the airlock and their feet toward the avionics bay.

In the three-tier configuration, the upper and middle crew members face the ceiling and the lower tier crew member faces the floor. The fixed panel at the lower sleep station is removable to provide access to the cabin debris trap door for cleaning the cabin filter, to gain access to floor locker MD76C and to enter the forward portion of the lower equipment bay to clean the avionics bay fan filter.

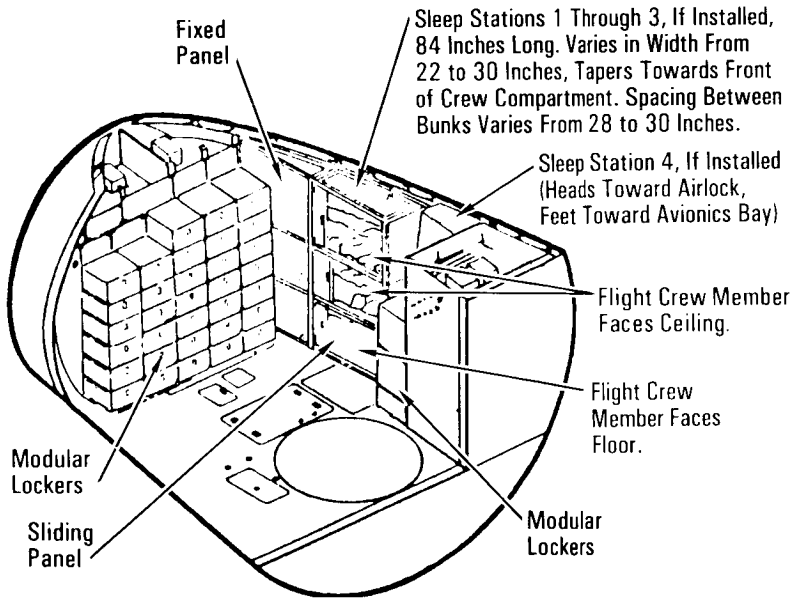


*Middeck Bunk-Type Sleep Station for Three Crew Members*

In the four-tier configuration, the bottom tier sleep restraint hookup provision allows the crew member to position himself at a 15-degree angle, which provides more room, or in the normal horizontal position. The sleeping bag, personal stowage provisions, light and ventilation inlet and outlet are the same as in the three-tier configuration. The head and feet orientations of the crew members are also the same as in the three-tier configuration. The lowest tier is removable so access can be obtained to the cabin debris trap door to clean the cabin filter, gain access to floor locker MD76C and enter the forward portion of the lower equipment bay to clean the avionics bay fan filter.

The three-tier rigid sleep station is made of plastic honeycomb panel and weighs approximately 205 pounds. The four-tier rigid sleep station is made of metal and weighs 173 pounds.

A 24-hour period is normally divided into an eight-hour sleep period and a 16-hour wake period for each crew member. Forty-five minutes are allocated for the crew members to prepare for the sleep period and another 45 minutes when they awake to wash and get ready for the day.



## PERSONAL HYGIENE PROVISIONS

To maintain good hygiene and appearance, personal hygiene and grooming provisions are furnished for both male and female flight crew members. Water is provided by the water dispensing system.

A personal hygiene kit is furnished each crew member for brushing teeth, hair care, shaving, nail care, etc. A kit is also furnished with articles essential to female hygiene and grooming.

Two washcloths and one towel per crew member per day are provided in addition to two paper tissue dispensers per crew member for each seven days. The washcloths are 12 by 12 inches and the towels 16 by 27 inches. The tissues are absorbent, multi-ply, low-linting paper. Rubber restraints with a Velcro base allow the crew members to restrain their towels and washcloths on the waste management door or middeck walls.

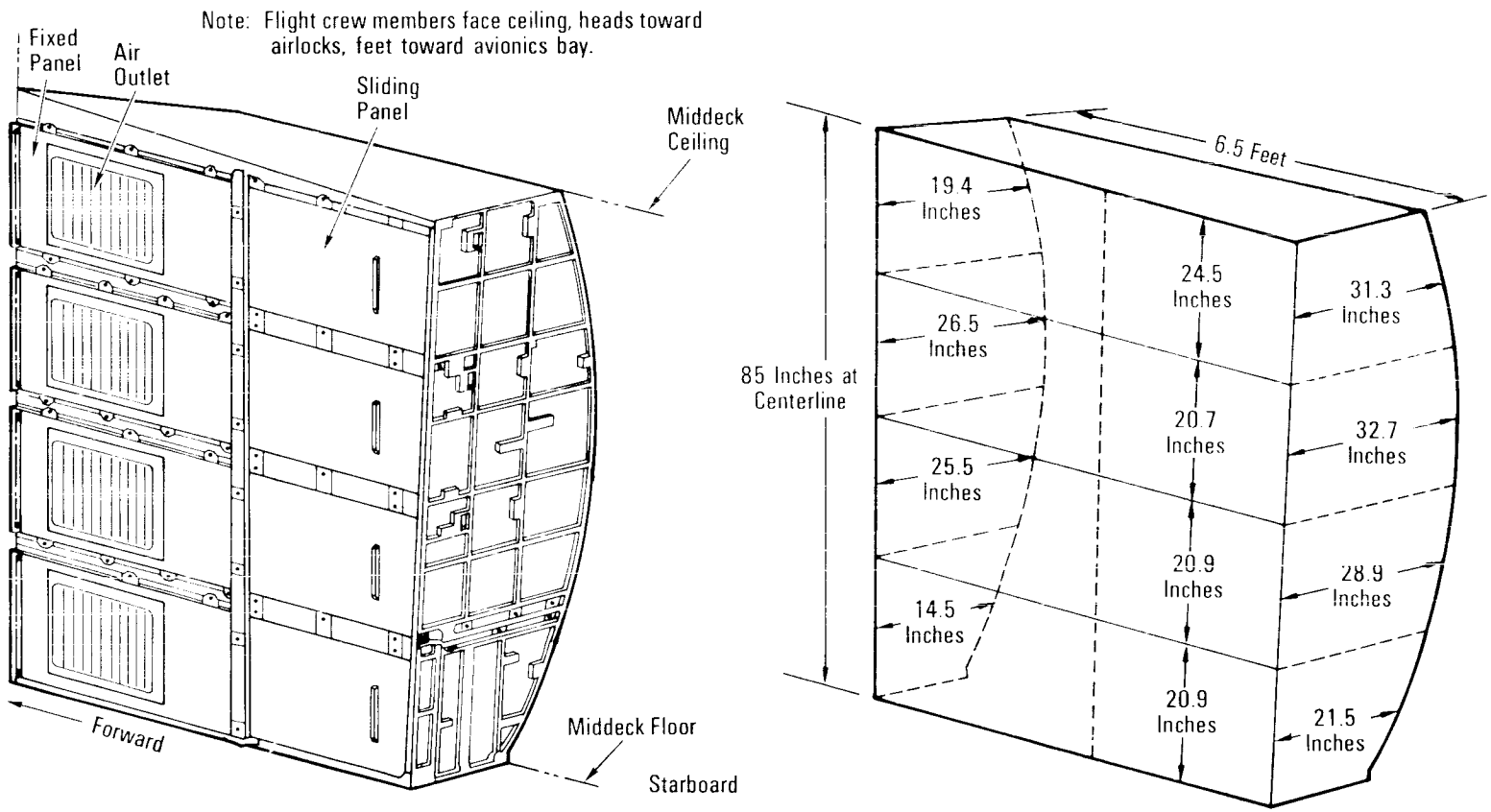


*Middeck Bunk-Type Sleep Station for Four Crew Members (If Installed)*

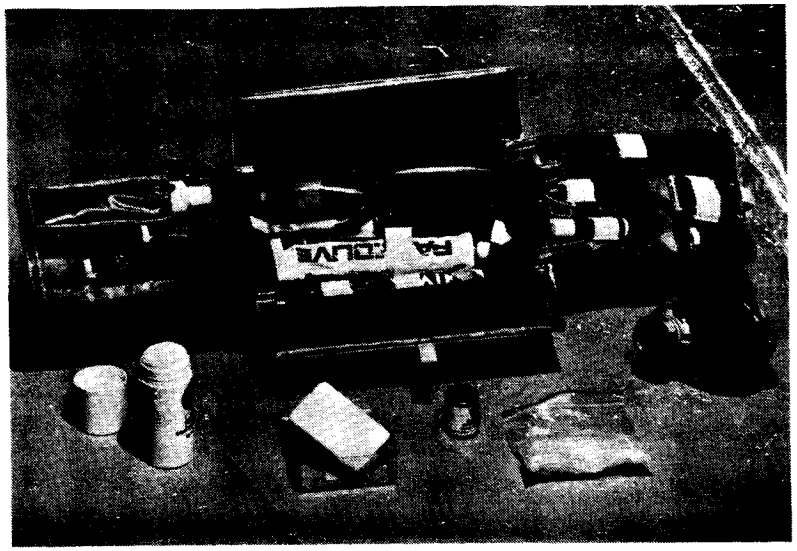

*Personal Hygiene Kit*

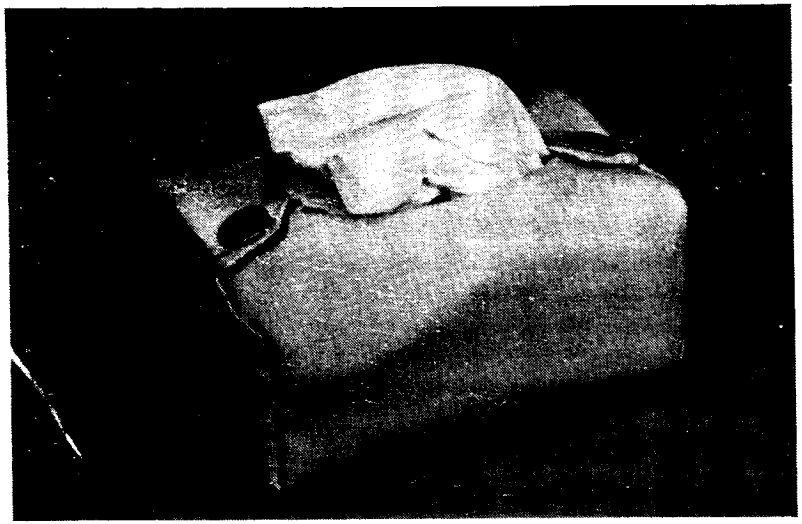

*Tissue Dispenser*



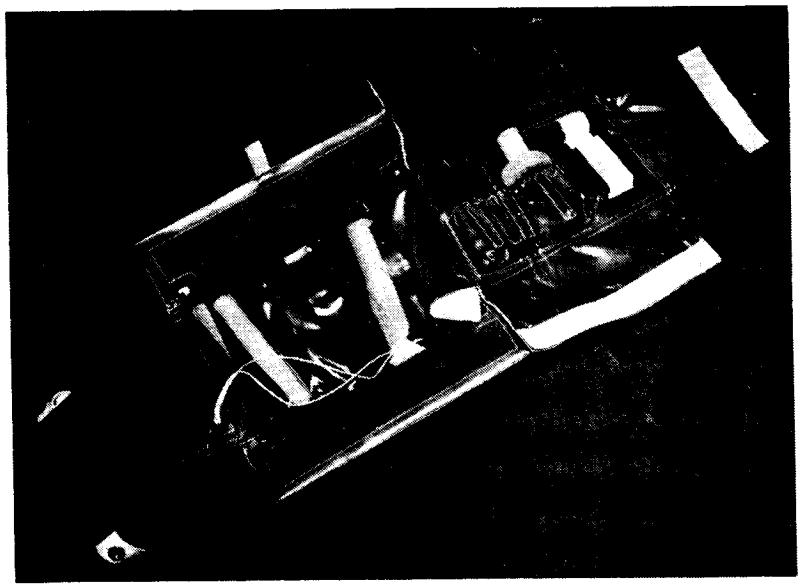

*Female Preference Kit*

*Towel Restraints*

The personal hygiene provisions are stowed in middeck stowage lockers at launch and are removed for use on orbit.

## HOUSEKEEPING

In addition to time scheduled for sleep periods and meals, each crew member has housekeeping tasks that require from five to 15 minutes of his time at intervals throughout the day. These include cleaning the waste management compartment, the dining area and equipment, floors and walls (as required), the cabin air filters; trash collection and disposal; and changeout of the crew compartment carbon dioxide (lithium hydroxide) absorber canisters.

*Carbon Dioxide Absorber Stowage*

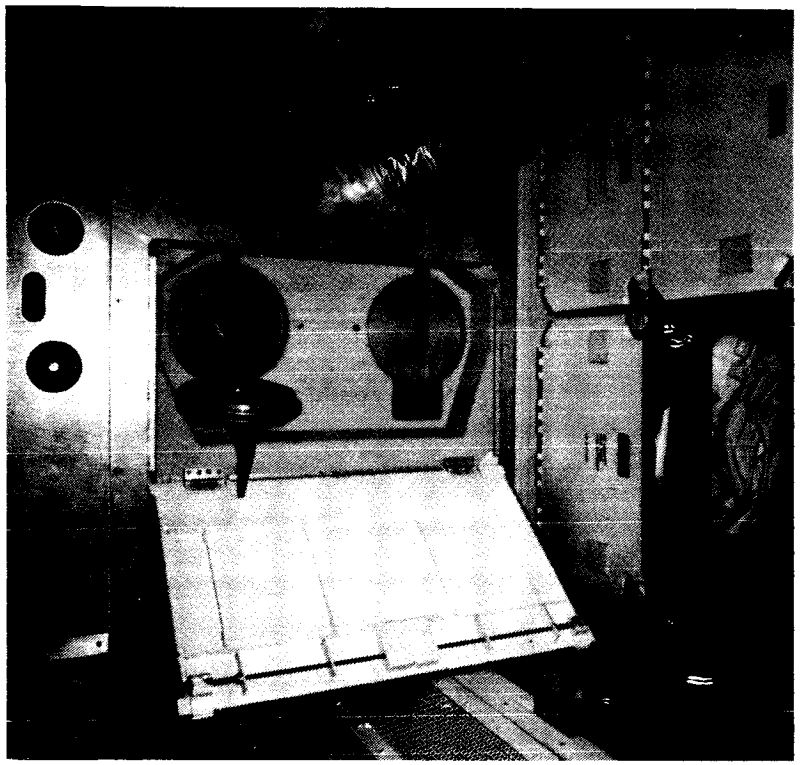

*Carbon Dioxide Absorbers—Air Revitalization System*

The materials and equipment available for cleaning operations are biocidal cleanser, disposable gloves, general-purpose wipes and a vacuum cleaner. The cleaning materials and vacuum are stowed in middeck lockers. The vacuum cleaner is powered by the orbiter's electrical power system.

The biocidal cleanser is a liquid detergent formulation in a container approximately 2 inches in diameter and 6 inches long. The container has a built-in bladder, dispensing valve and nozzle.

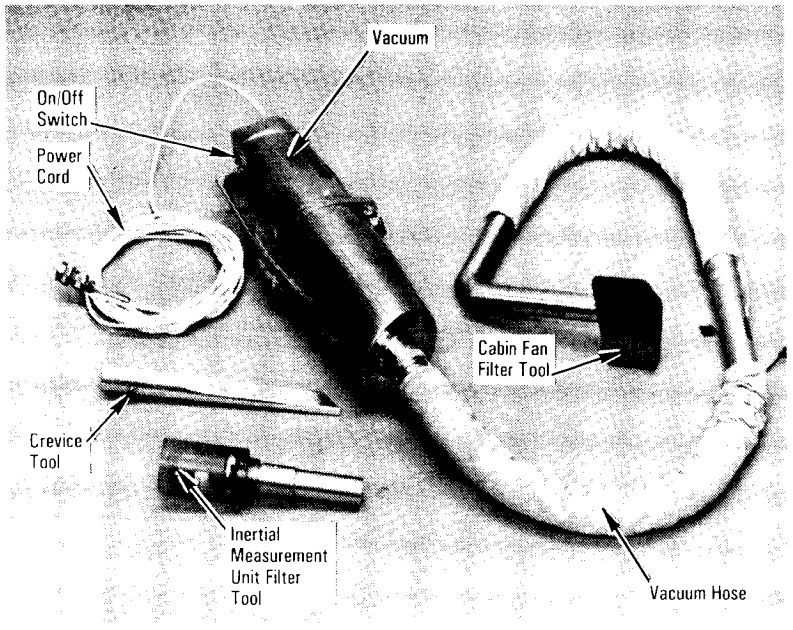


*Vacuum Cleaner*

The cleanser is sprayed on the surface to be cleaned and wiped off with dry general-purpose wipes. It is used for periodic cleansing of the waste collection system urinal and seat and the dining area and equipment. It is also used, as required, to clean walls and floors. Disposable plastic gloves are worn while using the biocidal cleanser.

General-purpose wipes are also used for general-purpose cleaning.

The vacuum cleaner is provided for general housekeeping and cleaning of the crew compartment air filters and Spacelab filters (on Spacelab missions). It has a normal hose, extension hose and several attachments. It is powered by the orbiter dc electrical power system.

Trash management operations include routine stowage and daily collection of wet and dry trash, such as expended wipes, tissues and food containers. Wet trash includes all items that could offgas. The equipment available for trash management includes trash bags, trash bag liners, wet trash containers and the stowable wet trash vent hose.

Three trash bags are located in the crew compartment. Each bag contains a disposable trash bag liner. Two bags are designated for dry trash and one for wet trash. At a scheduled time each day, the trash bag liner for dry trash is removed from its trash bag. The liner is closed with a strip of Velcro and stowed in an empty locker.

When more than 8 cubic feet of wet trash is expected, the trash bag liners for wet trash are removed at a scheduled time each day and placed in a wet trash container. The container is then closed with a zipper and the unit is stowed. If expansion due to offgassing is evident, the container is connected to a vent in the waste management system for overboard venting of the gas.

The wet trash container is made of airtight fabric and is closed with a seal-type slide fastener. The container has a volume of approximately 0.7 cubic foot and has an air inlet valve on one end and a quick disconnect on the other end. It is attached to the waste management vent system beneath the commode, enabling air to flow through the wet trash container and then overboard. It is attached through a 41-inch-long vent hose filter. When the container is full, it is removed and stowed in a modular locker.

An 8-cubic-foot wet trash stowage compartment is available under the middeck floor. Each day, the trash bag liners for wet trash are removed from the trash bags and stowed in the wet trash stowage compartment, which is vented overboard. If the compartment becomes full, the trash bag liners for wet trash are stowed in wet trash containers.

## SIGHTING AIDS

Sighting aids include all items used to aid the flight crew within and outside the crew compartment. The sighting aids include the crewman optical alignment sight, binoculars, adjustable mirrors, spotlights and eyeglasses.

The COAS is a collimator device similar to an aircraft gunsight. Two are installed in the crew compartment flight deck. One COAS is mounted during launch and entry over the positive X commander's forward window and on orbit is removed and mounted next to the aft flight deck overhead right negative Z window. The other COAS is mounted at the aft flight deck station for checking the alignment of the payload bay doors.

When the COAS is mounted at the commander's station, it allows the viewers to reassure themselves of proper attitude orientation during the ascent and deorbit thrusting periods. When the COAS is removed from the commander's station to the aft flight deck for on-orbit operations, it provides a backup to the orbiter star trackers for inertial measurement unit alignment. It is also used as the primary optical instrument for measuring range and rotational rates and allows the flight crew members to align the vehicles and dock.

The COAS consists of a lamp with an intensity control, a reticle, a barrel-shaped housing, a mount, a combiner assembly and a power cable. The reticle consists of a 10-degree circle, vertical and horizontal cross hairs with 1-degree marks, and an elevation scale on the right side of minus 10 degrees to 31.5 degrees.

For IMU alignments, the flight crew member at the aft flight deck station maneuvers the orbiter using the COAS at the right overhead negative Z window until the selected star is in the field of view. The crew member continues maneuvering the orbiter until the star crosses the center of the reticle. At the instant of crossing, the crew member makes a mark, which means he depresses the *att ref* (attitude reference) push button. At the time of the mark, software stores the gimbal angles of the three IMUs. The mark can be taken again if it is felt the star was not centered as well as it could have been. When the crew member feels a good mark was taken, the software is notified to accept it. Good marks for two stars are required for an IMU alignment.

By knowing the star being sighted and the COAS location and mounting relationship in the orbiter, software can determine a line-of-sight vector from the COAS to the star in an inertial coordinate system. Line-of-sight vectors to two stars define the attitude of the orbiter in inertial space. This attitude can be compared to the attitude defined by the IMUs, and if the IMUs are in error, they can be realigned to the more correct orientation by the COAS sightings.

The COAS requires 115-volt ac power for reticle illumination. The COAS is 9.5 by 6 by 4.3 inches and weighs 2.5 pounds.

The 10-by-40 binoculars are a space-modified version of the commercial Leitz Trinovid binocular noted especially for its small size, high magnification, wide field of view, and rugged sealed construction. The 7-by-35 binoculars are noted for close focal distance at high magnification. The 14-by-40 gyrostabilized binoculars contain a gyrostabilized system that enhances target acquisition and retention. When the crew member is subjected to ambient vibrations or hand tremor while using the gyrostabilized binoculars, the target image remains clear and stable. The gyrostabilized binoculars are electrically powered by six alkaline-type AA batteries and will operate continuously up to three hours on one battery pack.



Adjustable mirrors are installed before launch on handholds located between windows 2 and 3 for the commander and windows 4 and 5 for the pilot. During ascent and entry, the commander and pilot use the adjustable mirrors to better see controls that are in obscured areas of their vision. On orbit, the mirrors can be removed and stowed if desired. Each mirror is approximately 3 by 5 inches and weighs approximately 1 pound.

The spotlight is a high-intensity, hand-held flashlight powered by a battery pack consisting of five 1.2-volt one-half D size nickel-cadmium batteries. The spotlight produces a 20,000-candlepower output with a continuous running time of 1.5 hours. The lamp is a 6-volt tungsten filament and cannot be replaced in flight. A spare battery pack is available on board.

For those crew members requiring them, two pairs of eyeglasses are available on board.

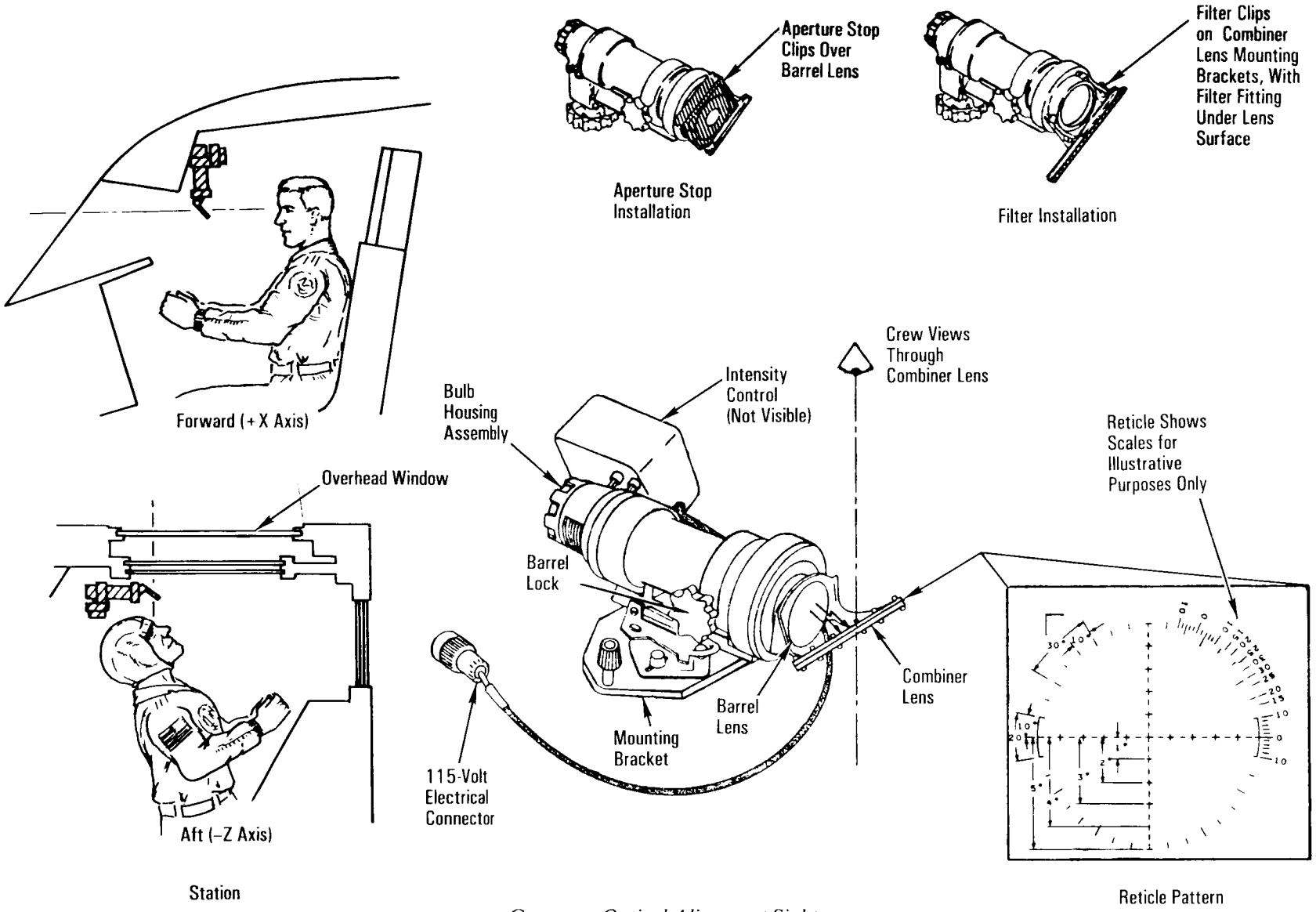


*Crewman Optical Alignment Sight*

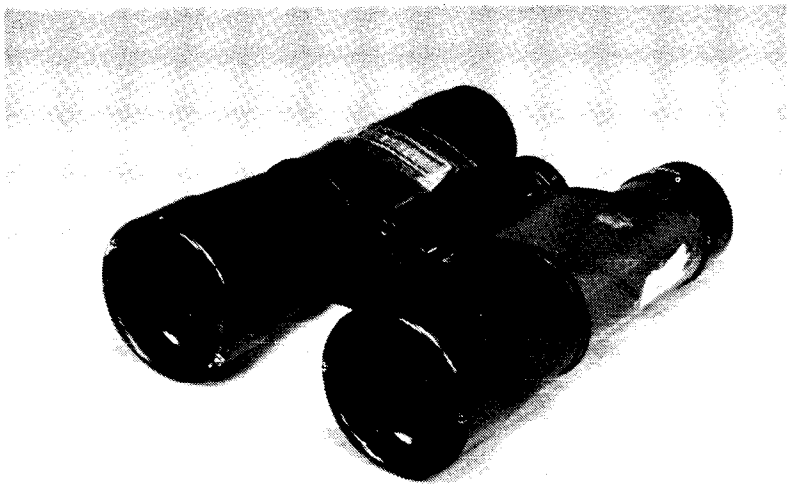

*Sighting Aids—10-by-40 Binoculars*

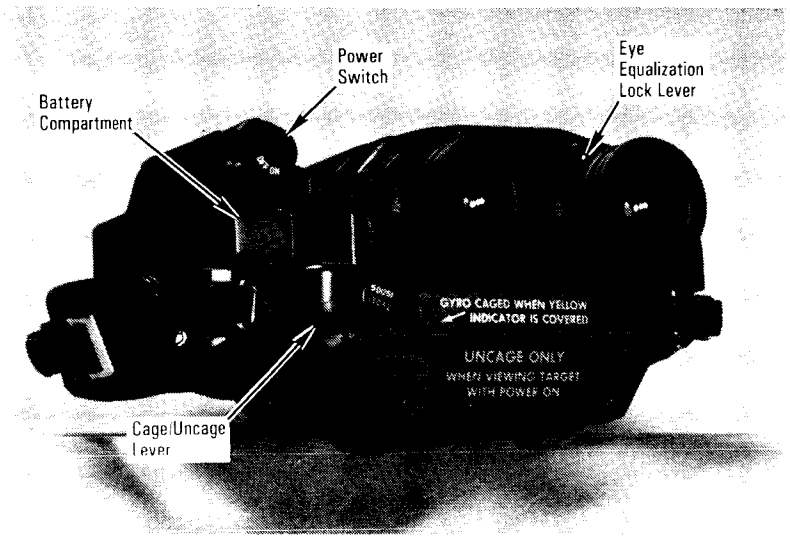


*Sighting Aids—14-by-40 Gyrostabilized Binoculars*

*Sighting Aids—7-by-35 Binoculars*

*Sighting Aid—Spotlight*

## MICROCASSETTE RECORDER

The microcassette recorder is flown primarily for voice recording of data but may also be used to play prerecorded tapes. A microcassette tape has a recording time of 30 minutes per side. It is powered by two 1.5-volt AAA alkaline batteries.

*Microcassette Recorder*

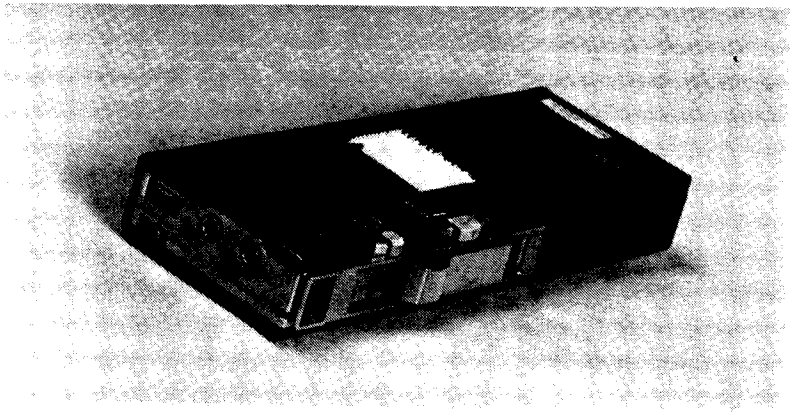

*Microcassette Recorder*

## PHOTOGRAPHIC EQUIPMENT

Three camera systems—16mm, 35mm and 70mm—are used by the flight crew to document activities inside and outside the orbiter. All three camera systems are used to document on-orbit operations. The 16mm camera is also used during the launch and landing phases of the flight.

The 16mm camera is like a motion picture camera with independent shutter speeds and frame rates. The camera can be operated in one of three modes: pulse, cine, or time exposure. In the pulse mode, the camera operates at a continuous frame rate of two, six or 12 frames per second. In the cine mode, the camera operates at 24 frames per second. In the time exposure mode, the first switch actuation opens the shutter and the second actuation closes it. The camera uses 140-foot film magazines and has 5mm, 10mm and 18mm lenses.

The 35mm camera is a motorized, battery-operated Nikon camera with reflex viewing, through-the-lens coupled light metering and automatic film advancement. The camera has the standard manual operation and three automatic (electrically controlled) modes—single exposure, continuous and time. It uses an f/1.4 lens.

The 70mm camera system is a modified battery-powered, motor-driven, single-reflex Hasselblad camera that has 80mm and 250mm lenses and film magazines. Each magazine contains approximately 80 exposures. This camera has only one mode of operation, automatic; however, there are five automatic-type camera functions from which to select. The camera has a fixed viewfinder for through-the-lens viewing.

Interdeck light shades are provided to minimize light leakage between the flight deck and middeck during in-cabin photography. The light shade is attached with Velcro to the middeck ceiling around the interdeck access. Adjustable louvers are provided to regulate the amount of light between the flight deck and middeck.

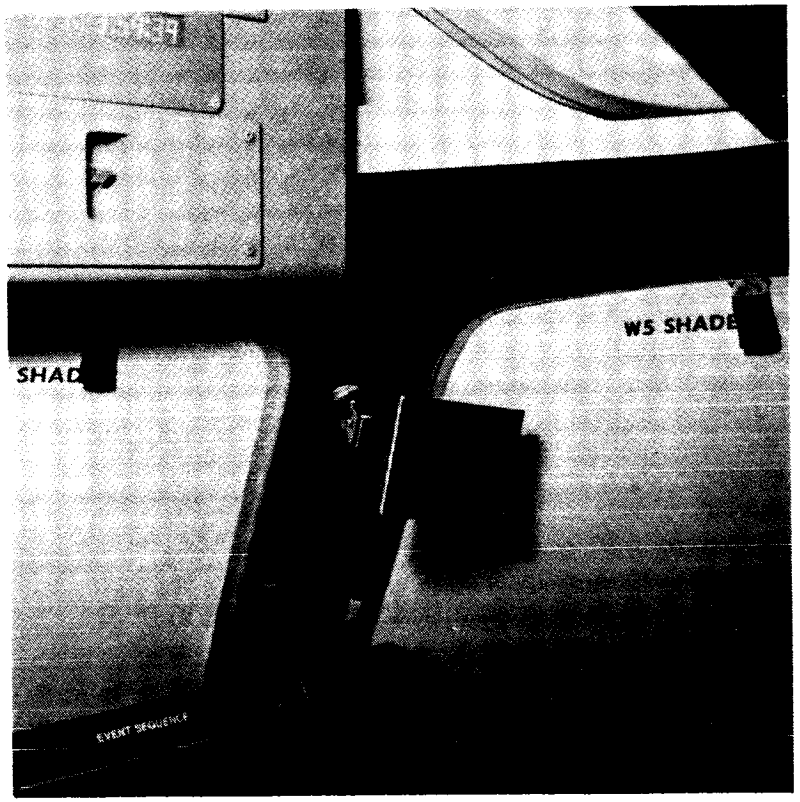


*Adjustable Mirror Installed on Flight Deck*

## WICKET TABS

Wicket tabs are devices that help the crew member activate controls when his vision is degraded. The tabs provide the crew member with tactile cues to the location of controls to be activated as well as a memory aid to their function, sequence of activation and other pertinent information. Wicket tabs are found on controls that are difficult to see during the ascent and entry flight phases on panels O8, C3 and R2.

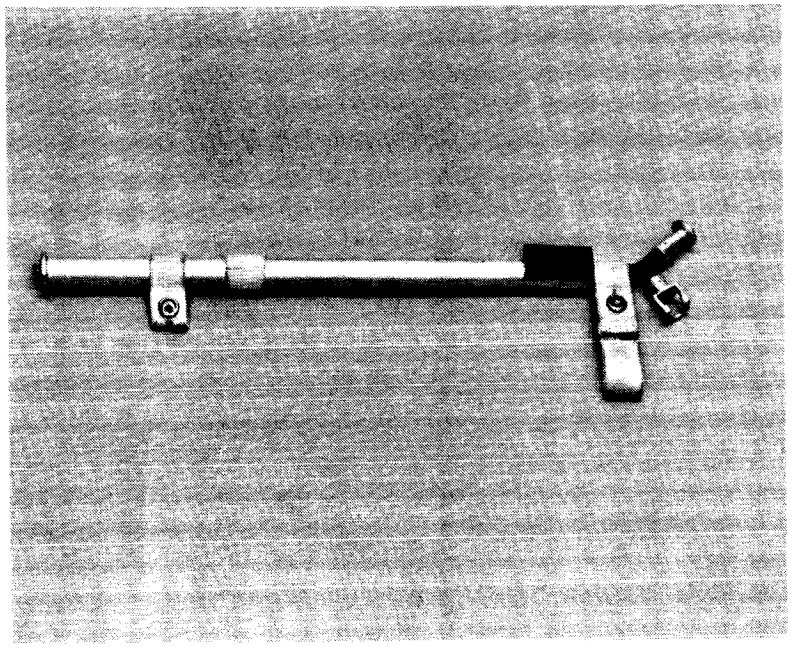

*Reach Aid*

## REACH AID

The reach aid, sometimes known as the "swizzle stick," is a short adjustable bar with a multipurpose end effector that is used to actuate controls that are out of the reach of seated crew members. The reach aid is used to push in and pull out circuit breakers and move toggle switches. It may be used during any phase of flight, but is not recommended for use during ascent because of the attenuation and switch-cuing difficulties resulting from acceleration forces.

Operation of the reach aid consists of extending it and actuating controls with the end effector. To extend the reach aid, one depresses the spring-loaded extension tab and pulls the end effector out to the desired length.

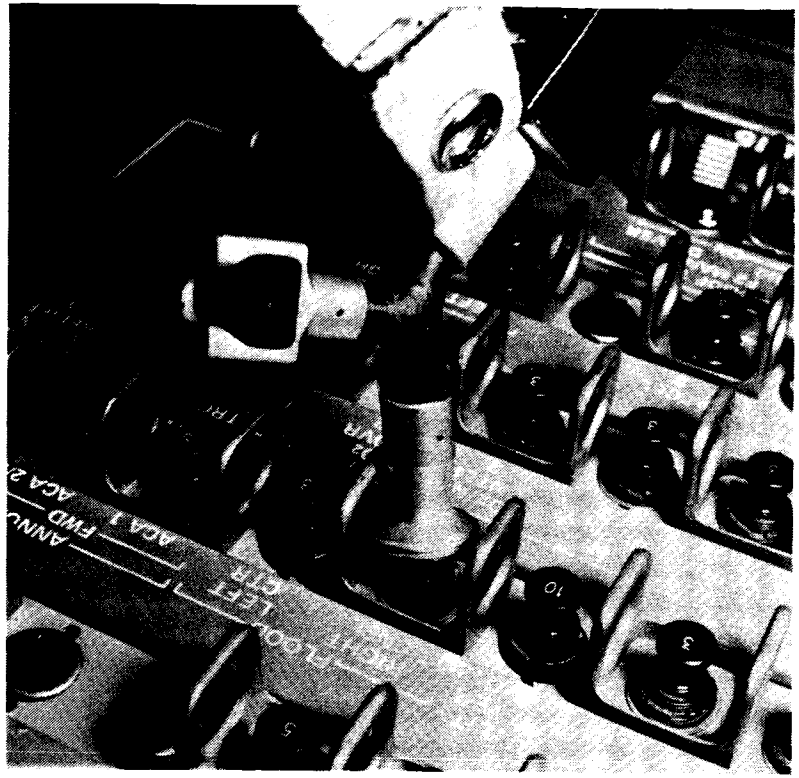

*Reach Aid Closing Circuit Breaker*

*Reach Aid Activating Lever Lock Switch*

## RESTRAINTS AND MOBILITY AIDS

Restraints and mobility aids are provided in the orbiter to enable the flight crew to perform all tasks safely and efficiently during ingress (1-g, orbiter vertical), egress (1-g, orbiter horizontal) and orbital flight (orbiter orientation arbitrary). Restraints and mobility aids consist of foot loop restraints, the airlock foot restraint platform and the work/dining table. In-flight restraints consist of temporary stowage bags, Velcro, tape, snaps, cable restraints, clips, bungees and tethers.

Mobility aids and devices consist of handholds, footholds, handrails, ladders and the ingress-egress platform.

Foot loop restraints are cloth loops attached to the crew compartment decks by adhesive to secure crew members to the deck. Before launch, the foot loop restraints are installed on the floor areas of the aft flight deck work stations, middeck lockers, waste collection system and galley (if installed). Spares will be stowed in the modular lockers. To install a foot restraint, the protective backing on the underside of the restraint is removed and the restraint is placed in its desired location. The foot loop restraints are easily used by placing one or both feet in the loop.

The temporary stowage bag is used to restrain, stow or transport loose equipment temporarily. It is snapped or attached with Velcro to the crew station standard Velcro and snap patterns.

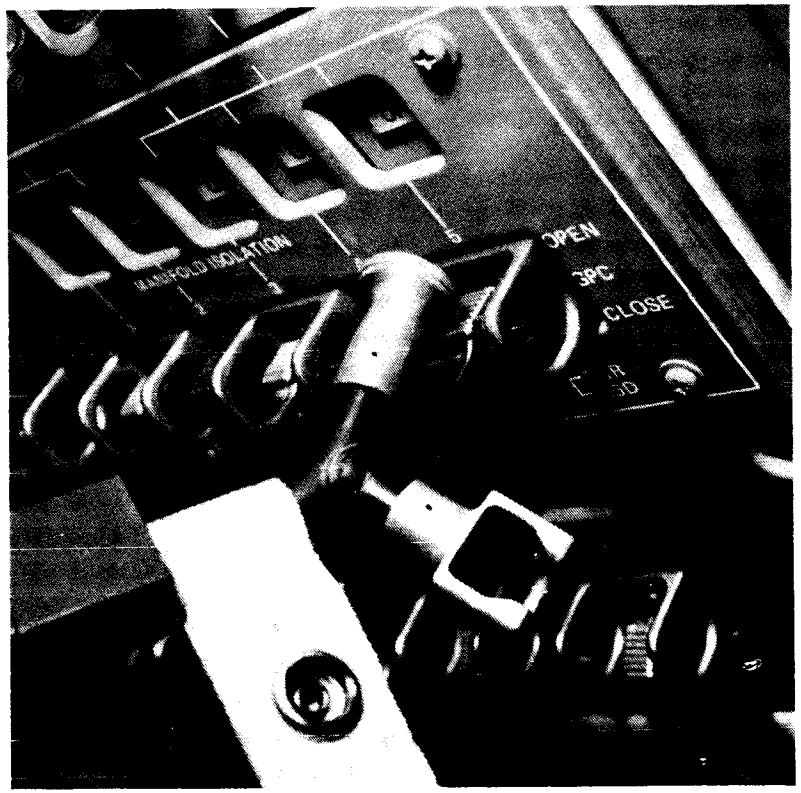


*Reach Aid Activating Toggle Switch*

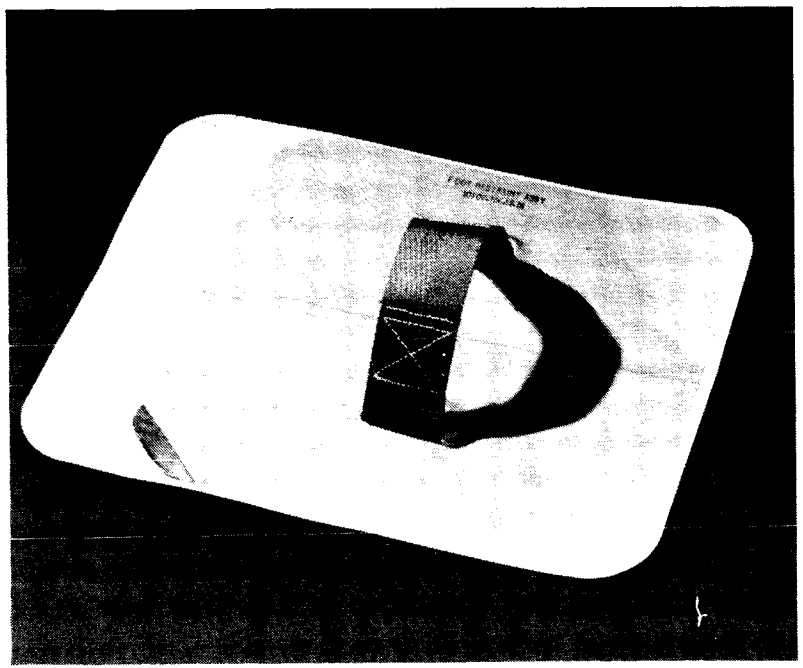

*Foot Loop Restraint Mobility Aid*

Mobility aids and devices are located in the crew compartment for movement of the flight crew members during ingress, egress and orbital flight. These devices consist of handholds for ingress and egress to and from crew seats in the launch and landing configuration, handholds in the primary interdeck access opening for ingress and egress in the launch and landing configuration, a platform in the middeck for ingress and egress to and from the middeck when the orbiter is in the launch configuration, and an interdeck access ladder to enter the flight deck from the middeck in the launch configuration and go from the flight deck to the middeck in the launch and landing configuration.

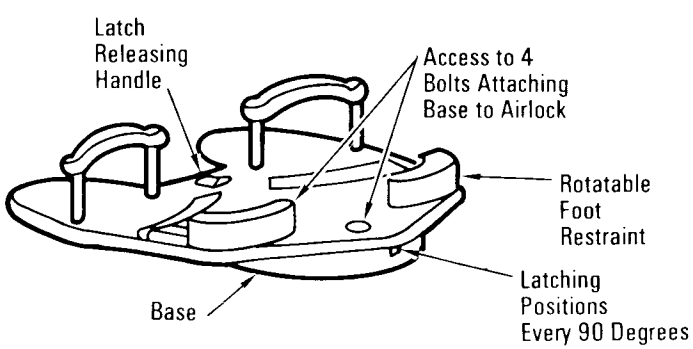


*Airlock Foot Restraint*

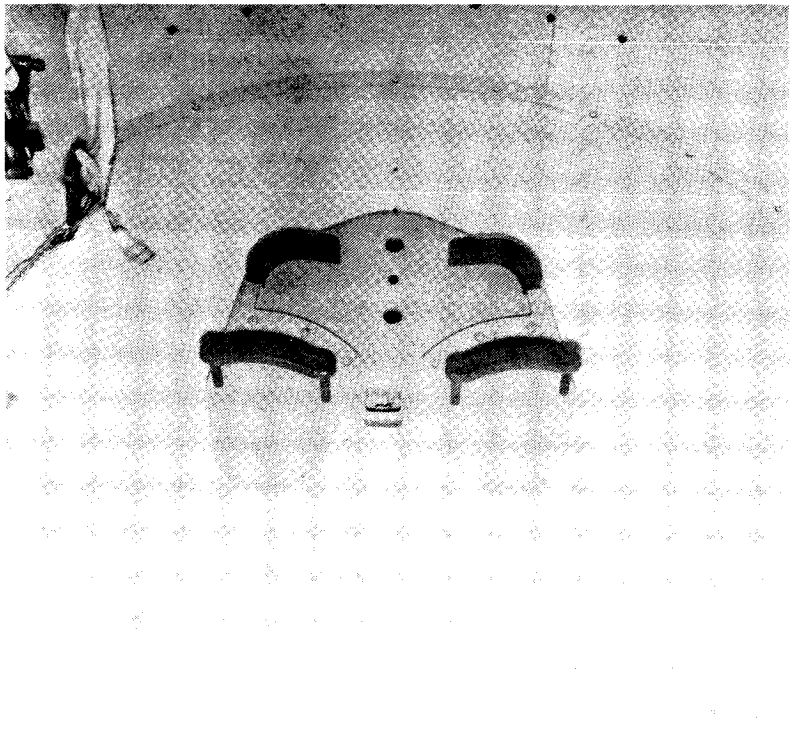

*Airlock Foot Restraint*

The flight data file is a flight reference data file that is readily available to crew members aboard the orbiter. It consists of the onboard complement of documentation and related crew aids and includes documentation, such as procedural checklists (normal, backup and emergency procedures), malfunction procedures, crew activity plans, schematics, photographs, cue cards, star charts, Earth maps and crew notebooks; FDF stowage containers; and FDF ancillary equipment, such as tethers, clips, tape and erasers.

Four permanently mounted containers are located to the left and right side of the commander's and pilot's seats for stowing FDFs on the flight deck. The remaining FDF items are stowed in a middeck modular stowage locker.

*Temporary Stowage Bags*

The flight data file quantity and stowage locations are similar for all flights. The baseline stowage volume is sufficient to contain all FDF items for all orbiter configurations except the pallet-mounted payload. In this case, a larger flight data file and, consequently, additional locker space are required because all payload operations are performed in the orbiter.

FDF items are used throughout the flight—from prelaunch use of the ascent checklist through crew use of the entry checklist.

Flight data files are packaged and stowed on an individual flight basis. FDF items will be stowed in five types of stowage con-

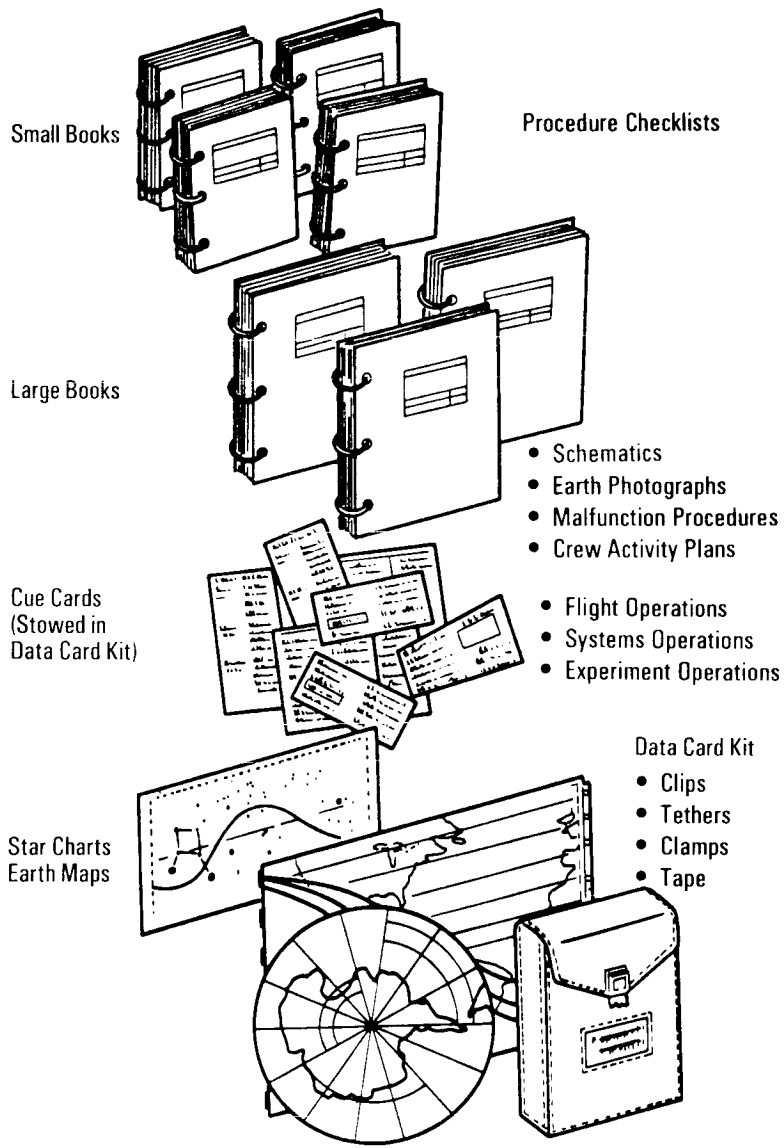


*Flight Data File Items*

tainers: lockers, the flight deck module, the commander's and pilot's seat-back FDF assemblies, the middeck FDF assembly and the map bag. The portable containers are stowed in a middeck modular locker for launch and entry.

If the flight carries a Spacelab module, all Spacelab books are stowed for launch in a portable container on the middeck and transferred in flight to the Spacelab. The FDF stowage is flexible and easily accessible.

## CREW EQUIPMENT STOWAGE

Crew equipment on board the orbiter is stowed in lockers with insertable trays. The trays can be adapted to accommodate a wide variety of soft goods, loose equipment and food. The lockers are interchangeable and attach to the orbiter with crew fittings. The lockers can be removed or installed in flight by the crew members. There are two sizes of trays: a half-size tray (two of which fit inside a locker) and a full-size tray. Approximately 150 cubic feet of stowage space is available, almost 95 percent of it on the middeck.



The lockers are made of either epoxy- or polyimide-coated Kevlar honeycomb material joined at the corners with aluminum channels. Inside dimensions are approximately 10 by 17 by 20 inches. The honeycomb material is approximately 0.25 of an inch thick and was chosen for its strength and light weight. The lockers contain about 2 cubic feet of space and can hold up to 60 pounds.

Dividers are used in the trays to provide a friction fit for zero-g retention. This will reduce the necessity for the straps, bags, Velcro snaps and other cumbersome attach devices previously used. Soft containers will be used in orbiter spaces too small for the fixed lockers.

The trays are packed with gear so that no item covers another type of gear. This method of packing will reduce the confusion

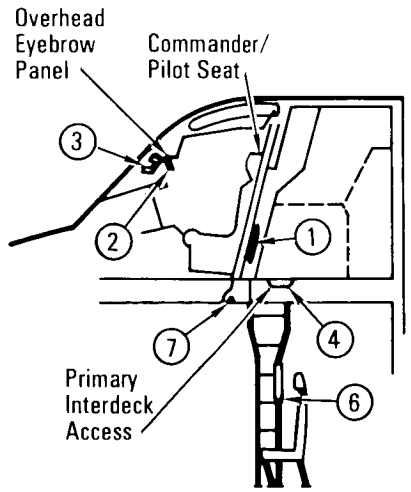


**Primary Interdeck Area (Port Side Looking Inboard)**

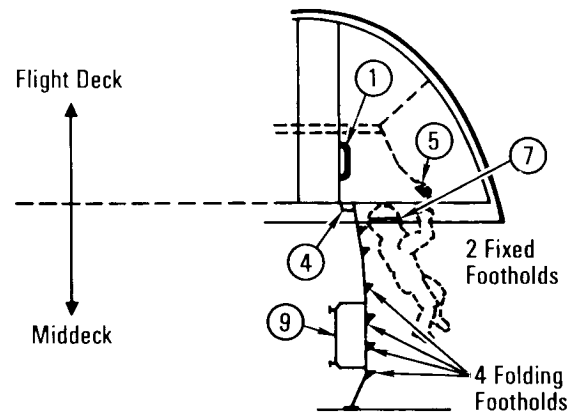


**Primary Interdeck Area (Port Side Looking Aft)**

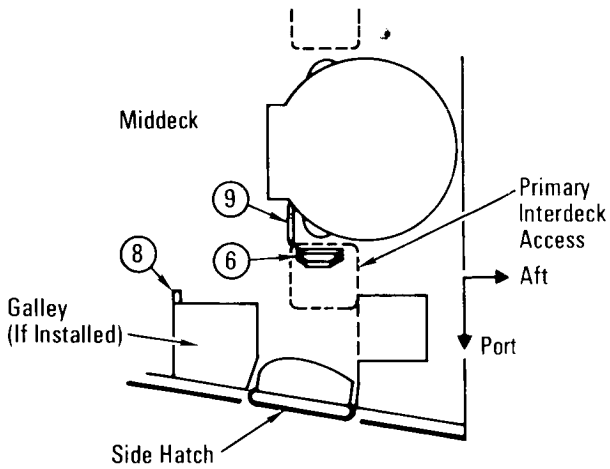


| No. | Name | Location | Primary Use |
|---|---|---|---|
| 1 | Seat rail handhold | Commander's seat | Interdeck transfer |
| 2 | Eyebrow handhold (folding) | Overhead eyebrow panel | Seat ingress/egress |
| 3 | Window post handhold | Window posts | Seat ingress/egress |
| 4 | Flight deck floor handhold | Flight deck floor | Interdeck access |
| 5 | Primary interdeck access handhold | Above accessway | Interdeck access |
| 6 | Interdeck access ladder (4 folding and 2 fixed footholds) | Below accessway | Interdeck access |
| 7 | Interdeck access handrail | Accessway | Interdeck access |
| 8 | Galley handhold (if installed) | Food preparation station | Pad egress |
| 9 | Ingress/egress platform | Forward of ladder | Pad ingress/egress |

*Mobility Aids in the Crew Station*

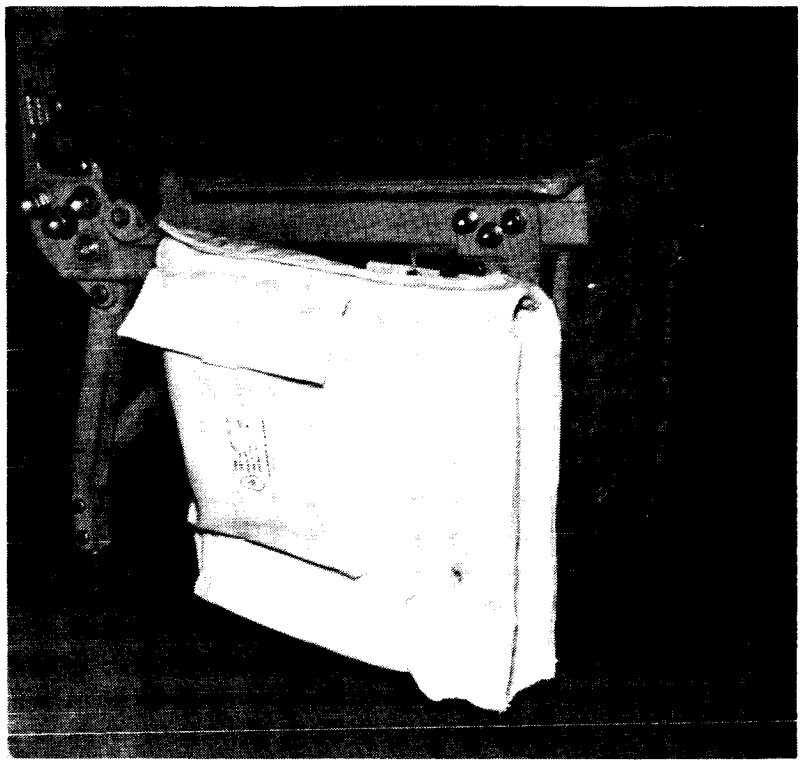

*Flight Data File Container*

usually associated with finding loose equipment and maintaining a record of the equipment.

Stowage areas in the orbiter crew compartment are located in the forward flight deck, the aft flight deck, the middeck, the equipment bay and the airlock module.

In the aft flight deck, stowage lockers are located below the rear payload control panels in the center of the deck. Container modules can be mounted to the right and left of the payload control station. Since these side containers are interchangeable, they may not be carried on every mission, depending on any payload-unique installed electronic gear.

In the middeck, container modules can be inserted in the forward avionics bay. Provisions for 42 containers are available in this area. In addition, there is an area to the right side of the airlock module where nine containers can be attached.

Harness stowage bags stowed in a middeck stowage locker or airlock are used on orbit to stow flight crew members' launch equipment, such as helmets, harnesses, boots and waste/trash materials.

## EXERCISE EQUIPMENT

The only exercise equipment presently being flown is a treadmill. The exact stowage location in the crew compartment middeck for launch, orbit and entry depends on the mission.

The treadmill is used with a restraint system to allow a crew member to run or jog in orbit. The treadmill kit is stowed on top

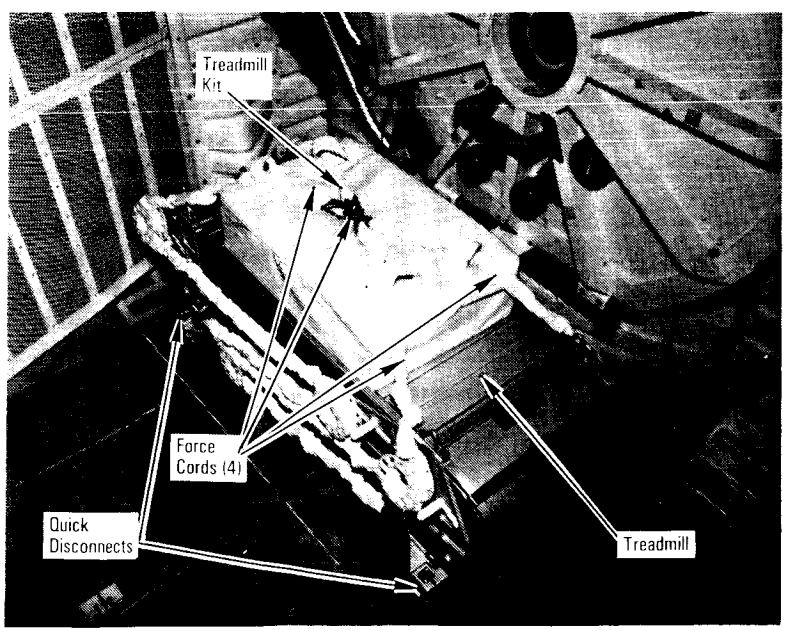


*Treadmill*

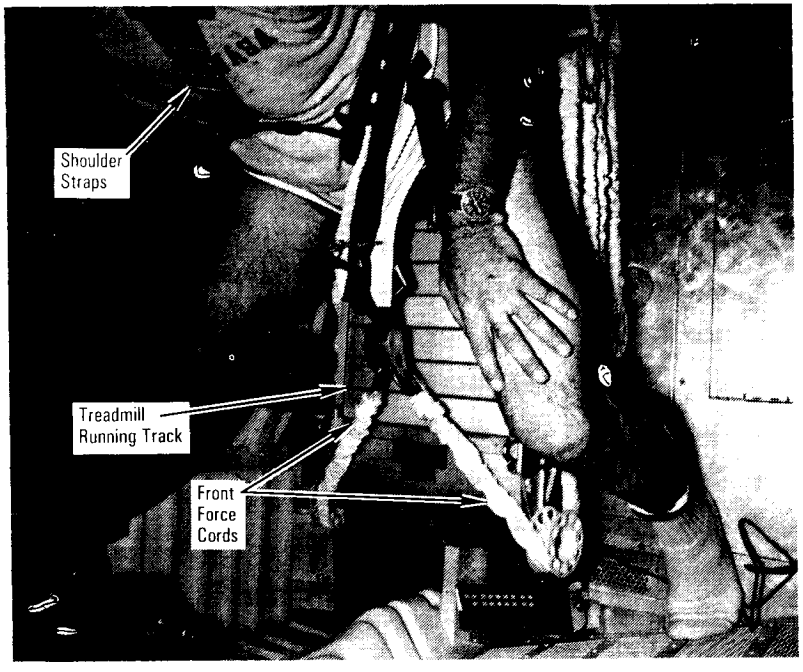


*Treadmill Configuration*

of the treadmill and contains the waist belt, two shoulder straps, four extender hooks and a physiological monitor. The treadmill kit is restrained by four force cords that are used to restrain the body during exercise. The treadmill attaches to four middeck quick disconnects. The quick disconnects contain several metal hooks that are hinged within the quick disconnect and actuated by the knurled lock ring. To release the quick disconnects, the lock push button is depressed and the knurled lock ring is pushed up, releasing the metal hooks. When the lock ring is pushed down, the metal hooks converge and capture the top of the middeck stud.

The treadmill has a speed control knob, which controls a rapid onset braking system. When the preset speed is reached, the brake engages and produces increased drag on the running track.

The physiological monitor provides heart rate, the time run and the distance run. The heart rate is determined by an ear clip,

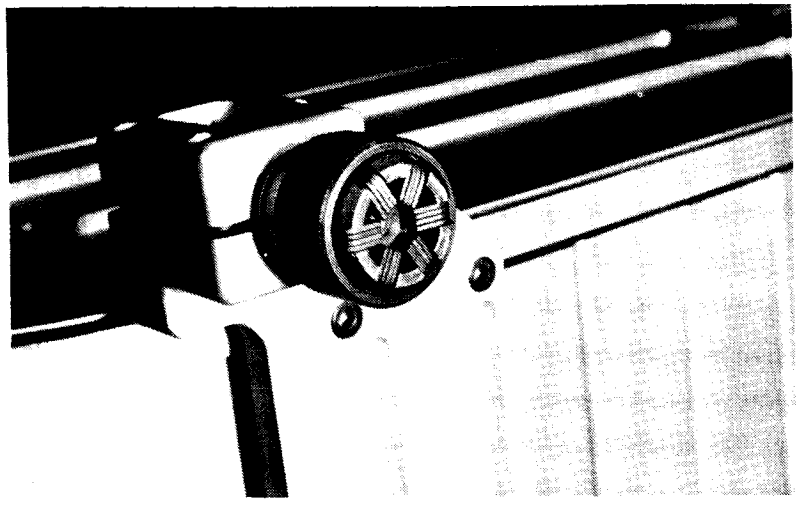

*Treadmill Quick Disconnect, Locked*

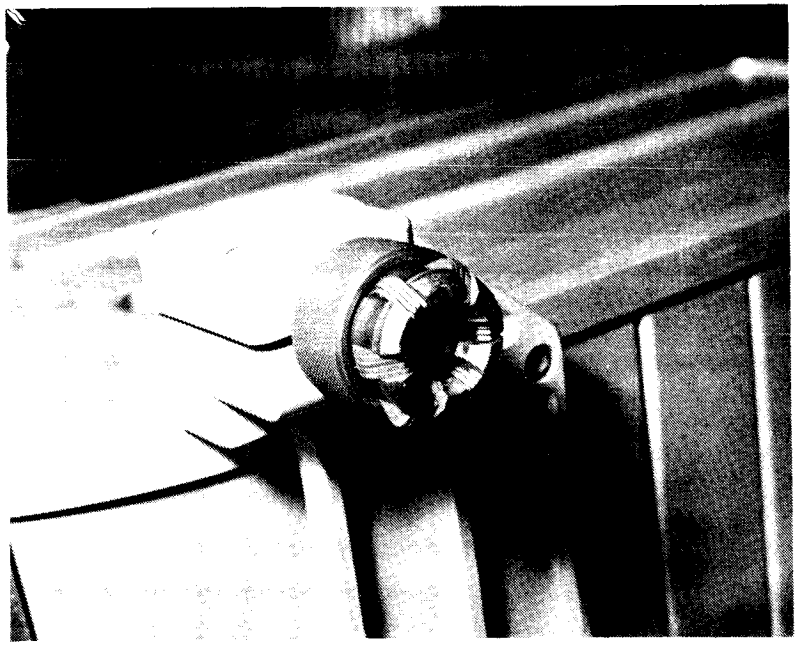

*Treadmill Quick Disconnect, Unlocked*

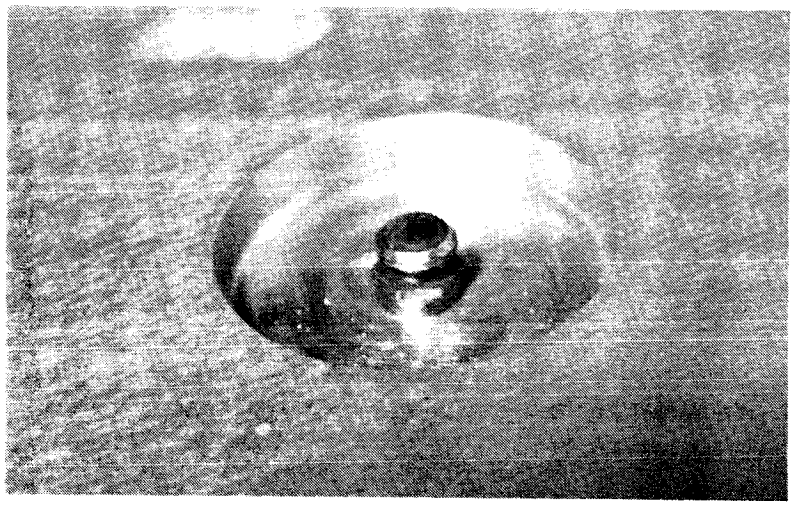

*Middeck Stud for Quick Disconnect*

which has an infrared sensor that detects increased blood flow (pulses) in the ear lobe. Distance run is determined by connecting a mechanical sensor wire on the side of the treadmill to the physiological monitor. The mechanical sensor detects the number of revolutions of the track and sends an electrical signal to the physiological monitor, where the distance is computed and shown on the display along with the heart rate. The monitor is stowed on the treadmill handle while the crew member runs.

## SOUND LEVEL METER

The sound level meter is provided to determine on-orbit acoustical noise levels in the cabin. Depending on the requirements for each flight, the flight crew is required to take meter readings at specified crew compartment and equipment locations. The data obtained by the flight crew is logged and/or voice recorded. The meter is operated by four 1.5-volt batteries.

## AIR SAMPLING SYSTEM

The air sampling system consists of air bottles that are stowed in a modular locker. They are removed for sampling and restowed for entry.

## THERMAL PROTECTION SYSTEM

The thermal protection system consists of various materials applied externally to the outer structural skin of the orbiter to maintain the skin within acceptable temperatures, primarily during the entry phase of the mission. The orbiter's outer structural skin is constructed primarily of aluminum and graphite epoxy.

During entry, the TPS materials protect the orbiter outer skin from temperatures above 350 F. In addition, they are reusable for 100 missions with refurbishment and maintenance. These materials perform in temperature ranges from minus 250 F in the cold soak of space to entry temperatures that reach nearly 3,000 F. The TPS also sustains the forces induced by deflections of the orbiter airframe as it responds to the various external environments. Because the thermal protection system is installed on the outside of the orbiter skin, it establishes the aerodynamics over the vehicle in addition to acting as the heat sink.

Orbiter interior temperatures also are controlled by internal insulation, heaters and purging techniques in the various phases of the mission.

The TPS is a passive system consisting of materials selected for stability at high temperatures and weight efficiency. These materials are as follows:

1. Reinforced carbon-carbon is used on the wing leading edges; the nose cap, including an area immediately aft of the nose cap on the lower surface (chine panel); and the immediate area around the forward orbiter/external tank structural attachment. RCC protects areas where temperatures exceed 2,300 F during entry.

2. Black high-temperature reusable surface insulation tiles are used in areas on the upper forward fuselage, including around the forward fuselage windows; the entire underside of the vehicle where RCC is not used; portions of the orbital maneuvering system and reaction control system pods; the leading and trailing edges of the vertical stabilizer; wing glove areas; elevon trailing edges; adjacent to the RCC on the upper wing surface; the base heat shield; the interface with wing leading edge RCC; and the upper body flap surface. The HRSI tiles protect areas where temperatures are below 2,300 F. These tiles have a black surface coating necessary for entry emittance.

3. Black tiles called fibrous refractory composite insulation were developed later in the thermal protection system program. FRCI tiles replace some of the HRSI tiles in selected areas of the orbiter.

4. Low-temperature reusable surface insulation white tiles are used in selected areas of the forward, mid-, and aft fuselages; vertical tail; upper wing; and OMS/RCS pods. These tiles protect areas where temperatures are below 1,200 F. These tiles have a white surface coating to provide better thermal characteristics on orbit.

5. After the initial delivery of Columbia from Rockwell International's Palmdale assembly facility, an advanced flexible reusable surface insulation was developed. This material consists of sewn composite quilted fabric insulation batting between two layers of white fabric that are sewn together to form a quilted blanket. AFRSI was used on Discovery and Atlantis to replace the vast majority of the LRSI tiles. Following its seventh flight, Columbia also was modified to replace most of the LRSI tiles with AFRSI. The AFRSI blankets provide improved producibility and durability, reduced fabrication and installation time and costs, and a weight reduction over that of the LRSI tiles. The AFRSI blankets protect areas where temperatures are below 1,200 F.

6. White blankets made of coated Nomex felt reusable surface insulation are used on the upper payload bay doors,

portions of the midfuselage and aft fuselage sides, portions of the upper wing surface and a portion of the OMS/RCS pods. The FRSI blankets protect areas where temperatures are below 700 F.

7. Additional materials are used in other special areas. These materials are thermal panes for the windows; metal for the forward reaction control system fairings and elevon seal panels on the upper wing to elevon interface; a combination of white- and black-pigmented silica cloth for thermal barriers and gap fillers around operable penetrations, such as main and nose landing gear doors, egress and ingress flight crew side hatch, umbilical doors, elevon cove, forward RCS, RCS thrusters, midfuselage vent doors, payload bay doors, rudder/speed brake, OMS/RCS pods and gaps between TPS tiles in high differential pressure areas; and room-temperature vulcanizing material for the thick aluminum T-0 umbilicals on the sides of the orbiter aft fuselage.

**REINFORCED CARBON-CARBON.** RCC fabrication begins with a rayon cloth graphitized and impregnated with a phenolic resin. This impregnated cloth is layed up as a laminate and cured in an autoclave. After being cured, the laminate is pyrolized to convert the resin to carbon. This is then impregnated with furfural alcohol in a vacuum chamber, then cured and pyrolized again to convert the furfural alcohol to carbon. This process is repeated three times until the desired carbon-carbon properties are achieved.

To provide oxidation resistance for reuse capability, the outer layers of the RCC are converted to silicon carbide. The RCC is packed in a retort with a dry pack material made up of a mixture of alumina, silicon and silicon carbide. The retort is placed in a furnace, and the coating conversion process takes place in argon with a stepped-time-temperature cycle up to 3,200 F. A diffusion reaction occurs between the dry pack and carbon-carbon in which the outer layers of the carbon-carbon are converted to silicon carbide (whitish-gray color) with no thickness increase. It is this silicon-carbide coating that protects the carbon-carbon from oxidation. The silicon-carbide coating develops surface cracks caused by differential thermal expansion mismatch, requiring further oxidation resistance. That is provided by impregnation of a coated RCC part with tetraethyl orthosilicate. The part is then sealed with a glossy overcoat. The RCC laminate is superior to a sandwich design because it is light in weight and rugged; and it promotes internal cross-radiation from the hot stagnation region to cooler areas, thus reducing stagnation temperatures and thermal gradients around the leading edge. The operating range of RCC is

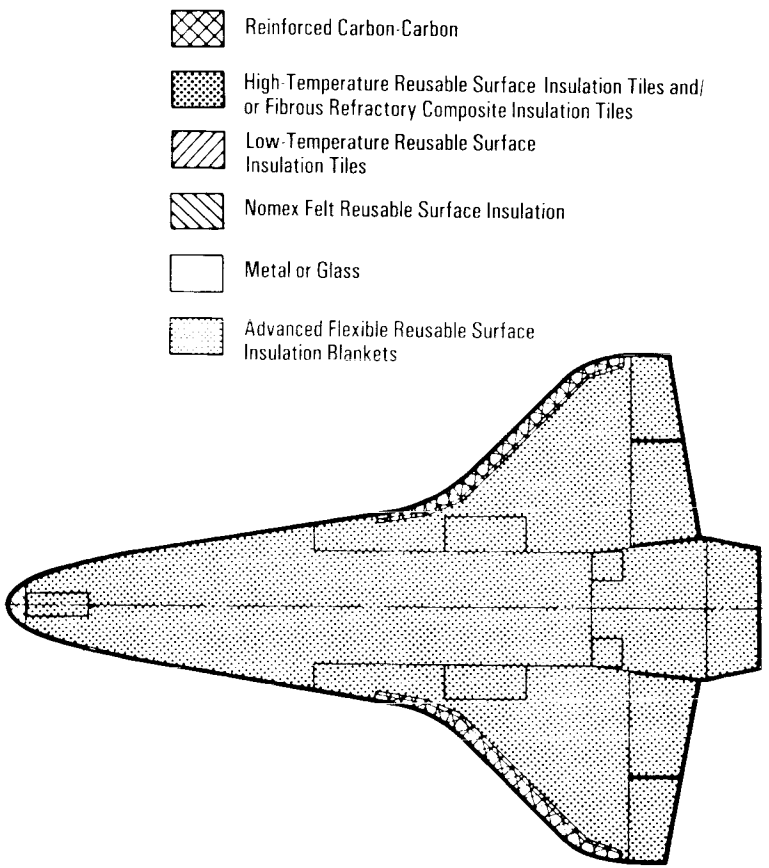


*Bottom View Orbiter Thermal Protection System*

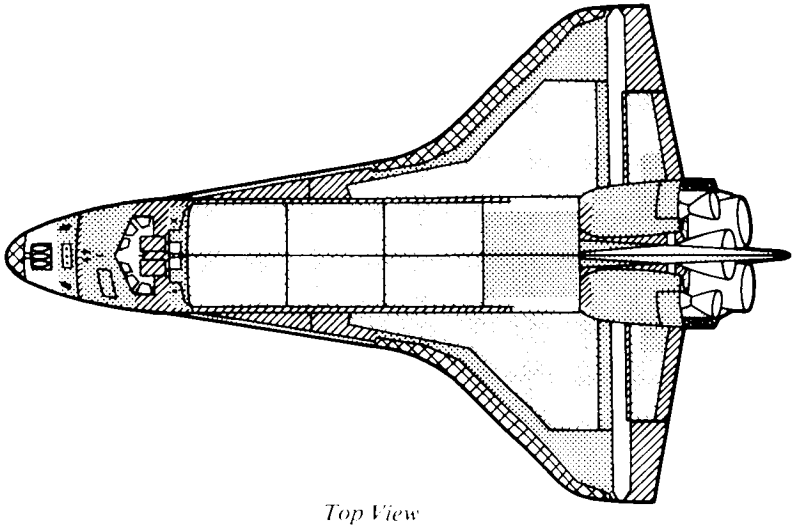

*Top View*

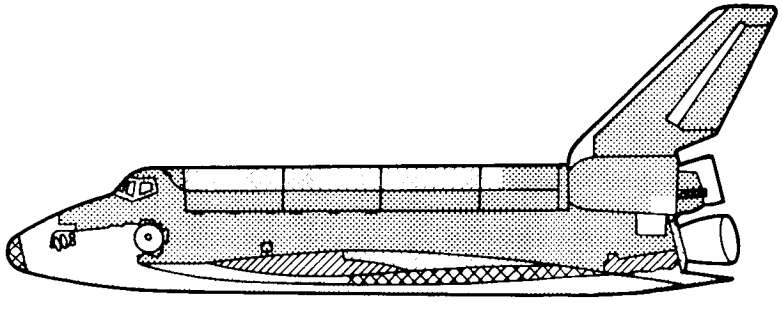

*Side View*

*Orbiter Thermal Protection System*

from minus 250 F to about 3,000 F. The RCC is highly resistant to fatigue loading that is experienced during ascent and entry.

The RCC panels are mechanically attached to the wing with a series of floating joints to reduce loading on the panels caused by wing deflections. The seal between each wing leading edge panel is referred to as a T-seal. The T-seals allow for lateral motion and

*Thermal Protection System*

| | Approximate Number of Tiles or Blankets |
|---|---|
| High-temperature reusable surface insulation tiles | |
| 22-pound tiles | 501 |
| 9-pound tiles | 20,047 |
| Fibrous refractory composite insulation tiles | |
| 12-pound tiles | 2,945 |
| Low-temperature reusable surface insulation tiles | |
| 9-pound tiles | 699 |
| Advanced flexible reusable surface insulation blankets | 2,277 |
| Flexible reusable surface insulation | 977** |
| | 27,446* |

*Columbia (OV-102) will have a slight variation in the number of tiles because of the Shuttle infrared leeside temperature sensing pod atop the vertical stabilizer. There will also be a slight variation in the number of tiles per vehicle.

**The FRSI sheets will vary slightly in number for each orbiter.

thermal expansion differences between the RCC and the orbiter wing. In addition, they prevent the direct flow of hot boundary layer gases into the wing leading edge cavity during entry. The T-seals are constructed of RCC.

Since carbon is a good thermal conductor, the adjacent aluminum and the metallic attachments must be protected from exceeding temperature limits by internal insulation. Inconel 718 and A-286 fittings are bolted to flanges on the RCC components and are attached to the aluminum wing spars and nose bulkhead. Inconel-covered cerachrome insulation protects the metallic attach fittings and spar from the heat radiated from the inside surface of the RCC wing panels.

The nose cap thermal insulation ues a blanket made from ceramic fibers and filled with silica fibers. HRSI or FRCI tiles are used to protect the forward fuselage from the heat radiated from the hot inside surface of the RCC.

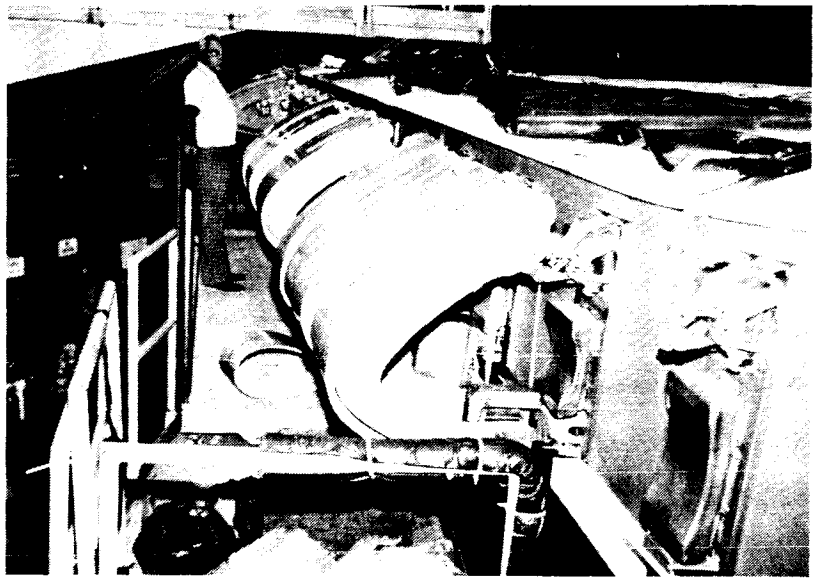

*Reinforced Carbon-Carbon Wing*

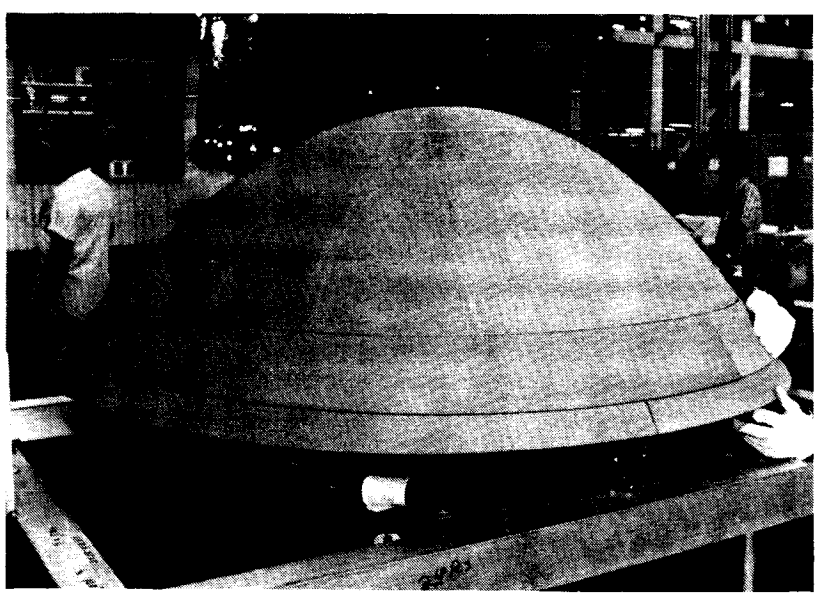

*RCC Nose Cap*

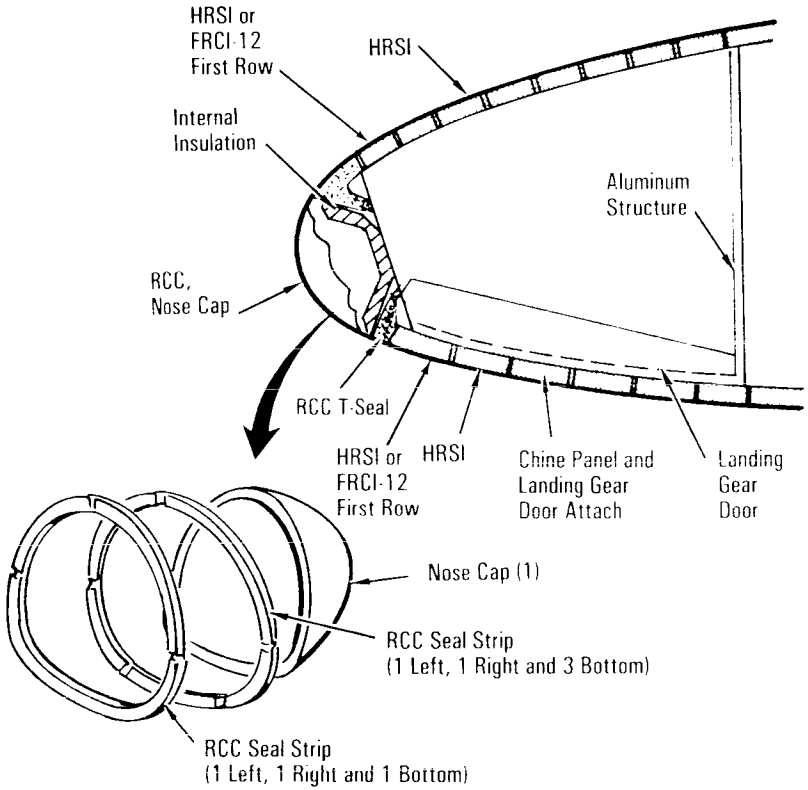


*RCC Nose Cap*

During flight operations, damage has occurred in the area between the RCC nose cap and the nose landing gear doors from impact during ascent and excess heat during entry. The HRSI tiles in this area are to be replaced with RCC.

In the immediate area surrounding the forward orbiter/ET attach point, an AB312 ceramic cloth blanket is placed on the forward fuselage. RCC is placed over the blanket and is attached by metal standoffs for additional protection from the forward orbiter/ET attach point pyrotechnics.

**HIGH-TEMPERATURE REUSABLE SURFACE INSULATION TILES.** The HRSI tiles are made of a low-density, high-

*RCC Chin Panel*

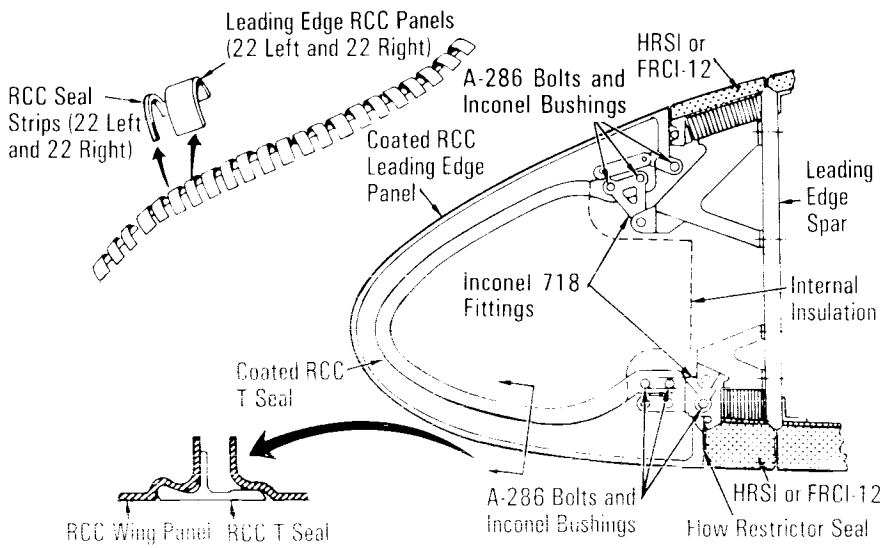


*RCC Wing Leading Edge*

purity silica 99.8-percent amorphous fiber (fibers derived from common sand, 1 to 2 mils thick) insulation that is made rigid by ceramic bonding. Because 90 percent of the tile is void and the remaining 10 percent is material, the tile weighs approximately 9 pounds per cubic foot. A slurry containing fibers mixed with water is frame-cast to form soft, porous blocks to which a colloidal silica binder solution is added. When it is sintered, a rigid block is produced that is cut into quarters and then machined to the precise dimensions required for individual tiles.

HRSI tiles vary in thickness from 1 inch to 5 inches. The variable thickness is determined by the heat load encountered during entry. Generally, the HRSI tiles are thicker at the forward areas of the orbiter and thinner toward the aft end. Except for closeout areas, the HRSI tiles are nominally 6- by 6-inch squares. The HRSI tiles vary in sizes and shapes in the closeout areas on the orbiter. The HRSI tiles withstand on-orbit cold soak conditions, repeated heating and cooling thermal shock and extreme acoustic environments (165 decibels) at launch.

For example, an HRSI tile taken from a 2,300 F oven can be immersed in cold water without damage. Surface heat dissipates so quickly that an uncoated tile can be held by its edges with an ungloved hand seconds after removal from the oven while its interior still glows red.

The HRSI tiles are coated on the top and sides with a mixture of powdered tetrasilicide and borosilicate glass with a liquid carrier. This material is sprayed on the tile to coating thicknesses of 16 to 18 mils. The coated tiles then are placed in an oven and heated to a temperature of 2,300 F. This results in a black, waterproof glossy coating that has a surface emittance of 0.85 and a solar absorptance of about 0.85. After the ceramic coating heating process, the remaining silica fibers are treated with a silicon resin to provide bulk waterproofing.

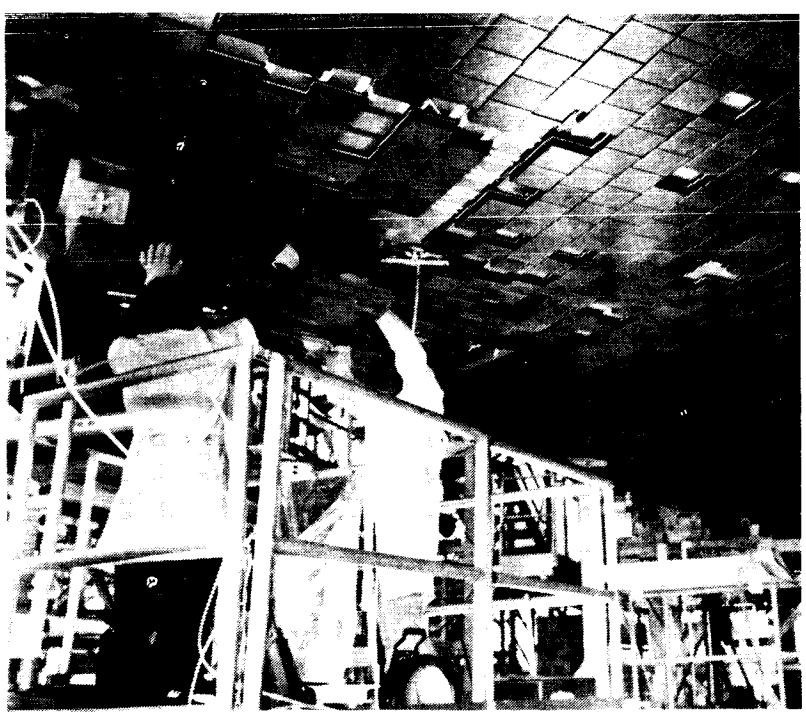

*High-Temperature Reusable Surface Insulation Tiles*

Note that the tiles cannot withstand airframe load deformation; therefore, stress isolation is necessary between the tiles and the orbiter structure. This isolation is provided by a strain isolation pad. SIPs isolate the tiles from the orbiter's structural deflections, expansions and acoustic excitation, thereby preventing stress failure in the tiles. The SIPs are thermal isolators made of Nomex felt material supplied in thicknesses of 0.090, 0.115 or 0.160 inch. SIPs are bonded to the tiles, and the SIP and tile assembly is bonded to the orbiter structure by an RTV process.

Nomex felt is a basic aramid fiber. The fibers are 2 deniers in fineness, 3 inches long and crimped. They are loaded into a carding machine that untangles the clumps of fibers and combs them to make a tenuous mass of lengthwise-oriented, relatively parallel fibers called a web. The cross-lapped web is fed into a loom, where it is lightly needled into a batt. Generally, two such batts are placed face-to-face and needled together to form felt. The felt then is subjected to a multineedle pass process until the desired strength is reached. The needled felt is calendered to stabilize at a thickness of 0.16 inch to 0.40 inch by passing through heated rollers at selected pressures. The calendered material is heat-set at approximately 500 F to thermally stabilize the felt.

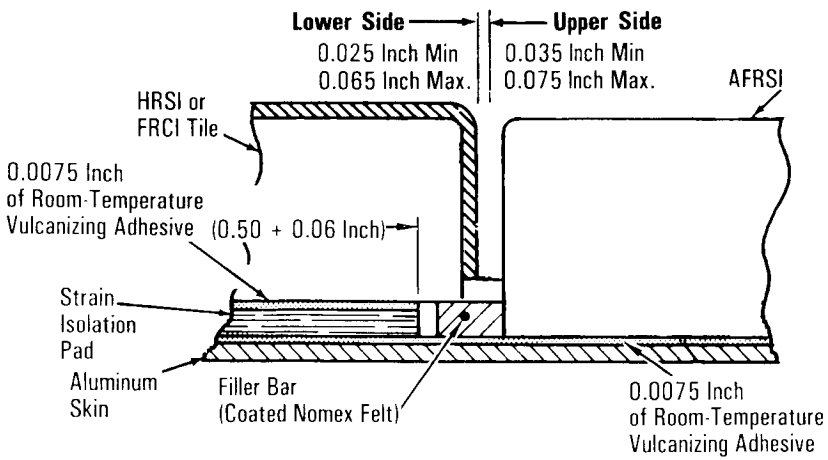


*HRSI or FRCI Tile and AFRSI Interface*

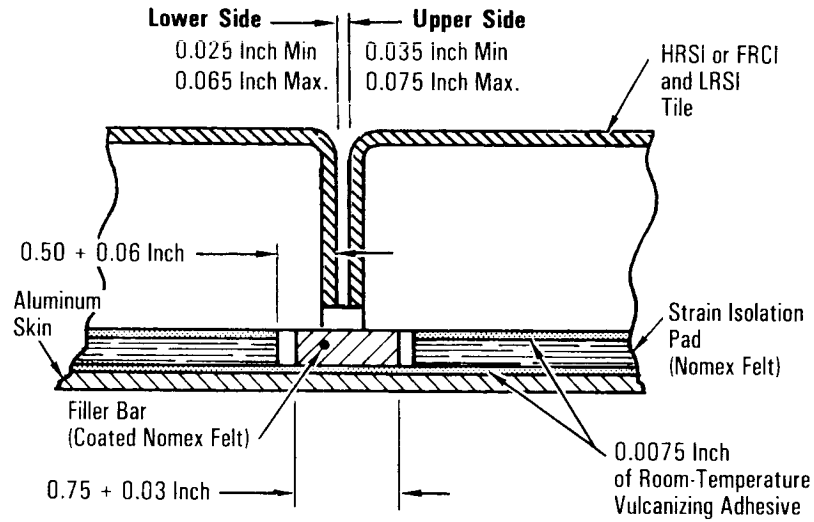


*HRSI or FRCI and LRSI Tile Interface*



The RTV silicon adhesive is applied to the orbiter surface in a layer approximately 0.008 inch thick. The very thin bond line reduces weight and minimizes the thermal expansion at temperatures of 500 F during entry and temperatures below minus 170 F on orbit. The tile/SIP bond is cured at room temperature under pressure applied by vacuum bags.

Since the tiles thermally expand or contract very little compared to the orbiter structure, it is necessary to leave gaps of 25 to 65 mils between them to prevent tile-to-tile contact. Nomex felt material insulation is required in the bottom of the gap between tiles. It is referred to as a filler bar. The material, supplied in thicknesses corresponding to the SIPs', is cut into strips 0.75 inch wide and is bonded to the structure. The filler bar is waterproof and temperature-resistant up to approximately 800 F, topside exposure.

SIP introduces stress concentrations at the needled fiber bundles. This results in localized failure in the tile just above the RTV bond line. To solve this problem, the inner surface of the tile is

densified to distribute the load more uniformly. The densification process was developed from a Ludox ammonia-stabilized binder. When mixed with silica slip particles, it becomes a cement. When mixed with water, it dries to a finished hard surface. A silica-tetraboride coloring agent is mixed with the compound for penetration identification. Several coats of the pigmented Ludox slip slurry are brush-painted on the SIP/tile bond interface and allowed to air-dry for 24 hours. A heat treatment and other processing are done before installation. The densification coating penetrates the tile to a depth of 0.125 inch, and the strength and stiffness of the tile and SIP system are increased by a factor of two.

There are two different densities of HRSI tiles. The first weighs 22 pounds per cubic foot and is used in all areas around the nose and main landing gears, nose cap interface, wing leading edge, RCC/HRSI interface, external tank/orbiter umbilical doors, vent doors and vertical stabilizer leading edge. The remaining areas use tiles that weigh 9 pounds per cubic foot.

**FIBROUS REFRACTORY COMPOSITE INSULATION TILES.** The FRCI tiles were developed by NASA's Ames Research Center, Mountain View, Calif., and were manufactured by Lockheed Missiles and Space Division, Sunnyvale, Calif.

The FRCI-12 HRSI tiles are a higher strength tile derived by adding AB312 (alumina-borosilicate fiber), called Nextel, to the pure silica tile slurry. Developed by the 3M Company of St. Paul, Minn., Nextel activates boron fusion and, figuratively, welds the micron-sized fibers of pure silica into a rigid structure during sintering in a high-temperature furnace. The resulting composite fiber refractory material composed of 20-percent Nextel and 80-percent silica fiber has entirely different physical properties from the original 99.8-percent-pure silica tiles. Nextel, with an expansion coefficient 10 times that of the 99.8-percent-pure silica, acts like a preshrunk concrete reinforcing bar in the fiber matrix.

The reaction-cured glass (black) coating of the FRCI-12 tiles is compressed as it is cured to reduce the coating's sensitivity to cracking during handling and operations. In addition to the improved coating, the FRCI-12 tiles are about 10 percent lighter than the HRSI tiles. The FRCI-12 HRSI tiles also have demonstrated a tensile strength at least three times greater than that of the HRSI tiles and a use temperature approximately 100 F higher than that of HRSI tiles.

The FRCI-12 HRSI tile manufacturing process is essentially the same as that for the 99.8-percent-pure silica HRSI tiles, the only change being in the wet-end prebinding of the slurry before it is cast. It also requires a higher sintering temperature. When the material is dried, a rigid block is produced. These blocks are cut into quarters and then machined to the precise dimensions required for each tile. The FRCI-12 tiles are the same 6- by 6-inch size as HRSI tiles and vary in thickness from 1 inch to 5 inches. They vary also in size and shape at the closeout areas and are bonded to the orbiter in essentially the same way as the HRSI tiles.

The FRCI-12 tiles are used to replace the HRSI 22-pound-per-cubic-foot tiles. The FRCI-12 tiles have a density of 12 pounds per cubic foot and provide improved strength, durability, resistance to coating cracking and weight reduction.



**LOW-TEMPERATURE REUSABLE SURFACE INSULATION TILES.** The LRSI tiles are of the same construction and have the same basic functions as the 99.8-percent-pure silica HRSI tiles, but they are thinner (0.2 to 1.4 inches) than HRSI tiles. Thickness is determined by the heat load encountered during entry. The 99.8-percent-pure silica LRSI tiles are manufactured in the same manner as the 99.8-percent-pure silica HRSI tiles, except that the tiles are 8- by 8-inch squares and have a white optical and moisture-resistant coating applied 10 mils thick to the top and sides. In addition, the white coating provides on-orbit thermal control for the orbiter. The coating is made of silica compounds with shiny aluminum oxide to obtain optical properties. The coated 99.8-percent-pure silica LRSI tiles are treated with bulk waterproofing similar to the HRSI tiles. LRSI tiles are installed on the orbiter in the same manner as the HRSI tiles. The LRSI tile has a surface emittance of 0.8 and a solar absorptance of 0.32.

Because of evidence of plasma flow on the lower wing trailing edge and elevon leading edge tiles (wing/elevon cove) at the outboard elevon tip and inboard elevon, the LRSI tiles are replaced with FRCI-12 and HRSI 22 tiles along with gap fillers on Discovery (OV-103) and Atlantis (OV-104). On Columbia (OV-102), only gap fillers are being installed in this area.

**ADVANCED FLEXIBLE REUSABLE SURFACE INSULATION BLANKETS.** AFRSI blankets replace the vast majority of the LRSI tiles. AFRSI consists of a low-density fibrous silica batting that is made up of high-purity silica and 99.8-percent amorphous silica fibers (1 to 2 mils thick). This batting is sandwiched between an outer woven silica high-temperature fabric and an inner woven glass lower temperature fabric. After the composite is sewn with silica thread, it has a quiltlike appearance. The AFRSI blankets are coated with a ceramic collodial silica and high-purity silica fibers (referred to as C-9) that provide endurance. The AFRSI composite density is approximately 8 to 9 pounds per cubic foot and varies in thickness from 0.45 to 0.95 inch. The thickness is determined by the heat load the blanket encounters during entry. The blankets are cut to the planform shape required and bonded directly to the orbiter by RTV silicon adhesive 0.20 inch thick. The very thin glue line reduces weight and minimizes the thermal expansion during temperature changes. The sewn quilted fabric blanket is manufactured by Rockwell in 3- by 3-foot squares of the proper thickness. The direct application of the blankets to the orbiter results in weight reduction, improved producibility and durability, reduced fabrication and installation cost, and reduced installation schedule time.

**FELT REUSABLE SURFACE INSULATION.** FRSI is the same Nomex material as SIP. The FRSI varies in thickness from 0.160 to 0.40 inch depending on the heat load encountered during entry. It consists of sheets 3 to 4 feet square, except for closeout areas, where it is cut to fit. The FRSI is bonded directly to the orbiter by RTV silicon adhesive applied at a thickness of 0.20 inch. A white-pigmented silicon elastomer coating is used to waterproof the felt and provide required thermal and optical properties. The FRSI has an emittance of 0.8 and solar absorptance of 0.32. FRSI covers nearly 50 percent of the orbiter's upper surfaces.

**THERMAL BARRIERS.** Thermal barriers are used in the closeout areas between various components of the orbiter and TPS, such as the forward and aft RCS, rudder/speed brake, nose and main landing gear doors, crew ingress and egress hatch, vent doors, external tank umbilical doors, vertical stabilizer/aft fuselage interface, payload bay doors, wing leading edge RCC/HRSI interface, and nose cap and HRSI interface. The various materials used are white AB312 ceramic alumina borosilica fibers or black-pigmented AB312 ceramic fiber cloth braided around an inner tubular spring made from Inconel 750 wire with silica fibers within the tube, alumina mat, quartz thread and Macor machinable ceramic.

Where surface pressure gradients would cause cross flow of boundary layer air within the intertile gaps, tile gap fillers are provided to minimize heating. The tile gap filler materials consist of white AB312 fibers or a black-pigmented AB312 cloth cover containing alumina fibers. These materials are used around the leading edge of the forward fuselage nose cap, windshields and side hatch, wing, trailing edge of elevons, vertical stabilizer, rudder/



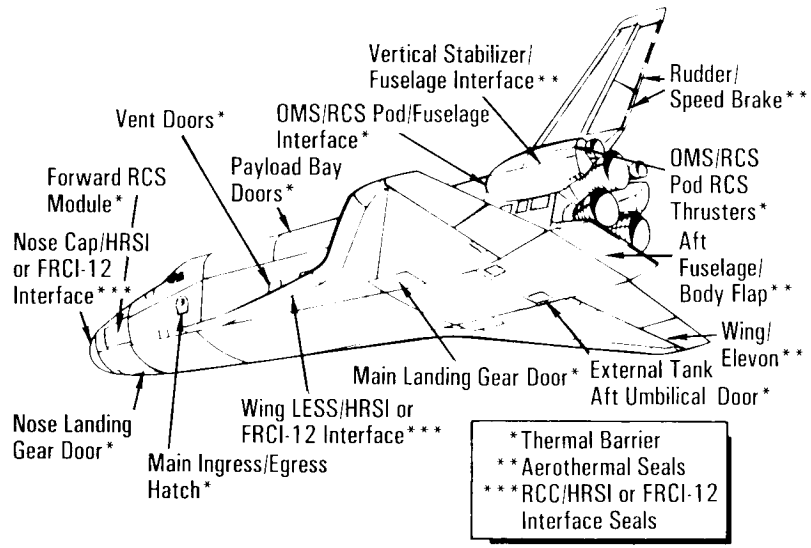


*Thermal Barriers*

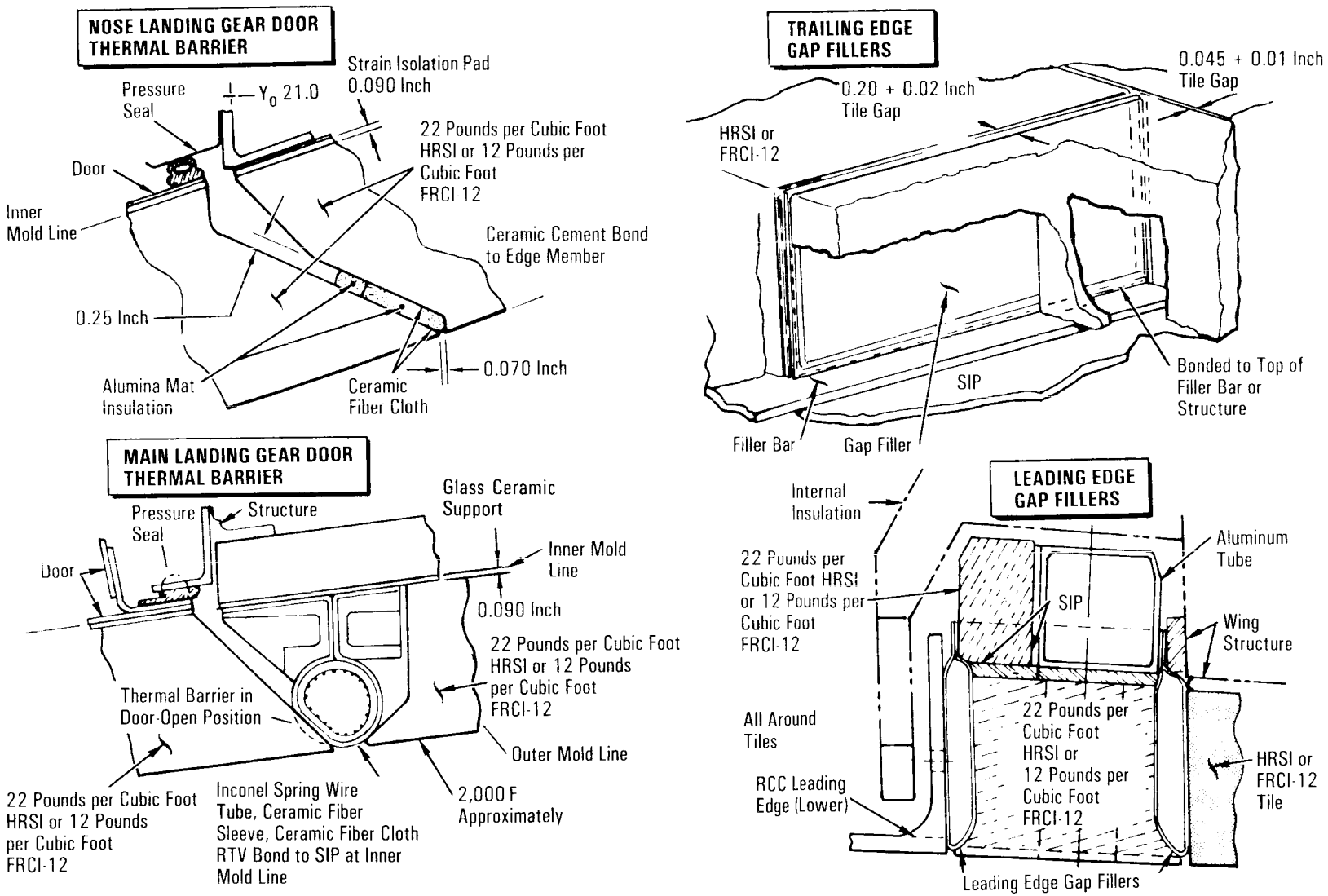


*Typical TPS Gap Fillers and Thermal Barriers*

speed brake, body flap and heat shield of the shuttle's main engines.

Fused silica threaded inserts and plugs are used in the tiles to provide access for door removal or panel attachment.

**TILE IDENTIFICATION**. Each TPS tile has an identification code that is painted in yellow. The paint does not burn off during entry and can be obtained commerically under the name Spearex.

**FLAGS AND LETTERS**. Flags and letters are painted on the orbiter with a Dow Corning 3140 silicon-base material colored by adding pigments. It is basically the same paint used to paint automobile engines and will break down in temperature ranges between 800 to 1,000 F.

**REWATERPROOFING**. After each flight, the orbiter thermal protection system is rewaterproofed. Dimethylethoxysilane is injected into each tile through an existing hole in the surface coating with a needleless gun, and the AFRSI blankets are injected with DMES from a needle gun.

The contractors for the thermal protection system are Vought Corporation, Dallas, Texas (RCC); Lockheed Missiles and Space Co. Inc., Sunnyvale, Calif. (HRSI and LRSI tiles and HRSI FRCI-12 tiles); Albany International Research Co., Dedham, Mass. (Nomex felt); General Electric, Waterford, N.Y. (room-temperature

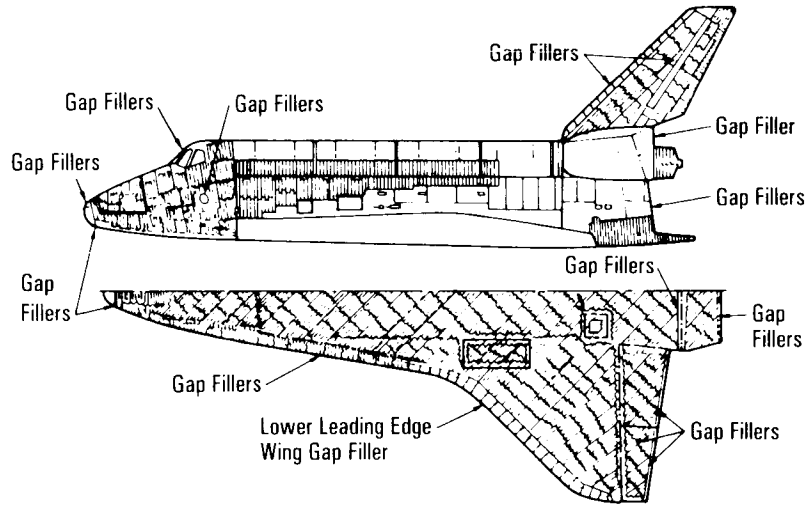


*TPS Tile Gap Filler Locations*

vulcanizing adhesive); 3M Company, St. Paul, Minn. (AB312 fibers); Santa Fe Textiles, Santa Ana, Calif. (Inconel 750 wire spring and fabric sleeving); ICI United States Inc., Wilmington, Del. (alumina mat); J.P. Stevens Co., Los Angeles, Calif. (quartz thread); Corning Glass Works, Corning, N.Y. (Macor machinable glass ceramic); Velcro Corp., New York, N.Y. (Velcro hooks and loops); Prodesco, Perkasie, Pa. (fibrous pile-S glass); Johns Manville, Waterville, Ohio (high-purity silica glass); and Rockwell International, Downey, Calif. (AFRSI quilted fabric).

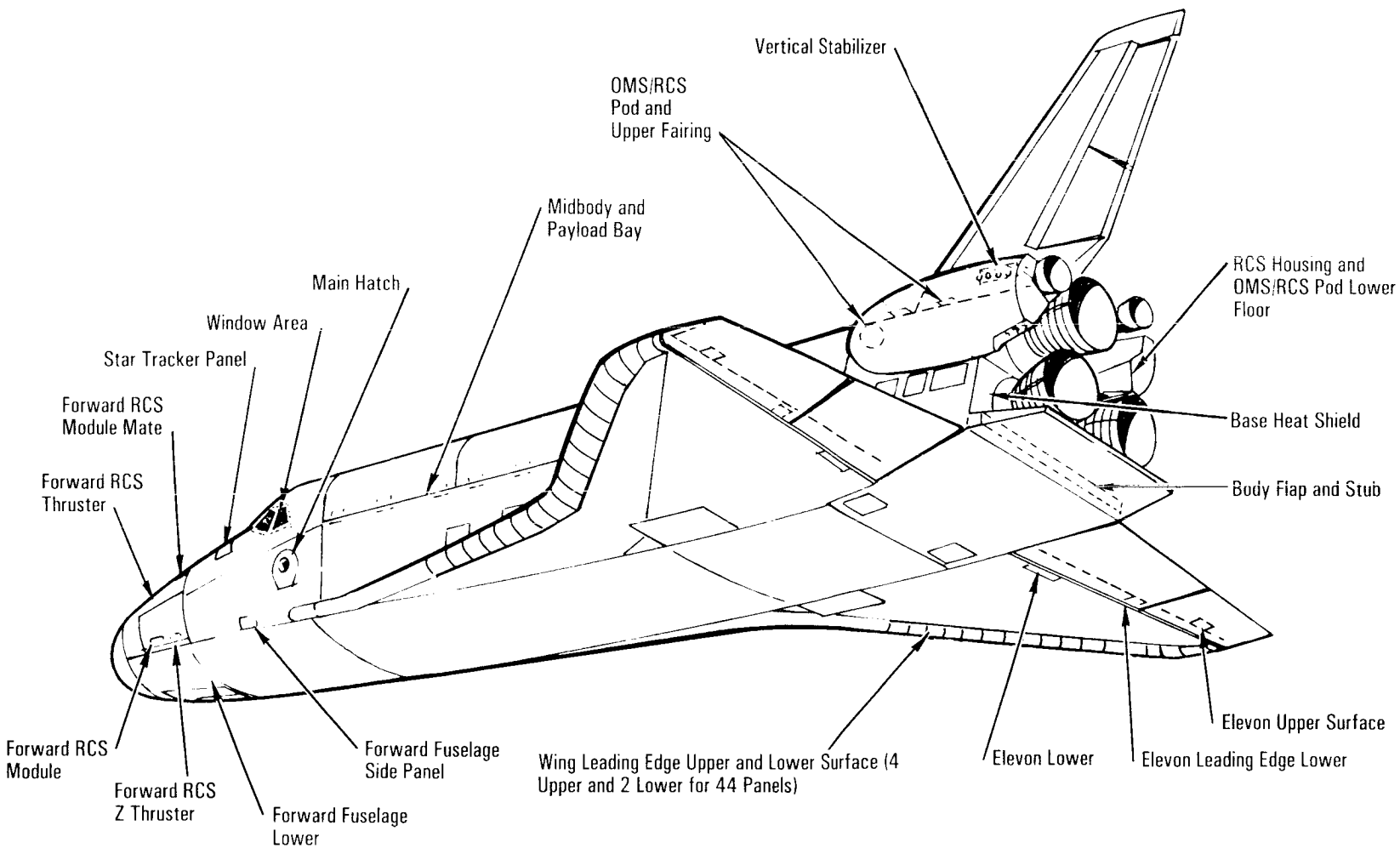


*Fused Silica Insert and Plug Locations*

## MAIN PROPULSION SYSTEM

The main propulsion system, assisted by the two solid rocket boosters during the initial phases of the ascent trajectory, provides the velocity increment from lift-off to a predetermined velocity increment before orbit insertion. The two SRBs are jettisoned after their fuel has been expended, but the MPS continues to thrust until the predetermined velocity is achieved. At that time, main engine cutoff is initiated. The external tank is jettisoned, and the orbital maneuvering system is ignited to provide the final velocity increment for orbital insertion. The magnitude of the velocity increment supplied by the OMS depends on payload weight, mission trajectory and system limitations.

Coincident with the start of the OMS thrusting maneuver (which settles the MPS propellants), the remaining liquid oxygen propellant in the orbiter feed system and space shuttle main engines is dumped through the nozzles of the three SSMEs. At the same time, the remaining liquid hydrogen propellant in the orbiter feed system and SSMEs is dumped overboard through the hydrogen fill and drain valves for six seconds. Then the hydrogen inboard fill and drain valve is closed, and the hydrogen recirculation valve is opened, continuing the dump. The hydrogen flows through the engine hydrogen bleed valves to the orbiter hydrogen MPS line between the inboard and outboard hydrogen fill and drain valves, and the remaining hydrogen is dumped through the outboard fill and drain valve for approximately 120 seconds.

During on-orbit operations, the flight crew vacuum inerts the MPS by opening the liquid oxygen and liquid hydrogen fill and drain valves, which allows the remaining propellants to be vented to space.

Before entry, the flight crew repressurizes the MPS propellant lines with helium to prevent contaminants from being drawn into the lines during entry and to maintain internal positive pressure. MPS helium is also used to purge the spacecraft's aft fuselage. The last activity involving the MPS occurs at the end of the landing rollout. At that time, the helium remaining in onboard helium storage tanks is released into the MPS to provide an inert atmosphere for safety.

The MPS consists of the following major subsystems: three SSMEs, three SSME controllers, the external tank, the orbiter MPS propellant management subsystem and helium subsystem, four ascent thrust vector control units, and six SSME hydraulic servoactuators.

The main engines are reusable, high-performance, liquid-propellant rocket engines with variable thrust. The propellant fuel is liquid hydrogen and the oxidizer is liquid oxygen. The propellant is carried in separate tanks in the external tank and supplied to the main engines under pressure. Each engine can be gimbaled plus or minus 10.5 degrees in the yaw axis and plus or minus 10.5 degrees in the pitch axis for thrust vector control by hydraulically powered gimbal actuators.

The main engines can be throttled over a range of 65 to 109 percent of their rated power level in 1-percent increments. A value of 100 percent corresponds to a thrust level of 375,000 pounds at sea level and 470,000 pounds in a vacuum. A value of 104 percent corresponds to 393,800 pounds at sea level and 488,800 pounds in a vacuum; 109 percent corresponds to 417,300 pounds at sea level and 513,250 pounds in a vacuum.

At sea level, the engine throttling range is reduced due to flow separation in the nozzle, prohibiting operation of the engine at its 65-percent throttle setting, referred to as minimum power level. All three main engines receive the same throttle command at the same time. Normally, these come automatically from the orbiter general-purpose computers through the engine controllers. During certain contingency situations, manual control of engine throttling is possible through the speed brake/thrust controller handle. The throttling ability reduces vehicle loads during maximum aerodynamic pressure and limits vehicle acceleration to 3 g's maximum during boost.

Each engine is designed for 7.5 hours of operation over a life span of 55 starts. Throughout the throttling range, the ratio of the liquid oxygen-liquid hydrogen mixture is 6-to-1. Each nozzle area ratio is 77.5-to-1. The engines are 14 feet long and 7.5 feet in diameter at the nozzle exit.

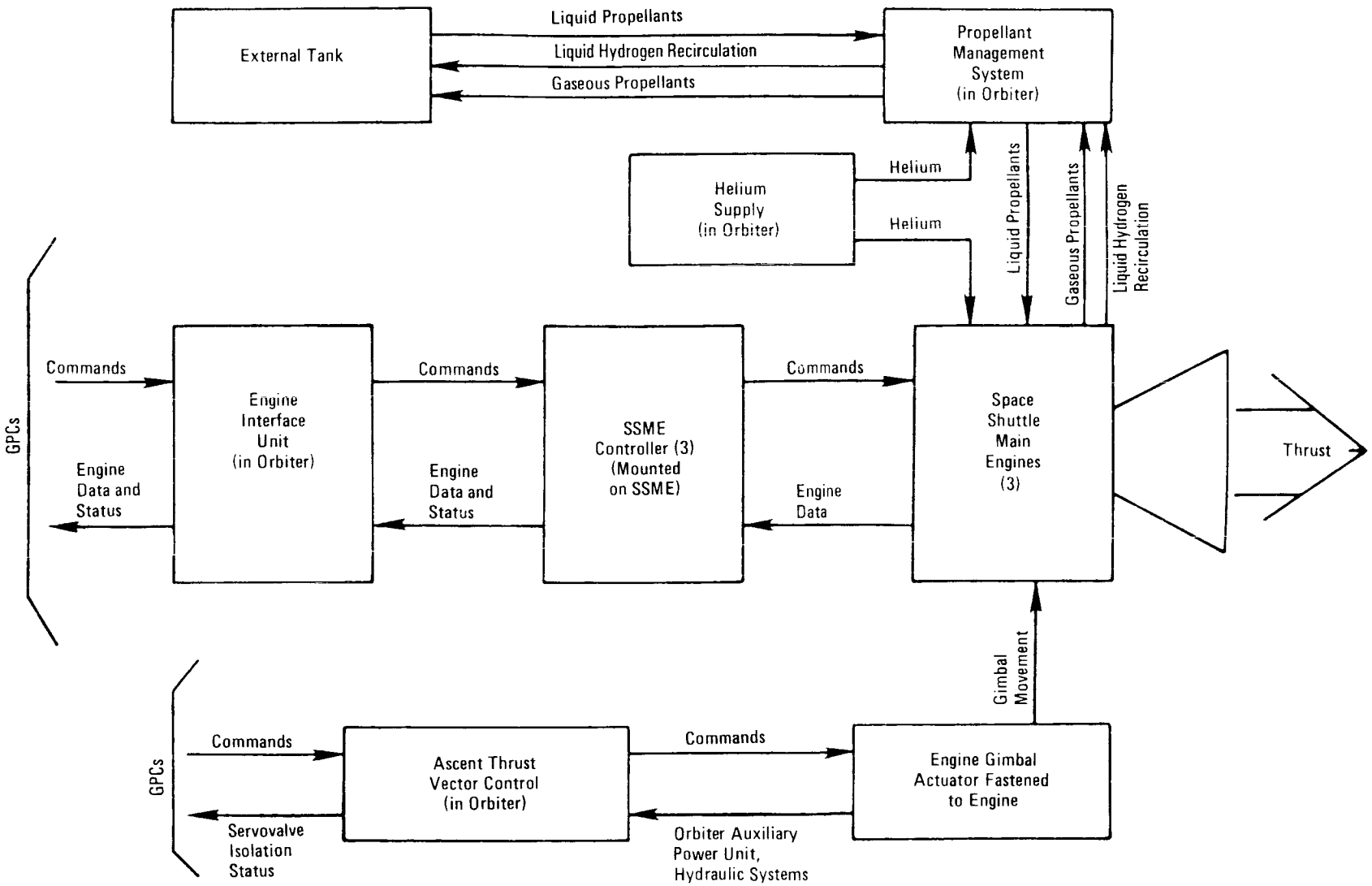


*MPS Subsystem*

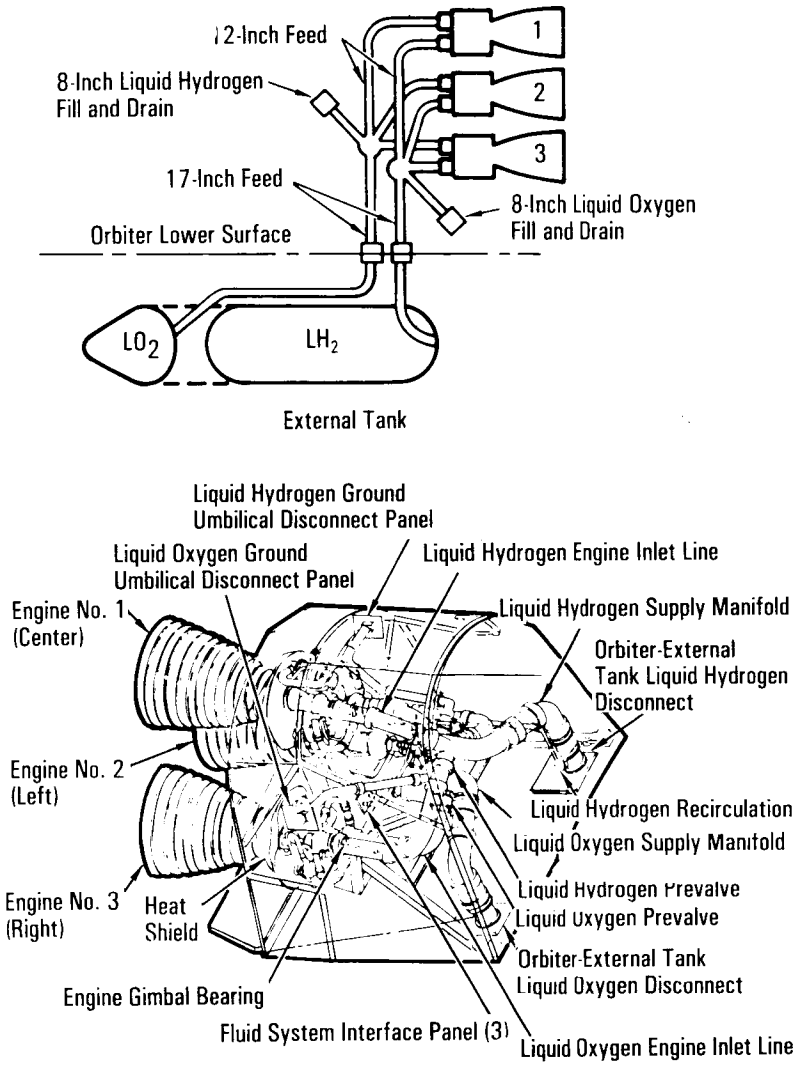


*Main Propulsion System*

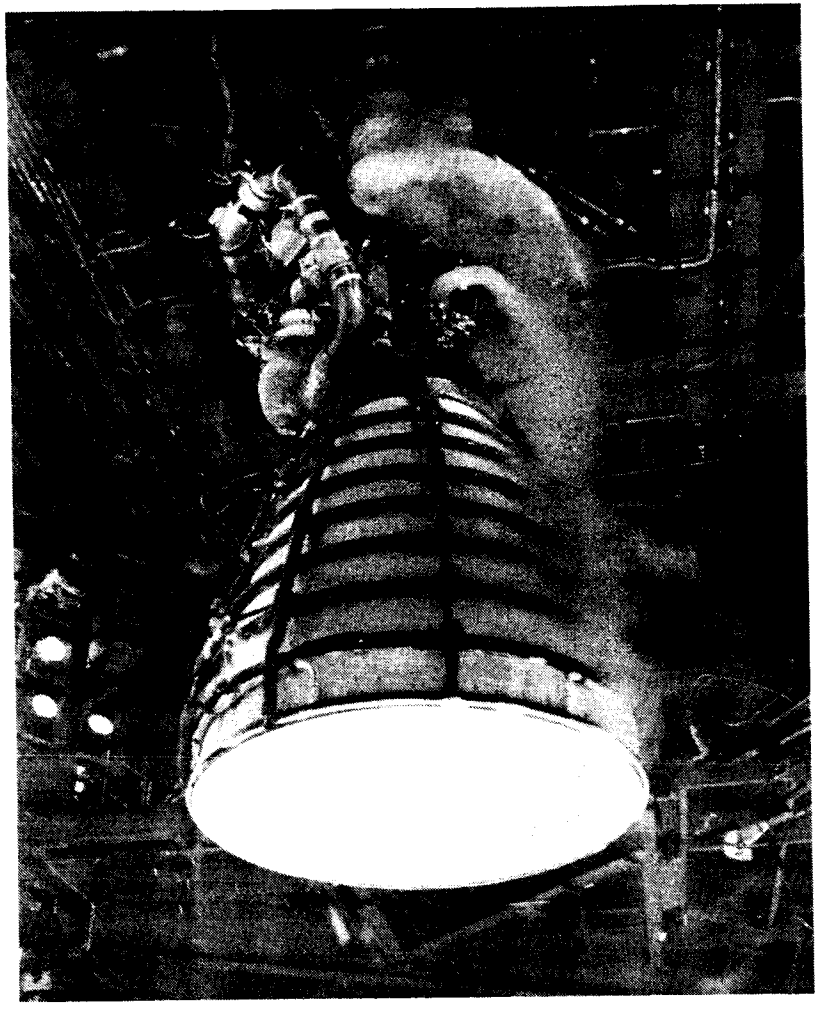

*Space Shuttle Main-Engine Test Firing*

The SSME controllers are digital, computer system, electronic packages mounted on the SSMEs. They operate in conjunction with engine sensors, valve actuators and spark igniters to provide a self-contained system for monitoring engine control, checkout and status. Each controller is attached to the forward end of the SSME.

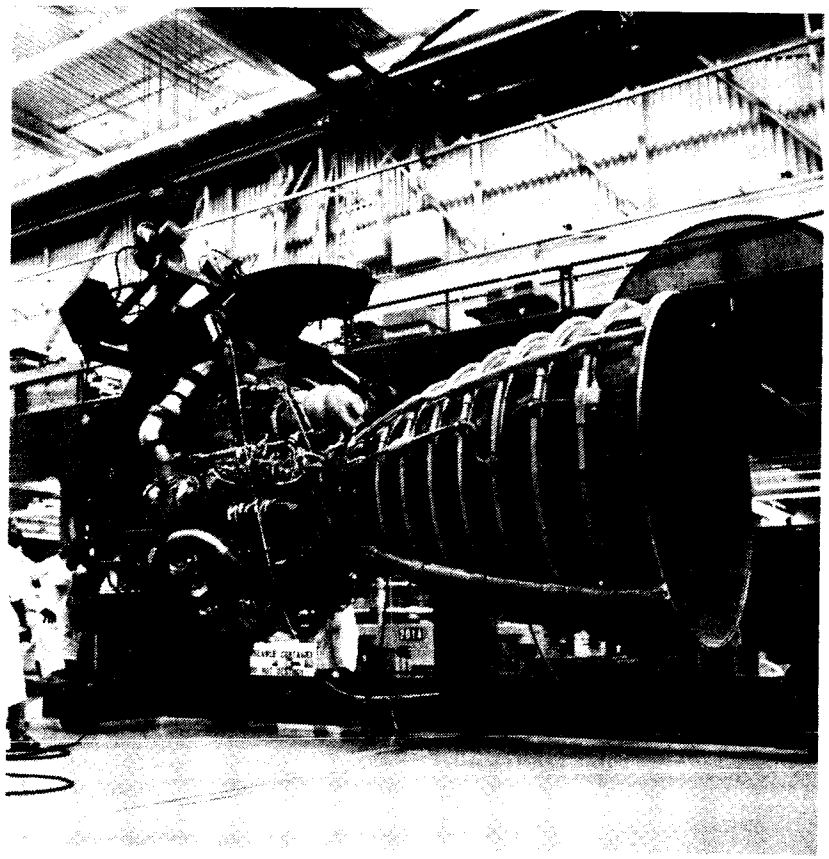

*MPS Interfaces With Other Vehicle Systems*

Engine data and status collected by each controller are transmitted to the engine interface unit, which is mounted in the orbiter. There is one EIU for each main engine. The EIU transmits commands from the orbiter GPCs to the main engine controller. When engine data and status are received by the EIU, the data are held in a buffer until the EIU receives a request for data from the computers.

Three orbiter hydraulic systems provide hydraulic pressure to position the SSME servoactuators for thrust vector control during the ascent phase of the mission in addition to performing other functions in the main propulsion system. The three orbiter auxiliary power units provide mechanical shaft power through a gear train to drive the hydraulic pumps that provide hydraulic pressure to their respective hydraulic systems.

The ascent thrust vector control units receive commands from the orbiter GPCs and send commands to the engine gimbal actuators. The units are electronics packages (four in all) mounted in the orbiter's aft fuselage avionics bays. Hydraulic isolation commands are directed to engine gimbal actuators that indicate faulty servovalve position. In conjunction with this, a servovalve isolation signal is transmitted to the computers.

The SSME hydraulic servoactuators are used to gimbal the main engine. There are two actuators per engine, one for pitch motion and one for yaw motion. They convert electrical commands received from the orbiter GPCs and position servovalves, which direct hydraulic pressure to a piston that converts the pressure into a mechanical force that is used to gimbal the SSMEs. The hydraulic pressure status of each servovalve is transmitted to the ATVC units.



The orbiter MPS propellant management subsystem consists of the manifolds, distribution lines and valves by which the liquid propellants pass from the external tank to the main engines and the gaseous propellants pass from the main engines to the external tank. The SSMEs' gaseous propellants are used to pressurize the external tank. All the valves in the propellant management subsystem are under direct control of the orbiter GPCs and are either electrically or pneumatically actuated.

The orbiter MPS helium subsystem consists of a series of helium supply tanks and regulators, check valves, distribution lines and control valves. The subsystem supplies the helium used within the engine to purge the high-pressure oxidizer turbopump intermediate seal and preburner oxidizer domes and to actuate valves during emergency pneumatic shutdown. The balance of the helium is used to actuate all the pneumatically operated valves within the propellant management subsystem and to pressurize the propellant lines before re-entry.

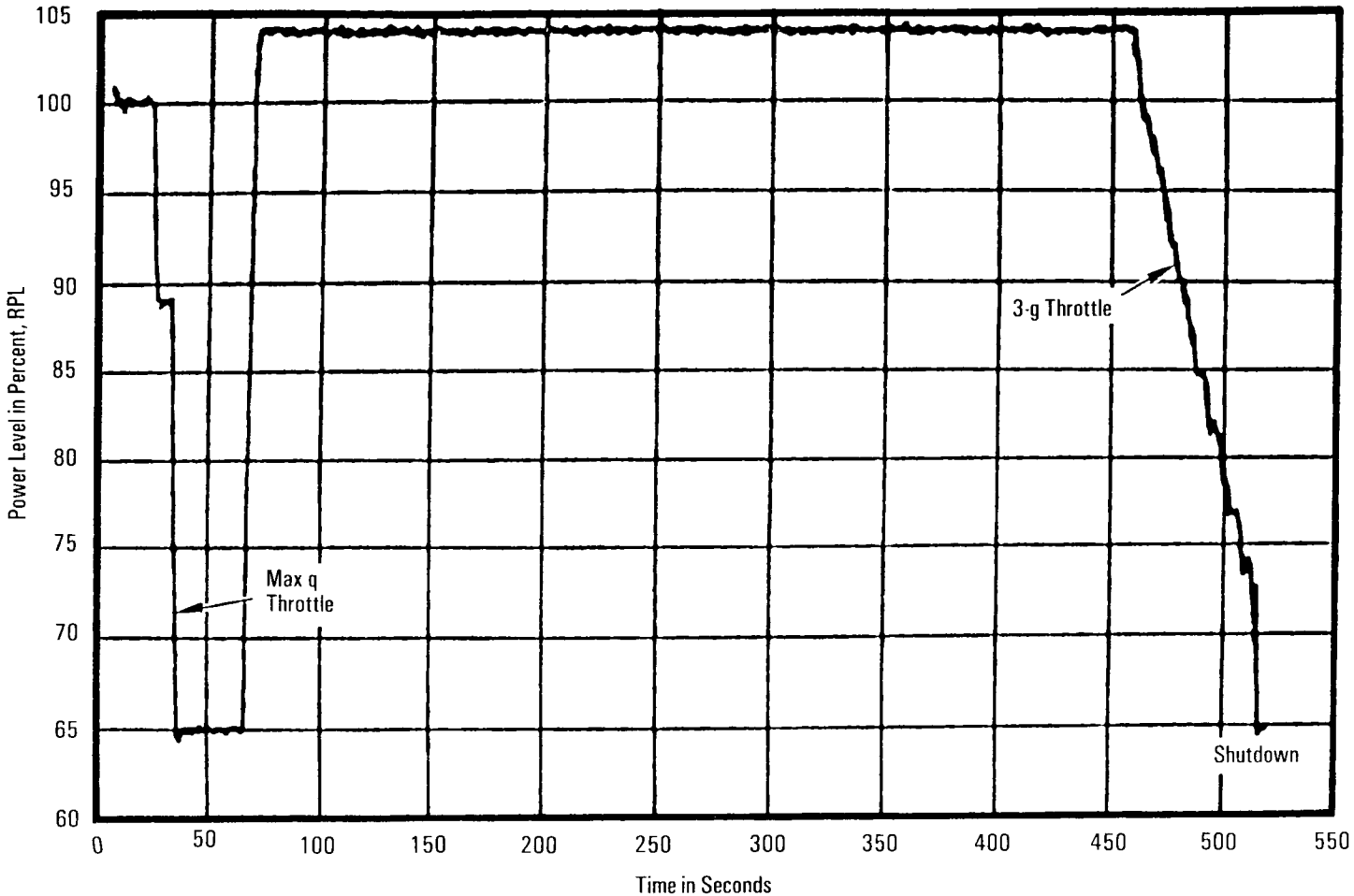


*Typical 104-Percent SSME Mission—With Three Engines*

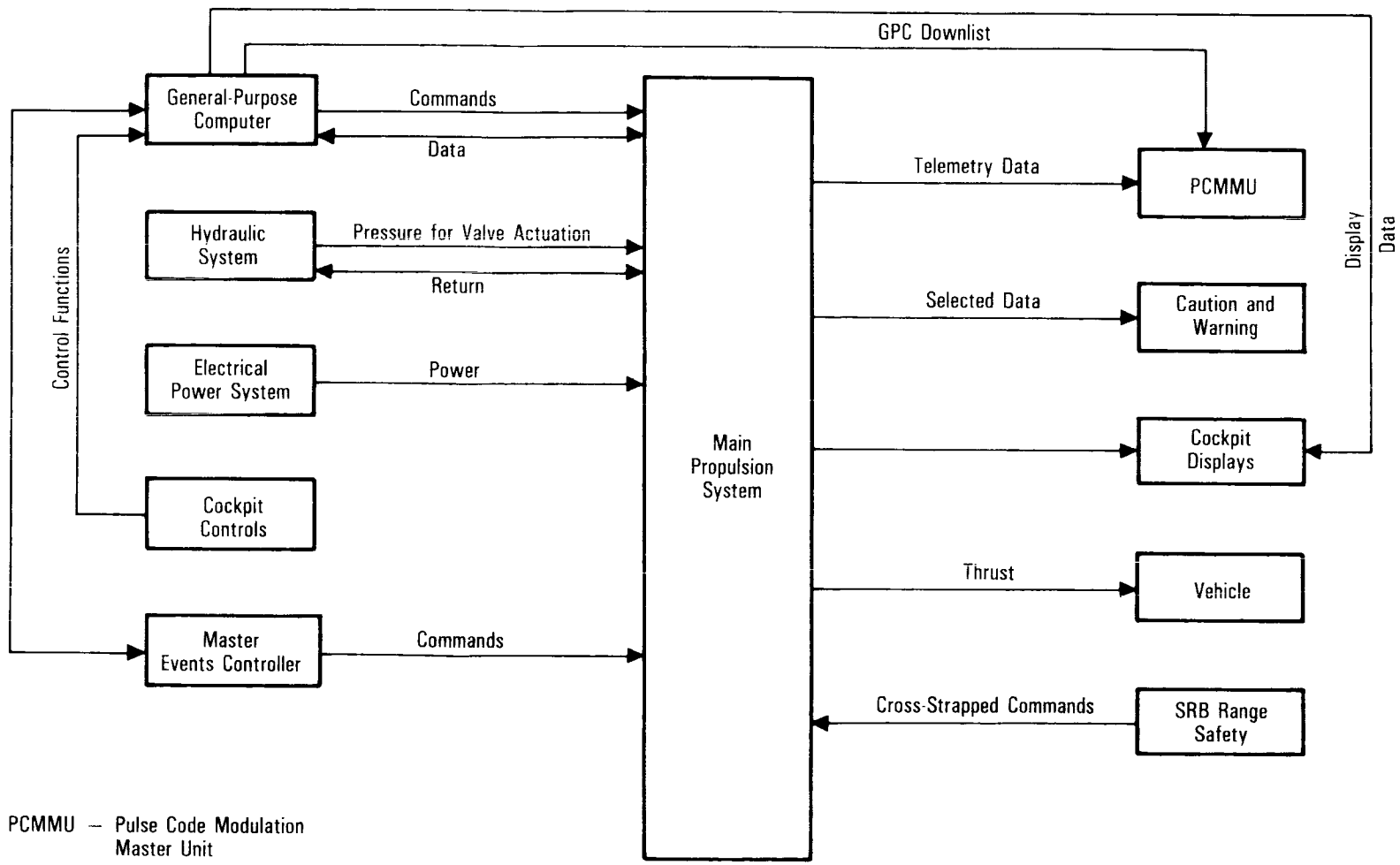


PCMMU – Pulse Code Modulation Master Unit

*MPS Interfaces With Other Vehicle Systems*

**ORBITER MAIN PROPULSION SYSTEM HELIUM SUBSYSTEM.** The MPS helium subsystem consists of seven 4.7-cubic-foot helium supply tanks; three 17.3-cubic-foot helium supply tanks; and associated regulators, check valves, distribution lines and control valves. Four of the 4.7-cubic-foot helium supply tanks are located in the aft fuselage, and the other three are located below the payload bay liner in the midfuselage in the area originally reserved for the cryogenic storage tanks of the power reactant storage and distribution system. The three 17.3-cubic-foot helium supply tanks are also located below the payload bay liner in the midfuselage.

The tanks are composite structures consisting of a titanium liner with a fiberglass structural overwrap. The large tanks are 40.3 inches in diameter and have a dry weight of 272 pounds. The smaller tanks are 26 inches in diameter and have a dry weight of 73 pounds. The tanks are serviced before lift-off to a pressure of 4,500 psi.

Each of the larger supply tanks is plumbed to two of the smaller supply tanks (one in the midbody, the other in the aft body), forming three sets of three tanks for the engine helium pneumatic supply system. Each set of tanks normally provides helium to only one engine and is commonly referred to as left, center, or right engine helium. Each set normally provides helium to its designated engine for in-flight purges and provides pressure for actuating engine valves during emergency pneumatic shutdown.

The remaining 4.7-cubic-foot helium tank is referred to as the pneumatic helium supply tank. It normally provides pressure to actuate all of the pneumatically operated valves in the propellant management subsystem.

There are eight helium supply tank isolation valves grouped in pairs. One pair of valves is connected to each engine helium supply tank cluster, and one pair is connected to the pneumatic supply tank. In the engine helium supply tank system, each pair of isolation valves is connected in parallel, with each valve in the pair controlling helium flow through one leg of a dual-redundant helium supply circuit. Each helium supply circuit contains two check valves, a filter, an isolation valve, a regulator and a relief valve. The two isolation valves connected to the pneumatic supply tanks are also connected in parallel; however, the rest of the pneumatic supply system consists of a filter, the two isolation valves, a regulator, a relief valve and a single check valve. Each engine helium supply isolation valve can be individually controlled by its *He isolation A left*, *ctr*, *right open*, *GPC*, *close* and *He isolation B left*, *ctr*, *right*, *open*, *GPC*, *close* switches on panel R2. The two pneumatic helium supply isolation valves are controlled by a single pneumatic *He isol*, *open*, *GPC*, *close* switch on panel R2.

All of the valves in the helium subsystem (with the exception of the supply tank isolation valves) are spring loaded to one position and electrically actuated to the other position. The supply tank isolation valves are spring loaded to the closed position and pneumatically actuated to the open position. Valve position is controlled via electrical signals from either the onboard GPCs or manually by the flight crew. All of the valves can be controlled automatically by the GPCs, and the flight crew can control some of the valves.



The helium source pressure of the pneumatic, left, center and right supply systems can be monitored on the *helium*, *pneu*, *l* (left), *c* (center), *r* (right) meters on panel F7 by positioning the *tank*, *reg* (regulator) switch below the meters to *tank*. In addition, the regulated pressure of the pneumatic, left, center and right systems can be monitored on the same meters by placing the switch to *reg*.

Each of the four helium supply systems operates independently until after main engine cutoff. Each engine helium supply has two interconnect (crossover) valves associated with it, and each valve in the pair of interconnect valves is connected in series with a check valve. The check valves allow helium to flow through the interconnect valves in one direction only. One check valve associated with one interconnect valve controls helium flow in one direction, and the other interconnect valve and its associated check valve permit helium flow in the opposite direction. The in interconnect valve controls helium flow into the associated engine helium distribution system from the pneumatic helium supply

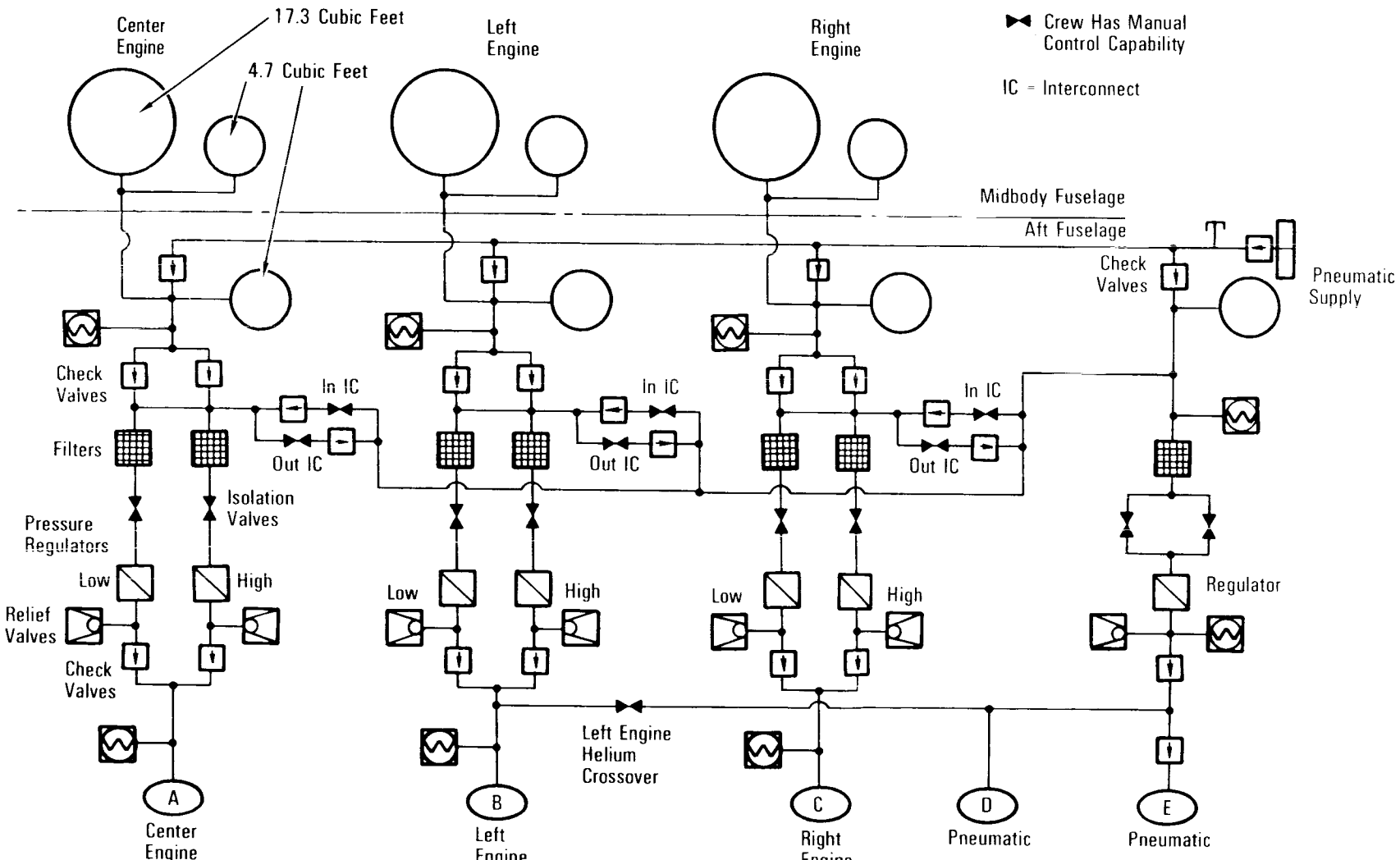


*Helium System Storage and Supply*

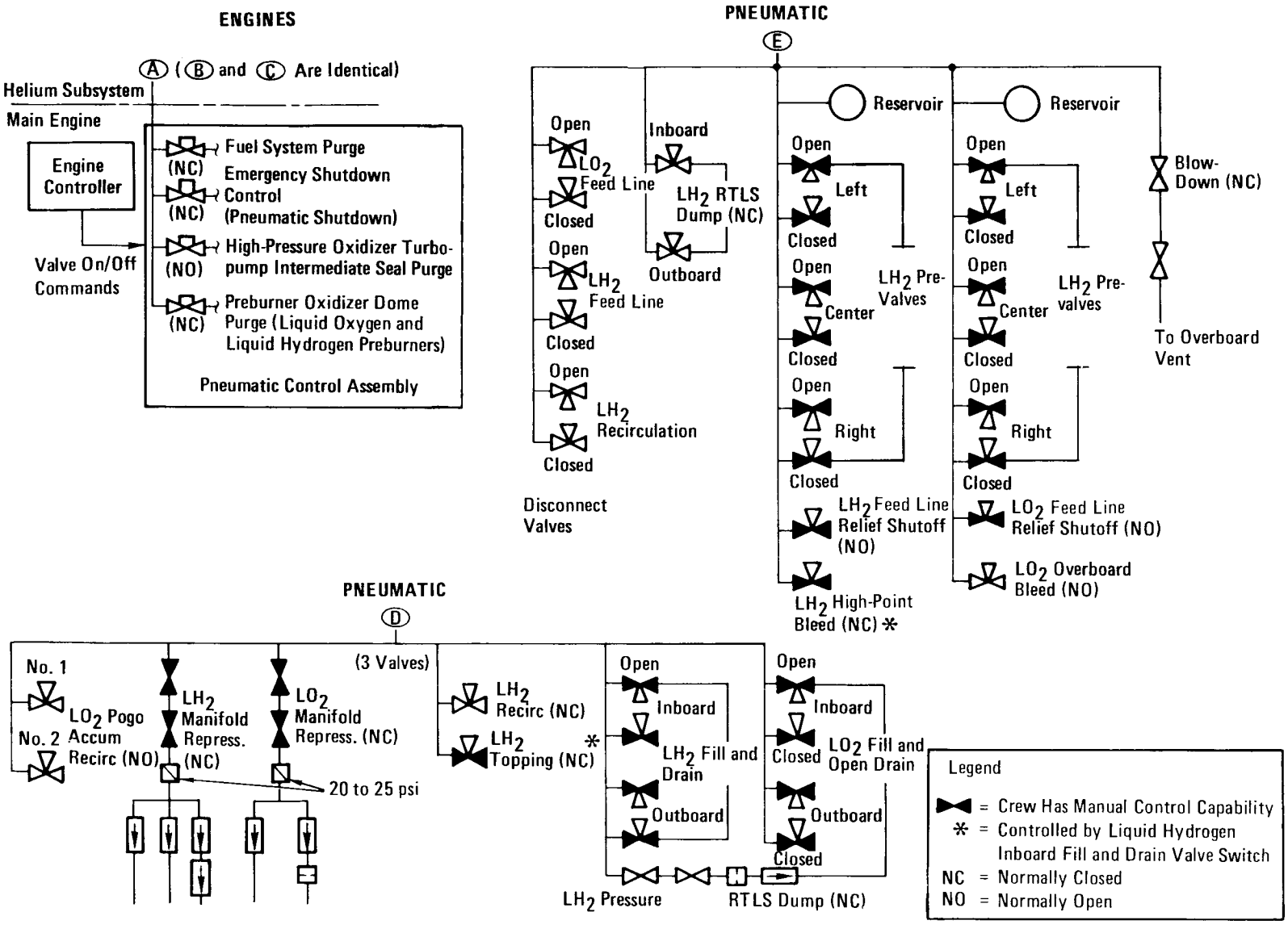


*Helium System Distribution*

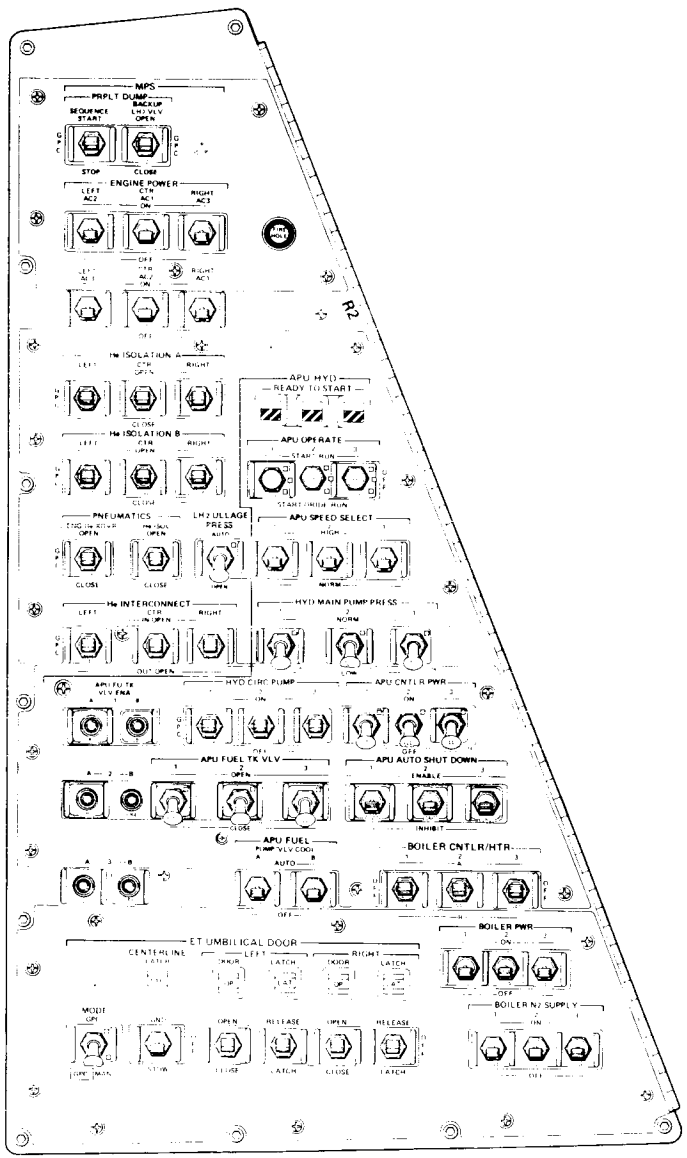


*Panel R2*

tank. The out interconnect valve controls helium flow out of the associated engine helium supply system to the pneumatic distribution system.

Each pair of interconnect valves is controlled by a single switch on panel R2. Each *He interconnect, left, ctr, right* switch has three positions—*in open/out close*, *GPC*, and *in close/out open*. With the switch in the *in open/out close* position, the in interconnect valve is open and the out interconnect valve is closed. The *in close/out open* position does the reverse. With the switch in *GPC*, the out interconnect valve opens automatically at the beginning of the liquid oxygen dump and closes automatically at the end of the liquid hydrogen dump.

In a return-to-launch-site abort, the *GPC* position will cause the in interconnect valve to open automatically at MECO and close automatically 20 seconds later. If an engine was shut down before MECO, its in interconnect valve will remain closed at MECO. At any other time, placing the switch in *GPC* results in both interconnect valves being closed.



An additional interconnect valve between the left engine helium supply and pneumatic helium supply would be used if the pneumatic helium supply regulator failed. This crossover valve would be opened and the pneumatic helium supply tank isolation valves would be closed, allowing the left engine helium supply system to supply helium to the pneumatic helium supply. The crossover helium valve is controlled by its own three-position switch on panel R2. The *pneumatics l* (left) *eng He xovr* (crossover) switch positions are *open*, *GPC* and *close*. The *GPC* position allows the valve to be controlled by the flight software loaded in the GPCs.

Manifold pressurization valves located downstream of the pneumatic helium pressure regulator are used to control the flow of helium to propellant manifolds during a nominal propellant dump and manifold repressurization. There are four of these valves grouped in pairs. One pair controls helium pressure to the liquid oxygen propellant manifolds, and the other pair controls helium pressure to the liquid hydrogen propellant manifold.

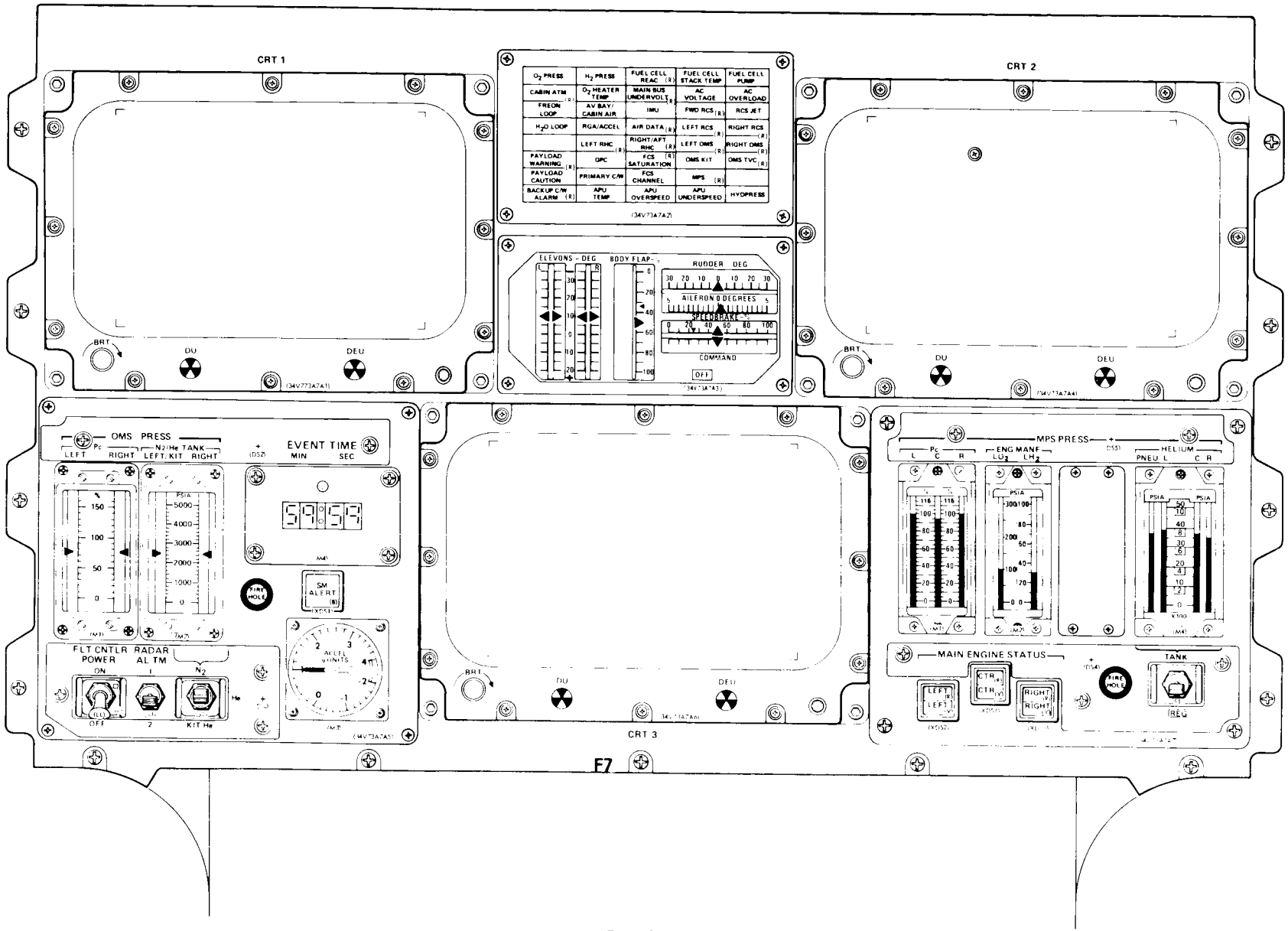
CRT 1
CRT 2
CRT 3
BRT
DU
DEU
ELEVONS - DEG
BODY FLAP
RUDDER DEG
AILERON DEGREES
SPEEDBRAKE
COMMAND
OFF
OMS PRESS
LEFT
RIGHT
N2/He TANK
LEFT/KIT
RIGHT
EVENT TIME
MIN
SEC
FIRE HOLE
SM ALERT
FLT CNTLR POWER
RADAR ALTM
ON
OFF
KIT He
MPS PRESS
ENG MANF
HELIUM
PNEU
MAIN ENGINE STATUS
TANK
REG

Panel F7

The liquid hydrogen RTLS dump pressurization valves located downstream of the pneumatic helium pressure regulator are used to control the pressurization of the liquid hydrogen propellant manifolds during an RTLS liquid hydrogen dump. There are two of these valves connected in series. Unlike the liquid hydrogen manifold pressurization valves, the liquid hydrogen RTLS dump pressurization valves cannot be controlled by flight deck switches. During an RTLS abort, these valves are opened and closed automatically by GPC commands. An additional difference between the nominal and the RTLS liquid hydrogen dumps is in the routing of the helium and the place where it enters the liquid hydrogen feed line manifold. For the nominal liquid hydrogen dump, helium passes through the liquid hydrogen manifold pressurization valves and enters the feed line manifold in the vicinity of the liquid hydrogen feed line disconnect valve. For the liquid hydrogen RTLS dump, helium passes through the RTLS liquid hydrogen dump pressurization valves and enters the feed line manifold in the vicinity of the liquid hydrogen inboard fill and drain valve on the inboard side. There is no RTLS liquid oxygen dump pressurization valve since the liquid oxygen manifold is not pressurized during the RTLS liquid oxygen dump.

Each engine helium supply tank has two pressure regulators operating in parallel. Each regulator controls pressure in one leg of a dual-redundant helium supply circuit and is capable of providing all of the helium needed by the main engines.

The pressure regulator for the pneumatic helium supply system is not redundant and is set to provide outlet pressure between 715 to 770 psig. Downstream of the regulator are two more regulators: the liquid hydrogen manifold pressure regulator and the liquid oxygen manifold pressure regulator. These regulators are used only during MPS propellant dumps and manifold pressurization. Both regulators are set to provide outlet pressure between 20 to 25 psig. Flow through the regulators is controlled by the appropriate set of two normally closed manifold pressurization valves.

Downstream of each pressure regulator, with the exception of the two manifold repressurization regulators, is a relief valve. The valve protects the downstream helium distribution lines from overpressurization if the associated regulator fails fully open. The two relief valves in each engine helium supply are set to relieve at 785 to 850 psig and reseat at 785 psig. The relief valve in the pneumatic helium supply circuit also relieves at 785 to 850 psig and reseats at 785 psig.

There is one pneumatic control assembly on each of the three space shuttle main engines. The PCA is essentially a manifold pressurized by one of the engine helium supply systems and contains solenoid valves to control and direct pressure to perform various essential functions. The valves are energized by discrete on/off commands from the output electronics of the associated SSME controller. Functions controlled by the PCA include the high-pressure oxidizer turbopump intermediate seal cavity and preburner oxidizer dome purge, pogo system postcharge and pneumatic shutdown.

**MAIN PROPULSION SYSTEM PROPELLANT MANAGEMENT SUBSYSTEM.** Within the orbiter aft fuselage, liquid hydrogen and liquid oxygen pass through the manifolds, distribution lines and valves of the propellant management subsystem.



During prelaunch activities, this subsystem is used to control the loading of liquid oxygen and liquid hydrogen in the external tank. During SSME thrusting periods, propellants from the external tank flow into this subsystem and to the three SSMEs. The subsystem also provides a path that allows gases tapped from the three SSMEs to flow back to the external tank through two gas umbilicals to maintain pressure in the external tank's liquid oxygen and liquid hydrogen tanks. After MECO, this subsystem controls MPS dumps, vacuum inerting and MPS repressurization for entry.

All the valves in the MPS are either electrically or pneumatically operated. Pneumatic valves are used where large loads are encountered, such as in the control of liquid propellant flows. Electrical valves are used for lighter loads, such as in the control of gaseous propellant flows.

The pneumatically actuated valves are divided into two types: those that require pneumatic pressure to open and close the valve (type 1) and those that are spring loaded to one position and require pneumatic pressure to move to the other position (type 2).

Each type 1 valve actuator is equipped with two electrically actuated solenoid valves. Each solenoid valve controls helium pressure to an "open" or "close" port on the actuator. Energizing the solenoid valve on the open port allows helium pressure to open the pneumatic valve. Energizing the solenoid on the close port allows helium pressure to close the pneumatic valve. Removing power from a solenoid valve removes helium pressure from the corresponding port of the pneumatic actuator and allows the helium pressure trapped in that side of the actuator to vent overboard. Removing power from both solenoids allows the pneumatic valve to remain in the last commanded position. This type of valve is used for the liquid oxygen and liquid hydrogen feed line 17-inch umbilical disconnect valves (two), the liquid oxygen and liquid hydrogen prevalves (six), the three liquid hydrogen and liquid oxygen inboard and outboard fill and drain valves (four), and the liquid hydrogen 4-inch recirculation disconnect valves.

Each type 2 valve is a single electrically actuated solenoid valve that controls helium pressure to either an open or a close port on the actuator. Removing power from the solenoid valve removes helium pressure from the corresponding port of the pneumatic actuator and allows helium pressure trapped in that side of the actuator to vent overboard. Spring force takes over and drives the valve to the opposite position. If the spring force drives the valve to the open position, the valve is referred to as a normally open valve. If the spring force drives the valve to a closed position, the valve is referred to as a normally closed valve. This type of valve is used for the liquid hydrogen RTLS inboard dump valve (NC), the liquid hydrogen RTLS outboard dump valve (NC), the liquid hydrogen feed line relief shutoff valve (NO), the liquid oxygen feed line relief shutoff valve (NO), the three liquid hydrogen engine recirculation valves (NC), the two liquid oxygen pogo recirculation valves (NO), the liquid hydrogen topping valve (NC), the liquid hydrogen high-point bleed valve (NC), and the liquid oxygen overboard bleed valve (NO).

The electrically actuated solenoid valves are spring loaded to one position and move to the other position when electrical power is applied. These valves also are referred to as either normally open or normally closed, based on their position in the de-energized state. Electrically actuated solenoid valves are the gaseous hydrogen pressurization line vent valve (NC), the three gaseous hydrogen pressurization flow control valves (NO) and the three gaseous oxygen pressurization flow control valves (NO).

There are two 17-inch-diameter MPS propellant feed line manifolds in the orbiter aft fuselage, one for liquid oxygen and one for liquid hydrogen. Each manifold has an outboard and inboard fill and drain valve in series that interface with the respective port (left) and starboard (right) T-0 umbilical. The port T-0 umbilical is for liquid hydrogen; the starboard, for liquid oxygen. In addition, each manifold connects the orbiter to the external tank in the lower aft fuselage through a port 17-inch liquid hydrogen disconnect valve umbilical and a starboard 17-inch liquid oxygen disconnect valve umbilical.



There are three outlets in both the liquid oxygen and liquid hydrogen 17-inch manifolds between the orbiter-external tank 17-inch umbilical disconnect valves and the inboard fill and drain valve. The outlets in the manifolds provide liquid oxygen and liquid hydrogen to each SSME in 12-inch-diameter feed lines.

The prevalve in each of the three liquid oxygen and liquid hydrogen 12-inch feed lines to each engine isolates liquid oxygen and liquid hydrogen from each engine or permits liquid oxygen and liquid hydrogen to flow to each engine. Each prevalve is controlled by an *$LH_2$* or *$LO_2$ prevalve, left, ctr, right* switch on panel R4. Each switch has *open*, *GPC* and *close* positions.

The 8-inch-diameter liquid hydrogen outboard and inboard fill and drain valves are also controlled by their own switches on panel R4. Each *propellant fill/drain $LH^2$, outbd, inbd* switch has *open*, *gnd* and *close* positions, as does each *$LO_2$, outbd, inbd* switch.

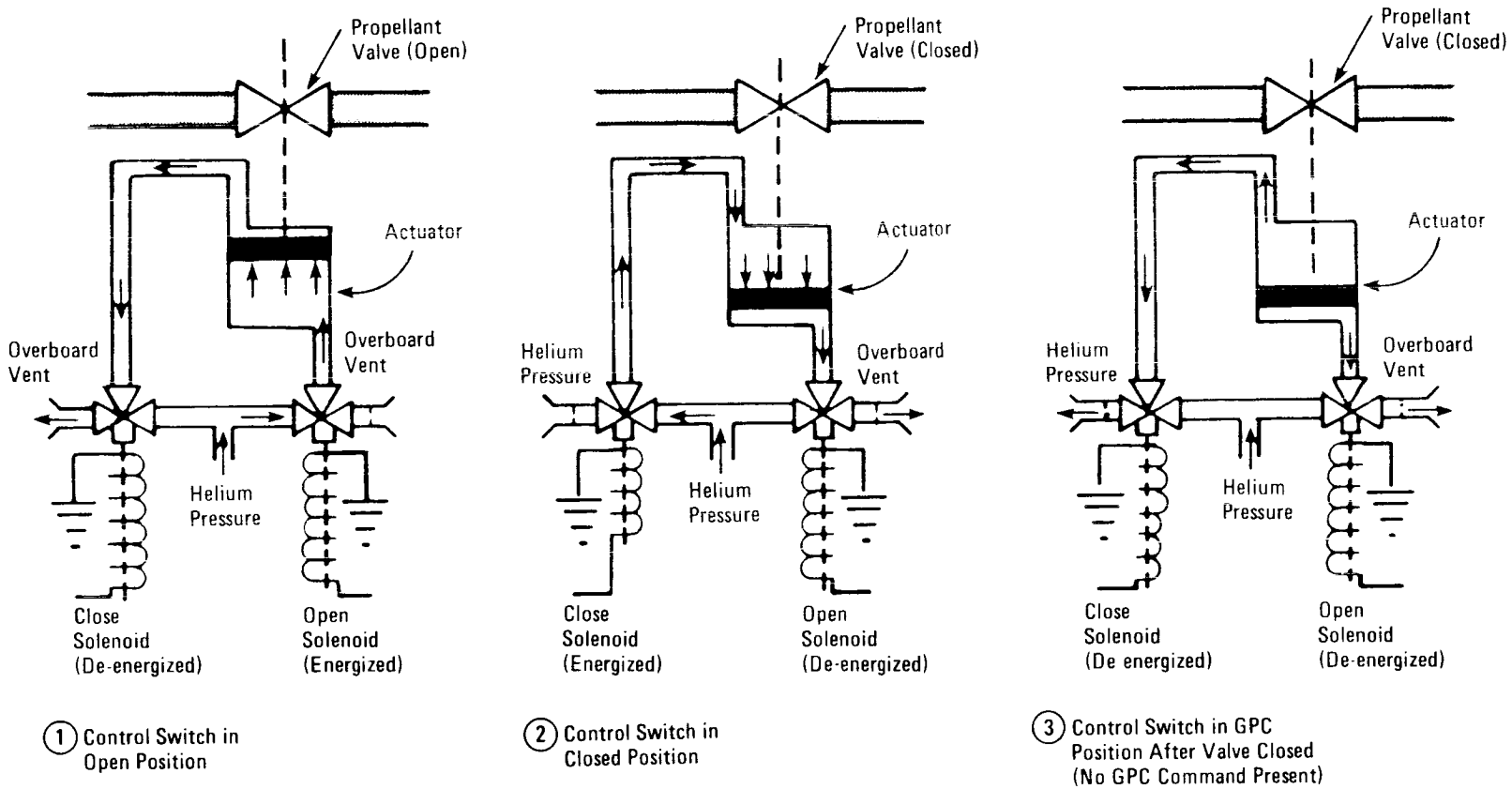


(1) Control Switch in Open Position

(2) Control Switch in Closed Position

(3) Control Switch in GPC Position After Valve Closed (No GPC Command Present)

*Propellant Management Subsystem Typical Type 1 Pneumatically Actuated Propellant Valve*

Normally Closed Valve

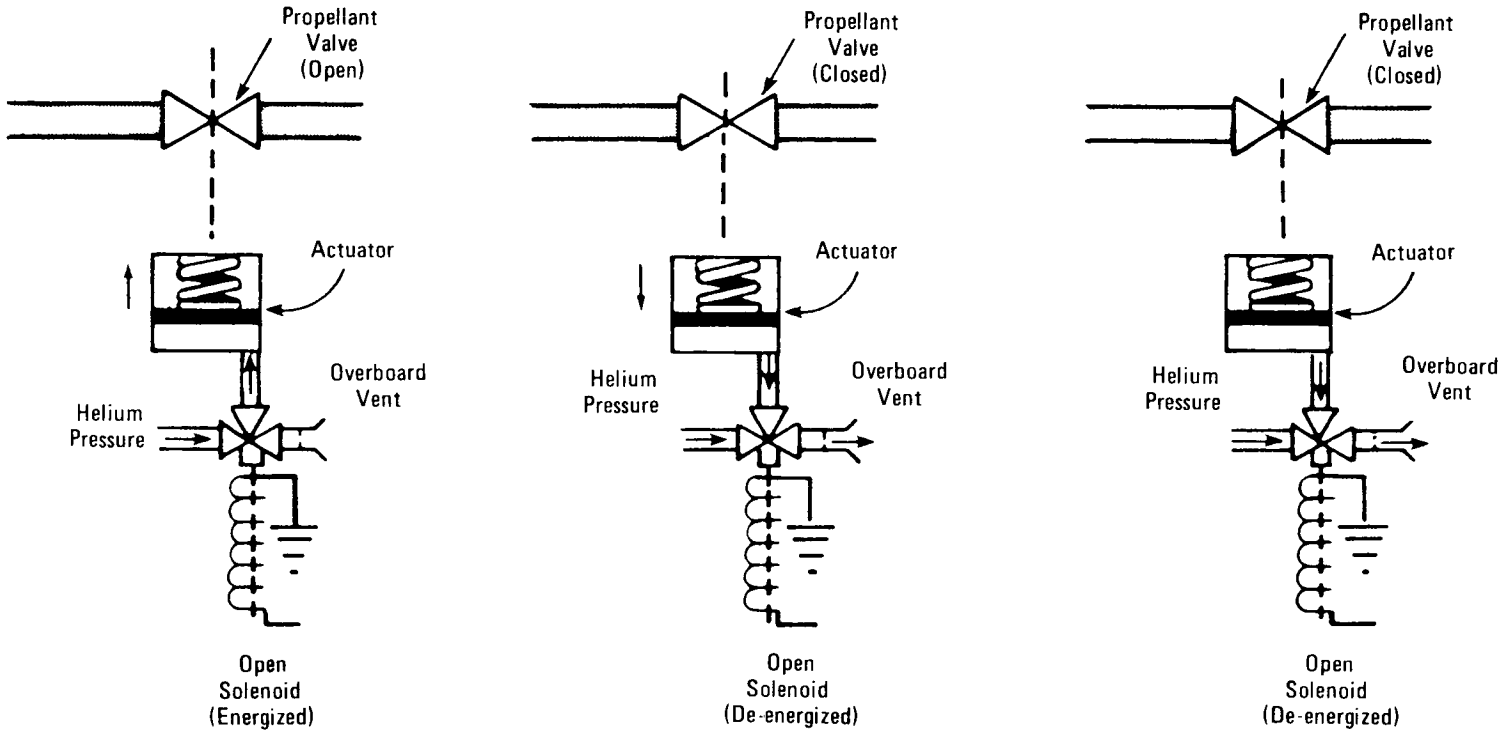


(1) Control Switch in Open Position

(2) Control Switch in Closed Position

(3) Control Switch in GPC Position (No GPC Command Present)

*Propellant Management Subsystem Typical Type 2 Pneumatically Actuated Propellant Valve*

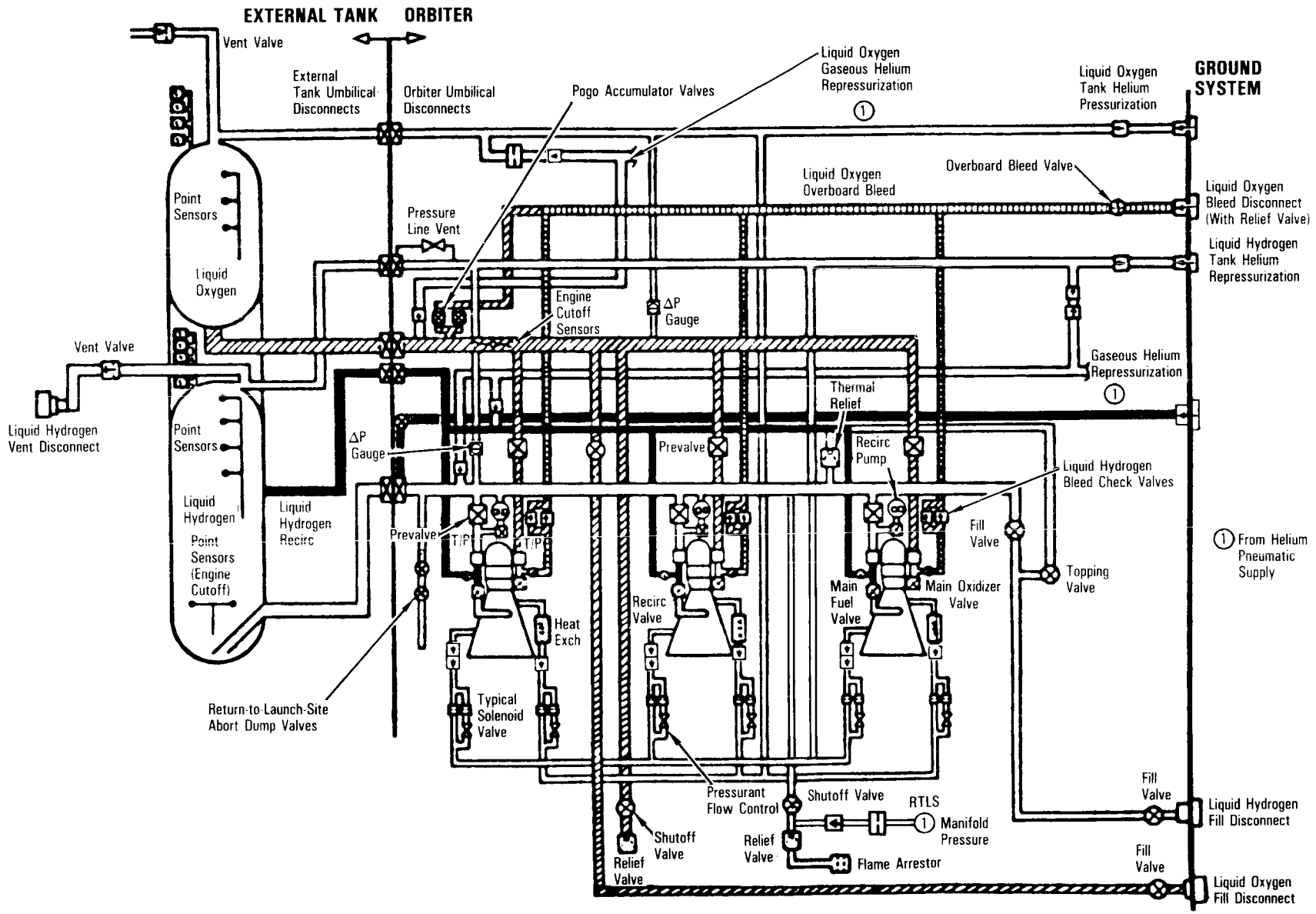


*Main Propulsion System Fluid System*

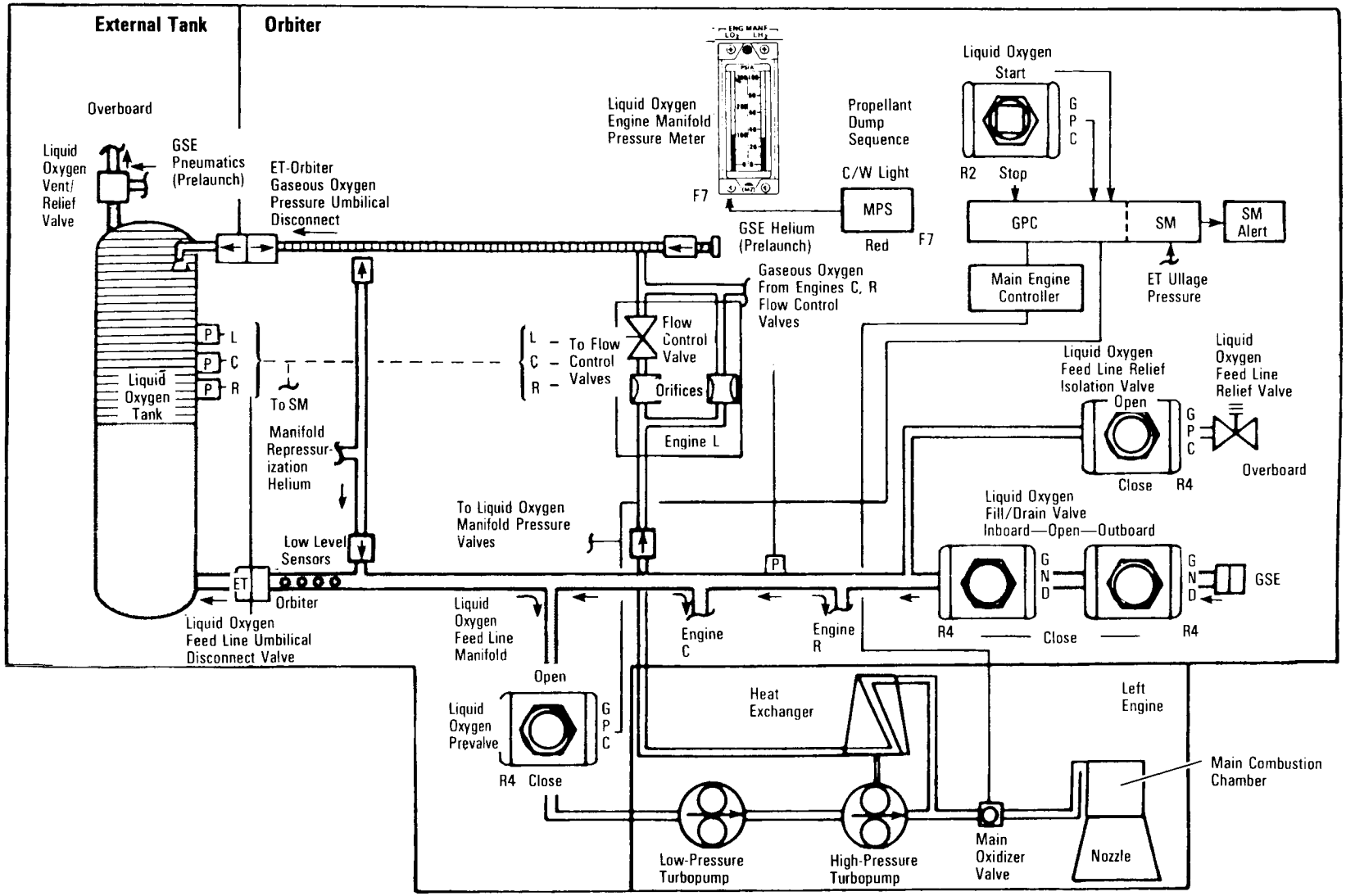


*Oxidizer Flow*

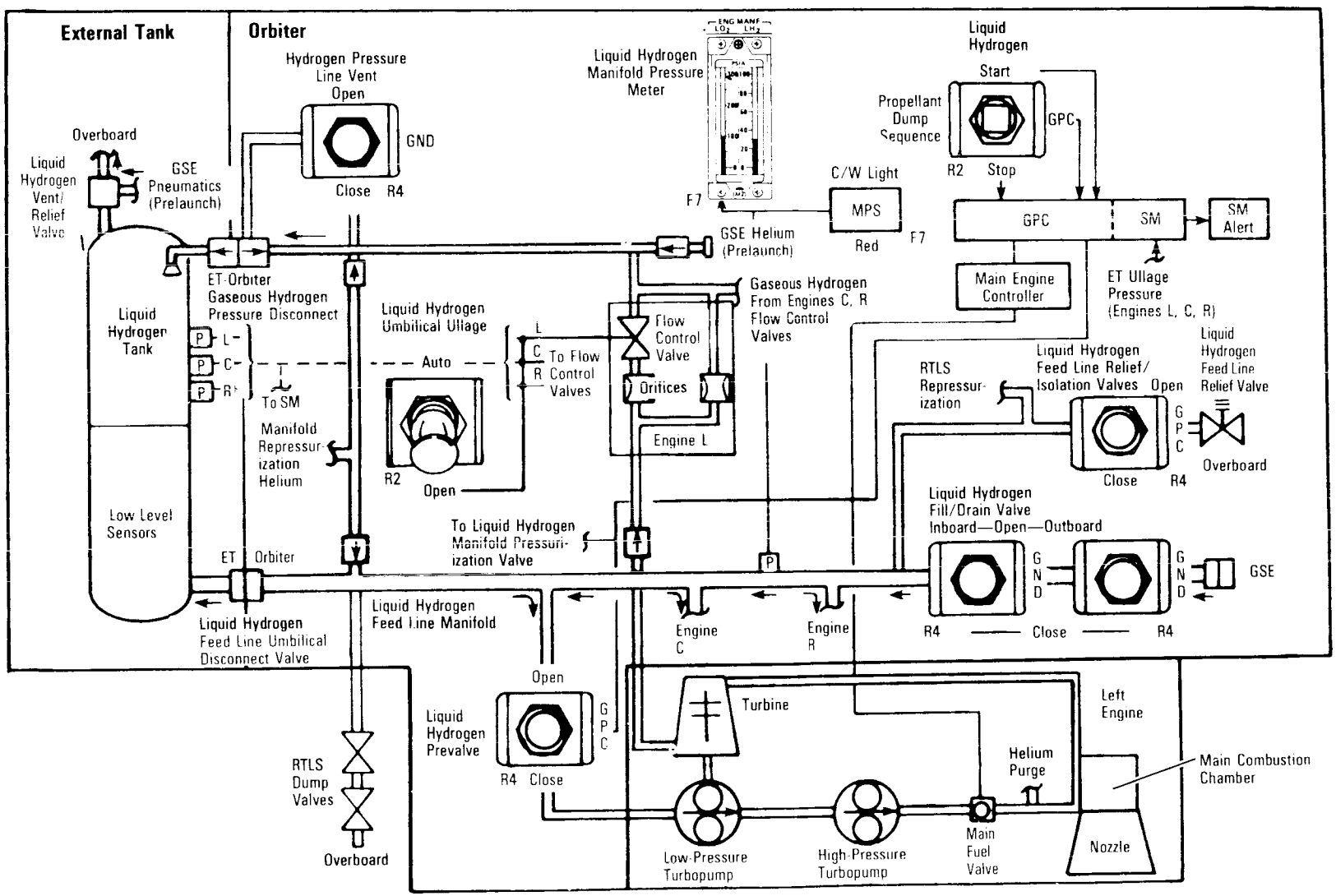
External Tank
Orbiter
Hydrogen Pressure Line Vent Open
GND
Close R4
Overboard
Liquid Hydrogen Vent/ Relief Valve
GSE Pneumatics (Prelaunch)
Liquid Hydrogen Manifold Pressure Meter
F7
C/W Light
MPS
Red
F7
GSE Helium (Prelaunch)
Liquid Hydrogen
Start
Propellant Dump Sequence
GPC
R2 Stop
GPC
SM
SM Alert
Main Engine Controller
ET Ullage Pressure (Engines L, C, R)
ET-Orbiter Gaseous Hydrogen Pressure Disconnect
Liquid Hydrogen Tank
L
C
R
To SM
Manifold Repressurization Helium
Liquid Hydrogen Umbilical Ullage
Auto
To Flow Control Valves
R2
Open
Flow Control Valve
Orifices
Engine L
Gaseous Hydrogen From Engines C, R Flow Control Valves
RTLS Repressurization
Liquid Hydrogen Feed Line Relief/ Isolation Valves
Open
Close R4
Liquid Hydrogen Feed Line Relief Valve
Overboard
Low Level Sensors
ET Orbiter
To Liquid Hydrogen Manifold Pressurization Valve
Liquid Hydrogen Fill/Drain Valve Inboard—Open—Outboard
GND
GSE
R4 — Close — R4
Liquid Hydrogen Feed Line Umbilical Disconnect Valve
Liquid Hydrogen Feed Line Manifold
Engine C
Engine R
Open
Liquid Hydrogen Prevalve
GPC
R4 Close
Turbine
Left Engine
Helium Purge
Main Combustion Chamber
RTLS Dump Valves
Overboard
Low-Pressure Turbopump
High-Pressure Turbopump
Main Fuel Valve
Nozzle

*Fuel Flow*

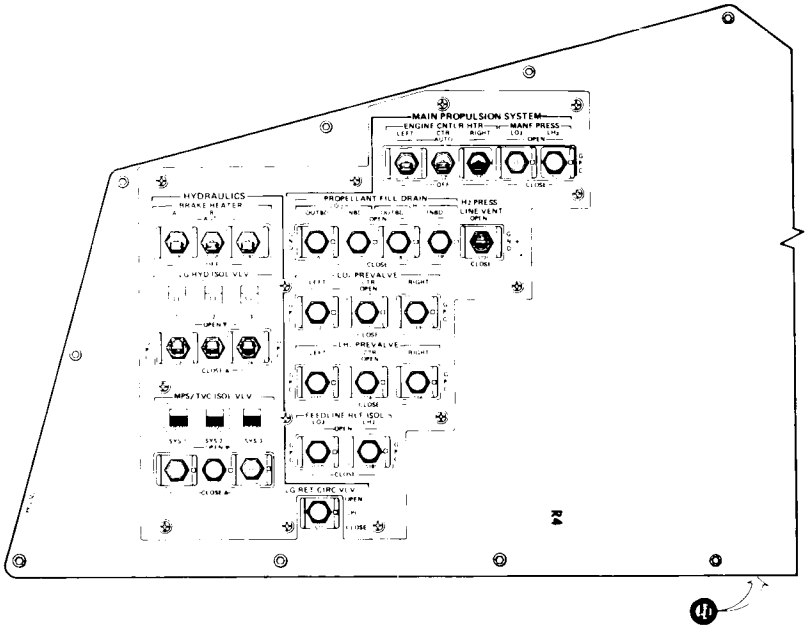


*Panel R4*

Each 17-inch liquid hydrogen and liquid oxygen manifold has a 1-inch-diameter line that is routed to a feed line relief isolation valve and feed line relief valve in the respective liquid hydrogen and liquid oxygen system. The $LO_2$ and $LH_2$ *feed line rlf* (relief) *isol* (isolation) switches on panel R4 have *open*, *GPC* and *close* positions. When a feed line relief isolation valve is opened, the corresponding manifold can relieve excessive pressure overboard through its relief valve.

The liquid hydrogen feed line manifold has another outlet directed to the two liquid hydrogen RTLS dump valves in series. Both valves are controlled by the *MPS prplt dump* $LH_2$ *valve* switch on panel R2, which has *backup* $LH_2$ *vlv open*, *GPC*, *close* positions. When opened, these valves enable the liquid hydrogen dump during RTLS aborts or provide a backup to the normal liquid hydrogen dump after a nominal main engine cutoff. In an RTLS abort dump, liquid hydrogen is dumped overboard through a port at the outer aft fuselage's left side between the orbital maneuvering system/reaction control system pod and the upper surface of the wing.

The MPS propellant management subsystem also contains two 2-inch-diameter manifolds, one for gaseous oxygen and one for gaseous hydrogen. Each manifold individually permits ground support equipment servicing with helium through the respective T-0 umbilical and provides initial pressurization of the external tank's liquid oxygen and liquid hydrogen orbiter/external tank disconnect umbilicals. Self-sealing quick disconnects are provided at the T-0 umbilical and the orbiter/external tank umbilical.

Six 0.63-inch-diameter pressurization lines, three for gaseous oxygen and three for gaseous hydrogen, are used after SSME start to pressurize the external tank's liquid oxygen and liquid hydrogen tanks.

In each SSME, a small portion of liquid oxygen is diverted into the engine's oxidizer heat exchanger, and the heat generated by the engine's high-pressure oxidizer turbopump converts the liquid oxygen into gaseous oxygen and directs it through a check valve to two orifices and a flow control valve for each engine. During SSME thrusting periods, liquid oxygen tank pressure is maintained between 20 and 22 psig by the orifices in the two lines and the action of the flow control valve from each SSME. The flow control valve is controlled by one of three liquid oxygen pressure transducers. When tank pressure decreases below 20 psig, the valve opens. If the tank pressure is greater than 24 psig, it is relieved through the liquid oxygen tank's vent and relief valve.

In each SSME, gaseous hydrogen from the low-pressure fuel turbopump is directed through two check valves to two orifices and a flow control valve for each engine. During the main engine thrusting period, the liquid hydrogen tank's pressure is maintained between 32 and 34 psia by the orifices and the action of the flow control valve from each SSME. The flow control valve is controlled by one of three liquid hydrogen pressure transducers. When tank pressure decreases below 32 psia, the valve opens; and when tank pressure increases to 33 psia, the valve closes. If the tank pressure is greater than 35 psia, the pressure is relieved

through the liquid hydrogen tank's vent and relief valve. If the pressure falls below 32 psia, the *$LH_2$ ullage press* switch on panel R2 is positioned from *auto* to *open*, which will cause all three flow control valves to go to full open and remain in the full-open position.

The single gaseous hydrogen manifold repressurization line connects to the hydrogen line vent valve, which is controlled by the *$H_2$ press line vent* switch on panel R4. This valve is normally closed, and the switch is positioned to *open* when vacuum inerting the gaseous hydrogen pressurization lines after MECO and the liquid hydrogen dump. The *gnd* position allows the launch processing system to control the valve during ground operations.

**EXTERNAL TANK.** The external tank is attached to the orbiter at one forward and two aft attach points. At the two aft attach points are the two external tank/orbiter umbilicals for the fluid, gas, signal and electrical power connections between the orbiter and the external tank. Each external tank umbilical plate mates with a corresponding umbilical plate on the orbiter. The umbilical plates help maintain alignment of the various connecting components. The corresponding umbilical plates are bolted together; and when external tank separation is commanded, the bolts are severed by pyrotechnics.

At the forward end of each external tank propellant tank is a vent and relief valve that can be opened by GSE-supplied helium before launch for venting or by excessive tank pressure for relief. The vent function is available only before launch; after lift-off only the relief function is operable. The liquid oxygen tank relieves at an ullage pressure of 25 psig, while the liquid hydrogen tank relieves at an ullage pressure of 38 psi. The flight crew has no control over the position of the vent and relief valves before launch or during ascent. Normal range of the tank ullage pressure of the liquid hydrogen tank during ascent is 32 to 39 psia. During prelaunch activities, the liquid hydrogen tank is pressurized to 44.1 psi to meet the start requirement of the main engine LPFT. The liquid oxygen and liquid hydrogen tanks' ullage pressures are monitored on the panel F7 *eng manf $LO_2$* and *$LH_2$* meters as well as on a cathode ray tube display.

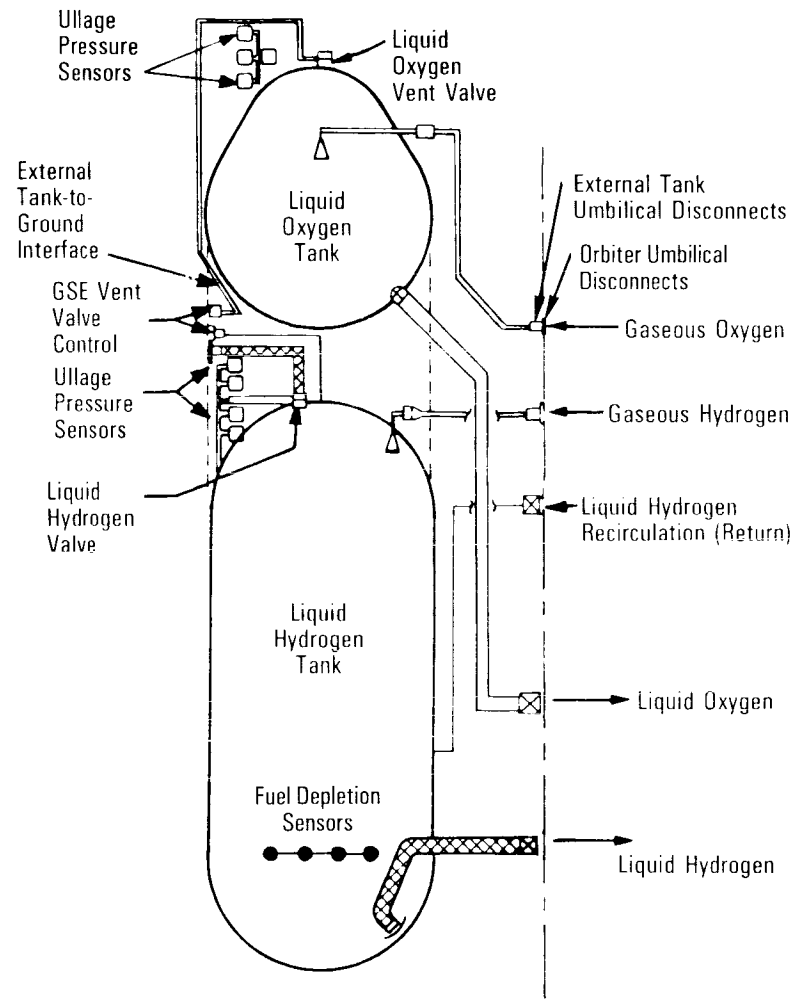


*External Tank Schematic*

In addition to the vent and relief valve, the liquid oxygen tank has a tumble vent valve that is opened during the external tank separation sequence. The thrust force provided by opening the valve imparts an angular velocity to the external tank to assist in the separation maneuver and provide more positive control of the external tank's re-entry aerodynamics.

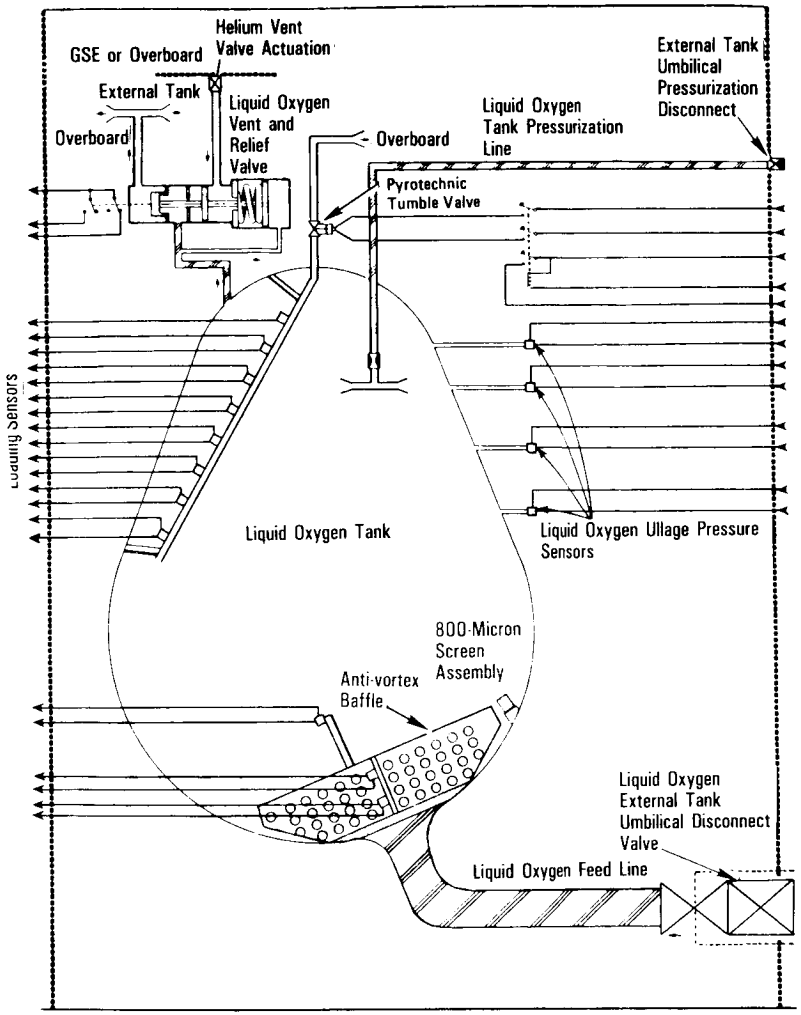


*External Tank Schematic, Liquid Oxygen Tank Detail*

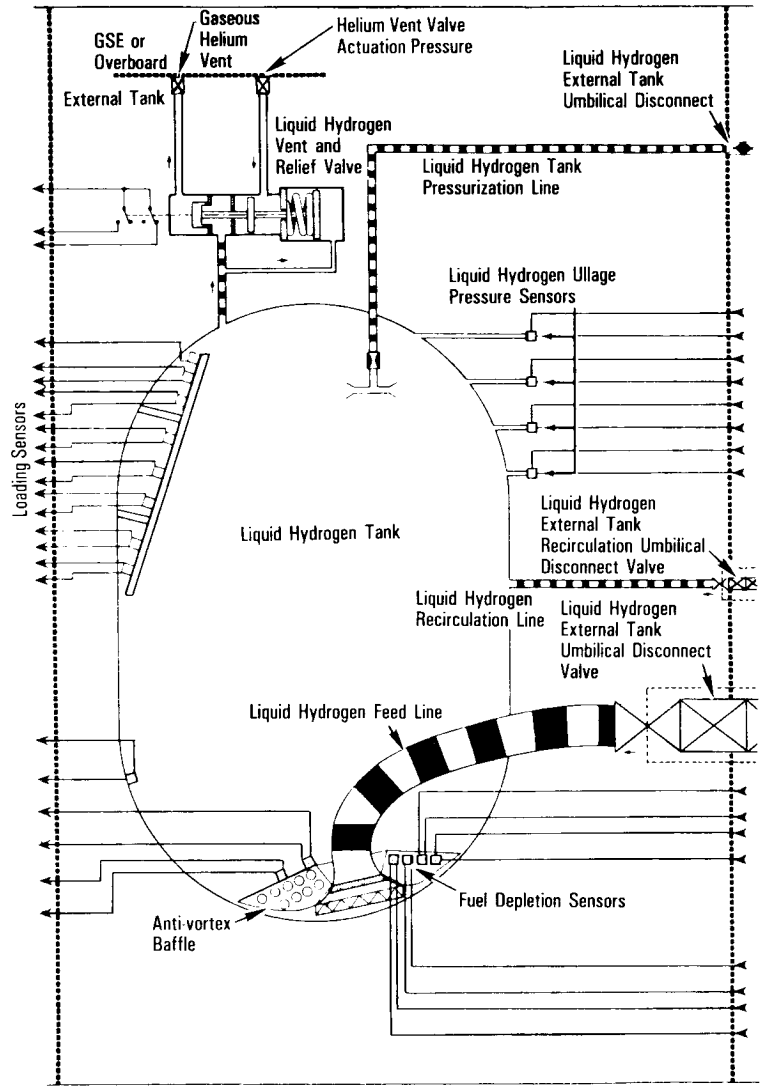


*External Tank Schematic, Liquid Hydrogen Tank Detail*

There are eight propellant depletion sensors. Four of them sense fuel depletion and four sense oxidizer depletion. The oxidizer depletion sensors are mounted in the external tank's liquid oxygen feed line manifold downstream of the tank. The fuel depletion sensors are located in the liquid hydrogen tank. During prelaunch activities, the launch processing system tests each propellant depletion sensor. If any are found to be in a failed condition, the LPS sets a flag in the computer's SSME operational sequence, sequence logic that will instruct the computer to ignore the output of the failed sensor or sensors. During main engine thrusting, the computer constantly computes the instantaneous mass of the vehicle, which constantly decreases due to propellant usage from the external tank. When the computed vehicle mass matches a predetermined initialized-loaded value, the computer arms the propellant depletion sensors. After this time, if any two of the good fuel depletion sensors (those not flagged before launch) or any two of the good oxidizer depletion sensors indicate a dry condition, the computers command main engine cutoff. This type of MECO is a backup to the nominal MECO, which is based on vehicle velocity. The oxidizer sensors sense propellant depletion before the fuel sensors to ensure that all depletion cutoffs are fuel-rich since an oxidizer-rich cutoff can cause burning and severe erosion of engine components. To ensure that the oxidizer sensors sense depletion first, a plus 700-pound bias is included in the amount of liquid hydrogen loaded in the external tank. This amount is in excess of that dictated by the 6-1 ratio of oxidizer to fuel. The position of the oxidizer propellant depletion sensors allows the maximum amount of oxidizer to be consumed in the engines and allows sufficient time to cut off the engines before the oxidizer turbopumps cavitate (run dry).

Four ullage pressure transducers are located at the top end of each propellant tank (liquid oxygen and liquid hydrogen). One of the four is considered a spare and is normally off-line. Before launch, GSE normally checks out the four transducers; and if one of the three active transducers is determined to be bad, it can be taken off-line and the output of the spare transducer selected. The flight crew can also perform this operation after lift-off via the computer keyboard; however, because of the time involved from lift-off to MECO, this would probably be impractical. The three active ullage pressure sensors provide outputs for CRT display and control of ullage pressure within their particular propellant tanks. For CRT display, computer processing selects the middle value output of the three transducers and displays this single value. For ullage pressure control, all three outputs are used.

The external tank/orbiter aft umbilicals have five propellant disconnects: two for the liquid oxygen tank and three for the liquid hydrogen tank. One of the liquid oxygen propellant umbilicals carries liquid oxygen and the other carries gaseous oxygen. The liquid hydrogen tank has two disconnects that carry liquid hydrogen and one that carries gaseous hydrogen. The external tank liquid hydrogen recirculation disconnect is the smaller of the two disconnects that carry liquid hydrogen and is used only during the liquid hydrogen chill-down sequence before launch.

In addition, the external tank/orbiter umbilicals contain two electrical umbilicals, each made of many smaller electrical cables. These cables carry electrical power from the orbiter to the external tank and the two solid rocket boosters and bring telemetry back to the orbiter from the SRBs and external tank. The operational instrumentation telemetry that comes back from the SRBs is conditioned, digitized and multiplexed in the SRBs themselves. The external tank OI measurements that return to the orbiter are raw transducer outputs and must be processed within the orbiter telemetry system.

The external tank's liquid oxygen tank is serviced at the launch pad before prelaunch from ground support equipment through the starboard T-0 umbilical of the orbiter, the MPS outboard and inboard fill and drain valves, the MPS 17-inch liquid oxygen line, and the orbiter/external tank 17-inch umbilical disconnect valves. Once the liquid oxygen is loaded and ready for main engine ignition, the liquid oxygen tank's vent and relief valve is closed, and the tank is pressurized to 21 psig by GSE-supplied helium. During SSME thrusting, liquid oxygen flows out of the external tank through the orbiter/external tank umbilical into the orbiter MPS and to each SSME. Pressurization in the tank is

maintained by gaseous oxygen tapped from the three main engines and supplied to the liquid oxygen tank through the orbiter/external tank gaseous oxygen umbilical.

The external tank's liquid hydrogen tank is serviced before launch from GSE at the launch pad similarly to the liquid oxygen tank but through the port T-0 umbilical and port orbiter/external tank umbilical. When the liquid hydrogen is loaded and ready for main engine ignition, the liquid hydrogen tank's vent and relief valve is closed, and the tank is pressurized to 42.5 psia by GSE-supplied helium.

Approximately 45 minutes after loading starts, three electrically powered liquid hydrogen pumps in the orbiter begin to circulate the liquid hydrogen in the external tank through the three SSMEs and back to the external tank through a special recirculation umbilical. This recirculation chills down the liquid hydrogen lines between the external tank and the high-pressure fuel turbopump in the SSMEs so that the path is free of any gaseous hydrogen bubbles and is at the proper temperature for engine start. Recirculation ends approximately six seconds before engine start. During engine thrusting, liquid hydrogen flows from the external tank and through the orbiter/external tank liquid hydrogen umbilical into the orbiter MPS and to the main engines. Tank pressurization is maintained by gaseous hydrogen tapped from the three SSMEs and supplied to the liquid hydrogen tank through the orbiter/external tank gaseous hydrogen umbilical.

**SPACE SHUTTLE MAIN ENGINES.** Oxidizer from the external tank enters the orbiter at the orbiter/external tank umbilical disconnect and then the orbiter's main propulsion system liquid oxygen feed line. There it branches out into three parallel paths, one to each engine. In each branch, a liquid oxygen prevalve must be opened to permit flow to the low-pressure oxidizer turbopump.

The LPOT is an axial-flow pump driven by a six-stage turbine powered by liquid oxygen. It boosts the liquid oxygen's pressure from 100 psia to 422 psia. The flow from the LPOT is supplied to the high-pressure oxidizer turbopump. During engine operation, the pressure boost permits the HPOT to operate at

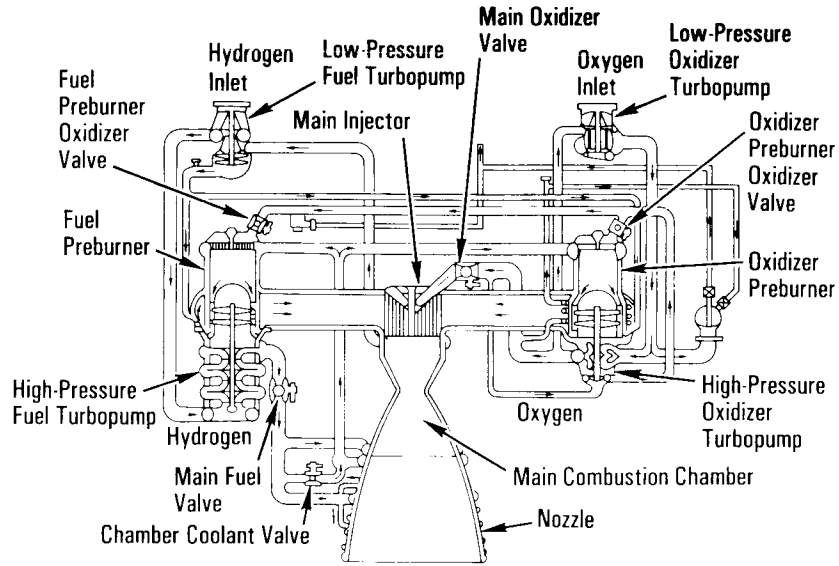


*Main Engine Flow*

high speeds without cavitating. The LPOT operates at approximately 5,150 rpm. The LPOT, which is approximately 18 by 18 inches, is connected to the vehicle propellant ducting and supported in a fixed position by the orbiter structure.

The HPOT consists of two single-stage centrifugal pumps (a main pump and a preburner pump) mounted on a common shaft and driven by a two-stage, hot-gas turbine. The main pump boosts the liquid oxygen's pressure from 422 psia to 4,300 psia while operating at approximately 28,120 rpm. The HPOT discharge flow splits into several paths, one of which is routed to drive the LPOT turbine. Another path is routed to and through the main oxidizer valve and enters into the main combustion chamber. Another small flow path is tapped off and sent to the oxidizer heat exchanger. The liquid oxygen flows through an anti-flood valve that prevents it from entering the heat exchanger until sufficient heat is present to convert the liquid oxygen to gas. The heat exchanger utilizes the heat contained in the discharge gases from the HPOT turbine to convert the liquid oxygen to gas. The gas is sent to a manifold and is then routed to the external tank to pres-

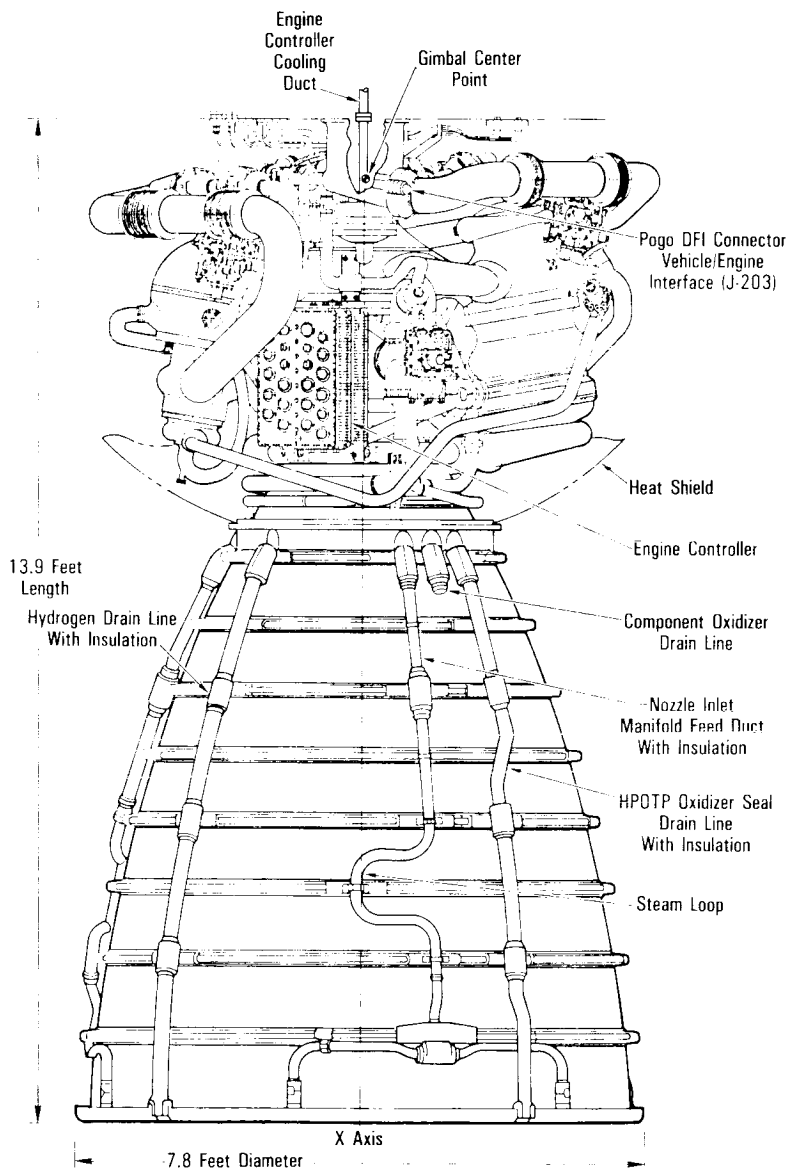


*SSME Controller Side*

surize the liquid oxygen tank. Another path enters the HPOT second-stage preburner pump to boost the liquid oxygen's pressure from 4,300 psia to 7,420 psia. It passes through the oxidizer preburner oxidizer valve into the oxidizer preburner and through the fuel preburner oxidizer valve into the fuel preburner. The HPOT is approximately 24 by 36 inches. It is attached by flanges to the hot-gas manifold.

Fuel enters the orbiter at the liquid hydrogen feed line disconnect valve, then flows into the orbiter gaseous hydrogen feed line manifold and branches out into three parallel paths to each engine. In each liquid hydrogen branch, a prevalve permits liquid hydrogen to flow to the low-pressure fuel turbopump when the prevalve is open.

The LPFT is an axial-flow pump driven by a two-stage turbine powered by gaseous hydrogen. It boosts the pressure of the liquid hydrogen from 30 psia to 276 psia and supplies it to the high-pressure fuel turbopump. During engine operation, the pressure boost provided by the LPFT permits the HPFT to operate at high speeds without cavitating. The LPFT operates at approximately 16,185 rpm. The LPFT is approximately 18 by 24 inches. It is connected to the vehicle propellant ducting and is supported in a fixed position by the orbiter structure 180 degrees from the LPOT.

The HPFT is a three-stage centrifugal pump driven by a two-stage, hot-gas turbine. It boosts the pressure of the liquid hydrogen from 276 psia to 6,515 psia. The HPFT operates at approximately 35,360 rpm. The discharge flow from the turbopump is routed to and through the main valve and then splits into three flow paths. One path is through the jacket of the main combustion chamber, where the hydrogen is used to cool the chamber walls. It is then routed from the main combustion chamber to the LPFT, where it is used to drive the LPFT turbine. A small portion of the flow from the LPFT is then directed to a common manifold from all three engines to form a single path to the external tank to maintain liquid hydrogen tank pressurization. The remaining hydrogen passes between the inner and outer walls to cool the hot-gas manifold and is discharged into the main combustion cham-

ber. The second hydrogen flow path from the main fuel valve is through the engine nozzle (to cool the nozzle). It then joins the third flow path from the chamber coolant valve. The combined flow is then directed to the fuel and oxidizer preburners. The HPFT is approximately 22 by 44 inches. It is attached by flanges to the hot-gas manifold.

The oxidizer and fuel preburners are welded to the hot-gas manifold. The fuel and oxidizer enter the preburners and are mixed so that efficient combustion can occur. The augmented spark igniter is a small combination chamber located in the center of the injector of each preburner. The two dual-redundant spark igniters, which are activated by the engine controller, are used during the engine start sequence to initiate combustion in each preburner. They are turned off after approximately three seconds because the combustion process is then self-sustaining. The preburners produce the fuel-rich hot gas that passes through the turbines to generate the power to operate the high-pressure turbopumps. The oxidizer preburner's outflow drives a turbine that is connected to the HPOT and the oxidizer preburner pump. The fuel preburner's outflow drives a turbine that is connected to the HPFT.

The HPOT turbine and HPOT pumps are mounted on a common shaft. Mixing of the fuel-rich hot gas in the turbine section and the liquid oxygen in the main pump could create a hazard. To prevent this, the two sections are separated by a cavity that is continuously purged by the MPS engine helium supply during engine operation. Two seals minimize leakage into the cavity. One seal is located between the turbine section and the cavity, and the other is between the pump section and cavity. Loss of helium pressure in this cavity results in an automatic engine shutdown.

The speed of the HPOT and HPFT turbines depends on the position of the corresponding oxidizer and fuel preburner oxidizer valves. These valves are positioned by the engine controller, which uses them to throttle the flow of liquid oxygen to the preburners and, thus, control engine thrust. The oxidizer and fuel preburner oxidizer valves increase or decrease the liquid oxygen flow, thus increasing or decreasing preburner chamber pressure, HPOT and HPFT turbine speed, and liquid oxygen and gaseous hydrogen flow into the main combustion chamber, which increases or decreases engine thrust, thus throttling the engine. The oxidizer and fuel preburner valves operate together to throttle the engine and maintain a constant 6-1 propellant mixture ratio.

The main oxidizer valve and the main fuel valve control the flow of liquid oxygen and liquid hydrogen into the engine and are controlled by each engine controller. When an engine is operating, the main valves are fully open.

A coolant control valve is mounted on the combustion chamber coolant bypass duct of each engine. The engine controller regulates the amount of gaseous hydrogen allowed to bypass the nozzle coolant loop, thus controlling its temperature. The chamber coolant valve is 100 percent open before engine start. During engine operation, it will be 100 percent open for throttle settings of 100 to 109 percent for minimum cooling. For throttle settings between 65 to 100 percent, its position will range from 66.4 to 100 percent open for maximum cooling.



Each engine main combustion chamber receives fuel-rich hot gas from a hot-gas manifold cooling circuit. The gaseous hydrogen and liquid oxygen enter the chamber at the injector, which mixes the propellants. A small augmented spark igniter chamber is located in the center of the injector. The dual-redundant igniter is used during the engine start sequence to initiate combustion. The igniters are turned off after approximately three seconds because the combustion process is self-sustaining. The main injector and dome assembly is welded to the hot-gas manifold. The main combustion chamber also is bolted to the hot-gas manifold.

The inner surface of each combustion chamber, as well as the inner surface of each nozzle, is cooled by gaseous hydrogen flowing through coolant passages. The nozzle assembly is a bell-shaped extension bolted to the main combustion chamber. The nozzle is 113 inches long, and the outside diameter of the exit is 94 inches. A support ring welded to the forward end of the nozzle is the engine attach point to the orbiter-supplied heat shield. Thermal protection for the nozzles is necessary because of the exposure that

portions of the nozzles experience during the launch, ascent, on-orbit and entry phases of a mission. The insulation consists of four layers of metallic batting covered with a metallic foil and screening.

The five propellant valves on each engine (oxidizer preburner oxidizer, fuel preburner oxidizer, main oxidizer, main fuel, and chamber coolant) are hydraulically actuated and controlled by electrical signals from the engine controller. They can be fully closed by using the MPS engine helium supply system as a backup actuation system.

The low-pressure oxygen and low-pressure fuel turbopumps are mounted 180 degrees apart on the orbiter's aft fuselage thrust structure. The lines from the low-pressure turbopumps to the high-pressure turbopumps contain flexible bellows that enable the low-pressure turbopumps to remain stationary while the rest of the engine is gimbaled for thrust vector control. The liquid hydrogen line from the LPFT to the HPFT is insulated to prevent the formation of liquid air.

The main oxidizer valve and fuel bleed valve are used after shutdown. The main oxidizer valve is opened during a propellant dump to allow residual liquid oxygen to be dumped overboard through the engine, and the fuel bleed valve is opened to allow residual liquid hydrogen to be dumped through the liquid hydrogen fill and drain valves overboard. After the dump is completed, the valves close and remain closed for the remainder of the mission.

The gimbal bearing is bolted to the main injector and dome assembly and is the thrust interface between the engine and orbiter. The bearing assembly is approximately 11.3 by 14 inches.

Overall, a space shuttle main engine weighs approximately 7,000 pounds.

**POGO SUPPRESSION SYSTEM.** A pogo suppression system prevents the transmission of low-frequency flow oscillations into the high-pressure turbopump and, ultimately, prevents main

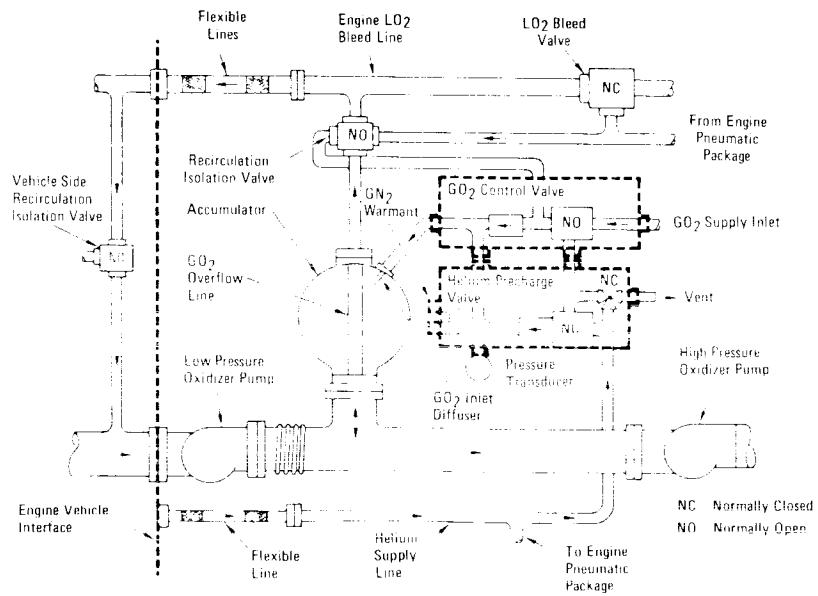


*Pogo Suppression System*



combustion chamber pressure (engine thrust) oscillation. Flow oscillations transmitted from the space shuttle vehicle are suppressed by a partially filled gas accumulator, which is attached by flanges to the high-pressure oxidizer turbopump's inlet duct.

The system consists of a 0.6-cubic-foot accumulator with an internal standpipe, helium precharge valve package, gaseous oxygen supply valve package and two recirculation isolation valves (one located on the orbiter).

During engine start, the accumulator is charged with helium 2.4 seconds after the start command to provide pogo protection until the engine heat exchanger is operational and gaseous oxygen is available.

The accumulator is partially chilled by liquid oxygen during the engine chill-down operation. It fills to the overflow standpipe line inlet level, which is sufficient to preclude gas ingestion at engine start.

During engine operation, the accumulator is charged with a continuous gaseous oxygen flow maintained at a rate governed by the engine operation point.

The liquid level in the accumulator is controlled by the overflow standpipe line in the accumulator, which is orificed to regulate the gaseous oxygen overflow over the engine's operating power level. The system is sized to provide sufficient replenishment of gaseous oxygen at the minimum flow rate and to permit sufficient gaseous oxygen overflow at the maximum decreasing pressure transient in the low-pressure oxidizer turbopump discharge duct. At all other conditions, excess gaseous and liquid oxygen are recirculated to the the low-pressure oxidizer turbopump inlet through the engine oxidizer bleed duct. The pogo accumulator is charged (pressurized) at engine shutdown to provide a positive pressure at the HPOT inlet, which prevents HPOT overspeed in the zero-gravity environment.

**SPACE SHUTTLE MAIN ENGINE CONTROLLERS.** The controller is an electronics package mounted on each SSME. It contains two digital computers and the associated electronics to control all main engine components and operations. The controller is attached to the main combustion chamber by shock-mounted fittings.

Each controller operates in conjunction with engine sensors, valves, actuators and spark igniters to provide a self-contained system for engine control, checkout and monitoring. The controller provides engine flight readiness verification; engine start and shutdown sequencing; closed-loop thrust and propellant mixture ratio control; sensor excitation; valve actuator and spark igniter control signals; engine performance limit monitoring; onboard engine checkout, response to vehicle commands and transmission of engine status; and performance and maintenance data.

Each engine controller receives engine commands transmitted by the orbiter's general-purpose computers through its own engine interface unit. The engine controller provides its own commands to the main engine components. Engine data are sent to the engine controller, where they are stored in a vehicle data table in

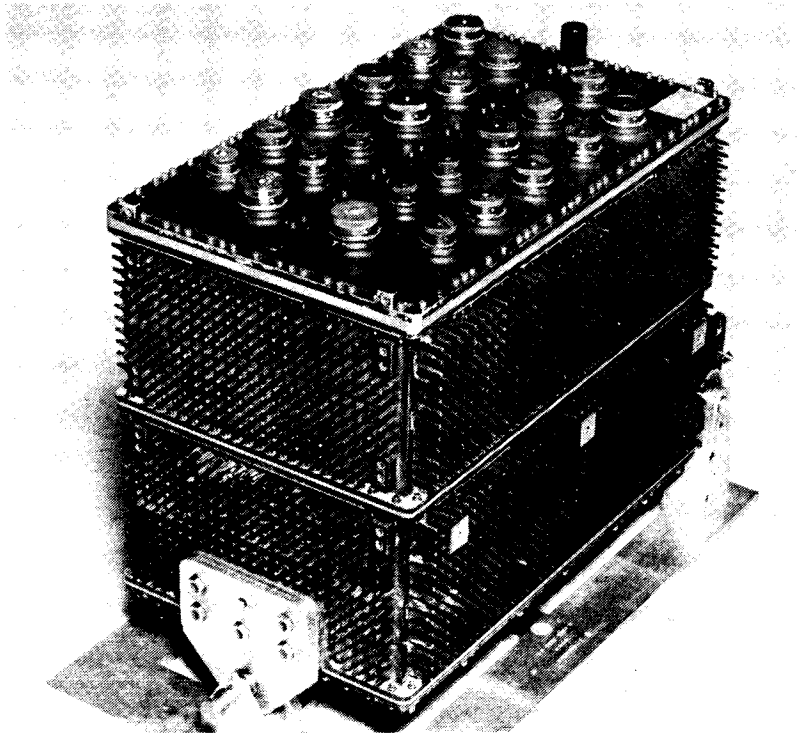

- Computer Control of Engine
- Input Power
  115 Volts, 400 Hertz, 3-Phase ac
  28 Volts dc
  490 Watts (Standby)
  600 Watts (Main Stage)
- Size 23.5 x 14.5 x 17 Inches
- Heat Transfer
  Forced-Air Cooling (Ground Checkout)
  Convection Cooling (Engine Operation)

*SSME Controller*

the controller's computer memory. Data on the controller's status compiled by the engine controller's computer are also added to the vehicle data table. The vehicle data table is periodically output by the controller to the EIU for transmission to the orbiter's GPCs.

The engine interface unit is a specialized multiplexer/demultiplexer that interfaces with the GPCs and with the engine controller. When engine commands are received by the EIU, the

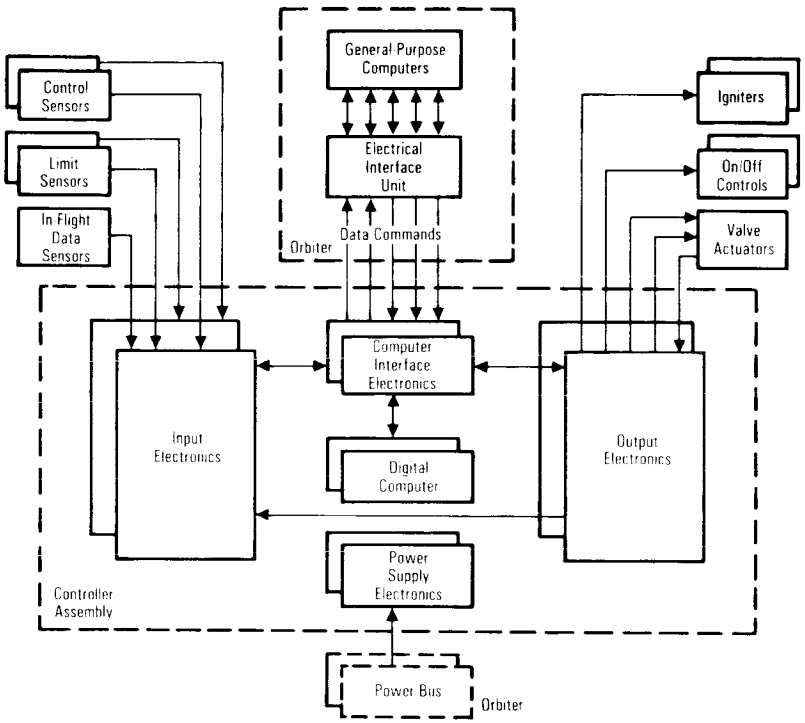


*Controller Organization and Redundancy*

data are held in a buffer until the EIU receives a request for data from the GPCs. The EIU then sends data to each GPC. Each EIU is dedicated to one space shuttle main engine and communicates only with the engine controller that controls its SSME. The EIUs have no interface with each other.

The controller provides responsive control of engine thrust and propellant mixture ratio throughout the digital computer in the controller, updating the instructions to the engine control elements 50 times per second (every 20 milliseconds). Engine reliability is enhanced by a dual-redundant system that allows normal operation after the first failure and a fail-safe shutdown after a second failure. High-reliability electronic parts are used throughout the controller.

The digital computer is programmable, allowing engine control equations and constants to be modified by changing the stored program (software). The controller is packaged in a sealed, pressurized chassis and is cooled by convection heat transfer through pin fins as part of the main chassis. The electronics are distributed on functional modules with special thermal and vibration protection.

The controller is divided into five subsystems: input electronics, output electronics, computer interface electronics, digital computer and power supply electronics. Each subsystem is duplicated to provide dual-redundant capability.

The input electronics receive data from all engine sensors, condition the signals and convert them to digital values for processing by the digital computer. Engine control sensors are dual-redundant, and maintenance data sensors are non-redundant.

The output electronics convert computer digital control commands into voltages suitable for powering the engine spark igniters, the off/on valves and the engine propellant valve actuators.

The computer interface electronics control the flow of data within the controller, data input to the computer and computer output commands to the output electronics. They also provide the controller interface with the vehicle engine electronics interface unit for receiving engine commands that are triple-redundant channels from the vehicle and for transmitting engine status and data through dual-redundant channels to the vehicle. The computer interface electronics include the watchdog timers that determine which channel of the dual-redundant mechanization is in control.

The digital computer is an internally stored, general-purpose computer that provides the computational capability necessary for all engine control functions. The memory has a program storage capacity of 16,384 data and instruction words (17-bit words; 16 bits for program use, one bit for parity).

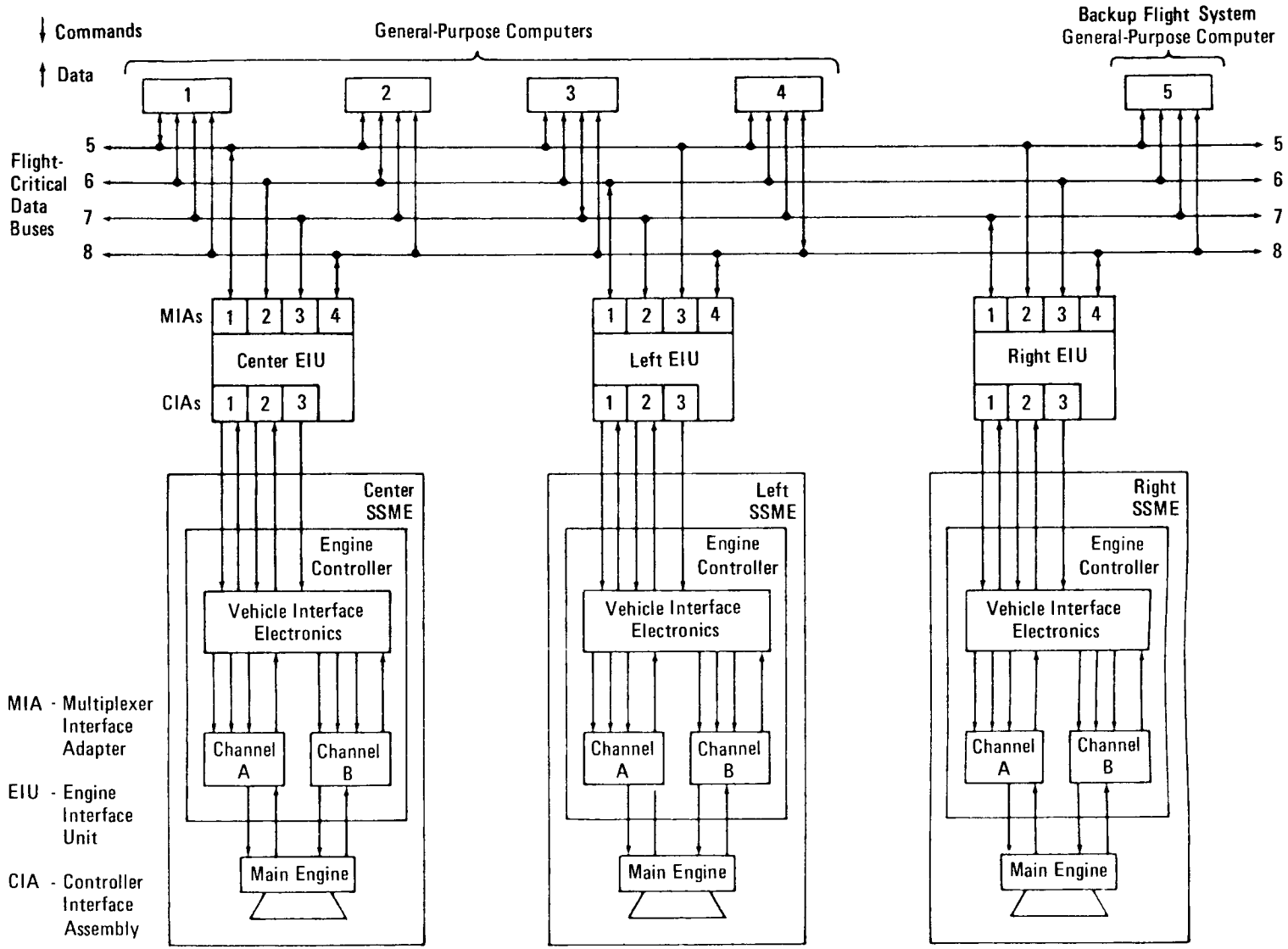


*General Purpose Computer*

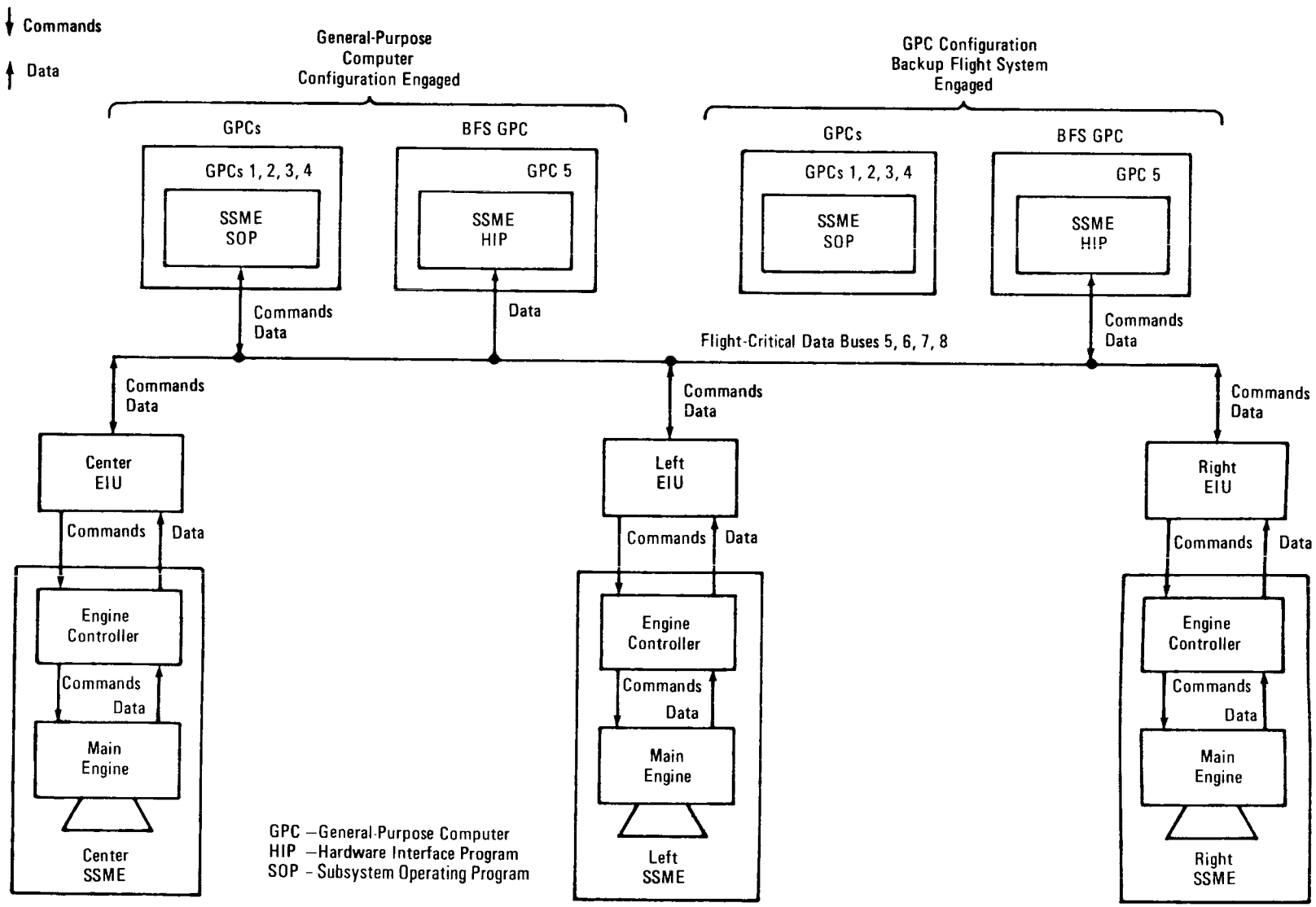


*General-Purpose Computer Overview*

The power supply electronics convert the 115-volt, three-phase, 400-hertz vehicle ac power to the individual power supply voltage levels required by the engine control system and monitor the level of power supply channel operation to ensure it is within satisfactory limits.

Each orbiter GPC, operating in a redundant set, issues engine commands to the engine interface units for transmission to their corresponding engine controllers. Each orbiter GPC has SSME subsystem operating program applications software residing in it. Engine commands are output over the engine's assigned flight-critical data bus (a total of four GPCs outputting over four FC data buses). Therefore, each EIU will receive four commands. The nominal ascent configuration has GPCs 1, 2, 3 and 4 outputting on FC data buses 5, 6, 7 and 8, respectively. Each FC data bus is connected to one multiplexer interface adapter in each EIU.

The EIU checks the received engine commands for transmission errors. If there are none, the EIU passes the validated engine commands on to the controller interface assemblies, which output the validated engine commands to the engine controller. An engine command that does not pass validation is not sent to the controller interface assembly. Instead, it is dead-ended in the EIU's multiplexer interface adapter. Commands that come through MIAs 1 and 2 are sent to CIAs 1 and 2, respectively. Commands that come to MIAs 3 and 4 pass through a CIA 3 data-select logic. This logic outputs the command that arrives at the logic first, from either MIA 3 or 4. The other command is dead-ended in the CIA 3 select logic. The selected command is output through CIA 3. In this manner, the EIU reduces the four commands sent to the EIU to three commands output by the EIU.

The engine controller vehicle interface electronics receive the three engine commands output by its EIU, check for transmission errors (hardware validation), and send controller hardware-validated engine commands to the controller A and B electronics. Normally, channel A electronics are in control, with channel B electronics active, but not in control. If channel A fails, channel B will assume control. If channel B subsequently fails, the engine controller will shut down the engine pneumatically. If two or three commands pass voting, the engine controller will issue its own commands to accomplish the function commanded by the orbiter GPCs. If command voting fails and two or all three commands fail, the engine controller will maintain the last command that passed voting.

The backup flight system computer, GPC 5, contains SSME hardware interface program applications software. When the four primary GPCs (1, 2, 3 and 4) are in control, the BFS GPC does no commanding. When GPC 5 is in control, the BFS sends commands to, and requests data from, the EIU; and in this configuration, the four primary GPCs neither command nor listen. The BFS, when engaged, allows GPC 5 to command FC buses 5, 6, 7 and 8 for main engine control through the SSME HIP. The SSME HIP performs the same main engine command functions as the SSME subsystem operating program. The command flow through the EIUs and engine controllers is the same when the BFS is engaged as for the four-GPC redundant set.

The engine controller provides all the main engine data to the GPCs. Sensors in the engine supply pressures, temperatures, flow rates, turbopump speeds, valve position and engine servovalve actuator positions to the engine controller. The engine controller assembles these data into a vehicle data table and adds status data of its own to the vehicle data table. The vehicle data tables output channels A and B to the vehicle interface electronics for transmission to the EIUs. The vehicle interface electronics output over both data paths. The data paths are called primary and secondary. The channel A vehicle data table is normally sent over both primary and secondary control (channel A has failed); then the vehicle interface electronics output the channel B vehicle data table over both the primary and secondary data paths.

The vehicle data table is sent by the controller to the EIU. There are only two data paths versus three command paths between the engine controller and the EIU. The data path that interfaces with CIA 1 is called primary data. The path that interfaces with CIA 2 is called secondary data. Primary and secondary data are held in buffers until the GPCs send a data request command to the EIUs. The GPCs request both primary and secondary

data. Primary data is output only through MIA 1 on each EIU. Secondary data is output only through MIA 4 on each EIU.

During prelaunch, the orbiter's computers look at both primary and secondary data. Loss of either primary or secondary data will result in data path failure and either an engine ignition inhibit or a launch pad shutdown of all three main engines.

At T minus zero, the orbiter GPCs request both primary and secondary data from each EIU. For no failures, only primary data are looked at. If there is a loss of primary data (which can occur between the engine controller channel A electronics and the SSME SOP), the secondary data are looked at.

There are two primary written engine controller computer software programs: the flight operational program and the test operational program. The flight operational program is an on-line, real-time, process-control program that processes inputs from engine sensors; controls the operation of the engine servovalves, actuators, solenoids and spark igniters; accepts and processes vehicle commands; provides and transmits data to the vehicle; and provides checkout and monitoring capabilities. The test operational program supports engine testing. Functionally, it is similar to the flight operational program but differs with respect to implementation. The computer software programs are modular and are defined as computer program components, which consist of a data base organized into tables and 15 computer program components. During application of the computer program components, the programs perform data processing for failure detection and status to the vehicle. As system operation progresses through an operating phase, different combinations of control functions are operative at different times. These combinations within a phase are defined as operating modes.

The checkout phase initiates active control monitoring or checkout. The standby mode in this phase is a waiting mode of controller operation while active control sequence operations are in process. Monitoring functions that do not affect engine hardware status are continually active during the mode. Such functions include processing of vehicle commands, status update and controller self-test. During checkout, data and instructions can be loaded into the engine controller's computer memory. This permits updating of the software program and data as necessary to proceed with engine-firing operations or checkout operations. Also in this phase, component checkout, consisting of checkout or engine leak tests, is performed on an individual engine system component.

The start preparation phase consists of system purges and propellant conditioning, which are performed in preparation for engine start. The purge sequence 1 mode is the first purge sequence, including oxidizer system and intermediate seal purge operation. The purge sequence 2 mode is the second purge sequence, including fuel system purge operation and the continuation of purges initiated during purge sequence 1. The purge sequence 3 mode includes propellant recirculation (bleed valve operation). The purge sequence 4 mode includes fuel system purge and the indication engine is ready to enter the start phase. The engine-ready mode occurs when proper engine thermal conditions for start have been attained and other criteria for start have been satisfied.

The start phase covers operations involved with starting or firing the engines, beginning with scheduled open-loop operation of propellant valves. The start initiation mode includes all functions before ignition confirmed and the closing of the thrust control loop. The thrust buildup mode detects ignition by monitoring main combustion chamber pressure and verifying that closed-loop thrust buildup sequencing is in progress.

The main stage phase is automatically entered upon successful completion of the start phase. The normal control mode has initiated mixture ratio control, and thrust control is operating normally. In the event of a malfunction, the electrical lock mode will be activated. In that mode, engine propellant valves are electrically controlled to their last commanded position. During this phase, there is also the hydraulic lockup mode, in which all fail-safe valves are deactivated to hydraulically hold the propellant valves

in a fixed configuration and all control loop functions are suspended.

The shutdown phase covers operations to reduce main combustion chamber pressure and drive all valves closed to effect full engine shutdown. Throttling to minimum power level is the portion of the shutdown in progress at a programmed shutdown thrust reference level above the MPL. The valve schedule throttling mode is the stage in the shutdown sequence at which the programmed thrust reference has decreased below the MPL. Propellant valves closed is the stage in the shutdown sequence after all liquid propellant valves have been closed, the shutdown purge has been activated, and verification sequences are in progress. The fail-safe pneumatic mode is when the fail-safe pneumatic shutdown is used.

The post-shutdown phase represents the state of the SSME and engine controller at the completion of engine firing. The standby mode is a waiting mode of controller operations whose functions are identical to those of standby during checkout. It is the normal mode that is entered after completion of the shutdown phase. The terminate sequence mode terminates a purge sequence by a command from the vehicle. All propellant valves are closed, and all solenoid and torque motor valves are de-energized.

Each controller utilizes ac power provided by the *MPS engine power left, ctr, right* switches on panel R2.

Each controller has internal electrical heaters that provide environmental temperature control and are powered by main bus power through a remote power controller. The RPC is controlled by the *main propulsion system engine cntrl htr left, ctr, right* switches on panel R4. The heaters are not normally used until after main engine cutoff and are only turned on if environmental control is required during the mission.

**MALFUNCTION DETECTION.** There are three separate means of detecting malfunctions within the main propulsion system: the engine controllers, the caution and warning system and the GPCs.

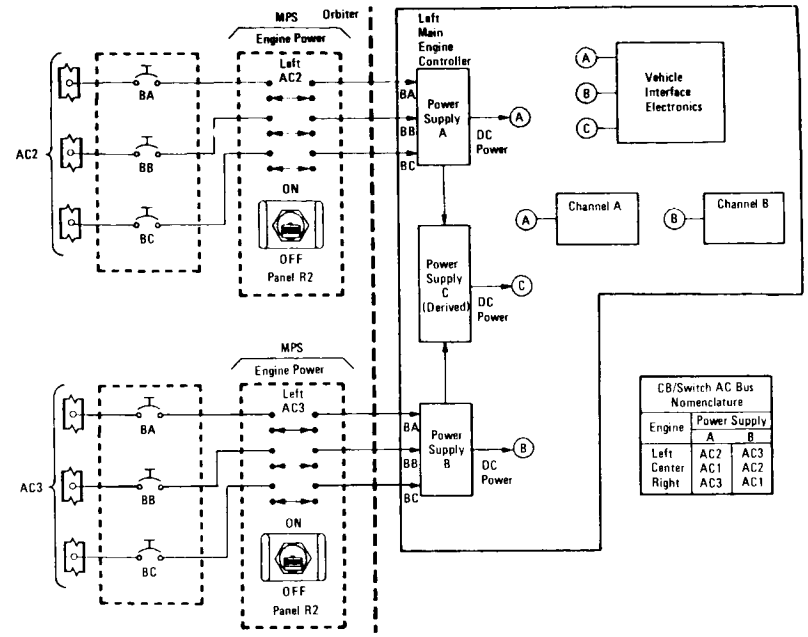


*Main Engine Controller Power*

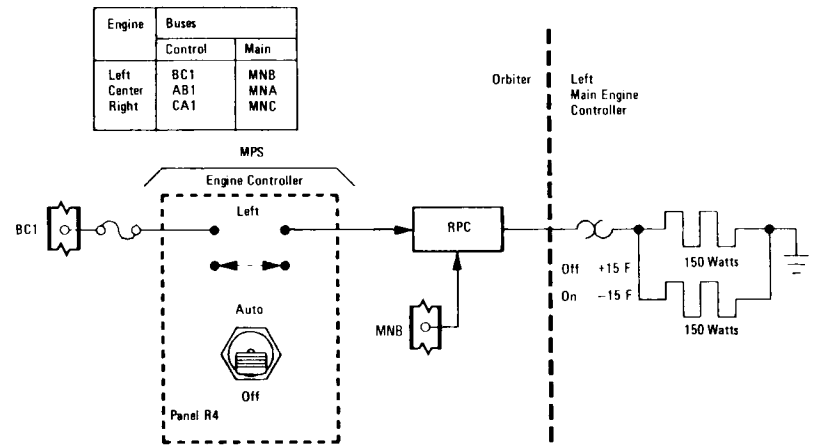


*Main Engine Controller Heater Power*

The engine controller, through its network of sensors, has access to numerous engine operating parameters. A group of these parameters has been designated critical operating parameters, and special limits defined for these parameters are hard-wired and limit sensed within the caution and warning system. If a violation of any limit is detected, the caution and warning system will illuminate the red *MPS* caution and warning light on panel F7. The light will be illuminated by an MPS engine liquid oxygen manifold pressure above 249 psia; an MPS engine liquid hydrogen manifold pressure below 28 psia or above 60 psia; an MPS center, left or right helium pressure below 1,150 psia; an MPS center, left or right helium regulated pressure above 820 psia; or an MPS left, center or right helium delta pressure/delta time above 29 psia. Note that the flight crew can monitor the *MPS press helium pneu, l, c, r* meter on panel F7 when the switch is placed in the *tank* or *reg* position. The *MPS press eng manf* $LO_2$, $LH_2$ meter can also be monitored on panel F7. A number of the conditions will require crew action. For example, an MPS engine liquid hydrogen manifold pressure below the minimum setting will require the flight crew to pressurize the external liquid hydrogen tank by setting the $LH_2$ *ullage press* switch on panel R2 to *open*, and a low helium pressure may require the flight crew to interconnect the pneumatic helium tank and the engine helium tanks using the *MPS He interconnect* valve switches on panel R2 for the engine helium system that is affected.

The engine controller also has a self-test feature that allows it to detect certain malfunctions involving its own sensors and control devices. For each of the three engines, a yellow *main engine status left, ctr, right* light (lower half) on panel F7 will be illuminated when the corresponding engine helium pressure is below 1,150 psia or regulated helium pressure is above 820 psia.

The lower half of the *main engine status left, ctr, right* light on panel F7 may also be illuminated by the SSME SOP (GPC-detected malfunctions). The yellow light may be illuminated due to an electronic hold, hydraulic lockup, loss of two or more command channels or command reject between the GPC and the SSME controller, or loss of both data channels from the SSME controller to the GPC of the corresponding engine. In an electronic hold for the affected SSME, loss of data from both pairs of the four fuel flow rate sensors and the four chamber pressure sensors will result in the propellant valve actuators being maintained electronically in the positions existing at the time the second sensor failed. (To fail both sensors in a pair, it is only necessary to fail one sensor.) In the case of either the hydraulic lockup or an electronic hold, all engine-throttling capability for the affected engine is lost; thus, subsequent throttling commands to that engine will not change the thrust level.

The red upper half of the *main engine status left, ctr, right* light on panel F7 will be illuminated if the corresponding engine's high-pressure oxidizer turbine's discharge temperature is above 1,760 degrees R, the main combustion chamber's pressure is below 1,000 psia, the high-pressure oxidizer turbopump's intermediate seal purge pressure is below 170 or above 650 psia, or the high-pressure oxidizer turbopump's secondary seal purge pressure is below 5 or above 85 psia. Because of the rapidity with which it is possible to exceed these limits, the engine controller has been programmed to sense the limits and automatically cut off the engine if the limits are exceeded. Although a shutdown as a result of violating operating limits is normally automatic, the flight crew can, if necessary, inhibit an automatic shutdown through the use of the *main engine limit shut dn* switch on panel C3. The switch has three positions: *enable, auto* and *inhibit*. The *enable* position allows only the first engine that violates operating limits to be shut down automatically. If either of the two remaining engines subsequently violates operating limits, it would be inhibited from automatically shutting down. The *inhibit* position inhibits all automatic shutdowns. The *main engine shutdown left, ctr, right* push buttons on panel C3 have spring-loaded covers (guards). When the guard is raised and the push button is depressed, the corresponding engine shuts down immediately.

The backup caution and warning processing of the orbiter GPCs can detect certain specified out-of-limit or fault conditions of the MPS. The *backup C/W alarm* light on panel F7 is illuminated, a fault message appears on all CRT displays, and an audio alarm sounds if the MPS engine liquid oxygen manifold pressure is zero or above 29 psia; the MPS engine liquid hydrogen manifold

pressure is below 30 or above 46 psia; the MPS left, center or right helium pressure is below 1,150 psia; or the MPS regulated left, center or right helium pressure is below 680 or above 820 psia. This is identical to the parameter limit sensed by the caution and warning system; thus, the *MPS* red light on panel F7 will also be illuminated.

The *SM alert* indicator on panel F7 is illuminated, a fault message appears on all CRT displays, and an audio alarm is sounded when MPS malfunctions/conditions are detected by the SSME SOP or special systems-monitoring processing. The first four conditions are detected by the SSME SOP and are identical to those that illuminate the yellow lower light of the respective *main engine status* light on panel F7 due to electronic hold, hydraulic lockup, loss of two or more command channels or command reject between the GPC and the SSME controller, or loss of both data channels from the SSME controller to the orbiter GPC. The last four conditions are special systems-monitoring processing and illuminate the *SM alert* light on panel F7, sound an audio alarm and provide a fault message on all CRTs because of an external tank liquid hydrogen ullage pressure below 30 psia or above 46 psia or an external tank liquid oxygen ullage pressure of zero or above 29 psia. (Note that the *main engine status* lights on panel F7 will not be illuminated.)

**ORBITER HYDRAULIC SYSTEMS.** The three orbiter hydraulic systems supply hydraulic pressure to the main propulsion system for providing thrust vector control and actuating engine valves on each SSME.

The three hydraulic supply systems are distributed to the MPS TVC valves. These valves are controlled by *hydraulics MPS/TVC 1, 2, 3* switches on panel R4. A valve is opened by positioning its respective switch to *open*. The talkback indicator above each switch indicates *op* or *cl* for open and close.

When the three MPS TVC hydraulic isolation valves are opened, hydraulic pressure actuates the engine main fuel valve, the main oxidizer valve, the fuel preburner oxidizer valve, the oxidizer preburner oxidizer valve and the chamber coolant valve. All hydraulically actuated engine valves on an engine receive hydraulic pressure from the same hydraulic system. The left engine valves are actuated by hydraulic system 2, the center engine valves are actuated by hydraulic system 1, and the right engine valves are actuated by hydraulic system 3. Each engine valve actuator is controlled by dual-redundant signals: channel A/engine servovalve 1 and channel B/engine servovalve 2 from that engine controller electronics. As a backup, all of the hydraulically actuated engine valves on an engine are supplied with helium pressure from the helium subsystem left, center and right engine helium tank supply system. In the event of a hydraulic lockup in an engine, helium pressure is used to actuate the engine's propellant valves to their fully closed position when the engine is shut down.

Hydraulic lockup is a condition in which all of the propellant valves on an engine are hydraulically locked in a fixed position. This is a built-in protective response of the MPS propellant valve actuator/control circuit. It takes effect any time low hydraulic pressure or loss of control of one or more propellant valve actuators renders closed-loop control of engine thrust or propellant mixture ratio impossible. Hydraulic lockup allows an engine to continue to thrust in a safe manner under conditions that normally would require that the engine be shut down; however, the affected engine will continue to operate at approximately the throttle level in effect at the time hydraulic lockup occurred. Once an engine is in a hydraulic lockup, any subsequent shutoff commands, whether nominal or premature, will cause a pneumatic helium shutdown. Hydraulic lockup does not affect the capability of the engine controller to monitor critical operating parameters or issue an automatic shutdown if an operating limit is out of tolerance; however, the engine shutdown would be accomplished pneumatically.

The three MPS thrust vector control valves must also be opened to supply hydraulic pressure to the six main engine TVC actuators. There are two servoactuators per SSME: one for yaw and one for pitch. Each actuator is fastened to the orbiter thrust structure and to the powerhead of one of the three SSMEs. The two actuators per engine provide attitude control and trajectory shaping by gimbaling the SSMEs in conjunction with the solid

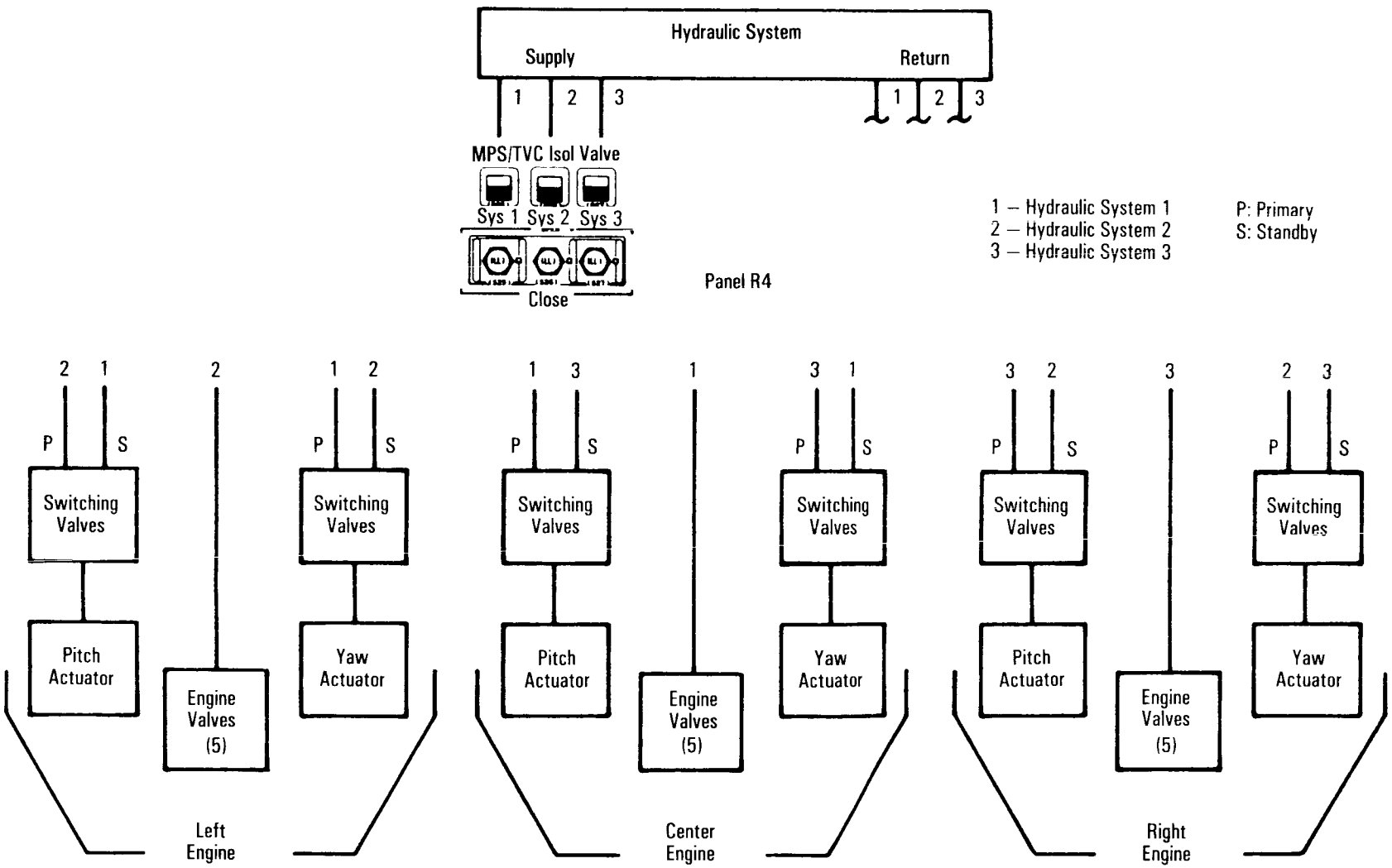


*MPS Hydraulic System Distribution*

rocket boosters during first-stage ascent and without the SRBs during second-stage ascent. Each SSME servoactuator receives hydraulic pressure from two of the three orbiter hydraulic systems; one system is the primary system and the other is a standby system. Each servoactuator has its own hydraulic switching valve. The switching valve receives hydraulic pressure from two of the three orbiter hydraulic systems and provides a single source to the actuator. Normally, the primary hydraulic supply is directed to the actuator; however, if the primary system were to fail and lose hydraulic pressure, the switching valve would automatically switch over to the standby system, and the actuator would continue to function on the standby system. The left engine's pitch actuator utilizes hydraulic system 2 as the primary and hydraulic system 1 as the standby. The engine's yaw actuator utilizes hydraulic system 1 as the primary and hydraulic system 2 as the standby. The center engine's pitch actuator utilizes hydraulic system 1 as the primary and hydraulic system 3 as the standby, and the yaw actuator utilizes hydraulic system 3 as the primary and hydraulic system 1 as the standby. The right engine's pitch actuator utilizes hydraulic system 3 as the primary and hydraulic system 2 as the standby. Its yaw actuator utilizes hydraulic system 2 as the primary and hydraulic system 3 as the standby.

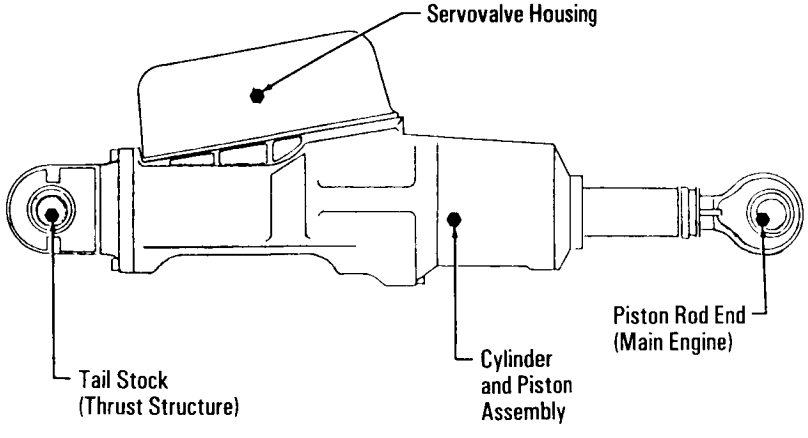


*Main Engine Electrohydraulic Servoactuator*

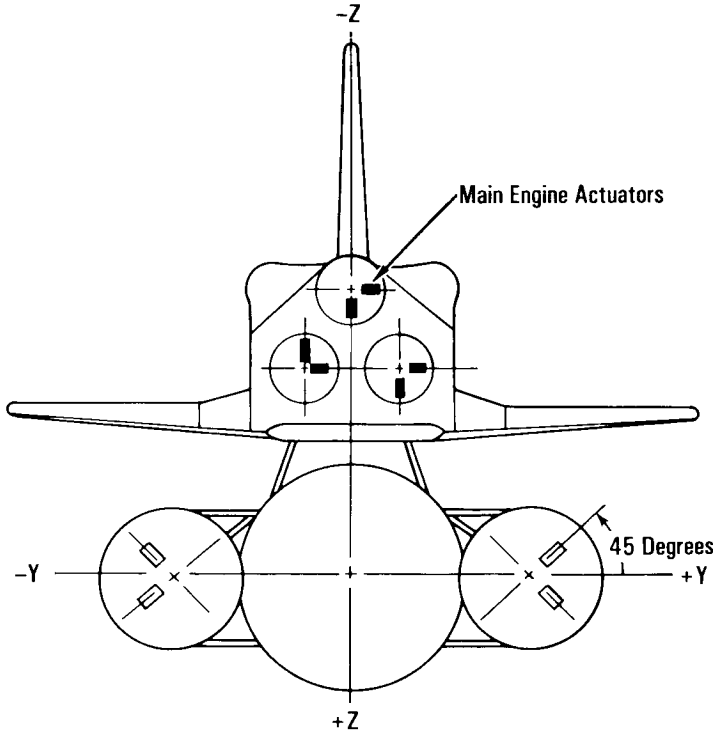


*Orientation of Main Engine Actuators*

The hydraulic systems are distributed among the actuators and engine valves to equalize the hydraulic work load among the three systems.

The *hydraulic MPS/TVC isol vlv sys1, sys2, sys3* switches on panel R4 are positioned to *close* during on-orbit operations to protect against hydraulic leaks downstream of the isolation valves. In addition, there is no requirement to gimbal the main engines from the stow position. During on-orbit operations when the MPS TVC valves are closed, the hydraulic pressure supply and return lines within each MPS TVC component are interconnected to enable hydraulic fluid to circulate for thermal conditioning.

**THRUST VECTOR CONTROL.** The space shuttle ascent thrust vector control portion of the flight control system directs the thrust of the three main engines and two solid rocket boosters to control attitude and trajectory during lift-off and first-stage ascent and the main engines alone during second-stage ascent.

Ascent thrust vector control is provided by avionics hardware packages that supply gimbal commands and fault detection for each hydraulic gimbal actuator. The MPS ATVC packages are located in the three aft avionics bays in the orbiter aft fuselage and are cooled by cold plates and the Freon-21 system. The associated flight aft multiplexers/demultiplexers are also located in the aft avionics bays.

The MPS TVC command flow starts in the general-purpose computers, in which the flight control system generates the TVC position commands, and terminates at the SSME servoactuators, where the actuators gimbal the SSMEs in response to the commands. All the MPS TVC position commands generated by the flight control system are issued to the MPS TVC command subsystem operating program, which processes and disburses them to their corresponding flight aft MDMs. The flight aft MDMs separate these linear discrete commands and disburse them to ATVC channels, which generate equivalent command analog voltages for each command issued. These voltages are, in turn, sent to the servoactuators, commanding the SSME hydraulic actuators to extend or retract, thus gimbaling the main engines to which they are fastened.

Six MPS TVC actuators respond to the command voltages issued by four ATVC channels. Each ATVC channel has six MPS drivers and four SRB drivers. Each actuator receives four identical command voltages from four different MPS drivers, each located in different ATVC channels.

Each main engine servoactuator consists of four independent, two-stage servovalves, which receive signals from the drivers. Each servovalve controls one power spool in each actuator, which positions an actuator ram and the engine to control thrust direction.

The four servovalves in each actuator provide a force-summed majority voting arrangement to position the power spool. With four identical commands to the four servovalves, the actuator's force-sum action prevents a single erroneous command from affecting power ram motion. If the erroneous command persists for more than a predetermined time, differential pressure sensing activates an isolation driver, which energizes an isolation valve that isolates the defective servovalve and removes hydraulic pressure, permitting the remaining channels and servovalves to control the actuator ram spool provided the *FCS channel 1, 2, 3, 4* switch on panel C3 is in the *auto* position. A second failure would isolate the defective servovalve and remove hydraulic pressure in the same manner as the first failure, leaving only two channels remaining.

Failure monitors are provided for each channel on the CRT and *backup* caution and warning light to indicate which channel has been bypassed for the MPS and/or SRB. If the *FCS channel 1, 2, 3,* or *4* switch on panel C3 is positioned to *off*, that ATVC channel is isolated from its servovalve on all MPS and SRB actuators. The *override* position of the *FCS channel 1, 2, 3, 4* switch inhibits the isolation valve driver from energizing the isolation valve for its respective channel and provides the capability of resetting a failed or bypassed channel.

The *ATVC 1, 2, 3, 4* power switch is located on panel O17. The *on* position enables the ATVC channel selected; *off* disables the channel.

Each actuator ram is equipped with transducers for position feedback to the TVC system.

The SSME servoactuators change each main engine's thrust vector direction as needed during the flight sequence. The three pitch actuators gimbal the engine up or down a maximum of 10 degrees 30 minutes from the installed null position. The three yaw actuators gimbal the engine left or right a maximum of 8 degrees 30 minutes from the installed position. The installed null position for the left and right main engines is 10 degrees up from the X axis in a negative Z direction and 3 degrees 30 minutes outboard from an engine centerline parallel to the X axis. The center

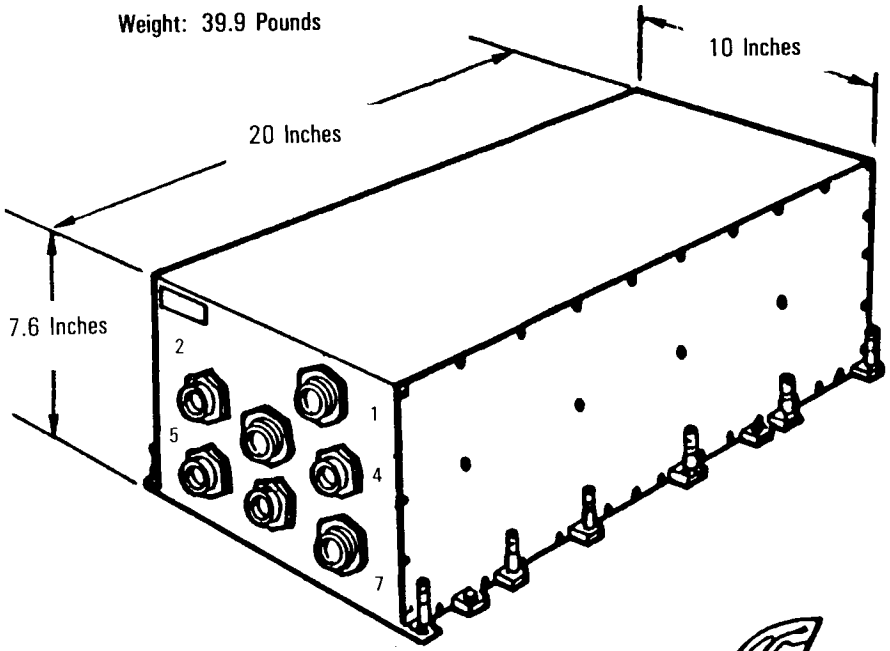


*Ascent Thrust Vector Controller*

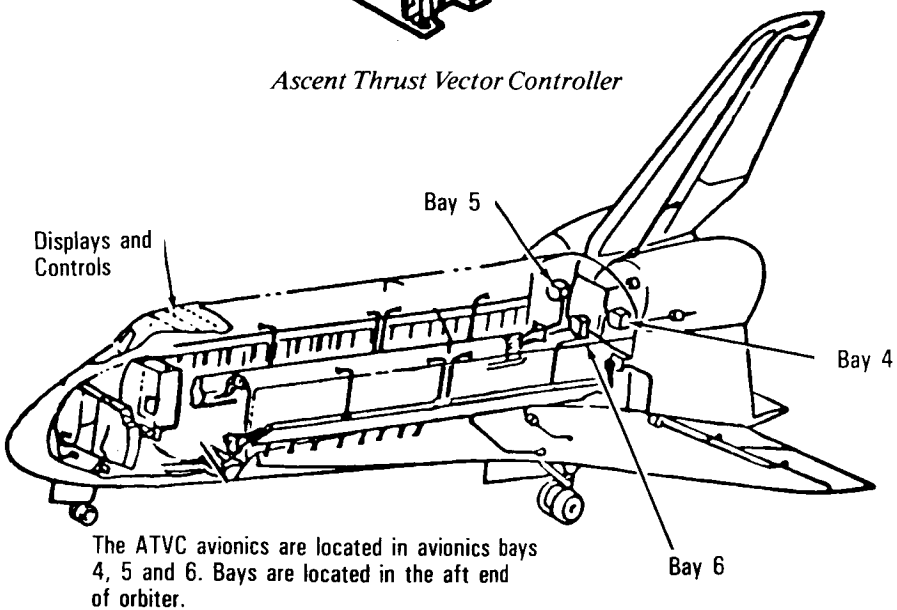


The ATVC avionics are located in avionics bays 4, 5 and 6. Bays are located in the aft end of orbiter.

*Location of Orbiter Avionics Bays*

ATVC – Ascent Thrust Vector Control
FA – Flight Aft
MDM – Multiplexer/ Demultiplexer

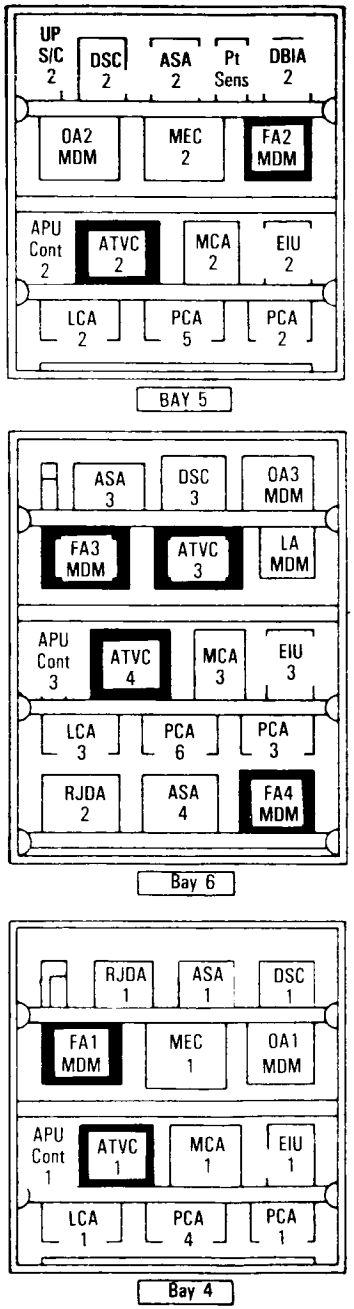


*Avionics Bays 4, 5 and 6*

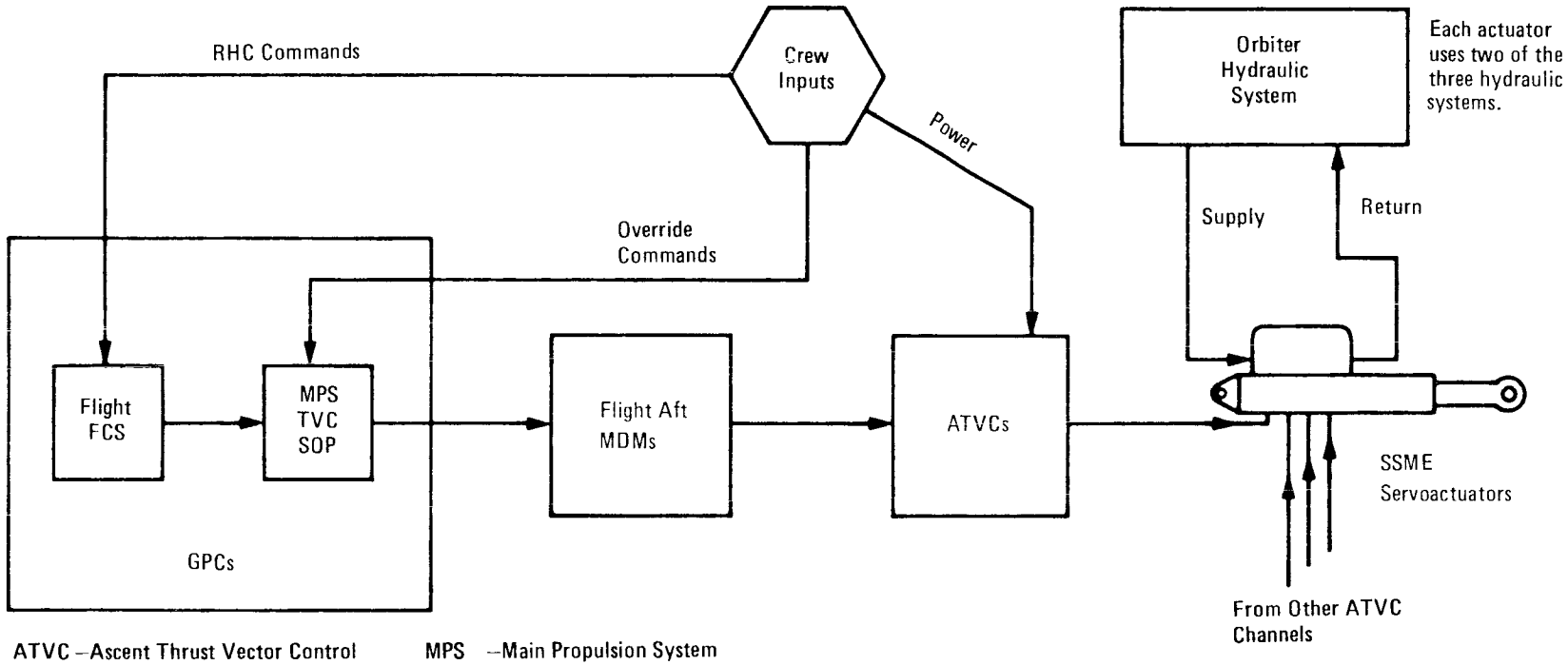


ATVC –Ascent Thrust Vector Control
FCS –Flight Control System
GPCs –General-Purpose Computers
MDM –Multiplexer/Demultiplexer
MPS –Main Propulsion System
RHC –Rotational Hand Controller
SOP –Subsystem Operating Program
TVC –Thrust Vector Control

*SSME Thrust Vector Control Interface Flow*



engine's installed null position is 16 degrees above the X axis for pitch and on the X axis for yaw. When any engine is installed in the null position, the other engines cannot collide with it.

The minimum gimbal rate is 10 degrees per second; the maximum rate is 20 degrees per second.

There are three actuator sizes for the main engines. The piston area of the one upper pitch actuator is 24.8 square inches, its stroke is 10.8 inches, it has a peak flow of 50 gallons per minute, and it weighs 265 pounds. The piston area of the two lower pitch actuators is 20 square inches, their stroke is 10.8 inches, their peak flow is 45 gallons per minute, and they weigh 245 pounds. All three yaw actuators have a piston area of 20 square inches, a stroke of 8.8 inches and a peak flow of 45 gallons per minute and weigh 240 pounds.

**HELIUM, OXIDIZER AND FUEL FLOW SEQUENCE.** At T minus five hours 15 minutes, the fast-fill portion of the liquid oxygen and liquid hydrogen loading sequence begins under the control of the launch processing system.

At T minus five hours 50 minutes, the SSME liquid hydrogen chill-down sequence is initiated by the LPS. It opens the liquid

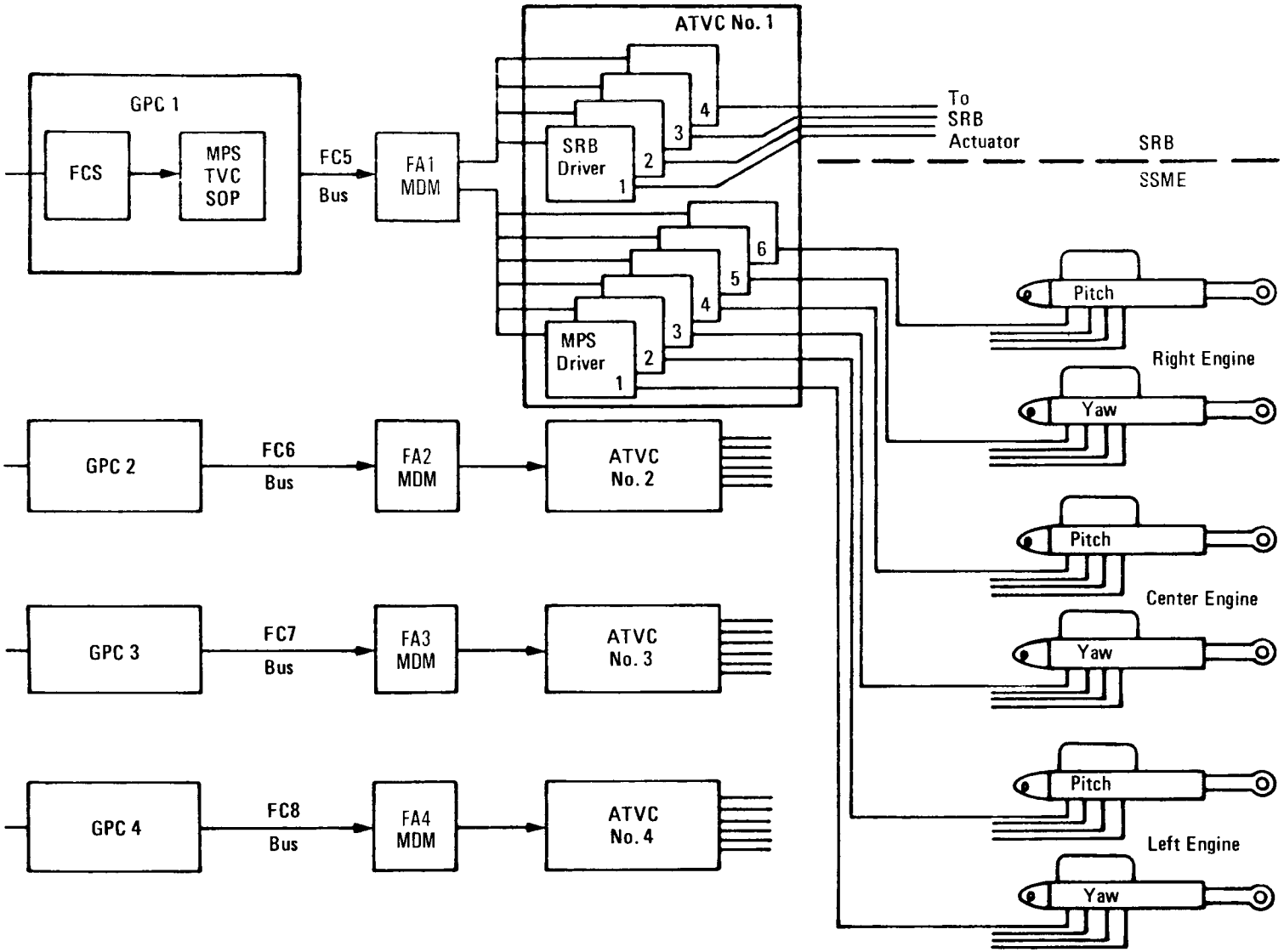


*Command Flow Overview*

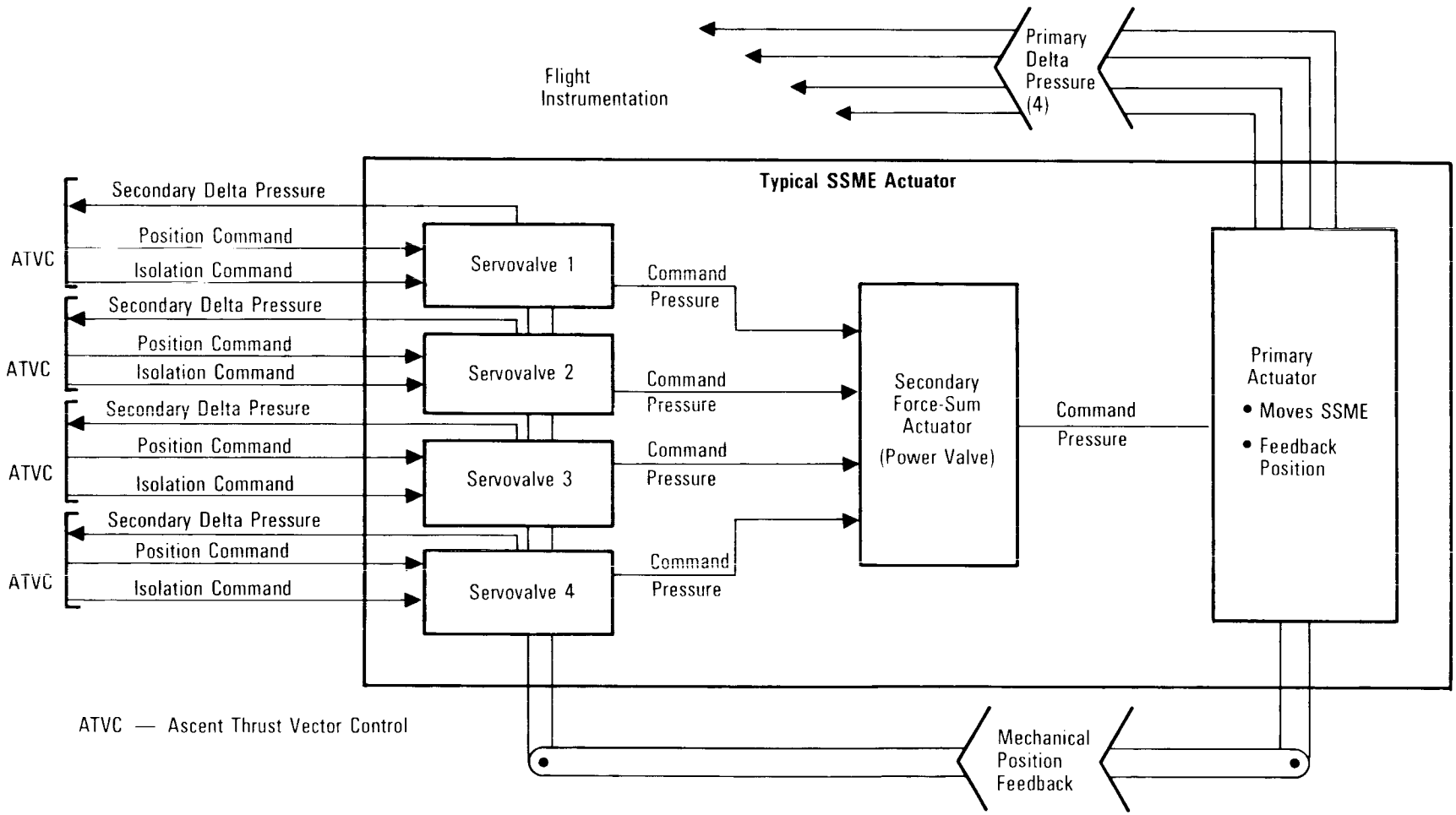


*Typical SSME Actuator*

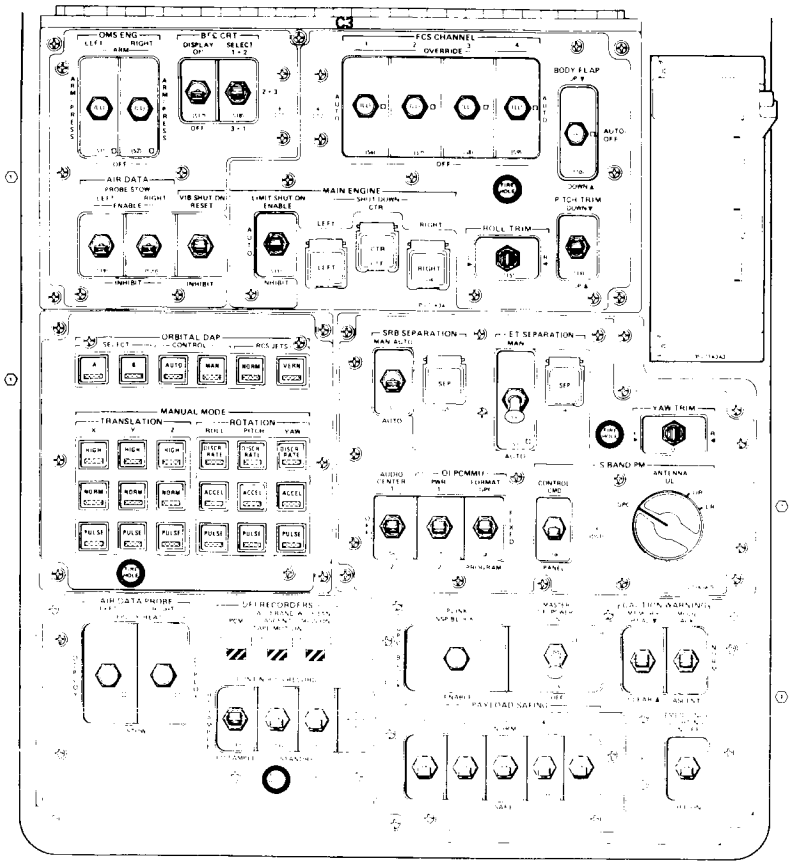


*Panel C3*

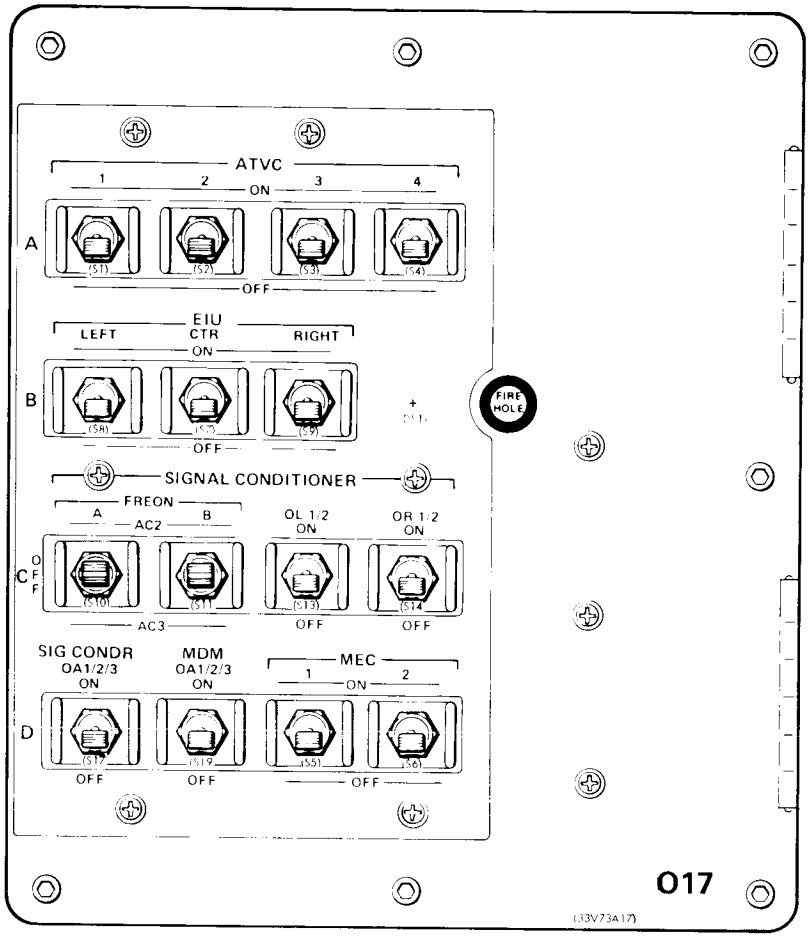


*Panel O17*

hydrogen recirculation valves and starts the liquid hydrogen recirculation pumps. As part of the chill-down sequence, the liquid hydrogen prevalves are closed and remain closed until T minus 9.5 seconds.

At T minus three hours 45 seconds, the fast fill of the liquid hydrogen tank to 98 percent is complete, and a slow topping off process that stabilizes to 100 percent begins. At T minus three hours 30 minutes, the liquid oxygen fast fill is complete. At T minus three hours 15 minutes, liquid hydrogen replenishment begins and liquid oxygen replenishment begins at T minus three hours 10 minutes.

During prelaunch, the pneumatic helium supply provides pressure to operate the liquid oxygen and hydrogen prevalves and outboard and inboard fill and drain valves. The three engine helium supply systems are used to provide anti-icing purges.

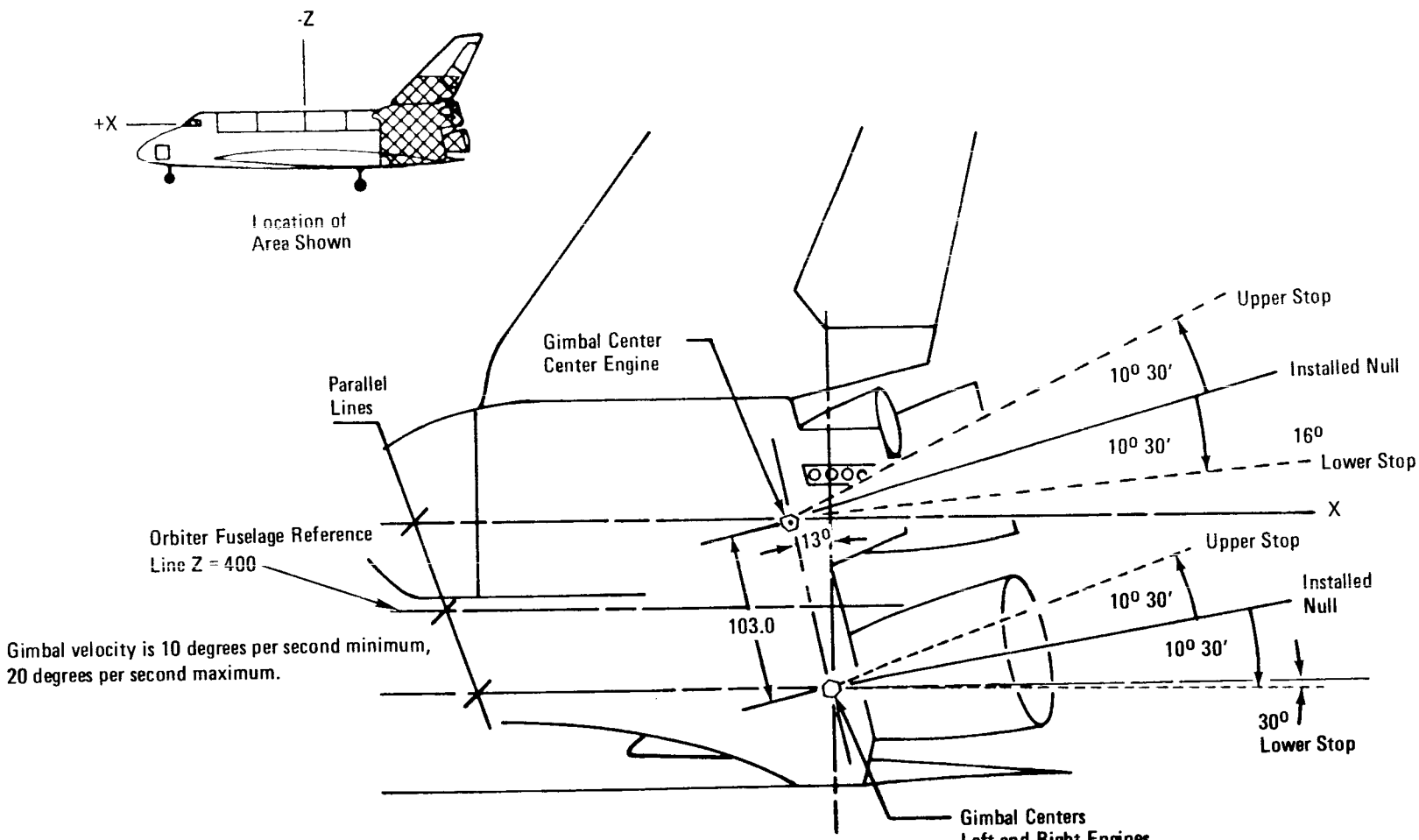


*SSME Gimbal Pitch Axis*

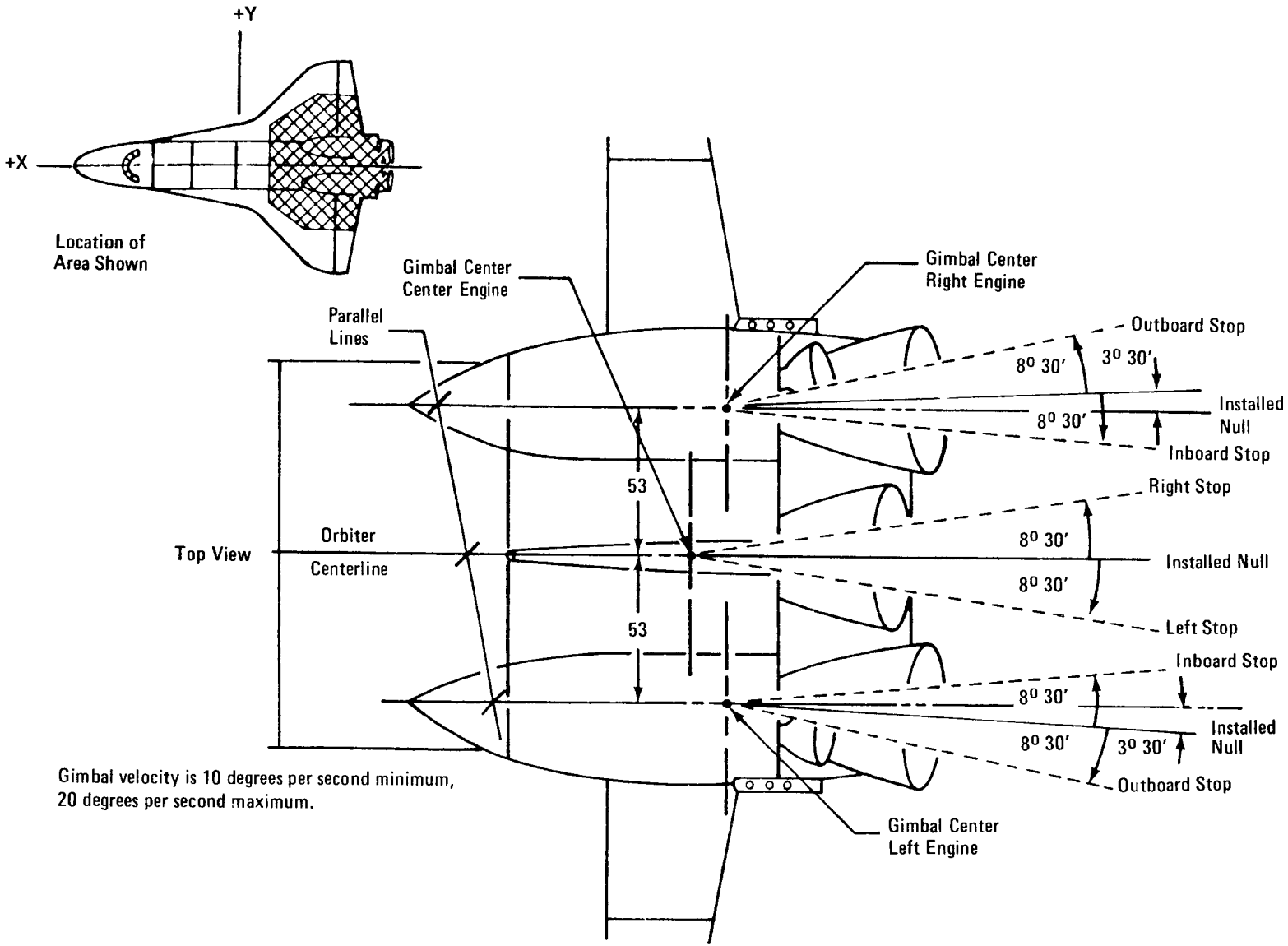


Gimbal velocity is 10 degrees per second minimum,
20 degrees per second maximum.

*SSME Gimbal Yaw Axis*

When the flight crew enters the orbiter, all 10 helium supply tanks are fully pressurized to approximately 4,400 psi. The filling of the helium tanks from 2,000 psi to their full pressure begins at T minus three hours 20 minutes. This process is gradual to prevent excessive heat buildup in the supply tank. Regulated helium pressure is between 715 to 775 psi. The helium supply tank and regulated pressures are monitored on the *MPS press, pneu, l, c, r* meters on panel F7. The *MPS press tank, reg* switch positions on panel F7 select the supply or regulated pressures to be displayed on the meters. Engine helium and regulated pressures are also available on the CRT display.

When the flight crew enters the orbiter, the eight *MPS He isolation A* and *B* switches; the *MPS pneumatics l eng to xovr* and *He isol* switches; and the *MPS He interconnect left, ctr, right* switches on panel R2 are in the *GPC* position. With the switches in these positions, the eight helium isolation valves are open, and the left engine crossover and the six helium interconnect valves are closed.

At T minus 16 minutes, one of the first actions by the flight crew is to place the six *MPS He isolation A* and *B* switches and the *MPS pneumatics He isol* switch on panel R2 in the *open* position. This will not change the position of the helium isolation valves, but it inhibits LPS control of valve position.

During prelaunch, liquid oxygen from ground support equipment is loaded through the GSE liquid oxygen T-0 umbilical and passes through the liquid oxygen outboard fill and drain valve, the liquid oxygen inboard fill and drain valve and the orbiter liquid oxygen feed line manifold. The liquid oxygen exits the orbiter at the liquid oxygen feed line umbilical disconnect and enters the liquid oxygen tank in the external tank. During loading, the liquid oxygen tank's vent and relief valves are open to prevent pressure buildup in the tank due to liquid oxygen loading; and the *main propulsion system propellant fill/drain* $LO_2$ *outbd* and *inbd* switches on panel R4 are in the *gnd* (ground) position, which allows the LPS to control the positions of these valves as required. When liquid oxygen loading is complete, the LPS will first command the liquid oxygen inboard fill and drain valve to close. The liquid oxygen in the line between the inboard and outboard fill and drain valves is then allowed to drain back into the GSE, and the LPS commands the outboard fill and drain valve to close.

Also during prelaunch, liquid hydrogen supplied through the GSE liquid hydrogen T-0 umbilical passes through the liquid hydrogen outboard fill and drain valve, the liquid hydrogen inboard fill and drain valve and the liquid hydrogen feed line manifold. The liquid hydrogen then exits the orbiter at the liquid hydrogen feed line umbilical disconnect and enters the liquid hydrogen tank in the external tank. During loading, the liquid hydrogen tank's vent valve is left open to prevent pressure buildup in the tank due to boiloff. The *main propulsion system propellant fill/drain* $LH_2$ *inbd* and *outbd* switches on panel R4 are in the *gnd* position, which allows the LPS to control the position of these valves as required.

At T minus four minutes, the fuel system purge begins, followed at T minus three minutes 25 seconds by the beginning of the engine gimbal tests. During the tests, each gimbal actuator is operated through a canned profile of extensions and retractions. If all actuators function satisfactorily, the engines are gimbaled to predefined positions at T minus two minutes 15 seconds. The engines remain in these positions until engine ignition. In the predefined start positions, the engines are gimbaled in an outward direction (away from one another) so that the engine start transient will not cause the engine bells to contact one another during the start sequence.

At T minus two minutes 55 seconds, the LPS closes the liquid oxygen tank vent valve, and the tank is pressurized to 21 psi with GSE-supplied helium. The liquid oxygen tank's pressure can be monitored on the *MPS press eng manf* $LO_2$ meter on panel F7 as well as on the CRT. The 21-psi pressure corresponds to a liquid oxygen engine manifold pressure of 105 psia.

At T minus one minute 57 seconds, the LPS closes the liquid hydrogen tank's vent valve, and the tank is pressurized to 44 psia with GSE-supplied helium. The pressure is monitored on the *MPS press eng manf* $LH_2$ meter on panel F7 as well as on the CRT dis-

play. A liquid hydrogen tank pressure of 44 psia corresponds to a liquid hydrogen engine manifold pressure of 44.96 psia.

At T minus 31 seconds, the onboard redundant set launch sequence is enabled by the LPS. From this point on, all sequencing is performed by the orbiter GPCs in the redundant set, based on the onboard clock time. The GPCs still respond, however, to hold, resume count and recycle commands from the LPS.

At T minus 16 seconds, the GPCs begin to issue arming commands for the SRB ignition pyro initiator controllers, the hold-down release PICs and the T-0 umbilical release PICs.

At T minus 9.5 seconds, the engine chill-down sequence is complete, and the GPCs command the liquid hydrogen prevalves to open (the liquid oxygen prevalves are open during loading to permit engine chill-down). The *main propulsion system* $LO_2$ and $LH_2$ *prevalve left, ctr, right* switches on panel R4 are in the *GPC* position.

At T minus 16 seconds, helium flows out of the nine helium supply tanks through the helium isolation valves, regulators and check valves and enters the engine at the inlet of the pneumatic control assembly. The PCA is a manifold containing solenoid valves that control and direct helium pressure under the control of the engine controller to perform various essential functions. The valves are energized by discrete on/off commands from the output electronics of the engine controller. One essential function from T minus 6.6 seconds to main engine cutoff plus six seconds is the purging of the high-pressure oxidizer turbopump's intermediate seal cavity. This cavity is between two seals, one of which contains the hot, fuel-rich gas in the oxidizer turbine. The other seal contains the liquid oxygen in the oxidizer turbopump. Leakage through one or both of the seals and mixing of the propellants could result in a catastrophic explosion. Continuous overload purging of this area prevents the propellants from mixing as they are dumped overboard through drain lines. The PCA also functions as an emergency backup for closing the engine propellant valves with helium pressure. In a normal engine shutdown, the engine propellant valves are hydraulically actuated.

At T minus 6.6 seconds, the GPCs issue the engine start command, and the main fuel valve in each engine opens. Between the opening of the main fuel valve and MECO, liquid hydrogen flows out of the external tank/orbiter liquid hydrogen disconnect valves into the liquid hydrogen feed line manifold. From this manifold, liquid hydrogen is distributed to the engines through the three engine liquid hydrogen feed lines. In each line, liquid hydrogen passes through the prevalve and enters the main engine at the inlet to the low-pressure fuel turbopump. In the engine, the liquid hydrogen cools various engine components and in the process is converted to gaseous hydrogen. The majority of this gaseous hydrogen is burned in the engine; the smaller portion is directed back to the external tank to maintain liquid hydrogen tank pressure. The flow of gaseous hydrogen back to the external tank begins at the turbine outlet of the LPFT. Gaseous hydrogen tapped from this line first passes through two check valves and then splits into two paths, each containing a flow control orifice. One of these paths also contains a valve normally controlled by one of three pressure transducers located in the liquid hydrogen tank.



When the GPCs issue the engine start command, the main oxidizer valve in each engine also opens. Between the opening of the main engine oxidizer valve and MECO, liquid oxygen flows out of the external tank and through the external tank/orbiter liquid oxygen umbilical disconnect valves into the liquid oxygen feed line manifold. From this manifold, liquid oxygen is distributed to the engines through the three engine liquid oxygen feed lines. In each line, liquid oxygen passes through the prevalve and enters the main engine at the inlet to the low-pressure oxidizer turbopump. In the engine, a small portion of the liquid oxygen is diverted into the oxidizer heat exchanger. In the heat exchanger, heat generated by the high-pressure oxidizer turbopump is used to convert liquid oxygen into gaseous oxygen, which is directed back to the external tank to maintain oxidizer tank pressure. The flow of gaseous oxygen back to the external tank begins at the outlet of the heat exchanger. From this point, gaseous oxygen passes through a check valve and then splits into two paths, each containing a flow control orifice. One of these paths also contains a valve that normally is controlled by one of three pressure transducers located in

the liquid oxygen tank. Downstream of the two flow control orifices and the pressure control valves, the gaseous oxygen lines empty into the orbiter gaseous oxygen pressurization manifold. This single line exits the orbiter at the gaseous oxygen pressurization disconnect and passes through the orbiter/external tank gaseous oxygen umbilical into the top of the liquid oxygen tank.

At T minus 6.6 seconds, if the PIC voltages are within limits and all three engine controllers are indicating engine ready, the GPCs issue the engine start commands to the three main engines. If the PIC conditions are not met in four seconds, the engine start commands are not issued, and the GPCs proceed to a countdown hold.

If all three SSMEs reach 90 percent of their rated thrust by T minus three seconds, then at T minus zero the GPCs will issue the commands to fire the SRB ignition PICs, the hold-down release PICs and the T-0 umbilical release PICs. Lift-off occurs almost immediately because of the extremely rapid thrust buildup of the SRBs. The three seconds to T minus zero allow the vehicle base bending loads to return to minimum by T minus zero.

If one or more of the three main engines do not reach 90 percent of their rated thrust at T minus three seconds, all SSMEs are shut down, the SRBs are not ignited, and a pad abort condition exists.

Beginning at T minus zero, the SSME gimbal actuators, which were locked in their special preignition positions, are first commanded to their null positions for SRB start and then allowed to operate as needed for thrust vector control.

Between lift-off and MECO, as long as the SSMEs perform nominally, all MPS sequencing and control functions are executed automatically by the GPCs. During this period, the flight crew monitors MPS performance; backs up automatic functions, if required; and provides manual inputs in the event of MPS malfunctions.

During ascent, the liquid hydrogen tank's pressure is maintained between 33 and 35 psig by the orifices in the two lines and the action of the flow control valve. There are three such systems, one for each SSME. When the pressure in the liquid hydrogen tank reaches 35 psig, the valve closes. It opens when the pressure drops below 33 psig. Tank pressure greater than 38 psia will cause the tank to relieve through the tank vent valve. If tank pressure falls below 33 psia, the flight crew positions the *MPS $LH_2$ ullage press* switch on panel R2 to *open*. This allows the three flow control valves to go to the full-open position. Normally, the *MPS $LH_2$ ullage press* switch is in the *auto* position. Downstream of the two flow control orifices and the flow control valves, the gaseous hydrogen line empties into the gaseous hydrogen pressurization manifold. This single line then exits the orbiter at the gaseous hydrogen umbilical and enters the top of the liquid hydrogen tank. During ascent, the liquid oxygen tank's pressure is maintained between 20 and 22 psig by the orifices in the two lines and the action of the flow control valve. When the pressure in the tank reaches 22 psig, the valve closes. It opens when pressure drops below 20 psig. A pressure greater than 25 psig will cause the tank to relieve through its vent and relief valve.



The SSME thrust level depends on the flight: it may be 100 percent or 104 percent for some missions involving heavy payloads or may require the maximum thrust setting of 109 percent for emergency situations. The initial thrust level normally is maintained until approximately 31 seconds into the mission, when the GPCs throttle the engines to a lower thrust to minimize structural loading while the orbiter is passing through the region of maximum aerodynamic pressure. This normally occurs around 63 seconds, mission elapsed time. At approximately 65 seconds, the engines are once again throttled to the appropriate higher percent and remain at that setting for a normal mission until 3-g throttling is initiated.

The solid rocket boosters burn out at approximately two minutes, mission elapsed time, and are separated from the orbiter by a GPC command sent via the mission events controller and by the SRB separation PICs. The flight crew can initiate SRB separation manually if the automatic sequence fails; however, the manual separation sequence does not bypass the separation sequence logic circuitry.

Beginning at approximately seven minutes 40 seconds, mission elapsed time, the engines are throttled back to maintain vehicle acceleration at 3 g's or less. Three g's is an operational limit devised to prevent physical stresses on the flight crew. Approximately eight seconds before main engine cutoff, the engines are throttled back to 65 percent.

Although MECO is based on the attainment of a specified velocity, the engines can also be shut down due to the depletion of liquid oxygen or liquid hydrogen before the specified velocity of MECO is reached. Liquid oxygen depletion is sensed by four sensors in the liquid oxygen feed line manifold. Liquid hydrogen depletion is sensed by four sensors in the bottom of the liquid hydrogen tank. If any two of the four sensors in either system indicate a dry condition, the GPCs will issue a MECO command to the engine controller.

Once MECO has been confirmed, the GPCs execute the external tank separation sequence. The sequence takes approximately 18 seconds and includes arming the external tank separation PICs, closing the liquid oxygen and liquid hydrogen prevalves, firing the external tank tumble system pyrotechnic, closing the liquid hydrogen and liquid oxygen feed line 17-inch disconnect valves, gimbaling the SSMEs to the MPS propellant dump position (full down), turning the external tank signal conditioners' power off (deadfacing), firing the umbilical unlatch pyrotechnics, and retracting the umbilical plates hydraulically.

At this point, the computers check for external tank separation inhibits. If the vehicle's pitch, roll and yaw rates are not less than 0.2 degree per second, automatic external tank separation is inhibited. If these conditions are met, the GPCs issue the commands to the external tank separation pyrotechnics. In crew-initiated external tank separation or return-to-launch-site aborts, the inhibits are overriden.

At separation, the orbiter begins a reaction control system minus Z translation separation maneuver to move it away from the external tank. This maneuver takes approximately 13 seconds and results in a negative Z-delta component of approximately 11 feet per second.

After MECO occurs (whether because the specified velocity is attained or the liquid oxygen or liquid hydrogen is depleted) and before external tank separation, the GPCs isolate the orbiter liquid hydrogen feed line from the external tank by closing the two liquid hydrogen 17-inch disconnect valves (one on each side of the separation interface) and the two liquid oxygen 17-inch disconnect valves (one on each side of the separation interface). At orbiter/external tank separation, the gaseous oxygen and gaseous hydrogen feed lines are sealed at the umbilicals by the self-sealing quick disconnects.

The MPS pneumatic control assembly on each main engine provides an emergency backup method of closing the engine propellant valves pneumatically using helium pressure. The normal engine shutdown of the engine propellant valves is by hydraulic actuation.

At MECO, the GPCs open the liquid oxygen feed line relief isolation valve, allowing any pressure buildup generated by oxidizer trapped in the orbiter liquid oxygen feed line manifold to be vented overboard through the relief valve provided the *main propulsion system feedline rlf isol* $LH_2$ switch on panel R4 is in the *GPC* position. The GPCs also open the liquid hydrogen feed line relief isolation valve, and any pressure buildup from fuel trapped in the orbiter liquid hydrogen feed line manifold is vented overboard through the relief valve provided the *main propulsion system feedline rlf isol* $LH_2$ switch on panel R4 is in the *GPC* position.

At MECO, the pneumatic control assembly for each engine performs a 16-second purge of the engine preburner oxidizer domes and a two-second postcharge of the pogo accumulator. This purge ensures that no residual propellant remains in these areas to cause an unsafe condition and prevents a water hammer effect in the liquid oxygen manifolds of the main engines. This helium usage and the purge of the high-pressure oxidizer turbo-

pump's intermediate seal cavity can be observed on the *MPS helium l, c, r* meters on panel F7 and are also available on the CRT.

Ten seconds after main engine cutoff, the RTLS liquid hydrogen dump valves are opened for 30 seconds to ensure that the liquid hydrogen manifold pressure does not result in operation of the liquid hydrogen feed line relief valve.

After the completion of the 16-second purge, the GPCs interconnect the pneumatic helium and engine helium supply system by opening the three out interconnect valves provided the *MPS He interconnect left, center, right* switches on panel R2 are in the *GPC* position. This connects all 10 helium supply tanks to the common manifold and ensures sufficient helium is available to perform the liquid oxygen and liquid hydrogen propellant dumps, which are required after external tank separation.

After external tank separation, approximately 1,700 pounds of propellant is still trapped in the SSMEs and an additional 3,700 pounds of propellant remains trapped in the orbiter's MPS feed lines. This 5,400 pounds of propellant represents an overall center-of-gravity shift for the orbiter of approximately 7 inches. Non-nominal center-of-gravity locations can create major guidance problems during re-entry. The residual liquid oxygen, by far the heavier of the two propellants, poses the greatest impact on center-of-gravity travel. The greatest hazard from the trapped liquid hydrogen occurs during re-entry, when any liquid or gaseous hydrogen remaining in the propellant lines may combine with atmospheric oxygen to form a potentially explosive mixture. In addition, if the trapped propellants are not dumped overboard, they will sporadically outgas through the orbiter liquid oxygen and liquid hydrogen feed line relief valves, causing vehicle accelerations of such a low level that they cannot be sensed by onboard guidance, yet represent a significant source of navigation error when applied over an entire mission. Outgassing propellants are also a potential source of contamination of scientific experiments contained in the payload bay.

Approximately 18 seconds after MECO occurs, the external tank separates from the orbiter. Approximately 102 seconds later, at MECO plus two minutes, the first thrusting period of the orbital maneuvering system begins. Coincident with the start of the OMS-1 thrusting, the GPCs automatically initiate the liquid oxygen dump provided the *MPS prplt dump sequence* $LO_2$ switch on panel R2 is in the *GPC* position. The computers command the two liquid oxygen manifold repressurization valves to open (the *main propulsion system manf press* $LO_2$ switch on panel R4 must be in the *GPC* position), command each engine controller to open its SSME main oxidizer valve, and command the three liquid oxygen prevalves to open (the *main propulsion system* $LO_2$ *prevalves left, ctr, right* switch must be in the *GPC* position). The liquid oxygen trapped in the feed line manifolds is expelled under pressure from the helium subsystem through the nozzles of the SSMEs. If the *main propulsion system manf press* $LO_2$ switch on panel R4 is left in the *GPC* position, the pressurized liquid oxygen dump continues for 90 seconds. At the end of this period, the GPCs automatically terminate the dump by closing the two liquid oxygen manifold repressurization valves, wait 30 seconds and then command the engine controllers to close their SSME main oxidizer valve. The three liquid oxygen prevalves remain open.



If necessary, the crew can perform the liquid oxygen dump manually utilizing the *start* and *stop* positions of the *MPS prplt dump sequence* $LO_2$ switch on panel R2. When the liquid oxygen dump is initiated manually, all valve opening and closing sequences are still automatic. Positioning the *MPS prplt dump sequence* $LO_2$ switch to *start* causes the GPCs to immediately begin commanding all of the required valves to open automatically and in the proper sequence. The liquid oxygen dump will continue as long as the switch is in the *start* position, but the pressurized portion with the two liquid oxygen manifold repressurization valves open is still limited to 90 seconds. Placing the switch in the *stop* position causes the GPCs to begin commanding all of the required valves to close automatically and in the proper sequence. The earliest a manual liquid oxygen dump can be performed is MECO plus 20 seconds since the SSMEs require a cool-down of at least 20 seconds after MECO.

The GPC software's MPS dump sequence automatically initiates the liquid oxygen dump at one time only—the beginning of the OMS-1 thrusting period. If the *MPS prplt dump sequence*

$LO_2$ switch on panel R2 is not in the *GPC* position at that time, the liquid oxygen dump must be initiated manually. In addition, once the liquid oxygen dump has been initiated and the *MPS prplt dump sequence* $LO_2$ switch is placed in the *stop* position, the GPCs no longer monitor any of the positions of this switch. For this reason, the liquid oxygen dump cannot be reinitiated, manually or automatically.

Simultaneously with the liquid oxygen dump, the GPCs automatically initiate the MPS liquid hydrogen dump provided the *MPS prplt dump sequence* $LH_2$ switch on panel R2 is in the *GPC* position. The GPCs command each engine controller to command a 10-second helium purge of its SSME's fuel lines downstream of the main engine fuel valves, command the liquid hydrogen manifold repressurization valve to open provided the *main propulsion system manf press* $LH_2$ switch on panel R4 is in the *GPC* position, and command the two liquid hydrogen fill and drain valves (inboard and outboard) to open.

The liquid hydrogen trapped in the orbiter feed line manifold is expelled overboard under pressure from the helium subsystem through the liquid hydrogen fill and drain valves for six seconds. Then the inboard fill and drain valve is closed; the three liquid hydrogen prevalves are opened; and liquid hydrogen flows through the engine bleed valves into the orbiter MPS, through the topping valve, between the inboard and outboard fill and drain valves, and overboard through the outboard fill and drain valve for approximately 88 seconds. The GPCs automatically terminate the dump by closing the two liquid hydrogen manifold repressurization valves and 30 seconds later closing the liquid hydrogen topping and outboard fill and drain valves.

If necessary, the flight crew can perform the liquid hydrogen dump manually utilizing the *start* and *stop* positions of the *MPS prplt dump sequence* $LH_2$ switch on panel R2. When the liquid hydrogen dump is initiated manually, all valve opening and closing sequences are still automatic. Placing the *MPS prplt dump sequence* switch in the *start* position causes the GPCs immediately to begin commanding all the required valves to open automatically and in the proper sequence. The liquid hydrogen dump continues as long as the switch is in the *start* position, but the pressurized portion of the dump with the two liquid hydrogen manifold repressurization valves open is still limited to 88 seconds. Placing the switch in the *stop* position causes the GPCs to begin commanding all of the required valves to close automatically and in the proper sequence.

At the end of the liquid oxygen and liquid hydrogen dumps, the GPCs close the helium out interconnect valves and all of the supply tank isolation valves provided the *MPS He isolation left ctr, right A* and *B; pneumatic He isol;* and *He interconnect left, ctr, right* switches on panel R2 are in the *GPC* position. After the dumps are complete, the space shuttle main engines are gimbaled to their entry positions with the engine nozzles moved inward (toward one another) to reduce aerodynamic heating.

Approximately 19 minutes into the mission and after the MPS liquid oxygen and liquid hydrogen dumps, the flight crew initiates the procedure for vacuum inerting the orbiter's liquid oxygen and liquid hydrogen lines. Vacuum inerting allows any traces of liquid oxygen or liquid hydrogen remaining after the propellant dumps to be vented into space.

The liquid oxygen vacuum inerting is accomplished by opening the liquid oxygen inboard and the outboard fill and drain valves. They are opened by placing the *main propulsion system propellant fill/drain* $LO_2$ *outbd, inbd* switch on panel R4 to the *open* position.

For liquid hydrogen vacuum inerting, the liquid hydrogen inboard and outboard fill and drain valves are opened by placing the *main propulsion system propellant fill/drain* $LH_2$ *outbd, inbd* switch on panel R4 to *open*. The external tank gaseous hydrogen pressurization manifold also is vacuum inerted by opening the hydrogen pressurization line vent valve by placing the *main propulsion system* $H_2$ *line vent* switch on panel R4 to *open*.

Helium for actuating the valves is provided by the two pneumatic helium isolation valves by placing the *MPS pneumatic He isol* switch on panel R2 to *open*. These isolation valves are closed

by the GPCs at the end of the MPS liquid hydrogen dump. If additional helium is required to open and close the fill and drain valves, it can be obtained by opening the helium out interconnect valves by placing the *MPS He interconnect left, ctr, right* switches on panel R2 in the *in close/out open* position. These valves also are closed by the GPCs at the end of the MPS liquid hydrogen dump.

The liquid oxygen and liquid hydrogen lines are inerted simultaneously. Approximately 30 minutes is allowed for vacuum inerting. At the end of the 30 minutes, the flight crew closes the liquid oxygen outboard fill and drain valve by placing the *main propulsion system propellant fill/drain* $LO_2$ switch on panel R4 to *close*. The inboard fill and drain valve is left open. To conserve electrical power after the completion of the liquid oxygen vacuum inerting sequence, the *main propulsion system propellant fill/drain* $LO_2$ *outbd, inbd* switch on panel R4 is placed in the *gnd* position. This position removes power from the opening and closing solenoids of the corresponding valves; and because they are pneumatically actuated, the valves remain in their last commanded position. At the end of the same 30-minute period, the liquid hydrogen outboard fill and drain valve and the hydrogen pressurization line vent valve are closed by positioning the *main propulsion system propellant fill/drain* $LH_2$ *outbd* switch and the *main propulsion system* $H_2$ *press line vent* switch on panel R4 to *close*. The liquid hydrogen inboard fill and drain valve is left open. The *main propulsion system propellant fill/drain* $LH_2$ *inbd, outbd* and $H_2$ *press line vent* switches on panel R4 are positioned to *gnd* to conserve power. The hydrogen pressurization vent line valve is electrically activated; however, it is normally closed (spring loaded to the closed position), and removing power from the valve solenoid leaves the valve closed.

After vacuum inerting, the helium isolation valves and interconnect valves (if they were used) are closed by placing the *MPS He isolation pneumatics He isol* switch on panel R2 to *close* and the *He interconnect left, ctr, right* switches on panel R2 to *GPC*. This ensures that the helium supply tanks are isolated from any leakage in the downstream lines during orbital operations.

The electrical power to each engine controller and engine interface unit is turned off by positioning the *MPS engine power left, ctr, right* switches on panel R2 to *off*; and the engine controller heaters are turned on by positioning the *main propulsion system engine cntlr htr, left, ctr, right* switches on panel R4 to *auto*.

During the early portion of the entry time line, the propellant feed line manifolds and the external tank pressurization lines are repressurized with helium from the helium subsystem. This prevents atmospheric contamination from being drawn into the manifolds and feed lines during entry. Removing contamination from the manifolds or feed lines can be a long and costly process since it involves disassembly of the affected part. Manifold repressurization is an automatic sequence performed by the GPCs.

After the orbital maneuvering system engines have been fired for deorbit and the orbiter begins to sense the presence of atmosphere, the GPCs start another vacuum inerting sequence. The liquid oxygen and liquid hydrogen prevalves that were left open at the end of the liquid oxygen and liquid hydrogen dump sequences remained open during the entire mission. Similarly, the liquid oxygen and liquid hydrogen inboard fill and drain valves that were left open at the end of the manual vacuum inerting sequence remained open during the entire mission. As re-entry begins, the left engine's helium isolation valve B and the pneumatic helium isolation valves are opened providing the *MPS He isolation left B* and the *MPS pneumatic He isol* switches on panel R2 are in the *GPC* position; the left engine's pneumatic crossover valve and in interconnect valve are opened; and the center and right engines' out interconnect valves are opened providing the *MPS pneumatics l eng He xovr* and *MPS He interconnect left, ctr* and *right* switches on panel R2 are in the *GPC* position. Also, the MPS liquid hydrogen topping valve, outboard fill and drain valves, and inboard and outboard RTLS drain valves are opened providing the *propellant fill/drain* $LO_2$ and $LH_2$ *outbd* and *inbd* switches are in the *gnd* position. As orbiter re-entry continues, its velocity decreases. When the velocity drops below 20,000 feet per second, the liquid oxygen outboard fill and drain valve opens.

This vacuum inerting continues until the orbiter's velocity drops below 4,500 feet per second (between 110,000 and 130,000 feet altitude depending on the re-entry trajectory). Then the MPS liquid oxygen and liquid hydrogen outboard fill and drain valves, the liquid hydrogen inboard and outboard RTLS drain valves, and the liquid oxygen prevalves are closed; the MPS liquid oxygen and liquid hydrogen manifold repressurization valves and the MPS helium blowdown supply valves are opened; and a 650-second timer is started. This provides a positive pressure in the liquid oxygen and liquid hydrogen manifolds and in the aft fuselage and the OMS/RCS pods and prevents contamination. The 650-second timer runs out approximately one minute after touchdown. After the timer expires, the purge of the aft fuselage and OMS/RCS pods is terminated when the MPS helium supply blowdown valves are closed. The manifold repressurization continues until the ground crews install the throat plugs in the main engine nozzles.

If MECO is preceded by an RTLS abort, the subsequent MPS liquid oxygen dump will begin 10 seconds after the external tank separation command is issued, and the liquid hydrogen dump will begin simultaneously. The liquid oxygen and liquid hydrogen dumps are initiated and terminated automatically by the GPCs regardless of the positions of the *MPS prplt dump sequence* $LO_2$ and $LH_2$ switches on panel R2.

During an RTLS abort, liquid oxygen initially is dumped through the SSMEs and 30 seconds later via the liquid oxygen fill and drain valves. This dump is performed without helium pressurization and relies on the self-boiling of the trapped liquid.

In the RTLS liquid oxygen dump, the GPCs terminate the dump whenever the orbiter's velocity drops below 3,800 feet per second. The liquid oxygen is dumped through the nozzles of the main engines; however, each engine is gimbaled to the entry position rather than the normal dump position. The liquid oxygen feed line manifold is not pressurized in this mode, and the two liquid oxygen manifold repressurization valves remain closed throughout the entire dump. The liquid oxygen system is repressurized when the 3,800-feet-per-second velocity is attained, and repressurization continues as in a nominal entry. The *main propulsion system prevalves* $LO_2$, *left, ctr, right* switches on panel R4 are in the *GPC* position, and the GPCs command the engine controllers to open each engine main oxidizer valve for the dump.

In the RTLS mode, the liquid hydrogen dump is initiated and terminated automatically by the GPCs simultaneously with the liquid oxygen dump regardless of the position of the *MPS prplt dump sequence* $LH_2$ switch on panel R2. The two RTLS dump valves and the two RTLS manifold repressurization valves are opened, and the liquid hydrogen trapped in the feed line manifold is expelled under pressure from the helium subsystem for 80 seconds through a special opening on the port side of the orbiter between the wing and the OMS/RCS pod. After 80 seconds, the liquid hydrogen fill and drain valves are opened, resulting in vacuum inerting of residual liquid hydrogen through bulk boiling. The GPCs terminate the liquid hydrogen dump and vacuum inerting automatically when the orbiter reaches the 3,800-feet-per-second velocity. At that time, the inboard and outboard RTLS dump valves, the inboard and outboard fill and drain valves, and the two RTLS manifold repressurization valves are closed. The liquid hydrogen system is repressurized after an RTLS liquid hydrogen dump, and repressurization continues as in a nominal entry.

**CONTRACTORS.** The Rocketdyne Division of Rockwell International, Canoga Park, Calif., is the prime contractor for the space shuttle main engines. Other contractors include Aeroflex Laboratories, Plainview, N.Y. (MPS vibration mounts); Airite Division, Sargent Industries, El Segundo, Calif. (MPS surge pressure receiver); Ametek Calmec, Pico Rivera, Calif. (1.5-inch and 2-inch liquid oxygen and liquid hydrogen shutoff valve, 4-inch liquid hydrogen disconnect and 2-inch gaseous hydrogen/gaseous oxygen disconnect); Ametek Straza, El Cajon, Calif. (8-inch liquid hydrogen/liquid oxygen fill and drain, 2- and 4-inch liquid hydrogen recirculation lines, high-point bleed line manifold and gimbal joint); Arrowhead Products, division of Federal Mogul, Los Alamitos, Calif. (12- to 17-inch-diameter liquid oxygen and liquid hydrogen feed lines and flexible purge gas connector); Astech, Santa Ana, Calif. (MPS heat shield); Brunswick, Lincoln, Neb. (17.3- and 4.7-cubic-foot capacity helium tanks); Brunswick-

Circle Seal, Anaheim, Calif. (helium check valves, gaseous oxygen and gaseous hydrogen 1-inch helium pressurization line, 0.375-inch liquid hydrogen relief valve and engine isolation check valves); Brunswick-Wintec, El Segundo, Calif. (helium filter); Coast Metal Craft, Compton, Calif. (metal flex hose); Conrac Corp., West Caldwell, N.J. (engine interface unit); Consolidated Controls, El Segundo, Calif. (oxygen pressure primary flow control valve and hydraulic valve, hydrogen/oxygen pressurant flow control valves, 20-psi helium regulator, 850-psi helium relief valve and 750-psi helium regulator); Fairchild Stratos, Manhattan Beach, Calif. (12 inch prevalves, 1.5-inch liquid oxygen disconnect, 8-inch liquid oxygen and liquid hydrogen fill and drain valves, and gaseous nitrogen and gaseous hydrogen disconnects); Gulton Industries, Costa Mesa, Calif. (pogo pressure transducer); K-West, Westminister, Calif. (liquid oxygen and liquid hydrogen external tank ullage pressure signal conditioner, MPS differential pressure transducer and electronics propellant head pressure); Megatek, Van Nuys, Calif. (MPS line flange cryo seals); Moog Inc., East Aurora, N.Y. (main engine gimbal actuators); Parker Hannifin Corp., Irvine, Calif. (1-inch relief isolation valves, pogo check valves, 17-inch liquid hydrogen and liquid oxygen disconnects, 8-inch liquid oxygen and liquid hydrogen disconnects, and liquid oxygen and liquid hydrogen relief valves); Simmonds Precision Instruments, Vergennes, Vt. (liquid oxygen and liquid hydrogen point sensors and electronics); Sterer Engineering, Los Angeles, Calif. (main engine hydraulic solenoid shutoff valve), Whittaker Corp., North Hollywood, Calif. (750-/250-psi helium regulator); Wright Components Inc. Clifton Springs, N.J. (two-way pneumatic solenoid valve, three-way helium solenoid valve and hydraulic latching solenoid valve).

## ORBITER/EXTERNAL TANK SEPARATION SYSTEM

The orbiter/external tank separation system consists of the oxygen and hydrogen umbilical disconnects located at the lower left and right aft fuselage, one forward structural attach point just aft of the nose landing gear doors and two structural attach points located in the orbiter/external tank umbilical disconnect cavities. An umbilical retraction system retracts the orbiter umbilicals within the orbiter aft fuselage, and umbilical doors close over each of the umbilical cavities after separation.

The 17-inch liquid oxygen and liquid hydrogen disconnects provide the propellant feed interface from the external tank to the orbiter main propulsion system and the three space shuttle main engines. The respective 17-inch disconnects also provide the capability for external tank fill and drain of oxygen and hydrogen through the orbiter main propulsion system and the T-0 umbilicals. The liquid hydrogen interface between the orbiter and the ground storage tank is provided by a T-0 umbilical located on the left side of the aft fuselage. The liquid oxygen interface between the orbiter and the ground storage tank is provided by a T-0 umbilical on the right side of the aft fuselage.

**17-INCH DISCONNECT.** Each mated pair of 17-inch disconnects contains two flapper valves, one on the orbiter side of the interface and one on the external tank side of the interface. Both valves in each disconnect pair are opened to permit propellant flow between the orbiter and the external tank. Before the separation of the external tank, both valves in each mated pair of disconnects are commanded closed by pneumatic (helium) pressure from the main propulsion system. The closure of both valves in each disconnect pair prevents propellant discharge from the external tank or orbiter at separation. Valve closure on the orbiter side of each disconnect also prevents contamination of the orbiter main propulsion system during landing and ground operations.

Inadvertent closure of either valve in a 17-inch disconnect during space shuttle main engine thrusting would stop propellant flow from the external tank to all three main engines. Catastrophic failure of the main engines and external tank feed lines would result.

To prevent inadvertent closure of the 17-inch disconnect valves during the main engine thrusting, a latch mechanism was added in the orbiter half of the disconnects. The latch mechanism provides a mechanical backup to the normal fluid-induced-open forces. The latch is mounted on a shaft in the flowstream so it overlaps both flappers and obstructs closure for any reason.

In preparation for external tank separation, both valves in each 17-inch disconnect are commanded closed. Pneumatic (helium) pressure from the main propulsion system causes the latch actuator to rotate the latch shaft in each orbiter 17-inch disconnect 90 degrees, thus freeing the flapper valves to close as required for external tank separation.

If the latch pneumatic actuator malfunctions, a backup mechanical separation capability is provided. When the orbiter umbilical initially moves away from the external tank umbilical, the mechanical latch disengages from the external tank flapper valve and permits the orbiter disconnect flapper to toggle the latch. This action permits both flappers to close.

During ground mating of the external tank to the orbiter, the latch engagement mechanism in each 17-inch disconnect provides a go/no-go verification that flapper angle rigging is within stability limits. Misrigged flappers will prevent full engagement of latch. The angle of each flapper in each disconnect is still carefully rigged within specific tolerances to assure basic stability independently of the latch safety feature.

**EXTERNAL TANK SEPARATION SYSTEM.** The external tank is separated from the orbiter at three structural attach points. Separation from the orbiter occurs before orbit insertion and is automatically controlled by the orbiter's general-purpose computers. External tank separation can be manually initiated by the flight crew using the same jettison circuits as the automatic sequence. Separation is controlled by the *ET separation auto, man*

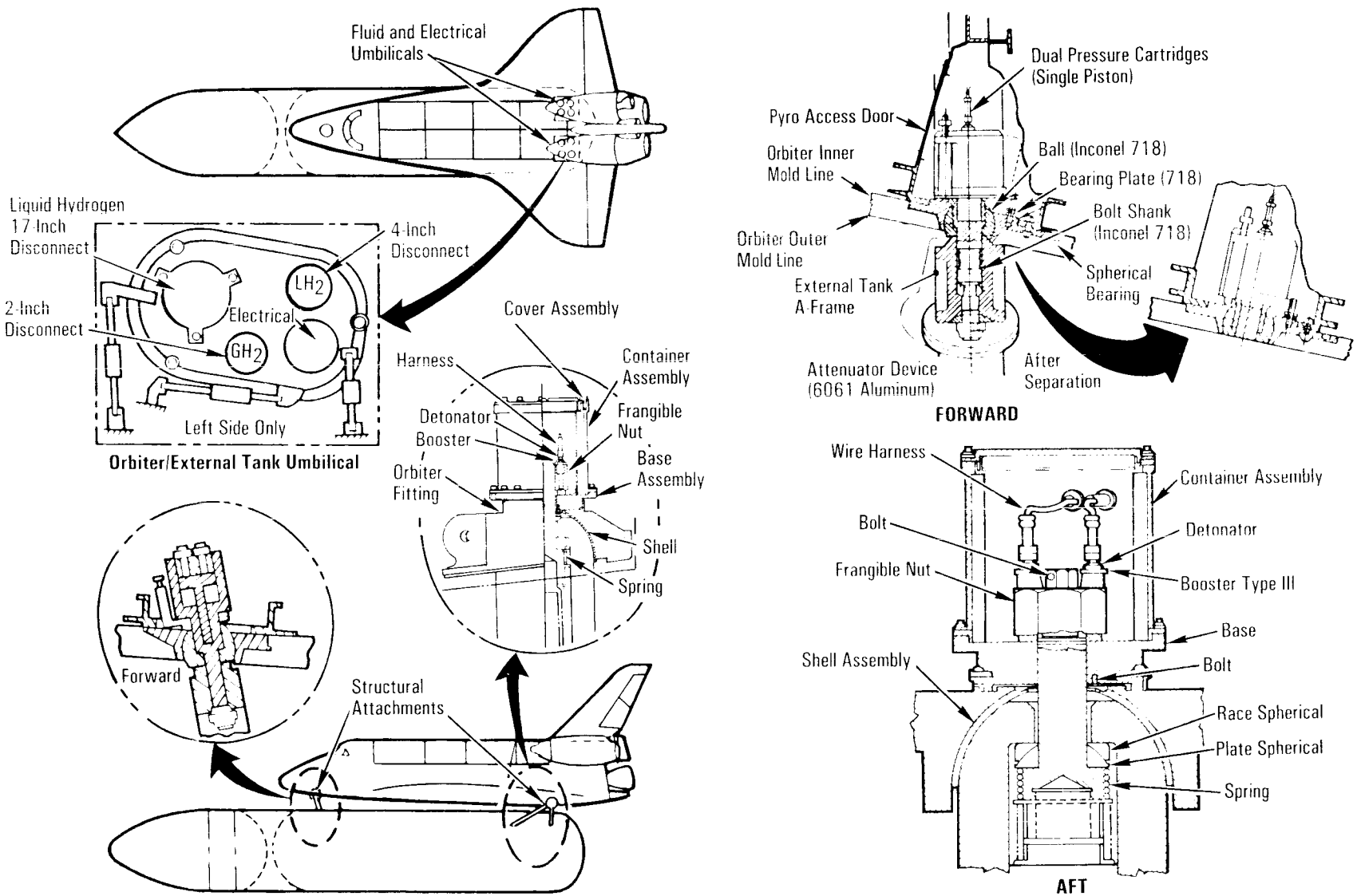


*Orbiter / External Tank Separation System*

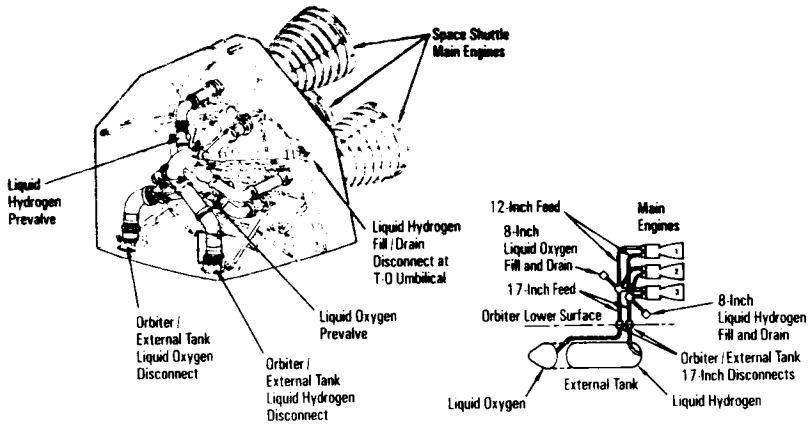


*Main Propulsion System Propellant Feed System*

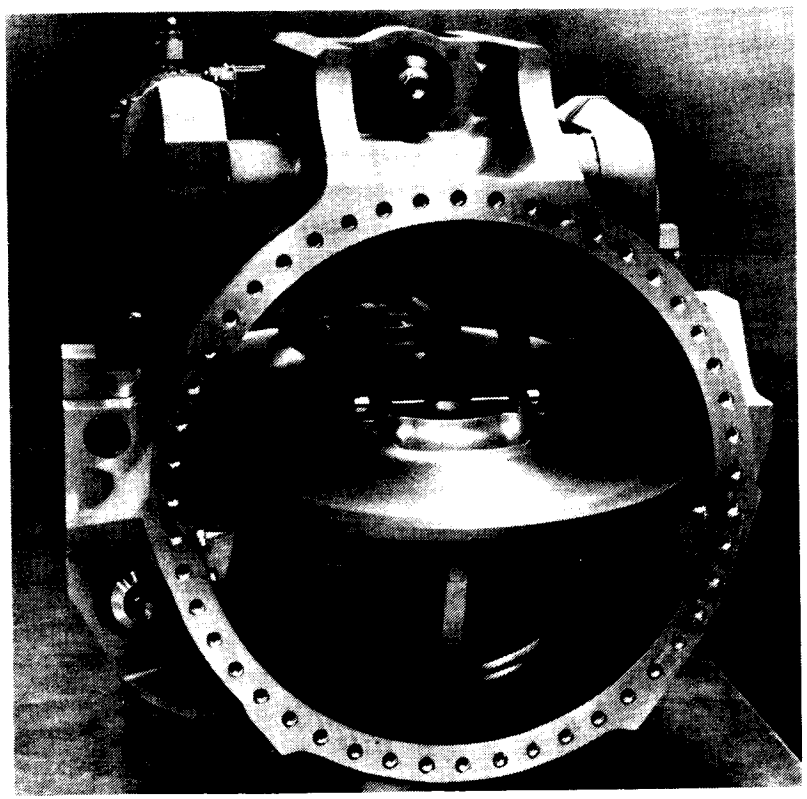

*17-Inch Disconnect Flapper Valves Without Latch Feature*

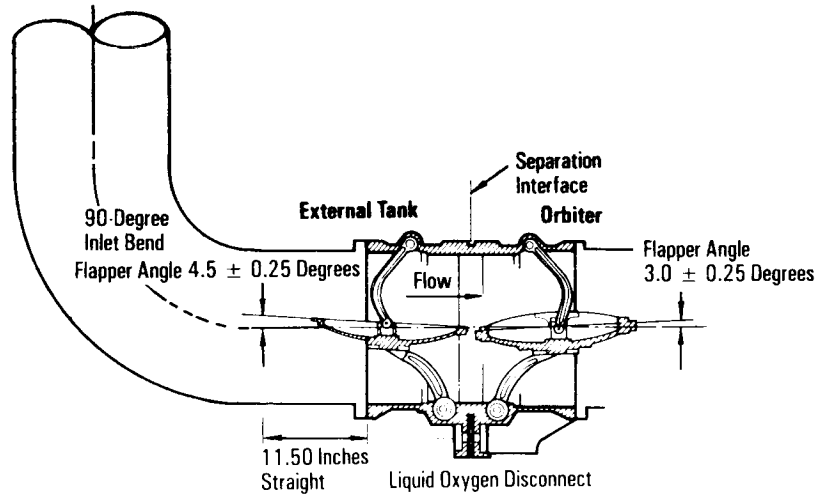


*Orbiter/External Tank 17-Inch Liquid Oxygen Disconnect Without Latch Feature*



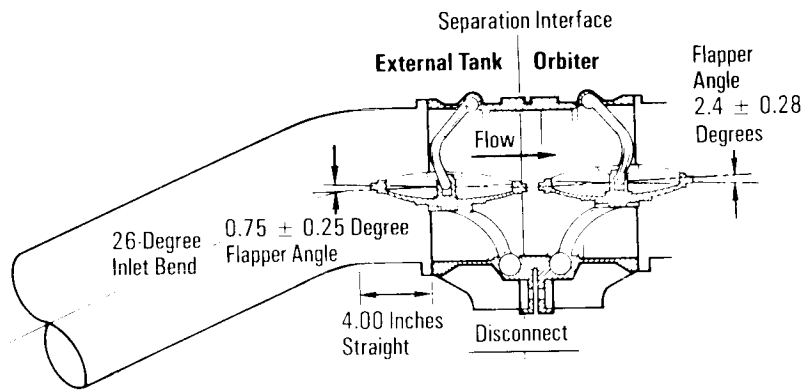


*Orbiter/External Tank Liquid Hydrogen 17-Inch Disconnect Without Latch Feature*

switch on panel C3 and the *sep* push button on panel C3. In the *auto* position, the onboard GPCs initiate separation. To manually initiate separation, the *ET separation* switch is positioned to *man* and the *sep* push button is depressed.

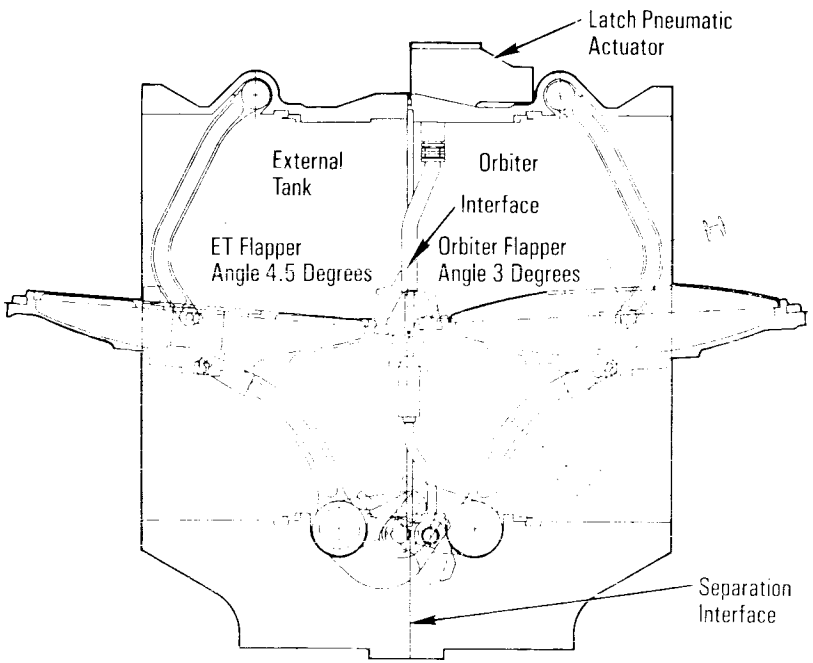


*Orbiter/External Tank 17-Inch Disconnect With Latch Feature*

The forward structural attachment consists of a shear bolt unit mounted in a spherical bearing. The bolt separates at a break area when two pressure cartridges are initiated. The pressure from one or both cartridges drives one of a pair of pistons to shear the bolt, with the second piston acting as a hole plugger to fill the cavity left by the sheared bolt. A centering mechanism rotates the unit from the displacement position to a centered position, aligning the bearing flush with the adjacent thermal protection system mold line.

The aft structural attachment consists of two special bolts and pyrotechnically actuated frangible nuts that attach the exter-

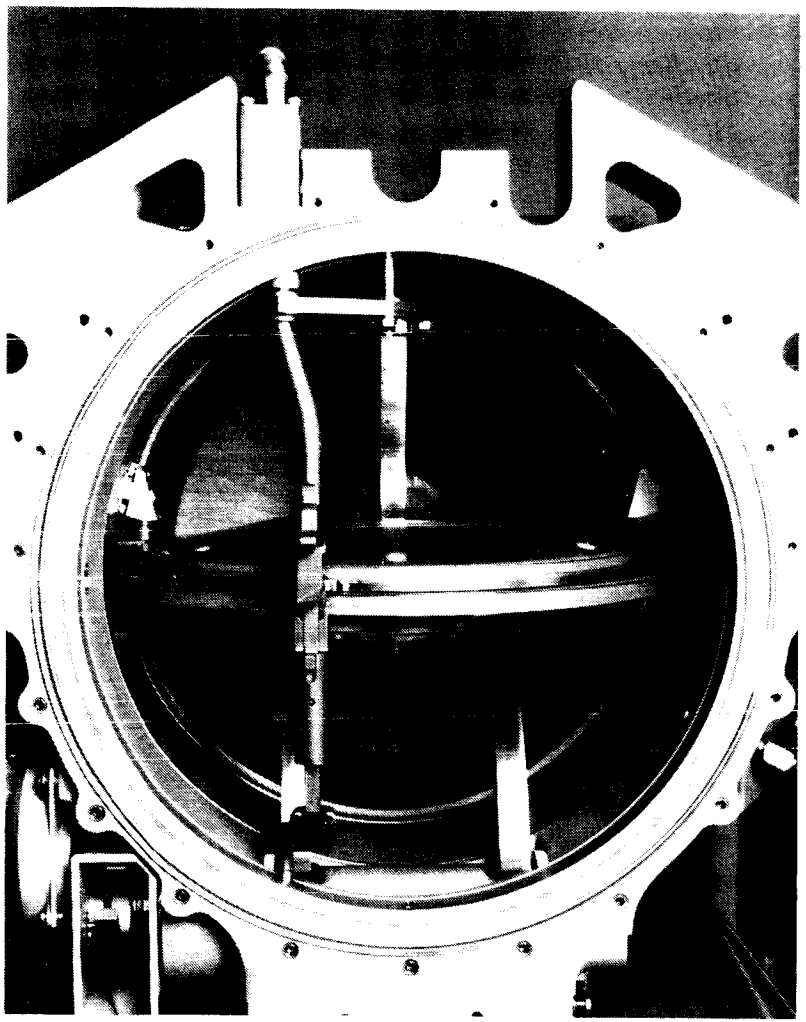

*17-Inch Disconnect With Latch Feature Engaged on One Flapper Valve (Other Flapper Valve Removed to Show Latch Feature, Engagement)*

nal tank strut hemisphere to the orbiter's left- and right-side cavities. At separation the frangible nuts are split by a booster cartridge initiated by a detonator cartridge. The attach bolts are driven by the separation forces and a spring into a cavity in the

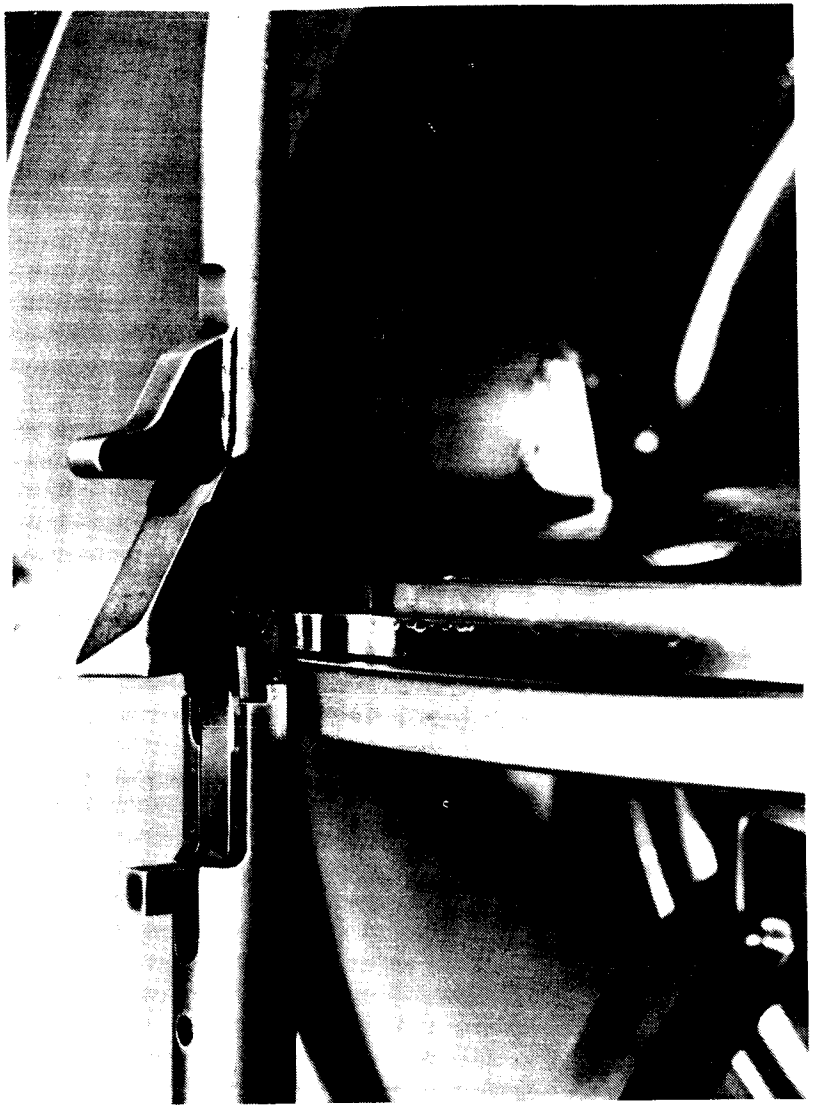

*17-Inch Disconnect With Latch Engaged on Flapper Valve (Other Flapper Valve Removed to Show Latch Engaged on Flapper Valve)*

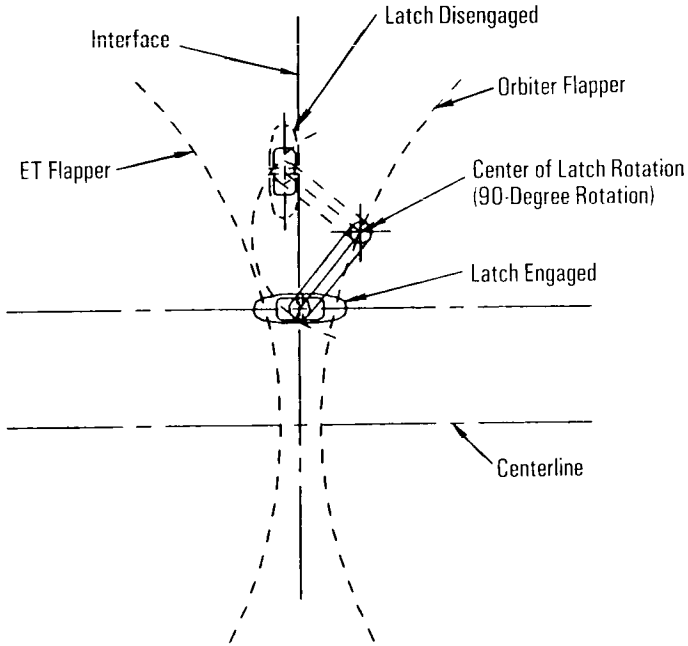


*Orbiter / External Tank 17-Inch Disconnect Latch Positions, Engaged and Disengaged*

tank strut. The frangible nut, cartridge fragments and hot gases are contained within a cover assembly, and a hole plugger isolates the fragments in the container.

The aft separation involves right and left umbilical assemblies. Each assembly contains three dual-detonator frangible nut and bolt combinations that hold the orbiter and external tank umbilical plates together during mated flight. Each bolt has a retraction spring that, after release of the nut, retracts the bolt to the external tank side of the interface. On the orbiter side, each frangible nut and its detonators are enclosed in a debris container

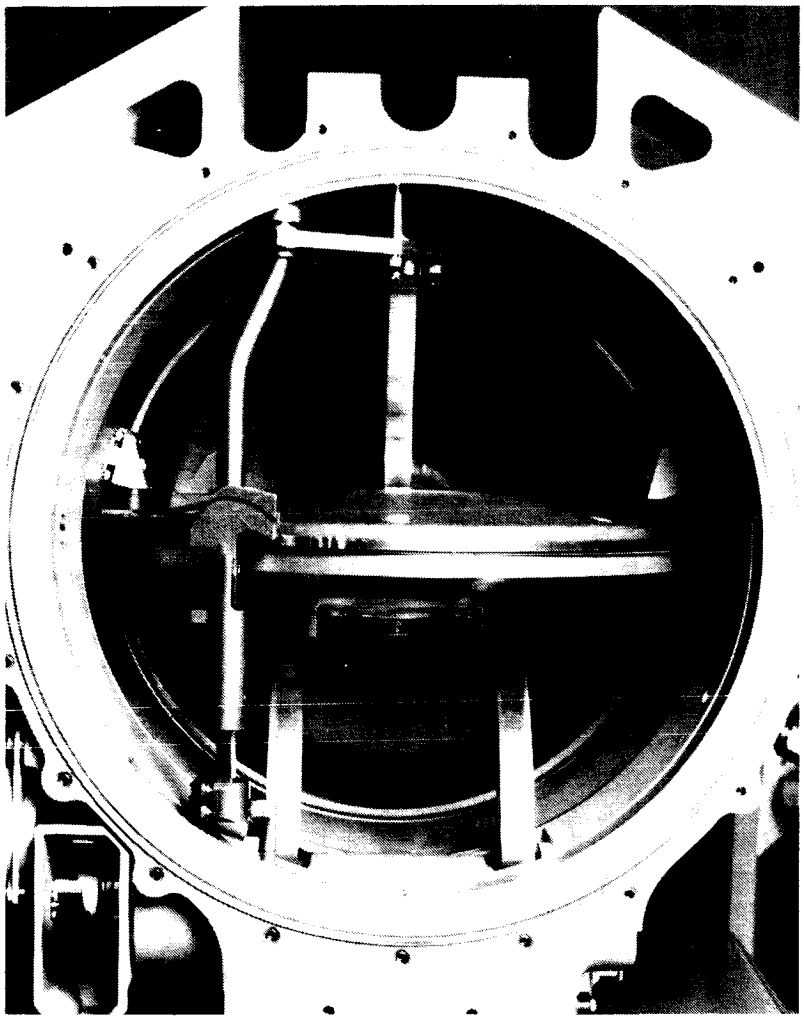

*17-Inch Disconnect With Latch Feature Rotated 90 Degrees on One Flapper Valve, Disengaging Latch Permitting Flapper to Close (Other Flapper Valve Removed to Show Unlatch Feature, Disengaged)*

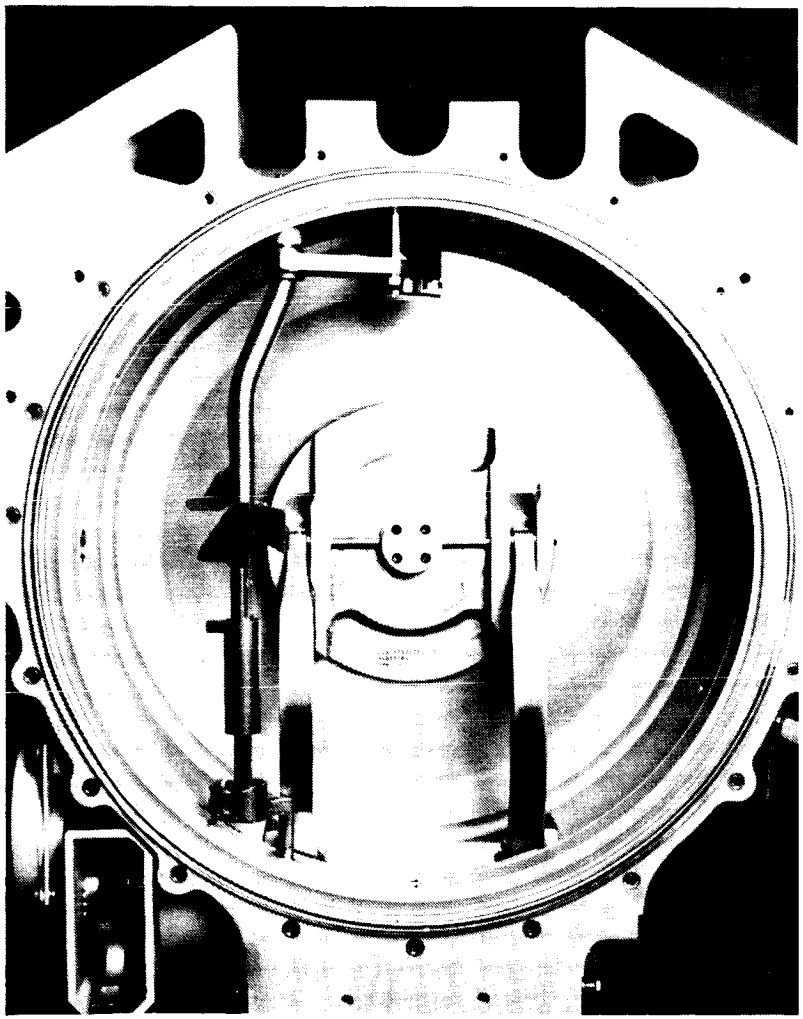

*17-Inch Disconnect With Latch Feature Disengaged, Flapper Valve Closed (Other Flapper Valve Removed to Show Unlatch Disengaged, Flapper Valve Closed)*

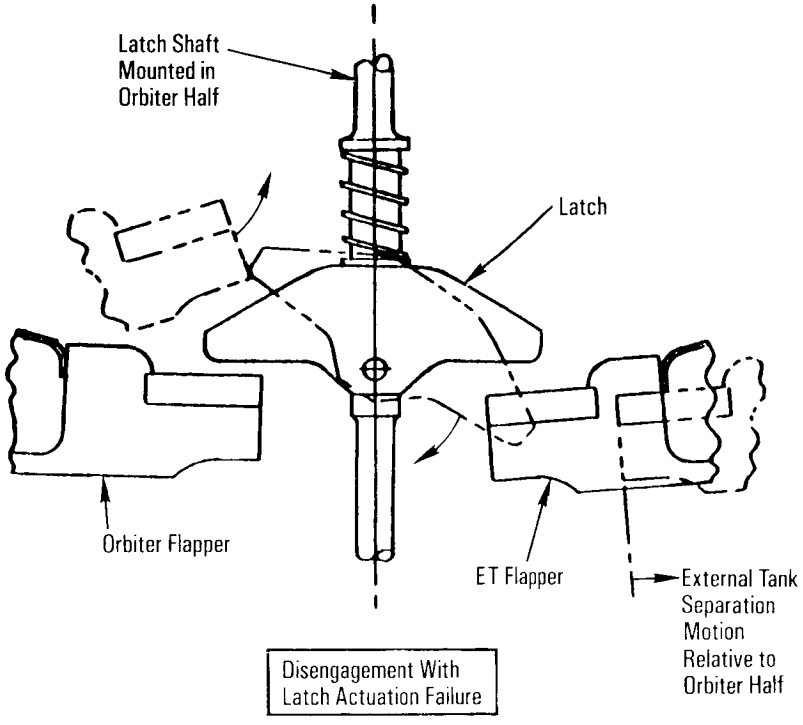


*Orbiter/External Tank 17-Inch Disconnect, Backup Unlatch Feature of Flapper Valves*

that captures nut fragments and hot gases generated by the operation of the detonators, either of which will fracture the nut.

The right aft umbilical assembly consists of an electrical disconnect, the gaseous oxygen 2-inch pressurization disconnect used for pressurization of the external tank's oxygen tank and the 17-inch liquid oxygen disconnect.

The left aft umbilical assembly consists of an electrical disconnect plate, the gaseous hydrogen 2-inch pressurization disconnect used for pressurization of the external tank's hydrogen tank, the 4-inch recirculation disconnect used during prelaunch to pre-

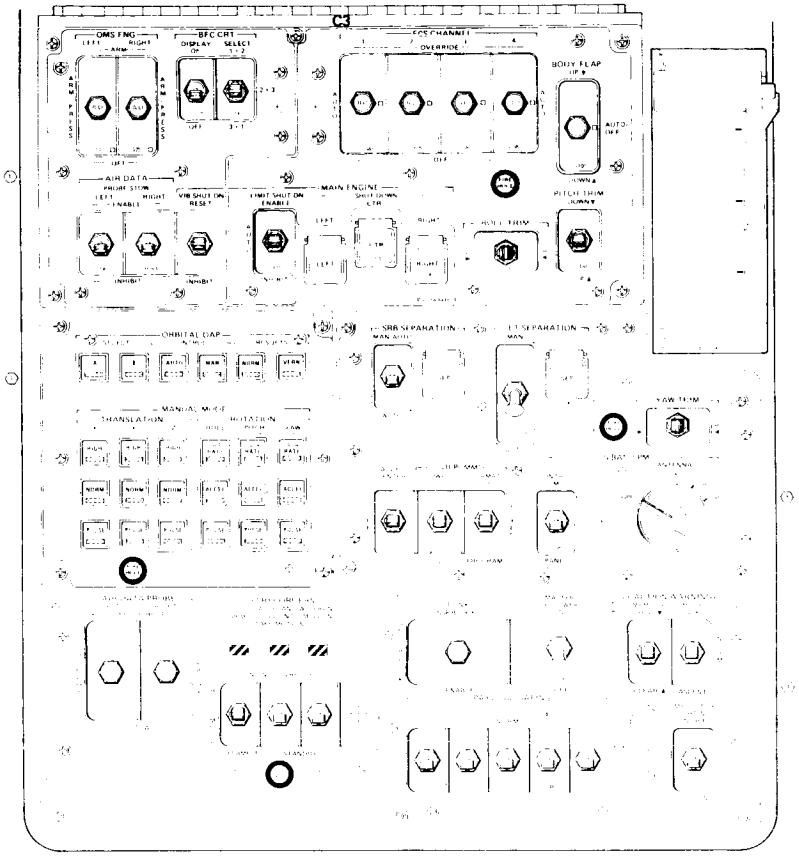

*Panel C3*

condition the main engine and the 17-inch liquid hydrogen disconnect.

After release of the three frangible nuts and bolts at each aft umbilical, three lateral support arms at each orbiter umbilical plate hold the plates in the lateral position when the external tank separates from the umbilical plates. Each 17-inch disconnect has been commanded closed. The orbiter umbilical plates are retracted inside the orbiter aft fuselage approximately 2.5 inches by three

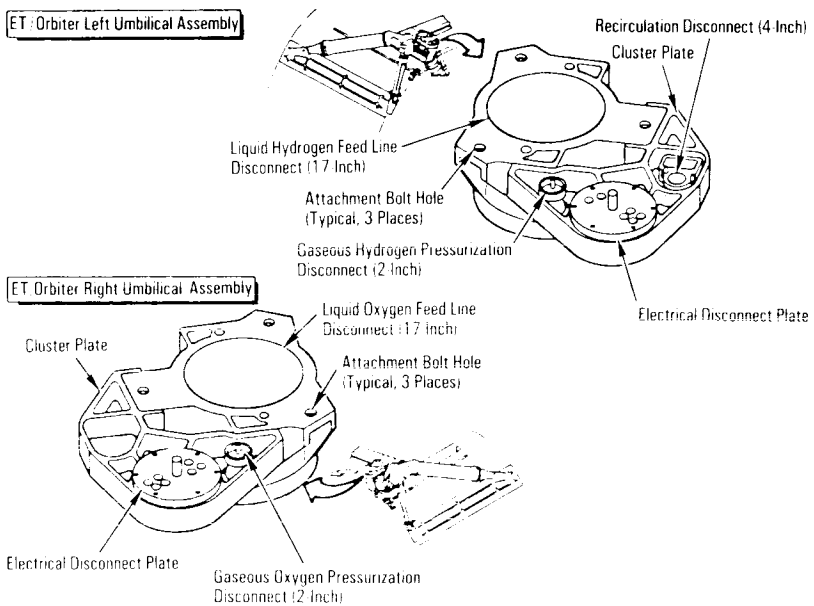


*External Tank/Orbiter 17-Inch Disconnects*

hydraulic actuators and locked to permit closure of the umbilical doors in the bottom of the aft fuselage. Hydraulic system 1 source pressure is supplied to one actuator at each umbilical, hydraulic system 2 source pressure is supplied to the second actuator at each umbilical, and hydraulic system 3 source pressure is supplied to a third actuator at each umbilical.

The retraction of each umbilical disconnects the external tank and orbiter electrical umbilical in the first 0.5 of an inch of travel and releases any fluids trapped between the 17-inch disconnect flappers.

**ORBITER UMBILICAL DOORS.** An electromechanical actuation system on each umbilical door closes the left and right umbilical cavities after the external tank is jettisoned and the umbilical plates retracted inside the orbiter's aft fuselage. Each umbilical door is approximately 50 inches square.

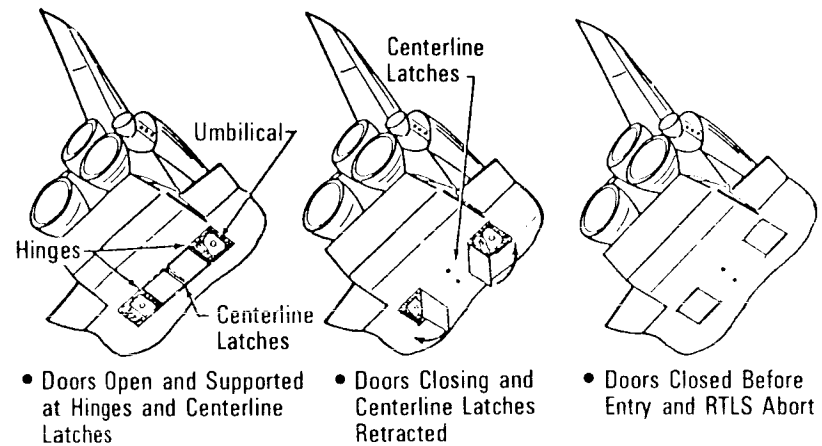


*Orbiter/External Tank Umbilical Door Operational Sequence*

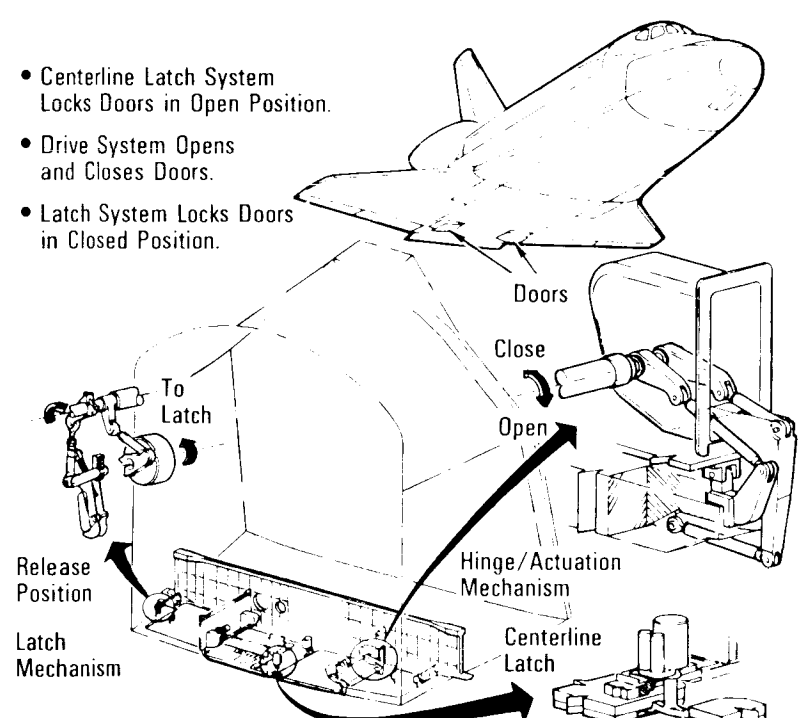


*Orbiter Umbilical Doors*

The doors are held in the full-open position by two centerline latches, one forward and one aft. They are opened before the mating of the orbiter to the external tank in the Vehicle Assembly Building.

The orbiter umbilical doors normally are controlled by the flight crew with switches on panel R2. In return-to-launch-site aborts, the doors are controlled automatically. The *ET umbilical door mode* switch on panel R2 positioned to *GPC* enables automatic control of the doors. The *GPC/man* position enables manual flight crew control of the doors.

The *ET umbilical door centerline latch* switch on panel R2 positioned to *gnd* permits ground control of the door centerline latches during ground turnaround operations. The *stow* position, enables flight crew manual control of the door centerline latches. The talkback indicator above the switch indicates *sto* when the door centerline latches are stowed, which permits closure of the doors, and barberpole when the latches are latched or the doors are in transit.

The *ET umbilical door left and right latch, off, release* switches on panel R2 are used by the flight crew to unlatch the corresponding centerline latches during normal operations. Positioning the respective switch to *release* provides electrical power to redundant ac reversible motors which operate an electromechanical actuator for each centerline latch that causes the latch to rotate and retract the latch blade flush with the reusable thermal protection system mold line. It takes approximately six seconds for the latches to complete their motion. The talkback indicator above the respective switch indicates *rel* when the corresponding latches are released. The *latch* position of each switch is used during ground turnaround operations to latch the respective door open, and the talkback indicator indicates *lat* when the latches have latched the doors in the open position. The talkback indicators indicate barberpole when the latches are in transit. The *off* position of the switches removes power from the motors, which stops the latches.

The *ET umbilical door left* and *right, open, off, latch* switches on panel R2 normally are used by the flight crew to close

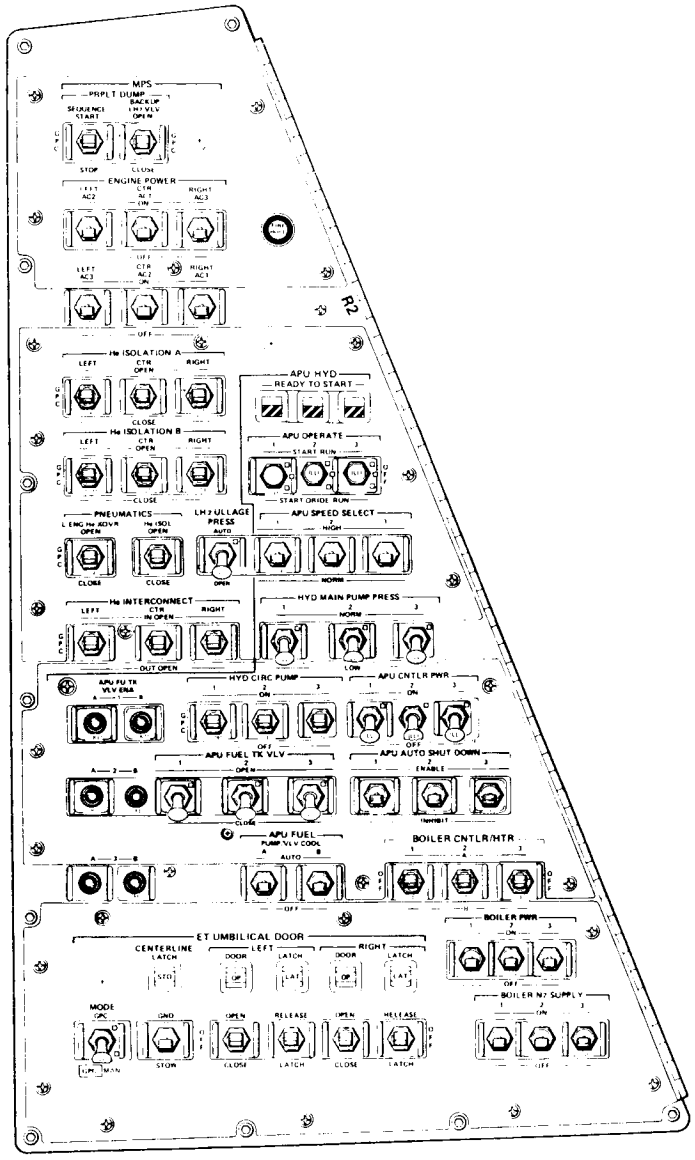


*Panel R2*

the umbilical doors. Positioning the switches to *close* provides electrical power to redundant ac reversible motors, which position the doors closed through a system of bellcranks and push rods. It takes approximately 24 seconds for the doors to close; and when they are within 2 inches of the closed position, ready-to-latch indicators activate the door uplatch system. Three uplatch hooks for each door engage three corresponding rollers near the outboard edge of the door and lock the door in preparation for entry. The motors are automatically turned off. The talkback indicator above the respective switch indicates *cl* when two of the three ready-to-latch switches for that door have sensed door closure. The *open* position of the switches is used during ground turnaround operations to open the doors. The talkback indicator indicates *op* when the doors are open and barberpole when they are in transit. The *off* position removes power from the motors, which stops the doors' movement.

The *ET umbilical door* switch on panel R2 positioned to *GPC* provides a backup method of releasing the centerline latches

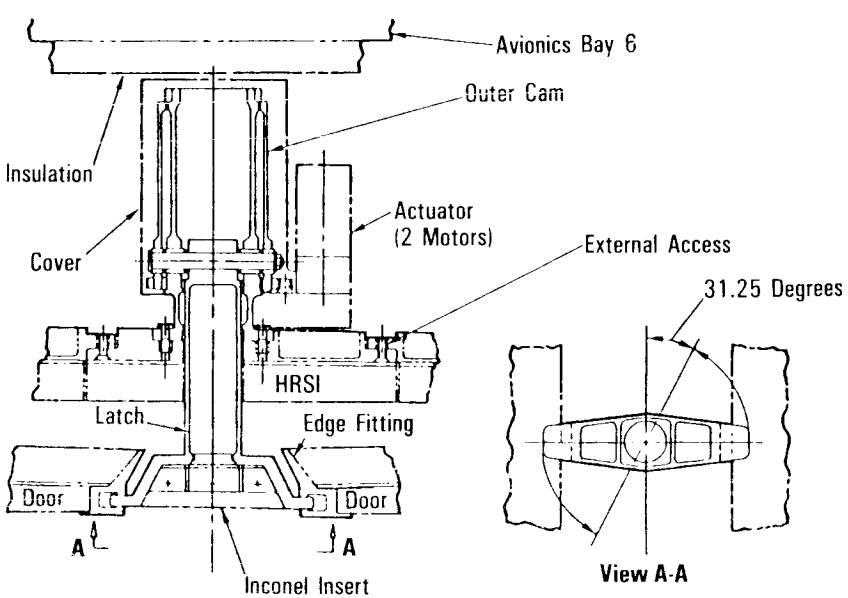


*Orbiter/External Tank Umbilical Doors—Centerline Latch*

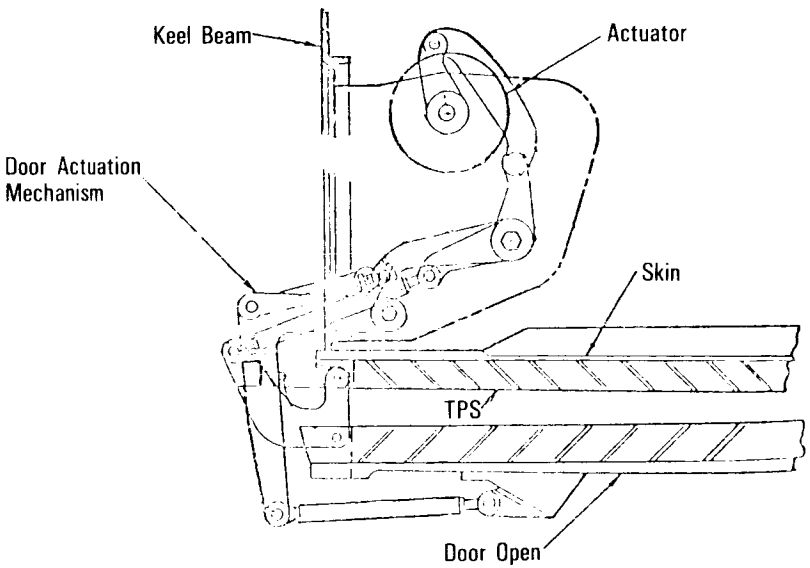


*Orbiter/External Tank Umbilical Doors—Hinge/Actuation System*



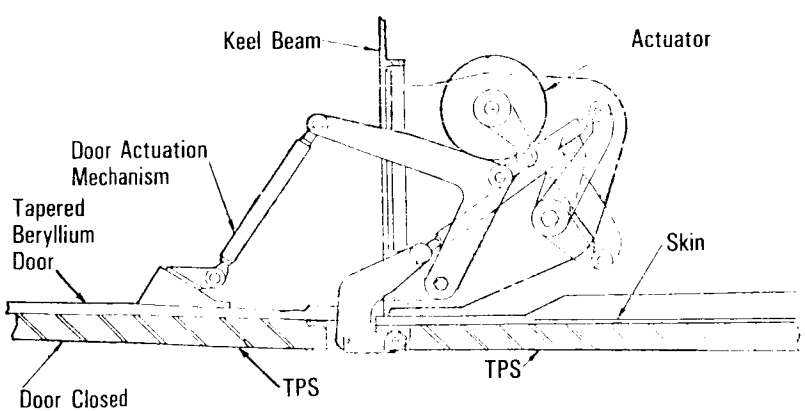


*Orbiter/External Tank Umbilical Doors—Hinge/Actuation System*

and closing the umbilical doors through guidance, navigation and control software through cathode ray tube display item entry during an RTLS abort. The operation of the centerline latches and closing of the umbilical doors are completely automated after external tank separation when the *ET umbilical door* switch on

panel R2 is positioned to *GPC*. Two seconds after external tank separation, the centerline latches release the doors and the latches are stowed. The *ET umbilical door centerline latch* talkback indicator indicates *sto* when the centerline latches complete their motion eight seconds after external tank separation. The left and right umbilical doors are closed, and the *ET umbilical door left* and *right* talkback indicates *cl* 32 seconds after separation. The left and right umbilical door latches latch the doors closed, and the *ET umbilical door left* and *right* talkback indicates *lat* 38 seconds after separation.

Each umbilical door is covered with reusable thermal protection system in addition to an aerothermal barrier that required approximately 6 psi to compress to seal the door with adjacent thermal protection system tiles.

A closeout curtain is installed at each of the orbiter/external tank umbilicals. After external tank separation, the residual liquid oxygen in the main propulsion system is dumped through the three space shuttle main engines and the residual liquid hydrogen is dumped overboard. The umbilical curtain prevents hazardous gases (gaseous oxygen and hydrogen) from entering the orbiter aft fuselage through the umbilical openings before the umbilical doors are closed. The curtain also acts as a seal during the ascent phase of the mission to permit the aft fuselage to vent through the orbiter purge and vent system, thereby protecting the orbiter aft bulkhead at station $X_O$ 1307. The curtain is designed to operate in range of minus 200 F to plus 250 F. The umbilical doors are opened when the orbiter has stopped at the end of landing rollout.

Various parameters are monitored and displayed on the flight deck control panel and CRT and transmitted by telemetry.

Contractors for the separation system include Hoover Electric, Los Angeles, Calif. (external tank umbilical centerline latch and actuator; umbilical door actuator and umbilical door latch actuator); U.S. Bearing, Chatsworth, Calif. (external tank/orbiter spherical bearing); Bertea Corp., Irvine, Calif. (umbilical retractor actuator); Space Ordnance Systems Division, Trans Technology Corp., Saugus, Calif. (orbiter/external tank separation bolt/cartridge detonator assembly, 0.75-inch frangible nut orbiter/external tank umbilical separation and 2.5-inch frangible nut/pyro components in orbiter/external tank aft attach separation system).

## ORBITAL MANEUVERING SYSTEM

The orbital maneuvering system provides the thrust for orbit insertion, orbit circularization, orbit transfer, rendezvous, deorbit, abort to orbit and abort once around and can provide up to 1,000 pounds of propellant to the aft reaction control system. The OMS is housed in two independent pods located on each side of the orbiter's aft fuselage. The pods also house the aft RCS and are referred to as the OMS/RCS pods. Each pod contains one OMS engine and the hardware needed to pressurize, store and distribute the propellants to perform the velocity maneuvers. The two pods provide redundancy for the OMS. The vehicle velocity required for orbital adjustments is approximately 2 feet per second for each nautical mile of altitude change.

The ascent profile of a mission determines if one or two OMS thrusting periods are used and the interactions of the RCS. After main engine cutoff, the RCS thrusters in the forward and aft RCS pods are used to provide attitude hold until external tank separation. At ET separation, the RCS provides a minus (negative) Z translation maneuver of about minus 4 feet per second to maneuver the orbiter away from the ET. Upon completion of the translation, the RCS provides orbiter attitude hold until time to maneuver to the OMS-1 thrusting attitude. The targeting data for the OMS-1 thrusting period is selected before launch; however, the target data in the onboard general-purpose computers can be modified by the flight crew via the cathode ray tube keyboard, if necessary, before the OMS thrusting period.

During the first OMS thrusting period, both OMS engines are used to raise the orbiter to a predetermined elliptical orbit. During the thrusting period, vehicle attitude is maintained by gimbaling (swiveling) the OMS engines. The RCS will not normally come into operation during an OMS thrusting period. If, during an OMS thrusting period, the OMS gimbal rate or gimbal limits are exceeded, RCS attitude control is required. If only one OMS



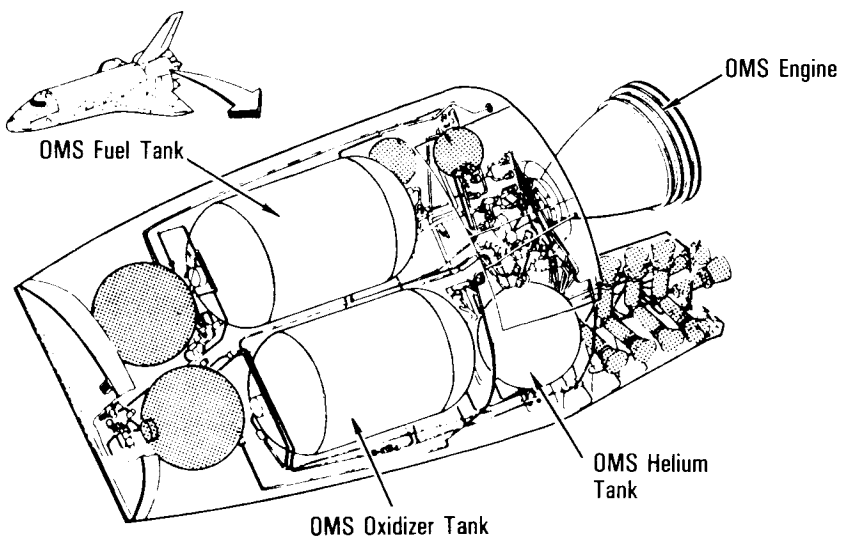


Note: Shaded areas part of RCS

| OMS Engine Characteristics | |
|---|---|
| Thrust | 6,000 Pounds Vacuum |
| Specific Impulse | 313 Seconds |
| Chamber Pressure | 125 psia |
| Mixture Ratio | 1.65-to-1 |
| Gimbal Capability | ±6 Degrees Pitch<br>±7 Degrees Yaw |

| | |
|---|---|
| OMS Delta Velocity Capability | 1,000 Feet per Second With 65,000-Pound Payload |
| OMS Propellant, Total Both Pods | 23,876 Pounds Total<br>14,866 Pounds of Oxidizer and 9,010 Pounds of Fuel |

*Orbital Maneuvering System*

engine is used during an OMS thrusting period, RCS roll control is required.

During the OMS-1 thrusting period, the liquid oxygen and liquid hydrogen trapped in the main propulsion system ducts are dumped. The liquid oxygen is dumped out through the space shuttle main engines' combustion chambers and the liquid hydrogen is dumped through the starboard (right) side T-0 umbilical overboard fill and drain. This velocity was precomputed in conjunction with the OMS-1 thrusting period.

Upon completion of the OMS-1 thrusting period, the RCS is used to null any residual velocities, if required. The flight crew uses the rotational hand controller and/or translational hand controller to command the applicable RCS thrusters to null the residual velocities. The RCS then provides attitude hold until time to maneuver to the OMS-2 thrusting attitude.

The second OMS thrusting period using both OMS engines occurs near the apogee of the orbit established by the OMS-1 thrusting period and is used to circularize the predetermined orbit for that mission. The targeting data for the OMS-2 thrusting period is selected before launch; however, the target data in the onboard GPCs can be modified by the flight crew via the CRT keyboard, if necessary, before the OMS thrusting period.

Upon completion of the OMS-2 thrusting period, the RCS is used to null any residual velocities, if required, in the same manner as during OMS-1. The RCS is then used to provide attitude hold and minor translation maneuvers as required for on-orbit operations. The flight crew can select primary or vernier RCS thrusters for attitude control on orbit. Normally, the vernier RCS thrusters are selected for on-orbit attitude hold.

If the ascent profile for a mission uses a single OMS thrusting maneuver, it is referred to as direct insertion. In a direct-insertion ascent profile, the OMS-1 thrusting period after main engine cutoff is eliminated and is replaced with a 5-feet-per-second RCS translation maneuver to facilitate the main propulsion system dump. The RCS provides attitude hold after the translation maneuver. The OMS-2 thrusting period is then used to achieve orbit insertion. The direct-insertion ascent profile allows the MPS to provide more energy to orbit insertion and permits easier use of onboard software.

Additional OMS thrusting periods using both or one OMS engine are performed on orbit according to the mission's requirements to modify the orbit for rendezvous, payload deployment or transfer to another orbit.

The two OMS engines are used to deorbit. Target data for the deorbit maneuver is computed by the ground and loaded in the onboard GPCs via uplink. This data is also voiced to the flight crew for verification of loaded values. After verification of the deorbit data, the flight crew initiates an OMS gimbal test on the CRT keyboard unit.

Before the deorbit thrusting period, the flight crew maneuvers the spacecraft to the desired deorbit thrusting attitude using the rotational hand controller and RCS thrusters. Upon completion of the OMS thrusting period, the RCS is used to null any residual velocities, if required. The spacecraft is then maneuvered to the proper entry interface attitude using the RCS. The remaining propellants aboard the forward RCS are dumped by burning the propellants through the forward RCS thrusters before the entry interface if it is necessary to control the orbiter's center of gravity.

The aft RCS plus X jets can be used to complete any planned OMS thrusting period in the event of an OMS engine failure. In this case, the OMS-to-aft-RCS interconnect would feed OMS propellants to the aft RCS.

From entry interface at 400,000 feet, the orbiter is controlled in roll, pitch and yaw with the aft RCS thrusters. The orbiter's ailerons become effective at a dynamic pressure of 10 pounds per square foot, and the aft RCS roll jets are deactivated. At a dynamic pressure of 20 pounds per square foot, the orbiter's ele-

vons become effective, and the aft RCS pitch jets are deactivated. The rudder is activated at Mach 3.5, and the aft RCS yaw jets are deactivated at Mach 1 and approximately 45,000 feet.

The OMS in each pod consists of a high-pressure gaseous helium storage tank, helium isolation valves, dual pressure regulation systems, vapor isolation valves for only the oxidizer regulated helium pressure path, quad check valves, a fuel tank, an oxidizer tank, a propellant distribution system consisting of tank isolation valves, crossfeed valves, and an OMS engine. Each OMS engine also has a gaseous nitrogen storage tank, gaseous nitrogen pressure isolation valve, gaseous nitrogen accumulator, bipropellant solenoid control valves and actuators that control bipropellant ball valves, and purge valves.

In each of the OMS pods, gaseous helium pressure is supplied to helium isolation valves and dual pressure regulators, which supply regulated helium pressure to the fuel and oxidizer tanks. The fuel is monomethyl hydrazine and the oxidizer is nitrogen tetroxide. The propellants are Earth-storable liquids at normal temperatures. They are pressure-fed to the propellant distribution system through tank isolation valves to the OMS engines. The OMS engine propellant ball valves are positioned by the gaseous nitrogen system and control the flow of propellants into the engine. The fuel is directed first through the engine combustion chamber walls and provides regenerative cooling of the chamber walls; it then flows into the engine injector. The oxidizer goes directly to the engine injector. The propellants are sprayed into the combustion chamber, where they atomize and ignite upon contact with each other (hypergolic), producing a hot gas and, thus, thrust.

The gaseous nitrogen system is also used after the OMS engines are shut down to purge residual fuel from the injector and combustion chamber, permitting safe restarting of the engines. The nozzle extension of each OMS engine is radiation-cooled and is constructed of columbium alloy.

Each OMS engine produces 6,000 pounds of thrust. The oxidizer-to-fuel ratio is 1.65-to-1. The expansion ratio of the nozzle exit to the throat is 55-to-1. The chamber pressure of the engine is 125 psia. The dry weight of each engine is 260 pounds.

Each OMS engine can be reused for 100 missions and is capable of 1,000 starts and 15 hours of cumulative firing. The minimum duration of an OMS engine firing is two seconds. The OMS may be utilized to provide thrust above 70,000 feet. For vehicle velocity changes of between 3 and 6 feet per second, normally only one OMS engine is used.

Each engine has two electromechanical gimbal actuators, which control the OMS engine thrust direction in pitch and yaw (thrust vector control). The OMS engines can be used singularly by directing the thrust vector through the orbiter center of gravity or together by directing the thrust vector of each engine parallel to the other. During a two-OMS-engine thrusting period, the RCS will come into operation only if the OMS gimbal rate or gimbal limits are exceeded and should not normally come into operation during the OMS thrust period. However, during a one-OMS-engine thrusting period, roll RCS control is required. The pitch and yaw actuators are identical except for the stroke length and contain redundant electrical channels (active and standby), which couple to a common mechanical drive assembly.

The OMS/RCS pods are designed to be reused for up to 100 missions with only minor repair, refurbishment and maintenance. The pods are removable to facilitate orbiter turnaround, if required.

**HELIUM PRESSURIZATION.** Each pod pressurization system consists of a helium tank, two helium isolation valves, two dual pressure regulator assemblies, parallel vapor isolation valves on the regulated helium pressure to the oxidizer tank only, dual series-parallel check valve assemblies and pressure relief valves.

The helium storage tank in each pod has a titanium liner with a fiberglass structural overwrap. This increases safety and decreases the weight of the tank 32 percent over that of conventional tanks. The helium tank is 40.2 inches in diameter and has a volume of 17.03 cubic feet minimum. Its dry weight is

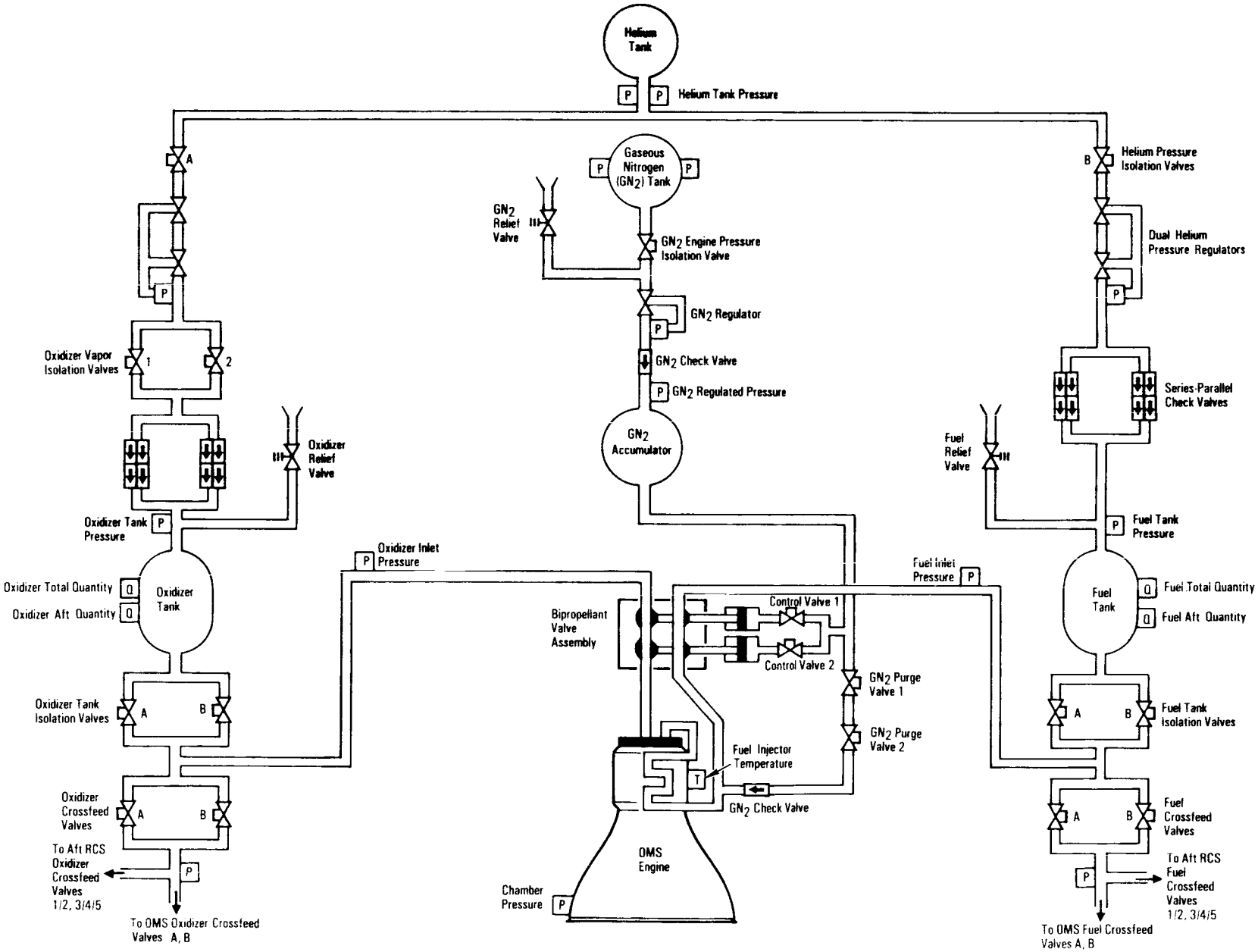


*Orbital Maneuvering System Pressurization and Propellant Feed System for One Engine (Other Engine Identical)*

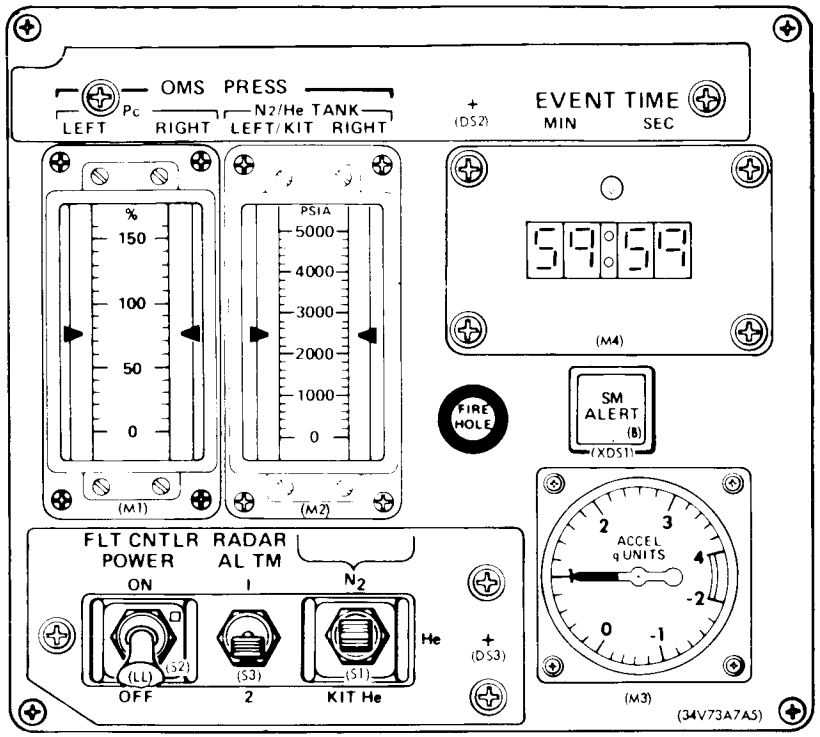


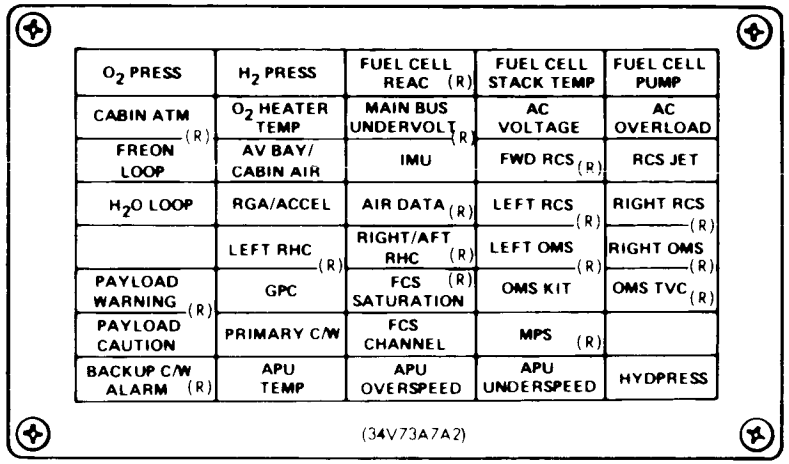


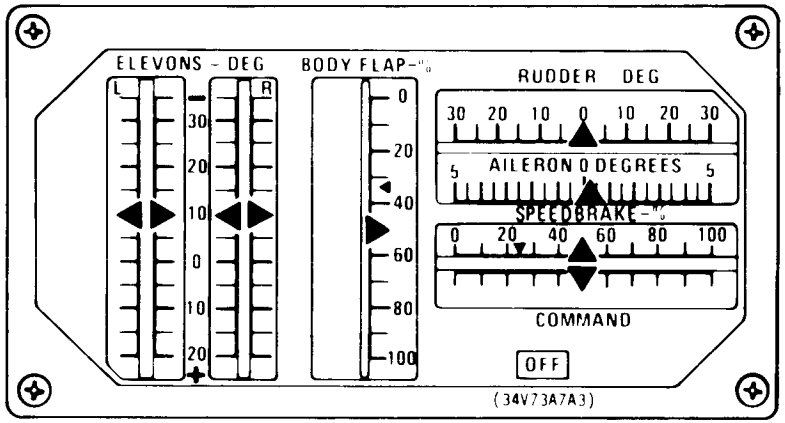


*Panel F7*

272 pounds. The helium tank's operating pressure range is 4,800 to 460 psia with a maximum operating limit of 4,875 psia at 200 F.

A pressure sensor downstream of each helium tank in each pod monitors the helium source pressure and transmits it to the *$N_2$, He, kit He* switch on panel F7. When the switch is in the *He* position, the helium pressure of the left and right OMS is displayed on the *OMS press left, right* meters. This pressure also is transmitted to the CRT and displayed.

The two helium pressure isolation valves in each pod permit helium source pressure to the propellant tanks or isolate the helium from the propellant tanks. The parallel paths in each pod assure helium flow to the propellant tanks of that pod. The helium valves are continuous-duty, solenoid-operated. They are energized open and spring loaded closed. The *OMS He press/vapor isol* switches on panel O8 permit automatic or manual control of the valves. With the switches in the *GPC* position, the valves are automatically controlled by the general-purpose computer during an

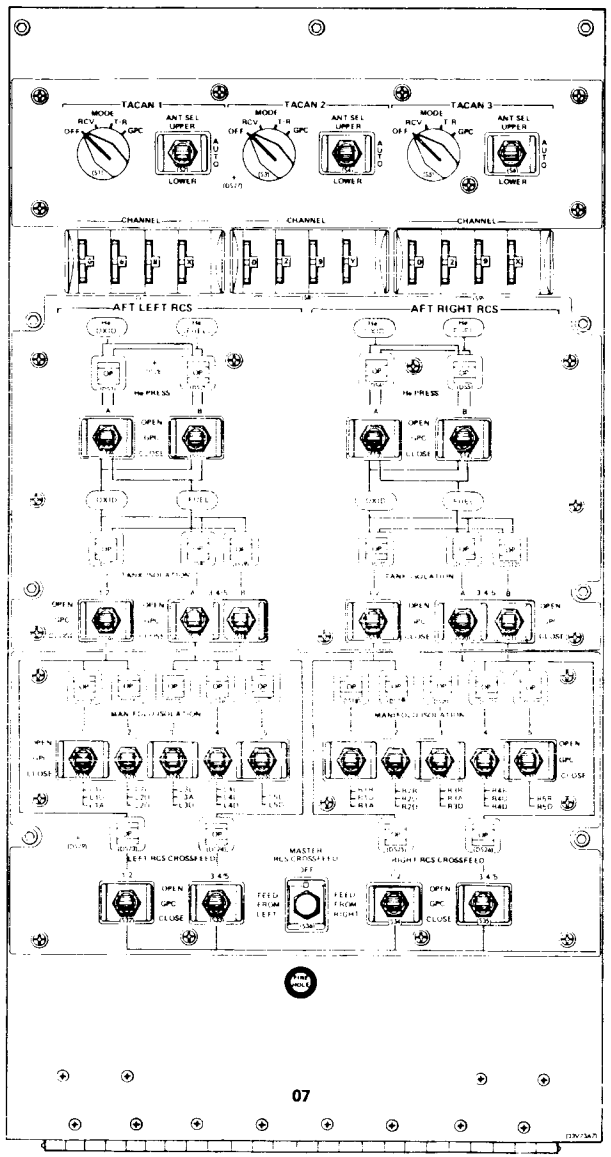


*Panel O7*

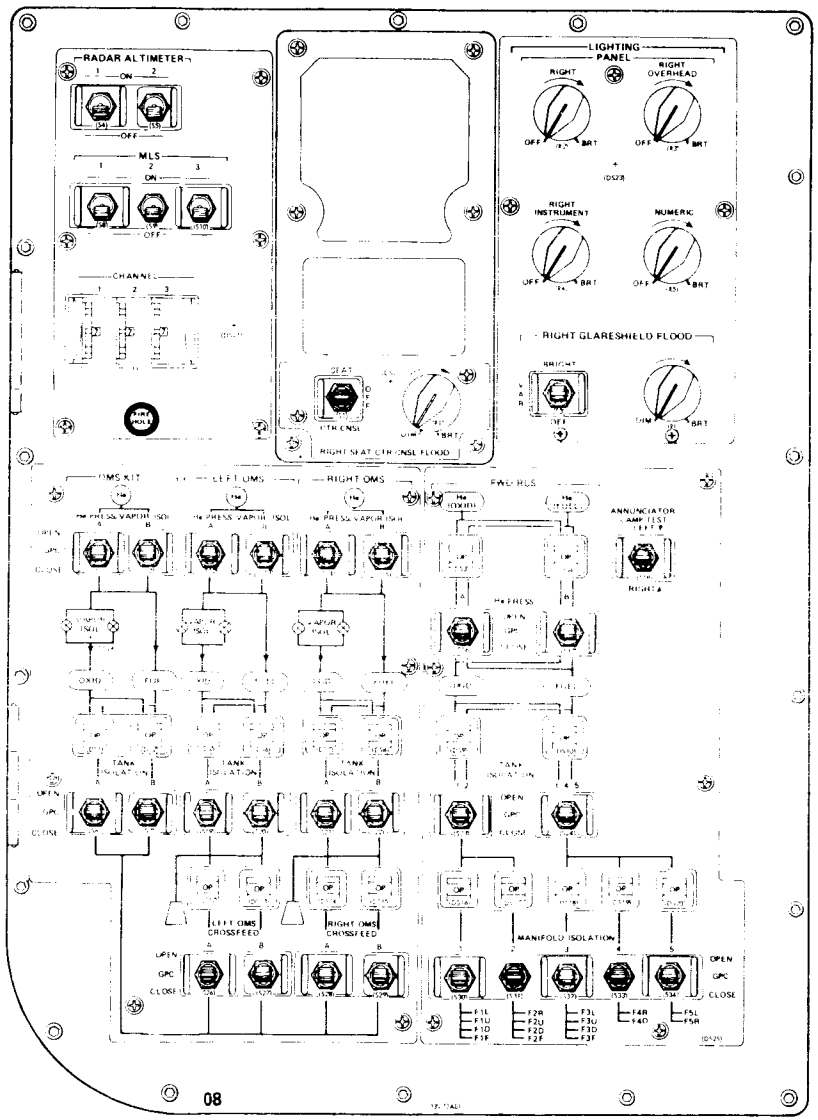


*Panel O8*

engine thrusting sequence. The valves are controlled manually by placing the switches to *open* or *close*.

The pressure regulators reduce the helium source pressure to the desired working pressure. Pressure is regulated by assemblies downstream of each helium pressure isolation valve. Each assembly contains primary and secondary regulators in series and a flow limiter. Normally, the primary regulator is the controlling regulator. The secondary regulator is normally open during a dynamic flow condition. It will not become the controlling regulator until the primary regulator allows a higher pressure than normal. All regulator assemblies are in reference to a bellows assembly that is vented to ambient. The primary regulator outlet pressure at normal flow is 252 to 262 psig and 247 psig minimum at high abort flow, with lockup at 266 psig maximum. The secondary regulator outlet pressure at normal flow is 259 to 269 psig and 254 psig minimum at high abort flow, with lockup at 273 psig maximum. The flow limiter restricts the flow to a maximum of 1,040 standard cubic feet per minute and to a minimum of 304 standard cubic feet per minute.

The vapor isolation valves in the oxidizer pressurization line to the oxidizer tank prevent oxidizer vapor from migrating upstream and over into the fuel system. These are low-pressure, two-position, two-way, solenoid-operated valves that are energized open and spring loaded closed. They can be commanded manually or automatically by the positioning of the *He press/vapor isol* switches on panel O8. When either of the *A* or *B* switches is in the *open* position, both vapor isolation valves are energized open; and when both switches are in the *close* position, both vapor isolation valves are closed. When the switches are in the *GPC* position, the GPC opens and closes the valves automatically.

The check valve assembly in each parallel path contains four independent check valves connected in a series-parallel configuration to provide a positive checking action against a reverse flow of propellant liquid or vapor, and the parallel path permits redundant paths of helium to be directed to the propellant tanks. Filters are incorporated into the inlet of each check valve assembly.

Two pressure sensors in the helium pressurization line upstream of the fuel and oxidizer tanks monitor the regulated tank pressure and transmit it to the *RCS/OMS press* rotary switch on panel O3. When the switch is in the *OMS prplnt* position, the left and right fuel and oxidizer pressure is displayed. If the tank pressure is lower than 234 psia or above 284 psia, the *left* or *right OMS* red caution and warning light on panel F7 will be illuminated. These pressures also are transmitted to the CRT and displayed.

The relief valves in each pressurization path limit excessive pressure in the propellant tanks. Each pressure relief valve also contains a burst diaphragm and filter. If excessive pressure is caused by helium or propellant vapor, the diaphragm will rupture and the relief valve will open and vent the excessive pressure overboard. The filter prevents particulates from the non-fragmentation-type diaphragm from entering the relief valve seat. The relief valve will close and reset after the pressure has returned to the operating level. The burst diaphragm is used to provide a more positive seal of helium and propellant vapors than the relief valve. The diaphragm ruptures between 303 and 313 psig. The relief valve opens at a minimum of 286 psig and a maximum of 313 psig. The relief valve's minimum reseat pressure is 280 psig. The maximum flow capacity of the relief valve at 60 F and 313 psig is 520 cubic feet per minute.



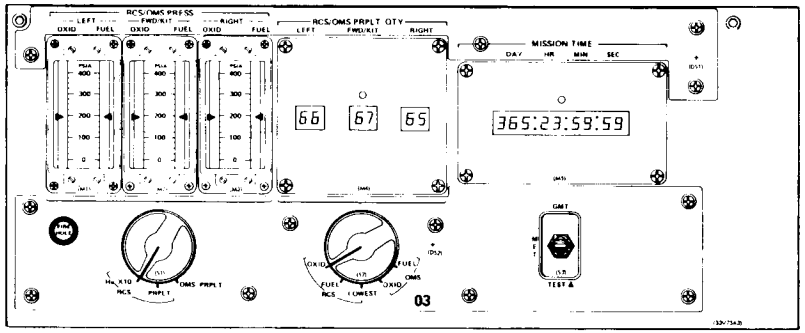


*Panel O3*

**PROPELLANT STORAGE AND DISTRIBUTION.** The propellant storage and distribution system consists of one fuel tank and one oxidizer tank in each pod. It also contains propellant feed lines, interconnect lines, isolation valves and crossfeed valves.

The OMS propellant tanks of both pods enable the orbiter to reach a 1,000-foot-per-second velocity change with a 65,000-pound payload in the payload bay. An OMS pod crossfeed line allows the propellants in the pods to be used to operate either OMS engine.

The propellant is contained in domed cylindrical titanium tanks within each pod. Each propellant tank is 96.38 inches long with a diameter of 49.1 inches and a volume of 89.89 cubic feet unpressurized. The dry weight of each tank is 250 pounds. The propellant tanks are pressurized by the helium system.

Each tank contains a propellant acquisition and retention assembly in the aft end and is divided into forward and aft compartments. The propellant acquisition and retention assembly is located in the aft compartment and consists of an intermediate bulkhead with communication screen and an acquisition system. The propellant in the tank is directed from the forward compartment through the intermediate bulkhead through the communication screen into the aft compartment during OMS velocity maneuvers. The communication screen retains propellant in the aft compartment during zero-gravity conditions.

The acquisition assembly consists of four stub galleries and a collector manifold. The stub galleries acquire wall-bound propellant at OMS start and during RCS velocity maneuvers to prevent gas ingestion. The stub galleries have screens that allow propellant flow and prevent gas ingestion. The collector manifold is connected to the stub galleries and also contains a gas arrestor screen to further prevent gas ingestion, which permits OMS engine ignition without the need of a propellant-settling maneuver employing RCS thrusters. The propellant tank's nominal operating pressure is 250 psi, with a maximum operating pressure limit of 313 psia.

A capacitance gauging system in each OMS propellant tank measures the propellant in the tank. The system consists of a forward and aft probe and a totalizer. The forward and aft fuel probes use fuel (which is a conductor) as one plate of the capacitor and a glass tube that is metallized on the inside as the other. The forward and aft oxidizer probes use two concentric nickel tubes as the capacitor plates and oxidizer as the dielectric. (Helium is also a dielectric, but has a different dielectric constant than the oxidizer.) The aft probes in each tank contain a resistive temperature-sensing element to correct variations in fluid density. The fluid in the area of the communication screens cannot be measured.

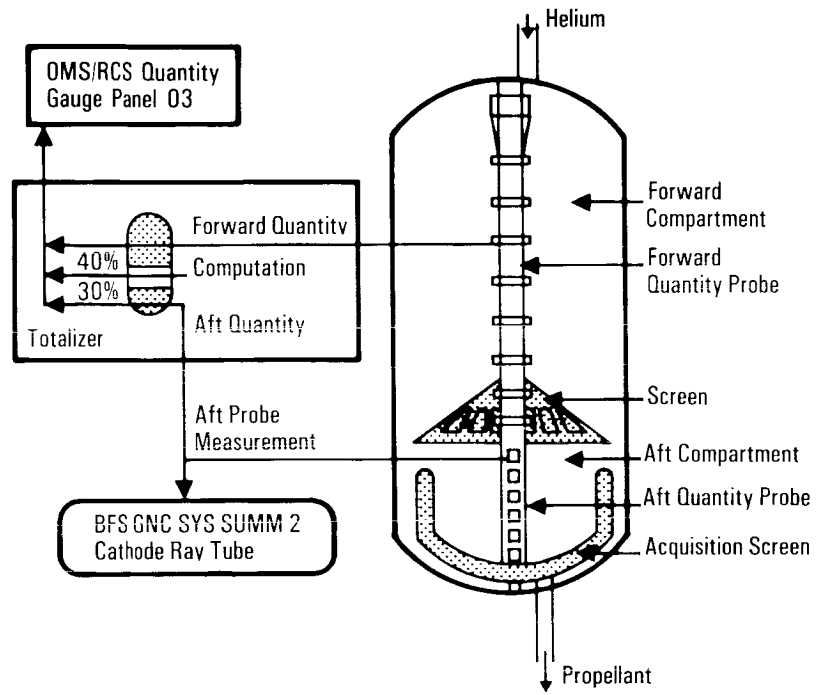


*Orbital Maneuvering System Quantity Gauging*

The totalizer receives OMS valve operation information and inputs from the forward and aft probes in each tank and outputs total and aft quantities and a low level quantity. The inputs from the OMS valves allow control logic in the totalizer to determine when an OMS engine is thrusting and which tanks are being used. The totalizer begins an engine flow rate/time integration process

at the start of the OMS thrusting period, which reduces the indicated amount of propellants by a preset estimated rate for the first 14.8 seconds. After 14.8 seconds of OMS thrusting, which settles the propellant surface, the probe capacitance gauging system outputs are enabled, which permits the quantity of propellant remaining to be displayed. The totalizer outputs are displayed on the *OMS/RCS prplnt qty* meters on panel O3 when the rotary switch is positioned to the *OMS fuel* or *oxid* positions.

When the wet or dry analog comparator indicates the forward probe is dry, the ungaugeable propellant in the region of the intermediate bulkhead is added to the aft probe output quantity, decreasing the total quantity at a preset rate for 98.15 seconds, and updates from the aft probes are inhibited. After 98.15 seconds of thrusting, the aft probe output inhibit is removed, and the aft probe updates the total quantity. When the quantity decreases to 5 percent, the low-level signal is output.

Parallel tank isolation valves in each pod located between the propellant tanks and the OMS engine and the OMS crossfeed valves permit propellant to be supplied to the OMS engine and OMS crossfeed valves or isolate the propellant. The *left* or *right OMS tank isolation A* switch on panel O8 controls the A fuel and A oxidizer valve in that pod, and the *B* switch controls the B fuel and B oxidizer valve in that pod. When the *left* or *right tank isolation* switches in a pod are positioned to *GPC*, pairs of valves are automatically opened or closed upon command from the orbiter computer. When a pair of valves is opened, fuel and oxidizer from the corresponding propellant tanks are allowed to flow to that OMS engine and OMS crossfeed valves; and when that pair of valves is closed, fuel and oxidizer are isolated from the OMS engine and OMS crossfeed valves. The switch positions *open, GPC* and *close* are permanent-position switches. Electrical power is provided to an electrical motor controller assembly, which supplies power to the ac-motor-operated valve actuators. Once the valve is in the commanded position, logic in the motor controller assembly removes power from the ac-motor-operated valve actuator. A talkback indicator above each tank isolation switch on panel O8 indicates the status of the fuel valve and oxidizer valve. The talkback indicator is controlled by microswitches in each pair of valves. The talkback indicator indicates *op* when that pair of valves is open, barberpole when the valves are in transit or one valve is open or closed, and *cl* when that pair of valves is closed. The *open* and *close* positions of each *left* or *right tank isolation A, B* switch permits manual control of the corresponding pair of valves (one for fuel and one for oxidizer).

In each pod, parallel left or right OMS crossfeed valves are controlled by the *left, right crossfeed A, B* switches on panel O8. The *A* switch controls the A fuel and A oxidizer ac-motor-operated valve actuators in the pod selected, and the *B* switch controls the B fuel and B oxidizer valve in the pod selected. When the *A* or *B* switch in a pod is positioned to *GPC*, the A or B pair of fuel and oxidizer valves is automatically opened or closed upon command from the orbiter computer. For example, when the A or B pair of crossfeed valves in the left pod is opened, fuel and oxidizer from the left pod are routed to the OMS crossfeed valves of the right pod; thus, a pair of A or B crossfeed valves in the right pod must be opened to permit the left pod fuel and oxidizer to be directed to the right OMS pod engine. A talkback indicator above the pod crossfeed switches on panel O8 indicates the status of the selected pair's fuel and oxidizer valves. The talkback indicator indicates *op* when both valves are open, barberpole when the valves are in transit or one valve is open and one closed, and *cl* when both valves are closed. The *left, right crossfeed A, B open/close* switches on panel O8 permit manual control of the corresponding pair of fuel and oxidizer valves.

The *left* and *right OMS crossfeed A, B* switches also provide the capability to supply OMS propellants to the left and right aft RCS engines. The left and right aft RCS will not be used to supply propellants to the OMS due to differences in pressures between the OMS and RCS.

The OMS crossfeed fuel and oxidizer line pressures are monitored on telemetry and are transmitted to the flight deck CRT.

There are 64 ac-motor-operated valve actuators in the OMS/RCS nitrogen tetroxide and monomethyl hydrazine propellant systems. Each valve actuator was modified to incorporate a 0.25-

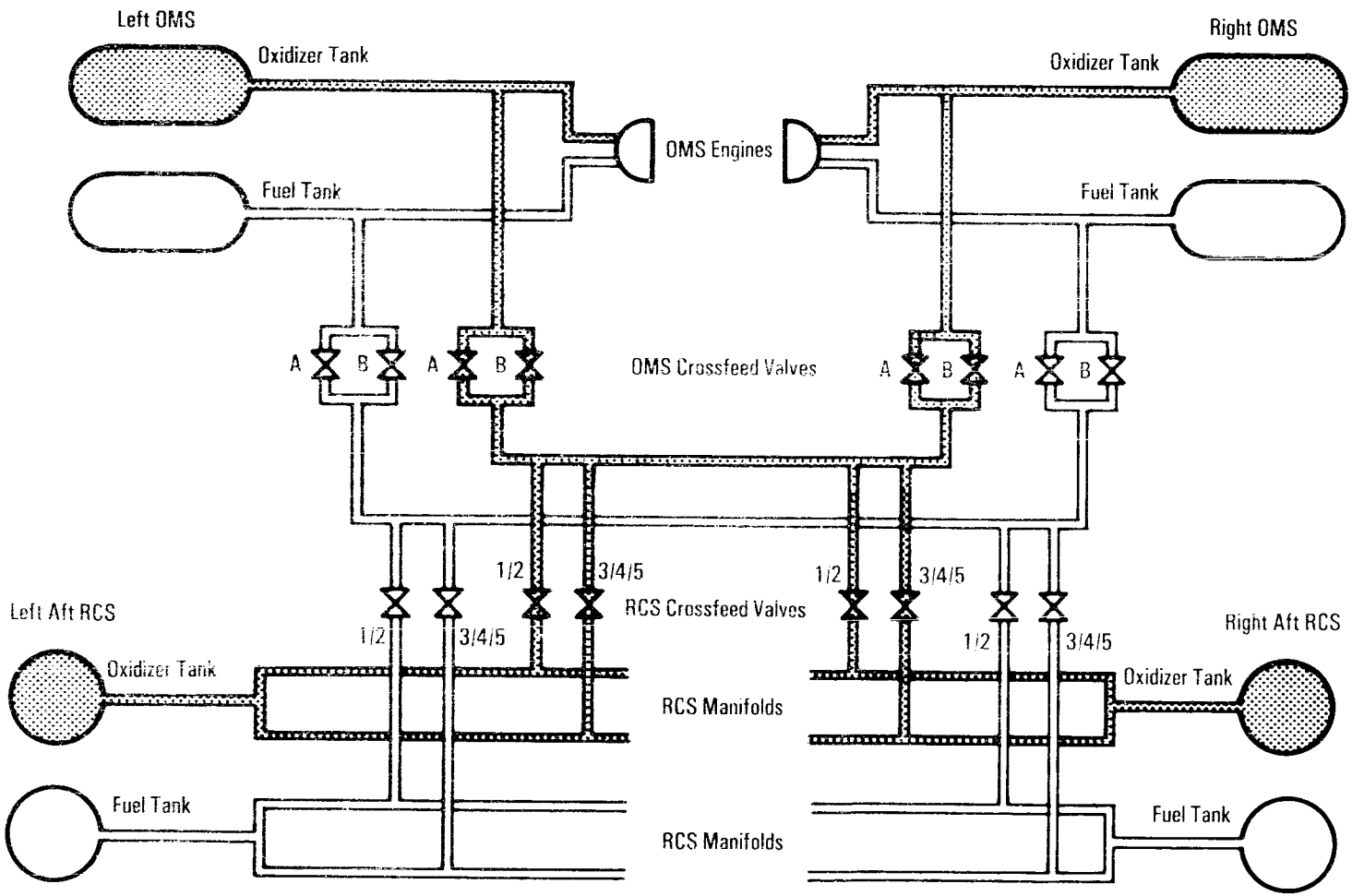


Note: Tank isolation and manifold isolation valves are not shown in this diagram.

*Orbital Maneuvering System Crossfeed and Crossfeed to Aft Reaction Control System*

inch-diameter stainless steel sniff line from the actuator to the mold line of the orbiter. The sniff line permits the monitoring of nitrogen tetroxide or monomethyl hydrazine in the electrical portion of each valve actuator during ground operations.

There are sniff lines in the 12 ac-motor-operated valve actuators in the forward RCS and in the 44 actuators in the aft left and aft right RCS. The remaining 0.25-inch-diameter sniff lines are in the eight OMS tank isolation and crossfeed ac-motor-operated valve actuators in the left and right orbital maneuvering systems. The 44 aft left and right RCS sniff lines and the eight OMS left and right sniff lines are routed to the respective left and right OMS/RCS pod Y web access servicing panels.

During ground operations, an interscan can be connected to the sniff ports to check for the presence of nitrogen tetroxide or monomethyl hydrazine in the electrical portion of the ac-motor-operated valve actuators.

An electrical microswitch in each of the ac-motor-operated valve actuators signals the respective valves' position (open or closed) to the onboard flight crew displays and controls as well as telemetry. An extensive improvement program was implemented to reduce the probability of floating particulates in the electrical microswitch portion of each ac-motor-operated valve actuator. Particulates could affect the operation of the microswitch in each valve and, thus, the position indication of the valves to the onboard displays and controls and telemetry.

**ENGINE BIPROPELLANT VALVE ASSEMBLY.** Each OMS engine receives pressure-fed propellants at its bipropellant valve assembly. The bipropellant ball valve assembly is controlled by its gaseous nitrogen system. The nitrogen system consists of a storage tank, engine pressure isolation valve, regulator, relief valve, check valve, accumulator, engine purge valves, bipropellant solenoid control valves and actuators that control the bipropellant ball valves.

A gaseous nitrogen spherical storage tank is mounted next to the combustion chamber to supply pressure to its engine pressure isolation valve. The tank contains enough nitrogen to operate the ball valves and purge the engine 10 times. Nominal tank capacity is 60 cubic inches. The maximum tank operating pressure is 3,000 psi, with a proof pressure of 6,000 psig.

Each tank's pressure is monitored by two pressure sensors. One sensor transmits the tank pressure to the *$N_2$, He, kit He* switch on panel F7. When the switch is positioned to $N_2$, tank pressure is displayed on the *OMS press $N_2$ tank left, right* meters on panel F7. The other sensor transmits pressure to telemetry.

A dual-coil, solenoid-operated engine pressure isolation valve is located in each gaseous nitrogen system. The valve is energized open and spring-loaded closed. The engine pressure isolation valve permits gaseous nitrogen flow from the tank to the regulator, accumulator, the bipropellant ball valve control valves and purge valves 1 and 2 when energized open and isolates the nitrogen tank from the gaseous nitrogen supply system when closed. The engine pressure isolation valves in each system are controlled by the *OMS eng left, right* switches on panel C3. When the *OMS eng left* switch is placed in the *arm press* position, the left OMS engine pod's pressure isolation valve is energized open. When the *OMS eng right* switch is placed in the *arm press* position, the right OMS engine pod's pressure isolation valve is energized open. The gaseous nitrogen engine pressure isolation valve, when energized open, allows gaseous nitrogen supply pressure to be directed into a regulator, through a check valve, an in-line accumulator and to a pair of engine bipropellant control valves. The engine bipropellant control valves are controlled by the OMS thrust on/off commands from the GPCs.

A single-stage regulator is installed in each gaseous nitrogen pneumatic control system between the gaseous nitrogen engine pressure isolation valve and the engine bipropellant control valves. The regulator reduces the gaseous nitrogen service pressure to a desired working pressure of 315 to 360 psig.

A pressure relief valve downstream of the gaseous nitrogen regulator limits the pressure to the engine bipropellant control valves and actuators if a gaseous nitrogen regulator malfunctions.

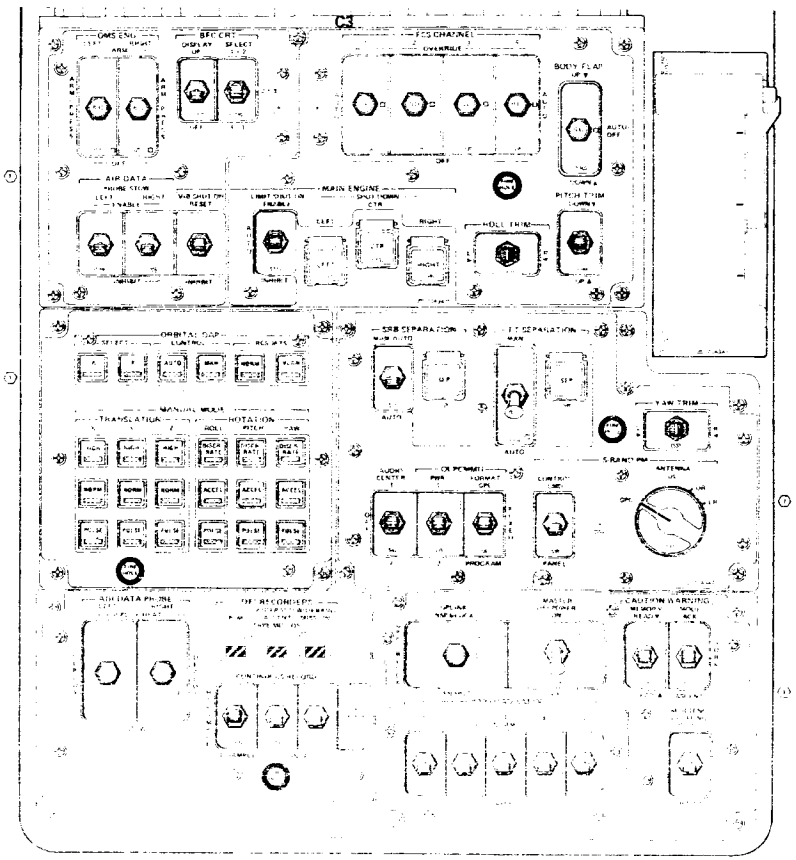

*Panel C3*

The relief valve relieves between 450 and 500 psig and resets at 400 psig minimum.

A pressure sensor downstream of the regulator monitors the regulated pressure and transmits it to the CRT display and to telemetry.

The check valve located downstream of the gaseous nitrogen regulator will close if gaseous nitrogen pressure is lost on the upstream side of the check valve and will isolate the remaining gaseous nitrogen pressure on the downstream side of the check valve.

The 19-cubic-inch gaseous nitrogen accumulator downstream of the check valve and upstream of the bipropellant control valves provides enough pressure to operate the engine bipropellant control valves one time with the engine pressure isolation valve closed or in the event of loss of pressure on the upstream side of the check valve.

Two solenoid-operated, three-way, two-position bipropellant control valves on each OMS engine control the bipropellant control valve actuators and bipropellant ball valves. Control valve 1 controls the No. 1 actuator and the fuel and oxidizer ball valves. Control valve 2 controls the No. 2 actuator and two ball valves, one fuel and oxidizer ball valve in series to the No. 1 system. Each control valve contains two solenoid coils, either of which, when energized, opens the control valve.

The right OMS engine gaseous nitrogen solenoid control valves 1 and 2 are energized open by computer commands if the *right OMS eng* switch on panel C3 is in the *arm* or *arm/press* position and the *right OMS eng vlv* switch on panel O16 is on; the valves are de-energized normally when thrust off is commanded or if the *right OMS eng* switch is positioned to *off*. The left OMS engine gaseous nitrogen solenoid control valves 1 and 2 are controlled in the same manner, but through the *left OMS eng* switch on panel C3 and the left *OMS eng vlv* switch on panel O14.

When the gaseous nitrogen solenoid control valves are energized open, pressure is directed into the two actuators in each engine. The nitrogen acts against the piston in each actuator, overcoming the spring force on the opposite side of the actuators. Each actuator has a rack-and-pinion gear; and the linear motion of the actuator connecting arm is converted into rotary motion, which drives two ball valves, one fuel and one oxidizer, to the open position. Each pair of ball valves opens simultaneously. Fuel and oxidizer are then directed to the combustion chamber of the engine, where the propellants atomize and ignite upon contact. The hypergolic propellants produce a hot gas, thus thrust.

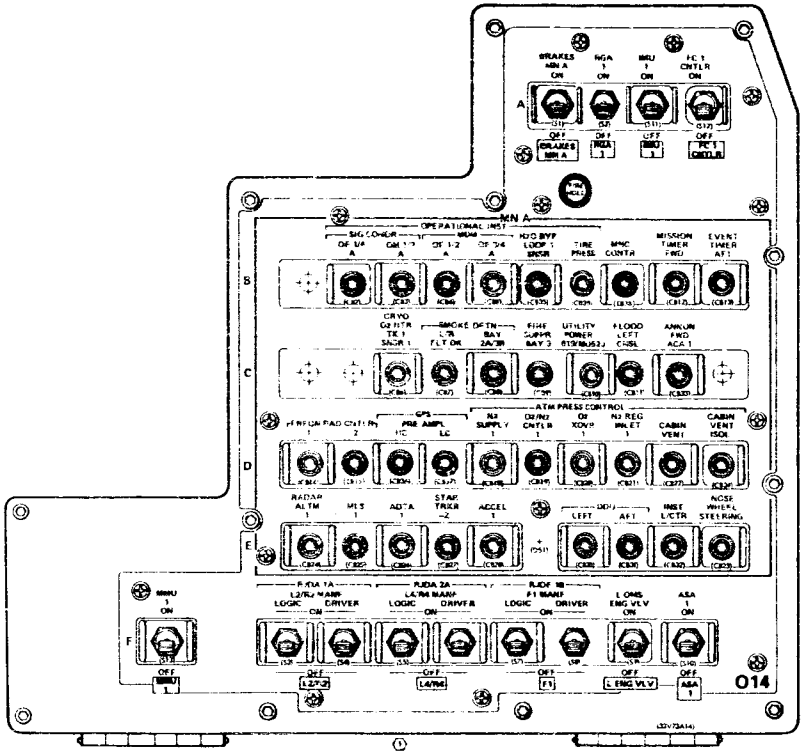

*Panel O14*

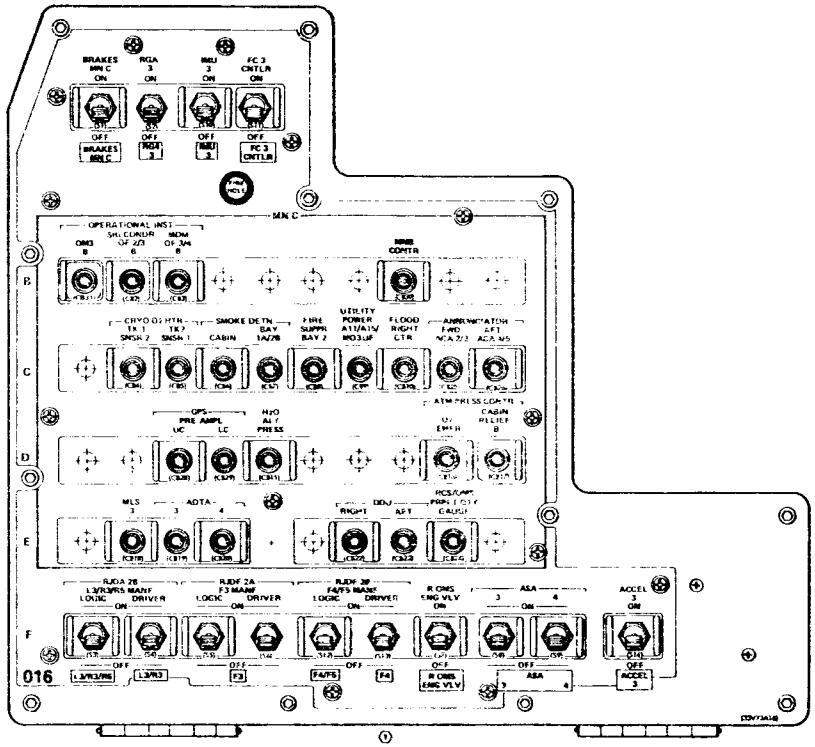

*Panel O16*

The chamber pressure of each engine is monitored by a pressure sensor and is transmitted to the *OMS press left* and *right Pc* (chamber pressure) meter on panel F7.

When the computer commands thrust off or an engine's *OMS eng* switch on panel C3 or *eng vlv* switch on panel O14/O16 is positioned *off*, the solenoid control valves are de-energized, removing gaseous nitrogen pressure from the actuators; and the gaseous nitrogen pressure in the actuators is vented overboard through the solenoid control valve. The spring in the actuator forces the actuator's piston to move in the opposite direction, and the actuator drives the fuel and oxidizer ball valves closed simultaneously. The series-redundant arrangement of ball valves ensures engine thrusting is terminated.

Each actuator incorporates a linear position transducer, which supplies ball valve position to a CRT.

Check valves are installed in the vent port outlet of each gaseous nitrogen solenoid control valve on the spring pressure side of each actuator to protect the seal of these components from atmospheric contamination.

Each engine has two gaseous nitrogen purge valves in series. These valves are solenoid-operated open and spring-loaded closed. They are normally energized open after each thrusting period by the GPCs unless inhibited by a crew entry on the maneuver CRT display. The two purge valves of an engine are energized open 0.36 second after OMS engine thrust off has been commanded and permit gaseous nitrogen to flow through the valves and check valve into the fuel line downstream of the ball valves and out through the combustion chamber and engine injector to space for two seconds. This purges the residual fuel from the combustion chamber and injector of the engine, permitting safe engine restart. The purge valves are then de-energized and spring-loaded closed. When the purge is completed, the gaseous nitrogen tank pressure isolation valve is closed by placing the respective *OMS eng* switch (panel C3) to *off*. The check valve downstream of the purge valves prevents fuel from flowing to the engine purge valves during engine thrusting.

**ENGINE THRUST CHAMBER ASSEMBLY.** When the fuel reaches the thrust chamber, it is directed through 102 coolant channels in the combustion chamber wall, providing regenerative cooling to the combustion chamber walls, and then to the injector of the engine. The oxidizer is routed directly to the injector. The platelet injector assembly consists of a stack of plates, each with an etched pattern that provides proper distribution and propellant injection velocity vector. The stack is diffusion-bonded and welded to the body of the injector. The fuel and oxidizer orifices are positioned so that the propellants will impinge and atomize, causing the fuel and oxidizer to ignite because of hypergolic reaction.

The contoured nozzle extension is bolted to the aft flange of the combustion chamber. The nozzle extension is made of a columbium alloy and is radiantly cooled.

The nominal flow rate of oxidizer and fuel to each engine is 11.93 pounds per second and 7.23 pounds per second, respectively, producing 6,000 pounds of thrust at a vacuum specific impulse of 313 seconds.

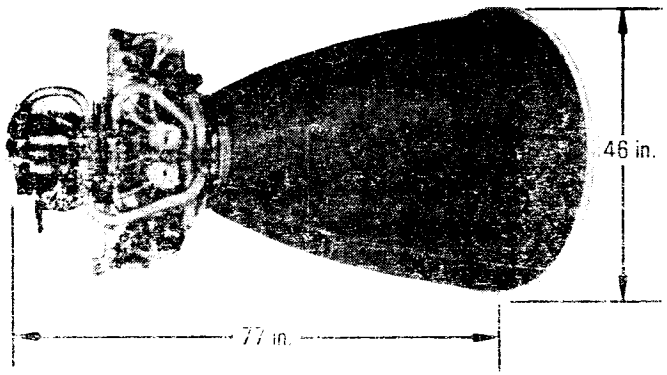


*OMS Engine*

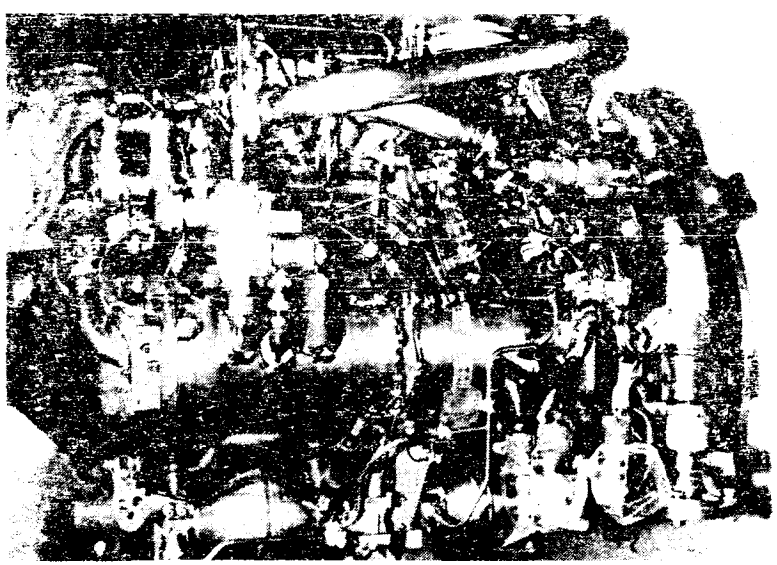

*OMS Engine (Minus Nozzle)*

**OMS THRUSTING SEQUENCE.** The OMS thrusting sequence commands the OMS engines on or off and commands the engine purge function. The flight crew can select, via item

entry on the maneuver display, a one- or two-engine thrusting maneuver and can inhibit the OMS engine purge.

The sequence determines which engines are selected and then provides the necessary computer commands to open the appropriate helium vapor isolation valves and the engine gaseous nitrogen solenoid control valves and sets an engine-on indicator. The sequence will monitor the OMS engine fail flags and, if one or both engines have failed, issue the appropriate OMS cutoff commands as soon as the crew has confirmed the failure by placing the *OMS eng* switch in the *off* position. This will then terminate the appropriate engine's control valve commands.

In a normal OMS thrusting period, when the OMS cutoff flag is true, the sequence terminates commands to the helium pressurization, helium vapor isolation valves and two gaseous nitrogen engine control valves. If the engine purge sequence is not inhibited, the sequence will check for the left and right engine *arm press* signals and after 0.36 second open the engine gaseous nitrogen purge valves for two seconds for the engines that have the *arm press* signals present.

**ENGINE THRUST VECTOR CONTROL SYSTEM.** The engine TVC system consists of a gimbal ring assembly, two gimbal actuator assemblies and two gimbal actuator controllers. The engine gimbal ring assembly and gimbal actuator assemblies provide OMS TVC by gimbaling the engines in pitch and yaw. Each engine has a pitch actuator and a yaw actuator. Each actuator is extended or retracted by one of a pair of dual-redundant electric motors and is actuated by general-purpose computer control signals.

The gimbal ring assembly contains two mounting pads to attach the engine to the gimbal ring and two pads to attach the gimbal ring to the orbiter. The ring transmits engine thrust to the pod and orbiter.

The pitch and yaw gimbal actuator assembly for each OMS engine provides the force to gimbal the engines. Each actuator contains a primary and secondary motor and drive gears. The primary and secondary drive systems are isolated and are not operated concurrently. Each actuator consists of two redundant brushless dc motors and gear trains, a single jackscrew and nut-tube assembly and redundant linear position feedback transducers. A GPC position command signal from the primary electronic controller energizes the primary dc motor, which is coupled with a reduction gear and a no-back device. The output from the primary power train drives the jackscrew of the drive assembly, causing the nut-tube to translate (with the secondary power train at idle), which causes angular engine movement. If the primary power train is inoperative, a GPC position command from the secondary electronic controller energizes the secondary dc motor, providing linear travel by applying torque to the nut-tube through the spline that extends along the nut-tube for the stroke length of the unit. Rotation of the nut-tube about the stationary jackscrew causes the nut-tube to move along the screw. A no-back device in each drive system prevents backdriving of the standby system.

The electrical interface, power and electronic control elements for active and standby control channels are assembled in separate enclosures designated the active actuator controller and standby actuator controller. These are mounted on the OMS/RCS pod structure. The active and standby actuator controllers are electrically and mechanically interchangeable.

The gimbal assembly provides control angles of plus or minus 6 degrees in pitch and plus or minus 7 degrees in yaw with clearance provided for an additional 1 degree for snubbing and tolerances. The engine null position is with the engine nozzles up 15 degrees 49 seconds (as projected in the orbiter XZ plane) and outboard 6 degrees 30 seconds (measured in the 15-degree 49-second plane).

The thrust vector control command subsystem operating program processes and outputs pitch and yaw OMS engine actuator commands and the actuator power selection discretes. The OMS TVC command SOP is active during operational sequences, orbit insertion (OMS-1 and OMS-2), orbit coast, deorbit, deorbit coast and return-to-launch-site abort.

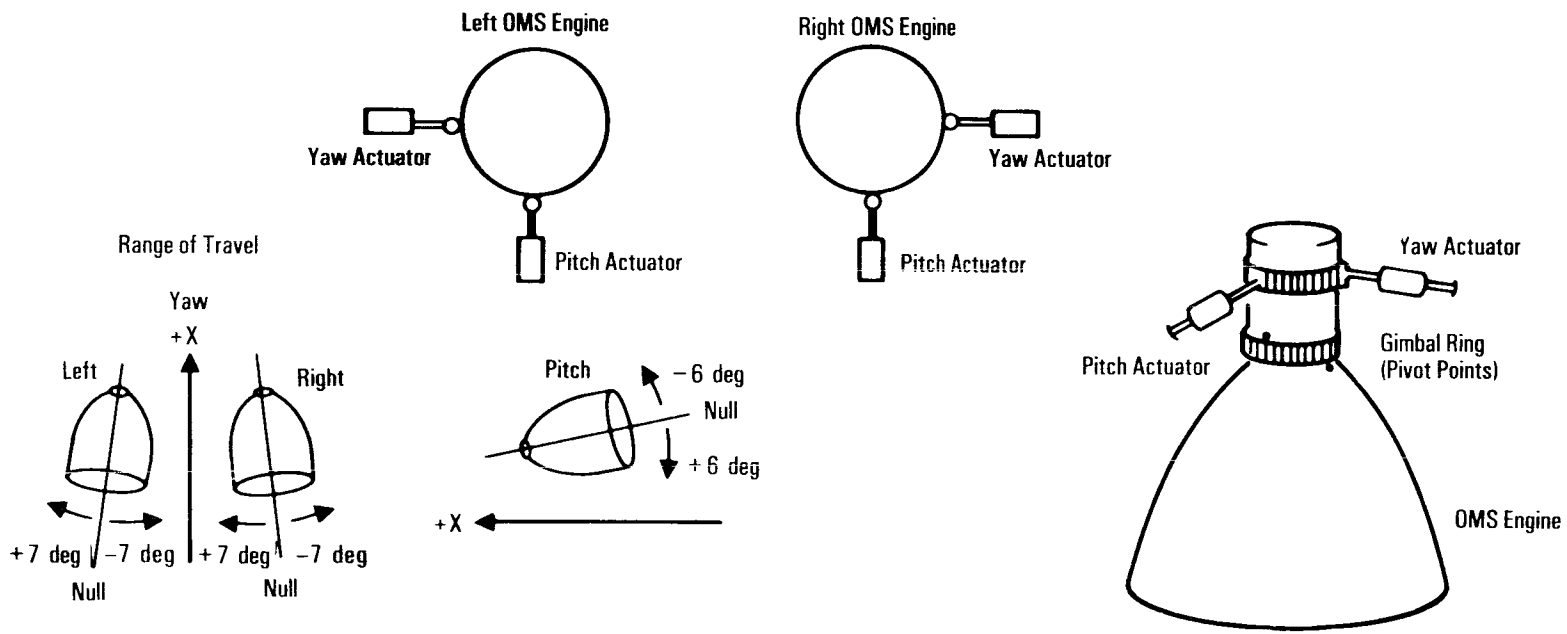




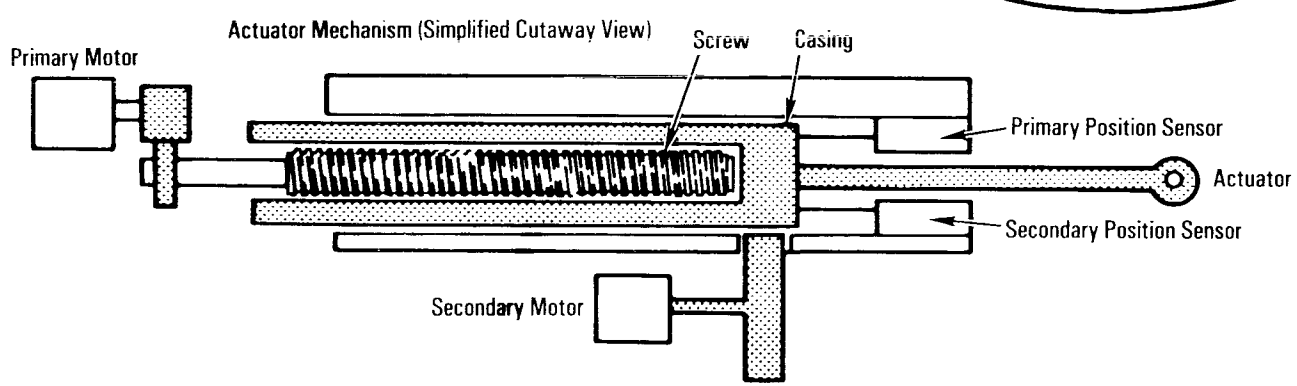


When the primary motor is driving, it rotates the screw, which moves the casing in and out.
When the secondary motor is driving, it rotates the casing, which moves in and out against the screw.

*Orbital Maneuvering System Gimbal Actuators*

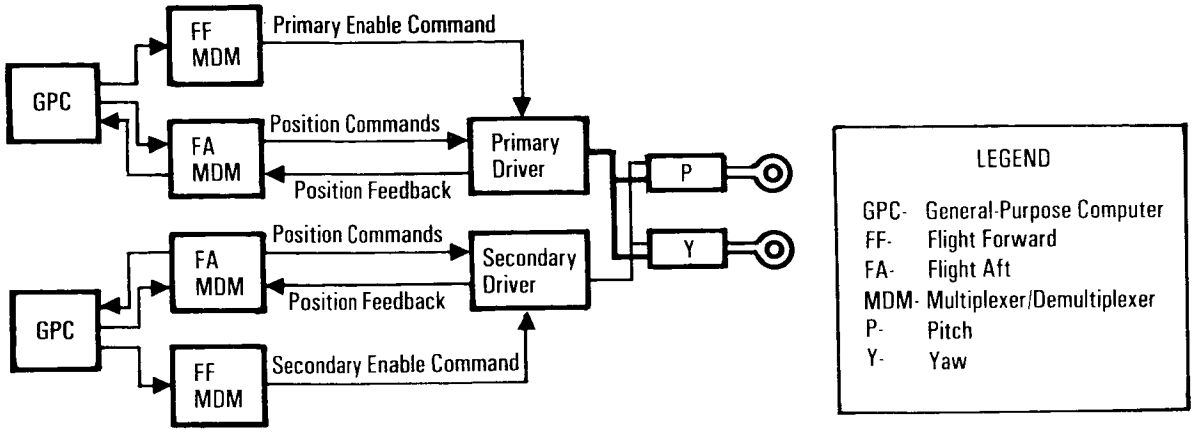


*Orbital Maneuvering System Thrust Vector Control Commands and Feedback*

The flight crew can select either the primary or the secondary motors of the pitch and yaw actuators by item entry on the maneuver display or can select actuators off. The actuator command outputs are selected by the TVC command SOP depending on the flag that is present, i.e., major modes, deorbit maneuver, orbit coast, and RTLS abort, center-of-gravity trim and gimbal check. The deorbit maneuver coast flag causes the TVC command SOP to output I-loaded values to command the engines to the entry stowed position. The presence of the RTLS abort and center-of-gravity trim flags causes the engines to be commanded to a predefined position with the thrust vector through the center of gravity. The major mode RTLS flag by itself will cause the engines to be commanded to a stowed position for return-to-launch-site entry. The gimbal check flag causes the engines to be commanded to plus 7 degrees yaw and 6 degrees pitch, then to minus 7 degrees yaw and 6 degrees pitch, and back to zero degrees yaw and pitch. In the absence of these flags, the TVC command SOP will output the digital autopilot gimbal actuator commands to the engine actuators. The backup flight control system allows only manual TVC during a thrusting period, but it is otherwise similar.

The OMS TVC feedback SOP monitors the primary and secondary actuator selection discretes from the maneuver display and performs compensation on the selected pitch and yaw actuator feedback data. This data is output to the OMS actuator fault detection and identification and to the maneuver display. The OMS TVC feedback SOP is active during orbit insertion (OMS-1 and OMS-2), orbit coast, deorbit maneuver and deorbit maneuver coast. The present OMS gimbal positions can be monitored on the maneuver CRT display when this SOP is active and the primary or secondary actuator motors are selected.

**THERMAL CONTROL.** OMS thermal control is achieved by insulation on the interior surface of the pods that enclose the OMS hardware components and the use of strip heaters. Wrap-around heaters and insulation condition the crossfeed lines. The heaters prevent propellant from freezing in the tanks and lines. The heater system is divided into two areas: the OMS/RCS pods and the aft fuselage crossfeed and bleed lines. Each heater system has two redundant heater systems, A and B, and is controlled by the *RCS/OMS heaters* switches on panel A14.

Each OMS/RCS pod is divided into eight heater areas. Each of the heater areas in the pods contains an A and B element, and each element has a thermostat that controls the temperature from 55 to 75 F. These heater elements are controlled by the *left pod* and

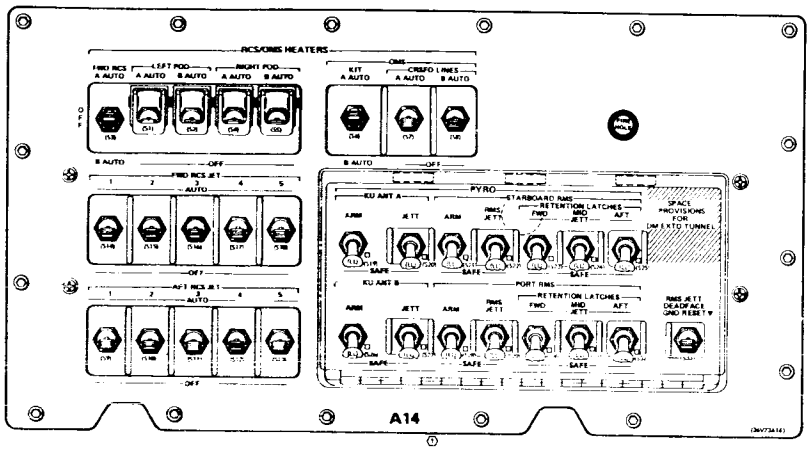


*Panel A14*

*right pod* switches on panel A14. Sensors located throughout the pods supply temperature information to the propellant thermal CRT display and telemetry.

The crossfeed line thermal control in the aft fuselage is divided into 11 heater areas. Each area is heated in parallel by heater systems A and B, and each area has a control thermostat to maintain temperature at 55 F minimum to 75 F maximum. Each circuit also has an overtemperature thermostat to protect against a failed-on heater switch. These heater elements are controlled by the respective *crsfd lines* switch on panel A14. Temperature sensors near the control thermostats on the crossfeed and bleed lines supply temperature information on the propellant thermal CRT display and telemetry.

**OMS-RCS INTERCONNECT.** An interconnect between the OMS crossfeed line and the aft RCS manifolds provides the capability to operate the aft RCS using 1,000 pounds per pod of OMS propellant for orbital maneuvers. The aft RCS may use OMS propellant from either OMS pod in orbit.

The orbital interconnect sequence is available during orbit operations and on-orbit checkout.

The flight crew must first configure the following switches (using a feed from the left OMS as an example): (1) position the *aft left RCS tank isolation 1/2, 3/4/5A* and *3/4/5B* and *aft right RCS tank isolation 1/2, 3/4/5A* and *3/4/5B* switches on panel O7 to *close;* (2) check that the talkback indicator above these switches indicates *cl*, and position the *aft left RCS crossfeed 1/2, 3/4/5* and *aft right RCS crossfeed 1/2, 3/4/5* switches to *open*; (3) check that the indicators show *op* and open the left OMS tank isolation A and B valves (panel O8) and verify the talkback indicators show *op*; (4) open the left OMS crossfeed A and B valves and verify the indicators show *op*; (5) close the right OMS crossfeed A and B valves and verify the indicators show *cl*; and (6) position the *left OMS He press/vapor isol valve A* switch in the *GPC* position. The left OMS-to-aft-RCS interconnect sequence can then be initiated by item entry on the RCS SPEC display.

The left OMS helium pressure vapor isolation valve A will be commanded open when the left OMS tank (ullage) pressure decays to 236 psig, and the open commands will be terminated 30 seconds later. If the left OMS tank (ullage) pressure remains below 236 psia, the sequence will set an OMS/RCS valve miscompare flag and will set a Class 3 alarm and a CRT fault message. The sequence also will enable the OMS-to-RCS gauging sequence at the same time.

The flight crew can terminate the sequence and inhibit the OMS-to-RCS gauging sequence by use of the *OMS press ena-off* item entry on the RCS SPEC display. The valves can then be reconfigured to their normal position on panels O7 and O8. The OMS-to-aft-RCS interconnect sequence is not available in the backup flight control system.

**OMS-TO-RCS GAUGING SEQUENCE.** The OMS-to-aft-RCS propellant quantities are calculated by burn time integration. Once each cycle, the accumulated aft RCS thruster cycles are used to compute the OMS propellant used since the initiation of gauging. The number of RCS thruster cycles is provided by the RCS command subsystem operating program to account for minimum-impulse firing of the RCS thrusters. The gauging sequence is initiated by item entry of the OMS right or OMS left interconnect on

For a single-engine thrusting maneuver, pitch gimbal angle would be the same as for a two-engine thrusting maneuver; but the yaw angle would be 6 degrees outward, which is plus 6 degrees for the left engine and minus 6 degrees for the right engine. The gimbal angles mentioned are approximate; the values vary since the location of the center of gravity depends on the vehicle configuration and propellant loading.

**Two-Engine Thrusting Maneuver Configuration**

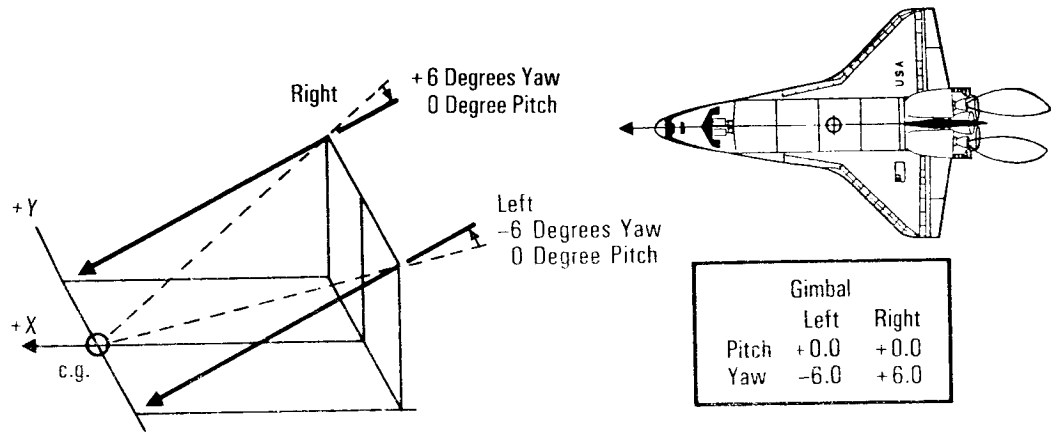


| | Gimbal Left | Gimbal Right |
|---|---|---|
| Pitch | +0.0 | +0.0 |
| Yaw | -6.0 | +6.0 |

**Single-Engine Thrusting Maneuver Configuration**

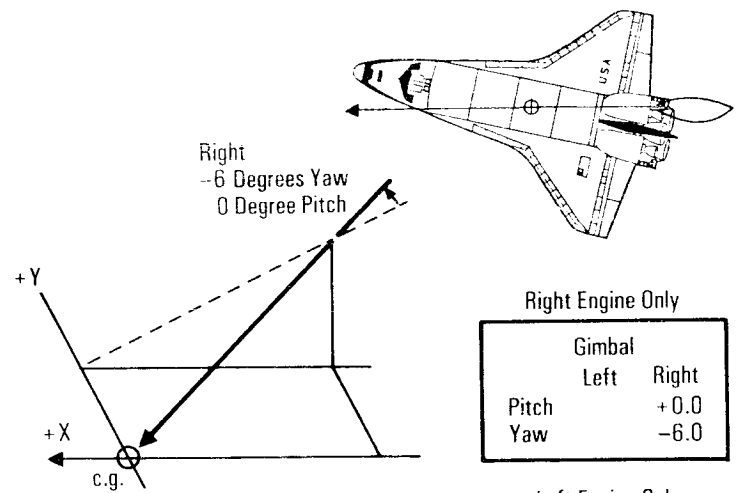


Right Engine Only

| | Gimbal Left | Gimbal Right |
|---|---|---|
| Pitch | | +0.0 |
| Yaw | | -6.0 |

Left Engine Only

| | Gimbal Left | Gimbal Right |
|---|---|---|
| Pitch | +0.0 | |
| Yaw | +6.0 | |

**Null Position**

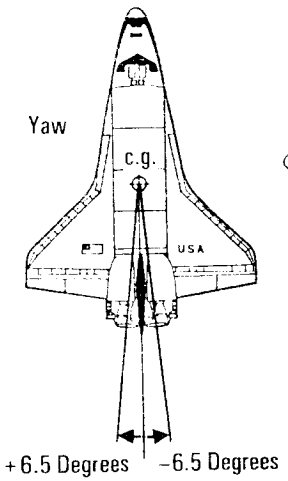


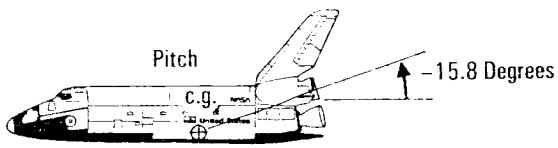


| | Gimbal Left | Gimbal Right |
|---|---|---|
| Pitch | +0.0 | +0.0 |
| Yaw | +0.0 | +0.0 |

*Orbital Maneuvering System Thrust Vector Control*

**Normal Feed**

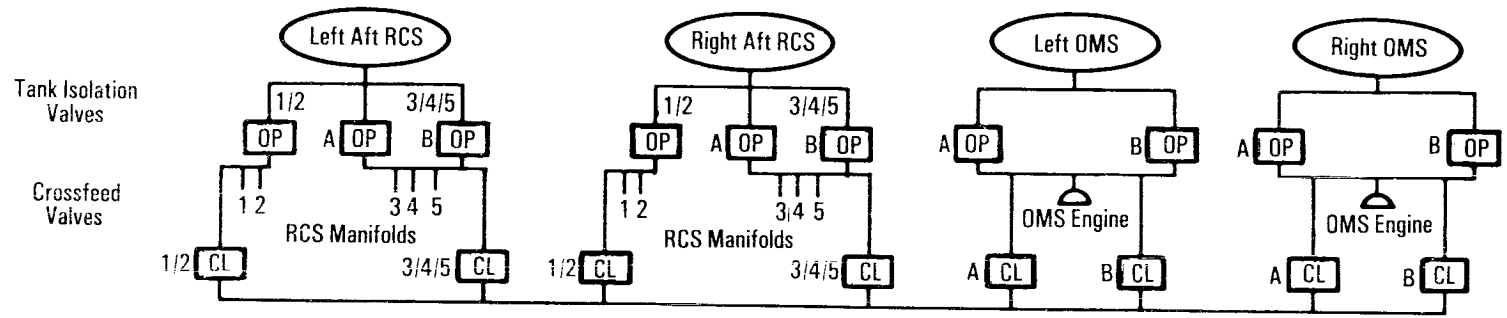


**Interconnect: Left OMS to RCS**

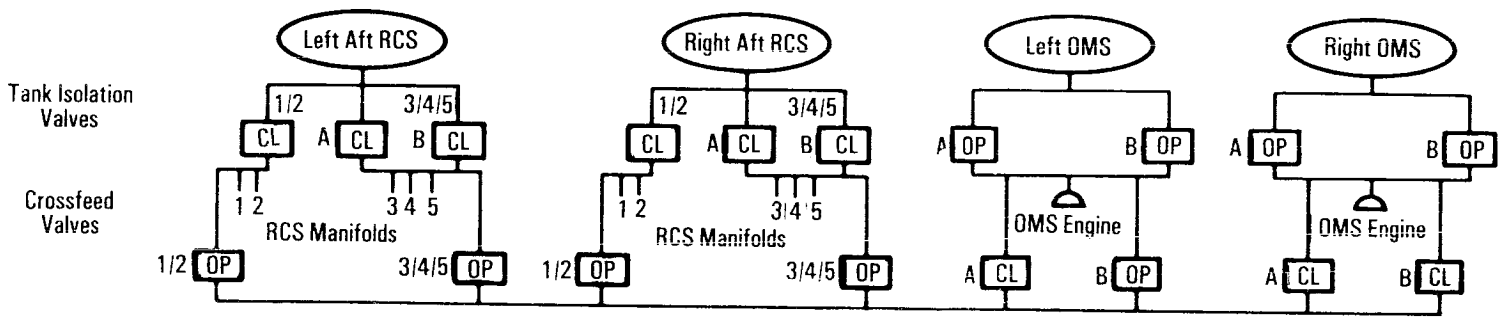


**Interconnect: Ascent Abort Sequence**

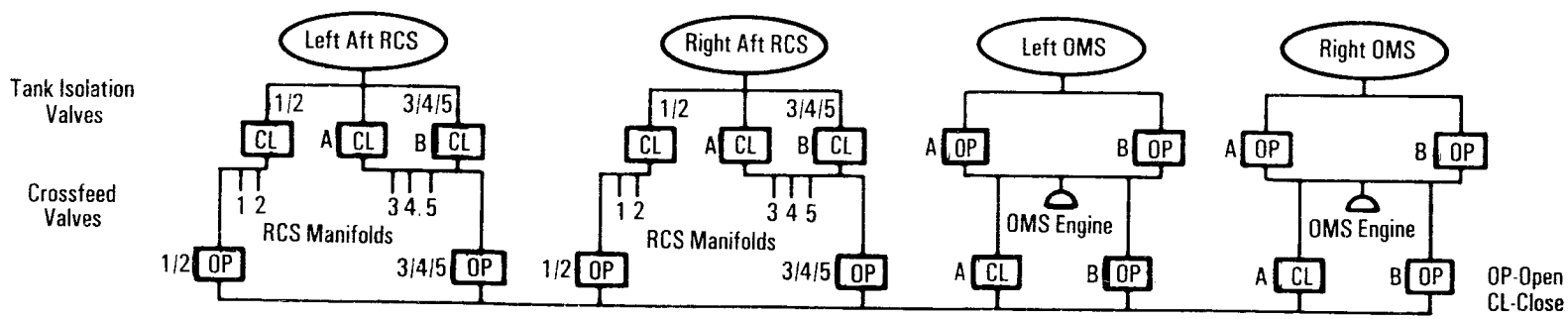


*Orbital Maneuvering System Crossfeed to Aft Reaction Control System*

the RCS SPEC CRT display and is terminated by the return to normal item entry.

The gauging sequence maintains a cumulative total of left and right OMS propellant used during OMS-to-aft-RCS interconnects and displays the cumulative totals as percentage of left and right OMS propellant on the RCS SPEC display. The flight crew will be alerted by a Class 3 alarm and a fault message when the total quantity used from either OMS pod exceeds 1,000 pounds or 8.37 percent.

**ABORT CONTROL SEQUENCES.** The abort control sequence is the software that manages, among other items, the OMS and aft RCS configuration and thrusting periods during ascent aborts to improve performance or to consume OMS and aft RCS propellants for orbiter center-of-gravity control.

Premission-determined parameters are provided for the OMS and aft RCS thrusting periods during aborts since the propellant loading and orbiter center of gravity vary with each mission.

The premission-determined parameters for the abort-to-orbit thrusting period are modified during flight, based on the vehicle velocity at abort initiation. The premission-determined parameters for abort once around are grouped with different values for early or late AOA. The return-to-launch-site parameters are contained in a single table.

The abort control sequence is available in OPS 1 and 6 and is initiated at SRB separation if selected before then or at the time of selection if after SRB separation.

**ATO and AOA Aborts.** The OMS and aft RCS begin thrusting as soon as an ATO or AOA is initiated with one main engine out.

For some aborts, an OMS-to-aft-RCS interconnect is not desired. A parallel aft RCS plus X thrusting period using aft RCS propellant and the four aft RCS plus X thrusters will be performed during the OMS-1 thrusting period to achieve the desired orbit. If a plus X aft RCS thrusting period is required before main engine cutoff, the abort control sequence will command the four aft plus X RCS jets on if vehicle acceleration is greater than 0.8 g and will monitor the RCS cutoff time to terminate the thrusting period. If an RCS propellant dump (burn) is required before MECO and vehicle acceleration is greater than 1.8 g, the abort control sequence will command an eight-aft-RCS-jet null thrust and monitor the RCS cutoff time to terminate the thrusting period.

In other abort cases, an OMS-to-aft-RCS interconnect is desired. This thrusting is performed with the OMS and four aft RCS plus X thrusters to consume OMS propellant for orbiter center-of-gravity control. More aft RCS jets can be commanded if needed to increase OMS propellant usage. For example, for an OMS propellant dump (burn), 14 aft RCS null jets can be commanded to thrust to improve orbiter center-of-gravity location.

If the amount of OMS propellant used before MECO leaves less than 28 percent of OMS propellants, a 15-second aft RCS ullage thrust is performed after MECO to provide a positive OMS propellant feed to start the OMS-1 thrusting period.

The OMS-to-aft-RCS interconnect sequence provides for an automatic interconnect of the OMS propellant to the aft RCS when required and reconfigures the propellant feed from the OMS and aft RCS tanks to their normal state after the thrusting periods have ended. The interconnect sequence is initiated by the abort control sequence.

In order to establish a known configuration of the valves, the interconnect sequence terminates the GPC commands to the following valves if they have not been terminated before honoring a request from the abort control sequence: left and right OMS crossfeed A and B valves, aft RCS crossfeed valves and aft RCS tank isolation valves.

A request from the abort control sequence for an OMS-to-aft-RCS interconnect will sequentially configure the OMS/RCS

valves as follows: close the left and right aft RCS propellant tank isolation valves, open the left and right OMS crossfeed A and B valves, and open the left and right aft RCS crossfeed valves. The OMS-to-aft-RCS interconnect complete flag is then set to true.

When the abort control sequence requests a return to normal configuration, all affected OMS/RCS propellant valve commands are removed to establish a known condition; and the interconnect sequence will then sequentially configure the valves as follows: close aft RCS crossfeed valves, close left and right OMS crossfeed valves and open aft RCS propellant tank isolation valves. The OMS-to-aft-RCS reconfiguration complete flag is then set to false, and the sequence is terminated.

**Return-to-Launch-Site Abort.** An RTLS abort requires the dumping of OMS propellant by burning the OMS propellant through both OMS engines and through the 24 aft RCS thrusters to improve abort performance and to achieve an acceptable entry orbiter vehicle weight and center-of-gravity location. The thrusting period is premission-determined and depends on the OMS propellant load.

The OMS engines start the thrusting sequence; and after the OMS-to-aft-RCS interconnect is complete, the aft RCS thrusters are commanded on. The OMS engines and RCS thrusters then continue their burn for a predetermined period. The interconnect sequence is the same for ATO and AOA aborts. The OMS and aft RCS will begin thrusting at SRB staging if the abort is initiated during the first stage of flight or immediately upon abort initiation during second stage.

**Contingency Abort.** A contingency abort is selected automatically at the loss of a second main engine or manually by the flight crew using an item entry on the RTLS TRAJ or RTLS TRANS CRT displays. For the contingency aborts, the OMS-to-aft-RCS interconnect is performed in a modified manner to allow continuous flow of propellants to the aft RCS jets for vehicle control and to allow contingency rapid dump (burning) of OMS and RCS propellants. The abort control sequence tracks the total time the OMS and aft RCS are on to determine the amount of propellants used.

The request for an interconnect will cause the interconnect sequence to configure the valves sequentially as follows: open the aft RCS crossfeed valves, open the left OMS crossfeed valves A, open the right OMS crossfeed valves B, close the left and right aft RCS tank isolation valves, open the left OMS crossfeed valves B and open the right OMS crossfeed valves A. The OMS-to-aft-RCS interconnect complete flag will then be set to true.

If the rapid dump is selected before MECO, the OMS-to-aft-RCS interconnect occurs, and both OMS engines and the 24 aft RCS jets are commanded to thrust until the desired amount of propellant has been consumed. The rapid dump will be interrupted during external tank separation if the thrusting period is not completed before MECO; otherwise, the thrusting period terminates when thrusting time equals zero or if the normal acceleration exceeds a threshold value.

Upon completion of the thrusting period, the OMS-to-aft-RCS configuration flag will be set to false, and the sequence will be terminated. A return-to-normal-configuration request by the abort control sequence will cause the interconnect sequence to configure the valves sequentially as follows: open aft RCS propellant tank isolation valves, close the aft RCS crossfeed valves, and close the left and right OMS crossfeed A and B valves. The OMS-to-aft-RCS interconnect complete flag will be set to false, and the sequence will be terminated.

**OMS ENGINE FAULT DETECTION AND IDENTIFICATION.** The OMS engine FDI function detects and identifies off-nominal performance of the OMS engine, such as off-failures during OMS thrusting periods, on-failures after or before a thrusting period and high or low engine chamber pressures.

Redundancy management software performs OMS engine FDI. It is assumed that the flight crew arms only the OMS engine to be used; the OMS engine not armed cannot be used for thrust-

ing. FDI will be initialized at SRB ignition and terminated after the OMS-1 thrusting period or, in the case of an RTLS abort, at the transition from RTLS entry to the RTLS landing sequence program. The FDI also will be initiated before each OMS burn and will be terminated after the OMS thrusting period is complete.

The OMS engine FDI uses both a velocity comparison and a chamber pressure comparison method to determine a failed-on or failed-off engine. The velocity comparison is used only after MECO since the OMS thrust is small compared to main propulsion thrust before MECO.

The measured velocity increment is compared to a predetermined one-engine and two-engine acceleration threshold value by the redundancy management software to determine the number of engines actually firing. This information, along with the assumption that an armed engine is to be used, allows the software to determine if the engine has low thrust or has shut down prematurely.

The chamber pressure comparison test compares a predetermined threshold chamber pressure level to the measured chamber pressure to determine a failed engine (on, off or low thrust).

The engine-on command and the chamber pressure are used before MECO to determine a failed engine. The velocity indication and the chamber pressure indication are used after MECO to determine a failed engine. If the engine fails the chamber pressure

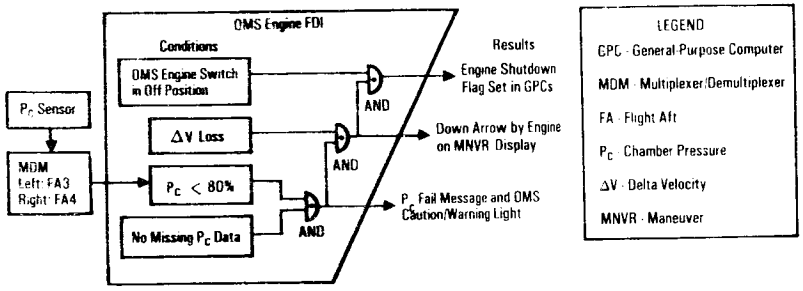


*Orbital Maneuvering System Fault Detection and Identification Software*

test but passes the velocity test after MECO, the engine will be considered failed. Such a failure would illuminate the red *right OMS* or *left OMS* caution and warning light on panel F7 and the master alarm and produce a fault message. In addition, if an engine fails the chamber pressure and velocity tests, a down arrow is displayed on the maneuver CRT next to the failed engine.

When the flight crew disarms a failed engine by turning the *arm/press* switch on panel C3 to *off*, a signal is sent to the OMS thrusting sequence to shut down the engine and to signal guidance to reconfigure. Guidance reconfigures and downmodes from two OMS engines, to one OMS engine, to four plus X RCS jets.

**OMS GIMBAL ACTUATOR FDI.** The OMS gimbal actuator FDI detects and identifies off-nominal performance of the pitch and yaw gimbal actuators of the OMS engines.

The OMS gimbal actuator FDI is divided into two processes. The first determines if the actuators should move from their present position. If the actuators must move, the second part determines how much they should move and whether the desired movement has occurred.

The first part checks the actuators' gimbal deflection error (which is the difference between the commanded new position and the actuators' last known position) and determines whether the actuators should extend or retract or if they are being driven against a stop. If the actuators are in the desired position or being driven against a stop, the first part of the process will be repeated. If the first part determines that the actuator should move, the second part of the actuator FDI process is performed.

The second part of the actuator FDI process checks the present position of each actuator against its last known position to determine whether the actuators have moved more than a threshold amount. If the actuators have not moved more than this amount, an actuator failure is incremented by one. Each time an actuator fails this test, the failure is again incremented by one. When the actuator failure counter reaches an I-loaded value of four, the actuator is declared failed and a fault message is output.

The actuator failure counter is reset to zero any time the actuator passes the threshold test.

The first and second parts of the actuator FDI process continue to perform in this manner. The actuator FDI process can detect full-off gimbal failures and full-on failures indirectly. The full-on failure determines that the gimbal has extended or retracted too far and commands reverse motion. If no motion occurs, the actuator will be declared failed. The flight crew's response to a failed actuator is to select the secondary actuator electronics by item entry on the maneuver CRT display.

The contractors are McDonnell Douglas Astronautics Co., St. Louis, Mo. (OMS/RCS pod assembly and integration); Aerojet Tech Systems Co., Sacramento, Calif. (OMS engine); Aerojet Manufacturing Co., Fullerton, Calif. (OMS propellant tanks); Aircraft Contours, Los Angeles, Calif. (OMS pod edge member); Brunswick-Wintec, El Segundo, Calif. (OMS propellant tank acquisition screen assembly); Consolidated Controls, El Segundo, Calif. (high- and low-pressure solenoid valves and OMS regulators); Fairchild Stratos, Manhattan Beach, Calif. (hypergolic servicing couplings); Metal Bellows Co., Chatsworth, Calif. (alignment bellows); Simmonds Precision Products Inc., Vergennes, Vt. (OMS propellant gauging system); SSP Products, Burbank, Calif. (gimbal bellows assembly); Tayco Engineering, Long Beach, Calif. (electrical heaters); AiResearch Manufacturing Co., Torrance, Calif. (gimbal actuators and controllers); Futurecraft Corp., City of Industry, Calif. (OMS engine valve components); L.A. Gauge, Sun Valley, Calif. (ball valves); PSM Division of Fansteel, Los Angeles, Calif. (OMS nozzle extension); Rexnord Inc., Downers Grove, Ill. (OMS engine bearings); Sterer Engineering and Manufacturing, Pasadena, Calif. (OMS engine pressure regulator/relief valve assembly); Parker-Hannifin, Irvine, Calif. (OMS propellant tank isolation valves, relief valves, manifold interconnect valves); Rockwell International, Rocketdyne Division, Canoga Park, Calif. (OMS check valves); Brunswick, Lincoln, Neb. (OMS helium tanks); Sundstrand, Rockford, Ill. (heater thermostats).

## REACTION CONTROL SYSTEM

The orbiter's reaction control system comprises the forward and aft RCS. The forward RCS is located in the forward fuselage nose area. The aft (right and left) RCS is located with the orbital maneuvering system in the OMS/RCS pods.

Each RCS consists of high-pressure gaseous helium storage tanks, pressure regulation and relief systems, a fuel and oxidizer tank, a system that distributes propellant to its engines, and thermal control systems (electrical heaters).

The forward and aft RCS units provide the thrust for attitude (rotational) maneuvers (pitch, yaw and roll) and for small velocity changes along the orbiter axis (translation maneuvers).

The ascent profile of a mission determines the interaction of the RCS units, which depends on the number (one or two) of OMS thrusting periods. After main engine cutoff, the forward and aft thrusters are used to maintain attitude hold until external tank separation. Then the reaction control system provides a minus (negative) Z translation maneuver of about 4 feet per second to move the orbiter away from the external tank. Upon completion of the maneuver, the RCS holds the orbiter attitude until it is time to maneuver to the OMS-1 thrusting attitude. Although the targeting data for the OMS-1 thrusting period is selected before launch, the target data in the onboard general-purpose computers can be modified by the flight crew via the CRT and keyboard, if necessary, before the OMS thrusting period.

The first thrusting period of the orbital maneuvering system (OMS-1) uses both OMS engines to raise the orbiter to a predetermined elliptical orbit. During the OMS-1 thrusting period, vehicle attitude is maintained by gimbaling (swiveling) the OMS engines. The reaction control system normally does not operate during an OMS thrusting period. If, during an OMS thrusting period, the gimbal rate or gimbal limits are exceeded, RCS roll control would be required; or if only one OMS engine is used during a thrusting period, RCS roll control would be required.

During the OMS-1 thrusting period, the liquid oxygen and liquid hydrogen trapped in the main propulsion system ducts are dumped. The liquid oxygen is dumped out through the space shuttle main engines' combustion chambers, and the liquid hydrogen is dumped out through the right-side T-0 umbilical overboard fill and drain system. This velocity is precomputed in conjunction with the OMS-1 thrusting period.

Upon completion of the OMS-1 thrusting period, the reaction control system can be used to null any residual velocities, if required. The flight crew uses the rotational hand controller or translational hand controller to command the applicable RCS thrusters to null the residual velocities. The reaction control system then provides attitude hold until it is time to maneuver to the OMS-2 thrusting attitude.

The second thrusting period of the orbital maneuvering system (OMS-2) uses both OMS engines near the apogee of the orbit established by the OMS-1 thrusting period to circularize the predetermined orbit for that mission. The targeting data for the OMS-2 thrusting period is selected before launch; however, the target data in the onboard computers can be modified by the flight crew on the computer keyboard, if necessary, before the OMS thrusting period.

Upon completion of the OMS-2 thrusting period, the reaction control system can be used to null any residual velocities, if required. It is then used for attitude hold and minor translation maneuvers as required for on-orbit operations. The flight crew can select primary or vernier RCS thrusters for attitude control in orbit. Normally, the vernier thrusters are selected for on-orbit attitude hold.

If the ascent profile for a mission uses a single OMS thrusting maneuver, it is referred to as direct insertion. In a direct-insertion ascent profile, the OMS-1 thrusting period after main engine cutoff is eliminated and is replaced with a 5-feet-per-second RCS translation maneuver to facilitate the MPS dump. The RCS is used for attitude hold after the 5-feet-per-second translation

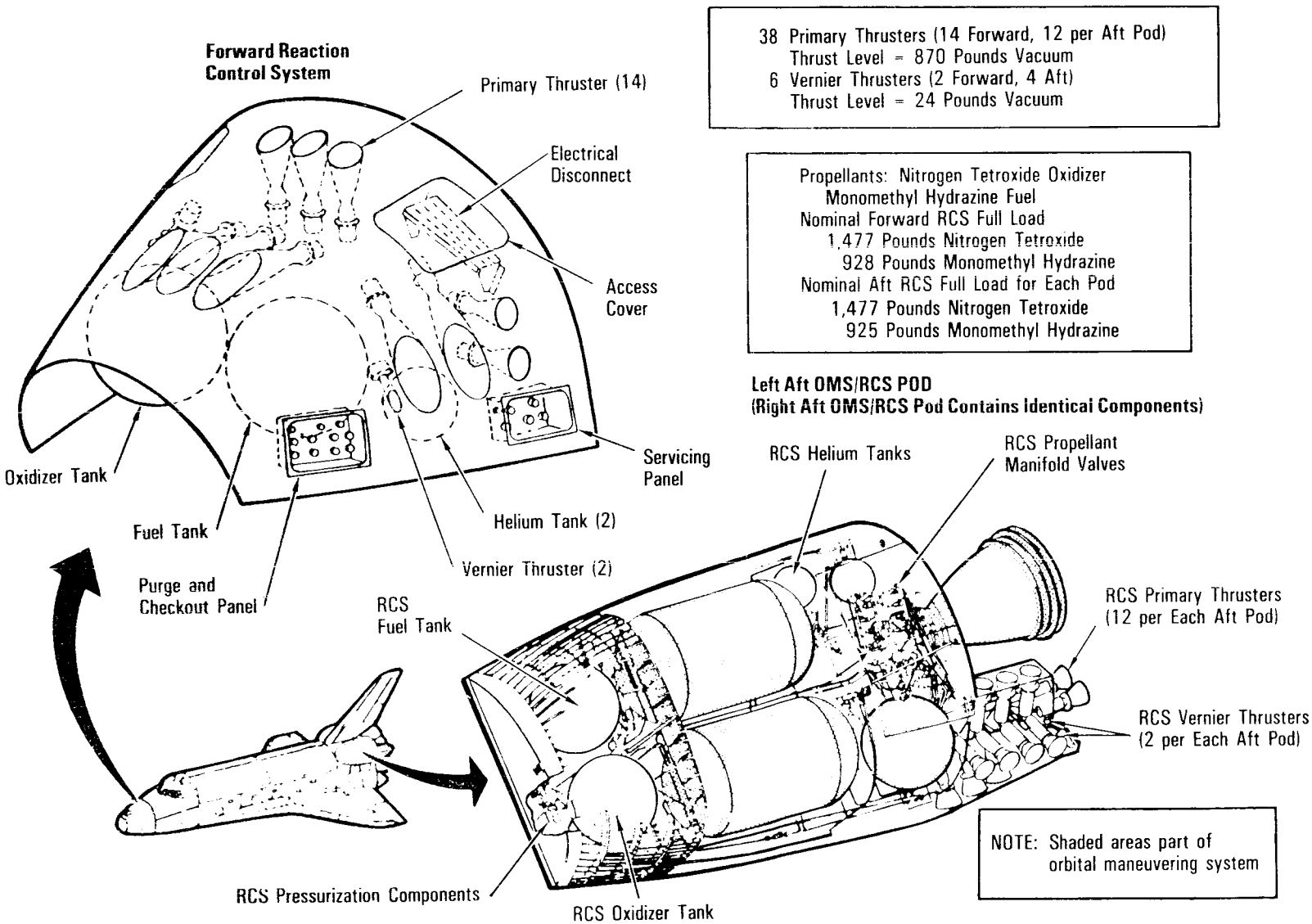


*Reaction Control System*

maneuver. The OMS-2 thrusting period is then used to achieve orbit insertion. This profile allows the MPS to provide more energy for orbit insertion and permits easier use of onboard software.

Additional OMS thrusting periods using one or both OMS engines are performed on orbit as needed for rendezvous, for payload deployment or for transfer to another orbit.

For the deorbit thrusting maneuver, the two OMS engines are used. Target data for the deorbit maneuver is computed on the ground, loaded in the onboard general-purpose computers by uplink and voiced to the flight crew for verification of loaded values. The flight crew then initiates an OMS gimbal test by item entry in the CRT keyboard unit.

Before the deorbit thrusting period, the flight crew moves the spacecraft to the desired attitude using the thrusters. After the OMS thrusting period, the RCS is used to null any residual velocities, if required. The spacecraft is then moved to the proper entry interface attitude using the RCS. The remaining propellants aboard the forward RCS are dumped by burning the propellants through the forward RCS yaw thrusters before entry interface if orbiter center-of-gravity control is necessary.

The aft RCS plus X jets can be used to complete any OMS deorbit thrusting period if an OMS engine fails. In this case, the OMS-to-aft-RCS interconnect can be used to feed OMS propellant to the aft RCS.

From an entry interface of 400,000 feet, the orbiter is controlled in roll, pitch and yaw with the aft RCS thrusters. The orbiter's ailerons become effective at a dynamic pressure of 10 pounds per square foot, and the aft RCS roll jets are deactivated. At a dynamic pressure of 20 pounds per square foot, the orbiter's elevons become effective, and the aft RCS pitch jets are deactivated. The rudder is activated at Mach 3.5, and the aft RCS yaw jets are deactivated at Mach 1 and approximately 45,000 feet.

Two helium tanks supply gaseous helium pressure to the oxidizer and fuel tanks. The oxidizer and fuel are then supplied under gaseous helium pressure to the RCS engines. Nitrogen tetroxide is the oxidizer, and monomethyl hydrazine is the fuel. The propellants are Earth-storable and hypergolic (they ignite upon contact with each other). The propellants are supplied to the engines, where they atomize, ignite and produce a hot gas and thrust.

The forward RCS has 14 primary and two vernier engines. The aft RCS has 12 primary and two vernier engines in each pod. The primary RCS engines provide 870 pounds of vacuum thrust each, and the vernier RCS engines provide 24 pounds of vacuum thrust each. The oxidizer-to-fuel ratio for each engine is 1.6-to-1. The nominal chamber pressure of the primary engines is 152 psia. For each vernier engine, it is 110 psia.

The primary engines are reusable for a minimum of 100 missions and are capable of sustaining 20,000 starts and 12,800 seconds of cumulative firing. The primary engines are operable in a maximum steady-state thrusting mode of one to 150 seconds, with a maximum single-mission contingency of 800 seconds for the aft RCS plus X engines and 300 seconds maximum for the forward RCS minus X engines as well as in a pulse mode with a minimum impulse thrusting time of 0.08 second above 125,000 feet. The expansion ratio (exit area to throat area) of the primary engines ranges from 22-to-1 to 30-to-1. The multiple primary thrusters provide redundancy.

The vernier engines' reusability depends on chamber life. They are capable of sustaining 330,000 starts and 125,000 seconds of cumulative firings. The vernier engines are operable in a steady-state thrusting mode of one to 125 seconds maximum as well as in a pulse mode with a minimum impulse time of 0.08 second. The vernier engines are used for finite maneuvers and stationkeeping (long-time attitude hold) and have an expansion ratio that ranges from 20-to-1 to 50-to-1. The vernier thrusters are not redundant.

**PRESSURIZATION SYSTEM.** Each RCS has two helium storage tanks, four helium isolation valves, four pressure regulators, two relief valves, two check valves, two manually operated valves and servicing connections for draining and filling.

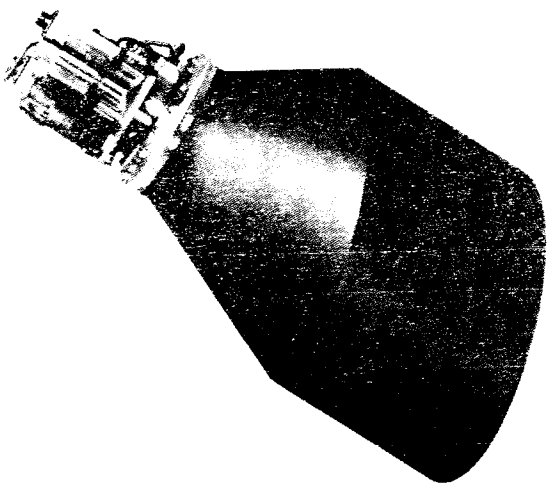

*Primary Engine*

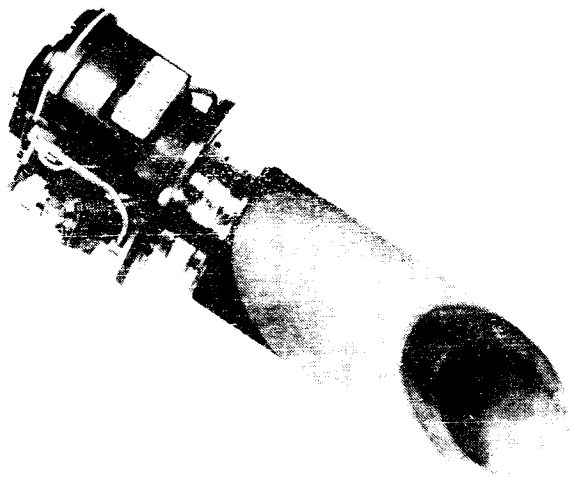

*Vernier Engine*



Thrust = 870 Pounds Vacuum (Two Engines Thrusting, 238 psia) Inlet Pressure at 70 F Propellant, 22.0 Nozzle Area Ratio, No Scarf

Chamber Pressure = 152 psia Nominal

Mixture Ratio = 1.6 Vacuum (Oxidizer to Fuel)

Specific Impulse = 280 Seconds Vacuum Nominal (22.0 Nozzle Area Ratio, No Scarf)

Thrust = 24 Pounds Vacuum (246 psia at 70 F Propellant)

Chamber Pressure = 110 psia Nominal

Mixture Ratio = 1.6 Vacuum (Oxidizer to Fuel)

Specific Impulse = 265 Seconds, Vacuum Nominal (20.7 Nozzle Area Ratio, No Scarf)

*Reaction Control System Primary and Vernier Engines*

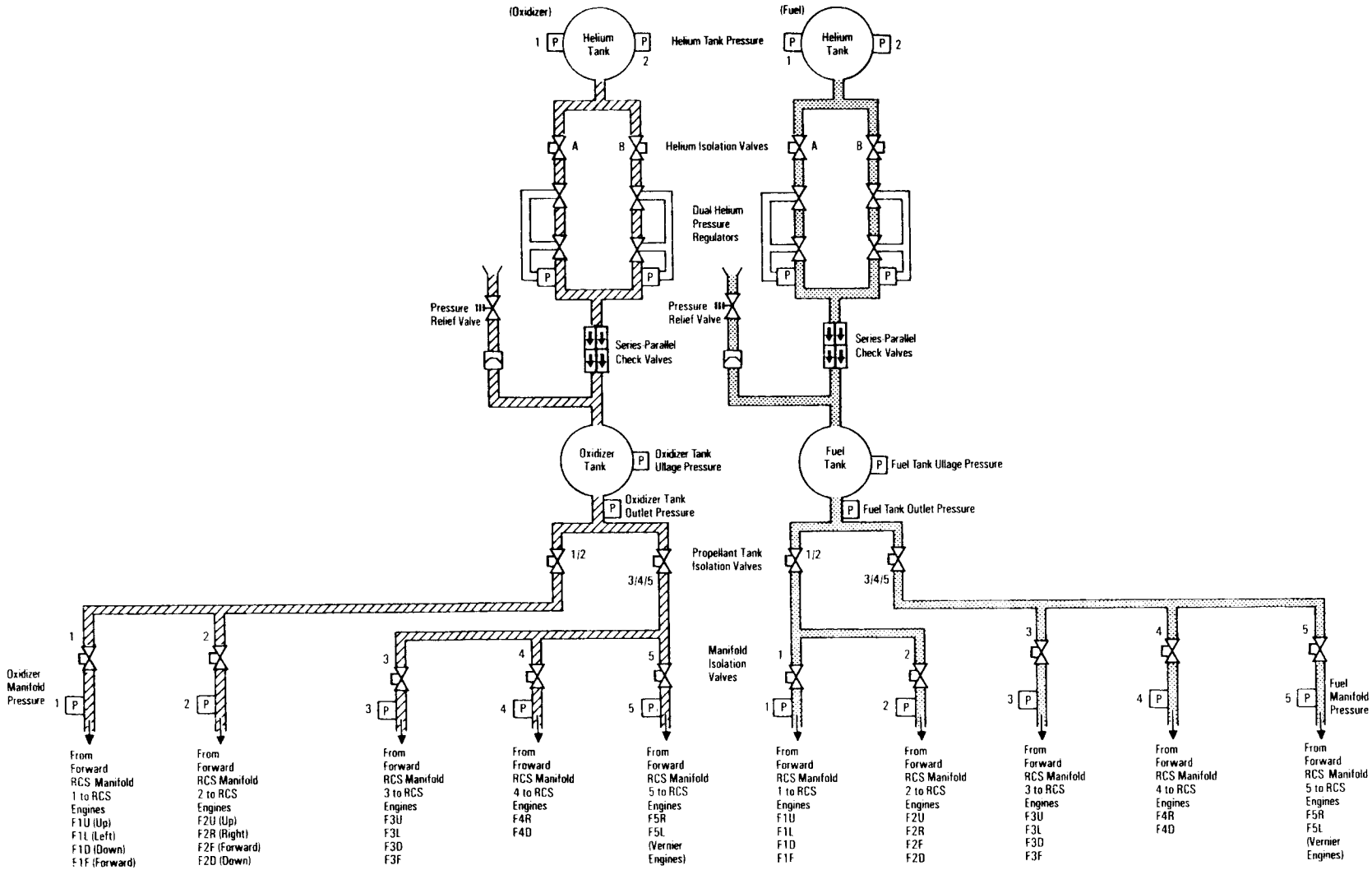


*Forward Reaction Control System Pressurization and Propellant Feed System*

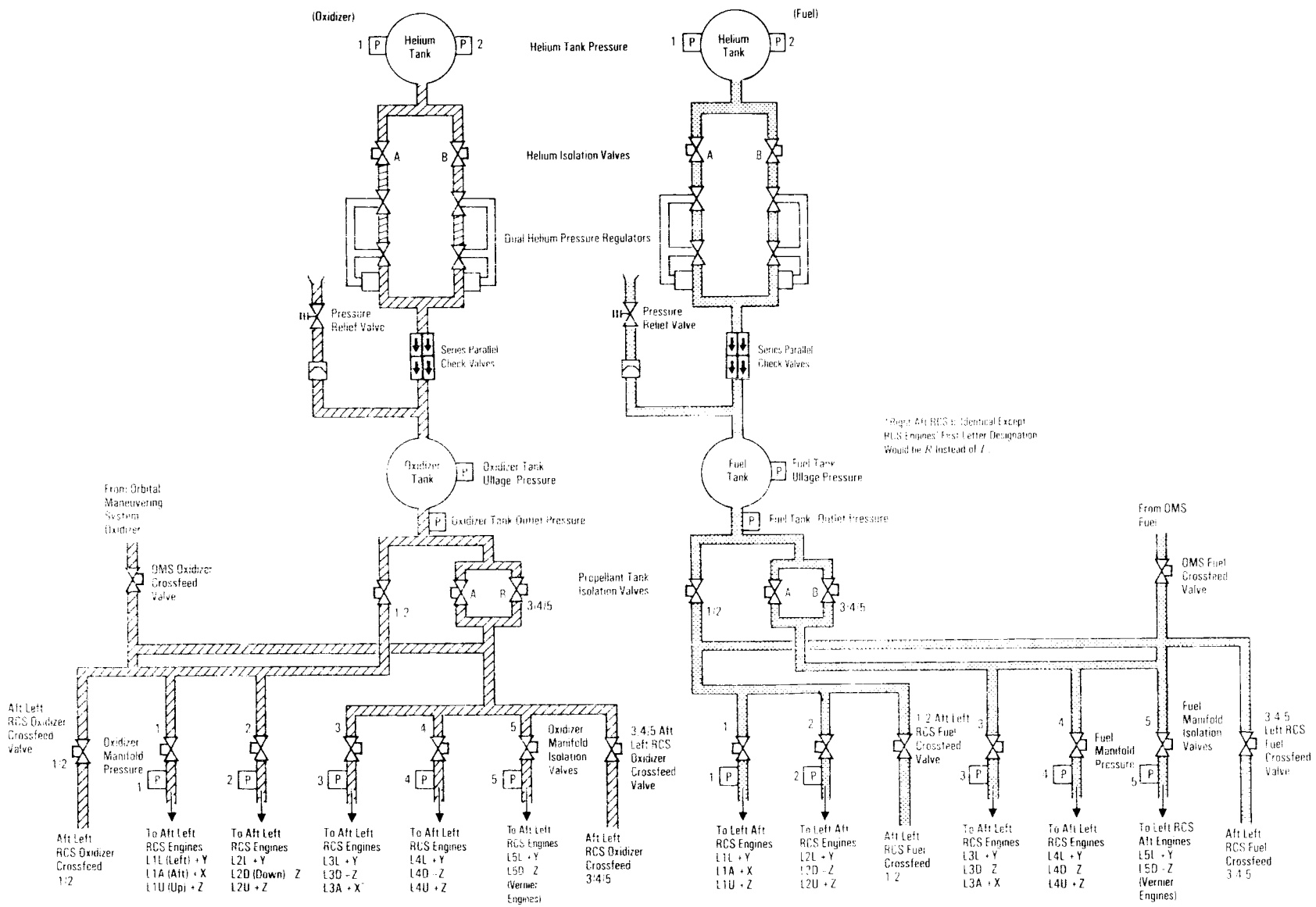


*Left Aft Reaction Control System Pressurization and Propellant Feed System*

The helium storage tanks are composite spheres and consist of a titanium liner with a Kevlar structural overwrap that increases safety and decreases the tank weight over conventional titanium tanks. Each helium tank is 18.71 inches in diameter with a volume of 3,043 cubic inches and a dry weight of 24 pounds. Each helium tank is serviced to 3,600 psia.

The two helium tanks in each RCS supply gaseous helium individually, one to the fuel tank and one to the oxidizer tank.

There are two parallel helium isolation valves between the helium tanks and the pressure regulators in each RCS. When open, the helium isolation valves permit the helium source pressure to flow to the propellant tank. The helium isolation valves are controlled by the *fwd RCS He press A/B* switches on panel O8 and the *aft left RCS He press A/B* and *aft right RCS He press A/B* switches on panel O7. Each switch controls two helium isolation valves, one in the oxidizer helium line and one in the fuel helium line. The switch positions are *open, GPC* and *close*. When positioned to *GPC*, the pair of valves is automatically opened or closed upon command from the orbiter computer. The *open/close* position permits manual control of that pair of valves.

Electrical power is momentarily applied through logic in an electrical load controller assembly to energize the two helium isolation solenoid valves open and to magnetically latch the valves open. To close the two helium isolation valves, electrical power is momentarily applied through the load controller to energize a solenoid surrounding the magnetic latch of the two helium isolation valves, which allows spring and helium pressure to force the valve closed.

A position microswitch in each valve indicates valve position to an electrical controller assembly and controls a position indicator (talkback) above each switch on panels O7 and O8. When both valves (helium fuel and helium oxidizer) are open, the talkback indicates *op*; and when both valves are closed, the talkback indicates *cl*. If one valve is open and the other is closed, the talkback indicates barberpole.

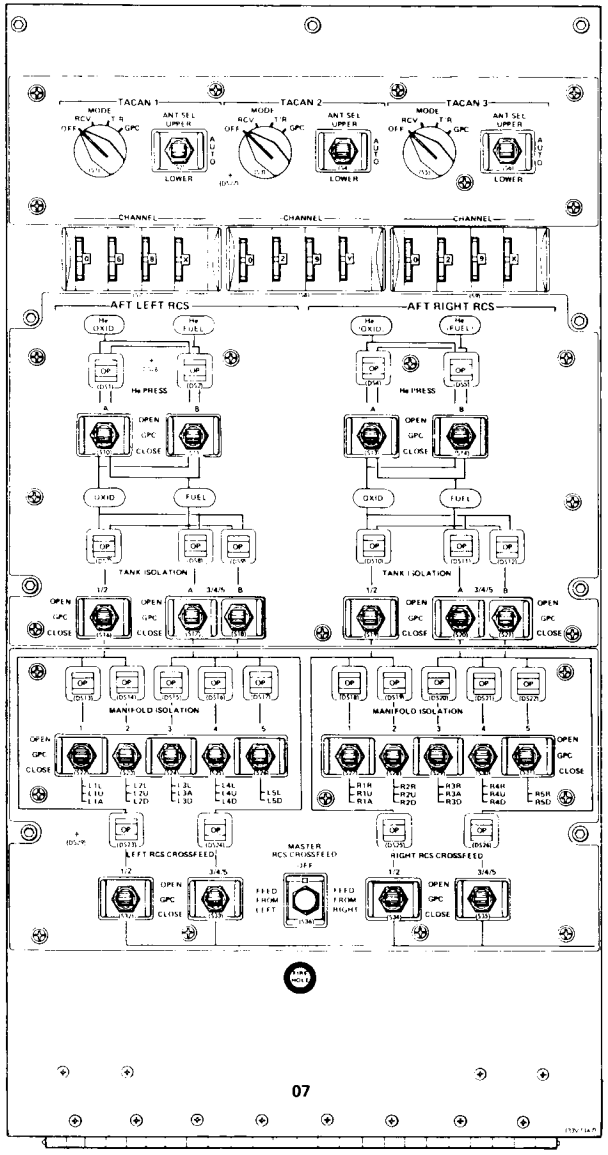


*Panel O7*

The RCS helium supply pressure is monitored on panel O3. The rotary switch on panel O3 positioned to *RCS He X10* allows the forward and aft RCS helium pressures to be displayed on the *RCS/OMS press fuel* and *oxid* meters on panel O3.

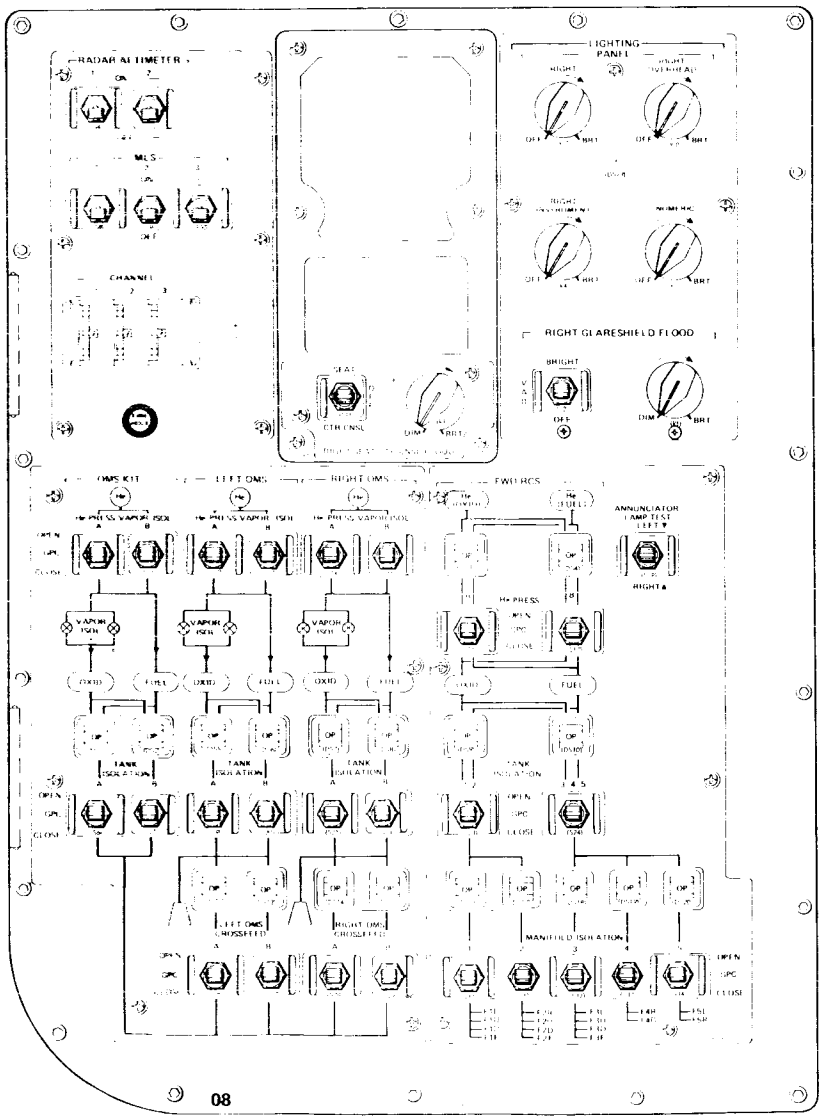


*Panel O8*

Helium pressure is regulated by two regulator assemblies, connected in parallel, downstream of the helium isolation valves. Each assembly contains two stages, a primary and a secondary, connected in series. If the primary stage fails open, the secondary stage regulates the pressure. The primary regulates the pressure at 242 to 248 psig, the secondary at 253 to 259 psig.

The check valve assembly, which consists of four poppets in a series-parallel arrangement, is located between the pressure regulator assemblies and the propellant tank. The series arrangement limits the backflow of propellant vapor and maintains propellant tank pressure integrity in the event of an upstream helium leak. The parallel arrangement ensures the flow of helium pressure to the propellant tank if a series check valve fails in the closed position.

A helium pressure relief valve assembly is located between the check valve assemblies and propellant tank and will vent excessive pressure overboard before it reaches the propellant tank. Each valve consists of a burst diaphragm, filter and relief valve. The non-fragmentation diaphragm provides a positive seal against helium leakage and will rupture between 324 to 340 psig. The filter prevents any particles of the burst diaphragm from reaching the relief valve seat. The relief valve relieves at 315 psig minimum. The relief valve is sized to handle, without damaging the propellant tank, helium pressure flow volume if a regulator malfunctions to a full-open position.

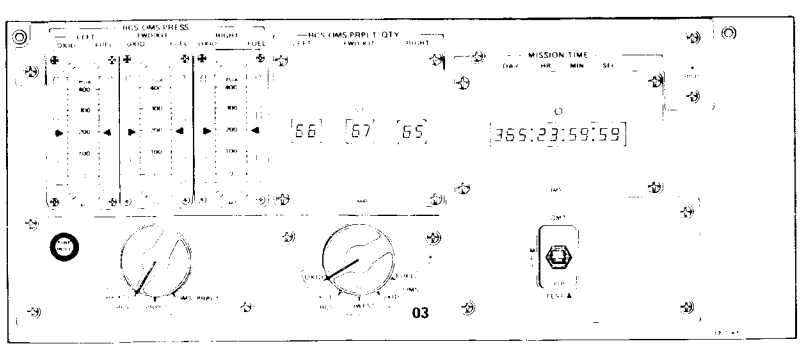


*Panel O3*

**PROPELLANT SYSTEM.** The system that distributes the propellants to the RCS thrusters consists of fuel and oxidizer tanks, tank isolation valves, manifold isolation valves, crossfeed valves, distribution lines and filling and draining service connections.

Each RCS contains two spherical propellant tanks, one for fuel and one for oxidizer, constructed of titanium and 39 inches in diameter.

The nominal full load of the forward and aft RCS tanks in each pod is 1,464 pounds in the oxidizer tanks and 923 pounds in the fuel tanks. The dry weight of the forward tanks is 70.4 pounds. The dry weight of the aft tanks is 77 pounds.

Each tank is pressurized with helium, which expels the propellant into an internally mounted, surface-tension, propellant acquisition device that acquires and delivers the propellant to the RCS thrusters on demand. The propellant acquisition device is required because of the orbiter's orientation during boost, on orbit, and during entry and because of the omnidirectional acceleration spectrum, which ranges from very high during boost, entry or abort to very low during orbital operation. The forward RCS propellant tanks have propellant acquisition devices designed to operate primarily in a low-gravity environment, whereas the aft RCS propellant tanks are designed to operate in both high and low gravity, ensuring propellant and pressurant separation during tank operation.

A compartmental tank with individual screen devices in both the upper and lower compartments supplies propellant independent of tank load or orientation. The devices are constructed of stainless steel and are mounted in the titanium tank shells. A titanium barrier separates the upper and lower compartments in each tank.

At orbiter and external tank separation and for orbital operations, propellant flows from the upper compartment bulk region, into the channel network, to the upper compartment transfer tube and into the lower compartment bulk region. Flow continues from the upper compartment until gas is ingested into the upper compartment device and transferred to the lower compartment.

The lower compartment of the forward RCS propellant tanks will expel propellant to depletion, as in the case of the upper compartment; however, orbital operations are terminated with the forward RCS at an expulsion efficiency of 91 percent to preclude gas ingestion to the forward RCS engines.

The aft RCS propellant tanks' lower compartment is not used on orbit, but is required for entry. The aft RCS tank propellants are positioned approximately 100 degrees away from the tank outlet because of the influence of up to 2.5-g acceleration. As the acceleration builds up, the channel screen in the ullage area of both devices breaks down and ingests gas. As entry expulsion continues, propellant is withdrawn from the lower compartment until a 96.5-percent expulsion efficiency is achieved.

The aft RCS propellant tanks incorporate an entry collector, sumps and gas traps to ensure proper operation during abort and entry mission phases. Because of these components, the aft RCS propellant tanks are approximately 7 pounds heavier than the forward RCS propellant tanks.



The left, forward and right RCS fuel and oxidizer tank ullage pressures can be monitored on panel O3. When the rotary switch on panel O3 is positioned to *RCS prplnt*, the pressures are displayed on the *RCS/OMS press fuel, oxid* meters on panel O3. The pressures will illuminate the *left RCS, fwd RCS* or *right RCS* red caution and warning light on panel F7, respectively, if that module's tank ullage pressure is below 200 psia or above 312 psia.

**RCS QUANTITY MONITOR.** The RCS quantity monitor sequence uses the general-purpose computer to calculate the usable percent of fuel and oxidizer in each RCS module. The RCS quantities are computed based on the pressure, volume and temperature method, which requires that pressure and temperature measurements be combined with a unique set of constants to calculate the percent remaining in each of the six propellant tanks. Correction factors are included for residual tank propellant at

depletion, gauging inaccuracy and trapped line propellant. The computed quantity represents the usable (rather than total) quantity for each module and makes it possible to determine if the difference between each pair of tanks exceeds a preset tolerance (leakage detection).

The calculations include effects of helium gas compressibility, helium pressure vessel expansion at high pressure, oxidizer vapor pressure as a function of temperature, and oxidizer and fuel

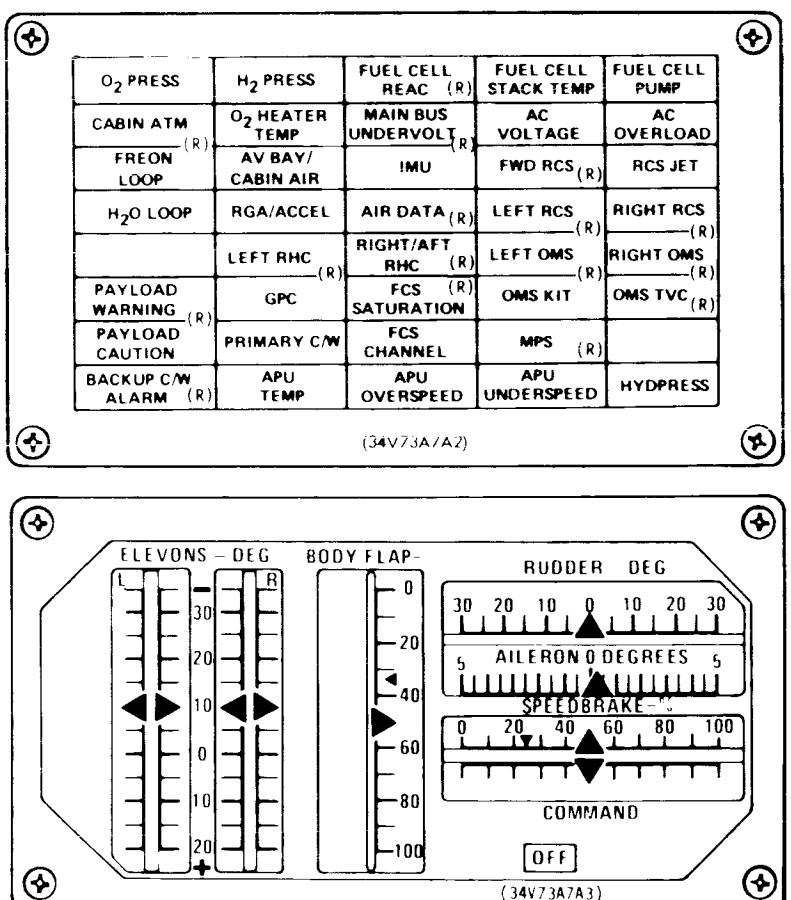


*Panel F7*

density as a function of temperature and pressure. The sequence assumes that helium flows to the propellant tanks to replace propellant leaving. As a result, the computed quantity remaining in a propellant tank will be decreased by normal usage, propellant leaks or helium leaks.

The left, right and forward RCS quantities are displayed to the flight crew on panel O3. When the rotary switch on panel O3 is positioned to the *RCS fuel* or *oxid* position, the *RCS/OMS qty* meters on panel O3 will indicate, in percent, the amount of fuel or oxidizer. If the switch is positioned to *RCS lowest*, the gauging system selects whichever is lower (fuel or oxidizer) for display on the *RCS/OMS prplt qty, left, fwd* and *right* meter.

The left, right and forward RCS quantities also are sent to the cathode ray tube, and in the event of failures, substitution of alternate measurements and the corresponding quantity will be displayed on the CRT. If no substitute is available, the quantity calculation for that tank is suspended with a fault message.



The sequence also provides automatic closure of the high-pressure helium isolation valves on orbit when the propellant tank ullage pressure is above 312 psia. The caution and warning red light on panel F7 is illuminated for the respective forward, left or right RCS, and a fault message is sent to the CRT. When the tank ullage pressure returns below this limit, the close command is removed.

Exceeding a preset absolute difference of 12.6 percent between the fuel and oxidizer propellant masses will illuminate the respective *left RCS, right RCS* or *fwd RCS* red caution and warning light on panel F7; activate the *backup* caution and warning light; and cause a fault message to be sent to the CRT. A bias of 12.6 percent is added when a leak is detected so that subsequent leaks in that same module may be detected.

**ENGINE PROPELLANT FEED.** The propellant tank isolation valves are located between the propellant tanks and the manifold isolation valves and are used to isolate the propellant tanks from the remainder of the propellant distribution system. The iso-

lation valves are ac-motor-operated and consist of a lift-off ball flow control device and an actuator assembly that contains a motor, gear train and sector gear. One pair of valves (one fuel valve and one oxidizer valve) isolates the propellant tanks from the 1/2 manifold in the forward and aft left and right RCS. One pair of valves isolates the propellant tanks from the 3/4/5 manifold in the forward RCS; and two pairs of valves, in parallel, identified as A and B, isolate the propellant tanks from the 3/4/5 manifold in the aft left and right RCS.

The forward RCS tank isolation valves are controlled by the *fwd RCS tank isolation 1/2* and *3/4/5* switches on panel O8. The aft RCS tank isolation valves are controlled by the *aft left RCS tank isolation 1/2* and *3/4/5 A* and *B* and *aft right RCS tank isolation 1/2* and *3/4/5 A* and *B* switches on panel O7. These are permanent-position switches that have three settings: *open, GPC* and *close.*

When the *fwd RCS tank isolation 1/2* and *3/4/5* switches are positioned to *GPC*, that pair of valves is automatically opened or closed upon command from the orbiter computer. When the corresponding pair of valves is opened, fuel and oxidizer from the propellant tanks are allowed to flow to the corresponding manifold isolation valves. Electrical power is provided to an electrical motor controller assembly that supplies power to the ac-motor-operated valve actuators. Once the valve is in the commanded position, logic in the motor controller assembly removes power from the actuator.

A talkback indicator above each tank's isolation switch on panel O8 shows the status of that pair of valves. The talkback indicator is controlled by microswitches in each pair of valves. The talkback indicator shows *op* or *cl* when that pair of valves is open or closed and barberpole when the valves are in transit or one valve is open and the other is closed. The *open* and *close* positions of the *fwd RCS tank isolation 1/2* and *3/4/5* switches on panel O8 permit manual control of the corresponding pair of valves.

The forward RCS manifold isolation valves are between the tank isolation valves and the forward RCS engines. The manifold isolation valves for manifolds 1, 2, 3 and 4 are the same type of ac-motor-operated valves as the propellant tank isolation valves and are controlled by the same type of motor-switching logic. The forward RCS manifold valve pairs are controlled by the *fwd RCS manifold isolation 1, 2, 3, 4* and *5* switches on panel O8. When a switch is positioned to *GPC*, that pair of valves is automatically opened or closed upon command from the orbiter computer. A talkback indicator above the *1, 2, 3, 4* and *5* switch on panel O8 indicates the status of that pair of valves. The talkback indicator is controlled in the same manner as the tank isolation valve indication. The *open* and *close* positions of the *manifold isolation 1, 2, 3, 4* or *5* switch on panel O8 permit manual control of the corresponding pair of valves. The *fwd RCS manifold 1, 2, 3* and *4* switches control propellants for the forward primary RCS engine only.

The *fwd RCS manifold 5* switch controls the manifold 5 fuel and oxidizer valves, which control propellants for the forward vernier RCS engines only. The switch is normally in the *GPC* position, but it can be placed in either *open* or *close* for manual override capability. Electrical power is momentarily applied through logic in an electrical load controller assembly to energize the solenoid valves open and magnetically latch the valves. To close the valves, electrical power is momentarily applied to energize the solenoids surrounding the magnetic latches of the valves, which allows spring and propellant pressure to force the valves closed. A position microswitch in each valve indicates valve position to an electrical controller assembly and controls a position talkback indicator above the switch on panel O8. When both valves are open, the indicator shows *op*; and when both valves are closed, it indicates *cl*. If one valve is open and the other is closed, the talkback indicator shows barberpole.

The *open, GPC* and *close* positions of the *aft left RCS tank isolation 1/2* and *3/4/5 A* and *B* and *aft right RCS tank isolation 1/2* and *3/4/5 A* and *B* switches on panel O7 are the same type as those of the forward RCS tank isolation switches and are controlled electrically in the same manner. A talkback indicator above each switch indicates the position of the pair of valves as in the forward RCS. The *3/4/5 A* and *B* switches control parallel fuel

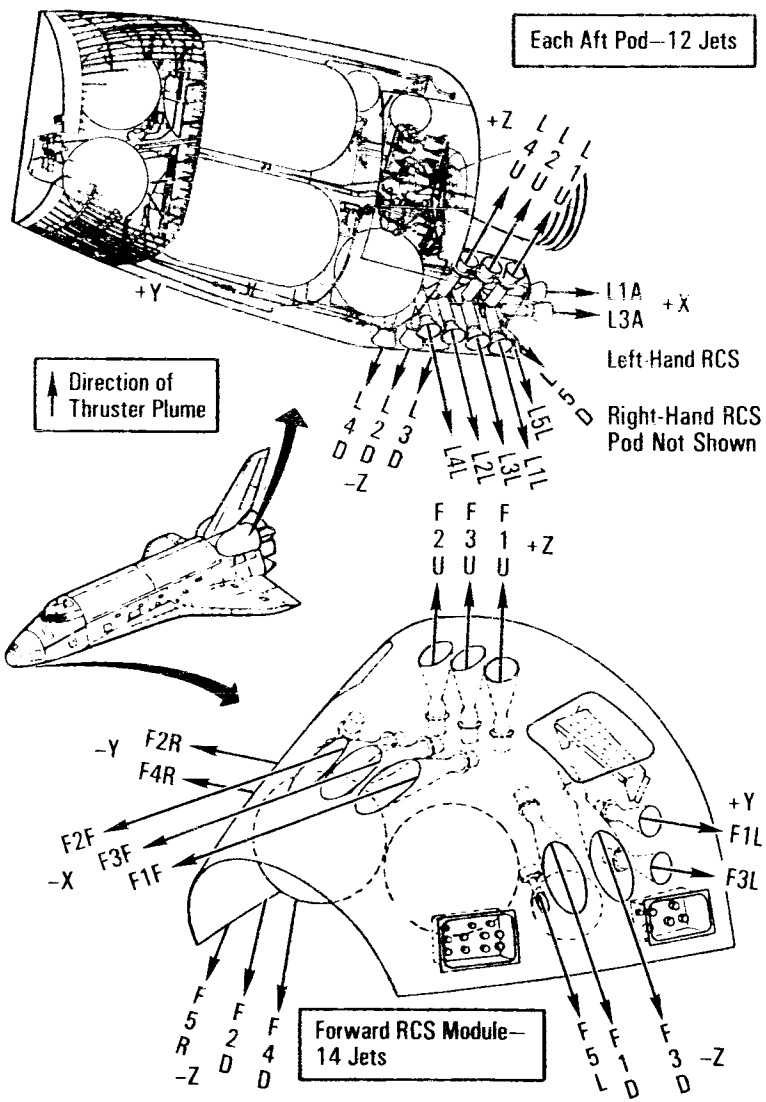


*Reaction Control System Engine Location and Identification*

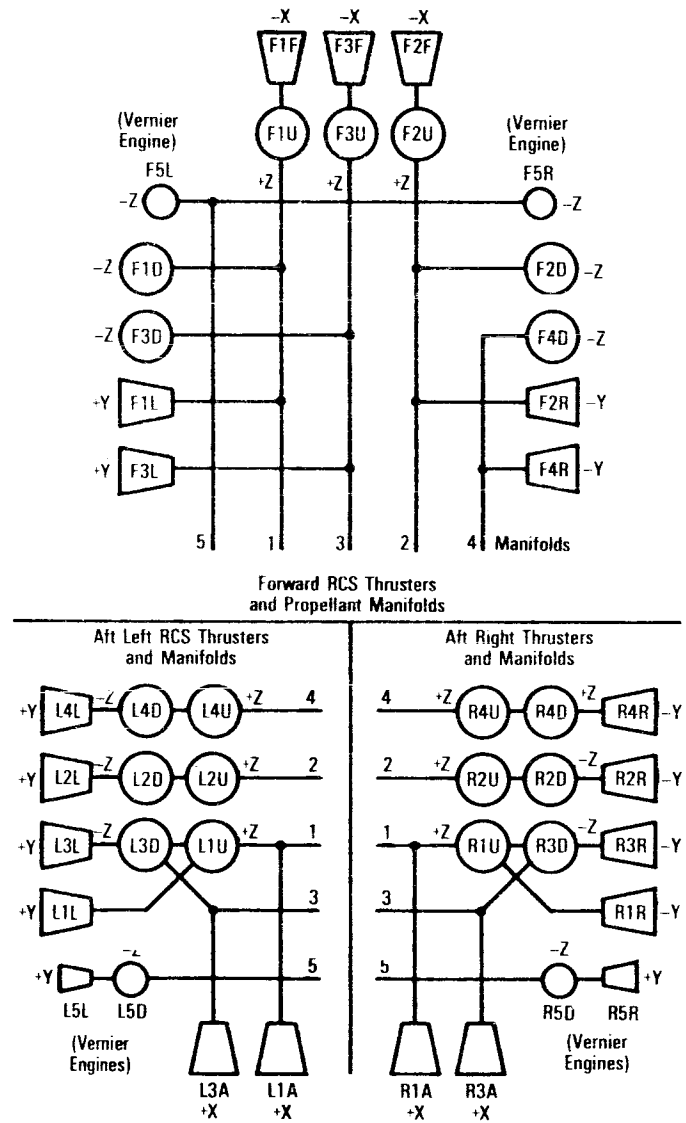


*Reaction Control System Propellant Manifold Feed System to Engines*

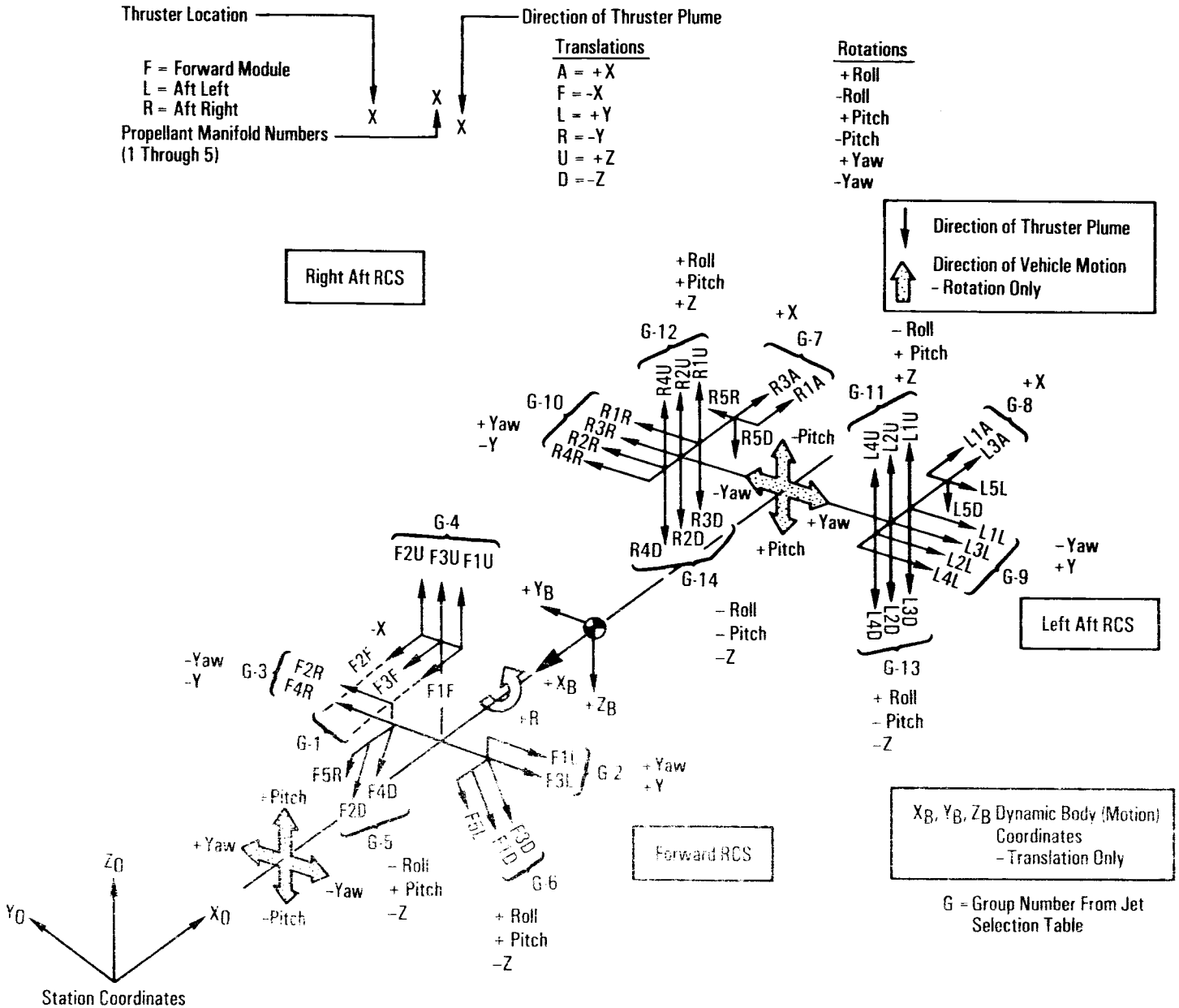


*Reaction Control System Engine Identification and Direction of Vehicle Motion*

and oxidizer tank isolation valves to permit or isolate propellants to the respective aft left and aft right RCS manifold isolation valves 3, 4 and 5.

The aft left and aft right manifold isolation valves are controlled by the *aft left RCS manifold isolation 1, 2, 3, 4, 5* and *aft right RCS manifold isolation* switches on panel O7. The *open, GPC* and *close* positions of each switch are the same type as the forward RCS manifold isolation switch positions and are controlled electrically in the same manner. The *aft left* and *aft right RCS manifold 1, 2, 3* and *4* switches provide corresponding tank propellants to the applicable primary RCS engines or isolate the propellants from the engines. The *aft left* and *aft right RCS manifold 5* switch provides corresponding tank propellants to the applicable vernier RCS engines or isolates the propellants from the engines.

Each RCS engine is identified by the propellant manifold that supplies the engine and by the direction of the engine plume. The first identifier is a letter—*F, L* or *R*. These designate an engine as forward, left aft or right aft RCS. The second identifier is a number—1 through 5. These designate the propellant manifold. The third identifier is a letter—*A* (aft), *F* (forward), *L* (left), *R* (right), *U* (up), *D* (down). These designate the direction of the engine plume. For example, engines F2U, F3U and F1U are forward RCS engines receiving propellants from forward RCS manifolds 2, 3 and 1, respectively; the engine plume direction is up.

If either aft RCS pod's propellant system must be isolated from its RCS jets, the other aft RCS propellant system can be configured to crossfeed propellant. The aft RCS crossfeed valves that tie the crossfeed manifold into the propellant distribution lines below the tank isolation valves can be configured so that one aft RCS propellant system can feed both left and right RCS engines. The aft RCS crossfeed valves are ac-motor-operated valve actuators and identical in design and operation to the propellant tank isolation valves. The aft RCS crossfeed valves are controlled by the *aft left* and *aft right RCS crossfeed 1/2* and *3/4/5* switches on panel O7. The positions of the four switches are *open, GPC* and *close*. The *GPC* position allows the orbiter computer to automatically control the crossfeed valves, and the *open and close* positions enable manual control. The *open* position of the *aft left RCS crossfeed 1/2* and *3/4/5* switches permits the aft left RCS to supply propellants to the aft right RCS crossfeed valves, which must be opened by placing the *aft right RCS crossfeed 1/2* and *3/4/5* switches to the *open* position for propellant flow to the aft right RCS engines. (Note that the aft right RCS tank isolation 1/2 and 3/4/5 A and B valves must be closed.) The *close* position of the *aft left* and *aft right RCS crossfeed 1/2* and *3/4/5* switches isolates the crossfeed capability. The crossfeed of the aft right RCS to the left RCS would be accomplished by positioning the *aft right* and *left RCS crossfeed* switches to *open* and positioning the *aft left RCS tank isolation 1/2* and *3/4/5 A, B* switches to *close*. (Note that the aft left RCS tank isolation 1/2 and 3/4/5 A and B valves must be closed.)

There are 64 ac-motor-operated valves in the OMS/RCS nitrogen tetroxide and monomethyl hydrazine propellant systems. Each of these valves was modified to incorporate a 0.25-inch-diameter stainless steel sniff line from each valve actuator to the mold line of the orbiter. The sniff line from each valve actuator permits the monitoring of nitrogen tetroxide or monomethyl hydrazine in the electrical portion of each valve actuator during ground operations.

The sniff lines from each of the 12 forward RCS valve actuators are routed to the respective forward RCS nitrogen tetroxide or monomethyl hydrazine servicing panels (six to the nitrogen tetroxide servicing panel and six to the monomethyl hydrazine servicing panel). The remaining 52 sniff lines are in the left and right OMS/RCS pods. During ground operations, an interscan checks for the presence of nitrogen tetroxide or monomethyl hydrazine in the electrical portion of the valve actuators.

An electrical microswitch located in each of the ac-motor-operated valve actuators provides an electrical signal (open or closed) to the onboard flight crew displays and controls and to telemetry. An extensive program was implemented to reduce the probability of floating particulates in the electrical microswitch portion of each ac-motor-operated valve actuator, which could affect the operation of the microswitch in each valve.

**RCS ENGINES.** Each RCS engine contains a fuel and oxidizer valve, injector head assembly, combustion chamber, nozzle and electrical junction box.

Each primary RCS engine has one fuel and one oxidizer solenoid-operated pilot poppet valve that is energized open by an electrical thrust-on command, permitting the propellant hydraulic pressure to open the main valve poppet and allow the respective propellant to flow through the injector into the combustion chamber. When the thrust-on command is terminated, the valves are de-energized and closed by spring and pressure loads.

Each vernier RCS engine has one fuel and one oxidizer solenoid-operated poppet valve. The valves are energized open by an electrical thrust-on command. When the thrust-on command is terminated, the valves are de-energized and closed by spring and pressure loads.

The primary RCS engine injector head assembly has injector holes arranged in two concentric rings; the outer ring is fuel and the inner ring is oxidizer. They are canted toward each other to cause impingement of the fuel and oxidizer streams for combustion within the combustion chamber. Separate outer fuel injector holes provide film cooling of the combustion chamber walls.

Each of the six vernier RCS engines has a single pair of fuel and oxidizer injector holes canted to cause impingement of the fuel and oxidizer streams for combustion.

The combustion chamber of each RCS engine is constructed of columbium with a columbium disilicide coating to prevent oxidation. The nozzle of each RCS engine is tailored to match the external contour of the forward RCS module or the left and right aft RCS pods. The nozzle is radiation-cooled, and insulation around the combustion chamber and nozzle prevents the excessive heat of 2,000 to 2,400 F from radiating into the orbiter structure.

The electrical junction box for each RCS engine has electrical connections for an electrical heater, a chamber pressure transducer, a leak detection device for each valve, and the propellant valves.

Because of the possibility of random but infrequent combustion instability of the primary RCS thrusters, which could cause a burnthrough in the combustion chamber wall of a RCS primary thruster in a very few seconds, an instability protection system is incorporated into each of the 38 primary RCS thrusters. The electrical power wire of each primary RCS thruster fuel and oxidizer valve is wrapped around the outside of each primary RCS thruster combustion chamber wall. If instability occurs within a primary RCS thruster, the burnthrough would cut the electrical power wire to that primary RCS thruster's valves, remove electrical power to the valves, close the valves and render the thruster inoperative for the remainder of the mission.

**HEATERS.** Electrical heaters are provided in the forward RCS module and the OMS/RCS pods to maintain the propellants in the module and pods at safe operating temperatures and to maintain safe operating temperatures for the injector of each primary and vernier RCS thruster.

Each primary RCS thruster has a 20-watt heater, except the four aft-firing thrusters, which have 30-watt heaters. Each vernier RCS thruster has a 10-watt heater.



The forward RCS has six heaters mounted on radiation panels in six locations. Each OMS/RCS pod is divided into nine heater zones. Each zone is controlled in parallel by an A and B heater system. The aft RCS thruster housing contains heaters for the yaw, pitch up, pitch down and vernier thrusters in addition to the aft OMS/RCS drain and purge panels. The OMS/RCS heater switches are located on panel A14.

The forward RCS panel heaters are controlled by the *fwd RCS auto A, B, off* switch on panel A14. When the *fwd RCS* switch is positioned to *auto A* or *B*, thermostats on the forward left-side panel and right-side panel automatically control the respective forward RCS heaters. When the respective forward RCS panel temperature reaches a minimum of approximately 55 F, the respective panel heaters are turned on. When the temperature reaches a maximum of approximately 75 F, the heaters are turned off. The *off* position removes all electrical power from the forward RCS heaters.

The aft RCS heaters are controlled by the *left pod auto A* and *auto B* and *right pod auto A* and *auto B* switches on panel A14. When the switches are positioned to either *auto A* or *auto B*, thermostats automatically control the nine individual heater zones in each pod. Each heater zone is different, but generally the thermostats control the temperature between approximately 55 F minimum to approximately 75 F maximum. The *off* position of the respective switch removes all electrical power from that pod heater system.

The forward and aft RCS primary and vernier thruster heaters are controlled by the *fwd* and *aft RCS jet 1, 2, 3, 4* and *5* switches on panel A14. When the switches are positioned to *auto*, individual thermostats on each thruster automatically control the individual heaters on each thruster. The primary RCS thruster heaters turn on between approximately 66 to 76 F and turn off between approximately 94 to 109 F. The vernier RCS thruster heaters turn on between approximately 140 to 150 F and off between approximately 184 to 194 F. The *off* position of the switches removes all electrical power from the thruster heaters. The 1, 2, 3, 4 and 5 designations refer to propellant manifolds. There are two to four thrusters per manifold.

**RCS JET SELECTION.** The RCS sends pressure, temperature and valve position data to the data processing system through the flight-critical multiplexers/demultiplexers for processing by the orbiter computers. The computers use the data to monitor and display the configuration and status of the RCS. The DPS provides valve configuration and jet on/off commands to the RCS by way of the aft and forward reaction jet drivers. Data from the RCS through the MDMs also are sent to the pulse code modulation master unit for incorporation into the downlink to ground telemetry and to the orbiter's onboard recorders.

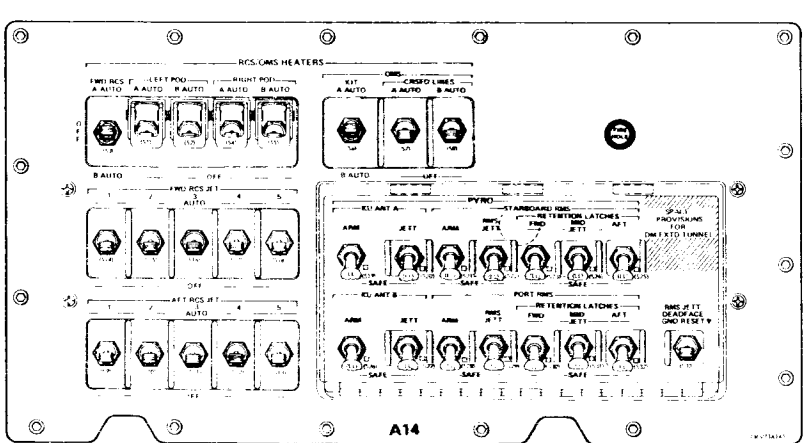


*Panel A14*

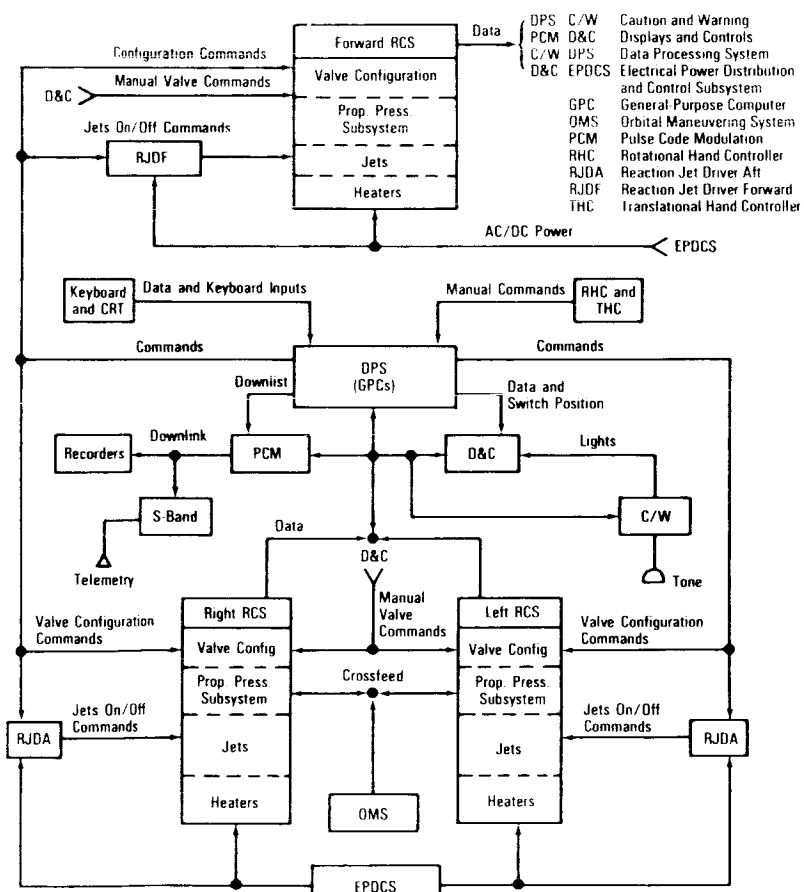


*Reaction Control System Overview*

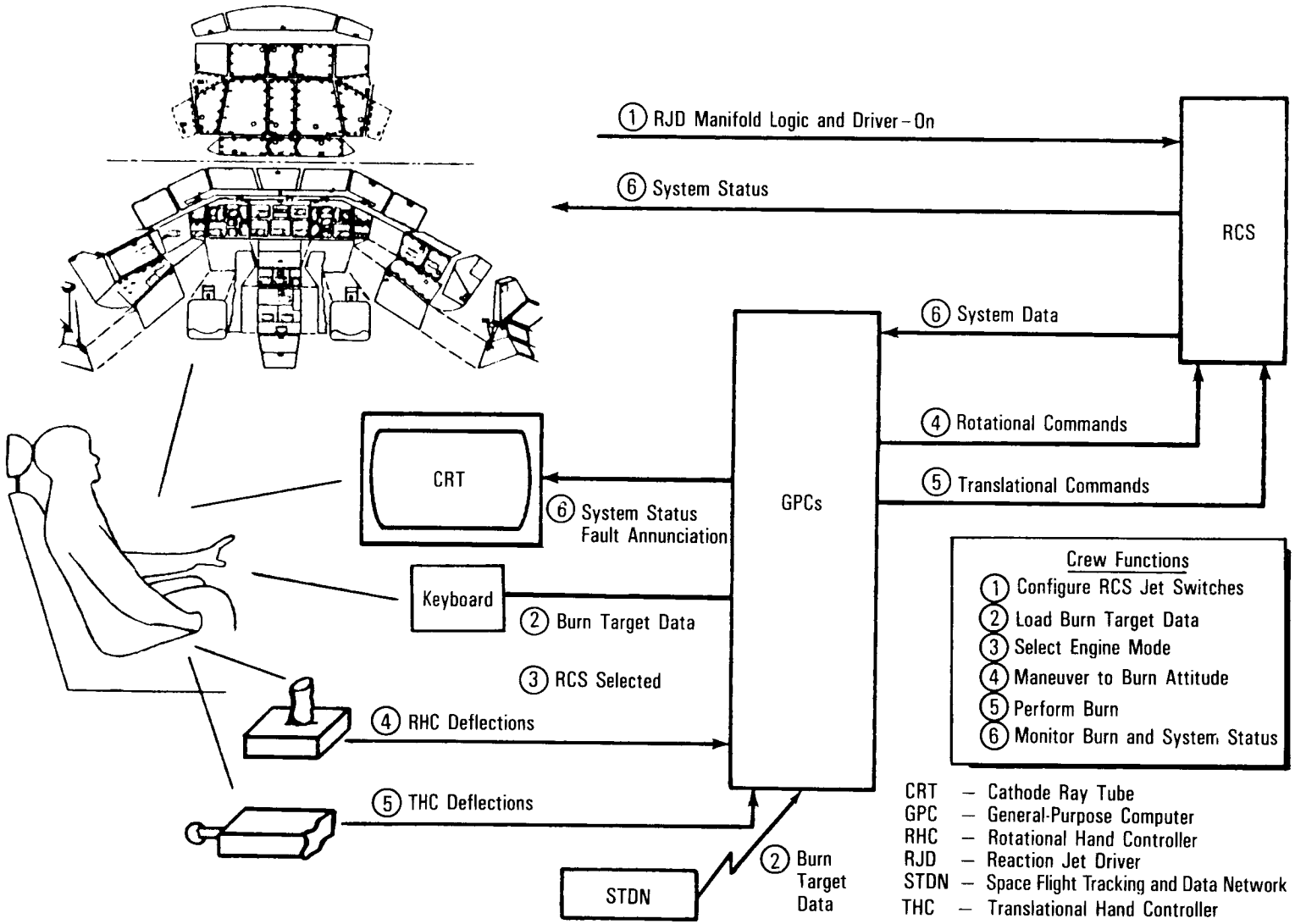


*Reaction Control System*

The RJDs AND fire commands A and B for an RCS jet. If both are true, they send a voltage to open the RCS fuel and oxidizer solenoid valves. This voltage is used to generate the RJD discrete. Fire command B also is sent and used by the RCS redundancy management. The RJD driver and logic power for the aft and forward RJDs are controlled by the *RJDA-1A L2/R2, RJDA-2A L4/R4* and *RJDF-1B F1 manf logic* and *driver on* and *off* switches on panel O14; *RJDA-1B L1/L5/R1* and *RJDF-1A F2 manf logic* and *driver* switches on panel O15; and *RJDA-2B L3/R3/R5, RJDF-2A F3* and *RJDF-2A F4/F5 manf logic* and *driver* switches on panel O16.

The RCS redundancy management monitors the RCS jets' chamber pressure discretes, fuel and oxidizer injector temperatures, RJD on/off output discretes, jet fire commands and manifold valve status.

The DPS software provides status information on any RCS errors to the RCS redundancy management software. The errors are referred to as communications faults. When an RCS error is detected by any orbiter computer for two consecutive cycles, the data on the entire chain are flagged as invalid for the applications software. Communications faults in the RCS redundancy management help to prevent the redundant orbiter computers from moding to dissimilar software, to optimize the number of RCS jets available for use, and to prevent the RCS redundancy management from generating additional alerts to the flight control operational software. The RCS redundancy management will reconfig-

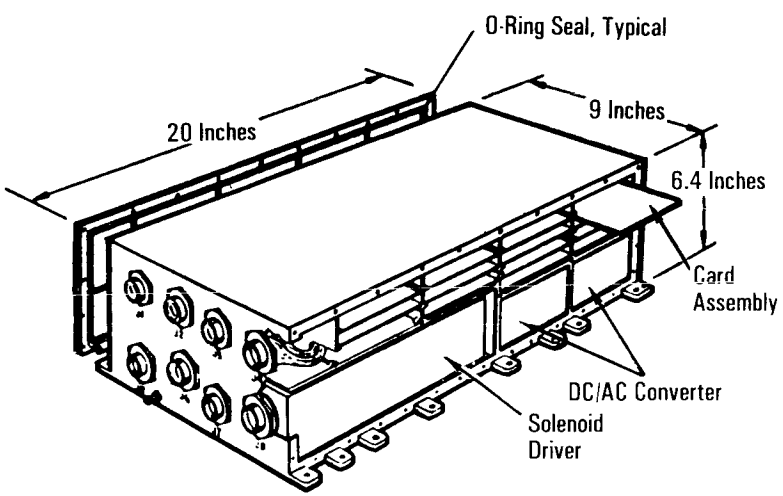


- Conventional Analog and Digital Circuitry
- Conventional Printed Circuit Cards
- 28-Volt dc Power Only
- Environmentally Sealed
- Cold-Plate-Cooled

| | Weight (Pounds) | Power (Watts) | |
|---|---|---|---|
| | | Normal Quiescent | Maximum |
| Aft Unit | 33 | 27.4 | 62.6 |
| Forward Unit | 30.4 | 20.3 | 41.4 |

*Reaction Jet Driver*

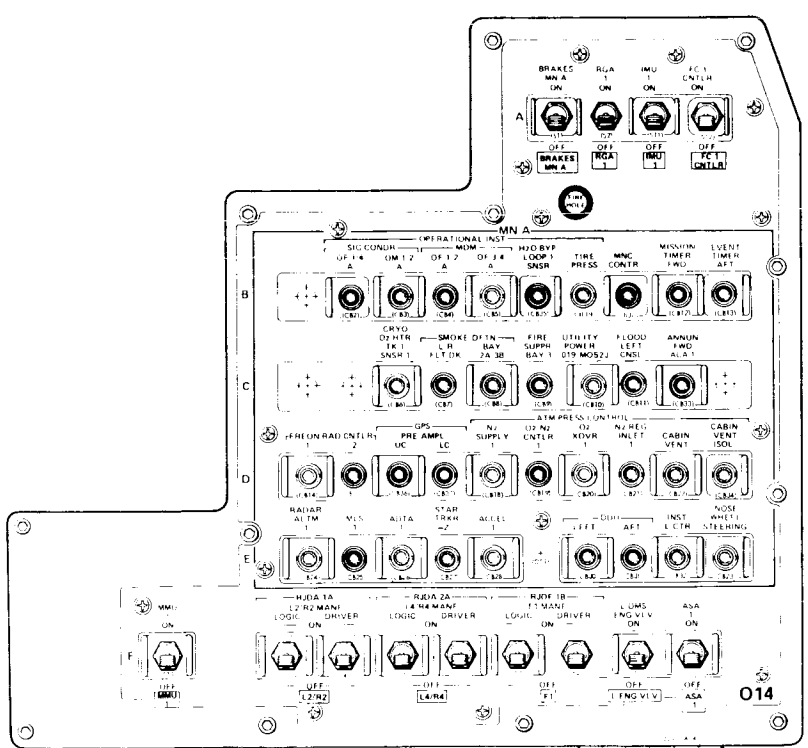


*Panel O14*

RCS jet redundancy management inhibit discrete is reset by the flight crew. A jet failed on will not be automatically deselected by the RCS redundancy management, and the orbiter digital autopilot will not reconfigure the jet selections.

The RCS-jet-failed-off monitor uses the RCS jet fire command B discretes, the jet chamber pressure discretes, the RCS jet-deselect inhibit discretes and the jet communications fault discrete as inputs from each of the 44 jets. The RCS-jet-failed-off logic checks for the absence of the jet chamber pressure discretes when a jet fire command B discrete exists. It outputs that the RCS jet has failed off if true for three consecutive cycles. The consecutive cycles are not affected by the communications faults or by cycles in which there are no fire commands for the affected RCS jet. However, the three-consecutive-cycle logic leading to a failed-off indication must begin anew if, before the third consecutive cycle is reached, the fire command and its associated chamber pressure indicate that the RCS jet has fired. A jet-failed-off determination sets the jet-failed-off discrete (even for a minimum jet fire command pulse of 80 milliseconds on and off) and outputs the jet-failed-off indication to the *backup* caution and warning light, the yellow *RCS jet* light on panel F7, a fault message on the CRT and an audible alarm. The RCS-jet-failed-off monitor will be inhibited for the jet failed off until the flight crew resets the redundancy management inhibit discrete. The RCS redundancy management will automatically deselect a jet that has failed off, and the DAP will reconfigure the jet selection accordingly. The RCS redundancy management will announce a failed-off jet, but will not deselect the jet if the jet's redundancy management inhibit discrete has been set in advance.

The RCS-jet-failed leak monitor uses the RCS jet fuel and oxidizer injector temperatures for each of the 44 jets with the specified temperatures of 30 F for oxidizer and 20 F for fuel for the primary and 130 F for the vernier jets (in OPS 2 and 8). It declares a jet-failed leak if any of the temperatures are less than the specified limit for three consecutive cycles. An RCS-jet-failed leak monitor outputs the RCS-jet-failed leak to the *backup* caution and warning light, the yellow *RCS jet* caution and warning light on panel F7, a fault message on the CRT and an audible alarm. The RCS-jet-failed leak monitor will be inhibited until the flight crew resets the RCS redundancy management inhibit discrete. The RCS redundancy management will automatically deselect a jet declared leaking, and the DAP will reconfigure the jet selection accordingly. The RCS redundancy management will announce a failed leak jet, but it will not deselect the jet if the jet's redundancy management inhibit discrete has been set in advance.

The RCS jet fault limit module limits the number of jets that can be automatically deselected in response to failures detected by RCS redundancy management. The limits are modifiable by the flight crew input on the RCS SPEC display (RCS forward, left, right jet fail limit). This module also reconfigures a jet's availability status. Automatic deselection of a jet occurs if all the following are satisfied: jet detected failed off or leak (jet-on failures do not result in automatic deselection), jet-select/deselect status is select, jet's manifold status is open, redundancy management is not inhibited for this jet, jet failure has not been overridden, and the number of automatic deselections of primary jets on that aft RCS pod is less than the associated jet fail limit (no limit on vernier jets). A jet's status can be changed from deselect to select only by item entry on the RCS SPEC page. Automatic deselection of a jet can be prevented by use of the inhibit item entries on the RCS SPEC page.

The manifold status monitor uses the open and close discretes of the oxidizer and fuel manifold isolation valves to determine their open/close status independently of status changes made by the flight crew. The flight crew can override the status of all manifolds on an individual basis by item entries on the RCS SPEC. The use of the manifold status override feature will not inhibit or modify any of the other functions of the manifold status monitor.

The available jet status table module provides a list of jets available for use to the flight control system. The available jet status table uses the manifold open/close discretes from the manifold status monitor and the jet-deselect output discretes from the jet fault limit module as inputs. This table outputs the jet available discretes and the jet status discrete. The available jet status module

shows a jet as available to the flight control system if the jet-deselect output discretes and the manifold open/close discretes indicate select and open, respectively. The available jet status table will be computed each time the jet status change discrete is true.

The digital autopilot jet-select module contains default logic in certain instances. When the orbiter is mated to the ET, roll rate default logic inhibits roll rotation, and yaw commands are normally in the direction of favorable yaw-roll coupling. During insertion, a limit of seven aft RCS jets per tank set applies for ET separation and for return-to-launch-site aborts. If negative Z and plus X translation commands are commanded simultaneously, both will be degraded. A limit of four aft RCS jets per tank set normally applies. Plus X is degraded when simultaneous negative Z and plus X and Y translation and yaw rotation commands exceed a demand of five aft RCS jets. If plus X and negative Z translations are commanded simultaneously, plus X is given priority.

The DAP jet-select module determines which aft RCS jets (right, left or both) must be turned on in response to the pitch, roll and yaw jet commands from the entry flight control system. The forward RCS jets are not used during entry. After entry interface, only the four Y-axis and six Z-axis RCS jets on each aft RCS pod are used. No X-axis or vernier jets are used. The DAP sends the discretes that designate which aft RCS jets are available for firing (a maximum of four RCS jets per pod may be fired) and, during reconfiguration or when the RCS crossfeed valves are open, the maximum combined total number of yaw jets available during certain pitch and roll maneuvers.

During ascent or entry, the DAP jet-select logic module in the flight control system receives both RCS rotation and translation commands. By using a table lookup technique, the module outputs 38 jet on/off commands to the RCS command subsystem operating program, which then generates dual fire commands A and B to the individual RCS reaction jet drivers to turn each of the 38 primary RCS jets on or off. The fire commands A and B for each of the 38 primary RCS jets are set equal to the digital autopilot RCS commands. Commands are issued to the six RCS vernier jets similarly on orbit.

The transition digital autopilot becomes active immediately after main engine cutoff and maintains attitude hold in preparation for ET separation. The transition DAP controls the spacecraft in response to control stick steering or automatic commands during orbit insertion OMS thrusting periods, orbit coast, on-orbit checkout, deorbit maneuver and deorbit maneuver coast. These commands are converted to OMS engine deflections (thrust vector control) during OMS insertion thrusting periods and RCS jet firing during the insertion phase. RCS commands are issued to support OMS rotations (roll control) when only one OMS engine is used or for rotation, attitude hold or translation when the OMS engines are not thrusting. The transition DAP uses attitude feedback and velocity increments from the inertial measurement units through the attitude processor. This feedback information allows the transition DAP to operate as a closed-loop system for pointing and rotation, but not for translation.

The on-orbit DAP and RCS command orbit subsystem operating program generate the dual fire commands to the individual RCS jets in response to commands from the flight control system during orbit operations and on-orbit checkout. The fire A and fire B commands for each jet are set equal to the on-orbit DAP RCS commands. The fire B commands are also sent to redundancy management. There are automatic or control stick steering rotation mode, manual translation and primary or vernier RCS capabilities on orbit.

The automated or guided rotation commands are supplied by the universal pointing processor, and control stick steering rotation or translation commands are supplied by the rotational hand controller or translational hand controller. Crew commands from the flight deck forward or aft station are accepted. Three selectable control stick steering rotation modes and two selectable translation modes (for X, Y and Z translations) are provided. The capability to select nose (forward RCS) or tail (aft RCS) only for pitch and/or yaw control is provided by the primary jets. Primary jet roll control is provided only by the aft RCS jets.

The vernier jets are used for tight attitude dead bands and fuel conservation. The loss of one down-firing vernier jet results in the loss of the entire vernier mode.

ure for communications faults regardless of whether the communications faults are permanent, transient or subsequently removed. On subsequent transactions, if the problem is isolated, only the faulty element is flagged as invalid.

The RCS-jet-failed-on monitor uses the jet fire command B discretes, the RJD on/off output, the jet deselect inhibit discretes and the jet communications fault discretes as inputs from each of the 44 jets. The RCS-jet-failed-on logic checks for the presence of an RJD-on discrete when no jet fire command B exists. It outputs that the RCS jet has failed on if this calculation is true for three consecutive cycles during any flight phase. Note that the consecutive cycles are not affected by communications faults or by cycles in which there are fire commands for the affected RCS jet. However, the three-consecutive-cycle logic will be reset if the non-commanded jet has its RJD output discrete reset to indicate the jet is not firing. A jet-failed-on determination sets the jet-failed-on discrete (even for a minimum jet fire command pulse of 80 milliseconds on and off) and outputs the jet-failed-on indication to the *backup* caution and warning light, the yellow caution and warning *RCS jet* light on panel F7, a fault message on the CRT and an audible alarm. These discretes will be reset when the associated

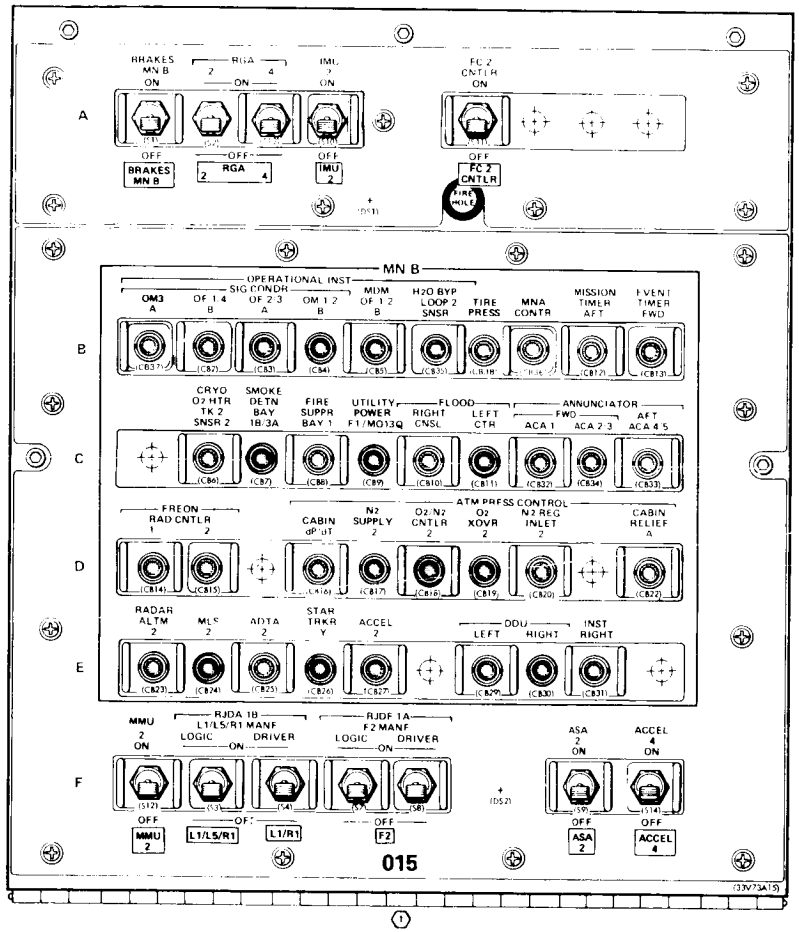


*Panel O15*

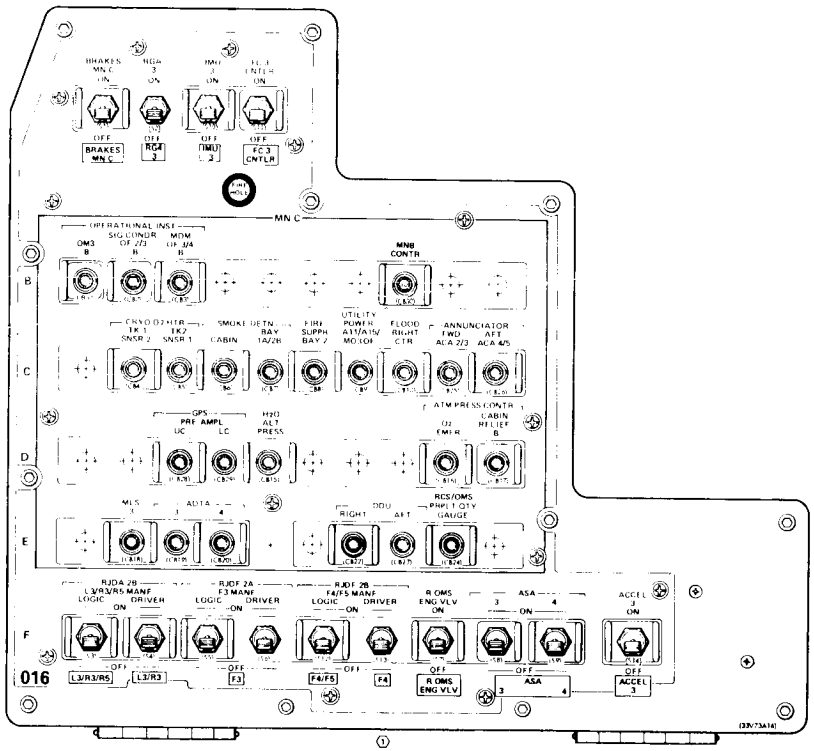


*Panel O16*

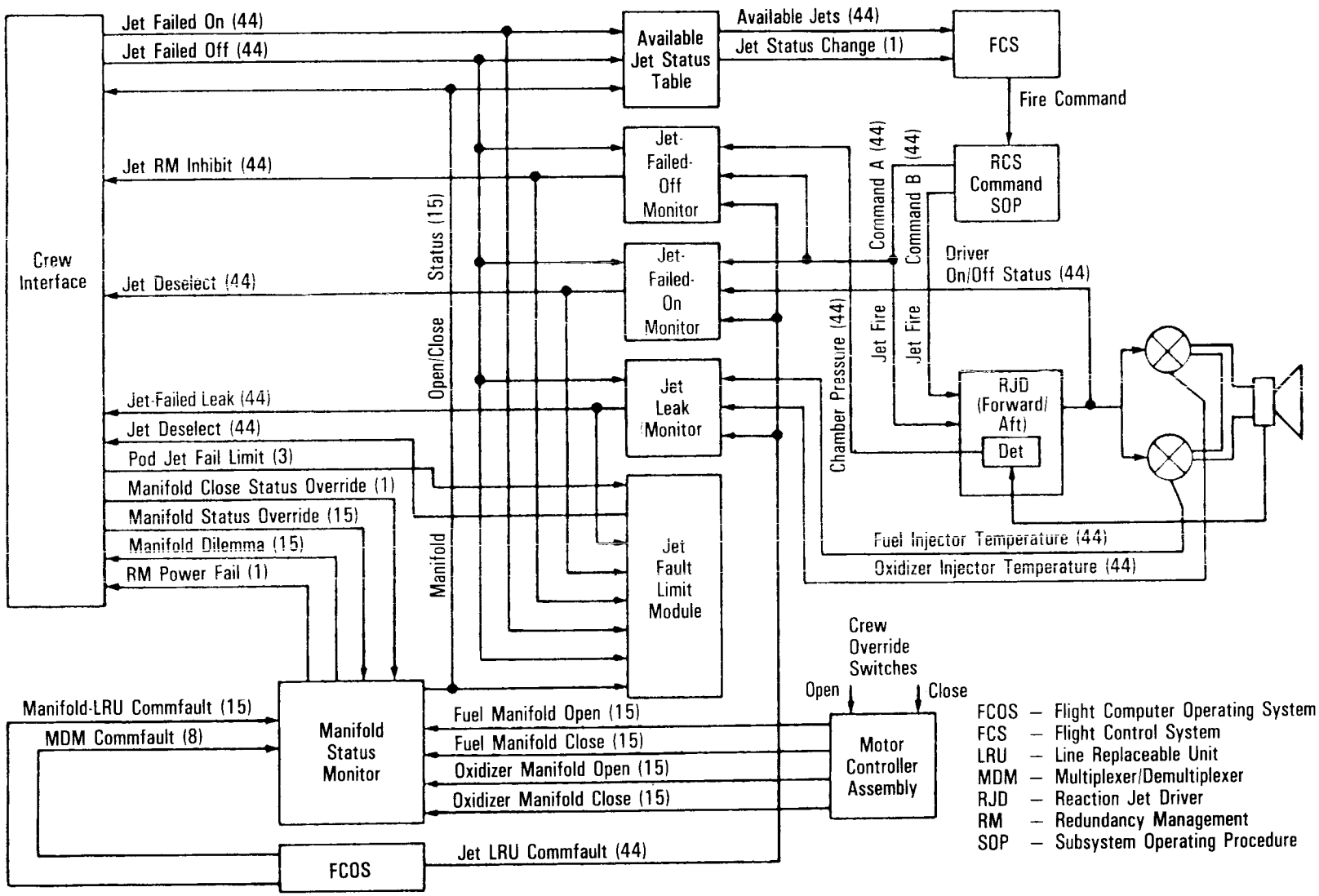


*Reaction Control System Redundancy Management*

The on-orbit DAP has two sets of initialized dead bands — DAP A and DAP B. DAP A is used for maneuvers that do not require accurate pointing. DAP B has a narrow dead band and is used for maneuvers that require accurate pointing, such as IMU alignment.

The entry and landing RCS command subsystem operating program generates the dual fire commands to the individual RCS thrusters in response to commands from the flight control system during entry guidance, terminal area energy management, and approach and landing. This program sets the fire A and fire B commands equal to the aerojet DAP commands or the return-to-launch-site abort DAP commands, depending on the one selected by the flight control system. These commands are sent to the 20 aft RCS Y and Z jets. The fire B commands are also sent to redundancy management.

The aerojet DAP is a set of general equations used to develop effector commands that will control and stabilize the orbiter during its descent to landing. The aerojet DAP resides in the entry OPS but is used only during entry, terminal area energy management, and approach and landing.

This is accomplished by using either control stick steering commands or automatic commands as inputs to the equations. The solution of these equations results in fire commands to the available RCS jets and/or appropriate orbiter aerosurfaces.

The on-orbit and transition digital autopilots also are rate command control systems. Sensed body rate feedback is employed for stability augmentation in all three axes. This basic rate system is retained in a complex network of equations whose principal terms are constantly changing to provide the necessary vehicle stability while ensuring sufficient maneuvering capability to follow the planned trajectory.

For exoatmospheric flight or flight during the trajectory in which certain control surfaces are rendered ineffective by adverse aerodynamics, a combination of aft RCS jet commands and aerosurface commands is issued. For conventional vehicle flight in the atmosphere, the solution of equations results in deflection commands to the elevons, rudder, speed brake and body flap. Inputs from entry guidance can consist of automatic attitude, angle of attack, surface position and acceleration commands and control stick steering roll, pitch and yaw rate commands from the flight-crew-operated controllers or a combination of the two, since the software channels may be moded independently.

Roll, pitch and yaw indicator lights on panel F6 indicate the presence of an RCS command during entry, terminal area energy management, and approach and landing. The indicators are L and R for roll and yaw left or right and U and D for pitch up and down. Their primary function is to indicate when more than two

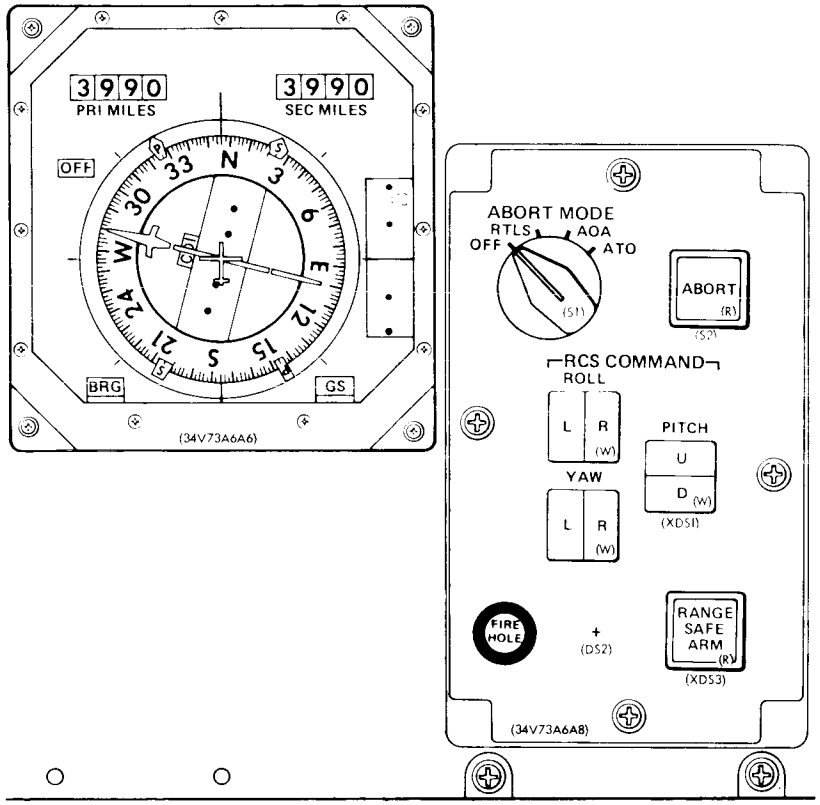


*Panel F6*

yaw jets are commanded and when the elevon drive rate is saturated.

From entry interface until the dynamic pressure is greater than 10 pounds per square foot, the *roll l* and *roll r* lights indicate that left or right roll commands have been issued by the DAP. The minimum light-on duration is extended to allow the light to be seen even for a minimum impulse firing. When a dynamic pressure of 10 pounds per square foot has been sensed, neither roll light will be illuminated until 50 pounds per square foot has been sensed and two RCS yaw jets are commanded on.

The pitch lights indicate up and down pitch jet commands until a dynamic pressure of 20 pounds per square foot is sensed, after which the pitch jets are no longer used. When 50 pounds per square foot is sensed, the pitch lights assume a new function. Both pitch lights will be illuminated whenever the elevon surface drive rate exceeds 20 degrees per second (10 degrees per second if only one hydraulic system is remaining).

The yaw lights function as yaw jet command indicators throughout entry until the yaw jets are disabled at approximately 45,000 feet. The yaw lights have no other function.

The forward RCS module and OMS/RCS pods can be removed to facilitate orbiter turnaround, if required, and are reusable for a minimum of 100 missions.

The contractors are McDonnell Douglas Astronautics Co., St. Louis, Mo. (OMS/RCS pod assembly and integration); CCI Corp., Marquardt Co., Van Nuys, Calif. (primary and vernier thrusters); Brunswick, Lincoln, Neb. (RCS helium tanks); Consolidated Controls, El Segundo, Calif. (dc solenoid RCS high-pressure helium isolation valves and low-pressure vernier engine manifold isolation valves); Cox and Co., New York, N.Y. (RCS electrical heaters); Fairchild Stratos, Manhattan Beach, Calif. (RCS helium pressure regulators, propellant couplings, nitrogen tetroxide/monomethyl hydrazine and helium fill disconnects); Honeywell Inc., Clearwater, Fla. (RCS reaction jet drivers); Martin Marietta, Denver, Colo. (RCS propellant tanks); Metal Bellows Co., Chatsworth, Calif. (RCS flexible line assembly); Parker Hannifin, Irvine, Calif. (ac-motor-operated tank and manifold isolation valves, OMS/RCS crossfeed interconnect valves and manually operated isolation OMS/RCS valves); Rockwell International, Rocketdyne Division, Canoga Park, Calif. (RCS check valves); Brunswick-Wintec, Los Angeles, Calif. (filters).

## ELECTRICAL POWER SYSTEM

The EPS consists of three subsystems: power reactant storage and distribution, fuel cell power plants (electrical power generation) and electrical power distribution and control.

The PRSD subsystem stores the reactants (cryogenic hydrogen and oxygen) and supplies them to the three fuel cell power plants, which generate all the electrical power for the vehicle during all mission phases. In addition, cryogenic oxygen is supplied to the environmental control and life support system for crew cabin pressurization. The hydrogen and oxygen are stored in their respective storage tanks at cryogenic temperatures and supercritical pressures. The storage temperature of liquid oxygen is minus 285 F and minus 420 F for liquid hydrogen.

The three fuel cell power plants, through a chemical reaction, generate all of the 28-volt direct-current electrical power for the vehicle from launch through landing rollout. Before launch, electrical power is provided by ground power supplies and the onboard fuel cell power plants until T minus three minutes and 30 seconds. Each fuel cell power plant consists of a power section, where the chemical reaction occurs, and a compact accessory section attached to the power section, which controls and monitors

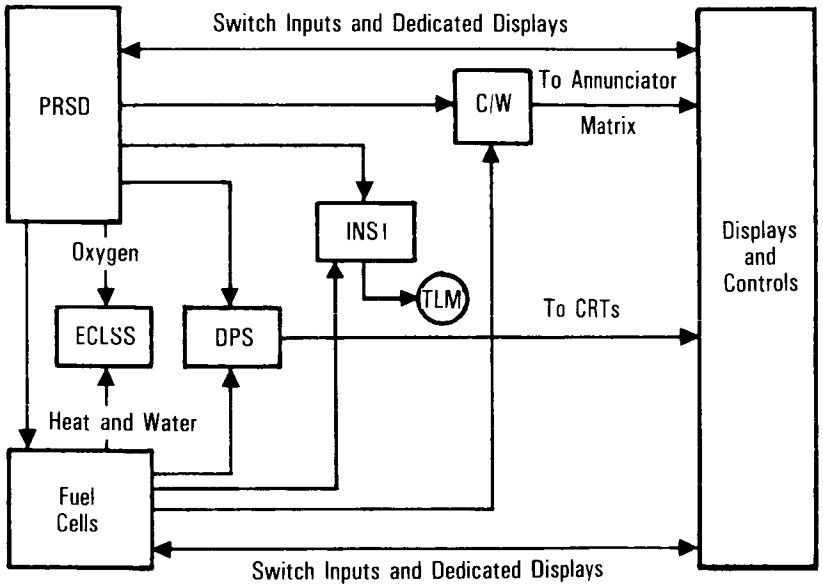


C/W – Caution/Warning
DPS – Data Processing System
ECLSS – Environmental Control and Life Support System
INST – Instrumentation
TLM – Telemetry
PRSD – Power Reactant Storage and Distribution

*Power Reactant Storage and Distribution System Interfaces*

Each Fuel Cell Power Plant
2 Kilowatts at 32.5 Volts dc
12 Kilowatts at 27.5 Volts dc
7 Kilowatts Continuous
12 Kilowatts Peak
All Three Fuel Cell Power Plants Capable of Supplying a Maximum Continuous Output of 21,000 Watts With 15-Minute Peaks of 36,000 Watts

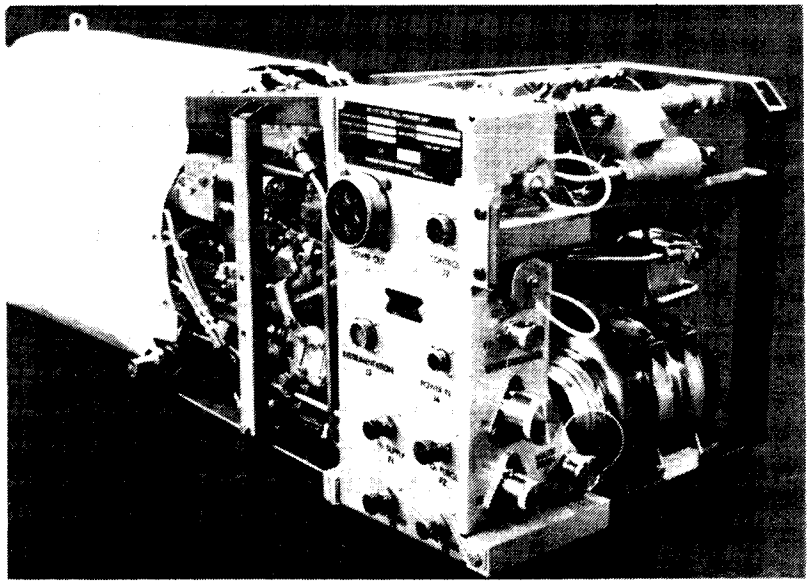

*Fuel Cell Power Plant*

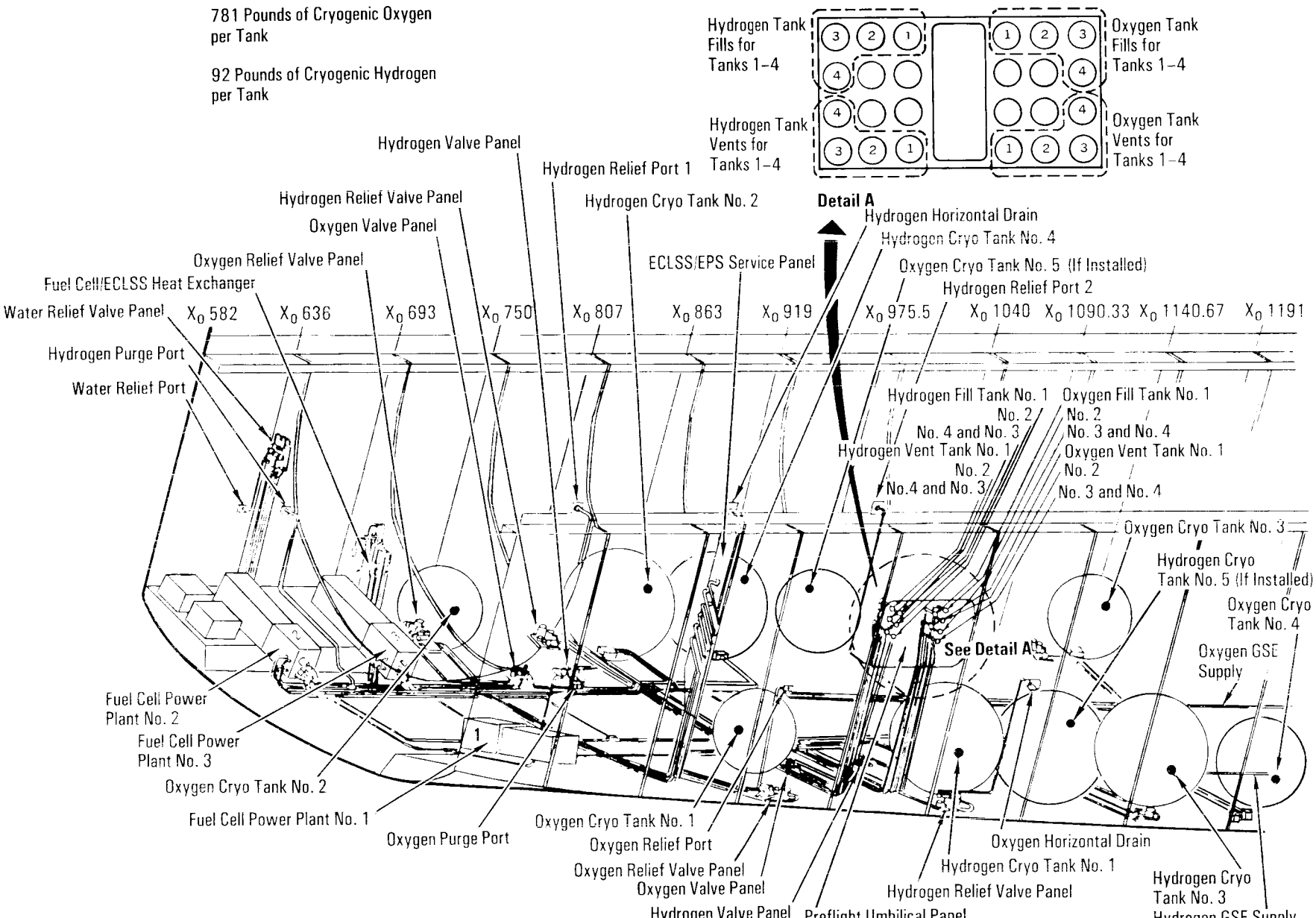


*Power Reactant Storage and Distribution System*

the power section's performance. The three fuel cell power plants are individually coupled to the reactant (hydrogen and oxygen) distribution subsystem, the heat rejection subsystem, the potable water storage subsystem and the EPDC subsystem. The fuel cell power plants generate heat and water as by-products of electrical power generation. The excess heat is directed to fuel cell heat exchangers, where the excess heat is rejected to Freon coolant loops. The water is directed to the potable water storage subsystem.

The EPDC subsystem distributes the 28 volts dc generated by each of the three fuel cell power plants to a three-bus system that distributes dc power to the forward, mid-, and aft sections of the orbiter for equipment in those areas. The three main dc buses—MNA, MNB and MNC—are the prime sources of power for the vehicle's dc loads. Each of the three dc main buses supplies power to three solid-state (static), single-phase inverters, which constitute one three-phase alternating-current bus; thus, the nine inverters convert dc power to 115-volt, 400-hertz ac power for distribution to three ac buses—AC1, AC2 and AC3—for the vehicle's ac loads.

The EPDC subsystem controls and distributes electrical power (ac and dc) to the orbiter subsystems, the solid rocket boosters, the external tank and payloads. Power is controlled and distributed by assemblies. Each assembly is a housing for electrical components, such as remote switching devices, buses, resistors, diodes and fuses. Each assembly usually contains a power bus or buses and remote switching devices for distributing bus power to subsystems located in its area.

**POWER REACTANT STORAGE AND DISTRIBUTION.** Cryogenic hydrogen and oxygen are stored in a supercritical condition in double-walled, thermally insulated spherical tanks with a vacuum annulus between the inner pressure vessel and outer shell of the tank. Each tank has heaters to add energy to the reactants during depletion to control pressure. Each tank is capable of measuring quantity remaining.

The tanks are grouped in sets consisting of one hydrogen and one oxygen tank. The number of tank sets installed depends on the specific mission requirement. Up to five tank sets can be installed. The five tank sets are all installed in the midfuselage under the payload bay liner.

The oxygen tanks are identical and consist of inner pressure vessels of Inconel 718 and outer shells of aluminum 2219. The inner vessel is 33.43 inches in diameter and the outer shell is 36.8 inches in diameter. Each tank has a volume of 11.2 cubic feet and stores 781 pounds of oxygen. The dry weight of each tank is 201 pounds. The initial temperature of the stored oxygen is minus 285 F. Maximum fill time is 45 minutes.

The hydrogen tanks also are identical. Both the inner pressure vessel and the outer shell are constructed of aluminum 2219. The inner vessel's diameter is 41.51 inches and the outer shell's is 45.5 inches. The volume of each tank is 21.39 cubic feet, and each stores 92 pounds of hydrogen. Each tank weighs 216 pounds dry. The initial storage temperature is minus 420 F. Maximum fill time is 45 minutes.



The inner pressure vessels are kept supercold by minimizing conductive, convective and radiant heat transfer. Twelve low-conductive supports suspend the inner vessel within the outer shell. Radiant heat transfer is reduced by a shield between the inner vessel and outer shell (hydrogen tanks only), and convective heat transfer is minimized by maintaining a vacuum between the vessel and shell. A vacuum ion pump maintains the required vacuum level and is also used as a vacuum gauge to determine the vacuum's integrity.

Each hydrogen tank has one heater probe with two elements, while each oxygen tank has two heater probes with two elements on each probe. As the reactants are depleted, the heaters add heat energy to maintain a constant pressure in the tanks. The heaters operate in manual and automatic modes. The oxygen tank and hydrogen tank switches *(auto, on, off)* for tanks 1, 2 and 3 are located on panel R1; switches for the oxygen and hydrogen tank 4 heaters are on panel A11. When a heater switch is positioned to *auto,* the heater is controlled by a tank heater controller. Each heater controller receives a signal from a tank pressure sensor. If

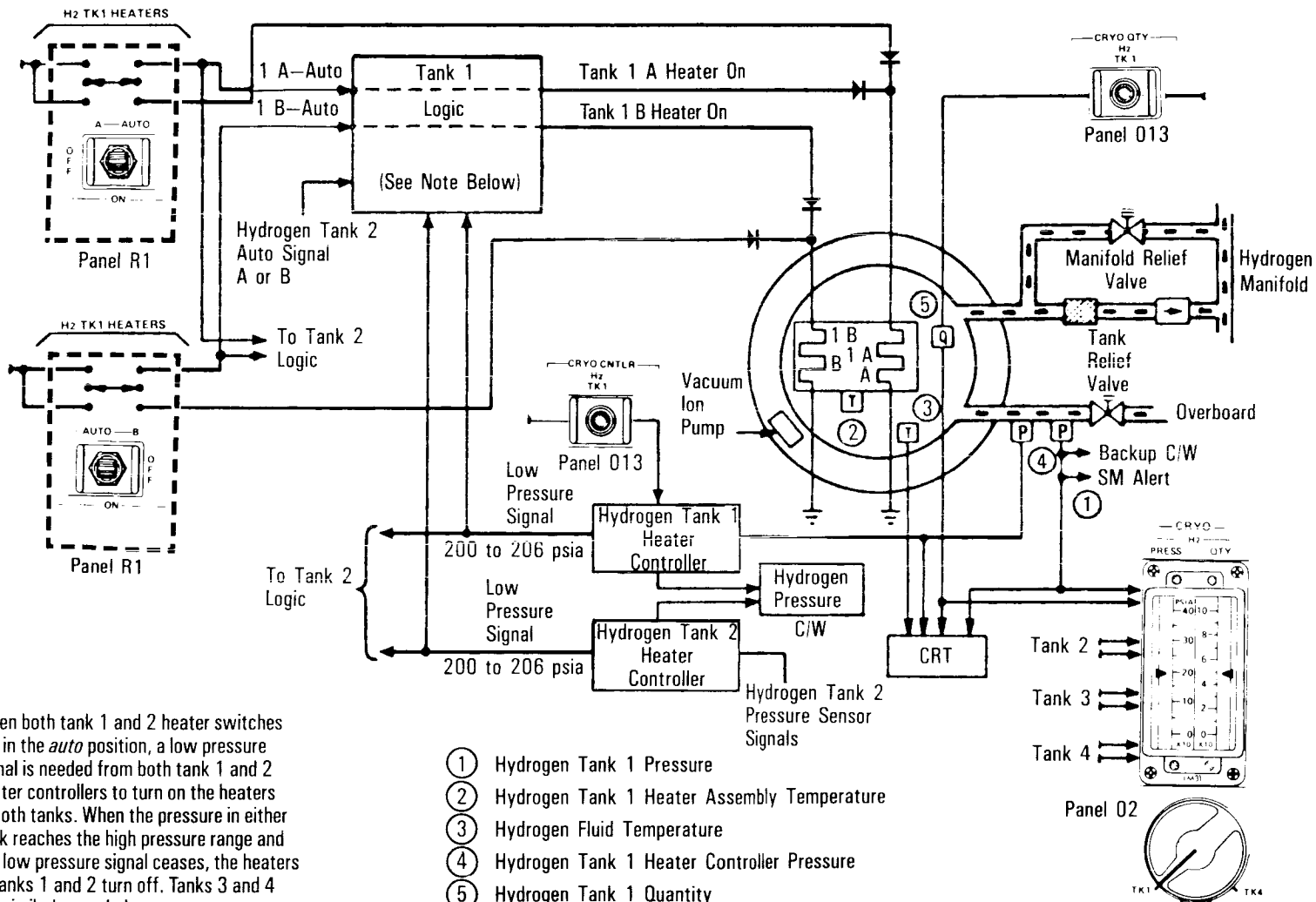


Note: When both tank 1 and 2 heater switches are in the *auto* position, a low pressure signal is needed from both tank 1 and 2 heater controllers to turn on the heaters in both tanks. When the pressure in either tank reaches the high pressure range and the low pressure signal ceases, the heaters in tanks 1 and 2 turn off. Tanks 3 and 4 are similarly coupled.

1. Hydrogen Tank 1 Pressure
2. Hydrogen Tank 1 Heater Assembly Temperature
3. Hydrogen Fluid Temperature
4. Hydrogen Tank 1 Heater Controller Pressure
5. Hydrogen Tank 1 Quantity

*Power Reactant Storage and Distribution—Hydrogen Tank 1*

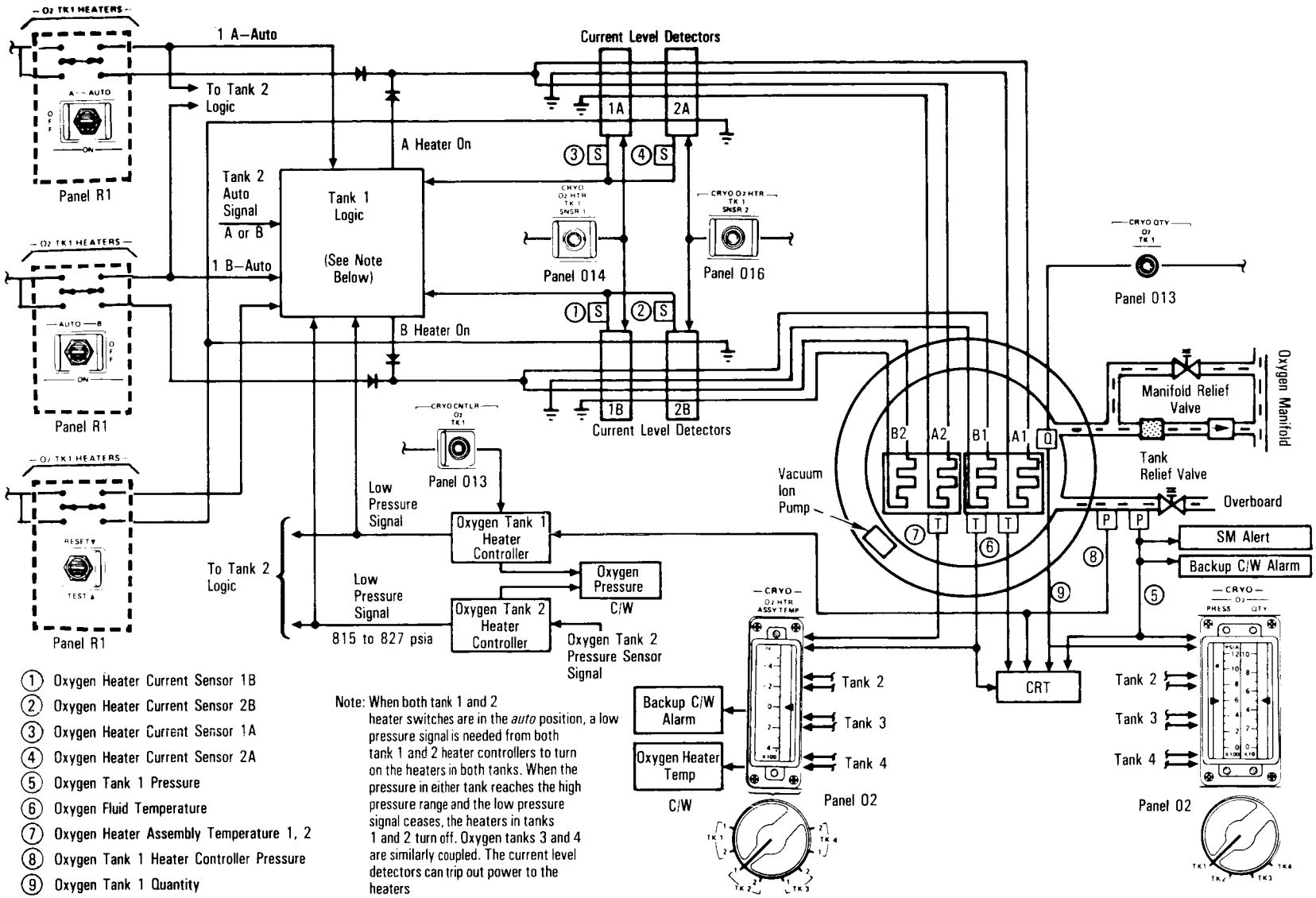


1. Oxygen Heater Current Sensor 1B
2. Oxygen Heater Current Sensor 2B
3. Oxygen Heater Current Sensor 1A
4. Oxygen Heater Current Sensor 2A
5. Oxygen Tank 1 Pressure
6. Oxygen Fluid Temperature
7. Oxygen Heater Assembly Temperature 1, 2
8. Oxygen Tank 1 Heater Controller Pressure
9. Oxygen Tank 1 Quantity

Note: When both tank 1 and 2 heater switches are in the *auto* position, a low pressure signal is needed from both tank 1 and 2 heater controllers to turn on the heaters in both tanks. When the pressure in either tank reaches the high pressure range and the low pressure signal ceases, the heaters in tanks 1 and 2 turn off. Oxygen tanks 3 and 4 are similarly coupled. The current level detectors can trip out power to the heaters

*Power Reactant Storage and Distribution—Oxygen Tank 1*

pressure in a tank is equal to or below a specific pressure and the controller sends a low pressure signal to the heater logic and the heater is powered on, the pressure bands are 200 to 206 psia; hydrogen tanks 3 and 4, 217 to 223 psia; oxygen tanks 1 and 2, 805 to 817 psia; and oxygen tanks 3 and 4, 834 to 846 psia. When the pressure of hydrogen tanks 1 and 2 is 220 to 226 psia, hydrogen tanks 3 and 4 is 237 to 243 psia, oxygen tanks 1 and 2 is 840 to 852 psia, and oxygen tanks 3 and 4 is 869 to 881 psia, the respective controller sends a high pressure signal to the heater logic, and the heater involved is turned off.

Dual-mode heater operation is available for pairs of oxygen and hydrogen tanks. If the heaters of both tanks 1 and 2 or tanks 3 and 4 are placed in the automatic mode, the tank heater logic is interconnected. In this case, the heater controllers of both tanks must send a low pressure signal to the heater logic before the heaters will turn on. Once the heaters are on, a high pressure signal from either tank will turn off the heaters in both tanks.

In the manual mode, the flight crew controls the heaters by using the *on/off* positions for each heater switch on panel R1 or A11. High or low pressure in each tank is shown on the CRT display or the gauges on panel O2. The specific tank is selected by setting the rotary switch on panel O2.

Before lift-off, the oxygen and hydrogen tank 1 and 2 heater switches are set on *auto*. After SRB separation, all the hydrogen and oxygen tank 1 and 2 heater switches are positioned to *auto*, and the tank 3 and 4 heaters remain off. On orbit, the tank 3 and 4 heater switches are positioned to *auto*. Because the tank 3 and 4 heater controller pressure limits are higher than those of tanks 1 and 2, tanks 3 and 4 supply the reactants to the fuel cells. For entry, the tank 3 and 4 heater switches are set to *off*, and tanks 1 and 2 supply the reactants to the fuel cells.

The cryo oxygen *htr assy temp* meter on panel O2, in conjunction with the rotary switch *tk1 1-2, tk2 1-2, tk3 1-2, tk4 1-2,*



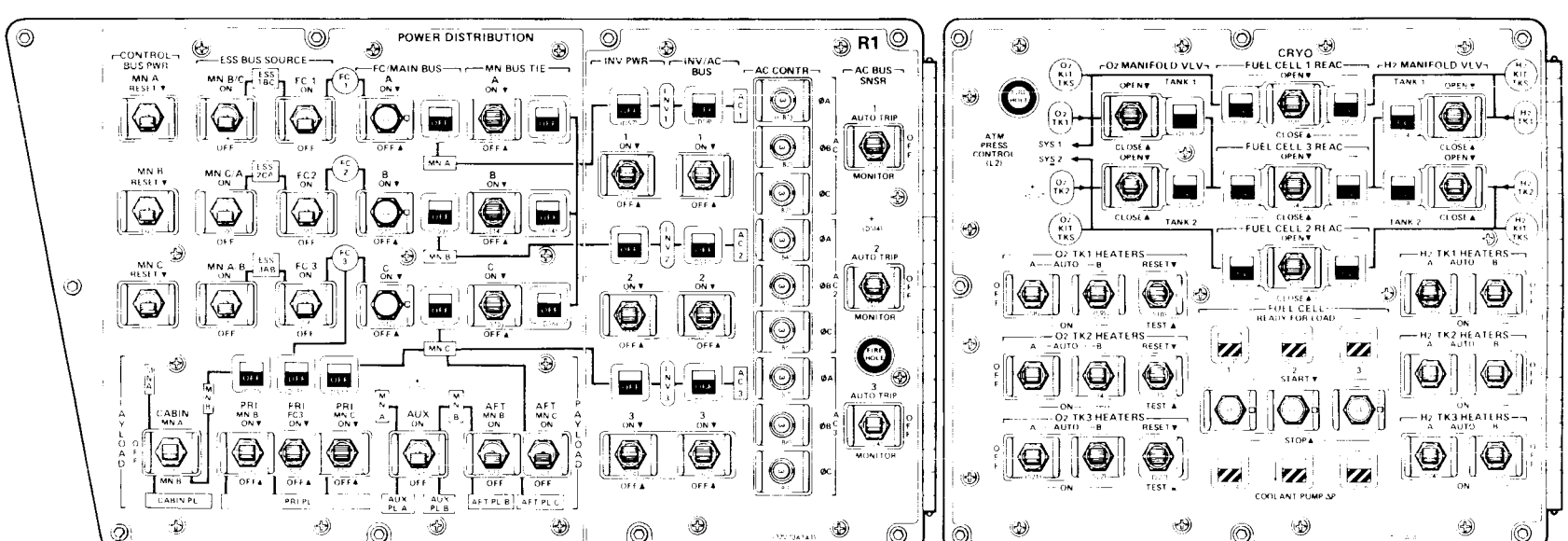


*Panel R1*

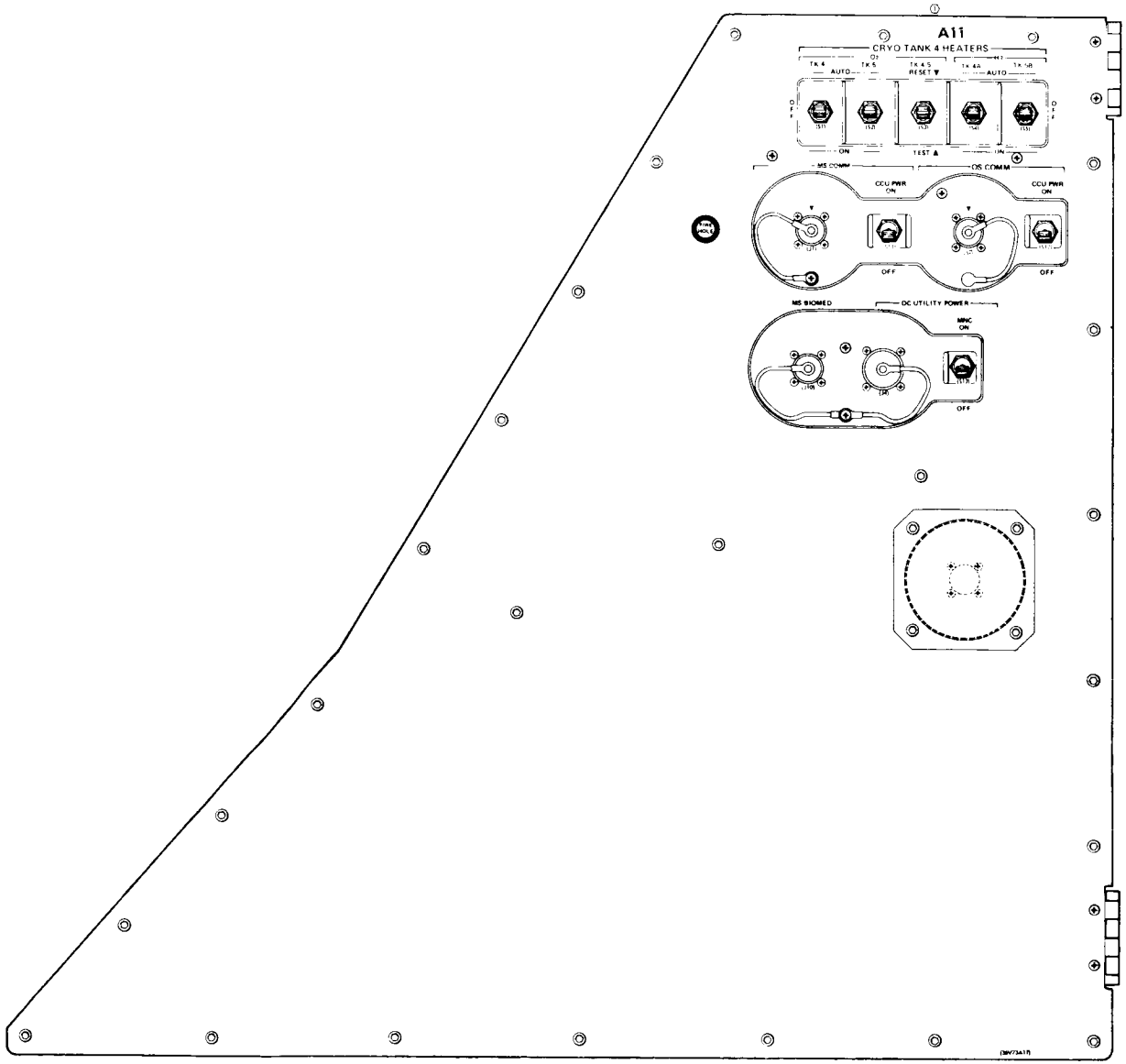
A11
CRYO TANK 4 HEATERS
TK 4
AUTO
TK 5
TK 4 5
RESET
TK 4A
TK 5B
AUTO
ON
TEST
MS COMM
OS COMM
CCU PWR
ON
OFF
MS SIGNED
DC UTILITY POWER
NINC
ON
OFF

*Panel A11*

selects one of the two heaters in each tank and permits the temperature of the heater element to be displayed. The range of the display is from minus 425 F to plus 475 F. The temperature sensor in each heater also is hard-wired directly to the yellow *$O_2$ heater temp* caution and warning light on panel F7. This light is illuminated if the temperature is at or above 349 F. A signal also is sent to the computers, where software checks the limit; and if the temperature is at or above 349 F, the *backup C/W alarm* light on panel F7 is illuminated. This signal also is transmitted to the CRT and telemetry.

Two current level detectors are built into the circuit of each oxygen tank heater to interrupt power in case of electrical shorts. The second detector is redundant. Each detector is divided into A and B detectors. One monitors the heater A current and the other monitors the heater B current. The detectors are powered by circuit breakers on panels O14, O15, O16 and ML86B and are identified as *cryo $O_2$ htr tk1, 2, 3, 4 snsr 1, 2*. The detectors monitor the current in and out of a heater. If the current difference is 0.9 amp or greater for 1.5 milliseconds, a trip signal is sent to the heater logic to remove power from the heaters regardless of the heater switch position. If one element of a heater causes a "trip-out,"

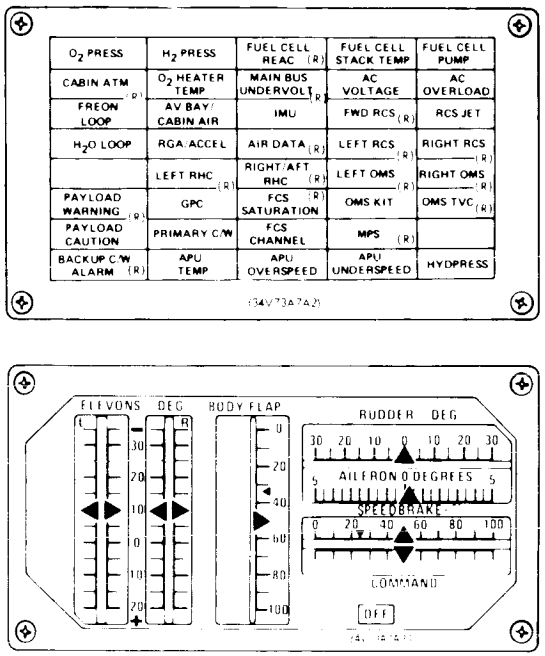


*Panel F7*



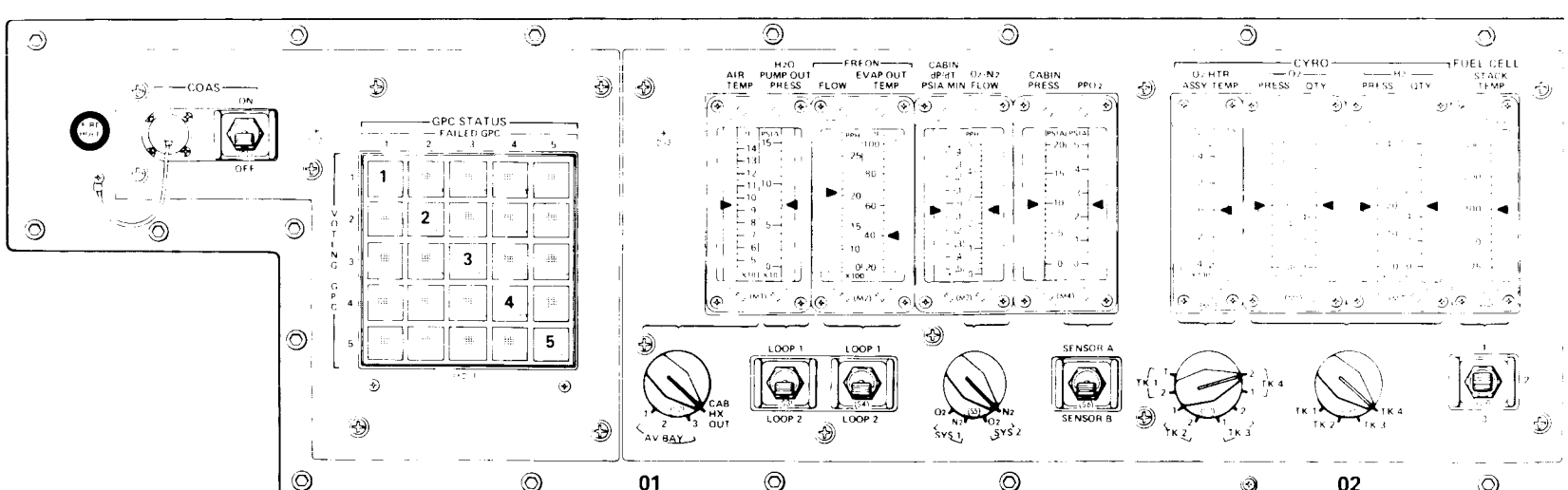


*Panel O1/O2*

power to both elements is removed. The *$O_2$ tk 1, 2, 3 heaters reset/test* switches on panel R1 and the *$O_2$ tk 4/5 reset/test* switch on panel A11 can be used to reapply power to that heater by positioning them to *reset*. The *test* position will cause a 1.4-amp delta current to flow through all four detectors of a specified oxygen tank, causing them to trip out. During on-orbit operations, the flight crew will be alerted to a current level detector trip-out by an *SM alert* on panel F7 and on the CRT.

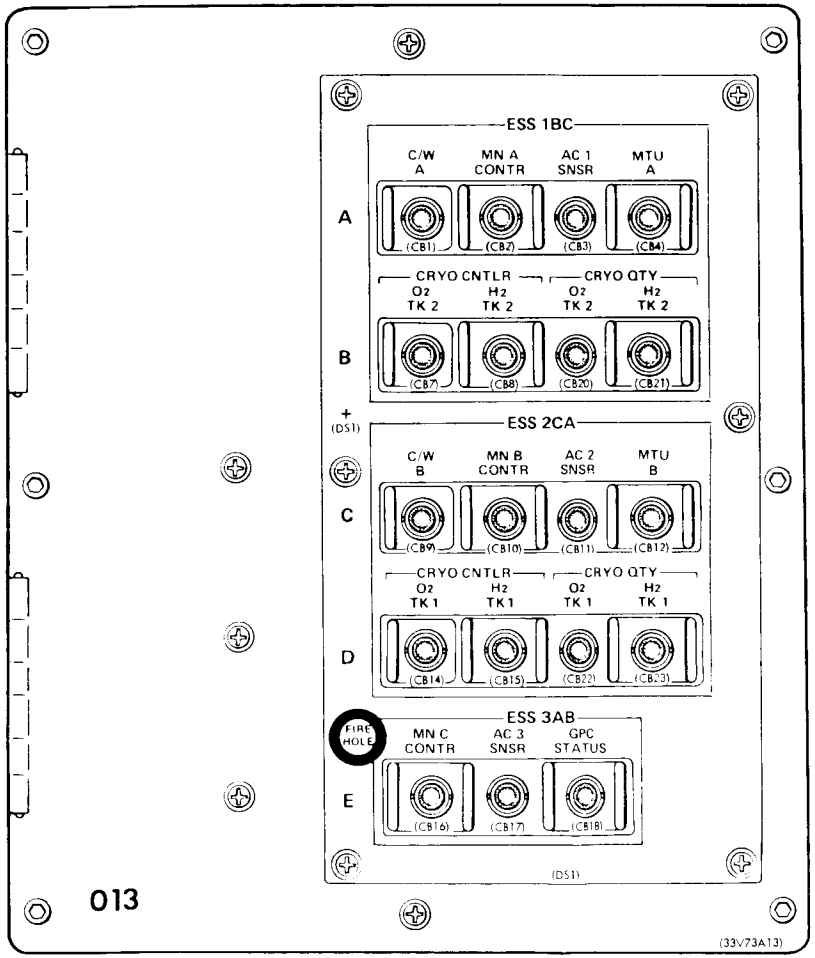


*Panel O13*

Each oxygen and hydrogen tank has a quantity sensor powered by a circuit breaker. These are identified on panel O13 as *cryo qty $O_2$* (or *$H_2$*) *tk1* and *tk2* and on panel ML86B as *cryo qty $O_2$* (or *$H_2$*) *tk3* and *tk4*. Data from the quantity sensors is sent to panel O2, where the *tk1, tk2, tk3, tk4* rotary switch is used to select the tank for display on the *cryo $O_2$* (or *$H_2$*) *qty* meters. The range of the meters is zero to 100 percent. The data is also sent to the CRT.

There are two tank pressure sensors for each oxygen and hydrogen tank. One sensor transmits its data to the tank heater controllers and to the yellow *$O_2$* or *$H_2$ press* C/W light on panel F7, which is illuminated if oxygen tank pressure is below 540 psia or above 985 psia or if hydrogen tank pressure is below 153 psia or

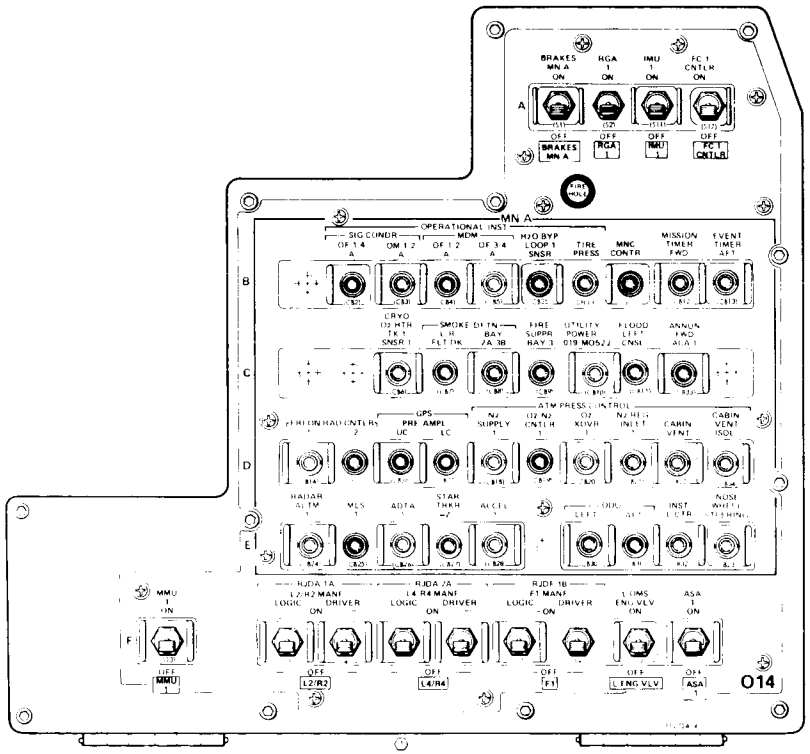


*Panel O14*

above 293.8 psia. The signal also is transmitted to the CRT and to panel O2, where the *tk1, tk2, tk3, tk4* rotary switch is used to select the tank for display on the *cryo* $O_2$ (or $H_2$) *press* meter. The data also goes to the *SM alert, backup C/W alarm* light on panel F7 and to telemetry. The range of the oxygen meter is zero to 1,200 psia. The hydrogen meter's range is zero to 400 psia.

The oxygen and hydrogen fluid temperature sensors transmit data to the CRT and telemetry.

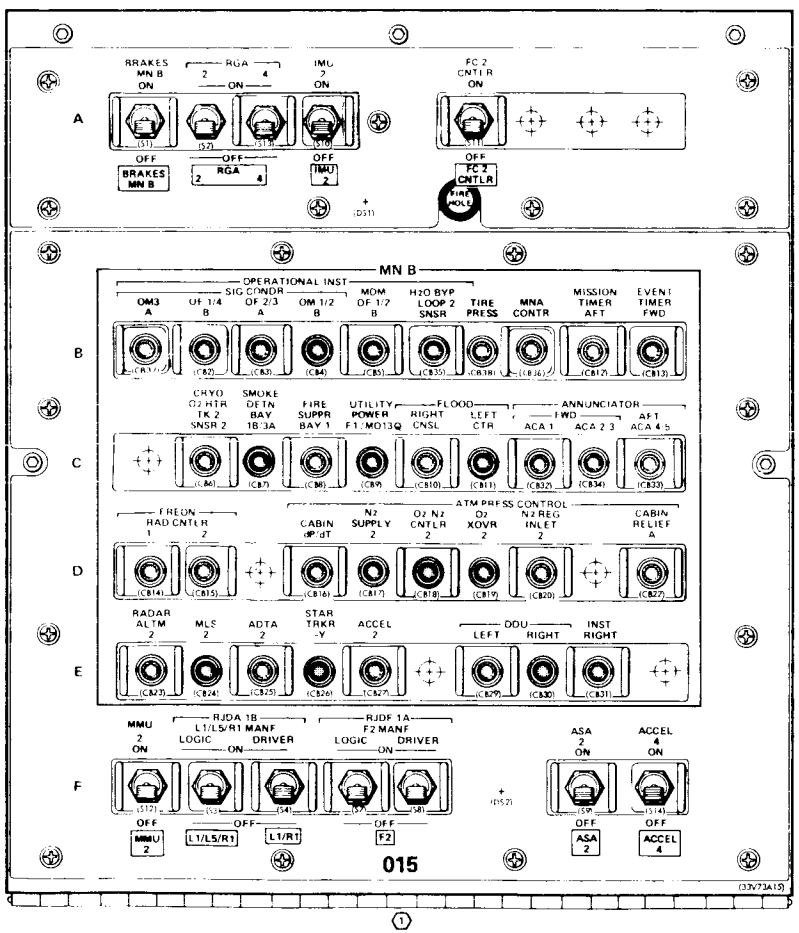


*Panel O15*

Each tank set (one hydrogen and one oxygen tank) has a hydrogen/oxygen control box that contains the electrical logic for the hydrogen and oxygen heaters and controllers. The control box is located on cold plates in the midbody under the payload bay envelope.

The reactants from the tanks flow through two relief valve/filter package modules and valve modules and then to the fuel cells through a common manifold. Oxygen is supplied to the manifold from the tank at a pressure of 815 to 881 psia, and hydrogen is supplied at a pressure of 200 to 243 psia. The pressure of the reactants will be essentially the same at the fuel cell interface as it is in the tanks since only a small decrease in pressure occurs in the manifolds.

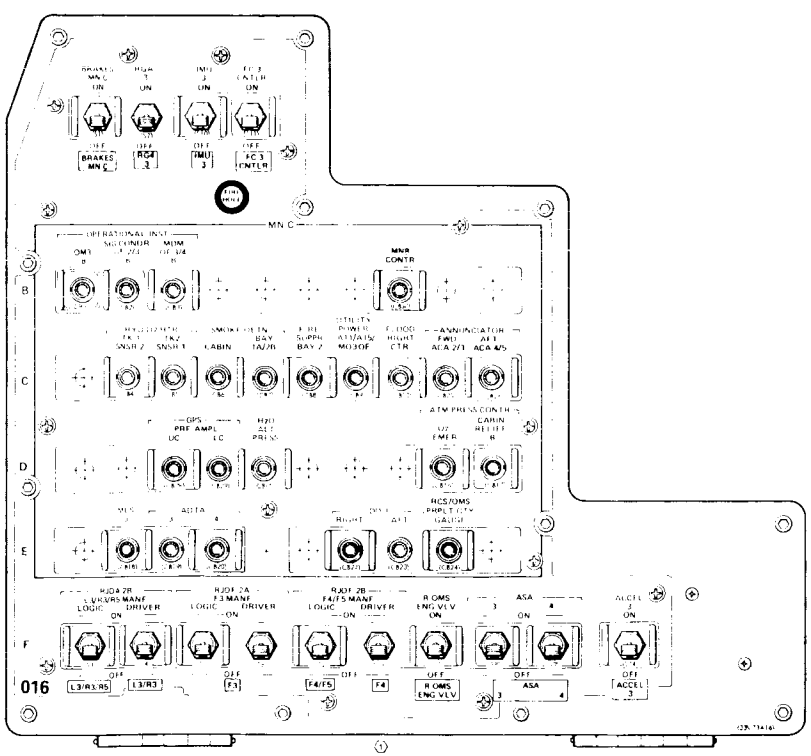


*Panel O16*

The relief valve/filter package module contains the tank relief valve and a 12-micron filter. The filter removes contaminants that could affect the performance of components within the power reactant storage and distribution subsystem and fuel cells. The valve relieves excessive pressure that builds up in the tank, and a manifold valve relieves pressure in the manifold lines. The oxygen tank relief valve relieves at 1,005 psia, and the hydrogen tank relief valve relieves at 310 psia.

The reactants flow from the relief valve/filter packages through four reactant valve modules: two hydrogen (hydrogen valve modules 1 and 2) and two oxygen (oxygen modules 1 and 2). Each valve module contains a check valve for each cryogenic tank line to prevent the reactants from flowing from one tank to another tank in the event of a tank leak. This prevents a total loss of reactants. The oxygen valve modules also contain the environmental control and life support system atmosphere pressure control system 1 and 2 oxygen supply. Each module also contains a manifold valve and fuel cell reactant valves.

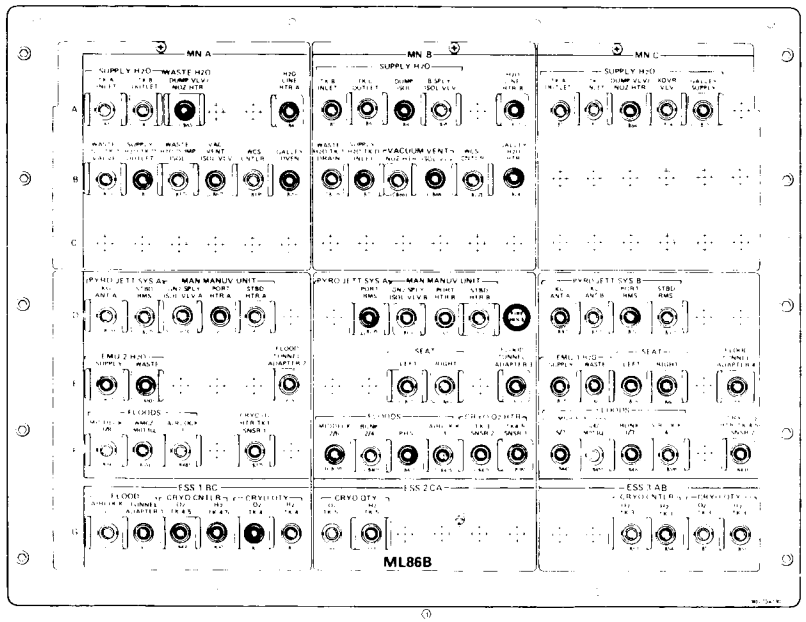


*Panel ML86B*

Each fuel cell reactant valve consists of two valves—one for hydrogen and one for oxygen. The valves are controlled by the *fuel cell 1, 2, 3 reac open/close* switches on panel R1. When the switch is positioned to *open,* the hydrogen and oxygen reactant valves for that fuel cell are opened, and reactants are allowed to flow from the manifold into the fuel cell. When the switch is positioned to *close,* the hydrogen and oxygen reactant valves for that fuel cell are closed, isolating the reactants from the fuel cell and rendering that fuel cell inoperative. Each *fuel cell reac* switch on panel R1 also has a talkback indicator. The corresponding talkback indicator indicates *op* when both valves are open and *cl* when either valve is closed.

Because it is critical to have reactants available to the fuel cells, the red *fuel cell reac* light on panel F7 is illuminated when any fuel cell reactant valve is closed, a caution/warning tone is sounded, and the computers sense the closed valve, which causes the *backup C/W alarm* light on panel F7 to be illuminated, an *SM alert* to occur, and the data to be displayed on the CRT. This alerts the flight crew that the fuel cell will be inoperative within approximately 20 seconds for a hydrogen valve closure and 130 seconds for an oxygen valve closure.

Each $H_2$ and $O_2$ *manifold 1, 2 open/close* switch on panel R1 controls the respective hydrogen and oxygen manifold valve. When the two hydrogen and two oxygen manifold valves are in the *close* position, fuel cell 1 receives reactants from cryogenic tank set 1, fuel cell 2 receives reactants from cryogenic tank set 2, and fuel cell 3 receives reactants from cryogenic tank sets 3 and 4. ECLSS atmosphere pressure control system 1 receives oxygen from oxygen tank 1, and system 2 receives oxygen from oxygen tank 2. When each $H_2$ and $O_2$ *manifold 1, 2 open/close* switch is positioned to *close,* the respective talkback indicator associated with each switch indicates *cl.*

With the $H_2$ and/or $O_2$ *manifold 1 open/close* switch positioned to *open,* cryogenic tanks 1 and 2 supply hydrogen to fuel

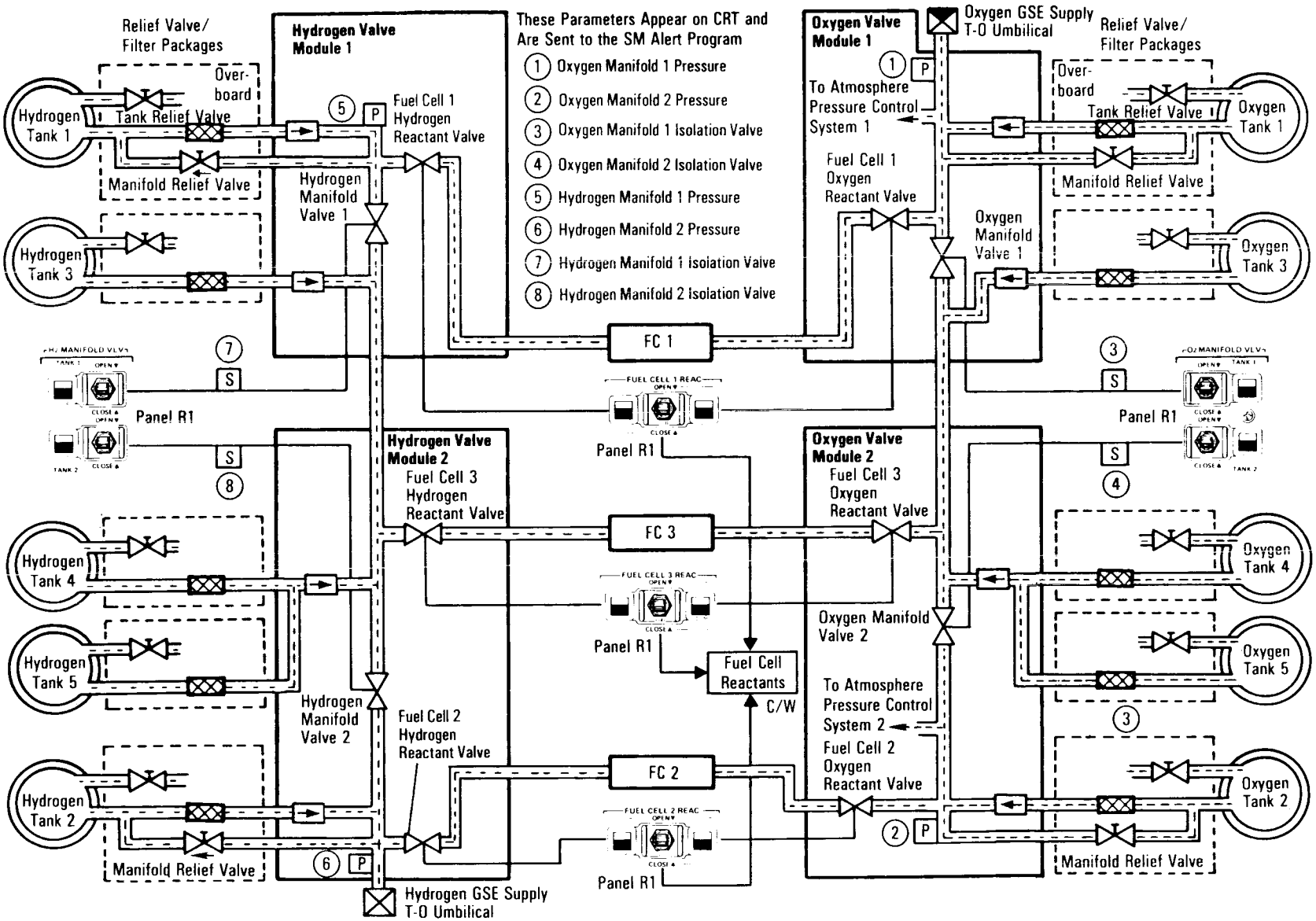


*Cryogenic Oxygen/Hydrogen Power Reactant Storage and Distribution System, Fuel Cell Reactants*

cells 1 and 3, and oxygen cryogenic tanks 1 and 3 supply oxygen to fuel cells 1 and 3 as well as to ECLSS atmosphere pressure control system 1. The talkback indicator associated with each switch indicates *op*.

When the *$H_2$* and/or *$O_2$ manifold 2 open/close* switch is positioned to *open,* hydrogen cryogenic tanks 2 and 3/4/5 supply hydrogen to fuel cells 2 and 3, and oxygen cryogenic tanks 2 and 3/4/5 supply oxygen to fuel cells 2 and 3 as well as to ECLSS atmosphere pressure control system 2. The talkback indicator associated with each switch indicates *op*.

With the *$H_2$* and *$O_2$ manifold 1* and *2* switches positioned to *op,* all hydrogen cryogenic tanks are supplying hydrogen to all three fuel cells, and all oxygen cryogenic tanks are supplying oxygen to all three fuel cells as well as to ECLSS atmosphere pressure control systems 1 and 2.

The manifold relief valves are a built-in safety device in the event a manifold valve and fuel cell reactant valves are closed because of a malfunction. The reactants trapped in the manifold lines would be warmed up by the internal heat of the orbiter and overpressurize. The manifold relief valve will open at 290 psi for hydrogen and 975 psi for oxygen to relieve pressure and allow the trapped reactants to flow back to their tanks.

Two pressure sensors located in the respective hydrogen and oxygen valve modules transmit data to the CRT. This data is also sent to the systems management computer, where its lower limit is checked; and if the respective hydrogen and oxygen manifold pressures are below 150 psia and 200 psia, respectively, an SM alert will occur.

If cryogenic tank set 5 is added to an orbiter, the displays and controls associated with controlling the tank set will be added to panel A15.

During prelaunch operations, the onboard fuel cell reactants (oxygen and hydrogen) are supplied by ground support equipment to assure a full load of onboard reactants before lift-off. At T minus two minutes 35 seconds, the GSE filling operation is terminated. The GSE supply pressure is 300 to 320 psia for hydrogen and 1,000 to 1,020 psia for oxygen, which is higher than the onboard PRSD pressures. The GSE supply valves close automatically to transfer to onboard reactants.

**FUEL CELL POWER PLANTS.** Each of the three fuel cell power plants is reusable and restartable. The fuel cells are located under the payload bay area in the forward portion of the orbiter's midfuselage.

The three fuel cells operate as independent electrical power sources, each supplying its own isolated, simultaneously operating 28-volt dc bus. The fuel cell consists of a power section, where the chemical reaction occurs, and an accessory section that controls and monitors the power section's performance. The power section, where hydrogen and oxygen are transformed into electrical power, water and heat, consists of 96 cells contained in three substacks. Manifolds run the length of these substacks and distribute hydrogen, oxygen and coolant to the cells. The cells contain electrolyte consisting of potassium hydroxide and water, an oxygen electrode (cathode) and a hydrogen electrode (anode).

The accessory section monitors the reactant flow, removes waste heat and water from the chemical reaction and controls the temperature of the stack. The accessory section consists of the hydrogen and oxygen flow system, the coolant loop and the electrical control unit.

Oxygen is routed to the fuel cell's oxygen electrode, where it reacts with the water and returning electrons to produce hydroxyl ions. The hydroxyl ions then migrate to the hydrogen electrode, where they enter into the hydrogen reaction. Hydrogen is routed to the fuel cell's hydrogen electrode, where it reacts with the hydroxyl ions from the electrolyte. This electrochemical reaction produces electrons (electrical power), water and heat. The electrons are routed through the orbiter's EPDC subsystem to perform electrical work. The oxygen and hydrogen are reacted (consumed) in proportion to the orbiter's electrical power demand.

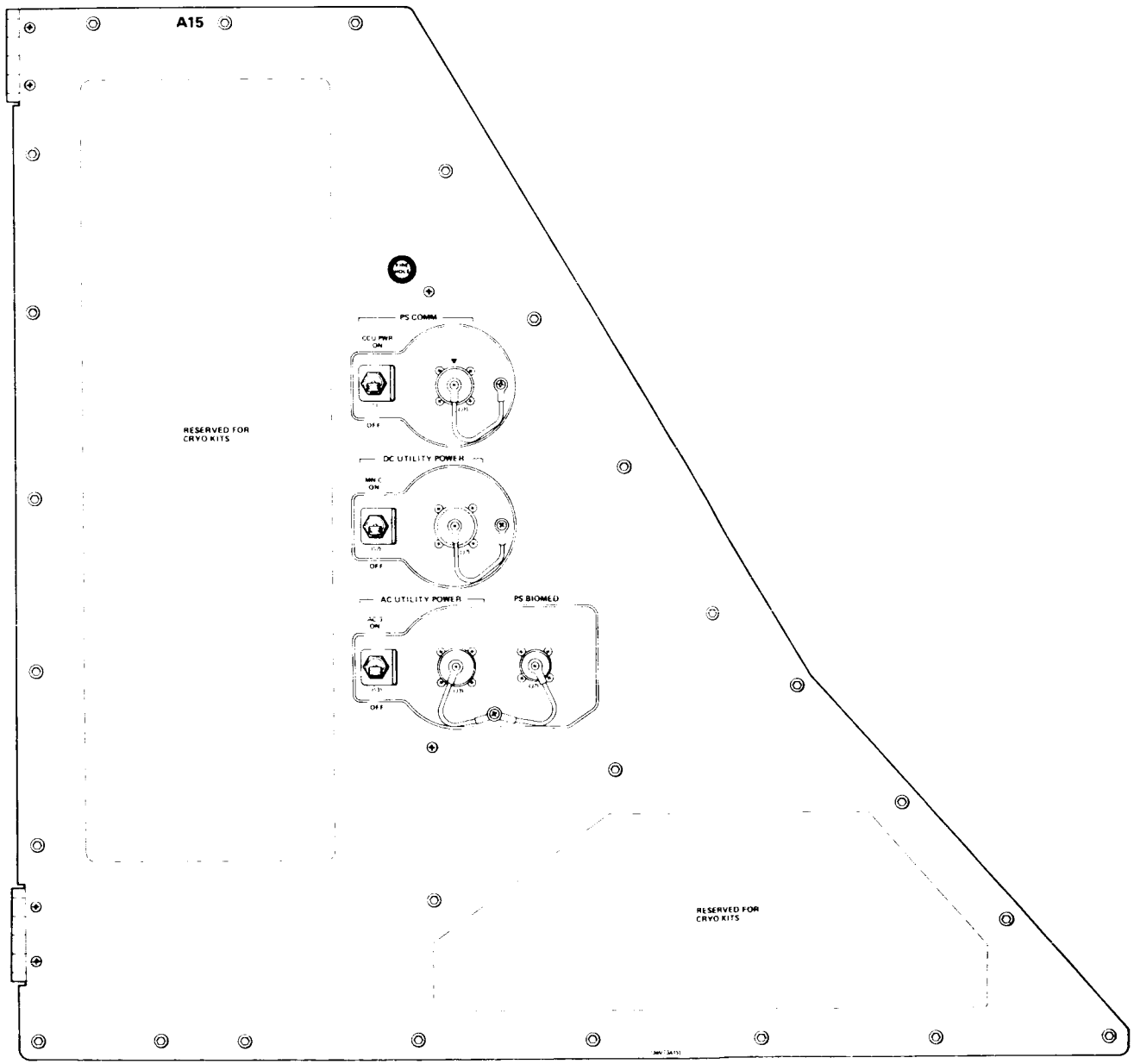
A15
PS COMM
CCU PWR
ON
OFF
RESERVED FOR
CRYO KITS
DC UTILITY POWER
ON
OFF
AC UTILITY POWER
PS BIOMED
ON
OFF
RESERVED FOR
CRYO KITS

*Panel A15*

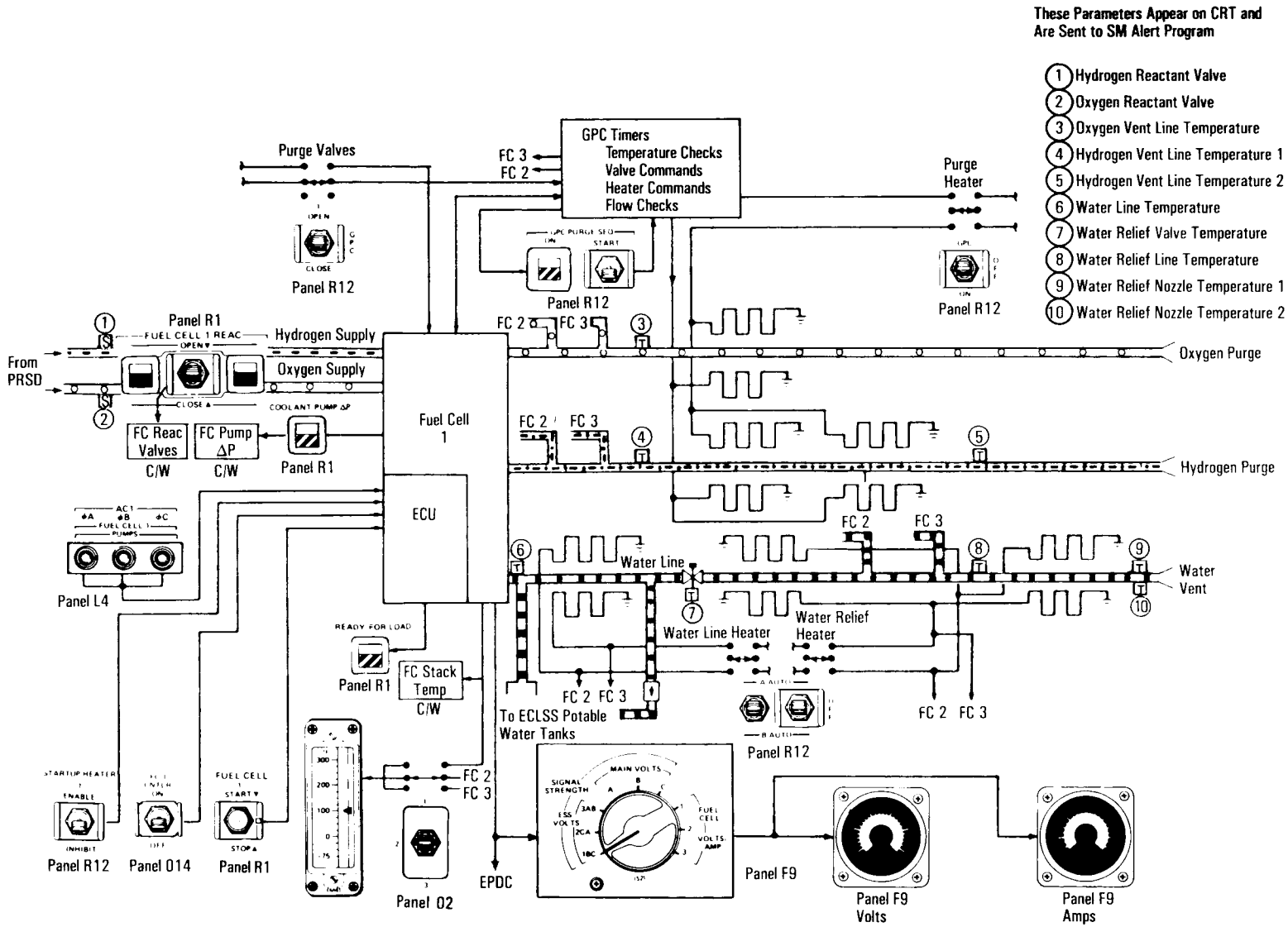


*Fuel Cell 1 Typical Displays and Controls*

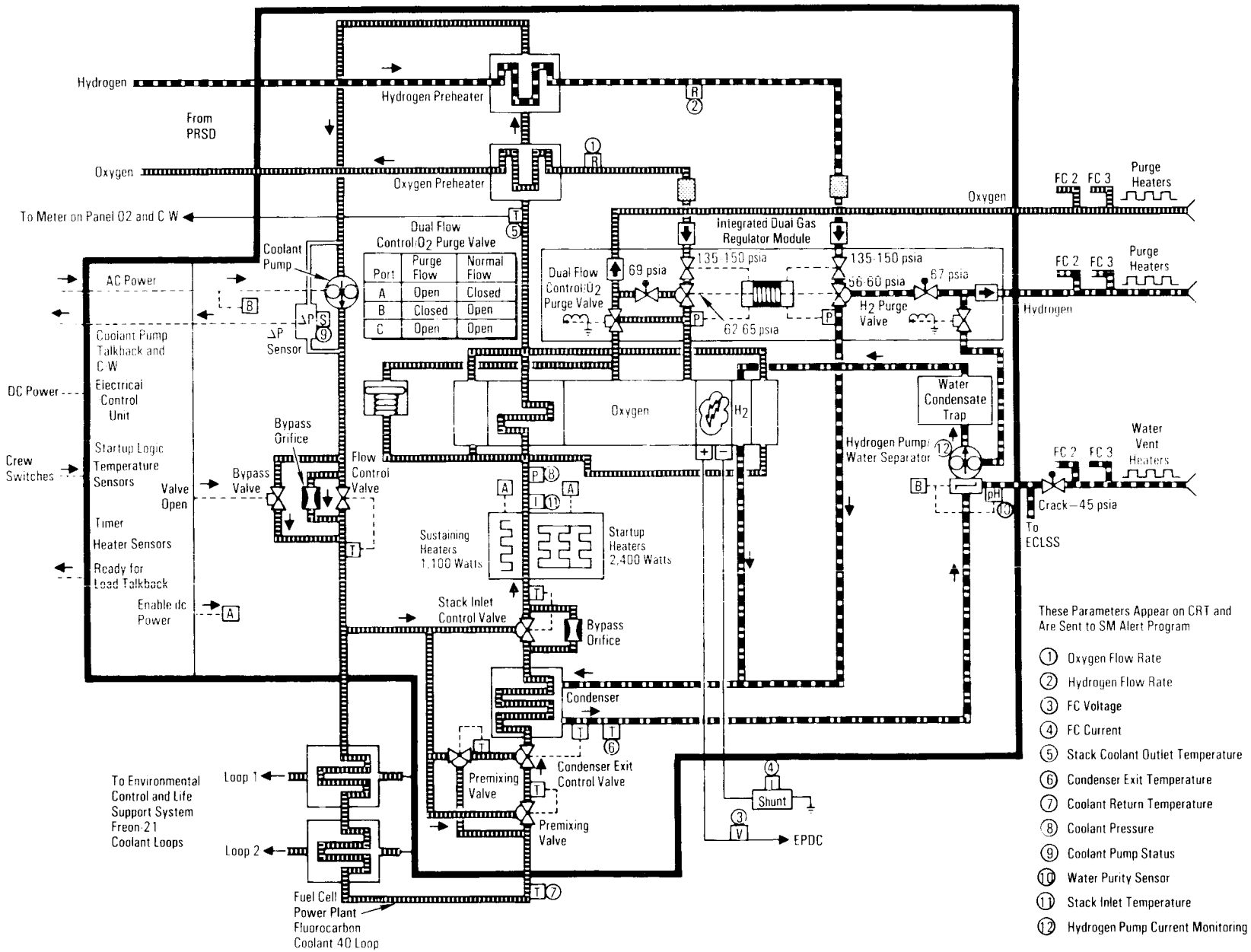


*Fuel Cell 1—Typical*

Excess water vapor is removed by an internal circulating hydrogen system. Hydrogen and water vapor from the reaction exits the cell stack, is mixed with replenishing hydrogen from the storage and distribution system, and enters a condenser, where waste heat from the hydrogen and water vapor is transferred to the fuel cell coolant system. The resultant temperature decrease condenses some of the water vapor to water droplets. A centrifugal water separator extracts the liquid water and pressure-feeds it to potable tanks in the lower deck of the pressurized crew cabin. Water from the potable water storage tanks can be used for crew consumption and cooling the Freon-21 coolant loops. The remaining circulating hydrogen is directed back to the fuel cell stack.

The fuel cell coolant system circulates a liquid fluorinated hydrocarbon and transfers the waste heat from the cell stack through the fuel cell heat exchanger of the fuel cell power plant to the Freon-21 coolant loop system in the midfuselage. Internal control of the circulating fluid maintains the cell stack at a normal operating temperature of approximately 200 F.

When the reactants enter the fuel cells, they flow through a preheater (where they are warmed from a cryogenic temperature to 40 F or greater); a 6-micron filter; and a two-stage, integrated dual gas regulator module. The first stage of the regulator reduces the pressure of the hydrogen and oxygen to 135 to 150 psia. The second stage reduces the oxygen pressure to a range of 62 to 65 psia and maintains the hydrogen pressure at 4.5 to 6 psia differential below the oxygen pressure. The regulated oxygen lines are connected to the accumulator, which maintains an equalized pressure between the oxygen and the fuel cell coolant. If the oxygen's and hydrogen's pressure decreases, the coolant's pressure is also decreased to prevent a large differential pressure inside the stack that could deform the cell stack structural elements.

Upon leaving the dual gas regulator module, the incoming hydrogen mixes with the hydrogen-water vapor exhaust from the fuel cell stack. This saturated gas mixture is routed through a condenser, where the temperature of the mixture is reduced, condensing a portion of the water vapor to form liquid water droplets. The liquid water is then separated from the hydrogen-water mixture by the hydrogen pump/water separator.

The hydrogen pump circulates the hydrogen gas back to the fuel cell stack, where some of the hydrogen is consumed in the reaction. The remainder flows through the fuel cell stack, removing the product water vapor formed at the hydrogen electrode. The hydrogen-water vapor mixture then combines with the regulated hydrogen from the dual gas generator module, and the loop begins again.

The oxygen from the dual gas regulator module flows directly through two ports into a closed-end manifold in the fuel cell stack, achieving optimum oxygen distribution in the cells. All oxygen that flows into the stack is consumed, except during purge operations.

Reactant consumption is directly related to the electrical current produced: if there are no internal or external loads on the fuel cell, no reactants will be used. Because of this direct proportion, leaks may be detected by comparing reactant consumption and current produced. An appreciable amount of excess reactants used indicates a probable leak.

Water and electricity are the products of the chemical reaction of oxygen and hydrogen that takes place in the fuel cells. The water must be removed or the cells will become saturated with water, decreasing reaction efficiency. With an operating load of about 7 kilowatts, it takes only a few minutes to flood the fuel cell with produced water, thus effectively halting power generation. Hydrogen is pumped through the stack, reacting with oxygen and picking up and removing water vapor on the way. After being condensed, the liquid water is separated from the hydrogen by the hydrogen pump/water separator and discharged from the fuel cell to be stored in the ECLSS potable water storage tanks.

If the water tanks are full or there is line blockage, the water relief valves open at 45 psia to allow the water to vent overboard through the water relief line and nozzle. Check valves prevent

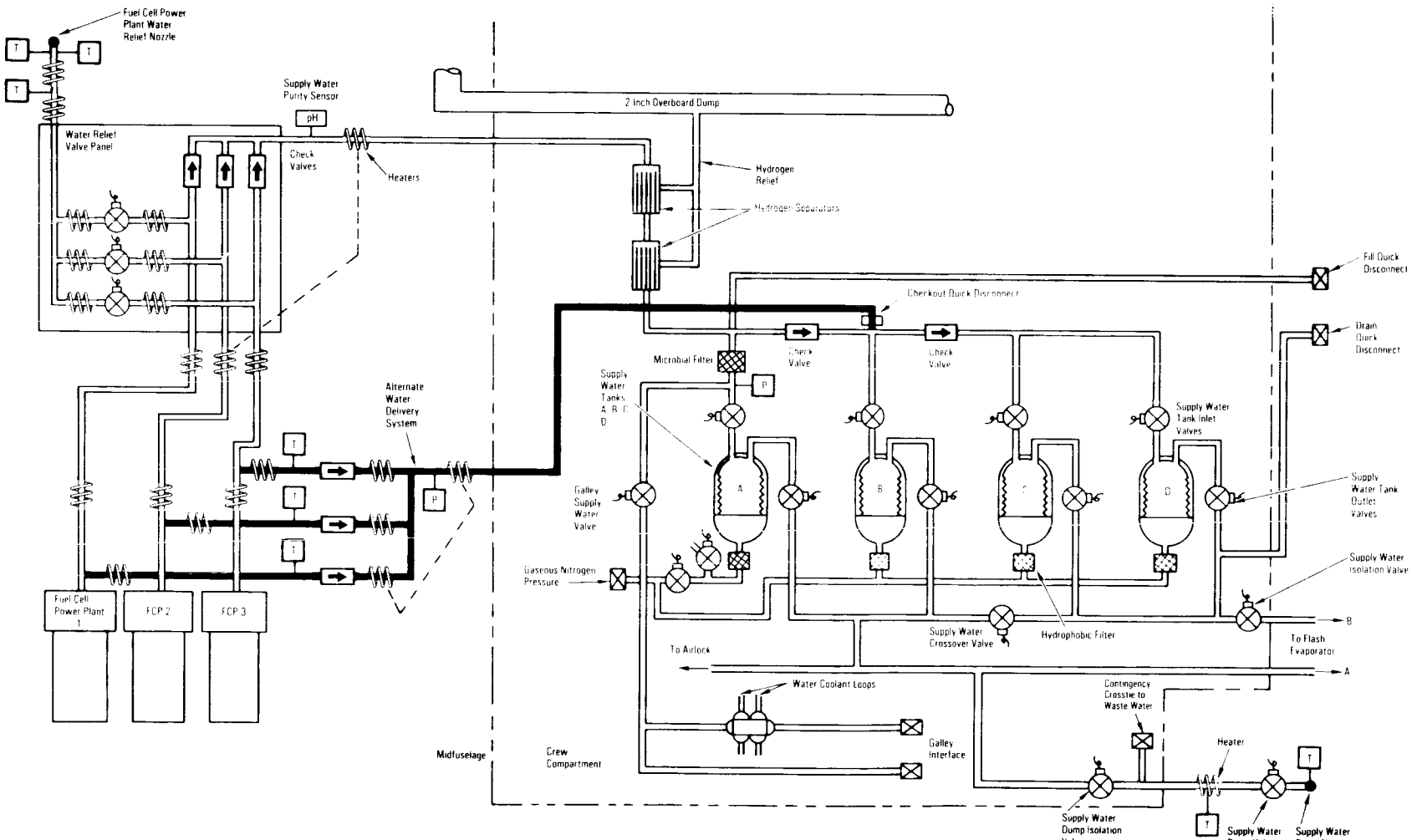


*Alternate Water Delivery Systems*

water tanks from discharging through an open relief valve. An alternate water delivery path is also available to deliver water to the ECLSS tanks if the primary path is lost.

For redundancy, there are two thermostatically activated heaters wrapped around the discharge and relief lines to prevent blockage caused by the formation of ice in the lines. Two switches on panel R12, *fuel cell $H_2O$ line htr* and *$H_2O$ relief htr*, provide the flight crew with the capability to select either *auto A* or *auto B* for the fuel cell water discharge line heaters and the water relief line and vent heaters, respectively.

Thermostatically controlled heaters will maintain the water line temperature above 53 F, when required. The normal temperature of product water is approximately 140 to 150 F. The thermostatically controlled heaters maintain the water relief valve's temperature when in use between 70 to 100 F. Temperature sensors located on the fuel cell water discharge line, relief valve, relief line and vent nozzle are displayed on the CRT.

If the potassium hydroxide electrolyte in the fuel cell migrates into the product water, a pH sensor located downstream of the hydrogen pump/water separator will sense the presence of the electrolyte, and the crew will be alerted by an *SM alert* and display on the CRT.

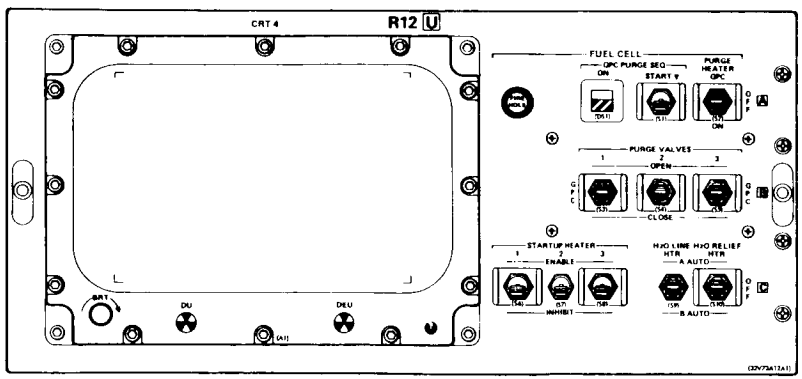


*Panel R12*

During normal fuel cell operation, the reactants are present in a closed-loop system and are 100 percent consumed in the production of electricity. Any inert gases or other contaminants will accumulate in and around the porous electrodes in the cells and reduce the reaction efficiency and electrical load support capability. Purging, therefore, is required at least twice daily to cleanse the cells. When a purge is initiated by opening the purge valves, the oxygen and hydrogen systems become open-loop systems; and increased flows allow the reactants to circulate through the stack, pick up the contaminants and blow them out overboard through the purge lines and vents. Electrical power is produced throughout the purge sequence, although no more than 10 kilowatts should be required from a fuel cell being purged because of the increased reactant flow and preheater limitations.

Fuel cell purge can be activated automatically or manually by the use of *fuel cell* switches on panel R12. In the automatic mode, the *fuel cell purge heater* switch is positioned to *GPC*. The purge line heaters are turned on to heat the purge lines to ensure that the reactants will not freeze in the lines. The hydrogen reactant is the more likely to freeze because it is saturated with water vapor. Depending on the orbit trajectory and vehicle orientation, the heaters may require 27 minutes to heat the lines to the required temperatures. The fuel cell current is checked to ensure a load of less than 350 amps, due to limitations on the hydrogen and oxygen preheaters in the fuel cells. As the current output of the fuel cell increases, the reactant flow rates increase, and the preheaters raise the temperature of the reactants to a minimum of minus 40 F in order to prevent the seals in the dual gas regulator from freezing.

The purge lines from all three fuel cells are manifolded together downstream of their purge valves and associated check valves. The line leading to the purge outlet is sized to permit unrestricted flow from only one fuel cell at a time. If purging of more than one cell at a time is attempted, pressure could build in the purge outlet line and cause a decrease in the flow rate through the individual cells, which would result in an inefficient purge.

When the *fuel cell purge valves 1, 2* and *3* switches are positioned to *GPC*, the *fuel cell GPC purge seq* switch is positioned to

*start* and must be held until the *GPC purge seq* talkback indicator indicates gray (in approximately three seconds). The automatic purge sequence will not begin if the indicator indicates barberpole. The GPC turns the purge line heaters on and monitors the temperature. The one oxygen line temperature sensor must register at least 69 F and the two hydrogen line temperature sensors 79 and 40 F, respectively, and be verified by the GPC before the purge sequence begins. If the temperatures are not up to minimum after 27 minutes, the GPC will issue an *SM alert* and display the data on the CRT. When the proper temperatures have been attained, the GPC will open for two minutes and then close the hydrogen and oxygen purge valves for fuel cells 1, 2 and 3 in that order. Thirty minutes after the fuel cell 3 purge valves have been closed (to ensure that the purge lines have been totally evacuated), the GPC will turn off the purge line heaters. This provides sufficient time and heat to bake out any remaining water vapor. If the heaters are turned off before 30 minutes have elapsed, water vapor left in the lines may freeze.

The manual fuel cell purge would be initiated by the flight crew using the switches on panel R12. In the manual mode, the three fuel cells must be purged separately. The *fuel cell purge heater* switch is positioned to *on* for the same purpose as in the automatic mode, and the flight crew verifies that the temperatures of the oxygen line and two hydrogen lines are at the same minimum temperatures as in the automatic mode before the purge sequence is initiated. The *fuel cell purge valves 1* switch is positioned to *open* for two minutes, and the flight crew observes that the oxygen and hydrogen flow rates increase on the CRT. The *fuel cell purge valves 1* switch is then positioned to *close*, and a decrease in the oxygen and hydrogen flow rates is observed on the CRT, indicating the purge valves are closed. Fuel cell 2 is purged in the same manner using the *fuel cell purge valves 2* switch. Fuel cell 3 is then purged in the same manner using the *fuel cell purge valves 3* switch. After the 30-minute line bakeout period, the *fuel cell purge heater* switch is positioned to *off*.

In order to cool the fuel cell stack during its operations, distribute heat during fuel cell starting, and warm the cryogenic reactants entering the stack, the fuel cell circulates a coolant—fluorinated hydrocarbon—throughout the fuel cell. The fuel cell coolant loop and its interface with the ECLSS Freon-21 coolant loops are identical in fuel cells 1, 2 and 3.

Where the coolant enters the fuel cell, the temperature of the F-40 coolant returning from the ECLSS Freon-21 coolant loops is sensed before it passes through a 75-micron filter. After the filter, two temperature-controlled mixing valves allow some of the hot coolant to mix with the cool returning coolant to prevent the condenser exit control valve from oscillating. The condenser exit control valve adjusts the flow of the coolant through the condenser to maintain the hydrogen-water vapor exiting the condenser at a temperature between 148 and 153 F.

The stack inlet control valve maintains the temperature of the coolant entering the stack between 177 and 187 F. The accumulator is the interface with the oxygen cryogenic reactant to maintain an equalized pressure between the oxygen and the coolant (the oxygen and hydrogen pressures are controlled at the dual gas regulator) to preclude a high-pressure differential in the stack. The pressure in the coolant loop is sensed before the coolant enters the stack.



The coolant is circulated through the fuel cell stack to absorb the waste heat from the hydrogen/oxygen reaction occurring in the individual cells. After the coolant leaves the stack, its temperature is sensed and the data transmitted to the GPC, to the *fuel cell stack temp* meter through the *fuel cell 1, 2, 3* switch located below the meter on panel O2, and to the CRT display. The yellow *fuel stack temp* C/W and the *backup C/W alarm* lights on panel F7 and the *SM alert* light will be illuminated if fuel cell and stack temperatures exceed certain limits: below 172.5 F or above 243.7 F. The hot coolant from the stack flows through the oxygen and hydrogen preheaters, where it warms the cryogenic reactants before they enter the stack.

The coolant pump utilizes three-phase ac power to circulate the coolant through the loop. The differential pressure sensor senses a pressure differential across the pump to determine the status of the pump. The *fuel cell pump* C/W light on panel F7 will be

illuminated if fuel cell 1, 2 or 3 coolant pump delta pressure is lost. The *SM alert* light also will be illuminated, and a fault message will be sent to the CRT. If the coolant pump for fuel cell 1, 2 or 3 is *off*, the *backup C/W alarm* light will be illuminated, and a fault message will be sent to the CRT. The temperature-actuated flow control valve downstream from the pump adjusts the coolant flow to maintain the fuel cell coolant exit temperature between 190 and 210 F. The stack inlet control valve and flow control valve have bypass orifices to allow coolant flow through the coolant pump and to maintain some coolant flow through the condenser for water condensation, even when the valves are fully closed due to the requirements of thermal conditioning.

The coolant (that which is not made to bypass) exits the fuel cells to the fuel cell heat exchanger, where it transfers its excess heat to be dissipated through the ECLSS Freon-21 coolant loop systems in the midfuselage.

In addition to thermal conditioning by means of the coolant loop, the fuel cell has internal startup and sustaining heaters. The 2,400-watt startup heater is used only during startup to warm the fuel cell to its operational level. The 1,100-watt sustaining heaters normally are used during low power periods to maintain the fuel cells at their operational temperature.

Two 160-watt end-cell electrical heaters on each fuel cell power plant were used to maintain a uniform temperature throughout the fuel cell power section. As an operational improvement, the end-cell electrical heaters on each fuel cell power plant were deleted due to potential electrical failures and were replaced by fuel cell power plant coolant (F-40) passages. This permits waste heat from each fuel cell power plant to be used to maintain a uniform temperature profile for each fuel cell power plant.

The hydrogen pump and water separator of each fuel cell power plant were also improved. To minimize excessive hydrogen gas entrained in each fuel cell power plant's product water, modifications were made to the water pickup (pitot) system. The centrifugal force of high-velocity water flowing around the pitot tube's bends separates the hydrogen gas and water. Pitot pressure then expels the hydrogen gas into the hydrogen pump's inlet housing though a bleed orifice.

A current measurement detection system was added to monitor the hydrogen pump load for each fuel cell power plant. Excessive load could indicate improper water removal, which could lead to flooding of the fuel cell power plant and eventually render that power plant inoperative.

The start/sustaining heater system for each fuel cell power plant was also modified. The modification was required specifically for fuel cell power plant No. 1, mounted on the port, or left, side. The No. 1 fuel cell power plant start/sustaining heater system added heat to that fuel cell power plant's F-40 coolant loop system during the startup of the power plant. Because of its orientation, any entrained gas in the coolant could enter the heater and become trapped at the heater elements. This would result in overheating of the heater elements, which could vaporize the F-40 coolant, causing heater failure and extensive damage to the fuel cell power plant. The F-40 coolant loop flow system within the start/sustaining heater of each fuel cell power plant was modified to prevent a gas bubble from developing or being trapped at the heater elements, preventing the loss of the start/sustaining heater.

A stack inlet temperature measurement was added to each fuel cell power plant. The temperature measurement was added to the in-flight system to provide full visibility of the thermal conditions of each fuel cell power plant (similar to the existing stack exit and condenser exit temperatures of each fuel cell power plant).

The product water from all three fuel cell power plants flows to a single water relief control panel. The water can be directed from the single panel to the ECLSS potable water tank A or to the fuel cell power plant water relief nozzle. Normally, the water is directed to water tank A. In the event of a line rupture in the vicinity of the single water relief panel, water could spray on all three water relief panel lines, causing them to freeze and prevent fuel cell power plant water discharge.

The product water lines from all three fuel cell power plants

were modified to incorporate a parallel (redundant) path of product water to ECLSS potable water tank B in the event of a freeze-up of the single water relief panel. In the event of the single water relief panel freeze-up, pressure would build up and relieve through the redundant paths to water tank B. Temperature sensors and a pressure sensor installed on each of the redundant water line paths transmit data via telemetry for ground monitoring.

A water purity sensor (pH) was added at the common product water outlet of the water relief panel to provide a redundant measurement of water purity. A single measurement of water purity in each fuel cell power plant was provided previously. If the fuel cell power plant pH sensor failed, the flight crew was required to sample the potable water.

The electrical control unit located in each fuel cell power plant is the brain of the power plants. The ECU contains the start-up logic, heater thermostats, and 30-second timer and interfaces with the controls and displays for fuel cell startup, operation and shutdown. The ECU controls the supply of ac power to the cool-

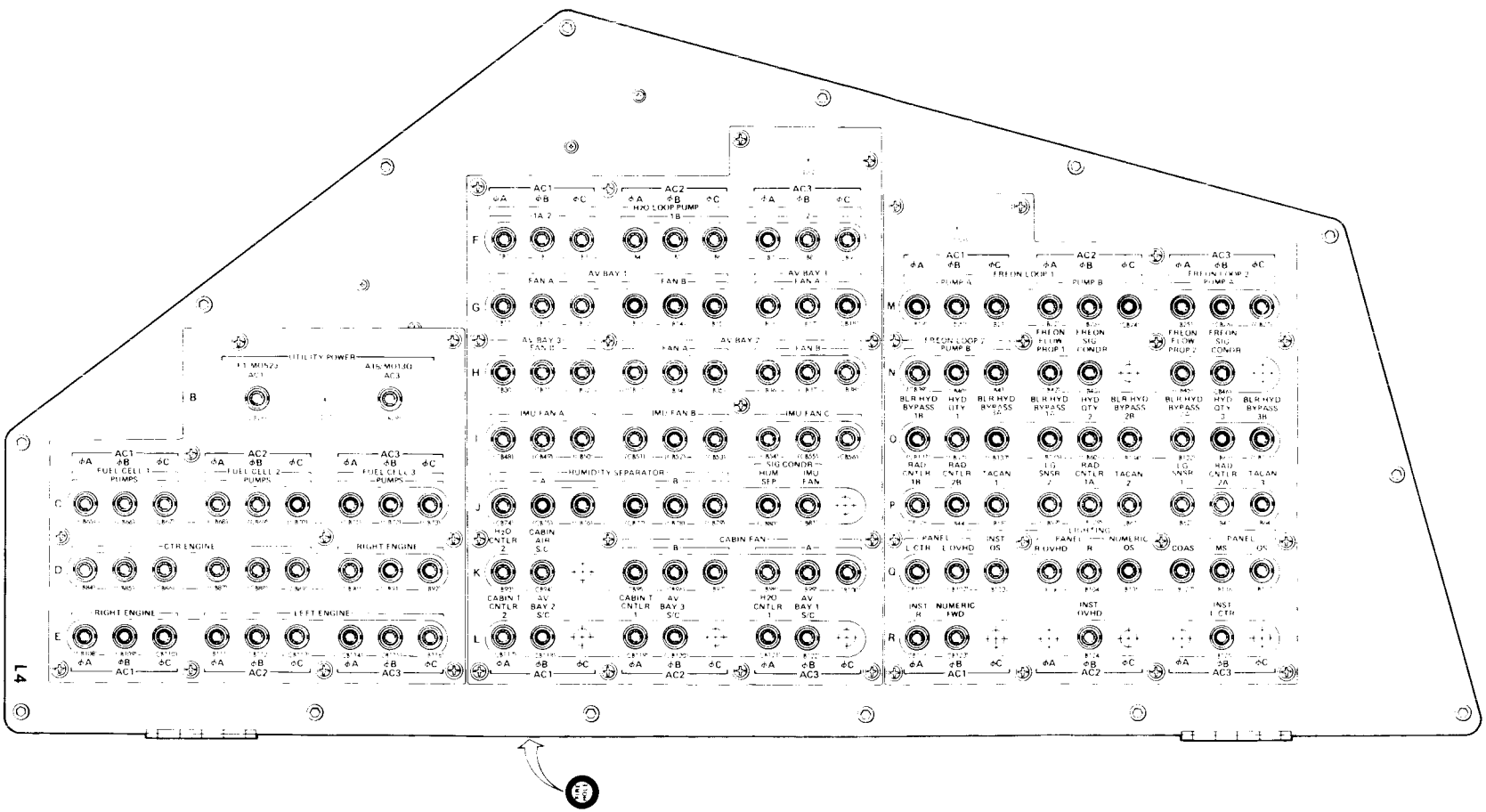


*Panel L4*

ant pump, hydrogen pump/water separator, the pH sensor, and the dc power supplied to the flow control bypass valve (open only during startup) and the internal startup and sustaining heaters. The ECU also controls the status of the *fuel cell 1, 2, 3 ready for load* and *coolant pump* $\Delta P$ talkback indicators on panel R1.

The nine fuel cell circuit breakers that connect the three-phase ac power to the three fuel cells are located on panel L4, and the fuel cell ECU receives its power from an essential bus through the *FC cntlr* switch on panel O14.

The *fuel cell start/stop* switch on panel R1 for each fuel cell is used to initiate the start sequence or stop the fuel cell operation. When this switch is held in its momentary *start* position, the ECU connects the three-phase ac power to the coolant pump and hydrogen pump/water separator (allowing the coolant and the hydrogen-water vapor to circulate through these loops) and connects the dc power to the internal startup and sustaining heaters and the flow control bypass valve. The switch must be held in the *start* position until the *coolant pump* $\Delta P$ talkback shows gray in approximately three to four seconds, which indicates that the coolant pump is functioning properly by creating a differential pressure across the pump. When the *coolant pump* $\Delta P$ talkback indicates barberpole, it indicates the coolant pump is not running.

The *ready for load* talkback for each fuel cell will show gray after the 30-second timer times out and the stack-out temperature is above 187 F (which can be monitored on panel O2 in conjunction with the *1, 2, 3* switch located beneath the *fuel cell stack out temp* meter). This indicates that the fuel cell is up to the proper operating temperature and is ready for loads to be attached to it. It should not take longer than 25 minutes for the fuel cell to warm up and become fully operational, the actual time depending on the fuel cell's initial temperature. The *ready for load* indicator remains gray until the *fuel cell start/stop* switch for each fuel cell is placed to *stop*, the *FC cntlr* switch is placed to *off*, or the essential bus power is lost to the ECU.

The *startup heater enable/inhibit* switch on panel R12 for each fuel cell provides the crew control of the off/on status of the startup heaters during fuel cell startup. The *inhibit* position allows the startup heaters to remain off and would be used only when immediate power is required from a shutdown fuel cell.

Fuel cell 1, 2 or 3 dc voltage and current (amps) can be monitored on the *dc volts* and *dc amps* meters on panel F9, using the *fuel cell volts/amp* rotary switch to select a specific fuel cell.

The fuel cells will be on when the crew boards the vehicle, and the vehicle is powered by the fuel cells and load sharing with the ground support equipment power supplies. Just before lift-off (T minus three minutes and 30 seconds), the GSE is powered off and the fuel cells take over all of the vehicle's electrical loads. Indication of the switchover can be noted on the CRT display and the *dc amps* meter. The fuel cell current will increase to approximately 220 amps; the oxygen and hydrogen flow will increase to approximately 4 and 0.6 pound per hour, respectively; and the fuel cell stack temperature will increase slightly.

Fuel cell standby consists of removing the electrical loads but continuing operation of the fuel cell pumps, controls, instrumentation and valves, with the electrical power being supplied by the remaining fuel cells. A small amount of reactants is used to generate power for the fuel cell internal heaters.



Fuel cell shutdown, after standby, consists of stopping the coolant pump and hydrogen pump/water separator by positioning that fuel cell *start/stop* switch on panel R1 to the *stop* position. If the temperature in the fuel cell compartment beneath the payload bay is lower than 40 F, the fuel cell should be left in standby instead of being shut down to prevent it from freezing.

Each fuel cell power plant is 14 inches high, 15 inches wide and 40 inches long and weighs 255 pounds.

The voltage and current range of each is 2 kilowatts at 32.5 volts dc, 61.5 amps, to 12 kilowatts at 27.5 volts dc, 436 amps. Each fuel cell is capable of supplying 12 kilowatts peak and 7 kilowatts maximum continuous power. The three fuel cells are capable of a maximum continuous output of 21,000 watts with

15-minute peaks of 36,000 watts. The average power consumption of the orbiter is expected to be approximately 14,000 watts, or 14 kilowatts, leaving 7 kilowatts average available for payloads. Each fuel cell will be serviced between flights and reused until each accumulates 2,000 hours of on-line service.

**ELECTRICAL POWER DISTRIBUTION AND CONTROL.** The EPDC subsystem distributes 28-volt dc electrical power and generates and distributes 115-volt, three-phase, 400-hertz ac electrical power to all of the space shuttle systems' electrical equipment throughout all mission phases. The EPDC subsystem consists of a three-bus system that distributes electrical power to the forward, mid-, and aft sections of the orbiter for equipment used in those areas. The three main dc buses are main A (MNA), main B (MNB) and main C (MNC). Three ac buses, AC1, AC2 and AC3, supply ac power to the ac loads. Three essential buses, ESS1BC, ESS2CA and ESS3AB, supply control power to selected flight crew controls and operational power to electrical loads that are deemed essential. Nine control buses, CNTL AB1, 2, 3; CNTL BC1, 2, 3; and CNTL CA1, 2, 3, are used only to supply control power to flight crew controls. Two preflight buses, PREFLT 1 and PREFLT 2, are used only during ground operations.

Electrical power is controlled and distributed by assemblies. Each assembly—main distribution assembly, power controller

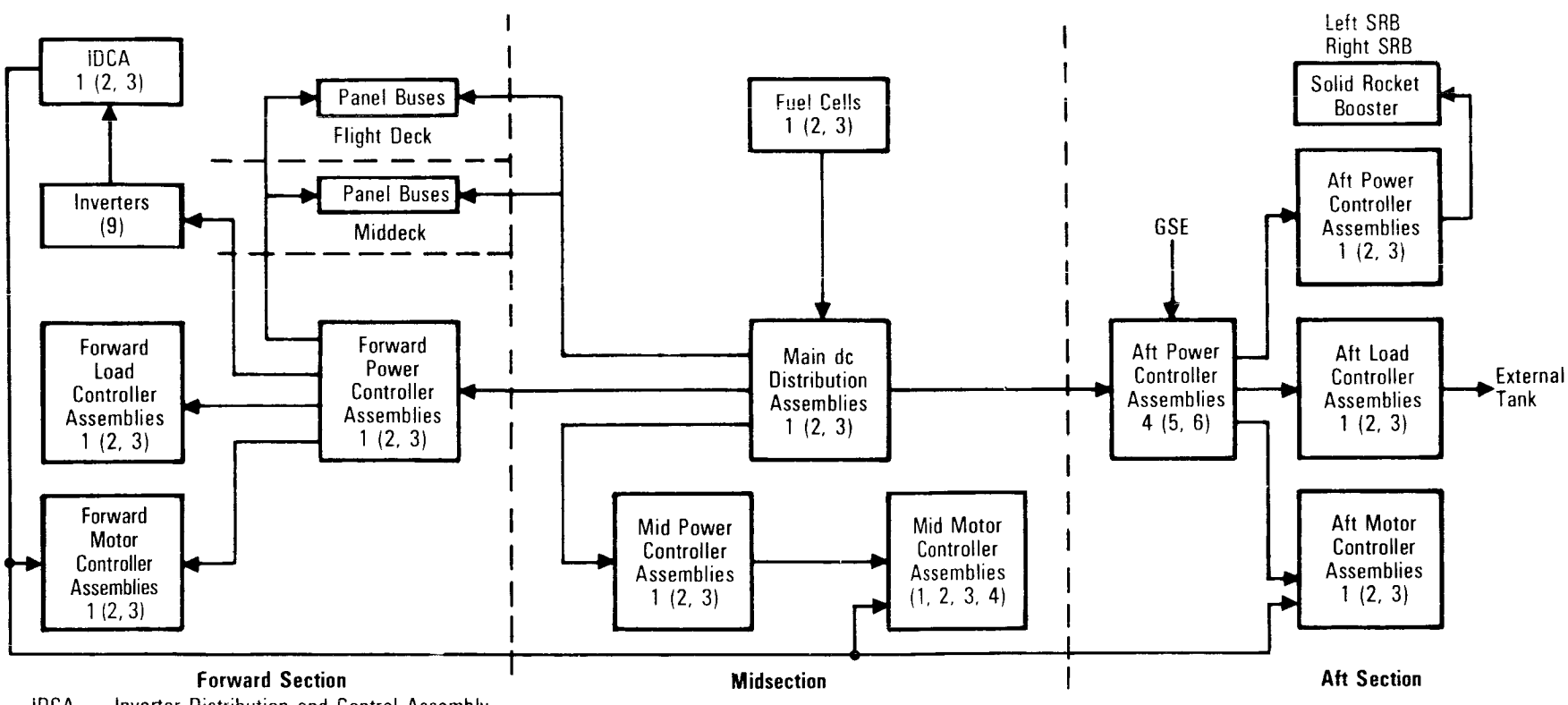


IDCA — Inverter Distribution and Control Assembly

*Electrical Power Distribution Block Diagram*

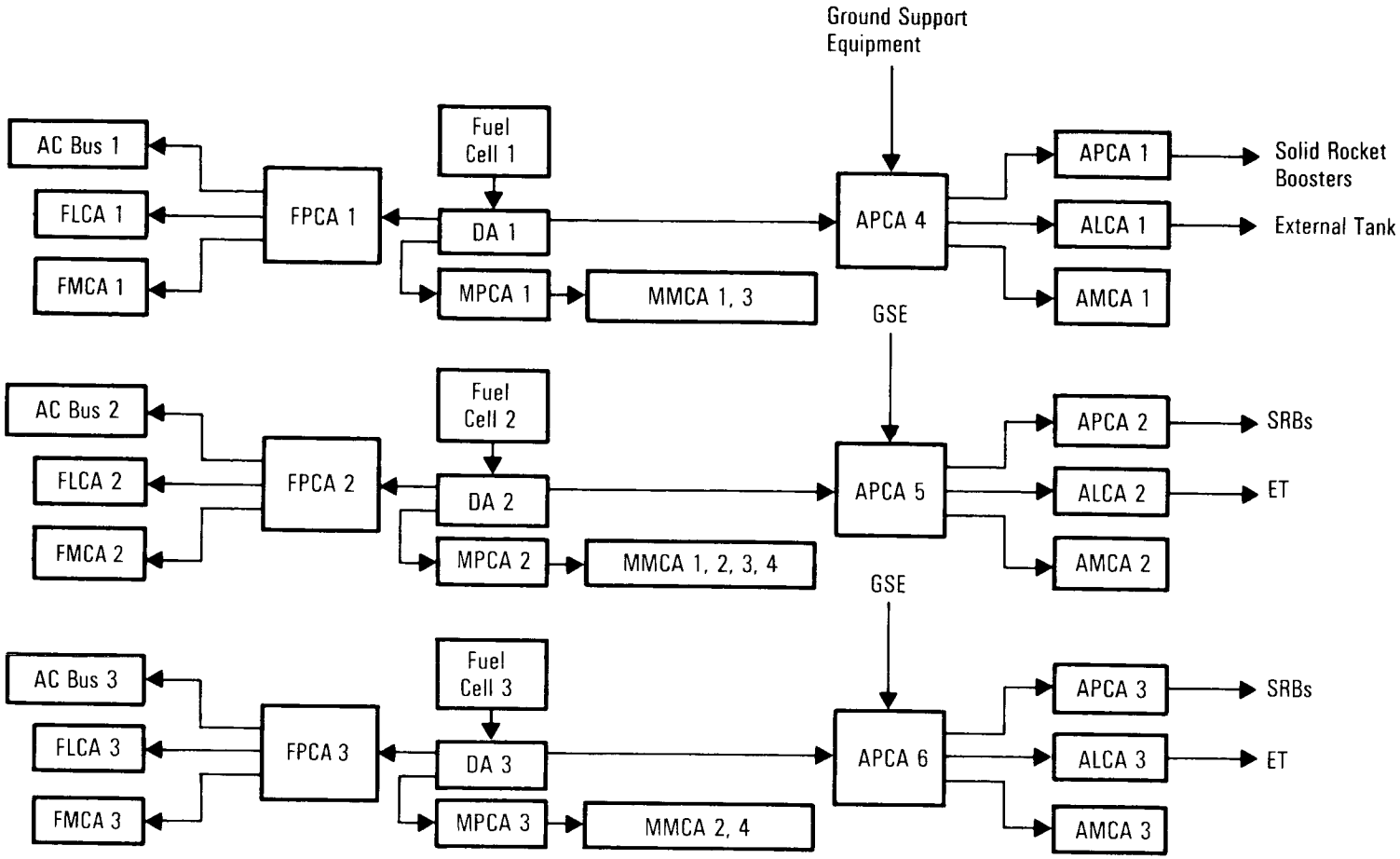


DA — Distribution Assembly
FLCA — Forward Load Controller Assembly
FMCA — Forward Motor Controller Assembly
FPCA — Forward Power Controller Assembly
MPCA — Mid Power Controller Assembly
MMCA — Mid Motor Controller Assembly
APCA — Aft Power Controller Assembly
ALCA — Aft Load Controller Assembly
AMCA — Aft Motor Controller Assembly

*Direct Current Power Distribution System*

assembly, load controller assembly and motor controller assembly—is an electrical equipment container or box.

The dc power generated by each of the fuel cell power plants is supplied to a corresponding DA. Fuel cell power plant 1 is supplied to DA 1, FCP 2 to DA 2 and FCP 3 to DA 3. Each DA contains remotely controlled motor-driven switches called power contactors used for loads larger than 125 amps. The power contactors are rated at 500 amps and control and distribute dc power to a corresponding mid power controller assembly, forward power controller assembly and aft power controller assembly. Power contactors are also located in the APCAs to control and distribute GSE 28-volt dc power to the orbiter through the T-0 umbilical before the fuel cell power plants take over the supply of orbiter dc power.

Each of the mid, forward, and aft PCAs supplies and distributes dc power to a corresponding mid motor controller assembly, forward motor controller assembly, forward load controller

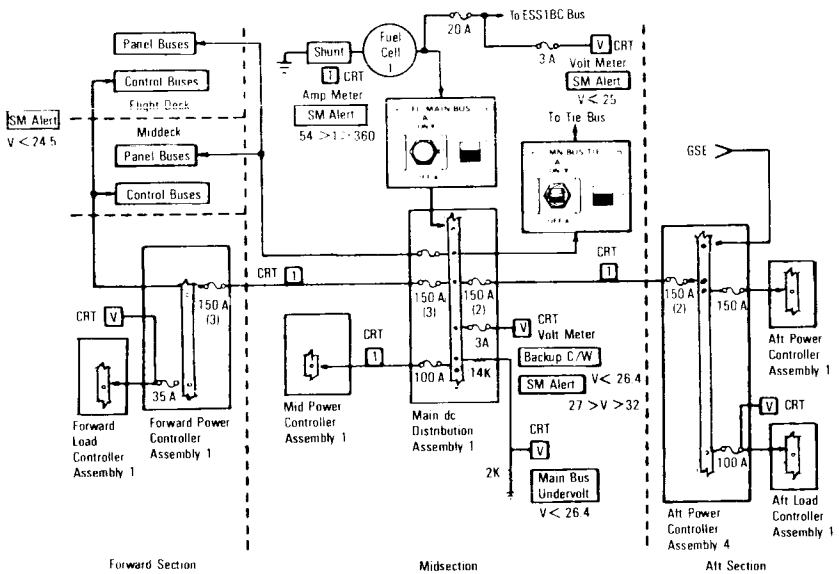


*Main Bus A Distribution*

assembly, aft load controller assembly and aft motor controller assembly and dc power to activate the corresponding ac power system.

Each PCA contains remote power controllers and relays. The RPCs are solid-state switching devices used for loads requiring current in a range of 3 to 20 amps. The RPCs are current protected by internal fuses and also have the capability to limit the output current to a maximum of 150 percent of rated value for two to three seconds. Within three seconds the RPC will trip out, which removes the output current. To restore power to the load, the RPC must be reset, which is accomplished by cycling a control switch. If multiple control inputs are required before an RPC is turned on, hybrid drivers are usually used as a logic switch, which then drives the control input of the RPC.

Each LCA contains hybrid drivers, which are solid-state switching devices (no mechanical parts) used as logic switches and for low-power electrical loads of less than 5 amps. When the drivers are used as a logic switch, several control inputs are required to turn on a load. Hybrid drivers are also used in the MPCAs. The hybrid drivers are current protected by internal fuses. Hybrid relays requiring multiple control inputs are used to switch three-phase ac power to motors.

Relays are also used for loads between 20 amps and 135 amps in PCAs and MCAs.

In the midbody there are no LCAs; therefore, the MPCAs contain RPCs, relays and hybrid drivers. Each MCA contains main dc buses, ac buses and hybrid relays that are remotely controlled for control of the application or removal of ac power to ac motors. The main dc bus is used only to supply control or logic power to the hybrid relays so the ac power can be switched on or off.

The remotely controlled switching devices permit the location of major electrical power distribution buses close to the major electrical loads, which eliminates heavy electrical feeders to and

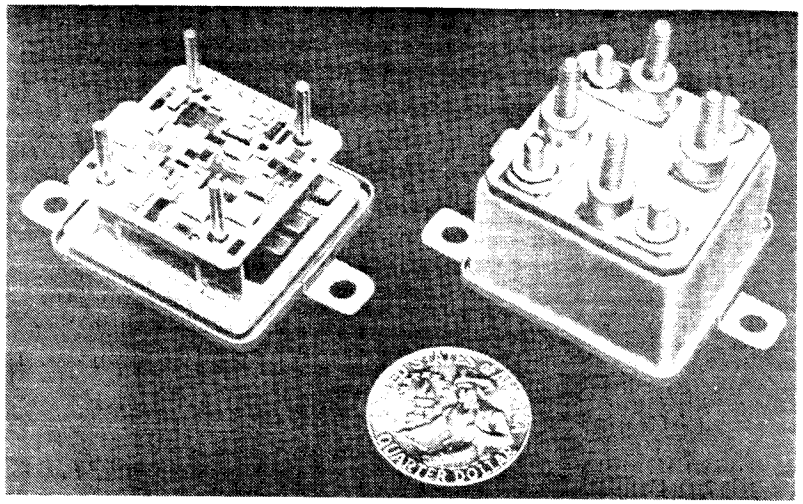

*Remote Power Controller*

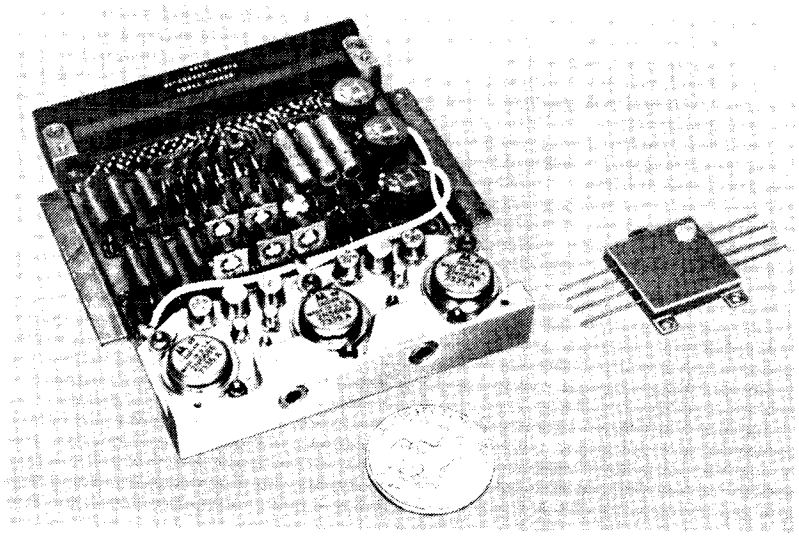

*Hybrid Load Controller*

from the pressurized crew compartment display and control panels. In addition, this reduces the amount of spacecraft wiring, thus weight, and permits more flexible electrical load management.

The No. 1 distribution assembly and all No. 1 controllers go with fuel cell 1 and MNA bus, all No. 2 controllers and DA 2 go with fuel cell 2 and MNB bus, and all No. 3 controllers and DA 3 go with fuel cell 3 and MNC bus. The *FC main bus A* switch on panel R1 positioned to *on* connects fuel cell 1 to the MNA DA and controllers and disconnects fuel cell 1 from the MNA DA and controllers when positioned to *off*. The talkback indicator associated with the *FC main bus A* switch will indicate *on* when fuel cell 1 is connected to main bus A DA and controllers and *off* when fuel cell 1 is disconnected from main bus A DA and controllers. The *FC main bus B* and *C* switches and talkback indicators on panel R1 function in the same manner.

Main bus A can be connected to main bus B or main bus C through the use of the *main bus tie* switches on panel R1 and power contactors in the DAs. For example, main bus A can be connected to main bus B by positioning the *main bus tie A* switch to *on* and the *main bus tie B* switch to *on*. The talkback indicator associated with the *main bus tie A* and *B* switches will indicate *on* when main bus A is connected to main bus B. To disconnect main bus A from main bus B, the *main bus tie A* and *B* switches must be positioned to *off*; the talkback indicators associated with the *main bus tie A* and *B* switches will then indicate *off*. Main bus A can be connected to main bus C in a similar manner using the *main bus tie A* and *C* switches. Main bus B can be connected to main bus A or C in a similar manner using the *main bus tie B* and *A* or *C* switches. Similarly, main bus C can be connected to main bus B or A using the *main bus C* and *B* or *A* switches.

Main bus A, B or C voltages can be displayed on the *dc volts* meter on panel F9 through the *main volts A, B* or *C* rotary switch on panel F9. The *main bus undervolts* red caution and warning light on panel F7 will be illuminated if main bus A, B or C voltage is 26.4 volts dc, informing the crew that the minimum equipment operating voltage limit of 24 volts dc is being approached. A backup caution and warning light will also be illuminated at 26.4 volts dc. An *SM alert* light will be illuminated at 27 volts dc or less, alerting the flight crew to the possibility of a future low-voltage problem. A fault message also is transmitted to the CRT.

The nominal fuel cell voltage is 27.5 to 32.5 volts dc, and the

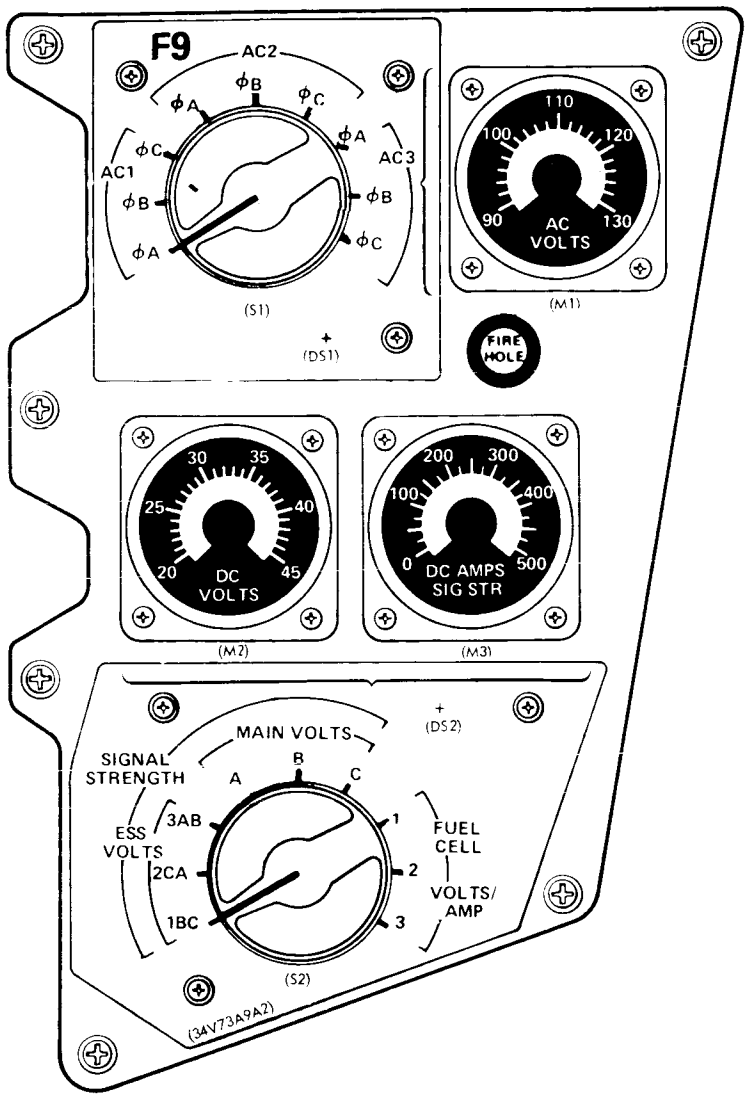


*Panel F9*

nominal main bus voltage range is 27 to 32 volts dc, which correspond to 12- and 2-kilowatt loads, respectively.

Depending on the criticality of orbiter electrical equipment, some electrical loads may receive redundant power from two or three main buses. If an electrical load receives power from two or three sources, it is for redundancy only and not for total power consumption.

Essential buses supply control power to switches that are necessary to restore power to a failed main dc or ac bus and to essential electrical power system electrical loads and switches. In some cases, essential buses are used to power switching discretes to multiplexers/demultiplexers. Examples of the selected flight crew switches and loads are the EPS switches, GPC switches, tactical air navigation mode switches, radar altimeter and microwave scan beam landing system power switches, the caution and warning system, emergency lighting, audio control panel, and master timing unit.

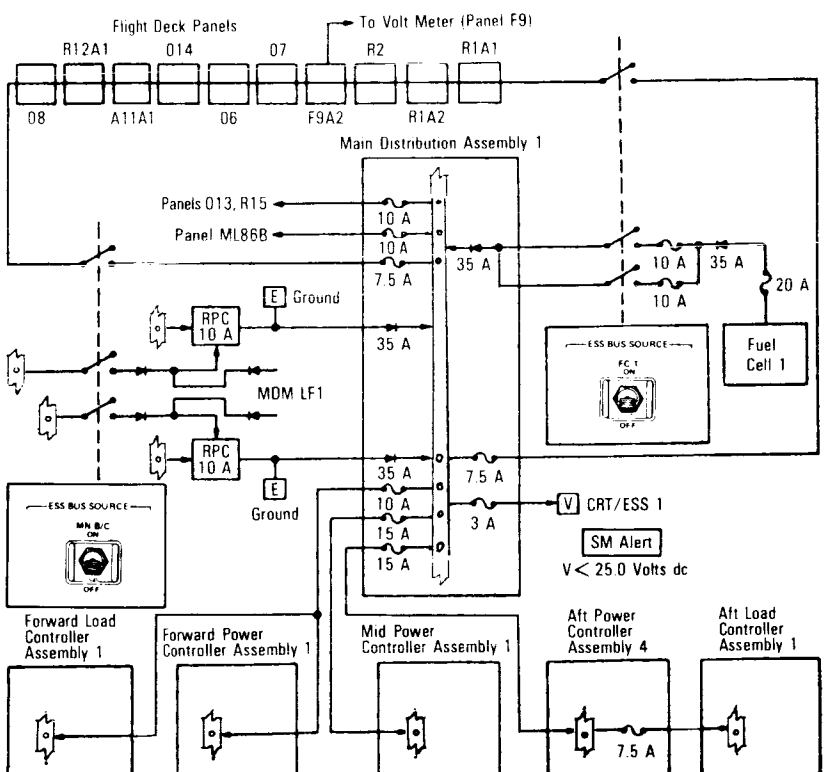


*Essential Bus/BC Distribution*

The three essential buses are ESS1BC, ESS2CA and ESS3AB. ESS1BC receives power from three redundant sources. It receives dc power from fuel cell 1 through the *ESS bus source FC 1* switch on panel R1 when the switch is positioned to *on* and from main dc buses B and C through RPCs when the *ESS bus source MN B/C* switch on panel R1 is positioned to *on*. Electrical power is then distributed from the essential bus in DA 1 through fuses to the corresponding controller assemblies and to the flight and middeck panels. ESS2CA receives power from fuel cell 2 through the *ESS bus source FC 2* switch on panel R1 when positioned to *on* and main dc buses C and A through RPCs when the *ESS bus source MN C/A* switch on panel R1 is positioned to *on*. Electrical power is then distributed from the essential bus in DA 2 through fuses to the corresponding controller assemblies and to

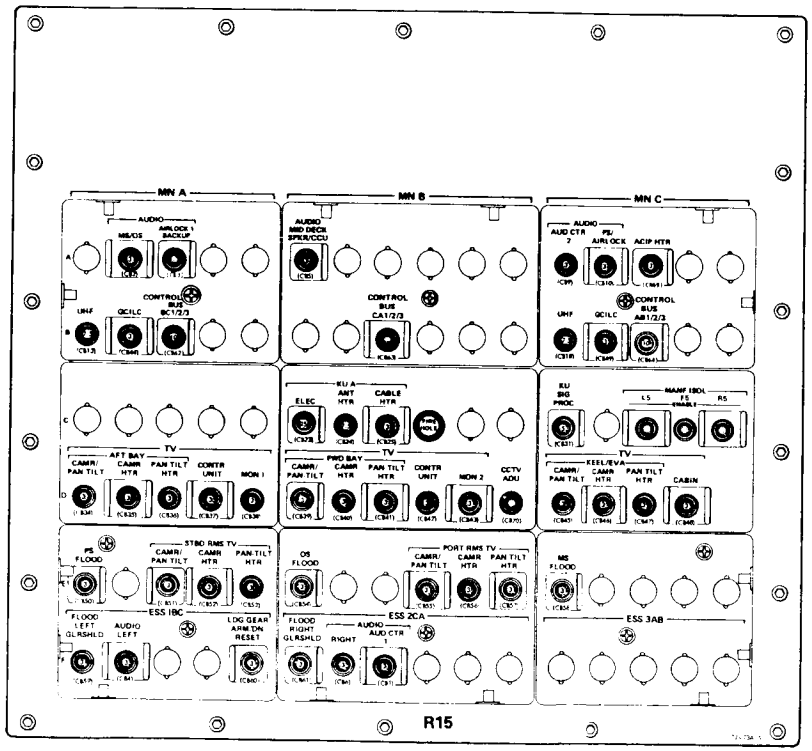


*Panel R15*

the flight and middeck panels. ESS3AB receives power from fuel cell 3 through the *ESS bus source FC 3* switch on panel R1 when positioned to *on* and main dc buses A and B through RPCs when the *ESS bus source MN A/B* switch on panel R1 is positioned to *on*. Electrical power is then distributed from the essential bus in DA 3 through fuses to the corresponding controller assemblies and to the flight and middeck panels.

The ESS bus voltage can be monitored on the *volts* meter on panel F9 through the *ESS volts 1 BC, 2 CA, 3 AB* rotary switch. An *SM alert* light will be illuminated to inform the flight crew if the essential bus voltage is less than 25 volts dc. A fault message also is transmitted to the CRT.

Nine control buses are used to supply only control power to the display and control panel switches on the flight deck and in the middeck area. A control bus does not supply operational power to any system loads. The control buses are enabled by the *control bus power MNA, B, C* switches on panel R1 and the *MNA control bus BC 1/2/3* circuit breaker on panel R15, the *MNB control bus CA 1/2/3* circuit breaker on panel R15 and the *MNC control bus AB 1/2/3* circuit breaker on panel R15. The corresponding main bus is connected through RPCs and diodes. Each control bus receives power from three main dc buses for redundancy. MNA bus is supplied to three control buses, AB1/2/3, BC1/2/3 and CA1/2/3. (The numbers 1, 2 and 3 indicate the number of the bus and not a fuel cell.) MNB bus is supplied to three control buses, AB1/2/3, BC1/2/3 and CA1/2/3. MNC bus is supplied to three control buses, AB1/2/3, BC1/2/3 and CA1/2/3. The RPCs are powered continuously unless the *control bus pwr MNA, MNB, MNC* switch on panel R1 is positioned to the momentary reset position, which turns the corresponding RPC's power off and resets the RPC if it has been tripped off. An *SM alert* light is illuminated if the control bus voltage is less than 24.5 volts dc, and a fault message is sent to the CRT. The Mission Control Center in Houston can monitor the status of each RPC.

Until T minus three minutes and 30 seconds, power to the orbiter is load shared with the fuel cells and GSE, even though the fuel cells are on and capable of supplying power. Main bus power

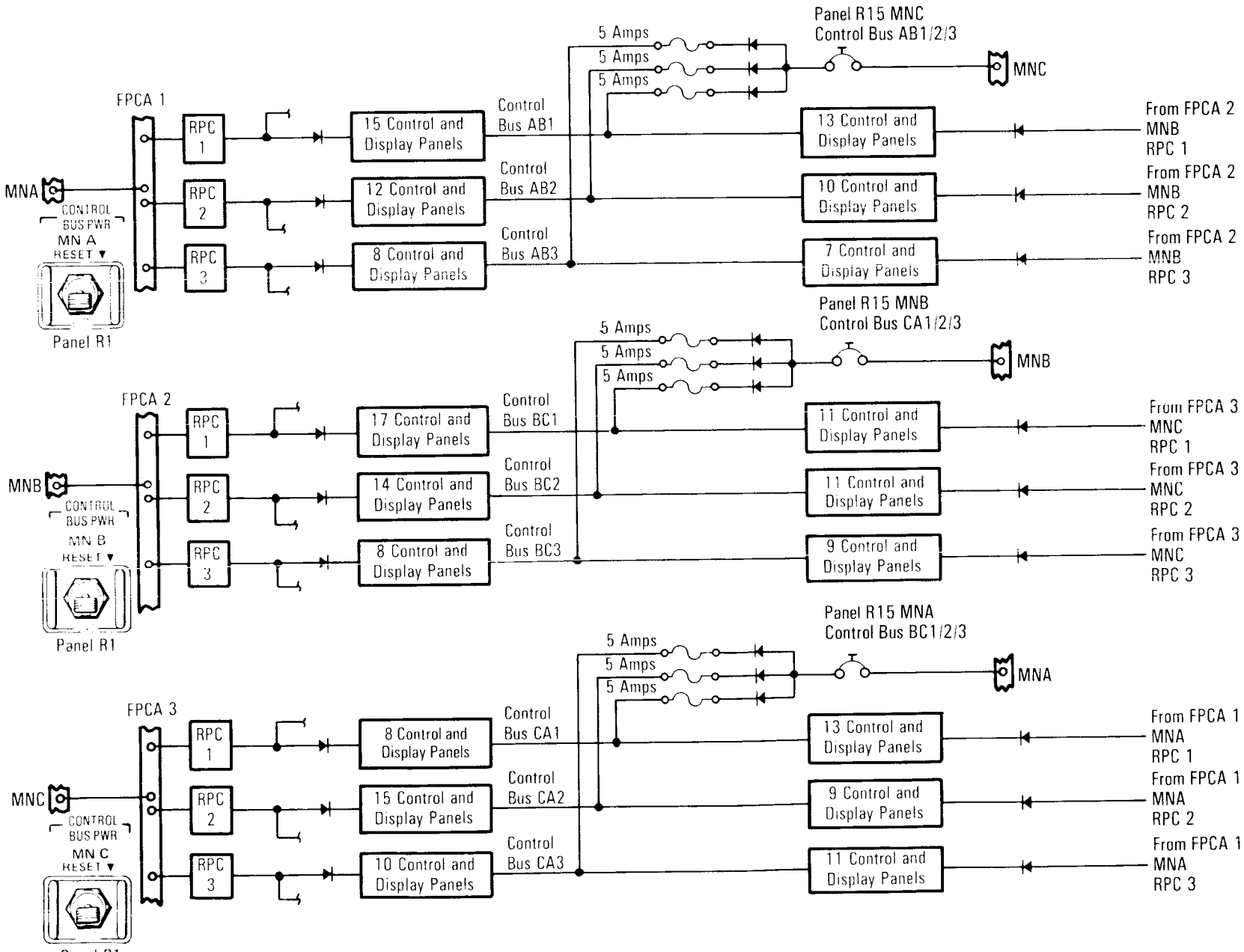


*Control Buses*

is supplied through the T-0 umbilicals, MNA through the left-side umbilical and MNB and C through the right-side umbilical to aft power controllers 4, 5 and 6. From APCs 4, 5 and 6, the GSE power is directed to the DA, where the power is distributed throughout the vehicle. The power for the PREFLT 1 and PREFLT 2 test buses is also supplied through the T-0 umbilical. These test buses are scattered throughout the orbiter and are used to support launch processing system control of critical orbiter loads, although they also power up the essential buses in the APCs when on GSE. As in the main bus distribution, essential bus power from the APCs is directed to the DAs and then distributed throughout the vehicle. At T minus three minutes 30 seconds, the ground turns off the GSE power to the main buses, and the fuel cells automatically pick up the loads. At T minus zero, the T-0 umbilical is disconnected with the preflight test bus wires live.

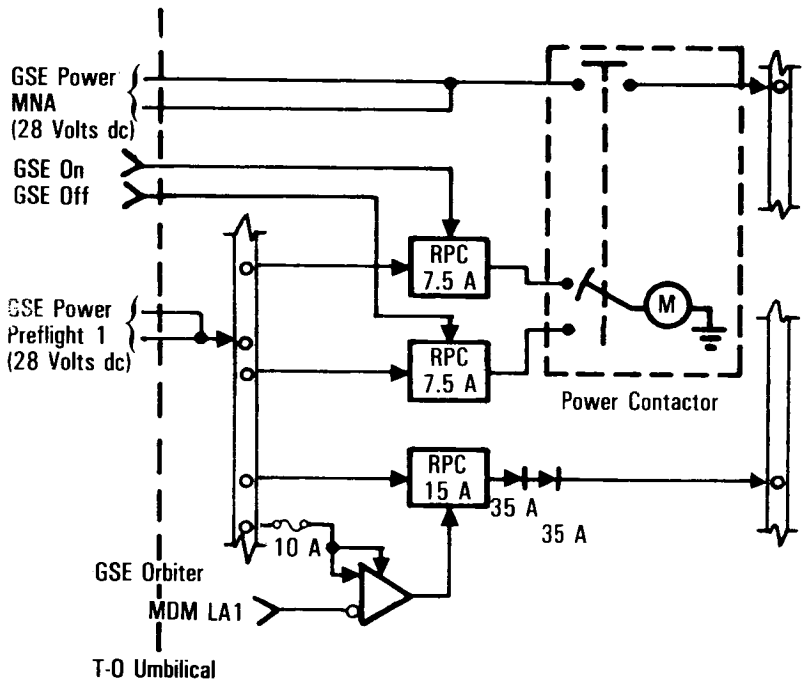


*Orbiter and GSE Power Interface (MNA Only)*

Fuel cell 3 may be connected to the primary payload bus by positioning the *pri FC3* switch on panel R1 to the momentary *on* position. The talkback indicator next to this switch will indicate *on* when fuel cell 3 is connected to the PRI PL bus. The PRI PL bus is the prime bus for supplying power to the payloads. Fuel cell 3 may be disconnected from the payload bus by positioning the *pri FC3* switch to the momentary *off* position. The talkback indicator will indicate *off*.

A second source of electrical power for the PRI PL bus may be supplied from MNB bus by positioning the *pri MN B* switch on panel R1 to the momentary *on* position. The talkback indicator next to this switch will indicate *on*. MNB bus may be removed from the PRI PL bus by positioning the switch momentarily to *off*. The talkback indicator will indicate *off*. A third possible source of electrical power for the PRI PL bus may be supplied from MNC bus through the *pri MN C* switch on panel R1, positioned momentarily to the *on* position. The adjacent talkback indicator will indicate *on*. MNC bus may be removed from the PRI PL bus by positioning the switch momentarily to *off*. The talkback indicator will indicate *off*.

There are two additional payload buses in the aft section of the payload bay at the $Y_O$ 1307 aft bulkhead station. The aft payload B bus may be powered up by positioning the *aft MN B* switch on panel R1 to *on*. The aft payload C bus may be powered up by positioning the *aft MN C* switch on panel R1 to *on*. The *off* position of each switch removes power from the corresponding aft payload bus.

The *payload aux* switch on panel R1 permits main bus A and main bus B power to be supplied to the AUX PL A and AUX PL B buses when the switch is positioned to *on*. The auxiliary payload buses provide power for emergency equipment or controls associated with payloads. The *off* position removes power from the AUX PL A and PL B buses. It is also noted that the two auxiliary payload buses may be dioded together to form one bus for redundancy.

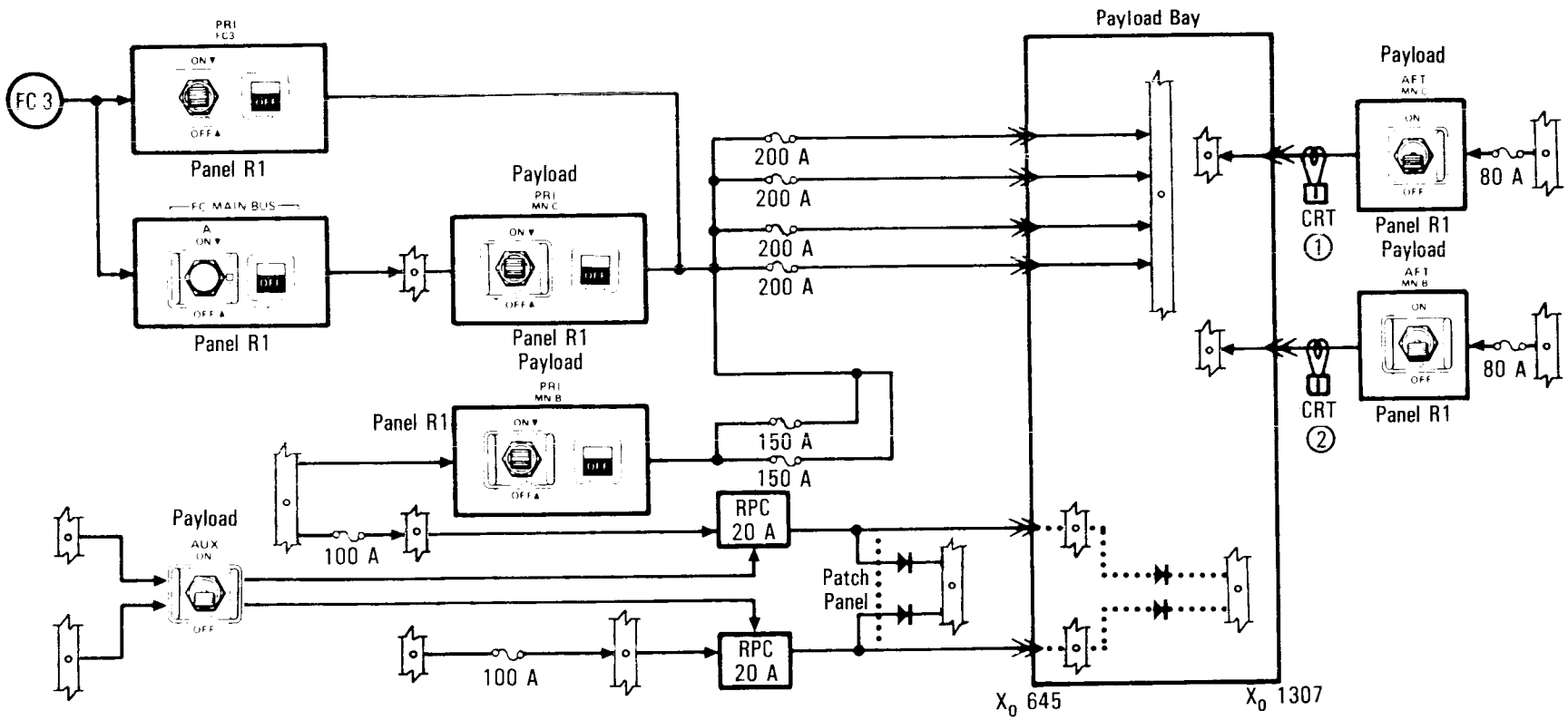


*Orbiter/Payload Power Interface Schematic*

Two or more feeders to the payload may be used simultaneously, but two orbiter power sources may not be tied directly within the payload. Any payload equipment requiring electrical power from two separate orbiter sources is required to ensure isolation of these power sources so that no single failure in a load, or succession or propagation of failures in a load, will cause an out-of-limit condition to exist on the orbiter system equipment on more than one bus.

The *payload cabin* switch on panel R1 provides MNA or MNB power to patch panels located behind the payload specialist and mission specialist stations located on the aft flight deck. These patch panels supply power to the payload-related equipment located on panels at these stations. Two three-phase circuit breakers, *AC2 cabin PL3ϕ* and *AC3 cabin PL3ϕ*, on panel MA73C provide ac power to the payload patch panels.

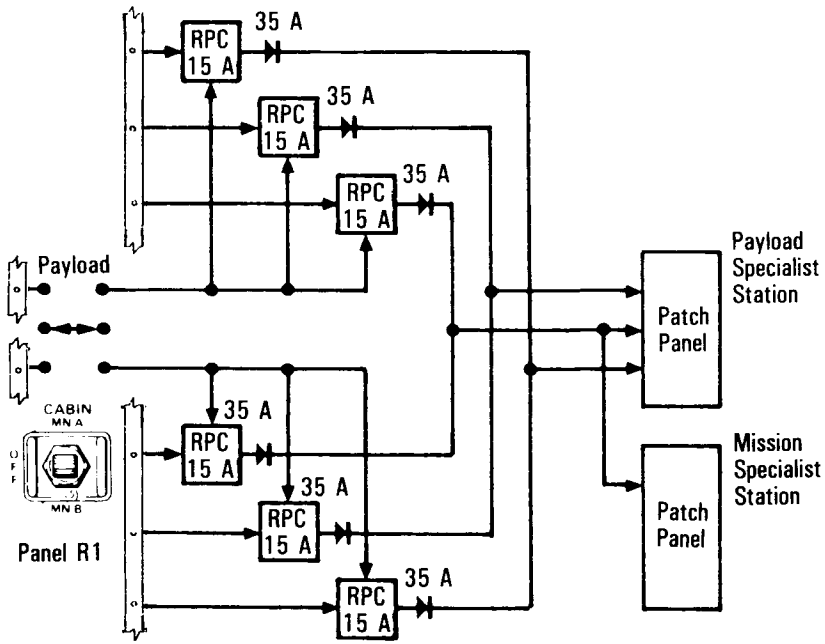


Note: The purpose of patch panels is to supply power to payload-related equipment located on panels at these stations.

*Payload Cabin Switch*

Alternating-current power is generated and made available to system loads by the EPDC subsystem, using three independent ac buses, AC1, AC2 and AC3. The ac power system includes the ac inverters for dc conversion to ac and inverter distribution and control assemblies containing the ac buses and the ac bus sensors. The ac power is distributed from the IDCAs to the flight and mid-deck display and control panels and from the MCAs to the three-phase motor loads.

Each ac bus consists of three separate phases connected in a three-phase array. Static inverters, one for each phase, are located in the forward avionics bays. Each inverter has an output voltage of 116 to 120 volts root mean square at 400 hertz, plus or minus 7 hertz.

The inverters are controlled by the *inv pwr 1, 2, 3* switches on panel R1. Inverter 1 receives power only from MNA, inverter 2 from MNB and inverter 3 from MNC. All three inverters of inverter 1 receive MNA bus power when the switch is positioned to *on*, and all three must be in operation before the adjacent talkback indicator indicates *on*. The indicator will show *off* when main bus power is not connected to the inverter.

The *inv/ac bus 1, 2, 3* switches on panel R1 are used to apply each inverter's output to its respective ac bus. An indicator next to each switch shows its status, and all three inverters must be connected to their respective ac buses before the indicator shows *on*. The talkback indicator will show *off* when the three inverters are not connected to their respective ac bus.

The *inv pwr* and *inv/ac bus* switches must have control power from the *ac contr* circuit breakers on panel R1 in order to operate. Once ac power has been established, these circuit breakers are opened to prevent any inadvertent disconnection, whether by switch failure or accidental movement of the *inv pwr* or *inv/ac bus* switches.

Each ac bus has a sensor, switch and circuit breaker for flight crew control. The *AC1, 2, 3 snsr* circuit breakers located on panel O13 apply essential bus power to their respective *ac bus snsr 1, 2, 3* switch on panel R1 and operational power to the respective *inv/ac*

*bus* switch indicator. The *ac bus snsr 1, 2, 3* switch selects the mode of operation of the ac bus sensor: *auto trip, monitor* or *off*. The ac bus sensor monitors each ac phase bus for over- or undervoltage and each phase inverter for an overload signal. The overvoltage limits are bus voltages greater than 123 to 127 volts ac for 50 to 90 milliseconds. The undervoltage limits are bus voltages less than 102 to 108 volts ac for 6.5 to 8.5 milliseconds. An overload occurs when any ac phase current is greater than 14.5 amps for 10 to 20 seconds or is greater than 17.3 to 21.1 amps for four to six seconds.

When the respective *ac bus snsr* switch is positioned to the *auto trip* position and an overload or overvoltage condition exists, the ac bus sensor will illuminate the respective yellow *ac voltage* or *ac overload* caution and warning light on panel F7 and trip out (disconnect) the inverter from its respective phase bus for the bus/inverter causing the problem. There is only one *ac voltage* and one *ac overload* caution and warning light; as a result, all nine inverters/ac phase buses can illuminate the lights. The *ac volts* meter and rotary switches (*AC1 $\phi A$, $\phi B$, $\phi C$; AC2 $\phi A$, $\phi B$, $\phi C$; AC3 $\phi A$, $\phi B$, $\phi C$*) on panel F9 or the CRT display would be used to determine which inverter or phase bus caused the light to illuminate. The phase bus causing the problem would show zero volts. Because of the various three phase motors throughout the vehicle, there will be a small induced voltage on the phase bus if there is only one phase that has loss of power.

Before power can be restored to the tripped bus, the trip signal to the *inv/ac bus* switch must be removed by positioning the *ac bus snsr* switch to *off*, then back to the *auto trip* position, which extinguishes the caution and warning light. The *inv/ac bus* switch is then positioned to *on*, restoring power to the failed bus. If the problem is still present, the sequence will be repeated.

If an undervoltage exists, the yellow *ac voltage* caution and warning light on panel F7 will be illuminated, but the inverter will not be tripped out from its phase bus.

When the *ac bus snsr 1, 2, 3* switches are in the *monitor* position, the ac bus sensor will monitor for an overload, overvoltage and undervoltage and illuminate the applicable caution and warning light; but it will not trip out the phase bus/inverter causing the problem.

When the *ac bus snsr* switches are *off*, the ac bus sensors are non-operational, and all caution and warning and trip-out capabilities are inhibited.

A backup caution and warning light will be illuminated for overload or over- and undervoltage conditions. The *SM alert* will occur for over- and undervoltage conditions. A fault message also is sent to the CRT.

There are 10 motor controller assemblies used on the orbiter: three are in the forward area, four are in the midbody area, and three are in the aft area. Panel MA73C contains the controls for the MCAs. Their only function is to supply ac power to non-continuous ac loads for ac motors used for vent doors, air data doors, star tracker doors, payload bay doors, payload bay latches and reaction control system/orbital maneuvering system motor-actuated valves. The MCAs contain main buses, ac buses and hybrid relays, which are the remote switching devices for switching the ac power to electrical loads. The main buses are used only to supply control or logic power to the hybrid relays so that ac power can be switched on and off. If a main bus is lost, the hybrid relays using that main bus will not operate. In some cases, the hybrid relays will use logic power from a switch instead of the MCA bus.

The three forward motor controller assemblies (FMC 1, FMC 2 and FMC 3) correspond to MNA/AC1, MNB/AC2 and MNC/AC3, respectively. Each FMC contains a main bus, an ac bus and an RCS ac bus. The main bus supplies control or logic power to the relays associated with both the ac bus and RCS ac bus. The ac bus supplies power to the forward left and right vent doors, the star tracker Y and Z doors, and the air data left and right doors. The RCS ac bus supplies power to the forward RCS manifold and tank isolation valves.

The aft motor controller assemblies (AMC 1, AMC 2 and AMC 3) correspond to MNA/AC1, MNB/AC2, and MNC/AC3,

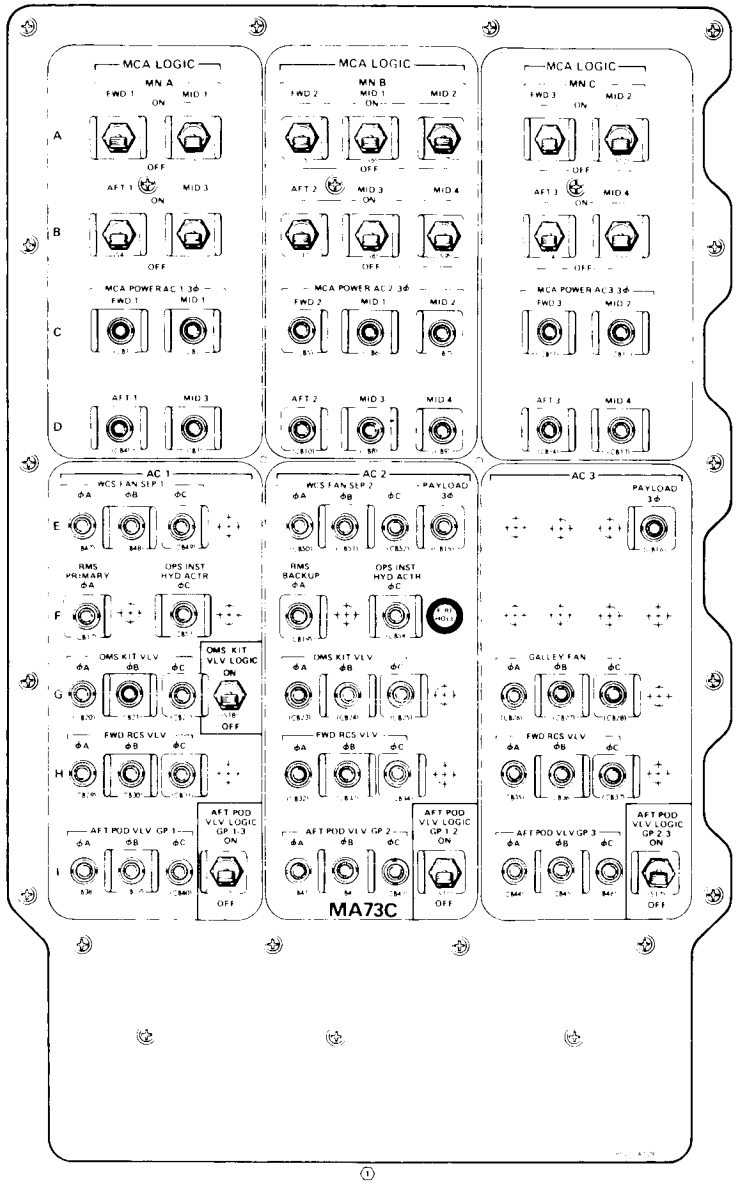


*Panel MA73C*

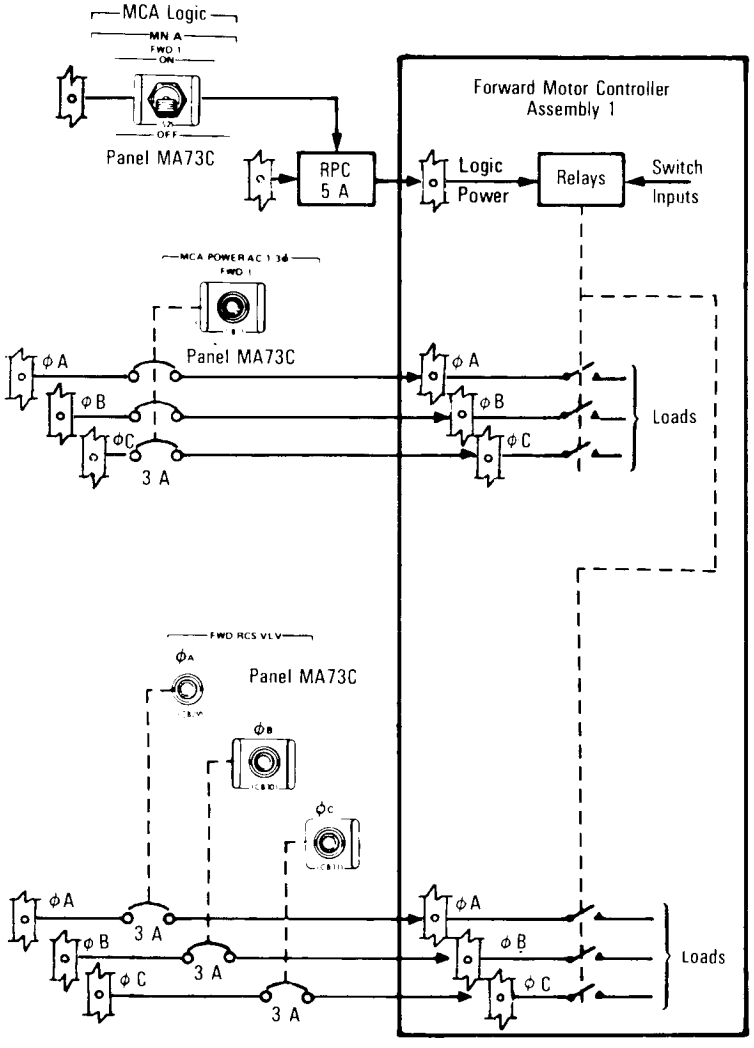


*Forward Motor Controller Assembly*

respectively. Each AMC assembly contains a main bus and its corresponding ac bus and a main RCS/OMS bus and its corresponding RCS/OMS ac bus. Both main buses are used for control or logic power for the hybrid relays. The ac bus is used by the aft RCS/OMS manifold and tank isolation and crossfeed valves.

The mid motor controller assemblies (MMC 1, MMC 2, MMC 3 and MMC 4) contain two main dc buses and two corresponding ac buses. MMC 1 contains main bus A and B and their corresponding buses, AC1 and 2. MMC 2 contains MNB and AC2 and AC3 buses. MMC 3 contains the same buses as MMC 1, and MMC 4 the same buses as MMC 2. Loads for the main buses/ac buses are vent doors, payload bay doors and latches, radiator panel deployment actuator and latches, and payload retention latches.

The electrical components in the midbody are mounted on cold plates and cooled by the Freon-21 system coolant loops. The PCAs, LCAs, MCAs and inverters located in forward avionics bays 1, 2 and 3 are mounted on cold plates and cooled by the water coolant loops. The inverter distribution assemblies in forward avionics bays 1, 2 and 3 are air-cooled. The LCAs, PCAs and MCAs located in the aft avionics bays are mounted on cold plates and cooled by the Freon-21 system coolant loops.

The contractors are Aerodyne Controls Corp., Farmingdale, N.Y. (oxygen, hydrogen check valve and water pressure relief valve); Aiken Industries, Jackson, Mich. (thermal circuit breakers; three-phase circuit breakers); American Aerospace, Farmingdale, N.Y. (ac and dc current sensors, current level detector); Applied Research, Fairfield, N.J. (rotary switch); Rockwell International Autonetics Group, Anaheim, Calif. (ac bus sensor, load controller assemblies); Beech Aircraft Corp., Boulder, Colo. (power reactant storage hydrogen and oxygen tanks, gaseous oxygen and hydrogen ground support equipment); Bell Industries, Gardena, Calif. (modular terminal boards); Bendix Corp., Sidney, N.Y., and Franklin, Ind. (high-density connectors); Bussman Division of McGraw Edison, St. Louis, Mo. (fuses, fuse holders, fuse dc limiter high current); Brunswick-Circle Seal, Anaheim, Calif. (water check valve); Consolidated Controls, El Segundo, Calif. (hydrogen, oxygen solenoid valve, undirectional/bidirectional shutoff valve); Cox and Co., New York, N.Y. (heaters); Deutsch, Banning, Calif. (general-purpose connector); Fairchild Stratos, Manhattan Beach, Calif. (cryogenic fluid and gas supply disconnects); G/H Technology Co., Santa Monica, Calif. (connector cryo); Hamilton Standard, Windsor Locks, Conn. (fuel cell heat exchanger); Haveg Industries Inc., Winooski, Vt. (general-purpose wire); ITT Cannon, Santa Ana, Calif. (connectors, bulkhead feedthrough); Labarge, Santa Ana, Calif. (general-purpose wire); Leach Relay, Los Angeles, Calif. (relay); Malco Microdot Corp., Pasadena, Calif. (connector); International Fuel Cells Division of United Technologies, South Windsor, Conn. (fuel cell power plants); R.V. Weatherford, Glendale, Calif. (shunt); Statham Instruments, Oxnard, Calif. (cryo pressure transducer); Tayco Engineering, Long Beach, Calif. (fuel cell water dump nozzle); Teledyne Kinetics, Solana Beach, Calif. (dc power contactor); Teledyne Thermatics, Elm City, N.C. (general-purpose wire); Westinghouse Electric Corp., Lima, Ohio (remote power controller, electrical system inverters); Weston Instruments, Newark, N.J. (electrical indicator meter); Brunswick-Wintec, El Segundo, Calif. (reactant and coolant filters); Rockwell International Space Transportation Systems Division, Downey, Calif. (power controller assemblies, motor controller assemblies, distribution assemblies and inverter distribution control assemblies).

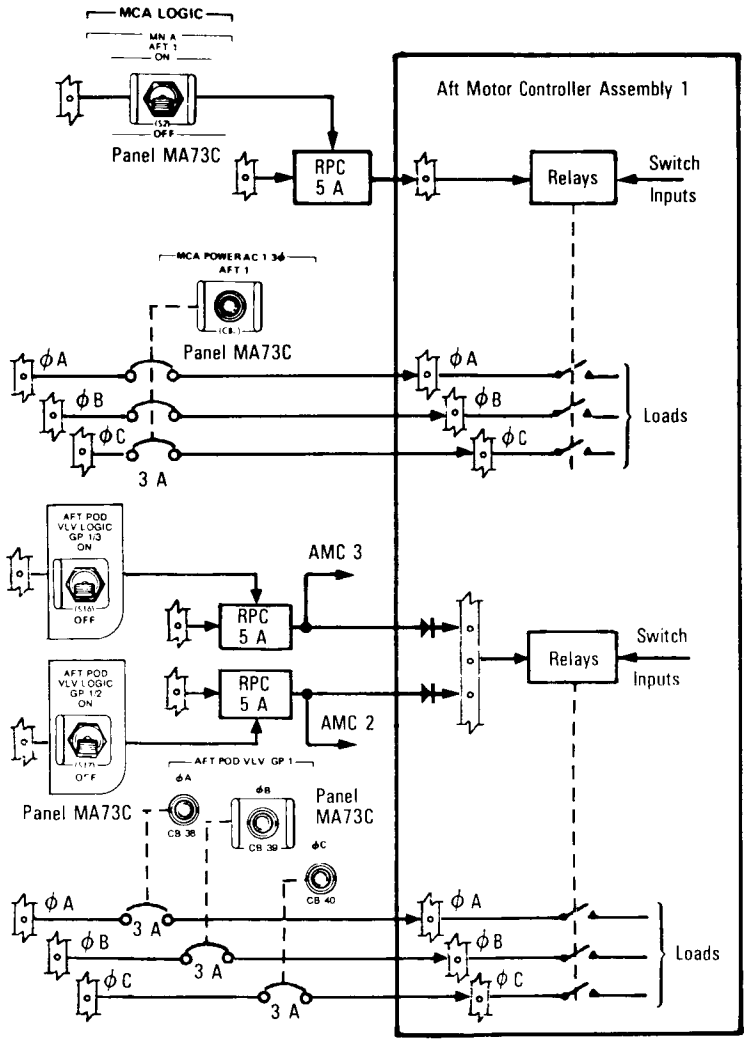


*Aft Motor Controller Assembly*

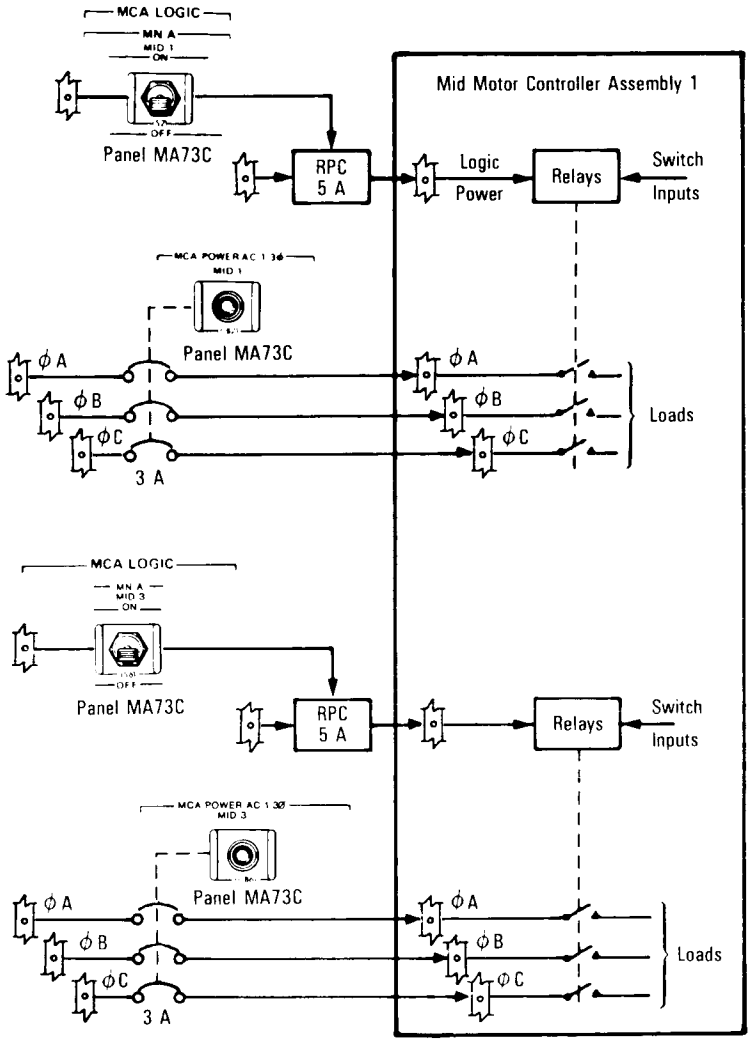


*Mid Motor Controller Assembly*

## ENVIRONMENTAL CONTROL AND LIFE SUPPORT SYSTEM

The ECLSS consists of an air revitalization system, water coolant loop systems, atmosphere revitalization pressure control system, active thermal control system, supply water and waste water system, waste collection system and airlock support system. These systems interact to provide a habitable environment for the flight crew in the crew compartment in addition to cooling or heating various orbiter systems or components.

The ARS controls relative humidity between 30 and 75 percent, maintains carbon dioxide and carbon monoxide at non-toxic levels, controls temperature and ventilation in the crew compartment, and provides cooling to various flight deck and middeck

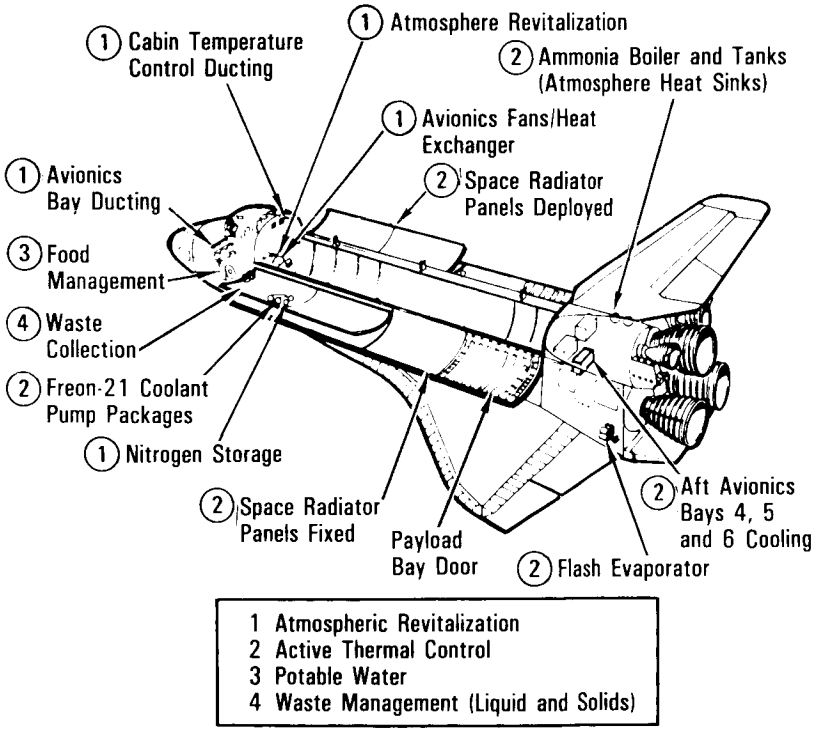


*Environmental Control and Life Support System*

electronic avionics and the crew compartment. The ARS consists of water coolant loops, cabin air loops and pressure control. Cabin air is ducted to the crew compartment cabin heat exchanger, where the cabin air is cooled by the WCLs; therefore, cabin air cools the crew cabin, flight crew and crew compartment electronic avionics. The water coolant loop system collects heat from the crew compartment cabin heat exchanger and heat from some of the electronic units in the crew compartment and transfers it to the water coolant/Freon-21 coolant loop heat exchanger of the ATCS.

The ATCS provides orbiter heat rejection during all phases of the mission. It consists of two Freon-21 coolant loops, cold plate networks for cooling electronic avionics units, liquid/liquid heat exchangers for cooling various orbiter systems, and four heat sink systems for rejecting excess heat outside the orbiter—ground support equipment heat exchanger, flash evaporators, radiator panels and ammonia boilers. The Freon-21 coolant loops transport excess heat from the fuel cell power plant heat exchangers, payload heat exchangers and midbody and aft avionics electronic units; heat the hydraulic systems; and deliver that heat to the heat sinks. During checkout, prelaunch and postlanding ground operations, the GSE heat exchanger in the orbiter's Freon-21 coolant loops rejects excess heat from the orbiter through ground systems cooling. Approximately 125 seconds after lift-off, the flash evaporator system is activated and provides orbiter heat rejection of the Freon-21 coolant loops via water boiling. When the orbiter is on orbit and the payload bay doors are opened, radiator panels on the underside of the doors are exposed to space and provide heat rejection. If combinations of heat loads and orbiter attitude exceed the capacity of the radiator panels during on-orbit operations, the flash evaporator can be activated to meet the heat rejection requirements. At the conclusion of orbital operations, the payload bay doors are closed, rendering the radiator panels inoperative for heat rejection; and the flash evaporator is again brought into operation through deorbit and entry until atmospheric pressure buildup no longer permits the boiling water to provide adequate cooling at approximately 100,000 feet altitude. At this point the ammonia boilers reject heat from the Freon-21 coolant loops by evaporating ammonia through the remainder of entry, landing and postlanding until ground cooling is connected to the GSE heat exchanger.

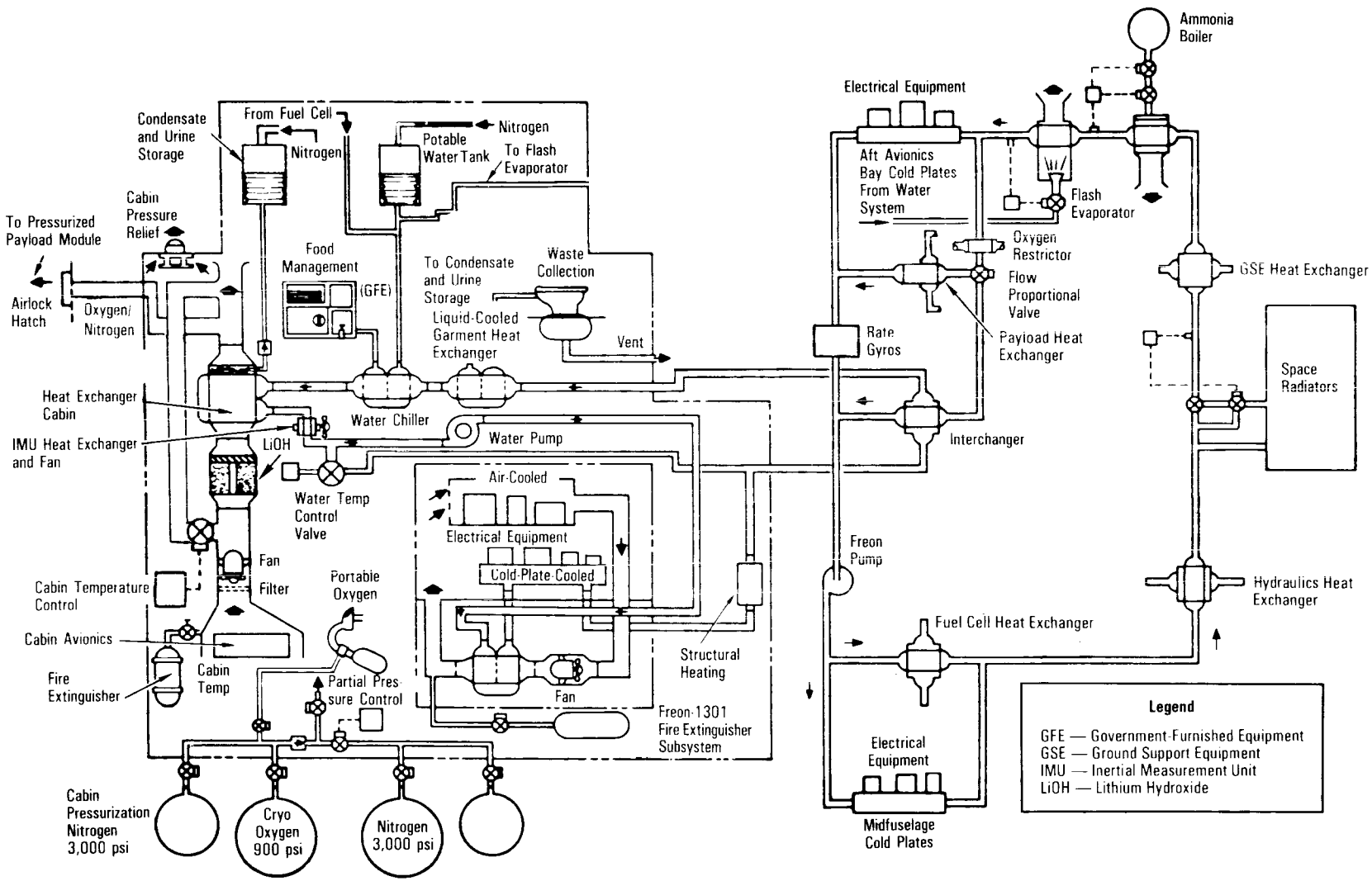


*ECLSS Schematic*

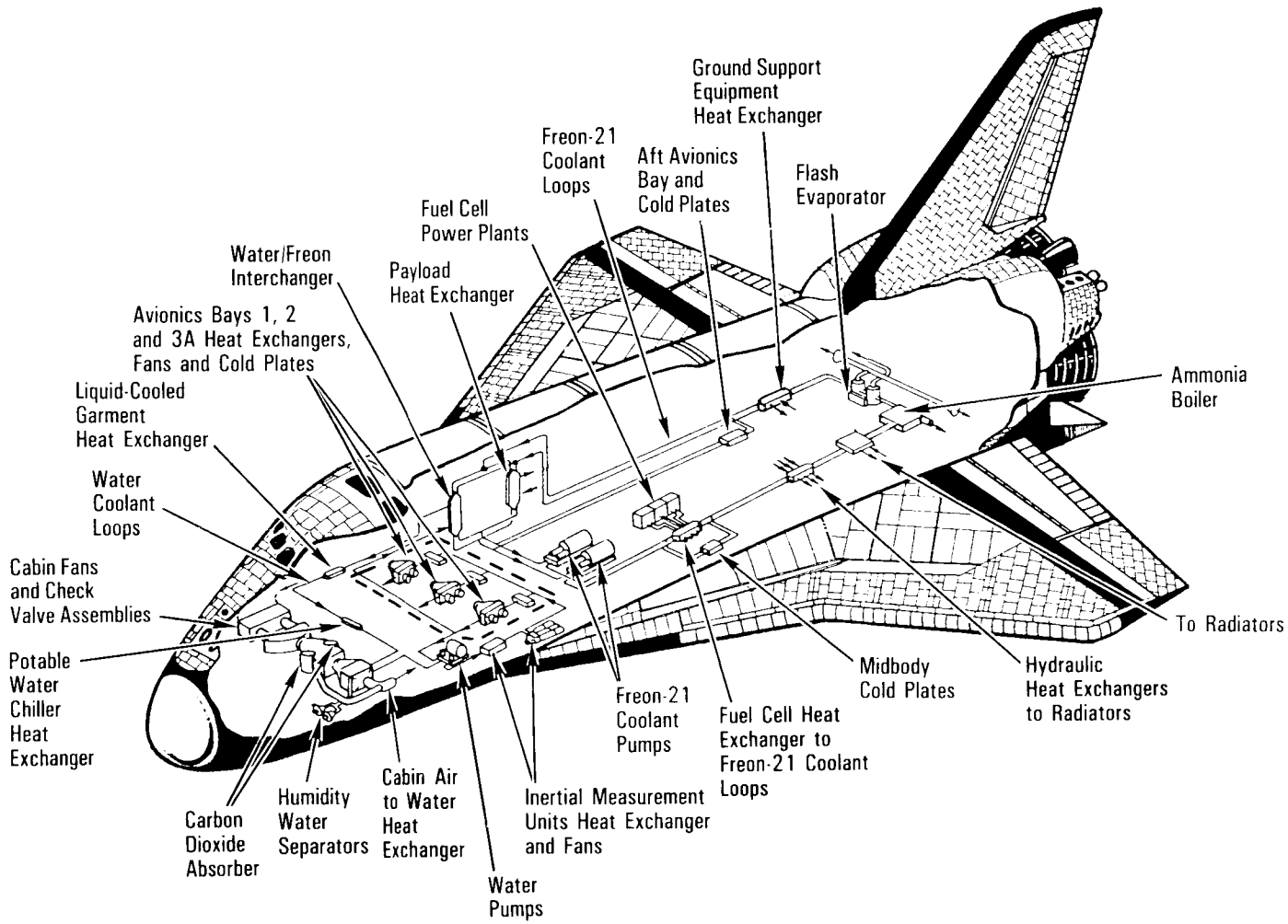


*Environmental Control and Life Support System*

The ARPCS controls crew compartment cabin pressure at 14.7 psia, plus or minus 0.2 psia, with an average of 80-percent nitrogen and 20-percent oxygen mixture. Oxygen partial pressure is maintained between 2.95 psia and 3.45 psia, with sufficient nitrogen pressure of 11.5 psia added to achieve the cabin total pressure of 14.7 psia, plus or minus 0.2 psia. The pressurization control system receives oxygen from two power reactant storage and distribution cryogenic oxygen systems in the midfuselage of the orbiter. Gaseous nitrogen is supplied from two nitrogen systems consisting of two nitrogen tanks for each system located in the midfuselage of the orbiter. An optional mission kit consists of an emergency gaseous oxygen tank, and the system can be located in the midfuselage of the orbiter. The gaseous nitrogen system is also used to pressurize the potable and waste water tanks located below the crew compartment middeck floor.

Potable water produced by the three fuel cell power plants is directed and stored in potable water tanks for flight crew consumption and personal hygiene. The potable water system is the supply to the flash evaporator system when it is used to cool the Freon-21 coolant loops. A waste water tank is also located below the crew compartment middeck floor to collect waste water from the crew cabin heat exchanger and flight crew waste water. Solid waste remains in the waste management system in the crew compartment middeck until the orbiter is serviced during ground turnaround operations.

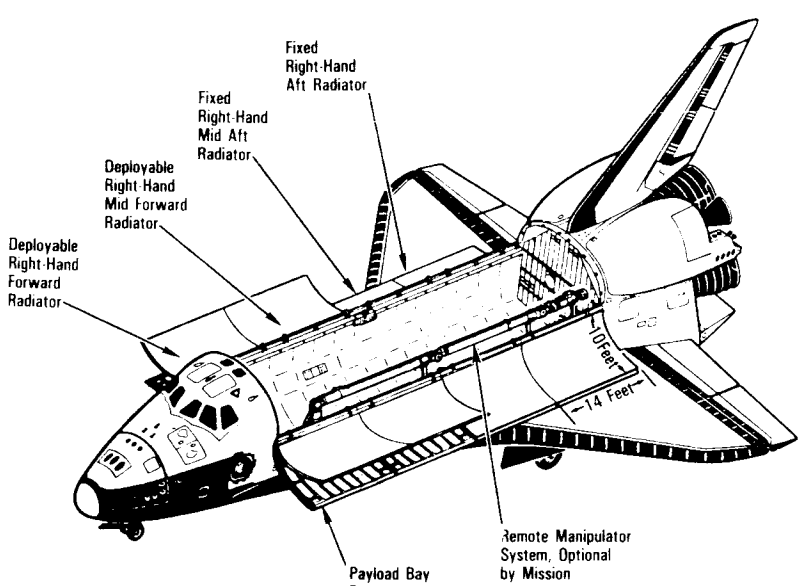


*Payload Bay Radiators*

The orbiter crew compartment provides a life-sustaining environment for a flight crew of eight. The crew cabin volume with the airlock inside the middeck is 2,325 cubic feet. For extravehicular activity requirements, only the airlock is depressurized and repressurized. If the airlock is located outside of the middeck in the payload bay, the crew cabin volume would be 2,625 cubic feet.

**CREW COMPARTMENT CABIN PRESSURIZATION.** The cabin is pressurized to 14.7 psia, plus or minus 0.2 psia, and maintained at an average 80-percent nitrogen and 20-percent oxygen mixture by the air revitalization system. Oxygen partial pressure is maintained between 2.95 and 3.45 psi, with sufficient nitrogen pressure of 11.5 psia added to achieve the cabin total pressure of 14.7 psia, plus or minus 0.2 psia.

The pressurization system consists of two oxygen systems and two gaseous nitrogen systems. The two oxygen systems are supplied by the PRSD oxygen system, which is the same source that supplies oxygen to the orbiter fuel cell power plants. The PRSD cryogenic supercritical oxygen storage system is controlled by electrical heaters within the tanks and supplies the oxygen to the ECLSS pressurization control system at a pressure of 835 to 852 psia in a gaseous state. The gaseous nitrogen supply system consists of two systems with two gaseous nitrogen tanks for each system. The nitrogen storage tanks are serviced to a nominal pressure of 2,964 psia at 80 F. If the auxiliary gaseous oxygen supply tank is installed, it is serviced to 2,440 psia at 80 F and stores 67.6 pounds of gaseous oxygen to provide high flow along with gaseous nitrogen. It would maintain the crew cabin at 8 psi with oxygen partial pressure at 2 psia. For normal on-orbit operations one oxygen and nitrogen supply system is used. For launch and entry both oxygen and nitrogen supply systems are used in addition to repressurization of the airlock.

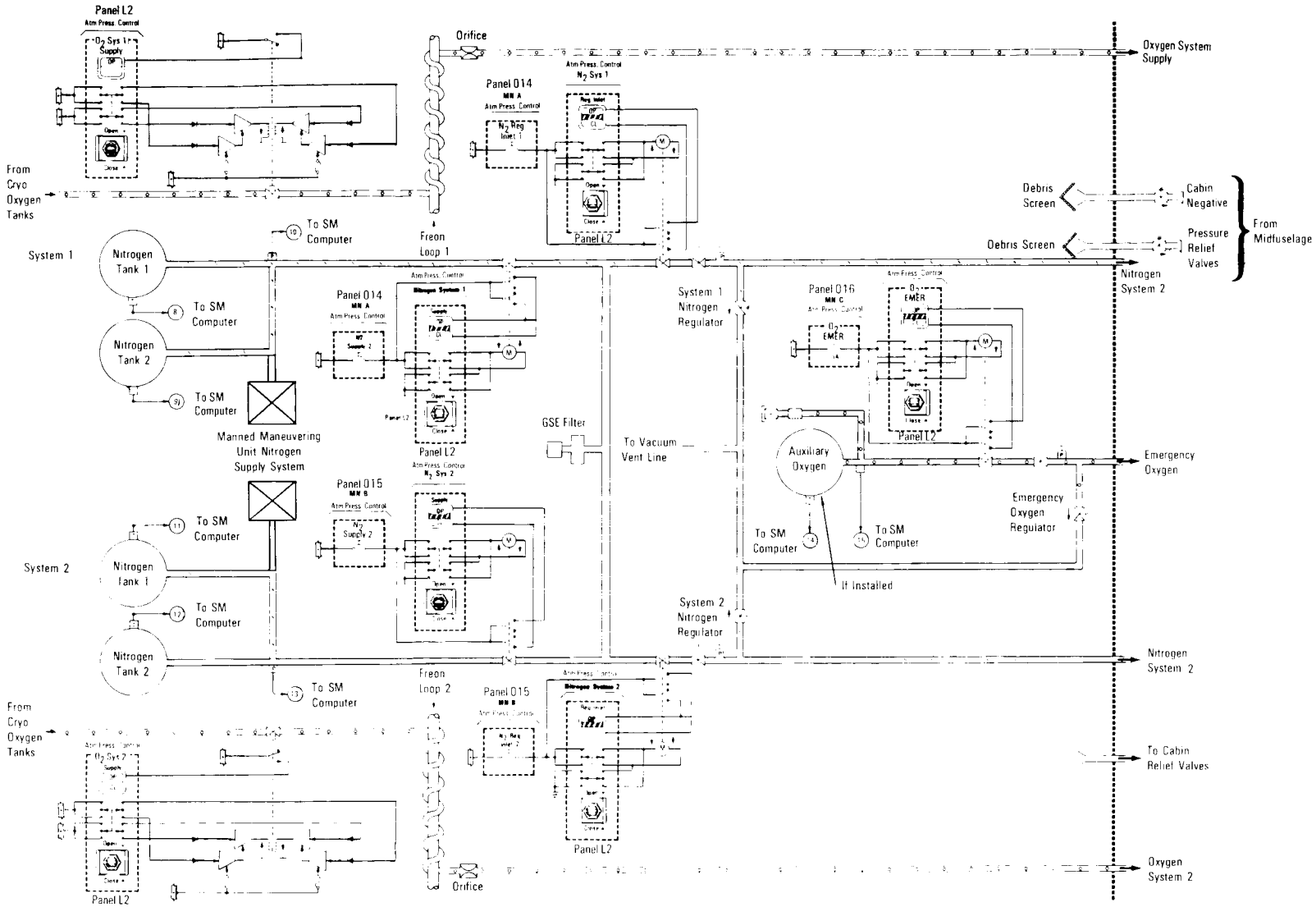


*Air Revitalization System Pressurization (Sheet 1 of 3)*

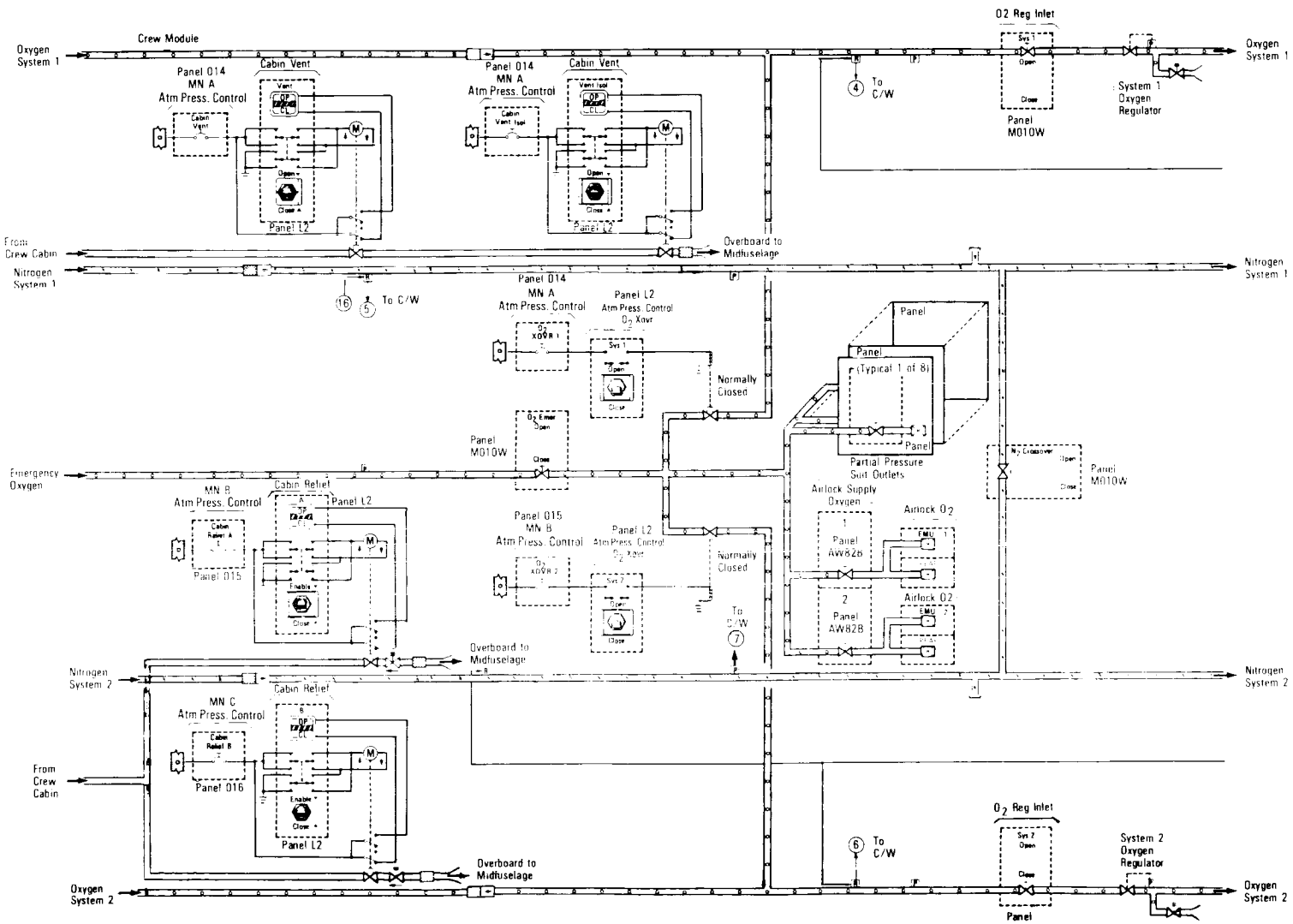


*Air Revitalization System Pressurization (Sheet 2 of 3)*

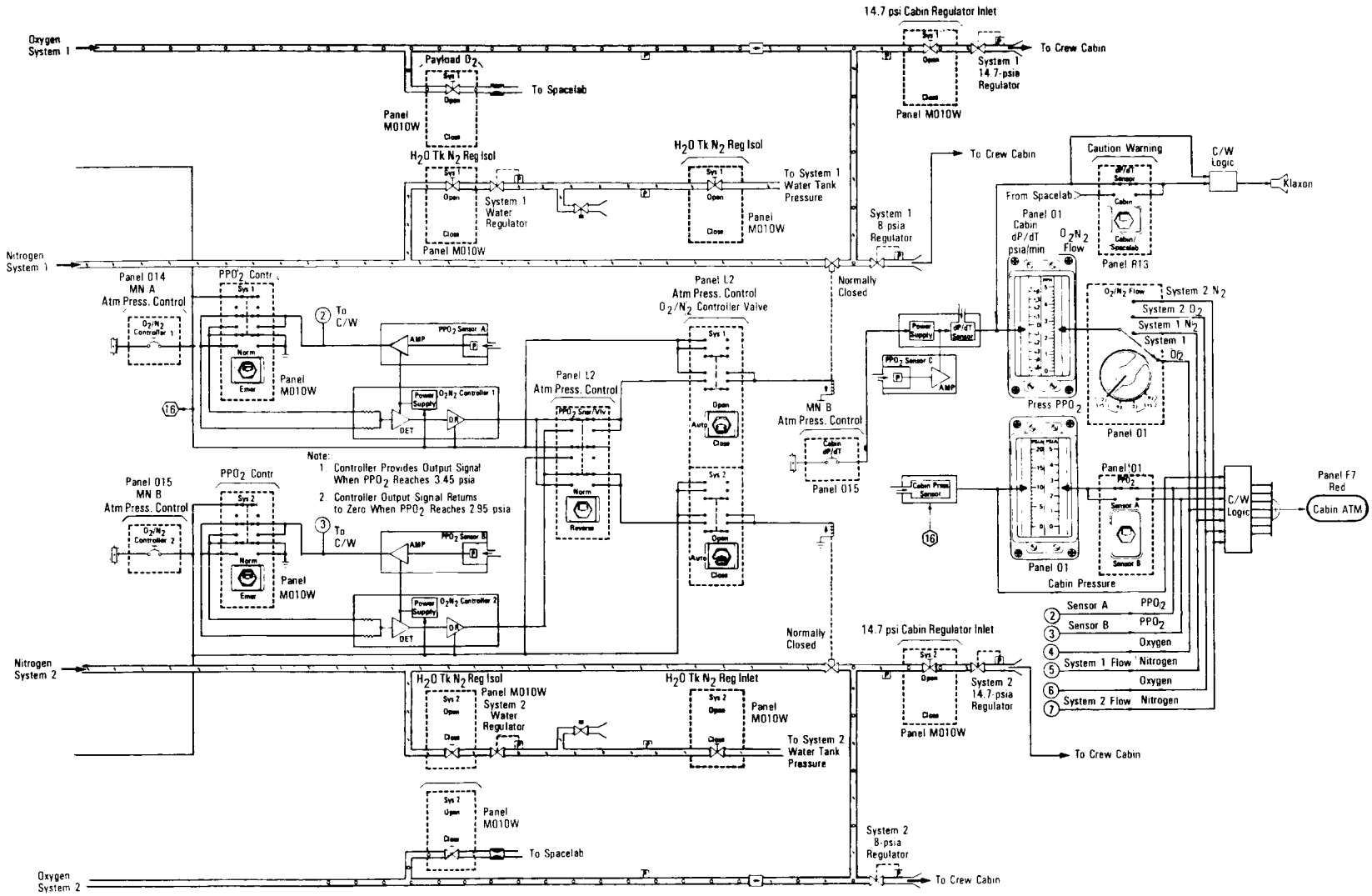


*Air Revitalization System Pressurization (Sheet 3 of 3)*

The heart of the cabin pressurization is the nitrogen/oxygen control and supply panels, the $PPO_2$ sensor, and crew cabin positive and negative pressure relief valves. The nitrogen/oxygen control panel selects and regulates primary (system 1) or secondary (system 2) oxygen and nitrogen. The primary and secondary nitrogen/oxygen supply panels are located in the lower forward portion of the midfuselage. The primary and secondary oxygen supply systems have a crossover capability, as do the primary and secondary nitrogen supply systems. If installed, the auxiliary oxygen supply system is also controlled by the supply panel.

The oxygen and nitrogen supply systems provide the makeup cabin oxygen gas consumed by the flight crew and nitrogen for pressurizing the potable and waste water tanks and repressurizing the airlock. An average of 1.76 pounds of oxygen is used per flight crew member per day. Up to 7.7 pounds of nitrogen and 9 pounds of oxygen are expected to be used per day for normal loss of crew cabin gas to space and metabolic usage. The potable and waste water tanks are pressurized to 17 psia.

Oxygen from the respective PRSD cryogenic oxygen supply system is routed to the atmosphere pressure control oxygen system 1 and system 2 supply valves. The atmosphere pressure control oxygen system 1 and system 2 supply valves are controlled by a switch on panel L2. When the switch is positioned to *open*, the corresponding oxygen system valve opens to permit oxygen to flow through an oxygen restrictor at a maximum flow of 20 pounds per hour and to a heat exchanger in the Freon-21 coolant loop (oxygen system 1 through Freon coolant loop 1 and oxygen system 2 through Freon coolant loop 2), which warms the oxygen supply to the oxygen regulator of that system. A talkback indicator next to the switch indicates *op* when the valve is open. When the *atm press control $O_2$ sys 1* or *sys 2* switch is positioned to *close*, the valve is closed, isolating that oxygen supply system. The talkback indicator indicates *cl*. A check valve downstream of the heat exchanger prevents oxygen from flowing from one supply source to the other if the crossover valves are open. Downstream of the oxygen check valve is a manifold with an oxygen systems 1 and 2 crossover valve that would permit system 1 to system 2 or vice versa. The crossover valves are controlled by the *atm press control $O_2$ xovr sys 1* and *sys 2* switches on panel L2. When the respective switch is positioned to *open*, that oxygen supply system is directed to airlock supply oxygen 1 and 2 manual valves, airlock oxygen 1 and 2 extravehicular mobility unit, and eight face mask outlets. If both atmosphere pressure control oxygen pressure system 1 and system 2 crossover valves are opened, oxygen supply systems 1 and 2 are interconnected. When the respective *atm press control $O_2$ press sys 1* or *sys 2 xover* switch is positioned to *close*, that oxygen supply system is isolated from the crossover feature.

The oxygen supply systems are directed to their corresponding oxygen regulator inlet manual valve. When the valve is manually positioned to *open* on panel M010W, the oxygen supply system is directed to its oxygen regulator, which reduces that oxygen

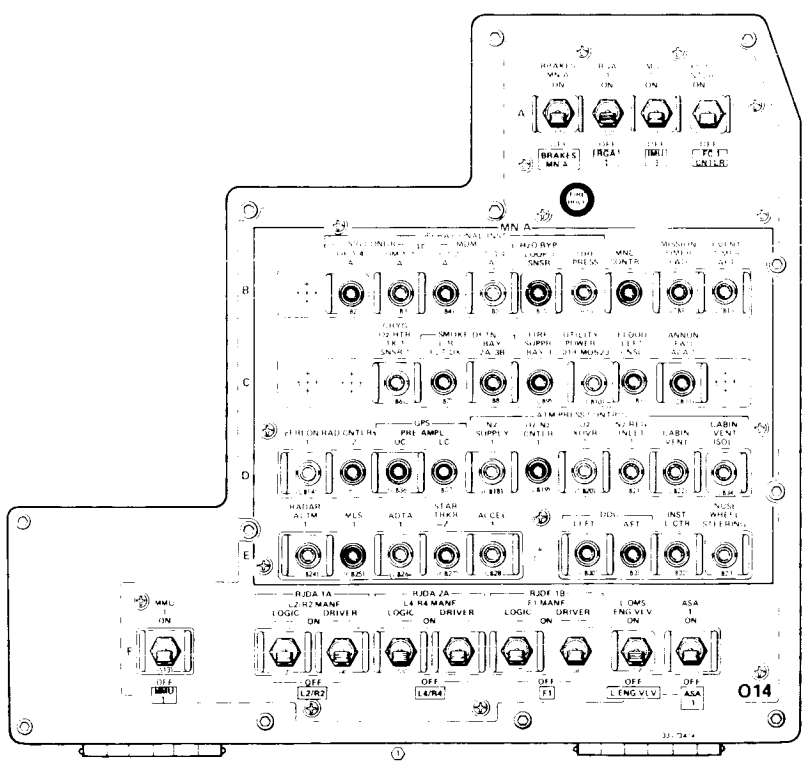


*Panel O14*

supply source pressure to 100 psi with a minimum flow rate capability of 75 pounds per hour. Each regulator is a two-stage regulator with the second stage functioning as a relief valve when the differential pressure across the second stage is 215 psi. The relief pressure is vented into the crew cabin. This regulated pressure passes through another check valve and is directed to its 14.7-psi cabin regulator inlet manual valve, 8-psi regulator and payload oxygen manual valve for Spacelab (if the Spacelab pressurized module is installed in the payload bay) on panel M010W. The check valve on each oxygen supply system between the oxygen regulator and 14.7-psia cabin regulator prevents the reverse flow of oxygen and nitrogen into the oxygen system since the 14.7-psi and 8-psi regulators in each system control the oxygen and nitrogen

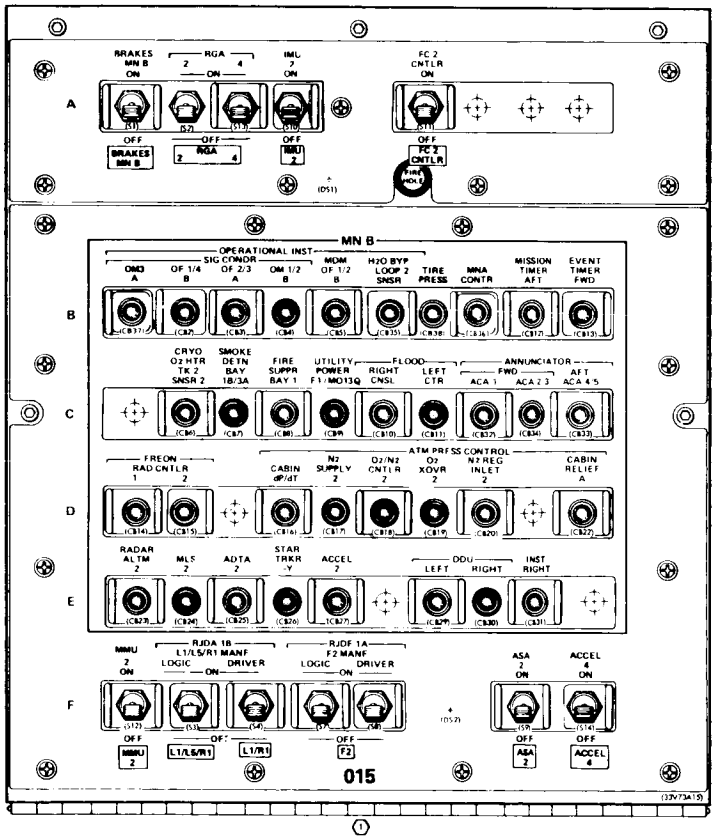


*Panel O15*

flow to the cabin as required to maintain the desired cabin pressure.

The two primary and two secondary gaseous nitrogen supply tanks are constructed of filament-wound Kevlar fiber with a titanium liner. Each nitrogen tank is serviced to a nominal pressure of 3,300 psia at 80 F with a volume of 8,181 cubic inches. The two nitrogen tanks in each system are manifolded together. The primary and secondary nitrogen supply systems are controlled by the atmosphere pressure control nitrogen supply valves in each system. Each valve is controlled by its corresponding *atm press control $N_2$ sys 1* and *2 supply* switch on panel L2. When a supply switch is positioned to *open*, that nitrogen supply system is directed to its corresponding atmosphere pressure control system regulator inlet valve. An indicator adjacent to the switch indicates barberpole when the motor-operated valve is in transit and *op*

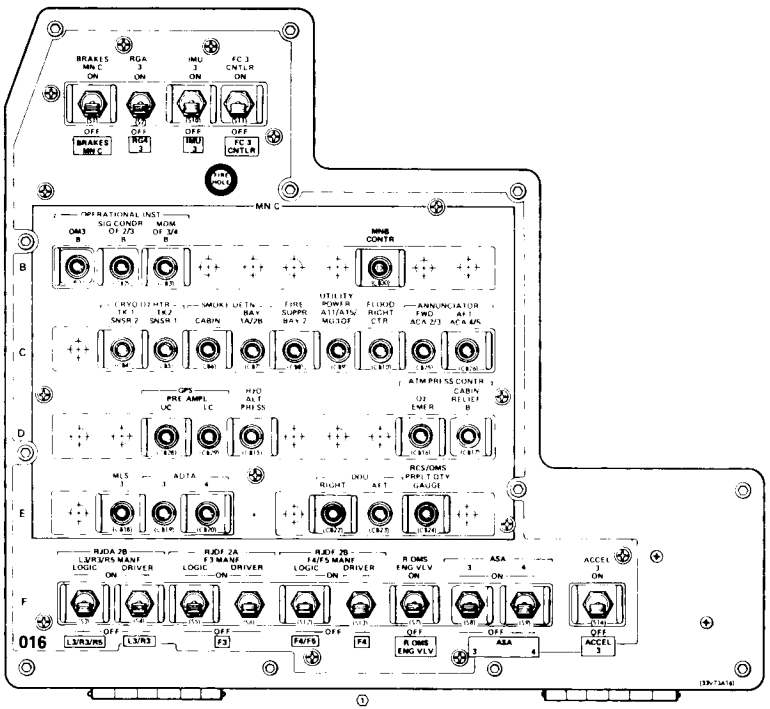


*Panel O16*

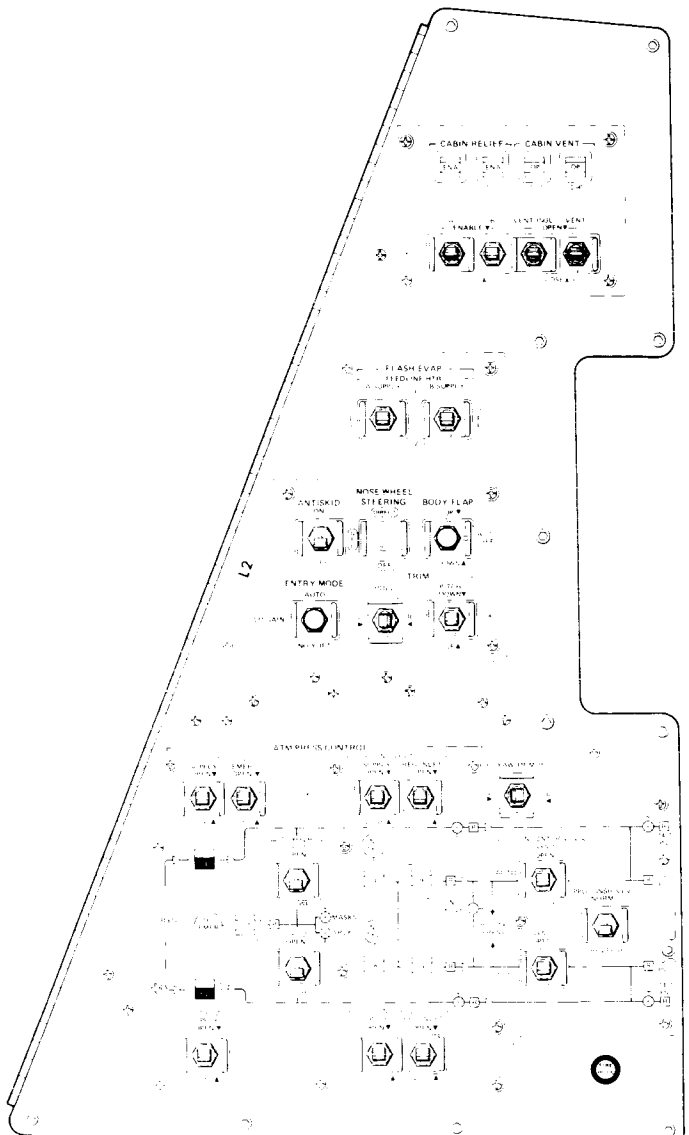


*Panel L2*

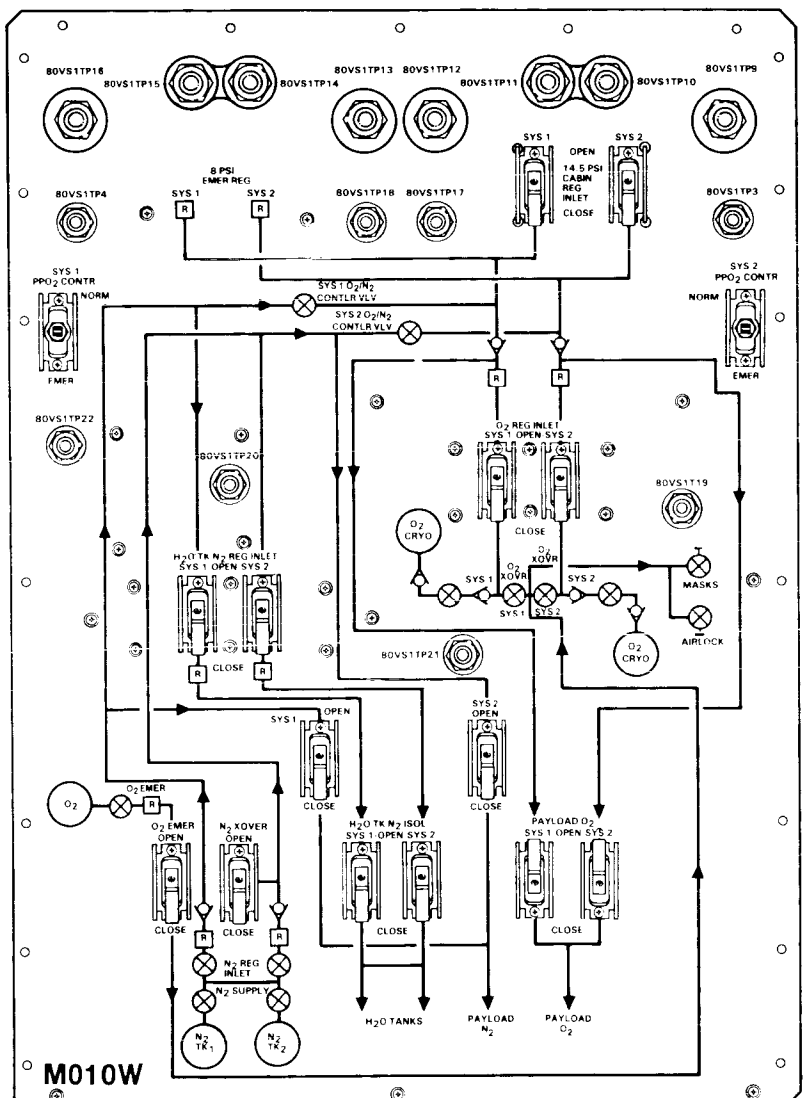


*Panel M010W*

when the supply valve is open. When the supply switch is positioned to *close*, that nitrogen supply system is isolated from the nitrogen system regulator inlet valve, and the talkback indicator indicates *cl*.

The inlet valve in each nitrogen system is controlled by its respective *atm press control $N_2$ sys 1* and *2 reg inlet* switch on panel L2. When a *reg inlet* switch is positioned to *open*, that system's nitrogen source pressure is directed to the system's nitrogen regulator. A talkback indicator next to the *reg inlet* switch indicates barberpole when the motor-operated valve is in transit and *op* when the valve is open. When the *reg inlet* switch is positioned to close, the nitrogen supply pressure is isolated from the system's nitrogen regulator, and the talkback indicator indicates *cl*.

The nitrogen regulators in the primary and secondary supply system reduce the pressure to 200 psi. Each nitrogen regulator is a two-stage regulator with the second stage functioning as a relief valve. The second stage relieves pressure overboard at 245 psi.

The regulated pressure of each nitrogen system is directed to the nitrogen manual crossover valve, the water tank regulator inlet valve and the oxygen and nitrogen controller valve in each system.

The nitrogen crossover manual valve connects both regulated nitrogen systems when the valve is open and isolates the nitrogen supply systems from each other when closed. A check valve between the nitrogen regulator and nitrogen crossover valve in each nitrogen-regulated supply line prevents flow from one nitrogen source supply pressure to the other if the nitrogen crossover valve is open.

The partial pressure of oxygen in the flight crew cabin can be controlled automatically by one of two oxygen and nitrogen controllers. Two $PPO_2$ sensors are located under the crew cabin flight deck mission support console. The $PPO_2$ A and B sensors provide inputs to the $PPO_2$ control systems 1 and 2 controller and switches, respectively.

When a *$PPO_2$ contr* switch is positioned to *norm* on panel M010W and the *atm press control $PPO_2$ snsr/vlv* switch on panel L2 is positioned to *norm*, electrical power is supplied to the corresponding *atm press control $O_2/N_2$ cntlr vlv* switches on panel L2 for system 1 or 2. When the *atm press contlr vlv* switch is positioned to *auto*, electrical power automatically energizes or de-energizes the corresponding nitrogen control valve and nitrogen-regulated supply. When the corresponding $PPO_2$ sensor determines that oxygen is required in the crew cabin to maintain the level at 3.5 psi, the nitrogen supply valve is automatically closed. When the 200-psi nitrogen supply in the manifold drops below 100 psi, the corresponding oxygen supply system flows through its check valve and 14.7-psi cabin regulator into the crew cabin. When the $PPO_2$ sensor determines that the oxygen in the crew cabin is at 3.2 psi, the corresponding nitrogen supply system valve is automatically opened, the 200-psi nitrogen enters the oxygen and nitrogen manifold and closes the corresponding oxygen supply system check valve, and nitrogen flows through the 14.7-psi regulator into the crew cabin. The *open* and *close* positions of the *$O_2/N_2$ cntlr vlv sys 1* and *2* switch on panel L2 permit the flight crew to control the nitrogen valve in each system manually, and thus cabin pressure is controlled manually. The *reverse* position of the *$PPO_2$ snsr/vlv* switch on panel L2 allows controller B to system 1 and controller A to system 2.

If the 14.7-psi cabin regulator inlet manual valves of systems 1 and 2 are closed on panel M010W, the crew module cabin pressure will decrease to 8 psi. The *$PPO_2$ contr sys 1* and *sys 2* switches on panel M010W are positioned to *emer* for the corresponding nitrogen system, which selects the 2.2-psi oxygen partial pressure. The corresponding $PPO_2$ sensor and controller, through the corresponding *$PPO_2$ contr* switch and the *$PPO_2$ snsr/vlv* switch positioned to *norm*, provide electrical inputs to the corresponding *$O_2/N_2$ cntrl vlv* switch. The electrical output from the applicable *$O_2/N_2$ cntrl vlv* switch controls the nitrogen valve in that supply system in the same manner as in the 14.7-psi mode except that the crew module cabin oxygen partial pressure is maintained at 2.2 psi.

The oxygen systems 1 and 2 and nitrogen systems 1 and 2 flows are monitored and sent to the $O_2/N_2$ *flow* rotary switch on

panel O1. The rotary switch permits system 1 oxygen or nitrogen or system 2 oxygen or nitrogen flow to be monitored on the *flow* meter on panel O1 in pounds per hour.

$PPO_2$ sensors A and B monitor the oxygen partial pressure and transmit the signal to the *$PPO_2$ sensor* select switch on panel O1. When the switch is positioned to *sensor A*, oxygen partial pressure from sensor A is monitored on the *$PPO_2$* meter on panel O1 in psia. If the switch is set on *sensor B*, oxygen partial pressure from sensor B is monitored. The cabin pressure sensor transmits directly to the *cabin press* meter on panel O1 and is monitored in psia.

The red *cabin atm* caution and warning light on panel F7 is illuminated for any of the following monitored parameters:

— Cabin pressure below 14.0 psia or above 15.4 psia.

— $PPO_2$ below 2.8 psia or above 3.6 psia.

— Oxygen flow rate above 5 pounds per hour.

— Nitrogen flow rate above 5 pounds per hour.

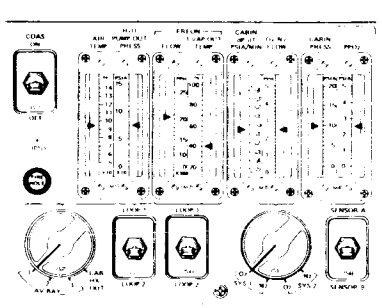

*Panel O1*

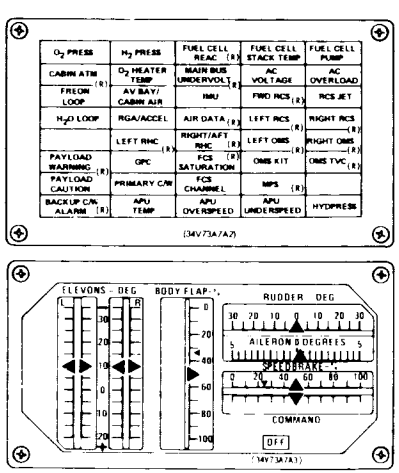


*Panel F7*

A klaxon will sound in the crew cabin and the master alarm push button light indicators will be illuminated if the change in pressure versus change in time decreases at a rate of 0.05 psi per minute or greater. The normal cabin dP/dT is zero psi per minute, plus or minus 0.01 psi, for all normal operations.

The temperature and pressure of the primary and secondary nitrogen and emergency oxygen tanks are monitored and transmitted to the systems management computer. This information is used to compute oxygen and nitrogen quantities.

The two cabin relief valves are in parallel to provide overpressurization protection of the crew module cabin above 16 psid. Each cabin relief valve is controlled by its corresponding switch on panel L2. The *cabin relief A* switch controls cabin relief A, and the *cabin relief B* switch controls cabin relief B. When the switch is positioned to *enable*, the corresponding motor-operated valve allows the cabin pressure to a corresponding positive pressure relief valve that relieves at 16 psid and reseats at 15.5 psid. The relief valve maximum flow capability is 150 pounds per hour. A talkback indicator above the respective switch indicates barberpole when the motor-operated valve is in transit and *op* when the motor-operated valve is open. When the switch is positioned to *close*, the corresponding motor-operated valve isolates cabin pressure from the relief valve, and the talkback indicator indicates *cl*.

The crew module cabin vent isolation valve and cabin vent valve are in series to vent the crew cabin to ambient pressure. Approximately one hour and 30 minutes before lift-off, the crew module cabin is pressurized to approximately 16.7 psi for leak checks of the crew cabin. The cabin vent isolation valve is controlled by the *cabin vent*, *vent isol* switch on panel L2, and the cabin vent valve is controlled by the *cabin vent*, *vent* switch on panel L2. Each switch is positioned to *open* to control its respective motor-operated valve. When both valves are open, the cabin pressure is vented into the midfuselage. The maximum flow capability through the valves at 0.2 psid is 900 pounds per hour. A talkback indicator above each switch indicates the position of the respective valve—barberpole when the valve is in transit and *op* when it is open.

If the crew cabin pressure is lower than the pressure outside the crew cabin, two negative pressure relief valves in parallel will open at 0.2 to 0.7 psid, permitting flow of ambient pressure into the crew cabin. The maximum flow rate at 0.5 psid is zero to 654 pounds per hour.

The manual water tank nitrogen regulator inlet valve in each nitrogen-regulated supply system permits nitrogen to flow to its corresponding regulator and water tank nitrogen regulator isolation manual valve. The inlet and isolation manual valves are on panel M010W. The water regulator in each nitrogen system reduces the 200-psi supply pressure to 16 psi. Each regulator is a two-stage regulator with the second stage relieving pressure into the crew cabin at a differential pressure of 20 psi. The nitrogen pressurization system for the potable and waste water tanks is discussed later in this section.

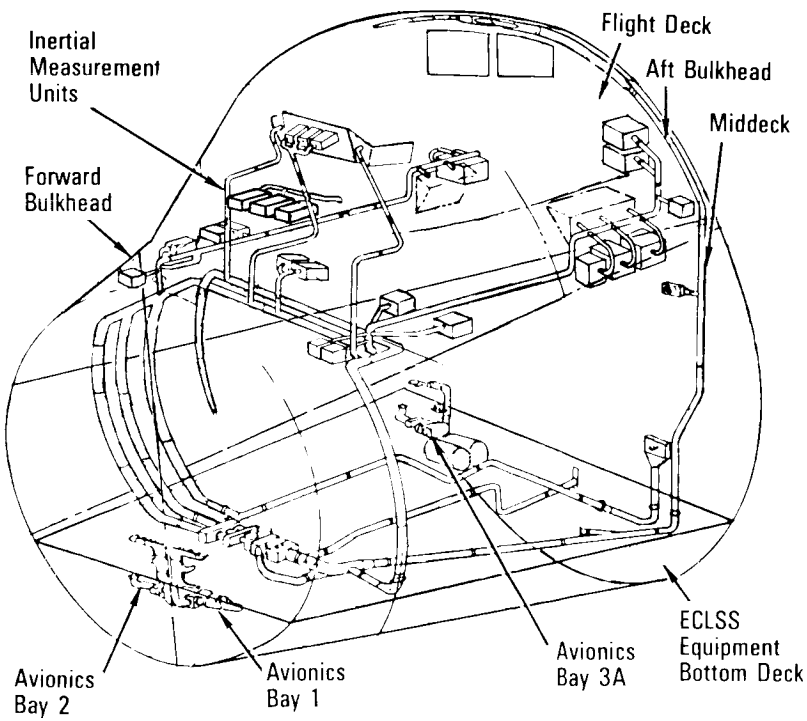


*Cabin Air (IMU Loop Not Shown)*

**CABIN AIR REVITALIZATION.** There are five independent air loops in the cabin: the cabin itself, three avionics bays and inertial measurement units. The cabin pressure atmosphere is circulated by the air revitalization system. The air circulated through the flight crew cabin picks up heat, moisture, odor, carbon dioxide and debris with additional heat from electronic units in the crew cabin. The cabin air is drawn through the cabin loop and through a 300-micron filter by one of two cabin fans located downstream of the filter.

Each cabin fan is controlled by its respective *cabin fan A* and *B* switch on panel L1. Normally, only one fan is used at a time. The cabin fans are located under the middeck floor.

The cabin air from the cabin fan is ducted to the two lithium hydroxide canisters, where carbon dioxide is removed and activated charcoal removes odors and trace contaminants. An orifice in the duct directs a specific amount of cabin air through each lith-

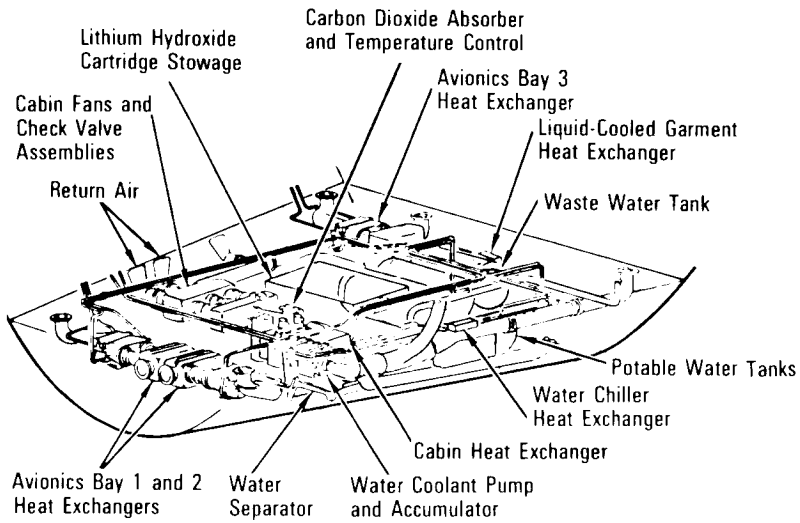


*Crew Cabin Bottom Deck ECLSS (Below Middeck Floor)*

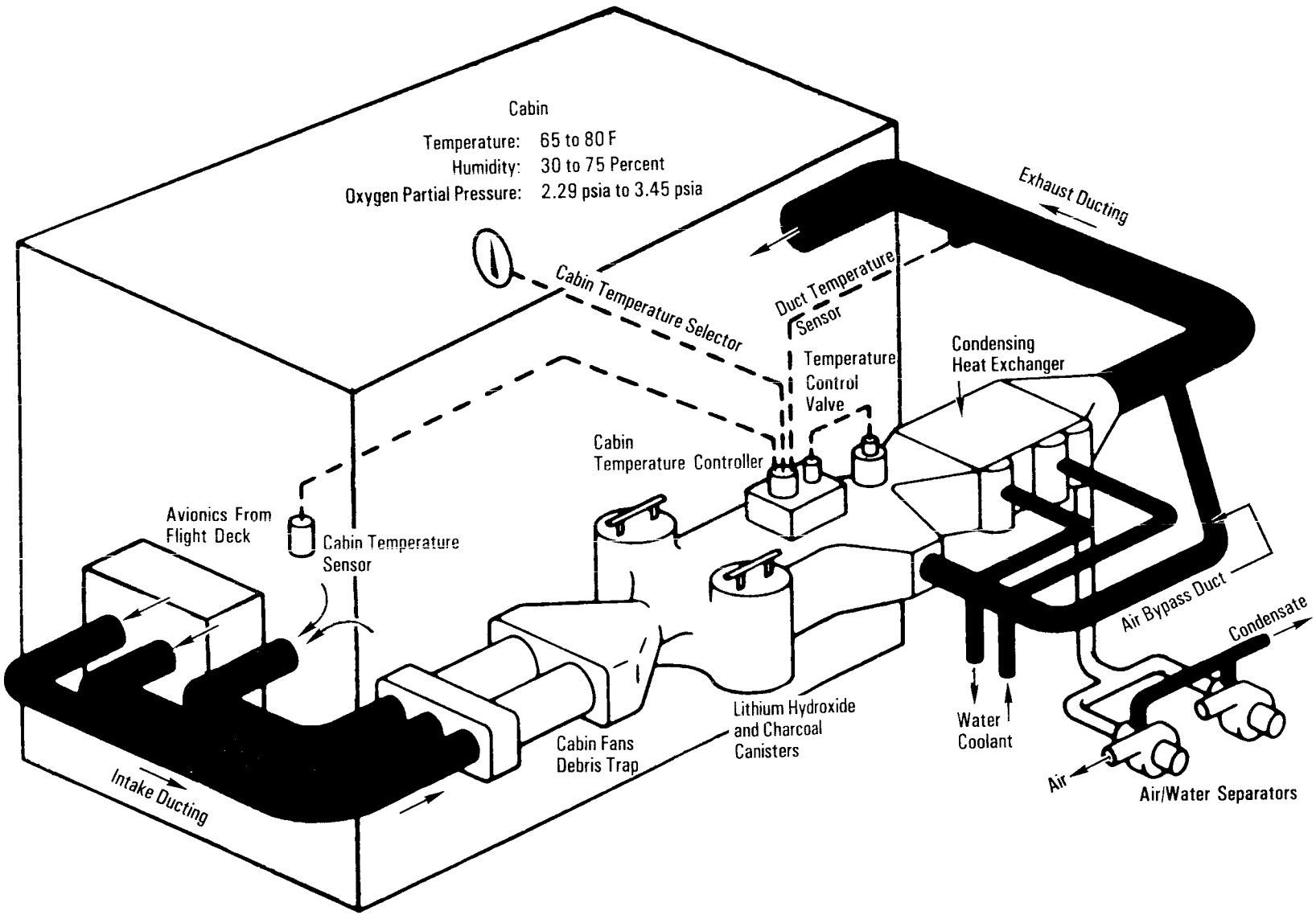
Cabin
Temperature: 65 to 80 F
Humidity: 30 to 75 Percent
Oxygen Partial Pressure: 2.29 psia to 3.45 psia
Exhaust Ducting
Cabin Temperature Selector
Duct Temperature Sensor
Temperature Control Valve
Condensing Heat Exchanger
Cabin Temperature Controller
Avionics From Flight Deck
Cabin Temperature Sensor
Air Bypass Duct
Condensate
Lithium Hydroxide and Charcoal Canisters
Water Coolant
Cabin Fans Debris Trap
Air
Air/Water Separators
Intake Ducting

*Cabin Air*

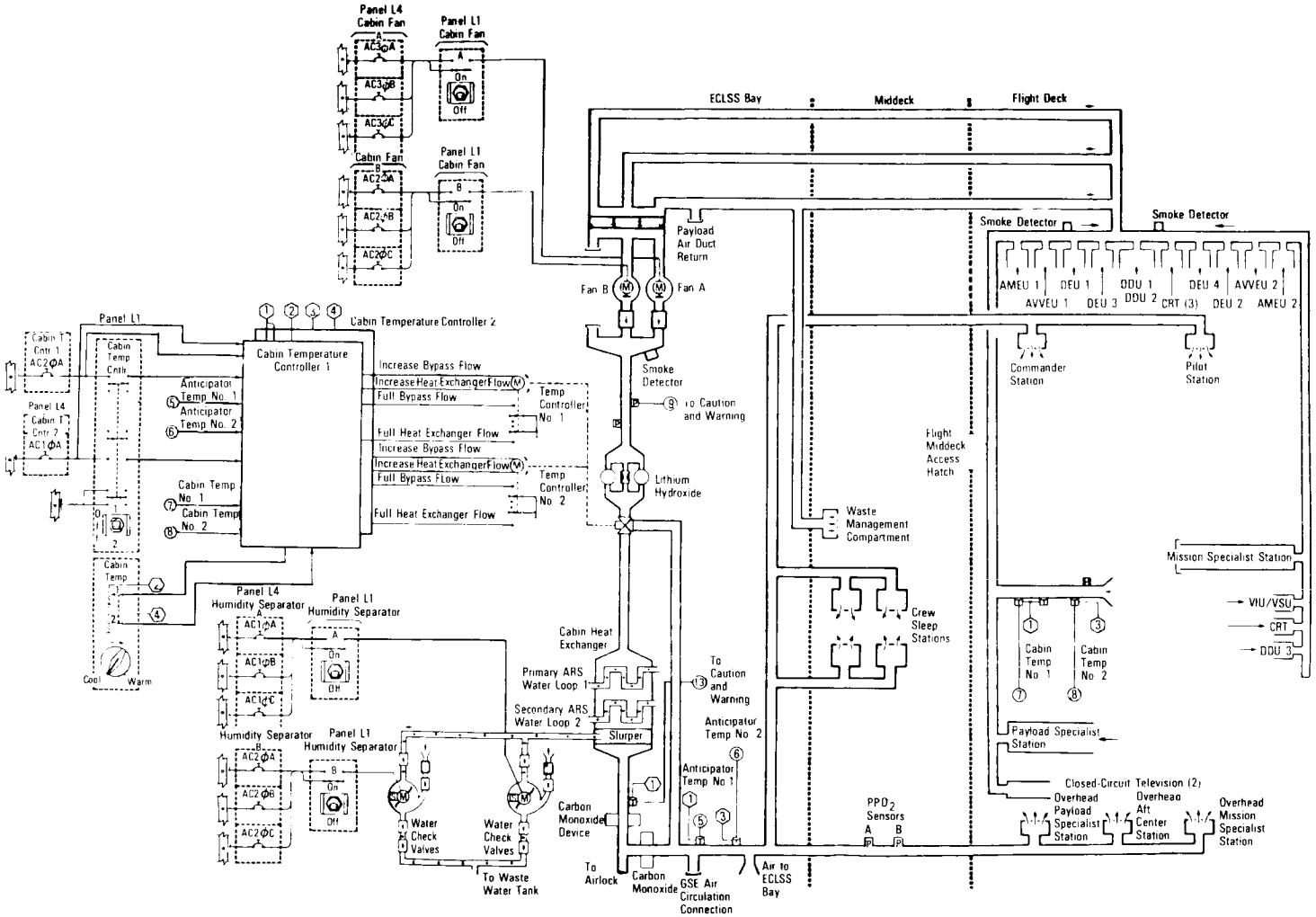


AMEU — Alpha/Mach Indicator Electronic Unit
AVVEU — Altitude/Vertical Velocity Indicator Electronic Unit
CRT — Cathode Ray Tube
DDU — Display Driver Unit
DEU — Digital Electronics Unit
VIU/VSU — Video Interface Unit/Video Electronic Unit

*Crew Cabin Air*

ium hydroxide canister. The canisters are also located under the middeck floor. They are changed alternately every 12 hours

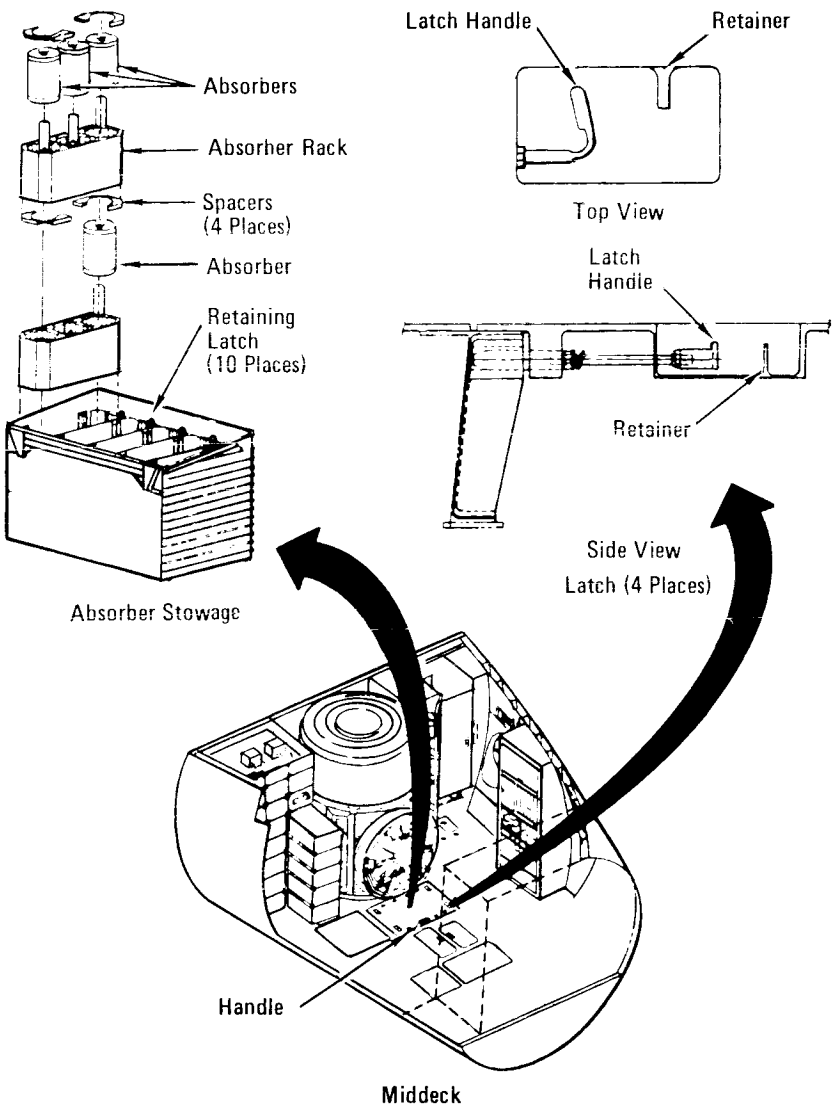


*Carbon Dioxide Absorbers*

through an access door in the floor. For a flight crew of seven, the lithium hydroxide canisters are changed alternately every 11 hours. Replacement canisters are stored under the middeck floor between the cabin heat exchanger and water tanks.

Cabin air is then directed to the crew cabin heat exchanger located under the middeck floor and cooled by the water coolant loops. Humidity condensation that forms in the slurper of the cabin heat exchanger is removed by a fan separator that draws air and water from the cabin heat exchanger. The moist air is drawn from the slurper into the humidity separator fan, where centrifugal force separates the water from the air. The fan separator removes up to approximately 4 pounds of water per hour. The water is routed to the waste water tank, and the air is ducted through the exhaust for return to the cabin. There are two fan separators controlled individually by *humidity sep A* and *B* switches on panel L1. The *humidity sep A* switch controls humidity separator fan A, and the *B* switch controls humidity separator fan B. Normally, only one fan separator is used at a time. The relative humidity in the crew cabin is maintained between 30 and 65 percent in this manner. A small portion of the revitalized and conditioned air from the cabin heat exchanger is ducted to the carbon monoxide removal unit, which converts carbon monoxide to carbon dioxide.



Based on the crew cabin volume of 2,300 cubic feet and 330 cubic feet of air per minute, one volume crew cabin air change occurs in approximately seven minutes, and approximately 8.5 air changes occur in one hour.

A bypass duct carries cabin air around the cabin heat exchanger and mixes it with the revitalized and conditioned air to control the crew cabin air temperature in a range between 65 and 80 F. When the *cabin temp cntlr* switch on panel L1 is positioned to *1*, it enables controller 1. The rotary *cabin temp cool/warm* switch on panel L1 selects and automatically controls the bypass valve by diverting zero to 70 percent of the air flow around the cabin heat exchanger depending on the position of the *cool/warm* rotary switch. The controllers are attached to a single bypass valve by an actuator arm. If controller 1 malfunctions, the actuator arm

linkage must be removed from controller 1 by the flight crew at panel MD44F and connected manually to controller 2 before the *cabin temp cntlr* switch on panel L1 is positioned to *2*. This enables controller 2 and permits the rotary *cool/warm* switch to control controller 2 and the single bypass control valve. The *cabin temp cntlr* switch's *off* position removes electrical power from both controllers, the *cabin temp cool/warm* switch and automatic control of the single bypass valve.

The cabin heat exchanger outlet temperature is transmitted to the *cabin hx out av bay* rotary switch on panel O1. When the switch is positioned to *cabin hx out*, the temperature can be monitored on the panel O1 *air temp* meter. The cabin heat exchanger outlet temperature provides an input to the yellow *av bay/cabin air* caution and warning light on panel F7. The C/W light is illuminated if the cabin heat exchanger outlet temperature is above 65 F or if the cabin fan delta pressure is 2.8 inches of water or above 7.1 inches of water.

The air from the cabin heat exchanger and the bypassed air come together in the supply duct and are exhausted into the crew cabin through consoles and middeck and various station duct outlets into the crew cabin.

If cabin temperature controllers 1 and 2 or the *cabin temp cool/warm* rotary switch is unable to control the single bypass valve, the flight crew can position the single bypass valve actuator drive arm to the desired position and pin the bypass valve in place

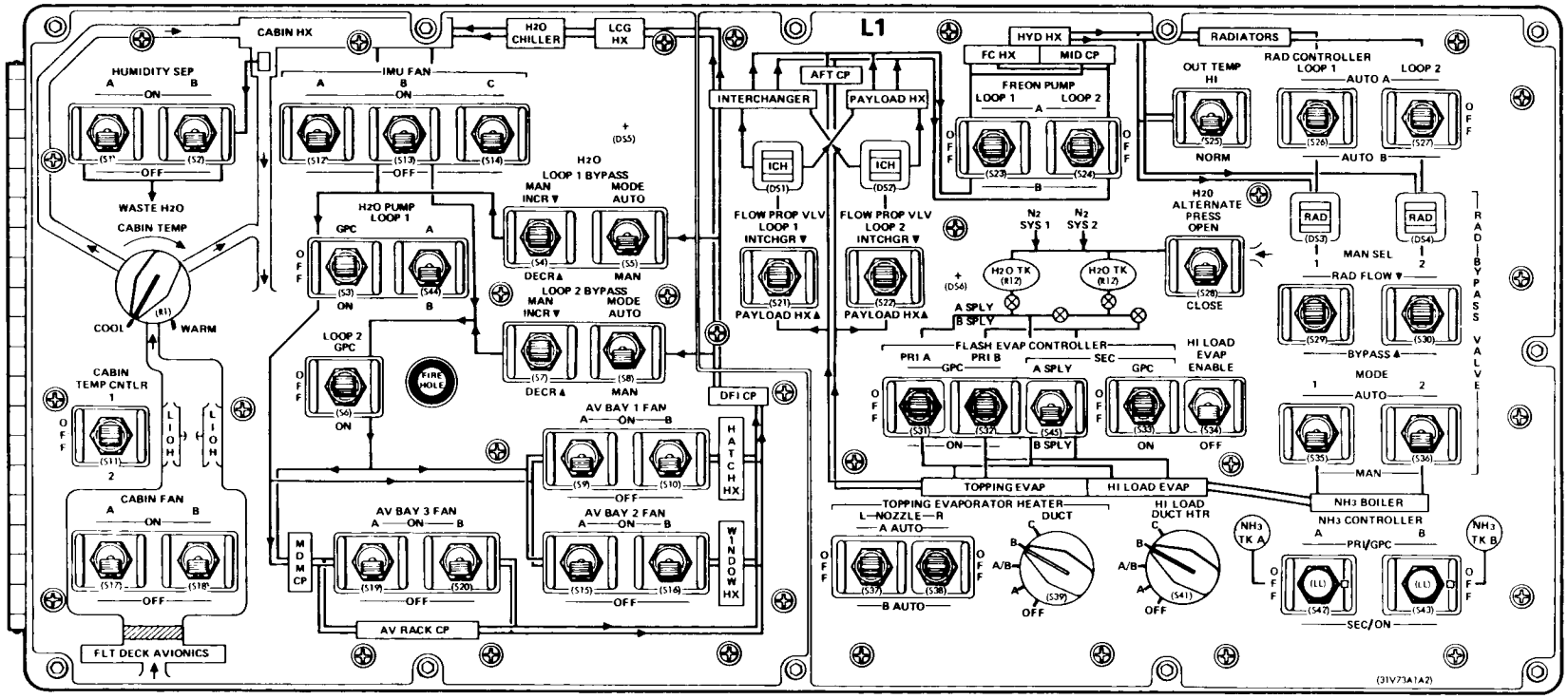


*Panel L1*

at panel MD44F. The *full cool* position at panel MD44F establishes the maximum cabin air flow rate to the cabin heat exchanger, the *2/3 cool* position establishes a flow rate that provides approximately two-thirds of the maximum cooling capability, the *1/3 cool* position establishes a flow rate that provides approximately one-third of the maximum cooling capability, and the *full heat* position establishes the minimum cabin air flow rate to the cabin heat exchanger.

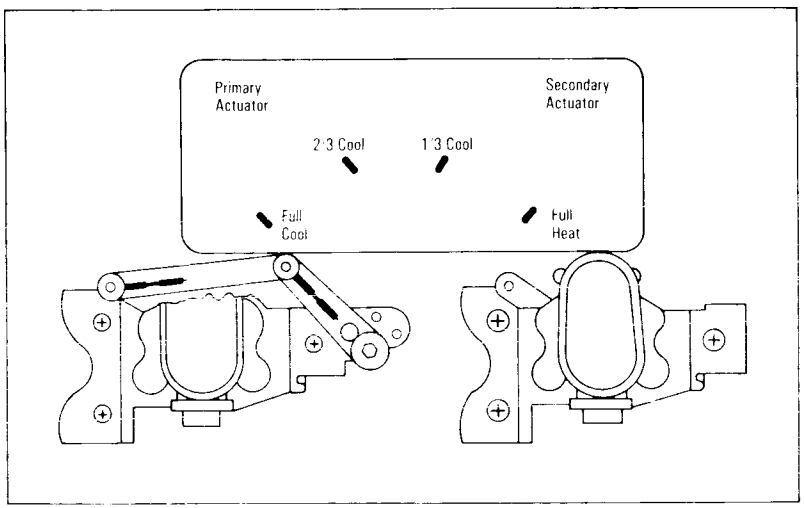


*Panel MD44F*

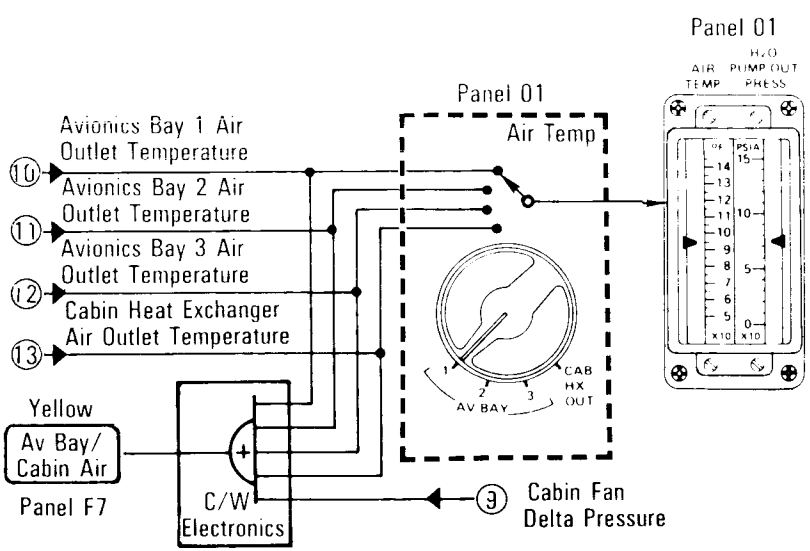


*Avionics Bay and Cabin Heat Exchanger Temperature Monitoring and Caution/Warning, Crew Cabin Air*

The cabin air is also used to cool the three avionics equip-

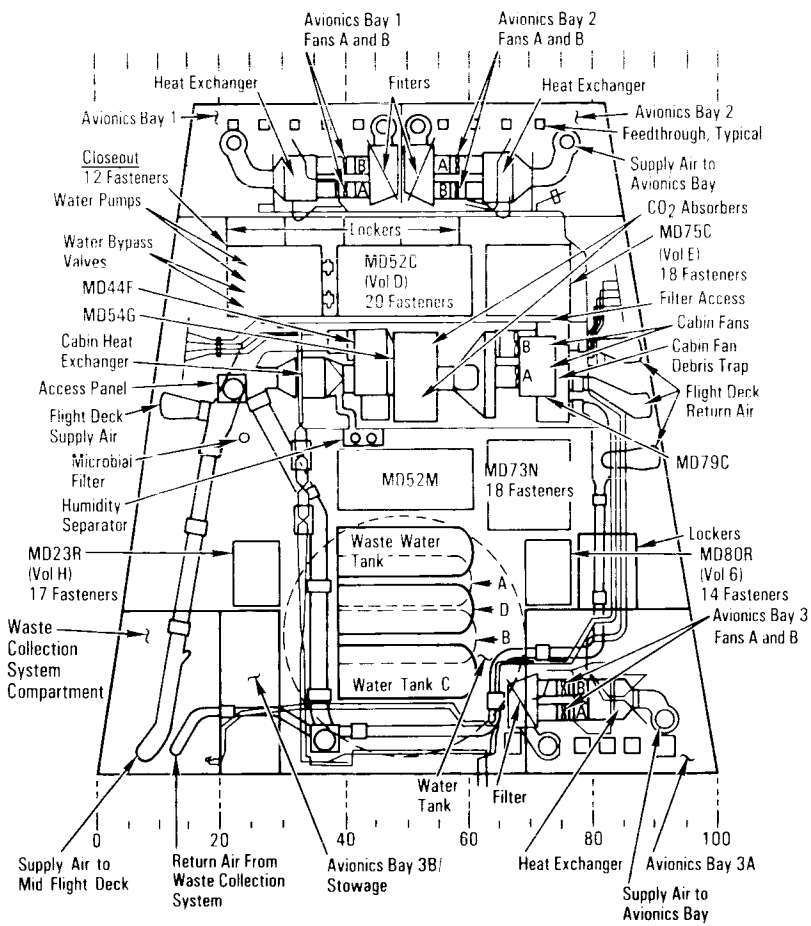


*Lower Equipment Bay*

ment bays and some of the electronic avionics units in the avionics bays in addition to the three IMUs. Each of the three avionics equipment bays in the middeck has a closeout cover to minimize air interchange and thermal gradients between the avionics bay and crew cabin; however, the closeout cover for each avionics equipment bay is not airtight. The electronic avionics units in each avionics bay meet outgassing and flammability requirements to minimize toxicity levels. Each of the three avionics equipment bays has identical air-cooled systems. Two fans per avionics equipment bay are controlled by individual avionics bay *fan A* and *B* switches on panel L1. Normally, only one fan is used at a time. When the *A* or *B* switch for an avionics bay is positioned to *on*, the fan draws cabin air from the floor of the avionics bay, through the applicable air-cooled avionics units, through connectors at the back of the applicable air-cooled units, to the cabin fan inlet, through a 300-micron filter and to the cabin fan. The cabin fan outlet directs the air through that avionics bay heat exchanger. The water coolant loops flow through the heat exchanger to cool the fan outlet air, and the cooled air is returned to the avionics bay. A check valve in the outlet of the fan that is not operating prevents a reverse flow through that fan. The air outlet from the fan in each avionics bay is monitored and transmitted to the *cabin hx out av bay 1,2,3* rotary switch on panel O1. When the rotary switch is positioned to *av bay 1, 2* or *3*, that avionics bay's fan outlet temperature can be displayed on the *air temp* meter on panel O1. The air outlet temperature of each avionics bay also provides an input to the yellow *av bay/cabin air* C/W light on panel F7. This light is illuminated if any of the avionics bay outlet temperatures are above 135 F. The *off* position of the *A* or *B* switch removes power from that avionics bay fan.

The three IMUs are cooled by one of three fans drawing cabin air through a 300-micron filter and across the three IMUs. The fan outlet air flows through the IMU heat exchanger and is cooled by the water coolant loops before returning to the crew cabin. Each IMU fan is controlled by the *IMU fan A, B, C* switches on panel L1. The *on* position turns the corresponding fan on and the *off* position turns it off. Normally, one fan is sufficient because one fan cools all three IMUs. A check valve is installed on the outlet of each fan to prevent a reverse air flow through the fans not operating.

If the payload bay contains the Spacelab pressurized module, a kit is installed to provide ducting for the flow of cabin air from the middeck through the airlock and tunnel to the module. The humidity separators, cabin fans, cabin heat exchanger, avionics bay heat exchangers, IMU heat exchanger, waste water tank, lithium hydroxide filters, carbon monoxide unit, and waste and potable water tanks are located beneath the middeck crew compartment floor.

**WATER COOLANT LOOP SYSTEM**. The WCLS provides thermal conditioning of the crew cabin by collecting heat at the cabin-air-to-water-coolant-loop heat exchanger and transfers heat to the water coolant loops. The water coolant loops transfer the

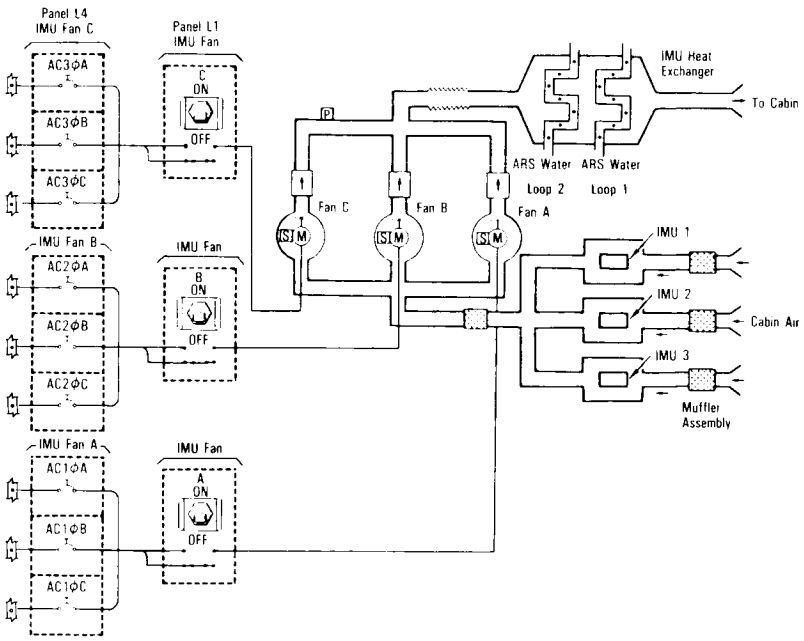


*Inertial Measurement Unit*

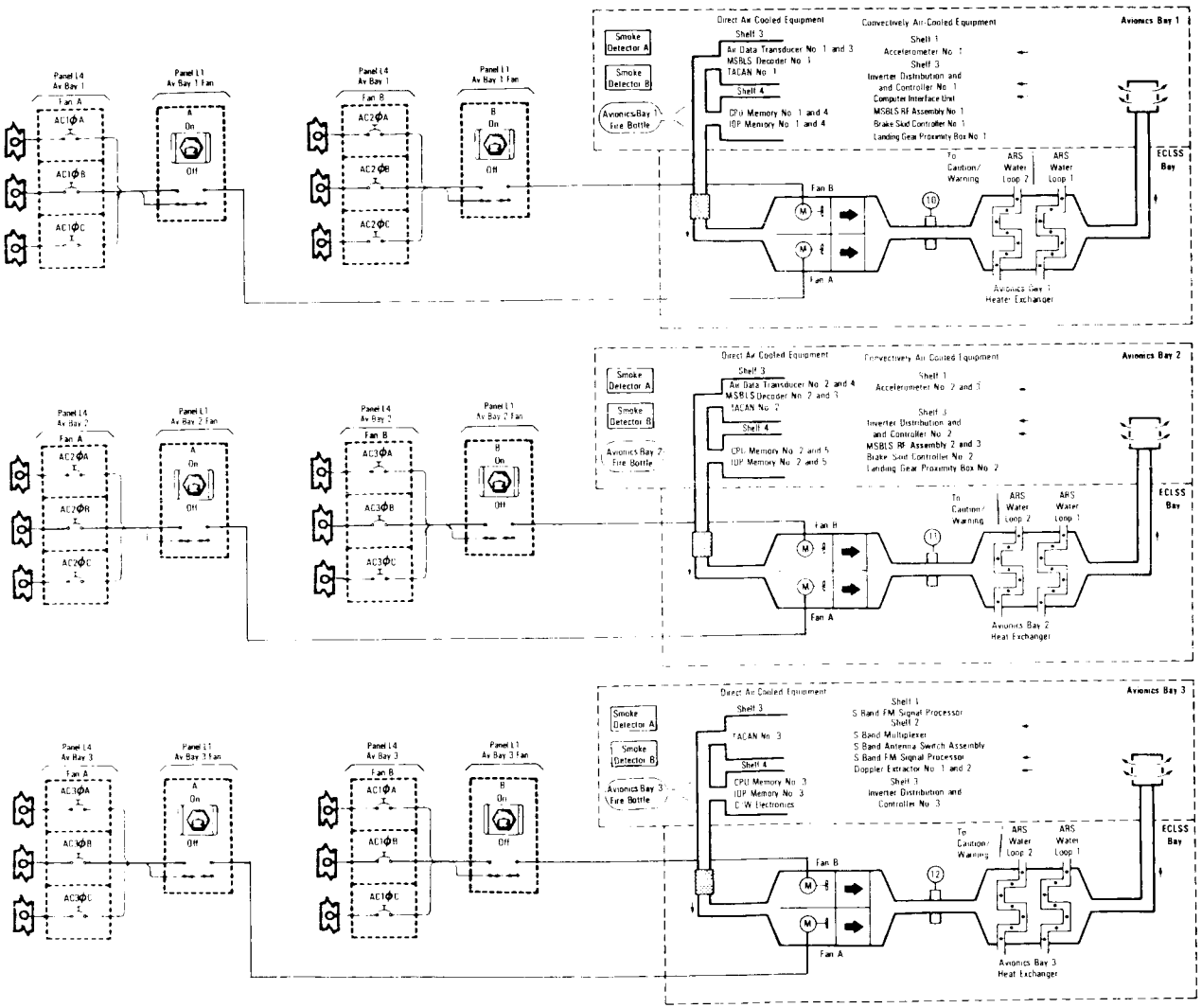


*Avionics Bay Cabin Cooling*

heat at the water and Freon-21 coolant loop interchanger. The WCLS also provides thermal conditioning for the three avionics bays by an air-to-water heat exchanger in each avionics bay, the cabin heat exchanger, liquid-cooled garament and water chiller, which transfers heat to the water coolant loops. The IMU air-to-water heat exchanger also transfers heat to the water coolant loops.

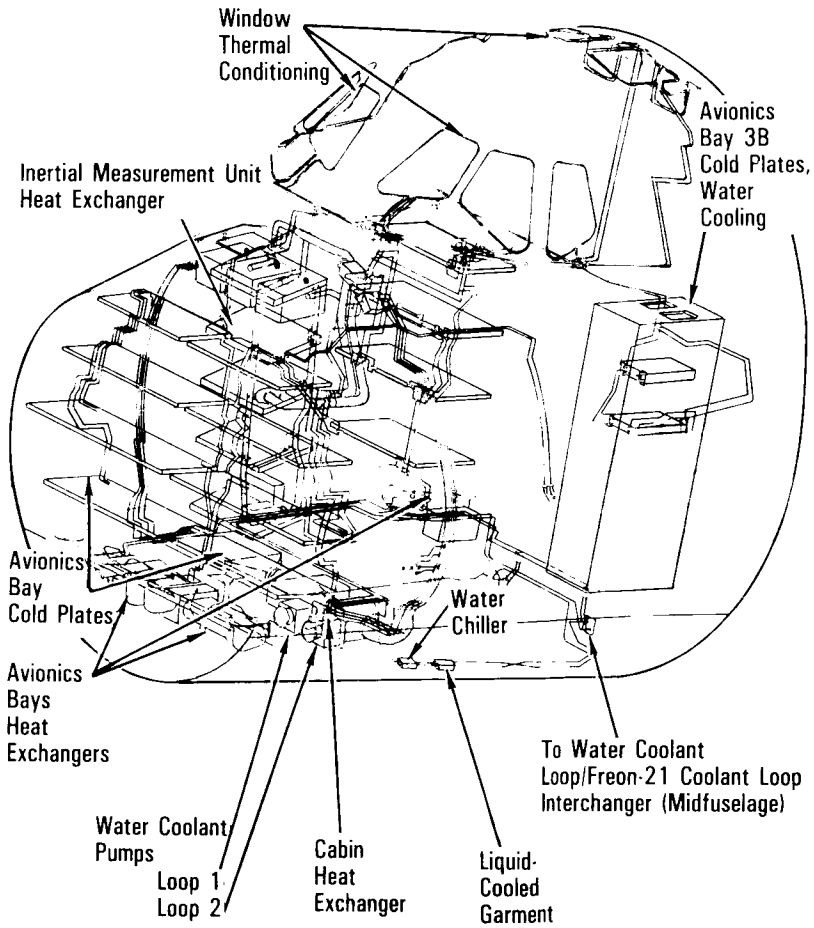


*Crew Cabin Water Coolant Loops*

There are two complete and separate water coolant loops that flow side by side and can operate at the same time. The only difference between water coolant loops 1 and 2 is that loop 1 has two water pumps and loop 2 has one pump.

Some electronic units in each of the avionics equipment bays are mounted on cold plates. The water coolant loops flow through the cold plates, and the heat generated by the electronics unit is transferred to the cold plate and then to the water coolant loop, which carries heat from the electronic unit. The cold plates mounted on the shelves in each avionics equipment bay are connected in a series-parallel arrangement with respect to the water coolant loop flow.

The water pumps in coolant loop 1 are controlled by the *$H_2O$ pump loop 1 A* and *B* switch on panel L1 in conjunction with the *$H_2O$ pump loop 1 GPC off* and *on* switch on panel L1. The *GPC* position enables the general-purpose computer to command the loop 1 pump, which is selected by the *$H_2O$ pump loop 1 A* or *B* switch, to circulate water through water coolant loop 1. The *on* position energizes the loop 1 pump. A ball-type check valve downstream of each water pump prevents reverse flow through the non-operating pump. The *off* position removes electrical power from both the A and B pumps of loop 1.

Water pump 2 is controlled by the *$H_2O$ pump loop 2 GPC on, off* switch on panel L1. When the switch is positioned to *GPC*, water pump 2 is commanded by the GPC to circulate water through water coolant loop 2. The *on* position energizes the water pump 2 to circulate water through water coolant loop 2. The *off* position removes electrical power from water coolant loop 2 pump.

Water loops 1 and 2 flow side by side through the same areas when both loop pumps are in operation. Downstream of the water pump in each loop, water flow splits into three parallel paths: one through the avionics bay 1 heat exchanger and cold plates; another through the avionics bay 2 heat exchanger and cold plates, payload bay floodlight cold plates and thermal conditioning of the

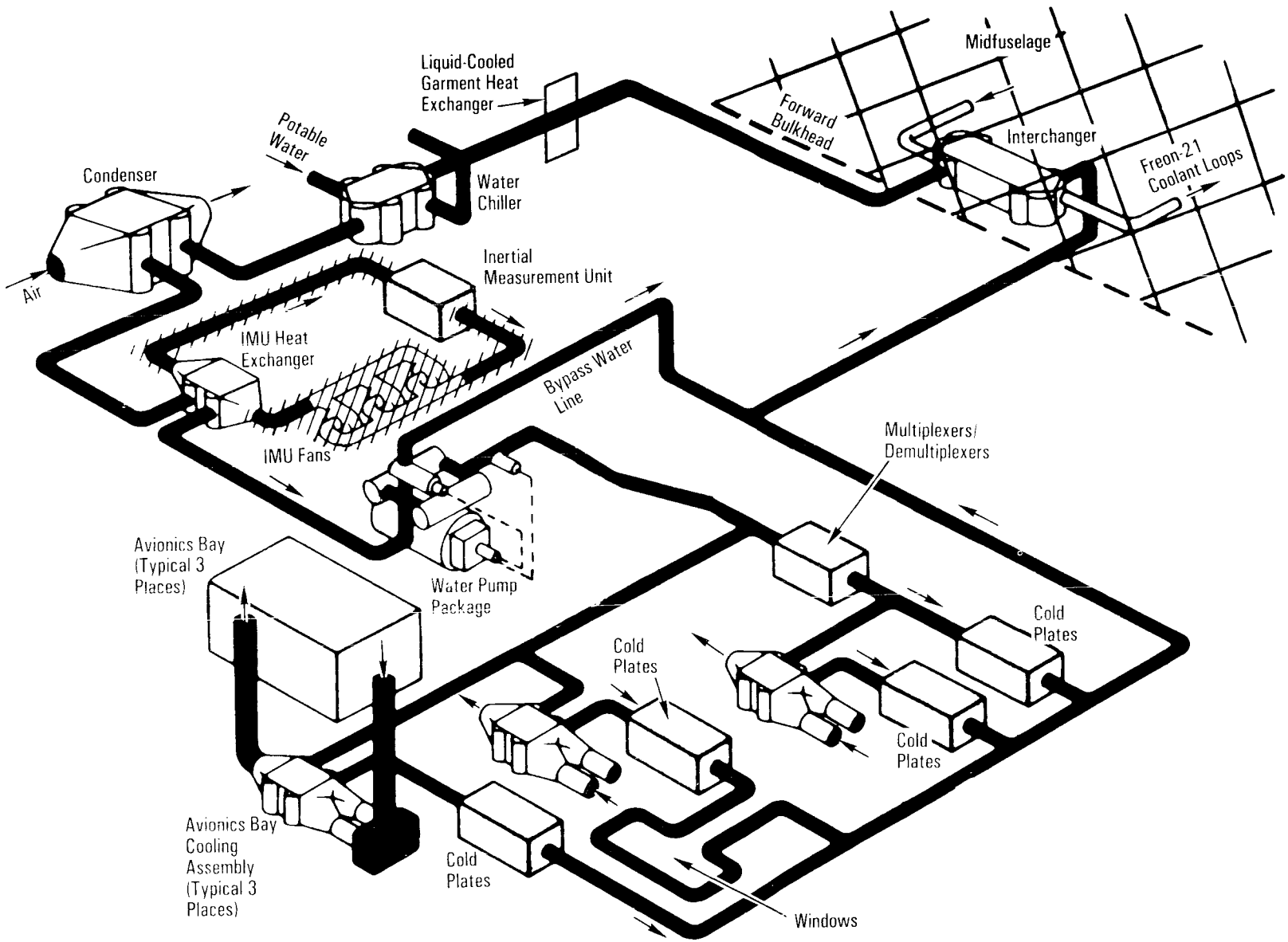


*Water Coolant Loops*

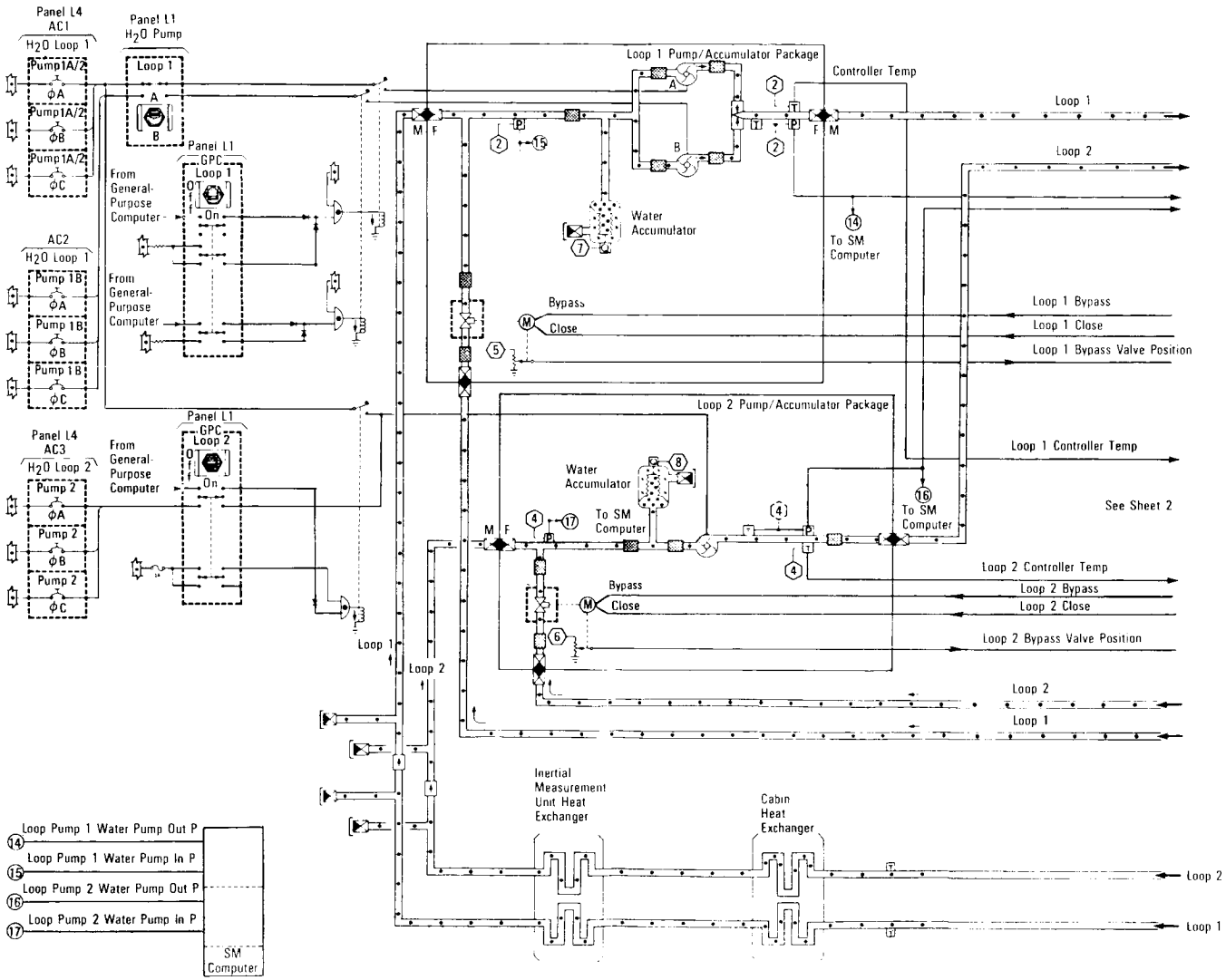


*Water Coolant Loops (Sheet 1 of 3)*

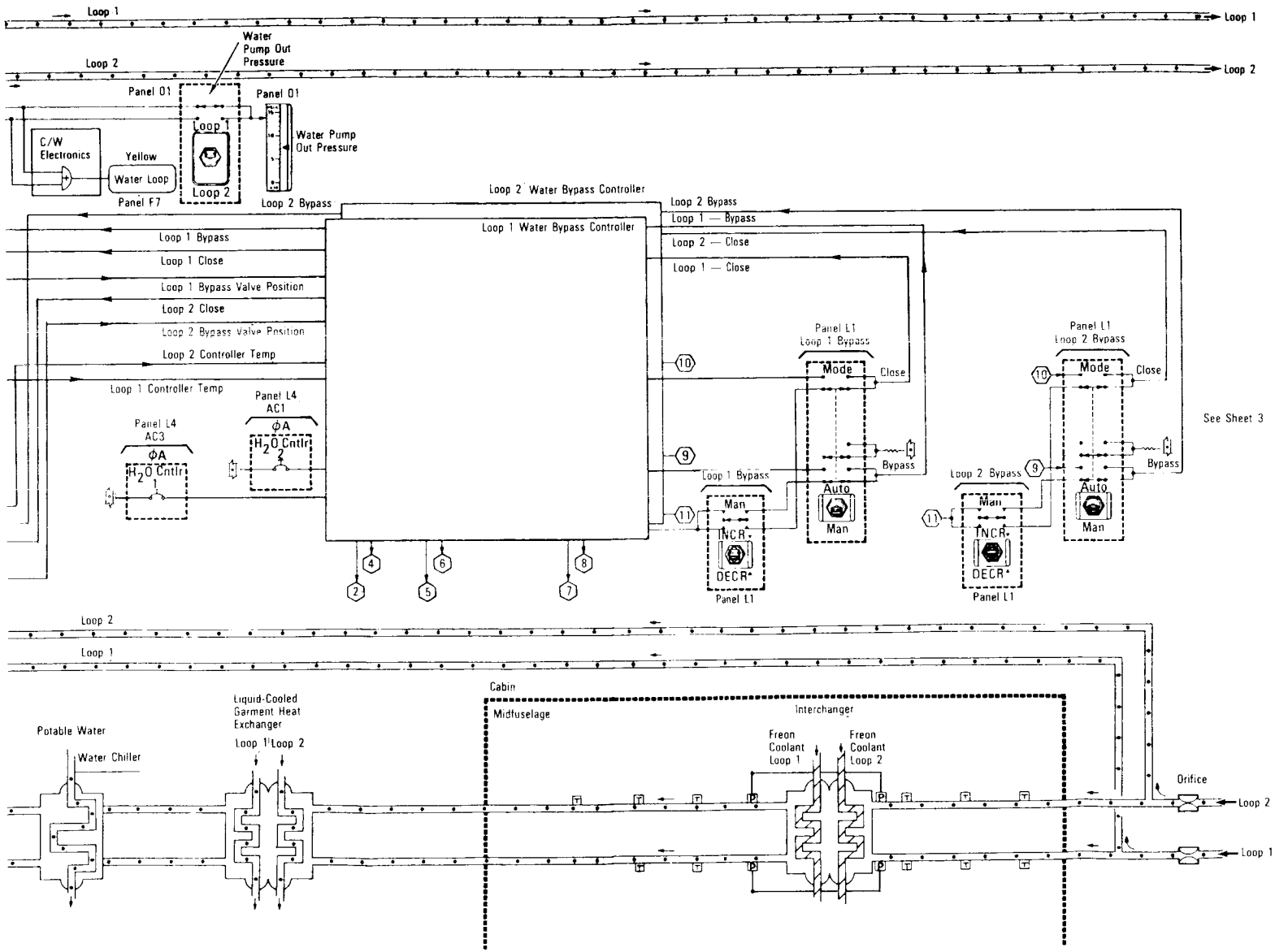


*Water Coolant Loops (Sheet 2 of 3)*

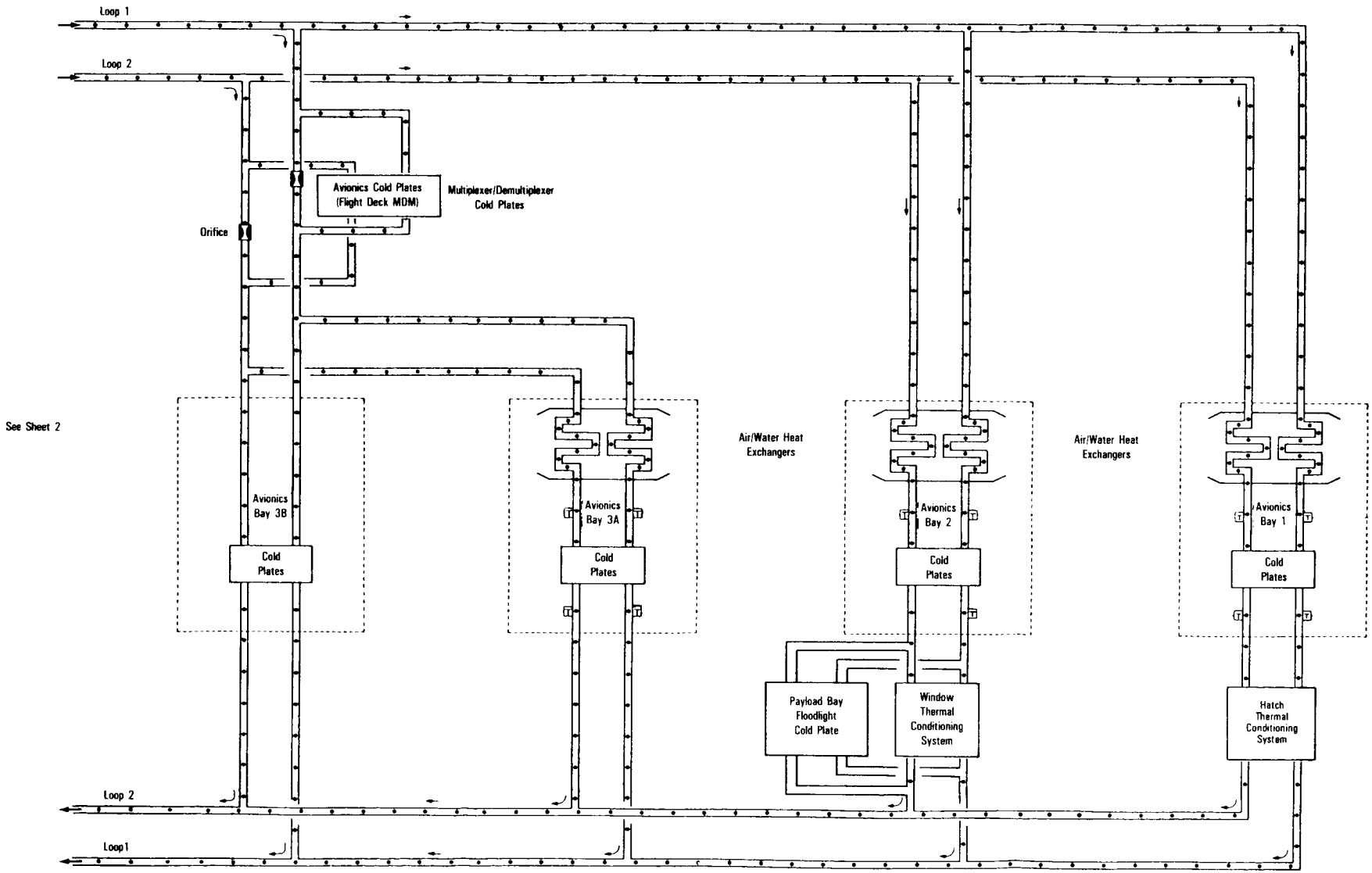


*Water Coolant Loops (Sheet 3 of 3)*

crew cabin windows; and the third through the crew cabin multiplexer/demultiplexer flight deck cold plates, the avionics bay 3A heat exchanger and cold plates and avionics bay 3B cold plates. The three parallel paths in each coolant loop then rejoin.

The water coolant loops 1 and 2 flow toward the Freon-21 coolant loops 1 and 2 and water heat exchanger and split into two parallel paths. One parallel path in each water coolant loop flows through the Freon-21 coolant loops 1 and 2 and water interchanger, liquid-cooled garment heat exchanger, potable water chiller, cabin heat exchanger and IMU heat exchanger to the respective water coolant loop 1 and 2 pump. The other parallel path in each water coolant loop flows to a water coolant loop bypass in that loop.

The bypass controller in each water coolant loop is enabled by its corresponding *$H_2O$ loop 1* and *2 bypass mode auto/man* switch on panel L1. When a coolant loop's *$H_2O$ loop bypass mode auto/man* switch is positioned to *auto*, the water bypass controller and bypass valve automatically control the amount of water in the coolant loop that bypasses the water/Freon-21 coolant loop interchanger. When the bypass controller's outlet temperature is 65.5 F, the loop's bypass valve is fully closed, and the excess heat in the loop is transferred to the corresponding Freon-21 coolant loop at the coolant water interchanger. Cooled water flows through the LCG heat exchanger, cabin heat exchanger and IMU heat exchanger, which joins with the bypass flow parallel path. When the bypass controller senses that the coolant loop water pump's outlet temperature is 60.5 F, the controller bypasses a maximum amount of water around the Freon-21 coolant loop/water interchanger and allows the water at that coolant loop pump to be warmed from the parallel path of water flowing from the interchanger and corresponding LCG heat exchanger, cabin heat exchanger and IMU heat exchanger. When the *$H_2O$ loop bypass mode auto/man* switch for the coolant loop is positioned to *man*, the flight crew sets the corresponding *$H_2O$ loop man incr/decr* switch on panel L1 to manually control the bypass valve in that water coolant loop.

Because of changes in heat loads from the initial design, the water bypass controllers are not able to control temperatures automatically as originally intended. As a result, the water bypass control valve is manually controlled by the flight crew by positioning the *$H_2O$ loop bypass mode auto/man* switch in *man* and the *$H_2O$ loop bypass man incr/decr* switch for that water coolant loop on panel L1. The bypass valve is adjusted before launch to provide a flow of 900 to 1,000 pounds per hour through the Freon-21 coolant loop/water interchanger, and the control system remains in the manual mode for the entire flight.

The accumulator in each water coolant loop provides a positive pressure on the corresponding water pump inlet and accommodates thermal expansion and dampening pressure surges in that water coolant loop when the pump is turned on or off. Each accumulator is pressurized with gaseous nitrogen at 19 to 35 psi.

The pressure at the outlet of the water pump in each water coolant loop is monitored and transmitted to the *$H_2O$ pump out press loop 1* and *loop 2* switches on panel O1. When the switch is positioned to *loop 1* or *loop 2*, the corresponding water coolant loop's pressure is monitored on the *$H_2O$ pump out press* meter on panel O1 in psia.



The yellow *$H_2O$ loop* C/W light on panel F7 will be illuminated if the outlet pressure of the water coolant loop 1 pump is below 45 psi or above 79.5 psi or if the outlet pressure of the loop 2 pump is below 45 psi or above 81 psi. The pump inlet and outlet pressure of each coolant loop is monitored and transmitted to the systems management GPC for CRT readout.

In summary, with the crew cabin's structural thermal capacity, its temperature will not exceed 95 F during entry or until flight crew egress.

**ACTIVE THERMAL CONTROL SYSTEM.** The ATCS removes heat from the ARS at the water coolant loop/Freon-21 coolant loop interchanger and from each of the fuel cell power plant heat exchangers and warms the PRSD cryogenic oxygen in the ECLSS oxygen supply line and the hydraulic fluid systems at the hydraulic heat exchanger. The ATCS consists of two complete and identical Freon-21 coolant loop systems; cold plate networks for cooling avionics units; liquid/liquid heat exchangers; and three

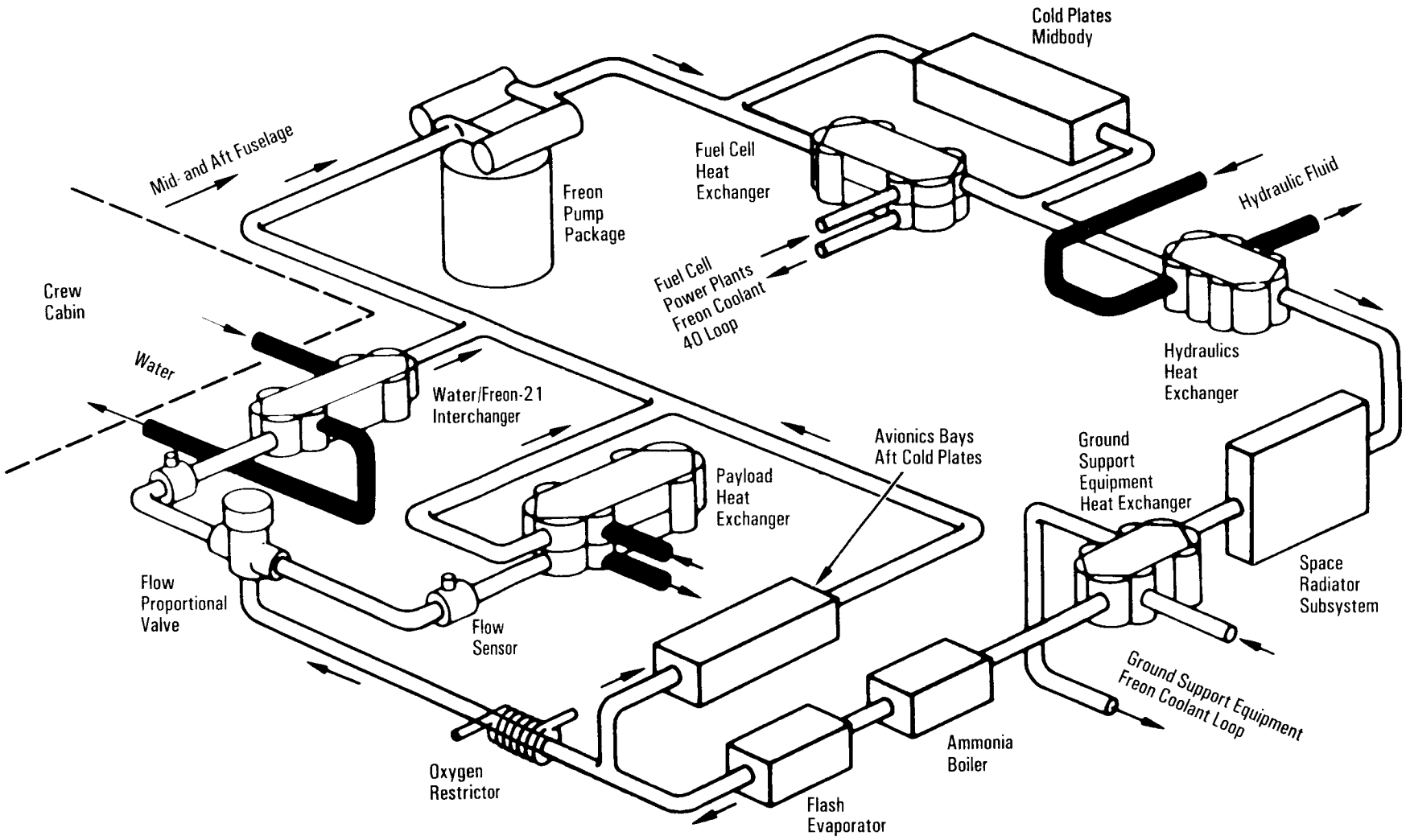


*Freon-21 Coolant Loop*

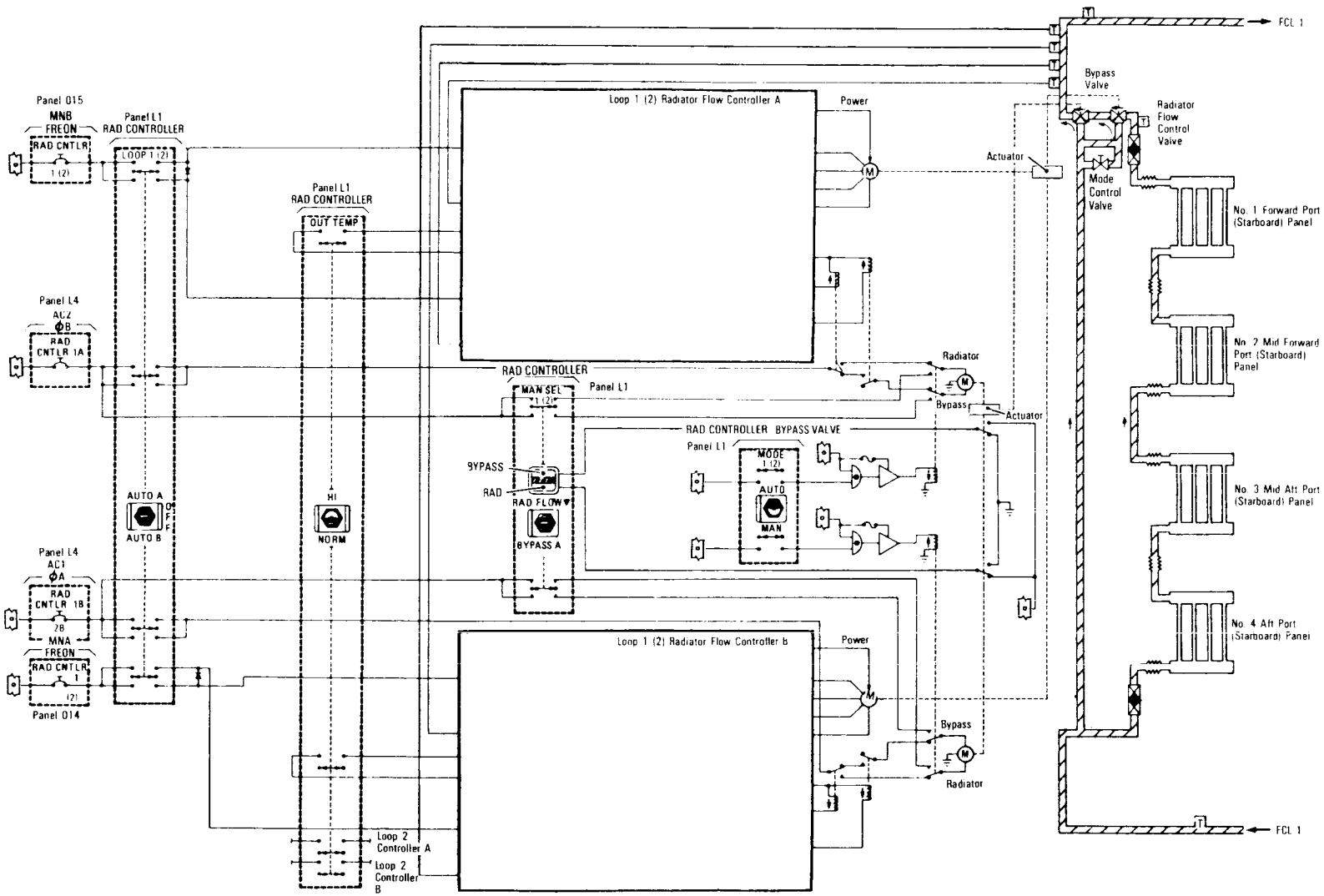


*Active Thermal Control Freon-21 Coolant Loop (Sheet 1 of 3)*

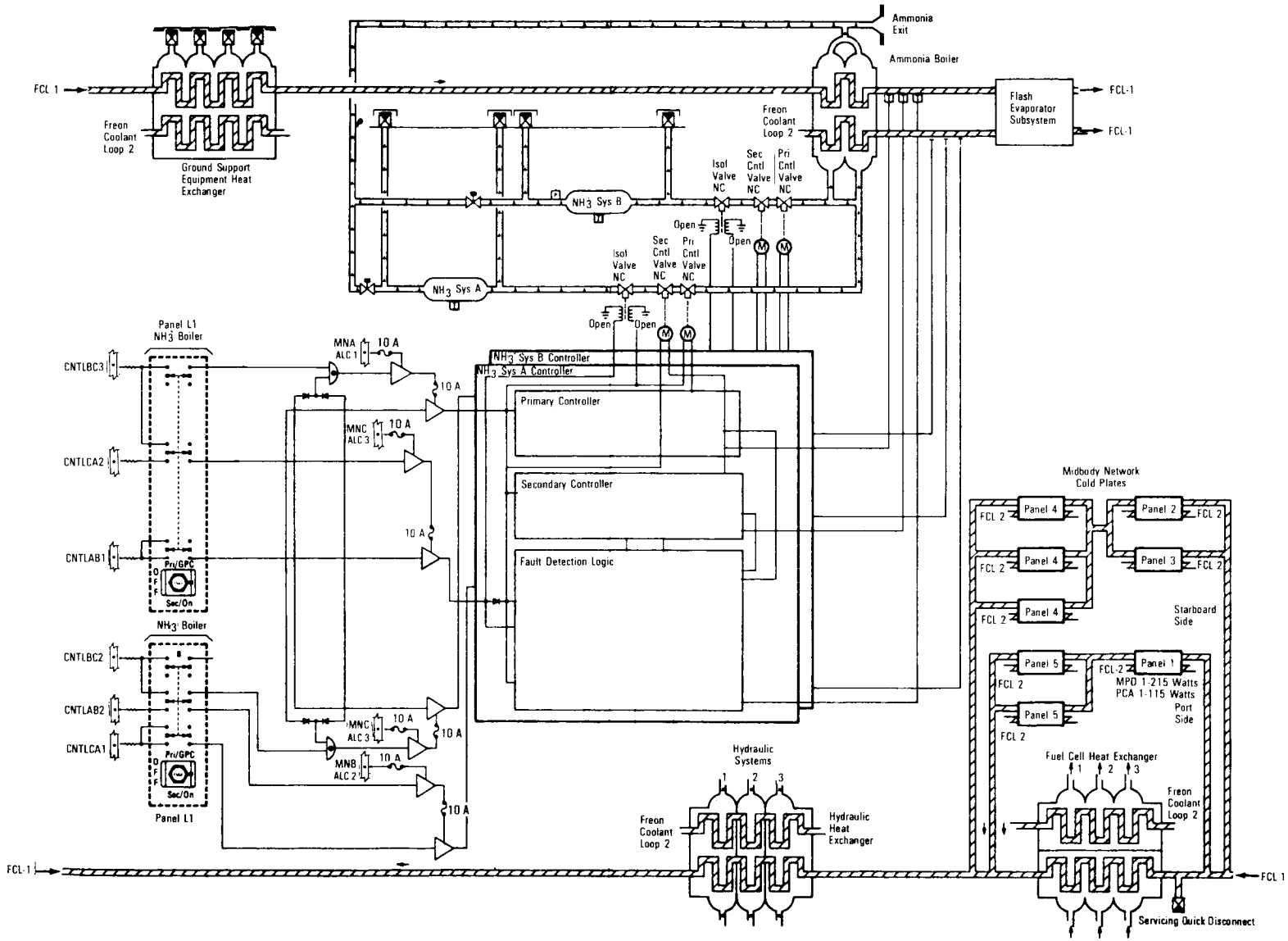


*Active Thermal Control Freon-21 Coolant Loop (Sheet 2 of 3)*

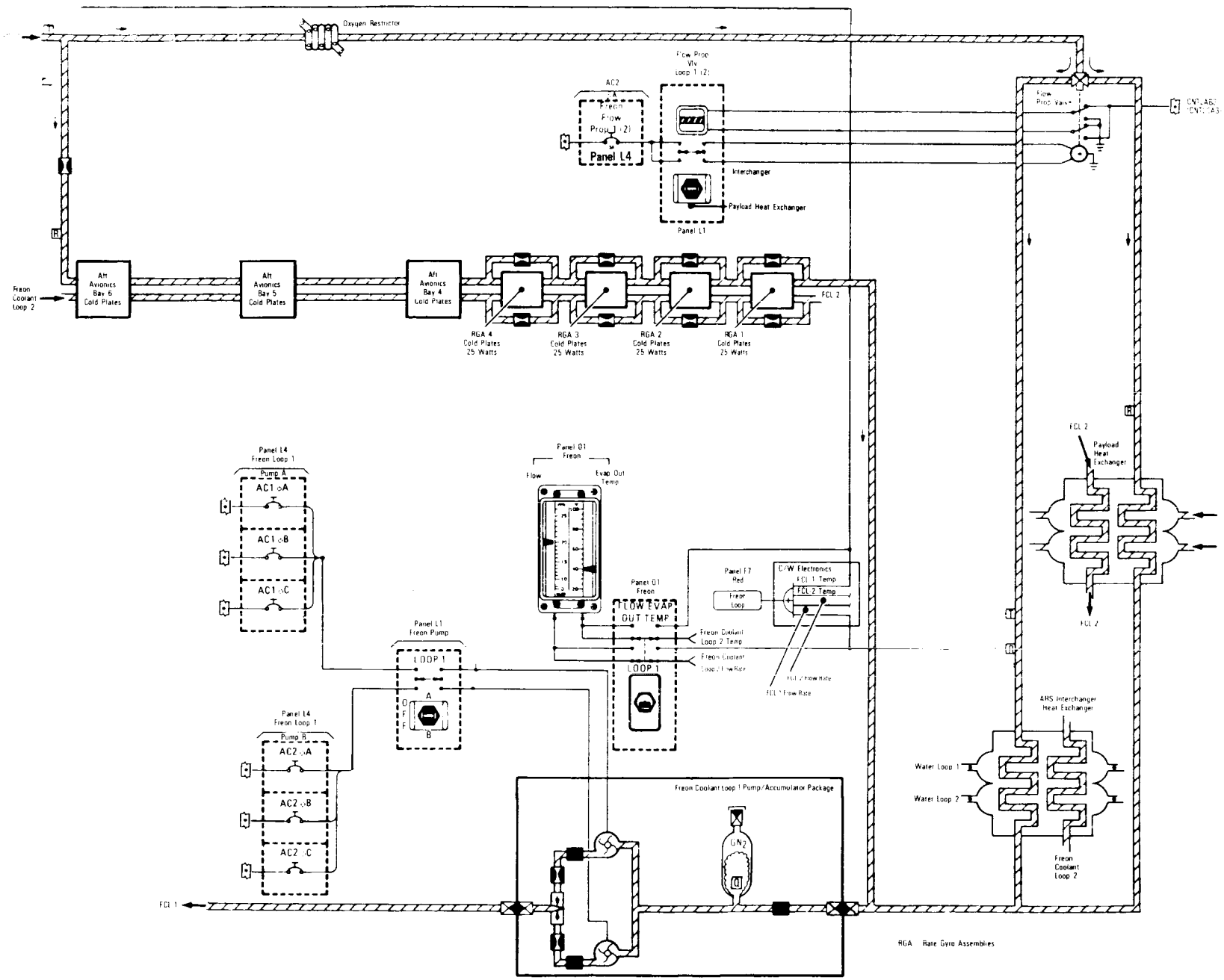


*Active Thermal Control Freon-21 Coolant Loop (Sheet 3 of 3)*

heat sink systems—radiators, flash evaporator and ammonia boiler.

During ground operations (checkout, prelaunch, and post-landing), orbiter heat rejection is provided by the GSE heat exchanger in the Freon-21 coolant loops through ground system cooling.

From lift-off to an altitude of less than 140,000 feet—approximately 125 seconds—thermal lag is used. Approximately 125 seconds after lift-off, the flash evaporator subsystem is activated and provides orbiter heat rejection of the Freon-21 coolant loops via water boiling. Flash evaporator operation continues until the payload bay doors are opened in orbit.

When the payload bay doors are opened, radiator panels attached to the forward payload bay doors may or may not be deployed depending on the flight. If deployed away from the payload bay doors, the forward two panels on each side of the orbiter will radiate from both sides. If not deployed, they will radiate only from one side. The aft radiator panels on the forward portion of the aft payload bay doors are affixed to the doors and radiate only from the upper surface. On-orbit heat rejection is provided by the radiator panels; however, during orbital operations when a combination of heat load and spacecraft attitude exceeds the capacity of the radiator panels, the flash evaporator subsystem is automatically activated to meet total system heat rejection requirements.

At the conclusion of orbital operations, the flash evaporator subsystem is activated, and the payload bay doors are closed with the radiator panels retracted, if they were deployed, in preparation for entry.

The flash evaporator subsystem operates during entry to an altitude of 100,000 feet, at which point boiling water can no longer provide adequate Freon-21 coolant temperatures. Through the remainder of the entry phase and after landing until ground cooling is connected, heat rejection of the Freon-21 coolant loops is provided by the evaporation of ammonia through the use of the ammonia boilers. When ground cooling is initiated after landing, the ammonia boilers are shut down, and heat rejection of the Freon coolant loops is provided by the GSE heat exchanger.

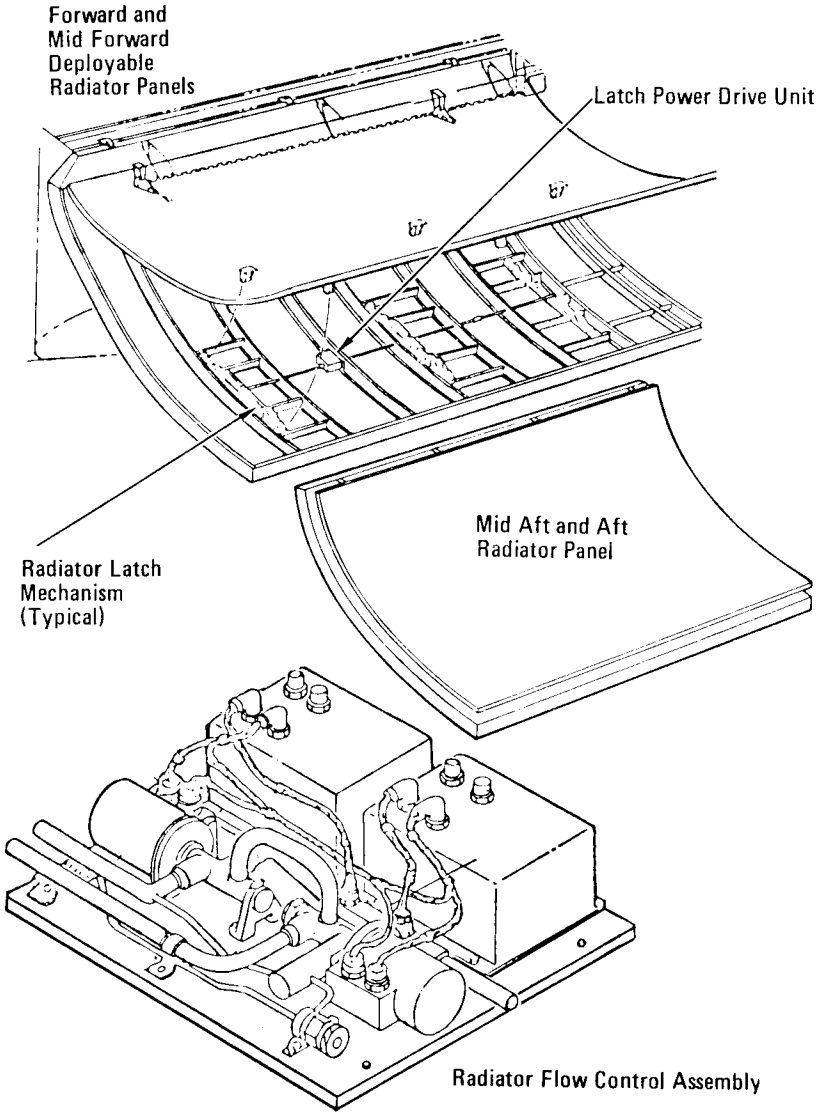


*Radiators and Radiator Flow Control Assembly*

Each Freon-21 coolant loop has a pump package consisting of two pumps and an accumulator. One Freon-21 coolant pump in each coolant loop is active at all times. The metal bellows-type accumulator in each coolant loop is pressurized with gaseous nitrogen to provide a positive suction pressure on the pumps and permit thermal expansion in that coolant loop. A ball check valve downstream of the pumps in each coolant loop prevents a reverse flow through the non-operating pump in the loops. The Freon pumps in each Freon coolant loop are controlled individually by the *Freon pump loop 1* and *loop 2* switches on panel L1. When either switch is positioned to *A* or ***B***, the corresponding Freon pump in that loop operates. The *off* position of each switch prohibits either Freon pump in that coolant loop from operating.

When a Freon coolant pump is operating, Freon is routed in parallel through the three fuel cell heat exchangers and the midbody cold plate network to cool electronic avionics units. The Freon coolant reunites in a series flow path before entering the hydraulics heat exchanger. It then extracts energy from the Freon-21 coolant loop to heat hydraulic system fluid during on-orbit hydraulic circulation thermal-conditioning operations. During the prelaunch and boost phase of the mission and during the atmospheric flight portion of entry through landing and rollout, the hydraulic system heat exchanger transfers excess heat from the hydraulic systems to the Freon-21 loops. The Freon flows from the hydraulic fluid heat exchanger to the radiators, which are bypassed through a bypass valve during ascent and entry because the payload bay doors are closed. The radiators are located on the underside of the payload bay doors. When the payload bay doors are opened in orbit, the radiators are used for heat rejection to space. The Freon coolant flows through the GSE heat exchanger, ammonia boilers and flash evaporator. It is then divided into two parallel paths. One path flows through the ECLSS oxygen restrictor to warm the PRSD oxygen for the ECLSS to 40 F. It then flows through a flow-proportioning valve into parallel paths to the payload heat exchanger and ARS interchanger and returns to a series flow. The other path flows through aft avionics bays 4, 5 and 6 to cool some electronic avionics equipment in each avionics bay. It also flows through cold plates to cool rate gyro assemblies 4, 3, 2 and 1 and then returns to a series flow. The parallel paths return in series to the Freon coolant pump in that Freon coolant loop.

The Freon-21 coolant pumps, ARS interchanger, three fuel cell power plant heat exchangers, payload heat exchanger, flow-proportioning valve modules and midbody cold plates are located in the lower forward portion of the midfuselage. The radiators are attached to the underside of the payload bay doors. The cold plates for the hydraulic system heat exchangers; ground support equipment heat exchanger; ammonia boilers; flash evaporator; and aft avionics bays 4, 5 and 6 are located in the aft fuselage of the orbiter. The radiator flow control assemblies and RGAs are located in the lower aft portion of the midfuselage.

The radiator system consists of three radiator panels for a baseline mission configuration under the right and left payload bay doors. During ascent and entry the radiator panels are secured to the payload bay doors. The two radiator panels attached to the forward right and left payload bay doors are deployable from the forward payload bay doors when the doors are opened on orbit. The heat rejection requirements of the orbiter for a specific mission will determine if the forward radiators are to be deployed. The third radiator panel is fixed to the forward underside of the aft right and left payload bay doors and is not deployable. The baseline radiator panels are designed for missions requiring heat rejection of 21,500 Btu per hour. A fourth radiator panel, which is deployable, may be required for a specific mission and would be fixed to the aft underside of the aft right and left payload bay doors. With the addition of the fixed fourth radiator panel, the heat rejection capability is 29,000 Btu per hour. When the payload bay doors are closed, the radiators are bypassed.

The deployable radiators are secured to the right and left payload bay doors by six motor-operated latches. When the payload bay doors are opened on orbit and the mission dictates that the deployable radiators be deployed, the six motor-driven latches unlatch the radiators from the payload bay doors, and the motor-driven torque-tube-lever arrangement deploys the forward radia-

tors at 35.5 degrees from the payload bay doors. The forward radiators would then provide heat rejection from both sides of the radiator panels.

The aft fixed radiator panels are attached to the payload bay doors by a ball joint arrangement at a maximum of 12 locations to compensate for movement of the payload bay door and radiator panel caused by the thermal expansion and contraction of each member.

The radiator panels are constructed of an aluminum honeycomb face sheet 126 inches wide and 320 inches long. The forward deployable radiator panels are two-sided and have a core thickness of 0.9 of an inch. They have longitudinal tubes bonded to the internal side of both face sheets. Each of the forward deployable panels contains 68 tubes spaced 1.9 inches apart. Each tube has an inside diameter of 0.131 of an inch. Each side of the forward deployable radiator panels has a coating bonded by an adhesive to the face sheet consisting of silver-backed Teflon tape for proper emissivity properties. The aft fixed panels are one-sided, and their cores are 0.5 of an inch thick. They have tubes only on the exposed side of the panel and a coating bonded by an adhesive to the exposed face sheet. The aft panels contain 26 longitudinal tubes spaced 4.96 inches apart. Each tube has an inside diameter of 0.18 of an inch. The additional thickness of the forward radiator panels is required to meet deflection requirements when the orbiter is exposed to ascent acceleration.

The radiator panels on the left and right sides are configured to flow in series, while flow within each panel is parallel through the bank of tubes connected by an inlet and outlet connector manifold. The radiator panels on the left side are connected in series with Freon-21 coolant loop 1. The radiator panels on the right side are connected in series with Freon-21 coolant loop 2.

If the two deployable and two fixed radiators are installed on the payload bay doors, the radiator panels will provide an effective heat dissipation area of 1,195 square feet on orbit. Each radiator panel is 10 feet wide and 15 feet long. The Freon tubing in the radiator panels is more than 1 mile long.

A radiator flow control valve assembly in each Freon coolant loop controls the temperature of that loop through the use of the variable flow control, which mixes hot bypassed Freon coolant flow with the cold Freon coolant from the radiators. The radiator flow control valve assemblies can be controlled automatically or manually by the flight crew.

In the automatic operation the *rad controller loop 1* and *loop 2 auto A*, *off*, *auto B* switch on panel L1 is positioned to *auto A* or *auto B* to apply electrical power to the corresponding radiator flow controller assembly. The *rad controller loop 1* and *loop 2 mode auto*, *man* switch on panel L1 is positioned to *auto*, and the *rad controller out temp* switch on panel L1 is positioned to *norm* or *hi*. With the *rad controller out temp* switch on panel L1 in *norm*, the radiator outlet temperature in Freon coolant loops 1 and 2 is automatically controlled at 38 F; in *hi*, the temperature is automatically controlled at 57 F. It should be noted that the flash evaporator is activated automatically when the radiator outlet temperature exceeds 41 F to supplement the radiators' ability to reject excess heat.



The radiator talkback indicator next to the *rad controller loop 1* and *loop 2 auto A*, *off* and *auto B* switches on panel L1 indicates the position of the bypass valve in that Freon coolant loop. The indicator indicates *byp* when the bypass valve in that Freon coolant loop is in the bypass position, barberpole when the motor-operated bypass valve is in transit and *rad* when the bypass valve is in the radiator flow position.

When the *rad controller loop 1* and *loop 2 mode auto*, *man* switch on panel L1 is positioned to *man* for the Freon coolant loop selected, the automatic control of the radiator flow control valve assembly in that loop is inhibited; and the flight crew controls the flow control valve assembly manually using the *rad controller loop 1*, *loop 2*, *rad flow* and *bypass* switches on panel L1. When the switch is positioned to *bypass*, the loop's motor-operated bypass valve permits that Freon coolant loop to bypass the radiators. When the switch is positioned to *rad flow*, the valve permits coolant to flow through the radiators. The *rad controller loop 1* and *2* talkback indicator for the Freon coolant loop indicates *byp*

when the bypass valve in that loop is in bypass and barberpole when it is in transit.

The flash evaporators reject heat loads from Freon-21 coolant loops 1 and 2 during ascent above 140,000 feet and supplement the radiators on orbit if required. They also reject heat loads during deorbit and entry to an altitude of approximately 100,000 feet.

The flash evaporators are located in the aft fuselage of the orbiter. There are two evaporators in one envelope. One is the high-load evaporator; the other is the topping evaporator. There are two major differences between the evaporators. The high-load evaporator has a higher cooling capacity than the topping evaporator, and its overboard vent is only on the left side. The topping evaporator vents steam equally to the left and right sides of the orbiter, which is non-propulsive. The evaporators are cylindrical and have a finned inner core. The hot Freon-21 from the coolant loops flows around the finned core, and water is sprayed onto the core by water nozzles from either evaporator. The water vaporizes, cooling the Freon-21 coolant loops. In the low-pressure atmosphere above 100,000 feet, water vaporizes quickly. Changing water liquid to vapor removes approximately 1,000 Btu per hour per 1 pound of water. The water for the evaporators is obtained from the potable water storage tanks through water supply systems A and B.

The flash evaporators have three controllers. The primary A controller has two separate, functionally redundant shutdown logic paths (undertemperature rate of cooling). Primary B has a single shutdown logic path; secondary has no shutdown. The *flash* evaporator controllers are enabled by the flash evaporator controller switches on panel L1. The *flash evap controller pri A* switch controls controller A, the *pri B* switch controls controller B, and the *sec* switch controls the secondary controller. When the *pri A*, *pri B* or *sec* switch is positioned to *GPC*, the corresponding controller is turned on automatically during ascent by the backup flight system computer as the orbiter ascends above 140,000 feet. During entry the BFS turns the corresponding controller off as the orbiter descends to 100,000 feet. The *on* position of the switch provides electrical power directly to the corresponding flash evaporator controller. The *off* position of the switch removes all electrical power and inhibits flash evaporator operation.

The primary A controller controls water flow to the flash evaporator from water supply system A through water feed line A. The primary B controller controls water flow to the flash evaporator from water supply system B through water feed line B. Note that when a primary controller is enabled, both evaporators can be used simultaneously.

The secondary controller controls water flow to the flash

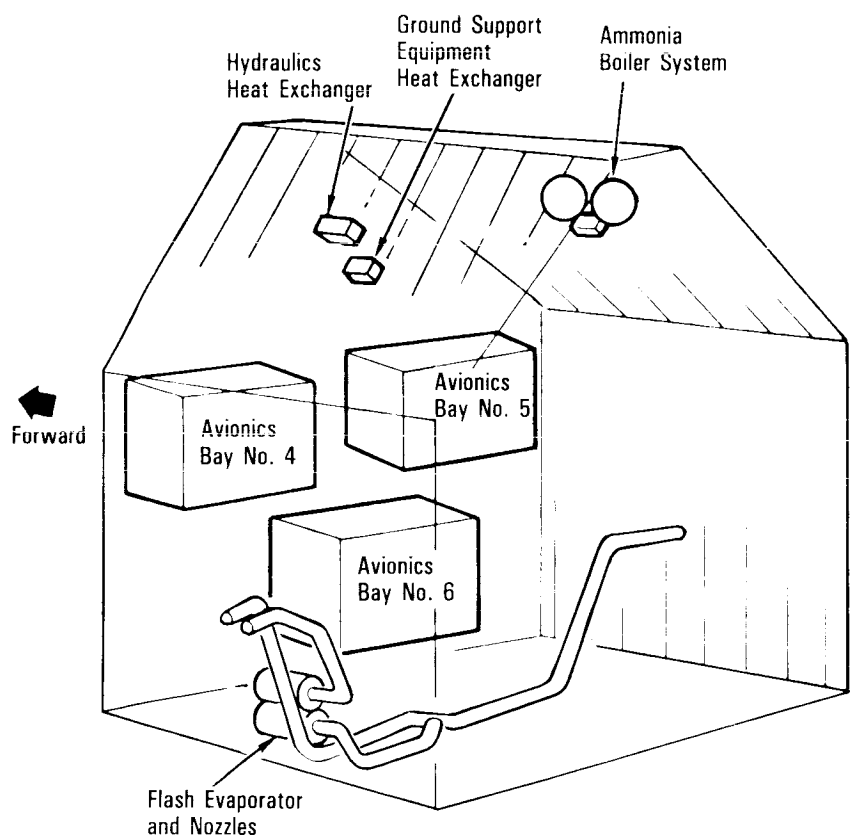


*Aft Fuselage ECLSS Components*

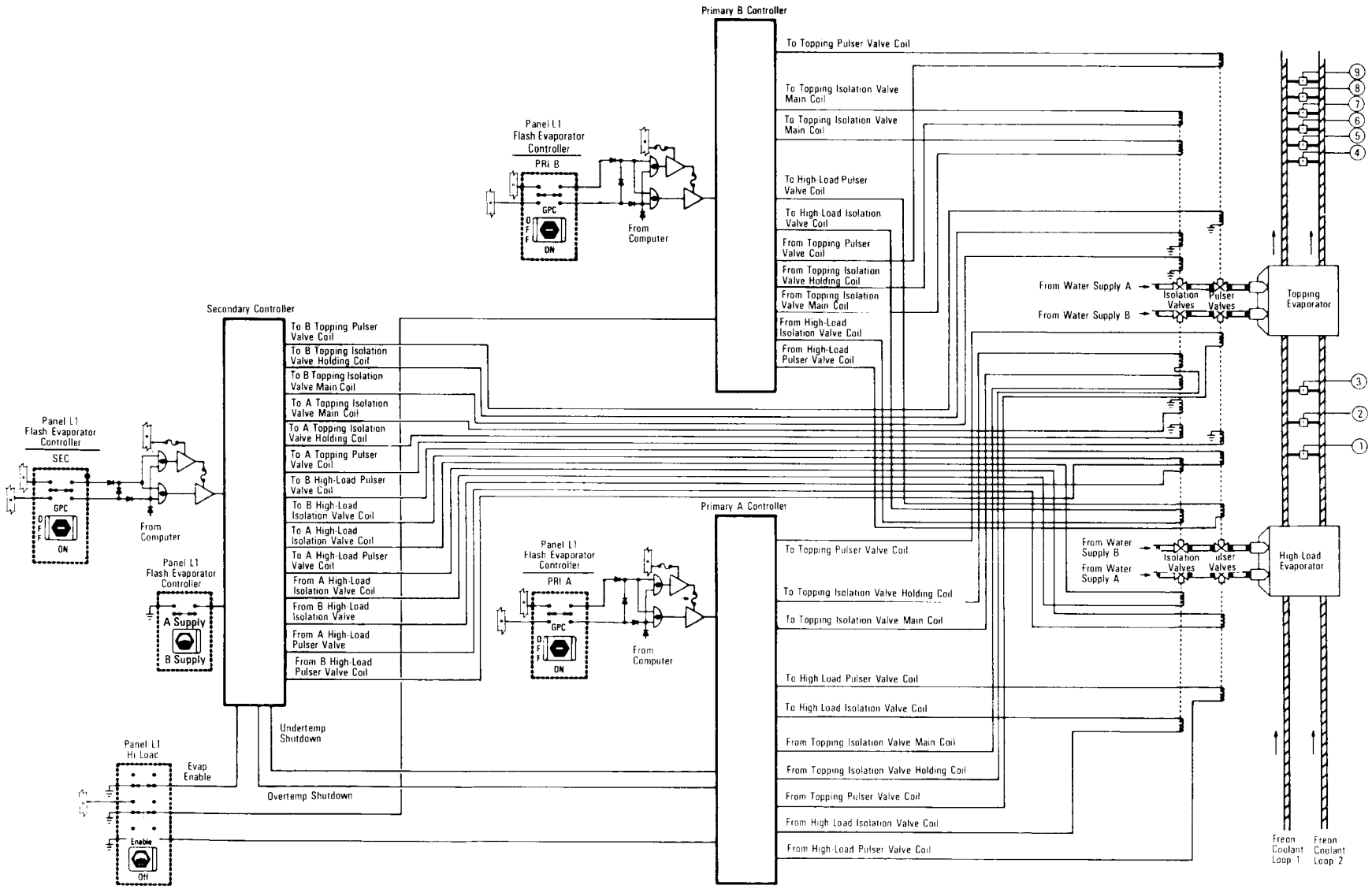


*Flash Evaporator*

evaporator from water supply system A through feed line A if the flash evaporator controller *sec A sply* switch on panel L1 is in the *sply A* position and if the *hi load evap* switch on panel L1 is in the *enable* position. If the *sec B sply* switch is in the *sply B* position and the *hi load evap* switch is in the *enable* position, the secondary controller controls water flow to the flash evaporator from water supply system B through feed line B. When the secondary controller is used and the *hi load evap* switch is *off*, both the A and B water supply systems will feed the topping evaporator in an alternate pulsing fashion. When the secondary controller is used and the *hi load evap* switch is in the *enable* position, the topping evaporator is disabled.

The primary A and B controllers modulate the water spray in the evaporator to control the Freon-21 coolant loops' evaporator outlet temperature at 39 F. The secondary controller modulates the water spray in the evaporator to control the Freon-21 coolant loops' evaporator outlet temperature at 62 F. The temperature sensors are located at the outlets of both evaporators.

The applicable flash evaporator controller pulses water into the evaporators, cooling the Freon-21. The steam generated in the topping evaporator is ejected through two sonic nozzles at opposing sides of the orbiter aft fuselage to reduce payload water vapor pollutants on orbit and to minimize venting thrust effects on the orbiter's guidance, navigation and control system. The high-load evaporator is used in conjunction with the topping evaporator during ascent and entry when higher Freon-21 coolant loop temperatures impose a greater heat load that requires a higher heat rejection. The *hi load evap* switch on panel L1 must be in the *enable* position for high-load evaporator operation. After leaving the high-load evaporator, Freon-21 flows through the topping evaporator for additional cooling. The steam generated by the high-load evaporator is ejected through a single sonic nozzle on the left side of the orbiter aft fuselage. The high-load evaporator would not normally be used on orbit because it has a propulsive vent and might pollute a payload.

Each primary controller has an automatic shutdown capability to protect the evaporator from over- or undertemperature conditions. The evaporator's outlet temperature is monitored to determine if a thermal shutdown of the evaporator is warranted. If the evaporator's outlet temperature goes below 37 F for 20 seconds or more, an undertemperature shutdown of the evaporator occurs. If the evaporator outlet temperature is greater than 41 F for 40 seconds, an overtemperature shutdown of the evaporator occurs. If the evaporator is shut down because it is over- or undertemperature, electrical power to the affected controller must be recycled to re-enable operations. The secondary controller does not have any automatic shutdown capability.

The evaporator outlet temperature of Freon-21 coolant loops 1 and 2 is transmitted to panel O1. When the *Freon loop 1* or *2* switch on panel O1 is positioned to *loop 1* or *2*, the evaporator outlet temperature of Freon coolant loops 1 or 2 can be monitored on the *Freon evap out temp* meter on panel O1 in degrees Farenheit. If the outlet temperature drops below 32 F or rises above 60 F, the red *Freon loop* C/W light on panel F7 will be illuminated.



The flash evaporator topping evaporator can be used to dump excess potable water from the potable water storage tanks, if required, on orbit. The radiator flow control valve assembly has an alternate control temperature of 57 F that is used for this excess water dump into the topping evaporator.

Electrical heaters are employed on the topping and high-load flash evaporators' steam ducts to prevent freezing. The *flash evap hi load duct htr* rotary switch on panel L1 selects the electrical heaters. Switch positions *A* and *B* provide electrical power to the corresponding thermostatically controlled heaters on the high-load evaporator steam duct and steam duct exhaust. The *A/B* position provides electrical power to both thermostatically controlled heaters. The *C* position provides electrical power to the thermostatically controlled C heaters. The *off* position removes electrical power from all the heaters.

The *flash evap topping evaporator duct* rotary switch on panel L1 selects the thermostatically controlled electrical heaters on the topping evaporator. Positions *A* and *B* provide electrical

power to the corresponding heaters, while *A/B* provides electrical power to both A and B heaters. The *C* position provides power to the C heaters. The *off* position removes electrical power from all the heaters.

The topping evaporator's left and right nozzle heaters are controlled by the *topping evaporator heater l* and *r* switches on panel L1. When the left and right switches are positioned to *auto A* or *auto B*, electrical power is provided to the corresponding left and right nozzle heaters, and the corresponding nozzle temperature is maintained between 40 and 70 F. The *off* position removes electrical power from both heater systems.

The ammonia boilers use the low boiling point of ammonia to cool the Freon-21 coolant loops when the orbiter is below 100,000 feet during entry. There are two complete, individual ammonia storage and control systems that feed one common boiler containing ammonia passages and the individual Freon-21 coolant loops 1 and 2.

Each ammonia boiler storage tank contains a total of 49 pounds of ammonia, all of which may be used for cooling. Each ammonia tank is pressurized with gaseous helium at an operating pressure between 550 psia to 83 psia. Downstream of each ammonia storage tank to the common boiler are three control valves: a normally closed isolation valve, a normally open secondary control valve and a primary control valve. A relief valve in each ammonia boiler storage system provides overpressurization protection of that ammonia storage tank.

Ammonia boiler supply systems A and B are enabled by the corresponding *$NH_3$ controller A* and *B* switches on panel L1.

When the *$NH_3$ controller A* switch is positioned to *pri/GPC* before entry, it enables the computer to control electrical power to the primary and secondary controller within ammonia controller A. When the orbiter descends through 100,000 feet, the backup flight system computer commands the ammonia system A controller on. The primary controller in the ammonia system A controller energizes the ammonia A system isolation valve open, permitting ammonia to flow to two motor-operated controller valves and commands the primary motor-operated valve to regulate the flow to the ammonia boiler. Three temperature sensors are located on each Freon-21 coolant loop. One sensor on each Freon-21 coolant loop is associated with the primary controller and its motor-operated valve to regulate ammonia system A flow to maintain Freon-21 coolant loop 1 and 2 temperatures at the outlet of the ammonia boiler at 34 F. One sensor on each Freon-21 coolant loop is associated with the ammonia system A controller fault detection logic. If the Freon-21 coolant loop 1 and 2 temperatures drop below 31 F for greater than 10 seconds, the fault detection logic automatically inhibits the primary controller, which removes power from the ammonia system A isolation valve and the primary controller's motor-operated valve. The fault detection logic switches to the secondary controller in the ammonia system A controller, which energizes a redundant coil in the ammonia system supply A isolation valve. It opens the valve and commands the primary motor-operated valve to full open and allows the secondary controller to control the secondary motor-operated valve to regulate the ammonia A flow to the ammonia boiler. The third sensor on each Freon coolant loop is associated with the secondary controller and secondary motor-operated valve. It regulates ammonia supply system A flow to maintain the Freon-21 coolant loop 1 and 2 temperatures at the outlet of the ammonia boiler at 34 F. This automatic switchover is only from the primary to the secondary.

The ammonia boiler is a shell-and-tube system with a single pass of ammonia on the ammonia side and two passes of each Freon-21 coolant loop through the boiler. The ammonia flows in the ammonia tubes and the Freon-21 coolant loop flows over the tubes, cooling the Freon-21 coolant loops. When the ammonia is sprayed on the Freon-21 coolant lines in the boiler, it immediately vaporizes, and the heat and boiler exhaust is vented overboard in the upper aft fuselage of the orbiter next to the bottom right side of the vertical tail. The ammonia boiler operations continue through the remainder of entry, landing and rollout until a ground cooling cart is connected to the GSE heat exchanger.

When the *$NH_3$ controller A* switch is positioned to *sec/on*,

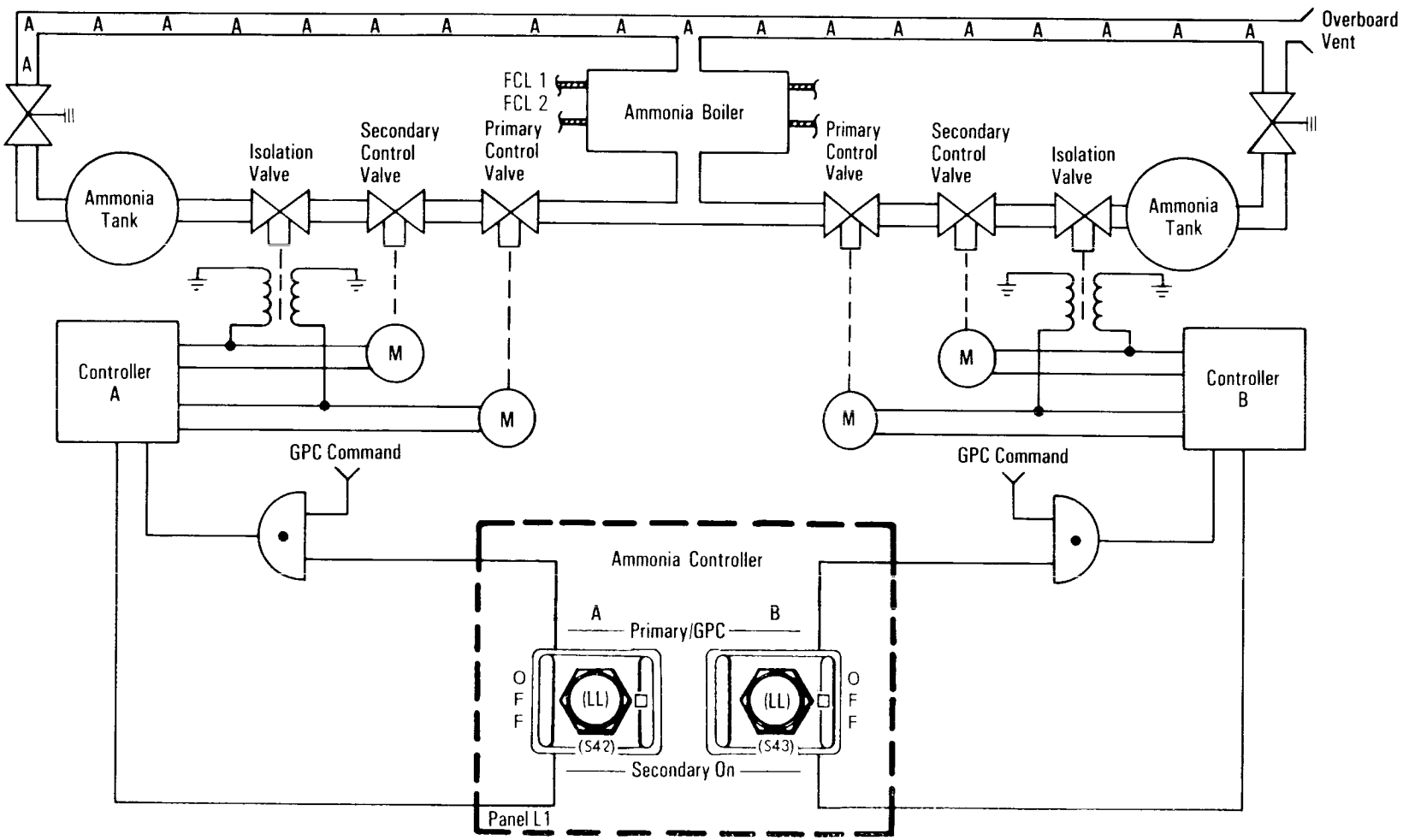


*Ammonia Boiler Control*

the ammonia system A controller is electrically powered and enabled directly (no computer command is required). The primary controller in the ammonia system A controller energizes the system's isolation valve open, permitting ammonia to flow to two motor-operated controller valves. The primary controller commands the secondary controller's motor-operated valve to the open position and the primary controller's motor-operated valve to regulate the ammonia flow to the ammonia boiler. The three temperature sensors on each Freon-21 coolant loop operate and control Freon-21 coolant loop 1 and 2 temperature in the same manner as in the primary/GPC mode. The fault detection logic also operates in the same manner as in the primary/GPC mode.

The *off* position removes all electrical power from the ammonia system A controller, rendering ammonia system A inoperative.

The *$NH_3$ controller B* switch controls the ammonia system B controller and ammonia supply system B in the same manner as the ammonia system A controller and ammonia supply system A are controlled by the *A* switch.

**SUPPLY AND WASTE WATER**. The supply and waste water systems provide water for the flash evaporator, crew consumption and hygiene. The supply water system stores water generated by the fuel cell power plants, and the waste water system stores waste from the crew cabin humidity separator and from the flight crew. There are four supply water tanks and one waste water tank located beneath the crew compartment middeck floor.

Each of the four potable water tanks has a usable capacity of 165 pounds, is 35.5 inches in length and 15.5 inches in diameter, and weighs 39.5 pounds dry.

The waste water tank's usable capacity is 165 pounds. It is 35.5 inches in length and 15.5 inches in diameter and weighs 39.5 pounds dry.

The three fuel cell power plants generate a maximum of 25 pounds of potable water per hour. The product water from all three fuel cell power plants flows to a single water relief control panel. The water can be directed to potable water tank A or to the fuel cell power plant water relief nozzle. Normally, the water is directed to water tank A. If a line ruptured in the vicinity of the single water relief panel, water could spray on all three water relief panel lines, causing them to freeze and preventing the fuel cell power plants from discharging water, which would cause flooding of the fuel cell power plants. The product water lines from all three fuel cell power plants were modified to incorporate a parallel (redundant) path of product water to potable water tank B in the event of a freeze-up of the single water relief panel. In the event of a water freeze-up, pressure would build up and relieve through the redundant paths to potable water tank B. Temperature sensors are installed on each of the redundant paths in addition to a pressure sensor that is transmitted to telemetry.

A water purity sensor (pH) was added at the common product water outlet of the water relief panel. It provides a redundant measurement of water purity—a single measurement of water purity in each fuel cell power plant was provided previously. If the single fuel cell power plant pH sensor failed, the flight crew was required to sample the potable water.

The hydrogen-enriched water from the fuel cell power plants that flows through the single water relief panel to potable tank A passes through two hydrogen separators, where 85 percent of the excess hydrogen is removed. The hydrogen separators consist of a matrix of silver palladium tubes, which have an affinity for hydrogen. The hydrogen is dumped overboard through a vacuum vent.

Water passing through the hydrogen separators can be stored in all four potable water tanks. The four potable water tanks are identified as tanks A, B, C and D. The water entering tank A passes through a microbial filter that adds approximately one-half parts per million iodine to the water. The water stored in tank A is normally used for flight crew consumption but could also be used for flash evaporator cooling. The water from the microbial check valve is also directed to a galley supply valve. If the water tank A inlet valve is closed or tank A is full, water is directed to tank B through a 1.5-psid check valve where it branches off to tank B. If

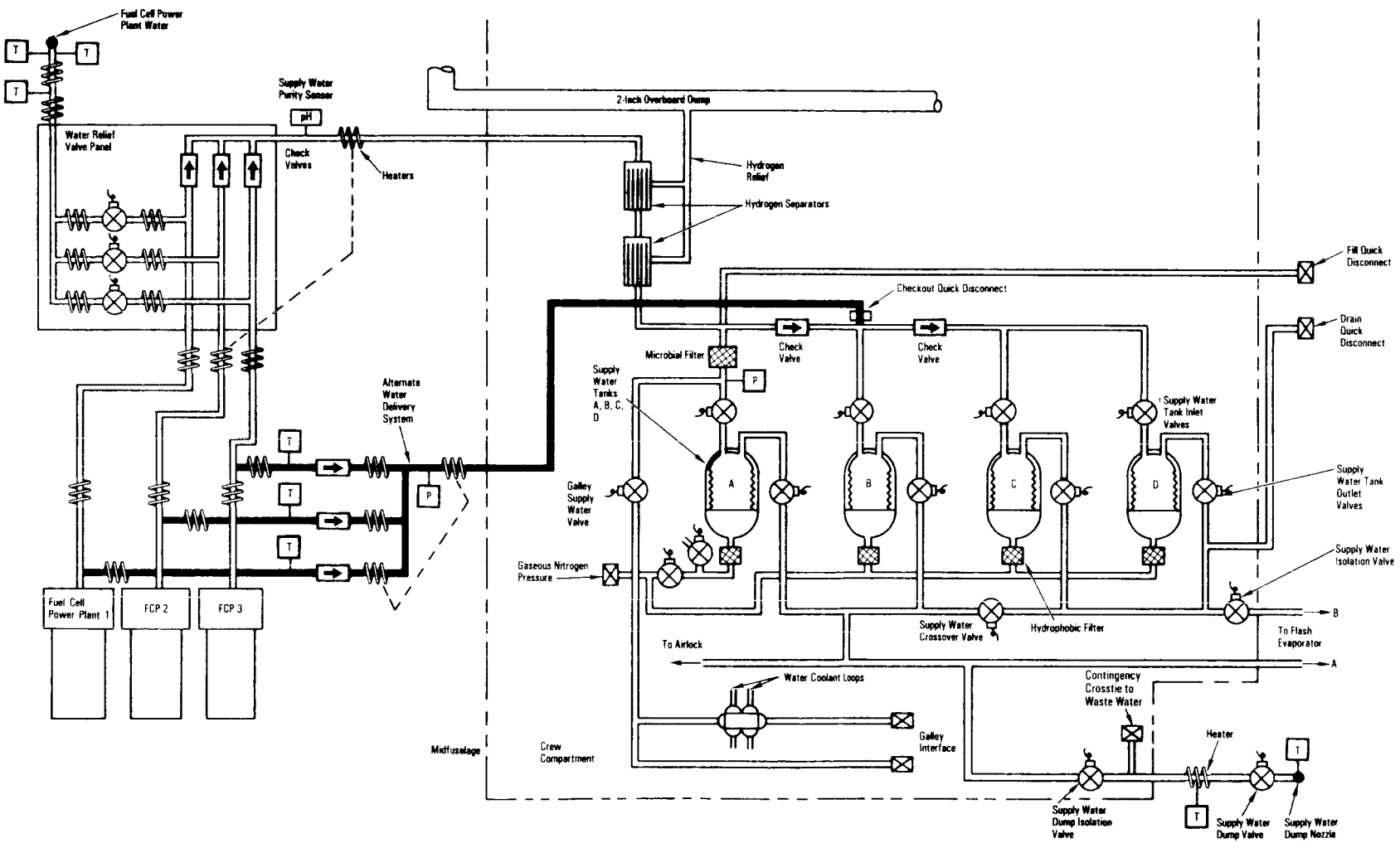


*Fuel Cell Power Plant Redundant Water Relief*

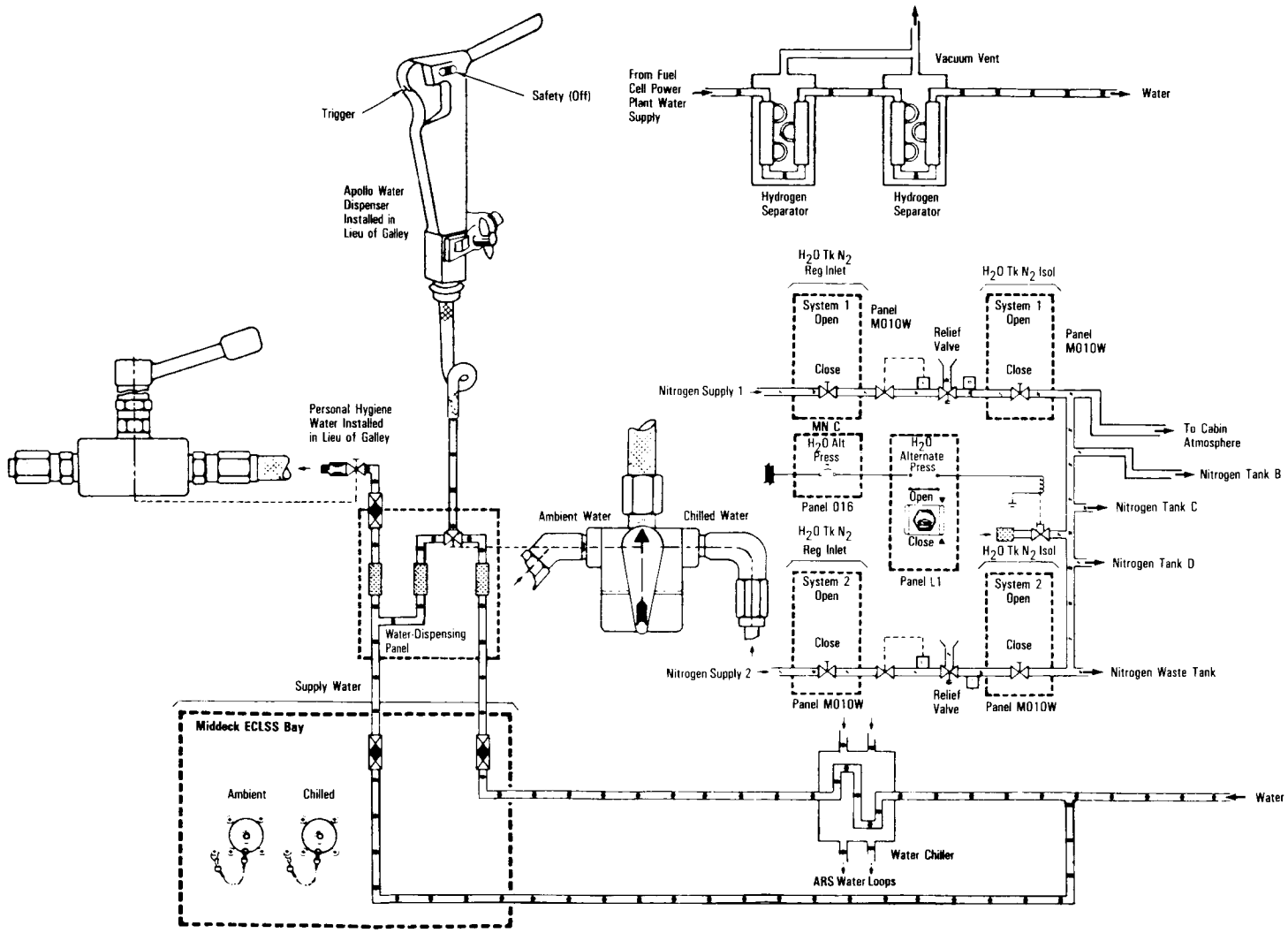


*Potable Water (Sheet 1 of 3)*

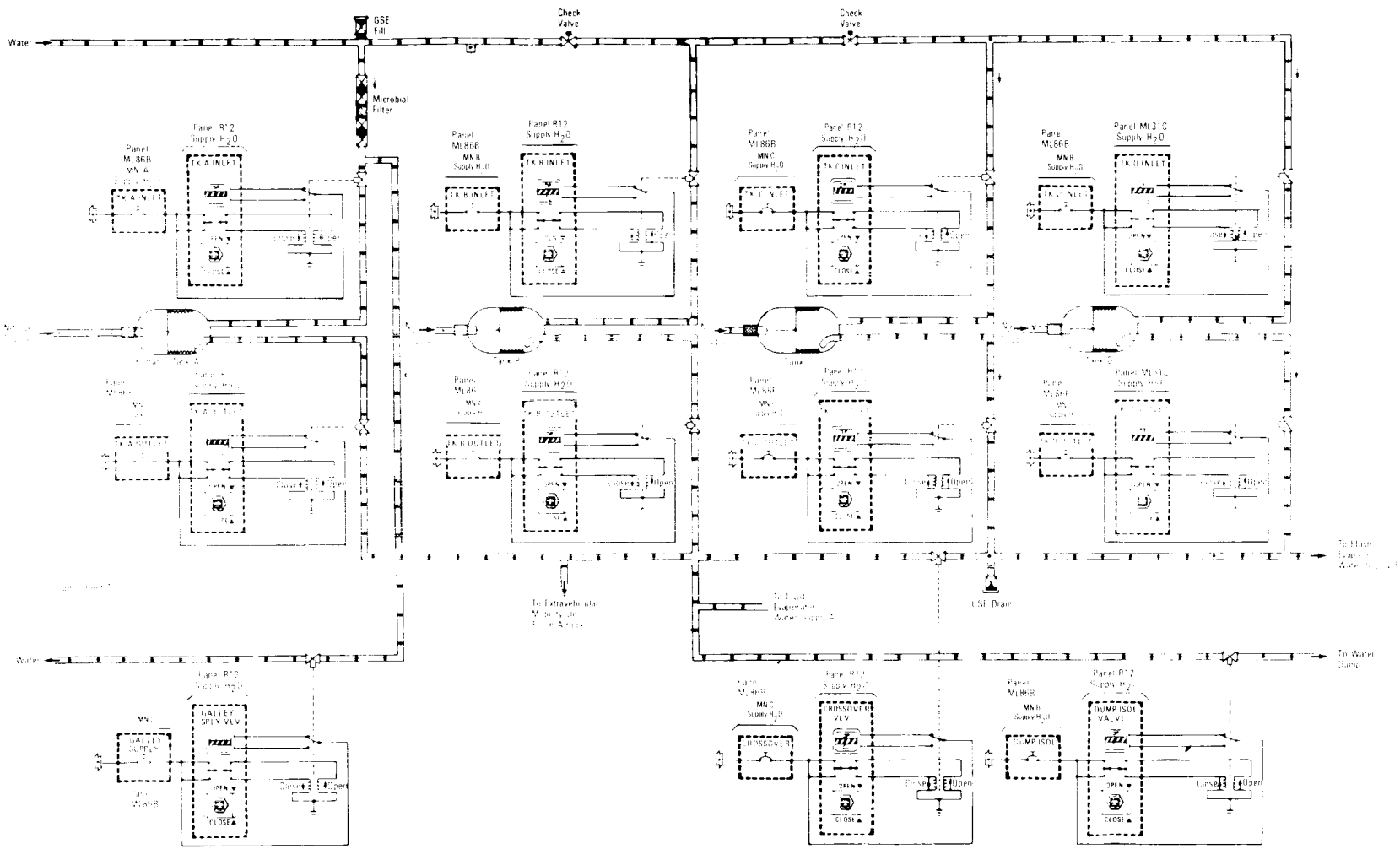


*Potable Water (Sheet 2 of 3)*

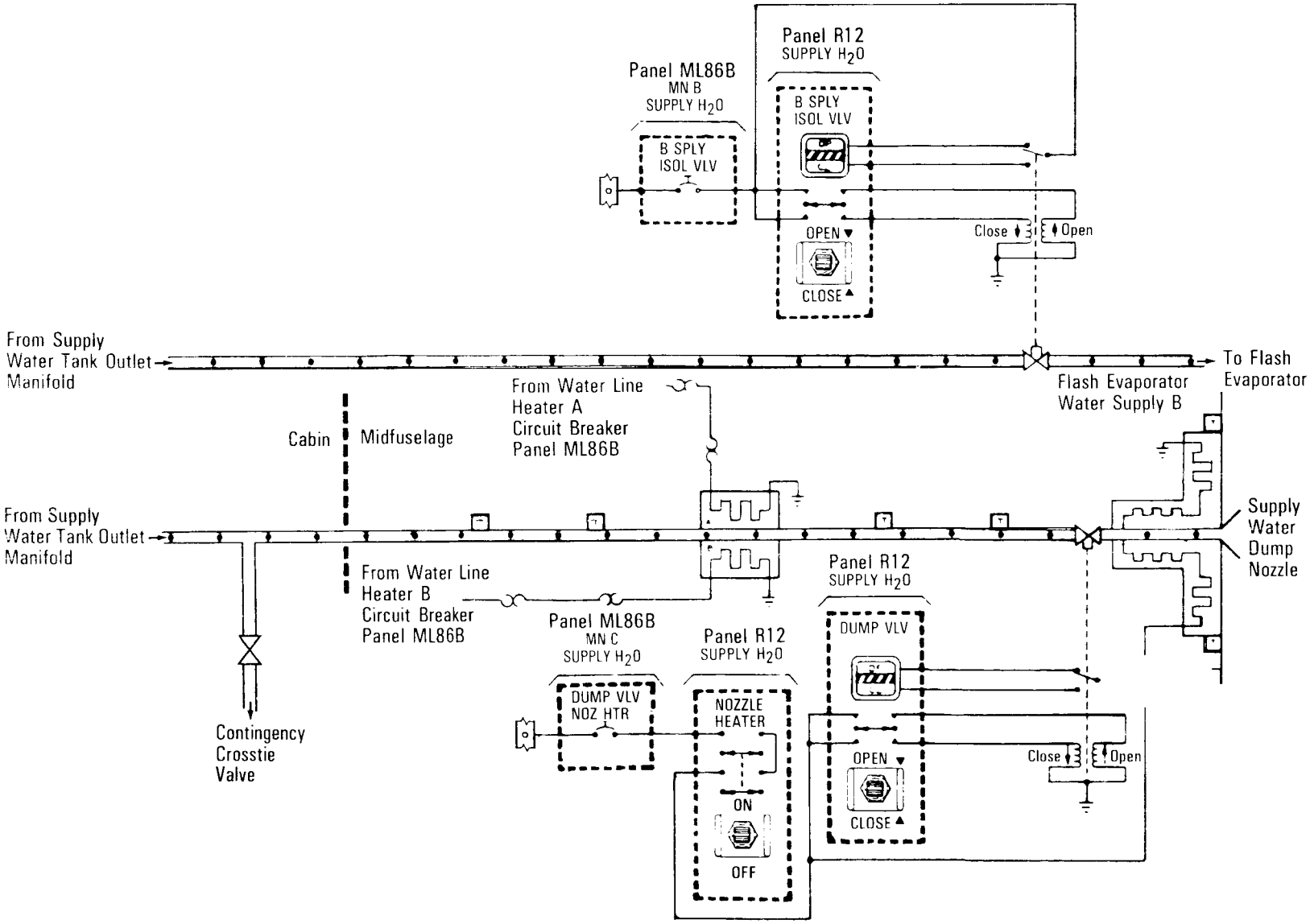


*Potable Water (Sheet 3 of 3)*

the tank B inlet valve is closed or tank B is full of water, the water is directed through another 1.5-psid check valve to the inlets to tanks C and D.

Each potable water tank has an inlet and outlet valve that can be opened or closed selectively to use water; however, the tank A outlet valve normally remains closed since the water has been treated by passage through the microbial filter for flight crew consumption.

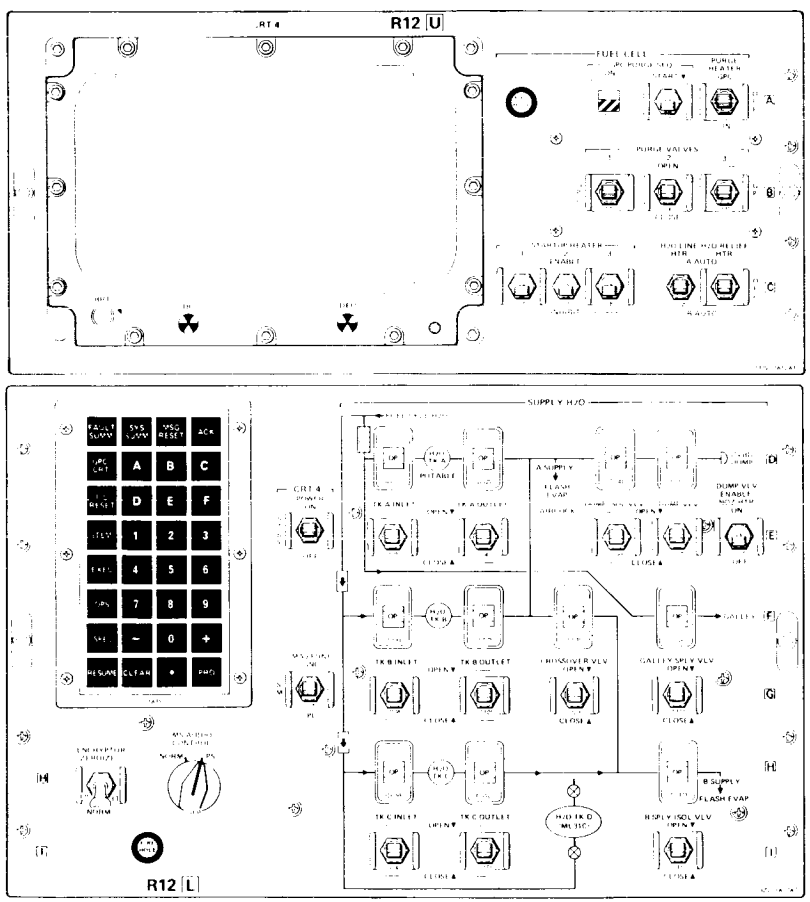


*Panel R12*

The controls and displays for the potable water tank supply system are located on panels R12 and ML31C. Potable water tanks A, B and C are controlled from panel R12, and tank D is controlled from panel ML31C.

When the *supply $H_2O$ inlet tk A, B* or *C* switch on panel R12 is positioned to *open*, the inlet valve for the tank permits water into that tank. A talkback indicator next to the corresponding switch on panel R12 indicates *op* when the corresponding valve is open, barberpole when the valve is in transit and *cl* when that valve is closed. When the switch is positioned to *close,* the water inlet to that tank is isolated from the inlet water supply. The *supply $H_2O$ tk inlet D* switch and talkback indicator are located on panel ML31C and operate in the same manner as the switches and talkbacks for tanks A, B and C.

Each potable water and waste water tank is pressurized with gaseous nitrogen from the crew compartment nitrogen supply system. Nitrogen supply systems 1 and 2 can be used individually to pressurize the tanks with nitrogen at 16 psig. Nitrogen supply system 1 is controlled by the water tank nitrogen regulator inlet and water tank nitrogen isolation 1 manual valves from panel M010W. Nitrogen supply system 2 is controlled by the water tank nitrogen regulator inlet and water tank nitrogen isolation 2 manual valves from panel M010W. The regulator in each nitrogen supply system controls the nitrogen pressure to the tanks at 16 psig, and a relief valve in each nitrogen supply system will relieve into the crew cabin if the nitrogen supply increases to 18.5 psig, plus or minus 1.5 psig, to protect the tanks from overpressurization.

For only tank A, inlet nitrogen pressure is controlled by pressure and vent manual valves on panel ML26C. When the tank A isolation valve is closed, the tank A vent valve is opened to the crew cabin atmosphere. For launch the tank A isolation valve is closed, which lowers tank A pressure so the fuel cell power plants' water head pressure is lower to help prevent flooding of the fuel cell power plants during ascent. On orbit the tank A isolation valve is opened, and the tank A vent to the cabin is closed, allowing nitrogen supply pressure to tank A and inhibiting cabin atmo-

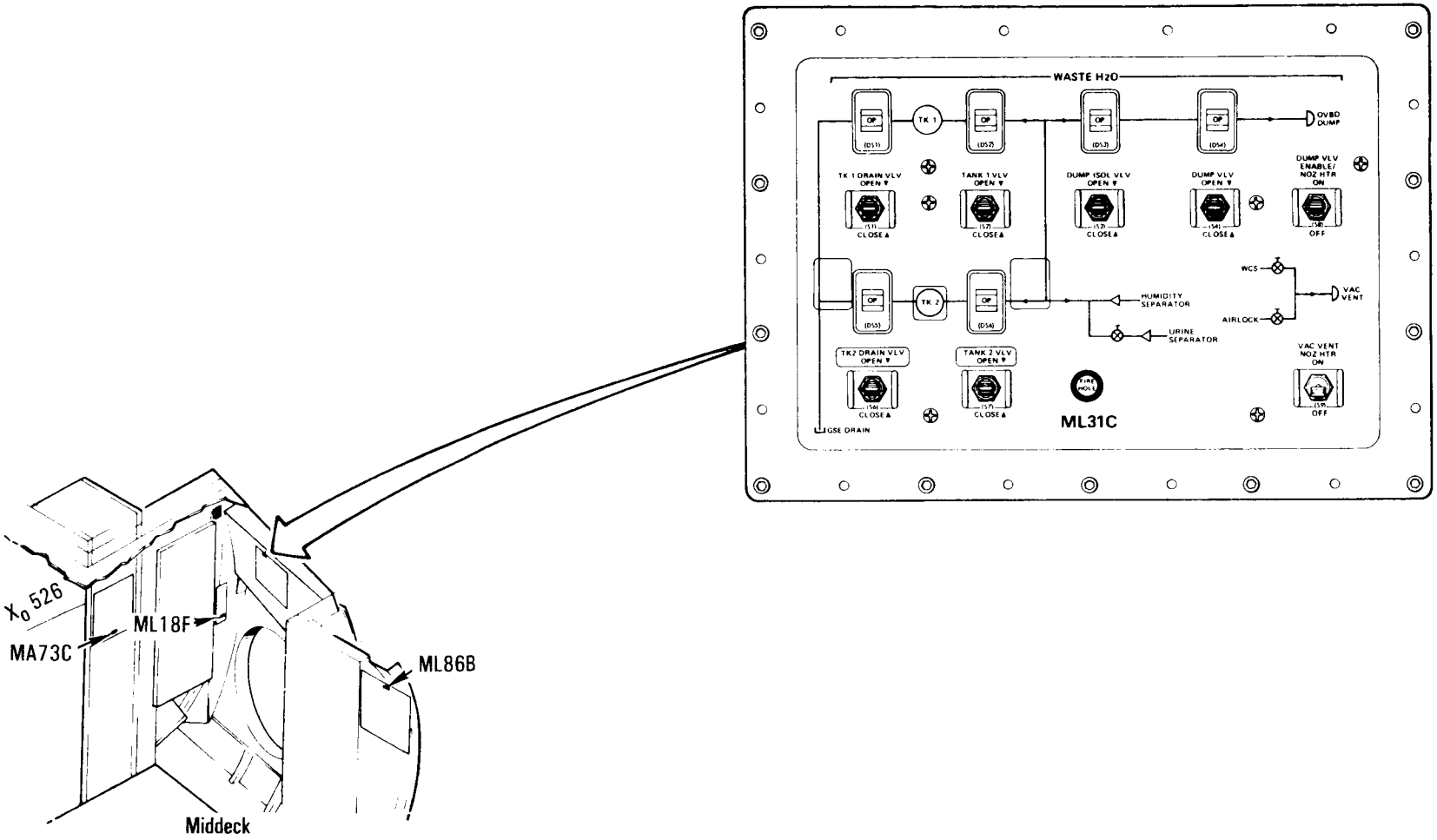


*Panel ML31C Middeck*

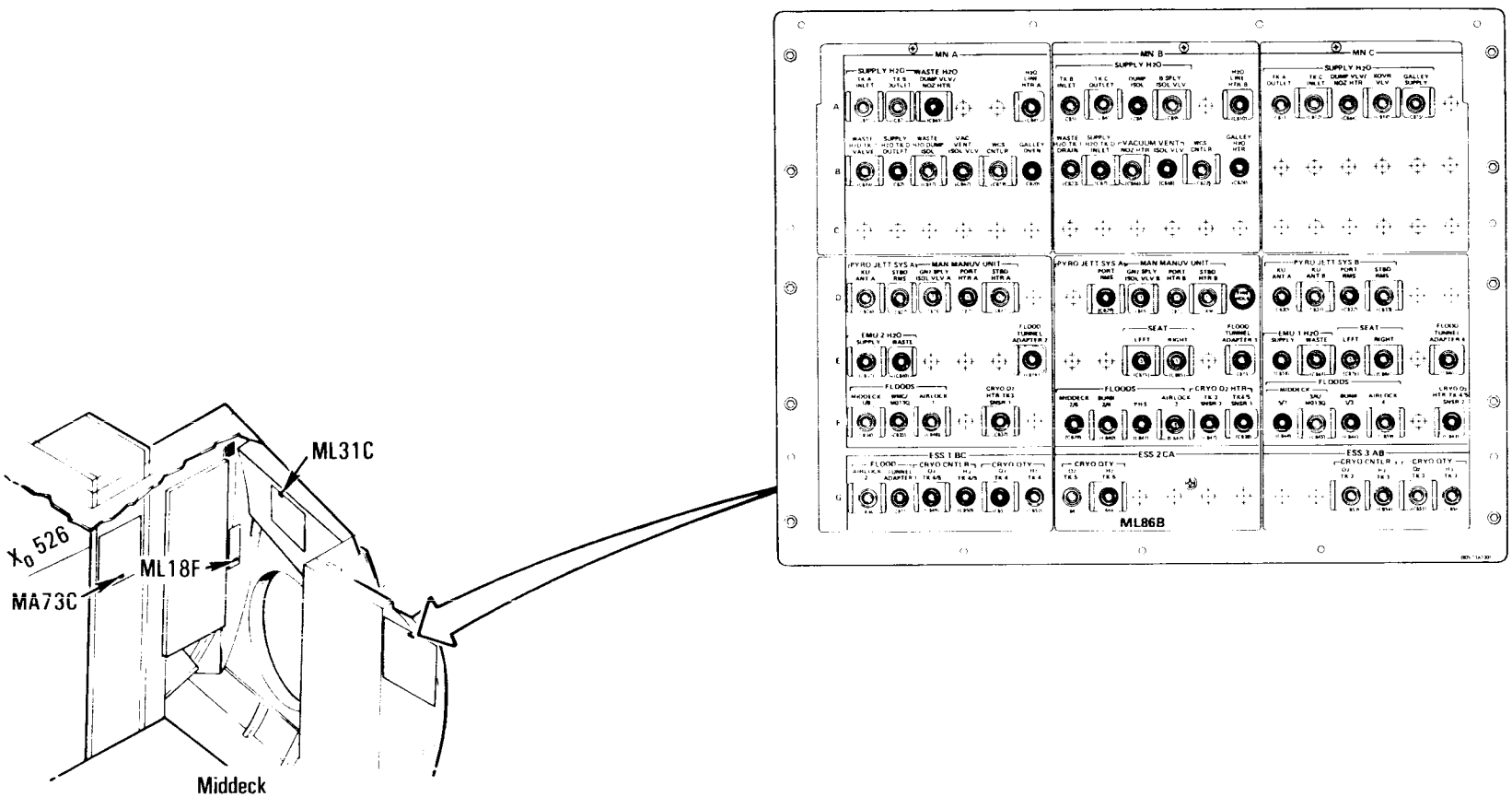


*Panel ML86B Middeck*

sphere to tank A. Nitrogen supply pressure is supplied to tanks B, C and D to support flash evaporator operation.

If neither nitrogen supply system 1 nor 2 can be used to pressurize the water tanks, the *$H_2O$ alternate press* switch on panel L1 can be positioned to *open*, which would reference the water tank pressurization system to the crew compartment ambient pressure. Normally, this switch is positioned to *close* to isolate the cabin pressurization system from the water tank pressurization system.

The *supply $H_2O$ outlet tk A, B* or *C* switch on panel R12 positioned to *open* permits water from the corresponding tank to

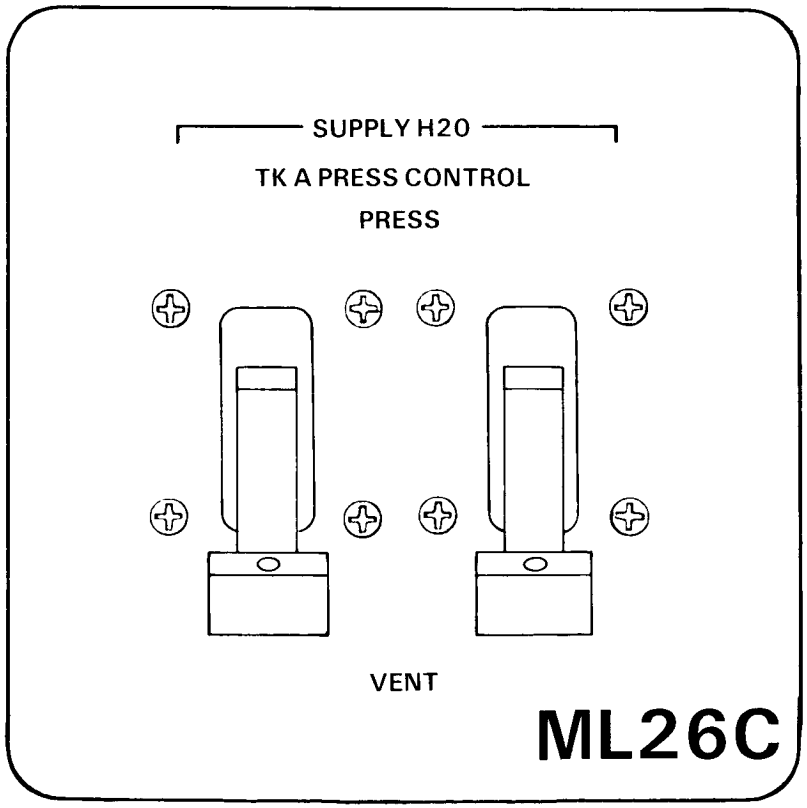


*Panel ML26C*

flow from the tank into the water outlet manifold by the tank nitrogen pressurization system. A talkback indicator next to the switch would indicate *op* when that valve is open, barberpole when it is in transit and *cl* when it is closed. The *close* position of each switch isolates that water tank from the water outlet manifold. The *supply $H_2O$ tk inlet D* switch and talkback indicator are located on panel ML31C and operate in the same manner as the tank A, B and C switches and talkback indicators on panel R12.

If the potable water tank A or B outlet valve is opened, water from the corresponding tank is directed to the water outlet manifold. The tank A and B water is then available to the extravehicular mobility unit fill in the airlock, to the flash evaporator water supply system A and to the water dump. As stated previously, the tank A outlet valve is normally closed to prevent contamination of the water in tank A. Thus, tank B would supply water to flash evaporator water supply system A and to the EMU fill in the airlock. If it is necessary to provide space for storing water in tank A and/or B, tank A and/or B water can be dumped overboard.

Tank C or D is normally saved full of water for contingency purposes. If the tank C or D outlet valve is opened, water from either tank is directed to the water outlet manifold. The water is then available to the flash evaporator water supply system B.

A crossover valve installed in the water outlet manifold is controlled by the *supply $H_2O$ crossover vlv* switch on panel R12. When the switch is positioned to *open*, the crossover valve opens and allows tank A or B to supply flash evaporator water supply systems A and B, the EMU fill in the airlock and water dump. It would also allow tank C or D to supply flash evaporator water supply systems A and B, the EMU fill in the airlock and water dump. A talkback indicator next to the switch indicates *op* when the crossover valve is opened, barberpole when the valve is in transit and *cl* when the valve is closed. The *close* position isolates the water manifold between the tank A and B outlets and the tank C and D outlets.

Water from supply system A is routed directly to the flash evaporator. Water from system B is routed to an isolation valve in

the system. The valve is controlled by the *supply $H_2O$ B supply isol vlv* switch on panel R12. When the switch is positioned to *open*, water from supply system B is directed to the flash evaporator. A talkback indicator next to the switch indicates *op* when the valve is opened, barberpole when it is in transit and *cl* when the valve is closed. The *close* position isolates water supply system B from the flash evaporator.

Potable water from tank A or B can be dumped overboard, if necessary, through a dump isolation valve and a dump valve. Potable water from tank C or D can also be dumped overboard, if necessary, through the crossover valve and through the dump isolation valve and dump valve. The overboard dump isolation valve is located in the crew cabin, and the dump valve is located in the midfuselage. The dump isolation valve is controlled by the *supply $H_2O$ dump isol vlv* switch on panel R12; the dump valve is controlled by *supply $H_2O$ dump vlv* switch on panel R12. The *supply $H_2O$ dump valve enable/noz htr* switch on panel R12 must be positioned to *on* to supply electrical power to the *supply $H_2O$ dump vlv* switch. When each switch is positioned to *open*, the corresponding valve is opened, which allows potable water to be dumped overboard. A talkback indicator next to each switch indicates *op* when the corresponding valve is open, barberpole when it is in transit and *cl* when it is closed. Closing either valve inhibits the dumping of potable water. At the completion of the dump, each switch is positioned to *close* to close the corresponding valve.

A contingency crosstie valve, in the supply water overboard dump line between the dump isolation valve and dump valve, permits the joining of the waste water system through a flexible hose to the supply water system for emergency dumping of waste water through the supply water dump or the use of waste water for the flash evaporators.

The potable supply water dump nozzle employs a heater to prevent freezing of the supply water dump nozzle at the midfuselage. The dump nozzle heater is powered when the *supply $H_2O$ dump vlv enable/noz htr* switch on panel R12 is positioned to *on*. When the switch is positioned to *off*, it removes electrical power from the nozzle heater as well as the *supply $H_2O$ dump vlv* switch, which causes the dump valve to close.

The potable supply water line upstream of the water dump nozzle has electrical heaters on the line to prevent supply water from freezing. The A and B heaters on the line are thermostatically controlled and are powered by the *$H_2O$ line heater A* and *B* circuit breakers on panel M186B. (These circuit breakers also provide power to thermostatically controlled heaters on the waste water line and the waste collection system vacuum vent line.)

The potable supply water feed lines to the flash evaporators are approximately 100 feet long. To prevent the water in the lines from freezing, redundant heaters are installed along the length of the water lines. The heaters are controlled by the *flash evap feedline heater A supply* and *B supply* switches on panel L2. When a switch is positioned to *1*, it enables the thermostatically controlled heaters on the corresponding supply line to automatically control the temperature on that line. When a switch is positioned to *2*, it enables another thermostatically controlled heater system on the corresponding supply line. The *off* position of each switch inhibits heater operation on the corresponding supply line.



The galley supply valve in the supply water line from the microbial filter permits or isolates the supply water from the microbial filter to the middeck ECLSS supply water bay. When the switch is positioned to *open*, supply water is routed through parallel paths; one path flows through the ARS water coolant loop water chiller to cool the supply water, and the other path bypasses the water chiller with ambient water. A talkback indicator next to the switch indicates *op* when the valve is open, barberpole when the valve is in transit and *cl* when the valve is closed. The *close* position of the switch isolates the potable supply water from the middeck ECLSS supply water panel.

If a payload is installed in the middeck in lieu of the galley, the chilled water and ambient water are connected to an Apollo water dispenser to dispense ambient and chilled water for drinking and food reconstitution. The temperature of the chilled water is within the range of 43 to 55 F, and the ambient water's temperature is between 65 to 95 F. A personal hygiene dispenser is also provided with ambient water.

If the galley is installed in the middeck of the crew cabin, the

water supply is directed to the galley. A hot-water heater heats water to 155 to 165 F. Chilled water is also provided at 45 to 55 F.

**WASTE COLLECTION SYSTEM.** The waste collection system is an integrated, multifunctional system used primarily to collect and process biological wastes from crew members in a zero-gravity environment. The WCS is located in the middeck of the orbiter crew compartment in a 29-inch-wide area immediately aft of the crew ingress and egress side hatch. The commode is 27 by 27 by 29 inches and is used like a standard toilet.

The system collects, stores and dries fecal wastes and associated tissues; processes urine and transfers it to the waste water

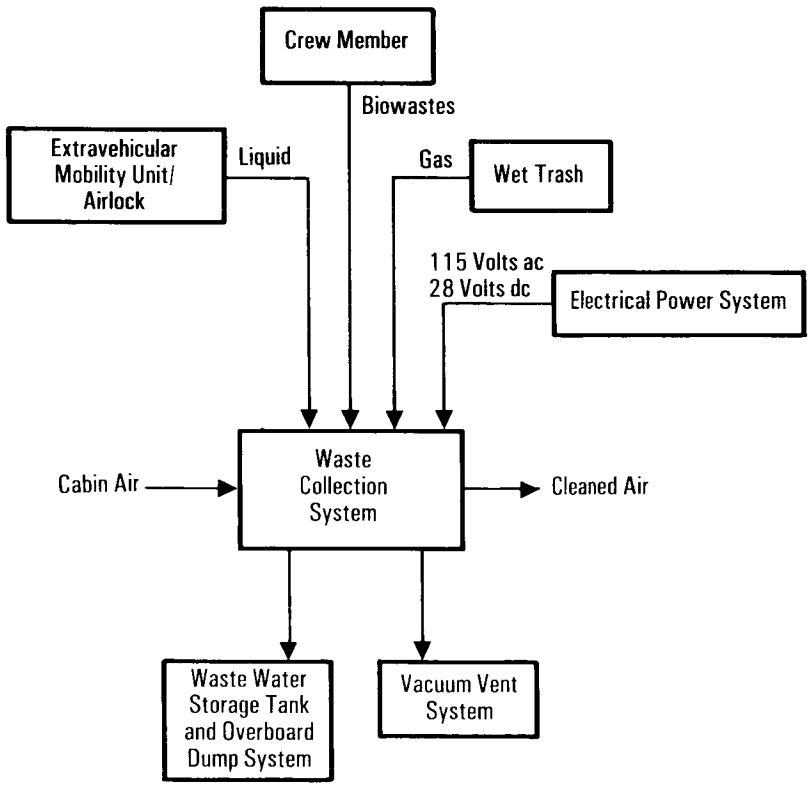


*Waste Collection System*

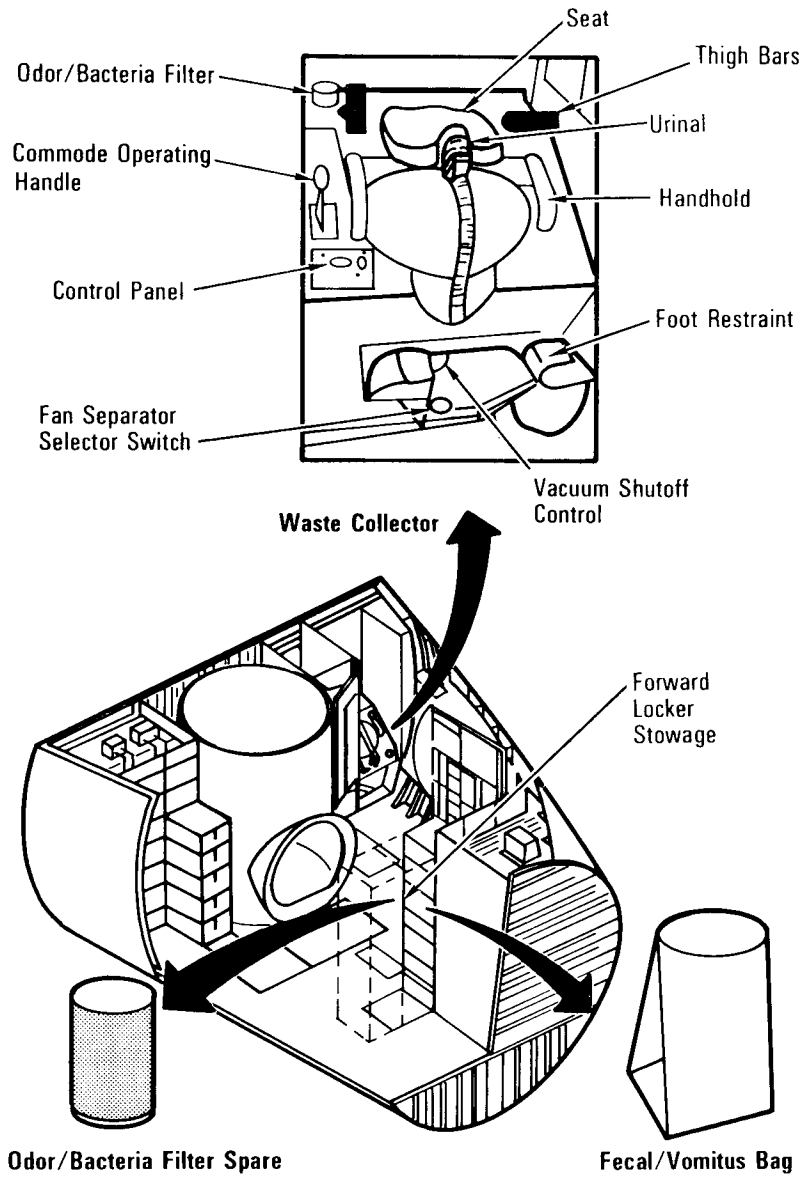


*Waste Collection System—Middeck*

tank; processes EMU condensate water from the airlock and transfers it to the waste water tank if an extravehicular activity is required on a mission; provides an interface for venting trash container gases overboard; provides an interface for dumping ARS waste water overboard in a contingency situation; and transfers ARS waste water to the waste water tank.

A door on the waste management compartment and two privacy curtains attached to the inside of the compartment door provide privacy for crew members. One curtain is attached to the top of the door and interfaces with the edge of the interdeck access, and the other is attached to the door and interfaces with the galley, if installed. The door also serves as an ingress platform during prelaunch (vertical) operations since the flight crew must enter the flight deck over the waste management compartment. The door has a friction hinge and must be open to gain access to the waste management compartment.

The WCS consists of a commode, urinal, fan separators, odor and bacteria filter, vacuum vent quick disconnect and waste collection system controls. The commode contains a single multilayer hydrophobic porous bag liner for collecting and storing solid waste. When the commode is in use, it is pressurized, and transport air flow is provided by the fan separator. When the commode is not in use, it is depressurized for solid waste drying and deactivation. The urinal is essentially a funnel attached to a hose and provides the capability to collect and transport liquid waste to the waste water tank. The fan separator provides transport air flow for the liquid. The fan separators separate the waste liquid from the air flow. The liquid is drawn off to the waste water tank, and the air returns to the crew cabin through the odor and bacteria filter. The filter removes odors and bacteria from the air that returns to the cabin. The vacuum quick disconnect is used to vent

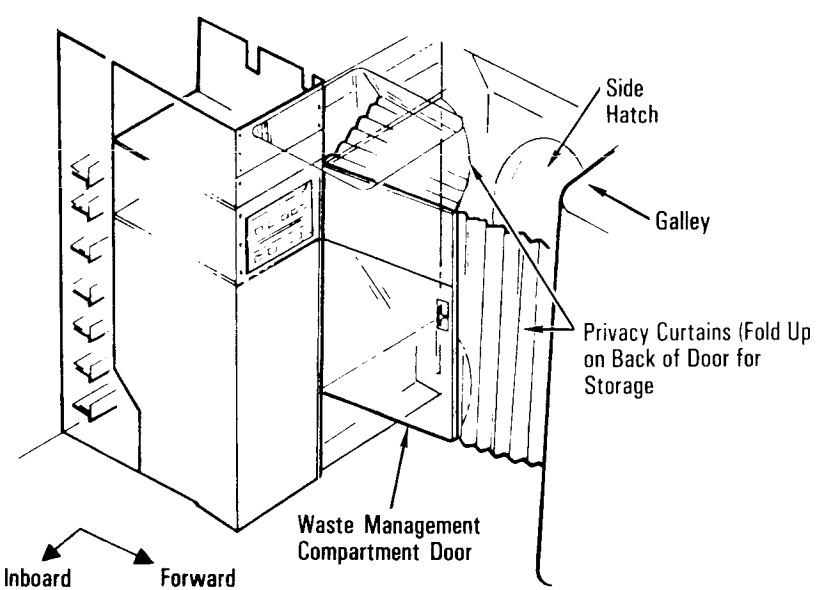


*Waste Management System Privacy Curtains*

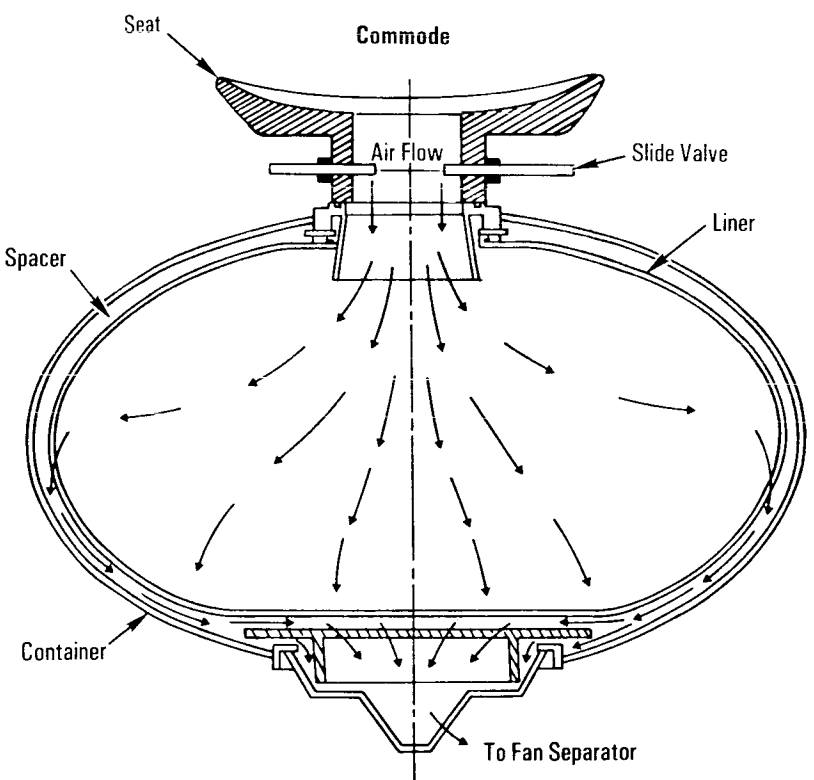


*Waste Collection System Container Liner*

liquid directly overboard from equipment connected to the quick disconnect through the vacuum line.

The urinal can accommodate both males and females. The urinal assembly is a flexible hose with attachable funnels for males or females. It can be used in a standing position or can be attached to the commode by a pivoting mounting bracket for use in a sitting position.

All waste collection system gases are ducted from the fan separator into the odor and bacteria filter and then mixed with cabin air. The filter can be removed for in-flight replacement.

The system employs various restraints and adjustments to enable the user to achieve the proper body positioning to urinate or defecate in a zero-gravity environment. Two foot restraints are provided. A toe bar is located at the commode base and is used to urinate standing. It consists of two flexible cylindrical pads on a shaft that can be adjusted to various heights by releasing two locking levers that are turned 90 degrees counterclockwise. The crew member is restrained by slipping the feet under the toe bar restraint. A footrest restrains the feet of a crew member sitting on the commode. It consists of an adjustable platform with detachable Velcro straps for securing the feet. The Velcro straps are wrapped crosswise over each foot and secured around the back. The footrest can be adjusted to various angles and heights. Two locking handles pulled outward adjust the angle; two other locking levers adjust the height of the footrest.

Two body restraints are provided for use when crew members are seated on the commode. The primary restraint is a thigh bar that the crew member lifts up out of the detent position, rotates over the thigh and releases. It exerts a preloaded force on each thigh of approximately 10 pounds. The second restraint is a backup method. It consists of four Velcro fabric thigh straps with a spring hook on one end. Two of the straps are attached to the top front commode surface mating attach points, and the other two are installed on a bracket with five holes on the upper sides of the commode, below and outboard of the thigh bars. The crew member is secured in position by wrapping two straps over each thigh and attaching the mating Velcro surfaces.

Handholds are used for positioning or stabilizing the crew member while using the WCS and form an integral part of the top cover of the waste management collection system assembly.

The controls on the waste collection system are the vacuum valve, fan separator select switch, mode switch, fan separator bypass switches and commode control handle. The system uses dc power to control the fan separators and ac power for fan separator operations. The mode switch and the commode control handle are mechanically interlocked to prevent undesirable system configurations. The remaining controls operate independently. The fan separator bypass switches allow the crew member to manually override a fan separator limit switch failure.

For launch and entry the vacuum valve is closed. During on-orbit operations when the WCS is not in use, the vacuum valve is opened. This exposes the commode (overboard) via the vacuum vent system, and any solid wastes in the commode are dried. The hydrophobic bag liner in the commode allows gas from the commode to vent overboard, but does not allow the passage of free liquid.



In the urine collection mode, the vacuum valve remains in *open*. The *fan sep select* switch is positioned to *1* or *2*. When positioned to *1*, main bus A dc power is supplied to the *mode* switch; and when positioned to *2*, MNB dc power is supplied to the *mode* switch. The *mode* switch positioned to *WCS/EMU* energizes a relay for a fan separator (dependent on *fan sep 1* or *2* position). The active fan separator pulls cabin air flow through the urinal at 8 cubic feet per minute and ballast cabin air through the wet-trash storage modules at 30 cubic feet per minute. The ballast air mixes with the urine transport air flow in the fan separator. The fan separator is designed to operate at 38 cubic feet per minute and thus requires the 30-cubic-feet-per-minute ballast air flow. Liquid check valves at the waste water outlet from each fan separator provide a back pressure for proper separator operation and prevent backflow through the non-operating separator.

The liquid and air mixture from the urinal line enters the fan separator axially and is carried to a rotating chamber. The mixture first contacts a rotating impact separator that throws the liquid to

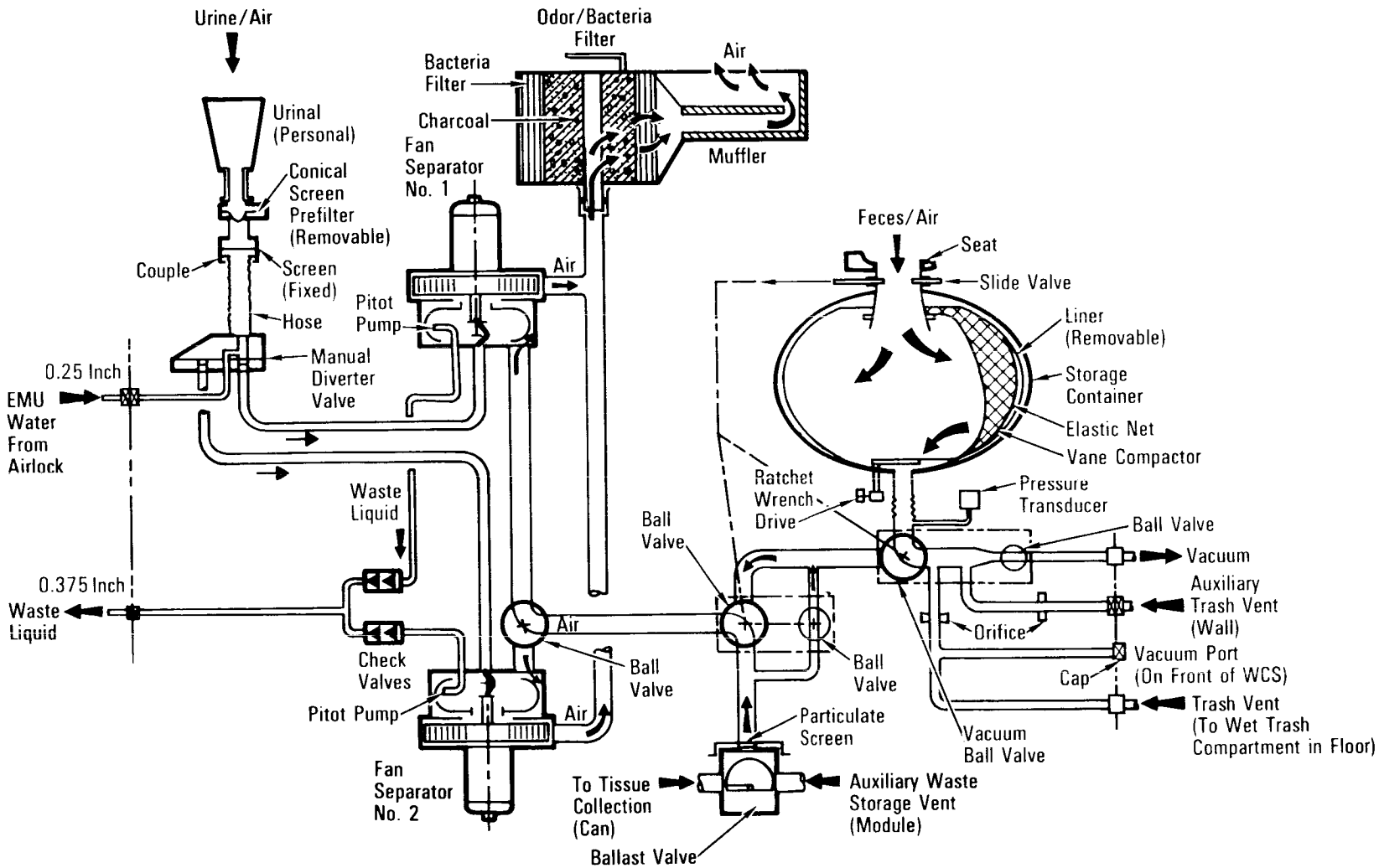


*Waste Collection System Vacuum Vent Position*

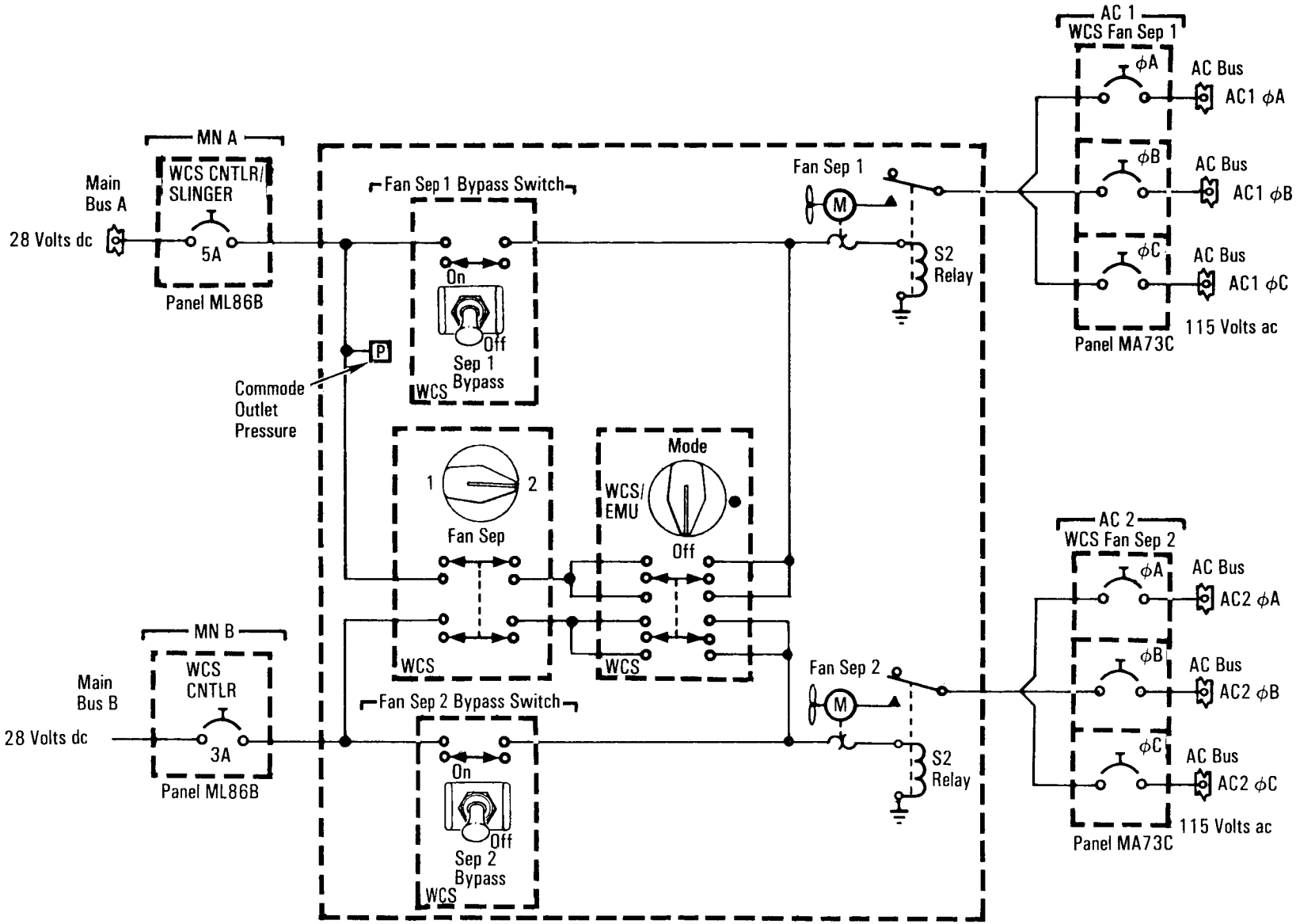


*Fan Separator Control*

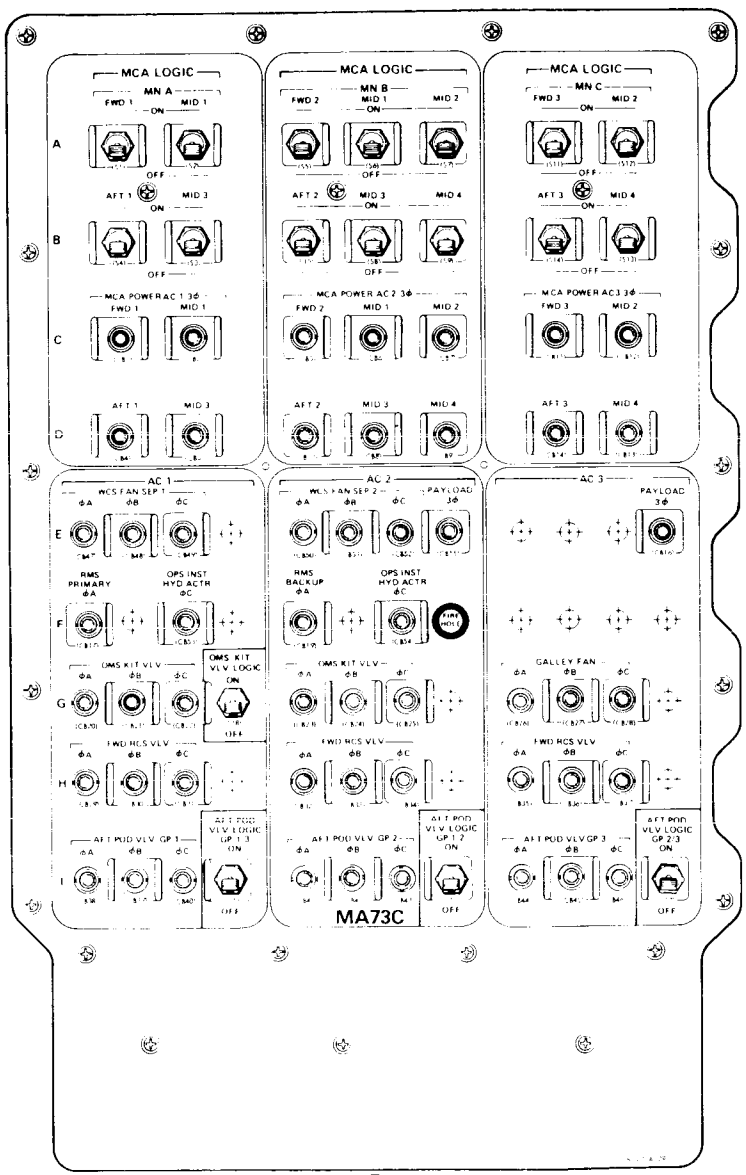


*Panel MA73C*

the outer walls of the rotating fluid reservoir. Centrifugal force separates the liquid and draws it into a stationary pitot tube in a reservoir and directs the liquid to the waste water tank. Air is drawn out of the rotating chamber by a blower that passes the air through the odor and bacteria filter, where it mixes with cabin air and re-enters the crew cabin.

In the EMU and airlock water collection mode, a guard is rotated over the *mode* switch to preclude WCS use or deactivation during the EMU and airlock water collection mode. A urinal protective screen cap is installed on the urinal because it cannot be used during the EMU dump because of possible separator flooding. The EMU dump will be used only if an EVA is required on a mission. The EMU waste water is dumped through waste water valves in the airlock. Other than these requirements, EMU dump is the same as the urine collection mode.

In the urine and feces collection mode, the commode control handle is pulled up, and the commode is pressurized with cabin air through the debris screen and flow restrictor in approximately



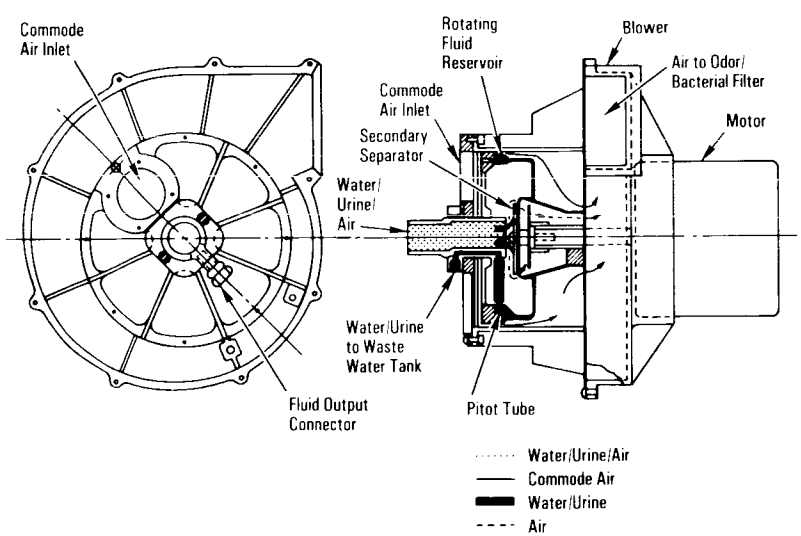


*Waste Collection System Fan Separator*

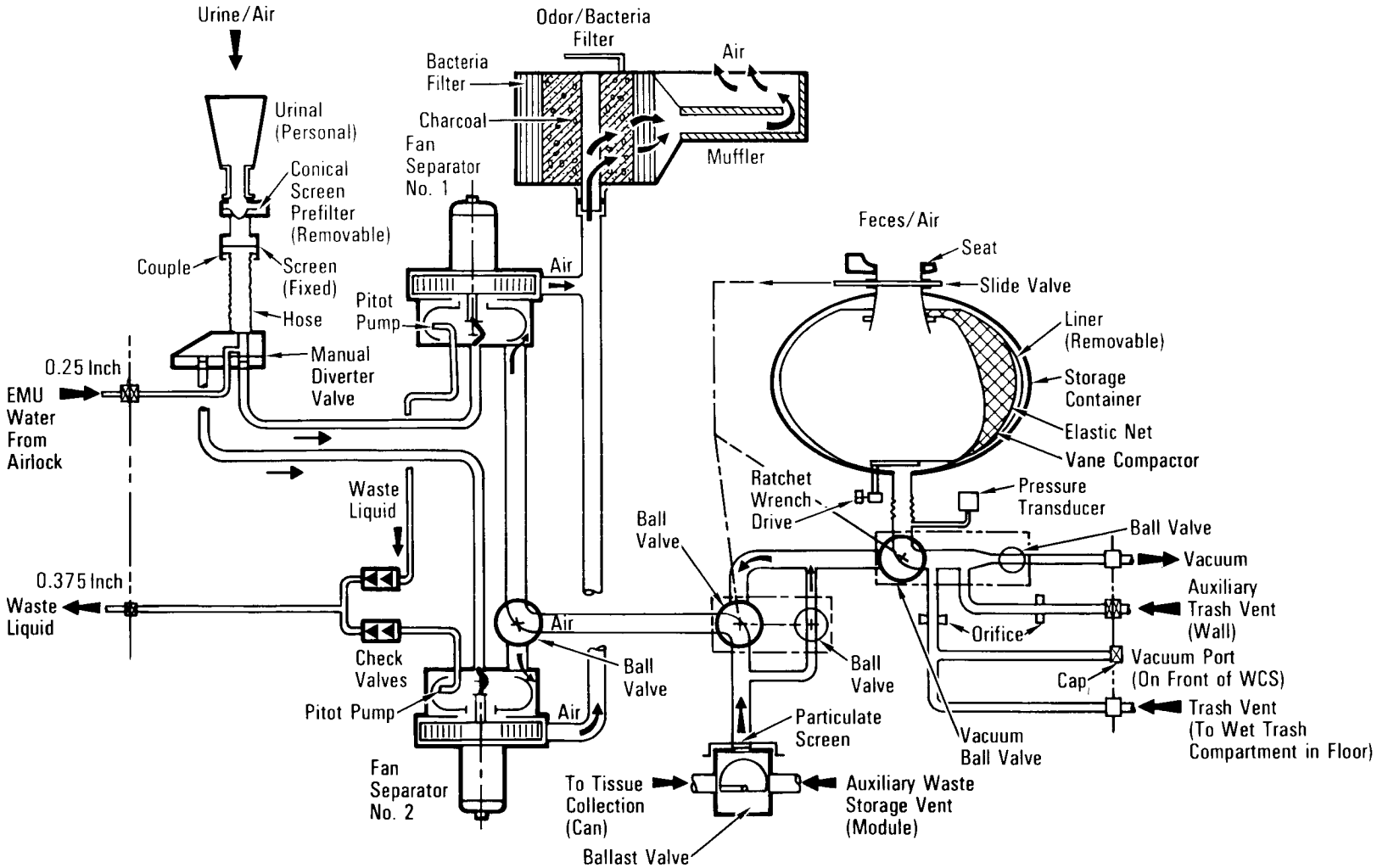


*Waste Collection System*

20 seconds. (Note that if the *mode* switch is positioned to *off*, the handle cannot be pulled up because of a mechanical interlock.) The commode control handle is positioned to *push fwd* after 20 seconds (it cannot be pushed forward until after 20 seconds because of the delta pressure across the sliding gate valve, and it cannot be pushed forward unless the *mode* switch is positioned all the way to the *WCS/EMU* position). When the commode control handle is pushed forward, the sliding gate valve on the commode is opened. The commode outlet control valve and ballast air control valves are positioned to connect the commode to the fan separator, and the commode pressurization valve is closed. The WCS is used like a normal toilet. The commode seat is made of a contoured, compliant, semisoft material that provides proper positioning of the user and is sealed to minimize air leakage. Feces enter the commode through the 4-inch-diameter seat opening and are drawn in by cabin air flowing through holes under the seat at 30 cubic feet per minute. Fecal matter and tissues are deposited on the porous bag liner, and the air is drawn through the hydrophobic material to the fan separator. The hydrophobic liner material prevents free liquid and bacteria from leaving the collector. (Toilet tissue is the only paper item permitted to be disposed of in the commode.) Urine is processed as in the urine collection mode. The *off/down* position closes the sliding gate valve and depressurizes the commode for deactivation and solid waste drying. If the handle is left partially up, it would cause loss of cabin air through the vacuum vent. After usage, the WCS should be cleaned with wet wipes, if required, to maintain an odorless and sanitary environment. The seat can be lifted for cleaning, and the WCS should be cleaned once a day with a biocidal cleanser. The urinal should also be cleaned and flushed with water once a day.

The vacuum vent quick disconnect provides the capability to dump ARS waste water overboard through the vacuum vent by connecting a water transfer hose to the vacuum vent quick disconnect and the waste water crosstie quick disconnect.

If fan separator 1 is inoperative or fails to achieve proper operational speed (which can be verified by a reduced noise level or lack of air flow), the *fan sep* switch is positioned from *1* to *2*, and fan separator 2 will operate in the same manner as 1.

The *fan sep 1 bypass* and *fan sep 2 bypass* switches permit the crew members to manually override a fan separator limit switch failure either in the *fan sep* or *mode* switches. The bypass switches are located on the waste collector and are lever-locked. When either switch is positioned to *on*, dc power is applied to the corresponding relay, energizing it and providing ac power to activate the corresponding fan separator. Both separator bypass switches should not be on at the same time. Before the *fan sep bypass* switch is activated, the *fan sep select* switch should be positioned in the corresponding fan separator position to preset the fan separator inlet valve, and the *mode* switch should be positioned to *WCS/EMU* to preset the urine collection valve.

A vacuum vent isolation valve is located in the vacuum vent line from the waste collector to the overboard vacuum line. It is controlled by the *vacuum vent control* switch on panel ML31C. This switch receives electrical power from the *vacuum vent bus select* switch on panel ML31C when the *bus select* switch is positioned to *MNA* or *MNB*. When the *control* switch is positioned to *open*, the vacuum vent isolation valve is opened, allowing the vacuum vent line to be open to vacuum. A talkback indicator next to the *control* switch indicates *op* when the valve is open, barberpole when the valve is in transit and *cl* when the valve is closed. The *off* position of the *control* switch closes the valve.

Thermostatically controlled heaters are installed on the vacuum vent line. Electrical power for the A and B heaters are from the respective *$H_2O$ line htr A* and *B* circuit breakers on panel ML86B. (These circuit breakers also supply electrical power to supply water dump line A and B heaters and waste water line A and B heaters.)

Heaters are also installed on the vacuum vent nozzle and are controlled by the *vacuum vent noz htr* switch on panel ML31C. Electrical power is supplied to the vacuum vent nozzle heaters when the switch is positioned to *on*. The *off* position removes electrical power from the vacuum vent nozzle heaters.

If both fan separators in the waste collection system fail, feces are collected by the Apollo fecal bag. To dispose of the

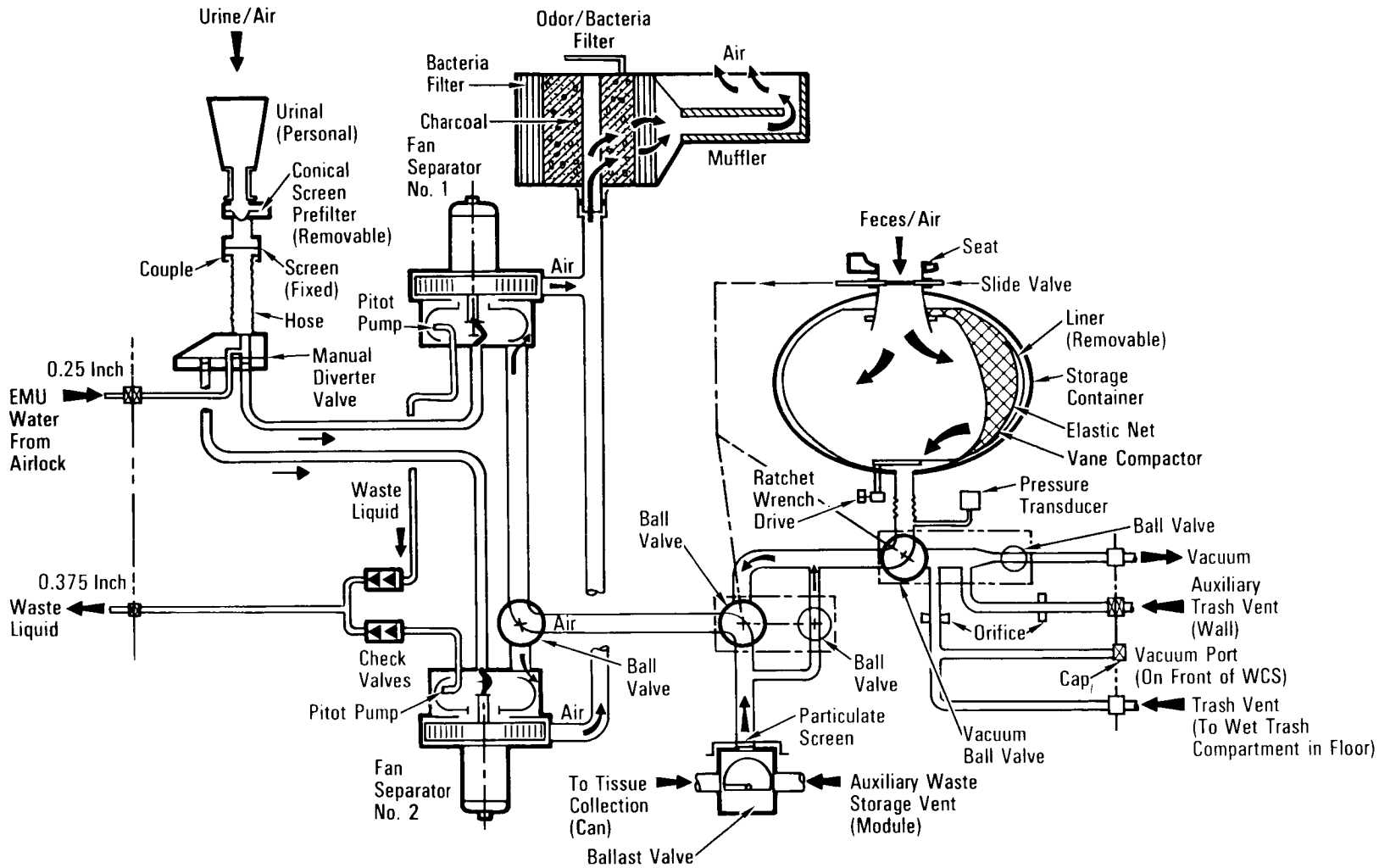


*Waste Collection System Urine/Feces Collection Mode, Handle Up*

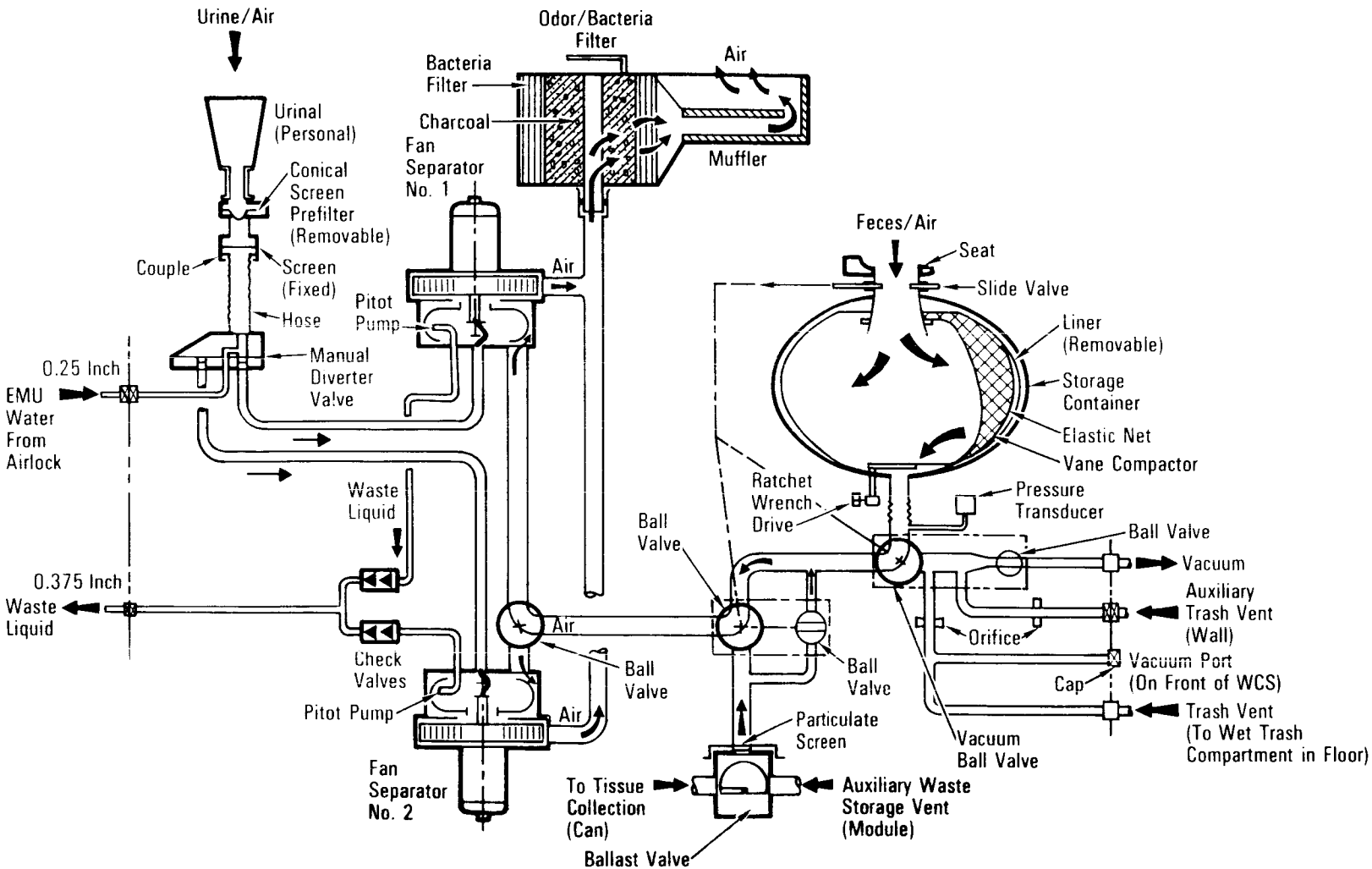


*Waste Collection System, Urine/Feces Collection Mode, Handle Forward*

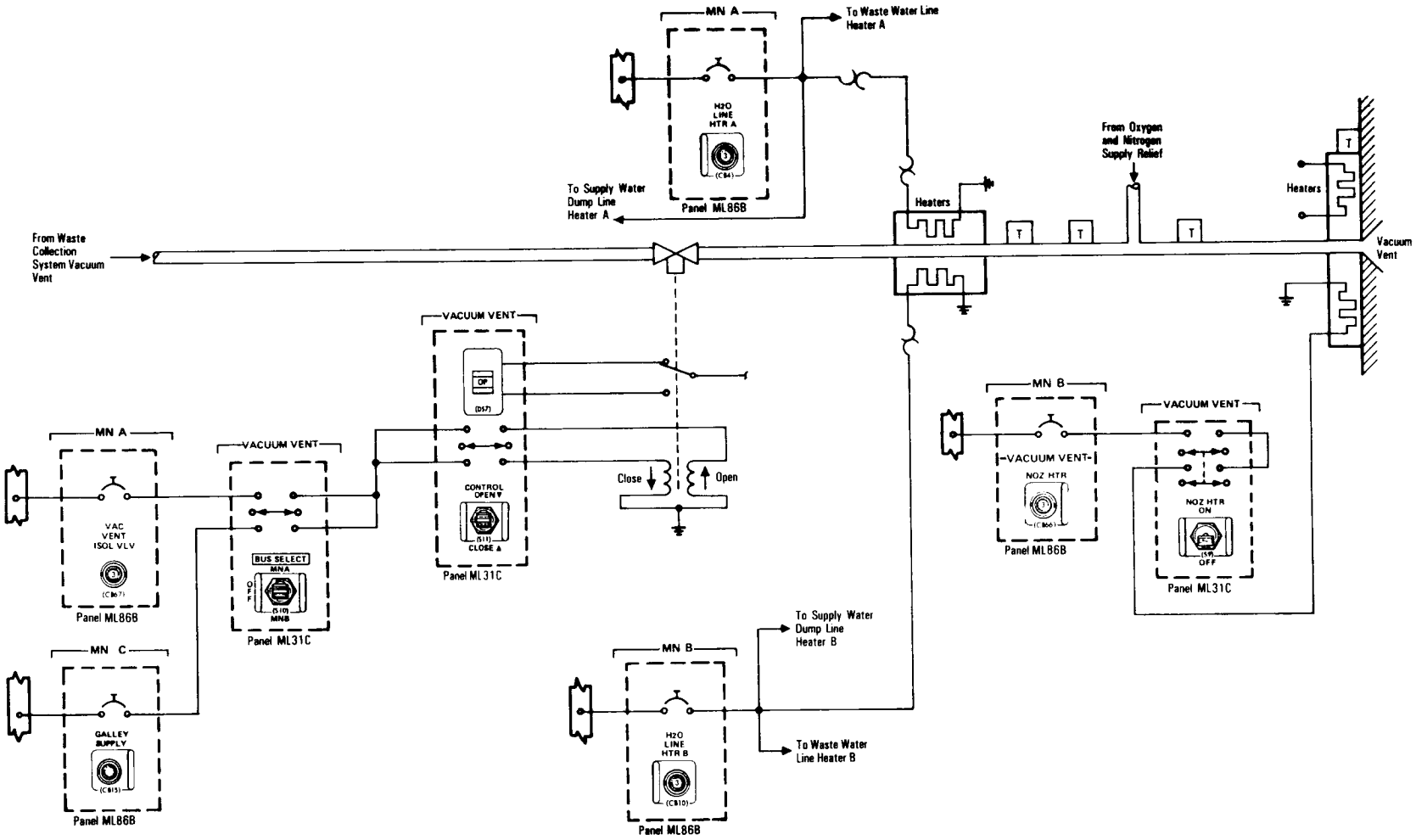


*Waste Collection System Vacuum Vent Line Control Valve and Heaters*

Apollo fecal bag, the waste collection system is configured as in the urine and feces collection mode and the bag is stowed in the commode.

If both fan separators in the waste collection system fail and it is not possible to dump urine overboard, urine may be collected using a contingency urine collection device.

**WASTE WATER TANK.** A single waste water tank receives waste water from the ARS humidity separator and the waste collection system. The tank is located beneath the crew compartment middeck floor next to the potable water tanks.

The waste water tank holds 165 pounds, is 35.5 inches long and 15.5 inches in diameter, and weighs 39.5 pounds dry. It is pressurized by gaseous nitrogen from the same source as the potable water tanks.

Waste water is directed to the waste water tank 1 inlet valve, which is controlled by the *waste $H_2O$ tank 1* switch on panel ML31C. When the switch is positioned to *open*, waste water is directed to the waste water tank. A talkback indicator next to the switch indicates *op* when the valve is open, barberpole when the valve is in transit and *cl* when the valve is closed. The switch positioned to *off* closes the waste water tank inlet, isolating the waste water tank from the waste water collection system. When the valve is open, waste water from the tank can also be directed to the waste water dump for overboard dumping.

The waste water dump isolation valve and waste water dump valve in the waste water dump line allow waste water to be dumped overboard through the waste water dump. The *waste $H_2O$ dump isol valve* switch on panel ML31C positioned to *open* allows waste water to be directed to the waste water dump valve. A talkback indicator above the *waste $H_2O$ dump isol valve* switch



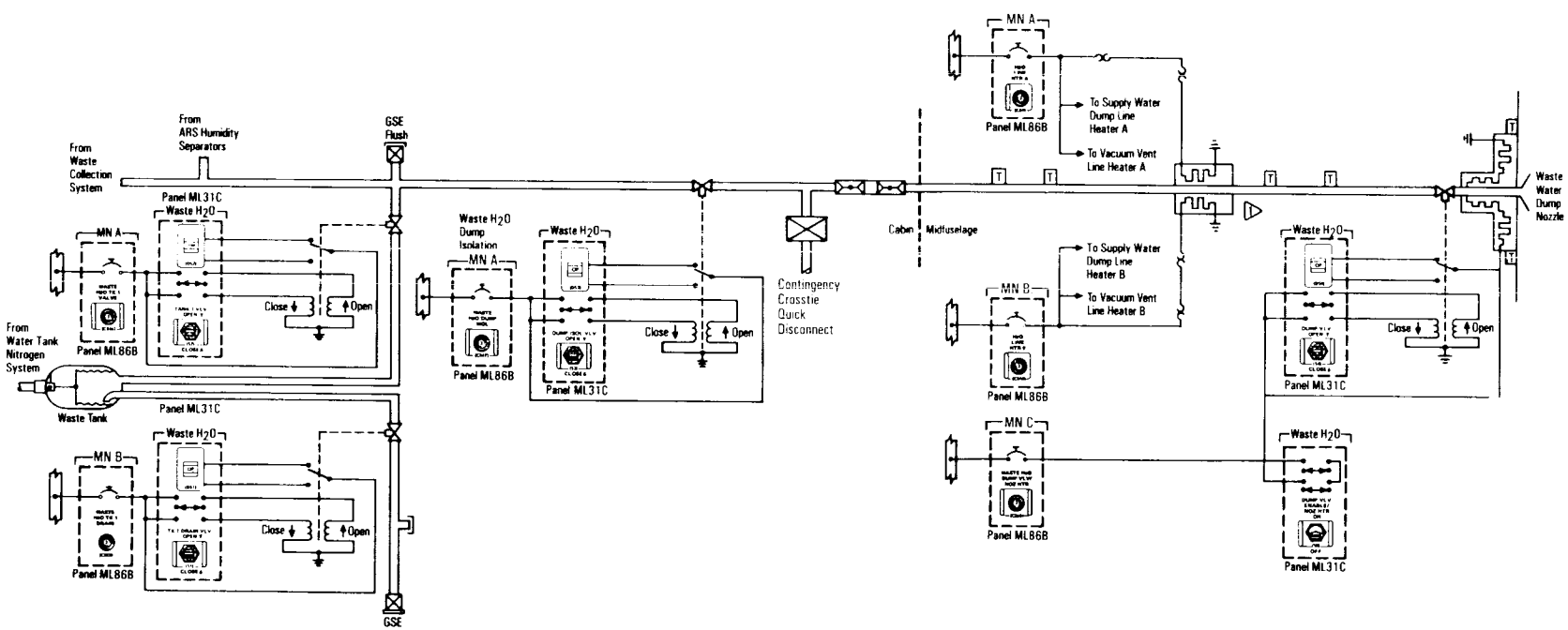


*Waste Water Tank and Waste Water Dump Line*

indicates *op* when the valve is open, barberpole when the valve is in transit and *cl* when the valve is closed.

In order for waste water to be dumped overboard, the waste water dump valve must be opened. It is controlled by the *waste $H_2O$ dump valve enable/nozzle heater* switch and the *waste $H_2O$ dump valve* switch on panel ML31C. When the *waste $H_2O$ dump valve enable/nozzle heater* switch is positioned to *on*, electrical power is supplied to the waste water dump heaters and the *waste $H_2O$ dump valve* switch. When the *waste $H_2O$ dump valve* switch is positioned to *open*, the dump valve allows waste water to be dumped overboard. A talkback indicator above the *dump* switch indicates *op* when the valve is open, barberpole when the valve is in transit and *cl* when the valve is closed. If waste water is dumped overboard, the *dump isolation valve* switch is positioned to *cl* upon completion of the dump. The *waste $H_2O$ dump valve* is positioned to *cl*, and the *waste $H_2O$ dump valve enable/nozzle heater* switch is set to *off*. (If the heater switch is positioned to *off* before the *dump valve* switch is positioned to *close*, the dump valve will remain open.) The heaters at the waste water dump prevent waste water from freezing at the overboard dump.

The waste water dump line, upstream of the waste dump nozzle, has electrical heaters on the line to prevent waste water from freezing. The A and B heaters are powered by the *$H_2O$ line htr A* and *B* circuit breakers on panel ML86B and are thermostatically controlled. (These circuit breakers also provide power to thermostatically controlled heaters on the supply water line and waste collection system vacuum vent line.)

The contingency crosstie quick disconnect in the waste water overboard dump line between the dump isolation valve and dump valve permits waste water to be joined with the supply water system through a flexible hose for emergency dumping of supply water through the waste water dump or using waste water for the flash evaporators.

The waste water tank 1 drain valve controls the draining of the waste water tank during ground operations through the ground support equipment flush and drain. When the *waste $H_2O$ drain tank 1 valve* switch on panel ML31C is positioned to *open*, the valve permits the draining and flushing of the waste water tank. The drain line is capped during flight. A talkback indicator above the switch indicates *op* when the valve is open, barberpole when the valve is in transit and *cl* when the valve is closed.

Personal hygiene accommodations for flight crew members include personal hygiene kits, pressure-packed personal hygiene agents and towel tissue dispensers. The personal hygiene kits have provisions for tooth brushing, hair care, shaving, nail care, etc. The pressure-packaged personal hygiene agents are for cleaning the hands, face and body.

**AIRLOCK SUPPORT.** An airlock is located in the crew cabin middeck. The airlock and airlock hatches permit EVA flight

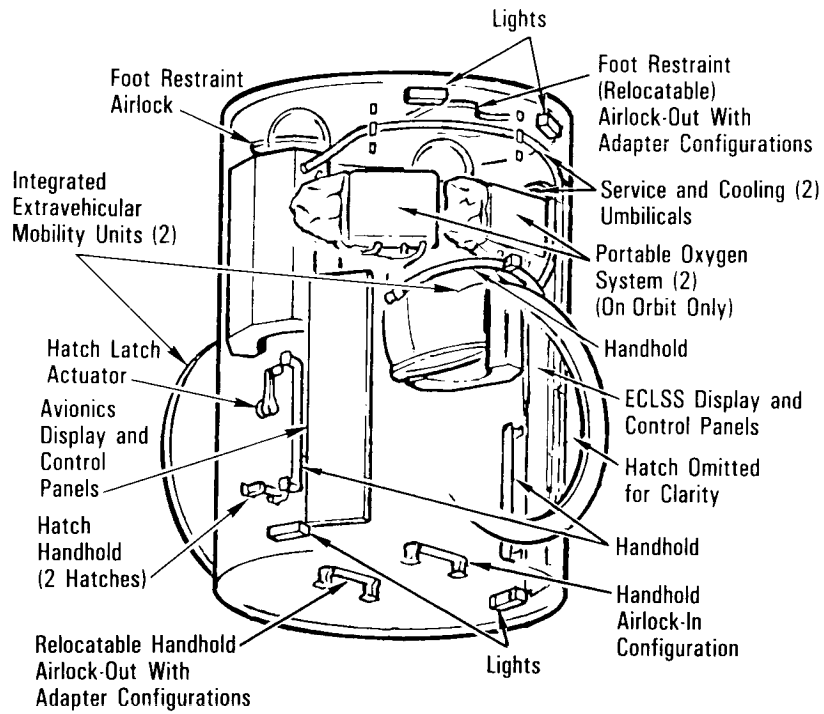


*Airlock*

crew members to transfer from the middeck crew compartment into the payload bay in EMUs without depressurizing the orbiter crew cabin.

Normally, two EMUs are stowed in the airlock. The EMU is an integrated space suit assembly and life support system that enables flight crew members to leave the pressurized orbiter crew cabin and work in space.

The airlock has an inside diameter of 63 inches, is 83 inches long and has two 40-inch-diameter D-shaped openings that are 36 inches across, plus two pressure sealing hatches and a complement of airlock support systems. The airlock's volume is 150 cubic feet.

The airlock is sized to accommodate two fully suited flight crew members simultaneously. The airlock support provides airlock depressurization and repressurization, EVA equipment recharge, liquid-cooled garment water cooling, EVA equipment checkout, donning and communications. All EVA gear, checkout panel and recharge stations are located against the internal walls of the airlock.

The airlock hatches are mounted on the airlock. The inner hatch is mounted on the exterior of the airlock (orbiter crew cabin middeck side) and opens into the middeck. The inner hatch isolates the airlock from the orbiter crew cabin. The outer hatch is mounted in the interior of the airlock and opens into the airlock. The outer hatch isolates the airlock from the unpressurized payload bay when closed and permits the EVA crew members to exit from the airlock to the payload bay when open.

Airlock repressurization is controllable from the orbiter crew cabin middeck and inside the airlock. It is performed by equalizing the airlock and cabin pressure with airlock-hatch-mounted equalization valves on the inner hatch. Depressurization of the airlock is controlled from inside the airlock. The airlock is depressurized by venting the airlock pressure overboard. The two D-shaped airlock hatches are installed to open toward the primary pressure source, the orbiter crew cabin, to achieve pressure-assist sealing when closed.

Each hatch has six interconnected latches with gearbox and actuator, a window, a hinge mechanism and hold-open device, a differential pressure gauge on each side and two equalization valves.

The window in each airlock hatch is 4 inches in diameter. The window is used for crew observation from the cabin and airlock and the airlock and payload bay. The dual window panes are made of polycarbonate plastic and are mounted directly to the hatch using bolts fastened through the panes. Each hatch window has dual pressure seals with seal grooves located in the hatch.

Each airlock hatch has dual pressure seals to maintain the airlock's pressure integrity. One seal is mounted on the airlock hatch and the other on the airlock structure. A leak check quick disconnect is installed between the hatch and the airlock pressure seals to verify hatch pressure integrity before flight.

The gearbox with latch mechanisms on each hatch allows the flight crew to open or close the hatch during transfers and EVA operations. The gearbox and the latches are mounted on the low-pressure side of each hatch, and a gearbox handle is installed on both sides to permit operation from either side of the hatch.



Three of the six latches on each hatch are double-acting. They have cam surfaces that force the sealing surfaces apart when the latches are opened, thereby acting as crew assist devices. The latches are interconnected, with push-pull rods and an idler bellcrank installed between the rods for pivoting the rods. Self-aligning dual rotating bearings are used on the rods to attach the bellcranks and the latches. The gearbox and hatch's open support struts are also connected to the latching system, using the same rod and bellcrank and bearing system. To latch or unlatch the hatch, a rotation of 440 degrees on the gearbox handle is required.

The hatch actuator and gearbox are used to provide the mechanical advantage to open and close the latches. The hatch actuator lock lever requires a force of 8 to 10 pounds through an angle of 180 degrees to unlatch the actuator. A minimum rotation of 440 degrees with a maximum force of 30 pounds applied to the actuator handle is required to operate the latches to their fully unlatched positions.

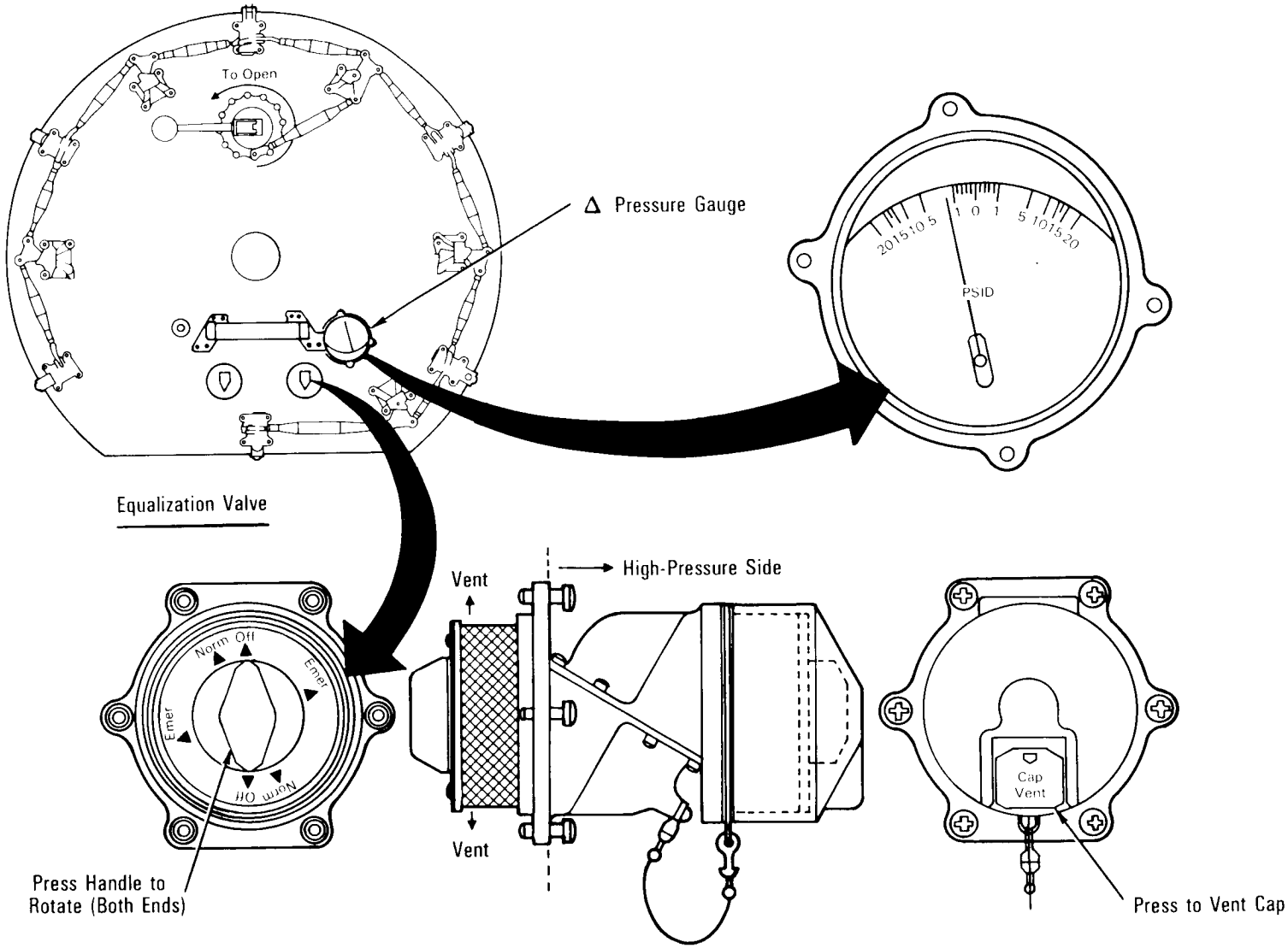


*Airlock Repressurization*

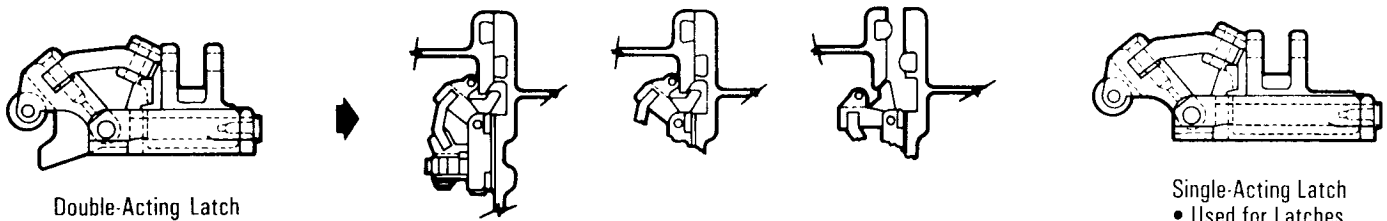

Double-Acting Latch
- Has Kicker Cam to Break Seal
- Used for Latches
- 2, 4 and 6

Single-Acting Latch
- Used for Latches 1, 3 and 5

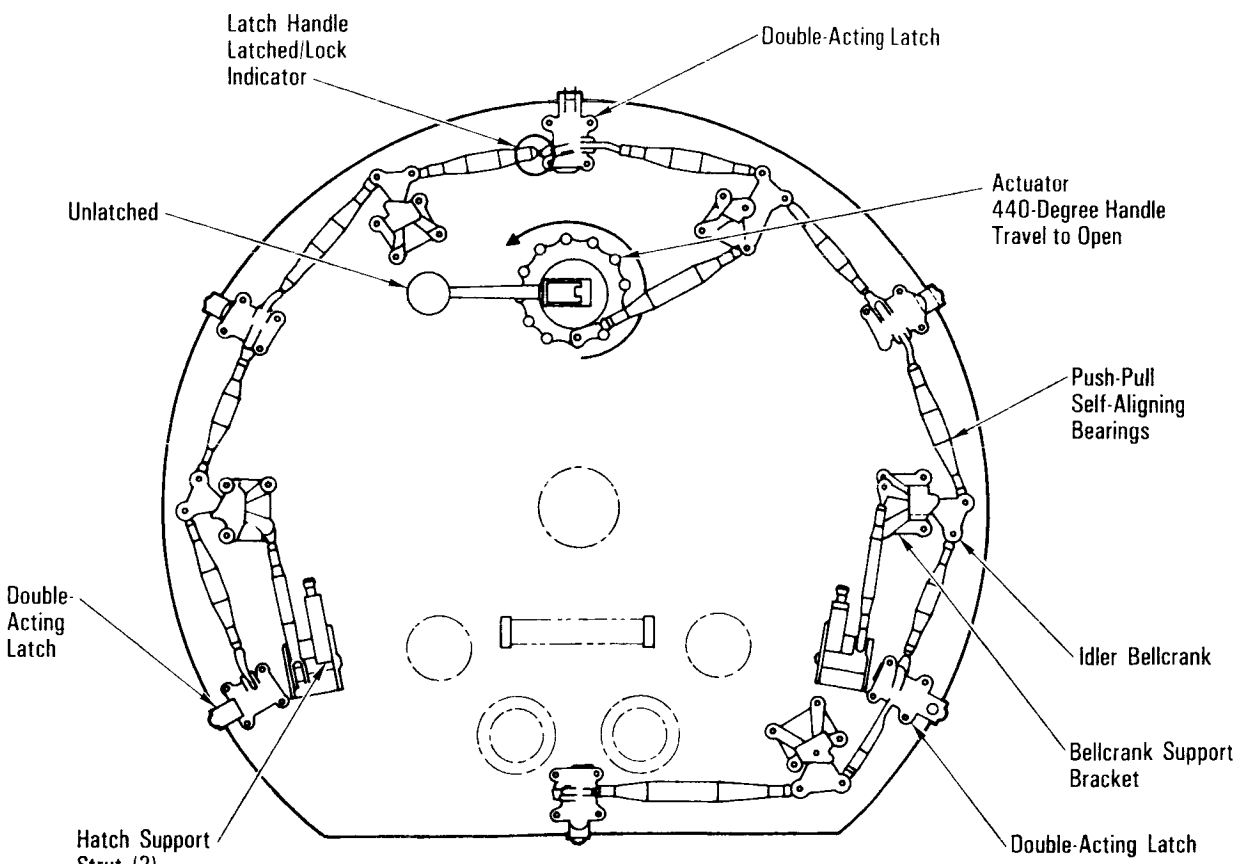


*Airlock Hatch Latches*

The hinge mechanism for each hatch permits a minimum opening sweep into the airlock or the crew cabin middeck. The inner hatch (airlock to crew cabin) is pulled and pushed forward into the crew cabin approximately 6 inches. The hatch pivots up and to the right side. Positive locks are provided to hold the hatch in both an intermediate and a full-open position. To release the lock, a spring-loaded handle is provided on the latch hold-open bracket. Friction is also provided in the linkage to prevent the hatch from moving if released during any part of the swing.

The outer hatch (in airlock to payload bay) opens and closes to the contour of the airlock wall. The hatch is hinged to be pulled first into the airlock and then pulled forward at the bottom and rotated down until it rests with the low-pressure (outer) side facing the airlock ceiling (middeck floor). The linkage mechanism guides the hatch from the close/open, open/close position with friction restraint throughout the stroke. The hatch has a hold-open hook that snaps into place over a flange when the hatch is fully open. The hook is released by depressing the spring-loaded hook handle and pushing the hatch toward the closed position. To support and protect the hatch against the airlock ceiling, the hatch incorporates two deployable struts. The struts are connected to the hatch linkage mechanism and are deployed when the hatch linkage mechanism is rotated open. When the hatch latches are rotated closed, the struts are retracted against the hatch.

The airlock hatches can be removed in flight from the hinge mechanism via pip pins, if required.

An air circulation system provides conditioned air to the airlock during non-EVA operation periods. The airlock revitalization system duct is attached to the outside airlock wall at launch. When the airlock hatch is opened in flight, the duct is rotated by the flight crew through the cabin and airlock hatch and installed in the airlock. It is held in place by a strap holder. The duct has a removable air diffuser cap on the end of the flexible duct that can adjust the air flow from zero to 216 pounds per hour. The duct must be rotated out of the airlock before the cabin and airlock hatch is closed for airlock depressurization. During the EVA preparation period, the duct is rotated out of the airlock and can be used as supplemental air circulation in the middeck.

To assist the crew member in pre- and post-EVA operations, the airlock incorporates handrails and foot restraints. Handrails are located alongside the avionics and environmental control and life support system panels. Oval aluminum alloy handholds 0.75 by 1.32 inches are mounted in the airlock. They are painted yellow. The handrails are bonded to the airlock walls with an epoxy-

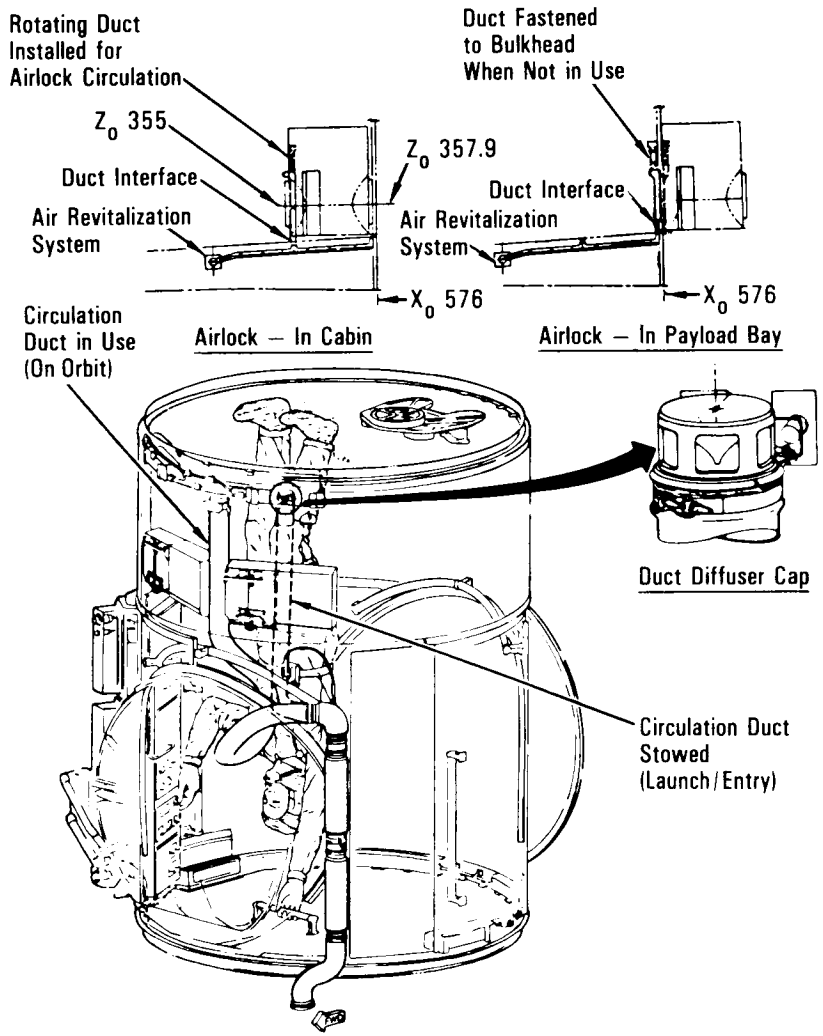


*Airlock*

phenolic adhesive. Each handrail has a clearance of 2.25 inches from the airlock wall to allow gripping in a pressurized glove. Foot restraints are installed on the airlock floor nearer the payload bay side. A ceiling handhold installed nearer the cabin side of the airlock was removed to make room to stow a third EMU. The foot restraints can be rotated 360 degrees by releasing a spring-loaded latch and lock every 90 degrees. A rotation release knob on the foot restraint is designed for shirt-sleeve operation; therefore, it must be positioned before the suit is donned. The foot restraint is bolted to the floor and cannot be removed in flight. It is sized for the EMU boot. The crew member first inserts his foot under the toe bar and then rotates his heel from inboard to outboard until the heel of the boot is captured.

There are four floodlights in the airlock. The lights are controlled by switches in the airlock on panel AW18A. Lights 1, 3 and 4 are controlled by a corresponding *on/off* switch on panel AW18A. Light 2 can be controlled by an *on/off* switch on panels AW18A and M013Q, allowing illumination of the airlock prior to entry. Lights 1, 3 and 4 are powered by main buses A, B and C, respectively, and light 2 is powered by essential bus 1 BC. The circuit breakers are on panel ML86B.

The airlock provides stowage for two EMUs, two service and cooling umbilicals and miscellaneous support equipment. Both EMUs are mounted on the airlock walls by means of an airlock adapter plate.

The prime contractor to NASA for the space suit and life support system is United Technologies' Hamilton Standard Division in Windsor Locks, Conn. Hamilton Standard is program systems manager, designer and builder of the space suit and life support system. Hamilton Standard's major subcontractor is ILC Dover of Frederica, Del., which fabricates the space suit.

The EMUs provide the necessities for life support, such as oxygen, carbon dioxide removal, a pressurized enclosure, temperature control and meteoroid protection during EVA.

The EMU space suit comes in various sizes so that flight crew members can pick their suits before launch. Components are designed to fit men and women from the 5th to the 95th percentiles of body size.

The self-contained life support system contains seven hours of expendables, such as oxygen, a battery for electrical power, water for cooling, lithium hydroxide for carbon dioxide removal and a 30-minute emergency life support system during an EVA.

The airlock adapter plate in the airlock also provides a fixed position for the EMUs to assist the crew member during donning, doffing, checkout and servicing. The EMU weighs approximately 225 pounds, and its overall storage envelope is 26 by 28 by 40 inches. For launch and entry, the lower torso restraint, a cloth

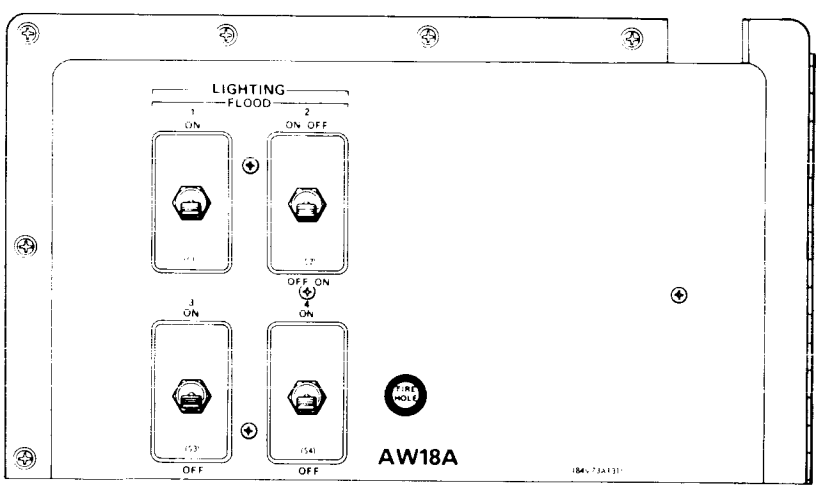


*Panel AW18A*

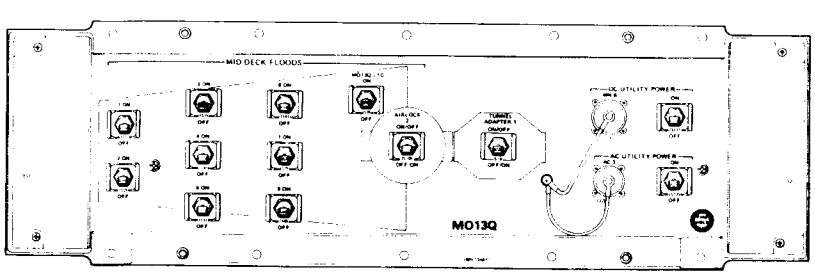


*Panel M013Q*

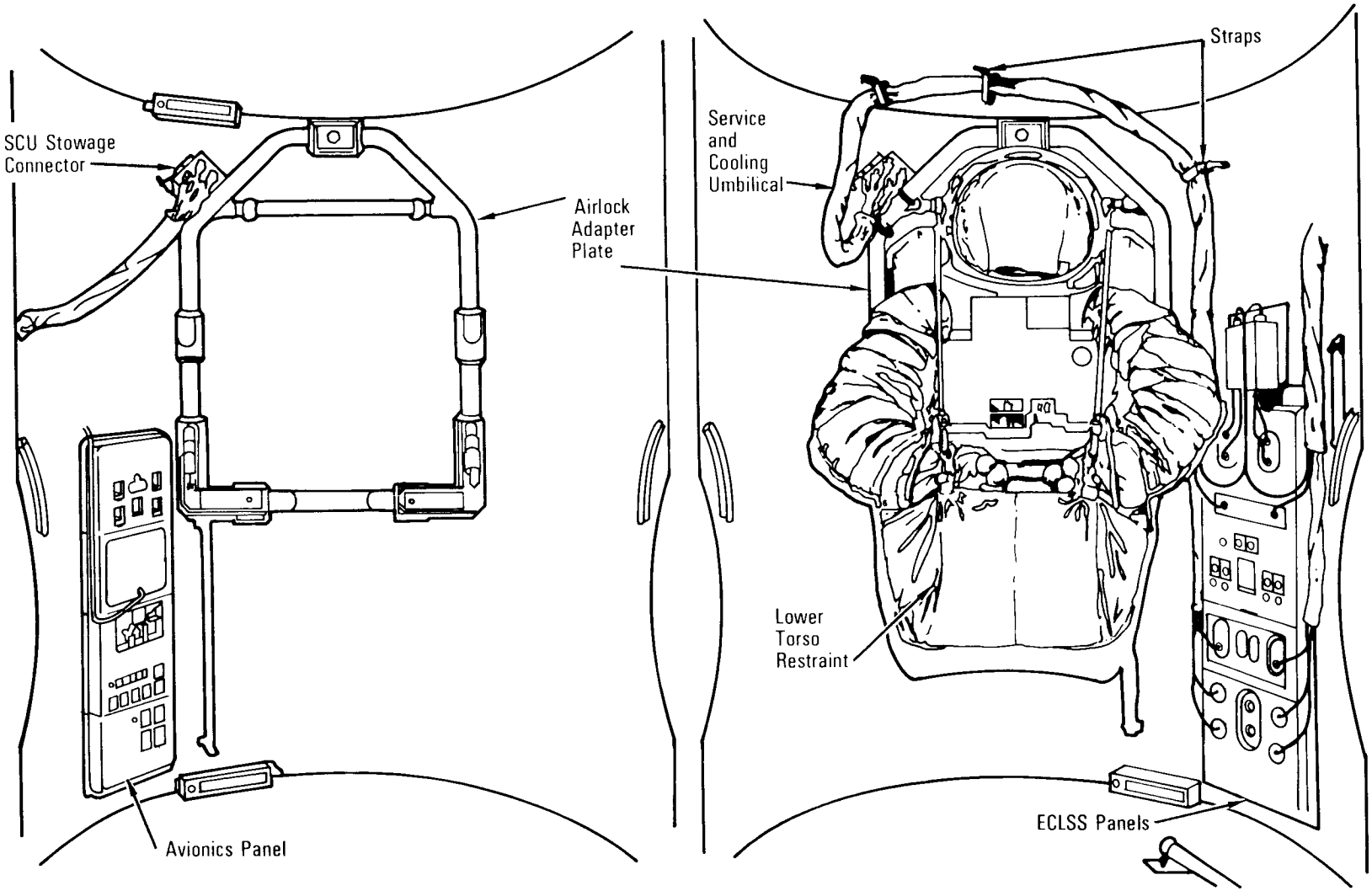


*Airlock Stowage Provisions*

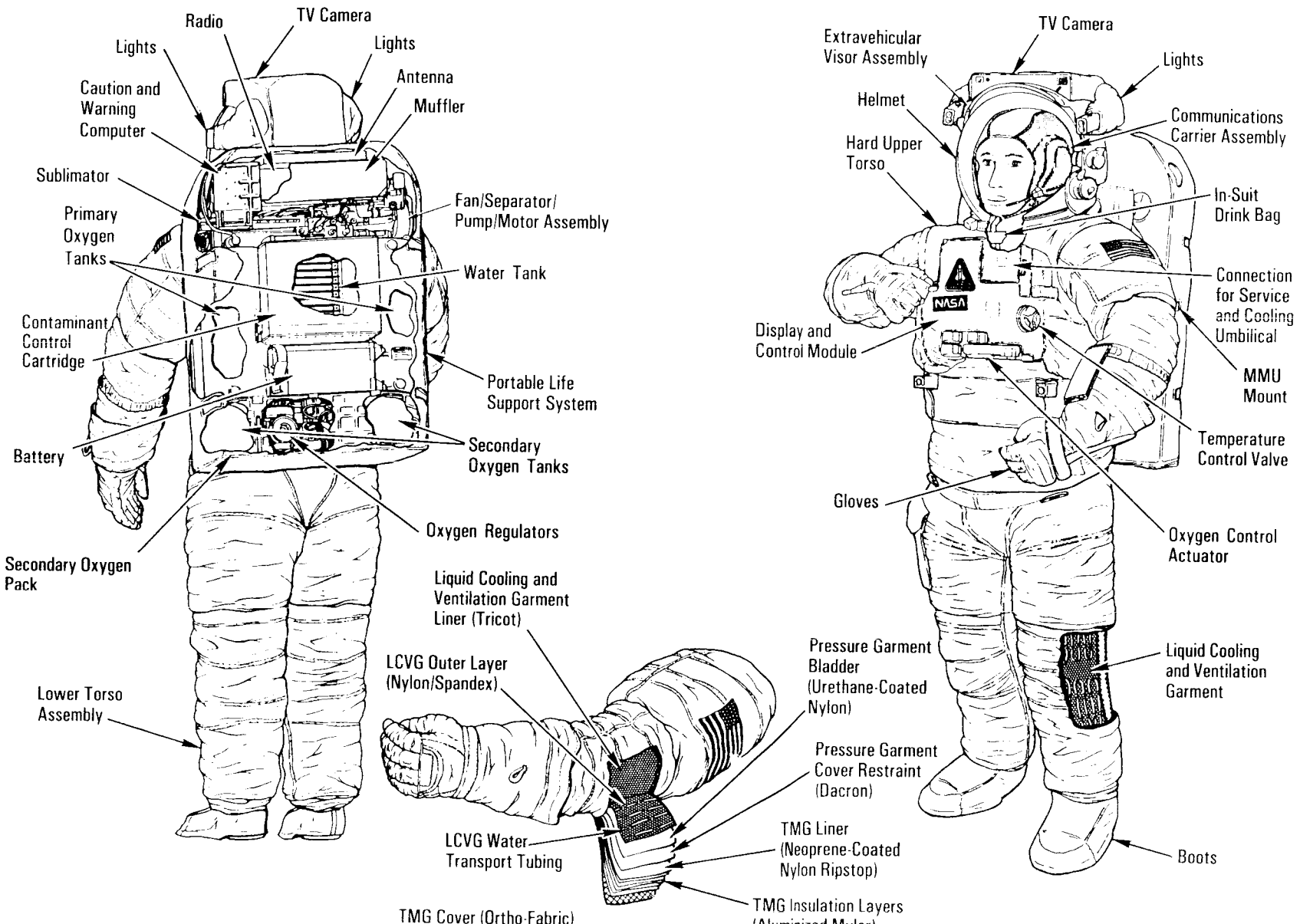


*Extravehicular Mobility Unit*

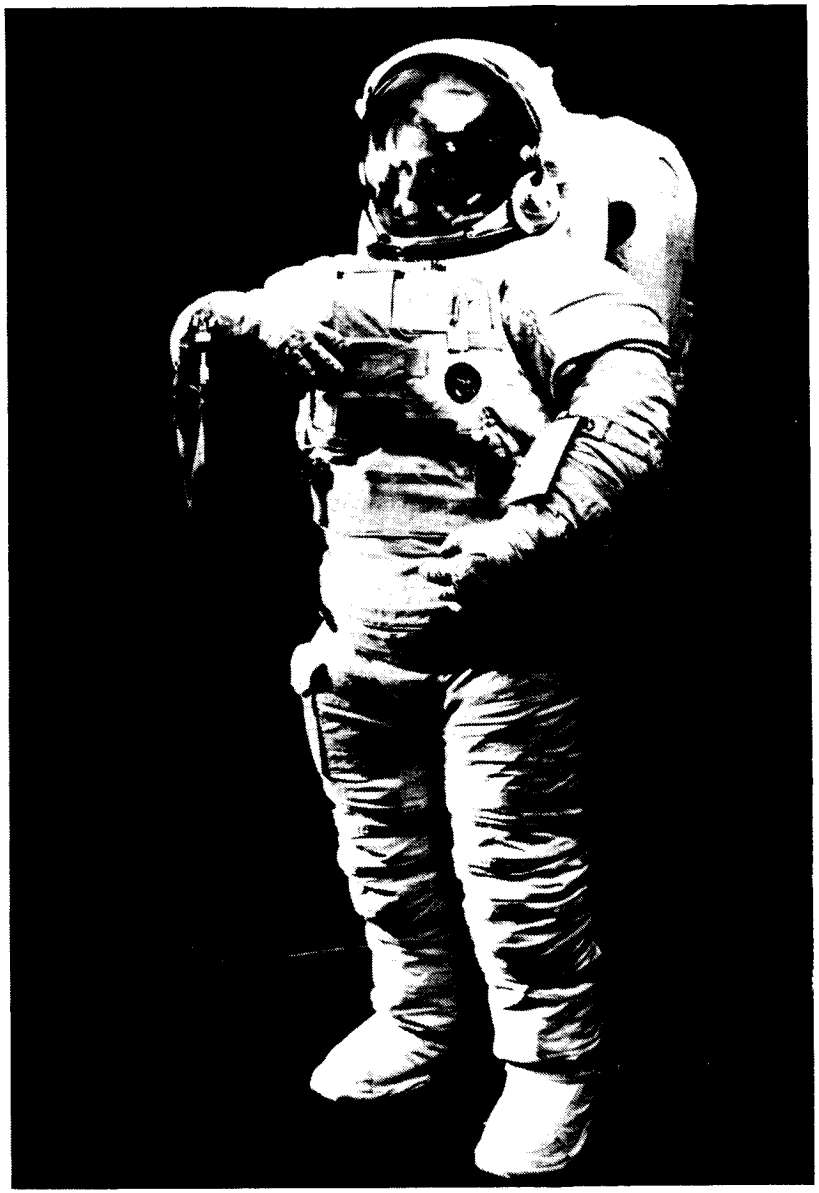

*Extravehicular Mobility Unit*

bag attached to the airlock adapter plate with straps, is used to hold the lower torso and arms securely in place.

The EMU is pressurized to 4 psid. It is designed for a 15-year life with cleaning and drying between flights. The EMU consists of a hard upper torso, lower torso assembly, gloves, helmet and visor assembly, communications carrier assembly, liquid cooling and ventilation garment, urine collection device and operational bioinstrumentation system. The upper torso, including arms, is that portion of the pressure suit above the waist, excluding the gloves and helmet. It provides the structural mounting for most of the EMU—helmet, arms, lower torso, portable life support system, display and control module and electrical harness. The arm assembly contains the shoulder joint and upper arm bearings that permit shoulder mobility as well as the elbow joint and wrist bearing.

The PLSS is made of fiberglass and provides a mounting for other EMU components. It includes oxygen bottles; water storage tanks; a fan, separator and pump motor assembly; a sublimator; a contaminant control cartridge; various regulators, valves and sensors; communications; bioinstrumentation; and a microprocessor module. The secondary oxygen pack attaches to the bottom of the PLSS. The PLSS expendables include 1.2 pounds of oxygen pressurized to 850 psia in the primary bottles, 2.6 pounds of oxygen at 6,000 psia in the secondary pack, 10 pounds of water for cooling in three bladders and lithium hydroxide in the contaminant control cartridge.

The primary oxygen system and water bladders provide enough of these expendables for seven hours inside the EMU, including 15 minutes for checkout, six hours of EVA, 15 minutes for EMU doffing and 30 minutes for reserve. The SOP will supply oxygen and maintain suit pressure for 30 minutes in the event of a failure in the primary system or depletion of the primary oxygen system.

The lower torso assembly is that portion of the EMU below the waist, including boots. It consists of pants and hip, knee and

ankle joints. The lower torso comes in various sizes and connects to the hard upper torso by a waist ring. It is composed of several layers, beginning with a pressure bladder of urethane-coated nylon, a restraining layer made of Dacron, an outer thermal garment made of neoprene-coated nylon, four layers of aluminized Mylar and a surface layer of Gortex and Nomex. The foot section consists of specialized socks that contain return air ports. The EVA crew members' feet are fitted with boot inserts that fit into the boots.

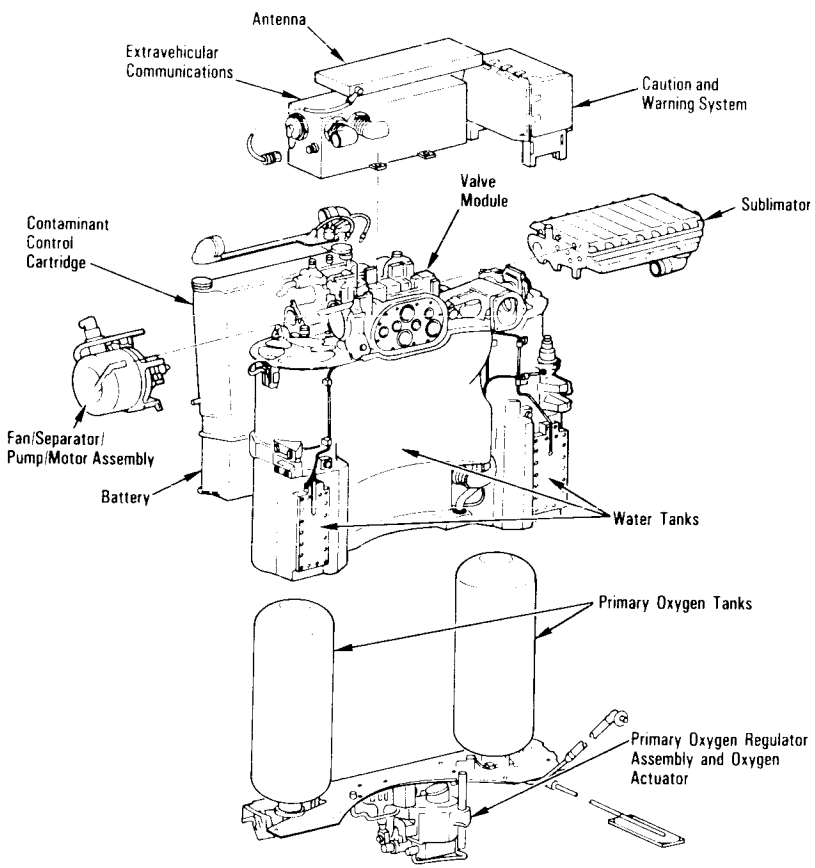


*Portable Life Support System*

The gloves contain the wrist connection, wrist joint and insulation padding for palms and fingers. They connect to the arms and are available in 15 sizes.

The helmet is a clear polycarbonate bubble with a neck disconnect and ventilation pad that provides pressurization for the head. An assembly that goes over the helmet contains visors that are manually adjusted to shield the EVA crew members' eyes from micrometeoroids and from ultraviolet and infrared radiation from the sun. Two EVA lights are attached on each side of the helmet. A TV camera can also be attached to the helmet.

A cap, known as the Snoopy cap, is worn under the EMU helmet. It fits over the crew member's head and is held in place by

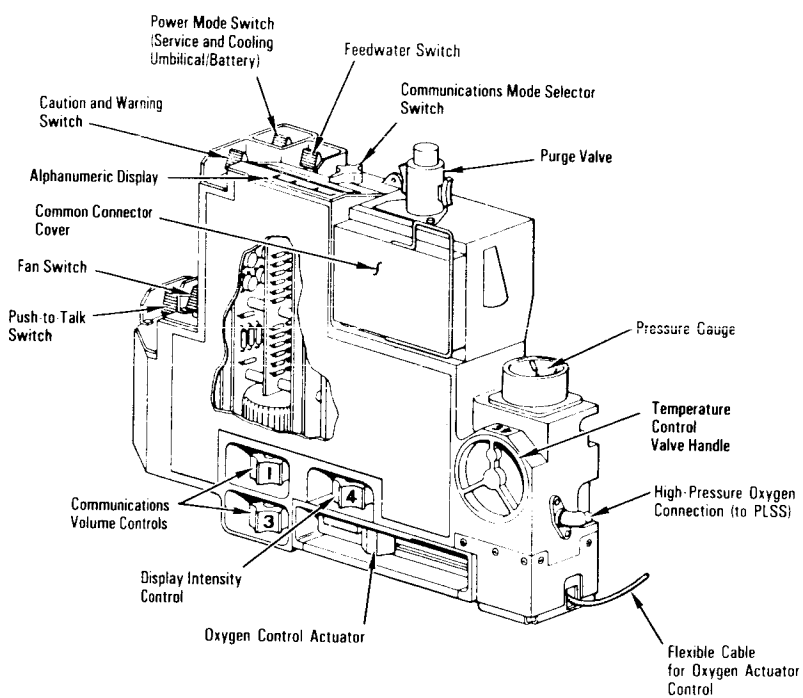


*Displays and Controls*

a chin guard. It contains a microphone and headphones for two-way communications and receiving caution and warning tones.

The liquid cooling and ventilation garment worn by the EVA crew member under the pressure suit has sewn-in tubes. It provides circulation of cooling water and pickup of vent flow at the extremities. It is a mesh one-piece suit made of spandex and has a zipper in the front for entry. It has 300 feet of plastic tubing that carries cooling water at a rate of 240 pounds per hour. It is controlled by a valve on the display and control module. Ducting along the garment's arms and legs directs oxygen and carbon dioxide from the suit to the life support system for purification and recirculation. The garment weighs 6.5 pounds and provides cooling to maintain desired body temperature and physical activity that nominally generates 1,000 Btu per hour and can generate up to 2,000 Btu per hour, which is considered extremely vigorous.

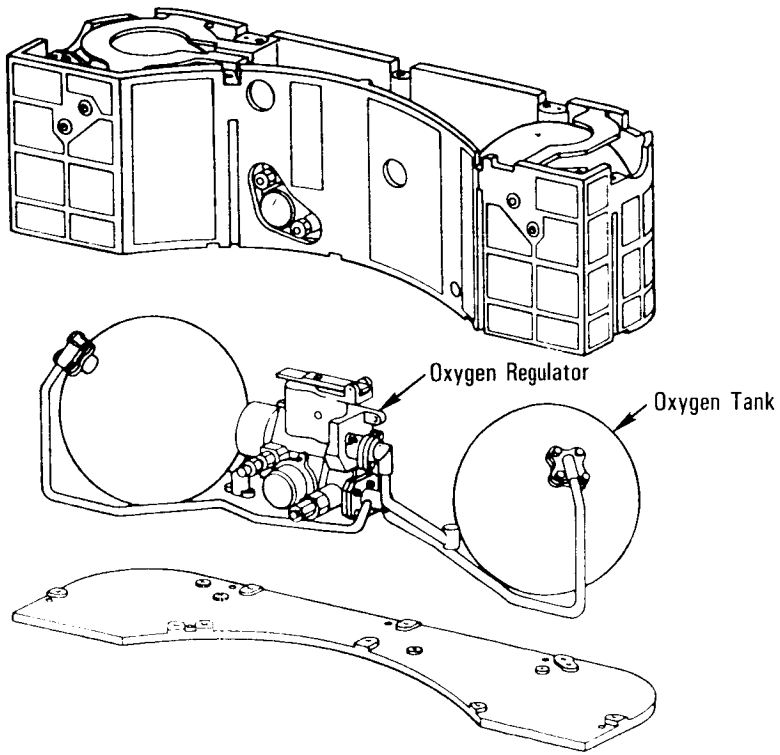


*Secondary Oxygen Package*

The urine collection device collects urine. It can store approximately 1 quart of urine. It consists of adapter tubing, a storage bag and disconnect hardware for emptying after an EVA to the orbiter waste water tank.

The bioinstrumentation system monitors the EVA crew member's heart rate (electrocardiogram) during an EVA.

An in-suit drink bag stores approximately 0.5 of a quart of drinking water in the upper torso. A tube from the upper hard torso to the helmet permits the EVA crew member to drink water while suited.

The life support system consists of the portable life support system, display and control module, contaminant control cartridge, battery, secondary oxygen pack, and EVA communicator and EMU antenna. The PLSS is also referred to as a backpack. The PLSS normally provides the EVA crew member with oxygen for breathing, ventilation and pressurization and water for cooling.

The contaminant cartridge consists of lithium hydroxide, charcoal and filters to remove carbon dioxide, odors, particulates and other contaminants from the ventilation circuit. It is replaceable upon completion of an EVA.

A silver-zinc battery provides all electrical power used by the EMU and life support system. It is stored dry, filled, sealed and charged before flight. It is rechargeable upon completion of an EVA and is rated at 17 volts dc.

The SOP provides oxygen for breathing, ventilation, pressurization and cooling in the event of a PLSS malfunction. It is mounted at the base of the PLSS and contains a 30-minute oxygen supply, a valve and a regulator assembly.

The EVA communicator and EMU antenna provide EVA communications via its transceiver and antenna between the suited crew member and the orbiter. In addition, the crew member's electrocardiogram is telemetered through the communicator to the orbiter. It is a separate subassembly that attaches to the upper portion of the life support system at the back of the hard upper torso. The controls are located on the display and control module mounted at the front of the upper torso.

The radios for space walk communications have two single-UHF-channel transmitters, three single-channel receivers and a switching mechanism. In addition, telemetry equipment is included so that ground personnel can monitor the astronaut's heart beat. These backpack radios have a low-profile antenna, a 1-foot-long rectangular block fitted to the top of the packs. The radios weigh 8.7 pounds and are 12 inches long, 4.3 inches high and 3.5 inches wide.

The EMU electrical harness provides biomedical instrumentation and communications connections to the PLSS. The harness connects the communications carrier assembly and the biomedical instrumentation subsystem to the hard upper torso, where internal connections are routed to the EVA communicator. The cable routes signals from the electrocardiogram sensors, which are attached to the crew member, through the bioinstrumentation system to the EVA communicator. It also routes caution and warning signals and communications from the communicator to the crew member's headset.

The DCM is an integrated assembly that attaches directly to the front of the hard upper torso. The module contains a series of mechanical and electrical controls, a microprocessor, and an alphanumeric LED display easily seen by a crew member wearing the space suit. It contains the displays and controls associated with the operation of the EMU.

The function of the display and control module is to enable the crew member to control the PLSS and the secondary oxygen pack. It also indicates the status of the PLSS, the suit and, the manned maneuvering unit (when it is attached) visibly and audibly.

The mechanical controls consist of a suit purge valve, the liquid cooling and ventilation garment cooling valve, and the oxygen actuator control, which has four positions: *off*, *iv* (which turns primary oxygen on to a 0.5-psid suit pressure setting), *press* (which turns primary oxygen on to a 4.1-psid suit pressure setting), and *ev* (which leaves primary oxygen on the 4.1-psid setting and turns the secondary oxygen pack on). The electrical controls include a voice communications mode switch, dual volume controls, push-to-talk switches, a power mode switch, feedwater and C/W switches and the LED display brightness control. The displays on the module are a 12-digit LED display, a built-in test equipment indicator and an analog suit pressure gauge.

The display and control module is connected to the hard upper torso and to the PLSS by both internal and external hookups. A multiple-function connector links the display module to the service and cooling umbilical, thus enabling the use of the display module controls during suit checkout inside the airlock station.

The display module interacts with a microprocessor in the PLSS that contains a program that enables the crew member to cycle the display through a series of systems checks and thereby determine the condition of a variety of components. The microprocessor monitors oxygen pressure and calculates the time remaining at the crew member's present use rate. It signals an alarm at high oxygen use in the primary oxygen tanks. It also monitors water pressure and temperature in the cooling garment. The carbon dioxide level is monitored and an alarm is signaled when it reaches high concentrations in the suit. The microprocessor monitors the power consumed and signals at high current-drain rates and also when an estimated 30 minutes of battery power is left. All the warnings are displayed on the LED display.

The display module also has a fiber-optic cable that is used when the MMU is connected to the EMU. The fiber-optic cable connects the display unit to the MMU. A fiber-optic cable is more reliable and more covenient and safer to use than an electrical connector for extravehicular applications. The MMU is mounted on the back of the portable life support system. When the MMU is connected, the display module also provides a cycled readout of propellant pressures, temperatures, and battery condition (in the

MMU) and an audible thruster cue. The C/W system warns of low propellant, low battery, and failed components.

Oxygen from the system enters the suit at the helmet and flows from behind the head down through the suit. Oxygen and carbon dioxide are removed from the suit through the liquid cooling and ventilation garment at ports near the crew member's wrists and feet. Return air goes first through the contaminant control cartridge, where activated charcoal and lithium hydroxide beds remove carbon dioxide, odors and dust. From there the return air goes through a water separator, where moisture from exhalation and the lithium hydroxide and carbon dioxide reaction is removed. The oxygen then goes through the fan, which maintains air flow at 6 cubic feet per minute. It is then routed through the sublimator, where it is cooled to 85 F, and then passes through a vent and flow detector and back to the suit. Oxygen for the air system is fed from the primary oxygen containers through regulators that maintain suit pressure at 4.1 psid.

The system is protected from suit overpressure, primary oxygen supply depletion or mechanical failure by regulators, sensors and the secondary oxygen pack. The secondary oxygen pack can maintain suit pressure at 3.45 psid. A purge valve on the display and control module allows a crew member to completely replace system oxygen in the suit if, for instance, the carbon dioxide level rises too high too quickly.

The cooling water system takes the warm water from the cooling garment and divides it into two loops. One loop goes to the sublimator, where the water in that loop is cooled and sent back to the cooling control valve. The other loop goes directly back to the cooling control valve, where the loops are recombined and full flow goes back to the cooling garment. Thus, the cooling garment has a constant flow of cooling water at a temperature set by the crew member using the cooling control valve. During the process, the full flow from the cooling garment goes through a gas separator, where gas is removed from the loop, and then through a pump that maintains a flow of 260 pounds per hour. Another side loop circulates 20 pounds per hour through the contaminant control cartridge to cool the lithium hydroxide canister since the lithium hydroxide and carbon dioxide reaction produces heat and needs to be kept cool for an efficient reaction.

Since the system is a closed-loop design, water from the water separator is fed back to the water system, and air from the gas trap is fed back to the oxygen system. Water from the water tanks is also fed, through regulators, into the cooling system. However, the primary purpose of the water tanks is to feed water to the sublimator. The sublimator works on the principle of sublimation, that is, the process by which a solid turns directly into a vapor, bypassing the liquid phase. In this case, ice is formed on the sublimator evaporator sieve and is allowed to vaporize to space, removing heat with it. Air and cooling water are passed through fins in the sublimator, which extracts heat from each system.

The PLSS sensors detect system air flow, air pressure, water flow, water pressure, differential water pressure (between the circulating system and the water tanks), water temperature and carbon dioxide content in the return air. In addition, there are a number of crew-selectable valves, including a purge valve, a cooling control valve (infinitely variable), oxygen supply and a direct-reading air pressure gauge. The sensors supply information to the display and control module, where a microprocessor maintains an automatic watch over system integrity.

Normally, the day before an EVA, the orbiter crew compartment cabin pressure is allowed to decrease from 14.7 psia to 12.5 psia through metabolic usage. One hour before depressurizing the crew compartment from 12.5 psia to 10.2 psia, the EVA crew member and prebreathes 100-percent oxygen for 45 minutes. There are two PEAPs in the airlock. The crew compartment is then depressurized from 12.5 psia to 10.2 psia and remains at this pressure until after the EVA is completed. This is necessary to remove nitrogen from the EVA crew member's blood before the EVA crew member works in the pure oxygen environment of the EMU. Without the prebreathing, bends can occur. When an individual fails to reduce nitrogen levels in the blood before working in a pressure condition, it can result in nitrogen coming out of solution in the form of bubbles in the bloodstream. This condition results in pain in the body joints, possibly because of restricted

blood flow to connective tissues or because of the extra pressure caused by bubbles in the blood in the joint area.

In preparation for an EVA, the crew member dons the liquid cooling and ventilation garment first, enters the airlock and dons the lower torso assembly. The crew member then squats under the hard upper torso mounted on the airlock adapter plate and slides up into the upper torso. The upper and lower torsos are connected with a waist ring. The gloves and helmet are then put on, and the EMU is disconnected from the AAP.

The orbiter provides electrical power, oxygen, liquid cooling and ventilation garment cooling and water to the EMUs in the airlock via the service and cooling umbilical for EVA preparation and after EVA operations.

The service and cooling umbilical contains communication lines, electrical power, water, water drain line and oxygen recharge

*Extravehicular Mobility Unit*

lines. The umbilical permits the EVA crew member to check out the suit in the airlock without using the EMU supply of water, oxygen and battery power.

The SCU is launched with the orbiter end fittings permanently connected to the appropriate ECLSS panels in the airlock and the EMU connected to the airlock adapter plate stowage connector. It allows all supplies (oxygen, water, electrical and communication) to be transported from the airlock control panels to the EMU before and after EVA without using the EMU expendable supplies of water, oxygen and battery power that are scheduled for use in the EVA. The SCU also provides EMU recharge. The SCU umbilical is disconnected just before the crew member leaves the airlock on an EVA and is reconnected when he returns to the airlock. Each SCU is 144 inches long, 3.5 inches in diameter and weighs 20 pounds. Actual usable length after attachment to the control panel is approximately 7 feet.

The airlock has two display and control panels. The airlock control panels are basically split to provide either ECLSS or avionics operations. The ECLSS panel provides the interface for the SCU waste and potable water, liquid cooling and ventilation garment cooling water, EMU hardline communications, EMU power and oxygen supply. The avionics panel includes the airlock lighting, airlock audio system and EMU power and battery recharge controls. The avionics panel is located on the right side of the cabin airlock hatch and the ECLSS panel is on the left side. The airlock panels are designated AW18H, AW18D and AW18A on the left side and AW82H, AW82D and AW82B on the right side. The ECLSS panel is divided into EMU 1 functions on the right side and EMU 2 functions on the left.

Airlock communications are provided with the orbiter audio system at airlock panel AW82D, where connectors for the headset interface units and the EMUs are located at airlock panel AW18D, the airlock audio terminal. The HIUs are inserted in the crew member communications carrier unit connectors on airlock panel AW82D. The CCUs are also known as the Snoopy caps. The adjacent two-position switches labeled *CCU1* and *CCU2 power* enable transmit functions only, as reception is normal as soon as the

HIUs are plugged in. The EMU 1 and EMU 2 connectors on the panel to which the SCU is connected include contacts for EMU hardline communications with the orbiter before EVA. Panel AW18D contains displays and controls used to select access to and control the volume of various audio signals. Control of the airlock audio functions can be transferred to the middeck ATUs on panel M042F by placing the control knob to the *middeck* position.

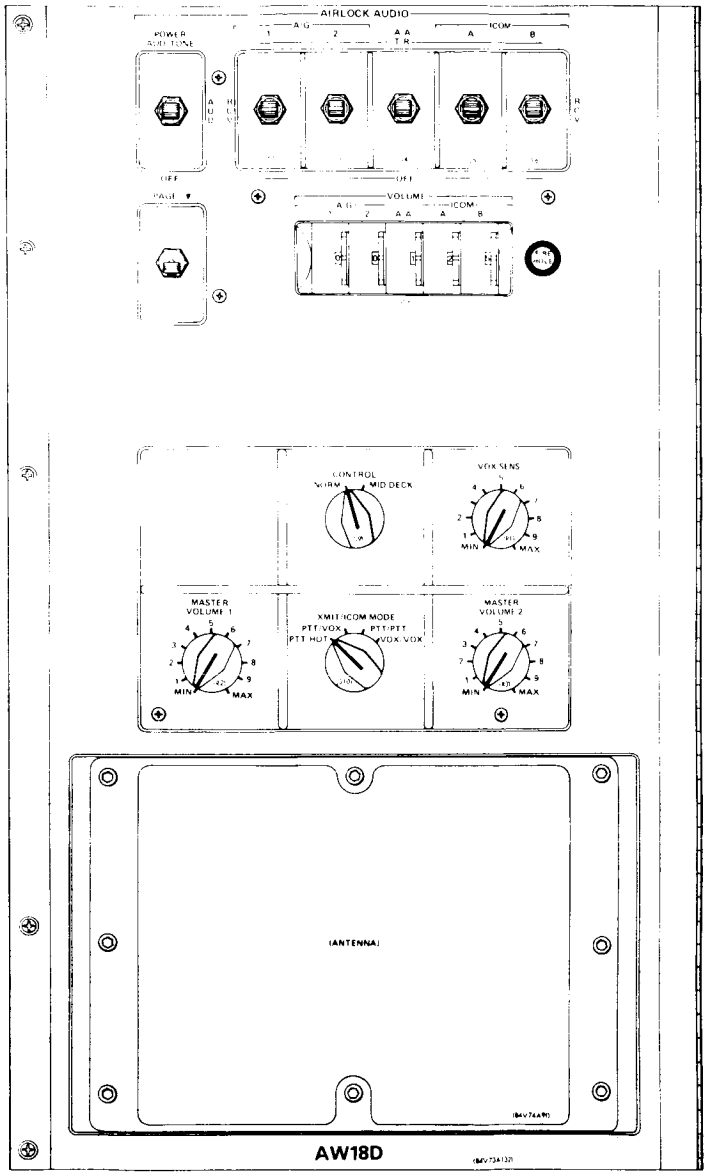


*Panel AW18D*

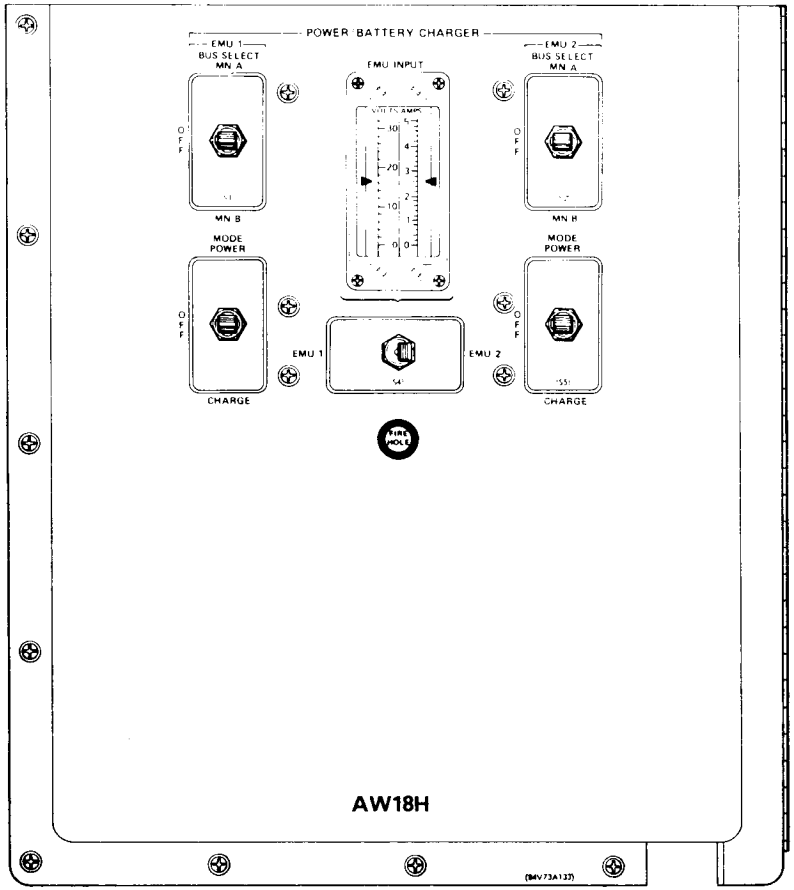


*Panel AW18H*

During EVA, the EVA communicator is part of the same UHF system that is used for air-to-air and air-to-ground voice communications between the orbiter and landing site control tower. The EVA communicator provides full duplex (simultaneous transmission and reception) communications between the orbiter and the EVA crew members. It also supplies continuous data reception of electrocardiogram signals from each crew member by the orbiter and processing by the orbiter and relay of electrocardiogram signals to the ground. The UHF airlock antenna in the forward portion of the payload bay provides the UHF EVA capability.

Panel AW18H in the airlock provides 17 volts dc, plus or minus 0.5 volt dc, at 5 amperes at both EMU electrical connector panels on panel AW82D and in EVA preparation. Main bus A or B can be selected on the *bus select* switch; then the *mode* switch is positioned to *power*. The *bus select* switch provides a signal to a remote power controller that applies 28 volts dc from the selected bus to the power and battery recharger. The *mode* switch in the *power* position makes the power available at the SCU connector and also closes a circuit that provides a battery feedback voltage charger control that inhibits EMU power when any discontinuity is sensed in the SCU/EMU circuitry. The *mode* switch in the *power* position also applies power through the SCU for the EMU microphone amplifiers for hardline communication. When the SCU umbilical is disconnected for EVA, the EMU operates on its self-contained battery power. After EVA, when the SCU is reconnected to the EMU, selecting a bus and the *charge* position on the *mode* switch charges the PLSS battery at 1.55 amps, plus or minus 0.05 amp. When the battery reaches 21.8 volts dc, plus or minus

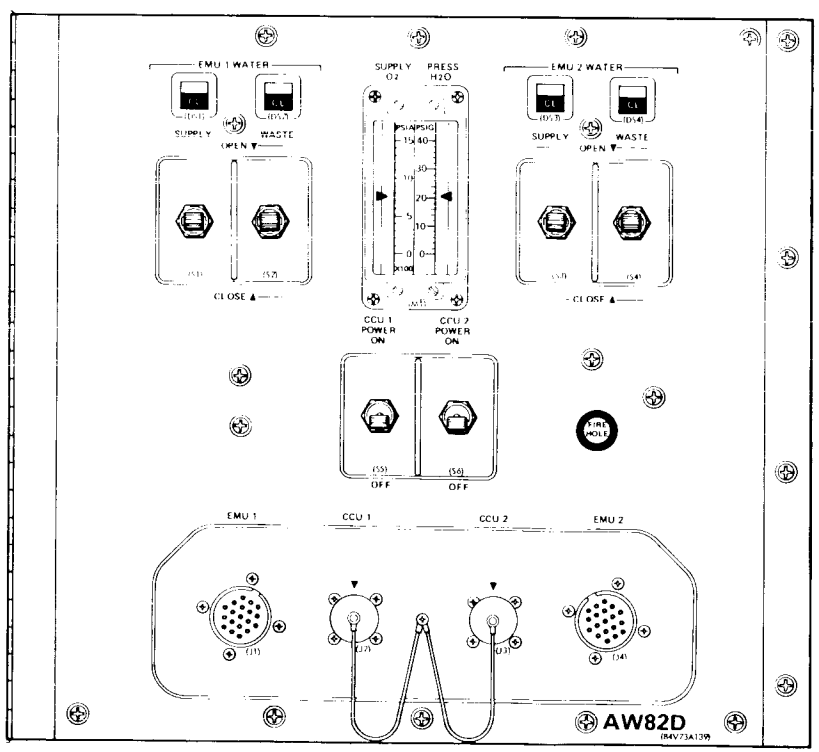


*Panel AW82D*

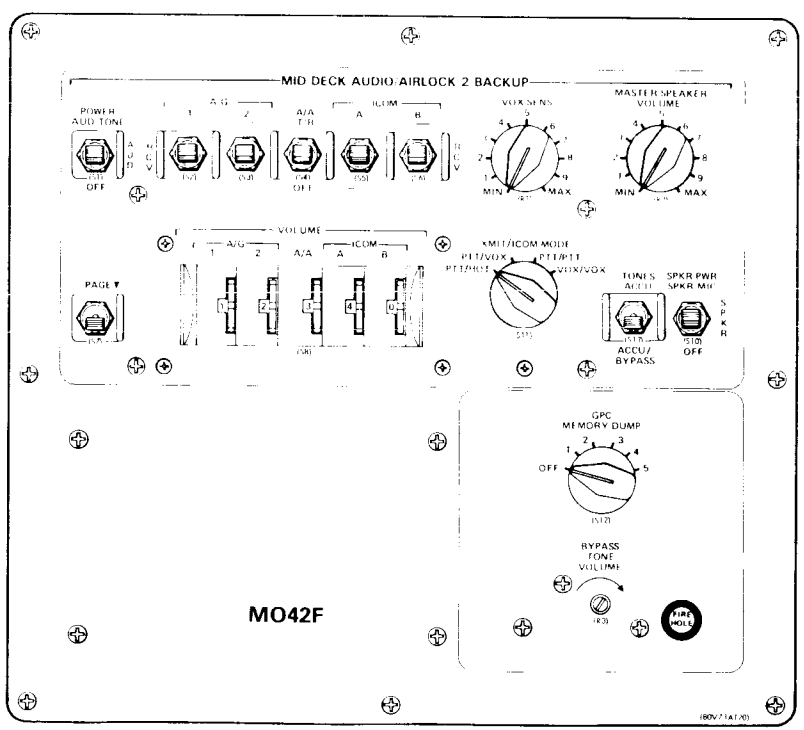


*Panel M042F*

0.1 volt dc, or the charging circuit exceeds 1.55 amps, plus or minus 0.05 amp, a solenoid-controlled switch internal to the battery charger removes power to the charging circuitry.

Cooling for flight crew members before and after the EVA is provided by the liquid-cooled garment circulation system via the SCU and LCG supply and return connections on panel AW82B. These connections are routed to the orbiter LCG heat exchanger, which transfers the collected heat to the orbiter Freon-21 coolant loops. The nominal loop flow of 250 pounds per hour is provided by the EMU and PLSS water loop pump. The system circulates chilled water at 50 F maximum to the liquid cooling and ventilation garment inlet and provides a heat removal capability of 2,000 Btu per hour per crew member. When the SCU is disconnected, the PLSS provides the cooling. Upon return from the EVA, the PLSS is reconnected to the SCU, and crew member cooling is as it was in the EVA preparation.

With the suit connected to the SCU, oxygen at 900 psia, plus or minus 500 psia, is supplied through airlock panel AW82B from the orbiter's oxygen system when the oxygen valve is in the *open* position on the airlock panel. This provides the suited crew member with breathing oxygen and prevents depletion of the PLSS oxygen tanks before the EVA. Before the crew member seals the helmet, an oxygen purge adapter hose is connected to the airlock panel to flush nitrogen out of the suit.

When the SCU is disconnected, the PLSS provides oxygen for the suit. When the EVA is completed and the SCU is reconnected, the orbiter's oxygen supply begins recharging the PLSS, assuming that the oxygen valve on panel AW82B is open. Full oxygen recharge takes approximately one hour (allowing for thermal expansion during recharge), and the tank pressure is monitored on the EMU display and control panel as well as on the airlock oxygen pressure readout.

The EMU water supply and waste valves are opened during the EVA preparation by switches on panel AW82D. This provides the EMU, via the SCU, access to the orbiter's potable water and waste water systems. The support provided to the EMU PLSS is further controlled by the EMU display and control panel. Potable water (supplied from the orbiter at 16 psi, plus or minus 0.5 psi; 100 to 300 pounds per hour; and 40 to 100 F) is allowed to flow to the feedwater reservoir in the EMU that provides pressure, which would top off any tank not completely filled. Waste water condensate developed in the PLSS is allowed to flow to the orbiter waste water system via the SCU whenever the regulator connected at the bacteria filters (airlock end of the SCU) detects upstream pressure in excess of 16 psi, plus or minus 0.5 psi.

When the SCU is disconnected from the EMU, the PLSS assumes its functions. When the SCU is reconnected to the EMU upon completion of the EVA, it performs the same functions it did before the EVA except that the water supply is allowed to continue until the PLSS water tanks are filled, which takes approximately 30 minutes.

In preparation for the EVA, the airlock hatch to the orbiter crew cabin is closed and depressurization of the airlock begins.

Airlock depressurization is accomplished in two stages by a three-position valve located on the ECLSS panel AW82A in the airlock. The airlock depressurization valve is covered with a pressure and dust cap. Before the cap is removed from the valve, it is necessary to vent the area between the cap and valve by pushing the vent valve on the cap. In flight the pressure and dust cap is stored next to the valve. The airlock depressurization valve is connected to a 2-inch-inside-diameter stainless steel overboard vacuum line. The airlock depressurization valve controls the rate of depressurization by varying the valve's diameter. Closing the valve prevents any air flow from escaping to the overboard vent system.

When the crew members have completed the 40-minute prebreathe in the EMUs, the airlock is depressurized from 10.2 psia to 5 psia by moving the airlock depressurization valve to the 5 position, which opens the depressurization valve and allows the pressure in the airlock to decrease at a controlled rate. The airlock depressurization valve must be closed to maintain 5 psia. During depressurization, pressure can be monitored by the delta pressure gauge on either airlock hatch. A delta pressure gauge is installed on each side of both airlock hatches.

At this time, the flight crew performs an EMU suit leak check, electrical power is transferred from the umbilicals to the EMU batteries, the umbilicals are disconnected, and the suit oxygen packs are brought on-line.

The second stage of airlock depressurization is accomplished by positioning the airlock depressurization valve to *0*, which increases the valve's diameter and allows the pressure in the airlock to decrease from 5 psia to zero psia. The suit sublimators are activated for cooling, EMU system checks are performed, and the airlock and payload bay hatch can be opened. The hatch is capable of opening against a 0.2 psia differential maximum.

Hardware provisions are installed in the orbiter payload bay for use by the crew member during the EVA.

Handrails and tether points are located on the payload bulkheads, forward bulkhead station $X_O$ 576 and aft bulkhead station $X_O$ 1307 along the sill longeron on both sides of the bay to provide translation and stabilization capability for EVA crew members and facilitate movement in the payload bay. The handrails are designed to withstand a load of 200 pounds, or 280 pounds maximum, in any direction. Tether attach points are designed to sustain a load of 574 pounds, 804 pounds maximum, in any direction.

The handrails have a cross section of 1.32 inches by 0.75 of an inch. They are made of aluminum alloy tubing and are painted yellow. The end braces and side struts of the handrails are constructed of titanium. An aluminum alloy end support standoff functions as the terminal of the handrail. Each end support standoff incorporates a 1-inch-diameter tether point.

A 25-foot safety tether is attached to each crew member at all times during an EVA.

The tether consists of a reel case with an integral D-ring, a reel with a light takeup spring, a cable and a locking hook. The safety tether hook is locked onto the slidewire before launch, and the cable is routed and clipped along the left and right handrails to a position just above the airlock and payload bay hatch. After opening the airlock hatch but before leaving the airlock, the crew member attaches a waist tether to the D-ring of the safety tether to be used. The other end of the waist tether is hooked to a ring on the EMU waist bearing. The crew member may select either the left or the right safety tether. With the selector on the tether in the locked position, the cable will not retract or reel out. Moving the selector to the unlocked position allows the cable to reel out and the retract feature to take up slack. The cable is designed for a maximum load of 878 pounds. The routing of the tethers follows the handrails, which allows the crew member to deploy and restow his tether during translation.

The two slidewires, approximately 46.3 feet long, are located in the longeron sill area on each side of the payload bay. They start approximately 9.3 feet aft of the forward bulkhead and extend approximately 46.3 feet down the payload bay. The slidewires withstand a tether load of 574 pounds with a safety factor of 1.4 or 804 pounds maximum.

EVA support equipment may consist of a small work station, tool caddies and equipment tethers. The work station contains a universal attachment tether for crew member restraint and a carrying location for the tool caddies. The caddies hold the tools and provide tethers for them when they are not in use.

A cargo bay stowage assembly installed in the orbiter payload bay contains miscellaneous tools for use in the payload bay during an EVA. The CBSA is approximately 42 inches wide, 24 inches deep and 36 inches high. The CBSA weighs 573 pounds.

The airlock and cabin hatch has two pressure equalization valves that can be operated from both sides of the hatch to repressurize the airlock volume. Each valve has three positions—*closed*, *norm* (normal) and *emerg* (emergency)—and is protected by a debris pressure cap on the intake (high-pressure) side of the valve. The pressure cap on the outer hatch must be vented for removal. The caps are tethered to the valves and also have small Velcro spots that allow them to be stored temporarily on the hatch. The exit side of the valve contains an air diffuser to provide uniform flow out of the valve.

Through the use of the equalization valves, the airlock is initially pressurized to 5 psia, and the space suit is connected to the umbilical in the airlock and electrical power is transferred back to umbilical power. After the airlock is pressurized to the 10.2-psia cabin pressure, the EVA crew members remove and recharge their EMUs. Shortly thereafter, the crew compartment cabin is pressurized from 10.2 psia to 14.7 psia.

The orbiter can accommodate three six-hour EVAs by two crew members per flight at no weight or volume cost to the payload. Two of the EVAs are for payload support; the third is reserved for orbiter contingency. Additional EVAs can be considered with consumables charged to payloads.

When fitted with a tunnel adapter, hatches, tunnel extension and tunnel, the middeck airlock permits flight crew members to transfer from the orbiter middeck into the Spacelab pressurized modules, where they can work in a pressurized shirt-sleeve environment. The airlock, tunnel adapter and hatches also permit EVA flight crew members to transfer into the payload bay from the tunnel adapter in the space suit assembly without depressurizing the spacecraft crew cabin and Spacelab.

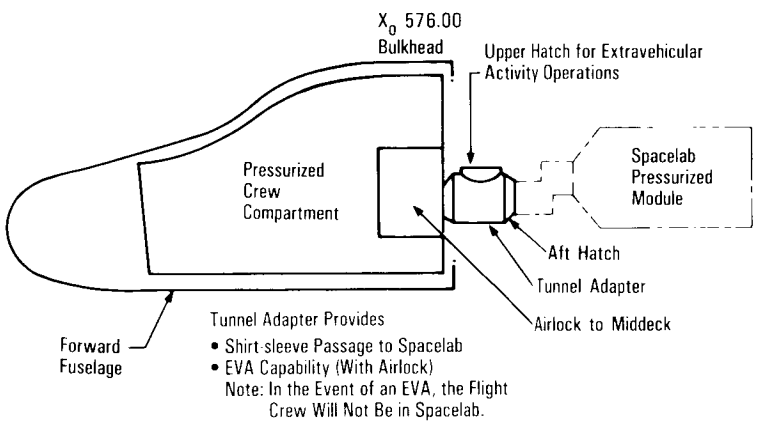


*Airlock/Tunnel Adapter*

The tunnel adapter is located in the payload bay and is attached to the airlock at orbiter station $X_0$ 576 and to the tunnel extension at $X_0$ 660, thus attaching it to the Spacelab tunnel and Spacelab. The tunnel adapter has an inside diameter of 63 inches at the widest section and tapers in the cone area at each end to two 40-inch-diameter D-shaped openings, 36 inches across. An identical D-shaped opening is located at the top of the tunnel adapter. Two pressure-sealing hatches are located in the tunnel adapter: one at the upper area of the tunnel adapter and one at the aft end of the tunnel adapter. The tunnel adapter is constructed of 2219 aluminum and is a welded structure with 2.4- by 2.4-inch exposed structural ribs on the exterior surface and external waffle skin stiffening.

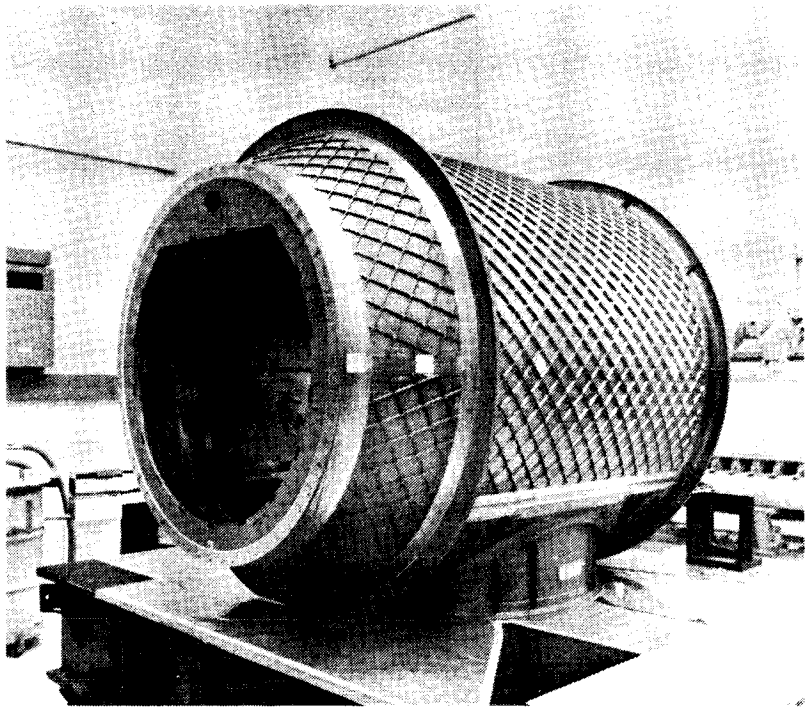

*Tunnel Adapter*

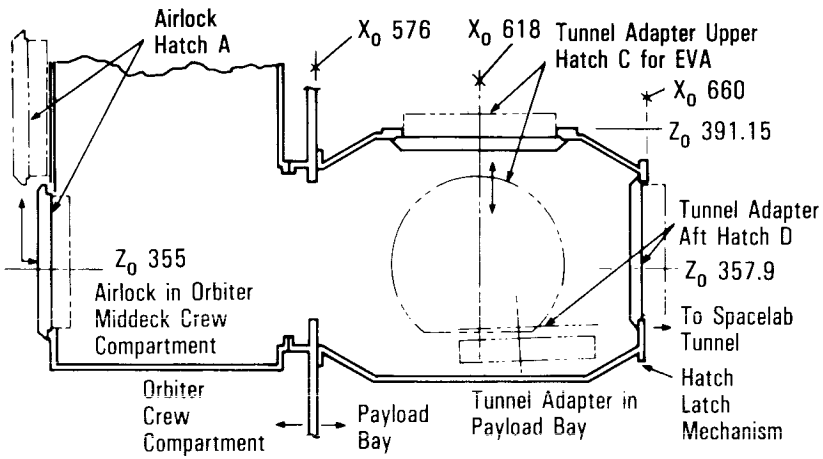


*Airlock and Tunnel Adapter Hatch Mechanical Systems*

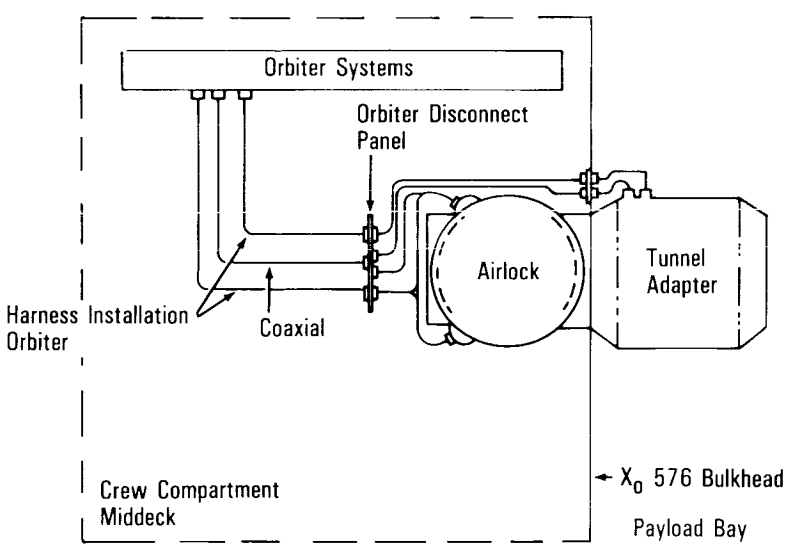


*Airlock/Tunnel Adapter Harness Installation and Coaxial Antenna*

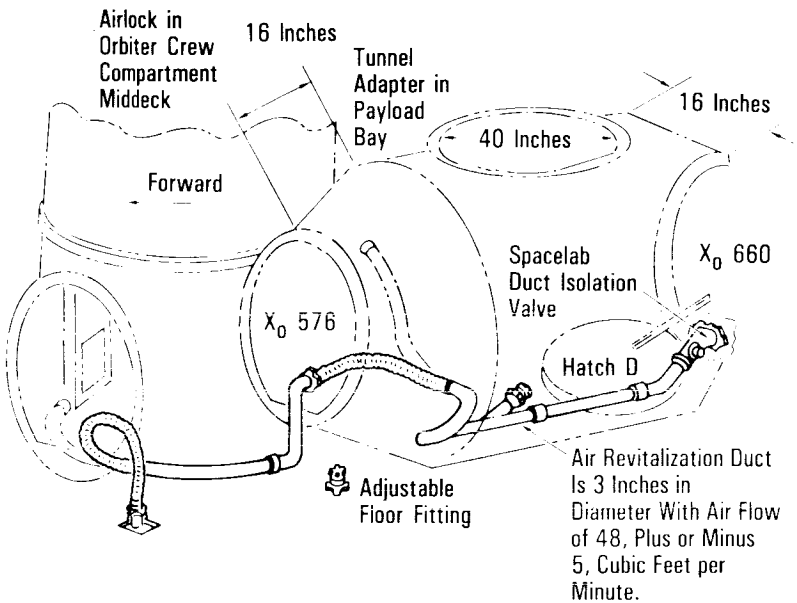


*Air Circulation Duct Routing*



The hatch located in the aft end isolates the tunnel adapter and airlock from the extension tunnel and Spacelab. This hatch opens into the tunnel adapter. The hatch located in the tunnel adapter at the upper D-shaped opening isolates the airlock and tunnel adapter from the unpressurized payload bay when closed and permits EVA crew members to exit the airlock and tunnel adapter to the payload bay when open. This hatch opens into the tunnel adapter.

The two hatches in the tunnel adapter are installed to open toward the primary pressure source and the orbiter crew cabin to achieve pressure-assist sealing when closed.

Each hatch has six interconnected latches (with the exception of the aft hatch, which has 17) with a gearbox and actuator, win-

dow, hinge mechanism and hold-open device, differential pressure gauge on each side and two equalization valves.

The window in each hatch is 4 inches in diameter. The window is used for crew observation from the cabin and airlock, tunnel adapter to tunnel, and tunnel adapter to payload bay. The dual window panes are made of polycarbonate plastic and are mounted directly to the hatch using bolts fastened through the panes. Each hatch window has dual pressure seals with seal grooves located in the hatch.

Each hatch has dual pressure seals to maintain pressure integrity. One seal is mounted on the hatch and the other on the structure. Leak check quick disconnects are installed between the hatches and the pressure seals to verify the hatches' pressure integrity before flight.

The gearbox with latch mechanisms on each hatch allows the flight crew to open or close the hatch during transfers and EVA operation. The gearbox and the latches are mounted on the low-pressure side of each hatch and a gearbox handle is installed on both sides to permit operation from either side of the hatch.

The aft hatch is hinged to be first pulled into the tunnel adapter and then pulled forward at the bottom. The top of the hatch is rotated toward the tunnel and downward until the hatch rests with the Spacelab side facing the tunnel adapter's floor. The linkage mechanism guides the hatch from the close/open, open/close position with friction restraint throughout the stroke. The hatch is held in the open position by straps and Velcro.

The upper (EVA) hatch in the tunnel adapter opens and closes to the left wall of the tunnel adapter. The hatch is hinged to be pulled first into the tunnel adapter and then pulled forward at the hinge area and rotated down until it rests against the left wall of the tunnel adapter. The linkage mechanism guides the hatch from the close/open, open/close position with friction restraint throughout the stroke. The hatch is held in the open position by straps and Velcro. The hatches can be removed in flight from the hinge mechanism via pip pins, if required.

When the airlock hatch is opened on orbit, a duct is connected to the cabin air system to provide conditioned air to the airlock, tunnel adapter and tunnel during non-EVA-operation periods. The duct must be disconnected before the airlock hatch is closed for entry.

For an EVA during a mission with pressurized Spacelab modules, all hatches are closed and depressurization of the airlock tunnel adapter begins. The prebreathe requirements, lowering of cabin pressure to 10.2 psia and space suit preparations, etc., remain the same as for an EVA from the airlock. The difference is that the EVA crew member enters the payload bay from the upper tunnel adapter hatch.

Hardware is installed in the orbiter payload bay and in the tunnel adapter, tunnel and Spacelab for use by the crew member during the EVA.

When EVA is completed, the crew member enters the upper tunnel adapter hatch and closes it. The airlock and tunnel adapter are repressurized in the same manner as when the airlock alone is used.



**CREW ALTITUDE PROTECTION SYSTEM.** The crew altitude protection system is worn by the flight crew members during launch and entry. Oxygen from the orbiter's environmental control and life support system is supplied to the crew members through the CAPS. A skullcap is worn under the helmet. A microphone and headphones are worn over the skullcap for two-way communications and receiving caution and warning tones. The CAPS also incorporates an anti-exposure, anti-gravity suit to prevent pooling of body fluids and to aid in maintaining the circulation of blood during entry. Pooling of body fluids can occur when high "g" loads are imposed on the body, particularly after crew members have had more than 12 hours of zero-gravity activity. The anti-gravity portion of the CAPS is pressurized from the ECLSS oxygen system.

**RADIOISOTOPE THERMOELECTRIC GENERATOR COOLING AND GASEOUS NITROGEN PURGE FOR PAYLOADS.** A radioisotope thermoelectric generator cooling and gas-

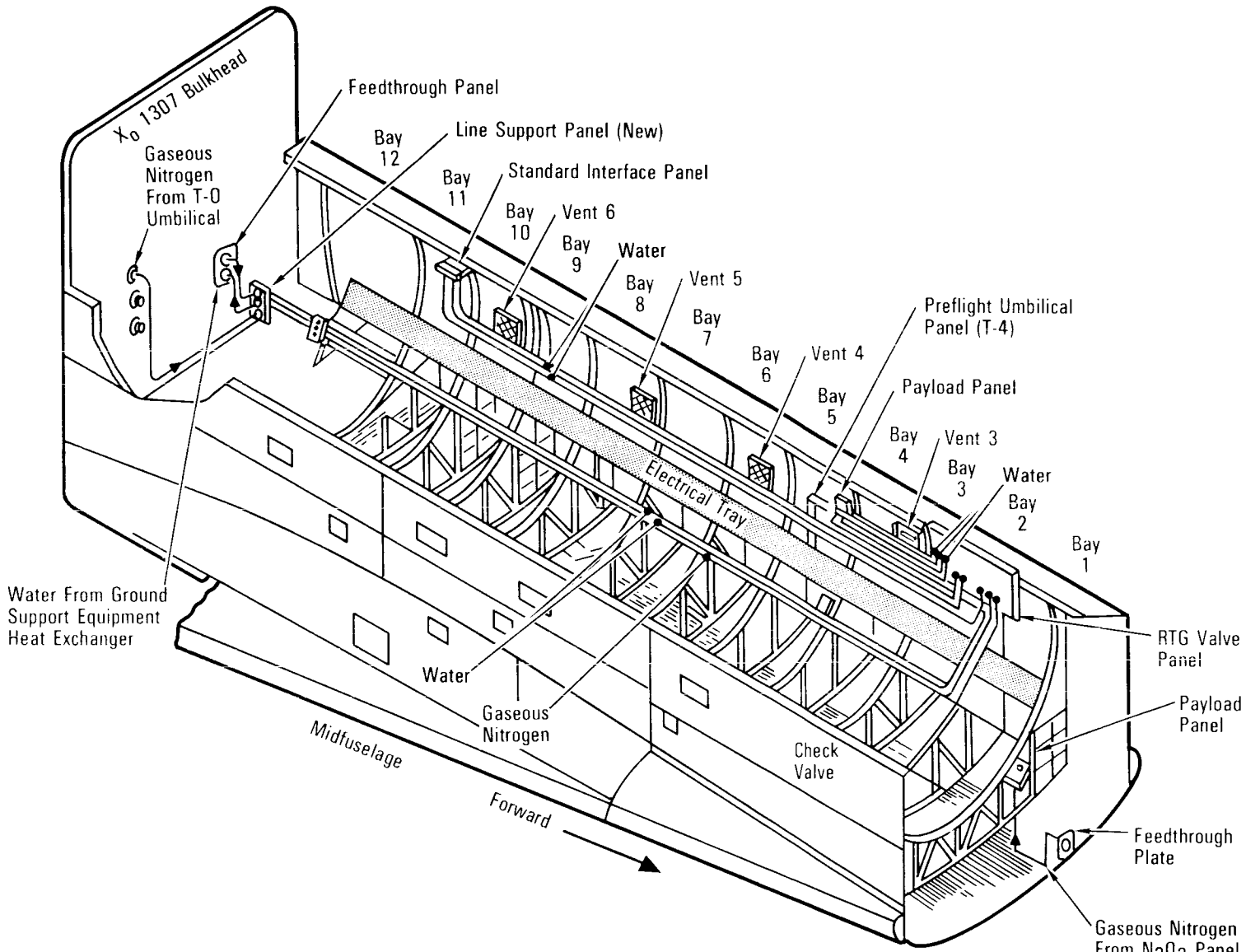


*Water Coolant System for Radioisotope Thermoelectric Generator and Gaseous Nitrogen Purge System for Payload Support in Payload Bay*

eous nitrogen purge system is installed in Discovery (OV-103) and Atlantis (OV-104) to support those payloads with RTGs or gaseous nitrogen purging requirements. The water coolant system lines are located in the aft fuselage and payload bay of the orbiters. The water system flows water through the existing ground support equipment heat exchanger in the aft fuselage. The heat exchanger cools the water from the RTGs and directs it back through the RTGs. An accumulator located in the aft fuselage next to the GSE heat exchanger acts as a reservoir to absorb excess water and is pressurized with gaseous nitrogen. The water preflight servicing umbilical is located at $X_0$ 835.05.

The gaseous nitrogen purge system connects at the existing nitrogen/oxygen panel at the $X_0$ 576 bulkhead. The gaseous nitrogen is directed from the nitrogen/oxygen panel to the existing payload interface panel in the payload bay and provides gaseous nitrogen purging as required by the payload.

Contractors involved with the ECLSS are Hamilton Standard Division of United Technologies Corp., Windsor Locks, Conn. (atmosphere revitalization, Freon-21 coolant loops, heat exchangers, cabin fan assembly, debris trap, carbon dioxide absorber, humidity control heat exchanger, avionics fan, accumulators, flash evaporators, water management panel EVA life support system and EMUs); Carlton Controls, East Aurora, N.Y. (atmosphere revitalization pressure control subsystem and airlock support components); Aerodyne Controls Corp., Farmingdale, N.Y. (water pressure relief valve and oxygen check valve); Aeroquip Corp., Marman, Los Angeles, Calif. (couplings, clamps, retaining straps and flexible air duct); AiResearch Manufacturing Co., Garrett Corp., Torrance, Calif. (ground coolant unit); Anemostat Products, Scranton, Pa. (cabin air diffuser); Arrowhead Products, division of Federal Mogul, Los Alamitos, Calif. (couplings, flex air duct, flexible connector and connector drain system convoluted bellows); Brunswick, Lincoln, Neb. (atmosphere revitalization oxygen and nitrogen tanks); Brunswick-Circle Seal, Anaheim, Calif. (water relief valve and water check valve); Brunswick-Wintec, El Segundo, Calif. (water relief valve, water check valve and water filter); Consolidated Controls, El Segundo, Calif. (unidirectional/bidirectional shutoff valve and water solenoid latching valve); Cox and Co., New York, N.Y. (water relief valve, vent nozzle and port heater and water boiler steam vent line heater); Dynamic Corp., Scranton, Pa. (cabin diffuser); Fairchild Stratos, Manhattan Beach, Calif. (ammonia boiler); General Electric, Valley Forge, Pa. (waste collector); Metal Bellows Co., Chatsworth, Calif. (potable and waste water tanks and flex metal tubes); RDF Corp., Hudson, N.H. (temperature sensor and transducer); Symetrics, Canoga Park, Calif. (Freon fluid disconnects and water boiler quick disconnects); Seaton Wilson Inc., subsidiary of Systron-Donner, Burbank, Calif. (water and coolant system quick disconnects); Tavis Corp., Mariposa, Calif. (Freon flow meter); Tayco Engineering, Long Beach, Calif. (urine, waste water, oxygen, nitrogen and waste dump); Titeflex Division, Springfield, Mass. (water coolant flex line); Vacco Industries, El Monte, Calif. (potable water in-line pressure relief valve); and Vought Corp., Dallas, Texas (radiators and flow control assembly).

The galley and CAPS are supplied to the orbiter as government-furnished equipment.

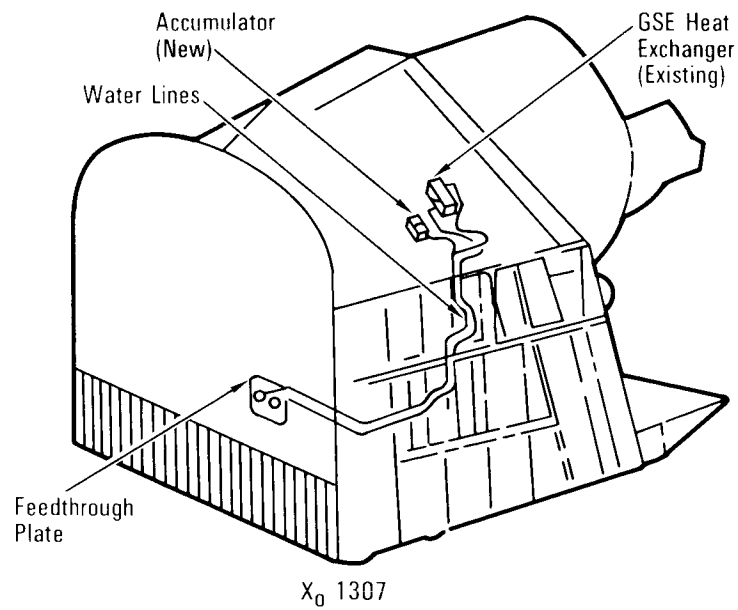


*Water Coolant System and Accumulator in Aft Fuselage for RTG Cooling*

## AUXILIARY POWER UNITS

The auxiliary power unit is a hydrazine-fueled, turbine-driven power unit that generates mechanical shaft power to drive a hydraulic pump that produces pressure for the orbiter's hydraulic system. There are three separate APUs, three hydraulic pumps and three hydraulic systems.

Each auxiliary power unit and its fuel system are located in the aft fuselage of the orbiter. They are identical but independent systems that are not interconnected. Each APU fuel system supplies storable liquid hydrazine fuel to its respective fuel pump, gas generator valve module and gas generator, which decomposes the fuel through catalytic action. The resultant hot gas drives a two-stage turbine. The turbine exhaust flow returns over the exterior of the gas generator, cooling it, and is then directed overboard through an exhaust duct at the upper portion of the aft fuselage near the vertical stabilizer. The turbine assembly provides mechanical power through a shaft to drive reduction gears in the gearbox. The gearbox drives a fuel pump, a hydraulic pump and a lube oil pump. The hydraulic pump supplies pressure to the hydraulic system. The fuel pump increases the fuel pressure at its outlet to sustain pressurized fuel to the gas generator valve module and gas generator. The lube oil system supplies lubricant to the gearbox reduction gears and uses the reduction gears as scavenge pumps to supply lube oil to the inlet of the lube oil pump to increase the pressure of the lube oil system.

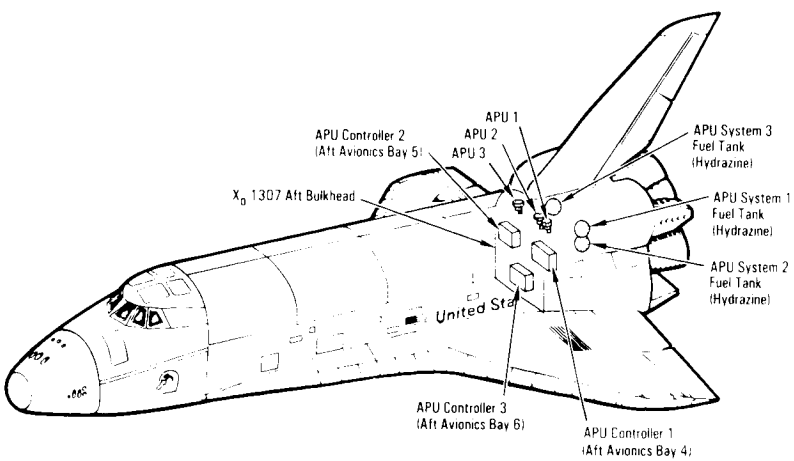


*Auxiliary Power Unit, APU Controller and APU Fuel Tank Locations*

The lube oil of each auxiliary power unit is circulated through a heat exchanger in a corresponding water spray boiler. Three water spray boilers, one for each APU, cool the lube oil systems. The hydraulic fluid of each hydraulic pump driven by an auxiliary power unit is also circulated through a hydraulic heat exchanger in a corresponding water spray boiler to cool hydraulic fluid during hydraulic system operation. The three water spray boilers are also located in the aft fuselage of the orbiter.

The three auxiliary power units, hydraulic pumps and water spray boilers are in operation five minutes before lift-off and throughout the launch phase. They are shut down after the first orbital maneuvering system thrusting period.

The hydraulic systems provide hydraulic pressure to position hydraulic actuators for thrust vector control by gimbaling the three main engines. The hydraulic system also operates the various propellant valves on the engines; controls the orbiter's aerosurfaces (elevons, body flap and rudder/speed brake); retracts the external tank/orbiter 17-inch liquid oxygen and liquid hydrogen disconnect umbilicals within the orbiter at external tank jettison; deploys the main and nose landing gear, main landing gear brakes and anti-skid devices; and enables nose wheel steering.

When the three auxiliary power units are started five minutes before lift-off, the hydraulic systems are used to position the three main engines for activation, control various propellant valves on the engines and position orbiter aerosurfaces. The hydraulic systems provide pressure for engine thrust vector control at launch through main engine cutoff, elevon load relief during ascent and retraction of the liquid oxygen and liquid hydrogen umbilicals at external tank jettison.

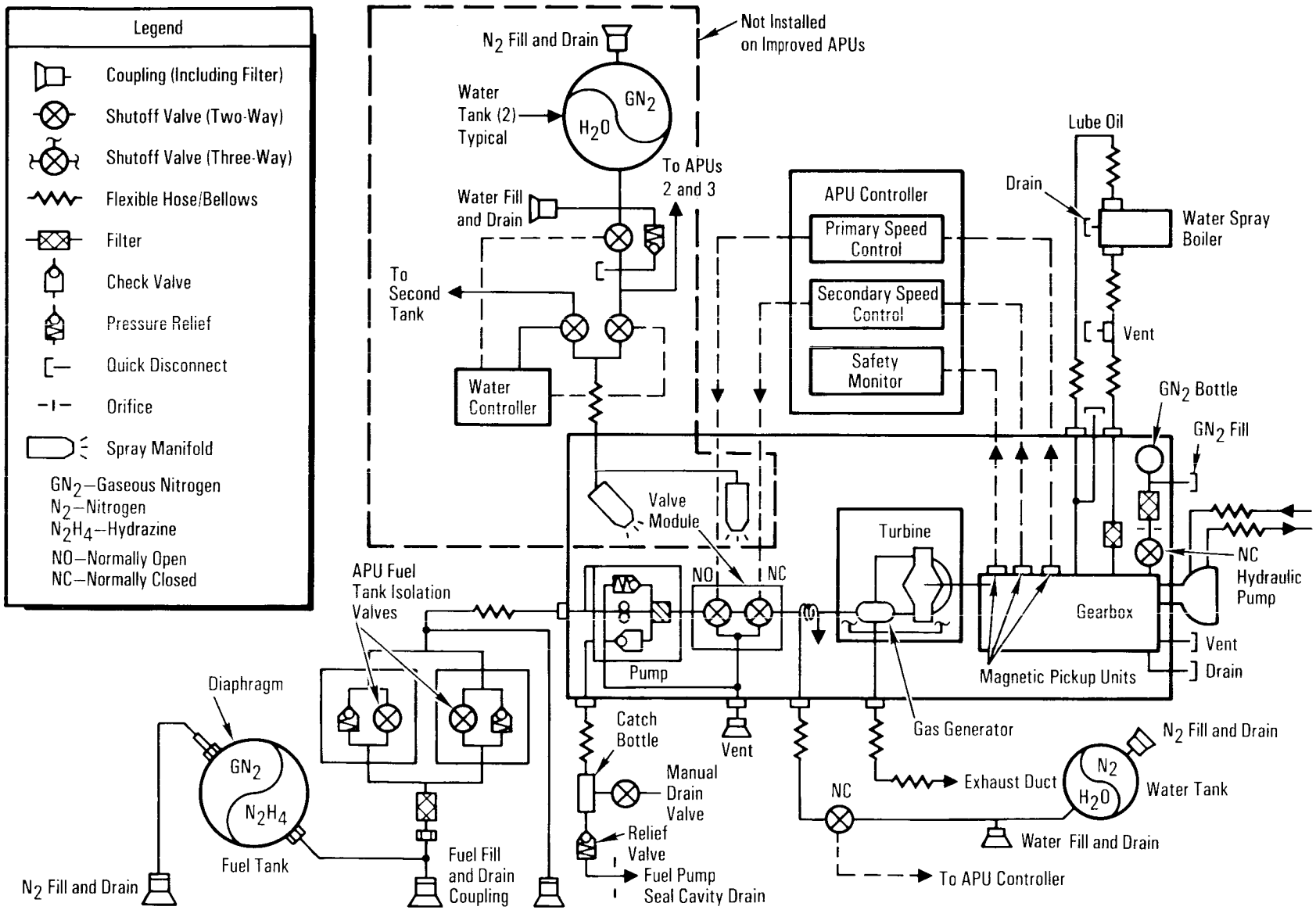


*Auxiliary Power Unit*

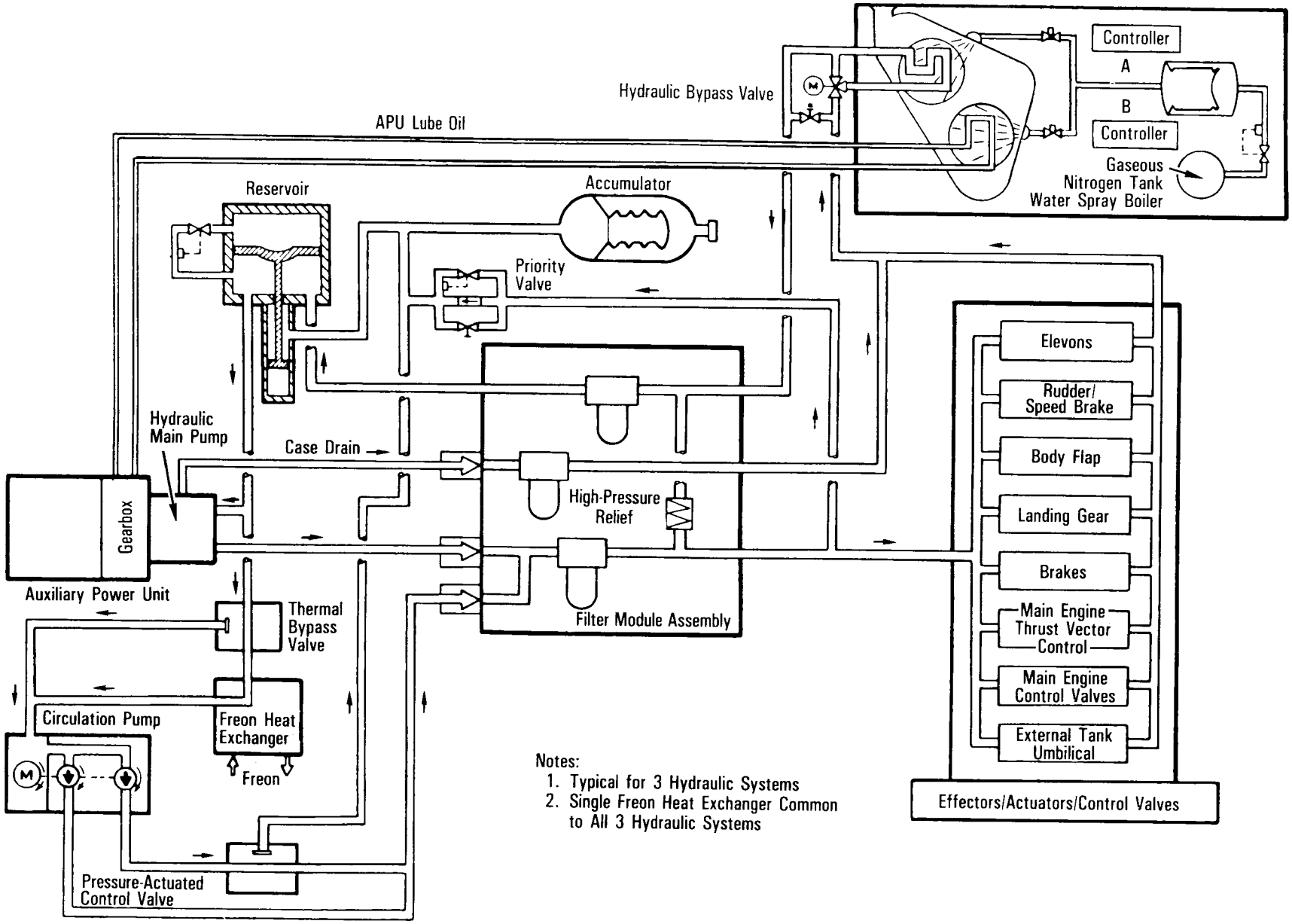


*APU, Water Spray Boiler and Hydraulic System Schematic*

The auxiliary power units are not operated after the first OMS thrusting period because hydraulic power is no longer required. One power unit is operated briefly one day before deorbit to support checkout of the orbiter flight control system, which includes the orbiter aerosurfaces (elevons, rudder/speed brake and body flap).

One auxiliary power unit is restarted before the deorbit thrusting period. The two remaining units are started after the deorbit thrusting maneuver and operate continuously through entry, landing and landing rollout to provide hydraulic pressure for the following: positioning of the orbiter aerosurfaces during the atmospheric flight portion of entry; deployment of the nose and main landing gear, main landing gear brakes and anti-skid; nose wheel steering; positioning of the three main engines after landing rollout; and maximum hydraulic pump operation reverification.

Each auxiliary power unit consists of a fuel tank, a fuel feed system, a system controller, an exhaust duct, lube oil cooling system, and fuel/lube oil vents and drains. Redundant electrical heater systems and insulation thermally control the system above 45 F to prevent fuel from freezing and to maintain required lube oil viscosity. Insulation is used on components containing hydrazine, lube oil or water to minimize electrical heater power requirements and to keep high surface temperatures within safe limits on the turbine and exhaust ducts.

The APU fuel tanks are mounted on supports cantilevered from the sides of the internal portion of the aft fuselage. The fuel is hydrazine, a storable liquid fuel. The fuel tank, which incorporates a diaphragm at its center, is serviced with fuel on one side and the pressurant (gaseous nitrogen) on the other. The nitrogen is the force acting on the diaphragm (positive expulsion) to expel the fuel from the tank to the fuel distribution lines and maintain a positive fuel supply to the auxiliary power unit throughout its operation. Each typical fuel tank load is approximately 325 pounds. The fuel supply supports the nominal power unit operating time of 90 minutes in a mission or any defined abort mode, such as an abort once around, when the APUs run continuously for approximately 120 minutes. Under operating load conditions, an auxiliary power unit consumes approximately 3 pounds of fuel per hour.

Each of the three APU controllers is 6 inches wide, 7.5 inches high and 19 inches long. The rated horsepower of each unit is 135. Each unit weighs approximately 88 pounds; its controller weighs approximately 15 pounds.

The fuel tanks are 28-inch-diameter spheres. Fuel tanks 1 and 2 are located on the port (left), or minus Y, side of the orbiter's aft fuselage, and tank 3 is located on the starboard (right), or plus Y, side. Each fuel tank is serviced through its respective fill and drain service connections, located on the corresponding side of the aft fuselage. The gaseous nitrogen servicing connection for each fuel tank is located on the same panel as the fuel servicing connections on the corresponding side of the aft fuselage. The fuel tank's nitrogen gas pressure is determined by the propellant load.

Each fuel tank's temperature and gaseous nitrogen pressure is monitored and calculated through the onboard computer and transmitted to the *APU fuel/$H_2O$ qty* meters on panel F8. When the *APU fuel/$H_2O$* switch on panel F8 is positioned to *fuel*, the quantity in APU fuel tanks 1, 2 and 3 is displayed simultaneously in percent. The fuel quantity of 100 percent on the meter is equivalent to 325 pounds.

The gaseous nitrogen pressure in each fuel tank exerts a force on the tank's diaphragm to expel the hydrazine fuel under pressure to the fuel distribution system. Filters are incorporated into each distribution line to remove any particles. The fuel distribution line branches into two parallel paths downstream of the filter. An isolation valve is installed in each parallel path, providing redundant paths to permit fuel flow to the auxiliary power unit or to isolate fuel from it.

Both valves in each APU fuel distribution system are controlled by the corresponding *APU fuel tk vlv 1, 2, 3* switch on panel R2. They are energized open when the corresponding *APU fuel tk vlv* switch is positioned to *open*; both valves are closed when the switch is positioned to *close*.

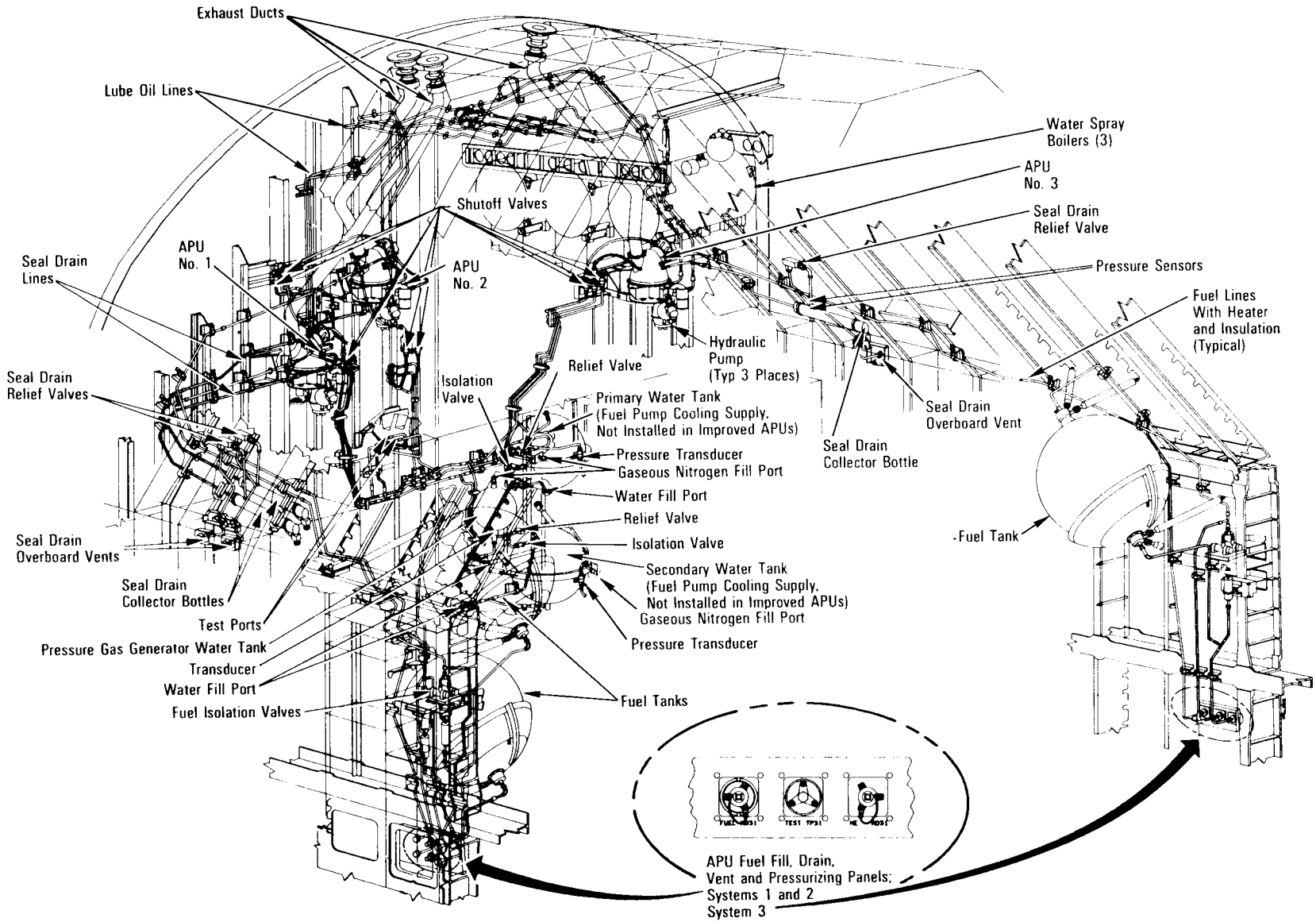


*Auxiliary Power Unit/Water Boilers*

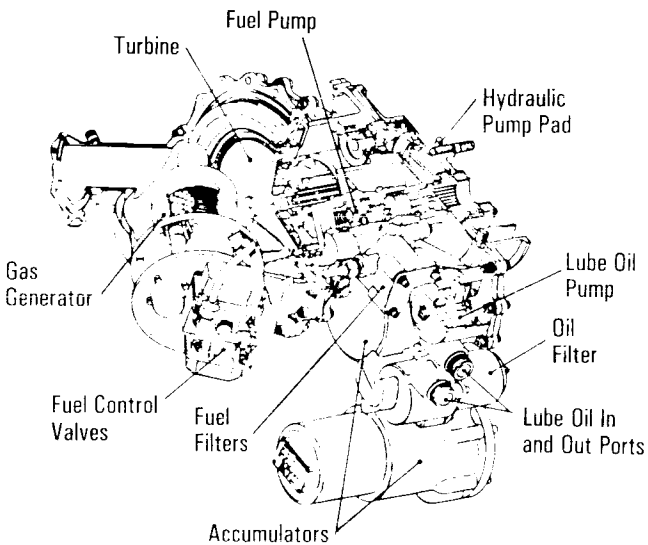


Dimensions: 20 Inches Wide, 21.80 Inches Long, 18 Inches Deep

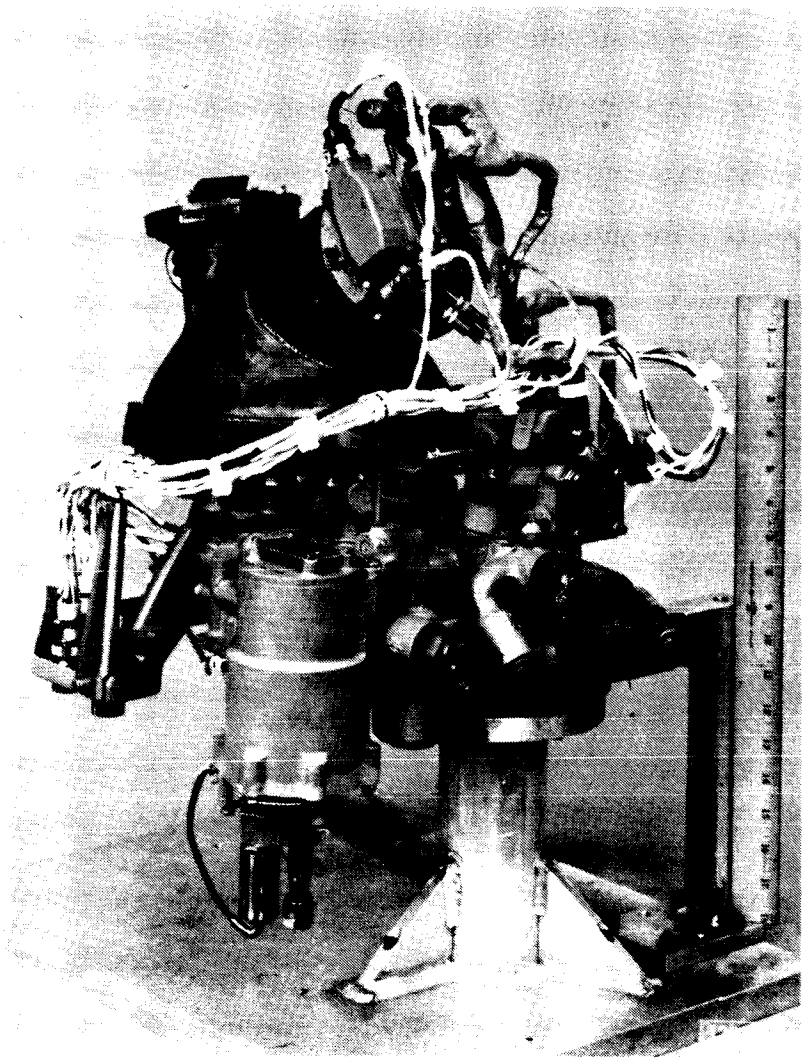

*Auxiliary Power Unit*

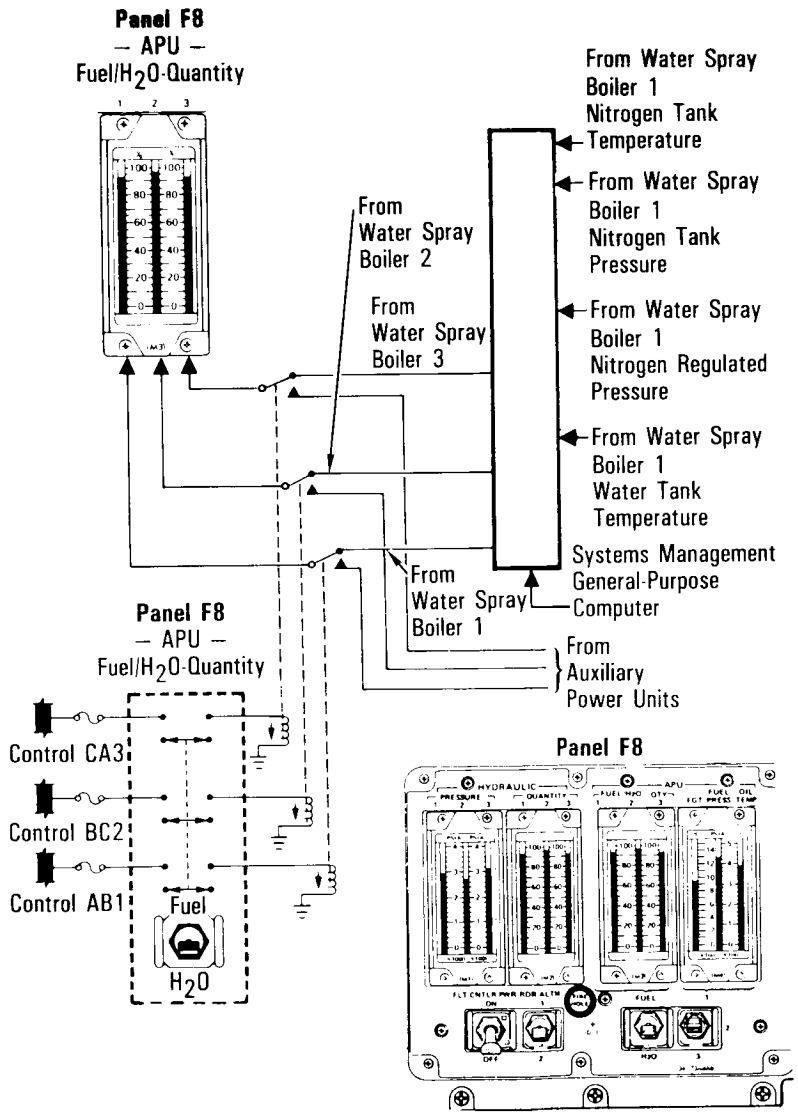


*Panel F8*

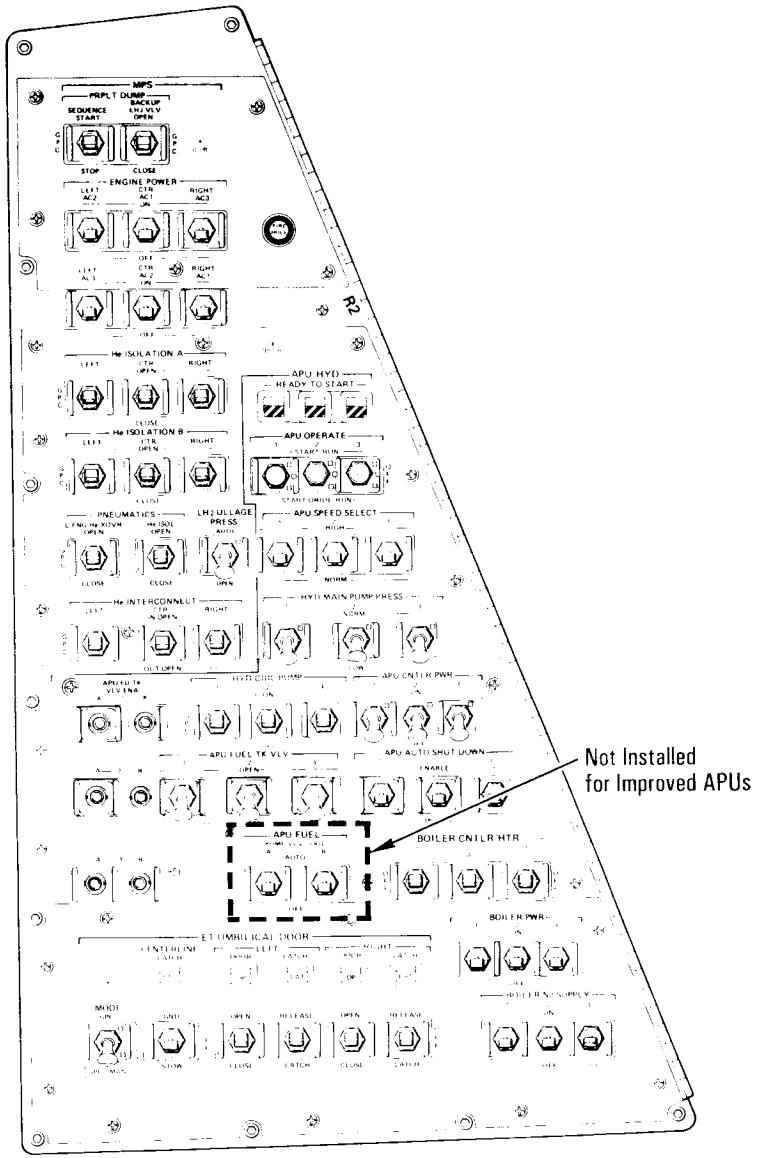


*Panel R2*

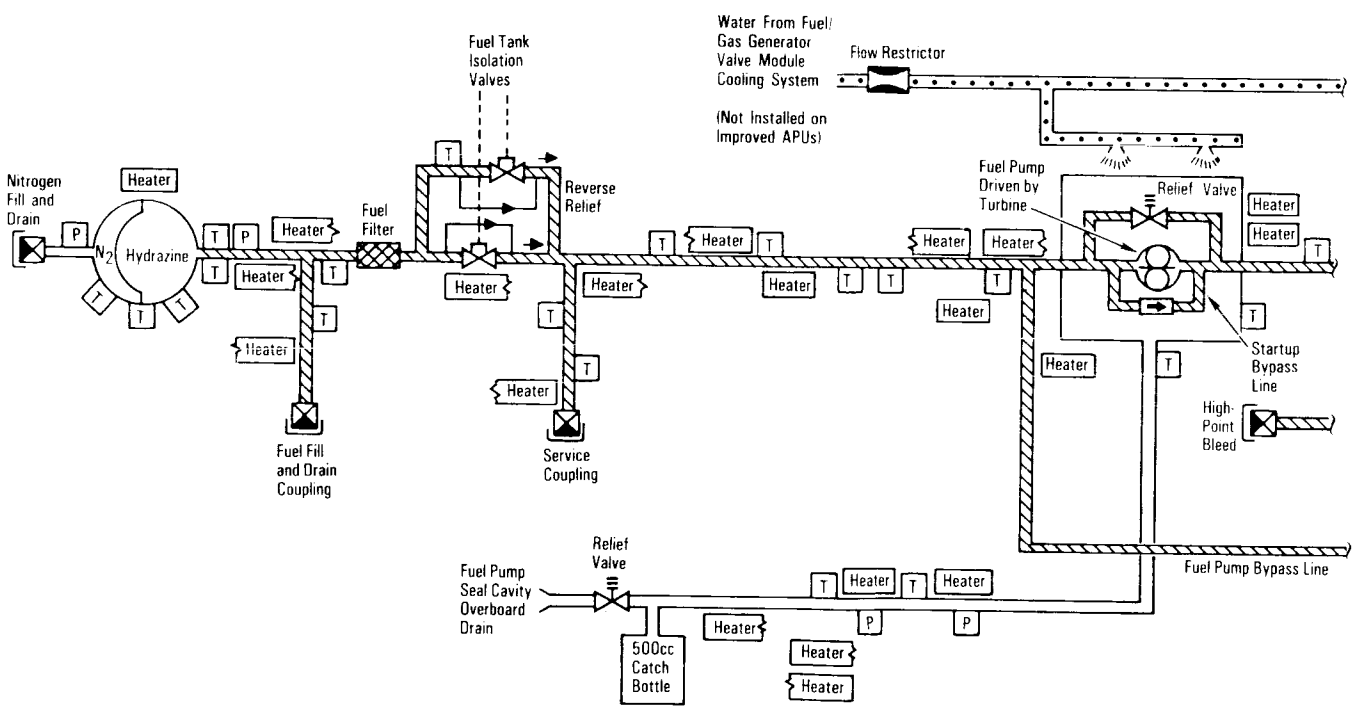


*Auxiliary Power Unit System 1 and APU Fuel System Schematic*

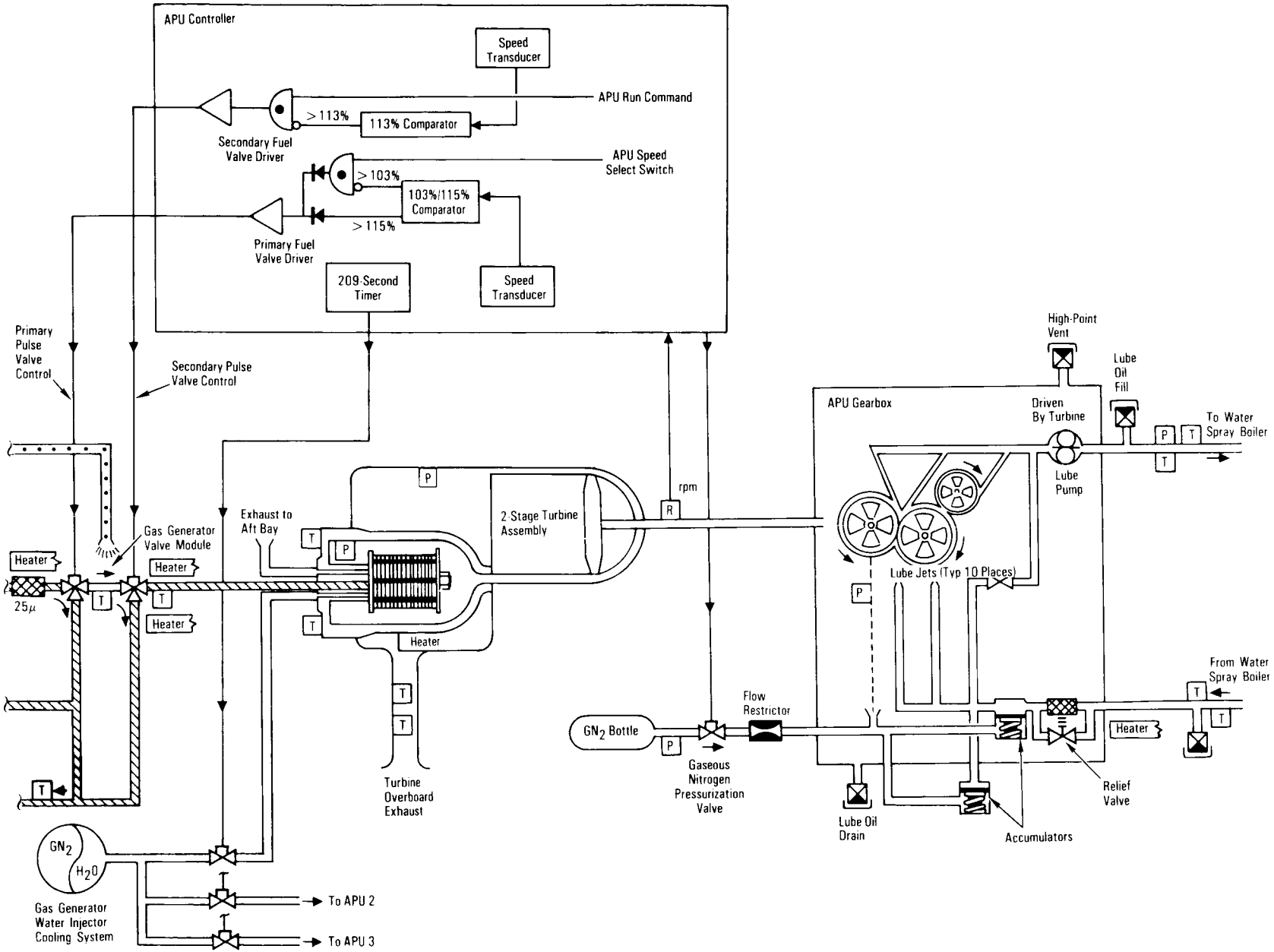


*Auxiliary Power Unit System 1 and APU Fuel System Schematic*

Each valve has a reverse relief function to relieve pressure on fuel trapped in the fuel distribution line downstream of the fuel tank valves when both tanks' valves are closed. The valve relieves the downstream pressure when the pressure rate increases 40 psi to 200 psi above fuel tank pressure.

In the event that an *APU fuel tk vlv* switch is inadvertently left on after APU shutdown or an electrical short occurs within the valve's electrical coil, a system improvement provides additional protection to prevent overheating of the fuel isolation valves. Redundant temperature measurements (two per valve, four per auxiliary power unit) have been added to redundant electrical valve drivers and individual circuit breakers. The temperature measurements are displayed on the backup flight system's systems management display. If the temperature limits are exceeded, the flight crew responds by turning the applicable switch off or pulling the applicable circuit breaker.

Each auxiliary power unit has its own controller, which provides checkout logic before the APU is started. The controller detects malfunctions and controls the unit's turbine-speed gearbox pressurization and fuel pump/gas generator heaters when the auxiliary power unit is not in operation. Each controller is controlled by its corresponding *APU cntlr pwr* switch on panel R2. When the switch is positioned to *on*, 28-volt dc power is sent to that controller and auxiliary power unit. When the switch is positioned to *off*, electrical power is removed from that controller and APU.

An *APU/hyd ready to start* talkback indicator for each auxiliary power unit is located on panel R2. The talkback indicator signals gray when that auxiliary power unit hydraulic system is ready to start, that is, when the APU gas generator temperature is above 190 F, APU turbine speed is less than 80 percent, APU gearbox pressure is above 5.5 psi, water spray boiler controller is ready, corresponding APU fuel tank isolation valves are open and corresponding hydraulic main pump is depressurized. When the auxiliary power unit is started and its turbine speed is greater than 80 percent of normal speed, the corresponding indicator shows a barberpole image.

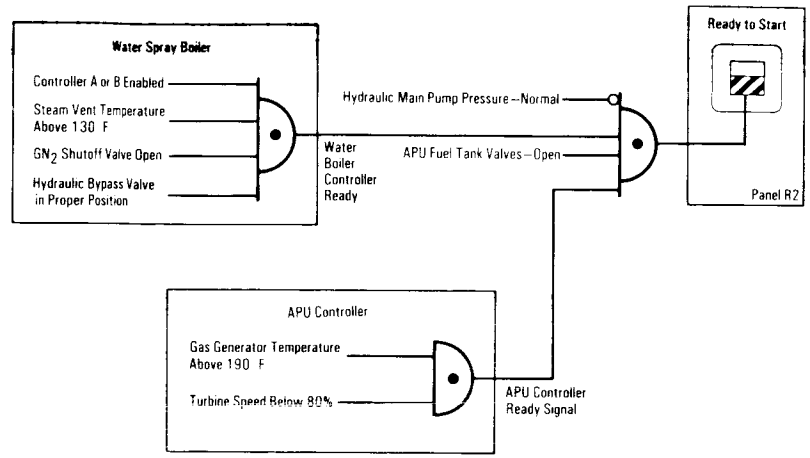


*APU Ready-for-Start Talkback Indicator Logic*

An APU *control 1, 2, 3* switch is located on panel R2 for each auxiliary power unit. When the switch is positioned to *start/run*, the corresponding APU controller activates the start of that unit and removes electrical power automatically from the unit's gas generator and fuel pump heaters. The *off* position of each switch removes the start signal from the corresponding APU controller.

To start the auxiliary power unit, fuel expelled from the hydrazine tank flows through the open tank valves and filter to the gas generator valve module, which contains a primary and secondary fuel control valve in series. The primary pulse control valve is normally open and the secondary pulse control valve is energized open. Fuel flowing through the pump bypass valve is directed to the gas generator, for the fuel pump is not being driven at that moment by the APU turbine. The fuel in the gas generator decomposes through catalytic reaction, creates hot gas and directs the hot gas to the two-stage turbine, which begins to rotate. The turbine's mechanical shaft drives the reduction gears, rotating the fuel pump, lube oil pump and hydraulic pump. The fuel pump increases the fuel pressure at its outlet and sustains pressurized fuel

to the gas generator valve module and gas generator. The turbine must come up to speed in 9.5 seconds or the APU controller automatically shuts the auxiliary power unit down.

The startup logic delays the APU underspeed logic check for 9.5 seconds after the start command is issued, allowing the APU to reach normal speed before the shutdown logic begins checking for a speed lower than 80 percent.

When the upper APU turbine speed is reached, the primary fuel control valve closes the fuel supply off to the gas generator and routes the fuel through the bypass line back to the fuel pump inlet. When the lower turbine speed is reached, the primary fuel control valve opens, permitting fuel to the gas generator, and closes the fuel off to the bypass line. Thus, the primary fuel valve pulses to maintain auxiliary power unit speed. The frequency and duration of the primary fuel control valve pulses are a function of the hydraulic load on the unit. The secondary fuel control valve normally stays fully open during the operation of the primary. If the primary valve loses power, it goes to the fully open position and the secondary valve begins pulsing and controlling APU speed. If the secondary valve loses power at any time, the APU is shut down. If the auxiliary power unit is taken to a high speed (by the *APU select* switch on panel R2), the primary valve is unpowered and goes to the fully open position while the secondary valve controls the unit's speed.

Each APU fuel pump is a fixed-displacement, gear-type pump that discharges fuel at approximately 1,400 psi to 1,500 psi and operates at approximately 3,918 rpm. A fuel filter is located at the fuel pump outlet, and a relief valve relieves at approximately 1,725 psi back to the pump inlet if the filter becomes clogged.

As stated previously, each fuel pump is driven by the turbine through the reduction gearbox. The fuel pump reduction gear is located in the lube oil system gearbox, and a shaft from the reduction gear drives the fuel pump. Seals are installed on the shaft to contain any leakage of fuel or lube oil. If leakage occurs through the seals, it is directed to a drain line that runs to a 500-cubic-centimeter catch bottle for each auxiliary power unit. If the catch bottle were overfilled, it would relieve overboard at approximately 28 psia through a drain port. The flight crew can monitor the catch bottle's line pressure on the CRT.

Each gas generator consists of a bed of Shell 405 catalyst in a pressure chamber, mounted inside the APU exhaust chamber. When the hydrazine fuel comes into contact with the catalyst, it undergoes an exothermic reaction, decomposing into a hot gas at approximately 1,700 F. The gas expands rapidly and makes two passes through the two-stage turbine wheel, passes over the outside gas generator chamber and exits overboard through its own independent exhaust duct, located near the base of the vertical stabilizer. The temperature of the hot gas at the exhaust duct is approximately 1,000 F.

Turbine exhaust gas temperature, lube oil temperature and fuel pressure for each auxiliary power unit are transmitted to panel F8. The three-position APU switch permits the exhaust gas temperature, fuel pressure, and lube oil temperature of the respective units to be displayed on the *APU EGT* (exhaust gas temperature), *fuel press* and *oil temp* meters on panel F8. The *APU temp* yellow caution and warning light on panel F7 is illuminated if the APU 1, 2 or 3 lube oil temperature is above 290 F.

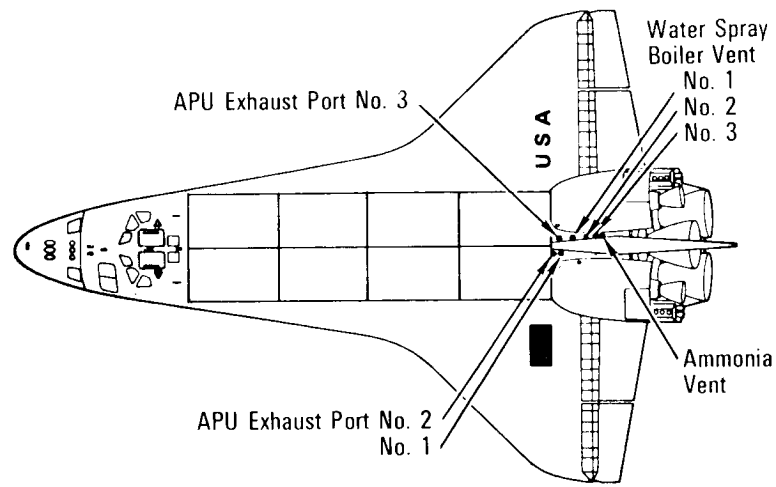


*APU Exhaust and Water Spray Boiler Vent*

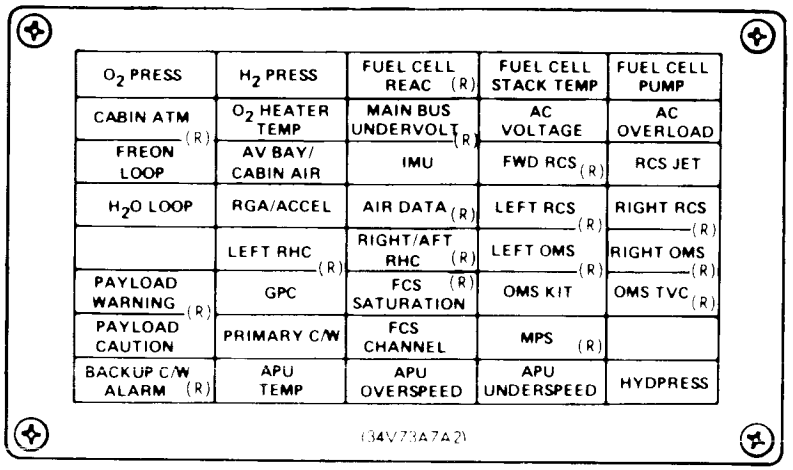


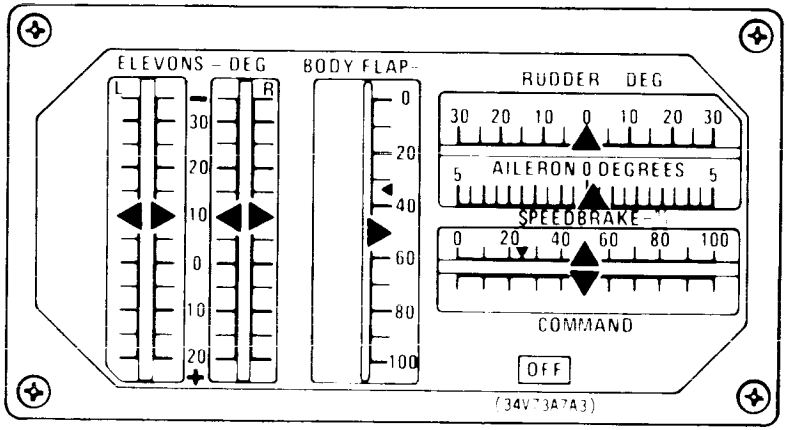


*Panel F7*

Each auxiliary power unit controller controls the speed of each unit upon the activation of the *APU select* switch for each APU on panel R2. The *norm* position controls the speed at 74,160 rpm, 103 percent, plus or minus 8 percent. The *high* position controls the speed at 81,360 rpm, 113 percent, plus or minus 8 percent, with a second backup of 82,800 rpm, 115 percent, plus or minus 8 percent.

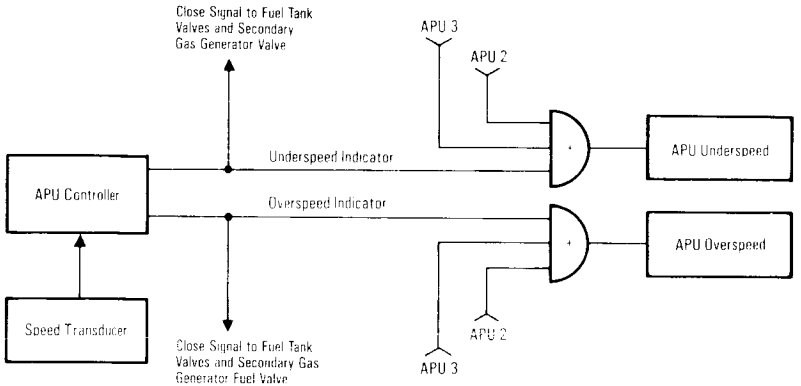


*APU Overspeed/Underspeed Detection*

The *APU auto shutdown* switch on panel R2 enables the automatic shutdown feature in all three APU controllers. When the switch is positioned to *enable*, each controller monitors its corresponding APU speed. If that APU speed falls below 57,600 rpm (80 percent) or rises above 92,880 rpm (129 percent), the controller automatically shuts down that unit. Each shutdown command closes that unit's secondary fuel valve and the tank isolation valves. The *APU overspeed* yellow caution and warning light on panel F7 is illuminated if APU 1, 2 or 3's turbine speed is above 92,880 rpm (129 percent). The *APU underspeed* yellow caution and warning light on panel F7 is illuminated if the APU 1, 2 or 3 turbine speed is less than 57,600 rpm (80 percent).

In the event of an overspeed or underspeed shutdown, the *hyd press* yellow caution and warning light on panel F7 also is illuminated for the corresponding hydraulic system. Because of APU shutdown, the corresponding hydraulic pump is inoperative. The yellow *hyd press* caution and warning light is illuminated when hydraulic system 1, 2 or 3 drops below 2,800 psi.

When the *APU auto shutdown* switch on panel R2 is positioned to *inhibit*, the automatic shutdown sequence for all three auxiliary power unit controllers is inhibited, and the 9.5-second

speed time delay for all three units is inhibited when the *APU control 1, 2 or 3* switch is set to the *start/run* position. The caution and warning *alert* light is illuminated and a tone is generated, even though the *APU auto shutdown* switch is in *inhibit*.

The *start oride/run* position of each *APU control* switch on panel R2 overrides the APU prestart conditions (gas generator temperature above 190 F, turbine speed less than 80 percent and gearbox pressure above 5.5 psi) to permit a start of the respective unit if one or more of the prestart conditions are not met. This switch also is activates the APU gas generator active cooling system, which provides the capability to restart a hot auxiliary power unit. The restart is inhibited for 209 seconds after the switch is positioned, during which time the gas generator is cooled by water flowing through its cooling passages, when the normal cool-down time of approximately three hours for the gas generator is not available.

As stated previously, each APU turbine imparts the mechanical drive to the gearbox to drive the lube oil pump at 12,215 rpm. The lube oil system of each unit is a scavenger-type system with a fixed-displacement pump. The system is pressurized with gaseous nitrogen to provide adequate suction pressure to start the lube oil pump under zero-gravity conditions. Each lube oil system has its own nitrogen gas storage vessel, which is pressurized to approximately 140 psia. The pressurization system for each lube oil system has a valve controlled by its corresponding APU controller. The gaseous nitrogen pressurization valve for each power unit is energized open by its corresponding controller when the gearbox pressure is below 4.5 psi, plus or minus 1.5 psi, to ensure that gearbox pressure is sufficiently above the requirements for proper scavenging and lube pump operation.

The pump increases the lube oil pressure to approximately 77 psi and directs the lube oil system through the corresponding APU/hydraulic water spray boiler for cooling and returns the lube oil to the accumulators and gearbox. The two accumulators in each lube oil system allow thermal expansion of the lube oil, accommodate gas initially trapped in the external lube circuit, maintain lube oil pressure at a minimum of approximately 15 psia and act as a zero-gravity, all-altitude lube reservoir.

The lube oil pump outlet pressure at approximately 45 psia, outlet temperature at approximately 270 F and return temperature from the water spray boiler at approximately 250 F for each auxiliary power unit are transmitted to the CRT. The lube oil temperature of each APU is also monitored on panel F8 through the *select 1, 2, 3* switch on panel F8.

One gas generator valve module injector water cooling system serves all three auxiliary power units. It is used only when the normal cool-down period of 180 minutes is not available. The water cooling system sprays water to reduce the temperature of the gas generator bed to less than 450 F in the event that a hot auxiliary power unit must be restarted after it has been recently shut down. The water cooling ensures that no hydrazine will detonate at APU startup because of heat soakback in the gas generator. The injector is cooled by circulating water through it. The water from the gas generator injector is exhausted into the aft fuselage.



A single water tank located in the aft fuselage of the orbiter serves all three APUs. The water tank is 9.4 inches in diameter and loaded with 6 pounds (plus or minus 0.5 pound) of water. The water tank is pressurized with gaseous nitrogen at a nominal pressure of 85 psi. The pressure acts on a diaphragm to expel the water through three 0.25-inch-diameter lines to three control valves. When the *APU control* switch on panel R2 for APU 1, 2 or 3 is positioned to *start oride/run*, that APU controller opens the water valve of that unit for 209 seconds (plus or minus five seconds) and directs the water into the gas generator to cool it. Regardless of the reason that *start oride/run* is selected for an APU, the water for that unit operates for 209 seconds (plus or minus five seconds). If the catalytic bed temperature of an APU is above 400 F from heat soakback, if the catalytic bed heater temperature is above 430 F or if the gearbox pressure is low, the flight crew starts that unit in the *start oride/run* position and the water valve for that unit is opened for 209 seconds (plus or minus five seconds). When the timer in that unit controller times out, its control valve is closed and the power unit starts.

The water tank supply is sufficient for about four hot starts, one hot start per APU, plus one extra. The unit's injector temperature can be monitored on the CRT. The APU gas generator water cooling system will not be activated when the *APU control 1, 2, 3* switch on panel R2 is positioned to *start/run*.

The *APU heater tank/fuel line/$H_2O$ sys 1A, 1B, 2A, 2B, 3A, 3B* switches on panel A12 operate the thermostatically controlled heaters located on the corresponding APU fuel system and water system. The fuel tank, fuel line and water line heaters for each auxiliary power unit are divided into redundant A and B systems for each unit. For example, for APU 1, 1A and 1B, the *1A* switch controls the A heaters and the thermostats provide automatic control. Only one set of heaters is used at a time. The *1B* switch controls the 1B heaters and the thermostats provide automatic control. The APU fuel tank and line heater thermostats maintain the temperatures between a nominal 55 F and 65 F. The water system heater thermostats maintain the temperatures between 80 F and 90 F. The *off* position of each switch removes power from the respective heater circuits.

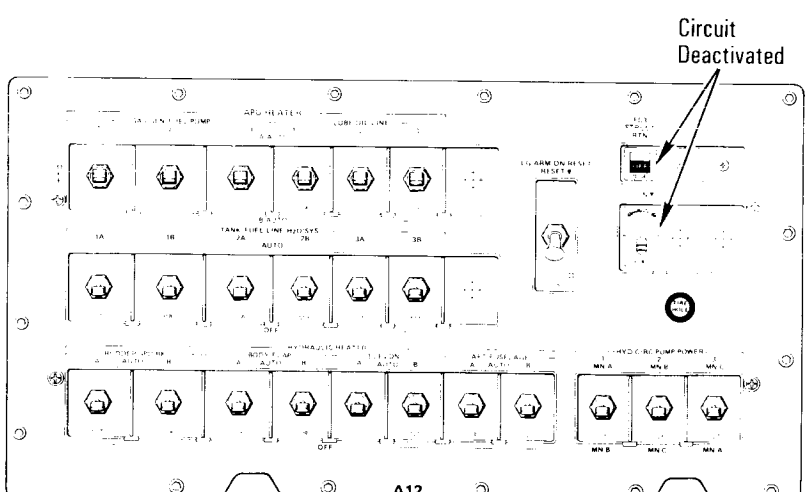


*Panel A12*

The *APU heater gas gen/fuel pump 1, 2, 3* switches on panel A12 operate thermostatically controlled heaters located on the corresponding auxiliary power unit. The thermostats control a series of heaters on the gas generator valve module, fuel pump, and all the fuel lines and the water lines from the fuel pump spray manifold to the gas generator valve module. The heaters are divided into redundant A and B systems for each APU. The *auto A* switch controls the A heater, and the A thermostat automatically controls the corresponding APU gas generator heater, keeping the gas generator in the temperature range of 360 F to 425 F while the auxiliary power unit is not operating. The gas generator temperature range ensures efficient APU startup through efficient catalytic reaction. The *auto A* switch also controls the A heater, and the thermostat automatically controls the corresponding APU fuel pump heater to keep the fuel pump temperature in the range of 80 F to 100 F while the auxiliary power unit is not operating. The *auto B* switch position provides the same capability for the B heater system. The gas generator and fuel pump heaters are automatically deactivated by the corresponding controller at APU start. The *off* position of each switch removes power from the respective heater circuits.



The lube oil system lines on each auxiliary power unit also have a heater system. These heaters are controlled by the *APU heater lube oil line 1, 2, 3* switches on panel A12. The lube oil line heaters for each auxiliary power unit are also divided into an A and B system: e.g., for APU 1, *auto A* and *auto B*. The *auto A* switch controls the A heater, and the thermostat automatically controls the corresponding lube oil system heater, maintaining the lube oil line in the temperature range of 55 F to 65 F. The *auto B* switch position provides the same capability to the B heater system. The *off* position of each switch removes power from the respective heater circuits.

The life of the auxiliary power units used to date is limited. Refurbishment of each was required after 20 hours of operation, degradation of the gas generator catalyst varied up to approximately 40 hours of operation, and operation of the gas generator valve module also varied up to approximately 30 hours of opera-

tion. The remaining parts were qualified for 40 hours of operation.

Improved APUs are scheduled for delivery in late 1988. A new turbine housing has an increased life of 75 hours of operation (50 missions), and a new gas generator increases its life to 75 hours. A new standoff design of the gas generator valve module and fuel pump deletes the requirement for a water spray system previously required for each APU upon shutdown after the ascent or orbital checkout; and the addition of a third seal in the middle of the two existing seals for the shaft of the fuel pump/lube oil system (previously only two seals were located on the shaft, one on the fuel pump side and one on the gearbox lube oil side) reduces the probability of hydrazine leakage into the lube oil system.

With the improved auxiliary power units, the deletion of the water spray system for the gas generator valve module and fuel pump on each unit results in a weight reduction of approximately 150 pounds for each orbiter.

Upon delivery of the improved APUs, the limited-life APUs will be refurbished to the upgraded design.

The fuel pump and gas generator valve module on the limited-life APUs are cooled by a separate water spray system after APU shutdown following the first OMS thrusting period and orbital checkout. The water spray system cooling prevents hydrazine decomposition in the fuel pump and gas generator valve module caused by heat soakback. The water spray cooling system consists of primary and secondary independent water supply systems for each APU. Each water system consists of a 16.5-inch-diameter tank, a 0.25-inch-diameter line to each APU, control valves and electrical heaters. Each water tank is loaded with 21 pounds (plus or minus 1 pound) of water. Each tank is pressurized with gaseous nitrogen between 50 psi and 59 psi. The gaseous nitrogen pressure acts on a diaphragm in each tank to expel the water into the lines to the control valves. When the limited-life units are shut down, the *APU fuel pump/vlv cool A* or *B* switch on panel R2 is positioned to *auto*. With the *A* switch on *auto*, the 150 F to 160 F thermostats on each APU, through the timer in the water controller, open control valve A on each unit to permit water to spray onto the valve module and fuel pump for 1.25 seconds, then close valve A for four seconds, etc. The cooling system is activated for two hours and 45 minutes after APU shutdown. The *B* switch controls valve B in the same manner. Nitrogen pressurization in each water tank is referred to as a blowdown system (pressure decay continues until the water is expelled from each tank). The water is exhausted into the aft fuselage compartment.

The water spray boiler controllers are powered up at launch minus four hours. The boiler water tanks are pressured at T minus one hour and 10 minutes in preparation for APU activation. The controllers activate heaters on the water tank, boiler and steam vent to assure that the water spray boiler is ready to operate for launch.

Auxiliary power unit start is delayed as long as possible to save fuel. At T minus six minutes, the pilot begins the prestart sequence. The pilot confirms that the water spray boiler is activated, then activates the APU controllers and depressurizes the main hydraulic pump. Depressurizing the main pump reduces the starting torque on the auxiliary power unit. The pilot then opens the fuel tank valves and looks for three APU ready-to-start indications (gray talkbacks). At T minus five minutes, the pilot starts the three units by setting the *APU cntl* switches to *start/run* and checks the hydraulic pressure gauges for an indication of approximately 900 psi. Then the pilot pressurizes the main pump and looks for approximately 3,000 psi on the gauges. All three hydraulic main pump pressures must be greater than 2,800 psi by T minus four minutes, or the automatic launch sequencer will abort the launch.

The auxiliary power units operate during the ascent phase and continue to operate through the first OMS thrusting period. At the conclusion of the main engine purge, dump and stow sequence, the auxiliary power units and water spray boilers are shut down. The same sequence applies for a delayed OMS-1 thrusting period. If an abort once around is declared, the APUs

are left running, but the hydraulic pumps are depressurized to reduce fuel consumption. The units are left running to avoid having to restart hot APUs for deorbit and re-entry.

Six hours after lift-off or as soon as they are required, depending on the environment, the gas generator/fuel pump heaters are activated and are in operation for the remainder of the orbital mission. The fuel and water line heaters are also activated to prevent the lines from freezing as the auxiliary power units cool down.

A few hours after lift-off, the landing gear isolation valves on hydraulic systems 2 and 3 are opened so that the pumps can circulate hydraulic fluid through these lines. The valves will not open or close unless the pressure in the line is at least 100 psi, which requires the main hydraulic pump or hydraulic circulation pump to be active. The hydraulic system 1 landing gear isolation valve is left closed because of the danger of inadvertently lowering the landing gear while the vehicle is in orbit.

Two hours after lift-off, the steam vent heaters of the water spray boilers are turned on and left on for about 1.5 hours to eliminate all ice from the steam vents.

While the vehicle is in orbit, the hydraulic circulation pumps are in the GPC mode—automatically activated when hydraulic line temperatures become too low and automatically deactivated when the lines warm up sufficiently.

On the day before deorbit, one auxiliary power unit is started to supply hydraulic pressure for checkout of the flight control system. (Hydraulic pressure is needed to move the orbiter aerosurfaces as part of this checkout.) The associated water spray boiler controller is activated, landing gear isolation valves 2 and 3 are closed, and one APU (selected by the Mission Control Center) is started. The hydraulic main pump is set to normal pressure (approximately 3,000 psi), and aerosurface drive checks are made. After about five minutes, the checks are complete and the APU is shut down. Normally, the unit does not run long enough to require water spray boiler operation. The landing gear isolation valves on hydraulic systems 2 and 3 are reopened after the APU is shut down.

At 2.5 hours before the deorbit thrusting period, the boilers' steam vent heaters are activated to prepare the system for operation during atmospheric entry. At about the same time, the landing gear isolation valves on hydraulic systems 2 and 3 are closed, and the circulation pumps are turned off.

At 45 minutes before deorbit, the WSB water tanks are pressurized, the APU controllers are activated, and the main hydraulic pumps are set to low pressure. The pilot opens the fuel tank valves and looks for three gray *APU/hyd rdy* talkbacks. The pilot then closes the fuel tank valves. This procedure takes place while the crew is in contact with the ground so that flight controllers can observe APU status. Five minutes before the deorbit thrusting period, one auxiliary power unit (selected by Mission Control) is started to ensure that at least one unit will be operating for entry. The hydraulic pump is left in low-pressure operation. The APU operates through the deorbit burn. At 13 minutes before entry interface (400,000-foot altitude), while the orbiter is still in free fall, the other two APUs are started and all three hydraulic pumps are pressurized to normal. Two main engine hydraulic isolation valves are cycled open and then closed to ensure that the engines are stowed for entry. Two minutes later, if required, the aerosurfaces are put through an automatic cycle sequence to make sure warm hydraulic fluid is available in the aerosurface drive units.

After touchdown, a hydraulic load test may be done to test the response of the auxiliary power units and hydraulic pumps under high load (i.e., high flow demand) conditions. This test cycles the orbiter aerosurfaces with one hydraulic system at a time in depressed mode (the remaining two APUs and hydraulic pumps have to drive all the aerosurfaces). This is typically done on the first flight of a new vehicle. Then the main engine hydraulic isolation valves are opened again and the engines are set to the transport position. At this point, the hydraulic systems are no longer needed; thus, the auxiliary power units and water spray boilers are shut down.

Each auxiliary power unit transmits data to the systems management summary CRT for display. Data displayed for each APU consist of exhaust gas temperature, lube oil inlet/outlet, gas generator bed/injector temperatures, speed, fuel quantity, pump leak, oil outlet pressure and fuel tank valves' status.

The contractors involved with the auxiliary power unit system are Sundstrand Corp., Rockford, Ill. (APU and APU controller); TRW (was Pressure Systems Inc.), Los Angeles, Calif. (APU fuel and water tanks); SSP Products Inc., Burbank, Calif. (APU exhaust duct assembly); Sundstrand Data Control, Redmond, Wash. (APU heater thermostat); Cox and Co., New York, N.Y. (APU fuel tank, fuel and lube line heaters); Brunswick-Wintec, El Segundo, Calif. (APU fuel line filter); J.C. Carter Co., Costa Mesa, Calif. (APU servicing coupling); Wright Components Inc., Clifton Springs, N.J. (fuel pump seal cavity drain catch bottle, relief valve); Rocket Research Corp., Redmond, Wash. (APU gas generator); Eaton Controls Corp., Valencia, Calif. (fuel isolation valves); Lear Siegler, Elyria, Ohio (test-point couplings); Symetrics, Burbank, Calif. (oil couplings); Carleton Controls, East Aurora, N.Y. (water valves); Circle Seal Components, Buena Park, Calif. (manual drain valve); Aerodyne Controls Corp., Farmingdale, N.Y. (water relief valve).

## WATER SPRAY BOILERS

The water spray boiler system consists of three identical independent water spray boilers, one for a corresponding auxiliary power unit and hydraulic system. The boilers are located in the aft fuselage of the orbiter. Each water spray boiler cools the corresponding power unit lube oil system and hydraulic system by spraying water onto their lines; the water then boils off, cooling the lube oil and hydraulic fluid. The water (steam) that boils off in each water spray boiler exits through its own steam duct, located to the right of the vertical stabilizer.

Each water spray boiler stores water in a bellows-type storage tank pressurized by gaseous nitrogen to provide positive water expulsion that feeds the boiler. The hydraulic fluid passes through the boiler three times, and the lube oil of the auxiliary power unit passes through the boiler twice in a set of tubes. The hydraulic fluid tubes are sprayed with water from three water spray bars, and two water spray bars spray the power unit lube oil. Separate water feed valves allow independent control of the hydraulic fluid spray bars and power unit lube oil spray bars. Redundant electrical controllers provide completely automatic operation.

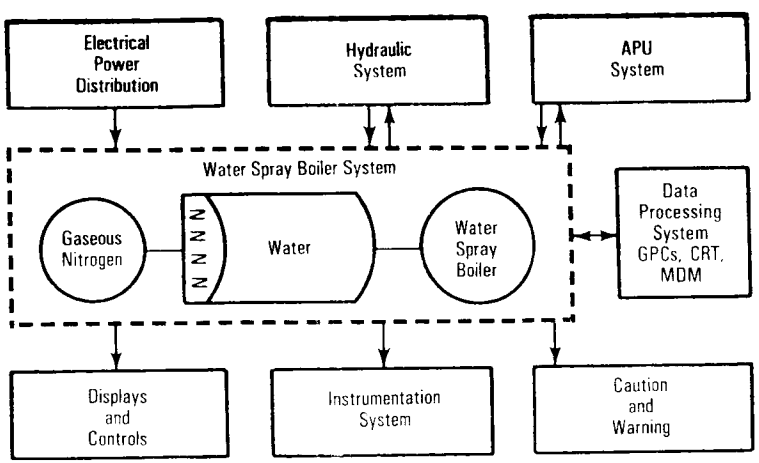


*Water Spray Boiler System*

The boiler system maintains auxiliary power unit lube oil temperature at approximately 250 F and the hydraulic fluid in the range of 210 to 220 F.

The three auxiliary power units and hydraulic pumps and water spray boilers are in operation five minutes before lift-off, operate throughout the launch phase and are shut down after the first orbital maneuvering system thrusting period. One power unit/hydraulic system and corresponding water spray boiler are operated briefly one day before deorbit during a checkout of the orbiter flight control system, which includes the orbiter aerosurfaces.

One auxiliary power unit is restarted before the deorbit thrusting maneuver. The two remaining units are started after the deorbit thrusting maneuver and operate continuously through entry, landing and landing rollout to provide hydraulic pressure for positioning the orbiter aerosurfaces during the atmospheric flight portion of entry; deploying the nose and main landing gear, main landing gear braking and nose wheel steering; and positioning the three space shuttle main engines after landing rollout. The corresponding water spray boilers are also in operation during this period.

Each water spray boiler is 45 by 31 inches long by 19 inches wide. Each boiler, including controller and vent nozzle, weighs 181 pounds. They are mounted in the orbiter aft fuselage between $X_O$ 1340 and 1400, at $Z_O$ 488 minus 15, and at $Y_O$ plus 15. Insulation blankets cover each boiler. The boiler's water capacity is 142 pounds.

The gaseous nitrogen pressure for each water spray boiler is contained in a corresponding 6-inch spherical pressure vessel. The pressure vessel contains 0.77 pound of nitrogen at a nominal pressure of 2,400 psi at 70 F. The gaseous nitrogen storage system of each water spray boiler is directed to its corresponding water storage tank. Each storage vessel contains sufficient nitrogen gas to expel all the water from the tank and allow for relief valve venting during ascent.

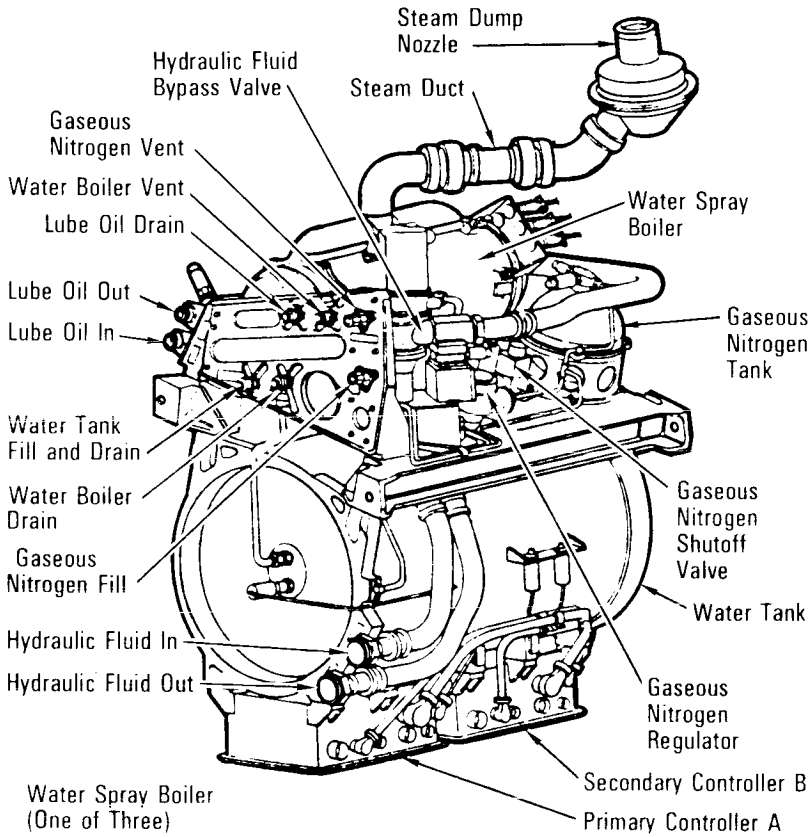


*Water Spray Boiler Unit*

The nitrogen shutoff valve between the pressure valve and water storage tank of each boiler permits the pressure to reach the nitrogen regulator and water tank or isolates the nitrogen supply from the water tank. Each nitrogen valve is controlled by its respective *boiler $N_2$ supply 1, 2* or *3* switch on panel R2. The nitrogen shutoff valve, which is latched open or closed consists of two independent solenoid coils that permit valve control from either the primary or secondary controller.

A single-stage regulator is installed between the nitrogen pressure shutoff valve and the water storage tank. The gaseous

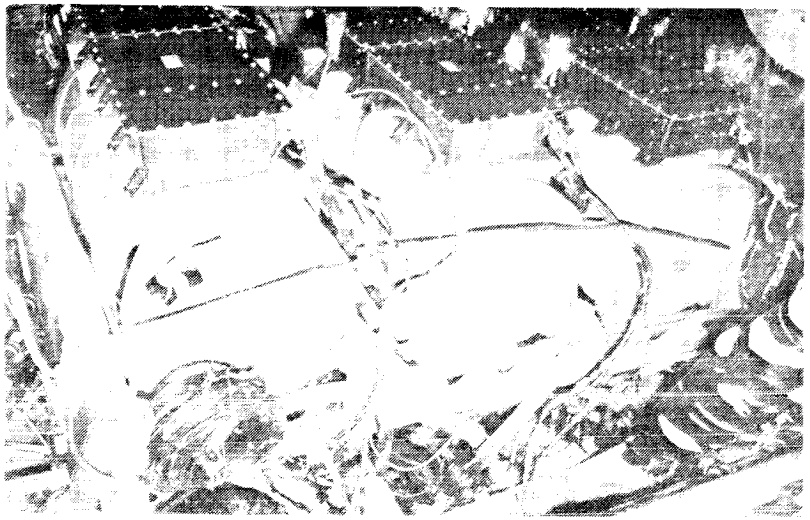

*Water Spray Boilers in Aft Fuselage*

nitrogen regulator for each water spray boiler regulates the high-pressure nitrogen between 24.5 and 26 psig as it flows to the water storage tank.

A relief valve is incorporated inside each nitrogen regulator to prevent the water storage tank pressure from exceeding 33.5 psig from heat soakback during operations or in the event of a failed-open nitrogen regulator. The gaseous nitrogen relief valve opens between 30 to 33.5 psig.

The water supply for each boiler is stored in a positive-displacement aluminum tank containing a welded metal bellows separating the stored water inside the bellows from the nitrogen expulsion gas.

Non-redundant pressure and temperature sensors located downstream from the gaseous nitrogen pressure vessel and on the water tank for each boiler transmit the pressures and temperatures through the A controller to the systems management general-purpose computer. The computer computes the pressure, volume and temperature and transmits the water tank quantity to panel F8

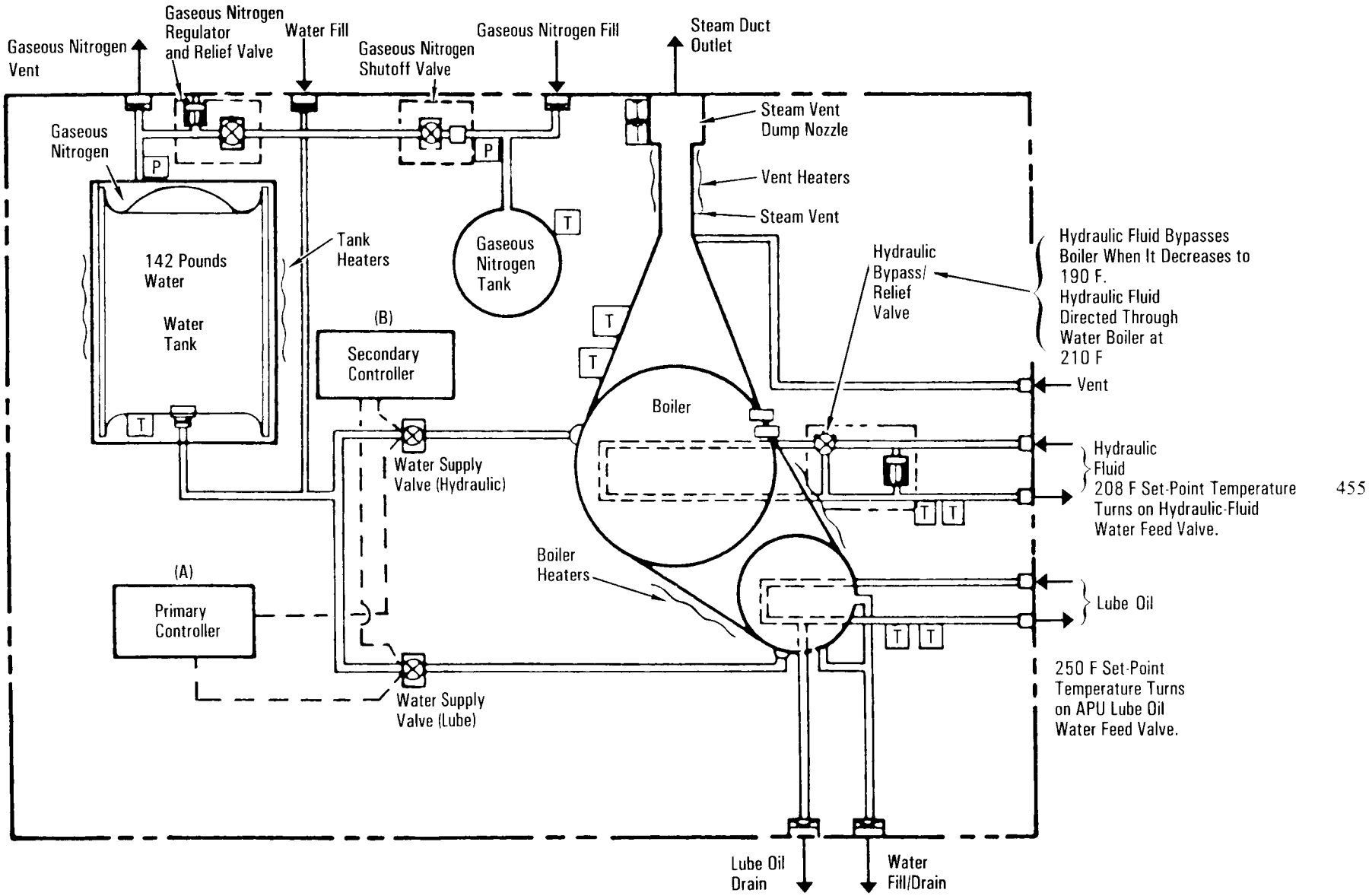


*Water Spray Boiler (One of Three)*

for each boiler. The *APU fuel/$H_2O$ qty* switch on panel F8 is positioned to allow the water quantity of each boiler to be displayed on the *APU fuel/$H_2O$ qty 1, 2* or *3* meter. Thus, water quantity is available only when the A controller is powered.

Downstream of the water storage tank, the feedwater lines to each water boiler split into two parallel lines: one line goes to the hydraulic fluid flow section and one to the lube oil section of the auxiliary power unit. A hydraulic-fluid water feed valve is installed in the water line to the hydraulic fluid section, and a power unit lube oil water feed valve is installed in the water line to the lube oil section of the power unit. Each valve is controlled independently by the boiler controller.

The two boiler controllers are operated by the respective *boiler cntlr pwr/htr 1, 2* and *3* switches on panel R2. When the applicable switch is positioned to *A*, the A controller for that

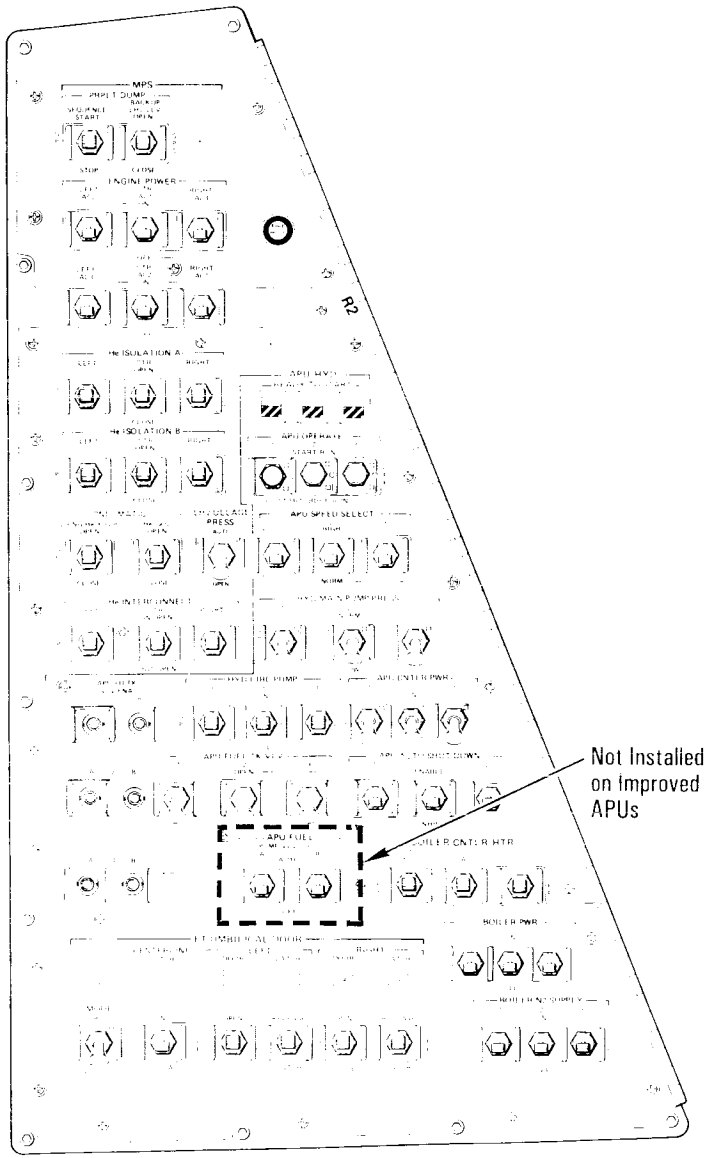


*Panel R2*

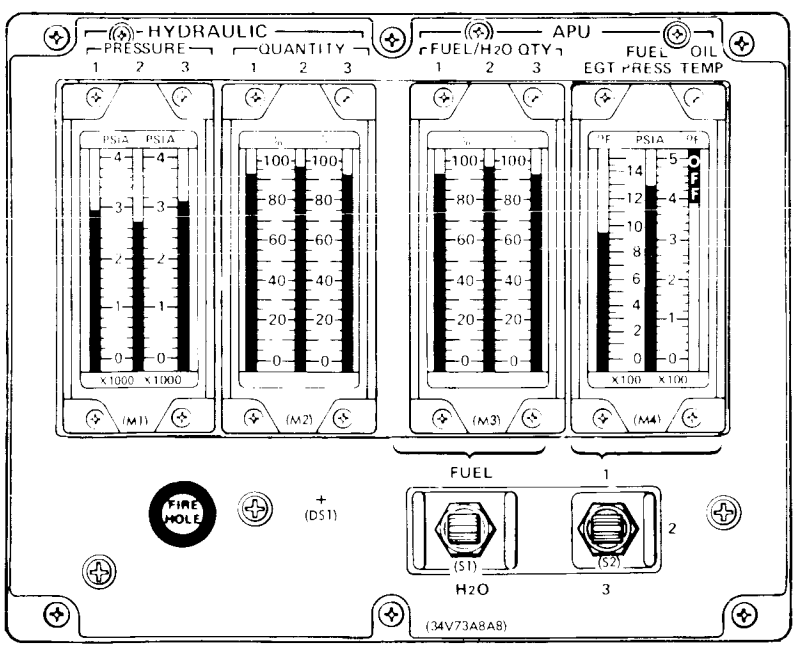


*Panel F8*

boiler is powered; if it is positioned to *B*, the B controller is powered. The *off* position of the applicable switch removes electrical power from both controllers.

The *boiler cntlr 1, 2* and *3* switches on panel R2 enable (provide the automatic control functions) the specific controller A or B selected for that boiler by the *boiler cntlr pwr/htr 1, 2* and *3* switches on panel R2. When the applicable controller A or B is enabled for that boiler, a ready signal is transmitted to the corresponding *APU/hyd ready to start* talkback indicator (along with other prerequisites from the auxiliary power unit and hydraulic system) on panel R2 if the following additional conditions are met: gaseous nitrogen shutoff valve is open, steam vent nozzle temperature is greater than 130 F, and hydraulic fluid bypass valve is in the correct position with regard to the hydraulic fluid temperature.

The core of each water spray boiler is a stainless steel crimped-tube bundle. The hydraulic fluid section is divided into three 17-inch-long passes of smooth tubes (first pass—234 tubes, second pass—224 tubes and third pass—214 tubes). The lube oil section of the auxiliary power unit comprises two passes with 103 crimped tubes in its first pass and 81 smooth tubes in the second pass. The tubes are 0.0125 of an inch in diameter with a wall thickness of 0.010 of an inch. Crimps located every 0.24 of an inch break up the internal boundary layer and promote enhanced turbulent heat transfer. Although the second pass is primarily a low-pressure drop return section, approximately 15 percent of the unit's lube oil heat transfer occurs there.

Three connected spray bars feed the hydraulic fluid section, while two spray bars feed the power unit's lube oil section in each boiler.

When the orbiter is in the vertical position on the launch pad, each boiler is loaded with up to 3.5 pounds of water, which is referred to as pool mode operation. When each auxiliary power unit/hydraulic system and water spray boiler is in operation five minutes before lift-off, the power unit tube bundle and hydraulic tube bundle are immersed in the boiler water precharge pool mode operation. Liquid level sensors in each water boiler prevent the

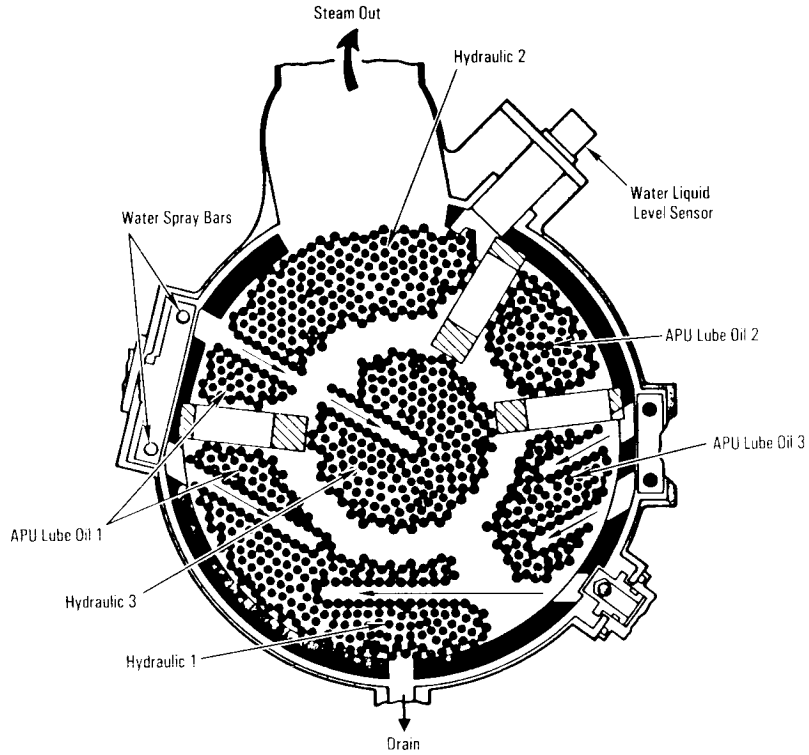


*Water Boiler*

water feed valves from pulsing to avoid water spillage or loss. As the vehicle ascends during launch, the lube oil system of the auxiliary power unit heats up, eventually the boiler water precharge boils off, and the boiler goes into the spray mode. The hydraulic fluid usually does not heat up enough during ascent to require spray cooling.

The enabled controller of the operating water spray boiler monitors the hydraulic fluid and lube oil outlet temperature from the auxiliary power unit. The hydraulic fluid outlet temperature controls the hydraulic-fluid water feed valve, and the power unit's lube oil outlet temperature controls the lube oil water feed valve. Signals are based on a comparison of the hydraulic system fluid

temperature to its 208 F set point and of the lube oil of the power unit to its 250 F set point. When the respective water feed valve opens, instantaneous flows of 10 pounds per minute maximum through the hydraulic section and 5 pounds per minute maximum through the lube oil section of the power unit enter the water boiler through the corresponding spray bars to begin evaporative cooling of the hydraulic fluid and auxiliary power unit lube oil. The steam is vented out through the overboard steam vent.

The separate water feed valves modulate the water flow to each section of the tube bundle core in each water spray boiler independently in 200-millisecond pulses that vary from one pulse every 10 seconds to one pulse every 0.25 of a second.

Because of the unique hydraulic system fluid flows, control valves are located in the hydraulic system fluid line section of each water spray boiler. Normally, hydraulic system fluid flows at up to 21 gallons per minute; however, the hydraulic system experiences one- to two-second flow spikes at up to 63 gallons per minute. If these spikes were to pass through the boiler, pressure drop would increase ninefold and the boiler would limit the flow of the hydraulic system. To prevent this, a relief function is provided by a spring-loaded poppet valve that opens when the hydraulic fluid pressure drop exceeds 48 psi and is capable of flowing 43 gallons per minute at a differential pressure of 50 psi across the boiler. A temperature controller diverter valve allows the hydraulic fluid to bypass the boiler when the fluid temperature decreases to 190 F. At 210 F, the controller commands the diverter valve to direct the fluid through the boiler. When the hydraulic fluid cools to 190 F, the controller again commands the diverter valve to route the fluid around the boiler.

Each water boiler, water tank and steam vent is equipped with electrical heaters to prevent freeze-up in orbit. The water tank and boiler electrical heaters are activated by the corresponding *boiler cntlr pwr/htr 1, 2* and *3* switches on panel R2. The *A* or *B* position of each switch selects the A or B heater system and is automatically controlled by the corresponding A or B controller. The steam vent heaters are also activated by the *boiler cntlr pwr/htr 1, 2* and *3* switches but only if the *boiler cntlr 1, 2* or *3* switch on panel R2 is on. The water tank and boiler heaters are cycled on at 50 F and off at 55 F. The steam vent heaters are not operated continuously in orbit; they are activated approximately two hours before auxiliary power unit startup. The steam vent heaters are cycled on at 150 F and cycled off at 175 F.

When the auxiliary power unit/hydraulic combination is started for atmospheric entry and the hydraulic fluid and power unit lube oil flow commences and fluid temperatures rise, spraying is initiated as required. During the lower part of entry, when the boiler temperature reaches 188 F, the water spray boiler returns to the pool mode. The spray bars begin discharging excess water to fill the boiler. When the water reaches the liquid level sensors, the spray is turned off so that the boiler is not overfilled. During entry, because the orbiter's orientation is different from that of launch, the boiler can hold up to 14 pounds of water.

Each water spray boiler transmits data to the systems management summary CRT for display. Data displayed for each boiler consist of water quantity, gaseous nitrogen pressure, gaseous nitrogen regulated pressure, bypass valve status, gaseous nitrogen and water tank temperature, and boiler temperature.

The boiler system controllers are powered up at launch minus four hours. The boiler water tanks are pressured at T minus one hour and 10 minutes in preparation for auxiliary power unit activation. The boiler system controllers activate heaters on the water tank, boiler and steam vent to ensure that the water spray boiler is ready to operate for launch.

Auxiliary power unit start is delayed as long as possible to save fuel. At T minus six minutes, the pilot begins the power unit prestart sequence—confirming that the water spray boiler is activated—activates the auxiliary power unit controllers and depressurizes the main hydraulic pump. Depressurizing the main pump reduces the starting torque on the auxiliary power unit. The pilot then opens the auxiliary power unit fuel tank valves and looks for three *APU ready to start* gray talkbacks. At T minus five minutes, the pilot starts the three power units by setting the *APU cntl* switches to *start/run* and checks the hydraulic pressure gauges

for an indication of approximately 600 to 1,000 psi. Then the pilot pressurizes the main pump and looks for approximately 3,000 psi on the gauges. All three hydraulic main pump pressures must be greater than 2,800 psi by T minus four minutes, or the automatic launch sequencer will abort the launch.

The auxiliary power units operate during the ascent phase and through the first orbital maneuvering system thrusting period. At the conclusion of the main engine purge, dump and stow sequence, the auxiliary power units and water spray boilers are shut down. The same sequence applies for a delayed OMS-1 thrusting period. If an abort once around is declared, the auxiliary power units are left running but the hydraulic pumps are depressurized to reduce power unit fuel consumption. The auxiliary power units are left running to avoid restarting hot power units for deorbit and re-entry.

Six hours after lift-off, the heater gas generator/fuel pump heaters of the auxiliary power units are activated to operate for the remainder of the orbital mission. The fuel and water line heaters of the power units are also activated to prevent the lines from freezing as the units cool down.

A few hours after lift-off, the landing gear isolation valves on hydraulic systems 2 and 3 are opened so that the pumps can circulate hydraulic fluid through the lines. Because these valves will not open or close unless the pressure in the line is at least 100 psi, the main hydraulic pump or hydraulic circulation pump must be active. The hydraulic system 1 landing gear isolation valve is left closed because of the danger of inadvertently lowering the landing gear while the vehicle is in orbit.

Two hours after lift-off, the steam vent heaters of the water spray boilers are turned on and left on for about 1.5 hours to eliminate all ice from the boiler steam vents.

While the vehicle is in orbit, the hydraulic circulation pumps are in the GPC mode (controlled by the general-purpose computers): automatically activated when hydraulic line temperatures become too low and automatically deactivated when the lines warm up sufficiently.

On the day before deorbit, one auxiliary power unit is started to supply hydraulic pressure for checkout of the flight control system. (Hydraulic pressure is needed to move the orbiter aerosurfaces during checkout.) The associated water spray boiler controller is activated, and landing gear isolation valves 2 and 3 are closed. Then one auxiliary power unit (selected by the Mission Control Center) is started. The hydraulic main pump is set to normal pressure (approximately 3,000 psi), and aerosurface drive is checked. After about five minutes, the checks are complete and the power unit is shut down. Normally, the auxiliary power unit does not run long enough to require water spray boiler operation. The landing gear isolation valves on hydraulic systems 2 and 3 are reopened after the auxiliary power unit is shut down.

At 2.5 hours before the deorbit thrusting period, the steam vent heaters of the water spray boiler are activated to prepare the boiler systems for operation during entry. At about the same time, the landing gear isolation valves on hydraulic systems 2 and 3 are closed, and the circulation pumps are turned off.

At 45 minutes before deorbit, the water tanks of the boiler systems are pressurized, the APU controllers are activated, and the main hydraulic pumps are set at low pressure. The pilot opens the fuel tank valves of the auxiliary power units and looks for three gray *APU/hyd rdy* talkbacks. The pilot then closes the fuel tank valves. This procedure takes place while the pilot is in contact with the ground so that flight controllers can observe the status of the auxiliary power units. Five minutes before the deorbit thrusting period, one power unit (selected by Mission Control) is started to ensure that at least one unit will be operating for entry.

The hydraulic pump is left in low. This auxiliary power unit operates through the deorbit burn. At 13 minutes before entry interface (400,000-foot altitude), while the orbiter is still in free fall, the other two auxiliary power units are started and all three hydraulic pumps are pressurized (*norm*). Two space shuttle main

engine hydraulic isolation valves are cycled open, then closed, to ensure that the engines are stowed for entry. Two minutes later, if required, the aerosurfaces are put through an automatic cycle sequence to make sure warm hydraulic fluid is available in the aerosurface drive units.

After touchdown, a hydraulic load test may be conducted to test the response of the auxiliary power units and hydraulic pumps under high load (i.e., high flow demand) conditions. This test cycles the orbiter aerosurfaces with one hydraulic system at a time in depressed mode (the remaining two power units and hydraulic pumps have to drive all the aerosurfaces). This is typically done on the first flight of a new vehicle. Then the main engine hydraulic isolation valves are opened again, and the engines are moved to the transport position. At this point, the hydraulic systems are no longer needed, and the auxiliary power units and water spray boilers are shut down.

The contractor for the water spray boilers is Hamilton Standard Division, United Technologies Corp., of Windsor Locks, Conn.

## HYDRAULIC SYSTEM

The hydraulic system consists of three independent systems. Each of the three auxiliary power units provides mechanical shaft power to drive a hydraulic pump, and each of the three hydraulic pumps provides the hydraulic pressure for the respective hydraulic system.

The hydraulic systems are designated 1, 2 and 3. Each of the three independent hydraulic systems consists of a main hydraulic pump, hydraulic reservoir, hydraulic bootstrap accumulator, hydraulic filters, control valves, hydraulic/Freon-21 heat exchanger, electrical circulation pump and electrical heaters.

Each hydraulic system provides hydraulic pressure for positioning of hydraulic actuators for (1) thrust vector control of the three space shuttle main engines by gimbaling the three SSMEs, (2) propellant control of various valves on the SSMEs, (3) control of the orbiter aerosurfaces (elevons, body flap, rudder/speed brake), (4) retraction of the external tank/orbiter 17-inch liquid oxygen and liquid hydrogen disconnect umbilicals within the orbiter at external tank jettison, (5) main and nose landing gear deployment, (6) main landing gear brakes and anti-skid and (7) nose wheel steering.

When the three APUs are started five minutes before lift-off, the hydraulic systems position the three SSMEs for start, control various propellant valves on the SSMEs and position orbiter aerosurfaces. The hydraulic systems provide pressure for SSME thrust vector control at launch through SSME propellant venting, elevon load relief during ascent and retraction of the liquid oxygen and liquid hydrogen umbilicals at external tank jettison.

The hydraulic/APU systems are not operated after the first orbital maneuvering system thrusting period because hydraulic functions are no longer required. One hydraulic/APU system is operated briefly one day before deorbit to support a checkout of the orbiter flight control system, which includes the orbiter aerosurfaces (elevons, rudder/speed brake and body flap).

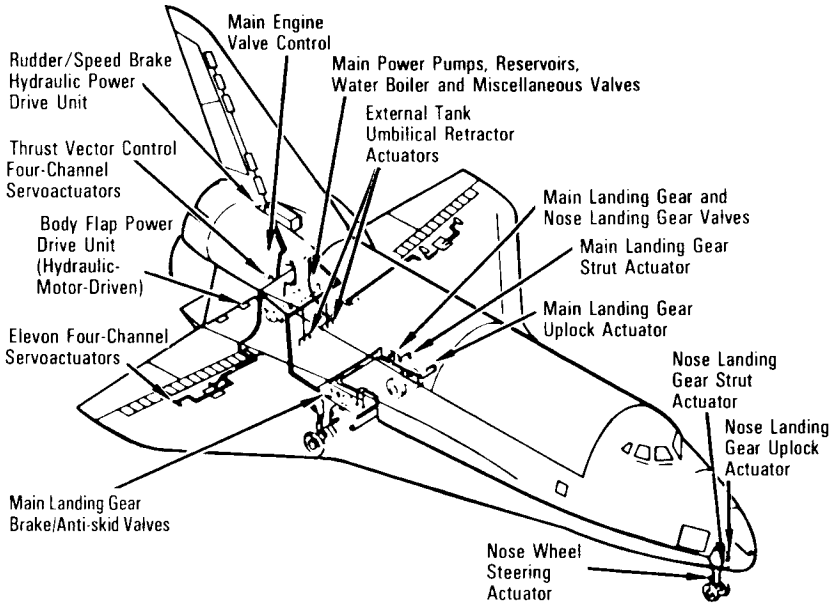


*Hydraulic Systems*



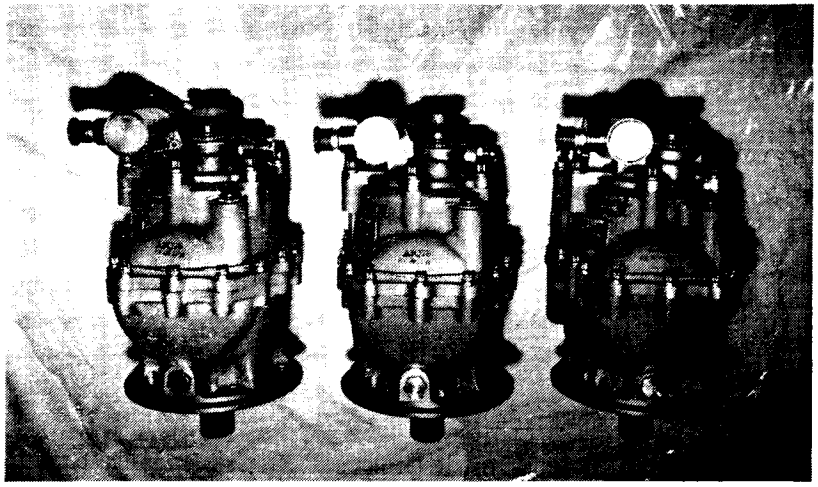

*Hydraulic System Pumps*

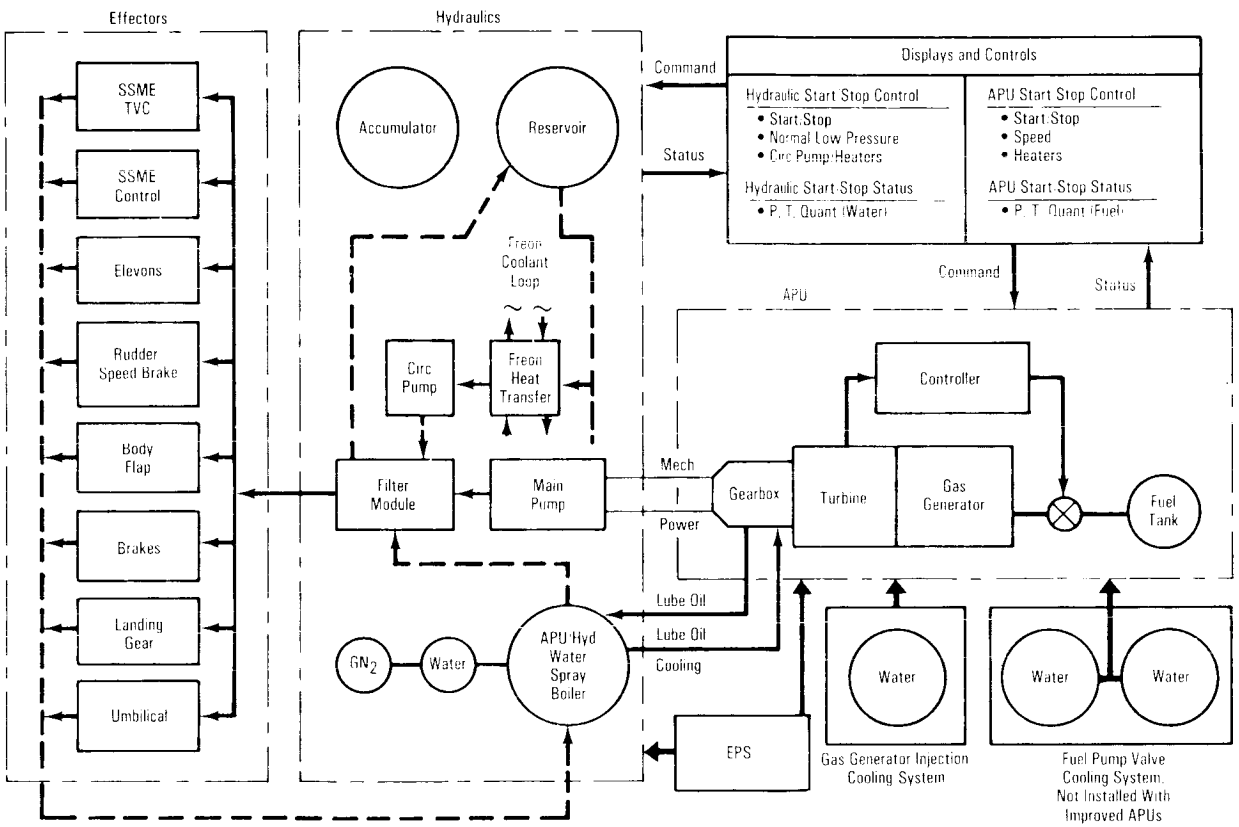


*Auxiliary Power Unit, Water Spray Boiler and Hydraulic System*

One hydraulic/APU system is activated before the deorbit thrusting period; and the two remaining systems are activated after the deorbit thrusting maneuver and operate continuously through entry, landing and landing rollout to provide hydraulic power for positioning of the orbiter aerosurfaces during the atmospheric flight portion of entry, deployment of the nose and main landing gear, main landing gear brakes and anti-skid, nose wheel steering and positioning of the three SSMEs after landing rollout.

When the hydraulic/APU systems are in operation, the corresponding water spray boilers cool the APU lube oil system and hydraulic systems. On orbit, because hydraulic power is no longer required, each hydraulic system's fluid is circulated periodically by an electric-motor-driven circulation pump to absorb heat from the Freon-21 hydraulic system heat exchanger and distribute it to active areas of that hydraulic system. Electrical heaters are provided in areas of the hydraulic systems that cannot be warmed by fluid circulation on orbit.

Each hydraulic system is capable of operation when exposed to forces or conditions caused by acceleration, deceleration, normal gravity, zero gravity, hard vacuum and temperatures encountered during on-orbit dormant conditions.

The main hydraulic pump for each hydraulic system is a variable displacement type. Each operates at approximately 3,900 rpm when driven by the corresponding APU.

Each main hydraulic pump has an electrically operated depressurization valve. The depressurization valve for each pump is controlled by its corresponding *hyd main press 1, 2* or *3* switch on panel R2. When the switch is positioned to *low*, the depressurization valve is energized to reduce the main hydraulic pump discharge pressure from its nominal range of 2,900 to 3,100 psi output to a nominal range of 500 to 1,000 psi to reduce the APU torque requirements during the start of the APU.

Before the start of each APU, the corresponding *APU/hyd ready to start 1, 2, 3* talkback indicator on panel R2 should indicate gray. For the talkback indicator to indicate gray, the corre-

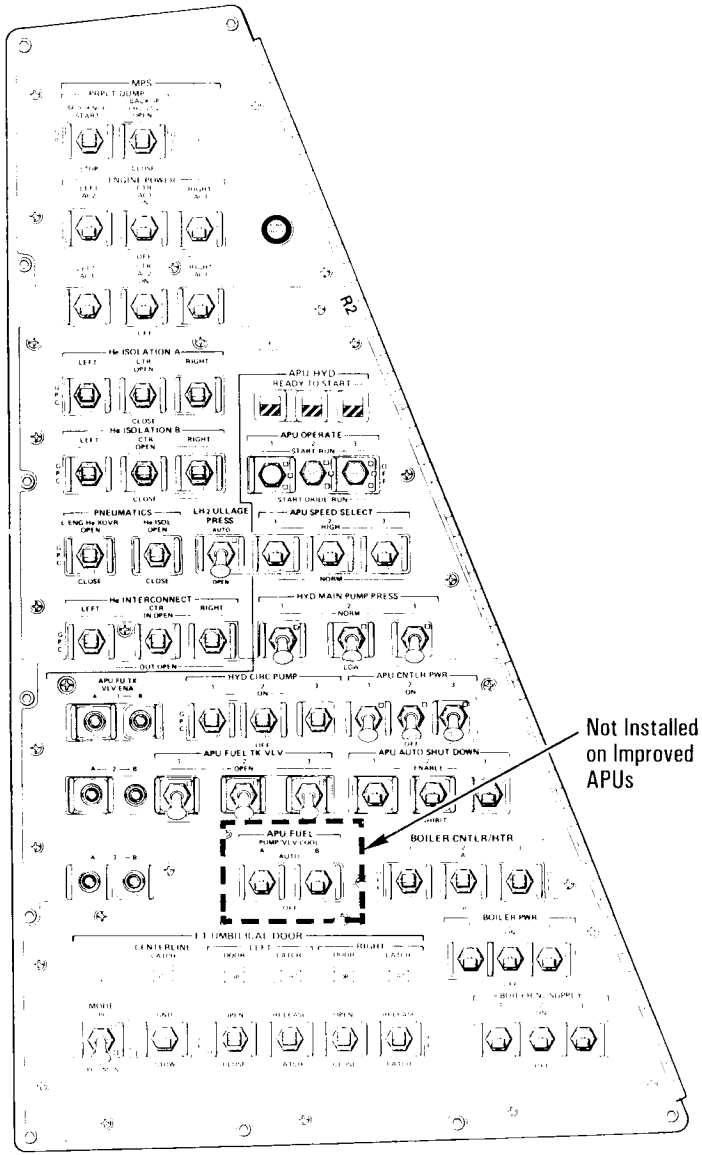


*Panel R2*

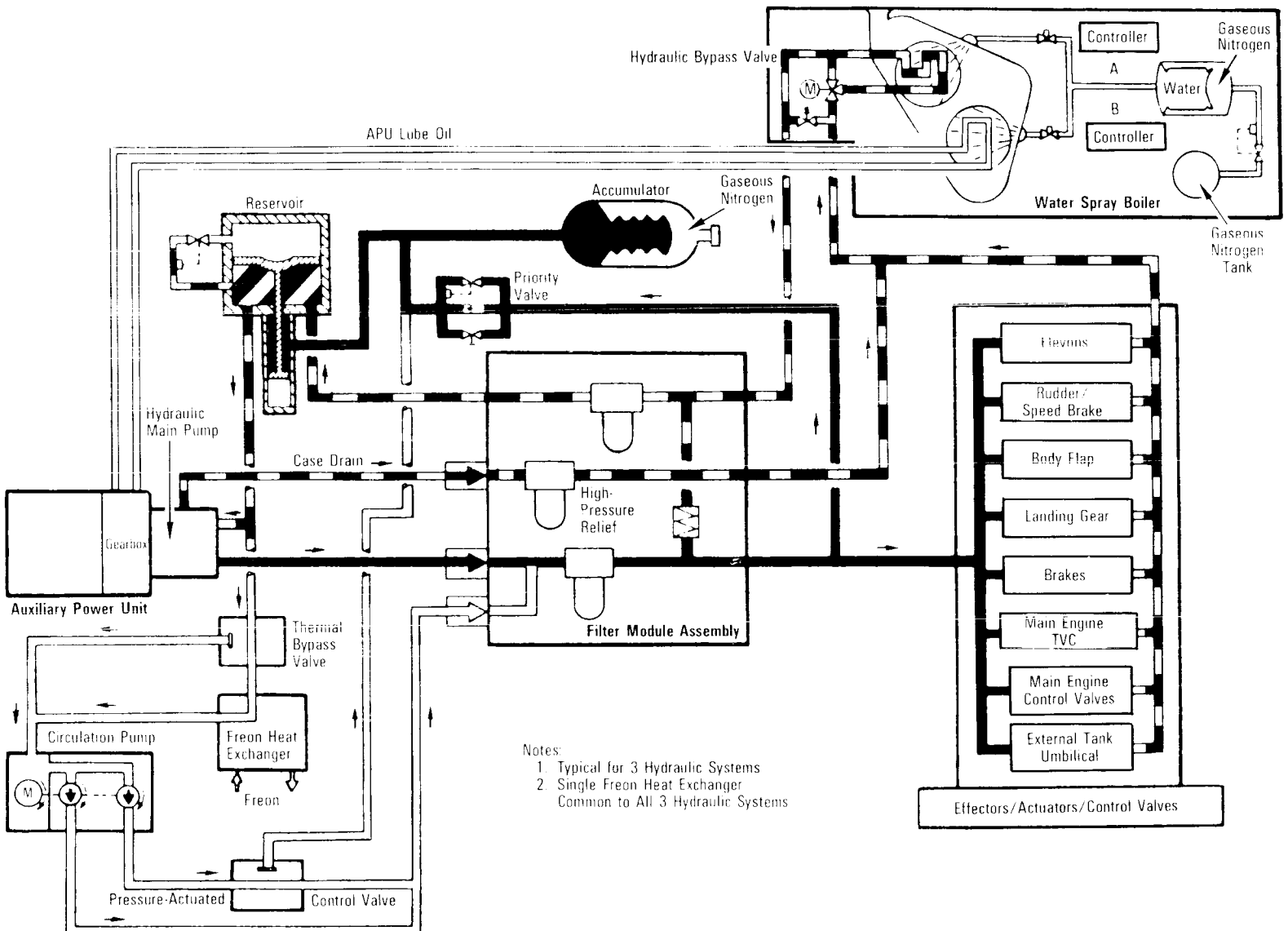


*Hydraulic Power System Main Pump Mode*

sponding hydraulic system *hyd main pump press* switch on panel R2 must be in *low*, the corresponding *boiler cntlr/pwr/htr* switch on panel R2 must be in the *A* or *B* position, the corresponding *boiler cntlr* switch on panel R2 must be on, the corresponding *boiler $N_2$ supply* switch on panel R2 must be on, and the boiler-ready signal, which consists of four parameters—boiler steam vent nozzle above 130 F, nitrogen valve open, bypass valve powered and boiler enabled—must be present.

When an APU has been started, the corresponding *hyd main pump press* switch is positioned from *low* to *norm*. This de-energizes the respective depressurization valve, allowing that hydraulic pump to increase its outlet pressure from 500 to 1,000 psi to 2,900 to 3,100 psi. Each hydraulic pump is a variable displacement type that provides zero to 63 gallons per minute at 3,000 psi nominal with the APU at normal speed and 69.6 gallons per minute at 3,000 psi nominal with the APU at high speed.

All hydraulic fluid going out to the system passes through a 5-micron filter before entering the hydraulic system, and all fluid passes through a 15-micron filter before entering the reservoir.

A high-pressure relief valve in the filter module for each hydraulic system relieves the hydraulic pump supply line pressure into the return line in the event the supply line pressure exceeds 3,850 psid.

A pressure sensor in the filter module for each hydraulic system monitors the hydraulic system source pressure and displays the pressure on the *hydraulic pressure 1, 2* and *3* meters on panel F8. The same hydraulic pressure sensor for each system also provides an input to the yellow *hyd press* caution and warning light on panel F7 if the hydraulic pressure of system 1, 2 or 3 is below 2,400 psi. The red *backup* caution and warning alarm light on panel F7 will also be illuminated if the hydraulic pressure of system 1, 2 or 3 is at 2,400 psi.

A hydraulic reservoir bootstrap accumulator in each hydraulic system bootstrap circuit assures adequate pressure at the inlet of the main hydraulic pump and circulation pump in that system

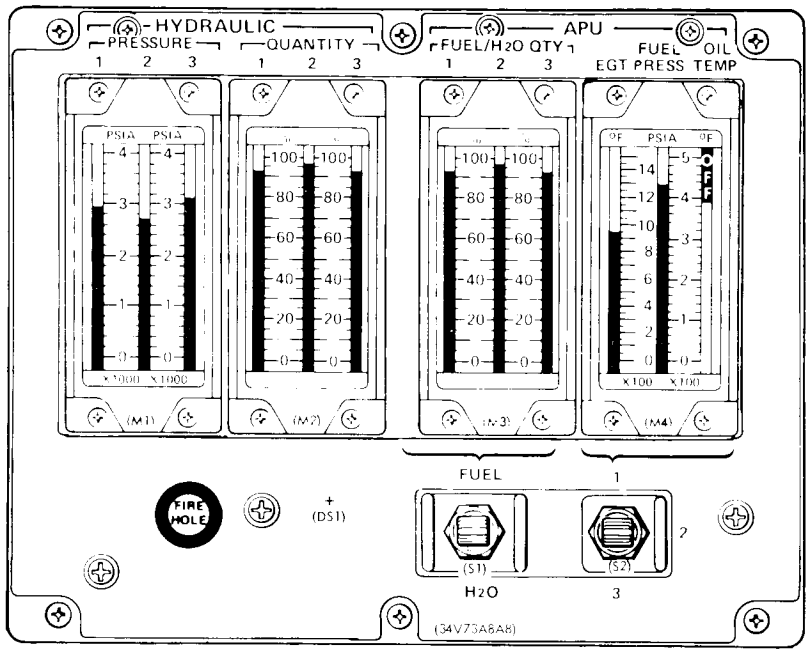


*Panel F8*

through the use of a differential area piston (41-1 area ratio between the reservoir side and accumulator side). When the main hydraulic pump is in operation, the high-pressure side of the piston and the bootstrap accumulator are pressurized to 3,000 psig from the main pump discharge line. When the main hydraulic pump is shut down, the priority valve closes and the bootstrap accumulator maintains a pressure of approximately 2,500 psi. The 2,500 psi on the high side results in a main pump inlet (low side) pressure of 40 to 60 psia. The minimum inlet pressure to assure a reliable main pump start is 20 psia (which corresponds to a high-pressure side of 800 psi). This prevents the main pump from cavitating (not drawing hydraulic fluid), which could damage the pump.

The quantity in each reservoir is 8 gallons. The hydraulic fluid specification is MIL-H-83282, which is a synthetic hydrocar-

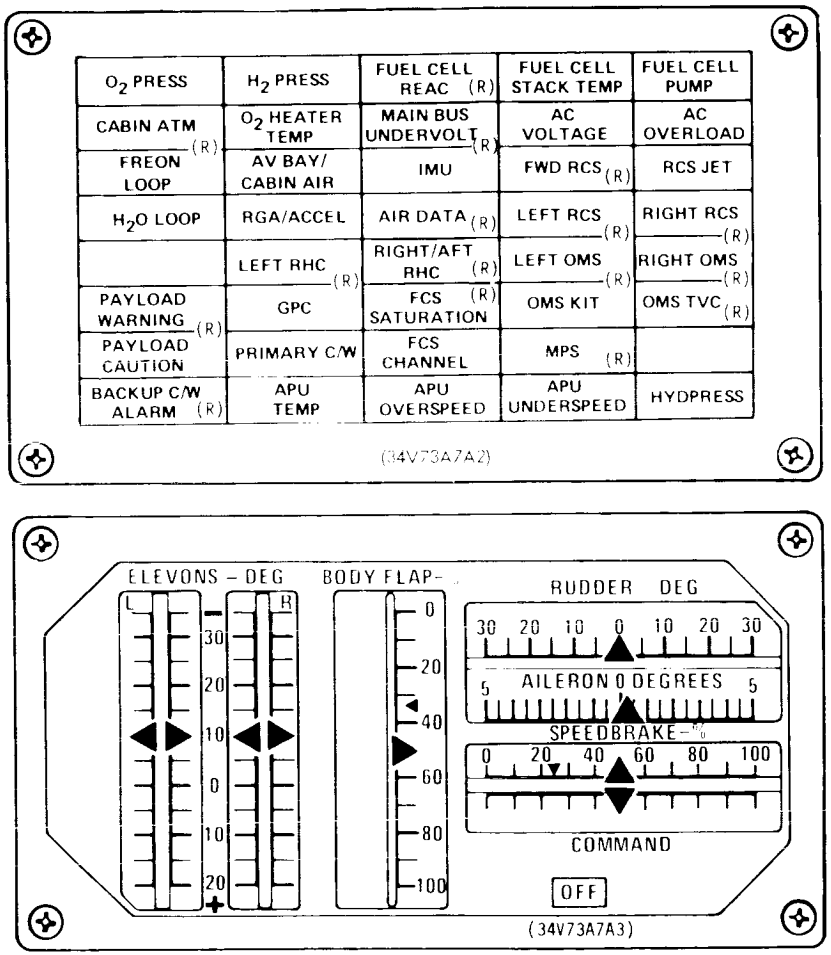


*Panel F7*

bon (to reduce fire hazards). The reservoir provides for volumetric expansion and contraction. The quantity of each reservoir is monitored in percent on the *hydraulic quantity 1, 2, 3* meters on panel F8. A pressure relief valve in each reservoir protects the reservoir from overpressurization and relieves at 120 psid.

The accumulator is a piston type precharged with gaseous nitrogen at 1,650 to 1,750 psi. The gaseous nitrogen capacity of each accumulator is 96 cubic inches, and the hydraulic volume is 51 cubic inches.

When each APU/main hydraulic pump and water spray boiler is in operation, each hydraulic fluid system directs through its corresponding water spray boiler. The hydraulic fluid is directed through the water spray boiler for cooling when the hydraulic fluid temperature of that system reaches 210 F. When the hydraulic fluid temperature of that system decreases to 190 F, the hydraulic fluid bypasses the boiler. This is automatically accomplished by the hydraulic bypass valve in the water spray boiler.

Another temperature-controlled bypass valve in each hydraulic fluid system directs the hydraulic fluid through the hydraulic/Freon-21 coolant heat exchanger, if the fluid's temperature is less than 105 F, and bypasses the fluid around the hydraulic/Freon-21 coolant heat exchanger if the temperature is greater than 115 F.



The aerosurfaces (elevons, rudder/speed brake and body flap) are powered by the hydraulic system, and the movement of the applicable aerosurface is accomplished mechanically.

Each elevon can be positioned by any of the three hydraulic systems. For each elevon, one hydraulic system is designated as the primary system, and the other two systems are standby 1 and standby 2. Switching valves are located in each elevon actuator. If the primary system pressure drops to around 1,200 to 1,500 psig, the switching valve will switch that elevon actuator to standby 1; and if that system pressure drops to around 1,200 to 1,500 psig, the switching valve will switch that elevon actuator to standby 2.

The rudder/speed brake is driven by six hydraulic motors, contained in a power drive unit. Three motors power the rudder, and three power the speed brake function. Each motor in its group is supplied by a different hydraulic system. The outputs of the three motors are combined in a planetary gear train, and the rudder and speed brake functions are summed in a mixing gear train. Loss of one hydraulic system results in loss of one motor. Because

of the velocity summary nature of the gearbox, loss of two hydraulic systems results in about half the design speed output from the gearbox.

The body flap operation is similar to that of the rudder/speed brake.

The priority rate-limiting system provides an automatic management of the loads on the remaining hydraulic system or systems if one or two hydraulic systems are lost for ascent or entry. The PRL system assigns relative priorities to the various flight controls of the orbiter and limits the demand on the hydraulic system by reducing the rate of movement of the control effectors. The PRL software is part of the guidance, navigation and control computer's digital autopilot software. The PRL system is automatically informed of the loss of a hydraulic system by a hydraulic-pressure-based redundancy management scheme in the GN&C computer software.

For each hydraulic system, the RM selection filter software receives three hydraulic main pump outlet pressure readings from three separate pressure transducers in each system by way of three different flight-critical aft multiplexers/demultiplexers. The selection filter selects the middle value, which it passes on to the hydraulic subsystem operating program. The SOP declares the hydraulic system failed if the pressure reading it gets from redundancy management is less than 1,706 psia. The hydraulic SOP then reports to the DAP PRL program how many good hydraulic systems are left and which systems are bad.

The PRL software establishes the elevons and rudder at a higher priority than the speed brake when the flow demand for all three systems cannot be met. In addition, for loss of one or two hydraulic systems, PRL will reduce the maximum rate of movement of the elevons to reduce the hydraulic flow demand. For loss of one hydraulic system, the reduction in elevon rates is approximately 4 percent (the body flap rate is not limited). For loss of two hydraulic systems, the reduction in elevon rates from normal rates is approximately 46 percent.

If one pressure transducer reading is lost because of an aft MDM failure, the redundancy management selection filter will take the remaining two readings, calculate an average and pass this average value on to the hydraulic SOP.

If two pressure transducer readings are lost, redundancy management will pass the remaining value to the hydraulic SOP unaltered.

Redundancy management also looks at the difference between the two readings when only two readings are involved. If the difference between the two pressures is greater than 250 psi, redundancy management will declare a miscompare, set a flag in the software declaring the data to be bad and pass this flag to the hydraulic SOP. When the hydraulic SOP sees the bad-data flag, it will ignore the current pressure value that redundancy management is sending it and use the last pressure value redundancy management sent before the data were declared bad.

Redundancy management also looks at the differences among the three readings. If one reading differs from the other two readings by greater than 250 psi, a miscompare is declared and that reading is no longer used. The remaining two readings are averaged.

Manual crew inputs to PRL can become necessary if an unlikely series of MDM failures, pressure transducer failures and hydraulic system failures on a given hydraulic system leads the hydraulic SOP to an incorrect conclusion regarding the status of that system.

Each hydraulic system is supplied or isolated to the space shuttle main engines' engine valve hydraulic actuators, SSME thrust vector control pitch and yaw actuators and umbilical retract actuators by the main propulsion system/thrust vector control *isol* (isolation) *vlv 1, 2* and *3* switches on panel R4. When the corresponding *MPS/TVC isol vlv* switch is positioned to *open*, the corresponding hydraulic source pressure is supplied to the SSME thrust vector control and umbilical actuators; when the switch is

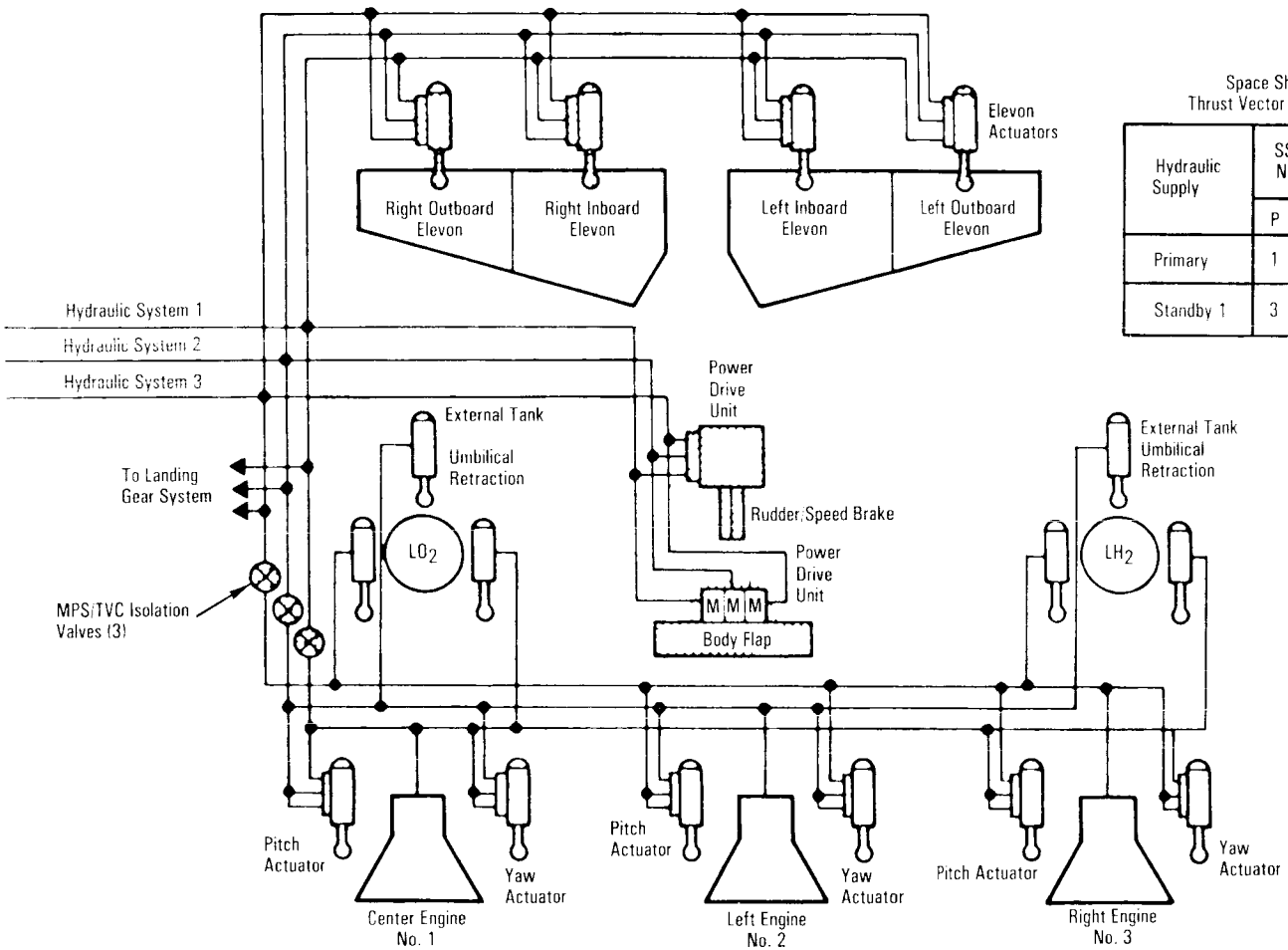


Space Shuttle Main Engine
Thrust Vector Control Hydraulic Logic

| Hydraulic Supply | SSME No. 1 | | SSME No. 2 | | SSME No. 3 | |
|---|---|---|---|---|---|---|
| | P | Y | P | Y | P | Y |
| Primary | 1 | 3 | 2 | 1 | 3 | 2 |
| Standby 1 | 3 | 1 | 1 | 2 | 2 | 3 |

*Hydraulic Actuator System—Aerosurfaces, Umbilical Retraction and Space Shuttle Main Engine Thrust Vector Control Actuator*

positioned to *close*, the hydraulic system is isolated from those functions. A talkback indicator located above the respective switch indicates *op* when that valve is open and *cl* when it is closed. The *MPS/TVC isol vlv 1, 2* and *3* switches are open during prelaunch and ascent and are closed after SSME propellant dump and stow. They remain closed except to reposition the SSMEs after deorbit thrusting, if required.

The three SSMEs and their associated controllers provide the positioning of the individual hydraulic actuators, which control each SSME oxidizer preburner oxidizer valve, main oxidizer valve, chamber coolant valve, fuel preburner oxidizer valve and the main fuel valve. These valves are commanded open for SSME ignition and are sustained in the open position through ascent. These valves are commanded closed hydraulically at main engine cutoff. After SSME shutdown and external tank separation, these valves are sequenced open for SSME propellant dump and purge and

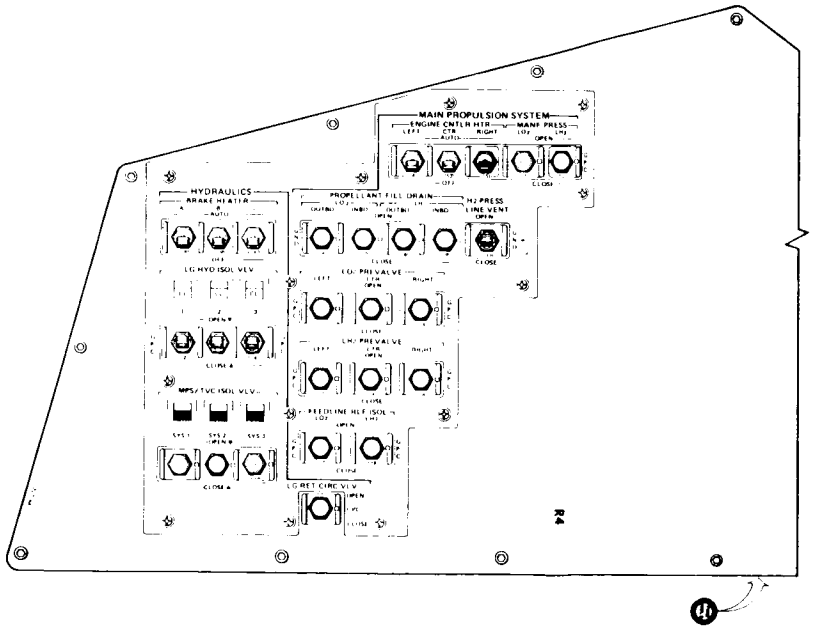


*Panel R4*

then sequenced closed for the remainder of the mission. Hydraulic system 1 supplies SSME 1, hydraulic system 2 supplies SSME 2 and hydraulic system 3 supplies SSME 3. If the corresponding hydraulic pressure drops below approximately 1,700 psig, a shuttle valve will shut off the hydraulic inlet and outlet to all five control valves. This is called a "soft lockup" and freezes that SSME at its current throttle setting. The soft lockup is reversible if that hydraulic system recovers pressure. However, if that SSME receives a command from its electronic controller to change throttle settings while in soft lockup, it enters an irreversible "hard lockup" condition and is held at that throttle setting for the rest of that SSME thrusting period. With the hydraulic system failed, if that SSME is required to shut down before or at MECO, shutdown is accomplished by a backup pneumatic (helium) system.

Each SSME is provided with thrust vector control by a pitch and yaw actuator, which is controlled by the ascent thrust vector control system. Each actuator is powered hydraulically for mechanically gimbaling the SSME for start and launch position and for thrust vector control during ascent. A switching valve is located at each actuator. A primary and secondary hydraulic system is supplied to each switching valve. If the primary hydraulic system at that switching valve drops below approximately 1,500 psig, the switching valve automatically switches that actuator to its secondary hydraulic system. After MECO, the actuators will position the SSMEs to the dump position for SSME propellant dump in order to minimize attitude disturbance. After propellant dump, the actuators will position the SSMEs to the stowed position for minimum aerodynamic interference for entry.

After external tank separation and SSME propellant dump and purge, the orbiter liquid oxygen and liquid hydrogen umbilicals at the external tank/orbiter interface are retracted and locked by three hydraulic actuators at each umbilical. The two umbilicals are retracted to permit the closure of the two external tank/orbiter umbilical doors in the bottom aft fuselage in preparation for entry. Hydraulic system 1 source pressure is supplied to one actuator at each umbilical, hydraulic system 2 source pressure is supplied to a second actuator at each umbilical and hydraulic system 3 source pressure is supplied to a third actuator at each umbilical.

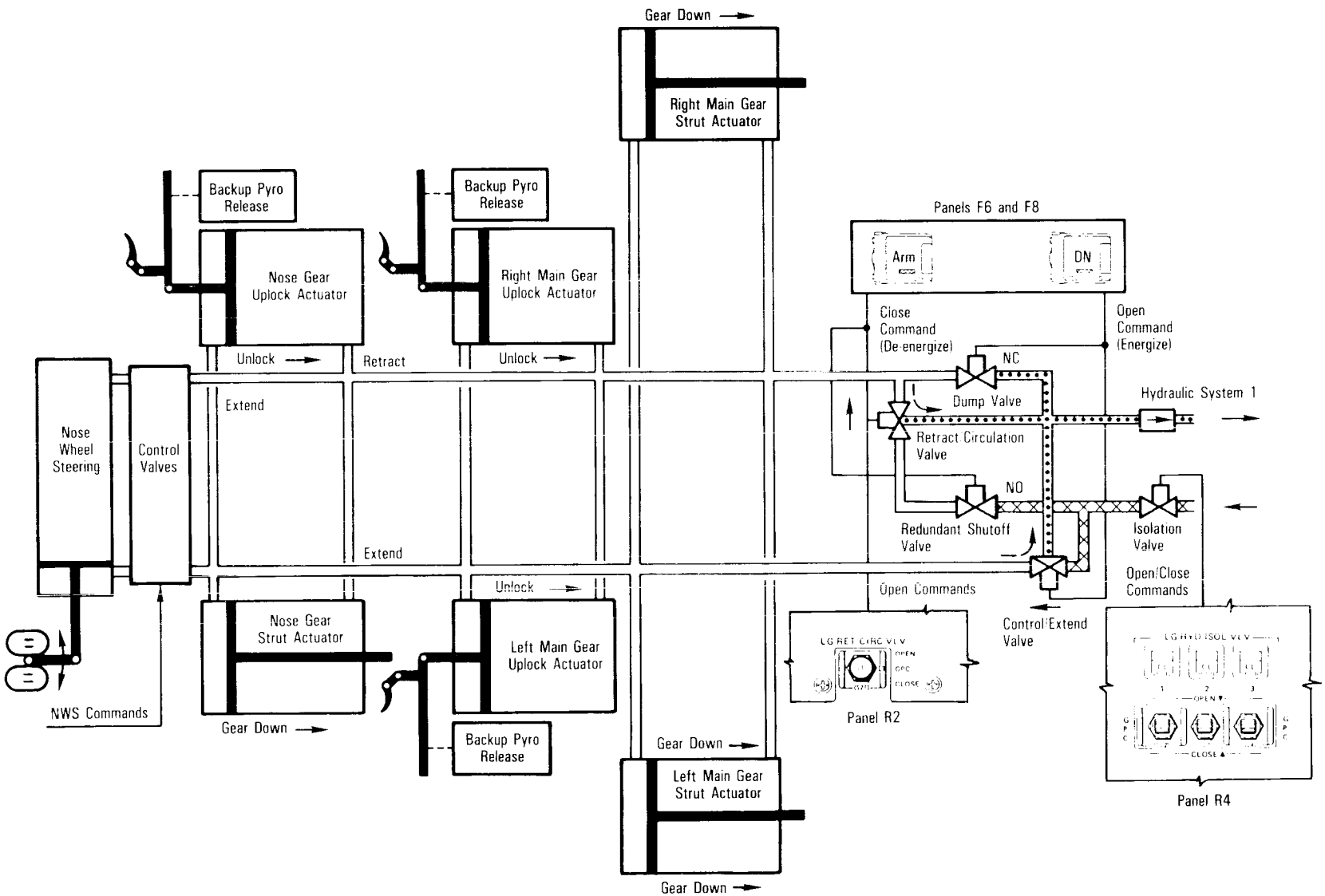


*Landing Gear Hydraulics*

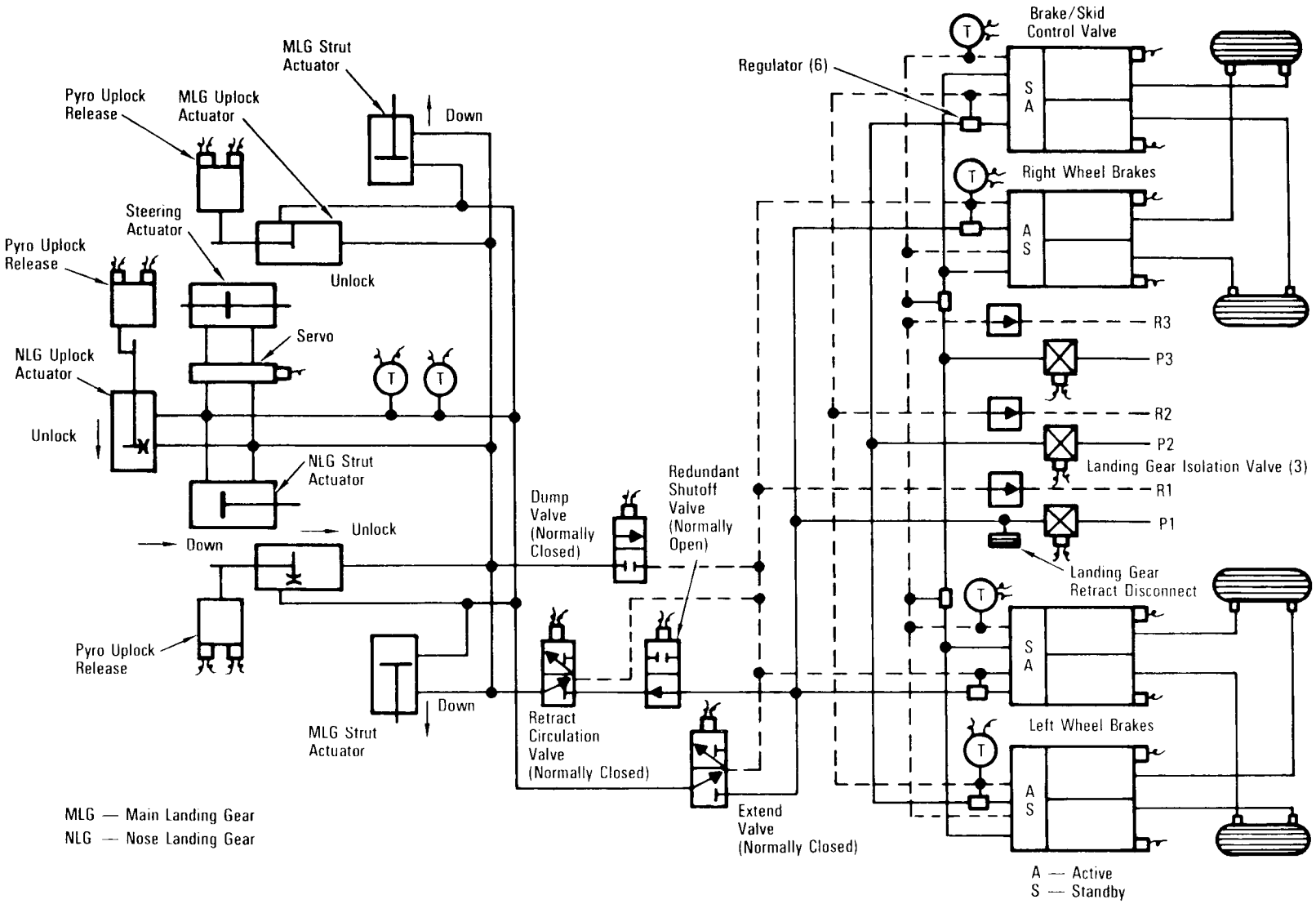


*Hydraulic Actuator System—Landing Gear and Brake*

There are three landing gear hydraulic isolation valve (*LG hyd isol vlv*) switches on panel R4 for hydraulic systems 1, 2 and 3. The *LG hyd isol vlv 1* switch positioned to *close* isolates hydraulic system 1 source pressure from the nose and main landing gear deployment uplock hook actuators and strut actuators, nose wheel steering actuator and main landing gear brake control valves. A talkback indicator next to the switch indicates *cl* when the valve is closed. The landing gear isolation valves will not close or open unless the pressure in that system is at least 100 psi. When the *LG hyd isol vlv 1* switch is positioned to *open*, hydraulic system 1 source pressure is supplied to the main landing gear brake control valves and to the normally closed extend valve. The normally closed extend valve is not energized until a gear down command is initiated by the commander or pilot on panel F6 or panel F8. The talkback indicator would indicate *op*. In order to prevent inadvertent nose and main landing gear deployment, the *LG hyd isol vlv 1* switch is left in the *cl* position.

The *LG hyd isol vlv 2* and *3* switches on panel R4 positioned to *close* isolate the corresponding hydraulic system from only the main landing gear brakes. The adjacent talkback indicator would indicate *cl*. When the switches are positioned to *open*, the corresponding hydraulic system source pressure is available to the main landing gear brake control valves. The corresponding talkback indicator would indicate *op*.

Only hydraulic system 1 is used for the deployment of the nose and main landing gear and nose wheel steering. When the nose and main landing gear down command is initiated by the commander or pilot on panel F6 or F8, hydraulic system 1 pressure is directed to the nose and main landing gear uplock hook actuators and strut actuators (provided the *LG hyd isol vlv 1* switch is in the *open* position) to actuate the mechanical uplock hook for each landing gear and allow the gear to be deployed and also provide hydraulic system 1 source pressure to the nose wheel steering actuator. The main landing gear brake control valves receive hydraulic system 1 source pressure when the *LG hyd isol vlv 1* is positioned to *open*. If hydraulic system 1 source pressure is unavailable, a pyrotechnic initiator attached to the nose and main landing gear uplock actuator automatically, one second after the gear down command, deploys the landing gear, actuates the mechanical uplock hook for each landing gear and allows the gear to be deployed. Because of the unavailability of hydraulic system 1 source pressure, powered nose wheel steering would not be functional; however, directional control of the orbiter can be maintained by differential braking to caster the nose wheel for steering.

The main landing gear brakes utilize hydraulic systems 1 and 2 as the primary source of hydraulic power and system 3 as a standby source of hydraulic power. Each of the four main landing gear wheel brake assemblies receives pressure from two different hydraulic systems in two separate brake chambers. One chamber receives hydraulic source pressure from hydraulic system 1 and the other chamber from hydraulic system 2. In the event of the loss of system 1 or 2 source pressure, switching valves provide automatic switching to the standby hydraulic system 3 when the active hydraulic system source pressure drops below approximately 1,000 psi. If hydraulic system 1 is unavailable, there is no effect to the braking system because standby system 3 would be automatically switched to replace system 1. Loss of hydraulic system 1 or 2 or both would also have no effect on the braking system because standby system 3 would automatically be switched to replace system 1 or 2 or both. Loss of hydraulic system 1 and 3 would cause the loss of half the braking power on each wheel and would require additional braking distance. Loss of hydraulic systems 2 and 3 would also cause the loss of half the braking power on each wheel, requiring additional braking distance.

A circulation pump in each hydraulic system consists of a high-pressure and low-pressure, two-stage gear pump driven by a 28-volt dc induction electric motor with a self-contained inverter. Protection against excessive electronic component temperature is provided by directing the inlet fluid flow around these components and through the electric motor before it enters the pumps. The low-pressure stage is rated at 2.9 gallons per minute at 350 psi. The circulation pumps in each hydraulic system maintain the desired hydraulic fluid temperatures during prelaunch activities before auxiliary power unit start and provide orbital thermal control of the hydraulic fluid by transferring heat from the active thermal control system Freon-21 coolant loop/hydraulic heat

exchanger to that hydraulic system. After landing and rollout, the circulation pump in each hydraulic system provides thermal conditioning of the hydraulic fluid after APU shutdown through the water spray boiler to limit hydraulic fluid temperature rise due to heat soakback. In the event of pressure loss in the bootstrap accumulator due to leakage on orbit, an unloader valve at the circulation pump directs the high-pressure stage pump to deliver 0.1 gallon per minute at a discharge pressure of up to 2,500 psi to repressurize the accumulator to greater than 2,563 psi and then redirects the high-pressure output to combine with the low-pressure output.

The electrical power for each circulation pump is supplied by the *hyd circ pump power 1, 2* and *3* switches on panel A12. Circulation pump 1 can receive power from main bus A or B, circulation pump 2 can receive power from main bus B or C, and circulation pump 3 can receive power from main bus C or A.

The circulation pump for each hydraulic system is controlled by the *hyd circ pump 1, 2* and *3* switches on panel R2. The *on* position provides the electrical power to its corresponding circulation pump, provided that the corresponding *APU start/run* switch on panel R2 is not in the *start/run* or *start oride/run* position. The *off* position removes electrical power from the corresponding circulation pump. The *GPC* position allows the general-purpose computer to automatically control the corresponding circulation pump.

The *GPC* position of the *hyd circ pump 1, 2* and *3* switches on panel R2 permits the activation or deactivation of the corresponding circulation pump according to the control program in the onboard computer based on certain hydraulic system line temperatures. The program activates the appropriate circulation pump when any of a hydraulic system's control temperatures drop below zero degree F and deactivates the circulation pump when all of the control temperatures for that hydraulic system are greater than 20 F.

The hydraulic circulation pump for a hydraulic system circulates the corresponding fluid system to the flight control system aerosurfaces. In order to circulate the fluid for the landing gear system, the *LG hyd isol vlv* switches on panel R4 must be positioned to *GPC* or *open*. The *GPC* position allows automatic computer control of the valves, whereas the *open* position enables manual control of the valves in conjunction with GPC control of the circulation pump. Note that hydraulic systems 2 and 3 provide fluid circulation to only the main landing gear brakes and that circulation dead-ends at the brake control valves, but system 1 is for gear deployment and main landing gear brakes. As stated previously, the *LG hyd isol vlv 1* switch is left closed to prevent inadvertent gear deployment.

The normally open hydraulic system 1 redundant shutoff valve is a backup to the retract/circulation valve to prevent hydraulic pressure from being directed to the retract side of the nose and main landing gear uplock hook actuators and strut actuators if the retract/circulation valve fails open during nose and main landing gear deployment.

The normally closed hydraulic system 1 dump valve is energized open to allow hydraulic system 1 fluid to return from the nose and main landing gear areas when deployment of the landing gear is commanded by the flight crew.

The activation/deactivation limits of the hydraulic fluid circulation systems can be changed during the mission by the flight crew or the Mission Control Center in Houston. The program also includes a timer to limit the maximum time a circulation pump will run and a priority system that automatically monitors hydraulic bootstrap pressure, which would allow all three circulation pumps to be on at the same time. The software timers allow this software to be used in contingency situations for "time-controlled" circulation pump operations in order to periodically boost an accumulator that is losing hydraulic fluid through a leaking priority valve or unloader valve.

During entry, if required, the *LG hyd isol vlv 1, 2* and *3* switches are positioned to *GPC*. At 19,000 feet per second, the landing gear isolation valve automatic opening sequence begins under guidance, navigation and control software control. If the

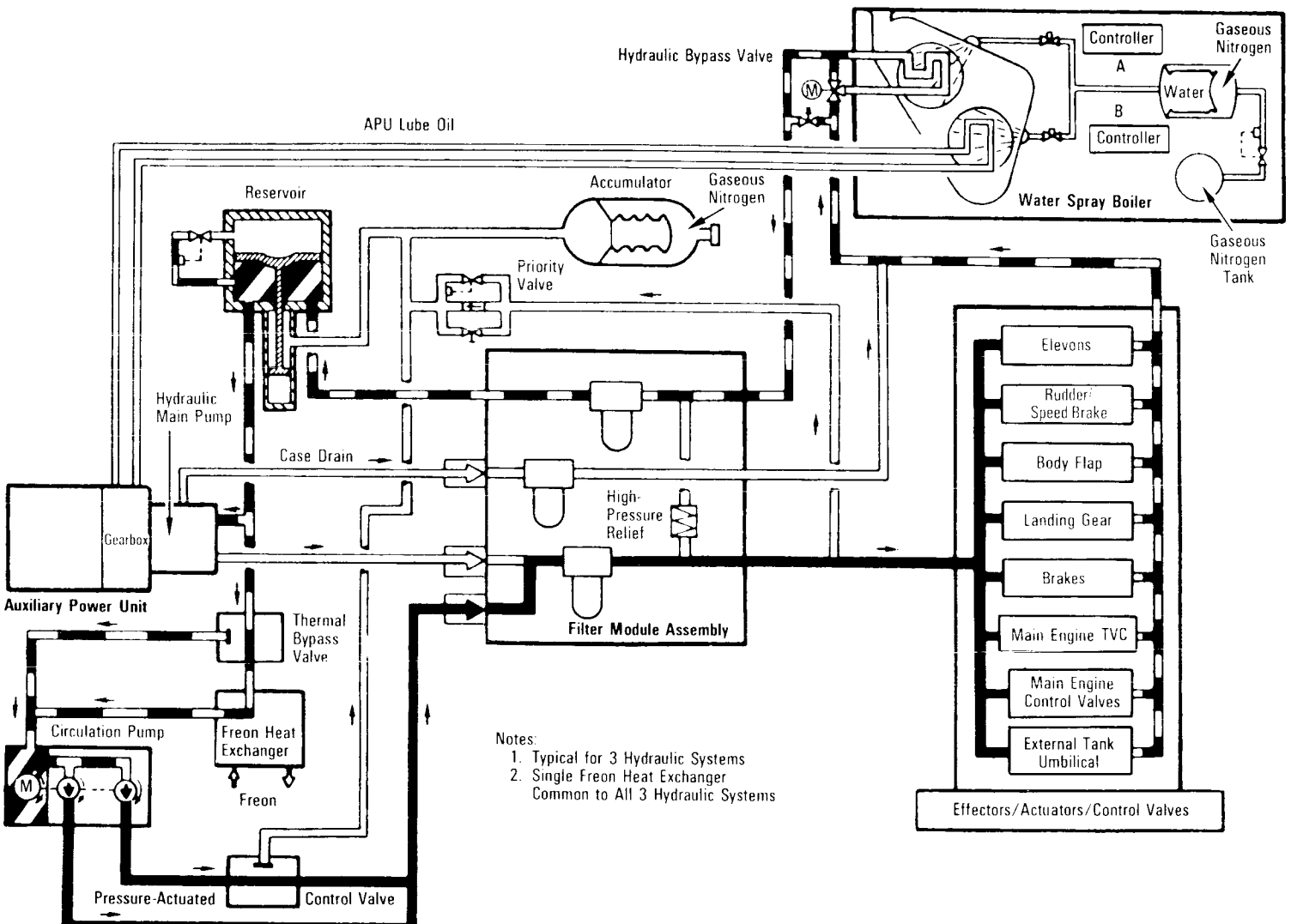


*Hydraulic Power System Circulation Mode*

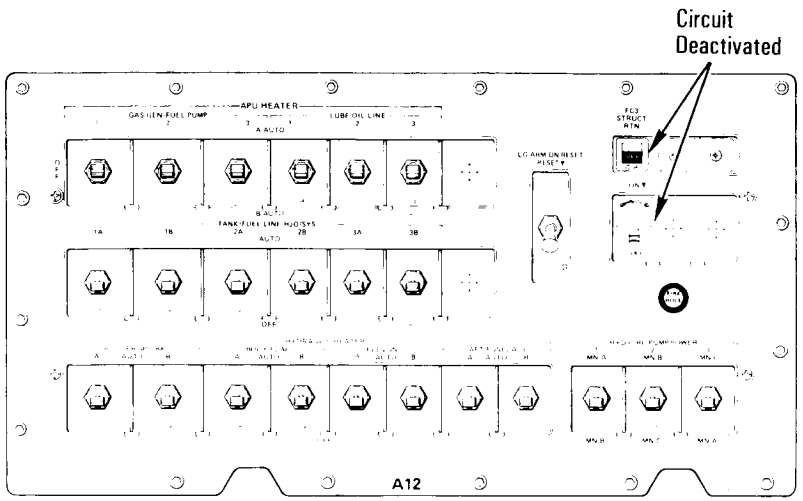


*Panel A12*

landing gear isolation valve is not opened automatically, the flight crew will be requested by the Mission Control Center to open the valve by positioning the applicable *LG hyd isol vlv* switch to *open*. Landing gear isolation valve 2 is automatically opened six minutes and 37 seconds later, followed by the automatic opening of landing gear isolation valve 1 when the orbiter's velocity is 800 feet per second or less. Landing gear isolation valve 3 is automatically opened at ground speed enable. Landing gear isolation valve 1 opens next to last to ensure that an inadvertent gear deployment would occur as late (low airspeed) as possible.

Insulation and electrical heaters are installed on the portions of the hydraulic systems that are not adequately thermally conditioned by the individual hydraulic circulation pump system because of stagnant hydraulic fluid areas.

Redundant electrical heaters are installed on the body flap differential gearbox, rudder/speed brake mixer gearbox, the four elevon actuators, the aft fuselage body flap A and B seal cavity drain line and rudder/speed brake cavity drain line. The *hydraulic heater* switches are located on panel A12. There are *hydraulic heater* switches for the rudder/speed brake, body flap, elevon and aft fuselage. The *auto A* or *B* switch for the rudder/speed brake, body flap, elevon and aft fuselage permits the corresponding main bus A or B to power redundant heaters at each location. Thermostats in each electrical A or B system cycle the heaters automatically off or on. The *off* position of the applicable switch removes electrical power from that heater system.

Redundant electrical heaters are installed on the main landing gear hydraulic flexible lines located on the back side of each main landing gear strut between the brake module and brakes. These heaters are required because the hydraulic fluid systems are dead-ended and cannot be circulated with the circulation pumps. In addition, on OV-103 and OV-104, the hydraulic system 1 lines to the nose landing gear are located in a tunnel between the crew compartment and forward fuselage. The passive thermal control system on OV-103 and OV-104 is attached to the crew compartment, and this leaves the hydraulic system 1 lines to the nose landing gear exposed to environmental temperatures, thus requiring electrical heaters on the lines in the tunnel. The passive thermal control system on OV-102 is attached to the inner portion of the forward fuselage rather than the crew compartment; thus, no heaters are required on the hydraulic system 1 lines to the nose landing gear on OV-102.

The *hydraulics brake heater A, B* and *C* switches on panel R4 enable the heater circuits. On OV-103 and OV-104, the *hydraulics brake heater A, B* and *C* switches provide electrical power from the corresponding main bus A, B and C to the redundant heaters on the main landing gear flexible lines and the hydraulic system 1 lines in the tunnel between the crew compartment and forward fuselage leading to the nose landing gear. Thermostats on each electrical A, B and C system cycle the heaters automatically off or on for the brake systems.

The *hydraulics brake heater A, B* and *C* switches on panel R4 enable the heater circuits on only the main landing gear hydraulic flexible lines on OV-102.

The return line of each hydraulic system is directed to its respective water spray boiler. One WSB for each hydraulic system provides the expendable heat sink for each orbiter hydraulic system and each of the APU lube oil systems during prelaunch, the boost phase, on-orbit checkout, deorbit and entry through rollout and landing.

Because of the unique hydraulic system fluid flows, hydraulic fluid control valves are located in the return line of the hydraulic system to the WSB. Normally, the hydraulic system fluid flows at up to 21 gallons per minute; however, the hydraulic system experiences one- to two-second flow spikes of up to 63 gallons per minute. If these spikes were to pass through the WSB, pressure drop would increase ninefold and the WSB would flow-limit the hydraulic system. To prevent this, a relief function is provided by a spring-loaded poppet valve that opens when the hydraulic fluid's pressure exceeds 48 psi and is capable of producing a flow of 43 gallons per minute at 50 psid across the WSB. A hydraulic bypass valve allows the hydraulic fluid to bypass the boiler when the hydraulic fluid has increased to 210 F. At 210 F, the controller commands the bypass valve to direct the hydraulic fluid through the WSB. When the hydraulic fluid cools to 190 F, the controller commands the bypass valve to direct the fluid around the WSB.

The WSB controllers are powered up at launch minus four hours. The WSB water tanks are pressurized at T minus one hour and 10 minutes in preparation for activating the auxiliary power units. The WSB controllers activate heaters on the water tank, boiler and steam vent to assure that the WSB is ready to operate for launch.

APU start is delayed as long as possible to save fuel. At T minus six minutes, the pilot begins the APU prestart sequence. The pilot confirms that the WSB is activated, then activates the APU controllers and depressurizes the main hydraulic pump. Depressurizing the main pump will reduce the starting torque on the APU. The pilot then opens the APU fuel tank valves and looks for three ready-to-start indications (gray talkbacks). At T minus five minutes, the pilot starts the three APUs by taking the *APU cntl* switches to *start/run* and checks the hydraulic pressure gauges for an indication of approximately 900 psi. Then the pilot pressurizes the main pump and verifies approximately 3,000 psi on the gauges.

Unless all three hydraulic main pump pressures are greater than 2,800 psi by T minus four minutes, the automatic launch sequencer will abort the launch.

The APUs operate during the ascent phase and continue to operate through the first orbital maneuvering system thrusting period. At the conclusion of the space shuttle main engine purge, dump and stow sequence, the APUs and WSBs are shut down. The same sequence applies for a delayed OMS-1 thrusting period. If an abort once around has been declared, the APUs are left running, but the hydraulic pumps are depressurized to reduce APU fuel consumption. Leaving the APUs running avoids having to restart hot APUs for deorbit and re-entry.

At six hours after lift-off, the APU heater gas generator/fuel pump heaters are activated and operate for the remainder of the on-orbit mission. The APU fuel and water line heaters are also activated to prevent freezing of these lines as the APUs cool down.

A few hours after lift-off, the landing gear isolation valves on hydraulic systems 2 and 3 are opened so that the circulation pumps can circulate hydraulic fluid through these systems. These valves will not open or close unless the pressure in the line is at least 100 psi, requiring the main hydraulic pump or hydraulic circulation pump to be active. The hydraulic system 1 landing gear isolation valve is left closed.

Two hours after lift-off, the WSB steam vent heaters are turned on and left on for about 1.5 hours to eliminate all ice from the WSB steam vents.

While the vehicle is in orbit, the hydraulic circulation pumps are in the GPC mode and are automatically activated when hydraulic line temperatures become too low and automatically deactivated when the lines warm up sufficiently.

On the day before deorbit, one hydraulic/APU system is started in order to have hydraulic power to check out the flight control system. Hydraulic power is needed to move the orbiter aerosurfaces as part of this checkout. The associated WSB controller is activated, landing gear isolation valves 2 and 3 are closed, and one APU (selected by the Mission Control Center) is started up. The hydraulic main pump is taken to normal pressure, and aerosurface drive checks are done. After about five minutes, the checks are complete and the APU is shut down. Normally, the APU does not run long enough to require WSB operation. The landing gear isolation valves on hydraulic systems 2 and 3 are reopened after the APU is shut down.

At 2.5 hours before the deorbit thrusting period, the WSB steam vent heaters are activated to prepare the WSB for operation during the entry. At about the same time, the landing gear isolation valves on hydraulic systems 2 and 3 are closed, and the circulation pumps are turned off.

At 45 minutes before deorbit, the WSB water tanks are pressurized, the APU controllers are activated, and the main hydraulic pumps are commanded to low pressure. The pilot opens the APU fuel tank valves and verifies three gray *APU/hyd rdy* talkbacks. The pilot then recloses the fuel tank valves. This procedure is run while in contact with the ground so that flight controllers can observe APU status. Five minutes before the deorbit thrusting period, one APU (selected by Mission Control) is started in order to assure that at least one APU will be operating for entry. The hydraulic pump is left in low. This APU operates through the deorbit burn. At 13 minutes before entry interface (entry interface is, by definition, 400,000 feet altitude), while the orbiter is still in free fall, the other two APUs are started, and all three hydraulic pumps are pressurized (*norm*). Any two SSME hydraulic isolation valves are cycled opened for 10 seconds and then closed in order to ensure that the SSMEs are stowed for entry. Two minutes later, if required, the aerosurfaces are put through an automatic cycle sequence to make sure warm hydraulic fluid is available in the aerosurface drive units.

After touchdown, a hydraulic load test may be performed to test the response of the APUs and hydraulic pumps under high load (i.e., high flow demand) conditions. This test consists of cycling the orbiter aerosurfaces with one hydraulic system at a time in depressed mode (the remaining two APUs and hydraulic pumps have to drive all the aerosurfaces). This is typically done on the first flight of a new vehicle. Then the SSME hydraulic isolation valves are opened again and the SSMEs are positioned to the transport position. At this point, the hydraulic systems are no longer needed, and the APUs and WSBs are shut down.

The contractors involved with the hydraulic systems are Arkwin Industries, Westbury, N.Y. (hydraulic reservoir, filter and control valves); Purolator Inc., Newbury Park, Calif. (hydraulic filter module); Parker-Hannifin Corp., Irvine, Calif. (hydraulic accumulator); Abex Corp., Aerospace Division, Oxnard, Calif. (hydraulic pump); Crissair Inc., El Segundo, Calif. (hydraulic check valve and flow restrictor); Hi-Temp Insulation Inc., Camarillo, Calif. (hydraulic blanket and line insulation); Bertea Corp., Irvine, Calif. (external tank umbilical retractor actuator, main and nose landing gear strut uplock actuator); Lear Siegler, Elyria, Ohio (hydraulic water spray boiler disconnect); Moog Inc., East Aurora, N.Y. (main engine gimbal servoactuators and elevon servoactuators); Pneu Devices, Goleta, Calif. (electric-motor-driven circulation pump); Pneu Draulics, Montclair, Calif. (priority valve and hydraulic thermal control shutoff valve); Resistoflex, Roseland, N.J. (hydraulic system line connectors); Sterer Engineering and Manufacturing, Los Angeles, Calif. (hydraulic landing gear solenoid shutoff valve, nose landing gear steering and damping system, three-way solenoid operating valve landing gear uplock and control valves); Sundstrand, Rockford, Ill. (rudder/speed brake actuation unit and body flap actuation unit); Symetrics, Canoga Park, Calif. (hydraulic quick disconnects); Titeflex Division, Springfield, Mass. (hydraulic system hose); Whittaker Corp., North Hollywood, Calif. (hydraulic accumulator dump valve); Wright Components Inc., Clifton Springs, N.J. (hydraulic latching solenoid valve); Hamilton Standard Division of United Technologies Corp., Windsor Locks, Conn. (water boiler hydraulic thermal unit and ground support equipment hydraulic cart); Cox and Co., New York, N.Y. (electrical heaters for components and lines).

## LANDING GEAR SYSTEM

The landing gear system on the orbiter is a conventional aircraft tricycle configuration consisting of a nose landing gear and a left and right main landing gear. Each landing gear includes a shock strut with two wheel and tire assemblies. Each main landing gear wheel is equipped with a brake assembly with anti-skid protection. The nose landing gear is steerable. The nose landing gear is located in the lower forward fuselage, and the main landing gear are located in the lower left and right wing area adjacent to the midfuselage.

The nose landing gear is retracted forward and up into the lower forward fuselage and is enclosed by two doors. The main landing gear are also retracted forward and up into the left and right lower wing area, and each is enclosed with a single door. The nose and main landing gear can be retracted only during ground operations.

For retraction, each gear is hydraulically rotated forward and up during ground operations until it engages an uplock hook

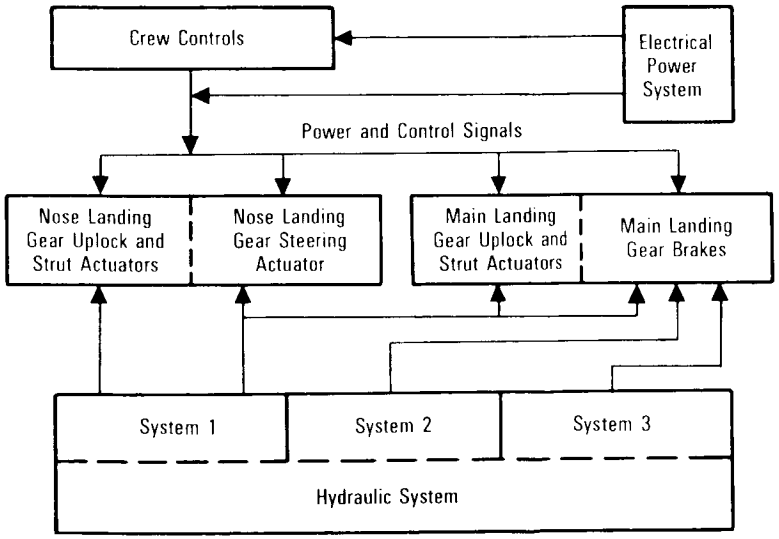


*Landing/Deceleration Interfaces*

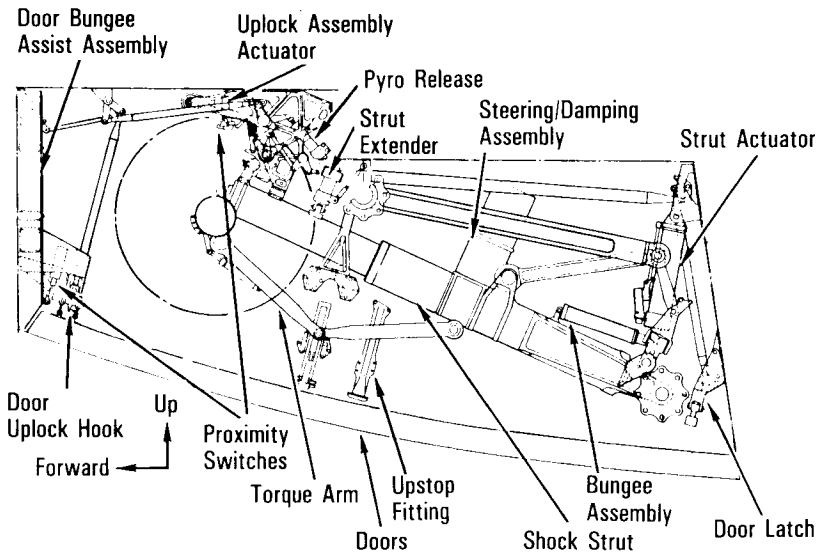


*Nose Landing Gear Stowed*



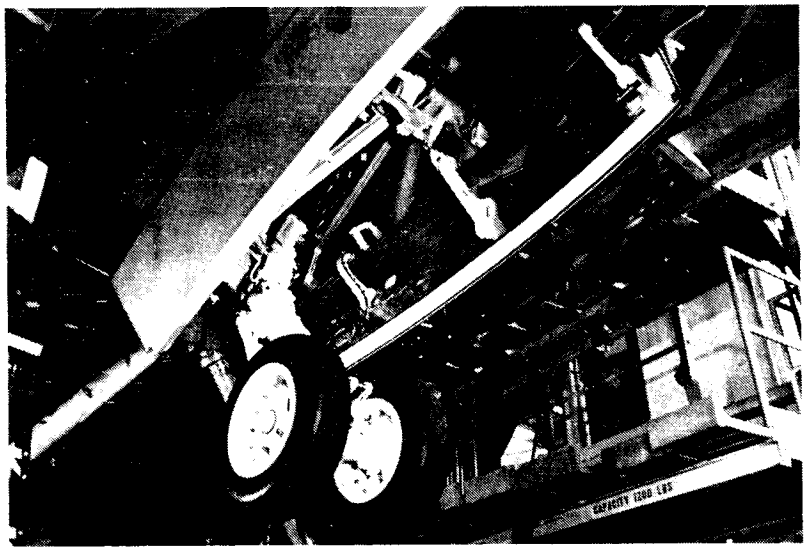

*Nose Landing Gear*

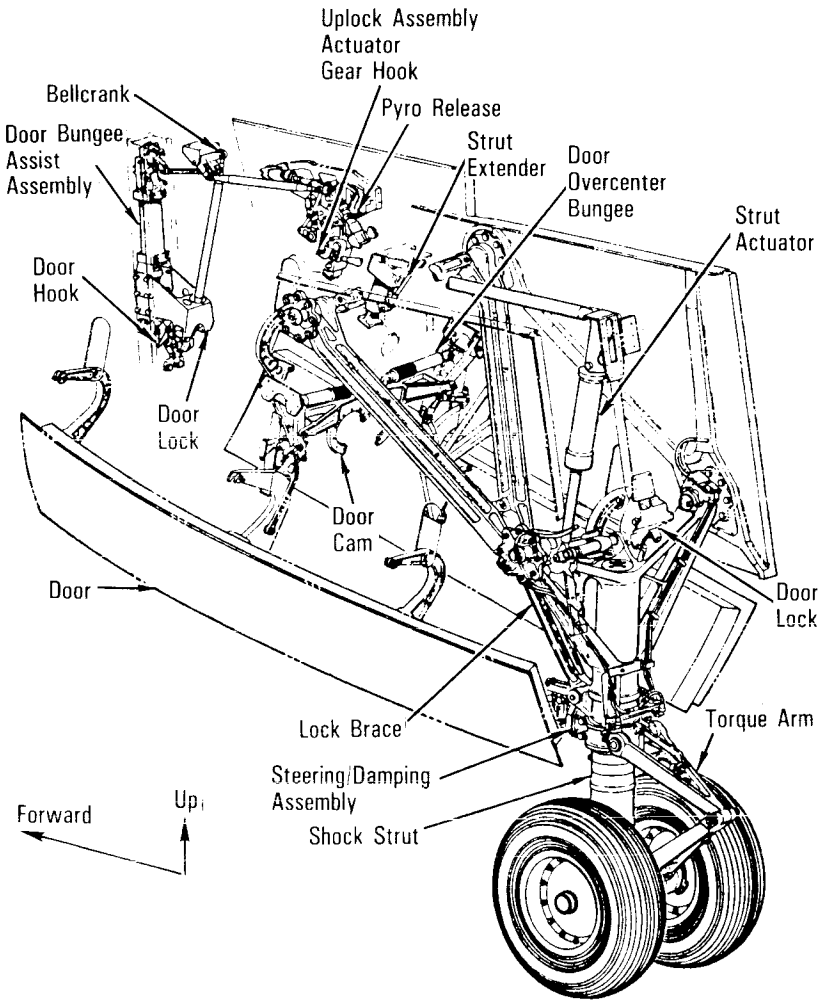


*Nose Landing Gear Deployed*

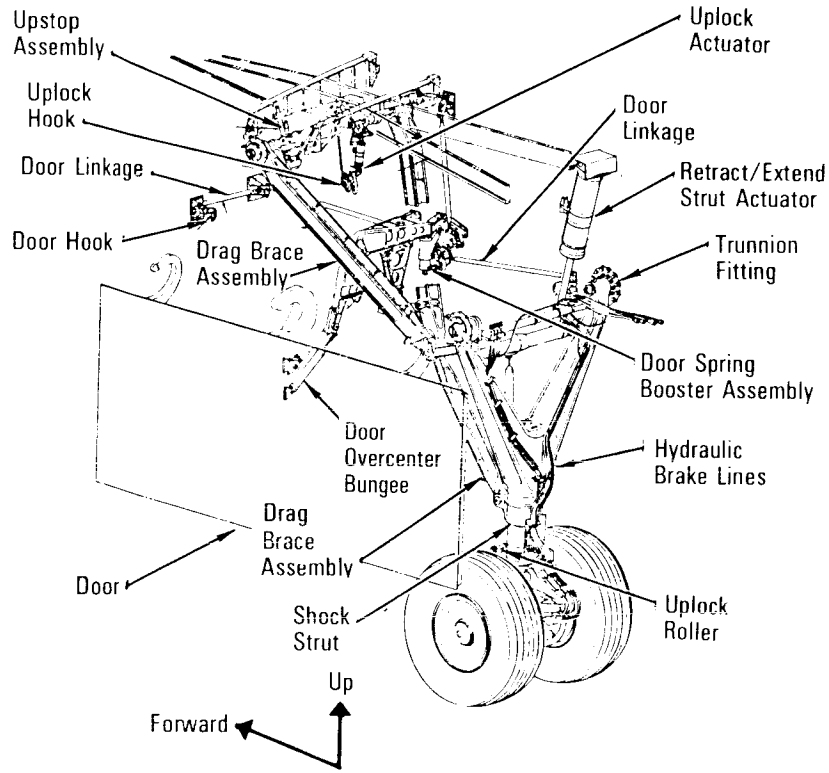


*Main Landing Gear Deployed*

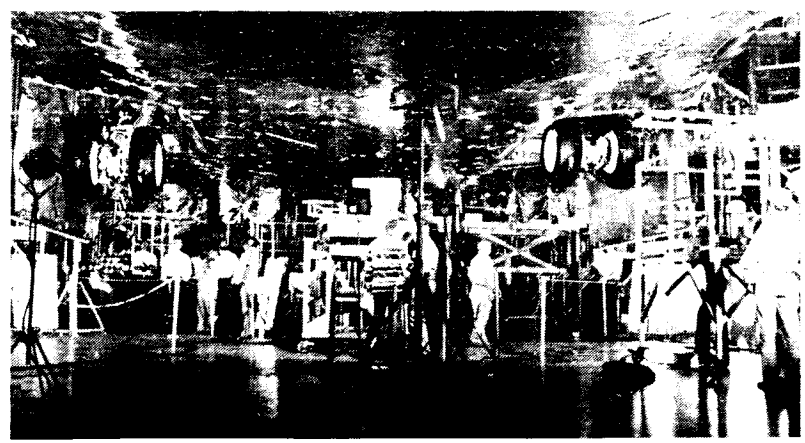

*Main Landing Gear*

for each gear in its respective wheel well. The uplock hook locks onto a roller on each strut. Mechanical linkage driven by each landing gear mechanically closes the respective landing gear doors. All three landing gear doors have high-temperature reusable surface insulation thermal protection system tiles bonded to their outer surface with thermal barriers to protect and prevent the landing gear and wheel well from the high-temperature thermal loads encountered during the shuttle's entry into the atmosphere.

For deployment of the landing gear, the uplock hook for each gear is activated by the flight crew initiating a gear-down command. The uplock hook is hydraulically unlocked by hydraulic system 1 pressure applied to release it from the roller on the strut to allow the gear, assisted by springs and hydraulic actuators, to rotate down and aft. Mechanical linkage released by each gear actuates the respective doors to the open position. The landing gear reach the full-down and extended position within 10 seconds and are locked in the down position by spring-loaded downlock bungees. If hydraulic system 1 pressure is not available to release the uplock hook, a pyrotechnic initiator at each landing gear uplock hook automatically releases the uplock hook on each gear one second after the flight crew has commanded gear down.

The landing gears are deployed only after the spacecraft has an indicated airspeed of less than 300 knots (345 mph) and an altitude of approximately 250 feet.

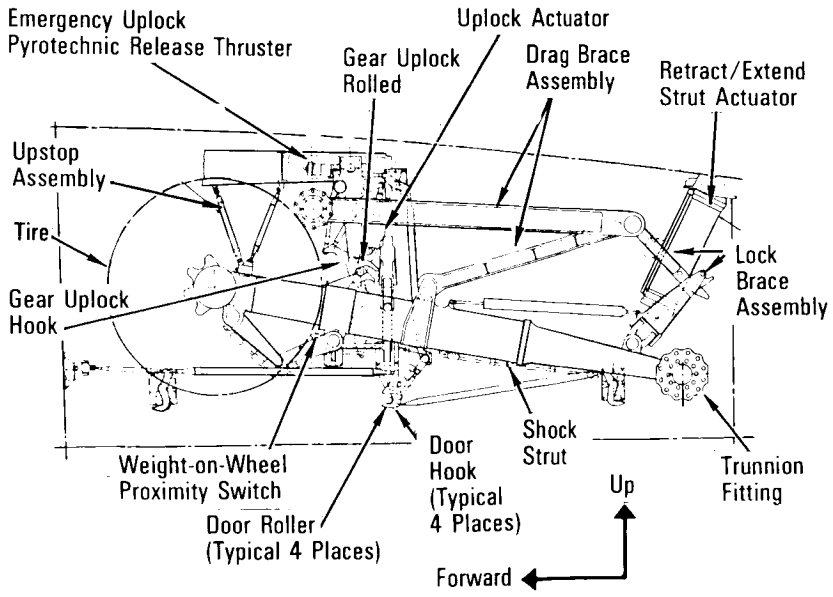


*Main Landing Gear Stowed*

The shock strut of each landing gear is the primary source of shock attenuation at landing. The struts have air/oil shock absorbers to control the rate of compression extension and prevent damage to the vehicle by controlling load application rates and peak values.

Each main landing gear wheel contains an electrohydraulic disc brake assembly with anti-skid control. The main landing gear brakes are controlled by the commander or pilot applying toe pressure to the rudder pedals; electrical signals produced by rudder pedal toe pressure control hydraulic servovalves at each wheel and allow hydraulic system pressure to perform braking. Main landing gear brakes cannot be applied until weight on the main gear has been sensed. The anti-skid system monitors wheel velocity and controls brake torque to prevent wheel lock and tire skidding. The braking/anti-skid system is redundant in that it utilizes system 1 and 2 hydraulic pressure as the active system with system 3 as standby and also utilizes all three main dc electrical systems.

The nose landing gear contains a hydraulic steering actuator that is electrohydraulically steerable through the use of the onboard general-purpose computers, the commander's or pilot's rudder pedals in conjunction with the orbiter flight control system in the control stick steering mode, or through the use of the commander's or pilot's rudder pedals in the direct mode. If hydraulic system 1 is inoperative, nose wheel steering changes to caster mode, and the commander or pilot would then apply toe pressure to the brake pedals to apply hydraulic pressure to the left and right main gear brakes as required for directional control using differential braking.

Each landing gear shock strut assembly is constructed of high-strength, stress- and corrosion-resistant steel alloys, aluminum alloys, stainless steel and aluminum bronze. Cadmium and chromium plating and urethane paint are applied to the strut surfaces for space flight protection. The shock strut is a pneudraulic shock absorber containing gaseous nitrogen and hydraulic fluid. Because the shock strut is subjected to zero-g conditions during space flight, a floating piston separates the gaseous nitrogen from the hydraulic fluid to maintain absorption integrity.

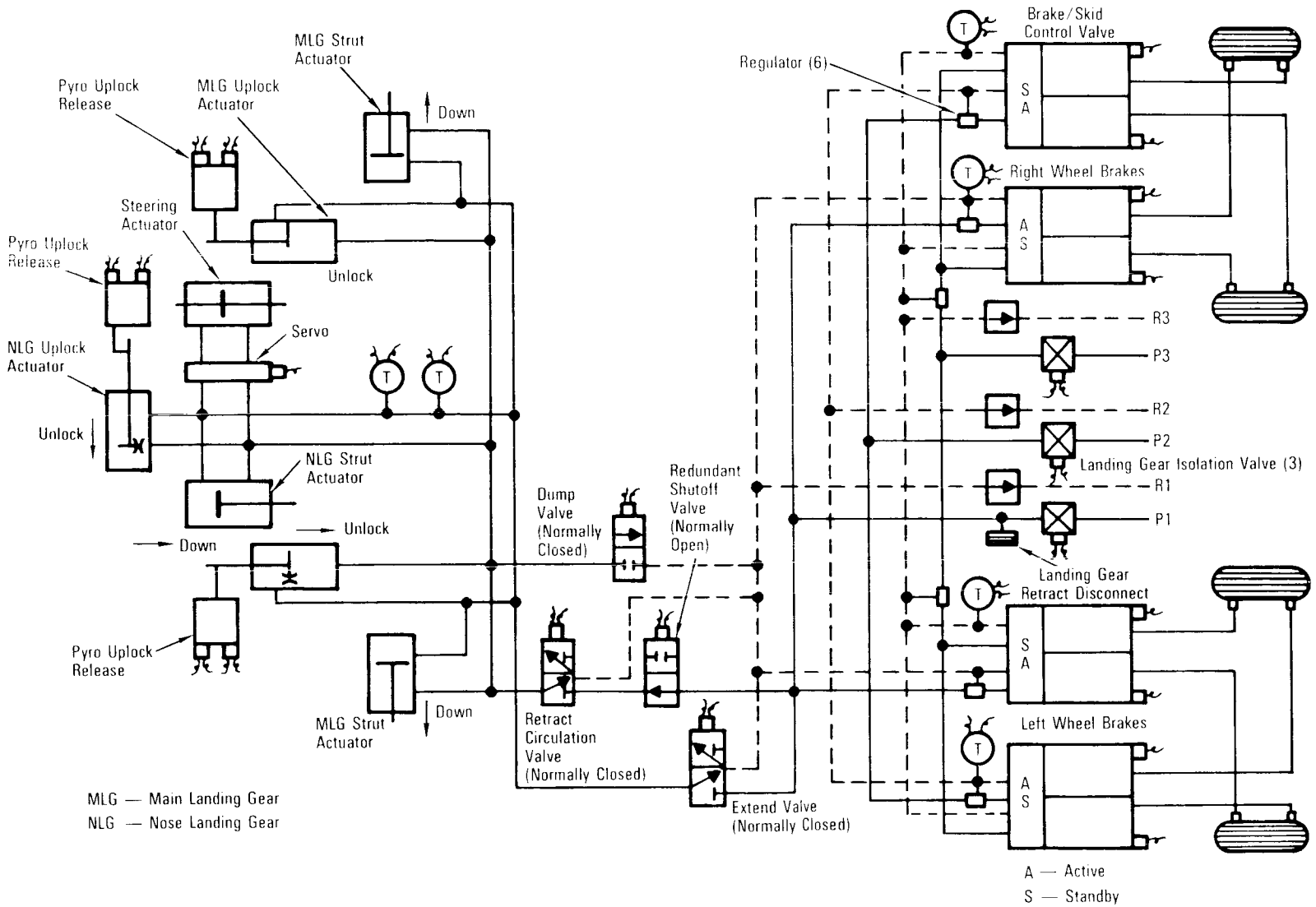


*Hydraulic Actuator System—Landing Gear and Brake*

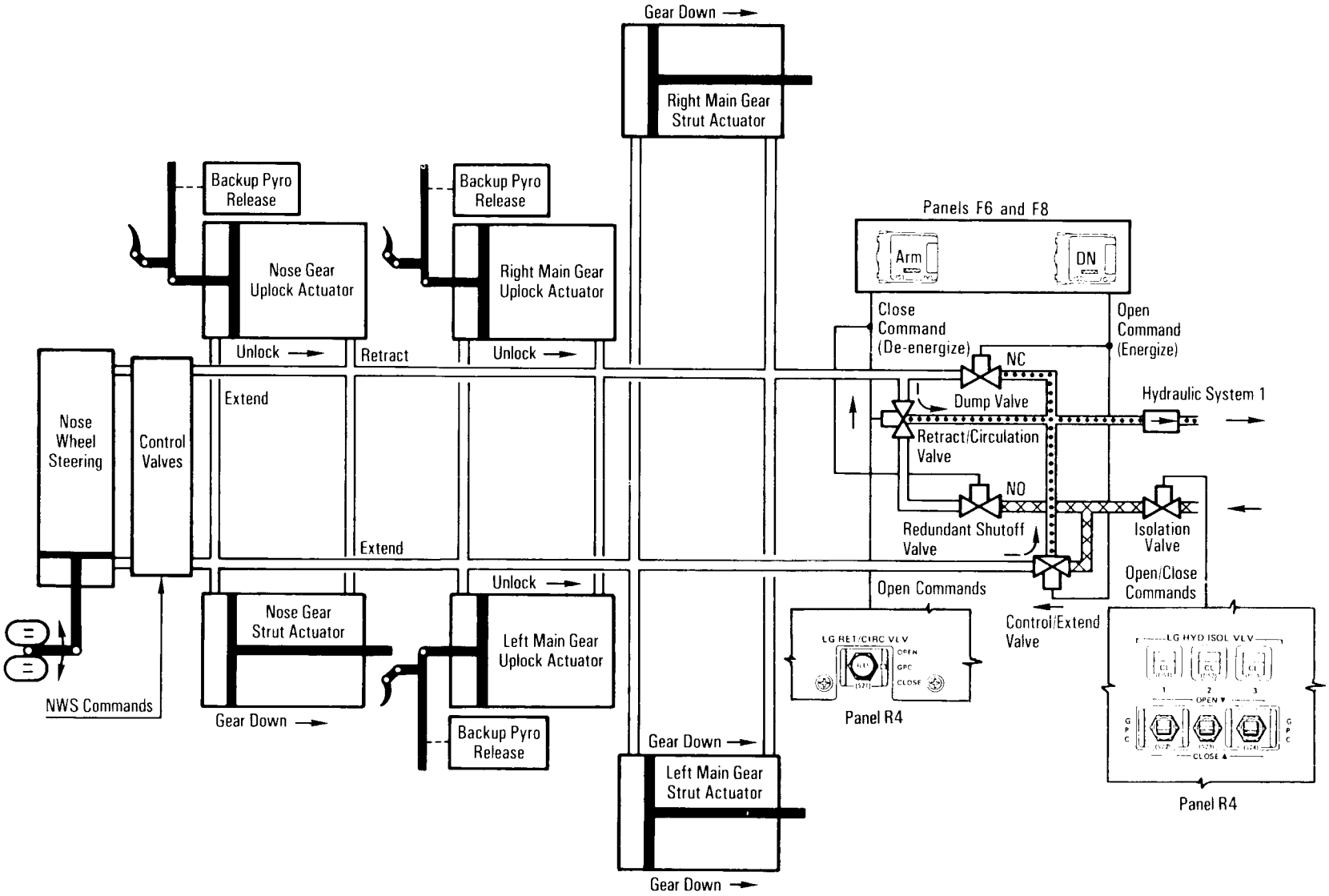


*Landing Gear Hydraulics*

Landing gear wheels are made in two halves from forged aluminum and are primed and painted with two coats of urethane paint.

The *LG hyd isol vlv 1, 2* and *3* switches on panel R4 control the corresponding landing gear isolation valve in hydraulic systems 1, 2 and 3. When the *LG hyd isol vlv 1* switch on panel R4 is positioned to *close*, hydraulic system 1 is isolated from the nose and main landing gear deployment uplock hook actuators and strut actuators, nose wheel steering actuator and main landing gear brake control valves. A talkback indicator next to the switch would indicate *cl*. The landing gear isolation valves will not close or open unless the pressure in that system is at least 100 psi. When the *LG hyd isol vlv 1* switch is positioned to *open*, it allows hydraulic system 1 source pressure to the main landing brake control valves and to the normally closed extend valve. The normally closed extend valve is not energized until a gear-down command is initiated by the commander or pilot on panel F6 or panel F8. The talkback indicator would indicate *op*. The *LG hyd isol vlv 1* switch is left in the *close* position during the mission to prevent inadvertent gear deployment.

The *LG hyd isol vlv 2* and *3* switches on panel R4 positioned to *close* isolate the corresponding hydraulic system from only the main landing gear brake control valves. The adjacent talkback indicator would indicate *cl*. When switches 2 and 3 are positioned to *open*, the corresponding hydraulic system source pressure is available to the main landing gear brake control valves. The corresponding talkback indicator would indicate *op*.

Thus, only hydraulic system 1 is used to deploy the nose and main landing gear and for nose wheel steering. When the nose- and main-landing-gear-down command is initiated by the commander or pilot on panel F6 or F8, hydraulic system 1 pressure is directed to the nose and main landing gear uplock hook actuators and strut actuators (provided that the *LG hyd isol vlv 1* switch is in



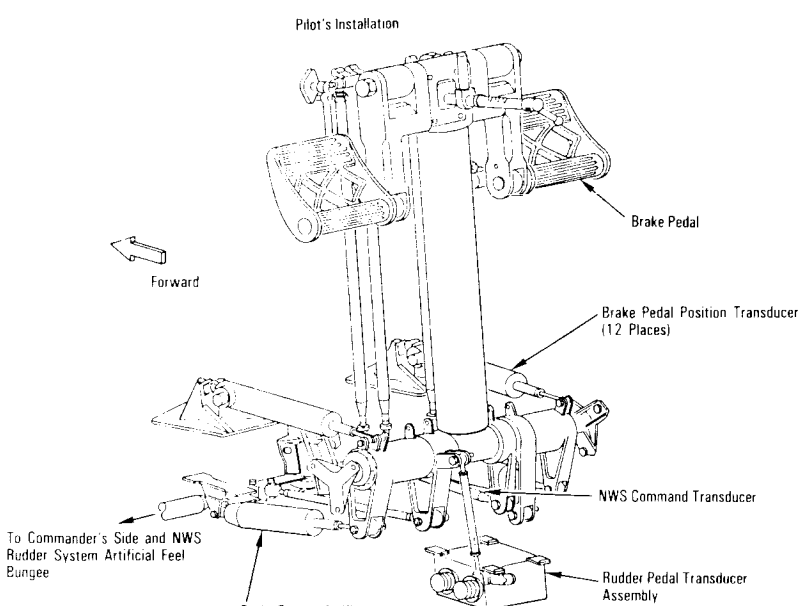


*Rudder Pedals*

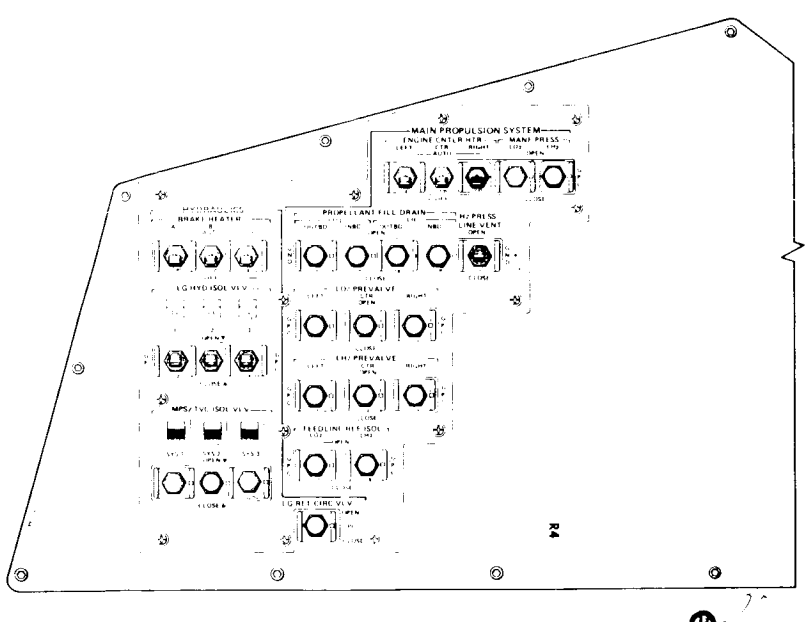


*Panel R4*

the open position) to actuate the mechanical uplock hook for each landing gear and allow the gear to be deployed and also provide hydraulic system 1 pressure to the nose wheel steering actuator. The main landing gear brake control valves receive hydraulic system 1 source pressure when the *LG hyd isol vlv 1* switch is positioned to *open*. If hydraulic system 1 is unavailable, a pyrotechnic actuator attached to the nose and main landing gear uplock actuator would deploy the landing gear automatically one second after the gear-down command, actuate the mechanical uplock hook for each landing gear and allow the gear to be deployed. Because powered nose wheel steering would not be functional, directional control for steering would be accomplished by differential braking to caster the nose wheel.

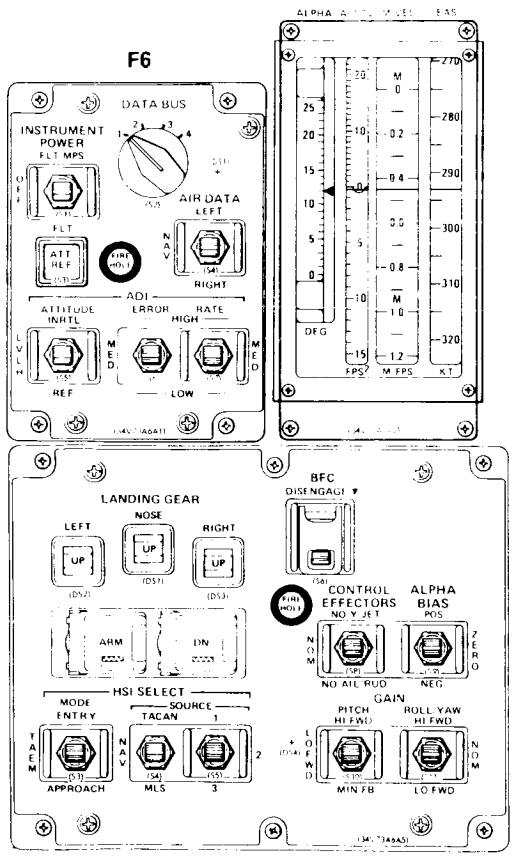


*Panel F6*

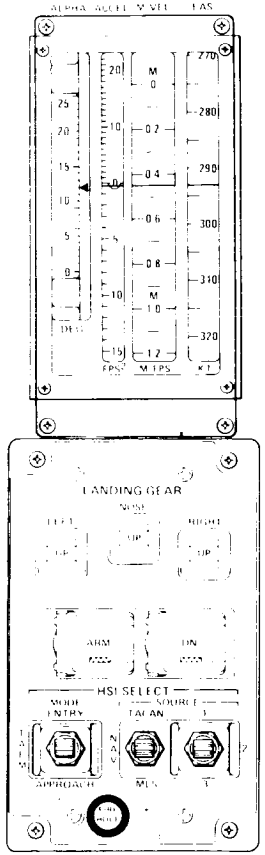


*Panel F8*

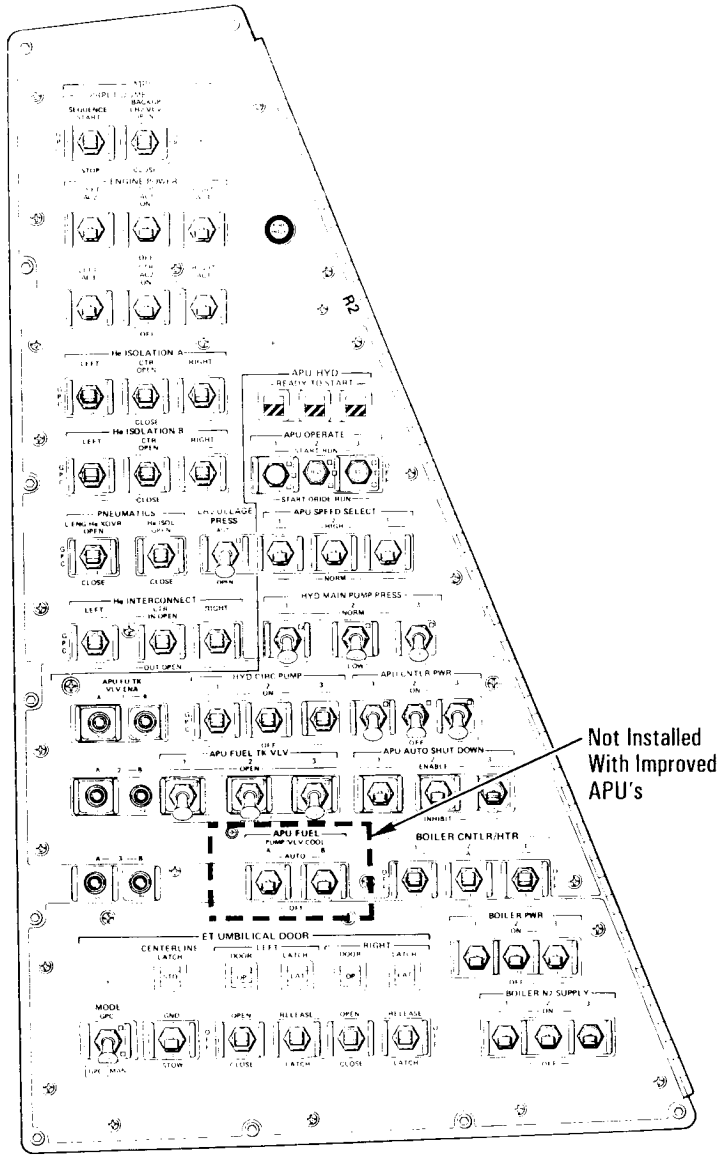


*Panel R2*

The *GPC* position of the *LG hyd isol vlv 1, 2* and *3* switches on panel R2 permits the onboard computer to automatically control the valves in conjunction with computer control of the corresponding hydraulic system circulation pump. The *LG hyd isol vlv 2* and *3* switches provide fluid circulation to only the main landing gear brake system, which dead-ends at the brake control valves. The *LG hyd isol vlv 1* switch is left closed to prevent inadvertent gear deployment.

The normally open hydraulic system 1 redundant shutoff valve is a backup to the retract/circulation valve to prevent hydraulic pressure from being directed to the retract side of the nose and main landing gear uplock hook actuators and strut actuators if the retract/circulation valve fails to open during nose and main landing gear deployment.

The normally closed hydraulic system 1 dump valve is energized open to allow hydraulic system 1 fluid to return from the nose and main landing gear areas when deployment of the landing gear is commanded by the flight crew.

The activation/deactivation limits of the hydraulic fluid circulation systems can be changed during the mission by the flight crew or the Mission Control Center-Houston. The program also includes a timer to limit the maximum time a circulation pump will run and a priority system that automatically monitors hydraulic bootstrap pressure to allow all three circulation pumps to be on at the same time. The software timers allow this software to be used in contingency situations for "time-controlled" circulation pump operations in order to periodically boost an accumulator that is losing hydraulic fluid through a leaking priority valve or unloader valve.

During entry, if required, *LG hyd isol vlv 1, 2* and *3* are positioned to *GPC*. At 19,000 feet per second, the landing gear isolation valve automatic opening sequence begins under GN&C software control. If the landing gear isolation valve is not opened automatically, the flight crew will be requested by the Mission Control Center to open the valve by positioning the applicable *LG hyd isol vlv* to *open*. Landing gear isolation valve 2 is automatically opened six minutes and 37 seconds later, and this is followed by the automatic opening of landing gear isolation valve 1 when orbiter velocity is at 800 feet per second or less. Landing gear isolation valve 3 is automatically opened at ground speed enable. Landing gear isolation valve 1 is next to last to ensure that an inadvertent gear deployment would occur as late (low airspeed) as possible.

Note that the hydraulic system 1 retract/circulation valve would be automatically closed when the landing gear system is armed for deployment.

The commander and pilot have a landing gear deployment *arm* and *dn* (down) guarded push button switch/light indicators and *landing left, nose* and *right* indicators. The commander's controls and indicators are on panel F6, and the pilot's controls and indicators are on panel F8. The *dn* push button, when depressed, energizes the hydraulic system 1 normally closed extend valve, permitting hydraulic system 1 source pressure for gear deployment and nose wheel steering.



The proximity switches on the nose and main landing gear doors and struts provide electrical signals to control the *landing gear nose, left* and *right* indicators on panels F6 and F8. The output signals of the landing gear and door uplock switches drive the landing gear *up* position indicators and the backup pyrotechnic release system. The output signals of the landing gear downlock switches drive the landing gear *dn* position indicators. The landing gear indicators are barberpole when the gear is deploying (or retracting).

The left and right main landing gear weight-on-wheels switches produce output signals to the guidance, navigation and control software to reconfigure the flight control system for landing.

The two weight-on-nose-gear signals run to the main landing gear brake/skid control boxes to prevent the main landing gear brakes from being applied until the nose gear is in contact with the runway and also to the GN&C software, which computes a nose

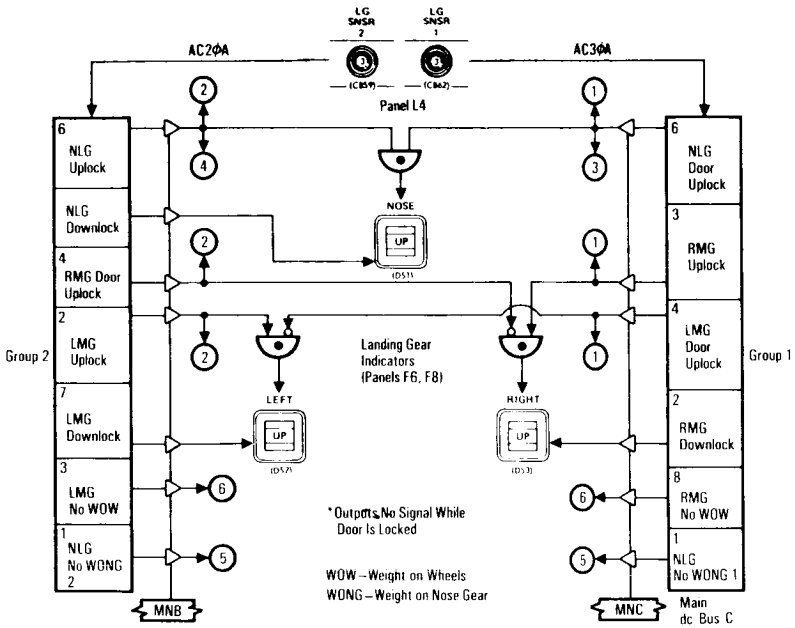


Landing Gear Sensors and Indicators

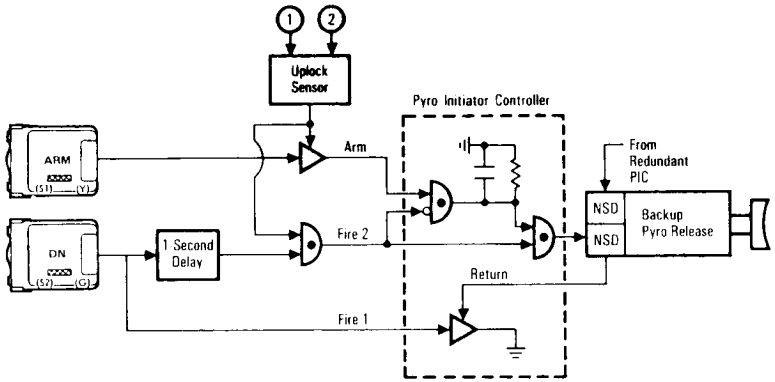


Nose Landing Gear and Main Landing Gear Uplock Release Pyro Actuator Circuit

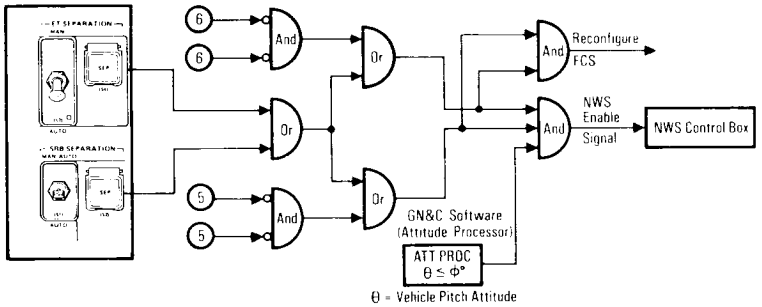


Nose Wheel Steering Enable Signal (Guidance, Navigation and Control Software)

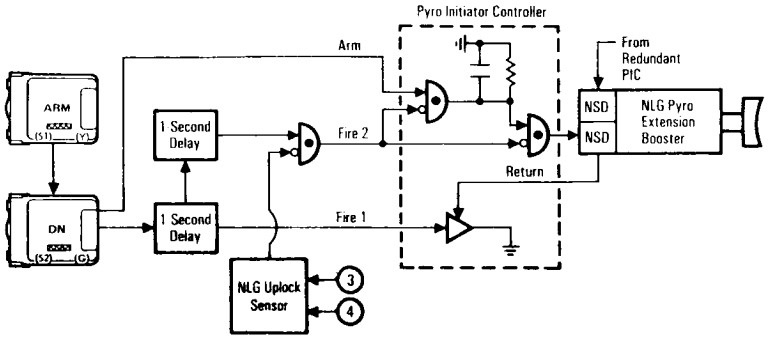


Nose Landing Gear Extension Booster Pyro Circuit

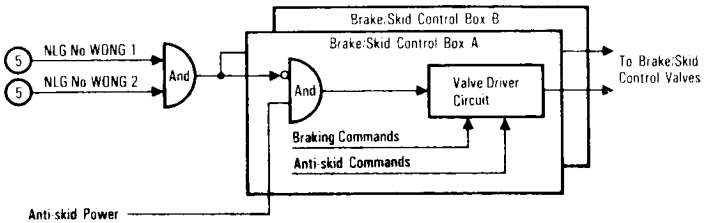


Brake/Skid Control

*Landing Gear Proximity Switches*

wheel steering enable signal. This enable signal is then sent to the NWS control box to prevent NWS until the nose gear is in contact with the runway.

The six group 1 switches are signal conditioned by the landing gear proximity sensor electronics box 1, located in avionics bay 1. The six group 2 switches are signal conditioned by the landing gear proximity sensor electronics box 2, located in avionics bay 2.

Landing gear deployment is initiated when the commander or pilot depresses the guarded *arm* push button switch/light indicator and then the guarded *dn* push button switch/light indicator at least 15 seconds before predicted touchdown and at a speed no greater than 300 knots (345 mph).

Depressing the *arm* push button switch/light indicator energizes latching relays that close the hydraulic system 1 landing gear retract/circulation valve and the normally open redundant shutoff valve to the retract/circulation valve. It also arms the nose and main landing gear pyrotechnic initiator controllers and illuminates the yellow light in the *arm* push button switch/light indicator.

The *dn* push button switch/light indicator is then depressed. This energizes latching relays that open the hydraulic system 1 landing gear normally closed extend control valve, permitting the fluid in hydraulic system 1 to flow to the landing gear uplock and strut actuators and nose wheel steering. The relays also open the normally closed dump valve, allowing the landing gear retract line fluid to flow in to the hydraulic system 1 return line. The green light in the *dn* push button switch/light indicator is illuminated.

Hydraulic system 1 source pressure is routed to the nose and main landing gear uplock actuators, which releases the nose and main landing gear and door uplock hooks. As the uplock hooks are released, the gear begins its deployment and mechanical linkage attached to the doors and fuselage is powered by landing gear strut camming action, during gear extension, which opens the landing gear doors. There are two landing gear doors for the nose



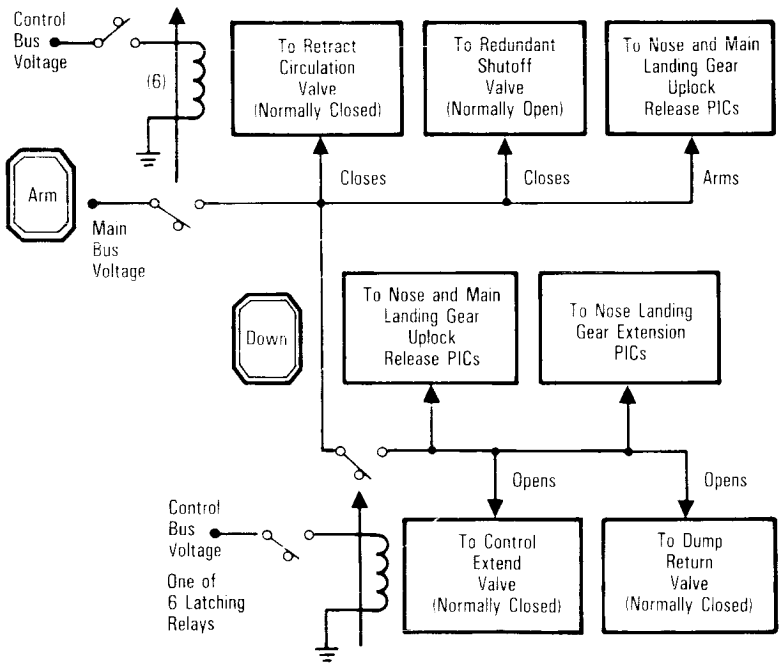


*Arm/Down Circuit*

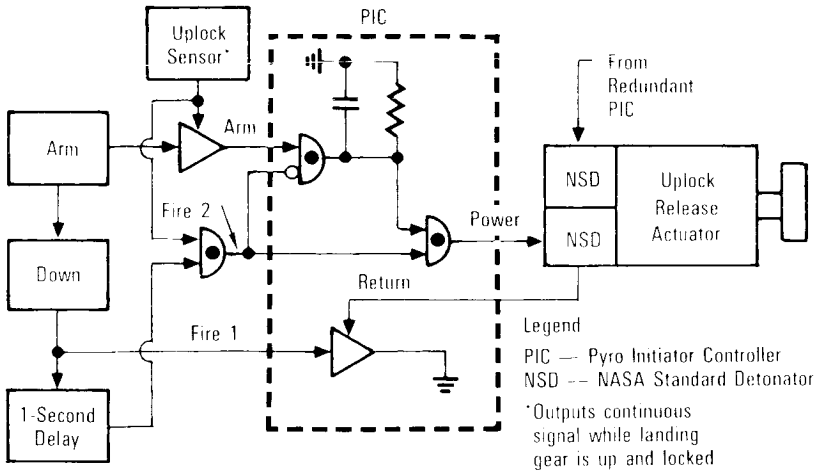


*Uplock Release and Pyro Actuator Circuit (Simplified)*

gear and one for each main gear. The landing gear free falls into the extended position, assisted by the strut actuators and airstream in the deployment. The hydraulic strut actuator incorporates a hydraulic fluid flow through orifice (snubber) to control the rate of landing gear extension and thereby prevent damage to the gear's downlock linkages.

If hydraulic system 1 fails to release the landing gear within one second after the *dn* push button is depressed, the nose and left and right main landing gear uplock sensors (proximity switches) will provide inputs to the pyro initiator controllers for initiation of the redundant NASA standard detonators (nose, left and right main landing gear pyrotechnic backup release system). They release the same uplock hooks as the hydraulic system. The nose landing gear, in addition, has a PIC and redundant NSDs that initiate a pyrotechnic power thruster two seconds after the *dn* push button is depressed to assist gear deployment.

The landing gear drag brace overcenter lock and spring-loaded bungee lock the nose and main landing gear in the down position.

The *ldg gr/arm/dn reset* switch positioned to *reset* on panel A12 unlatches the relays that were latched during landing

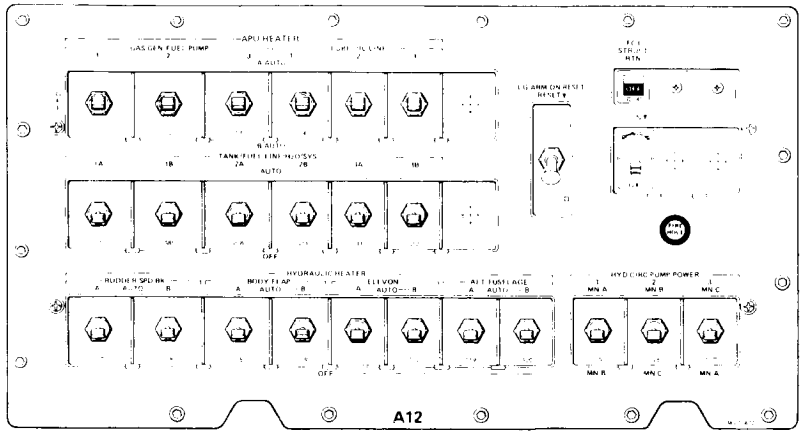


*Panel A12*

gear deployment by the *landing gear arm* and *dn* push button light/switch indicators. This is primarily a ground function, which will be performed only during landing gear deactivation.

The *reset* position also will extinguish the yellow light in the *arm* push button switch/light indicator and the green light in the *dn* push button switch/light indicator. In addition, the hydraulic system 1 landing gear dump valve is closed, the extend control valve is closed, the retract/circulation valve is opened only if the switch is in the *open* position, and its redundant shutoff valve is opened (de-energized) and de-energizes the landing gear PIC circuits.

The nose landing gear tires are 32 by 8.8 inches and will withstand a burst pressure of not less than 3.2 times the normal inflation pressure of 300 psi. The inflation agent is gaseous nitrogen. The maximum allowable load per nose landing gear tire is approximately 45,000 pounds and rated at 224 knots (258 mph) landing speed.

The nose landing gear shock strut has a 22-inch stroke. The maximum allowable derotation rate is approximately 9.4 degrees per second or 11 feet per second, vertical sink rate.

The main landing gear tires are 44.5 by 16 and 21 inches. The normal inflation pressure is 315 psi, and the inflation agent is gaseous nitrogen. The maximum allowable load per main landing gear tire is 123,000 pounds. If the orbiter touches down with a 60/40 percent load distribution on a strut's two tires, with one tire supporting the maximum load, then the other tire can support a load of only 82,410 pounds. Therefore, the maximum tire load on a strut is 205,410 pounds with a 60/40 percent tire load distribution. The tires are rated at 225 knots (258 mph).

The main landing gear shock strut stroke is 16 inches. The allowable main gear sink rate for a 212,000-pound orbiter is 9.6 feet per second; for a 240,000-pound orbiter, it is 6 feet per second. With a 20-knot (23-mph) crosswind, the maximum allowable gear sink rate for a 212,000-pound orbiter is 6 feet per second; for a 240,000-pound orbiter, it is approximately 5 feet per second.

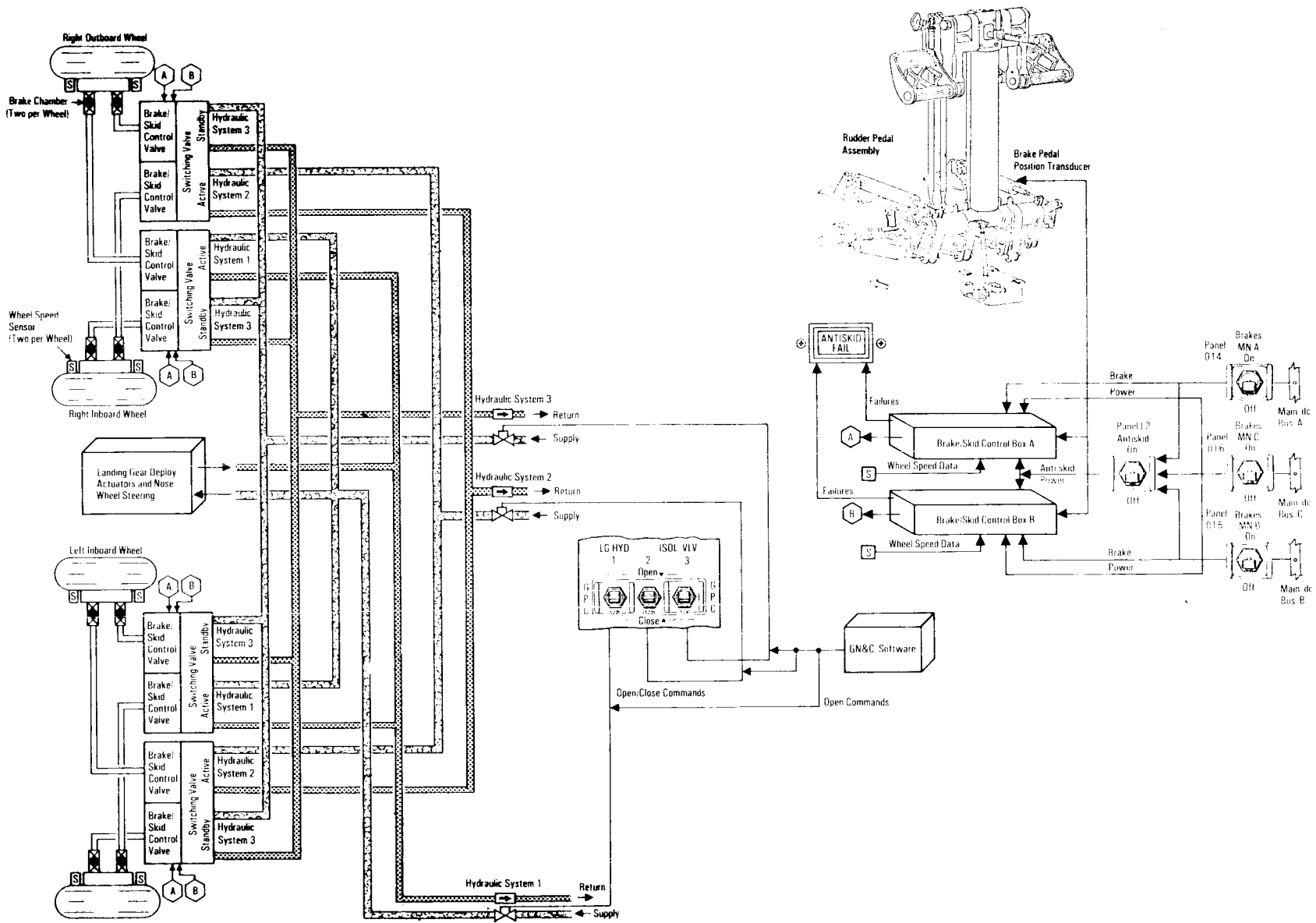


*Brake/Skid Control*

The landing gear tires have a life of one landing.

**MAIN LANDING GEAR BRAKES.** Each of the orbiter's four main landing gear wheels has electrohydraulic disc brakes and an anti-skid system.

Each main landing gear wheel has a disc brake assembly consisting of nine discs, four rotors, three stators, a backplate and a pressure plate. The carbon-lined beryllium rotors are splined to the inside of the wheel and rotate with the wheel. The carbon-lined beryllium stators are splined to the outside of the axle assembly and do not rotate with the wheel.

Each of the four main landing gear wheel brake assemblies is supplied with pressure from two different hydraulic systems. Each brake hydraulic piston housing has two separate brake supply chambers. One chamber receives hydraulic source pressure from hydraulic system 1 and the other from hydraulic system 2. There are eight hydraulic pistons in each brake assembly. Four are manifolded together from hydraulic system 1 in a brake chamber. The remaining four pistons are manifolded together from hydraulic system 2. When the brakes are applied, the eight hydraulic pistons press the discs together, providing brake torque.

In the event of the loss of hydraulic system 1 or 2 source pressure, switching valves provide automatic switching to the standby hydraulic system 3 when the active hydraulic system source pressure drops below approximately 1,000 psi. If hydraulic system 1 is unavailable, it has no effect on the braking system because standby system 3 would automatically replace system 1. Loss of hydraulic system 2 or both 1 and 2 would also have no effect on the braking system because system 3 would automatically switch to replace system 2 or 1 and 2. Loss of hydraulic systems 1 and 3

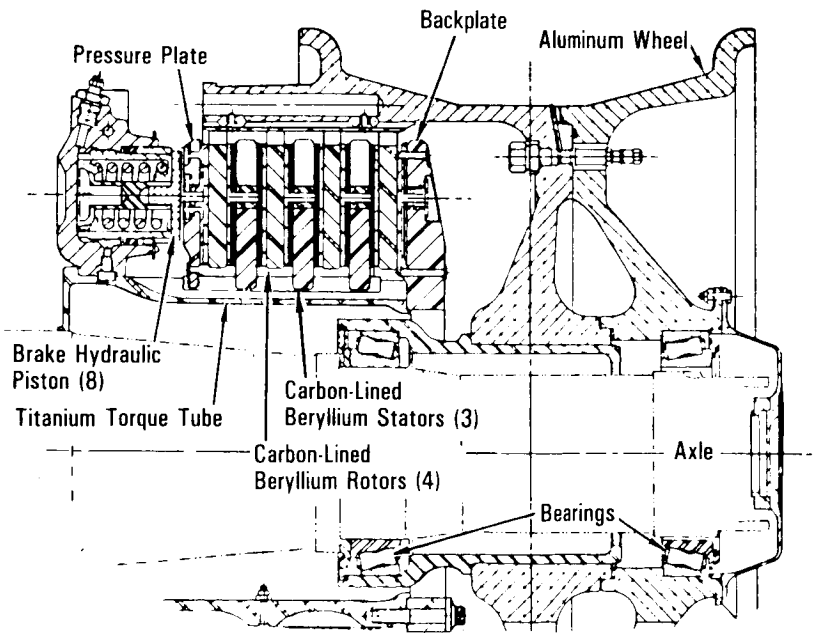


*Wheel Brake Assembly*

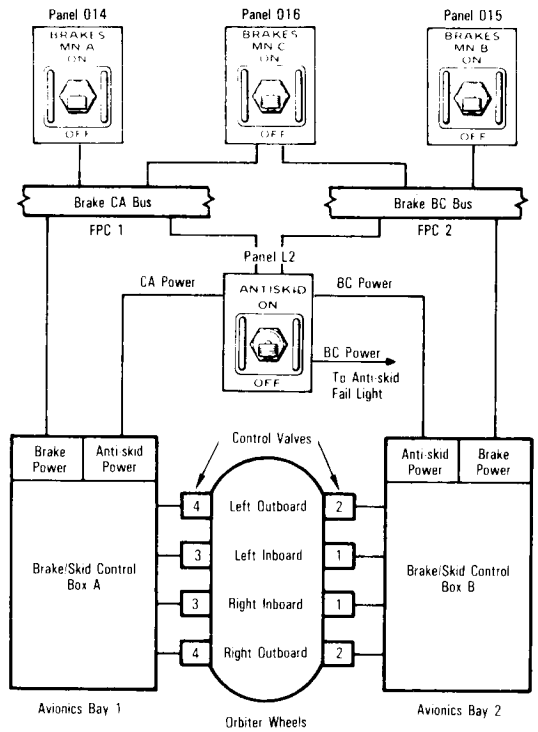


*Brake/Skid Control Power*

would cause the loss of half of the braking power on each wheel and additional braking distance would be required. Loss of hydraulic systems 2 and 3 would also cause the loss of half of the braking power on each wheel, requiring additional braking distance.

As in the landing gear deployment, the landing gear isolation valve in hydraulic systems 1, 2 and 3 must be open to allow the applicable hydraulic source pressure to the main landing gear brakes.

The *brakes MN A, MN B* and *MN C* switches are located on the flight deck display and control panels O14, O15 and O16 and allow electrical power to brake/anti-skid control boxes A and B. The *antiskid* switch located on panel L2 provides electrical power for enabling the anti-skid portion of the braking system boxes A and B. The *brakes MN A, MN B* and *MN C* switches are positioned to *on* to supply electrical power to brake boxes A and B and to *off* to remove electrical power. The *antiskid* switch is positioned to *on* to enable the anti-skid system and to *off* to disable the system.

When weight is sensed on the main landing gear, the brake/anti-skid boxes A and B are enabled, permitting the main landing gear brakes to become operational.

The main landing gear brakes controlled by the commander's or pilot's brake pedals are located on the rudder pedal assemblies

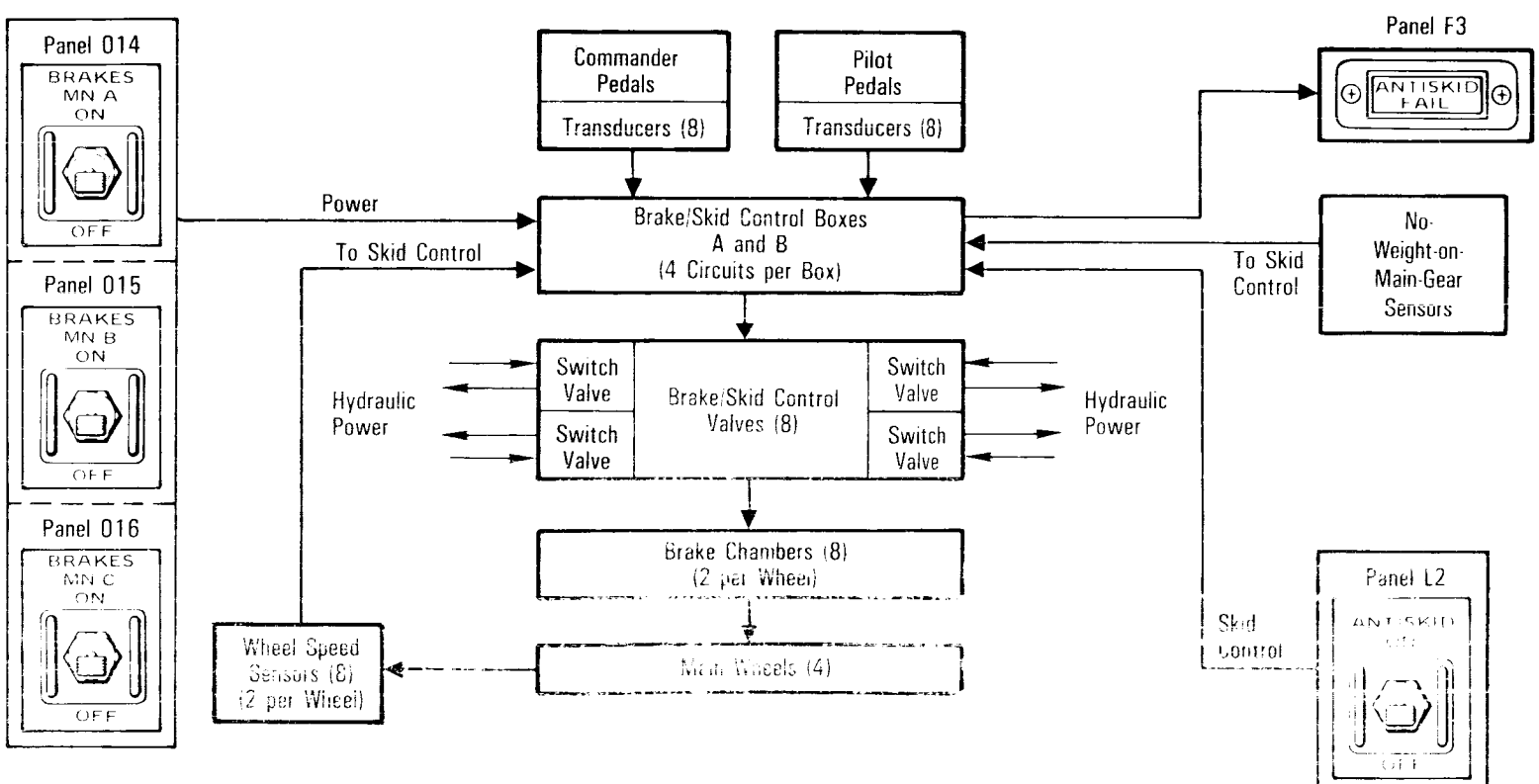


*Brake/Skid Control System Overview*

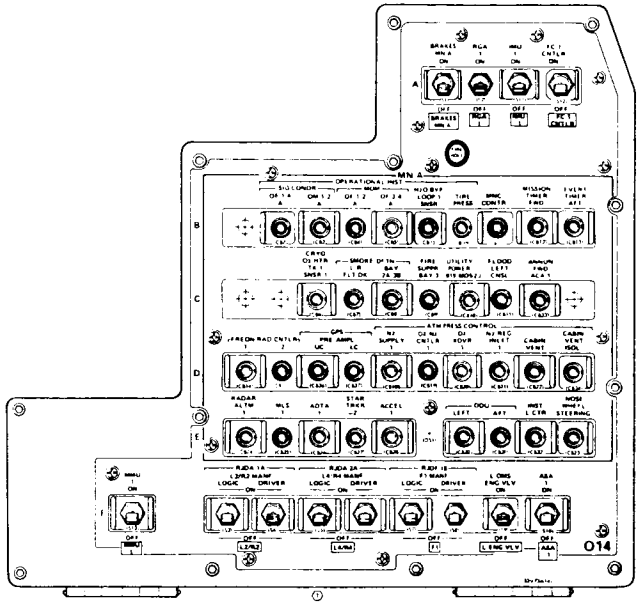

*Panel O14*

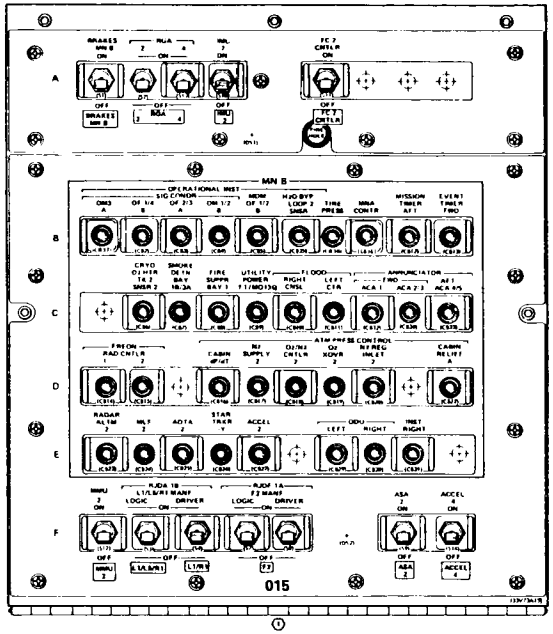

*Panel O15*

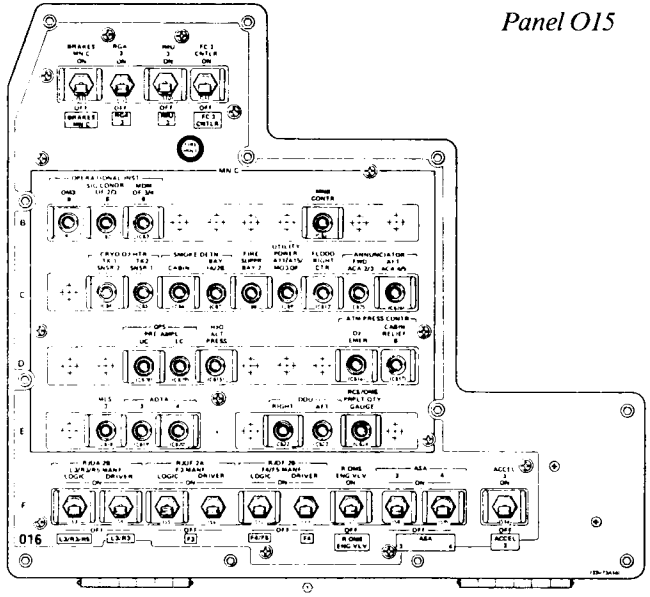

*Panel O16*

at the commander's and pilot's stations. The pedals' positions are adjustable by a handle. The braking commands are accomplished by the commander or pilot initiating toe pressure on the top of the rudder pedal assembly.

Each brake pedal (left and right) has four linear variable differential transducers. The left pedal transducer unit will output four separate braking signals through the brake/skid control boxes for braking control of the two left main wheels. The right pedal transducer unit does likewise for the two right main wheels. When toe pressure is applied to the brake pedal, the transducers transmit electrical signals of zero to 5 volts dc to the brake/anti-skid control boxes. If both right pedals are moved, the pedal with the greatest toe pressure becomes the controlling pedal through electronic OR circuits. The electrical signal is proportional to the toe pressure. The electrical output energizes the main landing gear brake coils proportionally to brake pedal deflection, allowing the desired hydraulic pressure to be directed to the main landing gear brakes for braking action. The brake system bungee at each brake pedal provides the braking artificial feel to the crew member.

Each of the three hydraulic systems' source pressure of 3,000 psi is reduced by a regulator in each of the brake hydraulic systems to 1,500 psi.

The anti-skid portion of the brake system provides optimum braking by preventing tire skid or wheel lock and subsequent tire damage.

Each main landing gear wheel has two speed sensors that supply wheel rotational velocity information to the skid control circuits in the brake/skid control boxes. The velocity of each wheel is continuously compared to the average wheel velocity of all four wheels. Whenever the wheel velocity of one wheel is below 30 percent of the average velocity of the four wheels, skid control removes brake pressure from the slow wheel until the velocity of that wheel increases to an acceptable range. The brake system contains eight brake/skid control valves that receive signals from the brake/skid control boxes. Each valve controls the hydraulic brake pressure to one of the brake chambers. The brake/skid control valves contain a brake coil and a skid coil. The brake coil allows hydraulic pressure to enter the brake chambers. The skid coil, when energized by the skid control circuit, provides reverse polarity to the brake coil, preventing the brake coil from allowing brake pressure to the brake chamber.

Anti-skid control is automatically disabled below 9 to 14 knots (11 to 17 mph) to prevent loss of braking for maneuvering and/or coming to a complete stop.

The anti-skid system control circuits contain fault detection logic. The *antiskid* yellow caution and warning light located on the flight deck display and control panel F3 will be illuminated if the anti-skid fault detection circuit detects an open or short in a wheel speed sensor, open or short in a anti-skid control valve servocoil or a failure in an anti-skid control circuit. A failure of these items will only deactivate the failed circuit, not total anti-skid control. If the *brake power* switches are *on* and the *antiskid* switch is *off*, the *antiskid* caution and warning light will be illuminated.



Insulation and electrical heaters are installed on the portions of the hydraulic systems that are not adequately thermally conditioned by the individual hydraulic circulation pump system because of stagnant hydraulic fluid areas.

Redundant electrical heaters are installed on the main landing hydraulic flexible lines located on the back side of each main landing gear strut between the brake module and brakes. These heaters are required because the hydraulic fluid systems are dead-ended and fluid cannot be circulated with the circulation pumps. In addition, on OV-103 and OV-104, the hydraulic system 1 lines to the nose landing gear are located in a tunnel between the crew compartment and forward fuselage. The passive thermal control systems on OV-103 and OV-104 are attached to the crew compart-

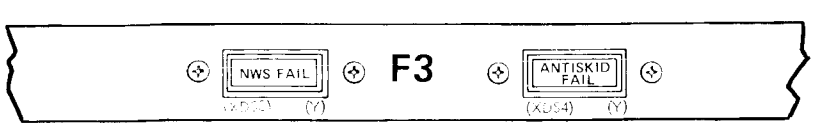


*Panel F3*

ment, which leaves the hydraulic system 1 lines to the nose landing gear exposed to environmental temperatures, thus requiring electrical heaters on the lines in the tunnel. Since the passive thermal control system on OV-102 is attached to the inner portion of the forward fuselage rather than the crew compartment, no heaters are required on the hydraulic system 1 lines to the nose landing gear on OV-102.

The *hydraulics brake heater A, B,* and *C* switches on panel R4 enable the heater circuits. On OV-103 and OV-104, *hydraulics brake heater* switches *A, B* and *C* provide electrical power from the corresponding main buses A, B and C to the

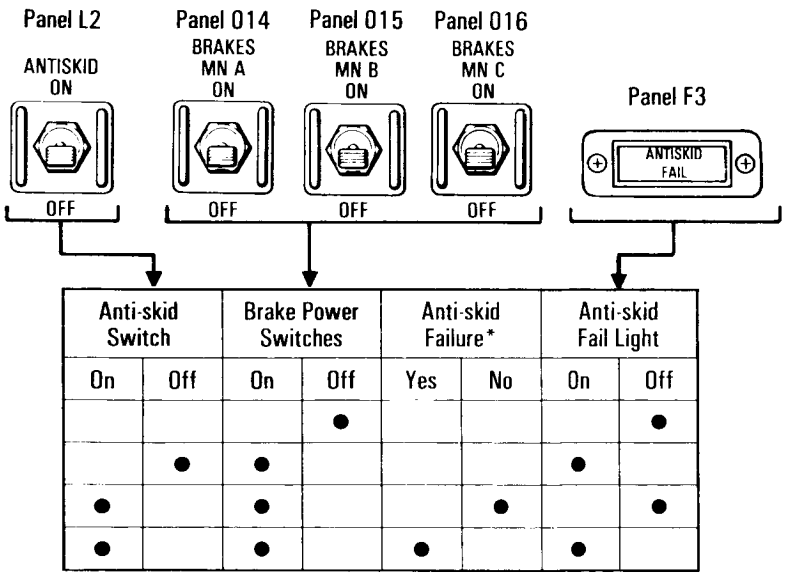


| Anti-skid Switch | | Brake Power Switches | | Anti-skid Failure* | | Anti-skid Fail Light | |
|---|---|---|---|---|---|---|---|
| On | Off | On | Off | Yes | No | On | Off |
| | | | ● | | | | ● |
| | ● | ● | | | | ● | |
| ● | | ● | | | ● | | ● |
| ● | | ● | | ● | | ● | |

*Anti-skid fault detection circuits detect any of the following failures:
– Open or short in a wheel speed sensor circuit
– Open or short in a skid control servovalve circuit
– Failure in an anti-skid control circuit

**Applies only to brake power switches MN B, MN C or both be activated

Note: A failure will deactivate only the failed circuit and not total anti-skid control.

*Anti-skid Fail Light Status*

redundant heaters on the main landing gear flexible lines and the hydraulic system 1 lines in the tunnel between the crew compartment and forward fuselage leading to the nose landing gear. Thermostats on each electrical A, B and C system cycle the heaters automatically off or on.

The *hydraulics brake heater A, B* and *C* switches on panel R4 enable the heater circuits on only the main landing gear hydraulic flexible lines on OV-102.

Because problems were encountered with the main landing gear braking system in the majority of the first 24 landings, an improvement program has been implemented for the main landing gear and braking system in addition to a long-term improvement program for the main landing gear brakes.

Main landing gear axle stiffness has been increased to reduce brake-to-axle deflections to preclude brake damage, which occurred in previous landings. This should also minimize tire wear. With the increased axle thickness, existing axle/bearing and axle/sensor interfaces are maintained. All main landing gear axles will be changed before the three orbiters return to flight.

Six orifices were added to the hydraulic passages in the brake hydraulic piston housing to restrict circular fluid flow within the chambers in order to stop the whirl phenomenon, which has been identified as the cause of brake damage.

The electronic brake control boxes were modified to provide hydraulic pressure balancing between adjacent brakes in order to equalize energy applications. This results in higher efficiency and allows full capability of adjacent brakes. The anti-skid circuitry that reduced brake pressure to the opposite wheel if a flat tire was detected was removed.

The previous, thinner, carbon-lined beryllium stator discs are being replaced in two positions with thicker discs to provide a significant increase in braking energy capability. The additional material added to the stators improves heat capacity, with resulting lower temperatures, and provides the stators with greater strength.

**FIRST FLIGHT**

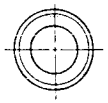

Tire Pressure Monitoring

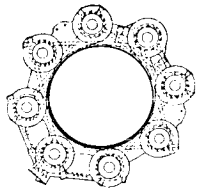

Brake Orifices

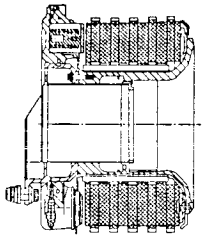

Improved Brakes

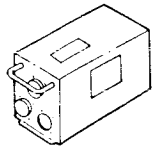

Anti-skid Avionics

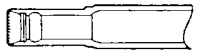

Stiffened Main Landing Gear Axles

**STUDIES**

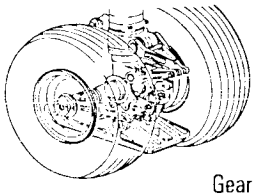

Gear Skids

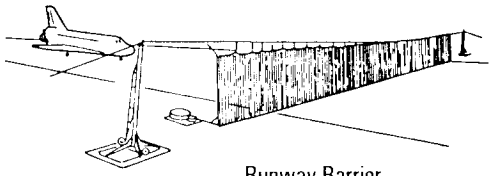

Runway Barrier

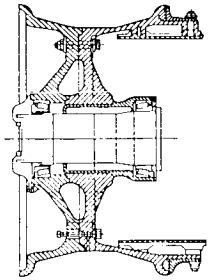

Roll-on-Rim

**LATER FLIGHTS**

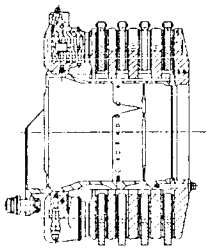

Carbon Brakes

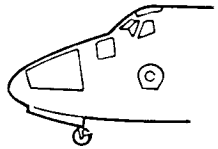

Redundant Nose Wheel Steering

*Landing System Safety Improvements*

Note that the main landing gear brakes, which were exposed to two 14-million-foot-pound wear-in cycles added before installation on the orbiter, reduced damage to the brakes during landing. The thicker stator discs will provide approximately 65 million foot pounds of energy absorption, which is a significant increase over the thinner stator discs.

A long-term structural carbon brake program is in progress to provide higher braking capability by increasing maximum energy absorption capability to 82 million foot pounds and to reduce refurbishment costs. These new brakes will consist of a five-rotor, disc-type carbon configuration for each main landing gear wheel brake. The goal is to demonstrate that the carbon heat sink brake design will have the capability of providing a one-time stop of 100 million foot pounds. The go-ahead for the carbon brake design was given in January 1986, with delivery scheduled in late April 1988.

Upon the return to flight of the space shuttle, end-of-mission landings are planned for Edwards Air Force Base in California until the performance of the landing gear system is fully under-

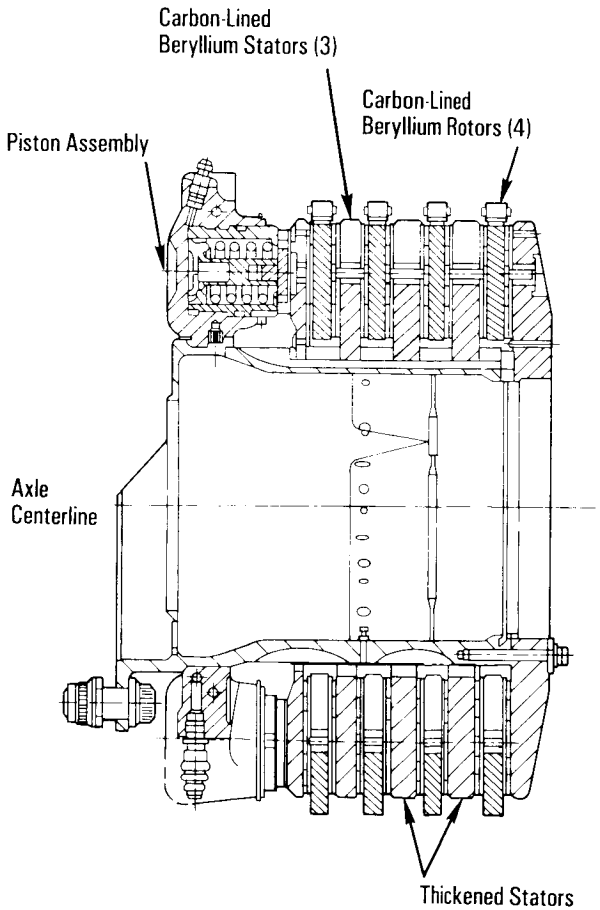


*Improved Main Landing Gear Brake Assembly*

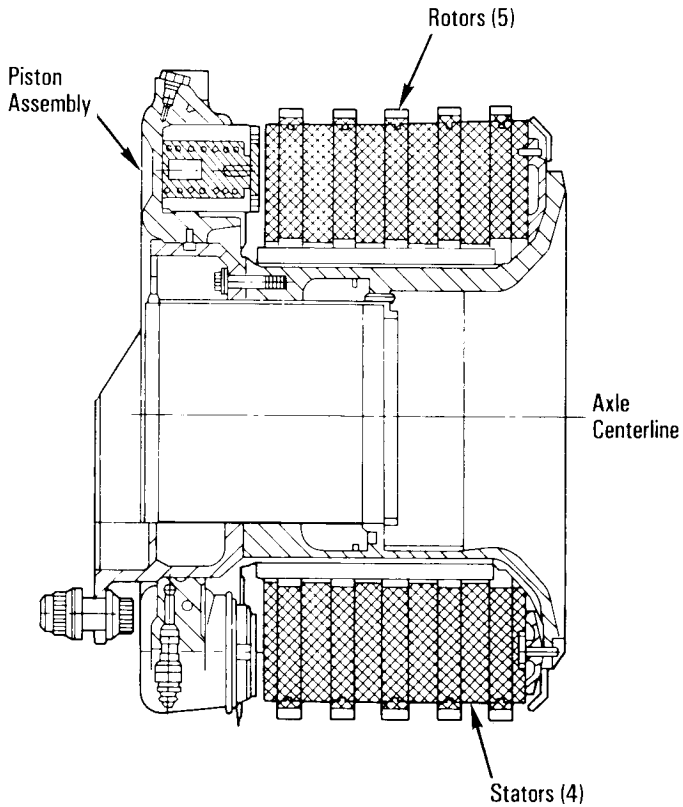


*Future Main Landing Gear Carbon Brake Assembly*

stood and a higher confidence in the weather prediction capability is established at the Kennedy Space Center shuttle landing facility runway area in Florida.

Strain gauges have been added to each nose and main landing gear wheel in order to monitor tire pressure and provide the status of tire pressures during launch pad stay, launch, orbit, deorbit and landing to the flight crew and Mission Control Center in Houston.

A landing gear tire improvement and runway-surface study is in progress at NASA's Langley Research Center to determine how best to decrease tire wear experienced during previous Kennedy Space Center landings and improve crosswind landing capability. Six new tire designs will be evaluated at the Langley Research Center with various yaw and tilt angles at speeds up to 253 mph. Additional tests at Langley Research Center are to provide the ability to mathematically model tire side-force characteristics.

Modifications were made to the Kennedy Space Center shuttle landing facility runway. The full 300-foot width of 3,500-foot sections at both ends of the runway were ground to smooth the runway surface and remove cross grooves. The corduroy ridges are smaller than those they replace and run the length of the runway rather than across its width. The existing landing zone light fixtures were also modified, and the markings of the entire runway and overruns were repainted. The primary purpose of the modifications is to enhance safety by reducing tire wear during landing.

The current strength of the orbiter landing system is a maximum of 240,000 pounds. Evaluations for landing loads of 256,000 pounds, associated with abort landings, are to be completed by the spring of 1988.

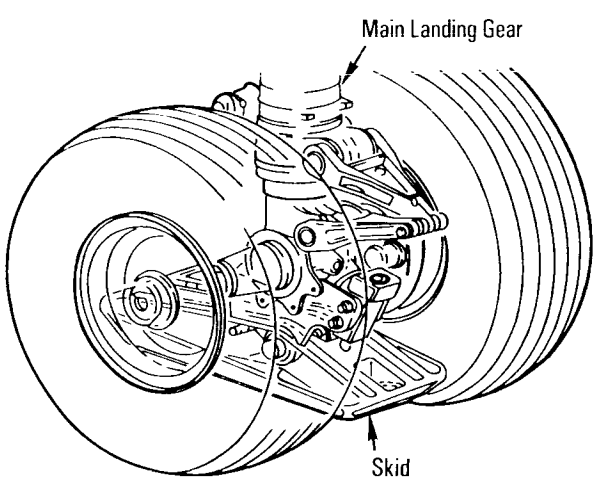


*Main Landing Gear Skid Study*

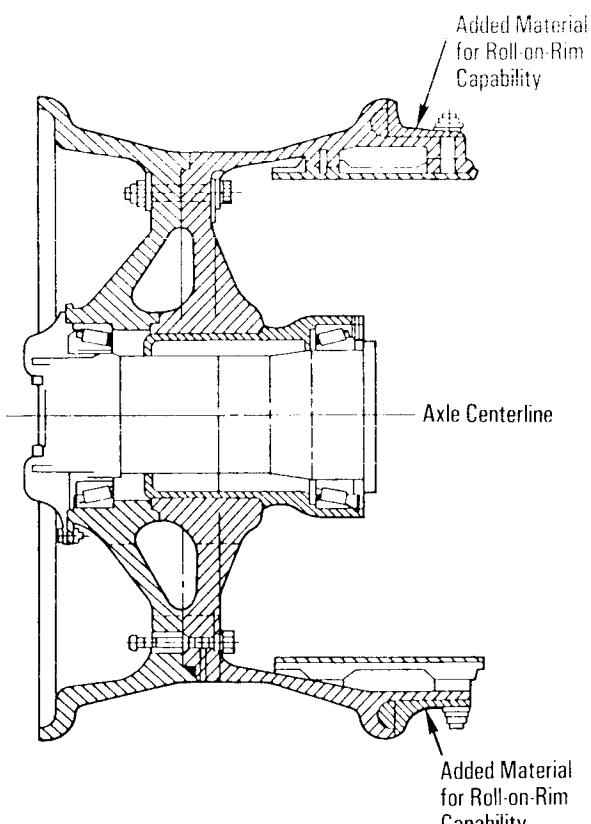


*Roll-on-Rim Study*

Other studies in progress are arrest barriers at landing sites (except lake bed runways) to provide safe stops in the event of main landing gear brake failure or unforeseen wet runway conditions. The barrier net study will determine whether the barrier can safely stop a 256,000-pound orbiter traveling at 100 knots (115 mph) at the end of runway. Also under study are (1) the installation of a skid on the landing gear that could preclude the potential for a second blown tire on a gear on which one tire has blown, (2) a rim that would provide a predictable roll in the event of the loss of both tires on a single or multiple gear and (3) the addition of a drag chute.

**NOSE WHEEL STEERING.** The orbiter nose wheel is steerable after nose wheel touchdown at landing. The nose wheel is electrohydraulically steerable through the use of the general-purpose computers and the commander's or pilot's rudder pedals, in conjunction with the orbiter flight control system in the control stick steering mode. In addition, the nose wheel may also be steerable through the use of the commander's or pilot's rudder pedals in the direct mode.

Nose wheel steering is advantageous to allow positive lateral directional control of the orbiter during the rollout phase of a mission in the presence of high crosswinds and blown tires. Recent modifications of the nose wheel steering system have been incorporated to allow a safe high-speed engage of the nose wheel steering system.

The first in the series of changes was to redefine the *NWS* switch on panel L2. The forward position of the switch now activates the direct mode of nose wheel steering, the center position activates the GPC mode of nose wheel steering, and the aft switch *off* position deactivates all nose wheel steering. A flexible handle extension was also added to the switch handle.

The commander selects and activates the GPC mode while performing the pre-entry checklist of cockpit switches while his eyes and attention are inside the cockpit. No other flight crew action is required in order to engage active nose wheel steering at

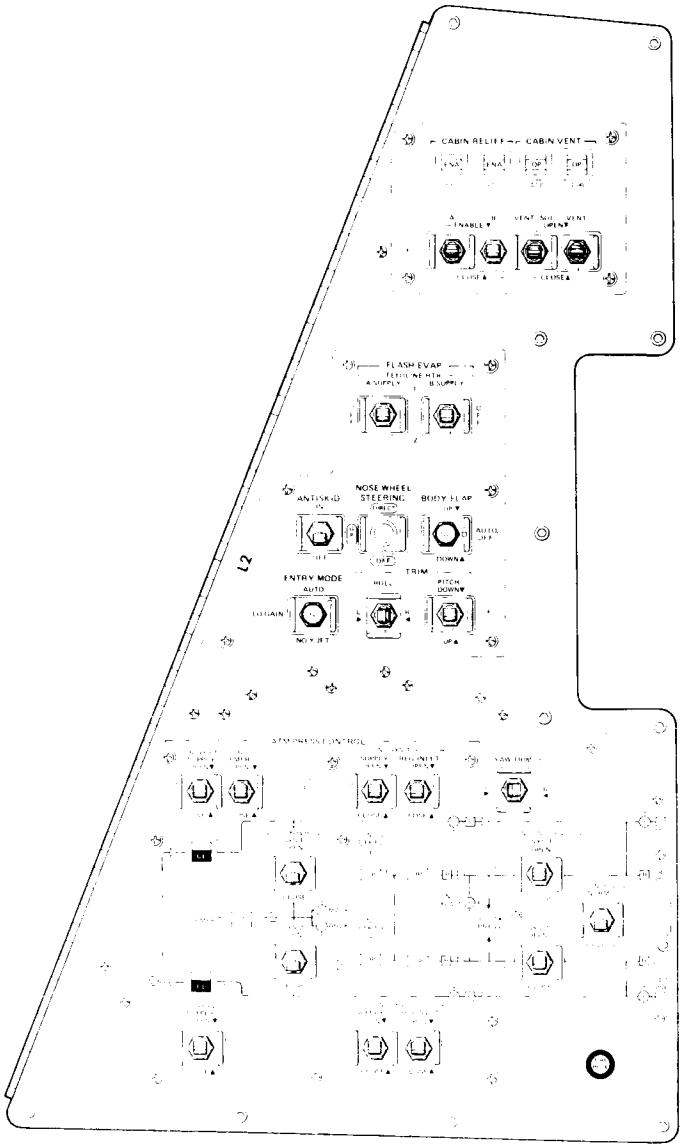


*Panel L2*

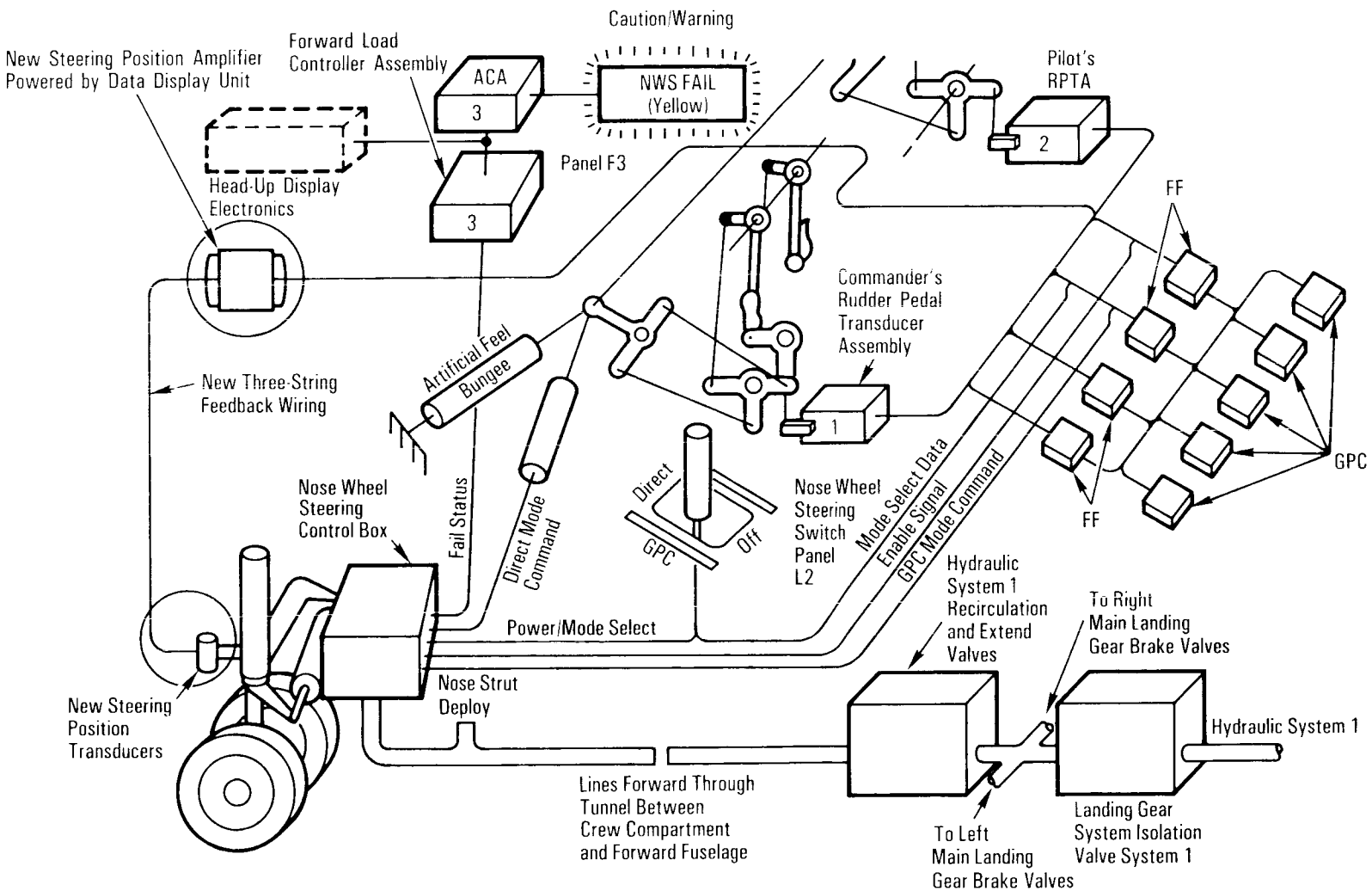


*Nose Wheel Steering System Overview*

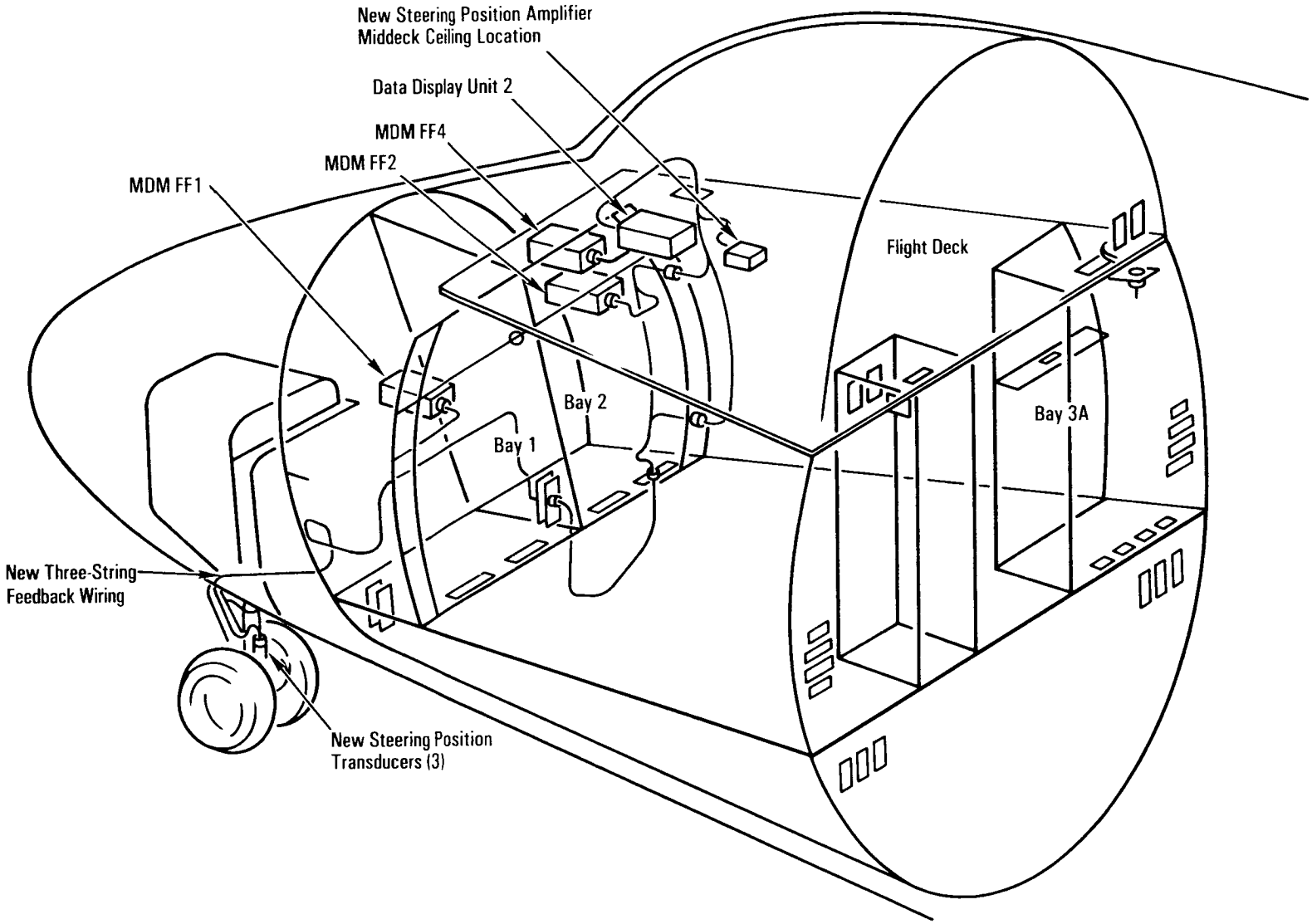


*Nose Wheel Steering*

the time of nose wheel touchdown. Other added features provide assurance that the nose wheel will be positioned straight ahead at the moment of nose wheel touchdown, and the final enable signals in the GPC mode are sequenced at nose wheel touchdown and begin active nose wheel steering at that time.

During derotation and nose wheel touchdown, the flight crew is looking out the windshield and at the head-up display. If the commander chooses to select the direct mode of nose wheel steering or deactivate all nose wheel steering by selecting *off* without visual verification of the actual switch position, he can sweep his left hand over the switch (forward motion for *direct* or aft motion for *off*) and be certain of the position of the *NWS* switch without looking at the switch.

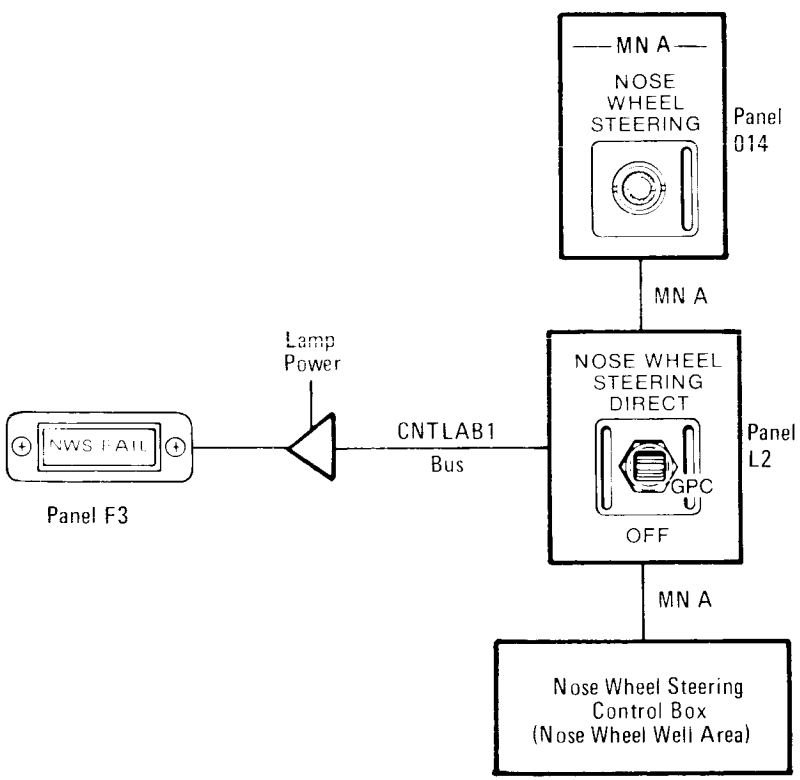


*Nose Wheel Steering Power*

Only hydraulic system 1 supplies hydraulic system supply pressure to the nose wheel hydraulic actuator for steering in either the GPC or direct mode. If hydraulic system 1 supply pressure is unavailable, the commander or pilot can apply the left and right main landing brakes by applying toe pressure on the rudder pedals differentially, which allows directional control by differential braking. The nose wheel steering actuator limits the motion of the nose wheel to plus or minus 10 degrees and also prevents nose wheel shimmey.

When the *NWS* switch is set to either *GPC* or *direct*, the nose wheel steering system fault detection logic detects (1) the interruption of hydraulic system 1 supply pressure; (2) an open or short in the nose wheel steering servovalve circuitry; (3) an open or short in the position feedback, rate position error; (4) an open or short in the command transducer; and (5) broken linkage or loss of electrical power. At this time, the *NWS fail* C/W light on panel F3 is illuminated, and the nose wheel steering reverts automatically to the caster mode.

General-Purpose Computer Mode. The *NWS* switch on panel L2, positioned to *GPC*, enables the nose wheel steering solenoid control valves, which supplies hydraulic system 1 pressure to the nose wheel steering servovalves. In addition to the GPC mode selection of the *NWS* switch, the flight control system *roll/yaw*

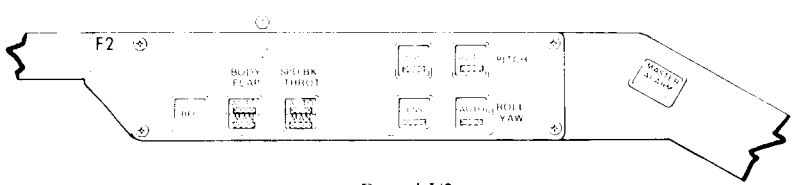


*Panel F2*

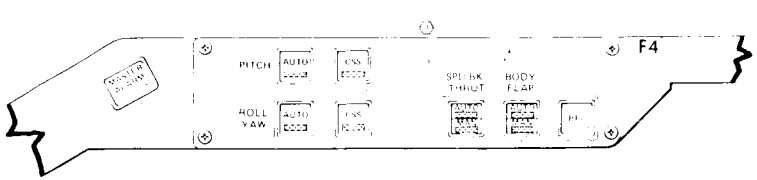


*Panel F4*

*CSS* push button switch/light indicator on panel F2 or F4 must be depressed to enable GPC mode steering. When either push button switch/light indicator on panel F2 or F4 is depressed, a white light is illuminated within the push button.

When the commander or pilot positions the rudder pedals in the GPC roll/yaw CSS mode, the rudder pedals command position is appropriately scaled within the GPC's software and transmitted to a summing network, along with accelerometer inputs from within the flight control system. The accelerometer inputs are utilized to prevent any sudden lateral deviation of the orbiter's velocity vector direction. From this summing network, a nose wheel steering command is sent to a comparison network as well as to the steering servo system.

The three new steering position transducers in the unit added on the nose wheel strut receive redundant electrical excitation from the new steering position amplifier (added to the middeck ceiling), which receives redundant electrical power from data display unit 2 on the flight deck.

Each of the three new transducers transmits nose wheel position feedback to a redundancy management mid-value-select software, which then transmits a nose wheel position signal to the comparison network. The orbiter nose wheel commanded and actual positions are compared for position error and for rates to reduce any error. Absence of an error condition will enable nose wheel steering after weight on the nose gear is sensed in the software. Weight on the nose gear requires weight on all three landing gear and a nose-down orbiter attitude. The enable signal permits hydraulic system 1 pressure to be applied to the nose wheel steering actuator. If hydraulic pressure is below 1,350 psi, the actuator remains in the shimmy damp mode, and a failure is annunciated to the *NWS fail* C/W yellow light on panel F3. If hydraulic system 1 pressure is above 1,350 psi, the actuator is configured to the GPC CSS mode to position the nose wheel utilizing the commander's or pilot's rudder pedals.

If more than one of the three new position transducer feedback signals are lost, the comparison logic switches hydraulic system 1 supply pressure off to the nose wheel steering actuator, and pressure sensing immediately inhibits nose wheel steering in the GPC CSS mode automatically. Nose wheel steering will then revert to a nose wheel caster mode and the *NWS fail* yellow C/W light will be illuminated on panel F3. This redundancy in the GPC CSS mode provides immediate protection against any undesired lateral nose wheel response during nose wheel steering.

If nose wheel steering has failed, the *NWS* switch on panel L2 positioned to *off* will extinguish the *NWS fail* C/W yellow light on panel F3, unless the GPC CSS mode comparison circuits caused the light to be illuminated. When the *NWS* switch is positioned to *off*, hydraulic system 1 supply pressure to the nose wheel steering system is removed, allowing the nose wheel to caster.

Direct Mode. When the *NWS* switch on panel L2 is positioned to *direct*, the nose wheel steering solenoid control is enabled after weight is sensed on the nose gear. This supplies hydraulic system 1 supply pressure to the nose wheel steering servo system.

When the commander or pilot positions the rudder pedals in the direct mode, the rudder pedals command position is shaped to provide a less sensitive rudder pedal command in the midrange and provides steering commands directly to the nose wheel steering servoactuator, bypassing the GPC software altogether.

The two additional steering position transducer/amplifier boxes are from Honeywell, the NWS box was modified by Sterer, and the DDU 2 modification was made by Collins.

A new additional nose wheel steering system design is expected to be available in late 1988 or early 1989.

The contractors for the landing gear are B.F. Goodrich, Troy, Ohio (main and nose landing gear wheel and main landing gear brake assembly and the nose/main gear tires); Bertea Corp., Irvine, Calif. (main landing gear hydraulic uplock actuator, main landing gear strut actuator and nose landing gear uplock actuator); Menasco Manufacturing Co., Burbank, Calif. (main and

nose landing gear shock struts and drag brace assembly); Sterer Engineering and Manufacturing, Los Angeles, Calif. (nose gear steering/damping and solenoid-operated landing gear uplock control valves); Crane Co., Hydro Aire, Burbank, Calif. (main landing gear brake anti-skid system); Eldec Corp., Lynwood, Wash. (landing gear proximity switch); OEA, Denver, Colo. (nose gear uplock release pyro thruster); Scott Inc., Downers Grove, Ill. (main landing gear uplock release thruster actuator).

## CAUTION AND WARNING SYSTEM

The primary caution and warning system is designed to warn the crew of conditions that may adversely affect orbiter operations. The system consists of hardware and electronics that provide the crew with both visual and aural cues when a system exceeds predefined operating limits. The primary system's visual cues consist of four *master alarm* lights, a 40-light array on panel F7 and a 120-light array on panel R13. The aural cue is sent to the communications system for distribution to flight crew headsets or speaker boxes.

The C/W system interfaces with the auxiliary power units, data processing system, environmental control and life support system, electrical power system, flight control system, guidance and navigation, hydraulics, main propulsion system, reaction control system, orbital maneuvering system and payloads. The audio alarms are classified as emergency (class 1), C/W (class 2) and alert (class 3).

The emergency alarms consist of a siren (activated by the smoke detection system) and a klaxon (activated by the delta pressure/delta time sensor that recognizes a rapid loss of cabin pressure), and they are annunciated by hardware. The siren's frequency varies from 666 to 1,470 hertz and returns at a five-second-per-cycle rate. The klaxon is a 2,500-hertz signal with an on/off cycle of 2.1 milliseconds on and 1.6 milliseconds off, mixed with a 270-hertz signal with a cycle of 215 milliseconds on and 70 milliseconds off.

The class 2 alarm is activated by the primary (hardware) system, the backup (software) system or both. The C/W tone is an alternating 375 hertz and 1,000 hertz at 2.5 hertz. The alternating C/W alarm tone is generated when the hardware system detects an out-of-limit condition on any of the 120 parameters it monitors or when the software (backup) system detects a parameter that is out of limits.

Both guidance, navigation and control and systems management software sense out-of-limit conditions. These software systems also serve some less critical parameters and annunciate the systems management alert tone. The SM alert tone is a steady tone of 512 hertz of predefined duration generated in the C/W electronics when activated by inputs from the onboard computers.

Visual cues for the flight crew consist of four red *master alarm* push button light indicators on panels F2, F4, A7 and M052J; the 40-light (red or yellow) C/W light array on panel F7; the 120 parameter status lights on panel R13; the blue *SM alert* light on panel F7; the red *backup* C/W light on panel F7; fault messages on cathode ray tubes; and status characters on CRTs.

Inputs enter the C/W logic circuitry from the onboard computers through multiplexers/demultiplexers to activate alarm tones and the backup C/W alarm. Some of these are used to turn the *backup* C/W light on panel F7 on and off. One additional signal resets the *master alarm* lights and tones.

The primary C/W system has three modes of operation: ascent, normal and acknowledge. These modes are controlled by the *caution/warning asc, norm, ack* switch on panel C3. The normal mode is discussed first.

One hundred twenty inputs are received by the primary C/W system directly from transducers through signal conditioners or from the flight forward MDMs and are fed into a multiplexing system. Of these 120 inputs, 95 come directly from transducers, five are from input/output processors, 18 are provided through MDM software and two are spares. These inputs can be either analog or bilevel. The analog signals are zero to 5 volts dc; the discretes are either zero, 5, or 28 volts dc. All of these inputs are designed to provide upper or lower limit detection. If the parameter has exceeded its limits, it will turn on the C/W tone, light the appropriate C/W light on panel F7, illuminate the four red *master alarm* push button light indicators and store the parameter in memory. The C/W tone can be silenced and the *master alarm* red light extinguished by depressing any one of the *master alarm* push button light indicators; however, the C/W light on panel F7 will remain illuminated until the out-of-tolerance condition is cor-

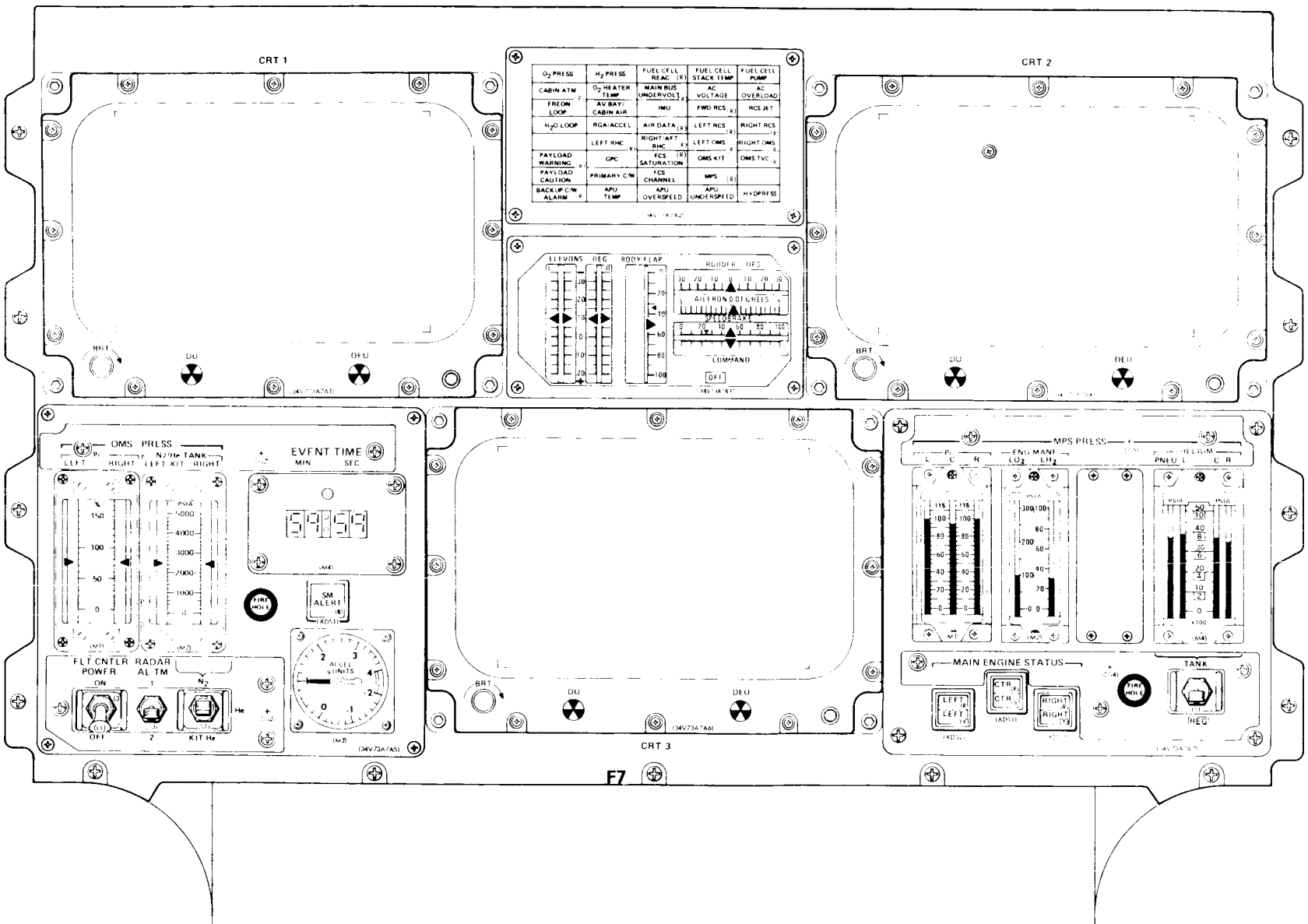
CRT 1
CRT 2
CRT 3
F7
BRT
DU
DEU
O2 PRESS
H2 PRESS
FUEL CELL REAC (R)
FUEL CELL STACK TEMP
FUEL CELL PUMP
CABIN ATM
O2 HEATER TEMP
MAIN BUS UNDERVOLT
AC VOLTAGE
AC OVERLOAD
FREON LOOP
AV BAY/ CABIN AIR
IMU
FWD RCS
RCS JET
H2O LOOP
RGA/ACCEL
AIR DATA (R)
LEFT RCS
RIGHT RCS
LEFT RHC
RIGHT AFT RHC
LEFT OMS
RIGHT OMS
PAYLOAD WARNING
GPC
FCS SATURATION (R)
OMS KIT
OMS TVC
PAYLOAD CAUTION
PRIMARY C/W
FCS CHANNEL
MPS (R)
BACKUP C/W ALARM
APU TEMP
APU OVERSPEED
APU UNDERSPEED
HYDPRESS
ELEVONS DEG
BODY FLAP
RUDDER DEG
AILERON DEGREES
SPEEDBRAKE
COMMAND
OFF
OMS PRESS
LEFT
RIGHT
N2/He TANK
LEFT KIT
RIGHT
EVENT TIME
MIN
SEC
FIRE HOLE
SM ALERT
ACCEL UNITS
FLT CNTLR POWER
RADAR ALTM
ON
OFF
KIT He
MPS PRESS
ENG MAIN
PNEU
HELIUM
MAIN ENGINE STATUS
LEFT
CTR
RIGHT
TANK
HEQ

*Panel F7*

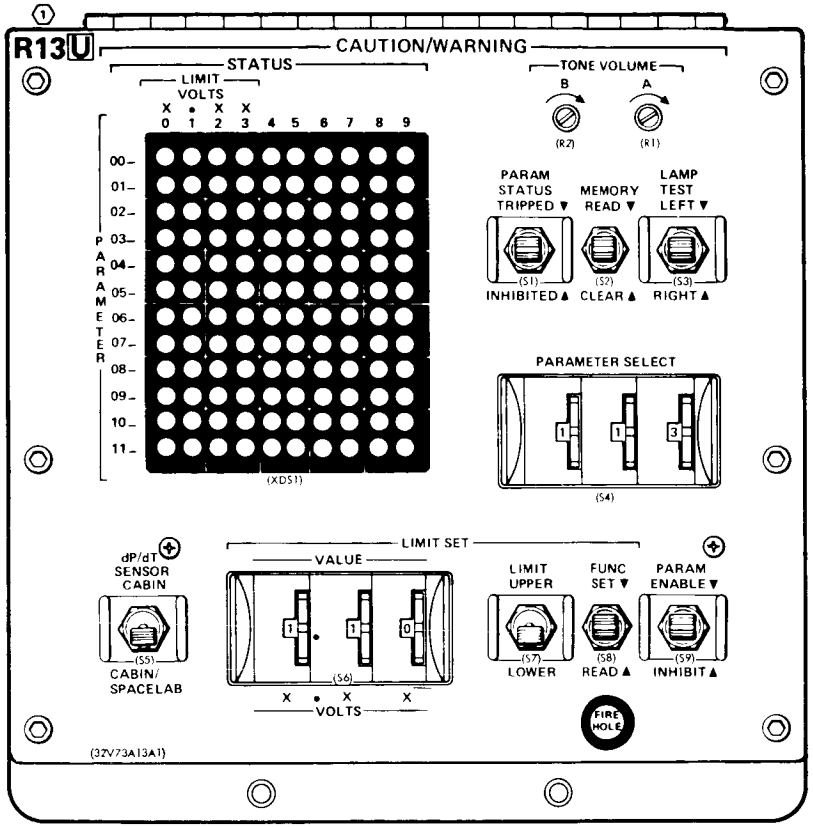


*Panel R13*

rected. Any one of the *master alarm* push button light indicators will reset all tones, including the systems management tone.

The C/W ascent mode is the same as the normal mode, except that the commander's red *master alarm* push button light indicator will not be illuminated.

The C/W acknowledge mode is also the same as the normal mode, except that the 40 annunciator lights on panel F7 will not be illuminated unless one of the red *master alarm* push button light indicators on panel F2 for the commander or panel F4 for the pilot is depressed.

Each of the 120 status C/W red parameter lights on panel R13 receives an input from a specific parameter. A primary C/W parameter matrix cue card identifies the 120 input channels and correlates them to the panel F7 C/W annunciator light matrix. If an out-of-limit condition exists on a specific parameter that is set on panel R13, it illuminates the corresponding light on panel F7. If the *caution/warning param status* switch on panel R13 is held in the *tripped* position when an out-of-limit parameter light on panel F7 is illuminated, the corresponding light on panel R13 will also be illuminated.

The three *caution/warning parameter select* thumbwheels on panel R13 provide signals to the C/W electronics unit and define the specific parameter for enabling and inhibiting the parameter and setting and reading the parameter's limits.

The *caution/warning limit set* switch grouping on panel R13 is used to change limits or to read a parameter's limits. The three *value* thumbwheels provide the signals to the C/W unit, defining the voltage value setting of a parameter's upper or lower limit, X.XX.

The *caution/warning limit set limit upper* switch on panel R13 provides a signal to the C/W electronics unit, which modes the electronics to set or read the upper limit of a parameter specified by the settings on the *value* thumbwheels for that parameter; and the *caution/warning limit func* switch is cycled to set or read the upper limit of that parameter. The *caution/warning limit lower* switch on panel R13 functions in the same manner as the *limit upper* switch, except for the lower limit for a parameter.

The *caution/warning limit set func set* switch position on panel R13 provides a signal to the C/W electronics unit, which sets the value specified by the *limit set value* thumbwheels into the parameter as specified by the *parameter select* thumbwheels and *limit set limit* switch. The *limit set func read* switch position on

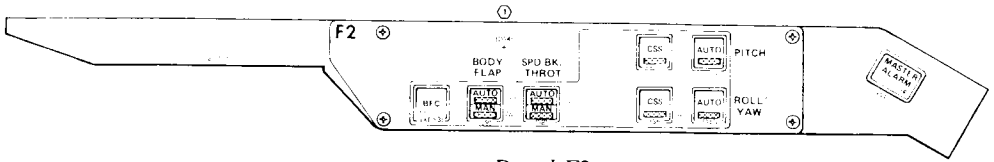


*Panel F2*

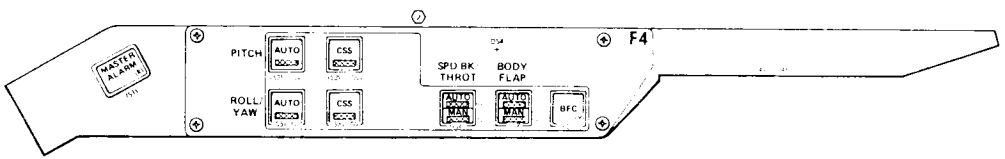


*Panel F4*

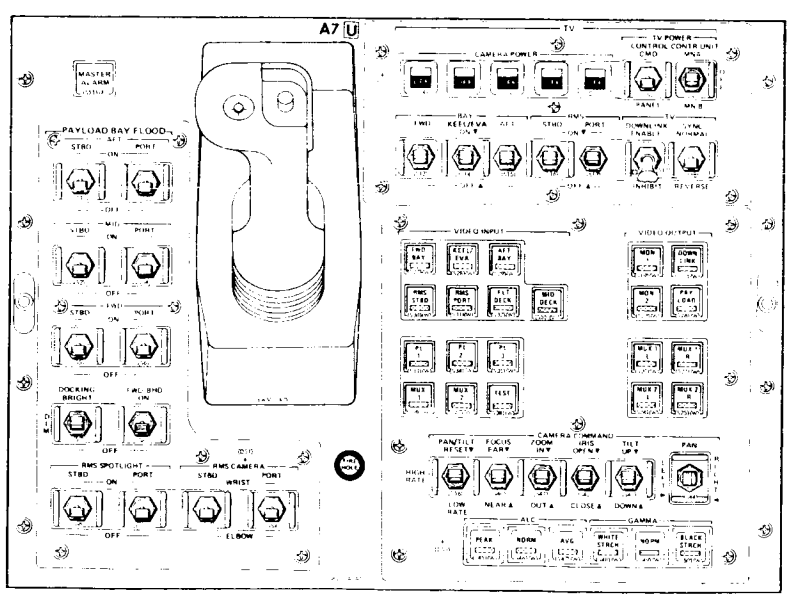


*Panel A7*

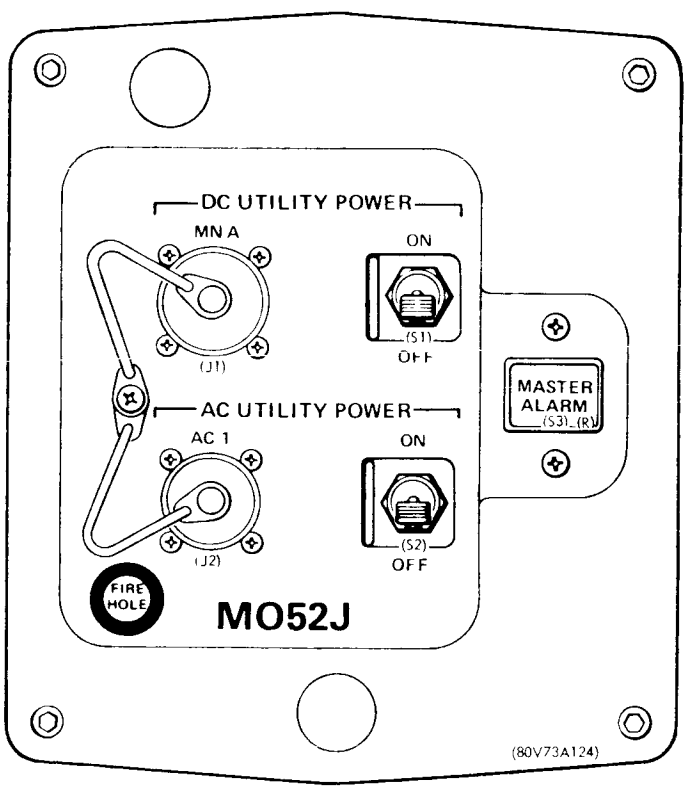


*Panel M052J*

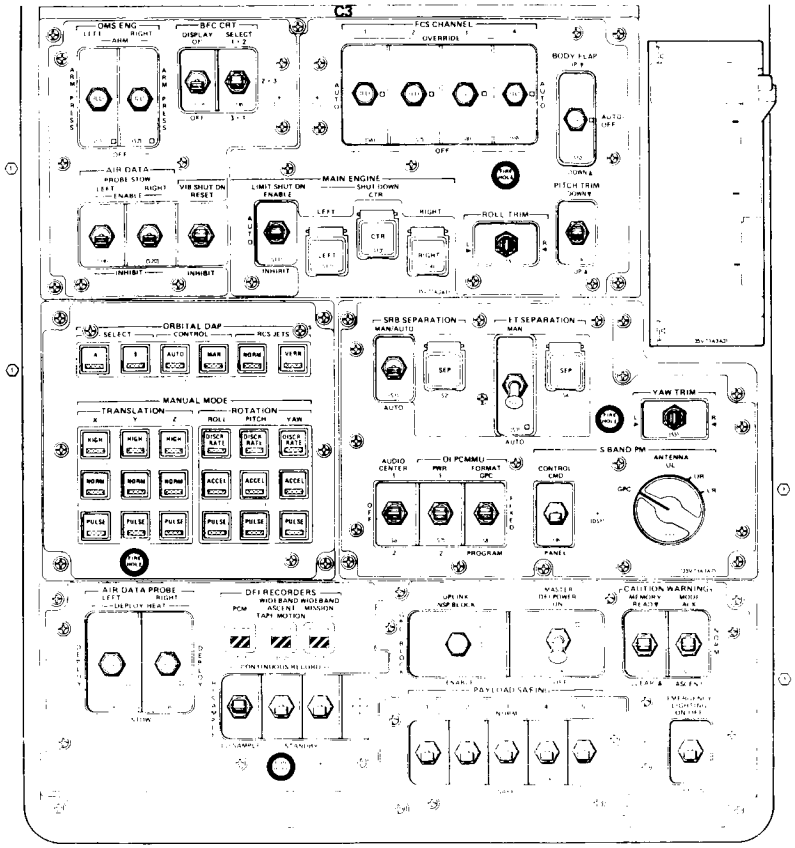


*Panel C3*

panel R13 provides a signal to the C/W electronics unit, which illuminates the lights under the *status limit volts* X.XX columns on panel R13, that correspond to the voltage parameter limit specified by the *parameter select* thumbwheels and the *limit set limit* switch. The value read corresponds to the parameter's full-scale range on a scale of zero to 5 volts dc. The *limit sec func* switch center position disables the set and read functions.

The *caution/warning param enable* switch position on panel R13 provides a signal to the C/W electronics unit to enable the parameter indicated on the *parameter select* thumbwheels, which allows the parameter to trigger the primary C/W alarm when out of limits. The *inhibited* position operates the same as *enable*, except it inhibits the parameter from triggering the primary C/W alarm. The center position of the switch disables the enable and inhibit functions.

The *caution/warning param status tripped* switch position on panel R13 provides a signal to the C/W electronics unit, which illuminates the C/W status lights on panel R13 that correspond to the parameters that are presently out of limits, including those that are inhibited. The *inhibited* position illuminates those C/W lights on panel R13 that have been inhibited. The center position disables the tripped and inhibited functions.

The *caution/warning memory read* switch position on panel R13 provides a signal to the C/W electronics unit, which illuminates the C/W status lights on panel R13 that correspond to the parameters that have been out of limits since the last positioning of this switch or the *caution/warning memory* switch on panel C3 to *clear*. The *clear* position on panel R13 or panel C3 provides a signal to the C/W electronics unit that clears from the memory any parameters that are presently within limits, but any parameters that are out of limits during this action remain in memory. The center position of the switch on panel R13 or panel C3 disables the clear and read functions.

The *caution/warning tone volume A* switch on panel R13, when adjusted clockwise, increases the system A siren, klaxon, C/W, and SM tone generator output signals to the audio central control unit. The *B* switch functions the same as the *A* switch for system B tone generators.

The *caution/warning lamp test* switch on panel R13, when positioned to *left*, provides a signal to the C/W electronics unit, which illuminates the left five columns of the C/W status matrix lights on panel R13. The *right* position functions the same as the *left*, except for the right five columns of lights.

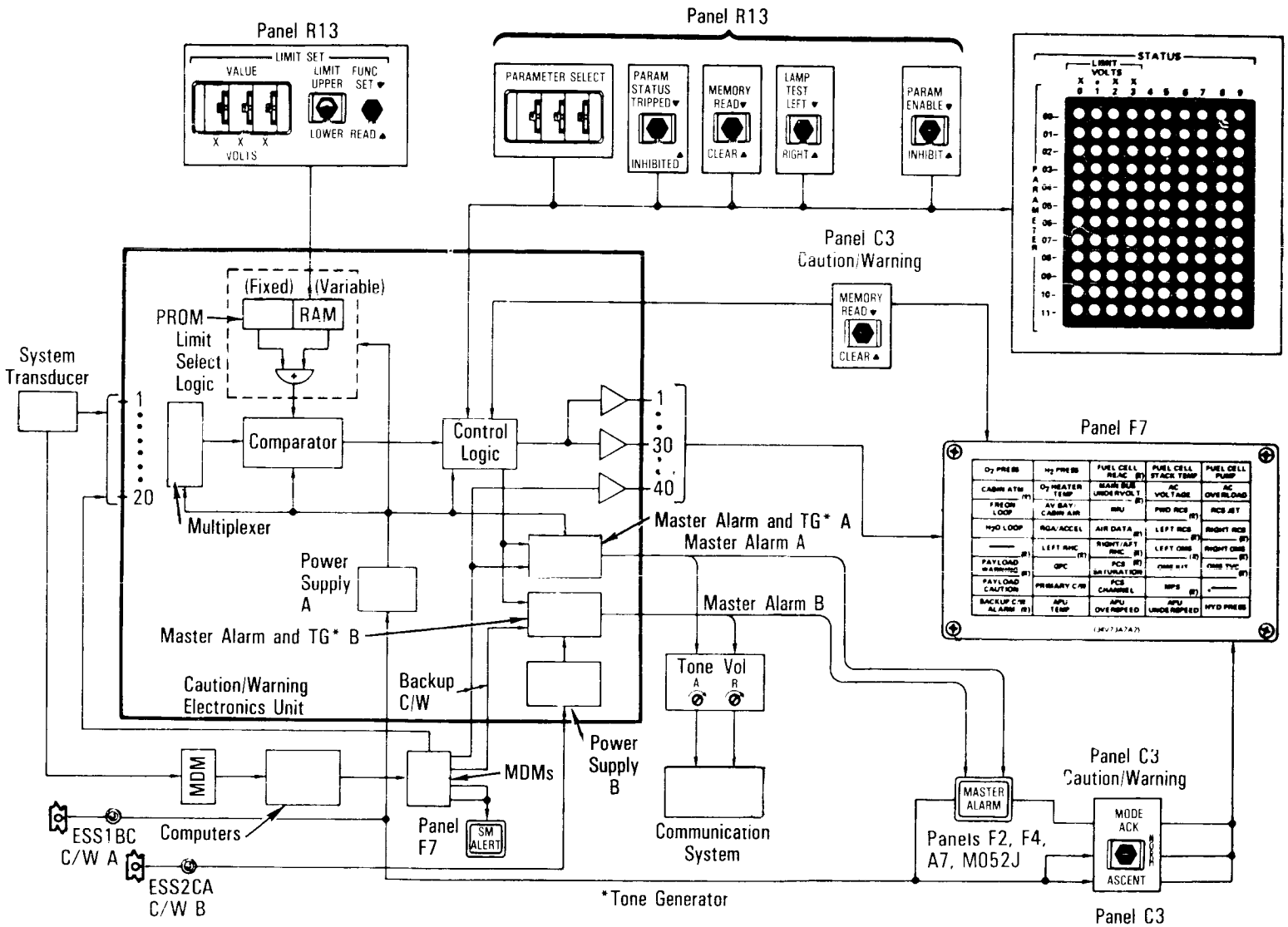


*Caution and Warning System Overview*

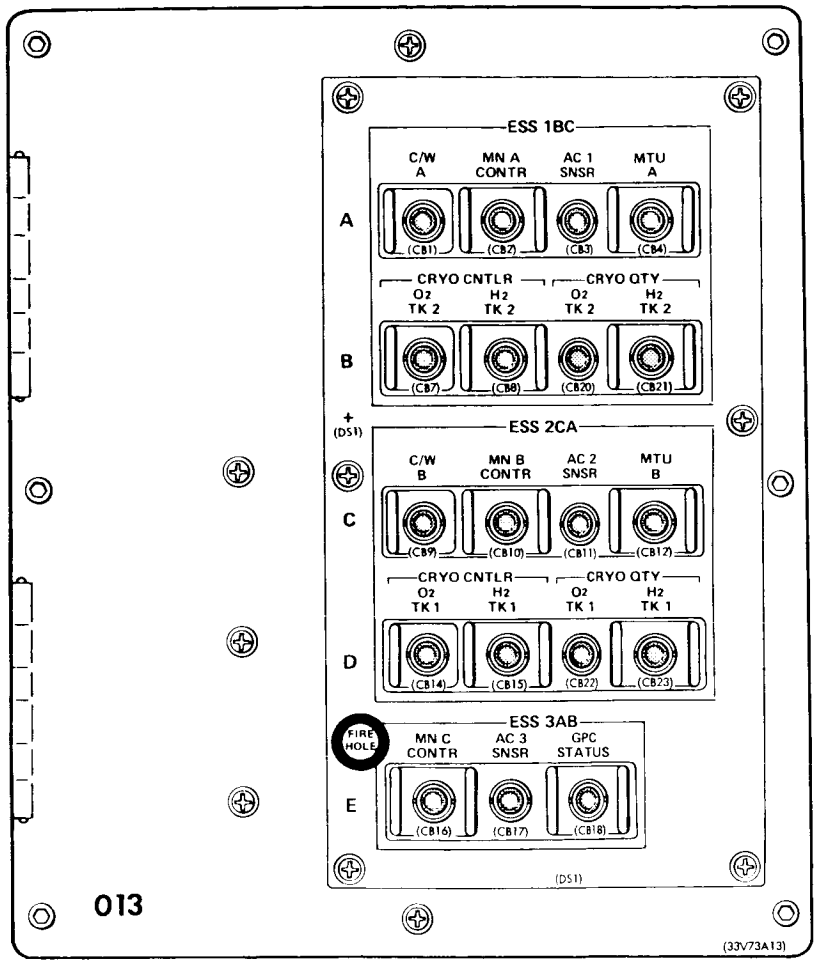


*Panel O13*

The backup C/W system is part of the systems management fault detection and annunciation, GN&C and backup flight system software programs. All backup C/W alarms are class 2. Only the 69 backup C/W alarms that are produced by FDA have limits that can be changed and displayed in engineering units accessed through the SM *table maintenance* specialist function display

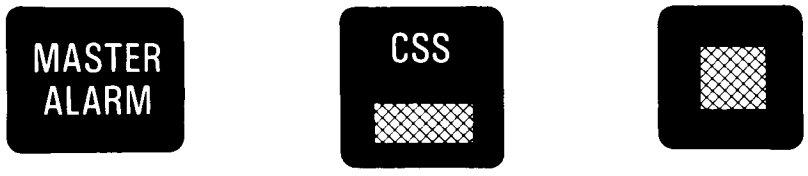


Illuminated Nomenclature (Nomenclature Is Black When Not Illuminated)

Illuminated Bar— White Nomenclature

Illuminated Bar— No Nomenclature

(Bars Appear Black When Not Illuminated)

Note: All Backgrounds Are Opaque Black

*Typical Annunciator Configurations*

*(SPEC 60)*. The remaining backup C/W alarms that are produced by the guidance and navigation program are accessed through general-purpose computer read/write procedures. A backup C/W out-of-tolerance condition will trigger a *master alarm* light, illuminate the red *backup* C/W alarm light on panel F7, and display a message on the fault message line and fault summary page on the SM CRT.



The SM alert program is another portion of the SM program and operates like the backup C/W system. It is designed to inform the flight crew of a situation leading up to a C/W or one that may require additional procedures. When an SM alert parameter exceeds its limits, the blue *SM alert* light on panel F7 is illuminated, a discrete is sent to the primary C/W system to turn on the SM tone, and the software displays a fault message on the fault message line and fault summary page on the SM CRT.

Annunciator lights provide visual indications of the status of the vehicle and payload systems. The annunciator lights are classified as emergency, warning, caution and advisory. Emergency and warning annunciators are red; cautions are yellow; and advisory may be white (status), green (normal configuration), yellow (alternate configuration) or blue (special applications).

Annunciator lighting is provided by incandescent lamps that illuminate the lens area of the annunciators. Most annunciators are driven by an annunciator control assembly that controls the

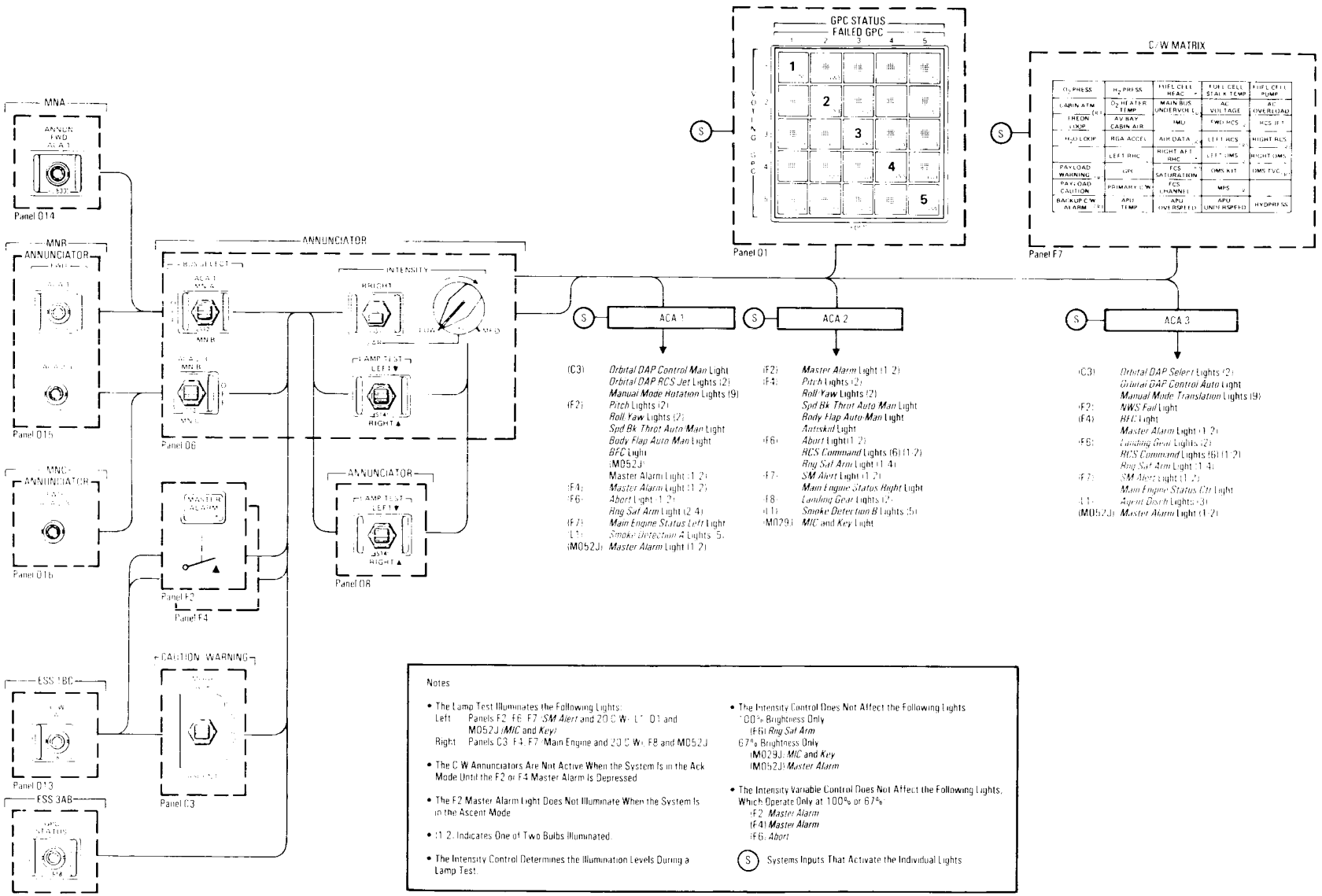


*Forward Flight Deck Annunciator Light Controls*

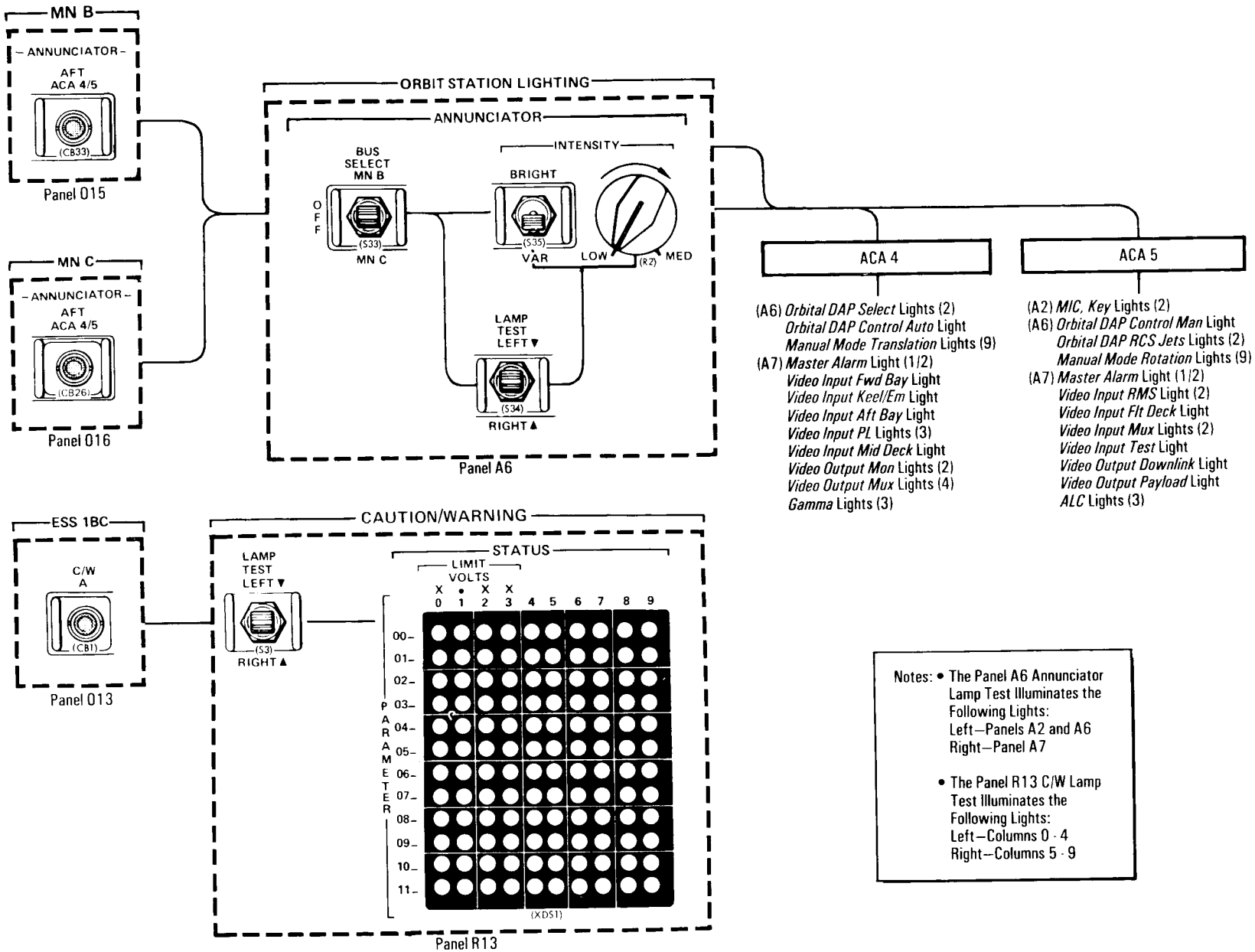


*Aft Flight Deck Annunciator Light Control*

illumination of the lights during a normal or test input and the brightness level. The C/W status lights and GPC status lights have separate electronic units for lighting control.

There are three different lens configurations for push button indicator and indicator lights. One configuration has illuminated nomenclature in the appropriate color on an opaque black background, and the nomenclature cannot be seen until it is illuminated. Another configuration has non-illuminated white nomenclature on an opaque black background and a bar that illuminates in the appropriate color; this nomenclature is always visible. The third configuration has a bar that is illuminated on an opaque black background and no nomenclature on the lens, but the nomenclature is available as part of the panel.

The forward flight deck *annunciator bus select ACA 1* and *ACA 2/3* switches on panel O6 provide electrical power to enable the corresponding ACAs. ACA 1 is enabled by positioning *bus select ACA 1* to either the *MN A* or *MN B* position, and thus the annunciator lights associated with ACA 1. *Bus select ACA 1* also provides electrical power to the annunciator light *intensity bright, var* switch on panel O6 and the *low, med* rotary switch on panel O6, controlling the intensity of the annunciator light associated with ACA 1. ACAs 2 and 3 are enabled by positioning the *bus select ACA 2/3* switch to either the *MN B* or *MN C* position, and thus the annunciator lights associated with ACAs 2 and 3. *Bus select ACA 2/3* also provides electrical power to the annunciator light *intensity bright, var* switch on panel O6 and the *low, med* rotary control on panel O6, thus controlling the intensity of the annunciator light associated with ACAs 2 and 3. The *off* position of the *bus select ACA 1* switch removes power from ACA 1, disabling the annunciator lights associated with it. The *off* position of the *bus select ACA 2/3* switch removes power from ACAs 2 and 3, disabling the annunciator lights associated with them.

The *annunciator intensity* switch on panel O6 positioned to *bright* bypasses the *intensity low, med* rotary control on panel O6. The *annunciator intensity* switch positioned to *var* permits the *intensity low, med* rotary control to control annunciator light intensity.

The *annunciator lamp test* switches on panel O6 or panel O8 positioned to *left* apply power to the ACA 1, 2 and 3 annunciator lamp test circuits, illuminating annunciator lights on panels F2, F6, L1, O1 and M029J; the 20 C/W lights on panel F7; and the *SM alert* on panel F7. Positioning the *lamp test* switches to *right* applies power to the ACA 1, 2 and 3 annunciator lamp test circuits, illuminating the annunciator lights on panels C3, F4, F8 and M052J; the 20 C/W lights on panel F7; and the main engine lights.

The aft flight deck *annunciator bus select* switch on panel A6 provides electrical power to enable ACAs 4 and 5. ACAs 4 and 5 are enabled by positioning *bus select* to either the *MN B* or *MN C* position, and thus the annunciator lights associated with ACAs 4 and 5. The *bus select* switch also provides electrical power to the annunciator light *intensity bright, var* switch on panel A6 and the *low, med* rotary control on panel A6, thus controlling annunciator light intensity associated with ACAs 4 and 5. The *off* position of the *bus select* switch removes power from ACAs 4 and 5, disabling the annunciator lights associated with them.

The *annunciator intensity* switch on panel A6, when positioned to *bright*, bypasses the *intensity low, med* rotary control on panel A6. Positioned to *var*, it permits the *intensity low, med* rotary control to vary annunciator light intensity.

The *annunciator lamp test* switch on panel A6, when positioned to *left*, applies power to the ACA 4 and 5 annunciator lamp test circuits, illuminating the annunciator lights on panels A2 and A6 and columns 0 through 4 on panel R13. Positioning the switch to *right* applies power to the ACA 4 and 5 annunciator lamp test circuits, illuminating the annunciator lights on panel A7 and columns 5 through 9 on panel R13.

The contractors involved are Aerospace Avionics, Bohemia, N.Y. (annunciators) and Martin Marietta, Denver, Colo. (C/W electronics and C/W status display and limit module).

## ORBITER LIGHTING SYSTEM

The orbiter lighting system provides both interior and exterior lighting. The interior lighting provides illumination for display and control visibility and general flight station and crew equipment operations. Exterior lighting provides illumination for payload bay door operations, extravehicular activity, remote manipulator system operations, and stationkeeping and docking. Interior lighting consists of floodlights, panel lights, instrument lights, numeric lights and annunciator lights. Annunciator lighting is discussed with the caution and warning system. Exterior lighting consists of floodlights and spotlights.

Interior floodlights provide general illumination throughout the crew cabin and allow the flight crew to function within the flight deck, middeck, airlock and tunnel adapter (if installed). Both fluorescent and incandescent lamps are used. Emergency lighting is provided by selected fixtures that are powered via a separate power input from an essential bus.

Dual fluorescent lamp fixtures provide lighting for the mission station and payload station. The mission station lighting is controlled by an *on/off* switch with a rotary control switch to control brightness on panel R10. The payload station lighting is controlled by an *on/off* switch with a rotary control switch to control brightness on panel L9.

A single fluorescent lamp fixture is employed on each side of the commander's and pilot's forward flight deck glareshield, the commander's and pilot's side consoles and the orbit station. The commander's glareshield light is controlled by the *bright, var, off* switch and a *dim, brt* rotary control on panel O6. The *dim, brt* rotary control operates in conjunction with the *var* position. The pilot's glareshield light functions the same as the commander's, except the control is on panel O8.

The commander's side console light is controlled by an integral *off/variable/on* control switch. The pilot's side console light is

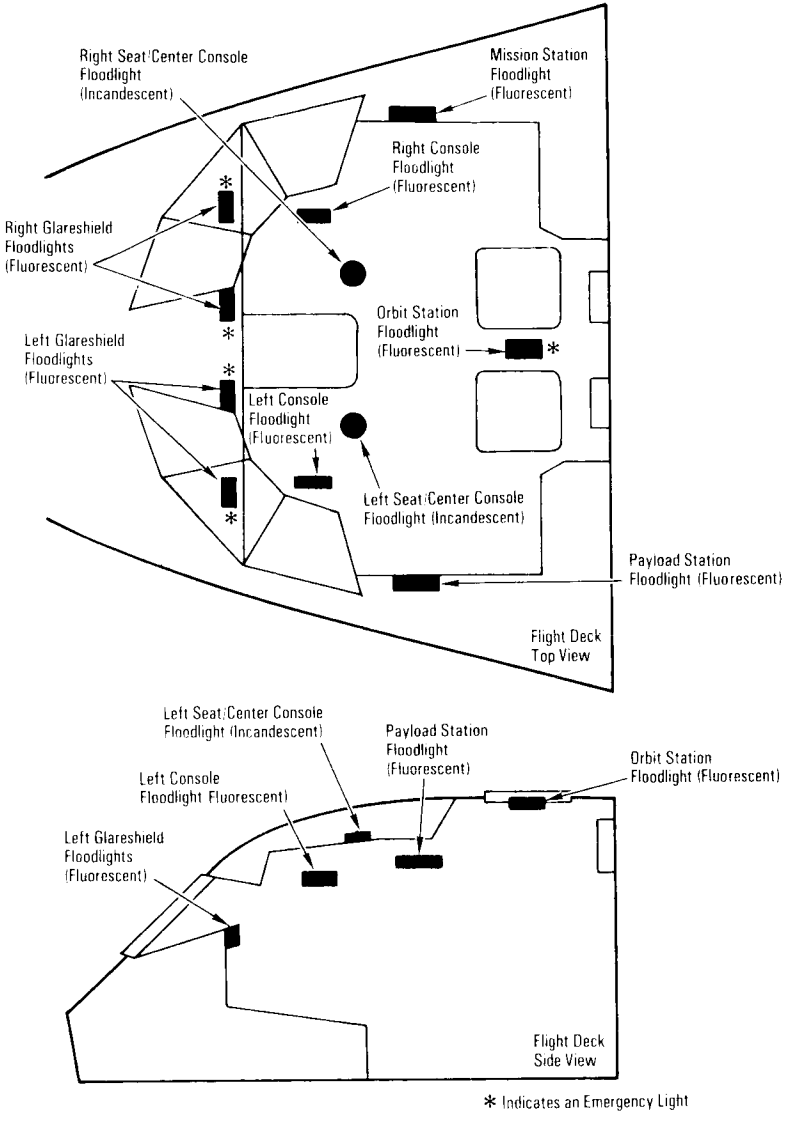


*Floodlight Locations—Flight Deck Forward and Aft*

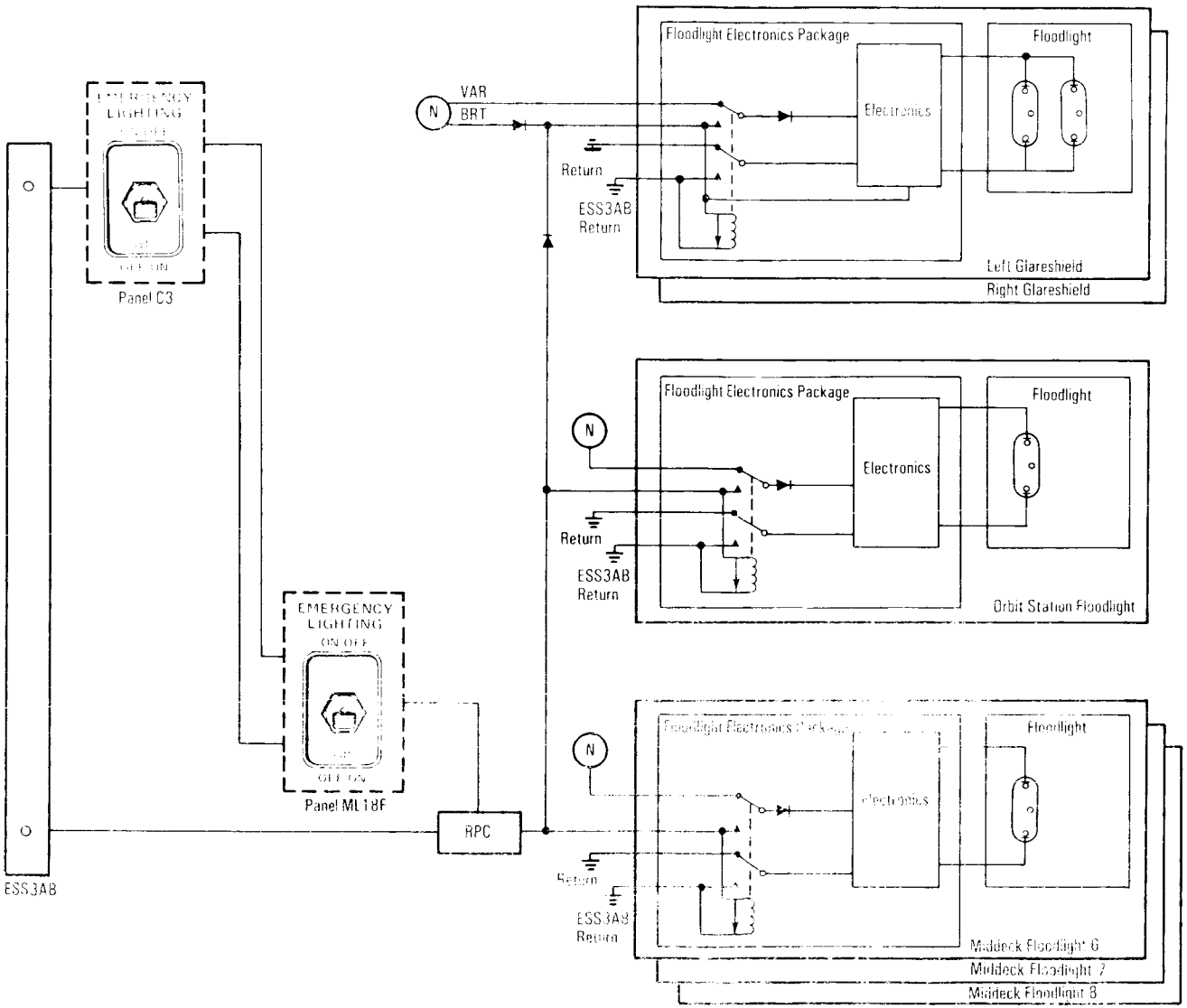


Notes: • The Emergency Lighting System Is Powering the Floodlights When Both the Panel C3 and ML18F Switches Are in the Same Position (On/Off and On/Off or Off/On and Off/On).

• When the Emergency System Is Turned On a Relay Is Activated That Configures the Lights to Full Bright.

N — Normal Lighting System Input

Fluorescent lamp

*Emergency Lighting Controls*

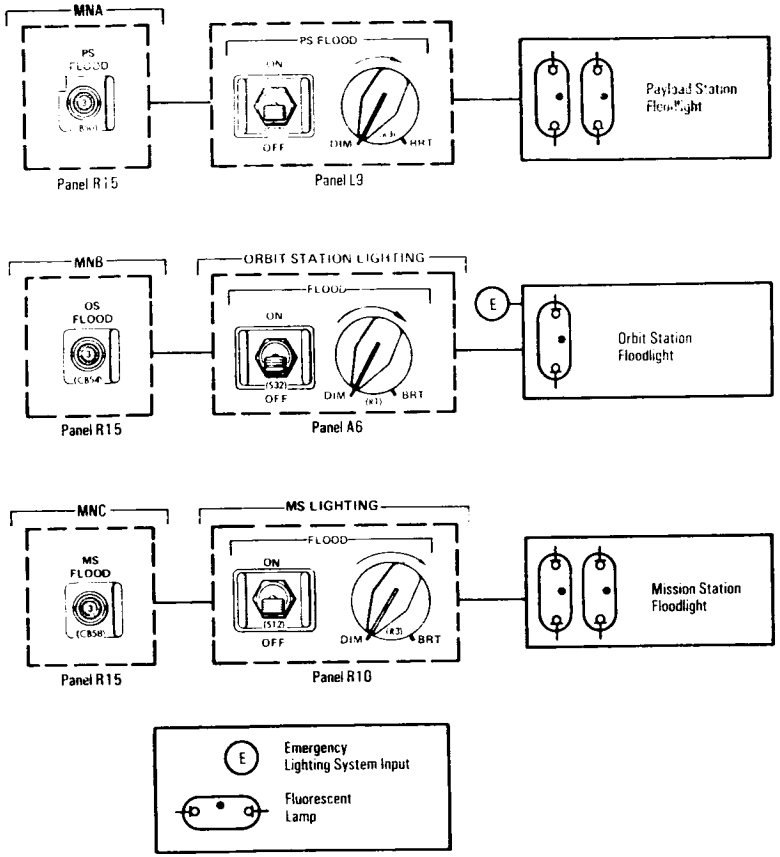


*Aft Flight Deck Floodlight Control*

also controlled by an integral *off/variable/on* control switch. The orbit station light is controlled by an *on/off* switch and *dim, brt* rotary control on panel A6.

The seat/center console floodlight has two incandescent bulbs: one illuminates the commander's lap or the center console, and the other illuminates the pilot's lap or the center console. The commander or pilot can select either the lap or center console, not both. The commander's seat or console light is controlled by the *left seat/ctr cnsl flood, seat off/ctr cnsl* switch and the *dim, brt*

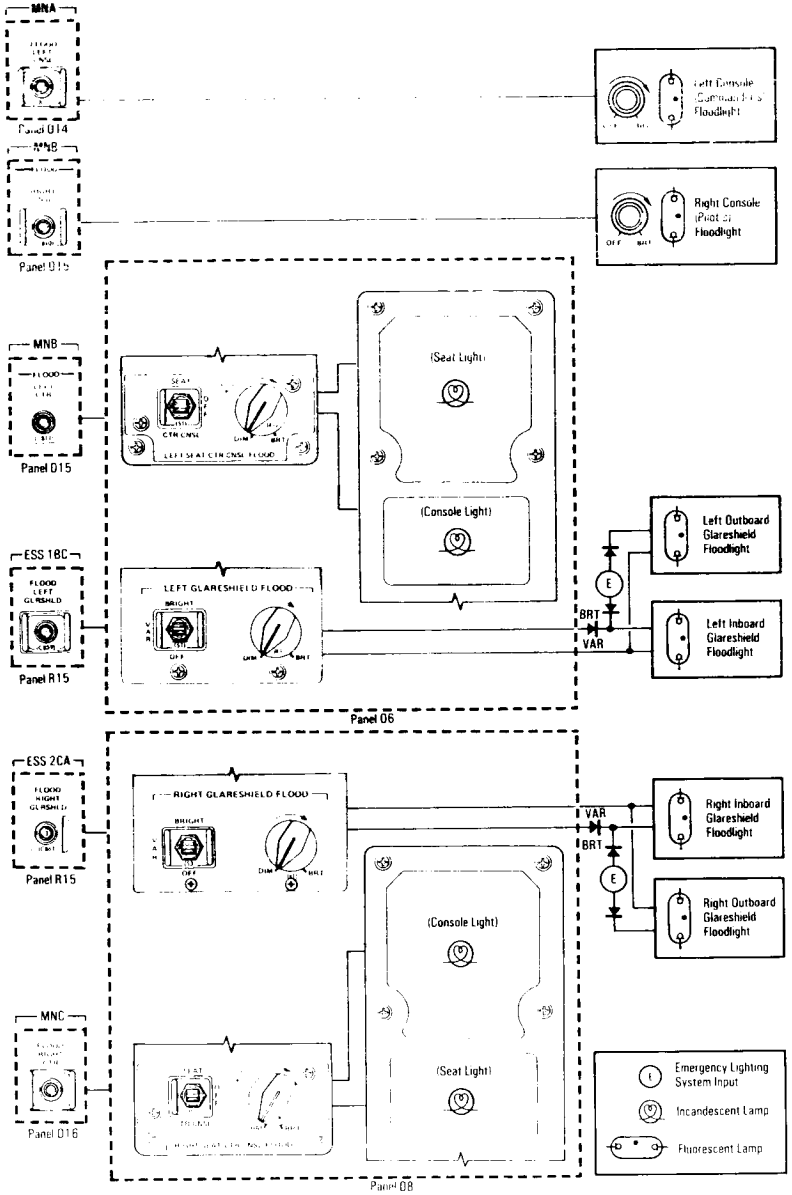


*Forward Flight Deck Floodlight Control*

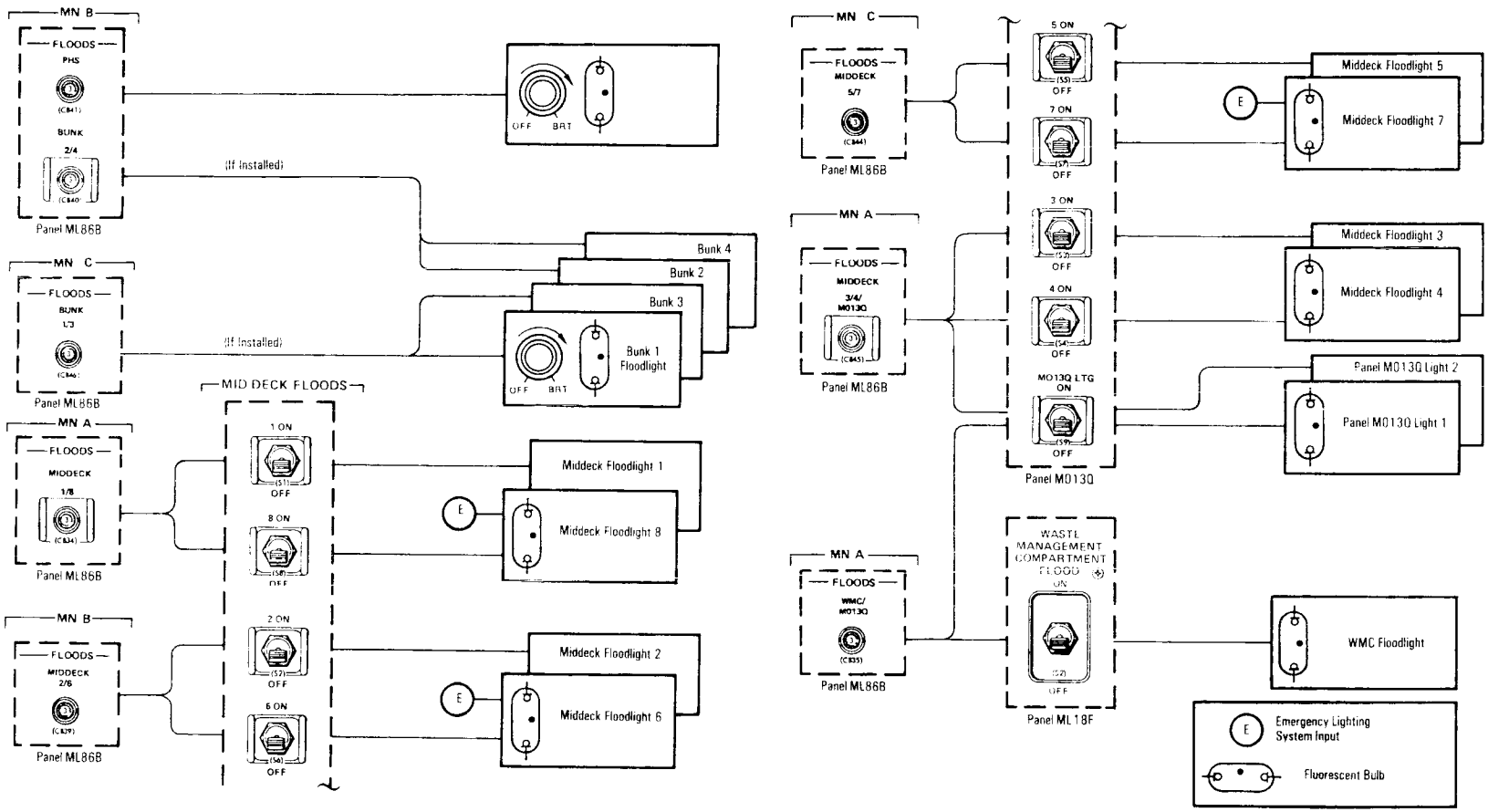


*Middeck Floodlight Control*

rotary control on panel O6. The pilot's seat or console light is controlled by the *right seat ctr cnsl flood, seat/off/ctr cnsl* switch and the *dim, brt* rotary control on panel O8.

The middeck ceiling floodlight fixtures are located behind a translucent polycarbonate material. They are the same fixtures as those at the orbit station and are individually controlled by *on/off* switches on panel M013Q. The middeck panel M013Q is lighted by a small fluorescent lamp at each end of the recessed panel and is controlled by the *M013Q on/off* switch on the panel.

The waste management compartment floodlight is also the same as the orbit station fixture and is controlled by an *on/off* switch on panel ML18F.

The galley and middeck sleep station bunks (if installed) use the same floodlights as the commander's and pilot's flight deck consoles and are also controlled individually.

The airlock floodlights are similar to those at the commander's and pilot's flight deck side consoles, except they are controlled by switches on panels AW18A and M013Q.

If the tunnel adapter is installed for a Spacelab mission, the floodlights are also similar to those at the commander's and pilot's side consoles. Tunnel adapter lights 2, 3 and 4 are controlled by individual *on/off* switches on the tunnel adapter panel. The remaining tunnel adapter light is controlled by the *tunnel adapter 1 on/off* switch on panel M013Q and the *on/off 1* switch on the tunnel adapter panel. The emergency floodlights are controlled by *on/off* switches on either panel C3 or ML18F.

**PANEL LIGHTING.** Many flight deck instrument panels have integral lighting that illuminates the panel nomenclature and markings on the displays and controls. This illumination aids the flight crew in locating displays and controls while operating the orbiter. Panel lighting is transmitted from behind a panel overlay through the panel nomenclature, making it appear white-lighted. It is also transmitted to the edges of the displays and controls for general illumination. The lighting source consists of small incan-

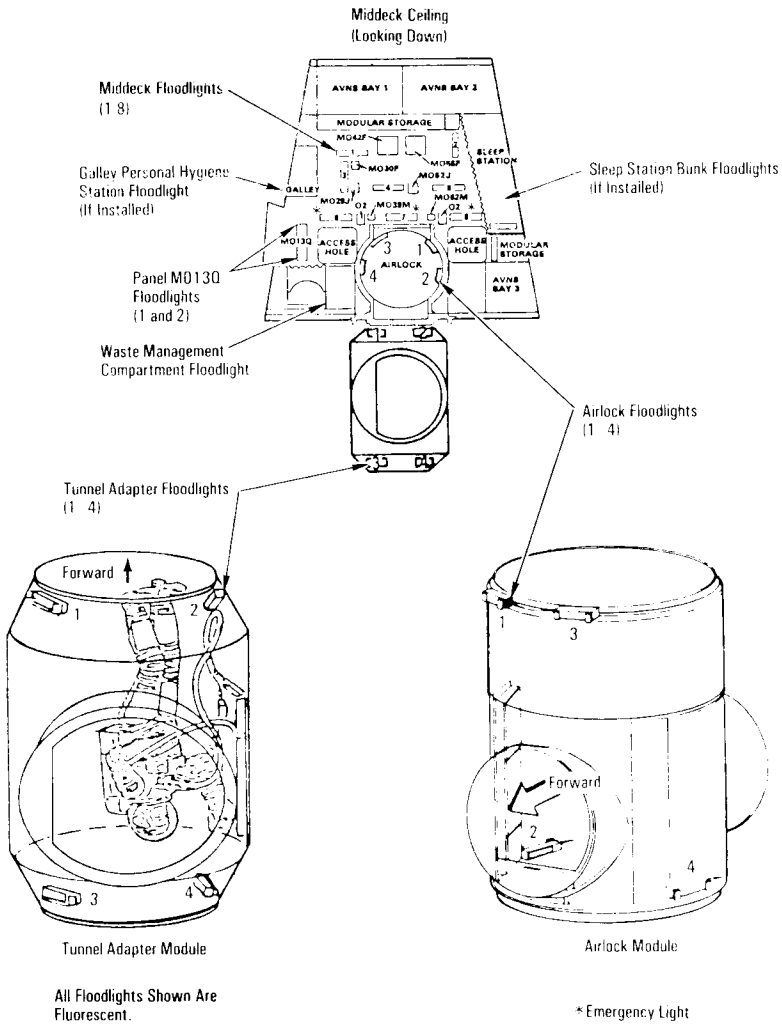


*Middeck and Airlock Floodlight Locations*

descent, grain-of-wheat lamps mounted between the metal panel face and the plastic panel overlay. The overlay has a layer of white paint and a layer of gray paint on the top surface. The panel nomenclature is formed by etching the letters and symbols into the gray paint, leaving the white layer underneath. The panel, mission

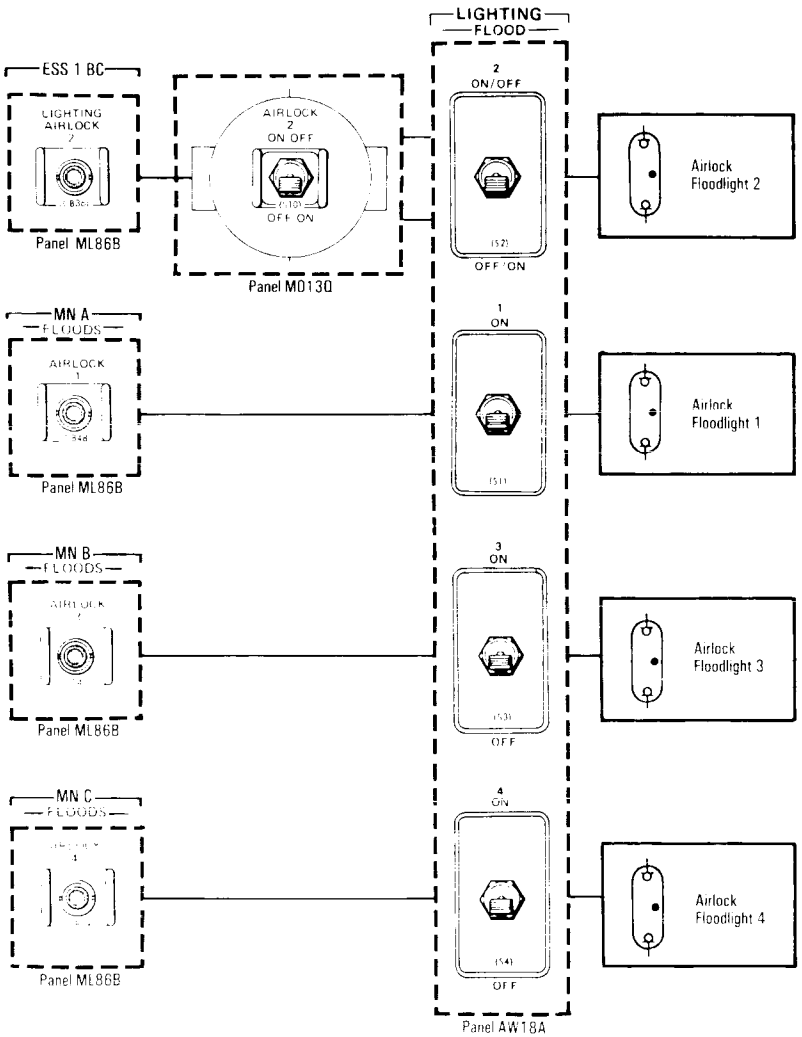


*Airlock Floodlight Control*

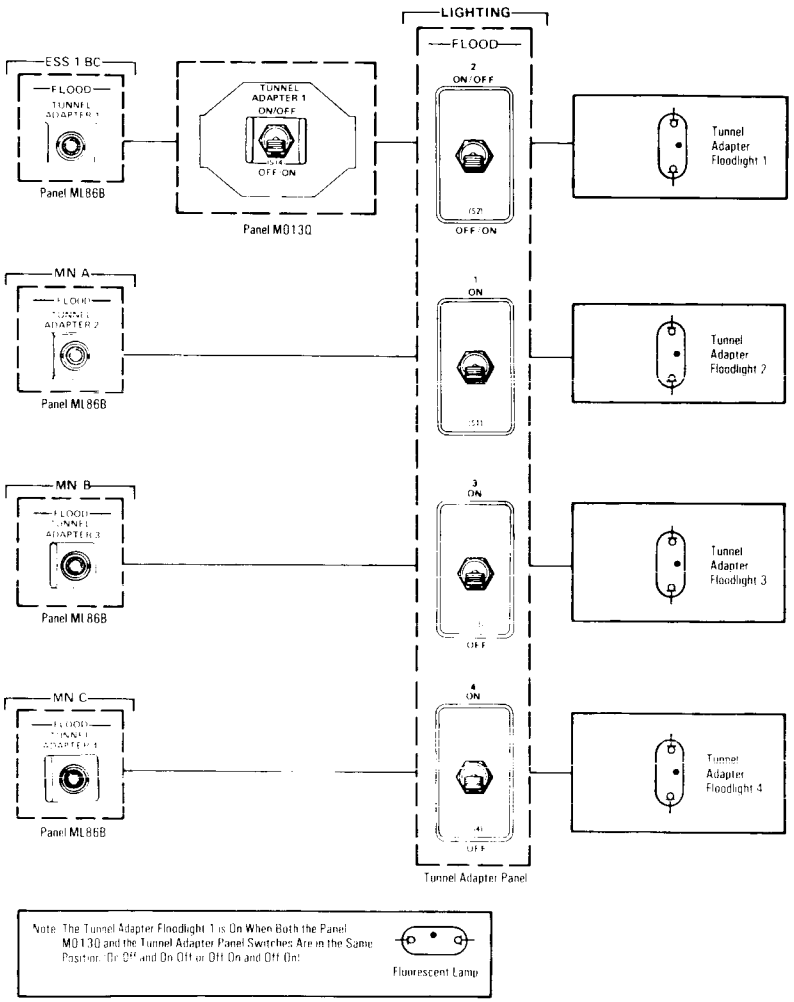


*Tunnel Adapter Floodlights, If Adapter Is Installed*

station and orbit station lighting is controlled by *off, var, brt* rotary controls on panels O6, O8, R10 and A6.

**INSTRUMENT LIGHTING.** The flight deck instruments have integral lighting that enables the flight crew to read the displayed data. Lighting is provided by incandescent lamps located behind the face of the instruments. Prisms are used to distribute the light evenly over the face. Instrument, lighting panel, and orbit station lighting are controlled by *off, var, brt* rotary controls on panels O6, O8 and A6.

**NUMERIC LIGHTING.** Six indicators on the flight deck use illuminated numeric (digital) readouts to display data. The illumination is provided by a single incandescent lamp in each segment of a digit. Seven segments are required to generate the numbers zero through nine. Each numeric indicator has a red light to indicate failures in the indicator and will be illuminated when any lamp in the indicator fails. The six numeric (digital) indicators are *event time* (panels F7 and A4), *mission time* (panels O3 and A4), *RCS/OMS prplt qty* (panel O3) and *rri* (rendezvous radar) (panel A2). The panel lighting and numeric orbit station lighting are controlled by *off, var, brt* rotary controls on panels O8 and A6.

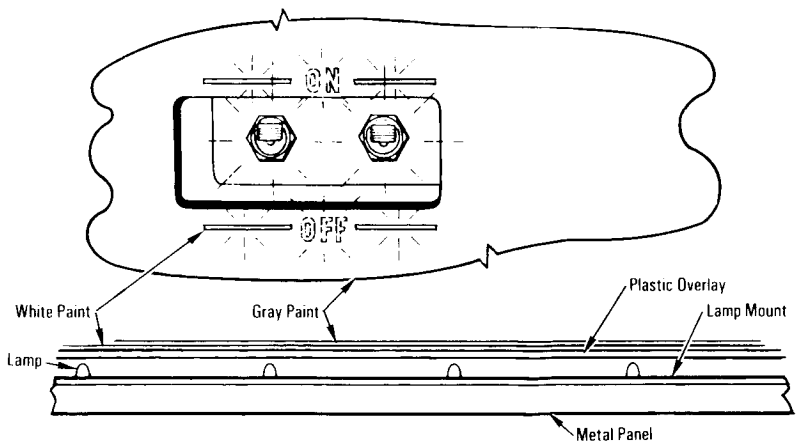


*Panel Lighting Configuration*

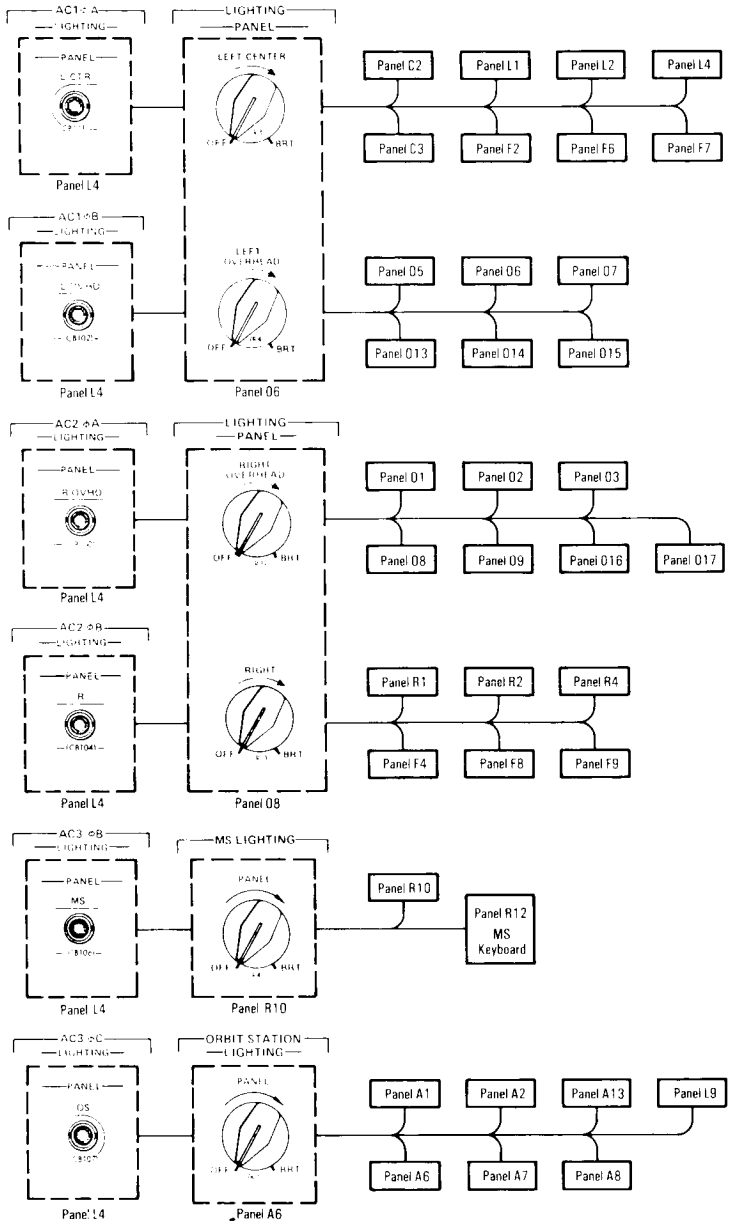


*Panel Lighting Controls*

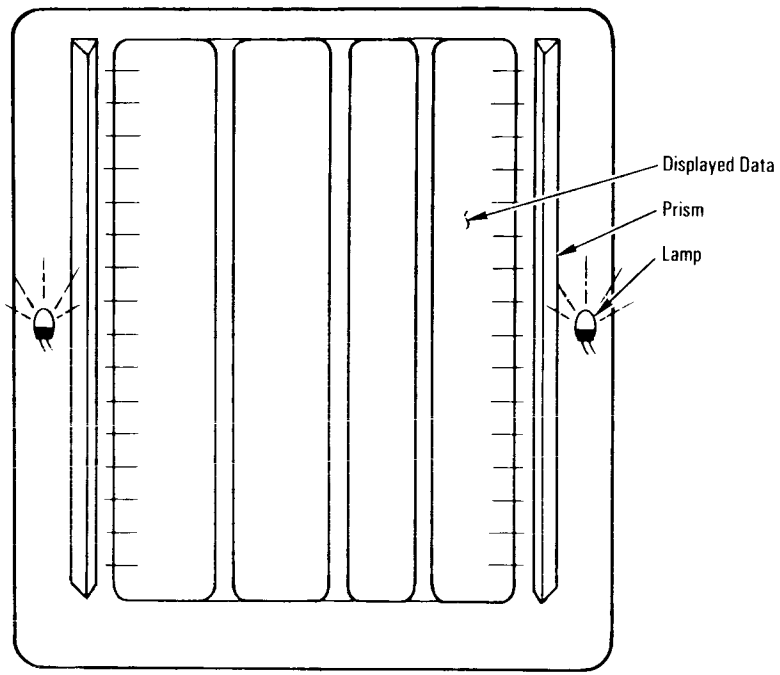


*Instrument Lighting Configuration*

**EXTERIOR FLOODLIGHTS.** The exterior floodlights improve visibility for the flight crew during payload bay door operations, EVA operations, RMS operations, and stationkeeping and docking. The payload bay floodlights are controlled by switches on panel A7. The RMS floodlight is also controlled on panel A7.

The payload bay floodlights are metal halide lamps that are gas discharge arc tubes similar to mercury vapor lamps. Two different fixtures are used with the lamps: one fixture mounts the floodlight on the payload bay forward bulkhead and the other fixture mounts the floodlight within the payload bay. The RMS floodlight uses an incandescent lamp. It is located near the RMS end effector.

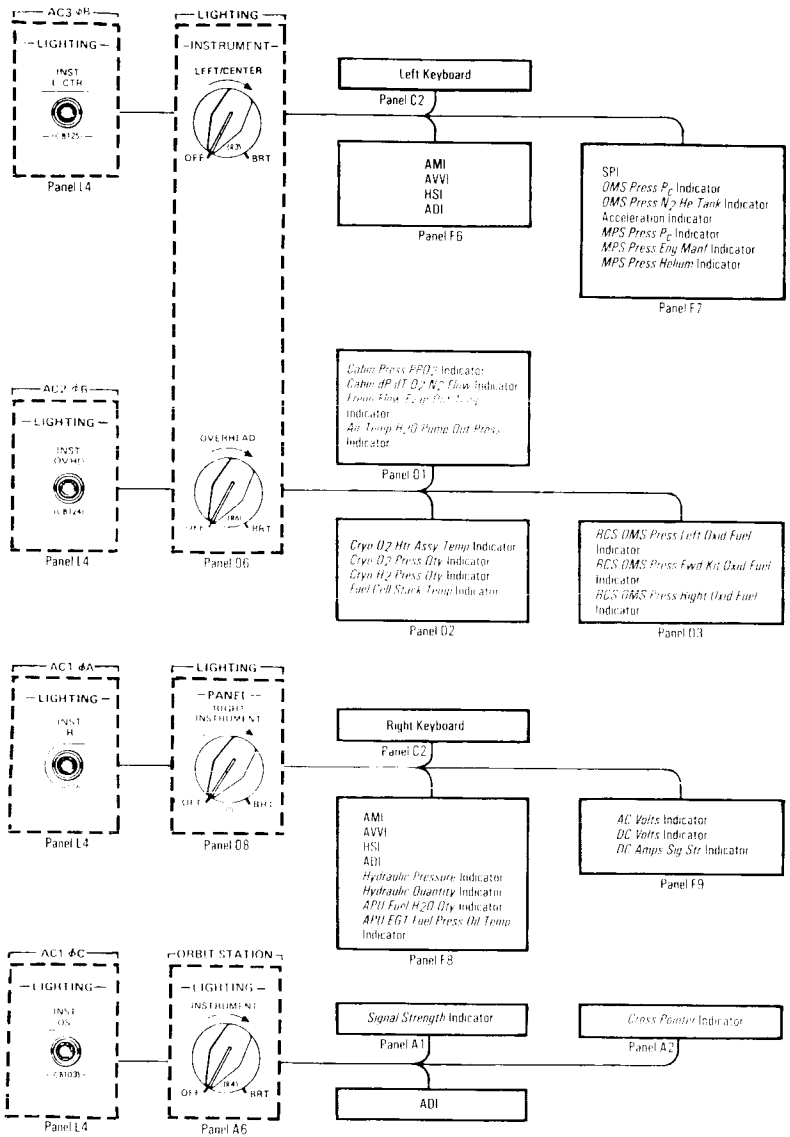


*Instrument Lighting Controls*

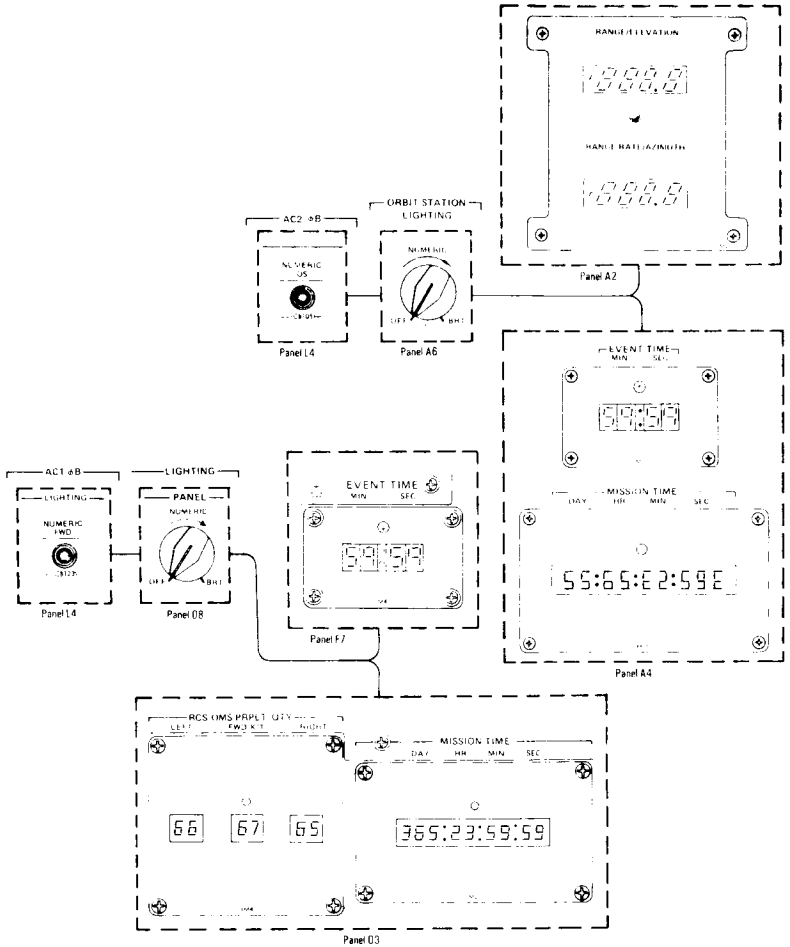


*Numeric Lighting Controls*

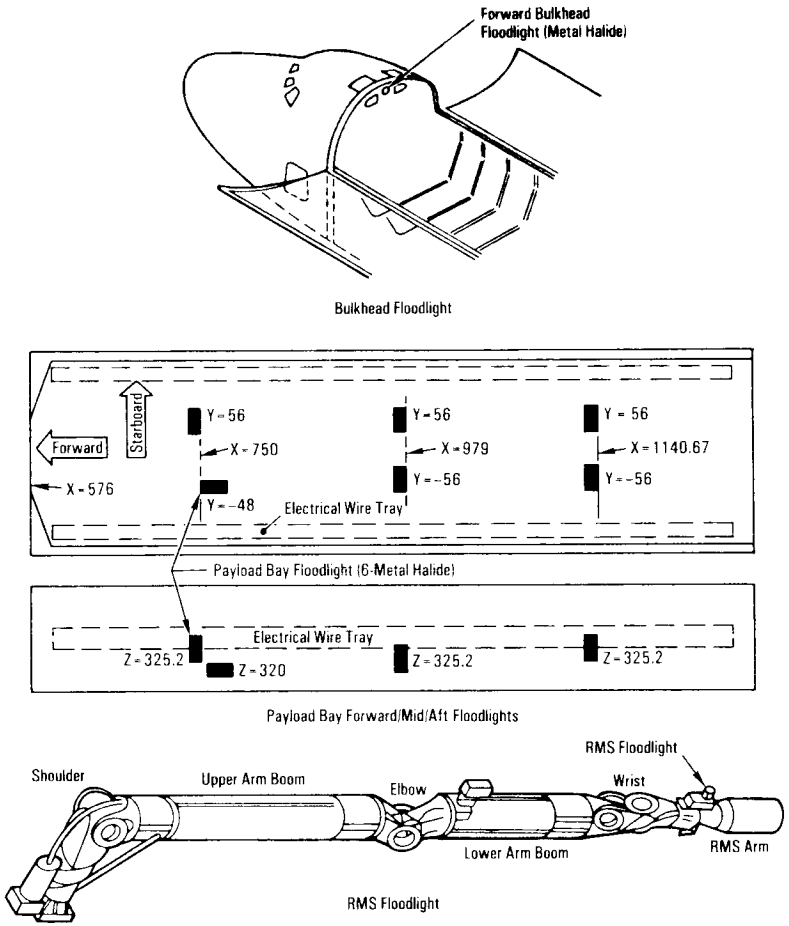


*Payload Bay and Remote Manipulator System Floodlight Locations*

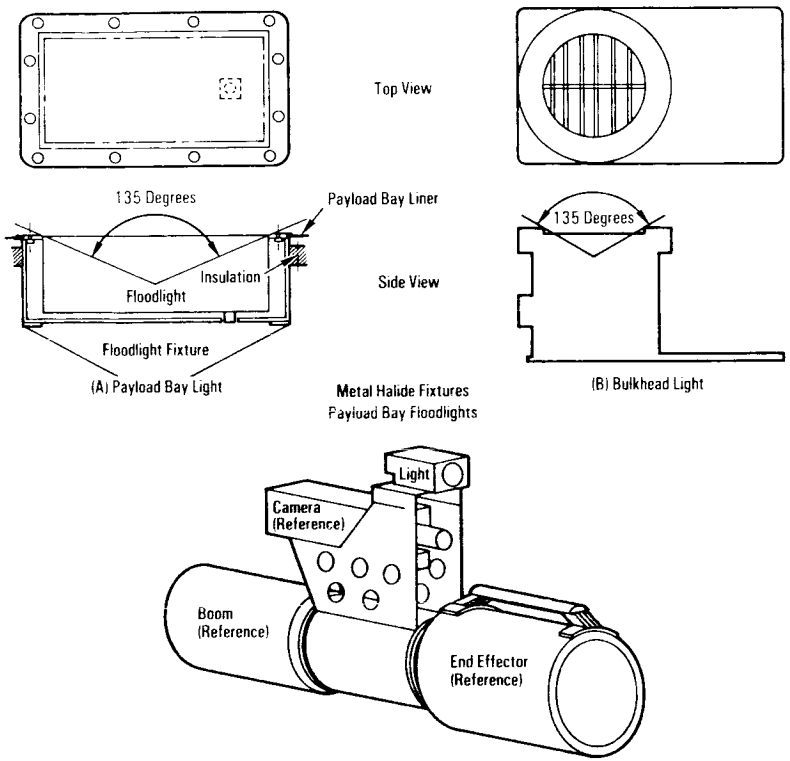


*Remote Manipulator System Incandescent Light Fixture*

The contractors involved with the lighting systems are Aerospace Avionics, Bohemia, N.Y. (incandescent floodlights and light dimmer); ILC Technology, Sunnyvale, Calif. (cabin interior lighting, floodlight systems, payload bay floodlight, forward bulkhead floodlight and floodlight electronic assemblies); Aeropanel, Boontoon, N.J. (integral panel lighting); Abbott Transistor, Burbank, Calif. (step-down transformer); Allen-Bradley, El Paso, Texas (controls); Betatronix, Hauppauge, N.Y. (controls); Armtec Industries, Manchester, N.H. (controls); and Mechanical Products, Jackson, Miss. (circuit breakers).

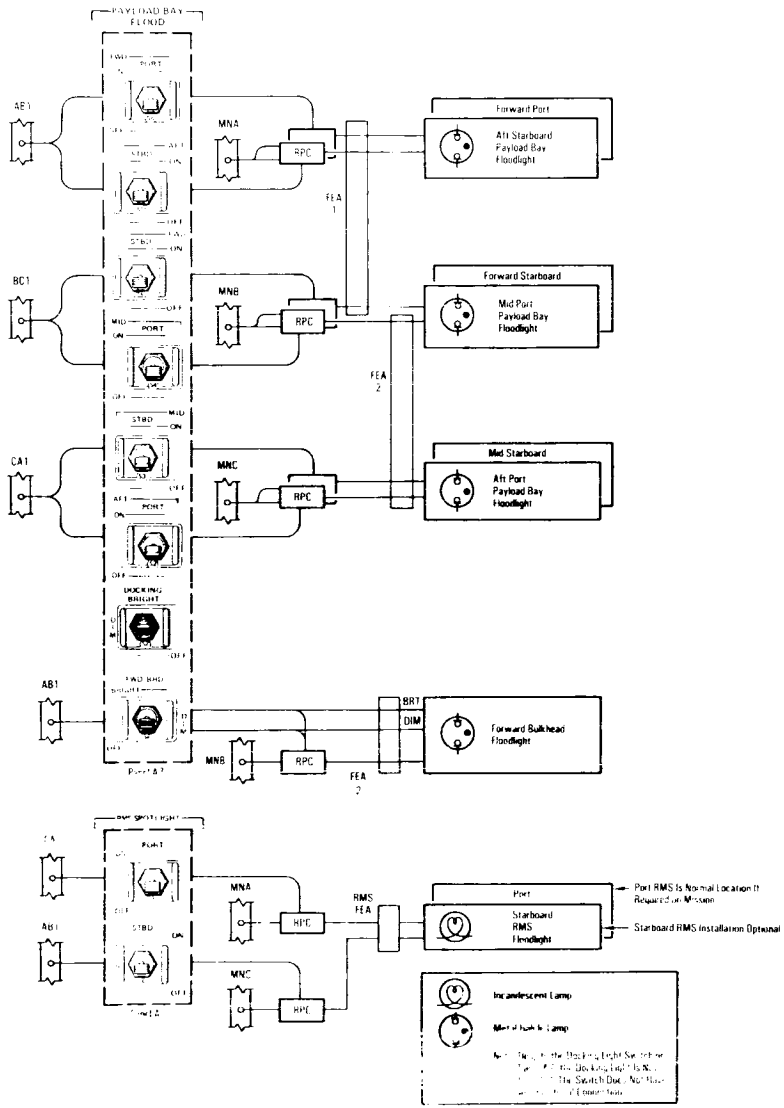


*Payload Bay and Remote Manipulator System Floodlights*

## SMOKE DETECTION AND FIRE SUPPRESSION

Smoke detection and fire suppression capabilities are provided in the crew cabin avionics bays, the crew cabin and the Spacelab pressurized module. Ionization detection elements, which sense levels of smoke concentrations or rate of concentration change, trigger alarms and provide information on smoke concentration levels to the performance-monitoring CRT system and displays on flight deck display panel L1.

The ionization detection system is divided into two groups: group A and group B. Group A ionization detection elements are located in the environmental control and life support system cabin fan plenum outlet beneath the crew cabin middeck floor and in the left return air duct on the crew cabin flight deck; and one element is located in each of the three avionics bays (bays 1, 2 and 3A). Group B ionization detection elements are located in the right return air duct on the crew cabin flight deck and in avionics bays 1, 2 and 3A. On Spacelab missions, ionization detection elements are located in the pressurized Spacelab module.

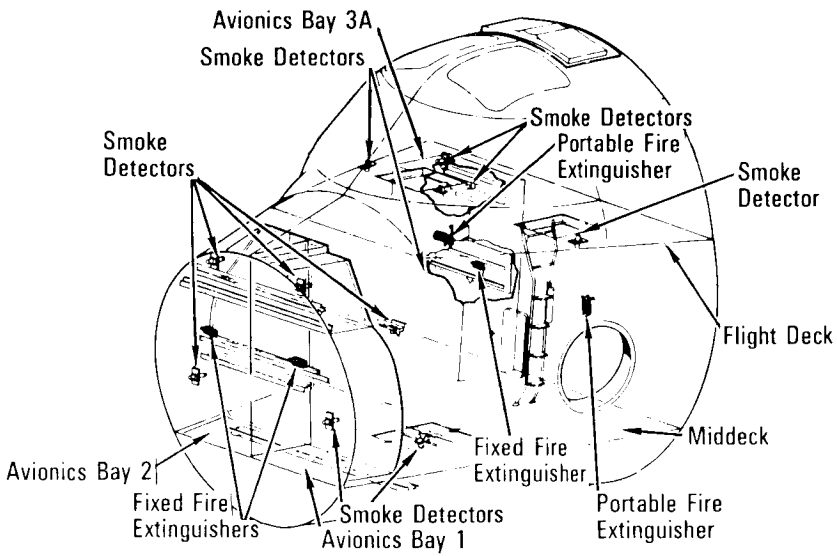


*Smoke Detection and Fire Suppression System*

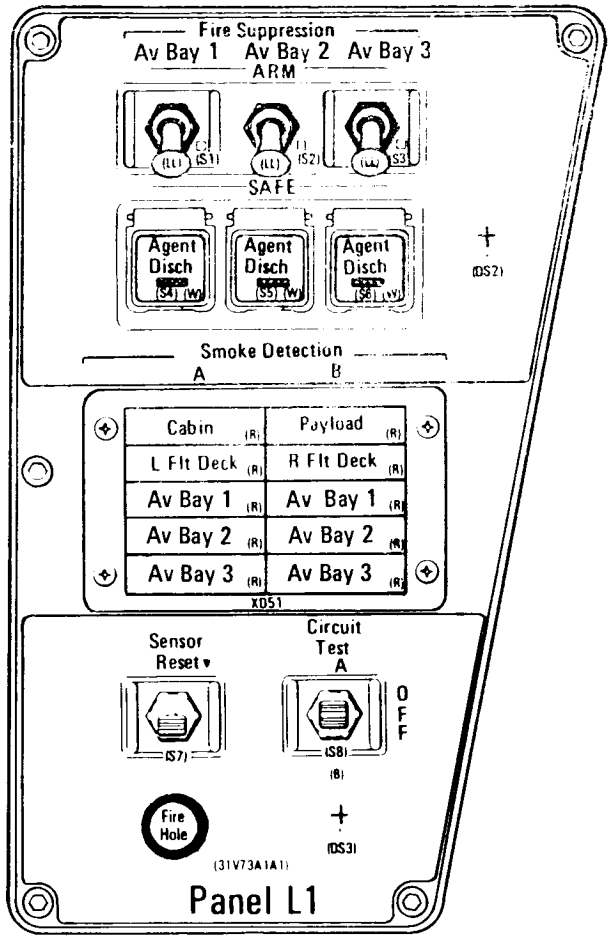


*Panel L1*

If an ionization detection element senses a smoke concentration of 2,200, plus or minus 200, micrograms per cubic meter or a rate of smoke increase of 22 micrograms per cubic meter per second for eight consecutive counts in 20 seconds, a trip signal illuminates the applicable red *smoke detection A* or *B* light on panel L1, activates the C/W *master alarm* red lights and sounds the siren in the crew cabin. The normal reading on the CRT for the smoke detection elements is 0.3 to 0.4. A reading on the CRT of 2.2, plus

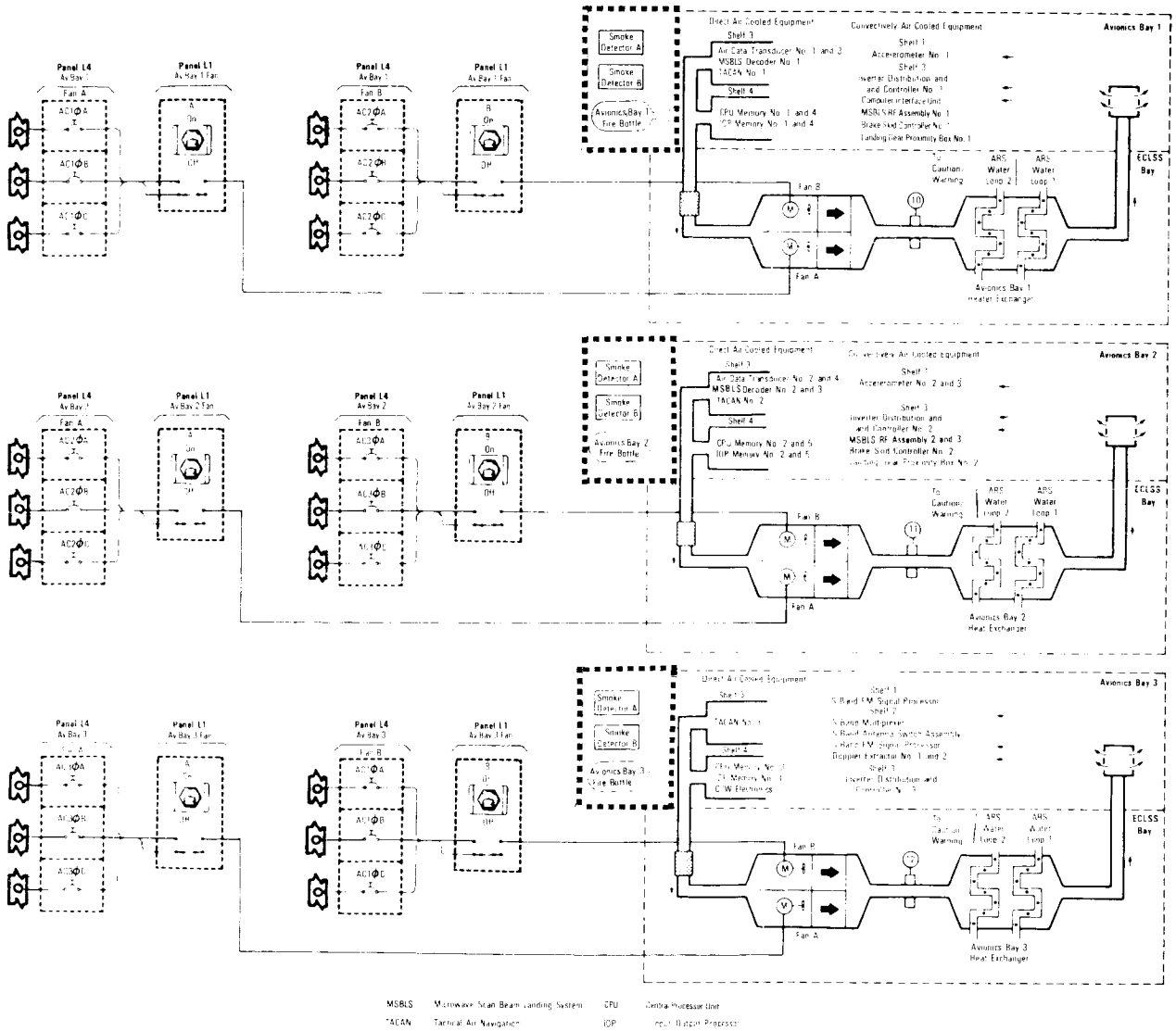


*Avionics Bay Cooling*

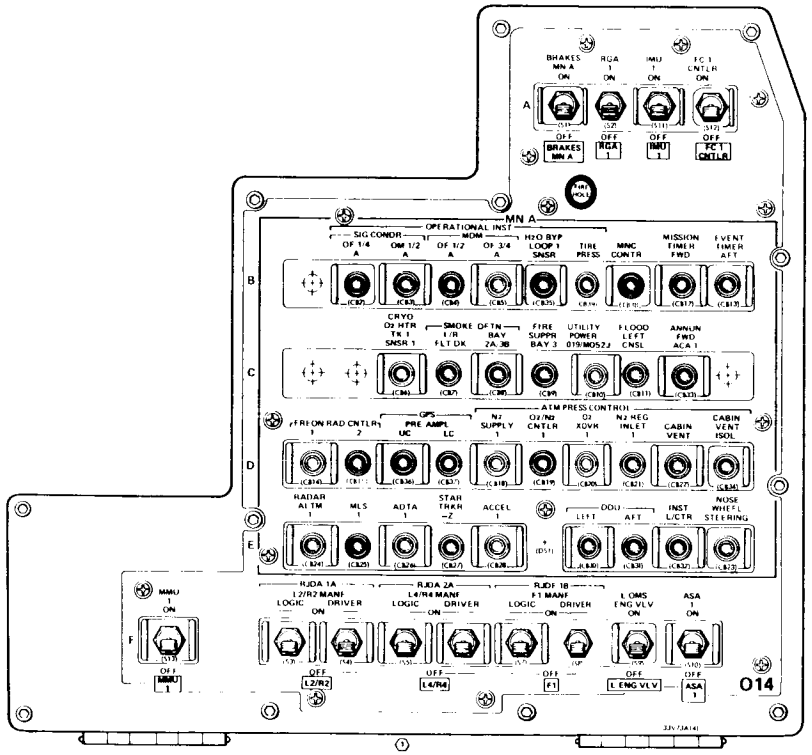


*Panel O14*

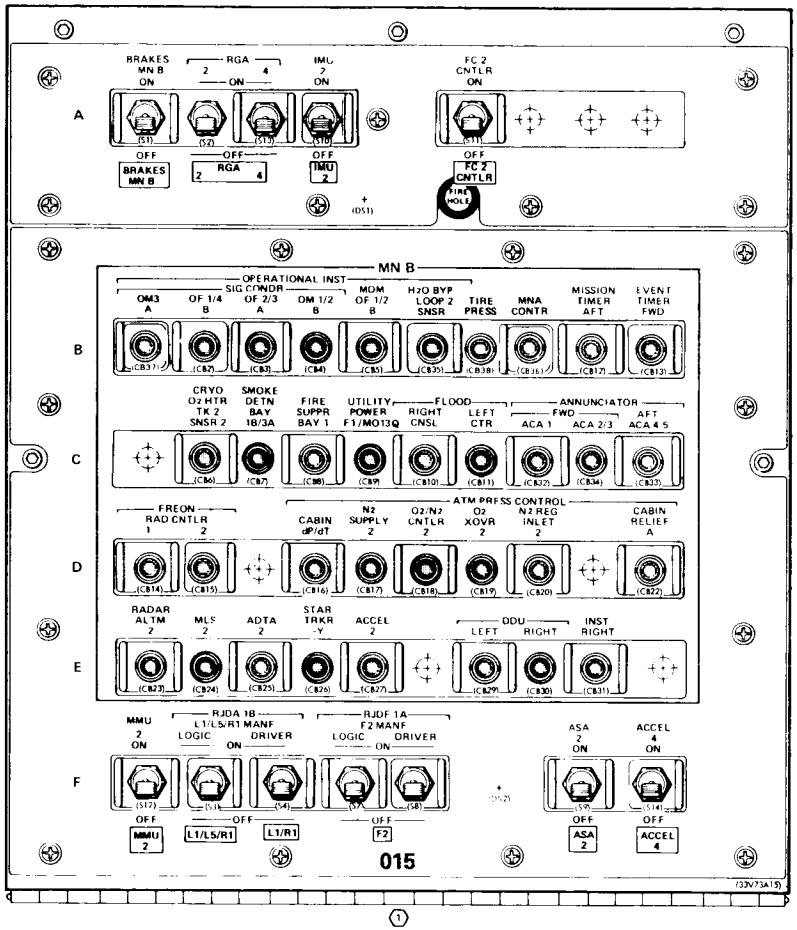


*Panel O15*

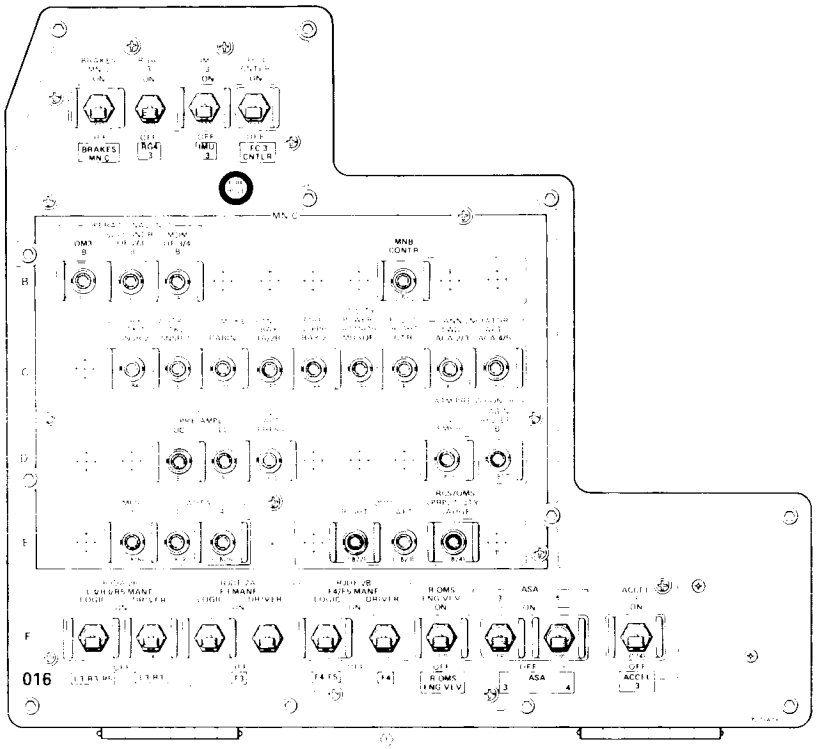


*Panel O16*

or minus 0.2, corresponds to 2,200, plus or minus 200, micrograms per cubic meter.

Fire suppression in the crew cabin avionics bays is provided by one Freon-1301 (bromotrifluoromethane) extinguisher bottle in each of the three avionics bays. Each bottle contains 3.74 to 3.8 pounds of Freon-1301 in a pressure vessel that is 8 inches long and 4.25 inches in diameter. To activate the applicable Freon-1301 bottle in an avionics bay, the corresponding *fire suppression av bay* switch on panel L1 is positioned to *arm*, and the corresponding *agent disch* push button light indicator on panel L1 is depressed for at least two seconds. The *agent disch* push button light indicator activates the corresponding pyro initiator controller, which initiates a pyrotechnic valve on the bottle to discharge the Freon-1301 into the avionics bay. When the Freon-1301 bottle is fully discharged, the push button light indicator white light will be illuminated. The white light will also be illuminated if the pressure in an avionics bottle decays before use.

The red *smoke detection cabin* light on panel L1 is illuminated by the smoke detection ionization element in the ECLSS cabin fan plenum, the red *l flt deck fire detection* light is illuminated by the crew cabin left flight deck return air duct smoke ionization element, the red *r flt deck fire detection* light is illuminated by the crew cabin right flight deck return air duct smoke ionization element, and the red *payload fire detection* light is illuminated by the smoke detection ionization elements in the Spacelab pressurized module if it is a Spacelab mission. The applicable smoke detection ionization element trips at the same levels as the avionics bay elements, illuminates the applicable red *smoke detection A* or *B* light on panel L1, activates the C/W *master alarm* red lights and sounds the siren in the crew cabin.

Three portable hand-held fire extinguishers are available in the crew cabin. Two are located in the crew cabin middeck and one is on the flight deck. Each fire extinguisher nozzle is tapered to fit fire hole ports in the display and control panels. The extinguishing agent is Halon-1301 (monobromotrifluoromethane). Halon-1301 minimizes the major hazards of a conflagration: smoke; heat; oxygen depletion; and formation of pyrolysis products, such as carbon monoxide. The fire extinguishers are 13 inches long. The portable fire extinguishers can also be used as a backup for extinguishers in the avionics bays.

Various parameters of the smoke detection system and remote fire extinguishing agent system are provided to telemetry.

The *smoke detection circuit test* switch on panel L1 tests the smoke detection system, lights and alarm circuitry. When the switch is positioned to *A* or *B*, electrical power is applied to the ACA channels controlling the *agent disch* lights, and the white lights are illuminated. After approximately a 20-second delay, the *smoke detection A* or *B* lights are illuminated and the siren is triggered.

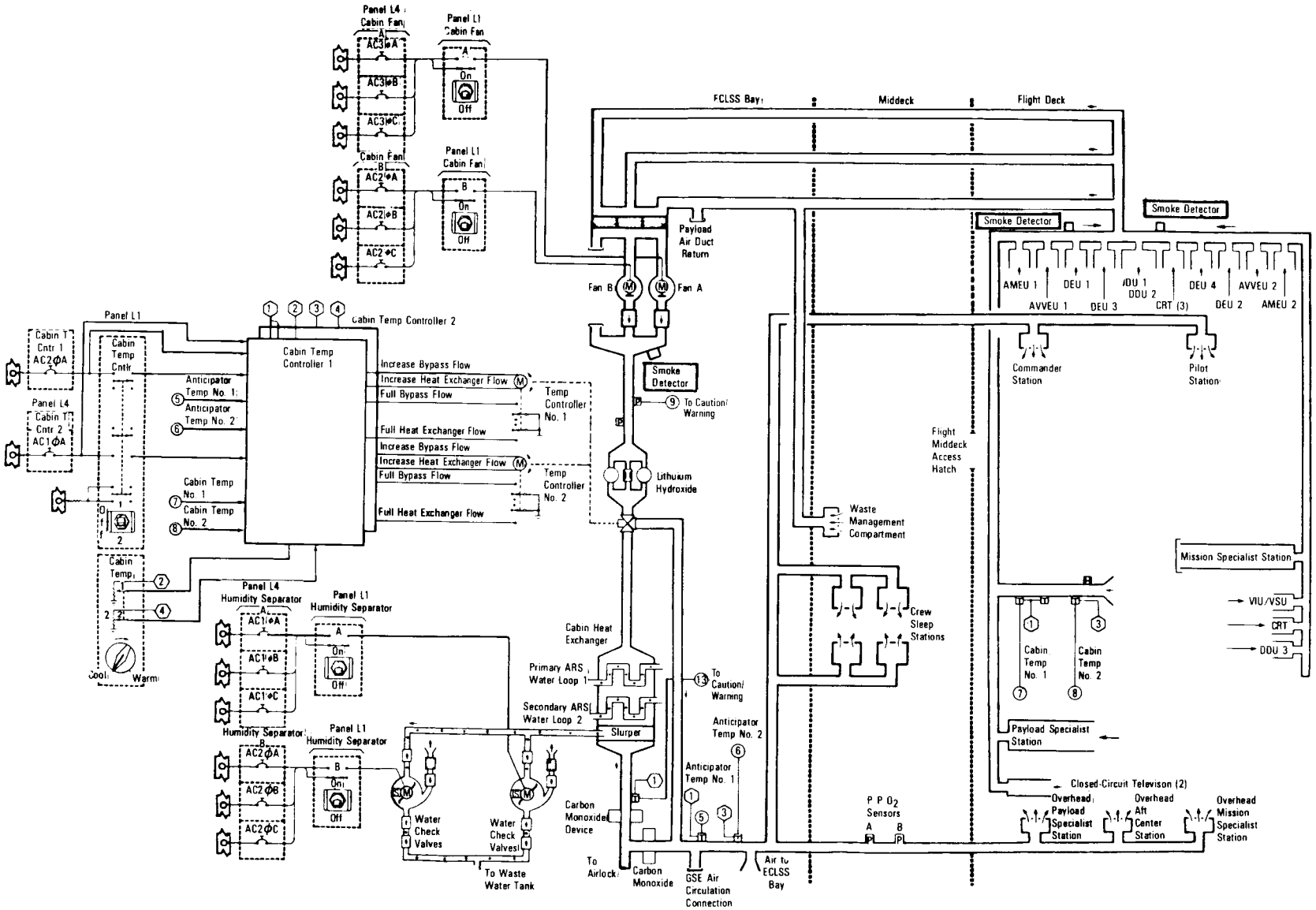


AMEU — Alpha Mach Indicator Electronic Unit
AVVEU — Altitude/Vertical Velocity Electronic Unit
CRT — Cathode Ray Tube
DDU — Display Driver Unit
DEU — Digital Electronics Unit
VIU/VSU — Video Interface Unit/Video Electronic Unit

*Crew Cabin Air Smoke Detectors*

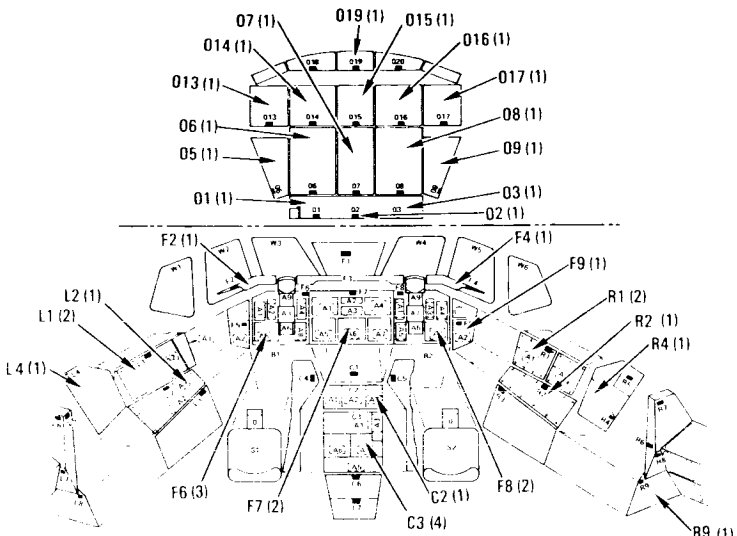


Flight Station

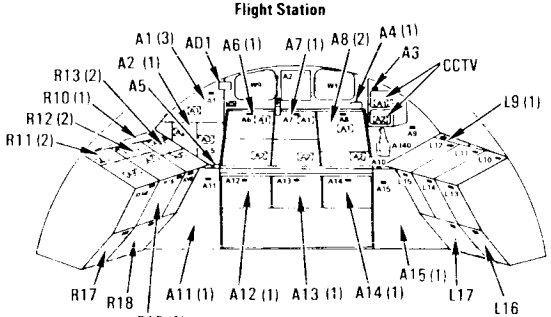


Aft Station

Notes

- Fire Ports Provide Access to Areas Behind Control and Display Panels.
- Fire Ports Are Sized to Fit Portable Fire Extinguisher Nozzle.
- Panels Containing Fire Ports Are Shaded and Identified By Panel No. (Example: R1 (1), R1 = Panel No. and (1) = No. of Fire Ports on Panel).

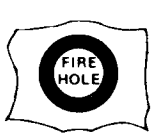


Fire (Extinguisher) Port (Typical)

*Fire Port Locations*

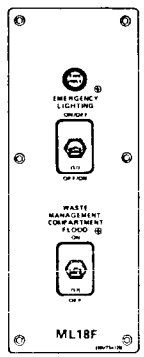


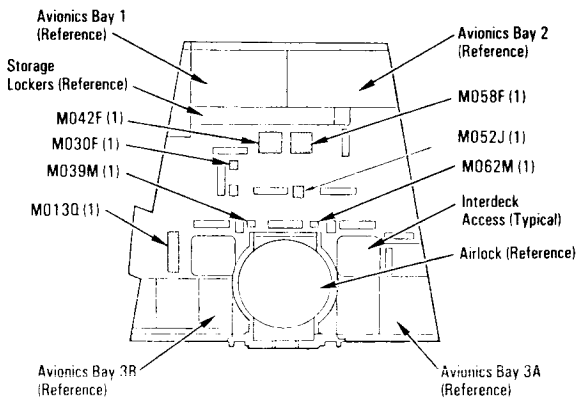


Middeck Ceiling (Looking Down)

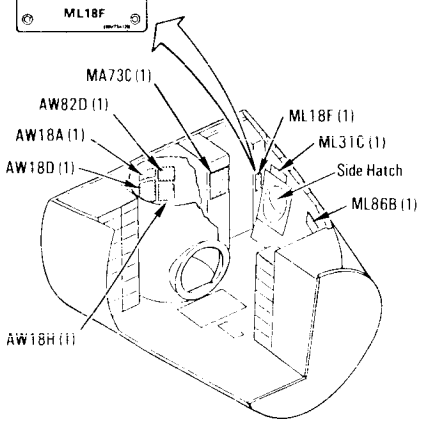


Middeck (Looking Aft and Outboard)

Fire (Extinguisher) Port (Typical)

Notes

- Fire Ports Provide Access to Areas Behind Control and Display Panels.
- Fire Ports Are Sized to Fit Portable Fire Extinguisher Nozzle.
- Panels Containing Fire Ports Are Shaded and Identified by Panel Number.
  (Example: ML86B (1), ML86B = Panel No. and (1) = No. of Fire Ports on Panel)

*Fire Port Locations*

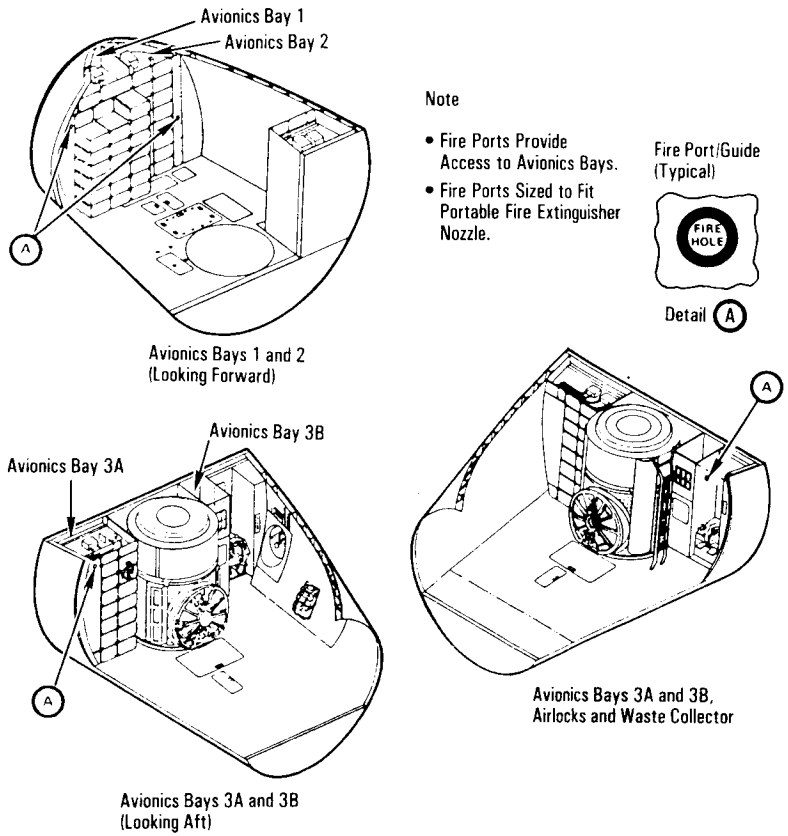


*Fire Port Locations*

The *smoke detection sensor* switch on panel L1 resets a tripped smoke detection element.

The contractors involved with the smoke detection and fire suppression system are Brunswick Celesco, Costa Mesa, Calif. (smoke detectors and remote control fire extinguishing agent); J.L. Products, Gardena, Calif. (arming fire push button); and Metalcraft Inc., Baltimore, Md. (portable fire extinguishers).

## PAYLOAD DEPLOYMENT AND RETRIEVAL SYSTEM

The payload deployment and retrieval system includes the electromechanical arm that maneuvers a payload from the payload bay of the space shuttle orbiter to its deployment position and then releases it. It can also grapple a free-flying payload, maneuver it to the payload bay of the orbiter and berth it in the orbiter. This arm is referred to as the remote manipulator system.

The RMS is installed in the payload bay of the orbiter for those missions requiring it. Some payloads carried aboard the orbiter for deployment do not require the RMS.

The RMS is capable of deploying or retrieving payloads weighing up to 65,000 pounds. The RMS can also retrieve, repair and deploy satellites; provide a mobile extension ladder for extravehicular activity crew members for work stations or foot

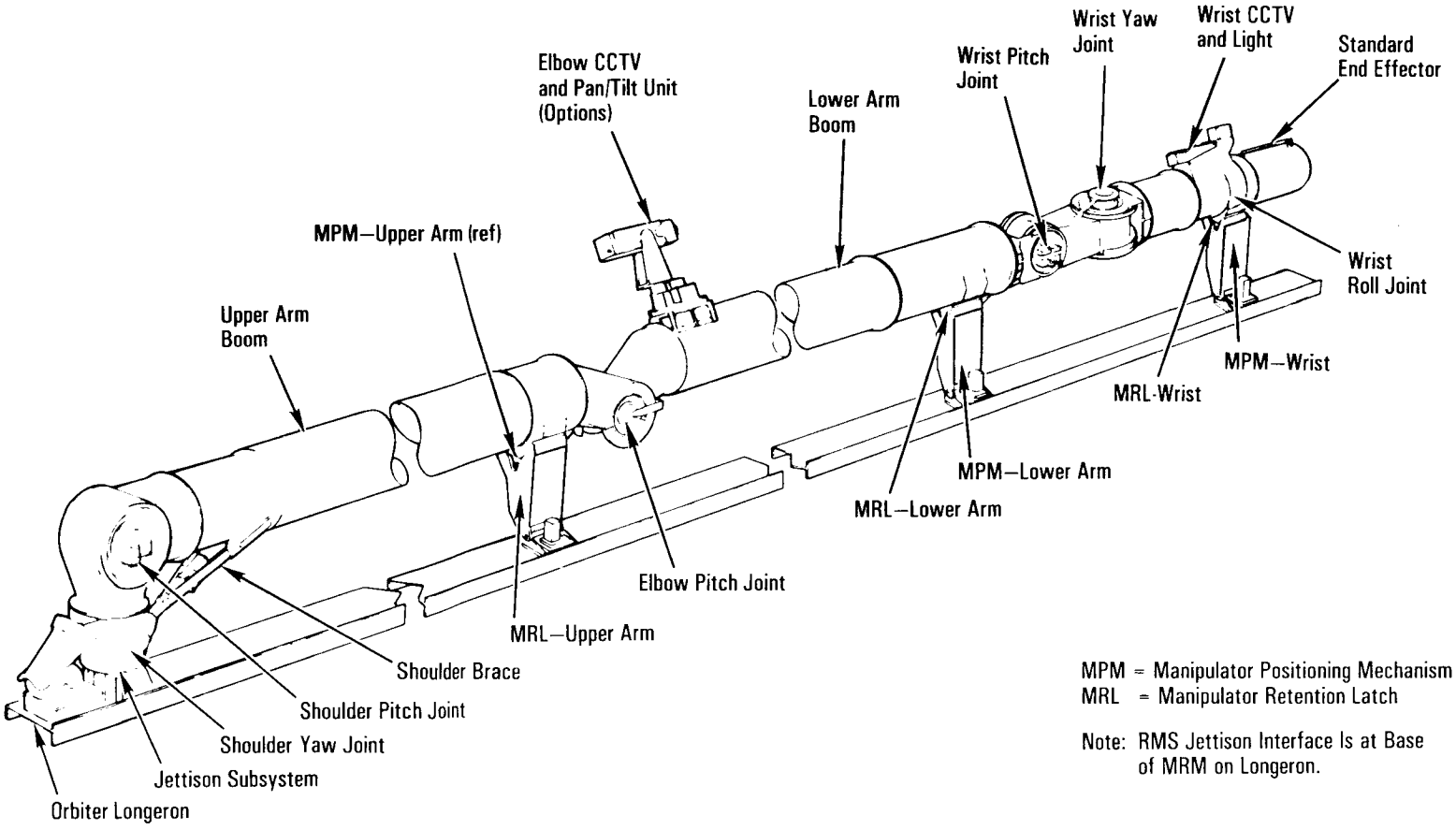


*RMS—Stowed Position and General Arrangement*

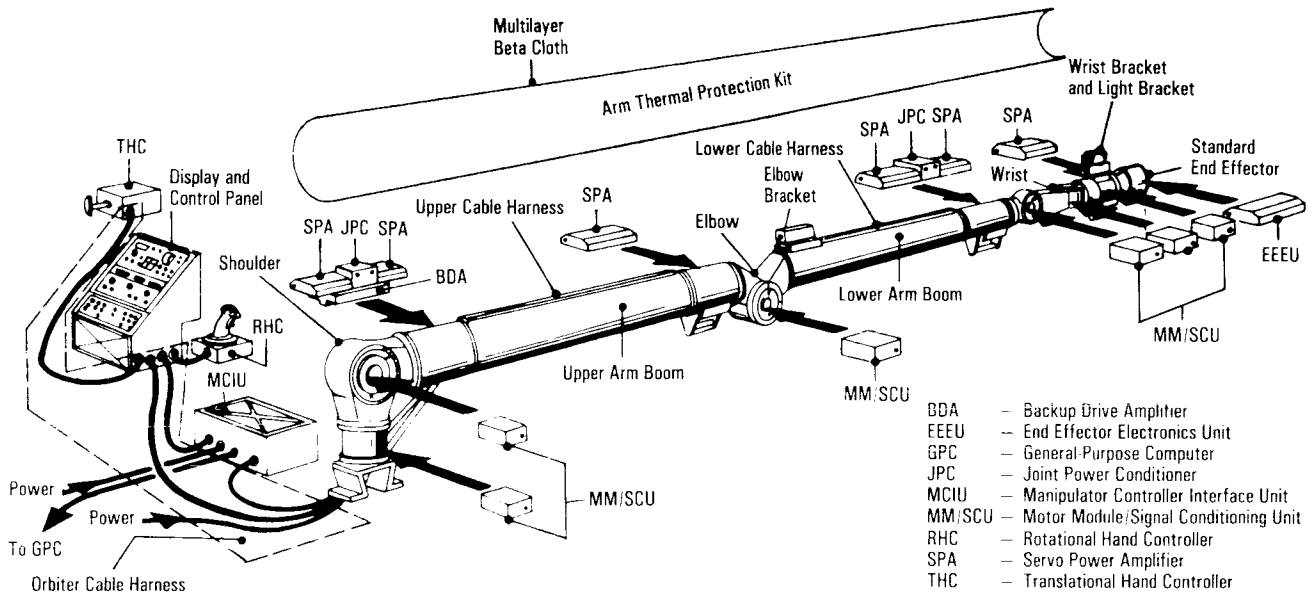


*RMS Components*



restraints; and be used as an inspection aid to allow the flight crew members to view the orbiter's or payload's surfaces through a television camera on the RMS.

The PDRS was built via an international agreement between the National Research Council of Canada and NASA. Spar Aerospace Ltd., a Canadian company, designed, developed, tested and built the RMS. CAE Electronics Ltd. in Montreal provides electronic interfaces, servoamplifiers and power conditioners. Dilworth, Secord, Meagher and Assoc. Ltd. in Toronto is responsible for the RMS end effector. Rockwell International's Space Transportation Systems Division designed, developed, tested and built the systems used to attach the RMS to the payload bay of the orbiter.

The basic RMS configuration consists of a manipulator arm; an RMS display and control panel, including rotational and translational hand controllers at the orbiter aft flight deck flight crew station; and a manipulator controller interface unit that interfaces with the orbiter computer. Normally, only one RMS is installed on the left longeron of the orbiter payload bay. The RMS could be installed on the right side, but the orbiter Ku-band antenna would have to be removed to accommodate the RMS there. Two arms could be installed in the payload bay if the orbiter Ku-band antenna were removed, but only one arm could be operated at a time because only a single software package (computer program) and a single set of display and control panel hardware are provided at the flight deck aft control station. Electrical wiring is in the flight deck aft station for both arms.

One flight crew member operates the RMS from the aft flight deck control station, and a second flight crew member usually assists with television camera operations. This allows the RMS operator to view RMS operations through the aft flight deck payload and overhead windows and through the closed-circuit television monitors at the aft flight deck station.

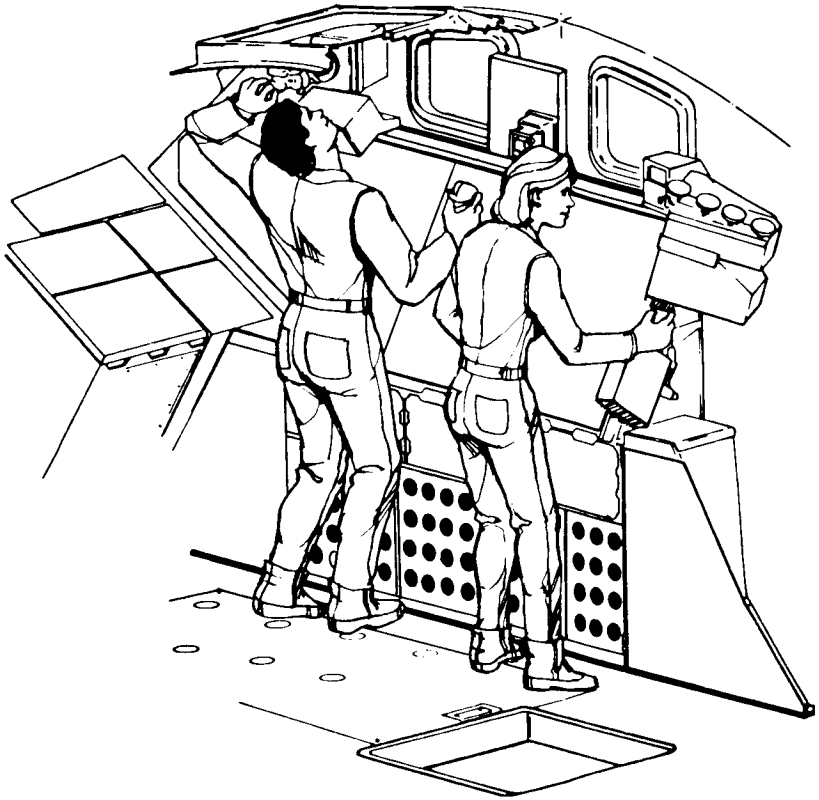

*Aft Flight Deck RMS Crew Station/Crew Interface*

The RMS arm is 50 feet 3 inches long and 15 inches in diameter and has six degrees of freedom. It weighs 905 pounds, and the total system weighs 994 pounds.

The RMS has six joints that correspond roughly to the joints of the human arm, with shoulder yaw and pitch joints; an elbow pitch joint; and wrist pitch, yaw and roll joints. The end effector is the unit at the end of the wrist that actually grabs, or grapples, the payload. The two lightweight boom segments are called the upper and lower arms. The upper boom connects the shoulder and elbow joints, and the lower boom connects the elbow and wrist

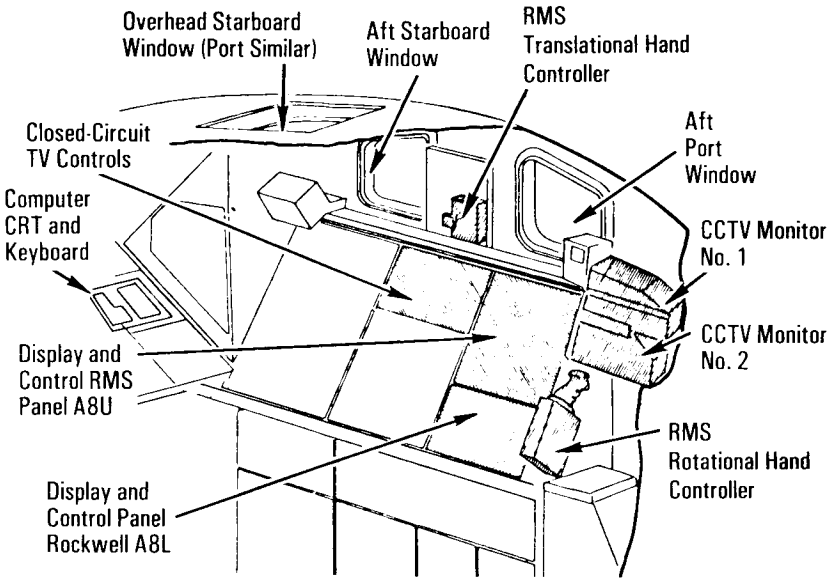


*RMS Controls and Displays*



joints. The RMS arm attaches to the orbiter payload bay longeron at the shoulder manipulator positioning mechanism. Power and data connections are located at the shoulder MPM.

The RMS can operate with standard or special-purpose end effectors. The standard end effector can grapple a payload, keep it rigidly attached as long as required and then release it. Special-purpose end effectors are designed by payload developers and installed instead of the standard end effector during ground turnaround. An optional payload electrical connector can receive electrical power through a connector located in the standard end effector.

The booms are made of graphite epoxy. They are 13 inches in diameter by 17 feet and 20 feet, respectively, in length and are attached by metallic joints. The composite in one arm weighs 93 pounds. The joint and electronic housings are made of aluminum alloy.

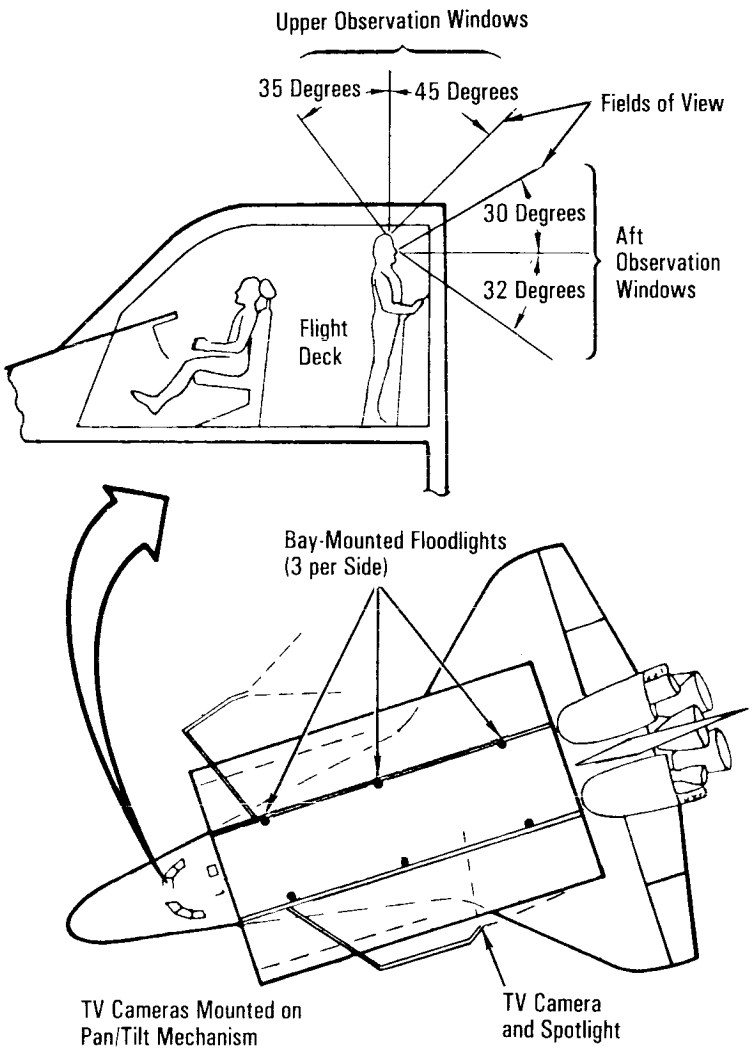


*Payload Bay Television Cameras and Floodlights*

A shoulder brace relieves launch loads on the shoulder pitch gear train of the RMS. On orbit, the brace is released to allow RMS operations. It cannot be relatched on orbit, but it is not required that it be relatched for entry or landing loads. A plunger is extended between two pieces of tapered metal, pushing the ends of the pieces outward, wedging the ends of the receptacle on the outer casing of the shoulder yaw joint, and engaging the shoulder brace. Shoulder brace release is controlled by the lever-locked *shoulder brace release starboard, port* switch on panel A8U. Normally, the RMS arm is installed on the orbiter's port, or left, side. Positioning the switch to *port* releases the port shoulder brace, which withdraws the plunger by an electrical linear actuator. This allows the tapered metal pieces to relax and move toward each other, which permits the brace to slide out of the shoulder yaw outer casing, unlatching the brace. The switch must be held until the *shoulder brace release* talkback indicator on panel A8U indicates gray, which usually takes six to nine seconds. A microswitch at the end of the plunger's travel controls the talkback indicator. A barberpole indication shows that the shoulder brace is still latched. The *shoulder brace release* switch and talkback indicator cannot receive electrical power until the *RMS select* switch and *RMS power* switch on panel A8L are positioned for electrical power.



The *RMS select* switch on panel A8L selects the arm to be used, or it indicates *off* if no arm is to be used. The switch essentially tells the manipulator controller interface unit and display and control panel A8L which arm is being powered and operated. The status of the switch is also displayed on the aft flight control station CRT display.

The *RMS power* switch on panel A8L has a guard over it and connects orbiter main dc bus and AC1 phase A power to the RMS, MCIU and displays and controls on panels A8L and A8U when positioned to *primary*. Main dc bus and AC2 phase A power are connected to the RMS and some displays and controls on panels A8L and A8U when the switch is positioned to *backup*. The status of the switch is also displayed on the aft flight deck CRT. The *off* position removes all power from the selected arm. Panel A8L has a set of switches for the starboard RMS on the left side and an identical set for the port RMS on the right side of the panel that controls the selected RMS heaters, retention system and positioning mechanism. Normally, the *port RMS* set of switches is used.

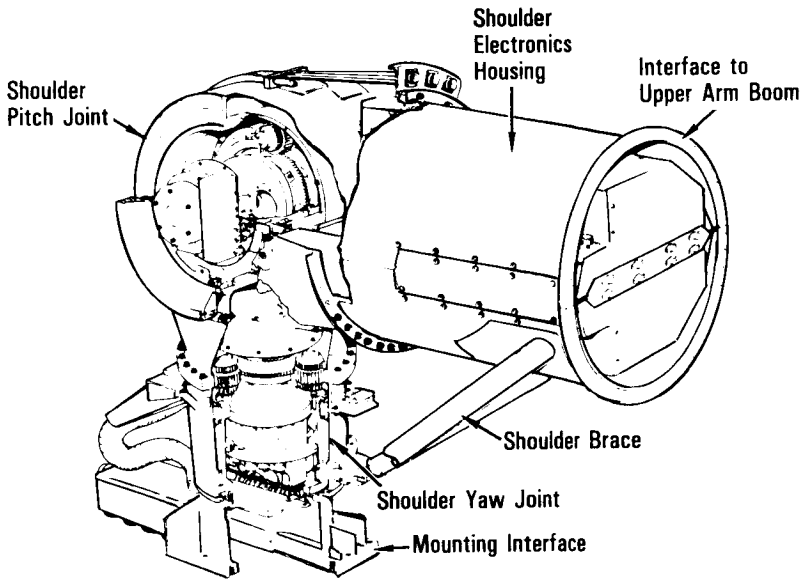


*Overall Configuration of the Shoulder Joint*

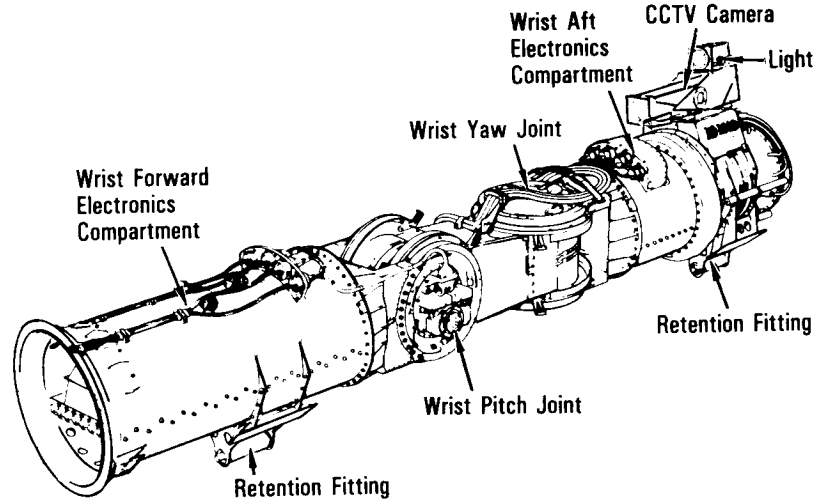


*Overall Configuration of the Wrist Joint*

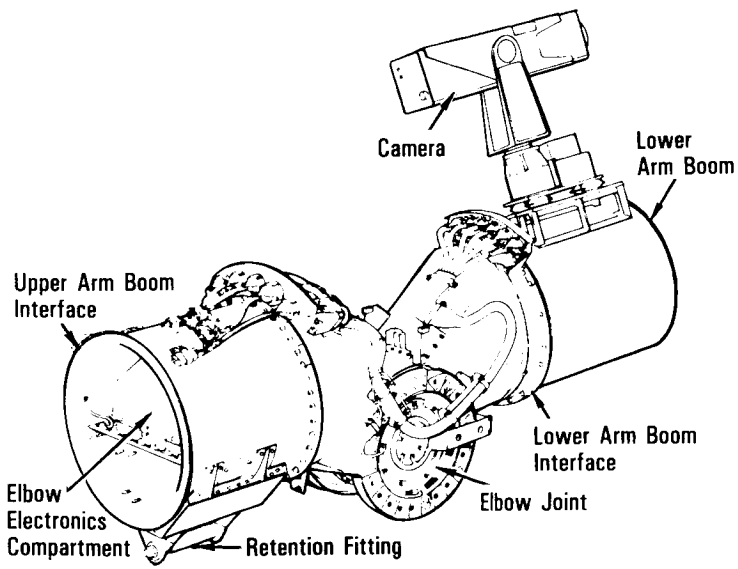


*Overall Configuration of the Elbow Joint*

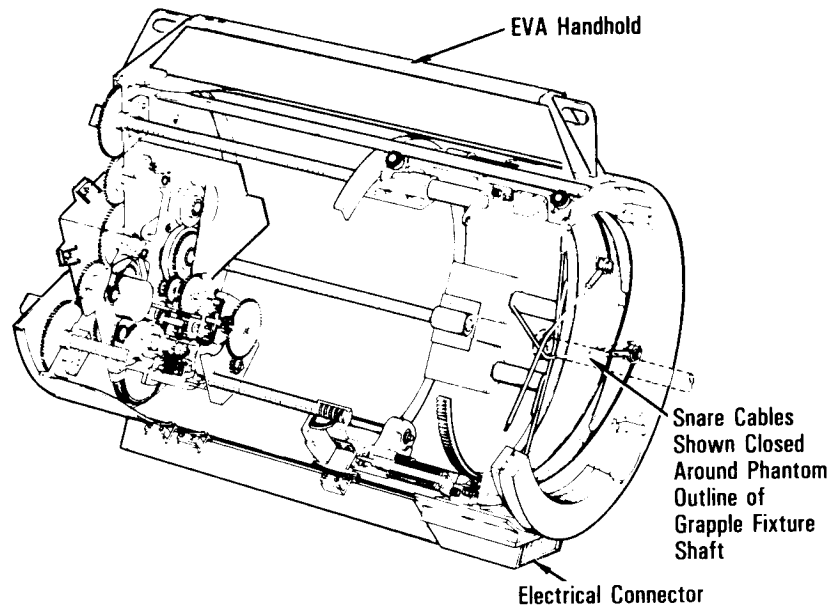


*Standard Snare-Type End Effector*

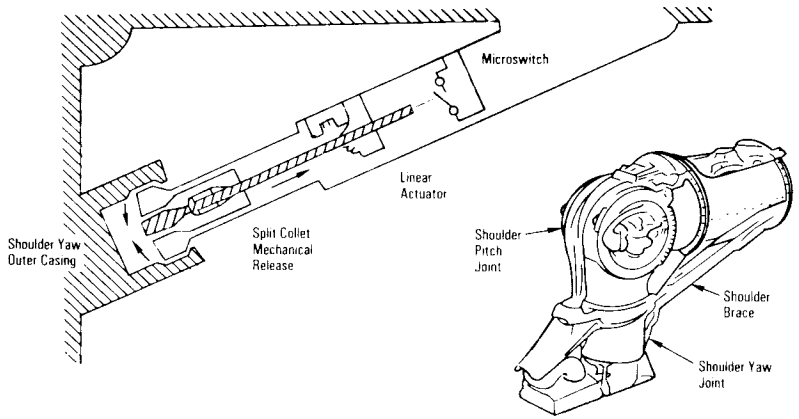


*Shoulder Brace*

The RMS is rotated 31.36 degrees toward the payload so the payload bay doors can be closed and is rotated 31.36 degrees away from the payload bay when the payload bay doors are opened. The manipulator positioning mechanism rolls the arm from its stowed position (toward the payload bay) to its operating position (away from the payload bay). The MPM consists of four pedestal joints joined by a torque tube and operated as a single assembly. The shoulder of the RMS arm attaches to the orbiter payload bay longeron (the sill of the bay) at the forwardmost MPM pedestal, and the aft three MPM pedestals contain latches that secure the arm along the orbiter payload bay longeron.

The RMS MPM assembly rotation is controlled by the guarded *RMS deploy, off, stow* switch on panel A8L. When the switch is positioned to *deploy*, two redundant ac motors drive the MPM assembly to the deploy position; and two microswitches, one for each motor located on the MPM shoulder, remove electrical power from that ac motor when it reaches its limit of travel. With both ac motors operating, it takes approximately 34 seconds to deploy the RMS. If only one ac motor is operating, it takes approximately 68 seconds to deploy the RMS. When the switch is positioned to *stow*, the ac motors drive the MPM assembly to the stow position; and two other microswitches, one for each motor

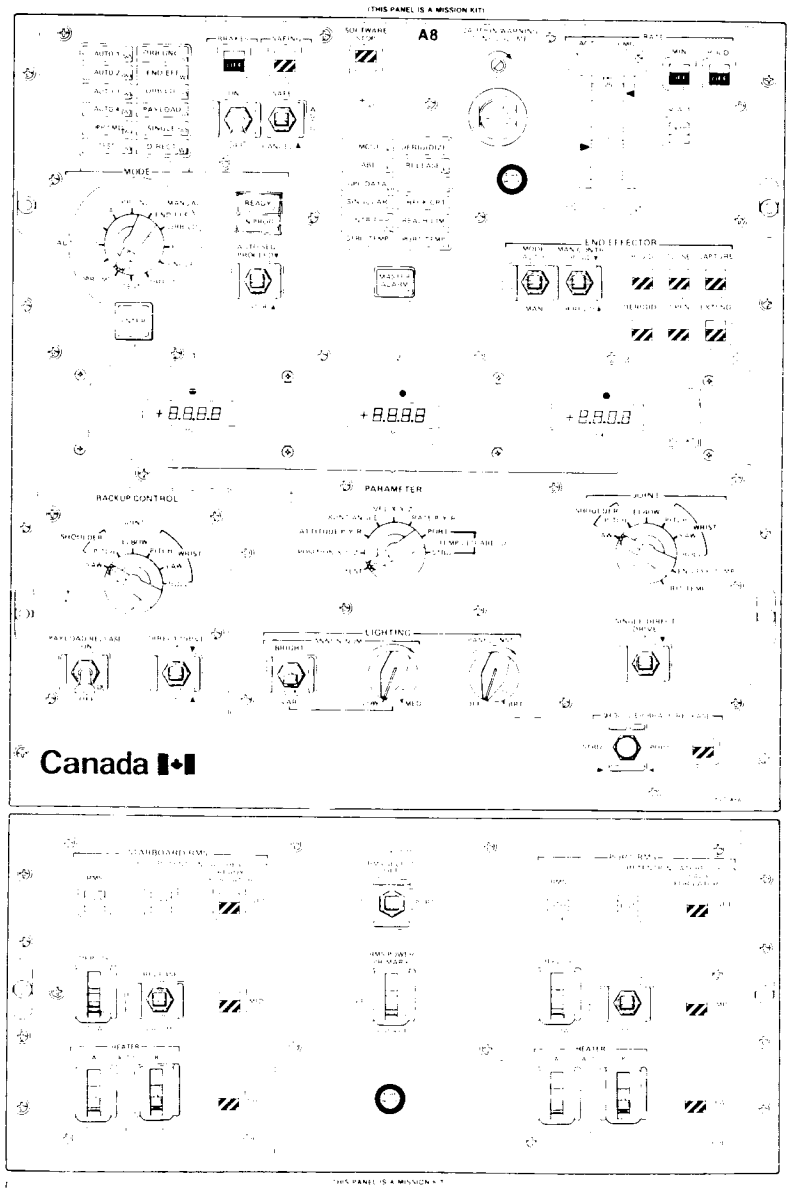


*Panel A8*

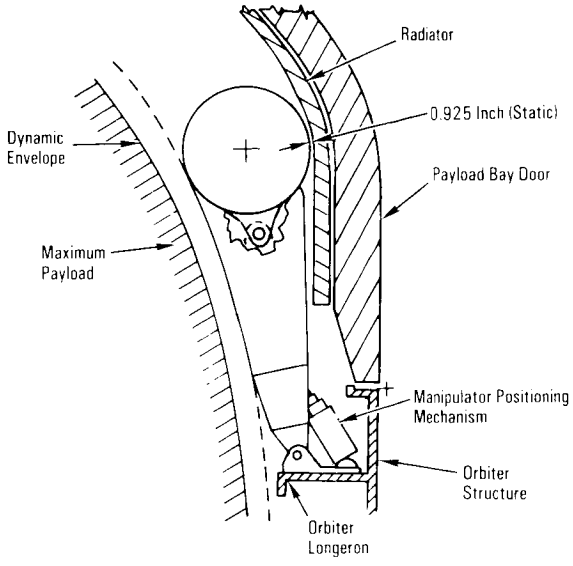


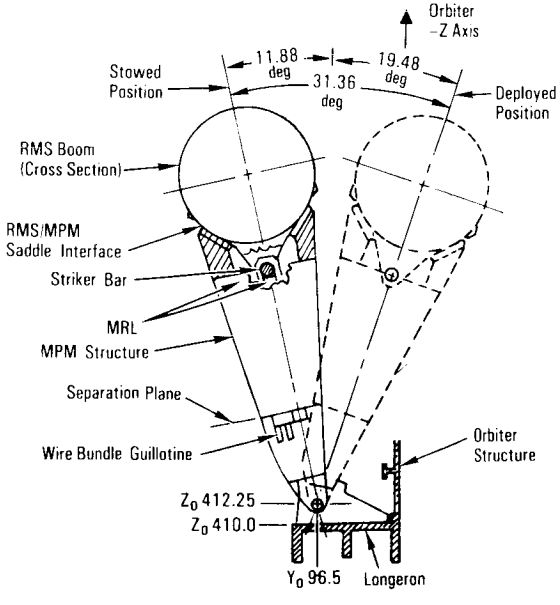


*MPM Operations*

located on the MPM shoulder, remove electrical power from that ac motor when it reaches its limit of travel. The operating time to the stow position for both motors or one motor is the same as in the deploy mode. The status of these four microswitches can be monitored by the flight crew on the aft flight station CRT and by telemetry. The *off* position removes electrical power from the MPM.

An RMS talkback indicator above the *RMS deploy, off, stow* switch on panel A8L indicates *sto* when the arm is stowed, barber-pole when the arm is in transit and *dep* when the arm is deployed. The talkback indicator is controlled by four microswitches on each of the four pedestals. These microswitches can also be monitored by telemetry.

A manipulator retention latch is located in each of the three aft MPM pedestals. It locks a corresponding striker bar on the arm, locking the arm to the MPM.

When the *RMS retention latches, release, off, latch* switch on panel A8L is positioned to *release*, each MRL has two redundant



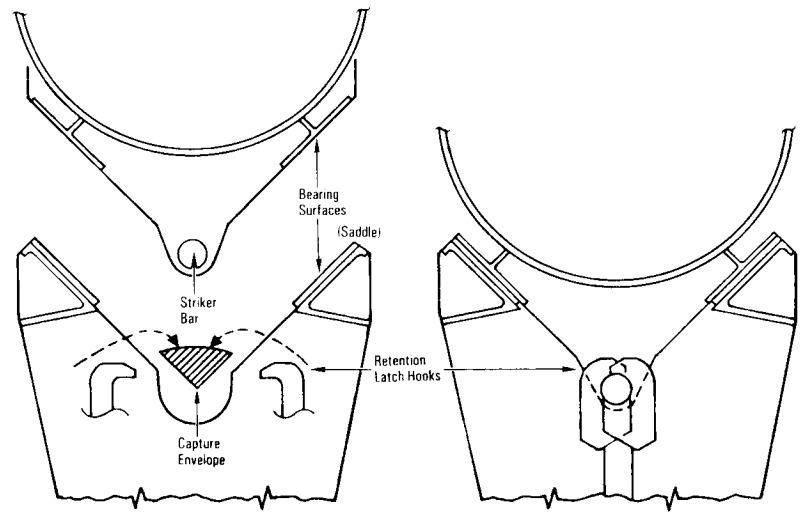


*The RMS Retention Mechanism*

ac motors that drive the MRL open; and two microswitches, one for each motor on each MRL, remove electrical power from that ac motor when it reaches its limit of travel. With both ac motors operating, it takes approximately eight seconds to fully open that latch. If only one ac motor is in operation, it takes approximately 18 seconds for the latch to fully open. The talkback indicator above the *release, off, latch* switch on panel A8L indicates barberpole when the MRLs are in transit and *rel* when they are released. There are two release microswitches on each of the MRLs that control the talkback indicator. These microswitches can be monitored by the flight crew on the aft flight deck CRT.

The RMS arm is now available for operation.

When the RMS arm is properly aligned and resting on the MPM pedestals for latching to the MPMs, the three RMS striker bars are in the MRL ready-to-latch envelope. Two microswitches in each MRL control the corresponding *aft, mid*, or *fwd ready for latch* talkback indicators on panel A8L. When the talkback indicators show gray, the corresponding MRL is positioned to latch the corresponding arm striker bar. If a talkback indicator shows barberpole, the MRL is not correctly aligned or not in position to be able to latch down the arm. As a result, the flight crew must reposition the arm until the talkback indicators show gray. These microswitches can be monitored by the flight crew at the aft flight deck CRT. When the flight crew sees three gray *ready for latch* talkbacks, it positions the *retention latches* switch to *latch*. The two ac motors in each MRL drive the MRL closed; and two microswitches, one for each motor, remove electrical power from that ac motor when it reaches its limit of travel. The operating time for both motors or one motor would be the same as for release.

The talkback indicator above the *release, off, latch* switch indicates barberpole when the MRLs are in transit and *lat* when they are latched, thus holding the arm in the MRLs.

The RMS has both passive and active thermal control systems. The passive system consists of multilayer insulation blankets and thermal coatings that reflect solar energy away from the arm and aid in controlling the temperature of the hardware. The blankets are attached to the arm structure and to each other with Velcro. Exposed areas around the moving parts are painted with a special white paint. To maintain the arm's temperature within predetermined operating limits, an active system, which consists of 26 heaters on the arm, supplies 520 watts of power at 28 volts dc. There are two redundant heater systems: one powered from the orbiter's main A dc bus and the other from the main B dc bus. Only one system is required for proper thermal control. The heaters in each system are concentrated at the arm's joint and end effector to heat the electronics and ac motor modules. The heaters are enabled by the *heater auto, off* guarded switch on panel A8L. When the switch is positioned to *auto*, the heaters are thermostatically controlled by 12 thermistors located along the arm. The heaters are automatically turned on at 14 F and off at 43 F.

The light-emitting diodes 1, 2 and 3 on panel A8U can be used in conjunction with the *joint* and *parameter* rotary switches on panel A8U to display arm temperatures in degrees Farenheit along with identification numbers. When the *joint* rotary switch is positioned to *end eff temp* and the *parameter* rotary switch is positioned to *port* or *stbd* (normally *port*), LED 1 displays the commutator's temperature, LED 2 displays the end effector electronics' temperature, and LED 3 identifies the end effector. The *stbd temp* or *port temp* caution and warning light (normally *port*) on panel A8U indicates a joint has reached a critical temperature. When the *joint* rotary switch is positioned to *crit temp* and the *parameter* rotary switch is positioned to *stbd* or *port*, the LED 1 digital display shows the commutator's temperature, the LED 2 digital display shows the temperature of the housing arm-based electronics, and the LED 3 digital display identifies the joint that has the most out-of-limit temperature. Temperatures are also monitored by software.

The orbiter's CCTV aids the flight crew in monitoring PDRS operations. The arm has provisions on the wrist joint for a CCTV camera that can be zoomed, a viewing light on the wrist joint and a CCTV with pan and tilt capability on the elbow of the arm. In addition, four CCTV cameras in the payload bay can be panned, tilted and zoomed. Keel cameras may be provided, depending on

the mission payload. The two CCTV monitors at the aft flight deck station can each display any two of the CCTV camera views simultaneously with split screen capability. This shows two views on the same monitor, which allows crew members to work with four different views at once. Crew members can also view payload operations through the aft flight station overhead and aft (payload) viewing windows.

The RMS can only be operated in a zero-gravity environment, since the arm dc motors are unable to move the arm's weight under the influence of Earth's gravity. Each of the six joints has an extensive range of motion, allowing the arm to reach across the payload bay, over the crew compartment or to areas on the undersurface of the orbiter. Arm joint travel limits are annunciated to the flight crew arm operator before the actual mechanical hardstop for a joint is reached.

Each joint of the arm is driven electromechanically. Each joint has one dc motor and associated ABE. Each dc motor turns a gear train, which produces joint motion. A tachometer on the output side of each motor measures motor rate. Also, on the output side of the gear train is an optical encoder that measures the actual joint angle and feeds it back to the software. There are two optical commutators on the input side of each motor: one commutator electronically interfaces with the primary motor drive amplifier; and one electronically interfaces with the backup drive amplifier, which is the only redundancy in each joint motor.

The arm has a number of operating modes. Some of these modes are computer-assisted, moving the joints simultaneously as required to put the end point (the point of resolution, such as the tip of the end effector) in the desired location. Other modes move one joint at a time; e.g., single mode uses software assistance and direct and backup hard-wired command paths that bypass the computers.

When the arm is used in the computer-assisted mode, the command from the flight crew operator is converted by the computer to a set of motor speeds (one for each joint) that move the arm to the desired configuration. The software scales down the set of commands so that no joint exceeds the maximum allowable joint rate. This is called rate limiting, with the maximum joint rates dependent on the payload being flown and chosen so the arm can be stopped in 2 feet. The software also checks that the POR can be stopped within 2 feet. This is called POR rate limiting. For example, the tip of the unloaded arm cannot be moved more than 2 feet per second, and a 32,000-pound payload cannot be moved more than 0.2 foot per second.

The motor drive amplifier for each joint (total of six) can receive either a hard-wired direct drive input when the arm is not in the computer-assisted mode of operation or receive the error signal from the tachometer feedback loop. When the MDA receives its signal from the feedback loop, it gets additional input, called the current limit command, from the computer. This input controls the maximum torque of the motor; thus, arm loads are maintained within the defined limits while operating. The current limit can only be changed with a computer memory read/write procedure.

One backup drive amplifier for the entire arm is located in the shoulder electronics compartment. When the arm is operated in the backup mode, the drive unit goes to the motor via the BDA and bypasses the feedback loop.

Normal braking is accomplished by each joint motor deceleration; however, each joint has a mechanical friction-type brake, and all six brakes are operated by a single switch on panel A8U. When the *brakes on, off* switch is positioned to *on*, brakes in all joints of the arm are applied. The brakes are applied only after all joints are brought to rest or for an emergency and should be left on whenever the arm is unattended. The switch positioned to *off* removes the brakes from all joints of the arm. The talkback indicator above the brakes switch on panel A8U indicates when the brakes are on or off.

The standard end effector can be considered the hand of the RMS. It is a hollow canlike device attached to the wrist roll joint at the end of the arm. Payloads to be captured by the standard end effector must be equipped with a grapple fixture. To capture a

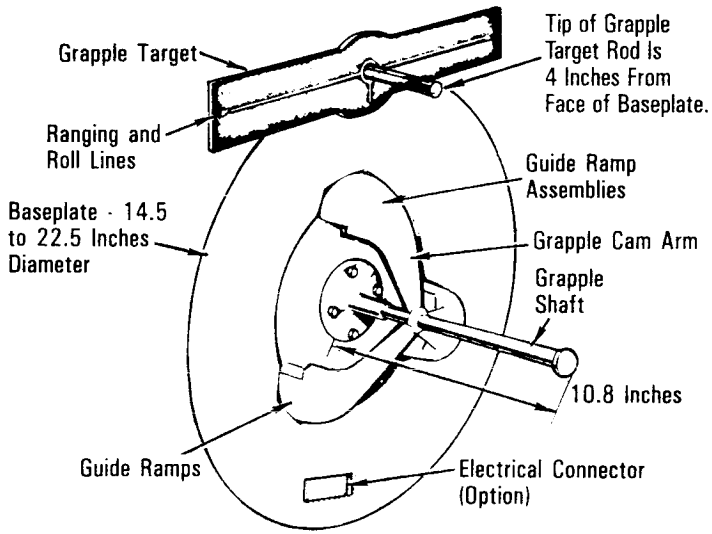


*Grapple Fixture/Target Assembly*

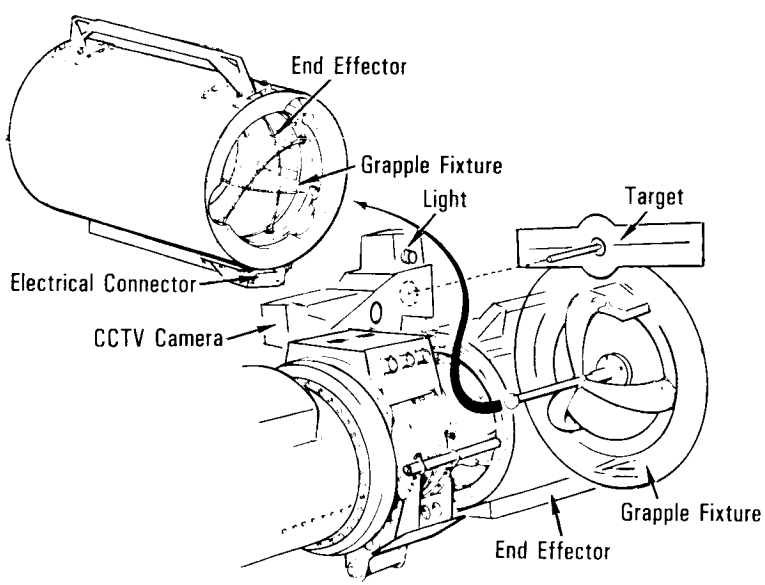


*End Effector/Grapple Fixture Interface*

payload, the flight crew operator aligns the end effector over the grapple fixture probe to capture it. The end effector snare consists of three cables that have one end attached to a fixed ring and one attached to a rotating ring.

The *end effector extend* talkback indicator on panel A8U indicates gray when the end effector snare assembly is fully extended toward the opening of the canister. Barberpole indicates the end effector snares are somewhere between rigidize and derigidize.

The *end effector open* talkback indicator on panel A8U indicates gray when the snares are fully open. Barberpole indicates the snares are not fully open.

An end effector *capture/release rocker* switch on the RMS rotational hand controller at the aft flight deck station is positioned to *capture* by depressing the bottom half of the rocker switch. The switch commands capture of the payload by rotating the inner cage assembly three-wire snares around the payload-mounted grapple fixture probe and centers the payload grapple fixture in the end effector. The RMS RHC end effector *capture* switch must be held until the payload-mounted grapple fixture is centered. The RMS RHC end effector *capture* switch is powered only if the *end effector mode* switch is in *auto* or *man*.

The *end effector capture* talkback indicator on panel A8U indicates gray when the snares have closed on the payload grapple fixture probe. Barberpole indicates the end effector has not captured the payload grapple fixture.

The *end effector close* talkback indicator on panel A8U indicates gray when the snares have fully closed on the payload grapple fixture probe and the probe is centered in the end effector. Barberpole indicates that the snares are not fully closed. The *end effector derigid* talkback indicator on panel A8U indicates gray when the end effector snare assembly is fully extended.

The payload is rigidized by drawing the snare assembly inside the end effector using a jackscrew, pulling the payload tightly

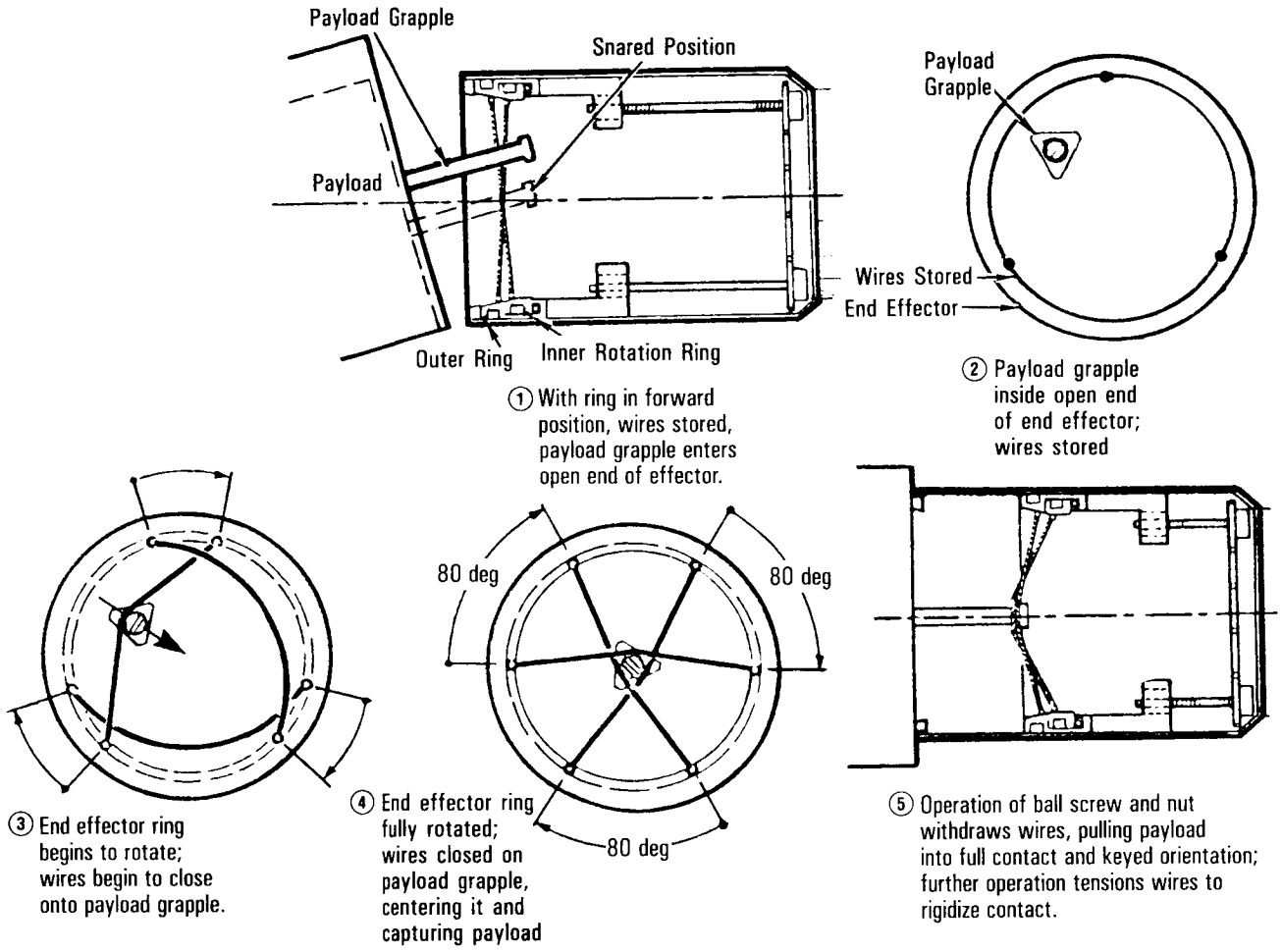


① With ring in forward position, wires stored, payload grapple enters open end of effector.

② Payload grapple inside open end of end effector; wires stored

③ End effector ring begins to rotate; wires begin to close onto payload grapple.

④ End effector ring fully rotated; wires closed on payload grapple, centering it and capturing payload

⑤ Operation of ball screw and nut withdraws wires, pulling payload into full contact and keyed orientation; further operation tensions wires to rigidize contact.

*Snare Capture and Rigidization Sequence*

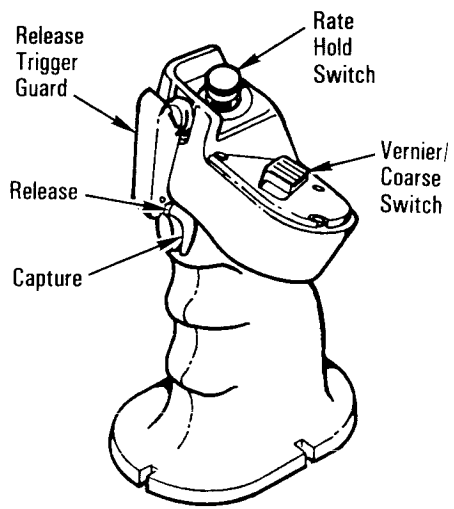


*RMS Rotational Hand Controller Switches*

against the face of the end effector and rigidizing the arm/payload assembly. During this process, current limit commands are sent to each joint motor to limp the arm, allowing the arm to move and compensate for misalignment errors. Wrist roll can still be commanded with a limp arm. The *end effector rigid* talkback indicator on panel A8U indicates gray when the end effector snare assembly is fully withdrawn in the end effector canister and the payload is rigidized. Barberpole indicates the end effector and payload are not rigidized.

There is one dual-end motor that produces all the motion in the end effector. The end effector electronics unit processes the end effector commands to produce the appropriate motor, clutch and brake commands from the displays and controls.

The rigidize sequence can be accomplished automatically or manually. The mode is selected by the flight crew operator with the *end effector mode auto, off, man* switch on panel A8U. Positioning the switch to *auto* causes the rigidize sequence to proceed automatically. If the switch is positioned to *man*, the *end effector man contr* switch on panel A8U must be positioned to *rigid*.

To release a payload, the snare mechanism moves outward until there is no force pulling the payload against the end effector, which is called derigidizing. If the *end effector mode auto, off, man* switch is in *auto*, lifting the RMS RHC switch guard and depressing the top half of the rocker switch commands a release. Derigidization automatically occurs, the snares of the end effector rotate open, and the payload grapple fixture is released. If the switch is positioned to *man*, the *end effector man contr* switch on panel A8U must be positioned to *derigid*.

The *end effector rigid* talkback indicator indicates barberpole when the end effector is no longer rigidized. The *end effector derigid* talkback indicator indicates gray when the end effector is derigidized. The *end effector extend* talkback indicator indicates gray when the end effector is fully extended. The *end effector open* talkback indicator indicates gray when the snares are fully open, releasing the payload, and the *end effector close* talkback indicator indicates barberpole.

The end effector is also equipped with a backup release capability that is controlled by the lever-locked *payload release, off* switch on panel A8U. The switch is only powered when the RMS *power* switch on panel A8L is positioned to *backup*. When the snares are closed, the snares wind up a spring device in the end effector. When the RMS *power* switch is in *backup* and the *payload release* switch is positioned to *on*, the snares are opened by the energy stored in the spring, releasing the payload. The end effector does not derigidize before releasing the payload. The *payload release* switch positioned to *off* de-energizes the circuit that opened the snares.

There are two types of automatic modes that can be used to position the RMS arm: preprogrammed and operator-commanded. The RMS software may be placed in the auto mode by positioning the *mode* rotary switch on panel A8U to *auto 1, auto 2, auto 3, auto 4* or *opr cmd* and depressing the *enter* push button indicator on panel A8U. RMS joint rate commands are computed to drive the arm from its present position to a given point. (Point refers to a position and attitude of the point of resolution relative to the orbiter.) The RMS joint rates are computed

so that the desired position and attitude are reached at the same time.

The operator-commanded automatic mode moves the end effector from its present position and orientation to a new one defined by the operator via the keyboard and RMS CRT display. After the data are keyed in, the operator must do a command check to verify that there is a set of joint angles that will put the arm at the desired point, but this command check does not verify the trajectory the arm must travel to get to that point (a straight line). If the point is valid, *good* appears on the CRT; if not, *fail* appears. The mode is then entered by selecting *opr cmd* on the rotary *mode* switch, positioning the *brakes* switch to *off*, and depressing the *enter* push button indicator. The white *ready* light on panel A8U then is illuminated. To start the arm moving to the desired point, the *auto seq* switch on panel A8U is positioned momentarily to *proceed*. The *ready* light is extinguished, and the white *in prog* light on panel A8U is illuminated. The arm will move in a straight line to the desired position and orientation, the *in prog* light will be extinguished, and the arm will then enter the hold mode. The RMS operator can stop and start the sequence through the *auto seq proceed, stop* switch on panel A8U.

The preprogrammed auto sequences operate in a manner similar to the operator-commanded sequences. Instead of the RMS operator entering the data on the computer via the keyboard and CRT display, the RMS arm is maneuvered according to sets programmed before the flight, called sequences. Up to 200 points may be preprogrammed into as many as 20 sequences. A given sequence is assigned via the CRT into auto 1, auto 2, auto 3 or auto 4. The mode is determined by then selecting *auto 1, auto 2, auto 3* or *auto 4* on the rotary *mode* switch and depressing the *enter* push button indicator. Each sequence is an ordered set of points to which the arm will move.

The preprogrammed sequences also consist of pause and fly-by. Pauses may be preprogrammed into the arm trajectory at any point that will cause the arm to come to rest. In order for the arm to proceed with the automatic sequence, the *auto seq proceed, stop* switch is positioned to *proceed*. (The operator can stop the

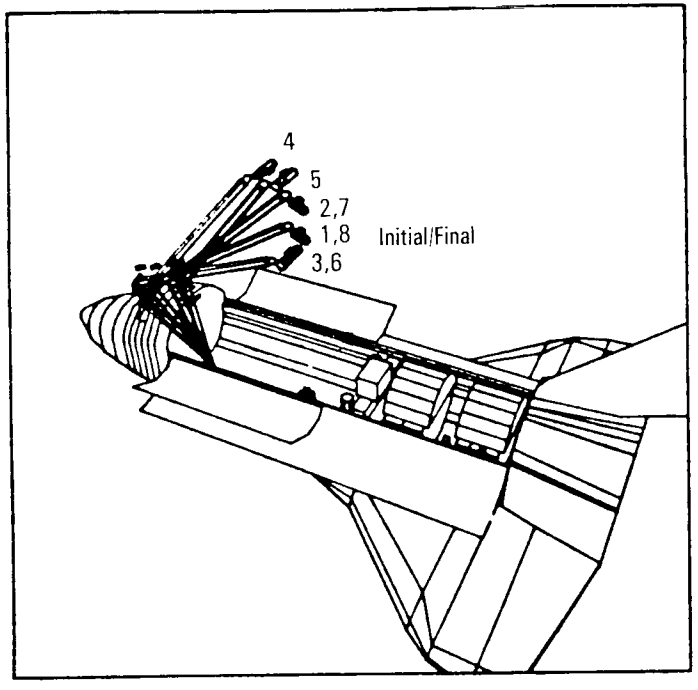


*Auto Sequence Loaded*

arm at any place in the auto sequence by positioning the *auto seq* switch to *stop*.) When the last point in the sequence is reached, the computer will terminate the movement of the arm and enter a position hold mode. The speed of the end effector between points in a sequence is governed by the individual joint rate limits set in the RMS software. In the fly-by sequence, the arm does not stop at a fly-by point; it continues to the next point in the sequence.

The single-joint drive control mode enables the operator to move the arm on a joint-by-joint basis with full computer support, thereby enabling full use of joint drive characteristics on a joint-by-joint basis. The operator places the rotary *mode* switch in the *single* position, depresses the *enter* push button indicator, and operates the arm by driving one joint at a time with the *joint* rotary switch on panel A8U and the *single/direct drive* switch on panel A8U. In this mode, actuation of the *single/direct drive*

switch removes the brakes from the joint that is selected by the *joint* rotary switch. The computer sends rate commands to the selected joint while holding position on the other joints. The single-joint drive mode is used to stow and unstow the arm and drive it out of joint travel limits.

Direct-drive control is a contingency mode. The direct mode is selected by positioning the rotary *mode* switch to *direct* and the *brakes* switch to *on*; the individual joints are driven with the rotary *joint* switch and the *single/direct drive* + or – switch. In the direct mode, the brakes remain on those joints not being driven, and the drive commands are hard-wired to the selected joint. Direct drive bypasses the manipulator control interface unit, computer and data buses to send a direct command to the motor drive amplifier. The direct-drive mode is used when the MCIU or computer has a problem that necessitates arm control by the direct-drive mode to maneuver the loaded arm to a safe payload release position or to maneuver the unloaded arm to the storage position. Since this is a contingency mode, full joint performance characteristics are not available. Computer-supported displays may or may not be available, depending on the fault that necessitated the use of direct drive.

Backup drive control is a contingency mode to be used when the prime channel drive modes are not available. The backup is a degraded joint-by-joint drive system. The RMS software is in a suspend mode when backup is selected. The backup mode is selected by positioning the RMS *power* switch on panel A8L to *backup*. The arm is controlled using the *backup control* rotary switch on panel A8U and the *single/direct drive* + or – switch located below the rotary switch. The brakes are on the joints not being driven. The motors are driven bypassing the servoloop system. Since the MCIU has no power, there are no data from the arm.

Four RMS manually augmented modes are used to grapple a payload and maneuver it into or out of the orbiter payload retention fittings. The four manually augmented modes require the RMS operator to use the RMS translational hand controller and rotational hand controller with the computer to augment operations. The RMS takes up 32 percent of the fifth central processor unit for RMS operation and 30 percent for the manually augmented modes. The four manually augmented modes are controlled by the *mode* rotary switch on panel A8U. The modes are orbiter unloaded, end effector, orbiter loaded or payload. The coordinate system to which the motion is referred and point of resolution differ for each of these modes.

The THC and RHC located at the aft flight deck station are used exclusively for RMS operations. The THC is located between the two aft viewing windows. The RHC is located on the left side of the aft flight station below the CCTV monitors. The THC and RHC have only one output channel per axis. Both RMS hand controllers are proportional, which means that the command supplied is linearly proportional to the deflection of the controller.

The RHC has additional switches on it. A *rate hold* push button on top of the RHC allows the RMS operator to maintain the RHC and THC inputs that are applied when the push button is engaged. Rate hold is disengaged when the push button is actuated again. Next to the *rate hold* push button is a *rate limit vernier/coarse* slide switch. In the forward position (away from the RMS operator), the operator uses the coarse rates. In coarse, the maximum rate of end effector movement for an unloaded arm is 2 feet per second, 0.2 foot per second for a loaded arm with a 32,000-pound payload, and 0.1 foot per second for 65,000-pound payloads. Sliding the switch toward the operator limits the maximum rate of end effector movement to lower speeds (vernier). For example, unloaded arm rates are limited to 0.61 foot per second and loaded arm rates to 0.061 foot per second. In vernier, maximum rates are loaded for a given payload.

The manually augmented mode enables the RMS operator to direct the end effector of the arm using two three-degree-of-freedom RMS hand controllers to control the end effector translation and rotation rates. The control alogrithms process the hand controller signals into a rate for each joint.

When a manually augmented mode is selected, rate commands from the RMS THC result in motions at the tip of the end

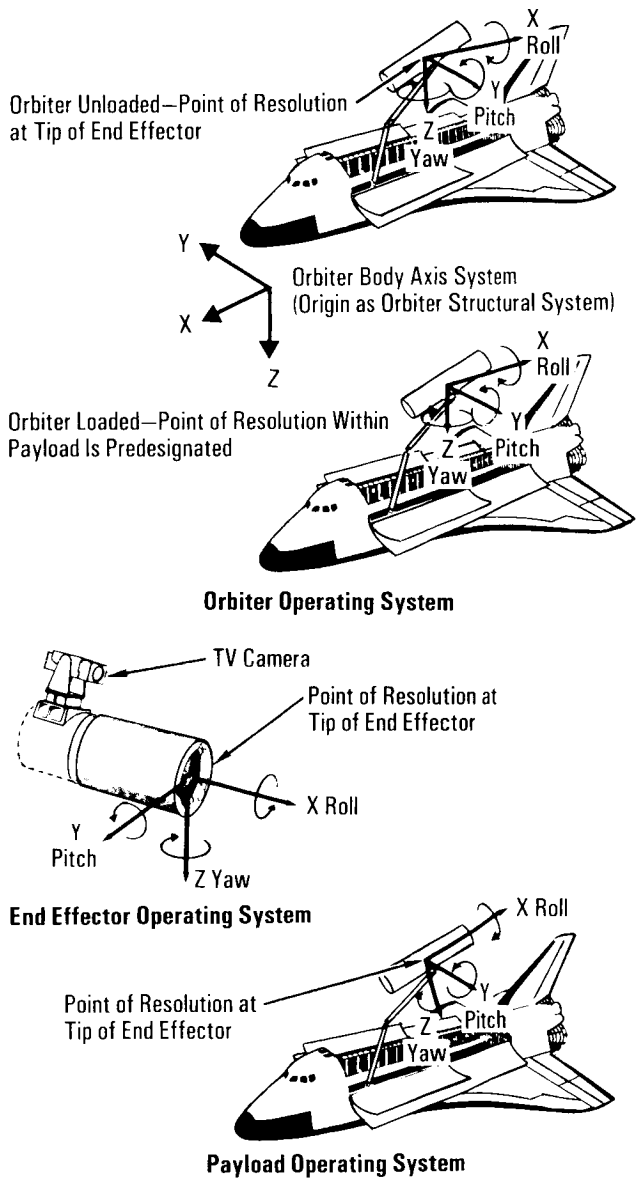


*Control Coordinate Operating Systems*

effector that are parallel to the orbiter-referenced coordinate frame and compatible with the up/down, left/right, in/out direction of the THC. Commands from the RMS RHC result in rotation at the tip of the end effector, which is also about the orbiter-referenced coordinate frame.

The manually augmented end effector mode maintains compatibility at all times among rate commands at the THC and RHC and the instantaneous orientation of the end effector. The end effector mode is used for grappling operations in conjunction with the RMS wrist-mounted CCTV camera, which is oriented with the end effector coordinates and rolls with the end effector. The CCTV scene presented on the television monitor has viewing axes that are oriented with the end effector's coordinate frame. This results in compatible motion among the rate commands applied at the hand controllers and movement of the background image presented on the television monitor. Up/down, left/right and in/out motions of the THC result in the same direction of motion of the end effector as seen on the television monitor, except that the background in the scene will move in the opposite direction. Therefore, the operator must remember to use a fly-to control strategy and apply commands to the THC and RHC that are toward the target area in the television scene.

The manually augmented orbiter-loaded mode enables the operator to translate and rotate a payload about the orbiter axis with the point of resolution of the resolved rate algorithm at a predetermined point within the payload, normally the center of geometry. This allows for pure rotations of the payload for berthing operations. The manually augmented payload mode is analogous to the manually augmented end effector mode.

Each RMS joint has travel limits. The wrist pitch joint is an example. This joint can be physically moved to plus or minus 121.4 degrees to the mechanical hardstop. At plus or minus 114.4 degrees, the arm is at its reach limit, where the software warns the RMS operator by activating the yellow *reach limit* light, the *master alarm* push button indicator and tone on panel A8U, a computer fault message, an SM tone and a reach limit indication

[illegible] the joint past [illegible] warning is [illegible] softstop. At this point [illegible] or minus 116.4 degrees for the wrist pitch joint), the *software stop* talkback on panel A8U will indicate barberpole. The arm will drop out of mode (if it was being driven in one of the computer-augmented modes) and be unable to be driven further without operator action. The arm can only be operated in the single, direct or backup modes once it reaches a softstop. If one continues to drive the joint in this direction, motion will stop at plus or minus 121.4 degrees for wrist pitch because a joint cannot be driven past its hardstop. All joint angles equal zero degrees when the arm is cradled.

Safing and braking are the two methods available for bringing the arm to rest. Safing can be accomplished by positioning the *safing* switch on panel A8U to *safe*, which brings the arm to rest using the servocontrol loops. When the *safing* switch is positioned

| Joint | Reach Limit Location (degrees) | Softstop Location (degrees) | Mechanical Stop Location (degrees) | Singularity Location |
|---|---|---|---|---|
| Shoulder yaw | +175.4<br>-175.4 | +177.4<br>-177.4 | +180<br>-180 | |
| Shoulder pitch | +2.6<br>+140.4 | +0.6<br>+142.4 | -2<br>+145 | |
| Elbow pitch | -2.4<br>155.6 | 0.4<br>-157.6 | +2.4<br>-161 | -7.6 |
| Wrist pitch | -114.4<br>+114.4 | 116.4<br>+116.4 | -121.4<br>+121.4 | |
| Wrist yaw | 114.6<br>+114.6 | -116.6<br>+116.6 | -121.3<br>+121.3 | -75/-105<br>+75/+105 |
| Wrist roll | -440.0<br>+440.0 | 442<br>+442 | -447<br>+447 | |

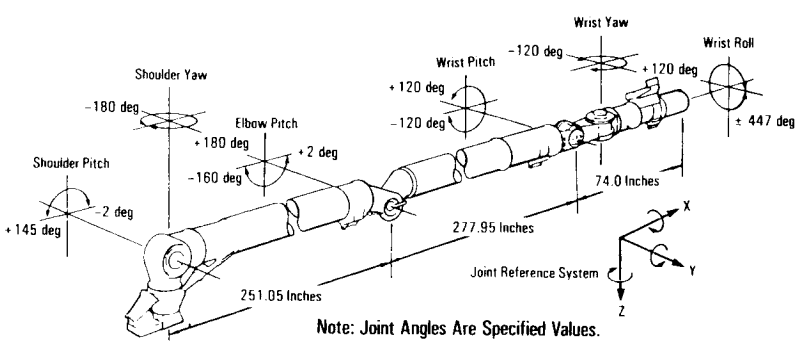


Note: Joint Angles Are Specified Values.

*Joint Travel Limit Locations*

[illegible] in test equipment failures are [illegible] *safing* switch removes the safing state. The *safing* talkback indicator indicates gray when safing is not in progress and barberpole when safing is in progress.

The RMS has a built-in test capability to detect and display critical failures. It monitors the arm-based electronics, displays and controls, and the MCIU software checks in the computer monitor computations. Failures are displayed on panel A8U and on the CRT and are also available for downlinking through orbiter telemetry.

All of the major systems of the ABE are monitored by BITE. The MCIU checks the integrity of the communications link among itself and ABE, displays and controls, and the orbiter computer. It also monitors end effector functions, thermistor circuit operation and its own internal consistency. The computer checks include an overall check of each joint's behavior through the consistency check, encoder data validity and end effector behavior as well as the proximity of the arm to reach limits, softstops and singularities.

The white *auto 1, auto 2, auto 3, auto 4, opr cmd, test, orb unl, end eff, orb ld, payload, single* and *direct* lights on panel A8U indicate the current RMS operating mode.

The *software stop* talkback indicator on panel A8U indicates gray when a stop has been commanded by the computer. Barberpole indicates a software stop has occurred, at least one joint has reached its limit of travel, and the computer has commanded arm motion to cease.

The *rate* meter on panel A8U reads in feet per second. *Act* indicates the translational speed, and *cmd* indicates the computer-commanded speed.

The *rate min* talkback indicator on panel A8U indicates *on* when the RHC vernier speed has been selected. *Off* indicates that the RHC coarse speed has been selected.

The *rate hold* talkback indicator on panel A8U indicates *on* when rate hold has been commanded and implemented by the computer. *Off* indicates that the rate hold function is not in effect. The rate hold function is engaged or disengaged by the *rate hold* button on the RHC.

The 11 RMS C/W annunciators are located on panel A8U. The red *MCIU* light indicates the MCIU has failed a self-test. The red *derigidize* light indicates that the end effector has derigidized without command. The red *ABE* light indicates that a failure has occurred in the ABE of any joint. The red *release* light indicates that the end effector has released the grapple fixture without command. The red *GPC data* light indicates invalid data were transmitted from the orbiter computer to the MCIU and were detected by the MCIU BITE. The yellow *check CRT* light indicates an RMS failure message is on the orbiter CRT. The yellow *contr err* light indicates the presence of abnormal conditions in an arm joint that may not be detected by BITE and may cause a joint runaway (software automatically applies the brakes when such a condition occurs). The yellow *reach limit* light indicates that one of the joints is close to its travel limit. The yellow *stbd temp* light indicates that the temperature of the starboard arm has exceeded its predetermined caution threshold. The yellow *port temp* light indicates the same for the port arm.

The red *master alarm* push button light indicator on panel A8U signals the RMS operator that an RMS C/W light was activated. A tone is activated with the *master alarm* light. The *master alarm* light and tone can be canceled by depressing the *master alarm* push button indicator. The RMS C/W tone volume can be adjusted on panel A8U. The C/W tone and *master alarm* on panel A8U are not associated with the orbiter's C/W system.

The three digital LEDs on panel A8U display data that are determined by the *parameter* rotary switch on panel A8U. A small red light above each digital LED, when illuminated, indicates there is a malfunction in the corresponding numerical readout.

The *test* position of the *parameter* rotary switch lights all of the RMS displays and lights and sounds the *master alarm* on panel A8U. The numeric indicators should display *+8.8.8.8.*

The *lighting annun-num* bright switch on panel A8U fixes the brightness of all panel A8 lights to a maximum level, while the *var* position enables the *low, var, med* rotary switch to control the brightness of the panel lights. The *panel/inst* rotary *off, brt* switch on panel A8U controls the integral lighting on the analog meter, panel nomenclature and electromechanical talkback indicators on panel A8.

The *rate scale* talkback indicator on panel A8U indicates gray when effective scales are as shown on the translation rate meter. *X10* indicates all readings should be multiplied by 10.

If the manipulator arm cannot be restowed for any reason, it will be jettisoned so the payload bay doors can be closed. There are four separation points: one at the shoulder and one at each of the three retention latches. Each separation point is individually released. The switches for jettisoning the right or left RMS are located on panel A14.

An RMS *jett deadface* switch is located on panel A14. When the switch is positioned to *deadface*, the electronics of the three RMS retention latches are deadfaced. The *safe* position removes power from the deadface circuits and the ground reset circuits. The *gnd reset* position resets relays in the retention latches if the RMS was jettisoned. The relays are reset on the ground.

The *pyro port* or *starboard RMS arm* switches on panel A14 control the corresponding arm jettison functions. The *jett arm, safe, guillotine* switch on panel A14 positioned to *safe* opens the corresponding RMS arm circuitry to disable the guillotine and jettison operations. Positioning the switch to *guillotine* closes the circuits, which arm the corresponding guillotine circuits. The *arm* position enables power to the RMS *jett* switch.

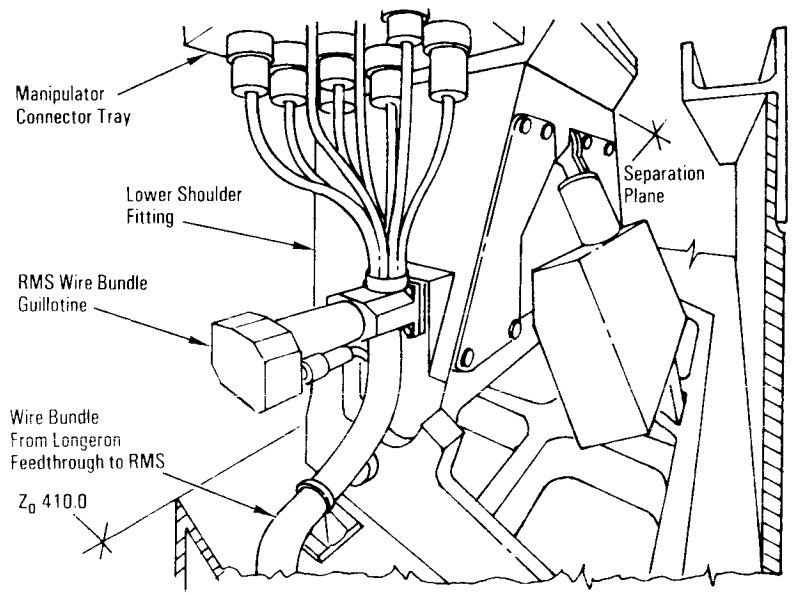


*The RMS Shoulder Wire Bundles*

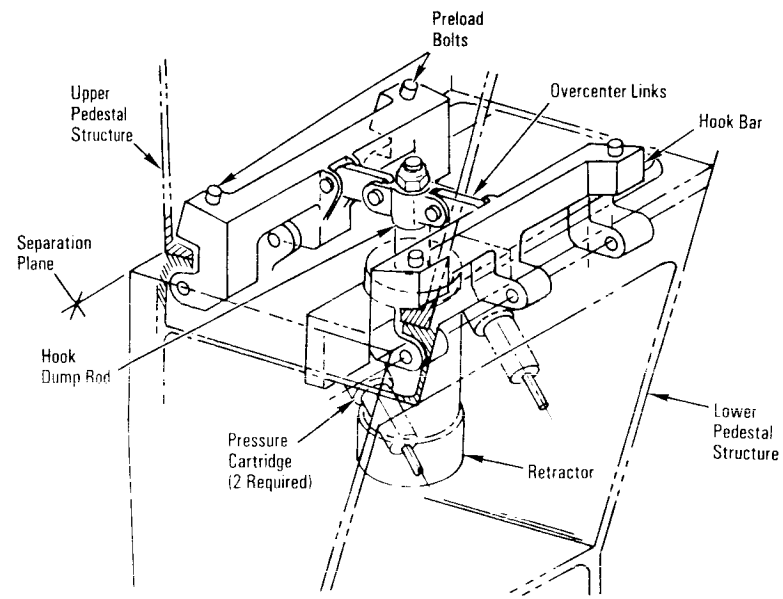


*RMS Mechanical Separation System*



The *pyro port* or *starboard RMS jett* switches on panel A14 control the corresponding arm shoulder jettison. The *jett arm, safe, guillotine* switch on panel A14 positioned to *safe* opens the jettison logic circuitry for the corresponding arm. Positioning the switch to *guillotine* allows power to the guillotine logic circuitry, guillotining the corresponding arm shoulder wire bundle (the corresponding RMS *arm* switch must be in the *guillotine* position). The wire bundle is severed by a redundant pyro-operated guillotine. Positioning the switch to *jett* allows power to the jettison logic circuitry, jettisoning the corresponding arm shoulder (the corresponding RMS *arm* switch must be in the *jett* position). The separation system has redundant pyro-operated pressure cartridges to force a retractor down and pulls four overcenter tiedown hooks back, which releases the arm at the shoulder joint support.

The *pyro starboard* or *port retention latches, fwd, mid, aft* switches on panel A14 control the corresponding arm retention latches. Positioning the switches individually to the *safe* position opens the jettison logic circuitry for the corresponding retention latch. Positioning the switches to *guillotine* individually allows power to guillotine the corresponding retention latch. Positioning the switches to *jett* individually allows power to the jettison circuitry, jettisoning the corresponding latch. The separation of the retention latches operates in a similar manner as the jettisoning of the shoulder joint. The separation system imparts a minimum impulse velocity on the RMS arm.

The contractor for the RMS retention latch actuators is Ellanef, Corona, N.Y.

## PAYLOAD RETENTION MECHANISMS

Non-deployable payloads are retained by passive retention devices, and deployable payloads are secured by motor-driven, active retention devices. Payloads are secured in the orbiter payload bay with the payload retention system or are equipped with their own unique retention systems. The orbiter payload retention system provides three-axis support for up to five payloads per flight. The payload retention mechanisms secure the payloads during all mission phases and allow installation and removal of the payloads when the orbiter is either horizontal or vertical.

Attachment points in the payload bay are in 3.933-inch increments along the left- and right-side longerons and along the bottom centerline of the bay. Of the potential 172 attach points on the longerons, 48 are unavailable because of the proximity of spacecraft hardware. The remaining 124 may be used for deployable payloads. Along the centerline keel, 89 attach points are available, 75 of which may be used for deployable payloads. There are 13 longeron bridges per side and 12 keel bridges available per flight. Only the bridges required for a particular flight are flown. The bridges are not interchangeable because of main frame spacing, varying load capability and subframe attachments.

The longeron bridge fittings are attached to the payload bay frame at the longeron level and at the side of the bay. Keel bridge fittings are attached to the payload bay frame at the bottom of the payload bay.

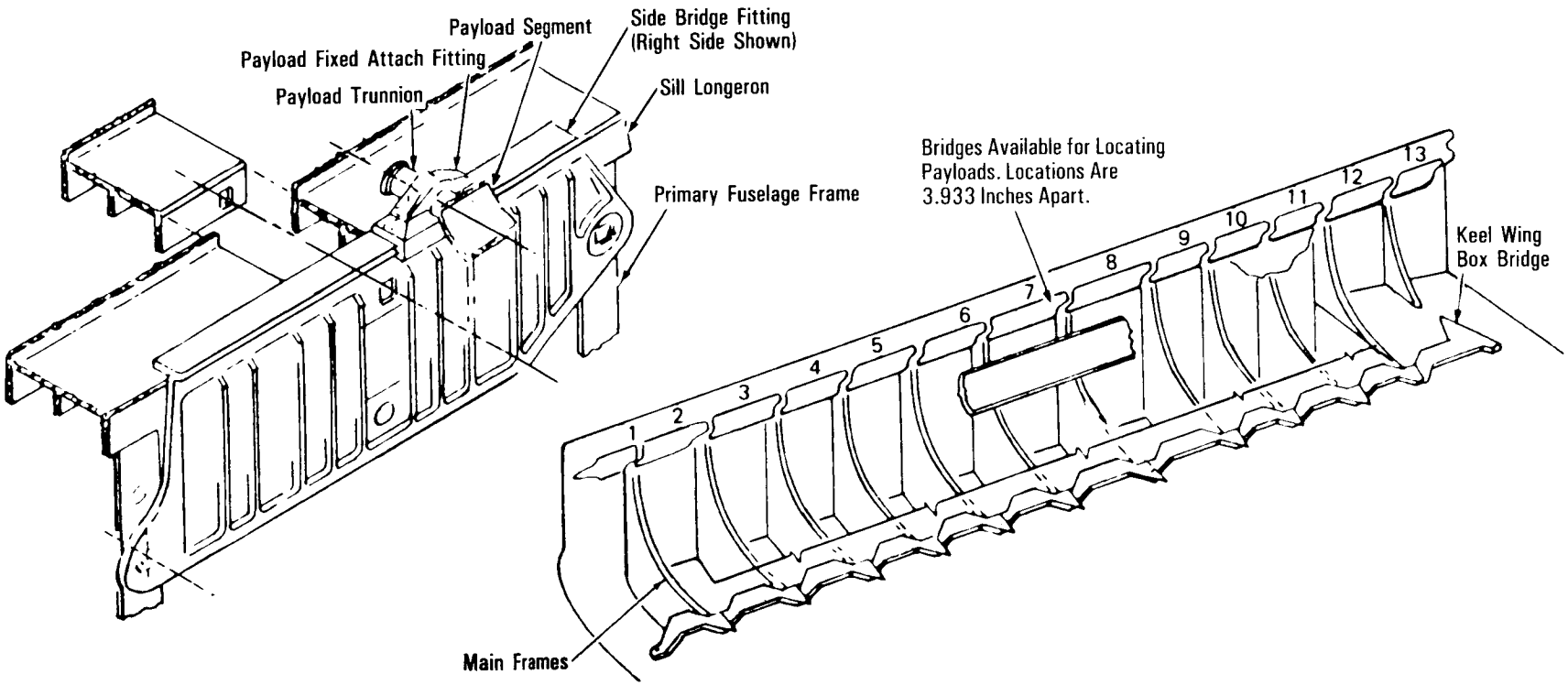


*Payload Retention*

The payload trunnions are the portion of the payload that interface with the orbiter retention system. The trunnions that interface with the longeron are 3.25 inches in diameter and 7 or 8.75 inches long, depending on their position in the payload bay. The keel trunnions are 3 inches in diameter and vary in length from 4 to 11.5 inches, depending on where they fit in the payload bay.

The orbiter and payload attachments are the trunnion/bearing/journal type. The longeron and keel attach fittings have a split, self-aligning bearing for non-release-type payloads in which the hinged half is bolted closed. For on-orbit deployment and retrieval payloads, the hinged half fitting releases or secures the payload by latches that are driven by dual-redundant electric motors.

Payload guides and scuff plates assist in deploying and berthing payloads in the payload bay. The payload is constrained in the X direction by guides and in the Y direction by scuff plates and guides. The guides are mounted to the inboard side of the payload latches and interface with the payload trunnions and scuff plates. The scuff plates are attached to the payload trunnions and interface with the payload guides.

The guides are V-shaped with one part of the V being 2 inches taller than the other part. Parts are available to make either the forward or aft guide taller.

This difference enables the operator monitoring the berthing or deployment operations through the aft bulkhead CCTV cameras to better determine when the payload trunnion has entered the guide. The top of the taller portion of the guide is 24 inches above the centerline of the payload trunnion when it is all the way down in the guide. The top of the guide has a 9-inch opening. These guides are mounted to the 8-inch guides that are a part of the longeron payload retention latches.

A set of payload active retention latches may consist of as many as five latches per payload. Three payloads can be accommodated with active latches. Each of the active latches is controlled by dual-redundant ac electric motors that release or latch the active retention latch. The active retention latches are controlled from panel A6U.

When the *payload retention logic power system 1* switch on panel A6U is positioned to *on*, it provides main bus power to the rotary *payload select* switch on panel A6U. The *system 2* switch, when positioned to *on*, provides MNB bus power to the rotary *payload select* switch for payloads 1, 2 and 3.

Positioning the *payload select* rotary switch on panel A6U to *1* provides power-on logic for the dual actuator motors of up to five latches for one payload and the talkback indications associated with up to five latches for the payload. Position *2* of the *payload select* switch provides power-on logic for the dual actuator motors of up to five latches for the second payload and the talkback indications associated with up to five latches for the payload. Position *3* provides power-on logic for the dual actuator motors of up to five latches for the third payload and the talkback indications associated with up to five latches.



The *payload retention latches 1, 2, 3, 4* and *5* switches on panel A6U are enabled by the *payload select* rotary switch. Positioning the *payload select* switch to *1* enables up to five retention latches for payload 1, and each of the five retention latches for payload 1 would be controlled by the individual *1, 2, 3, 4* and *5 release, off, latch* switches. Positioning the *payload select* switch to *2* or *3* has the same effect for payloads 2 and 3.

Positioning a *payload retention latches* switch to *release* provides ac power to the dual electric motors associated with the retention latch of the selected payload, driving the retention latch open. The operating time of the latch with both motors operating is 30 seconds; with only one motor operating it is 60 seconds. The talkback indicator immediately above a *retention latches* switch indicates *rel* when the latch is fully open. There are two microswitches for the *rel* talkback indication; however, only one is required to control the talkback indicator. The *payload retention latches ready for latch* talkback indicator for a *retention latches* switch is barberpole when the payload latch is set in the release

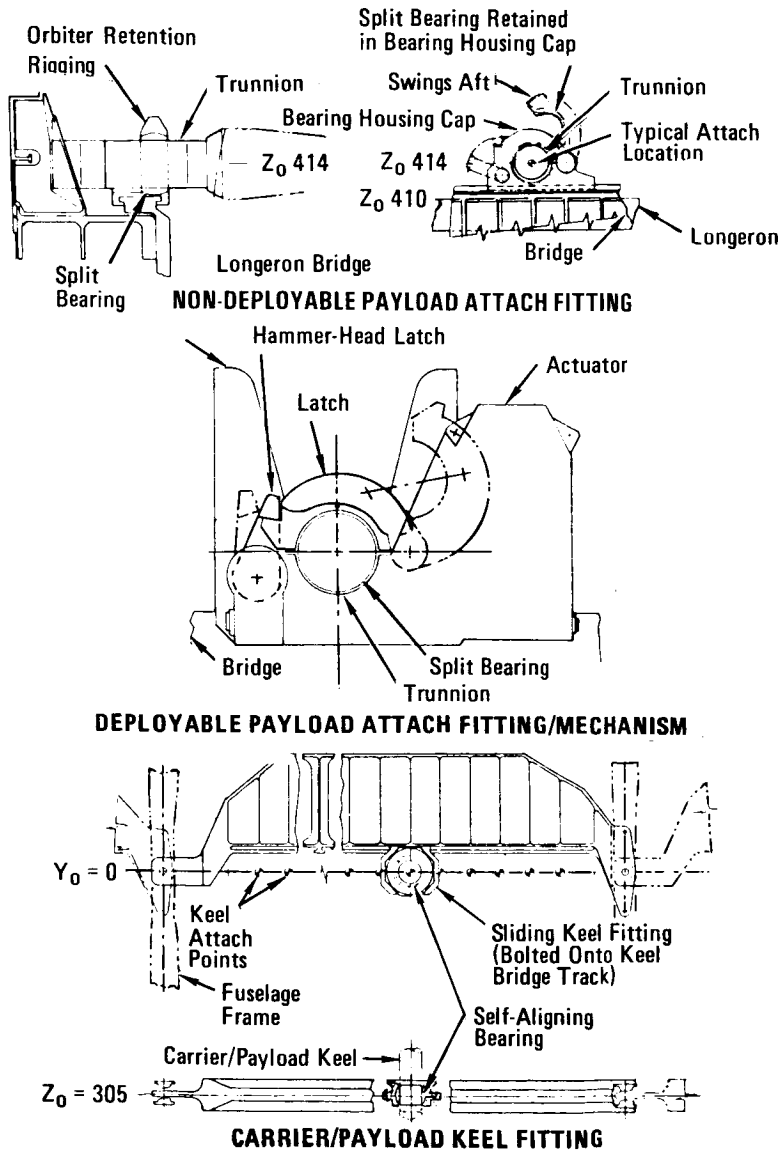


*Standard Attach Fittings for Payloads*

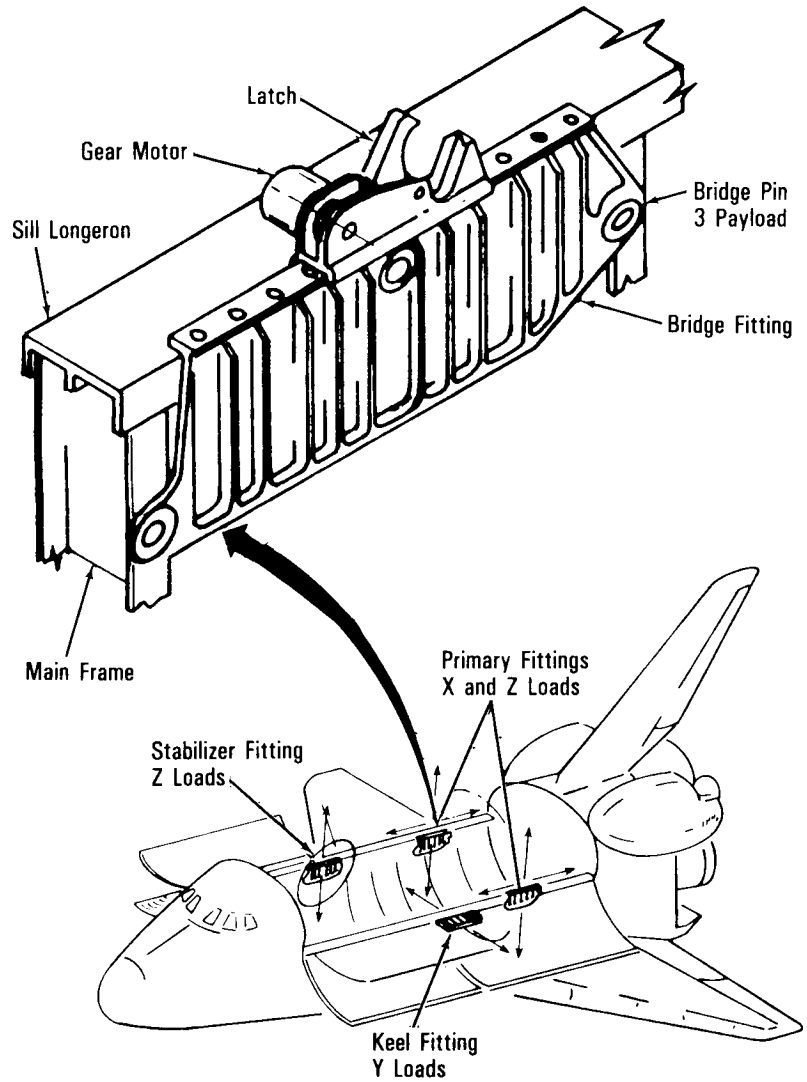


*Active Payload Retention System*

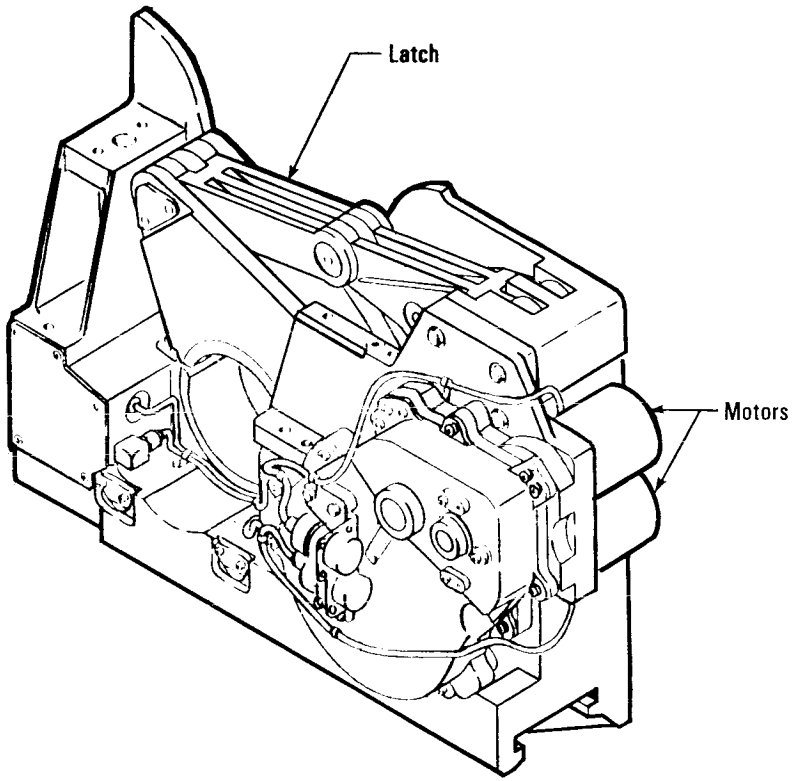


*Payload Retention Latch*

position. There are two microswitches for the ready-for-latch talkback indication; however, only one is required to control the talkback indicator.

Positioning a *payload retention latches* switch to *latch* provides ac power to the dual electric motor associated with the latch of the payload selected, driving the retention latch closed. The operating time of one or both motors is the same as for releasing a payload. A barberpole talkback indicator immediately above each

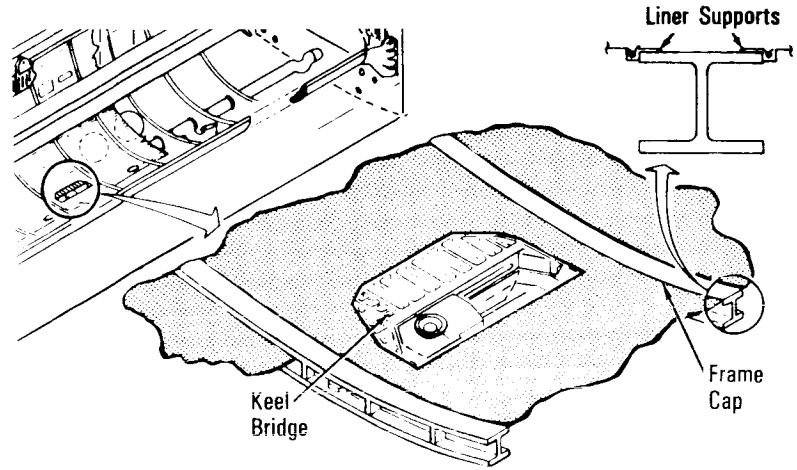


*Active Keel Fitting*

*retention latches* switch indicates that latch is ready to latch. The indicator shows *lat* when the latch is closed. There are two microswitches for the *lat* indication; however, only one is required to control the talkback indicator. The *payload retention latches ready for latch* talkback indicator for a *retention latches* switch is gray when the payload latch is ready to latch.

Positioning the *payload select* rotary switch to *monitor* inhibits the logic circuits of all payload actuator latch sets and inhibits the talkback indicators but provides power for payload latch telemetry.

The keel active latch centers the payload in the yaw direction in the payload bay; therefore, the keel latch must be closed before the longeron latches are closed. The keel latch can float plus or minus 2.75 inches in the X direction.

The contractor for the payload retention latches is Ball Brothers, Boulder, Colo.

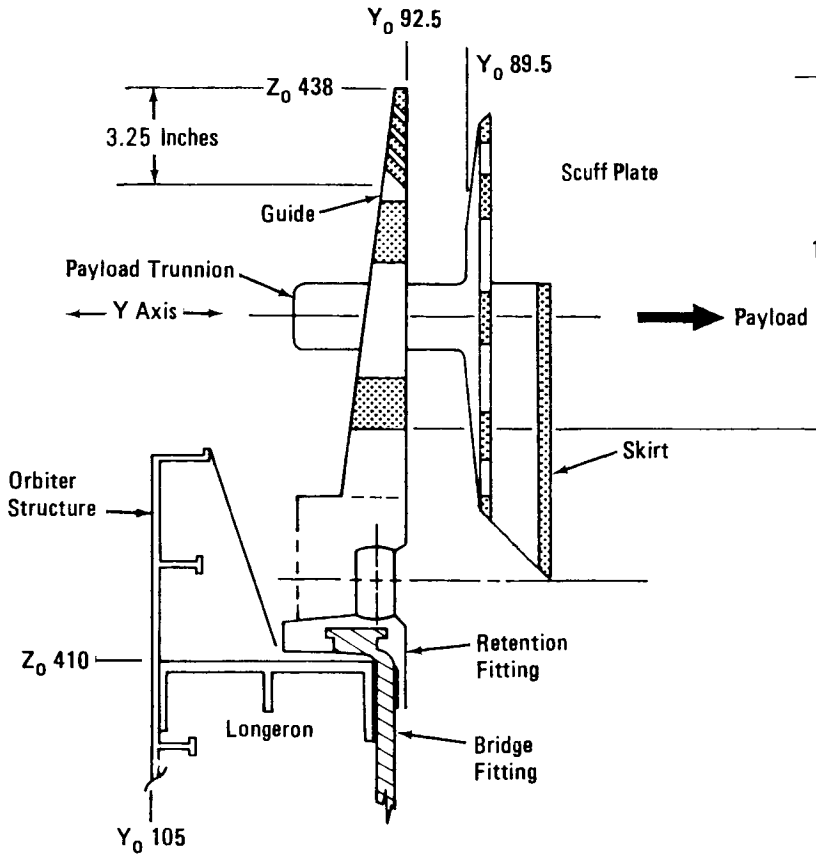


*Orbiter Payload Guide and Trunnion/Scuff Plate (Nominal)*

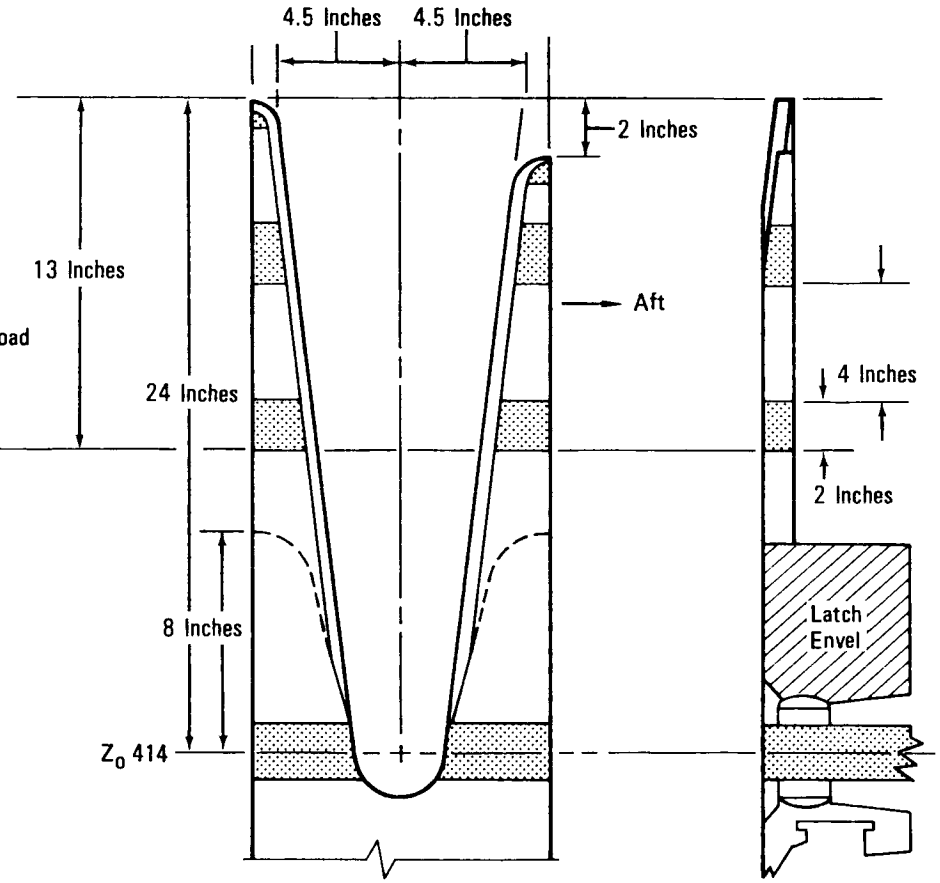


*Orbiter Active Latch Guide*

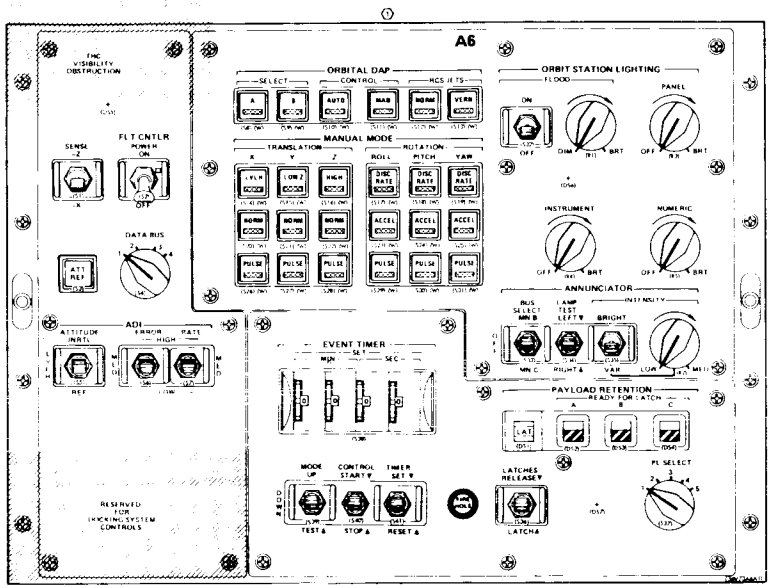
A6
ORBITAL DAP
SELECT
CONTROL
RCS JETS
A
B
AUTO
MAN
NORM
VERN
MANUAL MODE
TRANSLATION
ROTATION
X
Y
Z
ROLL
PITCH
YAW
LVLH
LOW Z
HIGH
DISC RATE
ACCEL
PULSE
ORBIT STATION LIGHTING
FLOOD
PANEL
ON
OFF
DIM
BRT
INSTRUMENT
NUMERIC
ANNUNCIATOR
BUS SELECT MN B
LAMP TEST LEFT
BRIGHT
INTENSITY
MN C
RIGHT
VAR
LOW
MED
PAYLOAD RETENTION
READY FOR LATCH
LAT
LATCHES RELEASE
LATCH
PL SELECT
EVENT TIMER
SET
MIN
SEC
MODE UP
CONTROL START
TIMER SET
TEST
STOP
RESET
FLT CNTLR POWER ON
SENSE -Z
DATA BUS
ATT REF
ADI
ATTITUDE INRTL
ERROR
RATE
HIGH
REF
FWC VISIBILITY OBSTRUCTION
RESERVED FOR TRACKING SYSTEM CONTROLS

*Panel A6*

## COMMUNICATIONS

**SPACE FLIGHT TRACKING AND DATA NETWORK.** The Networks Division of Goddard Space Flight Center, Greenbelt, Md., is responsible for operating, maintaining and controlling the space flight tracking and data network, which consists of the space network and ground network for providing tracking, data acquisition and associated support. The network is operated through NASA contracts and interagency and international agreements that provide staffing and logistic support for space missions. The Networks Division also operates the Network Control Center and NASA Ground Terminal. The division is responsible for testing, calibration and configuring network resources to ensure network support capability before each mission. It coordinates, schedules and directs all network activity and provides the necessary interface among GSFC elements and other agencies, centers and networks.

The STDN, controlled by the NCC at Goddard, is composed of the White Sands Ground Terminal and NASA Ground Terminal in White Sands, N.M.; the NASA Communications Network, Flight Dynamics Facility and Simulation Operations Center at GSFC; and the ground network. These elements are linked by voice and data communication services provided by Nascom. The prime operational communications data are formatted into 4,800-bit blocks and transmitted on the Nascom wide-band data and message switching system. Other communications are transmitted by teletype and facsimile facilities.

The Tracking and Data Relay Satellite system will consist of two Tracking and Data Relay satellites in geosynchronous orbit (130 degrees apart in longitude), an on-orbit spare, and a ground terminal facility (located at White Sands). The TDRS can transmit and receive data and track a user spacecraft in a low Earth orbit for a minimum of 85 percent of its orbit. TDRSS telecommunication services to and from the user's control and data processing facilities operate in a real-time, bent-pipe mode.

The White Sands Ground Terminal contains the ground terminal [illegible] relay equipment for the command, telemetry, tracking and control equipment of the TDRSS. The NASA Ground Terminal is colocated with WSGT. The NGT is managed and operated by the Networks Division and, in combination with Nascom, is NASA's physical and electrical interface with the TDRSS. The NGT provides the interfaces with the common carrier, monitors the quality of the service from the TDRSS, and remotes data quality to the NCC.

Goddard's ground tracking stations for various communications are located throughout the world:

— Ascension Island (ACN)—S-band and ultrahigh frequency air-to-ground.

— Bermuda (BDA)—S-band, C-band and UHF air-to-ground.

— Guam (GWM)—S-band and UHF air-to-ground.

— Kauai, Hawaii (HAW)—S-band and UHF air-to-ground.

— Merritt Island, Fla. (MIL)—S-band and UHF air-to-ground.

— Santiago, Chile (AGO)—S-band.

— Ponce de Leon, Fla. (PDL)—S-band.

— Canberra, Australia (CAN)—S-band.

— Dakar, Senegal—UHF air-to-ground.

— Wallops, Va. (WFF)—C-band.

Also supporting the STDN are several instrumented United States Air Force aircraft, referred to as advanced range instrumentation aircraft, that are situated upon request at various locations around the world where ground stations cannot support space [illegible].

The various antennas at each STDN site accomplish a specific task, usually in a specific frequency band. Functioning like giant electronic magnifying glasses, the larger antennas absorb radiated electronic signals transmitted by spacecraft in a radio form called telemetry.

The Nascom Division at Goddard is responsible for providing an operational telecommunication network for all NASA programs and projects. The Nascom network is a worldwide complex of communications services, including data, voice, teletype and television systems that are a mixture of government-owned and leased equipment as well as leased services. Nascom is responsible for the operations, maintenance and testing required to provide optimum service to the users. The major switching centers in Nascom are located at GSFC; the Jet Propulsion Laboratory in Pasadena, Calif.; Cape Canaveral, Fla.; Canberra, Australia; and Madrid, Spain.

This communication network is composed of telephone, microwave, radio, submarine cables and communication satellites. These various systems link the data flow through 11 countries of the free world with 15 foreign and domestic carriers and provide the required information between tracking sites and Johnson Space Center (Houston, Texas) and Goddard control centers. Special wide-band and video circuitry is used as needed. GSFC has the largest wide-band system in existence.

Included in the equipment of the worldwide STDN are numerous computers located at the different stations that control tracking antennas, handle commands and process data for transmission to the JSC and GSFC control centers. Shuttle data from all the tracking stations are funneled into the main switching computers at GSFC and rerouted to JSC without delay by domestic communications satellites. Commands generated at JSC are transmitted to the main switching computers at GSFC and switched to the proper tracking station for transmission to the space shuttle.

If NASA's JSC Mission Control Center should be impaired for an extended period of time, an emergency control center would be established at NASA's ground terminal at White Sands and manned by NASA JSC personnel.

A station conferencing and monitoring arrangement allows various traffic managers to hold conferences with as many as 220 different voice terminals throughout the United States and abroad with talking and listening capability at the touch of a few buttons. The system is redundant, which accounts for its mission support reliability record of 99.6 percent. All space shuttle voice traffic is routed through this arrangement at GSFC.

Communication satellites electronically connect the Earth stations and permit transmission of 10 to 20 times more data. Ground terminals for domestic communications satellites are situated at JSC; Kauai, Hawaii; Goldstone, Calif.; Kennedy Space Center, Florida; NASA's Dryden Flight Research Facility, California; GSFC, Greenbelt, Md.; and White Sands, N.M.

The tracking station at Ponce de Leon Inlet, Fla. (near New Smyrna Beach), provides support during powered flight because of attenuation problems from the solid rocket booster motor plume.



The existing worldwide ground stations provide coverage for approximately 20 percent of a satellite's or spacecraft's orbit, limited to brief periods when the satellite or spacecraft is within the line of sight of a given tracking station.

A new era in space communication began with the STS-6 mission in April 1983, when the first Tracking and Data Relay Satellite was deployed. TDRS-A was the first of three identical satellites planned for the system. The TDRS system was developed after studies in the early 1970s showed that a telecommunication satellite system could support the projected scientific and application mission requirements better than ground stations and also could halt the spiraling cost of upgrading and operating a worldwide network of tracking and communication ground stations.

**TRACKING AND DATA RELAY SATELLITE SYSTEM.** When fully operational, the TDRSS will provide continuous global coverage of Earth-orbiting satellites at altitudes from 750 miles to about 3,100 miles. At lower altitudes, there will be brief periods when satellites or spacecraft over the Indian Ocean near the equator are out of view. The TDRSS will be able to han-

dle up to 300 million bits of information per second. Because eight bits of information make one word, this capability is equivalent to processing 300 14-volume sets of encyclopedias every minute.

The fully operational TDRSS network will consist of three satellites in geosynchronous orbits. The first, positioned at 41 degrees west longitude, is TDRS-East (TDRS-A). The next satellite, TDRS-West, will be carried into Earth orbit aboard the space shuttle and deployed and positioned at 171 degrees west longitude. The remaining TDRS will be positioned above a central station just west of South America at 62 degrees west longitude as a backup.

The satellites are positioned in geosynchronous orbits above the equator at an altitude of 22,300 statute miles. At this altitude, because the speed of the satellite is the same as the rotational speed of Earth, it remains fixed in orbit over one location. The eventual positioning of two TDRSs will be 130 degrees apart instead of the usual 180-degree spacing. This 130-degree spacing will reduce the ground station requirements to one station instead of the two stations required for 180-degree spacing.

The TDRS system serves as a radio data relay, carrying voice, television, and analog and digital data signals. It offers three frequency band services: S-band, C-band and high-capacity Ku-band. The C-band transponders operate at 4 to 6 GHz and the Ku-band transponders operate at 12 to 14 GHz.

The highly automated TDRSS network ground station, located at the White Sands Ground Terminal, is owned and managed by Contel.

TDRSS also provides communication and tracking services for low Earth-orbiting satellites. It measures two-way range and Doppler for up to nine user satellites and one-way and Doppler for up to 10 user satellites simultaneously. These measurements are relayed to the Flight Dynamics Facility at GSFC from the WSGT.

Six TDRSs will be built by TRW's Defense and Space Systems Group, Redondo Beach, Calif. Contel owns and operates the satellites and the White Sands Ground Terminal, which was built jointly by the team of TRW, Harris Corporation and Spacecom. Electronic hardware was jointly supplied by TRW and Harris's Government Communications Division, Melbourne, Fla. TRW integrated and tested the ground station, developed software for the TDRS system and integrated the hardware with the ground station and satellites.

The ground station is located at a longitude with a clear line of sight to the TDRSs and very little rain, because rain can interfere with the Ku-band uplink and downlink channels. It is one of the largest and most complex communication terminals ever built.

The most prominent features of the ground station are three 60-foot Ku-band dish antennas used to transmit and receive user traffic. Several other antennas are used for S-band and Ku-band communications. NASA developed sophisticated operational control facilities at GSFC and next to the WSGT to schedule TDRSS support of each user and to distribute the user's data from White Sands to the user.



Automatic data processing equipment at the WSGT aids in satellite tracking measurements, control and communications. Equipment in the TDRS and the ground station collects system status data for transmission, along with user spacecraft data, to NASA. The ground station software and computer component, with more than 900,000 machine language instructions, will eventually control three geosynchronous TDRSs and the 300 racks of ground station electronic equipment.

Many command and control functions ordinarily found in the space segment of a system are performed by the ground station, such as the formation and control of the receive beam of the TDRS multiple-access phased-array antenna and the control and tracking functions of the TDRS single-access antennas.

Data acquired by the satellites are relayed to the ground terminal facilities at White Sands. White Sands sends the raw data directly by domestic communications satellite to NASA control centers at JSC (for space shuttle operations) and GSFC, which

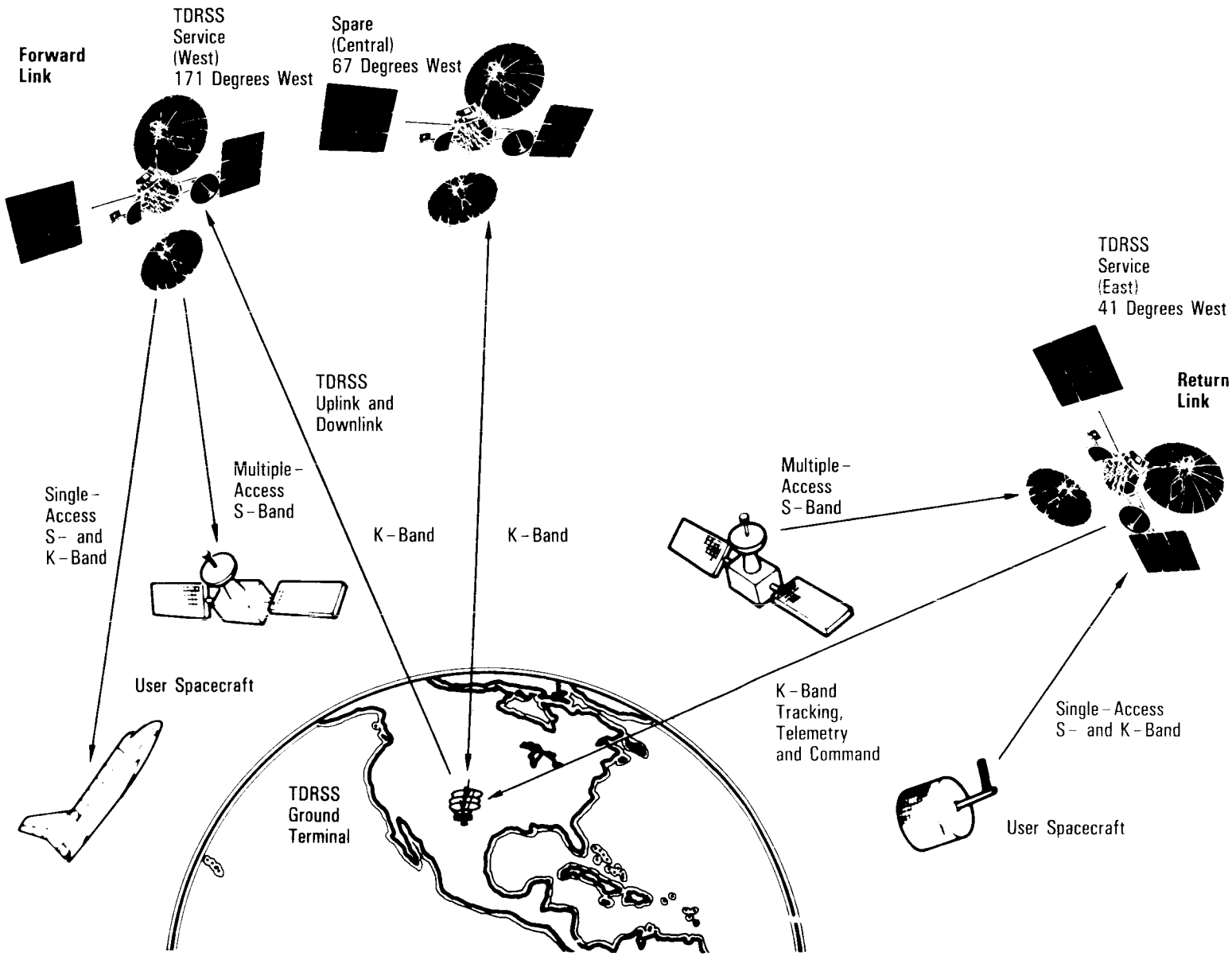


*Linking Three Identical and Interchangeable Satellites With Earth Station*

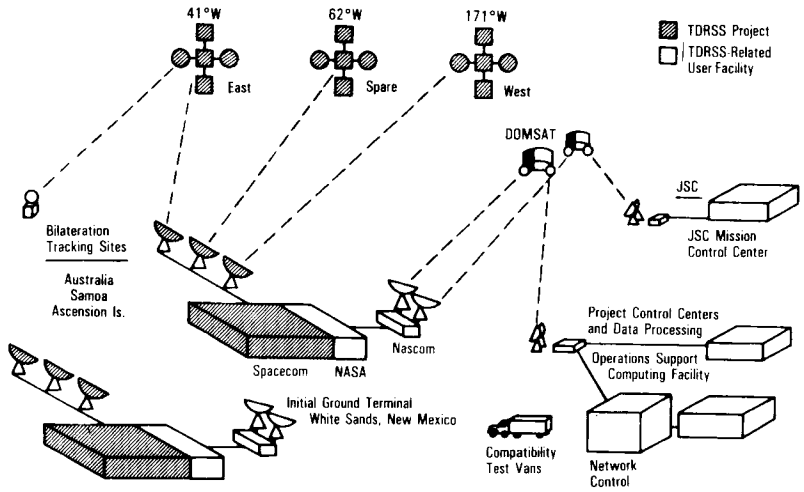


(Second ground station, under construction 3 miles north of existing station, is expected to be fully operational by 1993.)

*TDRSS Elements*

*Tracking and Data Relay Satellite on Station at Geosynchronous Orbit*

schedules TDRSS operations and controls a large number of satellites. To increase system reliability and availability, no signal processing is done aboard the TDRSs; instead, they act as repeaters, relaying signals to and from the ground station or to and from satellites or spacecraft. No user signal processing is done aboard the TDRSs.

A second TDRS ground terminal is being built at White Sands approximately 3 miles north of the initial ground station. The $18.5-million facility will back up the existing facility and meet the growing communication needs of the 1990s.

When the TDRSS is fully operational, ground stations of the worldwide STDN will be closed or consolidated, resulting in savings in personnel and operating and maintenance costs. However, the Merritt Island, Fla.; Ponce de Leon, Fla.; and Bermuda ground stations will remain open to support the launch of the space transportation system and the landing of the space shuttle at the Kennedy Space Center in Florida.

Deep-space probes and Earth-orbiting satellites above approximately 3,100 miles will use the three ground stations of the deep-space network, operated for NASA by the Jet Propulsion Laboratory, Pasadena, Calif. The deep-space network stations are in Goldstone, Calif.; Madrid, Spain; and Canberra, Australia.

During the lift-off and ascent phase of a space shuttle mission launched from the Kennedy Space Center, the space shuttle S-band system is used in a high-data-rate mode to transmit and receive through the Merritt Island, Ponce de Leon and Bermuda STDN tracking stations. When the shuttle leaves the line-of-sight tracking station at Bermuda, its S-band system transmits and receives through the TDRSS. (There are two communication systems used in communicating between the space shuttle and the ground. One is referred to as the S-band system; the other, the Ku-band, or K-band, system.)

To date, the TDRSs are the largest privately owned telecommunication satellites ever built. Each satellite weighs nearly 5,000 pounds in orbit. The TDRSs will be deployed from the space

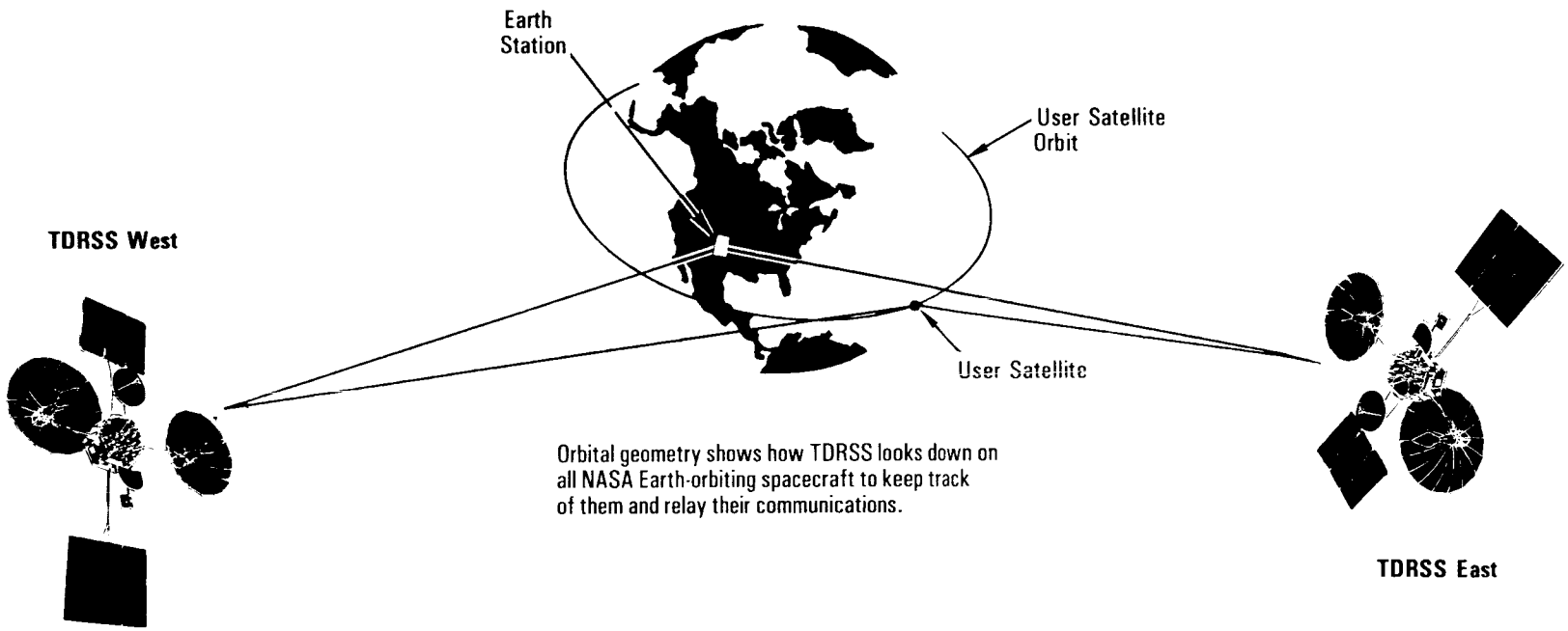




*Tracking and Data Relay Satellite System*

shuttle at an altitude of approximately 160 nautical miles, and inertial upper stage boosters will propel them to geosynchronous orbit.

The TDRS single-access parabolic antennas deploy after the satellite separates from the IUS. After the TDRS acquires the sun and Earth, its sensors provide attitude and velocity control to achieve the final geostationary position.

Three-axis stabilization aboard the TDRS maintains attitude control. Body-fixed momentum wheels in a vee configuration combine with body-fixed antennas pointing constantly at Earth, while the satellite's solar arrays track the sun. Monopropellant hydrazine thrusters are used for TDRS positioning and north-south, east-west stationkeeping.

The antenna module houses four antennas. For single-access services, each TDRS has two dual-feed S-band/Ku-band deployable parabolic antennas. They are 16 feet in diameter, unfurl like a giant umbrella when deployed, and are attached on two axes that can move horizontally or vertically (gimbal) to focus the beam on satellites or spacecraft below. Their primary function is to relay communications to and from user satellites or spacecraft. The high-bit-rate service made possible by these antennas is available to users on a time-shared basis. Each antenna simultaneously supports two user satellites or spacecraft (one on S-band and one on Ku-band) if both users are within the antenna's bandwidth.

The antenna's primary reflector surface is a gold-clad molybdenum wire mesh, woven like cloth on the same type of machine used to make material for women's hosiery. When deployed, the

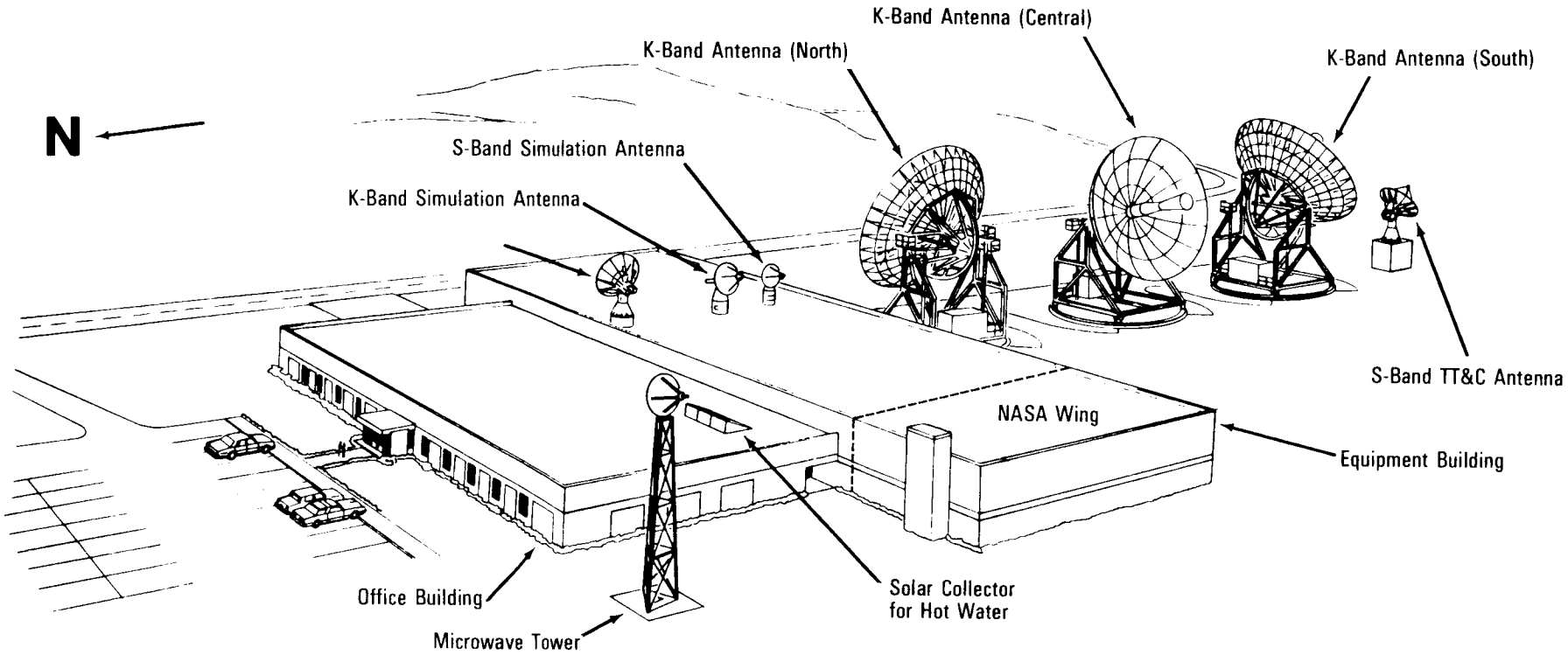


*Tracking and Data Relay Satellite System Ground Station, White Sands, N.M.*

antenna's 203 square feet of mesh are stretched tautly on 16 supporting tubular ribs by fine threadlike quartz cords. The antenna looks like a glittering metallic spiderweb. The entire antenna structure, including the ribs, reflector surface, a dual-frequency antenna feed and the deployment mechanisms needed to fold and unfold the structure like a parasol, weighs approximately 50 pounds.

For multiple-access service, the multielement S-band phased array of 30 helix antennas on each satellite is mounted on the satellite's body. The multiple-access forward link (between the TDRS and the user satellite or spacecraft) transmits command data to the user satellite or spacecraft, and the return link sends the signal outputs separately from the array elements to the WSGT's parallel processors. Signals from each helix antenna are received at the same frequency, frequency-division-multiplexed into a single composite signal and transmitted to the ground. In the ground equipment, the signal is demultiplexed and distributed to 20 sets of beam-forming equipment that discriminates among the 30 signals to select the signals of individual users. The multiple-access system uses 12 of the 30 helix antennas on each TDRS to form a transmit beam.

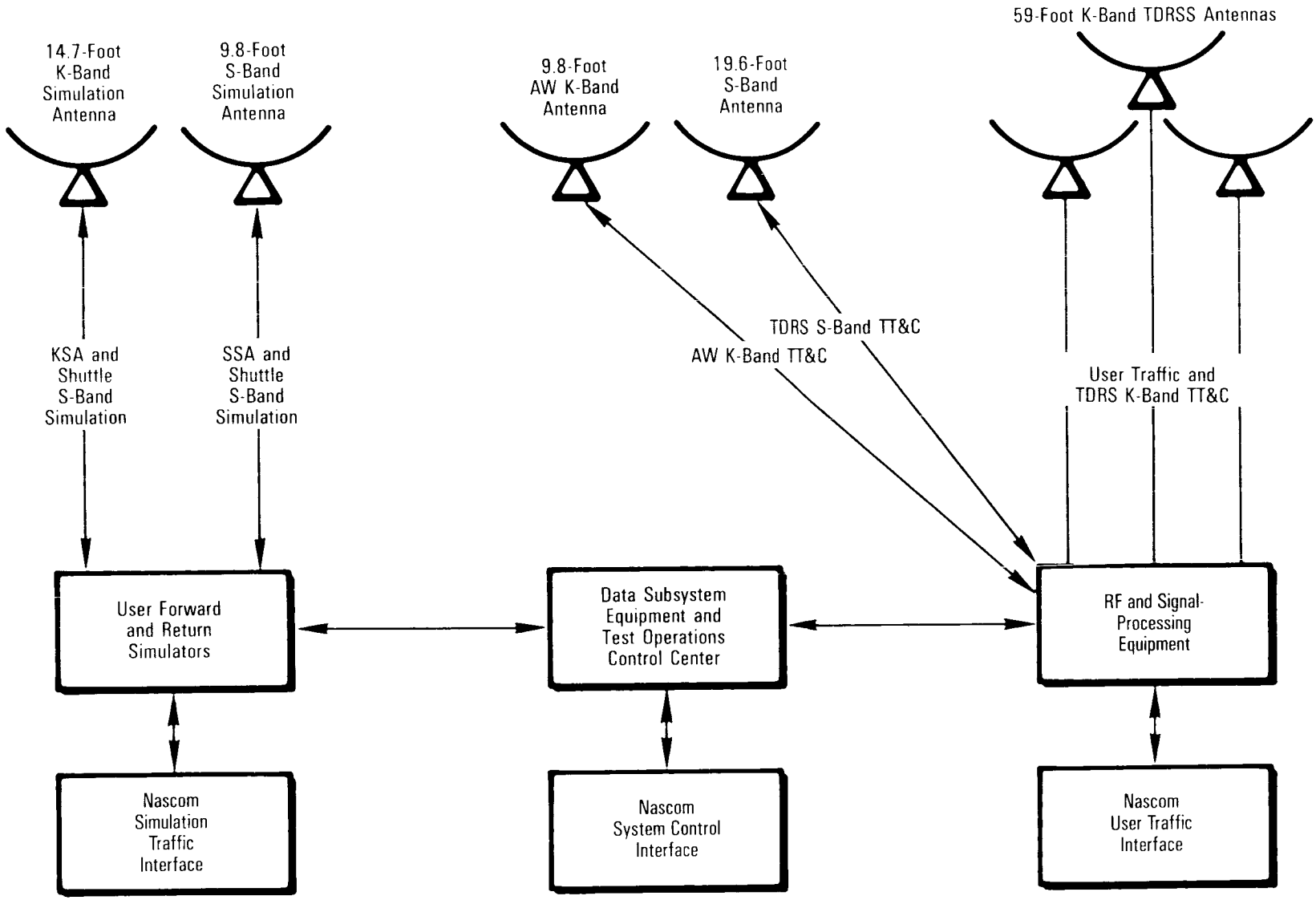


*Tracking and Data Relay Satellite System Antenna*

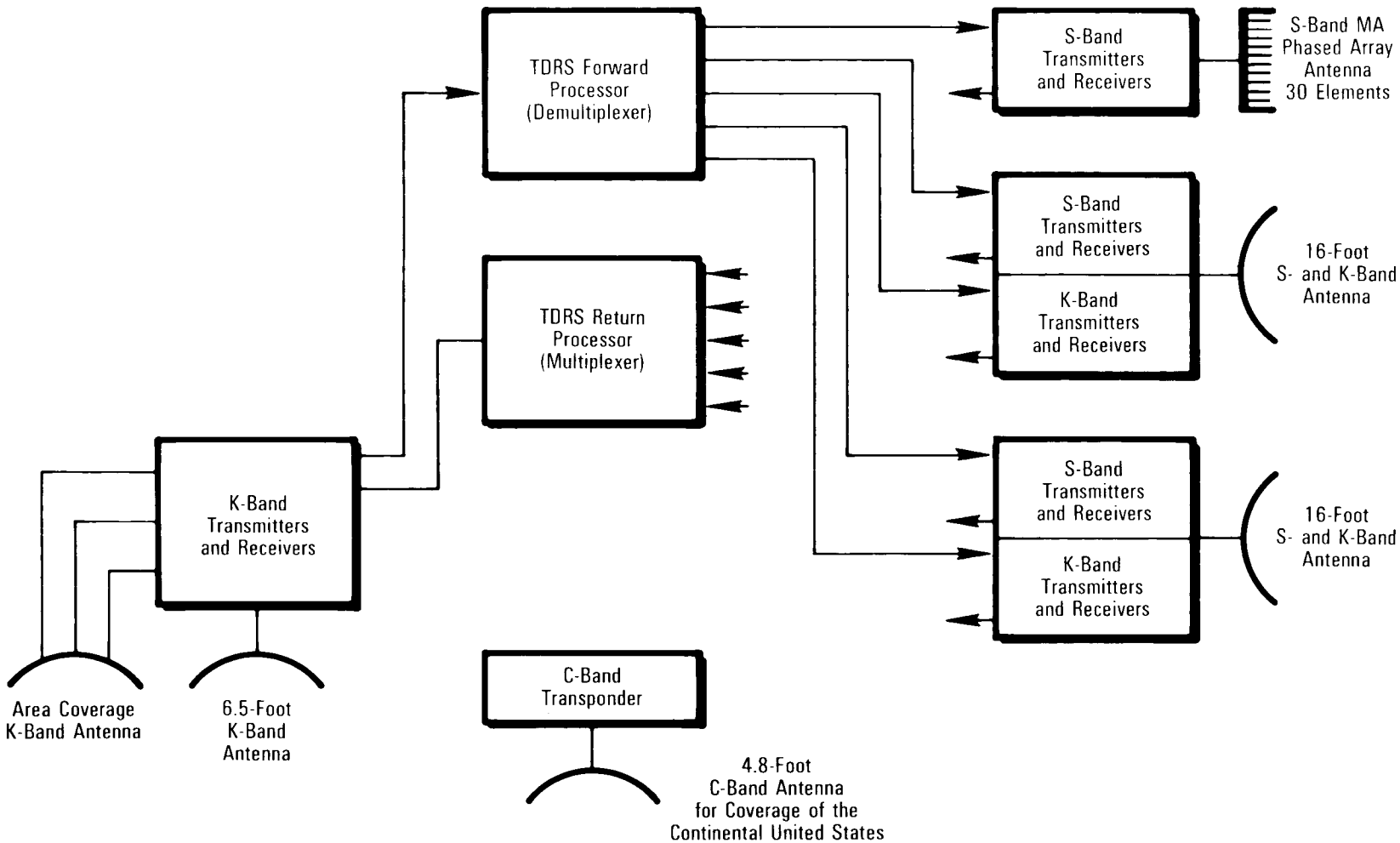


*Tracking and Data Relay Satellite System Transmission and Receive System*

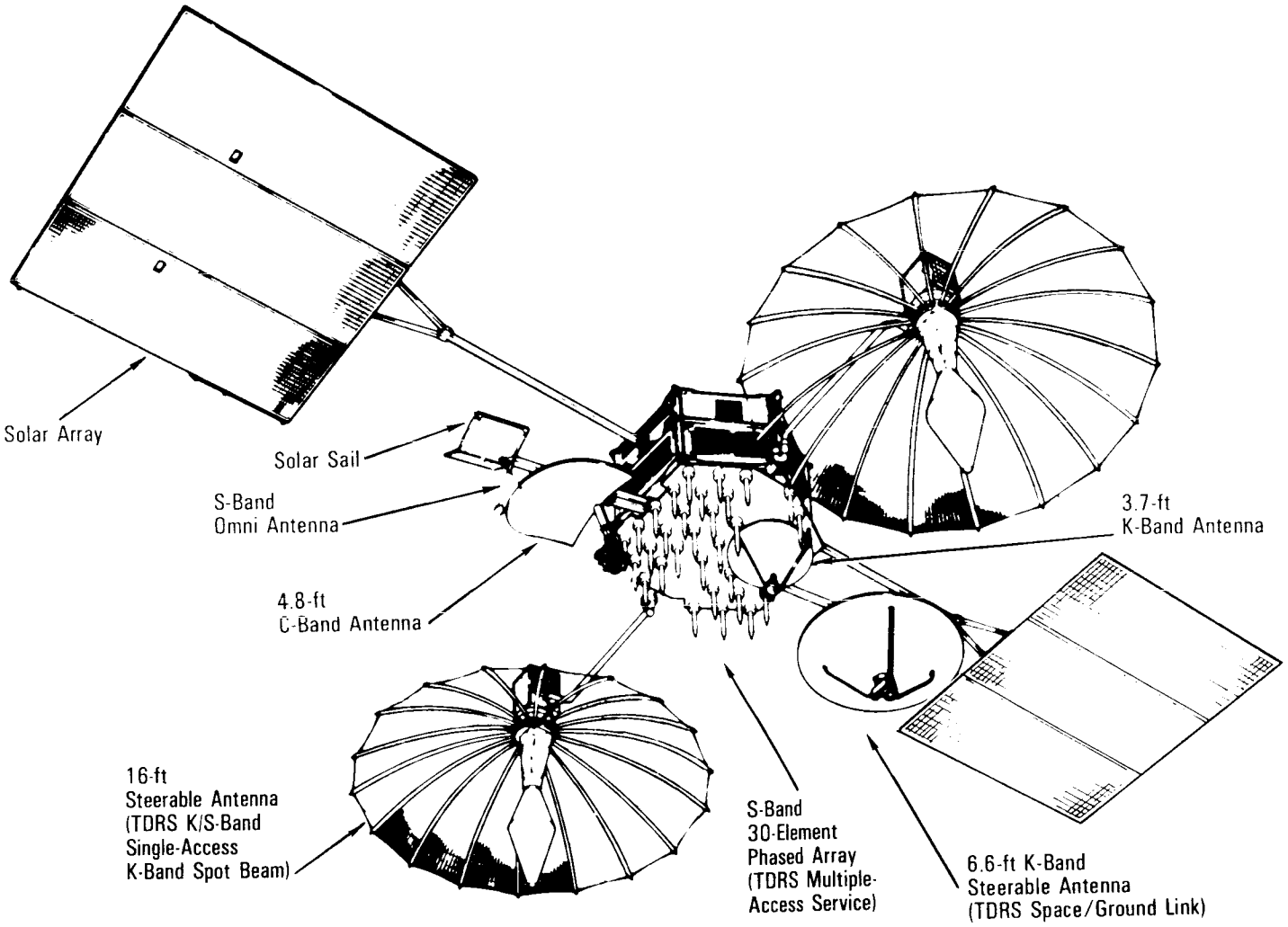


*TDRS Satellite*

A 6.6-foot parabolic reflector is the space-to-ground-link antenna that communicates all data and tracking information to and from the ground terminal on Ku-band. The omni telemetry, tracking and communication antenna is used to control TDRS while it is in transfer orbit to geosynchronous altitude.

The solar arrays on each satellite, when deployed, span more than 57 feet from tip to tip. The two single-access, high-gain parabolic antennas, when deployed, measure 16 feet in diameter and span 42 feet from tip to tip.

Each TDRS is composed of three distinct modules: the equipment module, the communication payload module and the antenna module. The modular structure reduces the cost of individual design and construction.

The equipment module housing the subsystems that operate the satellite and the communication service is located in the lower hexagon of the satellite. The attitude control subsystem stabilizes the satellite so that the antennas are properly oriented toward the Earth and the solar panels are facing toward the sun. The electrical power subsystem consists of two solar panels that provide approximately 1,850 watts of power for 10 years. Nickel-cadmium rechargeable batteries supply full power when the satellite is in the shadow of the Earth. The thermal control subsystem consists of surface coatings and controlled electric heaters. The solar sail compensates for the effects of solar winds against the asymmetrical body of the TDRS.

The communication payload module on each satellite contains electronic equipment and associated antennas required for linking the user spacecraft or satellite with the ground terminal. The receivers and transmitters are mounted in compartments on the back of the single-access antennas to reduce complexity and possible circuit losses.

TDRS-A and its IUS were carried aboard the space shuttle Challenger on the April 1983 STS-6 mission. After it was deployed on April 4, 1983, and first-stage boost of the IUS solid rocket motor was completed, the second-stage IUS motor malfunctioned and TDRS-A was left in an egg-shaped orbit 13,579 by 21,980 statute miles—far short of the planned 22,300-mile geosynchronous altitude. Also, TDRS-A was spinning out of control at a rate of 30 revolutions per minute until the Contel/TRW flight control team recovered control and stabilized it.

Later Contel, TRW and NASA TDRS program officials devised a procedure for using the small (1-pound) hydrazine-fueled reaction control system thrusters on TDRS-A to raise its orbit. The thrusting, which began on June 6, 1983, required 39 maneuvers to raise TDRS-A to geosynchronous orbit. The maneuvers consumed approximately 900 pounds of the satellite's propellant, leaving approximately 500 pounds of hydrazine for the 10-year on-orbit operations.

During the maneuvers, overheating caused the loss of one of the redundant banks of 12 thrusters and one thruster in the other bank. The flight control team developed procedures to control TDRS-A properly in spite of the thruster failures.

TDRS-A was turned on for testing on July 6, 1983. Tests proceeded without incident until October 1983, when one of the Ku-band single-access-link diplexers failed. Shortly afterward, one of the Ku-band traveling-wave-tube amplifiers on the same single-access antenna failed, and the forward link service was lost. On November 19, 1983, one of the Ku-band TWT amplifiers serving the other single-access antenna failed. TDRS-A testing was completed in December 1984. Although the satellite can provide only one Ku-band single-access forward link, it is still functioning.

TDRS-B, C and D are identical to TDRS-A except for modifications to correct the malfunctions that occurred in TDRS-A and a modification of the C-band antenna feeds. The C-band minor modification was made to improve coverage for providing government point-to-point communications. TDRS-B was lost on the 51-L mission.

The mission plan for TDRS-C is similar to that originally planned for TDRS-A. Backup project operations control centers have been added at TRW and at the TDRS Launch/Deployment

*Tracking and Data Relay Satellite Mating With Inertial Upper Stage*

Control Center in White Sands. These facilities will improve the reliability of control operations and the simultaneous control of TDRS-A in mission support and of TDRS-C during launch and deployment operations.

TDRS-C and its IUS are to be deployed from the space shuttle orbiter. Approximately 60 minutes later, the IUS first-stage solid rocket motor is scheduled to ignite. This will be followed by five maneuvers to allow monitoring of TDRS-C telemetry.

After the IUS second-stage thrusting is completed, the TDRSS mission team at White Sands will command deployment of the TDRS-C solar arrays, the space-ground link antenna and the C-band antenna while the TDRS is still attached to the IUS. Upon separation of the IUS from TDRS-C, the 16-foot-diameter single-access antennas will be deployed, unfurled and oriented toward Earth. Nominal deployment will place TDRS-C at 178 degrees west longitude.

Testing of TDRS-C will be initiated; and after initial check-out, TDRS-C will drift westward to its operational location at 171 degrees west longitude, southwest of Hawaii, where it will be referred to as TDRS-West. Operational testing will continue to verify the full-system capability with two operating satellites. On completion of this testing, about three to five months after the launch of TDRS-C, the TDRSS, for the first time, will provide its full-coverage capability in support of NASA space missions.

TDRS-D, identical to TDRS-C, will take the place of TDRS-A at 41 degrees west longitude above the equator, over the northeast corner of Brazil, and will be referred to as TDRS-East. TDRS-A will then be relocated, probably 79 degrees west longitude above the equator, over central South America, and will be maintained as an on-orbit spare.

These three satellites will make up the space segment of the TDRS system. The on-orbit spare, available for use if one of the operational satellites malfunctions, will augment system capabilities during peak periods. The two remaining satellites will be available as flight-ready spares.

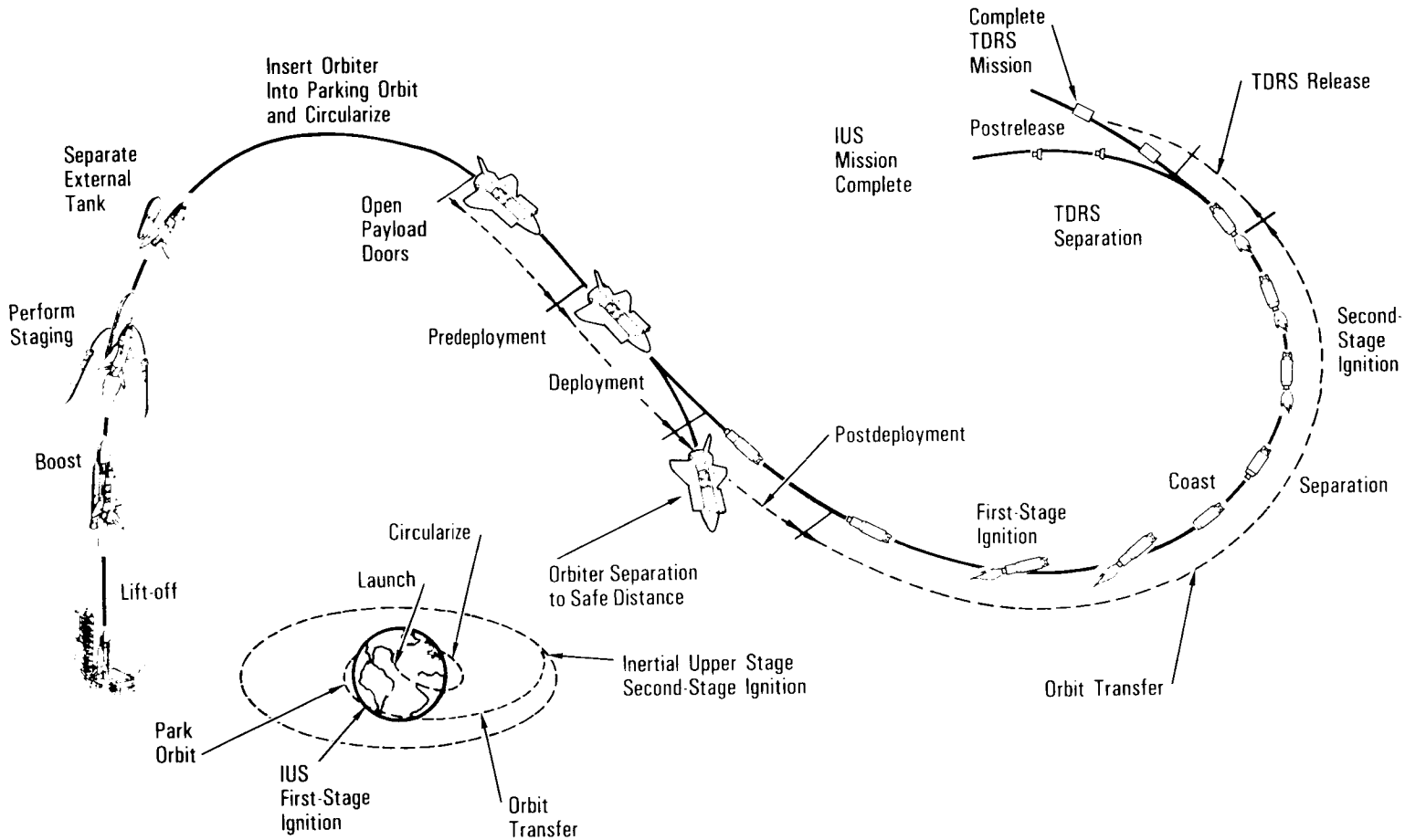


*Sequence of Events for Typical Geosynchronous Mission*

The failure of TDRS-A's Ku-band forward link prohibits the operation of the text and graphics system that it is desired be placed on board all space shuttle orbiters. TAGS is a high-resolution facsimile system that scans text or graphic material and converts the analog scan data into serial digital data. It provides on-orbit capability to transmit text material, maps, schematics and photographs to the spacecraft through a two-way Ku-band link through the TDRSS. This is basically a hard-copy machine that operates by telemetry.

Until there is a dual TDRS capability, a teleprinter must be used on orbit to receive and reproduce text only (such as procedures, weather data and crew activity plan updates or changes) from the Mission Control Center. The teleprinter uses S-band and is not dependent on the TDRSS Ku-band.

When the space shuttle orbiter is on orbit and its payload bay doors are opened, the space shuttle orbiter Ku-band antenna, stowed on the right side of the forward portion of the payload bay, is deployed. One drawback of the Ku-band system is its narrow pencil beam, which makes it difficult for the TDRS antennas to lock on to the signal. Because the S-band system has a larger beamwidth, the orbiter uses it first to lock the Ku-band antenna into position. Once this has occurred, the Ku-band signal is turned on.

The Ku-band system provides a much higher gain signal with a smaller antenna than the S-band system. The orbiter's Ku-band antenna is gimbaled so that it can acquire the TDRS. Upon communication acquisition, if the TDRS is not detected within the first 8 degrees of spiral conical scan, the search is automatically expanded to 20 degrees. The entire TDRS search requires approximately three minutes. The scanning stops when an increase in the received signal is sensed. The orbiter Ku-band system and antenna then transmits and receives through the TDRS in view.

At times, the orbiter may block its Ku-band antenna's view to the TDRS because of attitude requirements or certain payloads that cannot withstand Ku-band radiation from the main beam of the orbiter's antenna. The main beam of the Ku-band antenna produces 340 volts per meter, which decreases in distance from the antenna—e.g., 200 volts per meter 65 feet away from the antenna. A program can be instituted in the orbiter's Ku-band antenna control system to limit the azimuth and elevation angle, which inhibits direction of the beam toward areas of certain onboard payloads. This area is referred to as an obscuration zone. In other cases, such as deployment of a satellite from the orbiter payload bay, the Ku-band system is turned off temporarily.

When the orbital mission is completed, the orbiter's payload bay doors must be closed for entry; therefore, its Ku-band antenna must be stowed. If the antenna cannot be stowed, provisions are incorporated to jettison the assembly from the spacecraft so that the payload bay doors can be closed for entry. The orbiter can then transmit and receive through the S-band system, the TDRS in view and the TDRS system. After the communications blackout during entry, the space shuttle again operates in S-band through the TDRS system in the low- or high-data-rate mode as long as it can view the TDRS until it reaches the S-band landing site ground station.



**ORBITER COMMUNICATIONS.** The space shuttle orbiter communication system transfers telemetry information about orbiter operating conditions and configurations, systems and payloads; commands to the orbiter systems to make them perform some function or configuration change; documentation from the ground that is printed out on the orbiter's teleprinter or text and graphics system; and voice communications among the flight crew members and between the fight crew and ground.

This information is transferred through hardline and radio frequency links. Hardline refers to wires that connect communicating devices, and RF refers to radio signals. RF communication takes place directly with the ground or through the TDRS.

Direct communication takes place through Air Force Satellite Control Facility remote tracking station sites, also known as space-ground link system ground stations, for military missions or through STDN ground stations for NASA missions. Direct signals

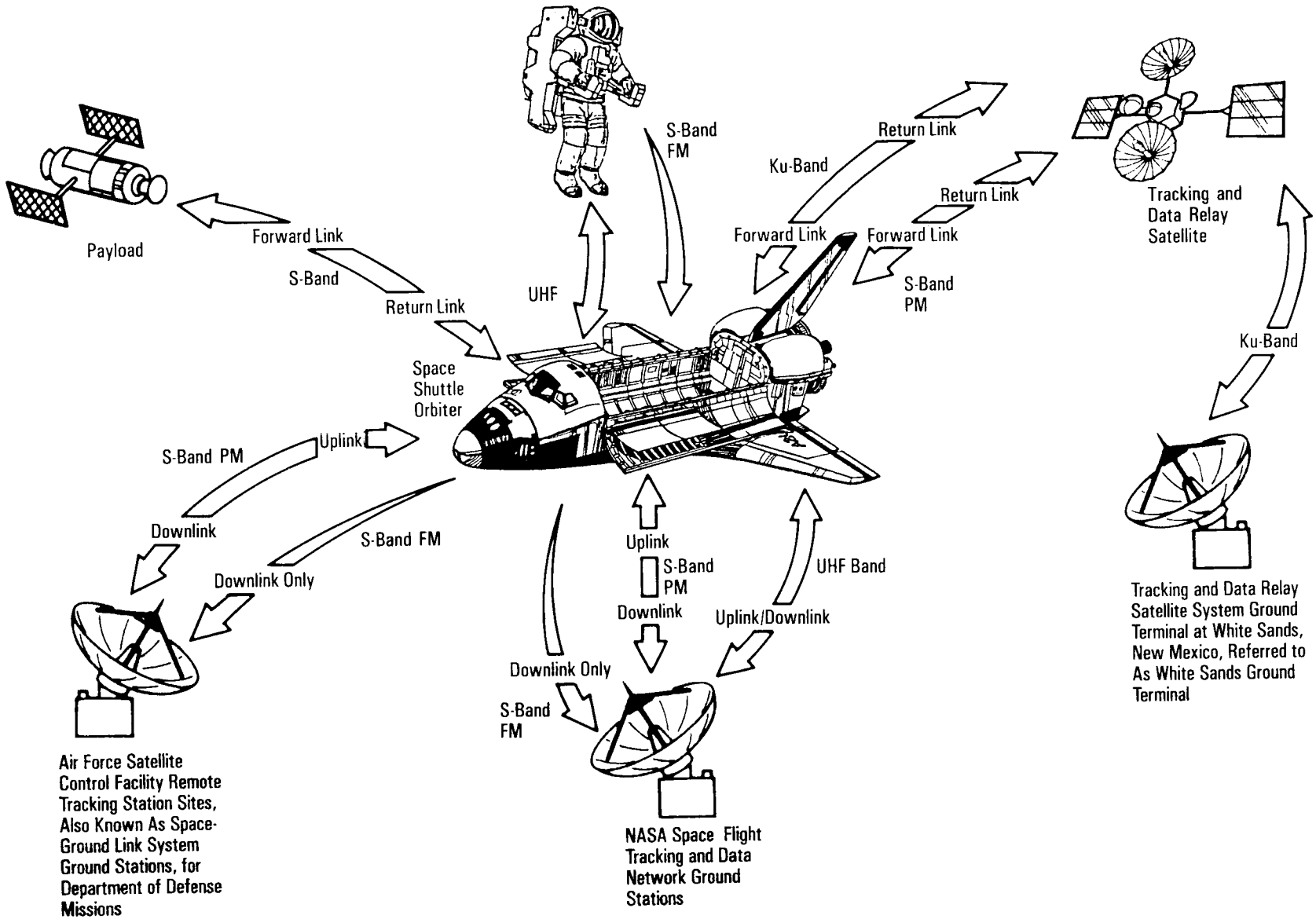


*Space Shuttle Orbiter Radio Frequency Links*

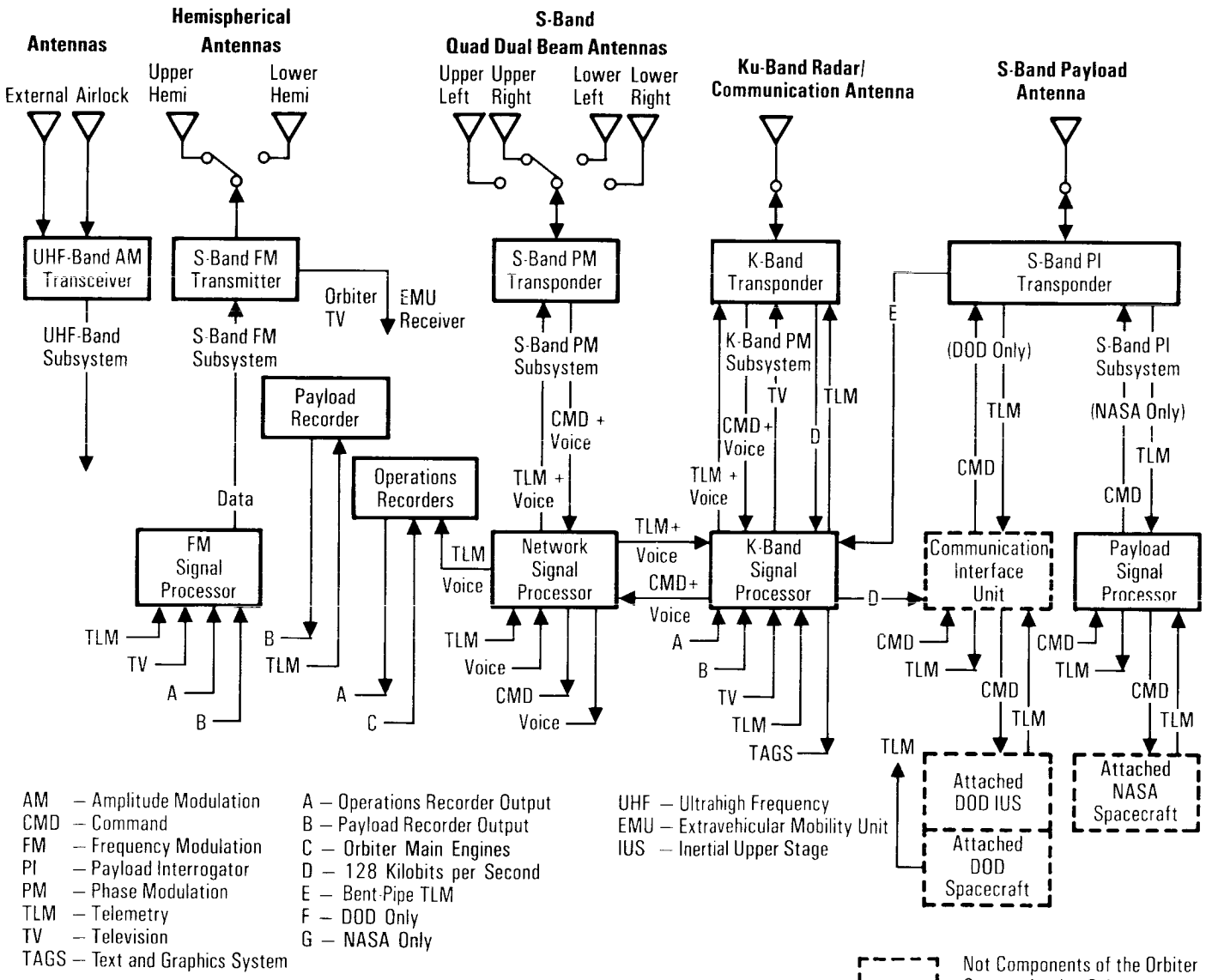


*Radio Frequency and Signal Processor*

from the ground to the orbiter are referred to as uplinks, and signals from the orbiter to the ground are called downlinks.

TDRS communication takes place through the White Sands Ground Terminal. These indirect signals from the TDRS to the orbiter are referred to as forward links, and the signal from the orbiter to the TDRS is called the return link. Communication with a detached payload from the orbiter is also referred to as FL, and RL is the signal from the payload to the orbiter.

The orbiter communication system is divided into several smaller systems to facilitate information transfer: S-band frequency modulation, S-band phase modulation, Ku-band ultrahigh frequency, payload communications, audio and closed-circuit television.

The S-band FM, S-band PM, Ku-band and UHF systems are used to transfer information between the orbiter and the ground on RF signals in their frequency bands. The payload communication system is used to transfer information between the orbiter and its payloads either through hardline or RF links. The audio systems transfer voice communications throughout the orbiter, and the CCTV system is used for visually monitoring and recording activities. Communication security equipment aboard the orbiters provides the capability for encryption and decryption of operational data.

**S-Band System**. The shuttle orbiter S-band system operates in the S-band portion of the RF spectrum of 1,700 to 2,300 MHz.

S-Band Phase Modulation. The S-band PM system is used to transmit information to or receive information from the ground. This system can communicate either directly between the orbiter and ground or through the TDRS, FL or RL.

The S-band forward link (previously referred to as uplink) is phase modulated on a center carrier frequency of either 2,106.4 MHz (primary) or 2,041.9 MHz (secondary) for NASA and operates through the STDN or TDRS. The two S-band forward link frequencies would prevent interference if two orbiters were in operation at the same time, since one orbiter could select the high frequency and the other could select the low frequency.

The S-band return link (previously referred to as downlink) is phase modulated on a center carrier frequency of 2,287.5 MHz (primary) or 2,217.5 MHz (secondary) for NASA and operates through the STDN or TDRS. The two S-band return link frequencies also would prevent interference if two orbiters were in operation at the same. One orbiter could operate on the forward link high frequency of 2,106.4 MHz (primary) and a return link high frequency of 2,287.5 MHz (primary) through the STDN or TDRS, and the other could operate on the forward link low frequency of 2,041.9 MHz (secondary) and a return link low frequency of 2,217.5 MHz (secondary) through the STDN or TDRS.

The Department of Defense S-band forward link is phase modulated on a center carrier frequency of either 1,831.8 MHz (primary) or 1,775.5 MHz (secondary) from the Air Force Satellite Control Facility through its own ground stations and does not operate through the TDRS because the S-band power amplifiers are not powered in the AFSCF mode. The two S-band forward link frequencies would prevent interference if two orbiters were in operation at the same time; one orbiter could select the high frequency and the other could select the low frequency.

The Department of Defense S-band return link is phase modulated on a center carrier frequency of 2,287.5 MHz (primary) or 2,217.5 MHz (secondary) through the Air Force ground stations to the AFSCF and does not operate through the TDRS because the S-band power amplifiers are not powered in the AFSCF mode. The two S-band return link frequencies also would prevent interference if two orbiters were in operation at the same time. One orbiter could operate on the forward link high frequency of 1,831.8 MHz (primary) and a return link of 2,287.5 MHz (primary) from the AFSCF and its ground stations, and the other orbiter could operate on the forward link of 1,775.5 MHz (secondary) and a return link of 2,217.5 MHz (secondary) through the Air Force ground stations and the AFSCF.

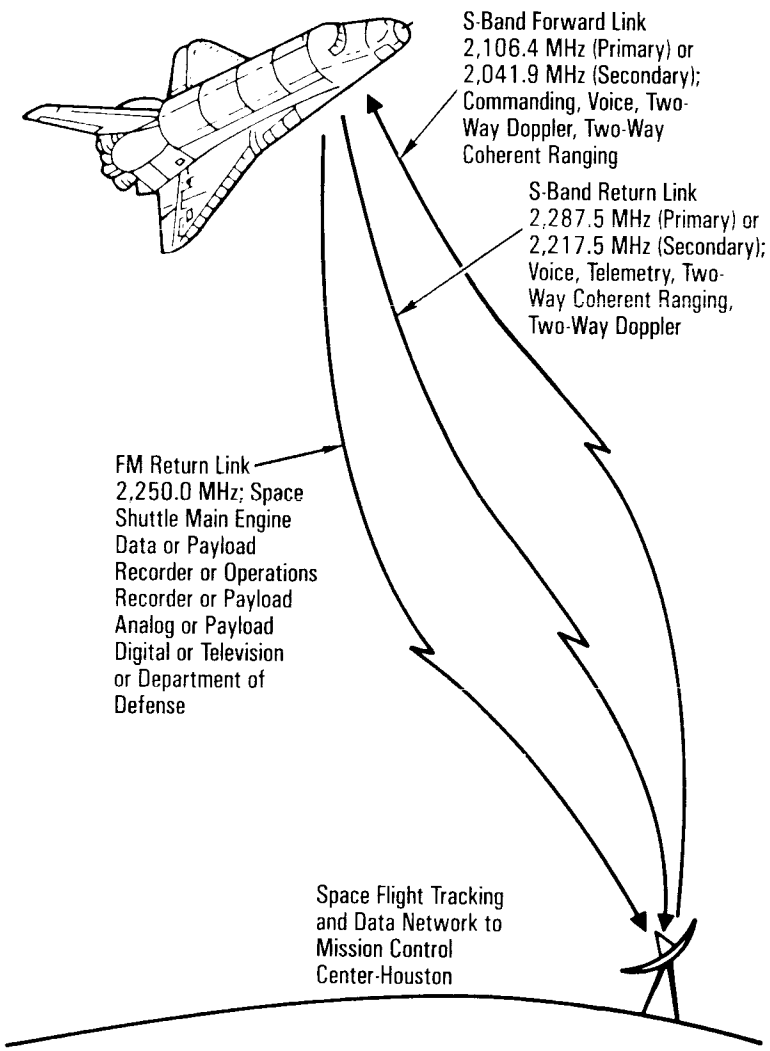


*NASA S-Band Communications With Space Flight Tracking and Data Acquisition Network*

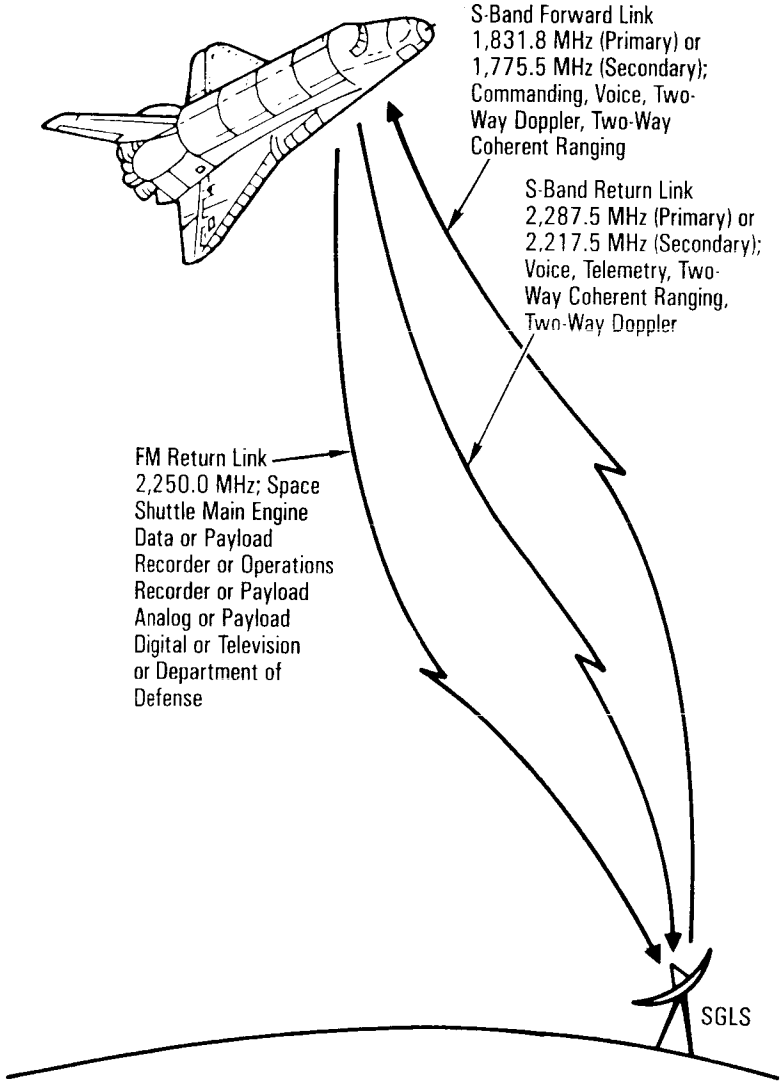


*Department of Defense S-Band Communications With Air Force Satellite Control Facility Remote Tracking Station Sites, Also Known as Space-Ground Link System*

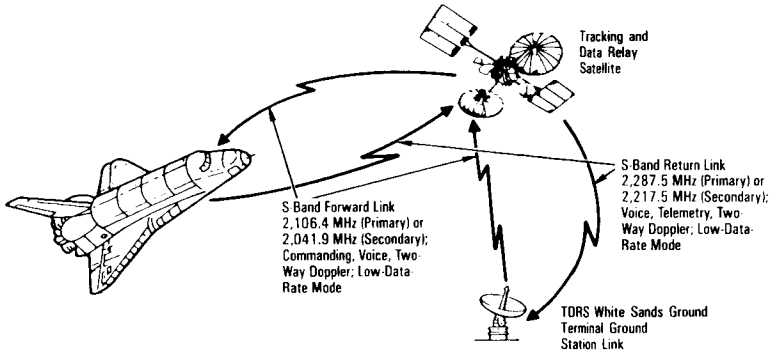


*NASA S-Band Communications With TDRSS and WSGT to Mission Control Center-Houston*

The S-band PM forward link originates from MCC-H through the NASA STDN ground stations used for launch, lift-off, ascent or landing or through the WSGT via the TDRS system to the orbiter. The DOD S-band PM forward link originates from the AFSCF through its own ground stations to the space shuttle. NASA and the Department of Defense AFSCF have a choice of two forward link frequencies for data transfer, but both frequencies cannot be used at the same time.

The S-band PM forward link transfers a high data rate of 72 kilobits per second, consisting of two air-to-ground voice channels at 32 kbps each and one command channel at 8 kbps, two-way Doppler and two-way tone ranging.

The S-band PM forward link transfers a low data rate of 32 kbps, consisting of one air-to-ground voice channel at 24 kbps and one command channel of 8 kbps, two-way Doppler and two-way ranging. The two-way ranging does not operate through the TDRS.

The S-band PM return link can originate from one of two S-band PM transponders aboard the orbiter. Each transponder can return link on a frequency 2,287.5 MHz (primary) or 2,217.5 MHz (secondary), but not both at the same time. The S-band return link from the orbiter transmits the data through the NASA STDN ground stations used for launch, lift-off, ascent or landing or through the TDRS and TDRS system via the WSGT to the MCC-H. The DOD S-band return link from the orbiter transmits the data through the Air Force ground stations to the AFSCF.

The S-band return link high data rate of 192 kbps consists of two air-to-ground voice channels at 32 kbps each and one telemetry link of 128 kbps, two-way Doppler and two-way ranging. In the high-data-rate mode, incoming signals are directed to a preamplifier before they reach the transponder, and outgoing signals go to the preamplifier after leaving the transponder. The two-way Doppler and two-way ranging are operative only when in view of the NASA STDN ground stations at launch, lift-off, ascent or landing or in view of the Department of Defense AFSCF ground stations. The two-way ranging does not operate with the TDRSS.

The S-band return link low data rate consists of one air-to-ground voice channel at 32 kbps and one telemetry link at 64 kbps, two-way Doppler and two-way ranging. In the low-data-rate mode, incoming signals flow directly to the transponder, and outgoing signals go directly to the S-band antenna switch without amplification. As noted, the two-way Doppler and two-way ranging are used in the same manner as in the high-data-rate mode.

Four quadrant S-band PM antennas are located on the forward fuselage outer skin of the space shuttle approximately 90 degrees apart. The antennas are covered with a reusable thermal protection system. In the orbiter, on the flight deck viewed through the forward windows, the quadrant antennas are to the upper right, lower right, lower left and upper left. These antennas are the radiating elements for transmitting the S-band PM return link and for receiving the S-band PM forward link. Each quad antenna is a dual-beam unit that can look forward or aft for both transmission and reception without any physical movement. The orbiter S-band PM antenna switch assembly performs the signal switching among the two S-band transponders and any one of the four quadrant antennas. The proper antenna to be used is selected automatically, under onboard SM computer control, by real-time

command from the ground or manually by the flight crew from the displays and controls on the spacecraft flight deck panel C3 with the *S-band PM antenna* rotary switch on panel C3 in *GPC*. The antenna selection is based on the computed line of sight to the NASA STDN ground station used for launch, lift-off, ascent or landing; the AFSCF ground station; or the TDRS in view. The antenna switching commands are sent to the switch assembly through the payload multiplexers/demultiplexers.

GPC control can be inhibited to permit ground control to select an antenna other than the one currently selected by the GPC. The ground sends a real-time command to inhibit GPC control and then a second RTC to select the desired antenna. GPC control is restored by sending an RTC to enable the GPC mode. The eight antenna beam position selections available are upper left forward or aft, upper right forward or aft, lower right forward or aft, and lower left forward or aft.

Two identical S-band PM transponders in the orbiter function as a multipurpose, multimode transmitter/receiver. The transponder can simultaneously transmit/receive, transmit only or receive only. Only one transponder operates at one time; the other transponder is a redundant backup. The selected transponder transfers the forward link commands and voice to the network signal processor and receives the return link telemetry and voice from the NSP. The transponders may be cross-strapped. Transponder 1 or 2 may be used with network signal processor 1 or 2. The radio frequency sections of either transponder can be used with either preamplifier and power amplifier 1 or 2.

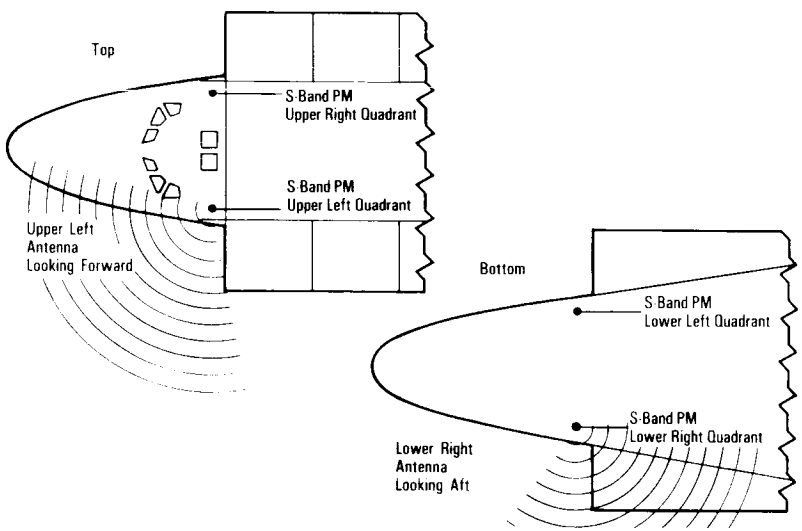


*S-Band Phase Modulation System Antenna Locations*

The dual S-band preamplifier, used in the TDRS mode for amplification, is required full-time for the FL radio frequency because of the much greater distance and, consequently, greater radio frequency loss from the TDRS to the orbiter (minimum of about 22,300 miles) than from the STDN to the orbiter (typically, slant ranges are in the low hundreds of miles). The preamplifier is not used in the AFSCF mode. One of the two units is used at a time, and the output of either unit can be cross-strapped to feed either transponder.



The selected transponders also provide a coherent turnaround of the PM forward link and PM return two-way Doppler and two-way tone ranging signals. The two-way Doppler and two-way ranging signals are operative when the orbiter is in view of the NASA STDN ground stations at launch, lift-off, ascent or landing or the AFSCF ground stations. The two-way Doppler operates through the TDRS, but the two-way ranging does not.

Two-way Doppler is used by ground stations to track the orbiter. The S-band PM forward link and PM return link are directly proportional to the forward link frequency (two-way Doppler). The S-band transponder provides a coherent turnaround of the forward link carrier frequency necessary for the two-way Doppler data. The transponder operates only when in view of the NASA STDN ground stations during launch, lift-off, ascent or landing or in view of the AFSCF ground stations. By measuring the forward link and using return link frequencies expected from the orbiter, the ground tracking station can measure the double Doppler shift that takes place and can calculate the radial velocity (range rate) of the orbiter with respect to the ground

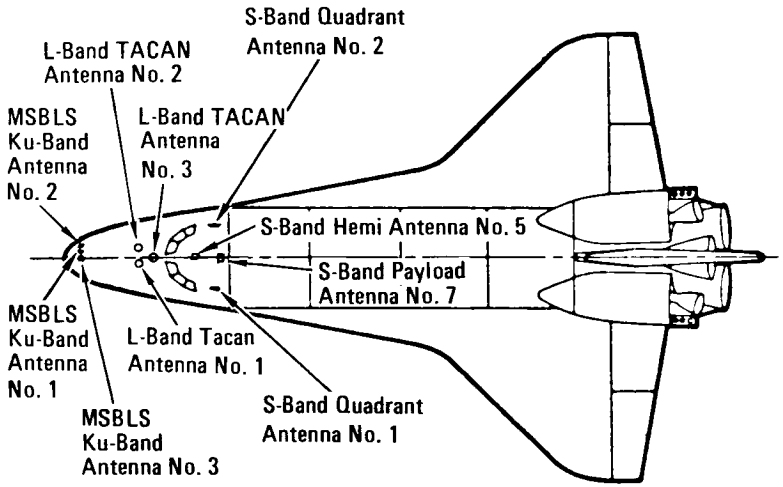


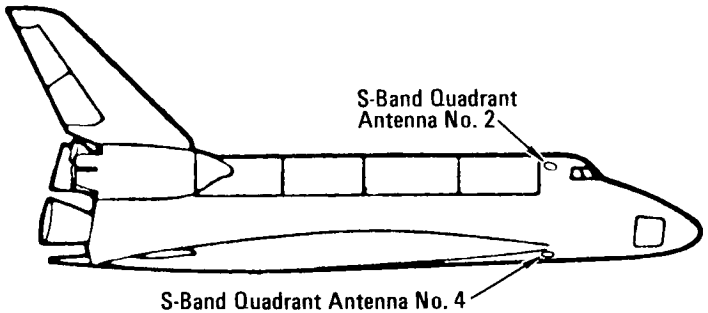




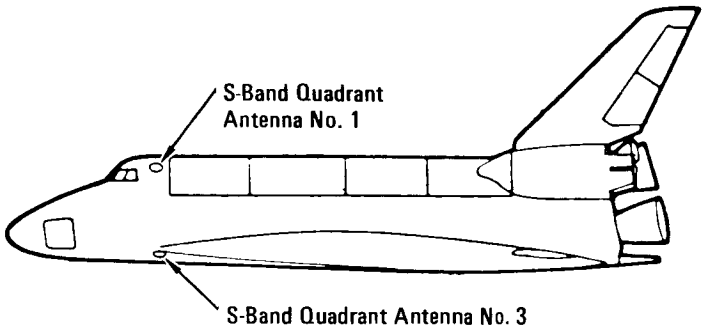


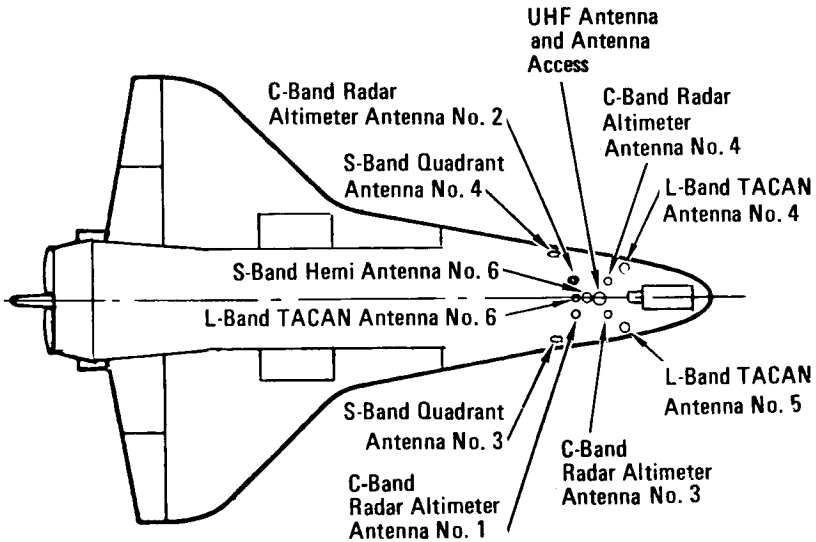


*Orbiter Antennas*

ACCU — Audio Central Control Unit
CCTV — Closed-Circuit Television
CIU — Communication Interface Unit
DL — Downlink
FF — Forward Flight
FL — Forward Link
FM — Frequency Modulation
GCILC — Ground Command Interface
— Logic Controller
GPC — General-Purpose Computer
MDM — Multiplexer/Demultiplexer
PCMMU — Pulse Code Modulation Master Unit
PF — Payload Forward
PI — Payload Interrogator
PM — Phase Modulation
RF — Radio Frequency
RL — Return Link
TAGS — Text and Graphics System
TLM — Telemetry
UL — Uplink

Note:
S-Band Operation With Power Amplifier Is 138 Watts; Without Power Amplifier, 5 Watts.

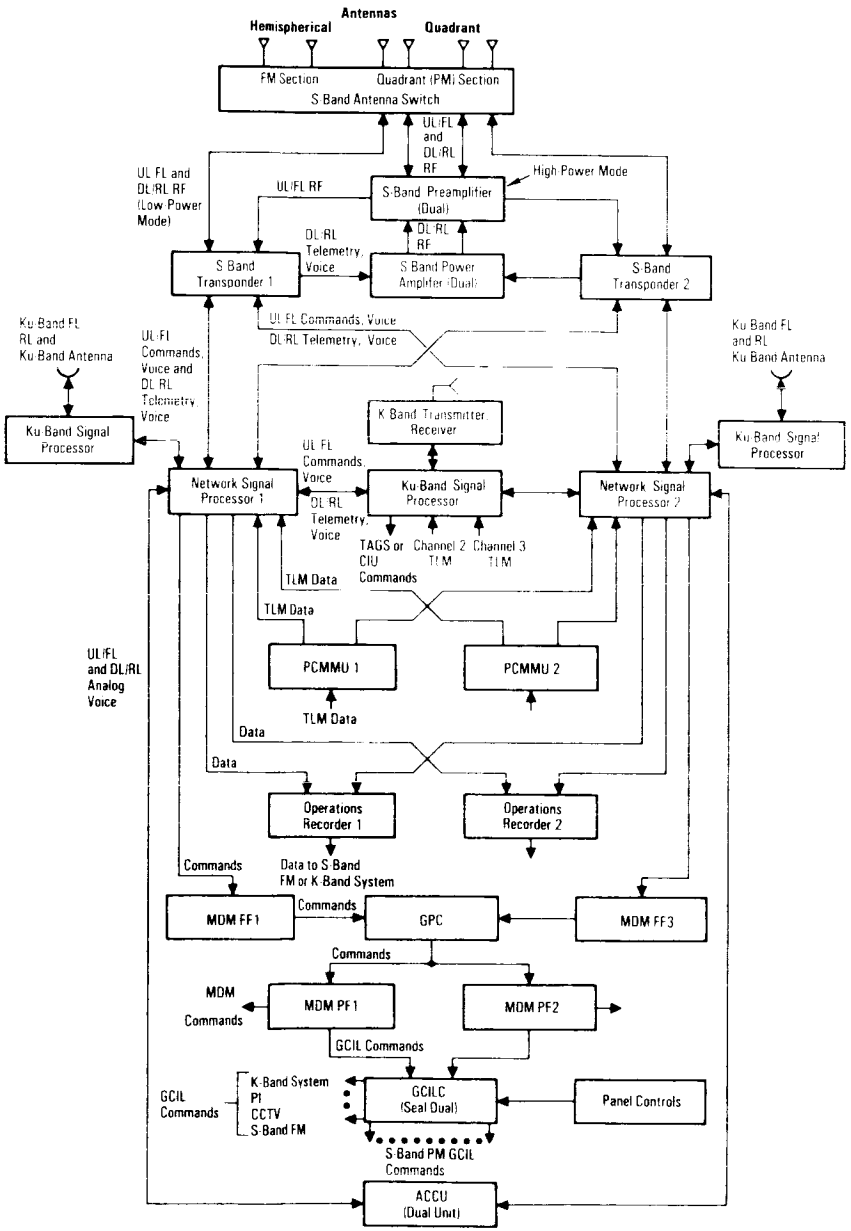


*Ku-Band and S-Band System*

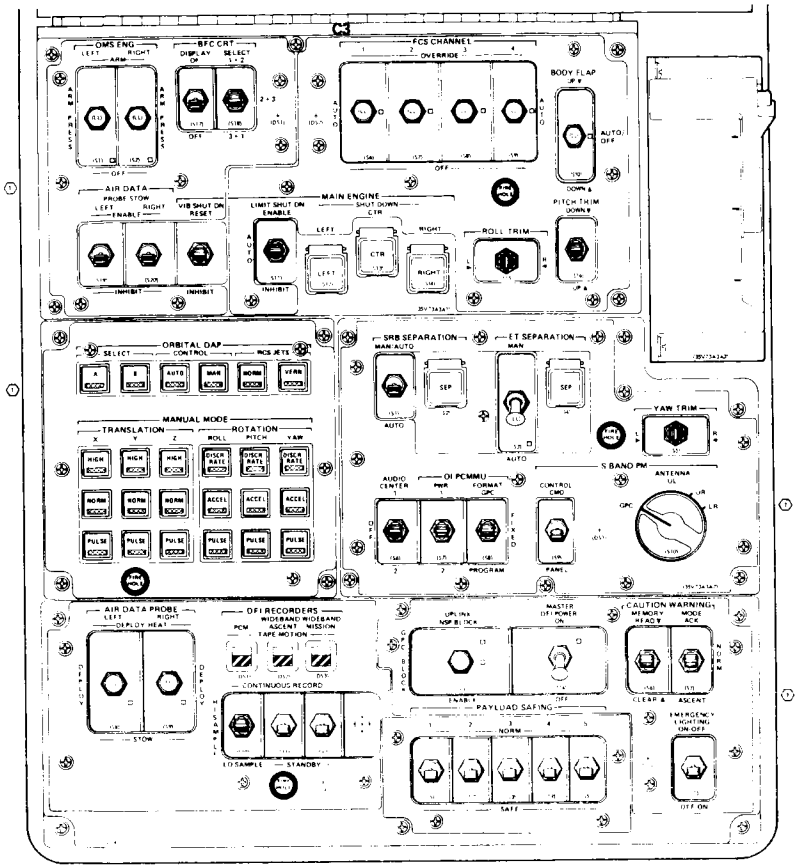


*Panel C3*

station. Because these links are PM, the S-band carrier center frequency is not affected by the modulating wave. It would be impossible to obtain valid Doppler data of the S-band carrier center frequency if it were affected by the modulating technique.

The S-band transponder also provides a subcarrier for two-way tone ranging. It is used to determine slant range from a known point to the orbiter and operates only when in view of the NASA STDN ground stations during launch, lift-off, ascent or landing or in view of the AFSCF ground stations. This capability does not operate through the TDRSS. The ground station forward-links ranging tones at 1.7 MHz and computes vehicle slant range from the time delay in receiving the return link 1.7-MHz tones to determine the orbiter's range. The orbiter azimuth is determined from the ground station antenna angles. A C-band skin-tracking mode also is provided from the ground station to track the orbiter and, again, is used only in view of the NASA STDN ground station associated with launch, lift-off, ascent or landing or in view of the AFSCF ground stations. This capability does not operate through the TDRSS.

The two onboard network signal processors receive commands (forward link) and transmit (return link) telemetry data to the selected S-band transponder. Only one NSP operates at a time; the other provides a redundant backup. The selected NSP receives either one or two analog voice channels from the onboard audio central control unit depending on whether one (in the low-data-rate mode) or both (in the high-data-rate mode) of the air-to-ground channels are being used, converts them to digital voice signals, time-division-multiplexes them with the telemetry from the pulse code modulation master unit, and sends the composite signal to the S-band PM transponder for transmission on the return link. On the forward S-band PM link, the NSP does just the reverse. It receives the composite signal from the S-band transponder and outputs it as either one or two analog voice signals to the audio central control unit. The composite forward link also has ground commands that the NSP decodes and sends to the onboard computers, which route the commands to the intended onboard systems.

S-Band Frequency Modulation. The S-band FM system cannot receive information; it is used to downlink data from seven different sources, one at a time, directly to the ground when there is a line of sight between the orbiter and STDN or Air Force ground stations. The S-band FM return link (previously referred to as downlink) can originate from two S-band transmitters aboard the space shuttle. Both transmitters are tuned to 2,250.0 MHz. The S-band FM return link can be transmitted simultaneously with the S-band PM return link to the STDN ground station or MCC-H or to the Air Force ground station at the AFSCF. It is planned that the S-band FM system be kittable

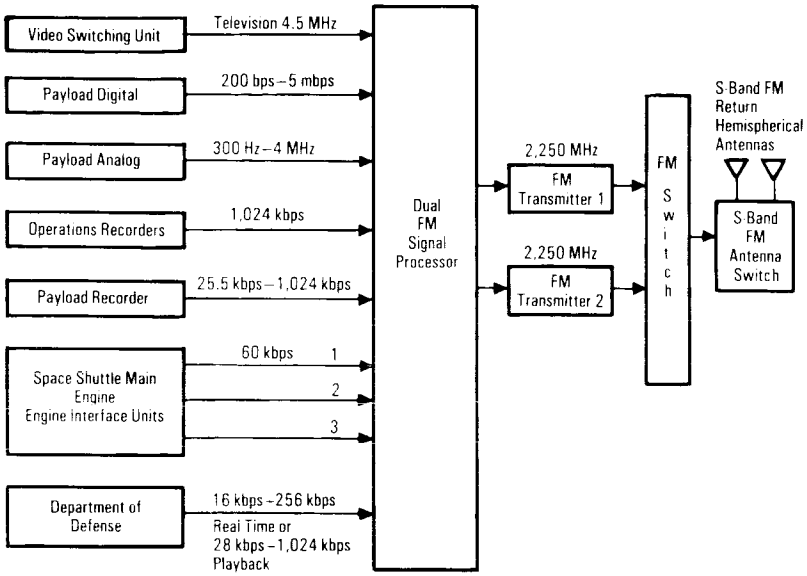


*S-Band Frequency Modulation Signal Processor (Not Operative Through TDRS)*

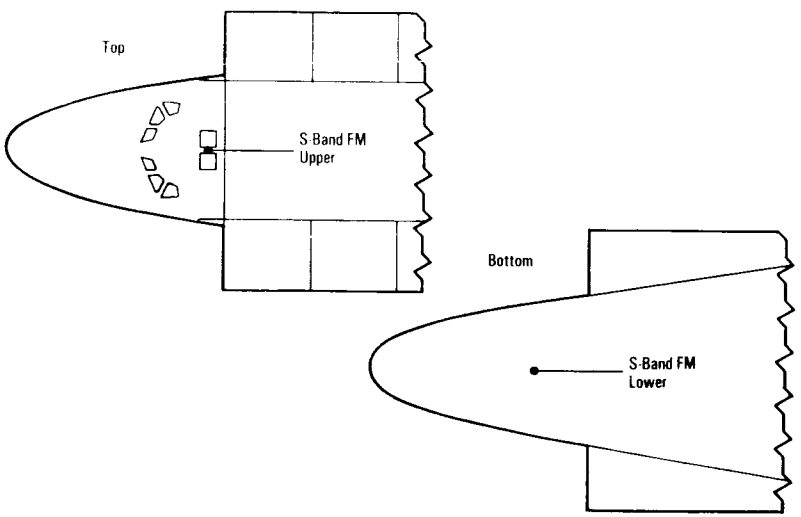


*S-Band Frequency Modulation System Antenna Locations*

for Department of Defense missions and removable for NASA missions when the TDRSS and the Ku-band system are fully operational.

The S-band FM signal processor aboard the orbiter receives inputs and processes data from the three space shuttle main engine interface units, the video (television) switching unit, the operations recorders for recorder dump, the payload recorder for recorder dump, payload analog, payload digital or Department of Defense.

During ascent, space shuttle main engine interface unit data are sent to the S-band FM system to be transmitted in real time to the ground. These data also are routed to the operations recorders for non-real-time transmission. On orbit, one of the other six services may be selected and routed through the S-band FM signal processor.

The FM signal processor is commanded to select one of these sources at a time for output to the S-band FM transmitter, which transmits it to the S-band FM return link through the STDN ground station used for launch, lift-off, ascent or landing or the DOD AFSCF ground station. The S-band FM return link transfers real-time SSME data from the engine interface units during launch at 60 kbps each or real-time video or operations recorder dumps of high- or low-data-rate telemetry at 1,024 kbps or one-track dumps of 60-kbps SSME data at 1,024 kbps or payload recorder at 25.5 kbps or 1,024 kbps or payload analog at 300 hertz or 4 MHz or payload digital data at 200 bps or 5 mbps or DOD data at 16 kbps or 256 kbps in real time or 128 kbps or 1,024 kbps of playback. The S-band FM return link does not operate through the TDRS system.

Only one of the two FM signal processors is used at a time. FM signal processor 1 interfaces with FM transmitter 1, and FM signal processor 2 interfaces with FM transmitter 2. The transmitters and processors cannot be cross-strapped.

Two hemispherical S-band FM antennas are located on the forward fuselage outer skin of the orbiter approximately 180 degrees apart. The antennas are covered with a reusable ther-

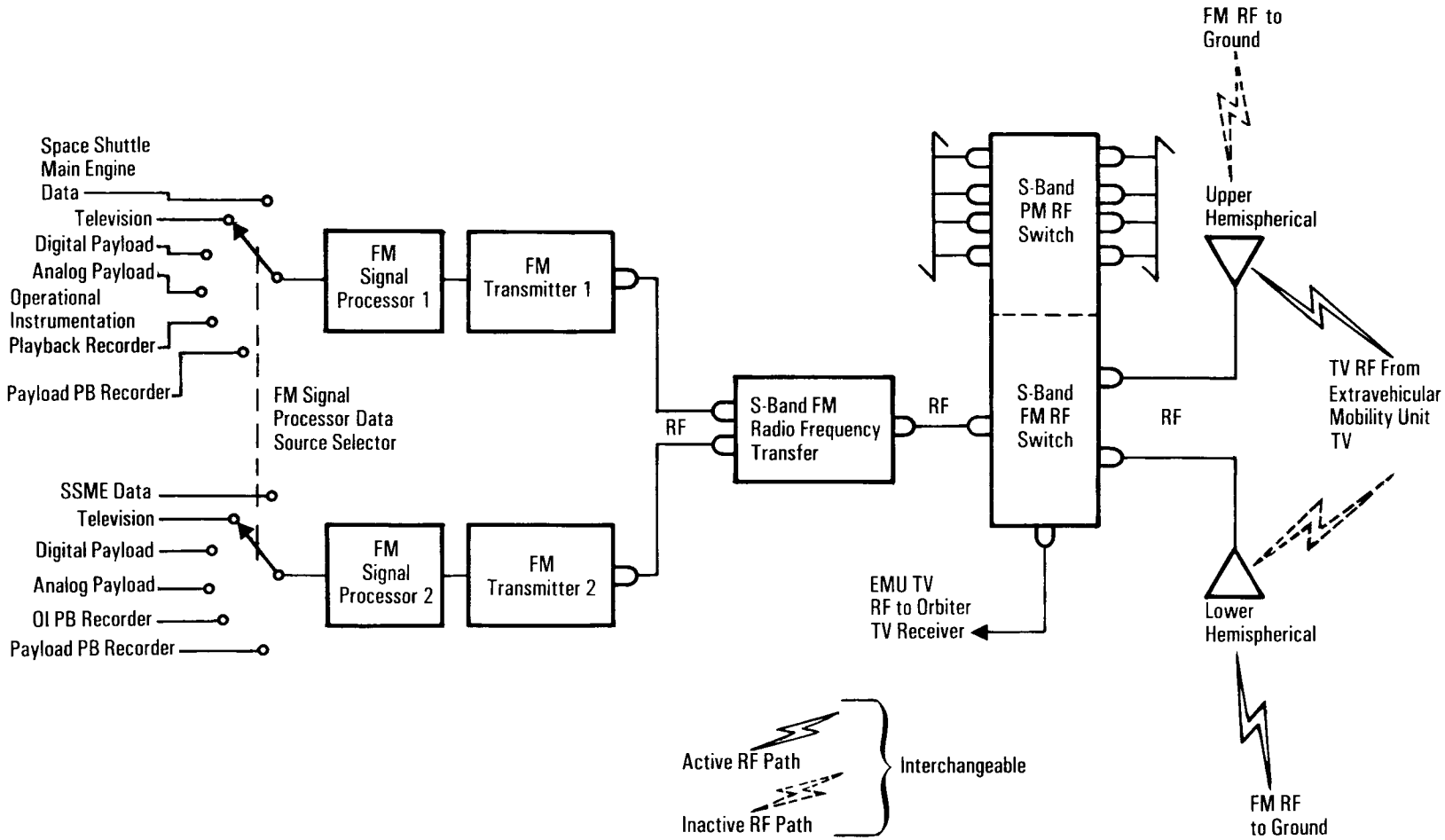


*S-Band FM System Block Diagram*

mal protection system. In the orbiter on the flight deck, the hemispherical antennas are above the head (upper) and below the feet (lower) and radiate the S-band FM return link.

The S-band antenna switch assembly aboard the orbiter provides the signal switching among the two S-band FM transmitters and either of the two hemispherical antennas. The proper antenna is selected automatically by onboard or real-time command from the ground, computer control or manual flight crew selection from displays and controls on flight deck panel A1. In the GPC mode, the onboard SM computer selects the proper hemispherical antenna to be used whenever an S-band FM transmitter is active. The antenna selection is based on the computed line of sight to the NASA STDN ground station used for launch, lift-off, ascent or landing or the Department of Defense AFSCF ground stations.

The basic difference between the orbiter's quadrant and hemispherical antennas is that the hemispherical antennas have a larger beamwidth while the quadrant antennas have a higher antenna gain. The hemispherical antennas are so named because there are two of them, one on top of the orbiter and one on the bottom. The quadrant antennas are so named because there are four of them, two on each side of the orbiter, one on the upper half and one on the lower half of each side, which provides nearly total coverage in all directions.

The hemi antenna switch has a port that can route RF television from the astronaut's extravehicular mobility unit to the orbiter's closed-circuit television system. An EMU TV unit can transmit television on one hemi antenna/antenna switch path to the orbiter while the S-band FM system is routing FM downlink telemetry to ground on the other hemi antenna/antenna switch path.

**Ku-Band System.** The Ku-band antenna aboard the space shuttle orbiter is located in the payload bay; thus, Ku-band can be used only when the orbiter is on orbit. The orbiter payload bay doors are opened and the Ku-band antenna is deployed. The Ku-band system operates in the Ku-band portion of the radio frequency spectrum between 15,250 MHz and 17,250 MHz. The Ku-band carrier frequencies are 13,755 GHz from the TDRS to the orbiter and 15,003 GHz from the orbiter to the TDRS. Once the Ku-band antenna is deployed, the Ku-band system can be used as a communication system to transmit information to and receive information from the ground through the TDRSS. The Ku-band antenna aboard the orbiter can also be used as a radar system for target tracking objects in space, but it cannot be used simultaneously for Ku-band communications and radar operations.

When the Ku-band antenna is deployed aboard the orbiter and handover from the S-band system to the Ku-band system occurs, the orbiter onboard NSP operates with the Ku-band signal processor rather than the S-band transponder. The data stream is then directed through the K-band signal processor and Ku-band antenna to the TDRS in view, to the TDRS system WSGT and to MCC-H on the return link. The process is reversed for the forward link. If the Ku-band forward link is lost, the system reverts (fail-safe) to S-band.



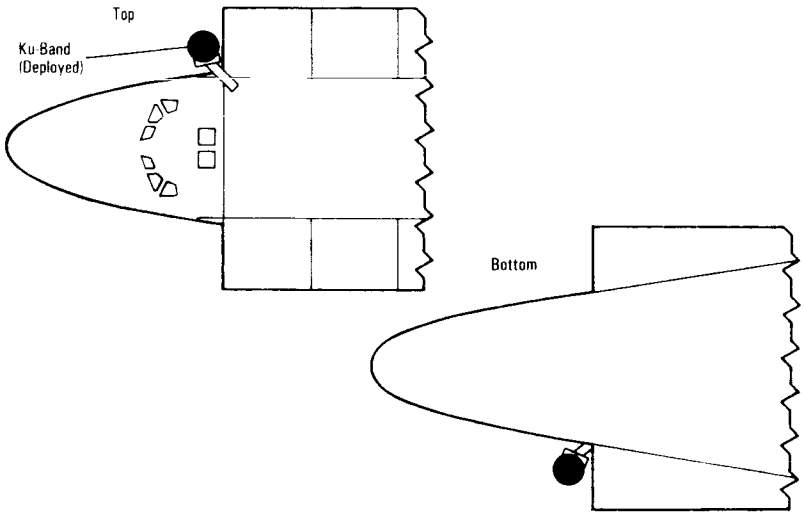


*Ku-Band System Antenna Location (Deployed)*

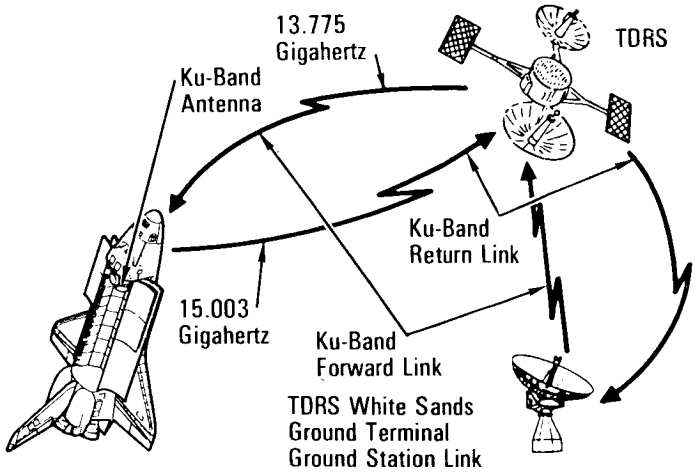


*NASA Ku-Band Communication With TDRSS and WSGT and Mission Control Center-Houston*

The Ku-band system can handle higher quantities of data than the S-band systems. It transmits three channels of data, one of which is the same interleaved voice and telemetry processed by the S-band PM system. Two of the seven possible sources of information sent on the other two channels are payload analog, payload digital, payload interleaver bent-pipe, payload recorder, operations recorders, television and Spacelab (if flown).

The three channels of data are sent to the Ku-band signal processor to be interleaved. This signal then goes to the onboard deployed electronics assembly, which contains the transmitter, to be transmitted to the TDRS through the Ku-band antenna. The incoming signal goes through the onboard Ku-band antenna to the onboard receiver in the DEA and then through an internal electronics assembly (EA 1 is for communications and EA 2 is for radar) to the Ku-band signal processor. Voice and commands are sent to the network signal processor. A separate output from the Ku-band signal processor is directed to the text and graphics system. (As previously mentioned, since TDRS-A's Ku-band forward link is not functional, TAGS cannot operate aboard the orbiters.)

The Ku-band deployed assembly is mounted on the starboard sill longeron in the payload bay of the orbiter. It is deployed and activated after the payload bay doors are opened. The deployed assembly consists of a two-axis, gimbal-mounted, high-gain antenna; an integral gyro assembly; and a radio frequency electronics box. The gimbal motors position the Ku-band antenna, and the rate sensors determine how fast the antenna is moving.

The Ku-band deployed antenna assembly is 7 feet long and 1 foot wide when stowed in the payload bay. The parabolic antenna dish is 3 feet in diameter and is a graphite epoxy structure. The deployed antenna assembly weighs 180 pounds. The weight of the entire system is 304 pounds.

The antenna can be steered in several selectable modes under manual control by the flight crew or automatically by the SM computer. It provides the interface with the TDRS when there is a line of sight between the orbiter and TDRS.

When the shuttle reaches orbit, before the Ku-band antenna is deployed, circuit breakers on panel R15 are closed to energize thermostatically controlled heaters for the deployed electronics assembly, gimbals and antenna assembly. They provide electrical power to the Ku-band electronic elements, electronics assemblies 1 and 2, the signal processor assembly and Ku-band portions of panel A2. Actual deployment involves the controls and associated talkback displays on panel R13L. The antenna is locked in the stowed position to clear the adjacent payload bay doors and radiators when they are closed or moving.

The SPA processes and routes Ku-band FL and RL data. EA 1, containing the communication data processor and antenna control electronics, provides data to onboard displays, meters and computers. EA 2 provides control signals to configure the system for radar operations in addition to receiving and processing return radar data.

Deployment and stowage of the Ku-band deployed assembly is controlled by flight crew switches at the aft flight station.

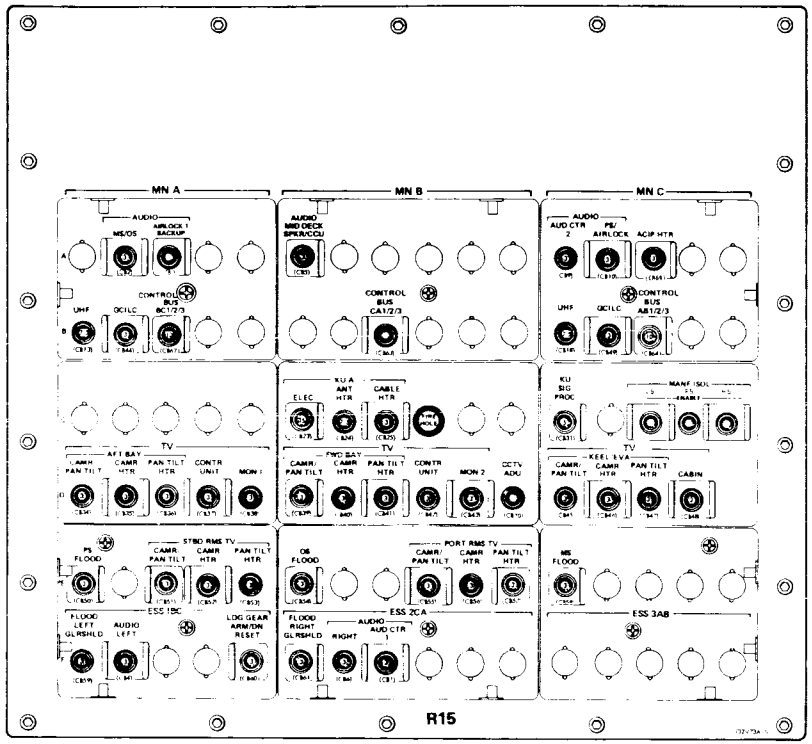


*Panel R15*

Twenty seconds are normally required to deploy or stow the DA. In the deployed position, the DA forms a 67-degree angle with the orbiter X axis. Activating the Ku electronics frees the antenna gimbals by removing the locking pins.

The antenna dish is edge-mounted on a two-axis gimbal. The alpha gimbal provides a 360-degree roll movement around the pole or axis of the gimbal. The beta gimbal provides a 162-degree pitch movement around its axis. The alpha gimbal has a stop at the lower part of its movement to prevent wraparound of the beta gimbal control cable. Since the beta gimbal has only a 162-degree movement, there is a 4-degree non-coverage zone outboard around the pole and a 32-degree non-coverage zone toward the payload bay.

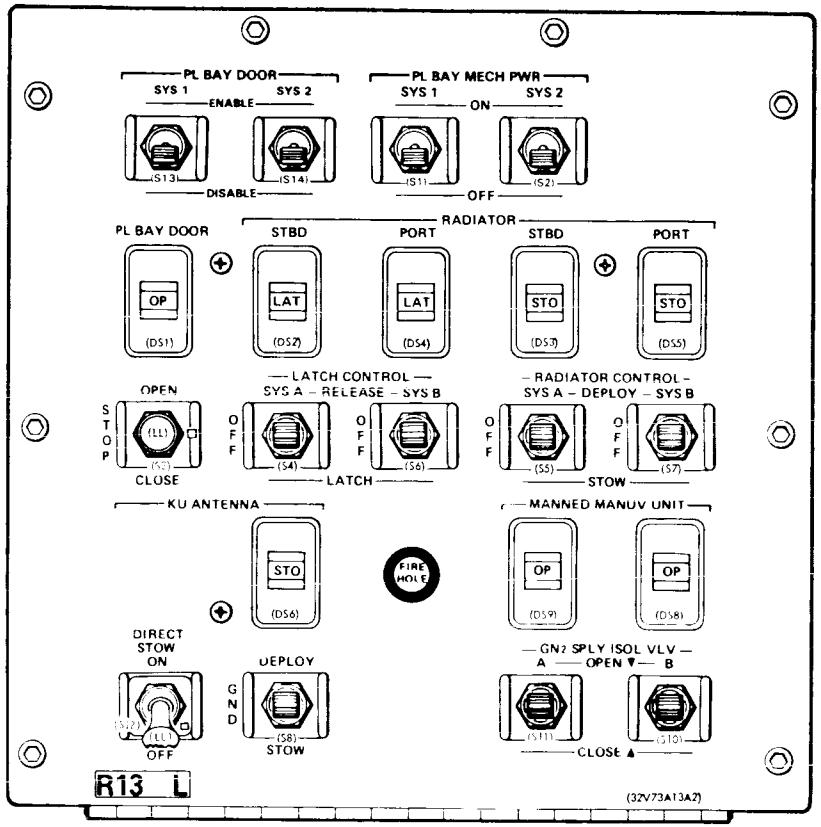


*Panel R13L*

As described in the S-band discussion, there are times when the Ku-band system, in view of a TDRS, is interrupted because the orbiter blocks the Ku-band antenna's view to the TDRS because orbiter attitude requirements or payloads' radiation sensitivities prohibit its use. In addition, periodically the Ku-band antenna beta cabling may require positioning to ensure that it does not become twisted in a way that could cause the antenna to bind.

As discussed under S-band, the Ku-band system's narrow beam makes it difficult for TDRS antennas to lock on to the signal. Therefore, the orbiter uses the S-band system to lock the

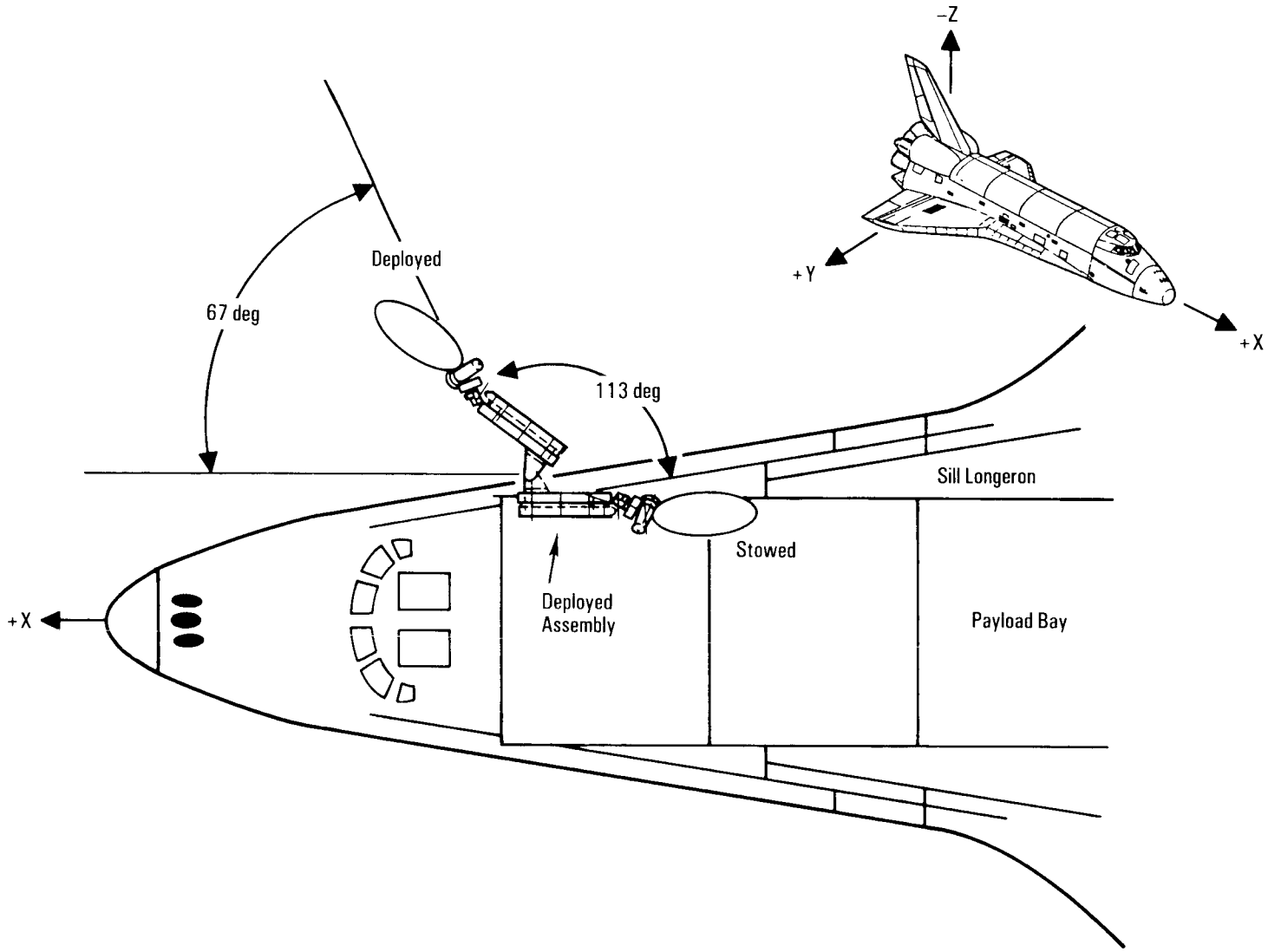


*Ku-Band Deployed Assembly Location*

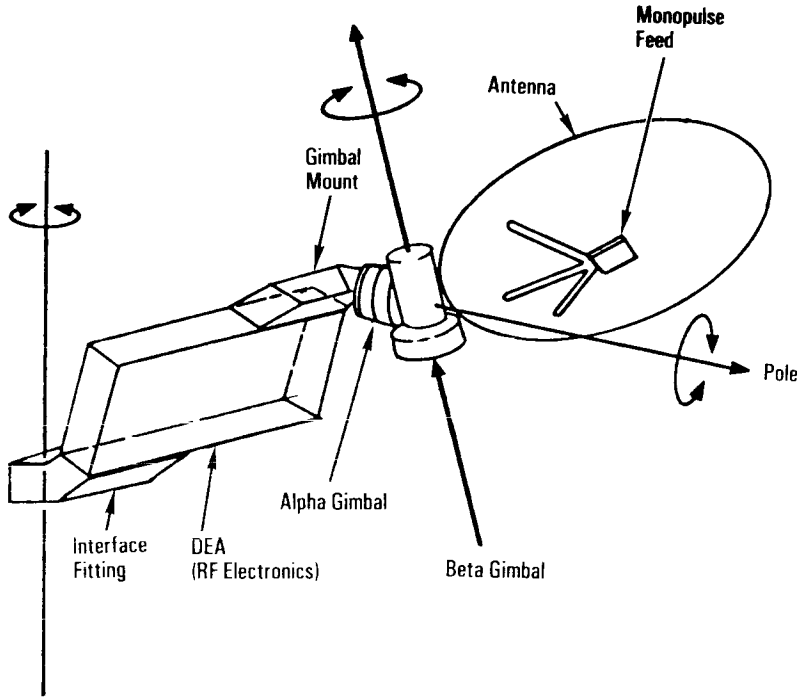


*Ku-Band Deployed Assembly*

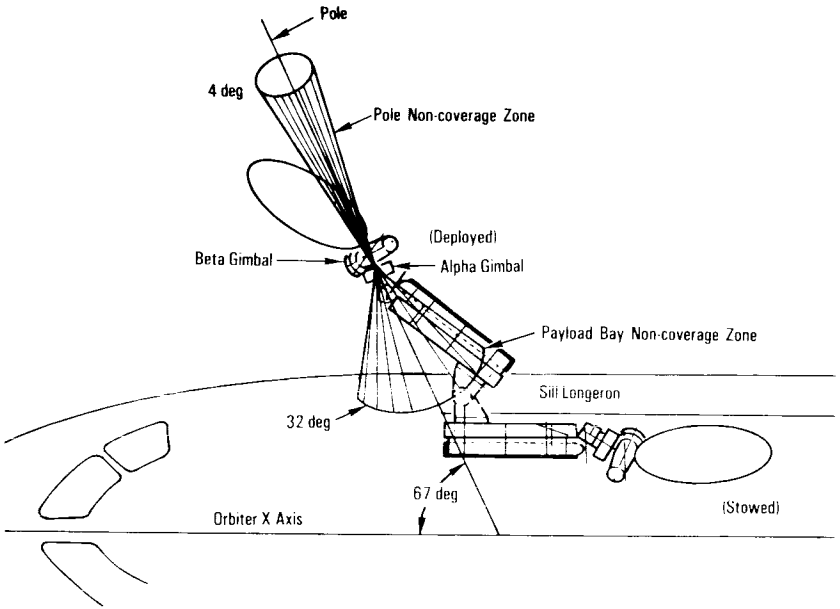


*Ku-Band Antenna Non-coverage Zones*



Ku-band antenna into position first because the S-band system has a larger beamwidth. The procedure for acquiring TDRS Ku-band communication from the orbiter is described in the S-band section.

The Ku-band system return link consists of channel 1, modes 1 and 2, plus one channel 2, modes 1 and 2, and one channel 3. Channel 1, modes 1 and 2, consists of 192 kbps of operational data (128 kbps of operational data telemetry and payload interleaver plus two air-to-ground voice links at 32 kbps each) plus one of the following selections from channel 2, modes 1 and 2: (1) payload digital data from 16 kbps to 2 Mbps, (2) payload digital data from 16 kbps to 2 Mbps, (3) operations recorder playback from 60 kbps to 1,024 kbps, or (4) payload recorder playback from 25.5 kbps to 1,024 kbps. It also includes one of the following from channel 3: mode 1 attached payload digital data (real-time or playback) from 2 Mbps to 50 Mbps, mode 2 television (color or black and white) composite video, or mode 2 real-time attached payload digital data or payload analog data.

The Ku-band system forward link consists of a mode 1 and 2 through the TDRS in view. Mode 1 consists of 72-kbps data (two air-to-ground voice streams at 32 kbps each and 8 kbps of command), 128-kbps TAGS (used in place of the teleprinter) and 16-kbps synchronization. Mode 2 consists of 72-kbps operational data (two air-to-ground voice streams at 32 kbps each and 8 kbps of command).

Like the S-band system, the Ku-band antenna must be stowed before the orbiter payload bay doors are closed in preparation for atmospheric entry. If the DA does not respond to normal stow operations, involving proper orientation and locking of the antenna, or to the stow operation itself, a direct stow switch on

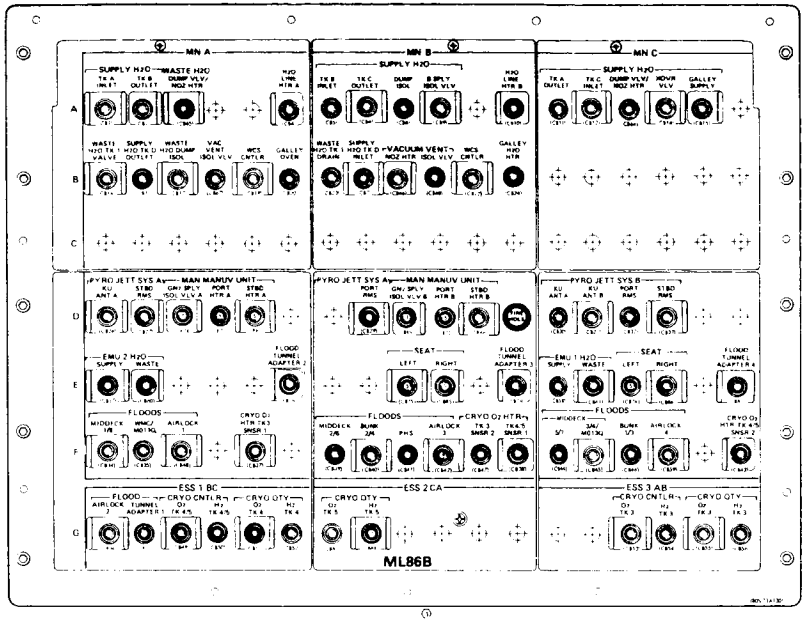


*Panel ML86B*

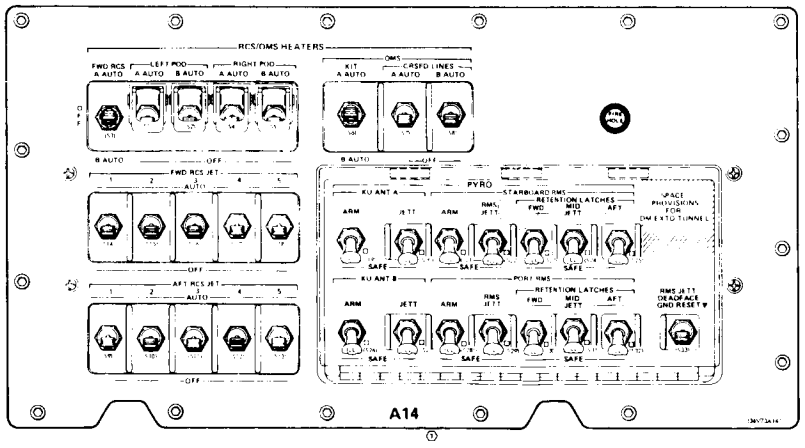


*Panel A14*

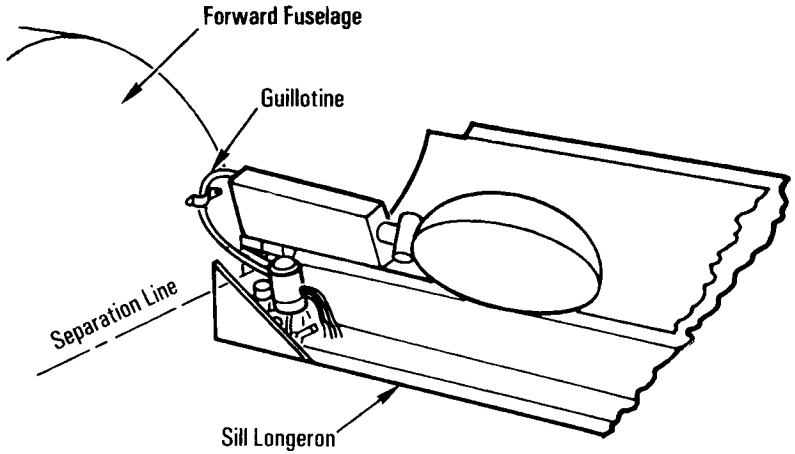


*Ku-Band Antenna Jettison Separation*

panel R13L is used. Setting this switch to *on* bypasses the normal stow control sequences and causes the DA to be driven inside the payload bay.

If neither the normal stow nor the direct stow can position the DA inside the payload bay, the DA can be jettisoned. To jettison the deployed assembly, the crew closes the circuit breakers on panel ML86B and activates the *Ku ant arm* and *jett* switches on panel A14, which causes a guillotine to cut the cables to the DA and releases a clamp holding the DA to the pivot assembly. The separation point is between the DA and deployment mechanism about 20 inches above the sill longeron. No ejective force is imparted to the DA; it is merely cut loose and the orbiter maneuvers away from it. The jettison operation takes approximately four seconds.

The space shuttle spacecraft transmits and receives through the S-band system, the TDRS in view and the TDRS system; thus, the WSGT and MCC-H are in the low-data-rate mode until the communications blackout in entry. After blackout, the space

shuttle again operates in S-band through the TDRS system in the low-data-rate mode during descent to as low a view as possible until it reaches the S-band landing site ground station, which then transmits and receives in the high-data-rate mode on S-band.

**Ku-Band Rendezvous Radar.** The orbiter Ku-band system includes a rendezvous radar that skin-tracks satellites or payloads in orbit to facilitate orbiter rendezvous with them. For large payloads that must be carried into orbit one section at a time, the orbiter will rendezvous with the payload segment currently in orbit to add on the next section. The gimbaling of the Ku-band antenna permits it to conduct a radar search for space hardware. The Ku-band system is first given the general location of the space hardware from the orbiter computer; then the antenna makes a spiral scan of the area to pinpoint the target.

Radar search for space hardware may use a wide spiral scan of up to 60 degrees. Objects may be detected by reflecting the radar beam off the surface of the target (passive mode) or by using the radar to trigger a transponder beacon on the target (active mode).

During a rendezvous operation, the radar system is used as a sensor that provides target angle and range information for updating the rendezvous navigation data. The operation is similar to using the crewman optical alignment sight or star trackers except that the radar provides target data in addition to angle data. Angle tracking maintains appropriate antenna pointing to keep the target within the antenna beam. Range tracking is accomplished by electronically measuring the time between a transmitted pulse and a return pulse from the target. The return pulse may be reflected from a passive (skin-tracked) target or cooperative target transmitter that is triggered by the radar-initiated pulse. The latter provides a longer range capability.

Angle tracking can be accomplished in two ways: computer or manual designations or automatic (auto) servo. During manually or computer-designated tracking, the antenna beam angle is positioned by services external to the Ku-band system. Computer tracking provides designated angle data based on combined target and orbiter state vector information. Manual tracking applies manually initiated rates to the antenna control system from switches at the orbiter aft flight deck station.

Automatic angle tracking applies error rates to the antenna control system from a receiving station that measures the target position relative to the antenna beam center. This closed-loop servosystem, internal to the Ku-band system, ignores external computer or manual designations.

Range tracking is always automatic, although computer-designated ranges are applied to the Ku-band system until automatic tracking is achieved. In the automatic tracking mode, the Ku-band system provides actual antenna angle, angle rate, range, and range rate data through an MDM for rendezvous and proximity operations. Data routed to panel A2 represent hard-wired azimuth, elevation, range and range rate information, which is not processed by the GPCs.

The Ku-band radar system has four steering modes for locating and tracking a target: crew-controlled; automatic; manual antenna steering, with programmed spiral search routines for angular acquisition; and range tracking (previously mentioned). In addition, there are two antenna stabilization modes.

Before any radar mode is used, the orbiter is normally maneuvered to an attitude with the minus Z axis pointing at the GPC-calculated target location. In all modes, therefore, the radar antenna is normally maneuvered around the minus Z axis.

The Ku-band system provides for antenna steering modes, each with a different combination of capabilities for acquiring and tracking a target: GPC, GPC designate, auto track and manual slew. All are mutually exclusive and crew selectable.

The GPC mode is fully automatic in all phases of target acquisition. Two GPC CRT commands are required before this mode can be initiated. One CRT command enables target position data to be routed from the GN&C to the SM antenna management program through the intercomputer data bus. The antenna man-

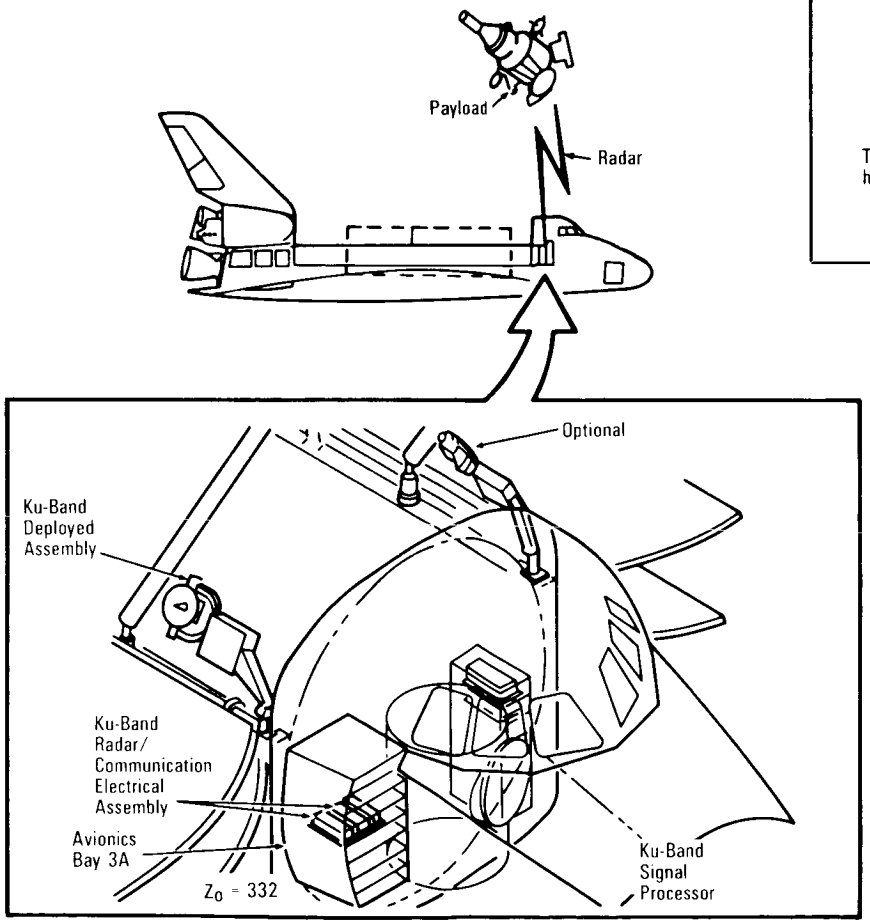


*Ku-Band Radar System*

**Radar Rendezvous Range**

Passive Skin Track

Range 100 Feet to 12 Nautical Miles (14 Statute Miles)

Range Rate 148 Feet per Second Opening Maximum
to 75 Feet per Second Closing Maximum

Active (Transponder on the Vehicle Being Tracked)

Range 100 Feet to 300 Nautical Miles (345 Statute Miles)

Range Rate 1,500 Feet per Second Opening Maximum
to 300 Feet per Second Closing Maximum

The shuttle program has not baselined a transponder; however, TRW has a transponder that can be placed on a payload.

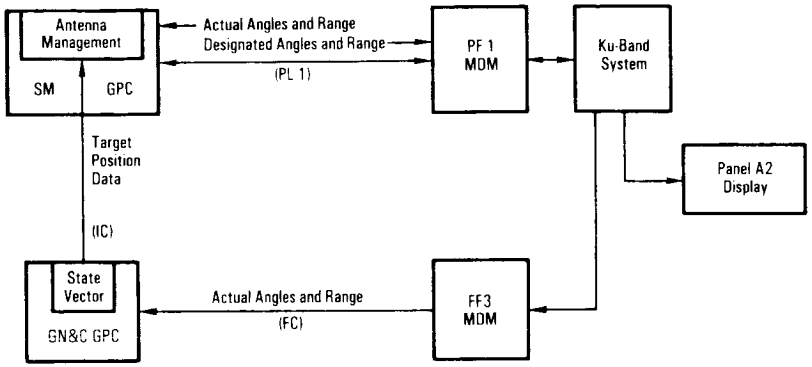


*Ku-Band Designated Steering and Radar Data Interface*

agement program converts the target position to antenna pointing angles and estimated orbiter-to-target range data. Another CRT command enables the antenna management program to send designated antenna pointing and range data to the Ku-band system through the payload 1 data bus and the payload forward 1 MDM.

When the GPC mode is selected, the antenna points to the commanded angles and adjusts the ranging system to the specified range. If a receive signal is detected, the automatic closed-loop system tracks the target in angles and range and provides data for the SM and GN&C computers and panel displays. If the target is not detected, the antenna is automatically commanded to search around the designated point. The antenna is inertially stabilized during the search operation.

The GPC designate mode provides the same designated pointing as the GPC mode without angle search or angle-tracking capabilities. No closed-loop angle tracking is provided. The designated angles are updated every two seconds. Range search and tracking are automatic. The antenna may be either inertially or body stabilized.

The auto tracking mode begins with manual antenna control, including a manually initiated search and inertial stabilization during the target acquisition phase. Once the target is detected, auto-

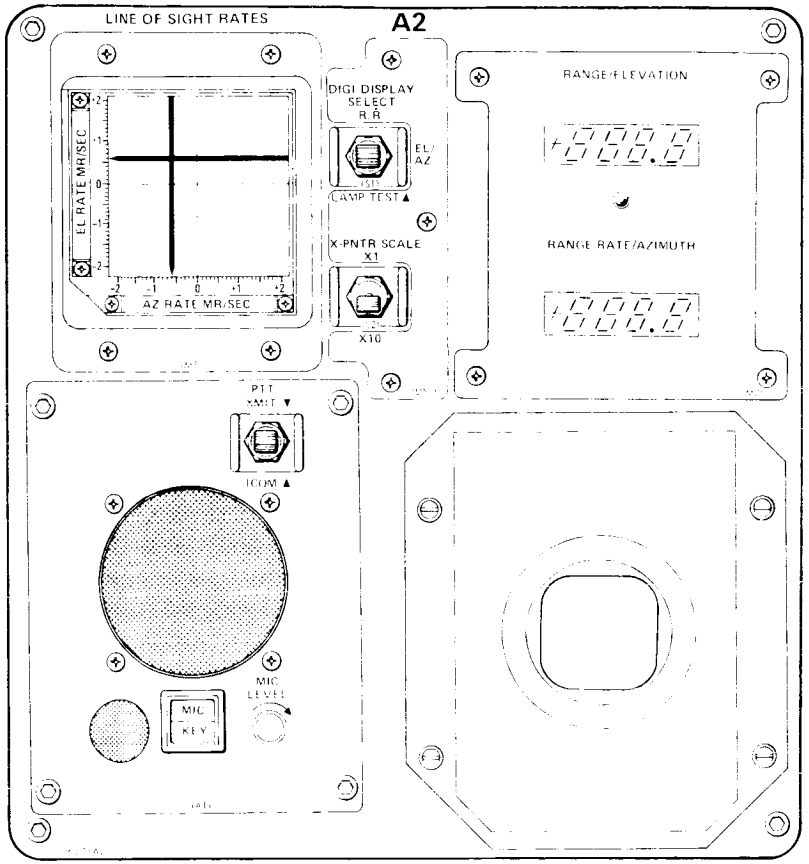


*Panel A2*

matic angle and range tracking is initiated and manual control is inhibited until auto tracking is broken.

The manual slew mode allows manual control of antenna movement with maximum automatic range search. Once the target is detected, an automatic range track is initiated, but angles are still under manual control. No angle search is available in this mode.

The search mode involves a programmed antenna movement that causes the radar beam to describe a spiral pattern starting at

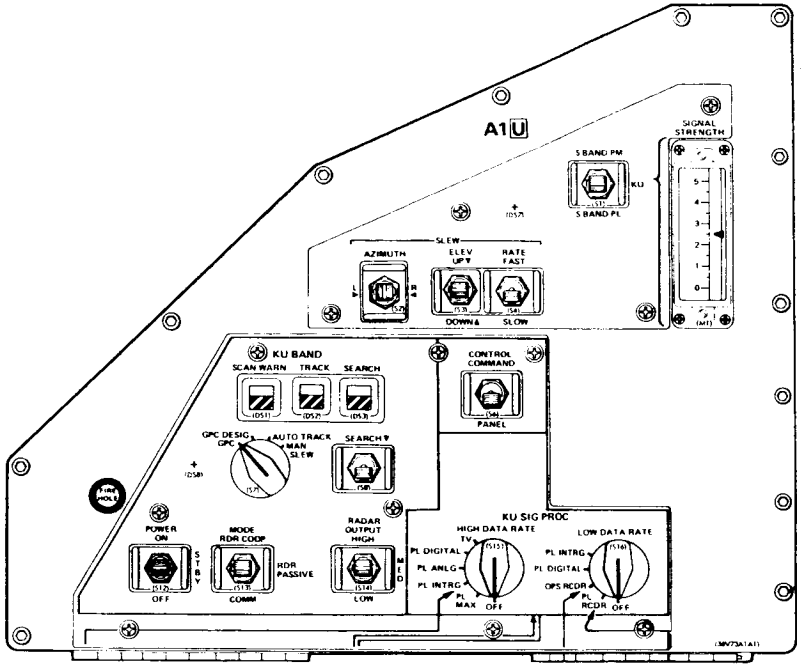


*Panel A1U*

the designated angles. The beam angle spirals out to a maximum of 30 degrees from the designated angle. In the GPC steering mode, the variation of the maximum angle of search from the designated point is inversely proportional to designated range. The smallest search spirals outward to a maximum of 6.2 degrees from the designated point for ranges from 145 to 300 nautical miles. At minimum ranges (zero to 8 nautical miles), the spiral search is the maximum 30 degrees from the designated point. If the antenna drive system detects but overshoots the target during a spiral search, a miniscan program is automatically initiated near the point of detection. The miniscan searches to a maximum of 9 degrees from the starting point in one minute. In the auto track steering mode, only the manually initiated main 30-degree scan is available.

In addition to angle search, the Ku-band system provides a range search. The process includes electronically varying the timing within the range system until it coincides with the time interval between the transmitted and received radar pulses. Once the intervals coincide, radar tracking is established and the range data output represents the range between the target and the orbiter. The crew can read the range and range rate values as panel and CRT parameters.

The crew is provided with two controls associated with range. Transmitter power output is automatically varied in proportion to range when a target is being tracked to keep the return signal relatively constant, regardless of range. If, however, the track is lost and the range system begins to search, the transmitter may transmit maximum power during the search. The crew can limit the maximum transmitter power by using an aft station panel control. The other control is a CRT command that limits the range search in GPC steering mode to 2,400 feet.

The Ku-band system has body and inertial antenna stabilization modes. When the body is stabilized, the antenna beam remains in a fixed relationship to the orbiter X, Y and Z axes during orbiter attitude changes. When the system is inertially stabilized, the antenna beam remains aligned to a point in inertial space, regardless of the orbiter attitude changes. Both of these modes are effective only when the radar angle-tracking system is not tracking a target. In the target angle-tracking mode, the system aligns the antenna beam to the target, and antenna movement is independent of orbiter attitude changes.

Each antenna steering mode has a specific stabilization mode except the designate mode. The designate mode selects either body or inertial stabilization on the basis of a real-time GPC command (not available to the crew). Since the designate mode provides range tracking only, inertial stabilization is effective during target tracking.

**Payload Communication System**. The payload communication system is used to transfer information between the orbiter and its payload or payloads. It supports hardline and radio frequency communications with a variety of payloads. The system is used to activate, check out and deactivate attached and detached pay-

loads. The two main users of this system are NASA and the DOD. Other users include various satellite consortiums, private industry and foreign countries.

Communication with an attached payload takes place through the payload patch panel at the crew compartment flight deck aft station, which is connected to external equipment with internal systems. From this panel, the attached payload telemetry can take different paths. All standard command and telemetry signals are processed on board. Non-standard signals are sent to the ground through Ku-band. This method of transmission, referred to as bent-pipe telemetry, means that no onboard signal processing occurs before the telemetry is sent to the Ku-band system. Payload telemetry can go directly to the S-band, FM or Ku-band systems for transmission to the ground, payload analog or payload digital; to the payload recorder for later transmission; or to the payload data interleaver to be interleaved with other payload data in a selected format called the decommutator format load. The system also processes commands and tracks the status of various payload-related controls and displays.

Detached payloads communicate with the orbiter on an RF signal through the payload antenna by the payload interrogator. The main frequency carrier of the detached payload telemetry is demodulated by the PI. The telemetry is sent directly to the Ku-band system for transmission to the ground (bent-pipe telemetry) or to the payload signal processors. The PSP demodulates the subcarrier from the telemetry and sends the telemetry to the payload data interleaver to be interleaved with other payload data. Attached payload commands are routed to the PSP and then to the payload patch panel, which is also referred to as the payload station distribution panel. Detached payload commands are routed to the PSP and then to the PI for transmission through the payload antenna.

The communication interface unit replaces the PSP during DOD missions and uses space-ground-link-system-compatible payloads and ground stations to provide communication security. The CIU interfaces indirectly with the payload data interleaver through the patch panel because the CIU is treated as an attached

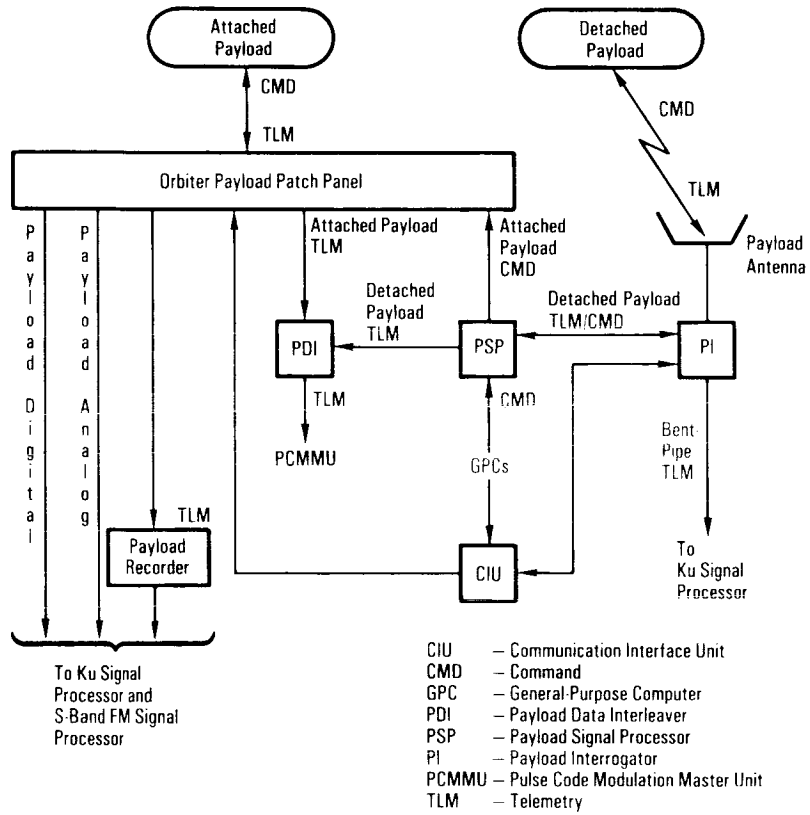


*Payload Communication System*



payload accessed through a patch panel input of the payload data interleaver. The payload signal processor is hard-wired directly to the payload data interleaver.

The S-band payload antenna is located on the top of the outer skin of the orbiter's forward fuselage, just aft of the upper hemispherical antenna. The payload antenna is covered with reusable thermal protection system. This antenna is used as the radiating element for S-band transmission and reception to and from the orbiter to detached payloads through the forward link and return link.

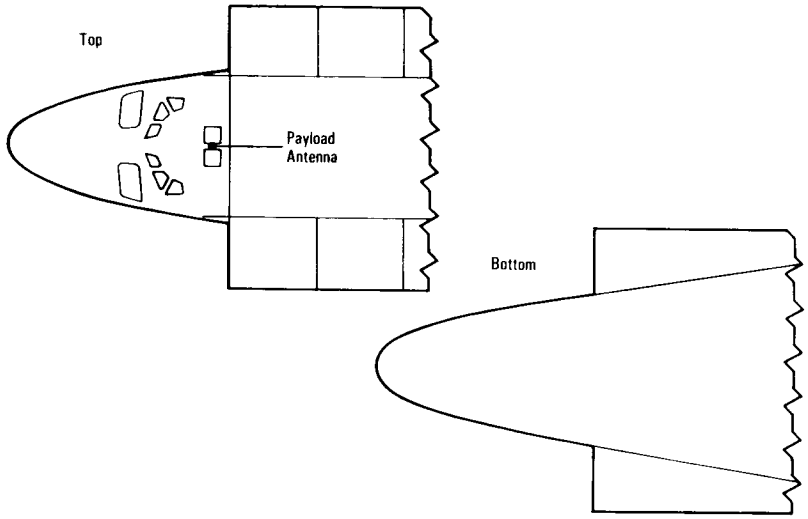


*Payload Communication System Antenna Location*

The basic elements in the payload communication system are the payload interrogator, payload signal processor, communication interface unit, payload data interleaver, pulse code modulation master unit, payload patch panel, payload recorder and payload MDMs 1 and 2. These elements are in the forward avionics bay and are controlled by switches on panels A1 and L10.

The payload interrogator is a transmitter/receiver unit that provides full duplex RF communications between the orbiter and a detached payload. It transmits commands to and receives telemetry from NASA- or DOD-compatible payloads through the payload antenna.

Communication problems involving antenna position relative to payload position are not evident while the payload is within a half mile of the orbiter. However, to maintain good communication with the orbiter from distances of several miles, the payload must be within an 80-degree beamwidth (with reference to the minus Z axis) of the orbiter's PI antenna. The boundary of the 80-degree beamwidth is the 3-decibel point (or half-power point), which must be considered during communication with deployed payloads. This constraint is normally satisfied by the payload and retrieval process.

The payload interrogator receiver automatically acquires and tracks an unmodulated or modulated RF signal. PI telemetry is available through the operational instrumentation MDM to verify signal strength and frequency lock.

When the payload outputs a data rate that is not compatible with the payload signal processor or communication interface unit, all data received by the PI is throughput (bent-pipe) directly to the K-band signal processor through a dedicated channel that operates independently of, but parallel to, the NASA and DOD channels. Standard payload telemetry is sent to the PSP for processing before being routed to the payload data interleaver.

The payload signal processor is the command interface between the ground or flight crew and five attached/detached payload services. It is also a detached payload telemetry interface to the payload data interleaver.

The communication interface unit is used in place of the PSP whenever an SGLS-compatible payload is flown. This provides a command and telemetry path between the orbiter guidance, navigation and control GPC and an SGLS-compatible payload or between the flight crew and an SGLS-compatible payload. The CIU passes commands and telemetry to either attached or detached payloads.

In the NASA mission configuration, the payload patch panel interfaces attached payloads to the PDI. Attached payloads are wired to specific input channels in the PPP during prelaunch activities. When the PDI is reconfigured by the flight crew, programming procedures include assigning inputs from the PPP to the desired decommutator.

In the DOD configuration, the PPP is the command and telemetry interface between the CIU and attached payloads as well as the telemetry interface for detached payloads from the CIU to the PDI.

The payload data interleaver allows the payload communication system to interface with the rest of the orbiter communication system and computers. It receives up to six different inputs from attached or detached payloads and one test input. For missions using the PSP, a maximum of five attached payloads can be accommodated on inputs 1 through 5. Input 6 is reserved for detached payload commands and telemetry using the RF link through the PSP. For missions using the CIU, all data, attached or detached, are routed through input 5. The PDI routes four of the six available inputs to the PCMMU for downlink to the SM GPC for display purposes.

**Ultrahigh Frequency System.** The UHF system is used as a backup for the S-band PM and Ku-band voice communications primarily during extravehicular activity. For communications with the STDN ground stations, the UHF system operates in a simplex mode, which means that the orbiter flight crew can only transmit or receive, but cannot do both simultaneously. The UHF transceiver takes the voice signal from the audio central control unit and transmits it through the external UHF antenna on the bottom of the orbiter forward fuselage. The incoming UHF signal goes through the external antenna to the UHF transceiver, which sends it to the ACCU for distribution in the orbiter.

UHF transmission is controlled through the *UHF mode* control knob and the three two-position toggle switches on overhead panel O6 labeled *xmit freq*, *splx pwr ampl* and *squelch*. The *xmit freq* switch selects one of the two UHF frequencies, 296.8 MHz primary or 259.7 MHz secondary, for external transmission. The *splx pwr ampl* switch selects the UHF antenna on the external skin of the orbiter's lower forward fuselage or the airlock antenna. The UHF antenna on the lower forward fuselage is covered with reusable thermal protection system. The airlock antenna is used by the EVA astronauts, in extravehicular mobility units, to check out their transceivers before exiting the airlock; it is also used for air-to-air communications during EVA.



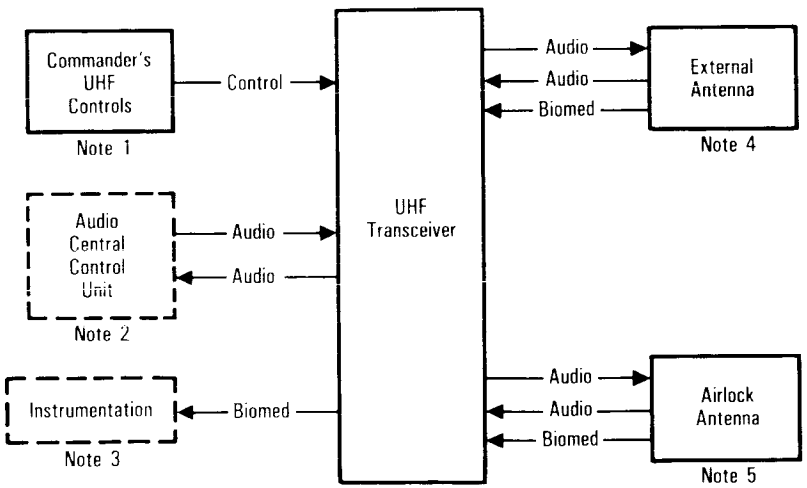


Notes:
1. Selects UHF Mode, Transmitter Frequency, Power and Squelch
2. May Be Either A:G 1, A:G 2 or A:A
3. Biomed Data Received From EVA Backpacks Only
4. External Antenna Is for Communication With Locations External to Orbiter.
5. Airlock Antenna Is for Communication With EMUs in Airlock.

*Ultrahigh Frequency System*

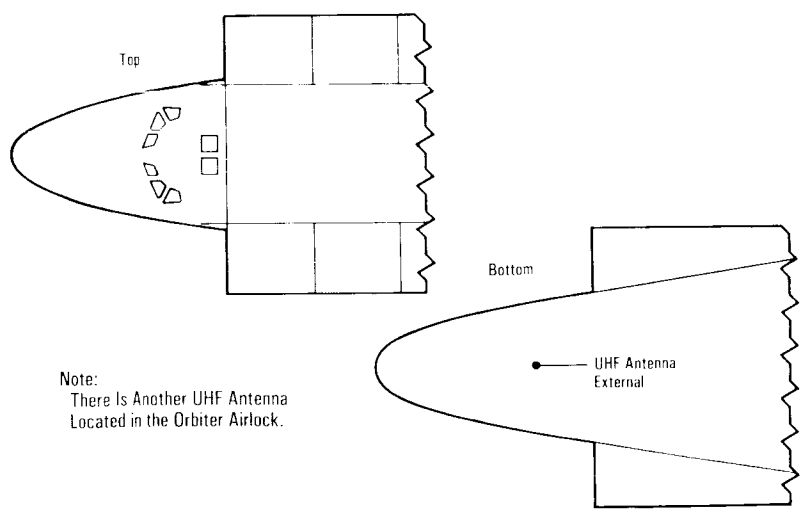


Note:
There Is Another UHF Antenna Located in the Orbiter Airlock.

*Ultrahigh Frequency System Antenna Locations*

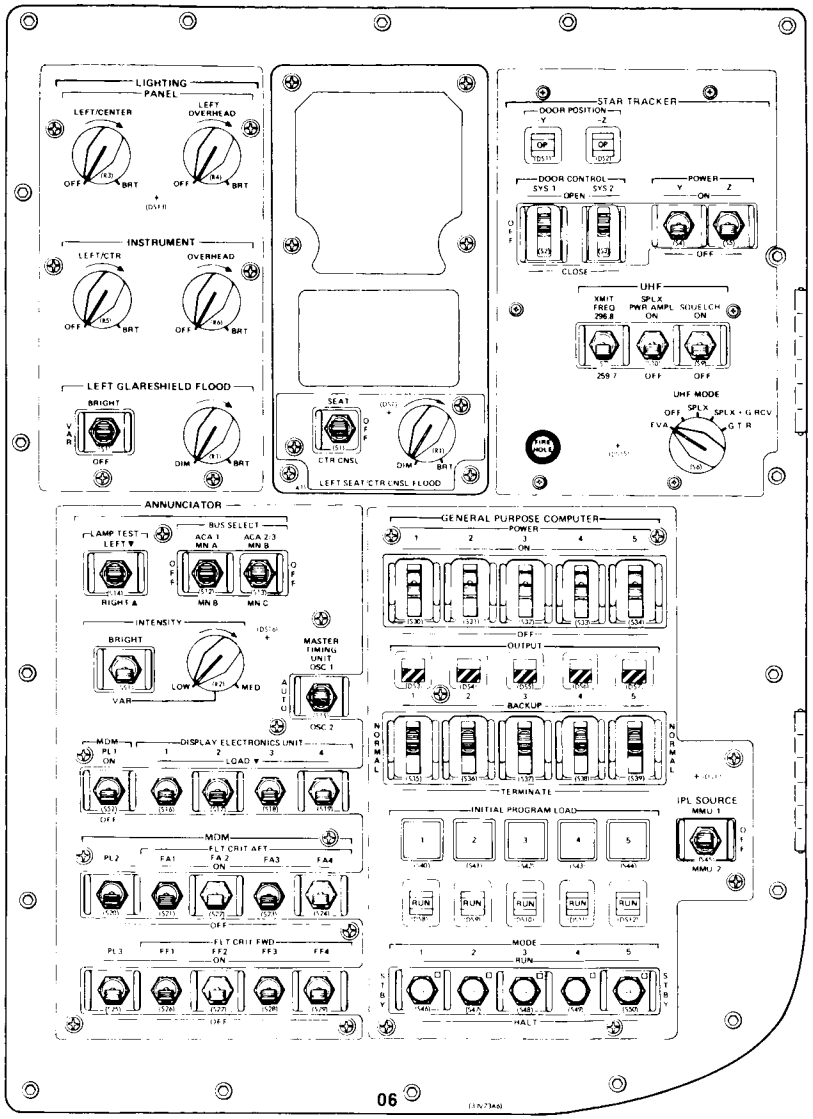


*Panel O6*

The *squelch* switch permits on or off selection of UHF squelch. A five-position rotary knob on the UHF control panel activates power to the UHF transceiver and selects any of the following modes of UHF transmission. When the knob is positioned to *EVA*, EVA transmissions are made on one frequency selected by the *xmit freq* switch, and the message is received on the other frequency. The *off* position removes all electrical power. When the *UHF mode* rotary contral knob is positioned to *simplex,* transmission and reception are both on the frequency selected by the *xmit freq* switch. Positioned to *splx + g rcv*, transmission and reception are the same as in simplex except that reception of the UHF guard (emergency) frequency (243.0 MHz) also is possible. In the *g t/r* position, transmission and reception are both on the UHF guard (emergency) frequency.

Access to transmission and reception of UHF signals is controlled by two-position toggle switches located on the bottom of the *audio center* panel on panel A1R at the aft station. The switches are labeled *t/r* for transmission/reception, *off* for blocking UHF signals to or from the UHF transceiver, *a/g* for the air-to-ground channel and *a/a* for air-to-air channel. All three of the UHF frequencies (296.8 MHz, 259.7 MHz and 243.0 MHz) are preset in the UHF transmitter and cannot be altered by the flight crew.

The UHF system is used for EVA operations. The EVA astronaut's UHF communication are through the orbiter UHF airlock antenna. The two existing UHF frequencies of 296.8 MHz and 259.7 MHz are used; an extra UHF of 279.0 MHz is added to the EMU backpack. The 279.0-MHz frequency can transmit or receive only among the two EVA astronauts and the orbiter, not the ground stations.

One EVA astronaut operates in mode A, transmitting data and voice to the orbiter on 259.7 MHz, transmitting voice to the other EVA astronaut on 259.7 MHz, receiving voice from the orbiter on 296.8 MHz and receiving voice from the other EVA

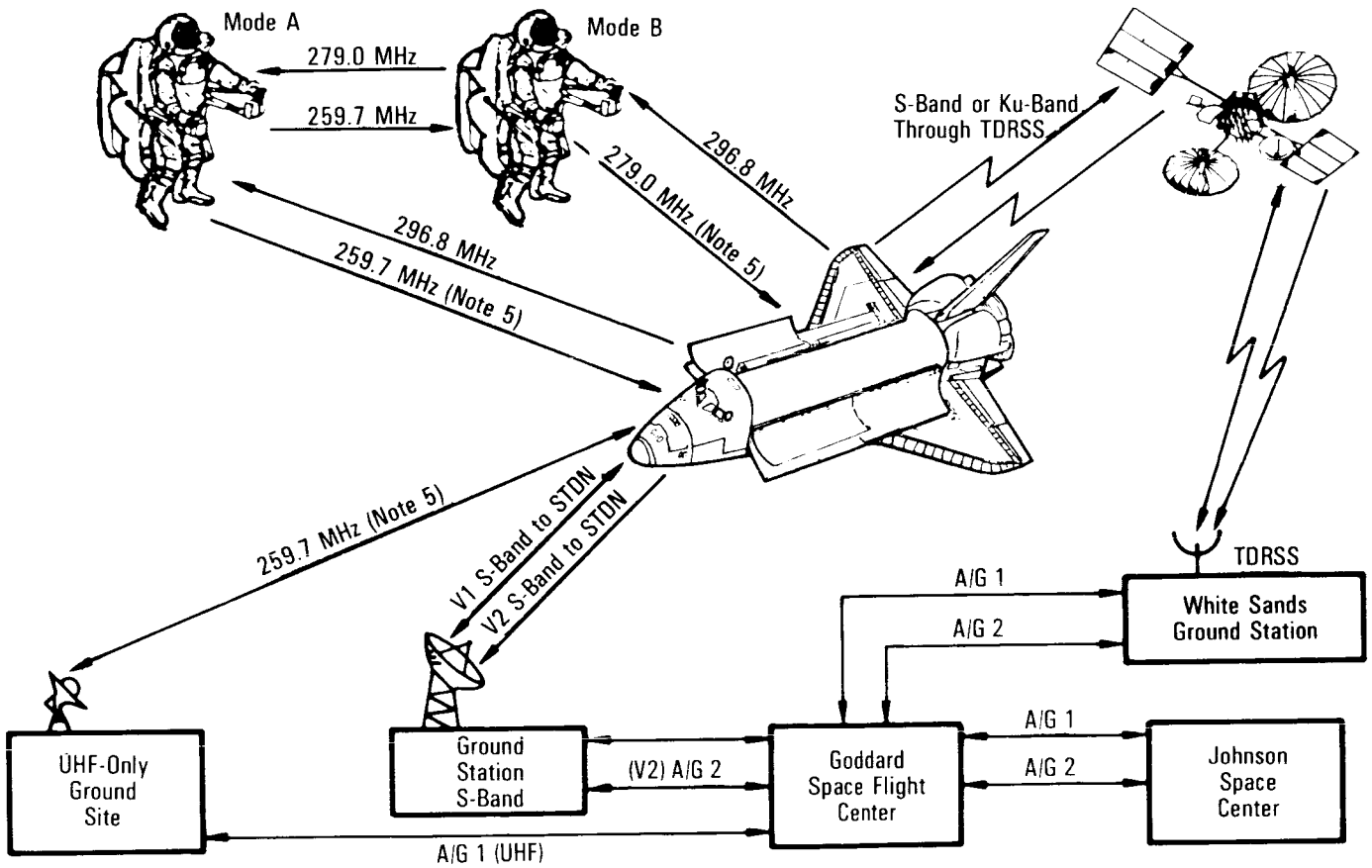


Notes:
1. Capsule Communicator Uplink Air-to-Ground 1 Only (S-Band Ground Sites)
2. Houston Communication Monitor A/G 2
3. Ground Site Monitor UHF
4. Backup A/G Lines Are Direct to JSC.
5. If Two-Way Communication Is Needed Over UHF-Only Ground Site, EVA, Orbiter and Ground Will Switch to 259.7 Simplex.

EVA Operational Modes

| Mode | | | |
|---|---|---|---|
| Hardline | A | B | Backup |
| Two-Way Hardline Communication Between Orbiter and Extravehicular Mobility Unit via Service and Cooling Umbilical | Transmit 259.7 Data and Voice<br>Receive 296.8, Receive 279.0 } Voice | Transmit 279.0 Data and Voice<br>Receive 296.8, Receive 259.7 } Voice | Transmit/Receive 259.7<br>Receive 295.8 |

*Extravehicular Activity Air-to-Ground Configuration*

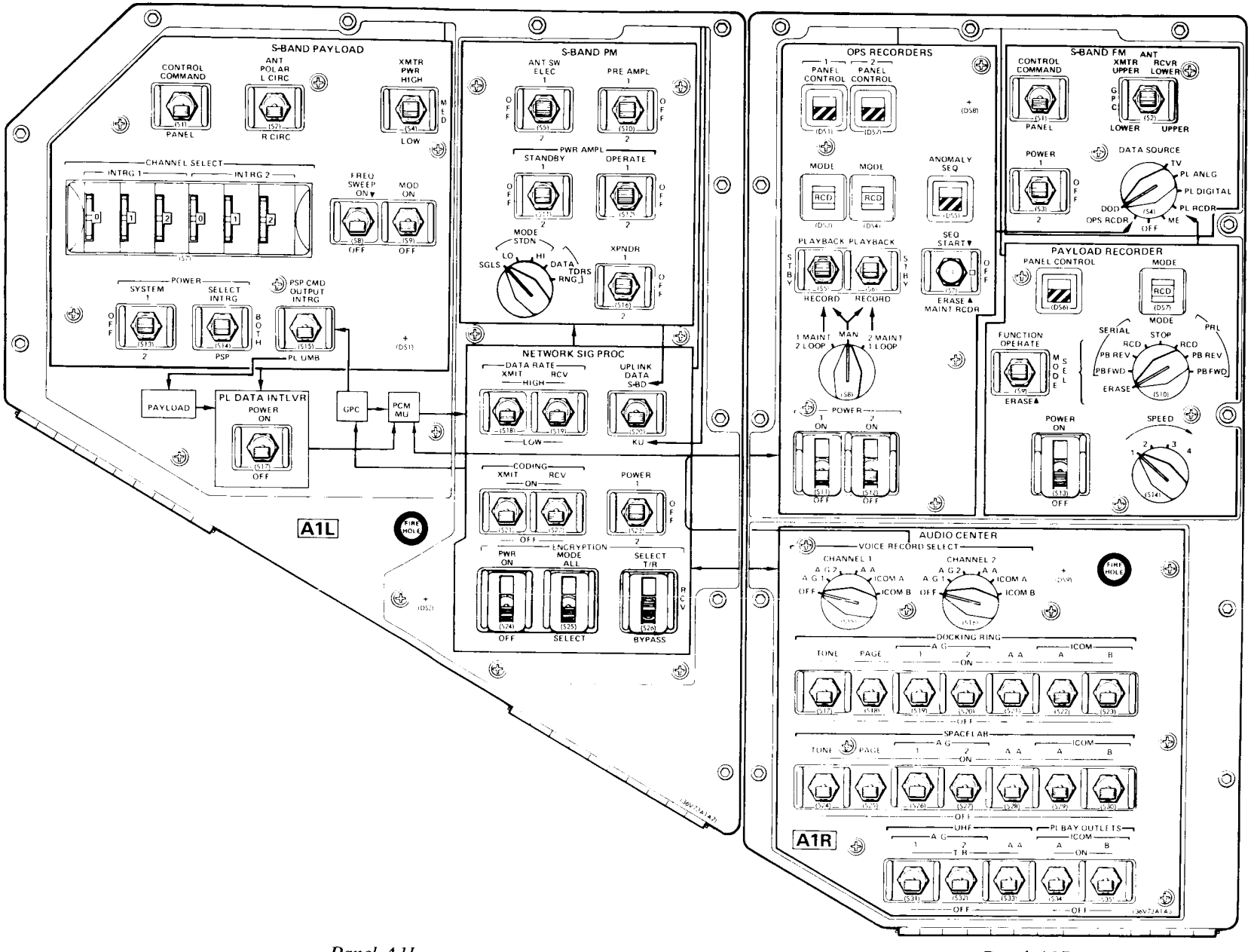


Panel A1L

Panel A1R

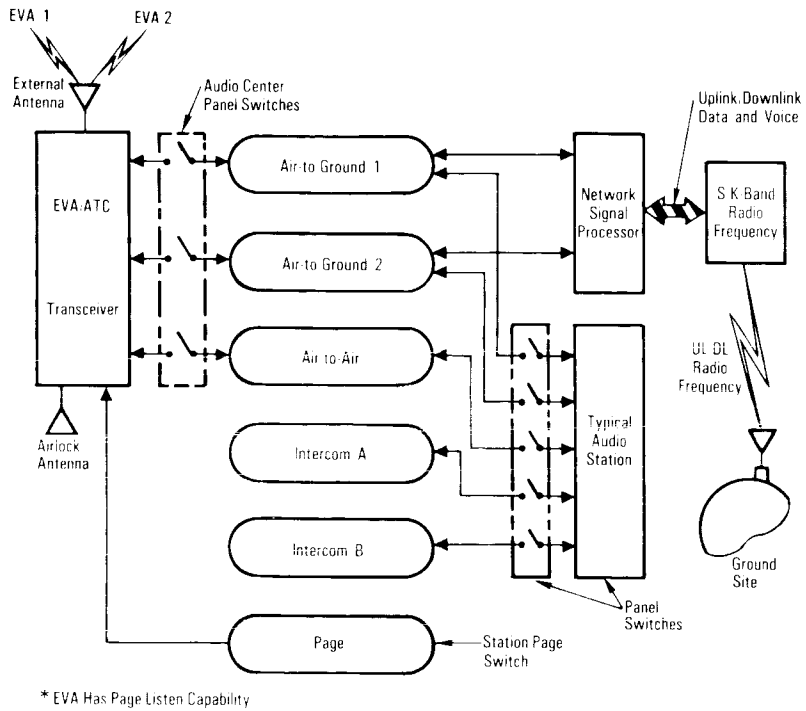


*Ultrahigh Frequency/Audio Interfaces*

astronaut on 279.0 MHz. The other EVA astronaut operates in mode B, transmitting data and voice to the orbiter on 279.0 MHz, transmitting voice to the other EVA astronaut on 279.0 MHz, receiving voice from the orbiter on 296.8 MHz and receiving voice from the other EVA astronaut on 259.7 MHz. The orbiter then communicates through a switch in the orbiter via the UHF EVA relay mode by retransmission over air-to-ground through its S-band system to the STDN ground station, its S-band system to the TDRS or its Ku-band system to the TDRS. As a backup procedure only when the shuttle is over a UHF ground station, the EVA astronauts, orbiter and ground can switch to the 259.7-MHz UHF, simplex. During EVA, the EVA crew members' biomedical data also are transmitted to the airlock antenna and separated from voice signals in the orbiter instrumentation system for transmission to the ground.

The UHF system may be used after entry during the approach and landing phase of the mission. Air-to-ground voice communications take place among the space shuttle, the landing site control tower and chase planes (if used).

**Audio System.** The audio system interfaces with the caution and warning system for reception of C/W (tone) signals; with UHF, S-band and Ku-band systems for transmission and reception of external signals (air-to-air and air-to-ground); and with the three tactical air navigation sets for receiver selection and signal monitoring. The network signal processor supplies S-band and Ku-band signals to the audio system for transmission and/or reception at various flight crew stations in the spacecraft. The attached payload (Spacelab), payload bay, launch umbilical and the operations recorders all interface electrically with the audio systems for transmissions and/or reception of signals.

The eight loops in the audio system are (1) air-to-ground 1, (2) air-to-ground 2, (3) air-to-air, (4) intercom A, (5) intercom B, (6) paging, (7) C/W and (8) TACAN. A/G 1 and A/G 2 are used to communicate with the ground through the S-band PM and Ku-band systems. In the low-data-rate mode or while the teleprinter is being used, A/G 2 is not available for voice communications. A/A is used, by convention, to communicate with the ground and with EVA astronauts through the UHF system. Intercoms A and B are used to communicate from station to station within the orbiter and Spacelab. The paging loop allows one crew member to send his voice to all active stations. The C/W loop sounds different tones for different malfunctions or emergencies. The TACAN loop, accessible only at the commander's and pilot's crew stations, is used to identify TACAN ground stations for navigation. Six audio terminal unit panels are in the orbiter at the following crew stations: commander, panel O5; pilot, panel O9; mission station, panel R10; payload station, panel L9; middeck, panel M042F; and airlock, panel AW18D.

The audio distribution system is a digital system that greatly reduces the number of wires necessary to carry electronic signals between system components. Electronic impulses can be given identifying characteristics and sorted into groups of signals. The

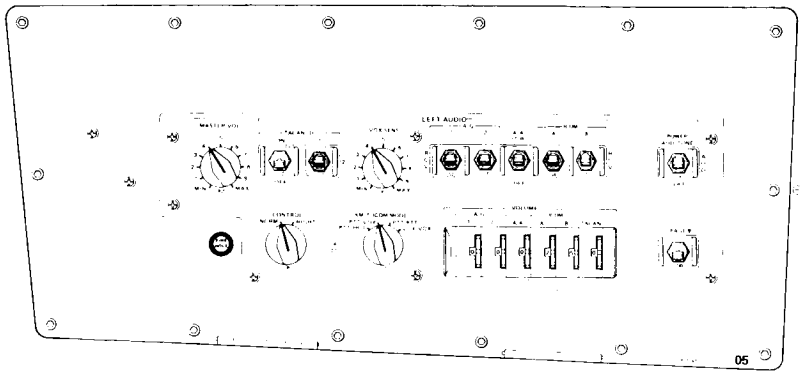


*Panel O5*

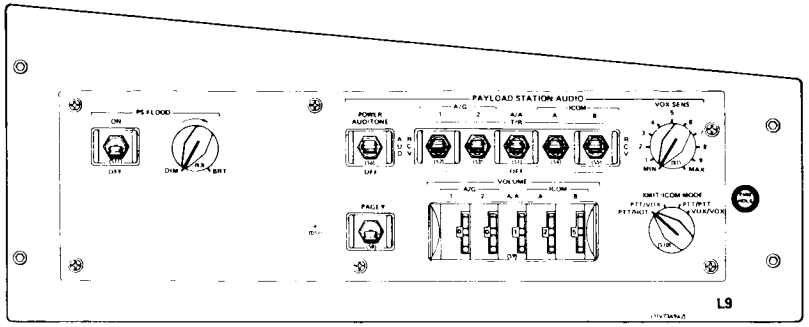


*Panel L9*

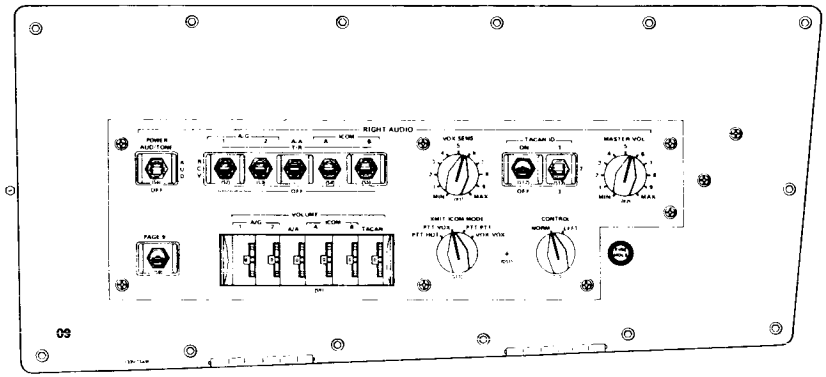


*Panel O9*

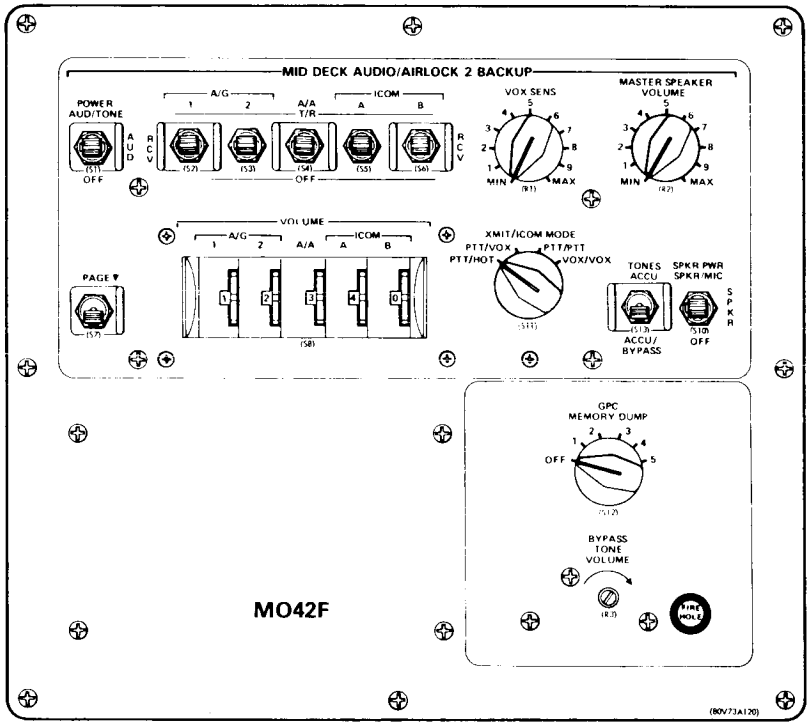


*Panel M042F*

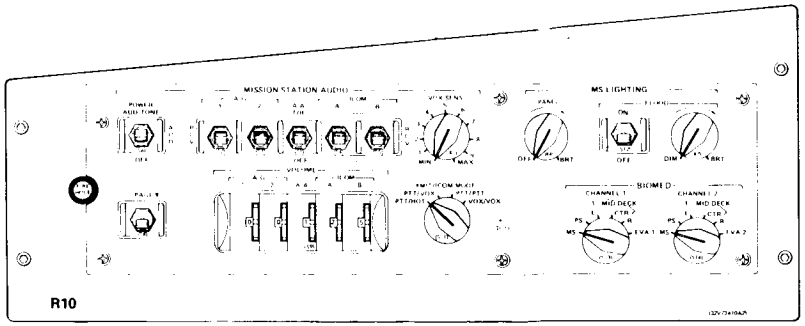


*Panel R10*

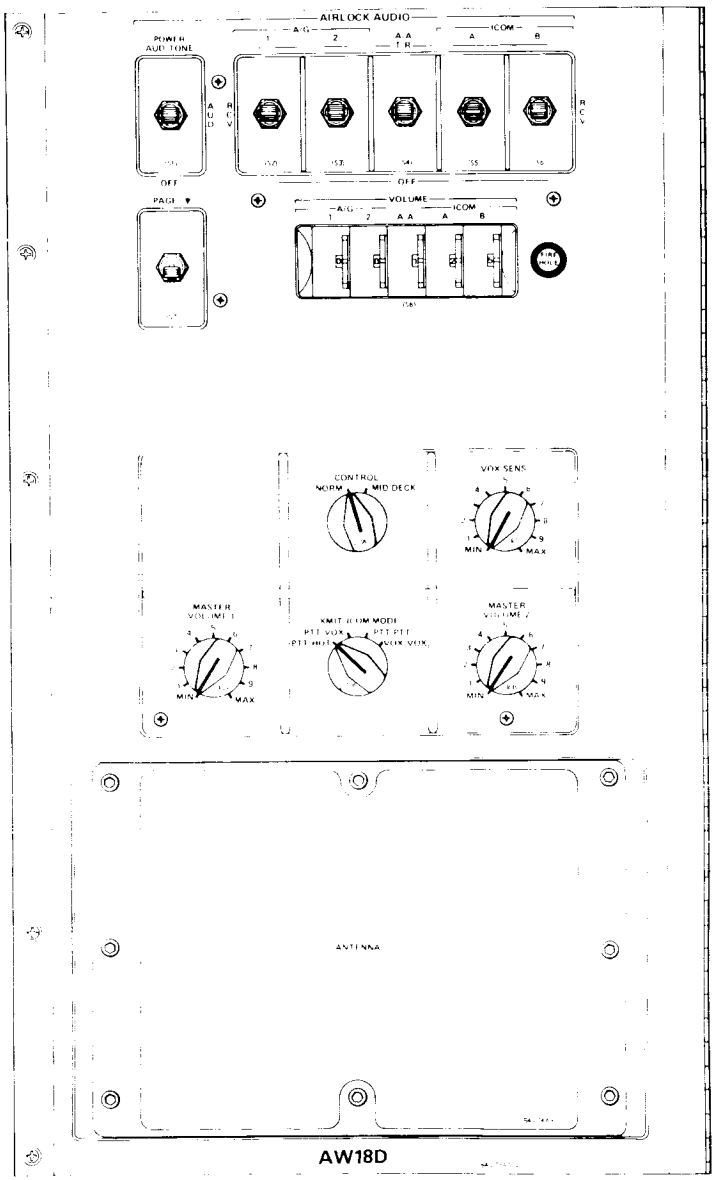


*Panel AW18D*

coded impulses, called bits of information, are generated by the particular position of each switch on the various spacecraft control panels. Several bits can be reduced in number by a multiplexer to a particular identifying impulse. Bit groups from several sources are reduced so that a large number of signals can be sent along a single wire. Up to 128 bits of information can be encoded by the audio terminal unit into a serial-data word and sent along one wire to a decoder in the audio central control unit, where the bits are identified and separated by their original characteristics. Audio signals then are distributed by the ACCUs to the appropriate ADS components. There are no digital voice signals in the ADS, only digital enable signals. All ADS voice signals are analog (audio).

During launch and entry, each flight crew member wears a crew altitude protection system. The enclosed environment of the helmet lessens the severe noise levels encountered at launch and allows intelligible air-to-ground communications. For communication capability, a headset containing a microphone and earphone fits over the crew member's head, and a connector and cable interface with the headset interface unit, connected through communications cables to respective ATUs. The microphone can be positioned to suit the individual flight crew member. For emergency egress, a pull-away connection is used between the CAPS and HIU, in addition to the standard CAPS/HIU twist-on connector.

The headset interface unit has separate push-to-talk buttons for transmit and intercom modes and a volume control that determines the level of sound heard through the ear piece (microphone sound level is determined by automatic gain control circuitry within the ATU). In addition, the commander and pilot have push-to-talk switches on their rotational hand controllers for the transmit mode. Push to talk means that a push button must be depressed to allow a flight crew member to talk through the system. The headset interface unit is a portable microphone switch that is considered part of the communications carrier umbilical. It provides volume control and push-to-talk capabilities to the CCA Snoopy cap used for EVA, to the CAPS and to the wireless crew

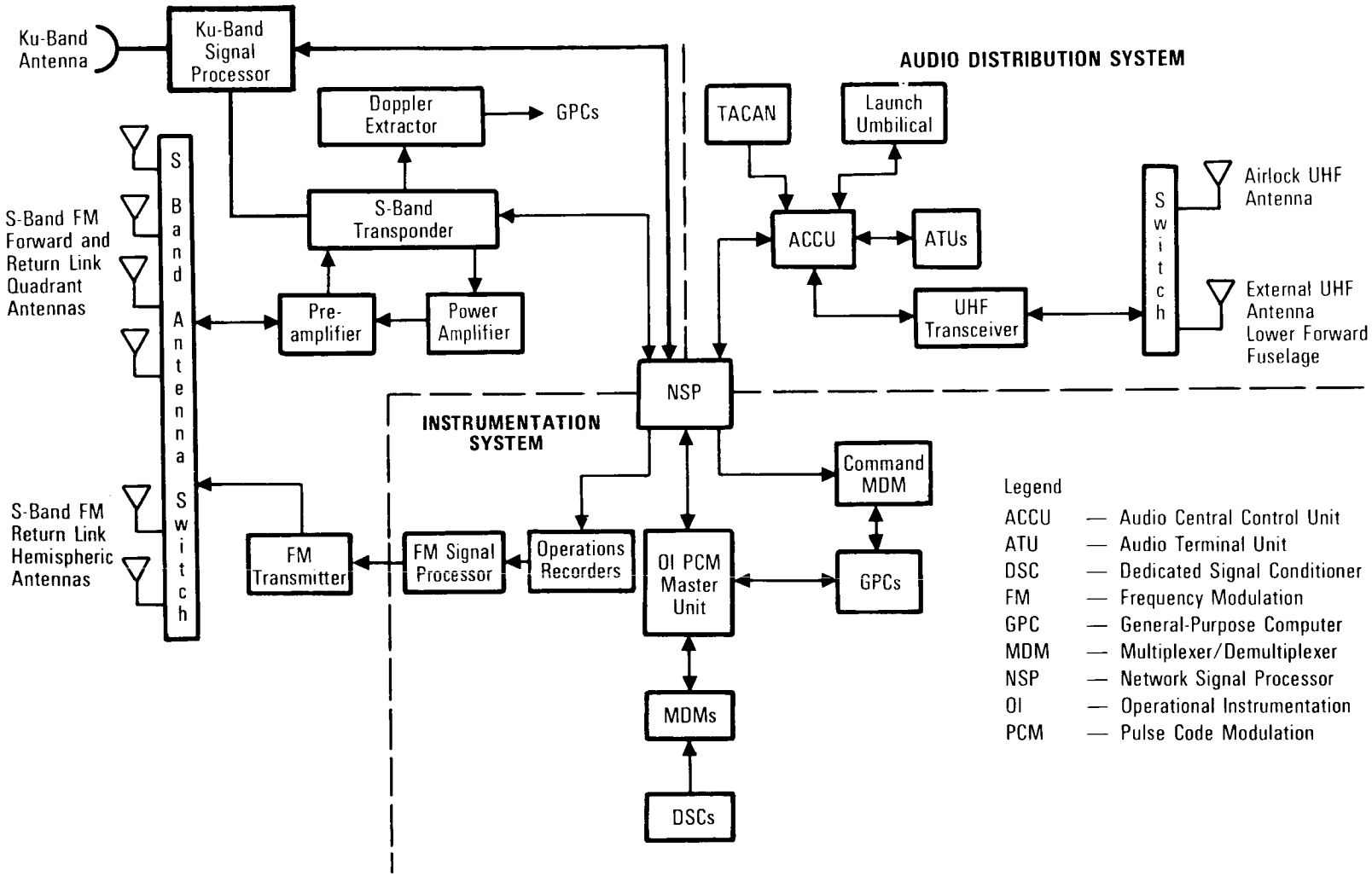


*Communications System*

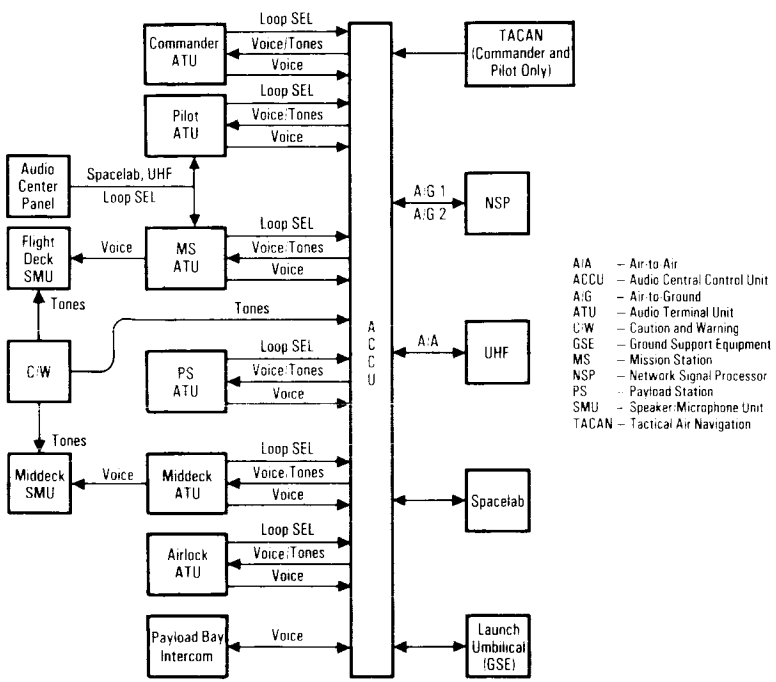


*Audio System*

communication unit as a backup. The Snoopy cap integrates the communication carrier assembly into a skullcap. The HIU has a clip that attaches to the crew's flight suits. The unit has a three-position rocker switch and a volume control knob. The switch positions are *xmit*; *icom;* and an unlabeled, spring-loaded-off center position. The *xmit* position allows access to intercom and external circuits, while the *icom* position is for intercom only. The volume control knob acts in series with the volume controls on the associated ATU.

The communication cables vary in configuration depending on seat location. Each seat has two 4-foot communication cables or a 14-foot length, as required. One 4-foot cable is flown as a spare. The cables connect to CCU outlets at various locations in the crew compartment. Each CCU has a specific ATU that controls communication loop configurations. CCUs are located at panels L5, R6, A11, A15 and M039M; two are located in the airlock on panel AW82D.

The CCU outlets and power switches provide electrical connection to headset and CAPS cables; an *on/off* toggle switch at each outlet controls electrical power to the respective cables. The commander's and pilot's stations each have three-position CCU switches labeled *CCU, off* and *suit*. The *CCU* position permits power flow to a WCCU or HIU. The *off* position blocks microphone power from a WCCU, HIU or LEH. The *suit* position permits power to reach the CAPS microphone. All other CCUs are two-position switches labeled *CCU* and *off*, which function the same as the commander's and pilot's switches. The *CCU/EMU* switches are located in the airlock below the EMU outlets on the panel labeled *power/battery charger*. The individual three-position switches are labeled *EMU 1, EMU 2* and *bus select*. Each switch allows the crew to select main A or main B dc power for the EMU or to turn power on and off to the EMU. For entry communication configurations, the power controlled by the switch is used for microphone-associated circuitry only. Leaving CCU power off confines that individual to a listen-only mode, independent of ATU configuration.

A multiple headset adapter installed on the middeck ceiling is plugged into the CCU outlet on panel M039M. Its three CCU outlets allow up to three crew members seated on the middeck to share the one available outlet. When any one person connected to an MHA keys (in PTT mode) or activates the voice-operated transmitter, all three individuals' microphones will be keyed, and individuals sharing the MHA will hear each other talking only on side tone (up to 20 decibels below other loop levels). One MHA is stowed in a locker for on-orbit or backup use. Voice-activated transmission means that if a crew member's voice reaches a certain volume level (which is adjusted by a dial on each ATU), the system will transmit that crew member's voice. Hot mike means that the microphone is always keyed.

Once the shuttle reaches orbit, the crew altitude protection systems are stowed, and wireless communication units are used in place of HIUs or communication cables to allow the flight crew freedom of movement around the crew cabin.

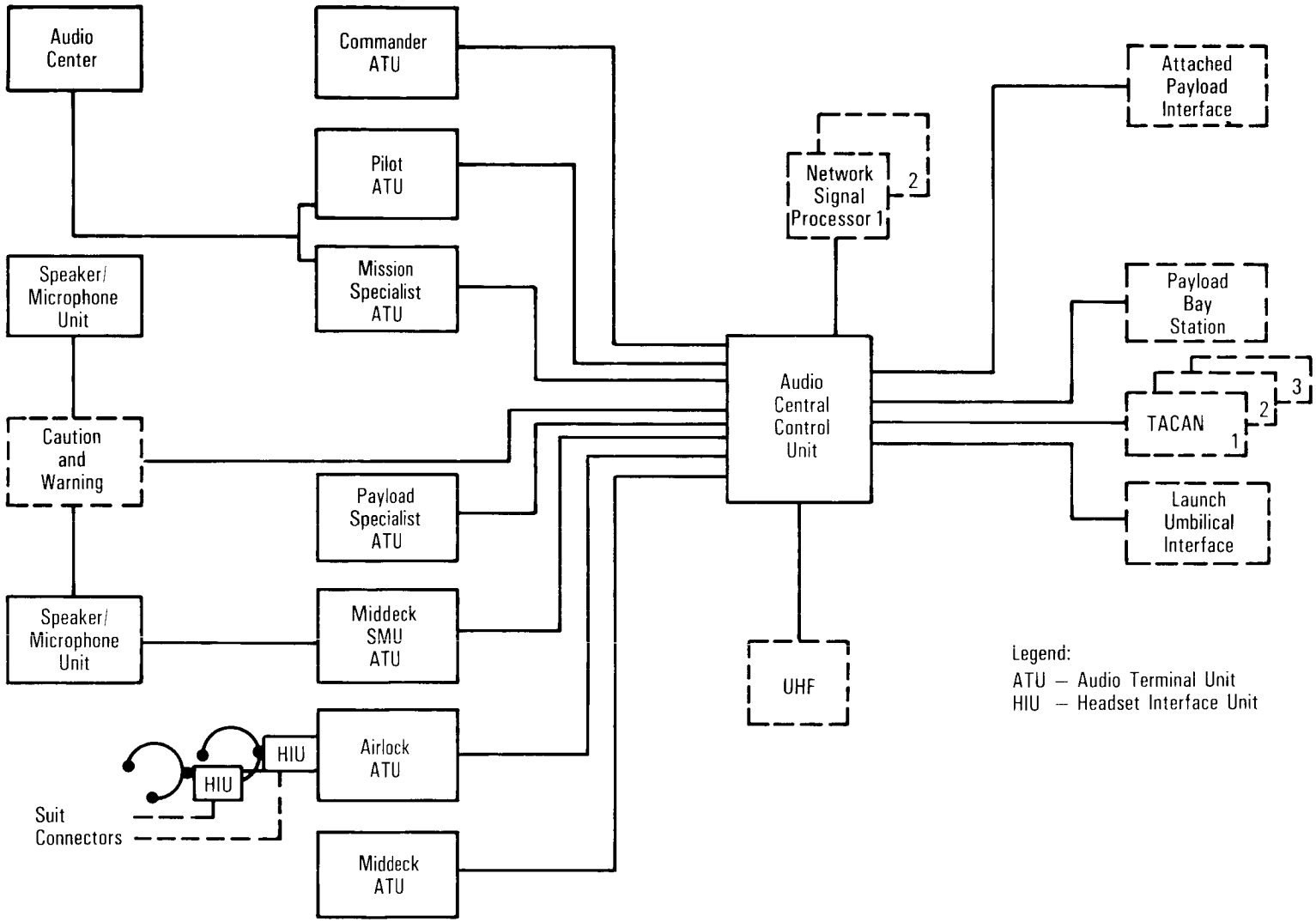


*Audio Distribution System*

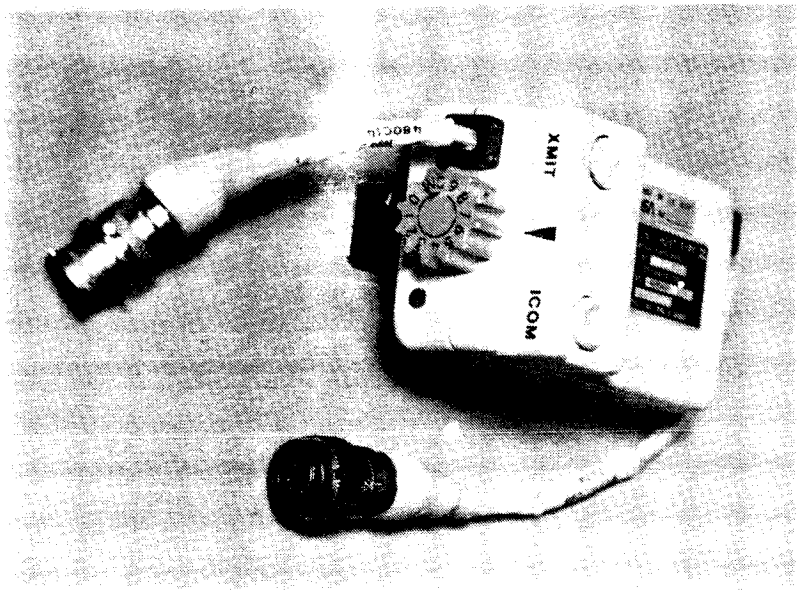


*Headset Interface Unit*

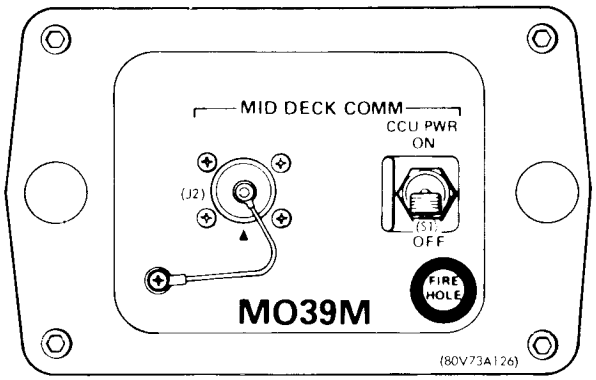


*Panel M039M*

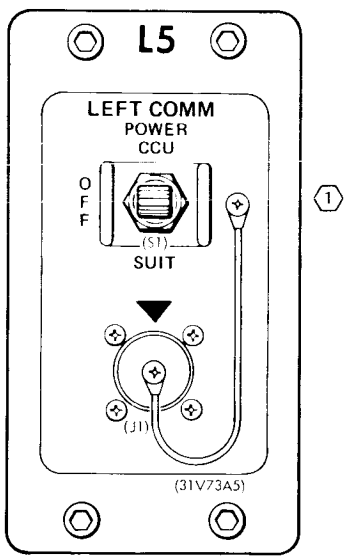


*Panel L5*

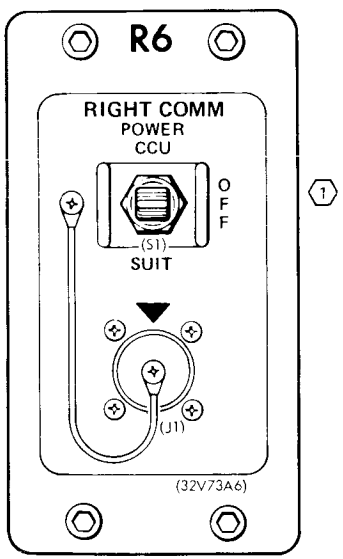


*Panel R6*

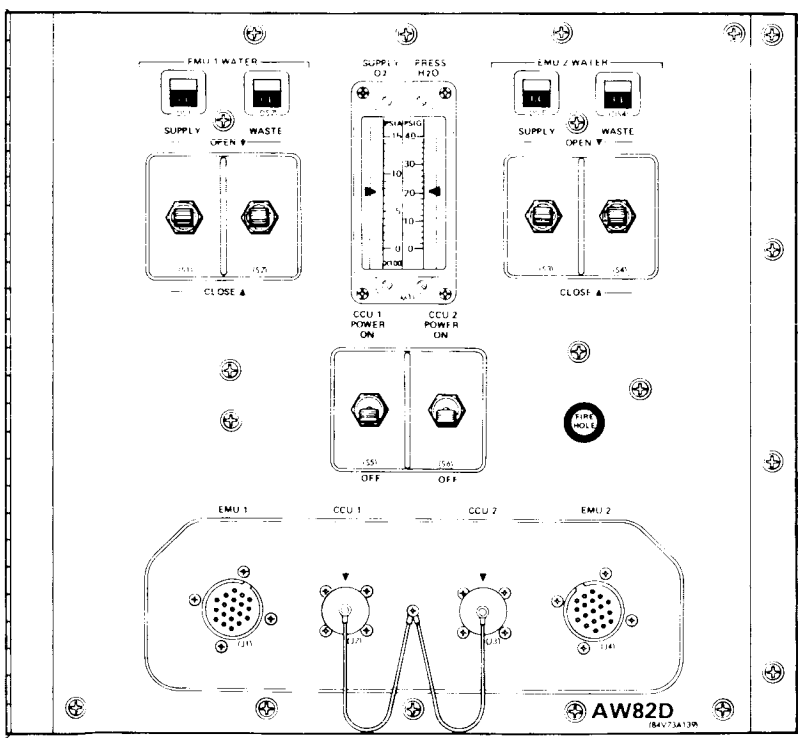


*Panel AW82D*

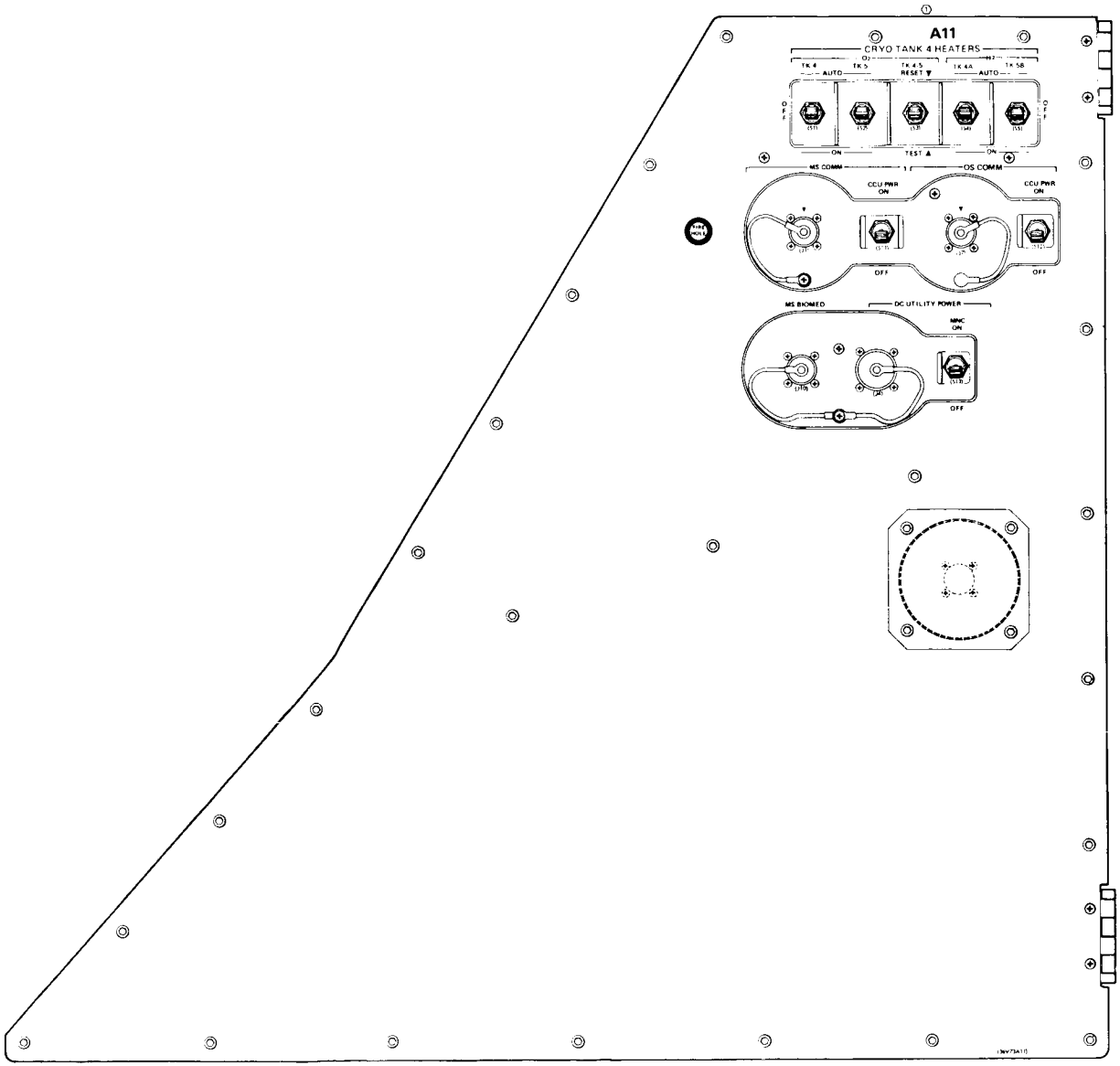
A11
CRYO TANK 4 HEATERS
TK 4
TK 5
TK 4.5
RESET
TK 4A
TK 5B
AUTO
AUTO
OFF
OFF
ON
TEST
ON
MS COMM
OS COMM
CCU PWR
ON
CCU PWR
ON
OFF
OFF
MS BIOMED
DC UTILITY POWER
MNC
ON
OFF

*Panel A11*

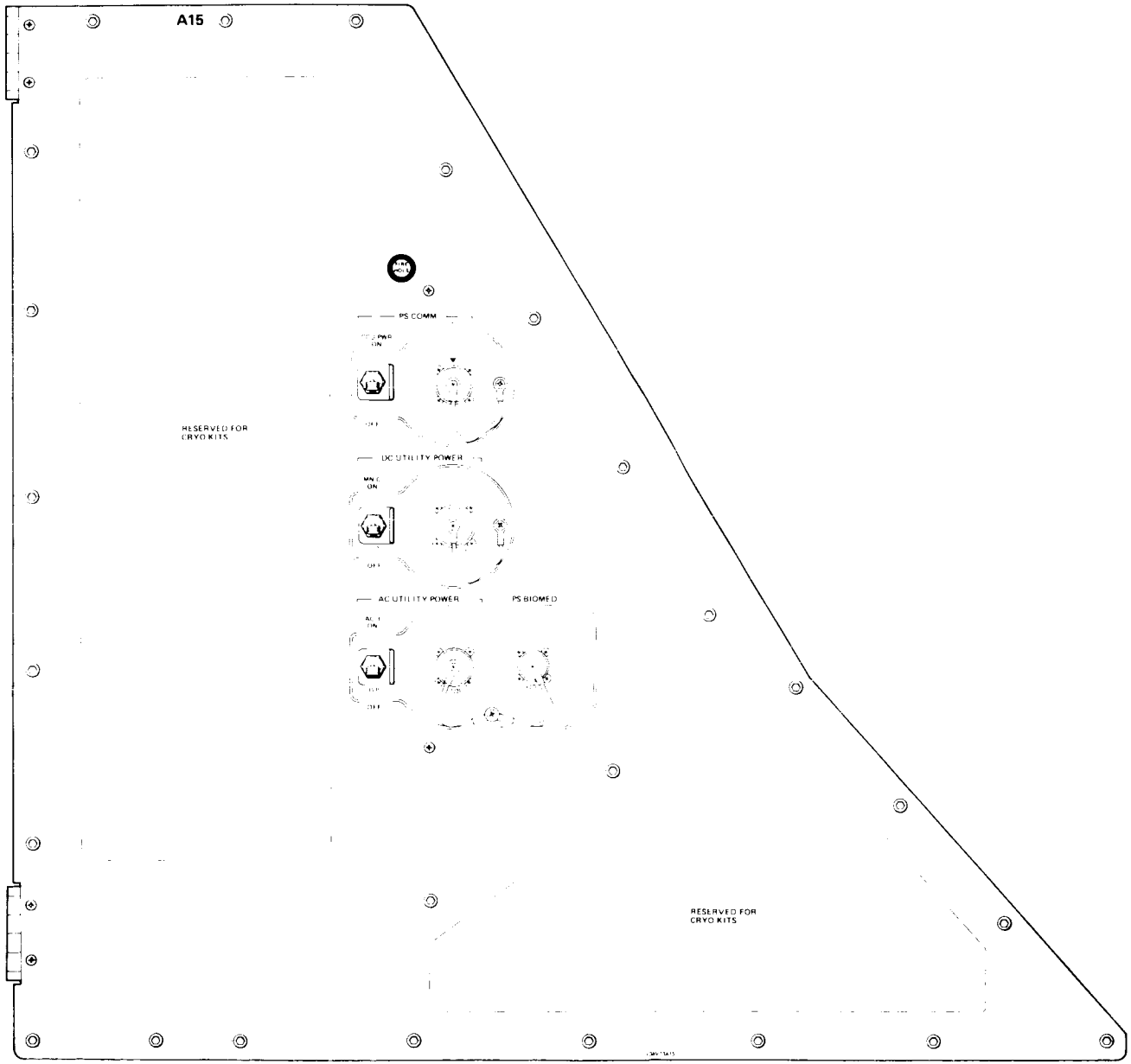
A15
PS COMM
PWR ON
OFF
RESERVED FOR CRYO KITS
DC UTILITY POWER
MAIN ON
OFF
AC UTILITY POWER
PS BIOMED
AC 1 ON
OFF
RESERVED FOR CRYO KITS

*Panel A15*

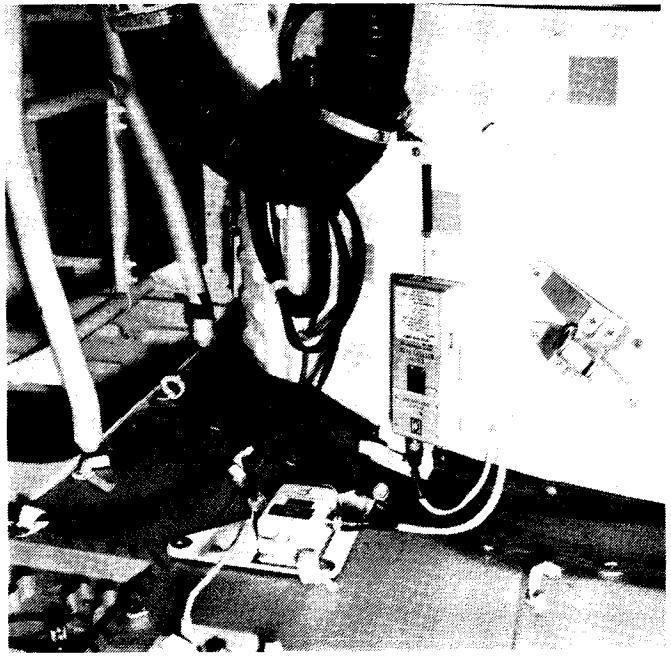

*Multiple Headset Adapter*

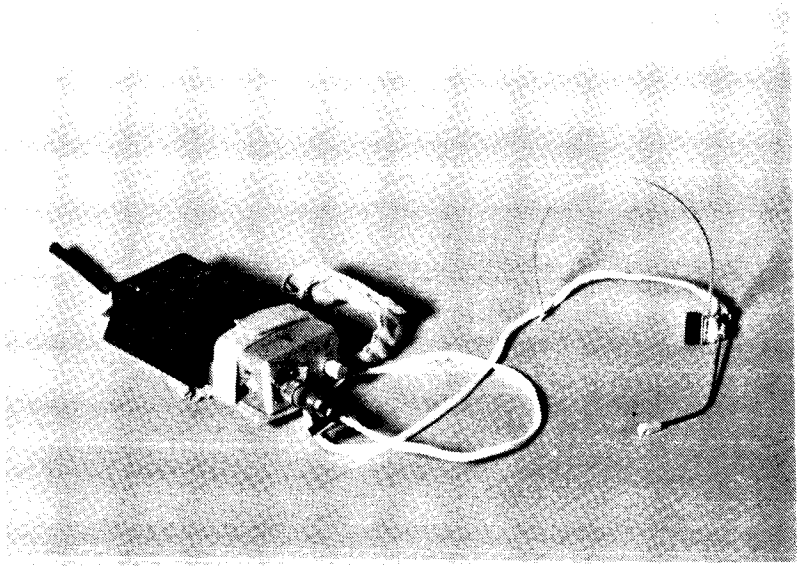

*On-Orbit Communication Configuration*



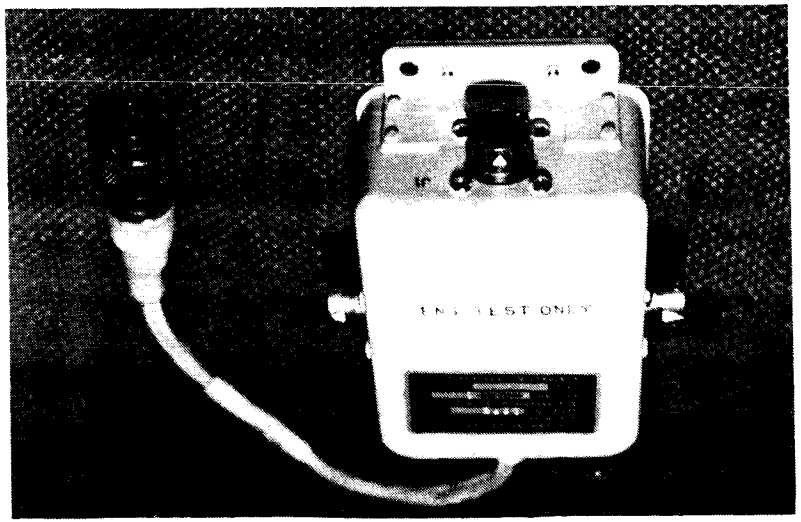


*Multiple Headset Adapter Stored as a Backup in Middeck Locker*

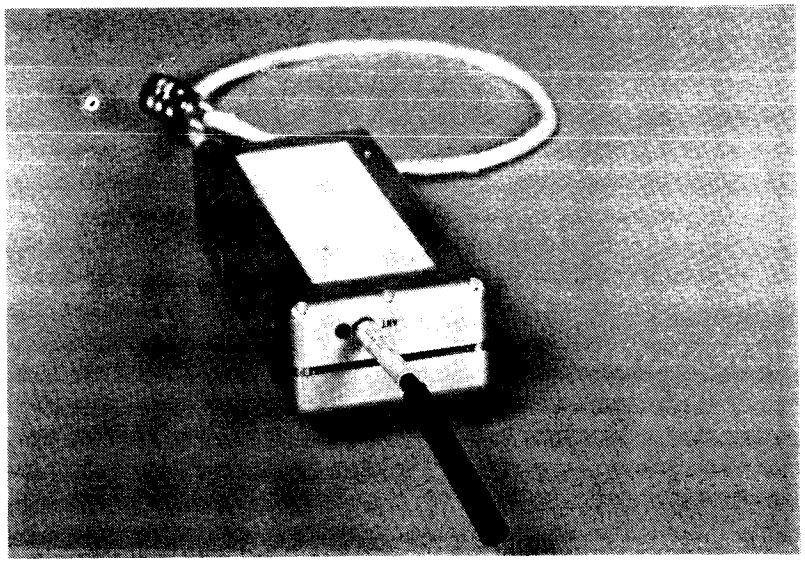

*On-Orbit Communication Antenna*

The WCCU consists of a wall unit and a leg unit that is worn by each flight crew member in the crew compartment during orbital operations. The wall unit connects to a CCU outlet and remains attached to the crew compartment wall by Velcro until stowed for entry. Each wall and leg unit transmits on a unique pair of UHF frequencies; therefore, wall and leg units must be used together. Each set is identified by a letter on the set (e.g., *A*). The wall unit is identified further by enclosing the letter in a box. Each unit is stowed with its cabling attached. The wall unit has a 23-inch cable to interface with the CCU outlet, and the leg unit has a 22-inch cable attached to a lightweight headset.

When the WCCU is unstowed, the only assembly necessary is to insert and tighten the flexible antenna in the bottom of each wall and leg unit. Since the wall unit receives power from the CCU outlet, the on/off/volume knob is not used and the battery pack is empty. The *master vol* control is set to full volume. All other switches are set as required; typically, the individual communication loops are used. The leg unit is stowed with battery pack installed and is attached to the crew member's leg with a wrap-around elastic strap. The rotary on/off/volume knob (unlabeled) is turned clockwise past the on/off detent, and the volume is set as desired. Batteries are changed by depressing the battery pack latch push button lever (unlabeled) and sliding the battery pack off the unit. Expected use from one battery is three days (with the unit turned off during sleep periods). Sliding the new battery pack into the unit causes both the electrical connector and mechanical connector to latch.

The very lightweight headset is the interface between the leg unit and crew member. A single-strand wire headband holds the earphone against the ear and supports a thin boom holding a noise-canceling microphone near the mouth and a cable connector to the crew member's leg unit. The lightweight headset cable and connector also can interface with the HIU.

The audio central control unit, the heart of the audio system, is located in the crew compartment middeck forward avionics bay. The ACCU identifies, switches and distributes signals among the various audio distribution system components. Both digital and audio signals are received and processed by the ACCU, but the ACCU transmits only audio signals. It polls the ATUs to determine the panel configuration and connects the selected loops to the ATUs. It is also the point where the audio system is connected to the S-band PM, Ku-band and UHF systems for external communication. The selection switch for the two ACCUs is on panel C3.

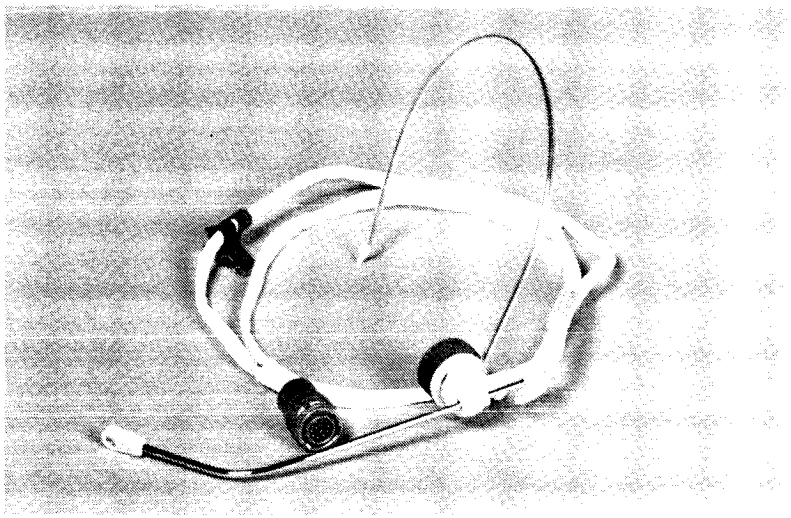

*Very Lightweight Headset*

The ACCU circuitry activates signals from the launch umbilical connection intercom A and B channels. Any crew station ATU then can be configured to transmit and receive intercom signals from the ground through the umbilial. (Only intercom signals are processed through the umbilical.)

Eight ATUs in the crew compartment are audio control panels used to select access by the CCU jack at each station and to control the volume of various audio signals. An ATU at each flight crew station, two in the middeck and one in the airlock control signals to headsets or CAPSs through the crew member CCU. The middeck and mission specialist crew stations have an ATU to control signals through a speaker/microphone unit. Signals to or

from ATUs are processed by the ACCU. The *vox, PTT, hot mic, ATU* and *master vol* controls are controlled by circuitry within the ATU. All other knobs or switches on the face of the ATU send digital enable signals to the ACCU (except the audio function of the ATU power switch, which supplies power to the ATU circuits).

A redundancy feature of the four switches on the four ATUs allows control of a particular panel to be switched to another ATU. The left may be switched to the right commander's and pilot's ATU, and right pilot ATU control may be switched to the left commander's ATU. The commander's and pilot's control knobs are located on the respective panels. Mission specialist ATU

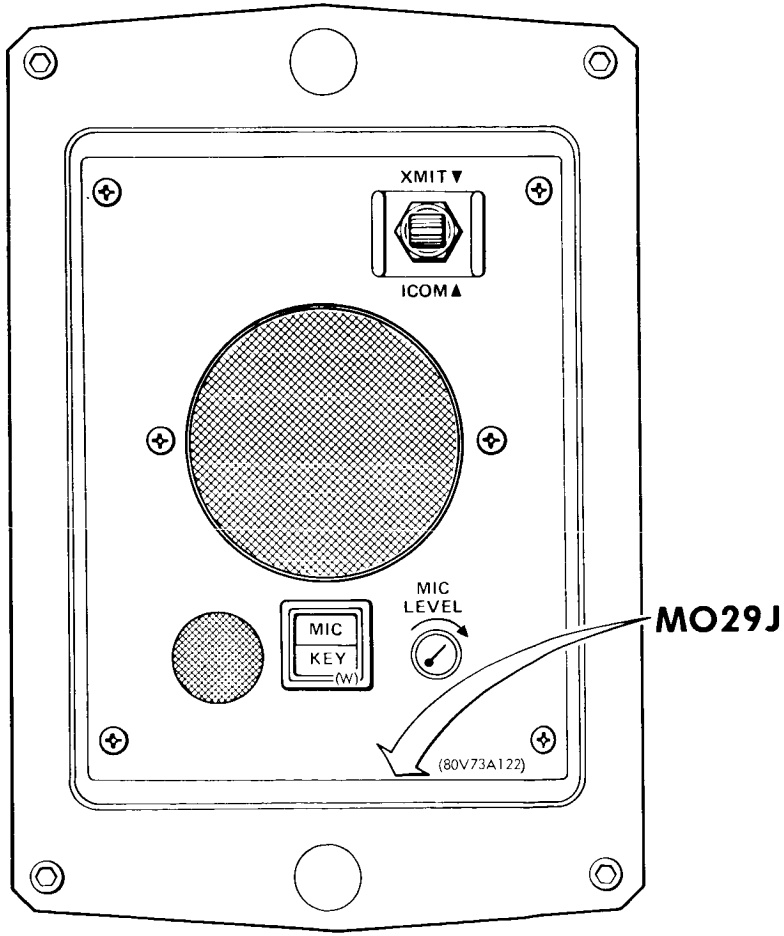


*Panel M029J*

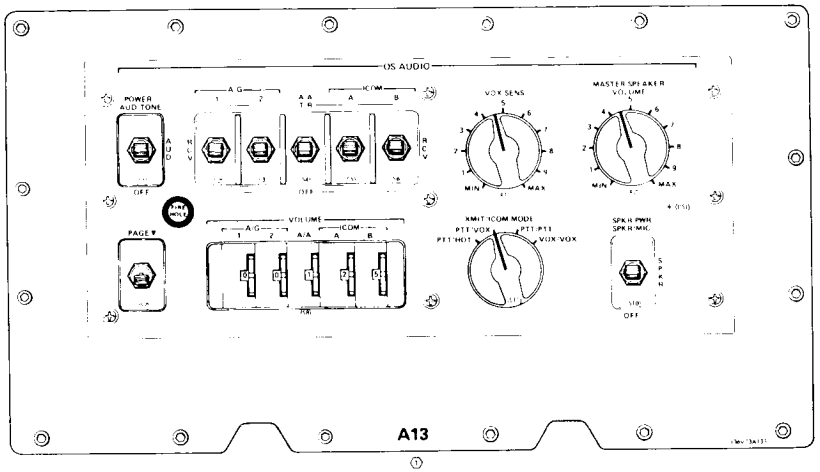


*Panel A13*

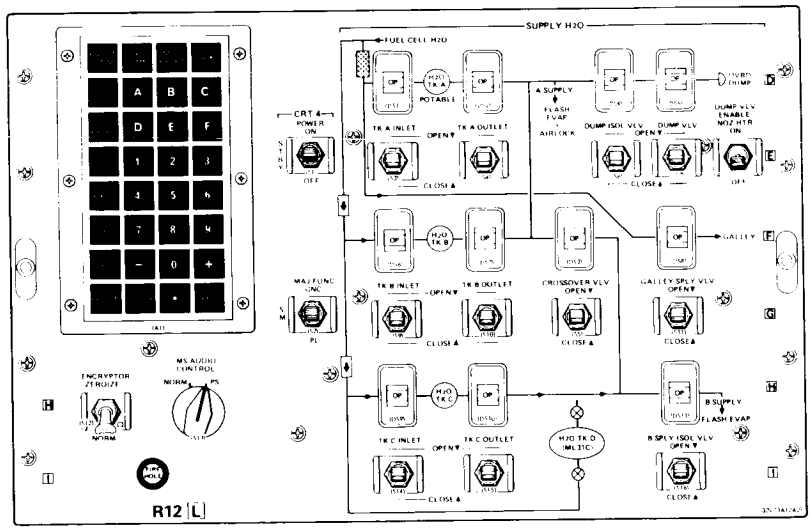


*Panel R12*

control may be switched to the payload specialist's ATU, and airlock ATU control may be switched to the middeck and payload specialist's ATUs. The control knob for the mission specialist's ATU is located below the CRT 4 keyboard beneath the mission specialist's ATU. Control of these latter two ATUs is not reversible as commander and pilot ATU control is. Airlock CCU/EMU 1 control is switched to the middeck CCU ATU, and airlock CCU/EMU 2 control is switched to the middeck speaker/microphone unit ATU. Both functions are switched with the single control knob in the airlock ATU. In the *norm* position, control of the ATU is from the panel to which the knob belongs. The other position of the knob indicates the ATU to which control can be transferred. The ATU control knob changes all ATU functions to the alternative ATU except the master volume control. This redundancy protection is used in the event of a failure or malfunction of any of the four ATUs that have an ATU control knob.

Each ATU has its own three-position power switch to control all signals to or from the ATU. The switch positions are *aud/tone, aud* and *off*. In the *aud/tone* position, all available functions of the ATU are armed; and transmission and receptions may be made through the ATU depending on the position of other switches on the ATU. C/W tone digital enable signals are sent to the ACCU to allow C/W audio to reach the ATU, thus the CCU or SMU. The *aud* position has the same functions as *aud/tone* except that C/W signals are blocked from the ATU. The *off* position shuts off power to the ATU power supply, for the ATU amplifiers. Siren ($\Delta P$) and klaxon (fire) C/W signals go directly to an SMU, even with the SMU and ATU power off.

Each ATU has a two-position, spring-loaded-off paging switch that must be held in the *page* position to activate the circuit. When activated, the switch enables the ATU to transmit to all other ATUs, the EVA transceiver and the attached payload circuit (Spacelab). Any number of stations may use the paging circuit simultaneously, and the circuit may be used regardless of the position of the various individual channel control switches.

On all ATUs, the two air-to-ground channels, the air-to-air channel and intercom channels A and B have individual three-position control switches for selecting access to particular channels for transmission or reception. The switch positions are *t/r, rcv* and *off*. The *t/r* position permits transmission or reception over the selected channel. The *rcv* position deactivates transmission capability on the selected channel and permits only reception of signals. The *off* position deactivates transmission and reception on the selected channel. These control switches do not turn on any transmitter or receiver but allow access to a transmitter or receiver.

Each channel control switch has a thumbwheel volume control to adjust signal intensity on the related channel. The thumbwheels are labeled from zero (lowest volume) to nine (highest volume) and cover a range of approximately 27 decibels in 3-decibel increments. There is a volume control thumbwheel for TACAN signals on the commander's and pilot's ATUs.

The *xmit/icom* knob controls four combinations of external and intercom transmissions. The four knob positions are labeled *PTT/hot, PTT/vox, PTT/PTT* and *vox/vox*. In each case, the first set of initials indicates the method of external transmission activation, and the second set indicates the method of intercom transmission. In the *PTT/hot* position, external transmissions are made through (1) push-to-talk activation of a rotational hand controller at the commander's or pilot's station, (2) an HIU (any CCU station) ATU or (3) an SMU (middeck). Hot mike is activated, and the intercom is continuously live from the selected station (*HIU* or *SMU xmit* must be keyed to enable external transmission). In the *PTT/vox* position, external transmissions are made by the transmit function of an HIU, SMU or RHC PTT; and intercom signals are voice activated. The *PTT/PTT* position provides access to external and intercom channels through the PTT of an RHC and HIU or an SMU, and the RHC PTT will activate any external and intercom channels selected. *Vox/vox* provides access to external and intercom channels and is voice activated.

*Vox* sensitivity regulates the loudness of the signal required for activation. The *max* setting requires a higher decibel level to activate the circuit than the *min* setting.

Master speaker volume control of all incoming signals to earphones or speakers is adjusted with the *master vol* knob. It acts in series with the volume control wheels for the individual channels—A/Gs 1 and 2, A/A, intercoms A and B and TACAN. Master volume knobs are located on the commander's, pilot's and airlock CCU ATUs and on the middeck SMU ATU. Two master volume knobs labeled *1* and *2* on the airlock ATU control volume to the respective CCU/EMU outlets in the airlock; the knobs are labeled from one (minimum volume) to nine (maximum volume).

The middeck ATU and the middeck speaker audio panel control operation of the SMU located at that station. In addition to the features of the other ATUs, the speaker/microphone unit ATU has a three-position power switch labeled *off, spkr* and *spkr/mic*. In the *off* position, no signals go through the ATU. In the *spkr* position, the SMU operates as a speaker only. In the *spkr/mic* position, the SMU can be used as either a speaker or a microphone. The SMU is located in the middeck ceiling and its power switch is located on the ATU. Signals to or from the SMU are selected on the ATU. A three-position, spring-loaded-off switch on the face of the SMU operates in conjunction with the PTT function of the ATU. The positions are *xmit* for access to external transmissions, *icom* for internal communications and the unlabeled off position for blocking outgoing PTT signals from the SMU. The *xmit* position sends signals over selected intercom circuits and to any external transmitters selected by the SMU ATU. The *icom* position excludes signals to external transmitters and allows signals to be sent over the selected intercom channel (A or B or both).

Keying the *icom* or *xmit* switch overrides the speaker, except for C/W emergency signals. In the voice-activated mode, the first signal to activate the circuit, either microphone or speaker, has priority, except for emergency C/W signals. The *mic key* light is a two-position, adjustable-intensity light that operates in conjunction with SMU transmissions. The intensity of the top half of the light is adjustable by the *mic level* knob; the brighter the light, the louder the signal. The bottom half of the light *(key)* is illuminated when a PTT function is selected and the circuit is keyed. Siren and klaxon C/W tones go directly to the speakers, even if the speaker power switch is off.

The audio center panel, located between the two aft viewing windows at the aft flight station, has three functions: UHF control, electrical interface capability with external vehicles and the payload bay, and operations recorders selection. All switches on the audio center panel send digital impulses to the ACCU, enabling the selected functions to communicate with Spacelab and the payload bay. Sets of *on/off* toggle switches labeled *Spacelab* and *PL bay outlets* electrically connect the particular function to the audio distribution system. The Spacelab subpanel has seven switches to enable the following functions: A/A, A/G 1, A/G 2, intercom A, intercom B, page and tone (C/W). The payload bay outlets subpanel has two *on/off* switches, one for intercom A and one for B.

Two rotary knobs labeled *voice record select* control various audio signals to be sent to the operational recorders through the NSP. A/G 1, A/G 2, A/A and intercom A or B audio can be sent to either recorder. Any two signals may be recorded at the same time, one on channel 1 and the other on channel 2. Either channel may be turned off. Signals to the operational recorders cannot be monitored by the flight crew.

The commander's and pilot's ATUs are the only units for controlling access to TACAN signals. There are two TACAN switches: the two-position *on/off* switch either allows reception or blocks incoming TACAN signals; the other three-position switch, labeled *1, 2, 3,* allows selection of the particular TACAN set to be monitored. There are no transmission capabilities over the TACAN channels. TACAN is a polar coordinate system that provides distance and bearing information to a selected TACAN station. It operates in a band of frequencies from 962 to 1,213 MHz. The TACAN ground station signal identification call letters are repeated in Morse code every 40 seconds.

**INSTRUMENTATION.** Orbiter operational instrumentation is used to collect, route and process information from transducers and sensors throughout the orbiter and its payloads. This system also interfaces with the solid rocket boosters, external tank and ground support equipment. Over 2,000 data points are monitored, and the data are routed to OI MDMs. The instrumentation system consists of transducers, signal conditioners, two pulse code

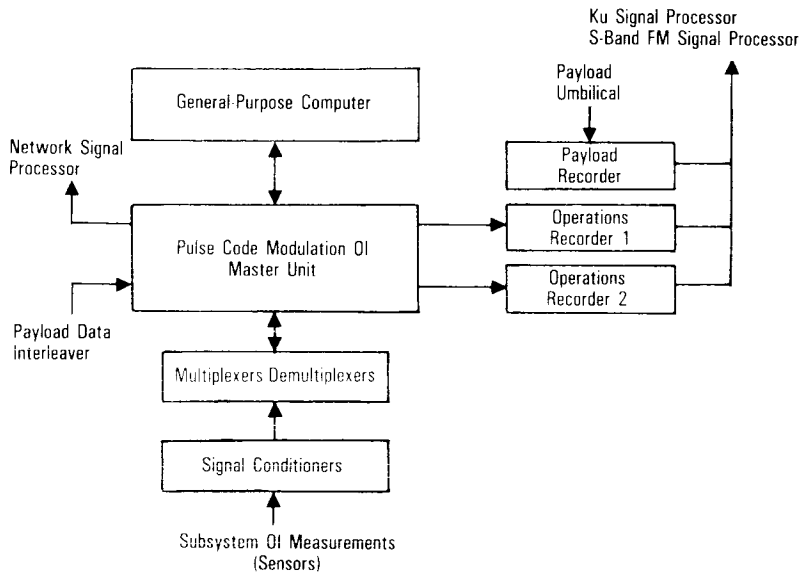


*Instrumentation*

| Area | Characteristics |
|---|---|
| Signal Conditioning | • 13 DSCs conditioning approximately 1,200 channels<br>• Six WBSC to MDM<br>• Approximately 45 high-level transducers<br>• Distributes data to PCM data system, panel displays, C/W, flight critical MDMs |
| PCM Data System | • Acquires data through seven OI MDMs, approximately 2,800 measurements<br>• Receives and provides data to five computers<br>• Accepts payload data through PDI or payload data bus (Spacelab)<br>• Provides output data in 64- and 128-kbps formats<br>• Provides synchronization to PDI and NSP<br>• Provides data to NSP and T-0 umbilical |
| Payload Data Recorders | • Receives data directly from payload or PLSP<br>• Provides data to GPCs and PCM<br>• Stores three channels of engine data at 60-kbps rate<br>• Stores interleaved voice and data at 96-, 128- or 192-kbps rates<br>• Stores payload data<br>• Provides for playback of recorded data during and after mission |
| Master Timing | • Provides time reference to computers, OI PCM, display panel and payload<br>• Provides synchronization to instrumentation and other subsystems |

*OI System*

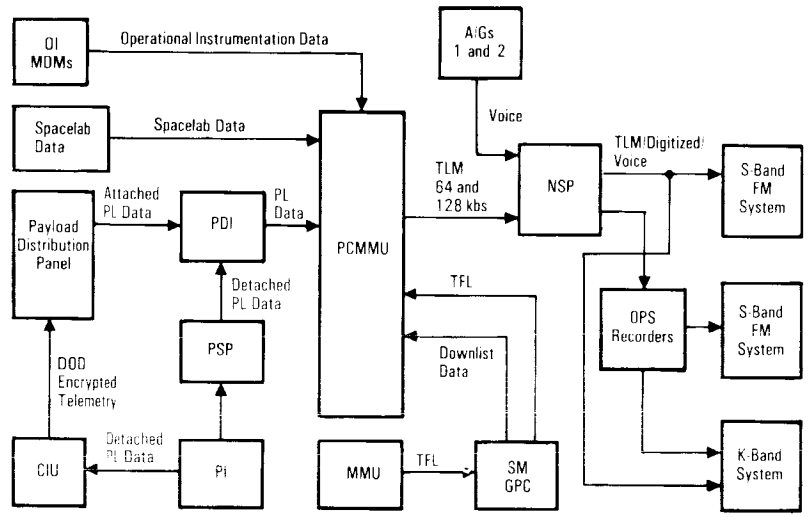


A/G – Air-to-Ground
CIU – Communication Interface Unit
GPC – General Purpose Computer
MDM – Multiplexer/Demultiplexer
MMU – Mass Memory Unit
NSP – Network Signal Processor
OI – Operational Instrumentation
OPS – Operations
PDI – Payload Data Interleaver
PL – Payload
PI – Payload Interrogator
PSP – Payload Signal Processor
PCMMU – Pulse Code Modulation Master Unit
SM – Systems Management
TFL – Telemetry Format Load
TLM – Telemetry

*Operational Instrumentation Data Flow*



modulation master units, encoding equipment, two operational recorders, one payload recorder, master timing equipment and onboard checkout equipment.

The OI system senses, acquires, conditions, digitizes, formats and distributes data for display, telemetry, recording and checkout. It provides for PCM recording, voice recording and master timing for onboard systems.

Dedicated signal conditioners convert digital and analog data signals received from the various sensors to a usable form. Some raw sensor data may need to be conditioned for compatibility with a multiplexing system. Signal conditioning provides the multiplexer with compatible inputs. The DSCs provide input from transducer signals, such as frequency, voltage, current, pressure,

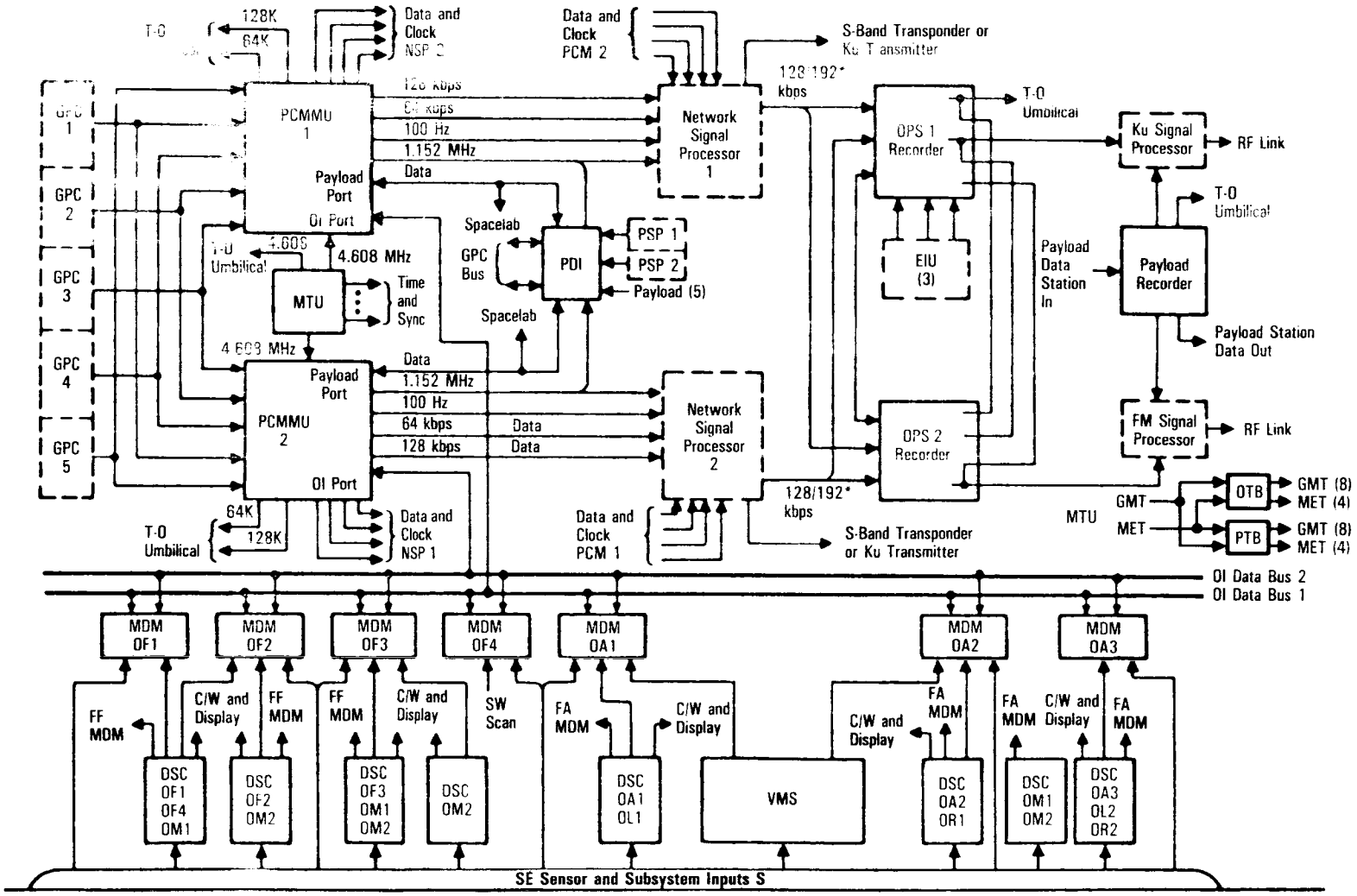


**Legend:**

C/W — Caution and Warning
DSC — Dedicated Signal Conditioner
EIU — Engine Interface Unit
FDM — Frequency Division Multiplexer
NSP — Network Signal Processor
GPC — General-Purpose Computer
MTU — Master Timing Unit
PDI — Payload Data Interleaver
PSP — Payload Signal Processor
VMS — Vibration Monitor System (Auxiliary Power Unit)
* Includes Digital Voice

*OI System*

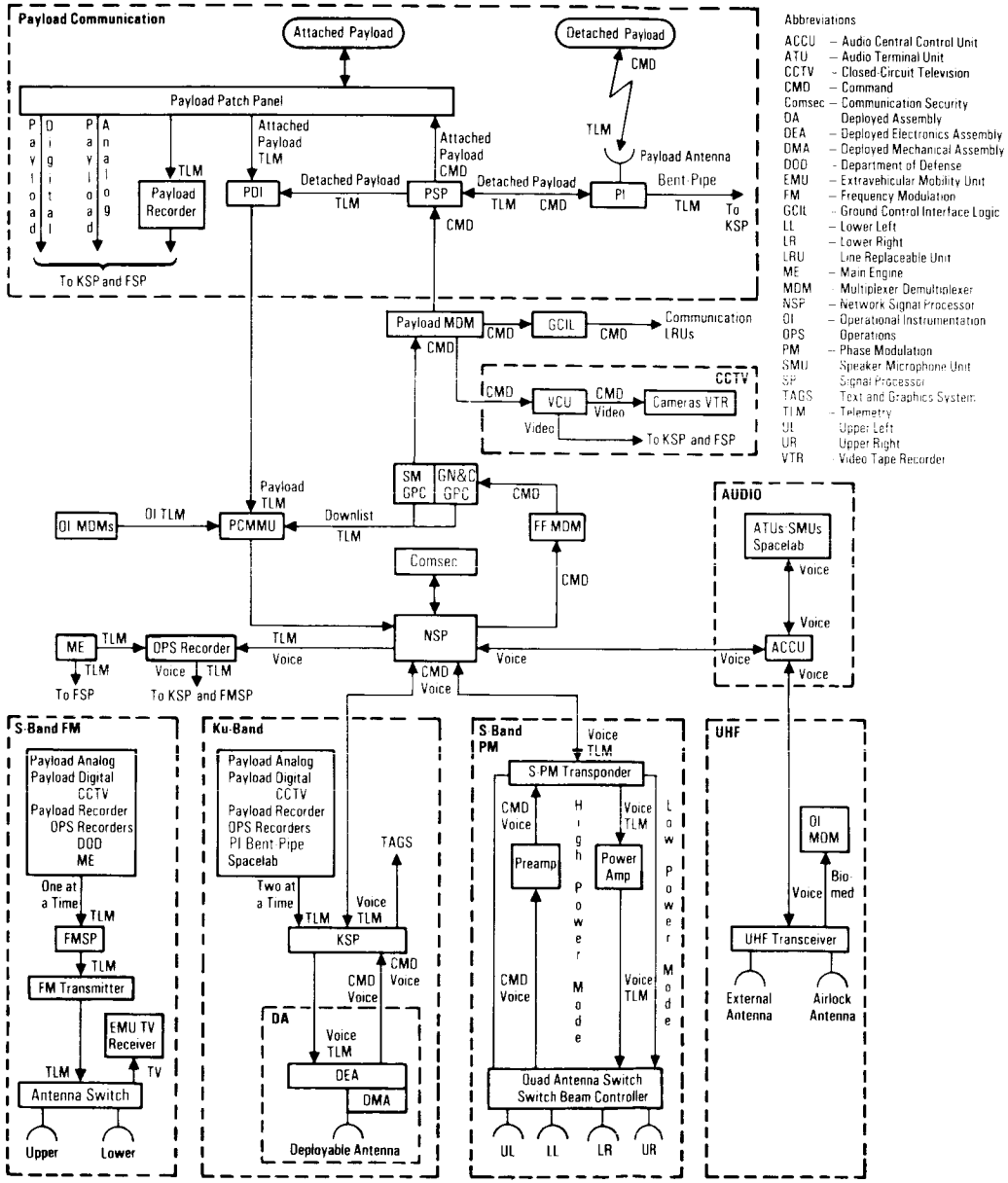


*Communication Systems*

temperature (variable resistance and thermocouple), displacement (potentiometer), 28- or 5-volt-dc discrete output signals, analog and digital level changes, polarity changes or an ac signal change to a dc signal. The DSCs send these converted signals to the appropriate MDMs and displays and to the C/W system.

MDMs can operate in two ways. As multiplexers, they take data from several sources, convert the data to serial digital signals (a digitized representation of the applied voltage) and interleave the data into a single data stream. As demultiplexers, the MDMs take interleaved serial digital information; separate and convert it to analog, discrete or serial digital; and send each separate signal to its appropriate destination. The payload MDMs generally act as demultiplexers. They take interleaved commands from the orbiter GPCs, separate them and send each command to its appropriate destination, such as payload ground command interface logic.

The OI MDMs generally act only as multiplexers. Upon request from the pulse code modulation master unit, the MDMs send these interleaved streams to the PCMMU through the OI data buses. When the MDM is addressed by the PCMMU, the MDM selects, digitizes and sends the requested data to the PCMMU in serial digital form. The PCMMU/OI MDM interface is based on demand and response: that is, the OI MDMs do not send data to the PCMMU until the PCMMU makes the request.

**Pulse Code Modulation Master Unit.** The PCMMU receives the data requested from the OI MDMs, downlists data from the GPCs under control of flight software and payload telemetry from the payload data interleaver and Spacelab computers, interleaves the data, formats data according to programmed instructions stored within the PCMMU, and sends the interleaved data to the network signal processor to be mixed with the analog air-to-ground voice data from the audio central control unit for transmission through the S-band PM downlink or Ku-band system return links. Telemetry from the PCMMU also is sent through the NSP to the operational recorders for storage and future payloads to be downlinked on the S-band FM or Ku-band system. OI and payload data collected by the PCMMU are sent to the onboard GPCs for display and monitoring purposes upon request. All data received by the PCMMU is stored in memory and periodically updated.

The PCMMU has two formatter memories: programmable read only and random access. The read-only memory is programmed only before launch; the random-access memory is reprogrammed several times during flight. The PCMMU uses the format memories to downlink data from the computers and OI MDMs into PCM telemetry data streams.

Only one of the redundant PCMMUs and NSPs operates at a time. The one used is controlled by the crew through the flight deck display and control panel. The primary port of an MDM operates with PCMMU 1 and the secondary port operates with PCMMU 2.

The PCMMUs receive a synchronization clock signal from the master timing unit. If this signal is not present, the PCMMU provides its own timing and continues to send synchronization signals to the payload data interleaver and network signal processor.

The payload data interleaver is programmed onboard from mass memory through the GPCs to select specific data from each payload PCM signal and to store the data within its buffer memory locations.

**Network Signal Processor.** The network signal processor is the nucleus of the communication systems. It is responsible for processing and routing commands, telemetry and voice between the orbiter and the ground.

Commands and voice uplinked to the orbiter are received by the S-band PM uplink or the Ku-band system's forward link. The NSP accepts this digitized, time-division-multiplexed data stream for further processing. Encrypted data are routed to Comsec, decrypted and returned to the NSP. Comsec interfaces with the NSP to provide communication security during Department of Defense and NASA missions. Digitized air-to-ground voice data are demultiplexed from command data and converted to analog signals before being routed to the ACCU. Command data are

routed to the GPCs of the data processing system through the flight forward MDM.

Telemetry and voice are downlinked from the orbiter by the S-band FM, S-band PM and Ku-band systems' return link. The NSP accepts and digitizes analog air-to-ground voice data from the ACCU. The digital voice is multiplexed with telemetry from the PCMMU for real-time transmission to the ground through the S-band PM and Ku-band systems. The multiplexed data also are routed to the operational recorders for later transmission through the S-band FM system or mode 2 of the Ku-band system. Encrypted data are routed to a Comsec encryptor and returned to the NSP before being downlinked.

Instrumentation equipment, except sensors and selected dedicated signal conditioners, is located in the forward and aft avionics bays. Sensors and dedicated signal conditioners are located throughout the orbiter in areas selected on the basis of accessibility, minimum harness requirements and functional requirements. Effective use of remote data acquisition techniques was considered for optimizing equipment location. The factors that were considered in the determination of equipment location were weight, power, physical size, redundancy and wire density, and length to each compartment and interconnect wiring. Abbreviations used to designate the locations of equipment are as follows: OA refers to operational aft, OF to operational forward, OL to operational left, OR to operational right, OM to operational mid.

**Ground Command Interface Logic.** The ground command interface logic, also referred to as the ground command interface logic controller, controls many of the functions of the S-band PM, S-band FM, Ku-band, payload communication and CCTV systems. Commands are sent to the orbiter from the ground through S-band system uplink or Ku-band system forward link. All commands, whether sent on S-band or Ku-band, are routed to the onboard GPC through the NSP and associated MDM. The GCIL takes commands for these systems from the GPCs for ground commands or from the appropriate panel for flight crew com-

(1) **Forward Avionics Bay 1**
- DSC
- OI Data MDM
- PCMMU 1
- Payload Recorder
- Payload Data Interleaver

(2) **Forward Avionics Bay 2**
- DSC
- OI Data MDM
- PCMMU 2
- Operations Recorder 1
- Operations Recorder 2

(3) **Forward Avionics Bay 3A**
- DSC
- OI Data MDM

(4) **Forward Avionics Bay 3B**
- Master Timing Unit

(5) **Forward RCS DSC**

(6) **Flight Deck MDM**

(7) **Aft Avionics Bay 4**
- DSC
- OI Data MDM

(8) **Aft Avionics Bay 5**
- DSC
- OI Data MDM

(9) **Aft Avionics Bay 6**
- DSC
- OI Data MDM

(10) **OMS DSCs (4)**

(11) **Fuel Cell DSCs (12)**

**Legend:**

DSC – Dedicated Signal Conditioner
MDM – Multiplexer/Demultiplexer
SCA – Signal Conditioner Assembly

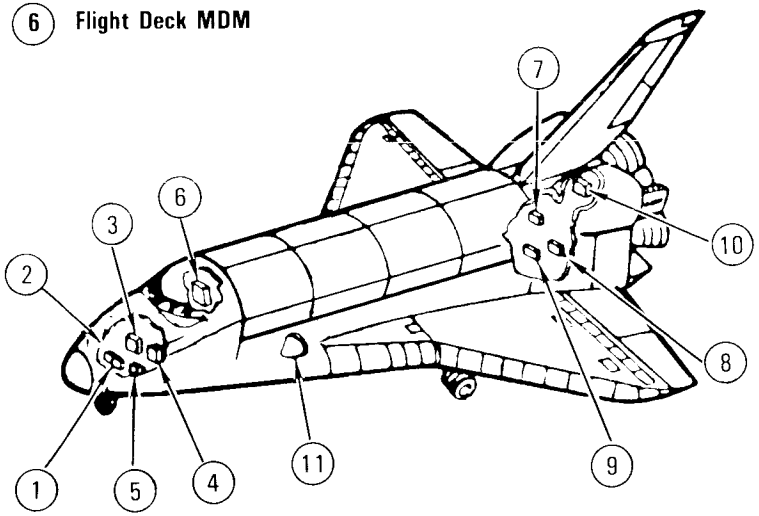


*Instrumentation Equipment Location*

mands. The command source is selected at a control panel *pnl/cmd* switch for each system. If the switch for that system is on *pnl*, the flight system is in control. If the switch for that system is on *cmd*, the ground has control.

**General-Purpose Computer and Communication Interface.** The five GPCs in the orbiter are loaded with software (to perform different functions) during different phases of the mission. During ascent and entry, four of the GPCs are loaded with primary avionics software system to provide guidance, navigation and control. One computer is loaded with backup flight system software and can take control of the orbiter if the PASS GN&C computers malfunction. The BFS GPC also contains all software necessary to return the orbiter to Earth, if required. Normal communication commands go through the BFS during ascent and entry phases of the mission. During the on-orbit phase of the mission, one computer is loaded with systems management software to support the communication commands. These two GPCs process antenna-pointing control commands for the S-band and Ku-band antenna systems. They also provide a communication command path from the ground to the required subsystem as well as a telemetry downlist path to the PCMMU to be interleaved with other data for transmission to the ground.

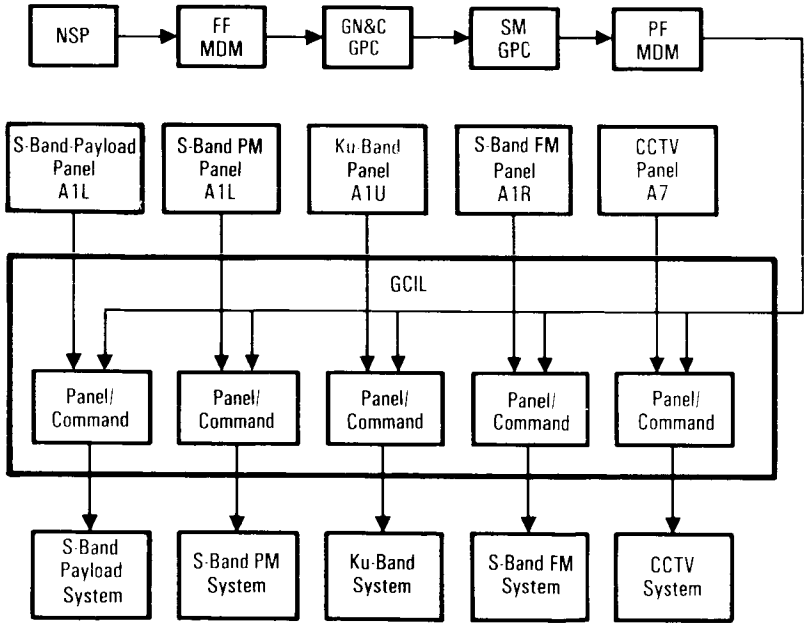


*Ground Command Interface Logic (Controller)*

**Master Timing Unit.** The master timing unit is a stable crystal-controlled timing source for the orbiter. It sends serial time reference signals to the onboard computers, PCMMUs, payloads and various time display panels. It also provides synchronization for instrumentation payloads and other systems. It includes separate time accumulators for Greenwich Mean Time and mission elapsed time, which can be reset or updated from the ground via uplink through the onboard computer or by the flight crew through the use of the flight deck display and control panel keyboard and CRT time displays.

The signal flows from the 4.608-MHz oscillators to the output of the GMT and MET accumulators. GMT or MET can be displayed on the *mission time* displays on panels O3 and A4 by positioning the *mission timer* switch on the respective panel to *GMT* or *MET*. In addition, *event time* displays are located on panels F7 and A4. Separate time accumulators used for the GMT and MET clocks accumulate time in days, hours, minutes, seconds and milliseconds. The GMT capacity is 366 days, 23 hours, 59 minutes, 59 seconds and 999.875 milliseconds. For MET, the capacity is 365 days, 23 hours, 59 minutes, 59 seconds and 999.875 milliseconds. Before flight, both time displays can be updated and reset by ground equipment or by the flight crew using onboard controls. During flight, the GMT and MET accumulators are updated at a predetermined time by uplink and the onboard computer or by voice command. They are entered through the flight deck display and control panel keyboard and CRT display.

**Operational Recorders.** Two recorders are used for serial recording and dumping of digital voice and PCM data from the OI systems. The recorders normally are controlled by ground command, but they can be commanded by the flight crew through

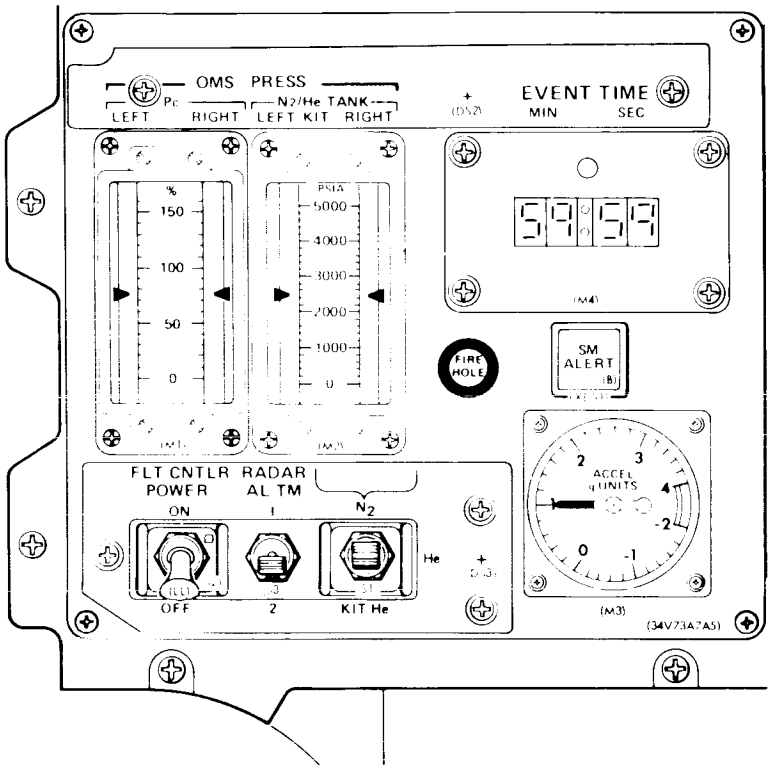


*Panel F7*

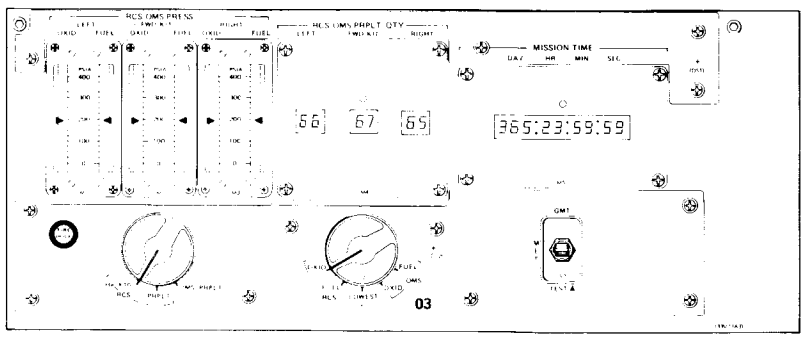


*Panel O3*

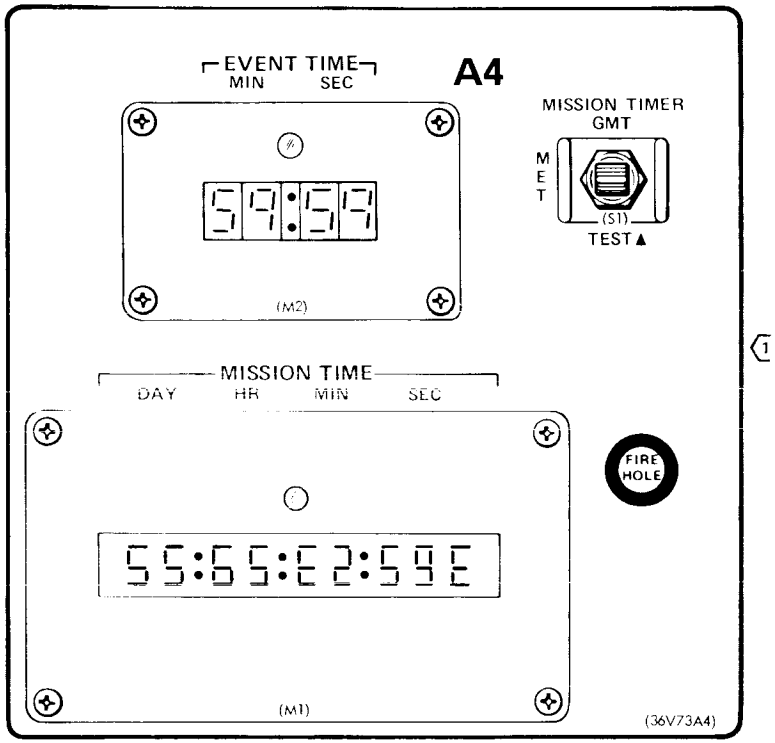


*Panel A4*

the flight deck display and control panel keyboard or through switches on a recorder panel. Input to the recorders is from the network signal processor, either in the form of 128-kbps PCM data or a 192-kbps composite signal that includes the 128-kbps PCM data and two 32-kbps voice channels. The network signal processor receives the PCM data from the PCMMU and voice signals from the audio control center. In addition, during ascent, operations recorder 1 receives three channels of main engine data at 60 kbps. A single recorder can store and reproduce digital data at many rates.

The operations recorders can be commanded to dump recorded data from one recorder while continuing to record real-

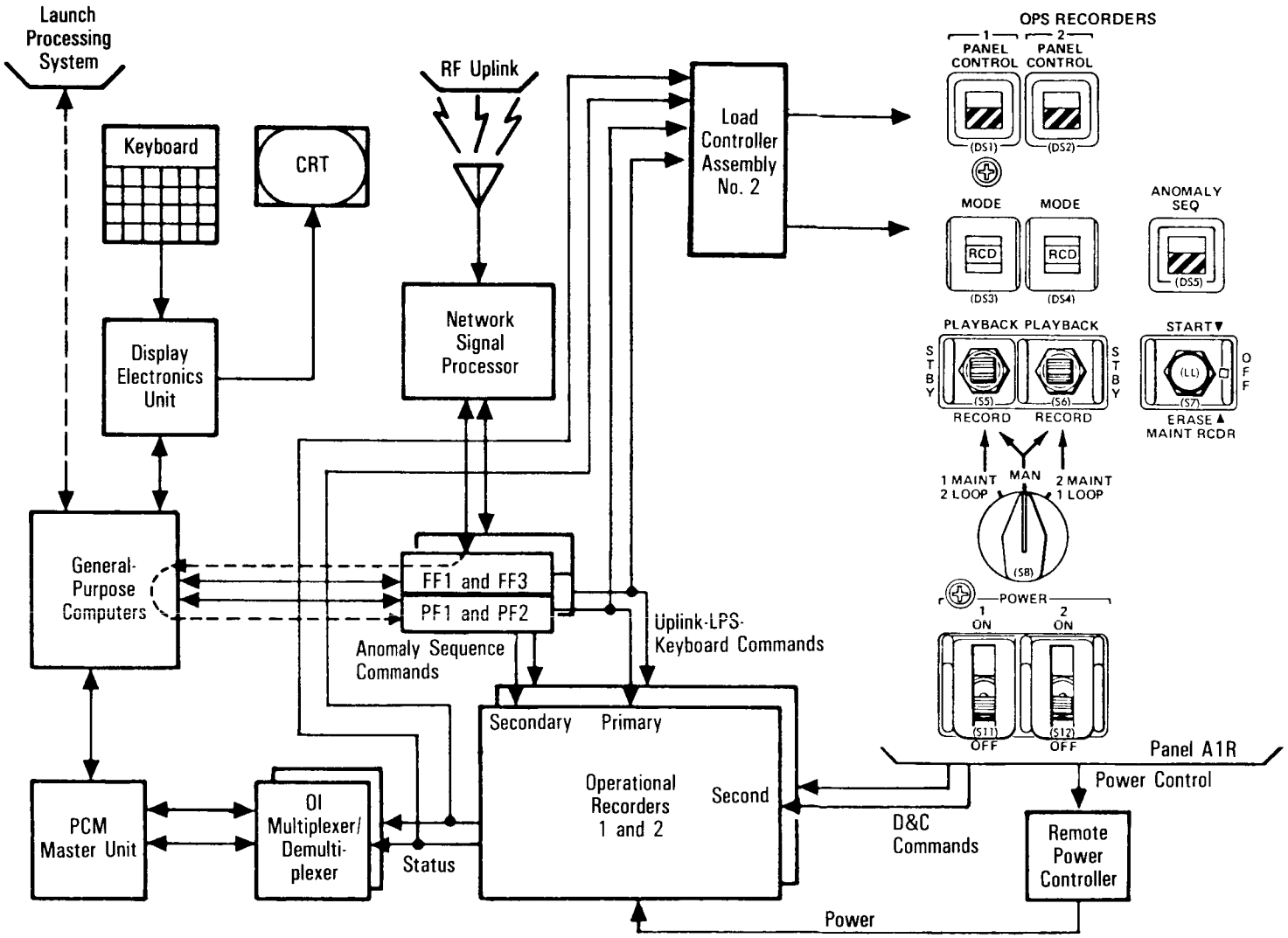


*Operational Recorders*

time data on the other. The dump data are sent to the FM signal processor for transmission to the ground station through the S-band FM transmitter on the S-band FM return link or to the Ku-band signal processor. When the ground has verified that the received data are valid, the operations recorders can use that track on the tape to record new data.

Recorder functions can be summarized as follows:

Data in, recorder 1

— Accept three parallel channels of engine data at 60 kbps during ascent.

— Accept 128 and 192 kbps of interleaved PCM data and voice that serially sequences from track 4 to track 14.

— Accept real-time data from network signal processor. Recording time is 32 minutes for parallel record and 5.8 hours for serial record on tracks 4 through 14 at a tape speed of 15 inches per second.

Data in, recorder 2

— Accept 128 and 192 kbps of interleaved PCM voice and data that serially sequences from track 1 to track 14.

— Accept real-time data from network signal processor. Recording time is 7.5 hours at a tape speed of 15 inches per second for serial record on 14 tracks.

Data out, recorder 1

— Play back in-flight engine interface unit data and network signal processor digital data through S-band FM transponder or Ku-band transmitter.

— Play back in-flight anomaly PCM data for maintenance recording

— Play back data serially to ground support equipment to T-0 ground support equipment umbilical

Data out, recorder 2

— Play back digital data through S-band FM transponder or Ku-band transmitter in flight.

— Play back anomaly PCM data in flight for maintenance recording.

— Play back preflight and postflight data serially to GSE T-0 umbilical.

Recorder control

— Recorders are manually controlled from the mission specialist flight deck aft station display and control panel or uplink and onboard computer keyboard.

— Recorder speeds of 7.5, 15, 24 and 120 inches per second are provided by hardwire program plug direct command.

The tape recorders contain a minimum of 2,400 feet of 0.5-inch by 1-mil magnetic tape. They operate at a tape speed of 24 inches per second in the recording mode and 120 inches per second in the playback mode.

**Payload Recorder.** The payload recorder records and dumps payload analog and digital data in flight through the S-band or Ku-band transmitter. The recorder can record one of three serial inputs or a maximum of 14 parallel digital or analog inputs or combinations of analog and digital data (up to 14 inputs) from the payload patch panel. In flight, all data dumps are serial; capability for parallel dump does not exist. The recorded digital data can range from 25.6 [illegible] 1.024 Mbps. Analog data inputs can be recorded only in parallel with a bandwidth from 1.9 kHz to 1,600 kHz. There are also 14 selectable tape speeds; however, only four speeds are available per flight. Recorder tape speeds [illegible] 15,

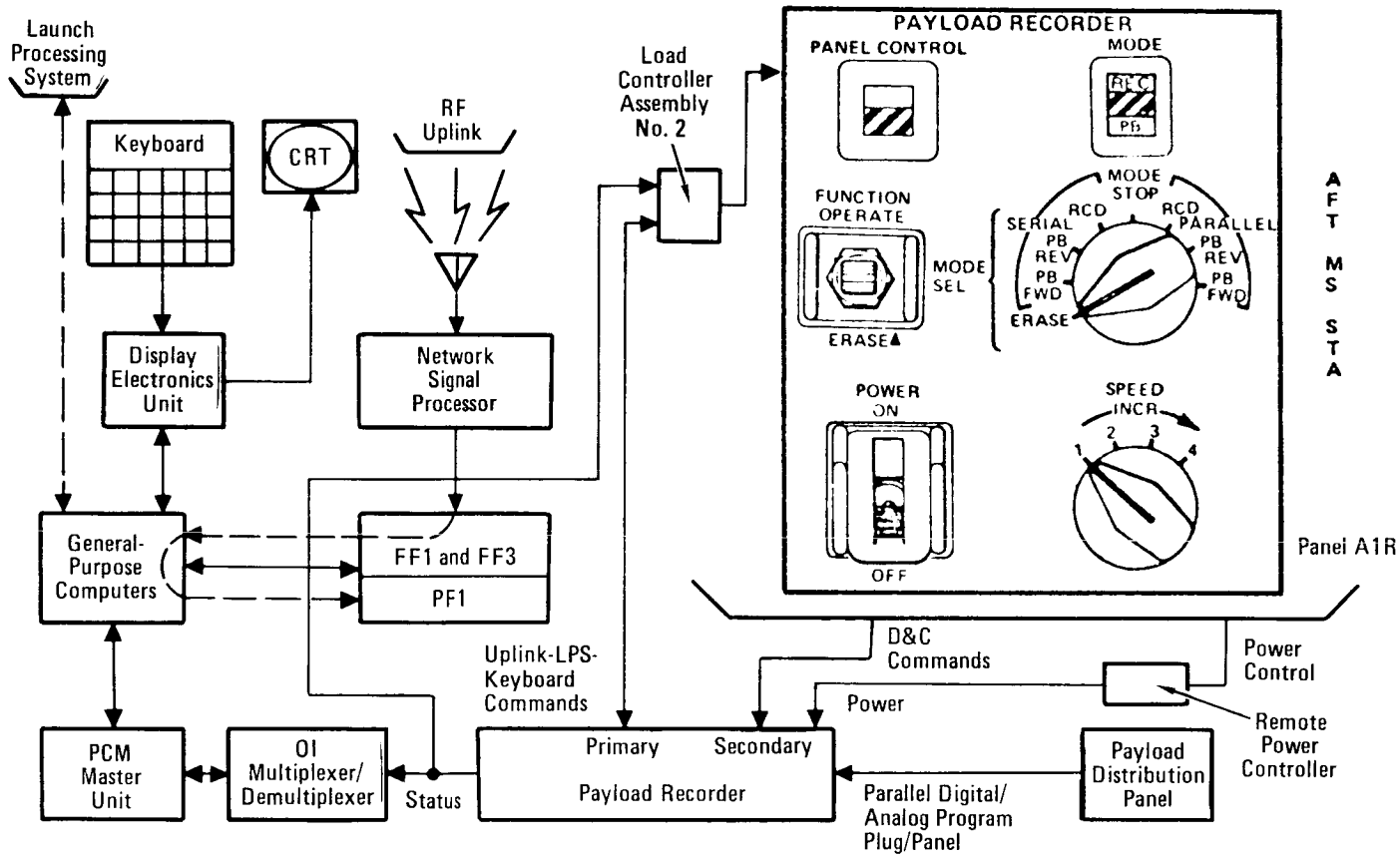


*Payload Recorder*

30, 60 and 120 inches per second. Total recording time ranges from 56 minutes at 1.024 Mbps to 18 hours 40 minutes at 25.6 kbps.

The recorder normally is controlled by ground command but can be commanded by the flight crew through the flight deck display and control panel keyboard or through switches on the recorder panel.

**Teleprinter.** The teleprinter is an interim system designed to transmit written data to the flight crew in orbit until dual TDRSS capability is achieved. It is a modified teletype machine located in a locker in the crew compartment middeck. Electrical power is connected to the *dc utility power* outlet on panel A15, and audio is connected to the *PS comm* outlet on panel A15. During launch, the *PS comm* outlet is used for crew communications; therefore, the audio cable for the teleprinter must be connected on orbit, and the ATU at panel L9 must be reconfigured on orbit. The panel L9 *payload station power* switch is positioned to *aud*, *A/G 1* is positioned to *off*, *A/G 2* is positioned to *t/r*, the thumbwheel is positioned to 9, *A/A* is positioned to *off*, the two *icom* switches are positioned to *off*, and the *xmit/icom mode* rotary switch is positioned to *PTT/PTT*. The power switch on the teleprinter locker door is in the *on* position at launch. Turning the *dc utility power* switch on panel A15 to *on* powers up the teleprinter and illuminates a green light on the locker door.

The teleprinter provides the capability to receive and reproduce text-only data, such as procedures, weather reports and crew activity plan updates or changes, aboard the orbiter from the Mission Control Center.

The teleprinter uplink requires one to 2.5 minutes per message, depending on the number of lines (up to 66). When the ground has sent a message, a *msg rcv* yellow light on the teleprinter is illuminated to indicate a message is waiting to be removed. The teleprinter is deactivated before seat ingress on entry day.

**Text and Graphics System.** The text and graphics system is used when there is an operational TDRSS. The TAGS consists of a facsimile scanner on the ground that sends text and graphics through the Ku-band communications system to the text and graphics hard copier in the orbiter. The interim teleprinter operates via the S-band PM system when the TDRSS is not operational. The hard copier installed on a dual cold plate in avionics bay 3 of the crew compartment middeck provides an on-orbit capability to transmit text material, maps, schematics, maneuver pads, general messages, crew procedures, trajectory and photographs to the orbiter through the two-way Ku-band link using the TDRSS. It is a high-resolution facsimile system that scans text or graphics and converts the analog scan data into serial digital data. Transmission time for an 8.5- by 11-inch page can vary from approximately one minute to 16 minutes, depending on the hard copy resolution desired.

The text and graphics hard copier operates by mechanically feeding paper over a fiber-optic CRT and then through a heater-developer. The paper then is cut and stored in a tray, accessible to the flight crew. A maximum of 200 8.5- by 11-inch sheets are stored. The status of the hard copier is indicated by front panel lights and downlink telemetry.

The hard copier can be powered from the ground or by the crew. The ground can power up the system when the Ku-band control switch is in the *command* position. When this switch is in the *panel* position, the crew can power up the system.

Uplink operations are controlled by the Mission Control Center in Houston. Mission Control powers up the hard copier and then sends the message. In the onboard system, light-sensitive paper is exposed, cut and developed. The message is then sent to the paper tray, where it is retrieved by the flight crew.

**Closed-Circuit Television System.** The closed-circuit television system is used primarily to support on-orbit activities that require visual feedback to the crew. The CCTV system also provides the capability to document on-orbit activities and vehicle

configurations for permanent record or for real-time transmission to the ground. The CCTV system can be controlled by both onboard and remote uplink commands. The CCTV system is a standard monochrome (black and white) system with an optional color capability by means of interchangeable camera lenses. Color scenes are not available on the onboard monitors because of hardware restrictions; however, color scenes are available on recorded and downlinked video.

Video inputs to the CCTV system are available from cameras mounted at several locations in the payload bay and on the remote manipulator system arm, which is mission dependent.

Cameras are also used in the middeck and the flight deck of the crew compartment. The video signals from these cameras can be viewed by the crew on one of two monitors in the flight deck, then sent to a video tape recorder for later viewing or to the ground on the S-band FM or Ku-band systems.

The video control unit controls power and input/output configuration, including camera control of pan, tilt, zoom, focus, iris operations and synchronization for the CCTV system. It processes video and data inputs from cameras and video tape recorder channels and routes them to monitors, the VTR or the ground by downlink.

Typical uses of the CCTV system for monitoring and recording mission activities include payload bay door operations, remote manipulator system operations, experiment operations, rendezvous and stationkeeping operations, and onboard crew activities.

The CCTV system consists of the video control unit, television cameras, VTR and onboard television monitors 1 and 2.

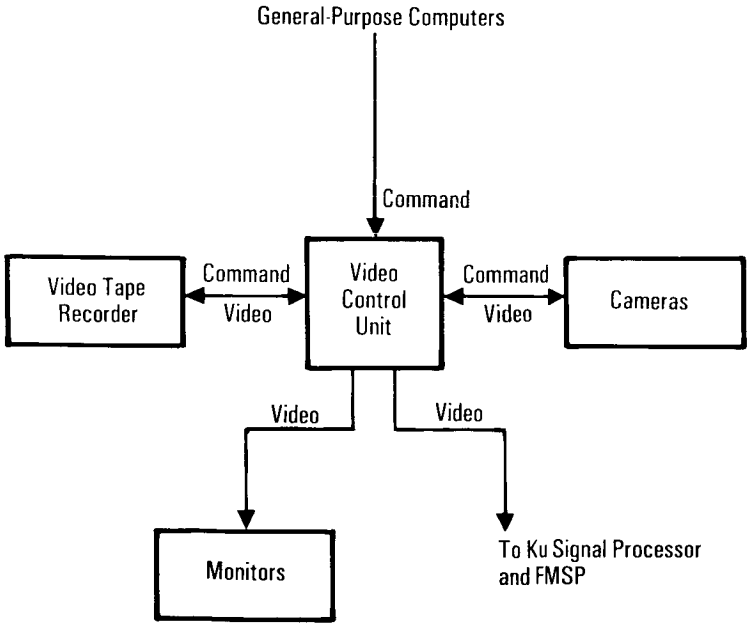


*Closed-Circuit Television System*

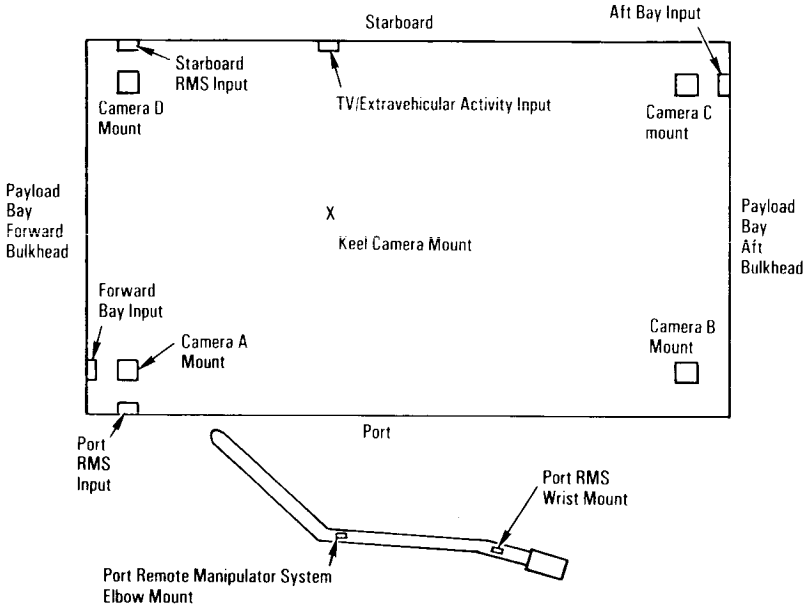


*Allowable Closed-Circuit Television Camera Locations in Payload Bay and on Remote Manipulator System*

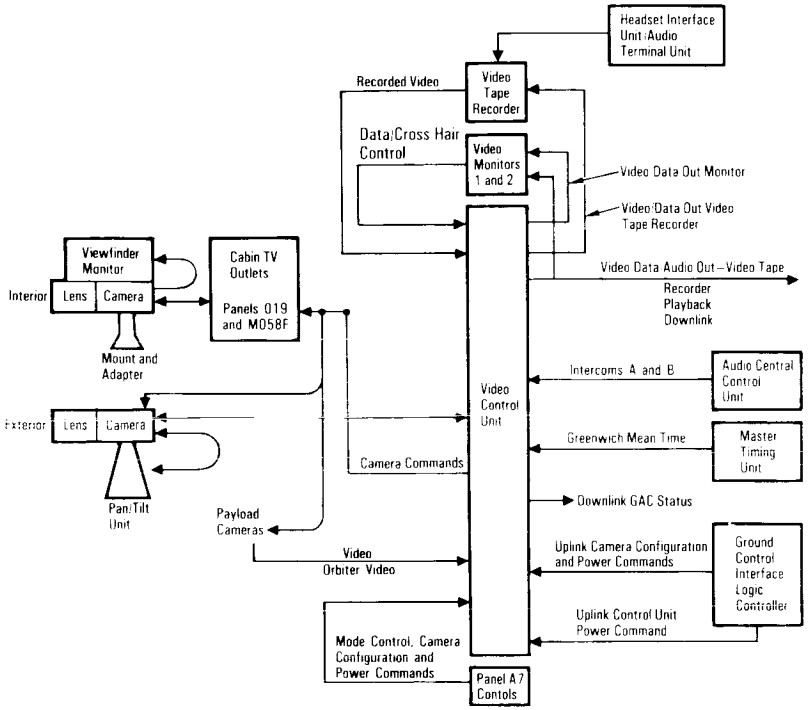


*Closed-Circuit Television System*

Audio from orbiter intercom channels A and B can be interleaved with the video output, along with Greenwich Mean Time data from the orbiter master timing unit. The VCU also generates a standard test pattern for use in adjusting the monitors and verifying downlink and provides multiplex capability for two split-screen outputs.

All television cameras are identical with the exception of accessory hardware. Any camera can be equipped with three types of interchangeable lens assemblies, depending on mission requirements. Both monochrome and color lenses are available with normal field of view. Color lenses are also available with a wide-angle field of view. In addition to focus control for sharp images, several special lens control functions are available. All functions can be controlled by both onboard and ground uplink commands.

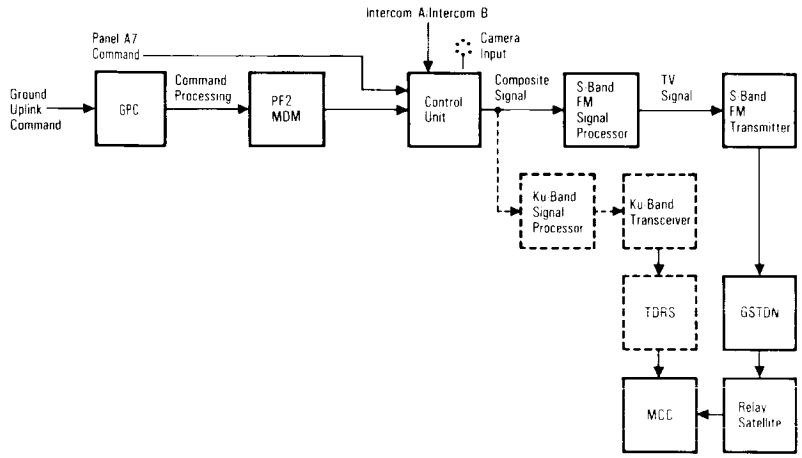


*Ground Command Systems Television Data Flow*

An automatic light control is available for each camera. Its modes compensate for scene brightness by eliminating a fraction of the brightness. It then adjusts the light level of the scene by controlling (1) the silicone intensified target tube high voltage, (2) lens aperture (iris) and (3) automatic gain control. As a result, more detail and contrast are available in the brighter areas of a scene. Light or dark areas of a camera scene can be enhanced or subdued by means of gamma commands. More contrast can be obtained within light or dark areas. Zoom capability magnifies or reduces the size of objects in a camera's field of view by adjusting the focal length of the lens. The minimum focus for standard lenses is 3 feet, the maximum is infinity.

Although five payload camera bay inputs can be used per mission, more than five camera locations are available. If a mission requires a keel camera, only one camera can be positioned at one of four locations along the keel. If a camera is connected to the keel/EVA position, then TV camera views are not available while the EVA camera is in use. Each remote manipulator system can accommodate two cameras, mounted at the wrist and elbow locations; however, scenes are only available from either the wrist or the elbow, selectable by means of panel A7 switches.

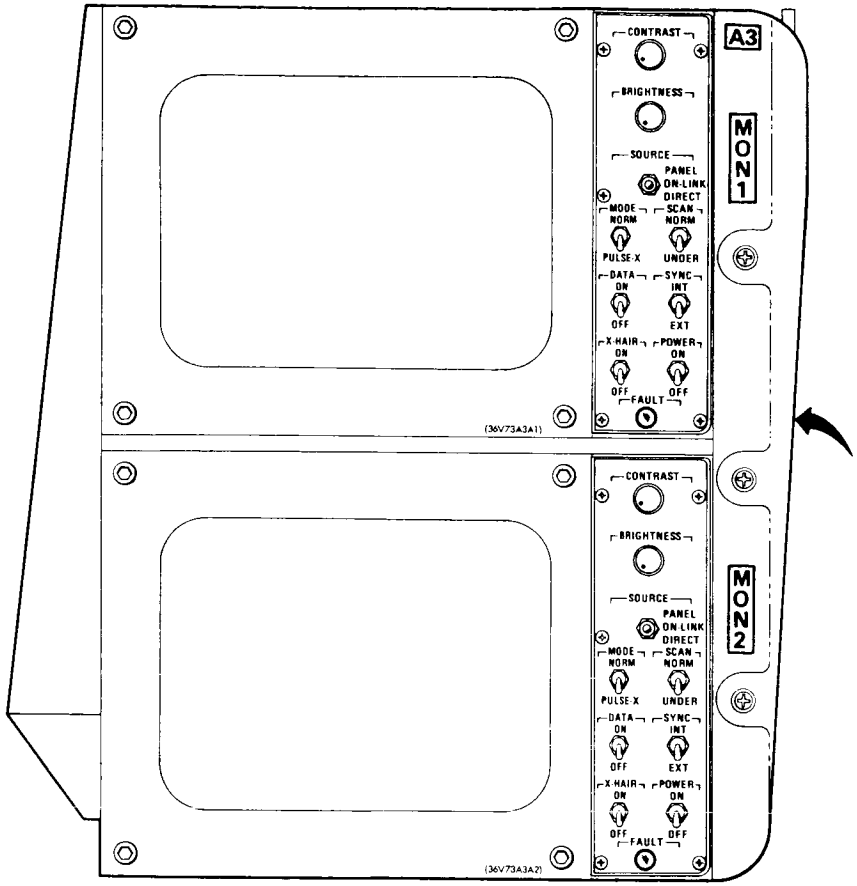


*Closed-Circuit Television Monitors*

*Panel A3*

With the exception of the RMS wrist camera and keel camera, all exterior cameras are mounted on motor-driven pan-tilt units. Camera azimuth (left and right) position and elevation (up and down) from a reference can be controlled on board by the flight crew or by ground uplink. The front tilt unit can accommodate up to plus or minus 170 degrees of pan and plus or minus 170 degrees of tilt from center. In tilt, the cameras cannot look straight down; in pan, the cameras cannot look straight down or

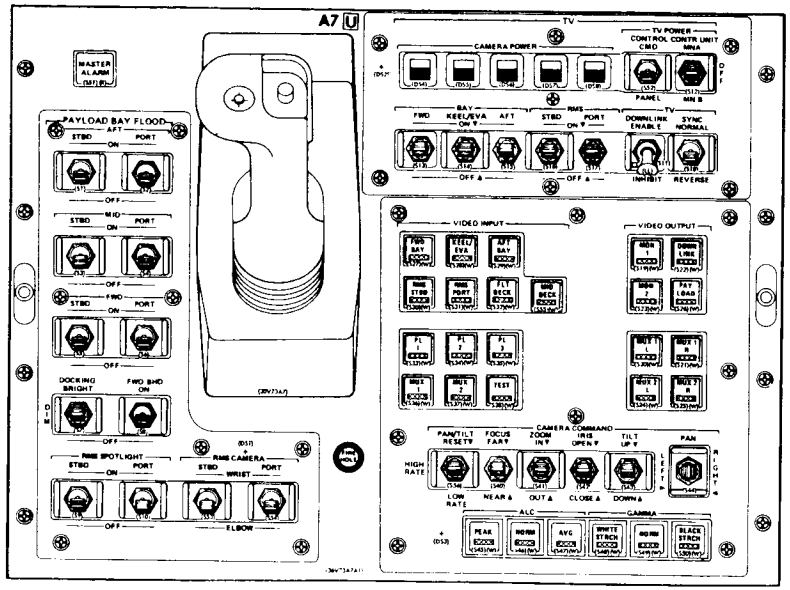


*Panel A7*

straight back, which accounts for the range of 340 degrees instead of 360 degrees. The pan and tilt units move at two speeds: the high rate allows 12-degree-per-second rotation, and the low rate allows 1.2-degree-per-second rotation. Each pan and tilt unit contains a thermostatically controlled heater to maintain proper temperature.

Up to three cameras can originate from payload sources. These inputs can come from pallet-mounted cameras or from the Spacelab module during a Spacelab mission. If the payload cameras are part of the orbiter flight hardware, the video control unit can command the camera in focus and zoom. However, Spacelab provides the electrical interface camera outlets that are available inside the orbiter crew compartment for portable cameras. The flight crew would deploy, set up and stow the portable TV system.

All interior cameras are equipped with a color lens. Monitors 1 and 2 and the TV viewfinder monitor provide a monochrome output regardless of the lens assembly utilized, allowing the crew to adjust and view the video scenes. The flicker that appears in the

interior camera scenes is caused by the rotating color wheel used to generate the field-sequential color signal that allows color outputs on the ground. The color-conversion process on the ground eliminates the flicker before the color signal is distributed.

The basic monochrome camera converts light images into a composite video signal (picture plus sync) and can produce either a black-and-white or color image, depending on the lens assembly used. The lens provided with the TV system is an f/1.4 color zoom lens equipped with a six-segment, three-color rotating filter wheel that produces sequential red, green and blue color fields. Motorized lens control functions that vary the zoom, iris and focus are controlled manually by lens switches remotely from panel A7 or by ground command. The small portable monochrome viewfinder monitor (8 by 4.25 by 3.6 inches, weighing 4 pounds) enables the crew to view camera video output for picture quality and scene verification when monitors 1 and 2 are not accessible or available. The TV cable connects the camera and the two TV system input stations located in the crew cabin at panels O19 and M058F. The cable provides the camera with 28-volt dc power; camera and lens commands along with the sync signal; and video, including camera and lens data, to the control unit for distribution. The viewfinder monitor cable, which is 9 feet long, provides an interface between the camera and the monitor.

Interior camera mounts restrain the camera assembly where it is used. Fixed-location quick-shoe mounts interface with any smooth, flat crew compartment surface. Clamp adapters can be used to affix the camera to panel switch guards or handholds. In addition, a special baseplate can be attached to either of two mounting locations on the sills of overhead windows 9 and 10.

The two black-and-white TV console monitors in the aft flight deck crew station on panel A3 are identical and are arranged one over the other. The top one is monitor 1 and the bottom is monitor 2. The monitors are used to view video on board. Camera scenes from any exterior, interior or payload camera can be viewed on either monitor. The video being downlinked can also be observed on either monitor. In addition, the monitors can be used to view the video being recorded or played back on the VTR. They can also display cabin TV output when it is more convenient than using the viewfinder monitor.

Each monitor accommodates a split-screen image from any two cameras. This feature is generated by the control unit and selected by panel A7 commands. Alphanumeric displays of camera location, pan and tilt angles, and temperatures of any cameras in an overtemperature condition can be superimposed on the monitor scene. A cross hair is also available at the center of the screen as an aid in remote manipulator system and proximity operations. The monitors are equipped with displays and controls for direct control of most monitor operations; however, the assignment of an input source to the monitor is controlled by panel A7. Each monitor is 12.5 by 10 by 7 inches and weighs 21 pounds.

The video tape recorder is a cassette recorder with the capability to record both video data and voice annotation. Video from any camera source can be recorded on board and in color if the selected camera has color capability using off-the-shelf cassettes of 20 and 30 minutes. Voice annotation can be input directly to the VTR through a headset interface unit. The HIU interfaces only with the VTR, not with the vehicle communications system. A tone may also be recorded to identify a particular location for subsequent playback operations. Voice annotation can be added during playback and records over any previously recorded audio.

All actual VTR operations must be performed by the crew—everything from tape changeout to VTR activation. The VTR is configured to receive its video input from monitor 2 (to record video on the VTR, the desired camera output must be displayed on monitor 2, which is connected directly to the recorder). For onboard playback, the recorded video can be reviewed on monitor 2 by positioning its source switch to *direct* and initiating a playback mode. For downlink purposes, the VTR is connected to the payload 1 input, which is a panel A7 *video input* selection. The switch panel located above the VTR includes a circuit breaker for the recorder. The recorder is equipped with a *no video* light that is illuminated when no video source is present at the recorder. When recording, the operator should verify that the *no video* light is off. An *end of tape* light indicates when the cassette is out of tape, and

the VTR automatically stops. Tape changeout is simply a matter of ejecting the cassette from the recorder.

The extravehicular mobility unit TV is a fully portable remote television unit. It transmits black-and-white television pictures to the orbiter CCTV system from virtually any location outside the orbiter. Orbiter reception is through either of the S-band FM hemispherical antennas. The TV assembly fits over the EMU helmet and light assembly. It is battery powered (28 volts dc) and transmits video at 1,775.7 MHz to a video receiver/processing unit installed in the orbiter's middeck. When the receiver is connected to the TV input station at panel M058F by a standard 20-foot TV power cable, crew members can view real-time EVA video on either monitor by selecting the middeck camera input on panel A7. EVA video can also be selected for return link or taping.

Auxiliary lighting to improve scene quality is available for both exterior and interior cameras. In the payload bay, floodlights are mounted on the forward bulkhead and at various locations along the lower payload bay interior. A spotlight is also connected to the RMS wrist. These lights are controlled from panel A7.

Video signals can be downlinked by means of onboard or uplink commands. If a scene assignment for downlink is commanded through S-band or Ku-band uplink, the appropriate camera command is received through the network signal processor by

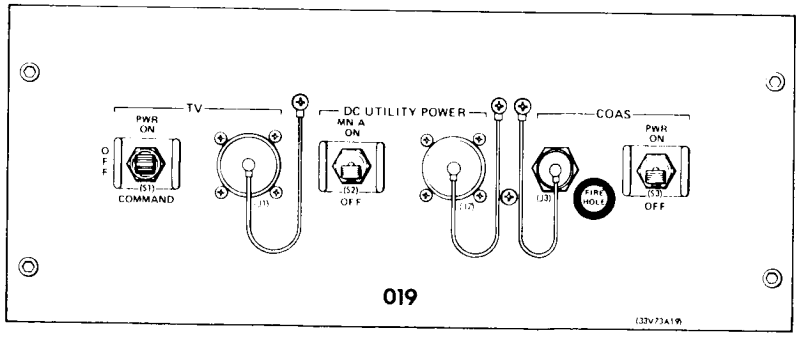


*Panel O19*

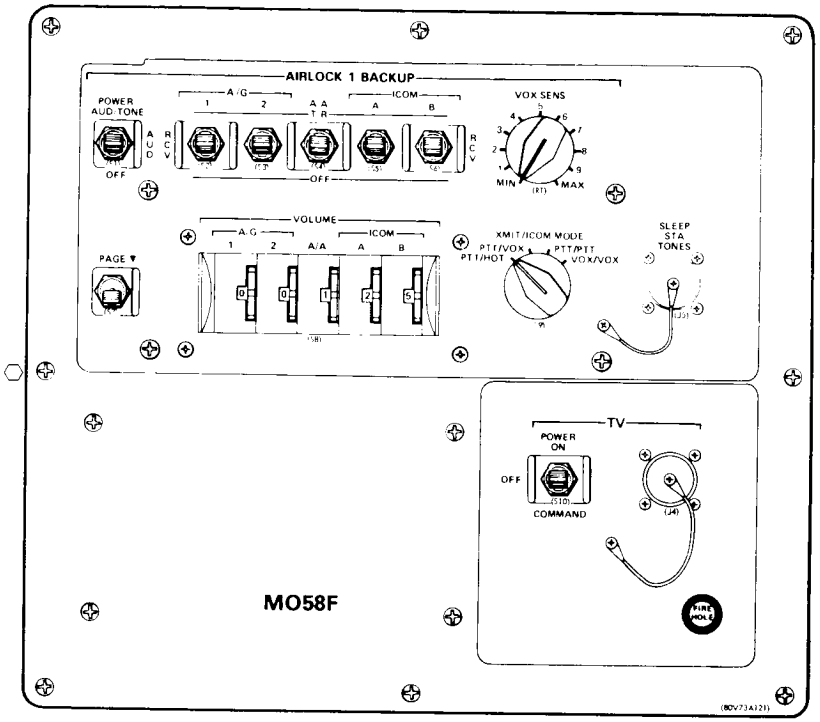


*Panel M058F*

the orbiter general-purpose computer. The GPC then transmits the command to the control unit on payload MDM PF2. The control unit selects the desired camera video and combines it with intercom A or B (if desired) and then sends a composite signal to the FM signal processor.

The FM signal processor transfers the TV signal to the FM transmitter, which modulates the signal and transmits it to a ground station with TV capability. Video data consisting of one of four signals (including real-time TV, main engine data, recorder dumps and payload data) can be individually assigned for downlink to the single S-band FM wide-band channel. Thus, if one of the other sources is being downlinked, video cannot be transmitted to the ground simultaneously.

The ground station receives, processes and records the downlinked TV signal. Real-time TV can be transmitted directly from the ground station to the Mission Control Center through a relay satellite. Sites with TV capability are Merritt Island, Goldstone and Hawaii.

The orbiter Ku-band system can downlink TV signals through the TDRSS directly to the Houston Mission Control Center. Since the TDRSS is not restricted to specific tracking stations, more continuous TV capability is available. However, only one Ku-band FM channel is used to downlink real-time TV, main engine data, recorder dumps and payload data. Therefore, video cannot be transmitted if one of the other sources is being downlinked.

**Orbiter Experiments Support Systems for OV-102 (Columbia).** The support system for the orbiter experiments was developed to record data obtained and to provide time correlation for the recorded data. The information obtained through the sensors of the OEX instruments must be recorded during the orbiter mission because there is no real-time or delayed downlink of OEX data. In addition, the analog data produced by certain instruments must be digitized for recording.

The support system for OEX comprises three subsystems: the OEX recorder, the system control module and the pulse code modulation system. The SCM is the primary interface between the OEX recorder and the experiment instruments and between the recorder and the orbiter systems. It transmits operating commands to the experiments. After such commands are transmitted, it controls the operation of the recorder to correspond to the experiment operation. The SCM is a microprocessor-based, solid-state control unit that provides a flexible means of commanding the OEX tape recorder and the OEX and modular auxiliary data system.

The PCM system accepts both digital and analog data from the experiments. It digitizes the analog data and molds it and the digital data received directly from the experiments into a single digital data stream that is recorded on the OEX recorder. The PCM also receives time information from the orbiter timing

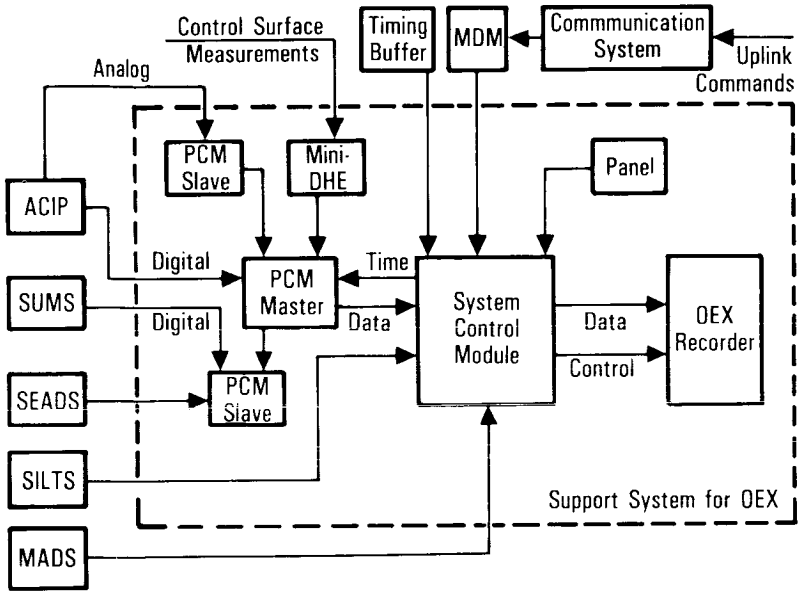


ACIP – Aerodynamic Coefficient Identification Package
SUMS – Shuttle Upper Atmosphere Mass Spectrometer
SEADS – Shuttle Entry Air Data System
SILTS – Shuttle Infrared Leeside Temperature Sensing
MADS – Modular Auxiliary Data System
PCM – Pulse Code Modulation
DHE – Data-Handling Equipment
MDM – Multiplexer/Demultiplexer

*Orbiter Experiments*



buffer and injects it into the digital data stream to provide the required time correlation for the OEX data.

The SCM selects any of 32 inputs and routes them to any of 28 recorder tracks or four-line driver outputs to the T-0 umbilical; executes real-time commands; controls experiments and data system components; and provides manual, semiautomatic and automatic control.

The recorder carries 9,400 feet of magnetic tape that permits up to two hours of recording time at a tape speed of 15 inches per second. After the return of the orbiter, the data tape is played back

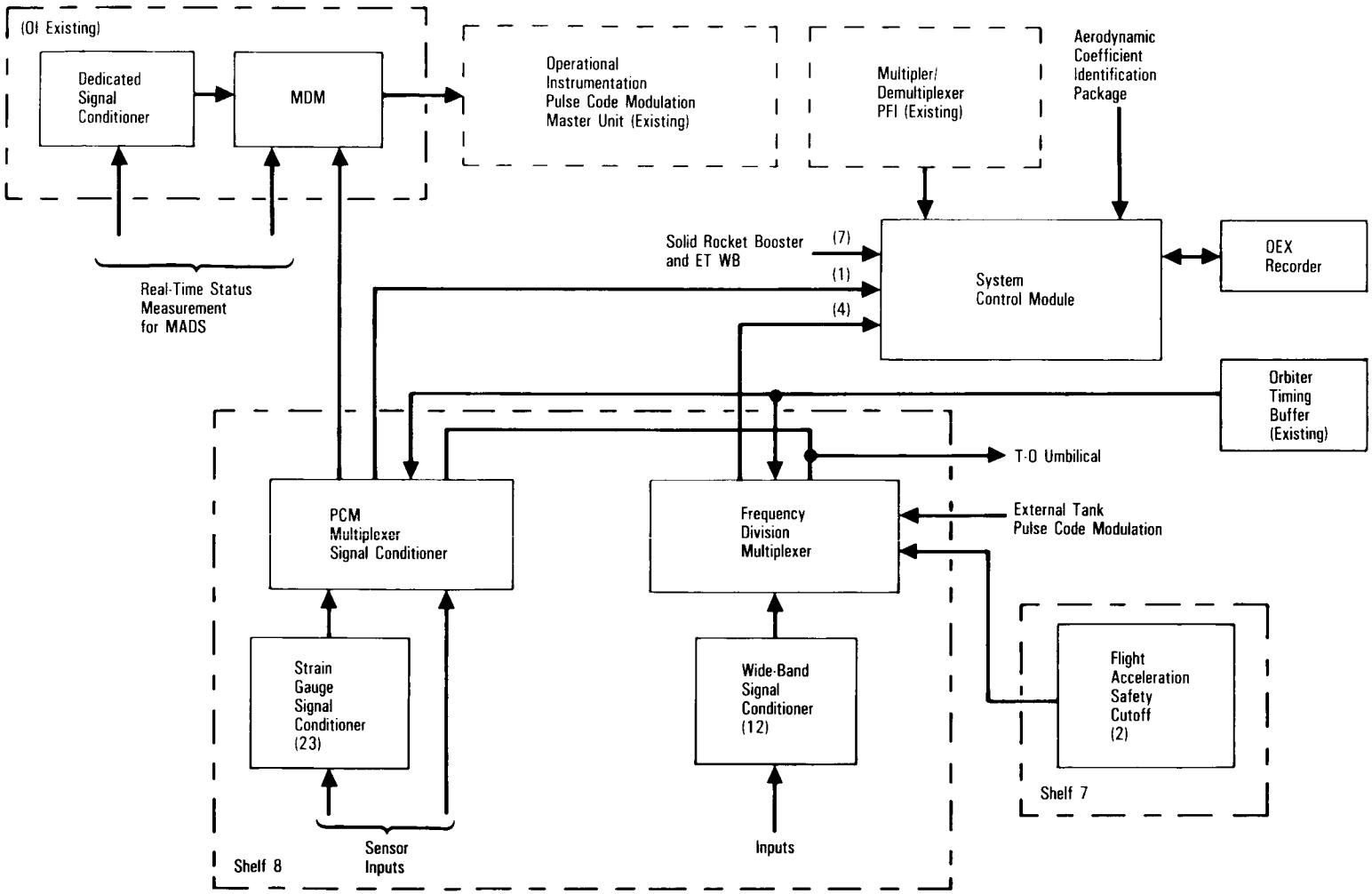


*Modular Auxiliary Data System Block Diagram, OV-102 (Columbia) Only*

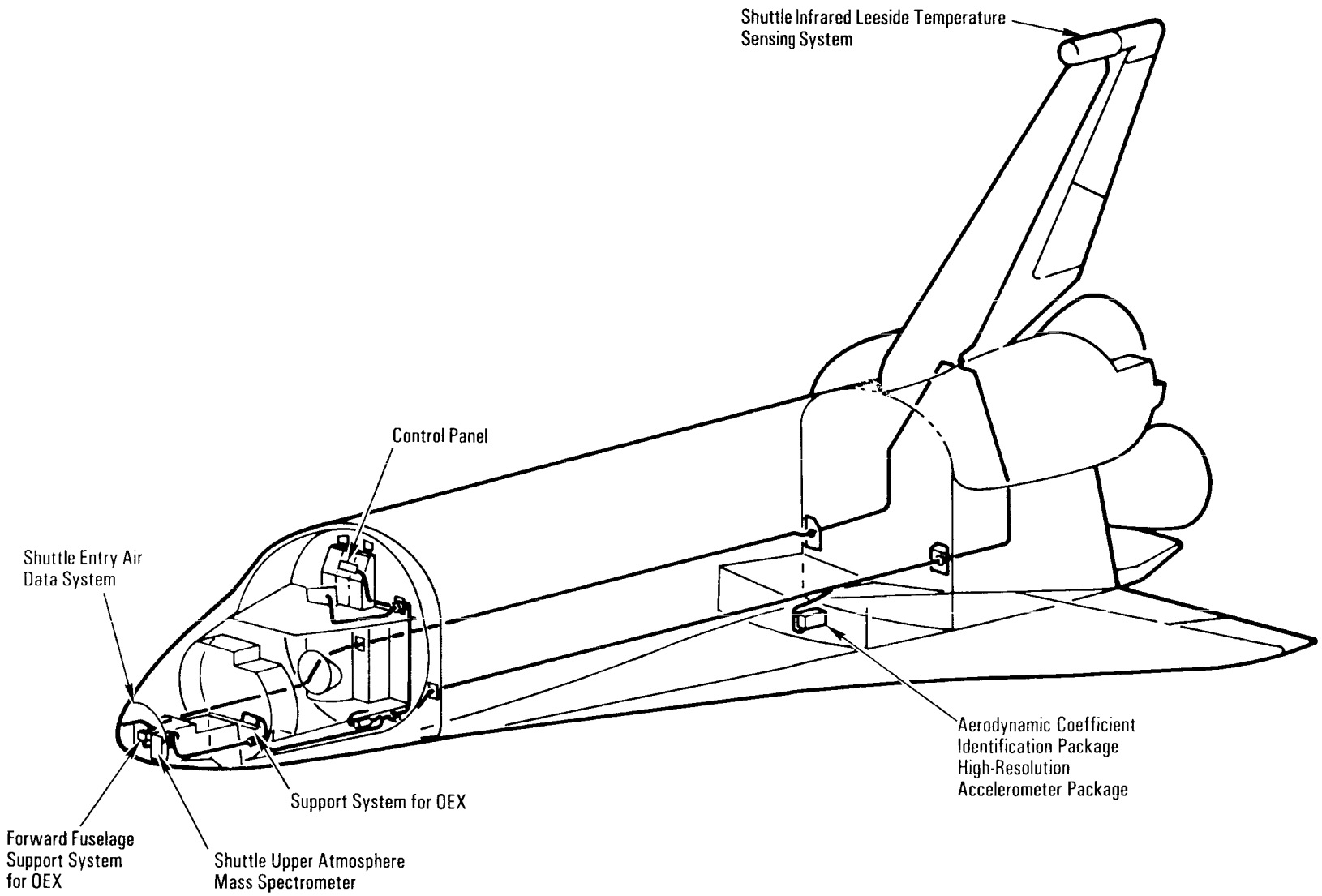


*Orbiter Experiments Locations on OV-102*

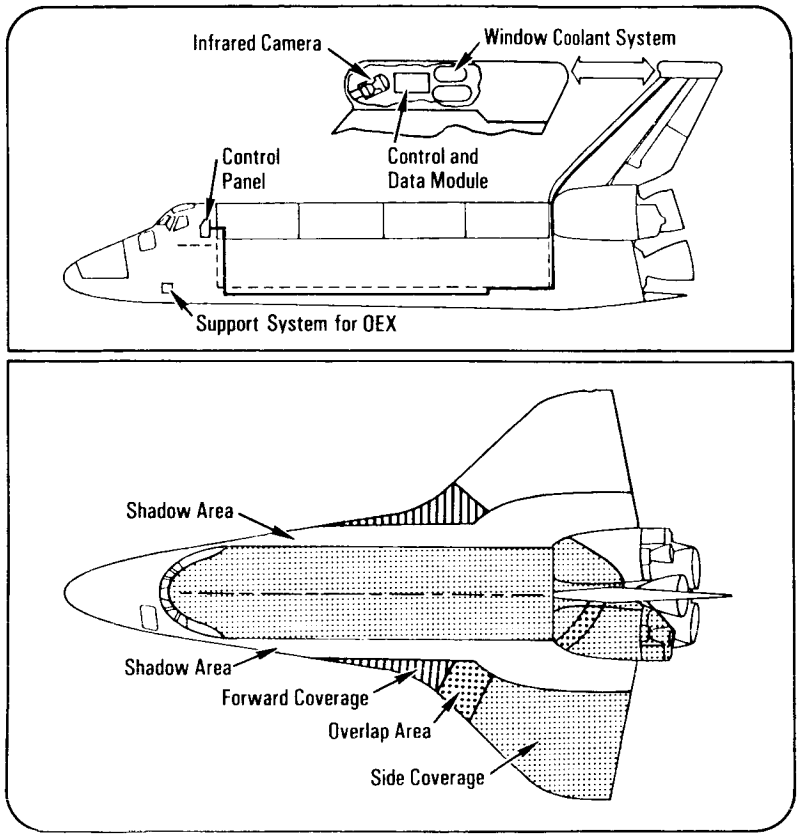


*Shuttle Infrared Leeside Temperature Sensing System*

for recording on a ground system. The tape is not usually removed from the recorder.

**Shuttle Infrared Leeside Temperature Sensing.** The SILTS experiment will obtain high-resolution infrared imagery of the upper (leeward) surface of the orbiter fuselage and left wing during atmospheric entry. This information will increase understanding of leeside aeroheating phenomena and will be used to design a less conservative thermal protection system. SILTS provides the opportunity to obtain data under flight conditions for comparison with data obtained in ground-based facilities.

Six primary components make up the SILTS experiment system: (1) an infrared camera, (2) infrared-transparent windows, (3) a temperature-reference surface, (4) a data and control electronics module, (5) a pressurized nitrogen module and (6) window protection plugs. These components are installed in a pod that is mounted atop the vertical stabilizer and capped at the leading edge by a hemispherical dome. (The SILTS pod replaces the top 24 inches of the vertical stabilizer.) Within this dome, the infrared camera system is mounted in such a way that it rotates to view the orbiter leeside surfaces through either of two windows—one offering a view of the orbiter fuselage and the other a view of the left wing. The camera is sensitive to heat sources from 200 to 1,000 F.

The camera's indium-antimonide detector is cooled to cryogenic temperatures by a Joule-Thompson cryostat. The camera's field of view is 40 by 40 degrees. Its rotating prism system scans four 100-line fields each second, with a 4-1 interlace, resulting in a 400-line image.

Each of the two infrared-transparent window assemblies consists of dual silicone windows constrained within a carbon-phenolic window mount. The windows and window mount assemblies are designed to withstand the entry thermal environment to which they would be subjected without active cooling. They are, however, transpiration cooled with gaseous nitrogen during experiment operation so that they do not reach temperatures at which they would become significant radiators in the infrared. A small thermostatically controlled surface between the two window assemblies provides an in-flight temperature reference source for the infrared camera.

The pressurized nitrogen system comprises two 3,000-psi gaseous nitrogen bottles and all associated valves and plumbing. The pressure system supplies gaseous nitrogen to the cryostat for camera detector cooling, to the external window cavities for window transpiration cooling, and to pin pullers that initiate the ejection of the advanced flexible reusable surface insulation window protection plugs upon SILTS activation to expose the viewing ports and camera.

The information obtained by the camera is recorded on the OEX tape recorder. The data, when reduced and analyzed, will produce a thermal map of the viewed areas.

The SILTS experiment is initiated by the onboard computers approximately five minutes before entry interface, which occurs at an altitude of approximately 400,000 feet. The camera operates for approximately 18 minutes through the forward-facing window and left-facing window, alternating evenly between the two about every five seconds.

After the six planned SILTS missions, an analysis of structural loads will determine whether the SILTS pod should be removed and replaced with the original structure or remain in position for other uses. The pod thermal protection system is high-temperature reusable surface insulation black tiles, whose density is 22 pounds per cubic foot.

**Shuttle Entry Air Data System.** Accurate aerodynamic research requires precise knowledge of vehicle attitude and state. This information, commonly referred to as air data, includes vehicle angle of attack, angle of sideslip, free-stream dynamic pressure, Mach number and total pressure. An evaluation of the orbiter baseline air data system indicated that flight air data would not be available above approximately Mach 3.5 and that the accuracy of the air data would not satisfy aerodynamic research requirements. Therefore, SEADS was developed under the orbiter experiments program to take the measurements required for precise determination of air data across the orbiter's atmospheric flight-speed range (i.e., hypersonic, supersonic, transonic and subconic Mach numbers) or from lift-off to 280,000 feet during ascent and from 280,000 feet to touchdown during entry.

The key to incorporating SEADS in the shuttle orbiter was the development of a technique for penetrating the orbiter's reinforced carbon-carbon nose cap to obtain the required pressure measurements. The SEADS nose cap penetration assembly evolved as a result of extensive design, fabrication and test programs that evaluated high-temperature (greater than 2,600 F) materials and configuration concepts. The coated columbium pen-

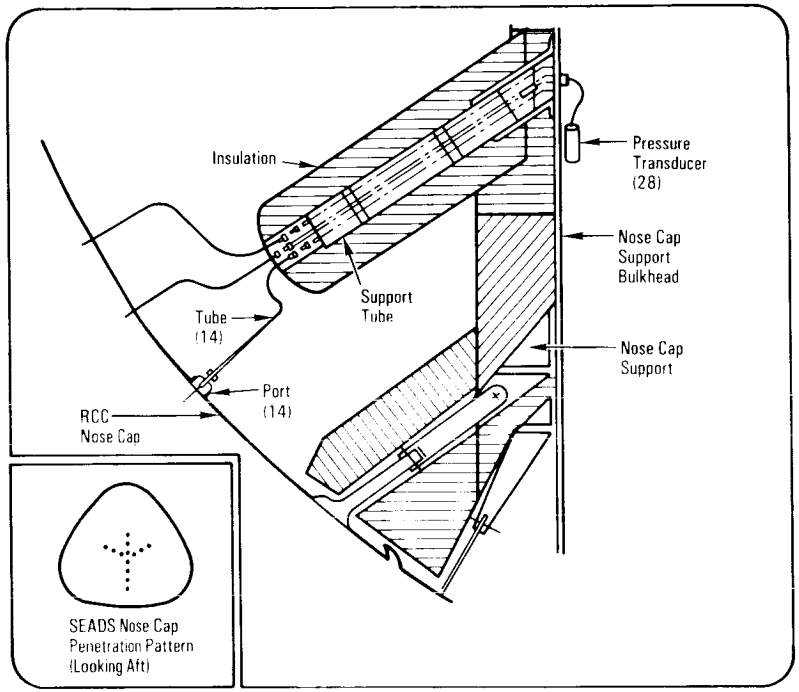


*Shuttle Entry Air Data System*

etration assembly selected then was fabricated for installation in a specially modified baseline geometry nose cap. The SEADS nose cap contains an array of 14 penetration assemblies, associated coated columbium pressure tubing, support structure, pressure transducers and system-monitoring instrumentation. Data from the SEADS pressure transducers are transmitted to the OEX support system and stored on the OEX tape recorder for postflight data analysis.

**Shuttle Upper Atmosphere Mass Spectrometer.** The SUMS experiment will obtain measurements of free-stream density during atmospheric entry in the hypersonic, rarefied flow regime. These measurements, combined with acceleration measurements from the companion high-resolution accelerometer package experiment, will allow calculation of orbiter aerodynamic coefficients in the flow regime previously inaccessible to experimental and ana-

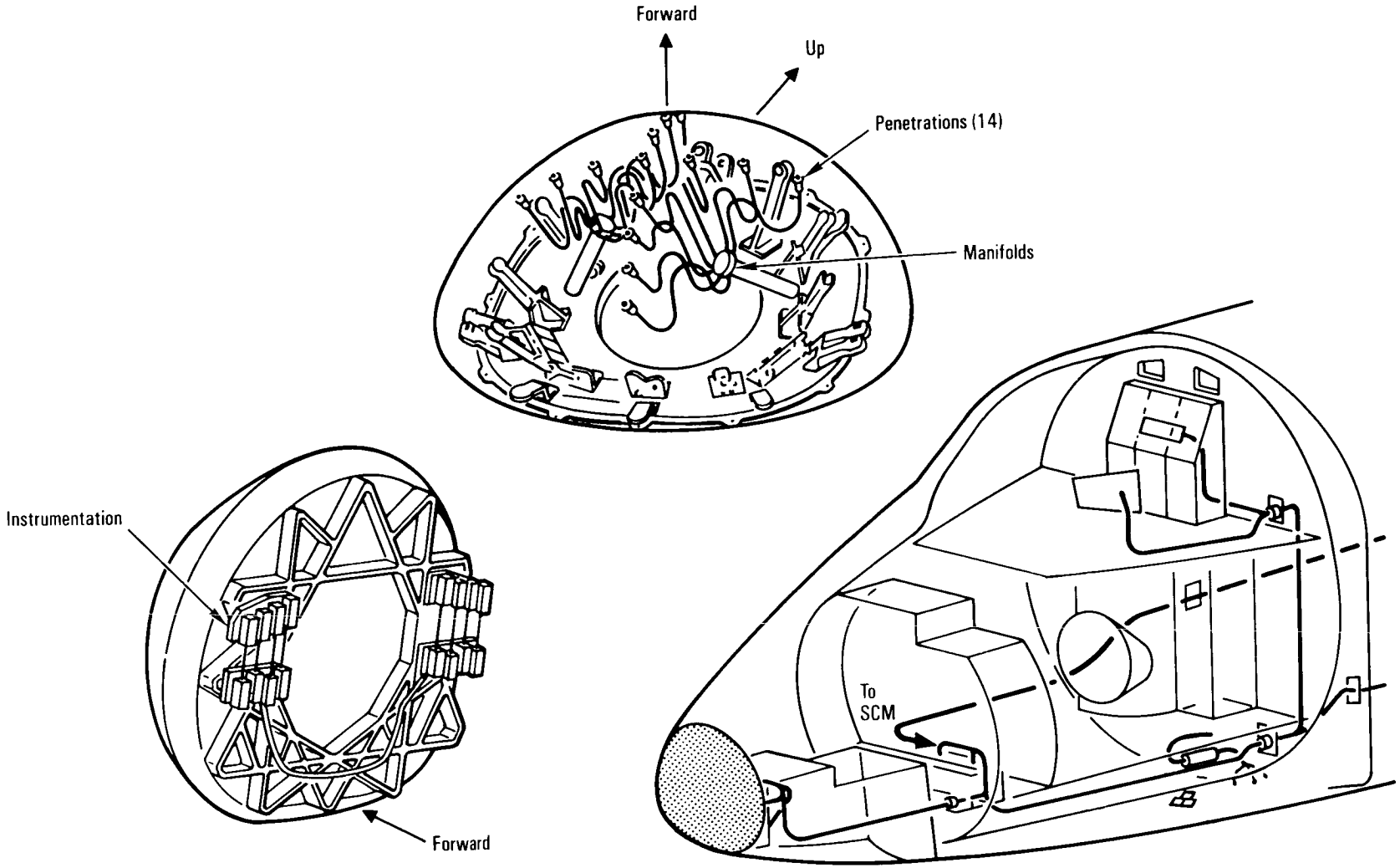


*Shuttle Entry Air Data System*

lytic techniques. SUMS complements SEADS by providing data at higher altitudes. The resultant flight data base will aid in future development of analysis techniques and laboratory facilities for predicting winged-entry-vehicle performance in hypersonic rarefied flow. Furthermore, SUMS will measure equilibrium gas composition at the inlet port, making the experiment a pathfinder for future mass spectrometer application in the study of aerothermodynamic properties of the transition flow field.

The SUMS experiment system consists of a sample orifice, an inlet system and a mass spectrometer. The sample orifice penetrates a thermal tile just aft of the fuselage stagnation point and just forward of the orbiter nose wheel well. The orifice is connected to the inlet system by a short tube through the forward nose wheel well bulkhead. The inlet system is connected through a longer tube to the mass spectrometer, which is mounted above the inlet system on the forward nose wheel well bulkhead. SUMS is designed for easy removal and reinstallation between flights to accommodate modification or repair.

The mass spectrometer is a flight spare unit from the Viking project's upper atmosphere mass spectrometer system. The unit has been modified to be compatible with the orbiter's mechanical, electrical and data systems. The mass spectrometer measures gases from hydrogen through carbon dioxide at a five-second rate. The inlet system contains two switchable flow restrictors that expand the measurement range of the mass spectrometer and position its measurement interval over the desired altitude range. Data from SUMS are output to the OEX data system for recording during flight operation.

SUMS is controlled by stored commands that are transmitted to the orbiter during flight and by internal software logic. Application of power for vacuum maintenance or for normal operation is controlled by stored commands; while internal control of system operation, such as opening and closing valves, is performed by preprogrammed logic. SUMS will be powered on shortly before deorbit burn initiation and will sample the inlet gases down to an altitude of 40 nautical miles. At an altitude of about 59 nautical miles, the range valve will close to switch between the two flow restrictors. At 59 nautical miles, the inlet valve and protection valve will close; but the mass spectrometer will continue to operate until landing, observing the pump-down and background signals after entry.

Operation of SUMS on repeated shuttle flights will not only build a substantial body of aerothermodynamic data for future winged-entry-vehicle design applications, but also add to the knowledge of mass spectrometer applications in aerothermodynamic research. As a further benefit, data will be obtained on atmospheric properties in the altitude range where experimental data are, to date, extremely sparse.

**Aerodynamic Coefficient Identification Package.** Although all of the generic data types required for aerodynamic parameter identification are available from the baseline orbiter systems, the data are not suitable for experimentation because of such factors as sample rate deficiencies, inadequate data resolution or computer cycle time and core size interactions. In addition, the baseline data are operational measurements that are not subject to the desired changes for conducting experiments. The ACIP is a group of sensors that will be placed on the orbiter to obtain experiment measurements unavailable through the baseline system.

The primary ACIP objectives are as follows: (1) to collect aerodynamic data in the hypersonic, supersonic and transonic flight regimes, regions in which there has been little opportunity for gathering and accumulating practical data; (2) to establish an extensive aerodynamic data base for verifying and correlating ground-based test data, including assessments of the uncertainties in such data; and (3) to provide flight dynamics state-variable data in support of other technology areas, such as aerothermal and structural dynamics.

Implementing the ACIP program will benefit the space shuttle because the more precise data obtained through the ACIP will enable earlier attainment of the spacecraft's full operational capability. Currently installed instrumentation provides sufficiently precise data for orbiter operations, but not for research. The result is that constraint removal would either be based on less

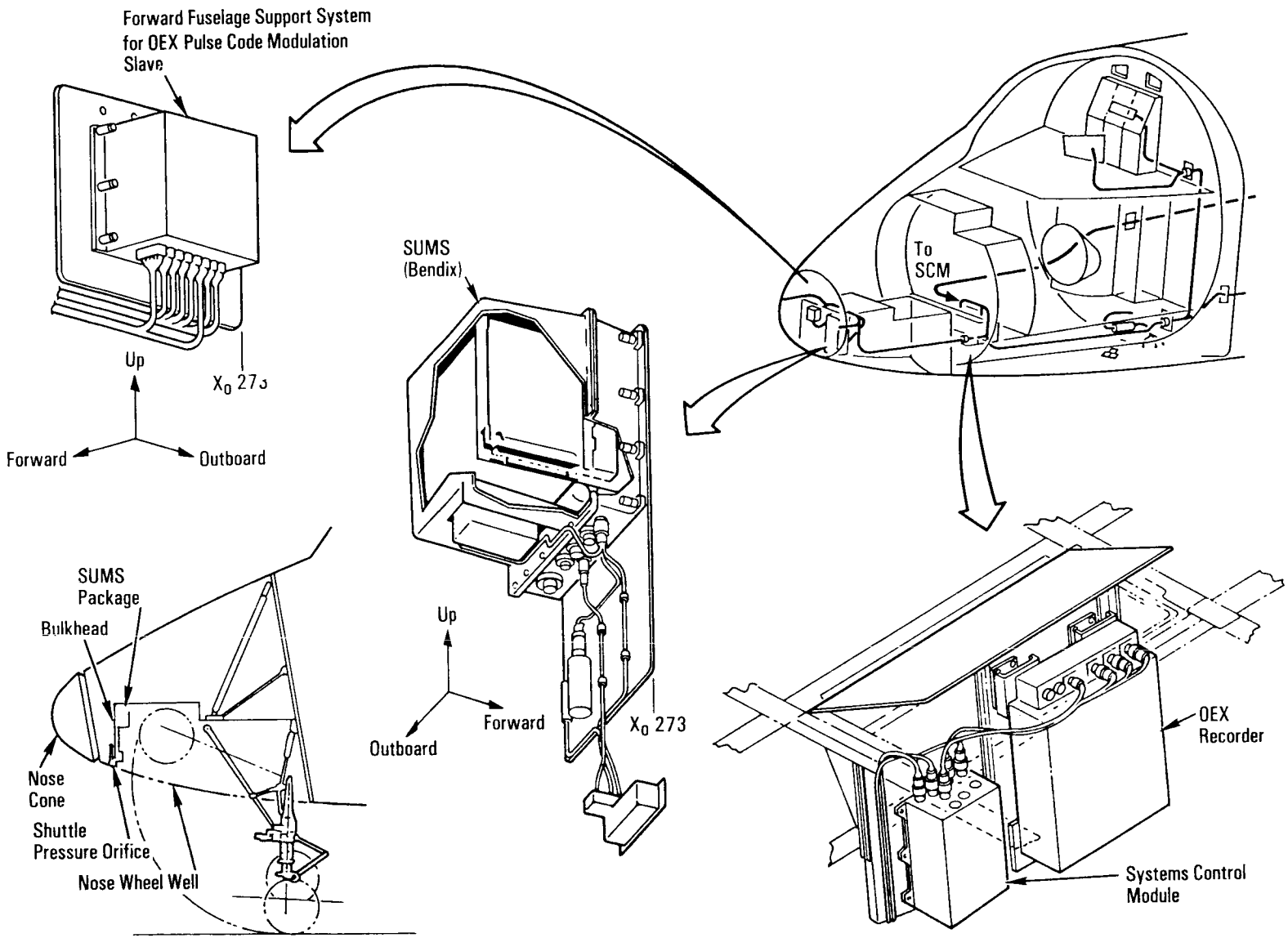


*Shuttle Upper Atmosphere Mass Spectrometer*

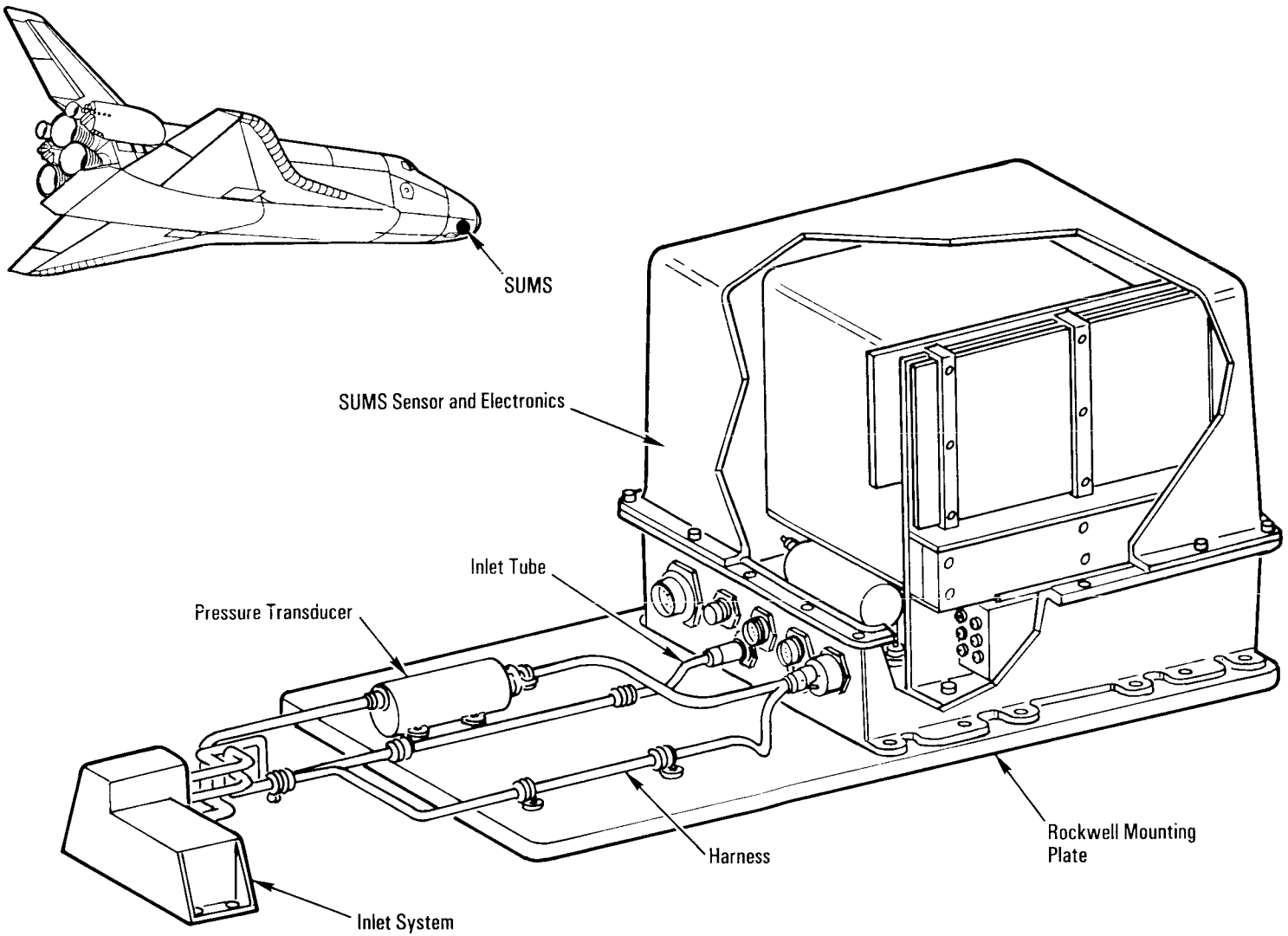


*Shuttle Upper Atmosphere Mass Spectrometer*

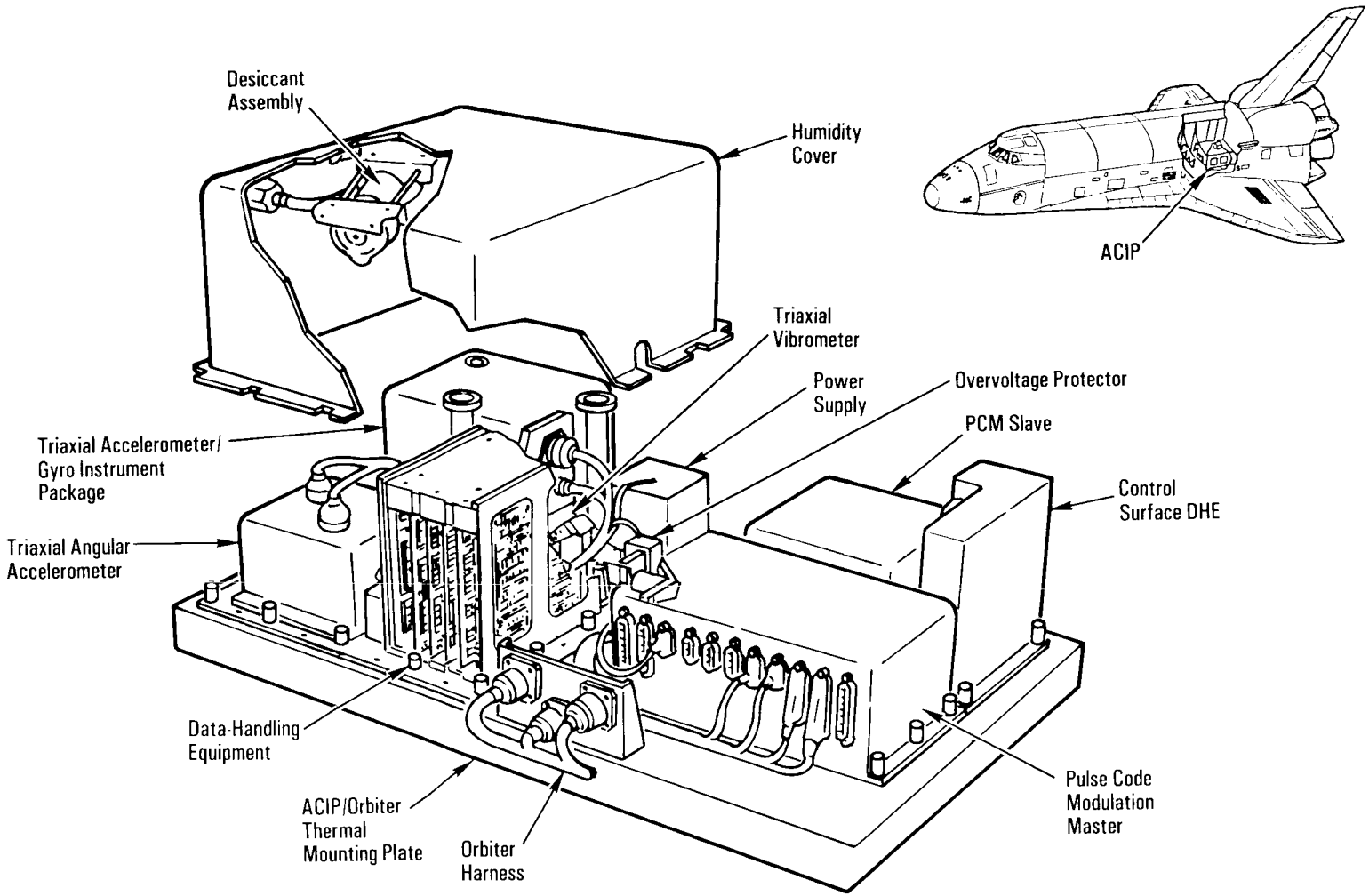


*Aerodynamic Coefficient Identification Package*

substantive data or would require a long-term program of gathering the less accurate data.

The ACIP incorporates three triads of instruments: one of linear accelerometers, one of angular accelerometers and one of rate gyros. Also included are the power conditioner for the gyros, the power control system and the housekeeping components for the instruments. The ACIP is aligned to the orbiter's axes with extreme accuracy. Its instruments continually sense the dynamic X, Y and Z attitudes and the performance characteristics of the orbiter during the launch, orbital, entry and descent phases of flight. In addition, the ACIP receives the indications of orbiter control surface positions and converts the information into higher orders of precision before recording it with the attitude data. The output signals are routed to the pulse code modulation system for formatting with orbiter time data and data from the orbiter experiments. The data are then stored in the OEX tape recorder.

**High-Resolution Accelerometer Package.** This experiment uses an orthogonal, triaxial set of sensitive linear accelerometers to take accurate measurements of low-level (down to micro-g's) aerodynamic accelerations along the orbiter's principal axes during initial re-entry into the atmosphere, i.e., in the rarefied flow regime.

The aerodynamic acceleration data from the HiRAP experiment, output on existing ACIP channels, have been used to calculate rarefied aerodynamic performance parameters and/or atmospheric properties pertaining to several flights, beginning with the STS-6 mission. These flight data support advances in predicting the aerodynamic behavior of winged entry vehicles in the high-speed, low-density flight regime, including free molecular flow and the transition into the hypersonic continuum. Aerodynamic performance under these conditions cannot be simulated in ground facilities; consequently, current predictions rely solely on computational techniques and extrapolations of tunnel data. For improvement or advances, these techniques depend on actual flight data to serve as benchmarks, particularly in the transition regime between free molecular flow and continuum flow.

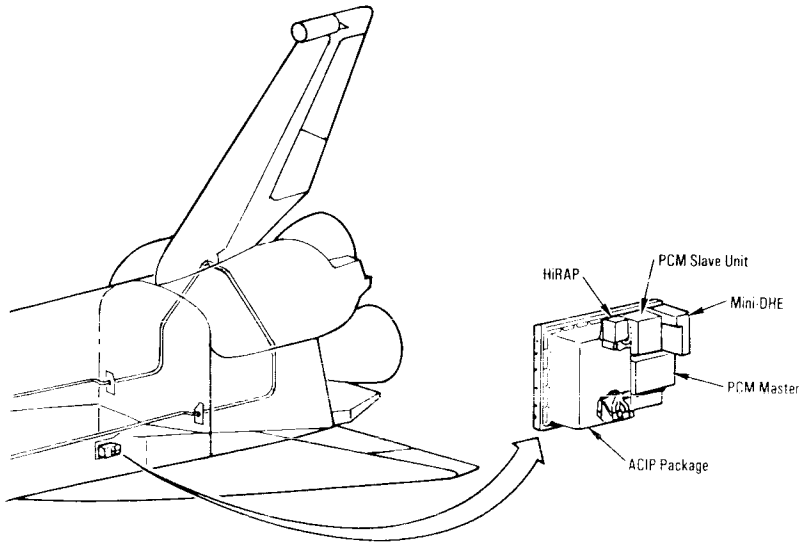


ACIP - Aerodynamic Coefficient Identification Package
DHE - Data Handling Equipment
HiRAP - High Resolution Accelerometer Package
PCM - Pulse Code Modulation

*High-Resolution Accelerometer Package*

Advancements in rarefied aerodynamics of winged entry vehicles may also prove useful in the design of future advanced orbital transfer vehicles. Such OTVs may use aerodynamic braking and maneuvering to dissipate excess orbital energy into the upper atmosphere upon return to lower orbits for rendezvous with an orbiter from the space station. A key aerodynamic parameter in the OTV design is the lift-to-drag ratio, which is measured directly in the HiRAP experiment. Furthermore, an OTV may require a flight-proven, sensitive onboard accelerometer system to overcome uncertainties in the upper atmosphere. The experience gained from the planned multiple HiRAP flights may provide valuable test data for the development of future navigation systems. In addition, the experiment provides data on key atmospheric properties (e.g., density) in a region of flight that is not readily accessible to orbital vehicles or regular meteorological soundings.

**Modular Auxiliary Data System.** This onboard instrumentation system measures and records selected pressure, temperature, strain, vibration and event data to support payloads and experiments and to determine orbiter environments during flight. It supplements existing orbiter operational instrumentation by conditioning, digitizing and storing data from selected sensors and experiments.

The MADS collects detailed data during ascent, orbit and entry to define vehicle response to flight environments. It permits correlation of data from one flight to another and enables comparison of flight data from one orbiter to another orbiter.

All MADS equipment installed in the orbiter is structurally mounted and environmentally compatible with the orbiter and mission requirements. Because of its location, the MADS does not intrude into the payload envelope. Equipment consists of a pulse code modulation multiplexer, a frequency division multiplexer, a power distribution assembly and appropriate signal conditioners mounted on shelf 8 beneath the payload bay liner of the midfuselage.

In OV-102 (Columbia), MADS inputs its information to the system control module and records it on the OEX recorder located below the crew compartment middeck floor. In OV-103 (Discovery) and OV-104 (Atlantis), a MADS control module and recorder are mounted below the crew compartment middeck floor.

MADS records approximately 246 measurements from the orbiter airframe, skin and orbital maneuvering system/reaction control system left-hand pod.

The MADS interfaces with the orbiter through the orbiter's electrical distribution system and operational instrumentation inputs for status monitoring. Coaxial cables and wire harnesses from the sensors are routed through the orbiter payload bay harness bundles to the signal conditioners, PCM multiplexer and FDM, attached to the midfuselage shelf. After the signal conditioners and the multiplexers have processed the data, four outputs of the FDM and one output of the PCM multiplexer are routed forward to the SCM in OV-102 for recording on the OEX recorders. In OV-103 and OV-104, the four outputs of the FDM and one output of the PCM multiplexer are routed forward to the MCM for recording on five tracks of the MADS recorder. In addition, the MADS recorder is used during ascent to record additional space shuttle data consisting of solid rocket booster wide band and external tank signals.

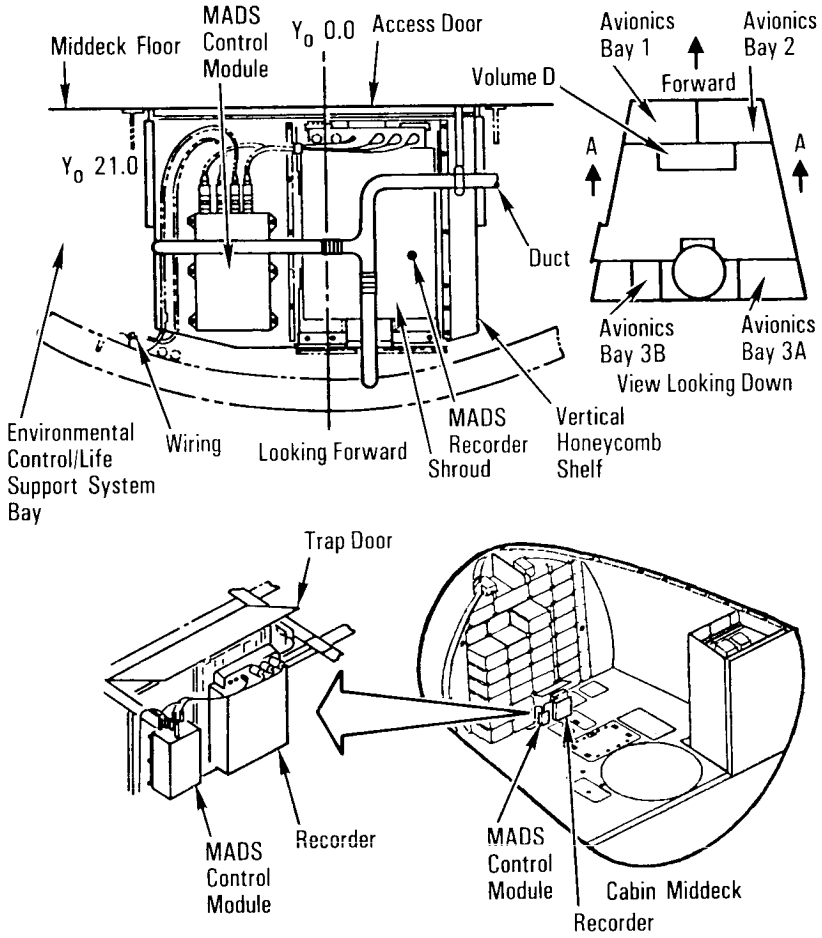


*Modular Auxiliary Data System Equipment Location in Crew Compartment—Middeck of OV-103 (Discovery) and OV-104 (Atlantis)*

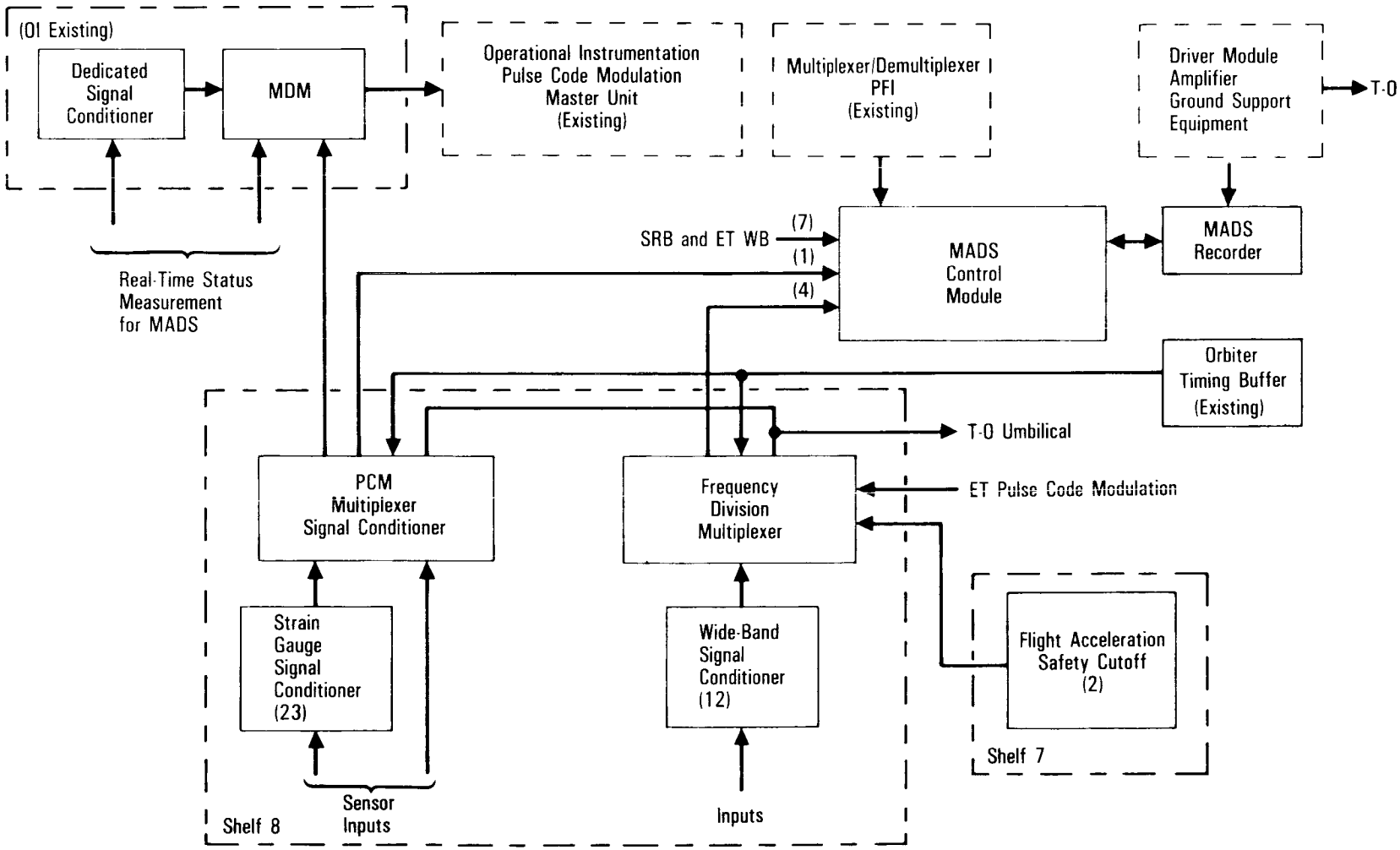


*Modular Auxiliary Data System Block Diagram—OV-103 (Discovery) and OV-104 (Atlantis)*

The MADS is not considered mandatory for launch, and its loss during flight does not cause a mission abort. It measures and records data for predetermined events established by test and mission requirements.

For a typical mission, approximately five hours before launch, the MADS is powered on from the preset switch configuration to supply a prelaunch manual calibration. (Power is supplied from the orbiter's main buses A and B.) After calibration, all switches are returned to the preset configuration, leaving the MADS in the standby position and only the MCM receiving power. This mode continues until nine minutes before launch, at which time the MADS attains the full-system mode through uplink commands and all its components are powered on. In this mode, the MADS recorder is operating at a continuous tape speed of 15 inches per second, recording aerodynamic coefficient identification package, flight acceleration safety cutoff, ET, SRB, wideband and PCM data. The MADS PCM bit rate is 64 kbps.

The wide-band-only mode is used during the prelaunch automatic and manual calibrations. This mode records the ac and dc calibration levels provided by the FDM. Each manual calibration level is recorded for 10 seconds at a tape speed of 15 inches per second in the continuous mode.

Approximately 12 minutes after launch, the MADS is commanded into the PCM-snapshot-with-strain-gauge-signal-conditioner mode. In this mode, the recorder is in the sample mode, conserving power and recorder tape by recording data for 10 seconds every 10 minutes at a PCM bit rate of 32 kbps and a tape speed of 3.75 inches per second. Two minutes before the second orbital maneuvering system thrusting period, the MADS is commanded into the full-system mode until the thrusting period is completed. Then it is commanded into the PCM-only mode, which continues during the orbit until a quiescent period is reached. In OV-102 only, one minute of ACIP calibration is required during this period, after which the MADS continues in the PCM-only mode. The system is switched to the full-system mode for the OMS separation thrusting periods and can be returned to the PCM-only mode for the majority of the on-orbit mission.

The PCM-with-SGSC mode is similar to the PCM-only mode, but strain measurements are also recorded during this period. The SGSC operation is cycled along with the other MADS equipment and signal conditioners by uplink commands to maintain the required operational temperatures. This mode occurs between two full-system modes to minimize flight crew participation and conserve power and recorder tape. It can be initiated from the full-system mode or returned to the full-system mode by one uplink command. To shift this mode to the PCM-only mode, the SGSC must be commanded off manually by the flight crew. This mode is used on orbit.

Two minutes before the deorbit thrusting period, the MADS is put into the full-system mode for one hour to record descent (entry) data. At the conclusion of the one-hour period, it is placed in the PCM-only mode for approximately four hours to measure postlanding thermal data and is then powered down for the entire postlanding period.

With the use of the MADS switches located in the crew compartment, control can be initiated by the flight crew. To reduce the flight crew's participation, all commands are uplinked from the Mission Control Center in Houston and transmitted to the onboard payload forward 1 multiplexer/demultiplexer. The MDM then routes the commands to the SCM for processing in OV-102 and to the MCM in OV-103 and OV-104. Power for the MADS will be supplied by the orbiter's 28-volt dc main buses A and B.

The flight acceleration safety cutoff system interfaces 12 orbiter main engine vibration measurements with the MADS. The variety of MADS measurements is collected by thermocouples, resistance thermometers, radiometers, vibration sensors, strain gauges or pressure transducers.

The MADS shelf 8 components are protected from overheating by shelf temperature monitoring and control of MADS opera-

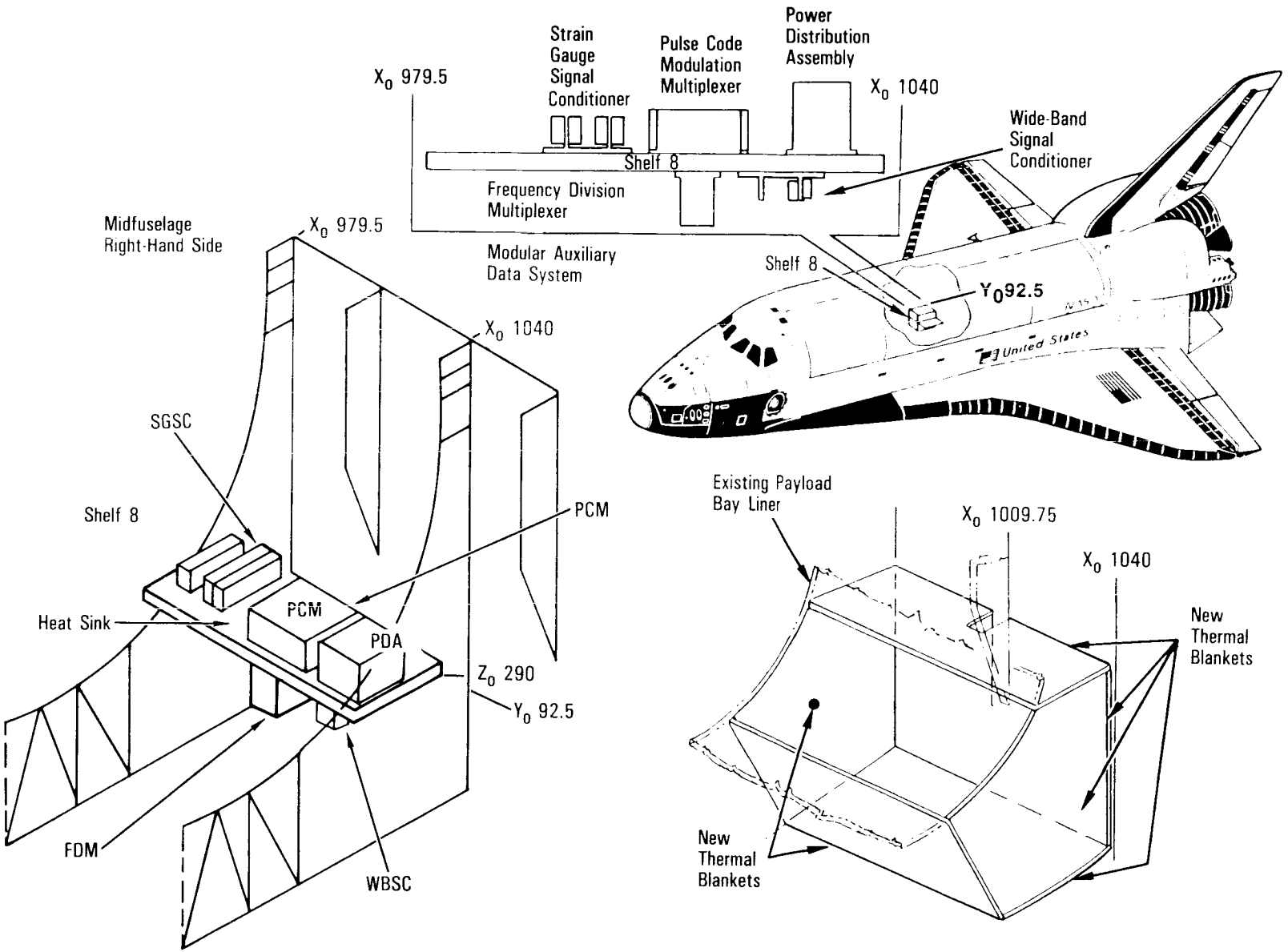


*Modular Auxiliary Data System Equipment Location in Midfuselage, All Orbiters*

tion by ground commands. The MADS is thermally isolated from the orbiter structure by 0.049-inch thin-wall titanium struts. It is also protected from the orbiter environment by a 1.5-inch bulk-insulation enclosure.

The MADS recorders in OV-103 and OV-104 are Data Tape/Kodak 28-track, wide-band, modular, airborne recording systems similar to the OV-102 orbiter experiments recorder. The recorders are capable of simultaneously recording, and subsequently reproducing, 28 tracks of digital biphase L data or any combination of wide-band analog and digital biphase L data up to 28 tracks.

After OV-103 and OV-104 return from a mission, the recorder tape is played back to record the data on a ground recording system. The tape is not removed from the flight recorder. The total MADS weight is 641 pounds.

The following are the contractors involved with the orbiter instrumentation and communication systems: Aydin Vector Division, Newton, Pa. (wide-band frequency-division multiplexers); Communications Components, Costa Mesa, Calif. (UHF antenna); Conrac Corp., West Caldwell, N.J. (mission timer, event timer, ground command interface logic box, FM signal processor); Eldec Corp., Lynwood, Wash. (dedicated signal conditioner); Endevco, San Juan Capistrano, Calif. (piezoelectric accelerometer, piezoelectric pickup [acoustic and vibration]); Gulton Industries, Costa Mesa, Calif. (accelerometer linear flow frequency, vibration and acoustic); Harris Corp., Electronic Systems Division, Melbourne, Fla. (pulse code modulation master unit, orbiter/payload timing buffer and payload data interleaver); Hughes, El Segundo, Calif. (Ku-band radar, communication system deployable antenna and electrical assembly); K-West, Westminster, Calif. (wide-band signal conditioner, strain gauge signal conditioner); Magnavox, Ft. Wayne, Ind. (UHF receiver/transmitter mount, UHF receiver/transmitter); Micro Measurements, Romulus, Mich. (strain gauge); RDF Corp., Hudson, N.H. (sensors, transducers); Rosemount Inc., Eden Prairie, Minn. (transducers, sensors); Radio Corp. of America, Astro-Electronics Division, Princeton, N.J. (closed-circuit television); Spectran, La Habra, Calif. (sensors); Sperry Rand Corp., Flight Systems Division, Phoenix, Ariz. (multiplexer/demultiplexer); Stratham Instruments, Oxnard, Calif. (transducers); Systron-Donner, Concord, Calif. (accelerometer); Teledynamics Division of Ambac Industries, Fort Washington, Pa. (S-band transmitter, FM transmitter, S-band transceiver); Telephonics Division, Instruments System Corp., Huntington N.Y. (orbiter audio distribution system); TRW Systems, Electronic Systems Division, Redondo Beach, Calif. (S-band payload interrogator, S-band network equipment, network signal processor, payload signal processor); Transco Products, Venice, Calif. (S-band switch); Watkins Johnson, Palo Alto, Calif. (C-band radar altimeter antenna, L-band TACAN, UHF antenna, S-band power amplifier); Wavecom, Northridge, Calif. (S-band multiplexer); Westinghouse Electric Corp., Systems Development Division, Baltimore, Md. (master timing unit); AIL, Huntington, N.Y. (S-band preamplifier assembly); AVCO, Wilmington, Mass. (Ku-band MSBLS antenna, Ku-band waveguide); Teledyne-Microwave, Mountain View, Calif. (S-band switch assembly); Teledyne-Electronics, Newberry Park, Calif. (S-band FM transmitter); RCA, Government Communications Systems, Camden, N.J. (extravehicular activity communication system); Data Tape Inc., division of Kodak Corp., Pasadena, Calif. (MADS recorder); Gulton Data Systems, Gulton Industries Inc., Albuquerque, N.M. (pulse code modulation multiplexer); Odetics Space Born Corp., Anaheim, Calif. (operational and payload recorders); Rockwell, Anaheim, Calif. (S-band quad antenna, S-band hemi antenna, S-band payload antenna).

## AVIONICS SYSTEMS

The space shuttle avionics system controls, or assists in controlling, most of the shuttle systems. Its functions include automatic determination of the vehicle's status and operational readiness; implementation sequencing and control for the solid rocket boosters and external tank during launch and ascent; performance monitoring; digital data processing; communications and tracking; payload and system management; guidance, navigation and control; and electrical power distribution for the orbiter, external tank and solid rocket boosters.

Automatic vehicle flight control can be used for every phase of the mission except docking, which is a manual operation performed by the flight crew. Manual control—referred to as the control stick steering mode—also is available at all times as a flight crew option.

The avionics equipment is arranged to facilitate checkout, access and replacement with minimal disturbance to other systems. Almost all electrical and electronic equipment is installed in three areas of the orbiter: the flight deck, the three avionics equipment bays in the middeck of the orbiter crew compartment and the three avionics equipment bays in the orbiter aft fuselage. The flight deck of the orbiter crew compartment is the center of avionics activity, both in flight and on the ground. Before launch, the orbiter avionics system is linked to ground support equipment through umbilical connections.

The space shuttle avionics system consists of more than 300 major electronic black boxes located throughout the vehicle, connected by more than 300 miles of electrical wiring. There are approximately 120,400 wire segments and 6,491 connectors in the vehicle. The wiring and connectors weigh approximately 7,000 pounds, wiring alone weighing approximately 4,600 pounds. Total weight of the black boxes, wiring and connectors is approximately 17,116 pounds.

The black boxes are connected to a set of five general-purpose computers through common party lines called data buses. The black boxes offer dual or triple redundancy for every function.

The avionics are designed to withstand multiple failures through redundant hardware and software (computer programs) managed by the complex of five computers; this arrangement is called a fail-operational/fail-safe capability. Fail-operational performance means that, after one failure in a system, redundancy management allows the vehicle to continue on its mission. Fail-safe means that after a second failure, the vehicle still is capable of returning to a landing site safely.

**DATA PROCESSING SYSTEM**. The space shuttle vehicle relies on computerized control and monitoring for successful performance. The data processing system, through the use of various hardware components and its self-contained computer programming (software), provides the vehicle with this monitoring and control.

The DPS hardware consists of five general-purpose computers for computation and control, two magnetic tape mass memory units for large-volume bulk storage, a time-shared computer data bus network consisting of serial digital data buses (essentially party lines) to accommodate the data traffic between the GPCs and space shuttle vehicle systems, 19 orbiter and four solid rocket booster multiplexers/demultiplexers to convert and format data from the various vehicle systems, three space shuttle main engine interface units to command the SSMEs, four multifunction CRT display systems used by the flight crew to monitor and control the vehicle and payload systems, two data bus isolation amplifiers to interface with the ground support equipment/launch processing system and the solid rocket boosters, two master events controllers, and a master timing unit.

The software stored in and executed by the GPCs is the most sophisticated and complex set of programs ever developed for aerospace use. The programs are written to accommodate almost every aspect of space shuttle operations, including orbiter check-

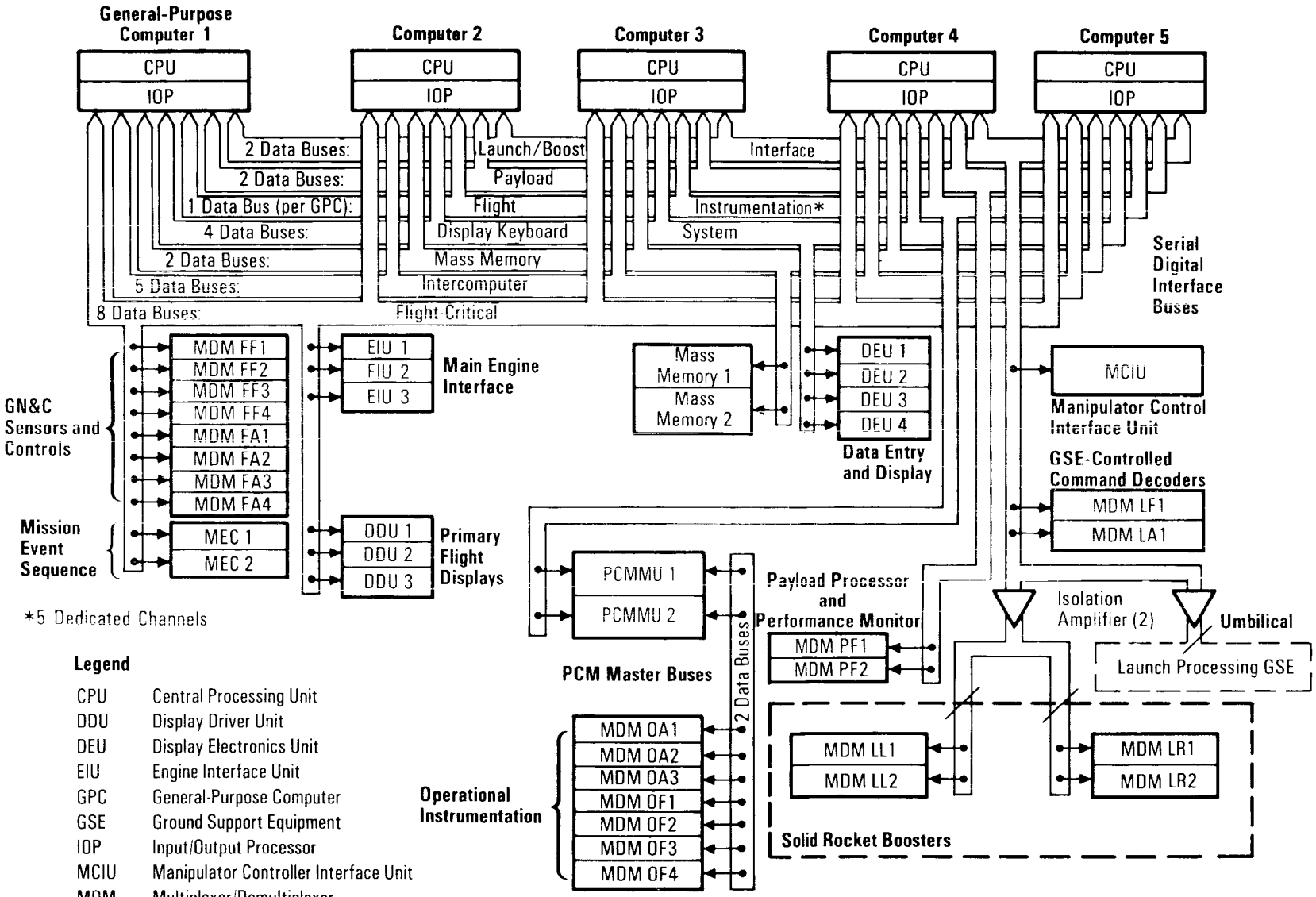


*Data Processing System*

out at Rockwell's Palmdale, Calif., assembly facility; space shuttle vehicle prelaunch and final countdown for launch; turnaround activities at the Kennedy Space Center and eventually Vandenberg Air Force Base; control and monitoring during launch ascent, on-orbit activities, entry and landing; and aborts or other contingency mission phases. A multicomputer mode is used for the critical phases of the mission, such as launch, ascent, entry, landing and aborts.

Some of the DPS functions are as follows: support the guidance, navigation and control of the vehicle, including calculations of trajectories, SSME thrusting data and vehicle attitude control data; process vehicle data for the flight crew and for transmission to the ground and allow ground control of some vehicle systems via transmitted commands; check data transmission errors and crew control input errors; support annunciation of vehicle system failures and out-of-tolerance system conditions; support payloads with flight crew/software interface for activation, deployment, deactivation and retrieval; process rendezvous, tracking and data transmissions between payloads and the ground; and monitor and control vehicle subsystems.

**SOFTWARE.** DPS software is divided into two major

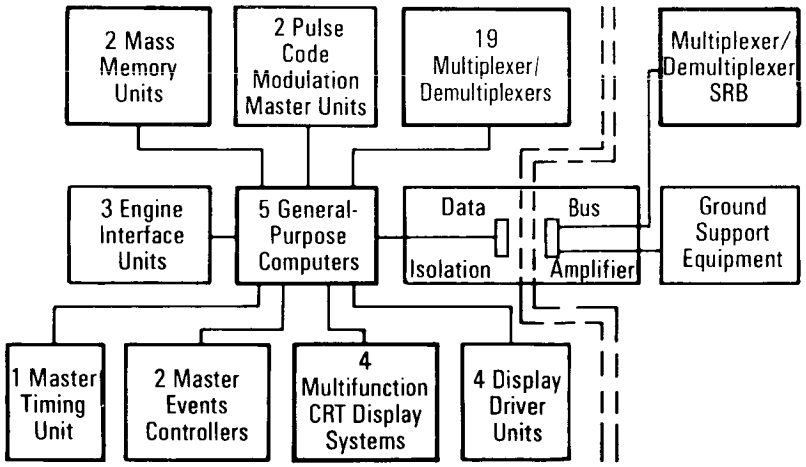


*Data Processing System*

groups, system software and applications software. The two software program groups are combined to form a memory configuration for a specific mission phase. The software programs are written in HAL/S (high-order assembly language/shuttle) especially developed for real-time space flight applications.

The system software is the GPC operating software that controls the interfaces among the computers and the rest of the DPS. It is loaded into the computer when it is first initialized. It always resides in the GPC main memory and is common to all memory configurations. The system software controls the GPC input and output, loads new memory configurations, keeps time, monitors discretes into the GPCs and performs many other functions required for the DPS to operate. The system software has nothing to do with orbiter systems or systems management software.

The system software consists of three sets of programs: the flight computer operating program (the executive) that controls the processors, monitors key system parameters, allocates computer resources, provides for orderly program interrupts for higher priority activities and updates computer memory; the user interface programs that provide instructions for processing flight crew commands or requests; and the system control program that initializes each GPC and arranges for multi-GPC operation during flight-critical phases. The system software program tells the general-purpose computers how to perform and how to communicate with other equipment.

One of the system software responsibilities is to manage the GPC input and output operations, which includes assigning computers as commanders and listeners on the data buses and exercising the logic involved in sending commands to these data buses at specified rates and upon request from the applications software.

The applications software contains (1) specific software programs for vehicle guidance, navigation and control required for launch, ascent to orbit, maneuvering in orbit, entry and landing on a runway; (2) systems management programs with instructions for loading memories in the space shuttle main engine computers and for checking the vehicle instrumentation system, aiding in

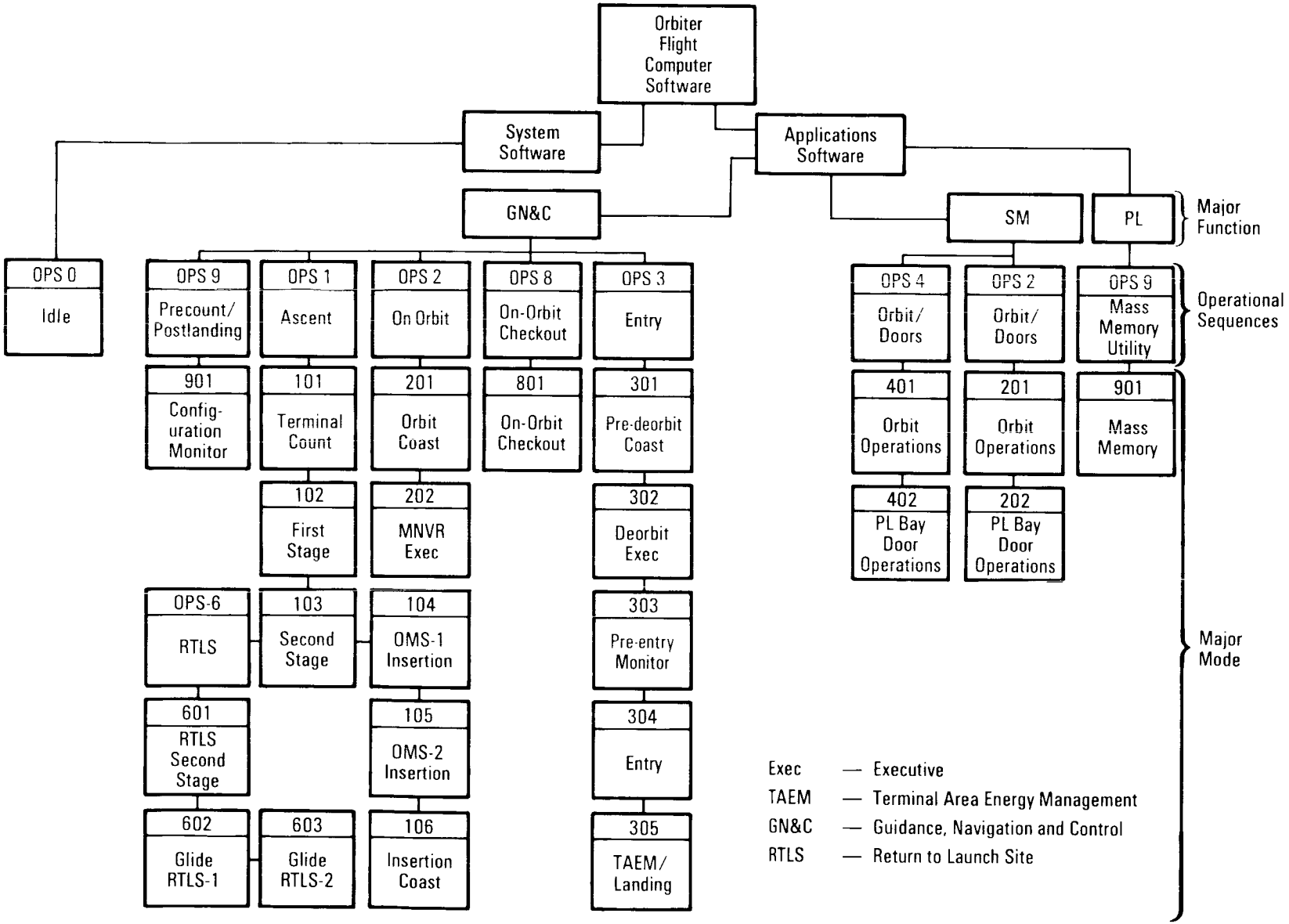


*Orbiter Flight Computer Software*

vehicle subsystem checkout, ascertaining that flight crew displays and controls perform properly and updating inertial measurement unit state vectors; (3) payload processing programs with instructions for controlling and monitoring orbiter payload systems that can be revised depending on the nature of the payload; and (4) vehicle checkout programs needed to handle data management, performance monitoring, special processing, and display and control processing.

The applications software performs the actual duties required to fly and operate the vehicle. To conserve main memory, the applications software is divided into three major functions: guidance, navigation and control; systems management; and payload. Each GPC operates in one major function at a time, and usually more than one computer is in the GN&C major function simultaneously for redundancy.

The highest level of the applications software is the operational sequence required to perform part of a mission phase. Each

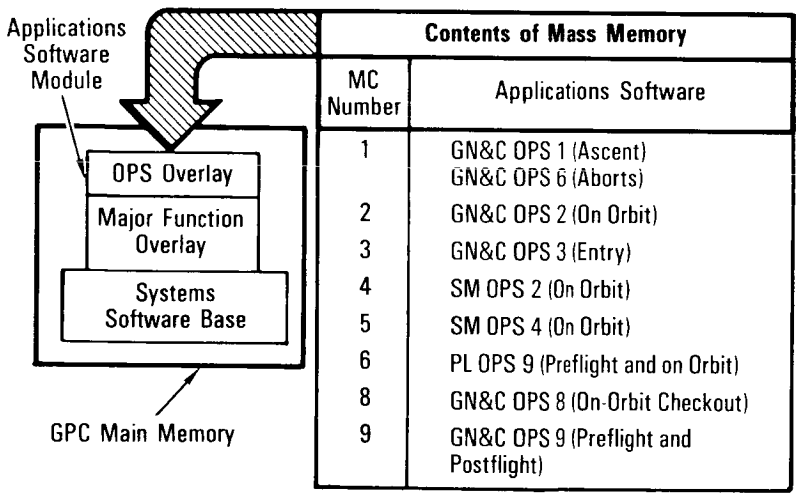


| Contents of Mass Memory | |
|---|---|
| MC Number | Applications Software |
| 1 | GN&C OPS 1 (Ascent)<br>GN&C OPS 6 (Aborts) |
| 2 | GN&C OPS 2 (On Orbit) |
| 3 | GN&C OPS 3 (Entry) |
| 4 | SM OPS 2 (On Orbit) |
| 5 | SM OPS 4 (On Orbit) |
| 6 | PL OPS 9 (Preflight and on Orbit) |
| 8 | GN&C OPS 8 (On-Orbit Checkout) |
| 9 | GN&C OPS 9 (Preflight and Postflight) |

GN&C — Guidance, Navigation and Control
OPS — Operational Sequences
MC — Memory Configuration

*Applications Software Memory Configurations*

OPS is a set of unique software that must be loaded separately into a GPC from the mass memory units. Therefore, all the software residing in a GPC at any time consists of system software and an OPS. An OPS can be further subdivided into groups called major modes, each representing a portion of the OPS mission phase.

During the transition from one OPS to another, the flight crew requests a new set of applications software to be loaded in from the MMU. Every OPS transition is initiated by the flight crew. An exception is GN&C OPS 1, which is divided into six major modes and contains the OPS 6 return-to-launch-site abort, since there would not be time to load in new software for an RTLS. When an OPS transition is requested, the redundant OPS overlay contains all major modes of that sequence.

Each major mode has with it an associated CRT display, called an OPS display, that provides the flight crew with information concerning the current portion of the mission phase and allows flight crew interaction. There are three levels of CRT displays. Certain portions of each OPS display can be manipulated by flight crew keyboard input (or ground link) to view and modify system parameters and enter data. The specialist function of the OPS software is a block of displays associated with one or more operational sequences and enabled by the flight crew to monitor and modify system parameters through keyboard entries. The display function of the OPS software is a block of displays associated with one OPS or more. These displays are for parameter monitoring only (no modification capability) and are called from the keyboard.

The principal software used to operate the vehicle during a mission is the primary avionics software system. It contains all the programming needed to fly the vehicle through all phases of the mission and manage all vehicle and payload systems.

Since the ascent and entry phases of flight are so critical, four of the five GPCs are loaded with the same PASS software and perform all GN&C functions simultaneously and redundantly. As a safety measure, the fifth GPC contains a different set of soft-

ware, programmed by a company different from the PASS developer, designed to take control of the vehicle if a generic error in the PASS software or other multiple errors should cause a loss of vehicle control. This software is called the backup flight system. In the less dynamic phases of on-orbit operations, the BFS is not required.

GPCs running together in the same GN&C OPS are part of a redundant set performing identical tasks from the same inputs and producing identical outputs. Therefore, any data bus assigned to a commanding GN&C GPC is heard by all members of the redundant set (except the instrumentation buses because each GPC has only one dedicated bus connected to it). These transmissions include all CRT inputs and mass memory transactions, as well as flight-critical data. Thus, if one or more GPCs in the redundant set fail, the remaining computers can continue operating in GN&C. Each GPC performs about 325,000 operations per second during critical phases.

Each computer in a redundant set operates in synchronized steps and cross-checks results of processing about 440 times per second. Synchronization refers to the software scheme used to ensure simultaneous intercomputer communications of necessary GPC status information among the primary avionics computers. If a GPC operating in a redundant set fails to meet two redundant synchronization codes in a row, the remaining computers will vote it out of the redundant set. Or if a GPC has a problem with its multiplexer interface adapter receiver during two successive reads of response data and does not receive any data while the other members of the redundant set do not receive the data, they in turn will vote the GPC out of the set. A failed GPC is halted as soon as possible.

GPC failure votes are annunciated in a number of ways. The GPC *status matrix* on panel O1 is a 5-by-5 matrix of lights. For example, if GPC 2 sends out a failure vote against GPC 3, the second white light in the third column is illuminated. The yellow diagonal lights from upper left to lower right are self-failure votes. Whenever a GPC receives two or more failure votes from other GPCs, it illuminates its own yellow light and resets any failure votes that it made against other GPCs (any white lights in its row are extinguished). Any time a yellow *matrix* light is illuminated, the *GPC* red caution and warning light on panel F7 is illuminated, in addition to *master alarm* illumination, and a GPC fault message is displayed on the CRT.

**GPCs.** Five identical general-purpose computers aboard the orbiter control space shuttle vehicle systems. Each GPC is composed of two separate units, a central processor unit and an input/output processor. All five GPCs are IBM AP-101 computers. Each CPU and IOP contains a memory area for storing software and data. These memory areas are collectively referred to as the GPC's main memory.

The central processor controls access to GPC main memory for data storage and software execution and executes instructions to control vehicle systems and manipulate data. In other words, the CPU is the "number cruncher" that computes and controls computer functions.

The IOP formats and transmits commands to the vehicle systems, receives and validates response data from the vehicle systems and maintains the status of interfaces with the CPU and the other GPCs.

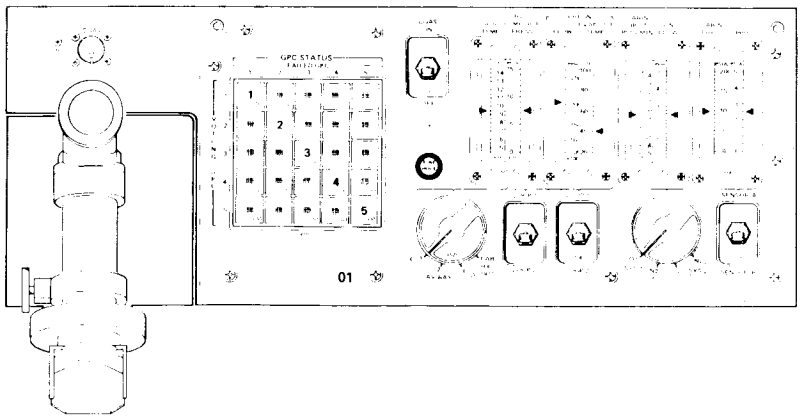


*Panel O1*

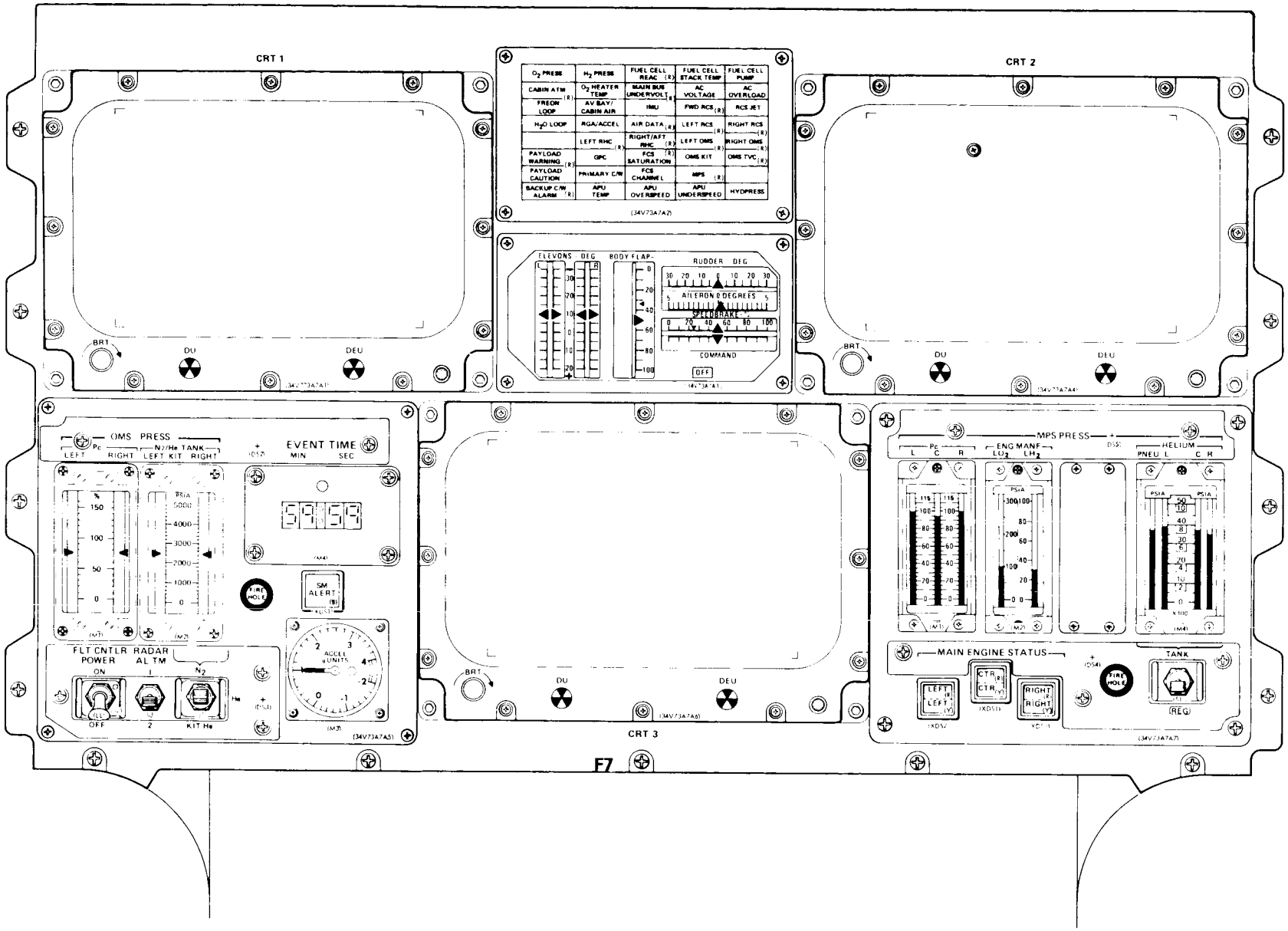
CRT 1
CRT 2
CRT 3
F7
BRT
DU
DEU
ELEVONS DEG
BODY FLAP
RUDDER DEG
AILERON DEGREES
SPEEDBRAKE
COMMAND
OFF
OMS PRESS
EVENT TIME
MIN SEC
FIRE HOLE
SM ALERT
FLT CNTLR POWER
RADAR AL TM
ON
OFF
KIT He
ACCEL UNITS
MPS PRESS
ENG MANF
HELIUM
PNEU
MAIN ENGINE STATUS
TANK
(REG)

*Panel F7*

The IOP of each computer has 24 independent processors, each of which controls 24 data buses used to transmit serial digital data between the GPCs and vehicle systems, and secondary channels between the telemetry system and units that collect instrumentation data. The 24 data buses are connected to each IOP by multiplexer interface adapters that receive, convert and validate the serial data in response to discrete signals calling for available data to be transmitted or received from vehicle hardware.

During the receive mode, the multiplexer interface adapter validates the received data (notifying the IOP control logic when an error is detected) and reformats the data. During the receive mode, its transmitter is inhibited unless that particular GPC is in command of that data bus.

During the transmit mode, a multiplexer interface adapter transmits and receives 28-bit command/data words over the computer data buses. When transmitting, the MIA adds the appropriate parity and synchronization code bits to the data, reformats the data, and sends the information out over the data bus. In this mode, the MIA's receiver and transmitters are enabled.

The first three bits of the 28-bit word provide synchronization and indicate whether the information is a command or data.

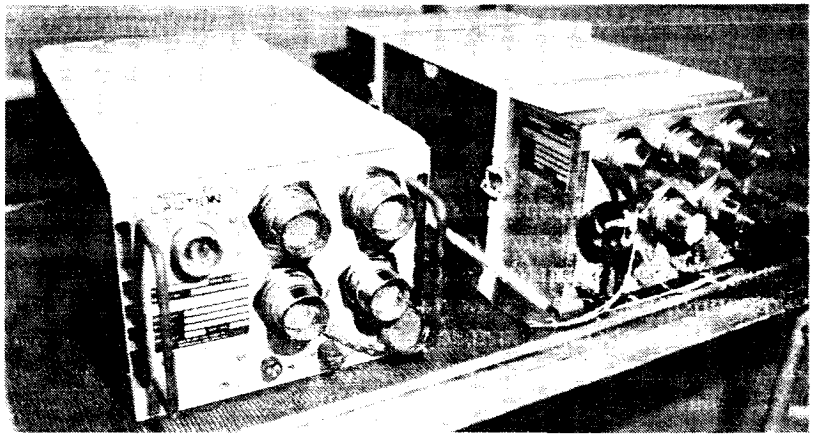

*AP-101B General-Purpose Computer (IOP and CPU)*

The next five bits identify the destination or source of the information. For command words, 19 bits identify the data transfer or operations to be performed; for data words, 16 of the 19 bits contain the data and three bits define the word validity. The last bit of each word is for an odd parity error test.

The main memory of each GPC is non-volatile (the software is retained when power is interrupted). The memory capacity of each CPU is 81,920 words, and the memory capacity of each IOP is 24,576 words; thus, the CPU and IOP constitute a total of 106,496 words.

The hardware controls for the GPCs are located on panel O6. Each computer reads the position of its corresponding *output*, *initial program load* and *mode* switches from discrete input lines that go directly to the GPC. Each GPC also has an *output* and *mode* talkback indicator on panel O6 that are driven from GPC output discretes.

Each GPC power *on*, *off* switch is a guarded switch. Positioning a switch to *on* provides the computer with triply redundant power (not through a discrete) by three essential buses—ESS1BC, 2AC and 3AB—which run through the GPC power switch. The essential bus power is transferred to remote power controllers, which permits main bus power from the three main buses (MNA, MNB and MNC) to power the GPC. There are three RPCs for the IOP and three for the CPU; thus, any GPC will function normally, even if two main or essential buses are lost.

Each computer uses over 600 watts of power. GPCs 1 and 4 are located in forward middeck avionics bay 1, GPCs 2 and 5 are located in forward middeck avionics bay 2, and GPC 3 is located in aft middeck avionics bay 3. The GPCs receive forced-air cooling from an avionics bay fan. There are two fans in each avionics bay but only one is powered at a time. If both fans in an avionics bay fail, the computers will overheat and could not be relied on to operate properly for more than 20 minutes if the initial condition is warm.

Each GPC *output* switch is a guarded switch with *backup*,

*normal* and *terminate* positions. The *output* switch provides a hardware override to the GPC that precludes that GPC from outputting (transmitting) on the flight-critical buses. The switches for

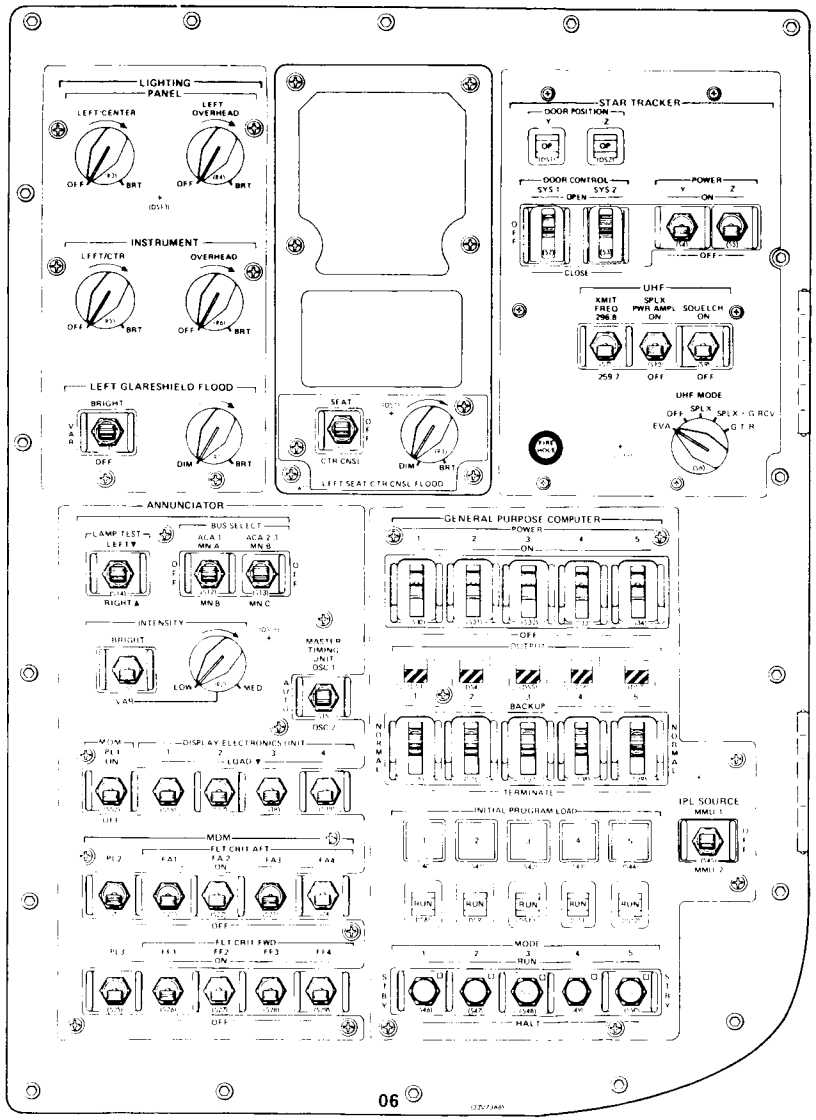


*Panel O6*

the primary avionics GN&C GPCs are positioned to *normal*, which permits them to output (transmit). The backup flight system GPC switch is positioned to *backup*, which precludes it from outputting until it is engaged. The switch for a GPC designated on orbit to be a systems management computer is positioned to *terminate* since the GPC is not to command anything on the flight-critical buses.

The *output* talkback indicator above each *output* switch on panel O6 indicates gray if that GPC output is enabled and barberpole if it is not.

Each GPC receives *run*, *stby*, or *halt* discrete inputs from its *mode* switch on panel O6, which determines whether that GPC can process software. The *mode* switch is lever-locked in the *run* position. The *halt* position for a GPC initiates a hardware-controlled state in which no software can be executed. A GPC that fails to synchronize with others is moded to halt as soon as possible to prevent the failed computer from outputting erroneous commands. The *mode* talkback indicator above the *mode* switch for that GPC indicates barberpole when that computer is in halt.

In standby, a GPC is also in a state in which no software can be executed but is in a software-controlled state. The *stby* discrete allows an orderly startup or shutdown of processing. It is necessary, as a matter of procedure, for a GPC that is shifting from run to halt to be temporarily (more than one second) in the standby mode before going to halt since the standby mode allows for an orderly software cleanup and allows a GPC to be correctly initialized without an initial program load. If a GPC is moded from run to halt without pausing in standby, it may not perform its functions correctly upon being remoded to run. There is no *stby* indication on the *mode* talkback indicator above the *mode* switch; however, it would indicate barberpole in the transition from run to standby and *run* from standby to halt.

The *run* position permits a GPC to support its normal processing of all active software and assigned vehicle operations. Whenever a computer is moded from standby or halt to run, it initializes itself to a state in which only system software is processed

(called OPS 0). If a GPC is in another OPS before being moded out of run and the initial program has not been loaded since, that software still resides in main memory; but it will not begin processing until that OPS is recalled by flight crew keyboard entry. The *mode* talkback indicator always reads *run* when that GPC switch is in *run* and the computer has not failed.

Placing the backup flight system GPC in standby does not stop BFS software processing or preclude BFS engagement; it only prevents the BFS from commanding.

The *IPL* push button indicator for a GPC on panel O6 activates the initial program load command discrete input when depressed. When the input is received, that GPC initiates an IPL from whichever mass memory unit is specified by the *IPL source, MMU 1, MMU 2, off* switch on panel O6. The talkback indicator above the *mode* switch for that GPC indicates *IPL*.

During non-critical flight periods in orbit, only one or two GPCs are used for GN&C tasks and another for systems management and payload operations.

A GPC on orbit can also be "freeze-dried;" that is, it can be loaded with the software for a particular memory configuration and then moded to standby. It can then be moded to halt and powered off. Since the GPCs have non-volatile memory, the software is retained. Before an OPS transition to the loaded memory configuration, the freeze-dried GPC can be moded back to run and the appropriate OPS requested.

A simplex GPC is one in run and not a member of the redundant set, such as the BFS GPC. Systems management and payload major functions are always in a simplex GPC.

A failed GPC can be hardware-initiated, stand-alone-memory-dumped by switching the powered computer to *terminate* and *halt* and then selecting the number of the failed GPC on the GPC *memory dump* rotary switch on panel M042F in the crew compartment middeck. Then the GPC is moded to standby to start the dump, which takes three minutes.

Each CPU is 7.62 inches high, 10.2 inches wide and 19.55 inches long; it weighs 57 pounds. The IOPs are the same size and weight as the CPUs.

The new upgraded general-purpose computers, AP-101S from IBM, will replace the existing GPCs, AP-101B, aboard the space shuttle orbiters in mid-1990.

The upgraded GPCs allow NASA to incorporate more capabilities into the space shuttle orbiters and apply more advanced computer technologies than were available when the orbiter was first designed. The new design began in January 1984, whereas the older GPC design began in January 1972.

The upgraded computers provide 2.5 times the existing mem-

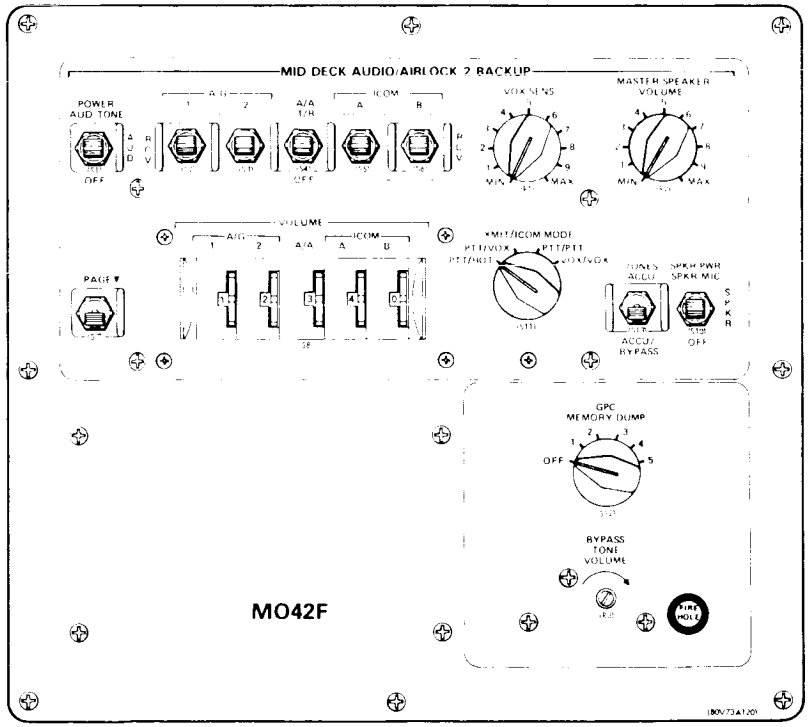


*Panel M042F*

ory capacity and up to three times the existing processor speed with minimum impact on flight software. The upgraded GPCs are half the size and approximately half the weight of the old GPCs, and they require less power to operate.

The upgraded GPCs consist of a central processor unit and an input/output processor in one avionics box instead of the two separate CPU and IOP avionics boxes of the old GPCs. The upgraded GPC can perform more than 1 million benchmark tests per second in comparison to the older GPC's 400,000 operations per second. The upgraded GPCs have a semiconductor memory of 256,000 32-bit words; the older GPCs have a core memory of up to 104,000 32-bit words.

The upgraded GPCs have volatile memory, but each GPC contains a battery pack to preserve the software when the GPC is powered off.

The initial predicted reliability of the upgraded GPCs is 6,000 hours mean time between failures, with a projected growth to 10,000 hours mean time between failures. The mean time between failures for the older GPCs is 5,200 hours—more than five times better than the original reliability estimate of 1,000 hours.

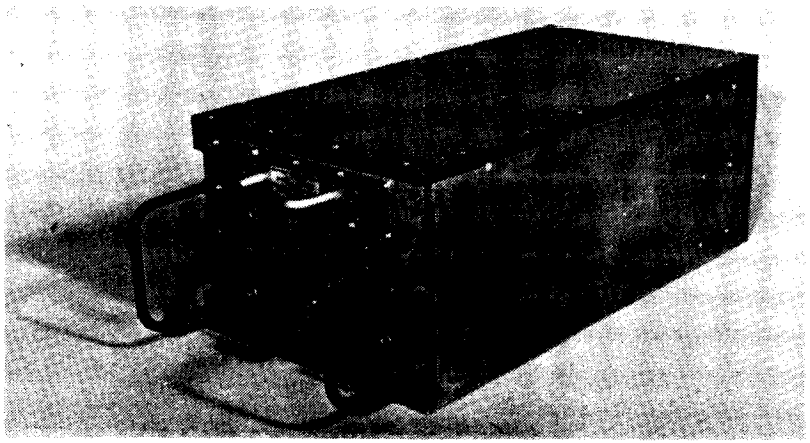

*AP-101S Upgraded Computer*

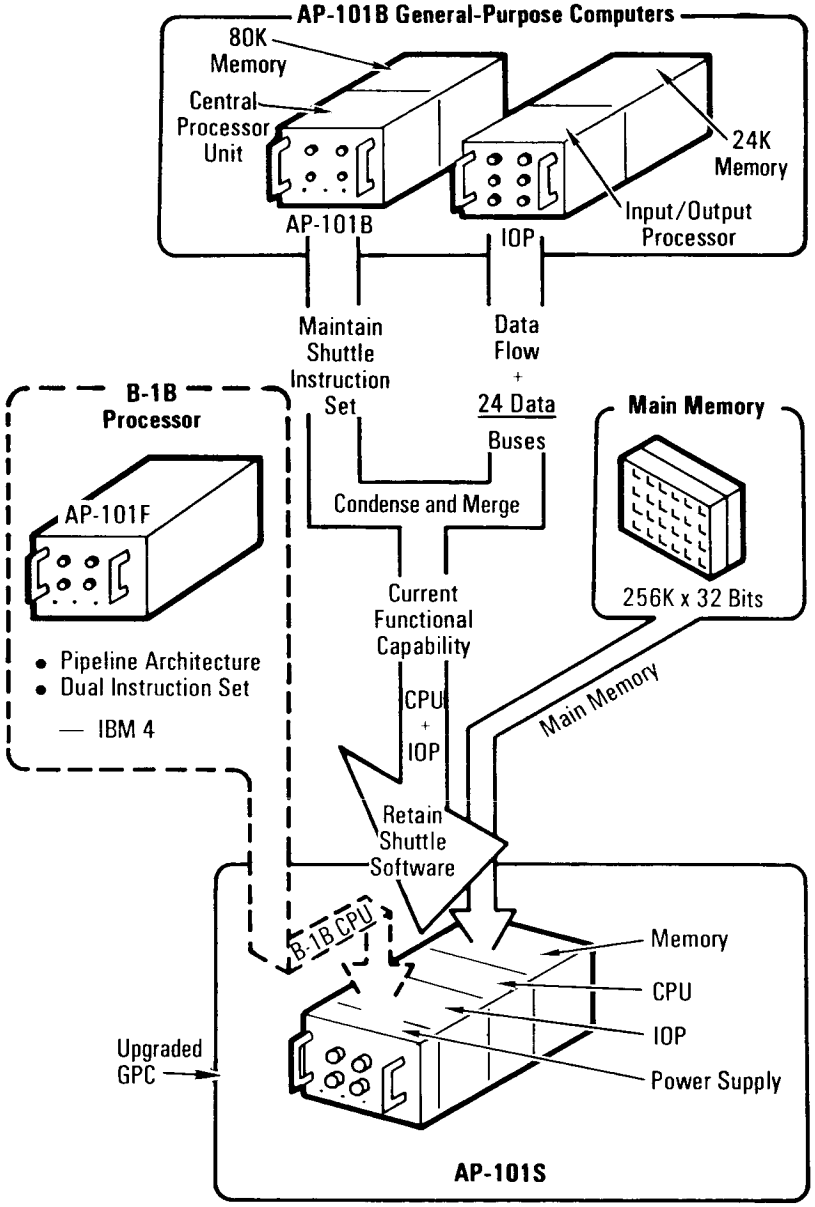


*AP-101B General-Purpose Computers*

The AP-101S avionics box is 19.55 inches long, 7.62 inches high and 10.2 inches wide, the same as one of the two previous GPC avionics boxes. Each of the five upgraded GPCs aboard the orbiter weighs 64 pounds, in comparison to 114 pounds for the two units of the older GPCs. This change reduces the weight of the orbiter's avionics by approximately 300 pounds and frees a volume of approximately 4.35 cubic feet in the orbiter avionics bays. The older GPCs require 650 watts of electrical power versus 550 watts for the upgraded units.

Thorough testing, documentation and integration, including minor modifications to flight software, were performed by IBM and NASA's Shuttle Avionics Integration Laboratory in NASA's Avionics Engineering Laboratory at the Johnson Space Center.

**Mass Memory Units**. There are two mass memory units aboard the orbiter. Each is a coaxially mounted, reel-to-reel digital magnetic tape storage device for GPC software and orbiter systems data that can be written to or read from. The MMU tape is 602 feet long and 0.5 of an inch wide and has nine tracks (eight data tracks and one control track). These tracks are divided into files and subfiles for finding particular locations.

Computing functions for all mission phases requires approximately 400,000 words of computer memory. The orbiter GPCs are loaded with different memory groups from the MMUs containing the desired program. In this way, software can be stored in MMUs and loaded into the GPCs when actually needed.

To fit the required software into the available GPC memory space, programs are subdivided into nine memory groups corresponding to functions executed during specific flight and checkout phases. Thus, in addition to the central memory in the GPCs themselves, 34 million bytes of information can be stored in each of the two mass memory units. Critical programs and data are loaded in both MMUs and protected from erasure.

The principal function of the MMU, besides storing the basic flight software, is to store background formats for certain CRT displays and the checkpoints that are written periodically to save system data in case the systems management GPC fails.

MMU operations are controlled by logic and the read and write electronics that activate the proper tape heads (read or write/erase) and validate the data.

Each MMU interfaces with its mass memory data bus through multiplexer interface adapters, which function like the GPCs. Each mass memory data bus is connected to all five computers; however, each MMU is connected to only one mass memory data bus. All MMU operations are on an on-demand basis only.

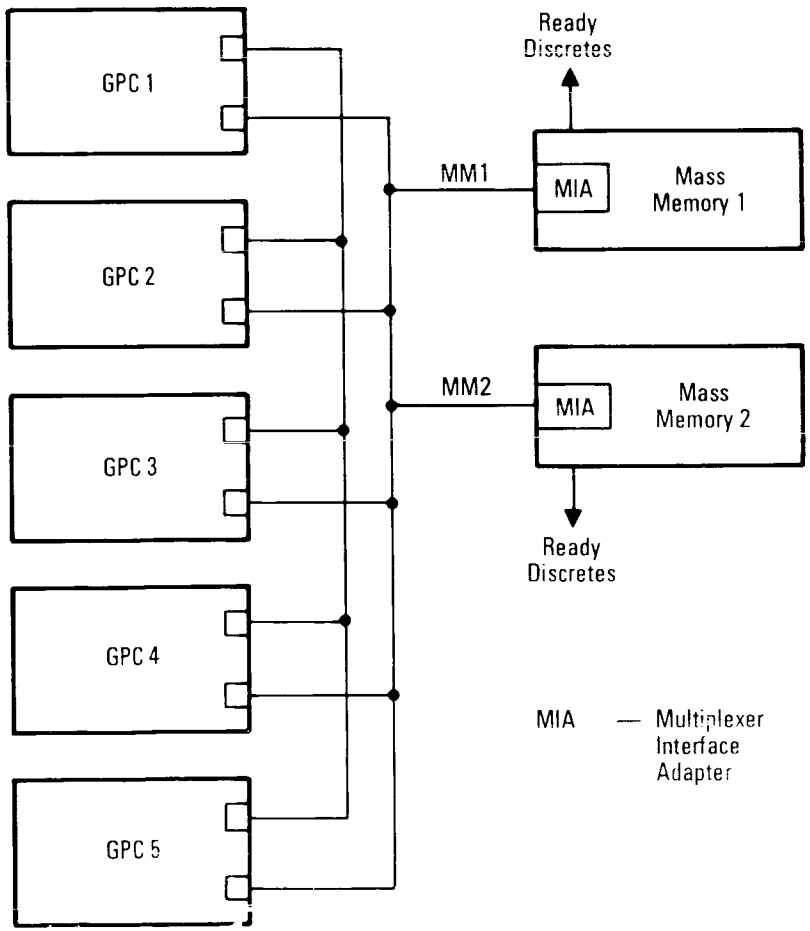


*Mass Memory Data Buses*

The mass memory units are an advanced form of data storage that fills the gap between slow-access drives of high storage capacity and discs or drums with fast access but relatively low storage capacity.

The power switches are located on panel O14 for MMU 1 and panel O15 for MMU 2. The *MMU 1* switch positioned to *on* allows control bus power to activate an RPC, which allows MNA power to MMU 1. The *MMU 2* switch positioned to *on* operates in a similar manner with MNB power. A mass memory unit uses 20 watts of power in standby and 50 watts when the tape is moving.

MMU 1 is located in crew compartment middeck avionics bay 1, and MMU 2 is in avionics bay 2. Each unit is cooled by water coolant loop cold plates. Each MMU is 7.6 inches high, 11.6 inches wide and 15 inches long and weighs 22 pounds.

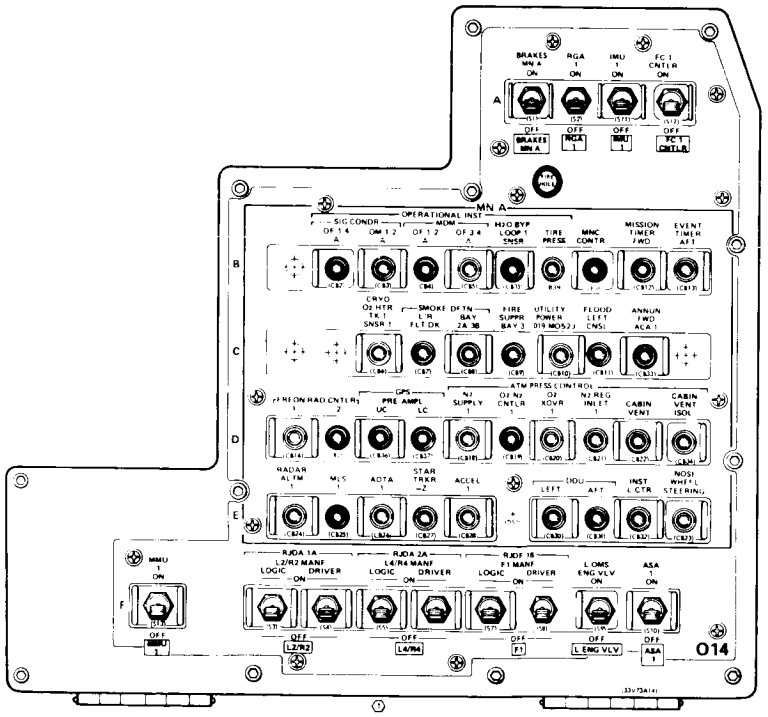


*Panel O14*

**Multifunction CRT Display System.** The MCDS on the orbiter crew compartment flight deck allows onboard monitoring of orbiter systems, computer software processing and manual control for flight crew data and software manipulation.

The system is composed of three types of hardware: display electronics units; display units that include the CRTs; and keyboard units, which together communicate with the GPCs over the display/keyboard data bus network.

The MCDS provides almost immediate response to flight crew inquiries through displays, graphs, trajectory plots and pre-

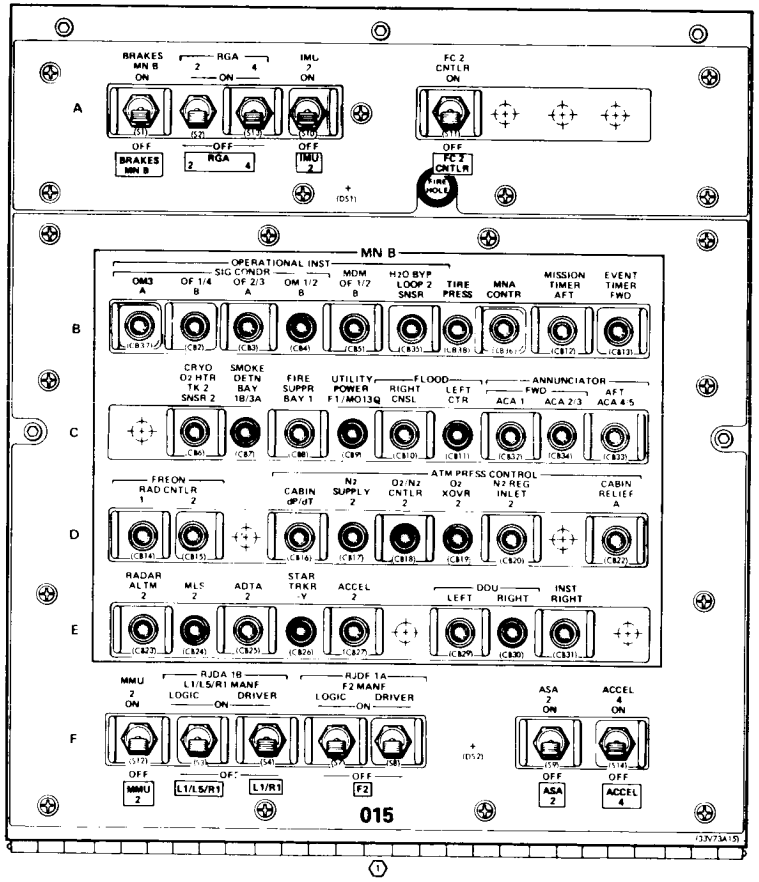


*Panel O15*

dictions about flight progress. The crew controls the vehicle system operation through the use of keyboards in conjunction with the display units. The flight crew can alter the system configuration, change data or instructions in GPC main memory, change memory configurations corresponding to different mission phases, respond to error messages and alarms, request special programs to perform specific tasks, run through operational sequences for each mission phase and request specific displays.

Three keyboards are located on the flight deck: two on the left and right sides of the flight deck center console (panel C2) and one on the flight deck at the side aft flight station (panel R12). Each consists of 32 momentary double-contact push button keys. Each key uses its double contacts to communicate on separate signal paths to two DEUs. Only one set of contacts on the aft station keys is actually wired because this keyboard can communicate with only the aft display electronics unit.

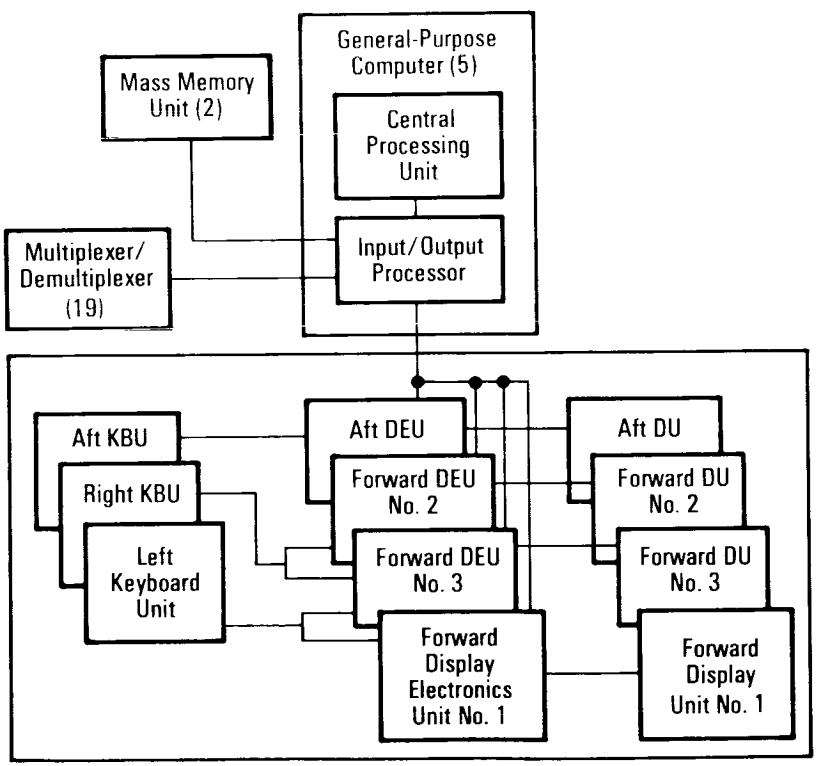


*Data Processing System Hardware*

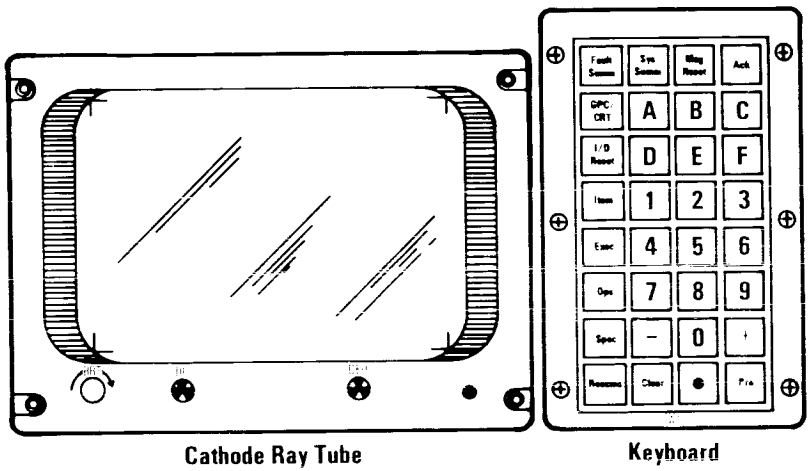


*Multifunction Cathode Ray Tube Display System*

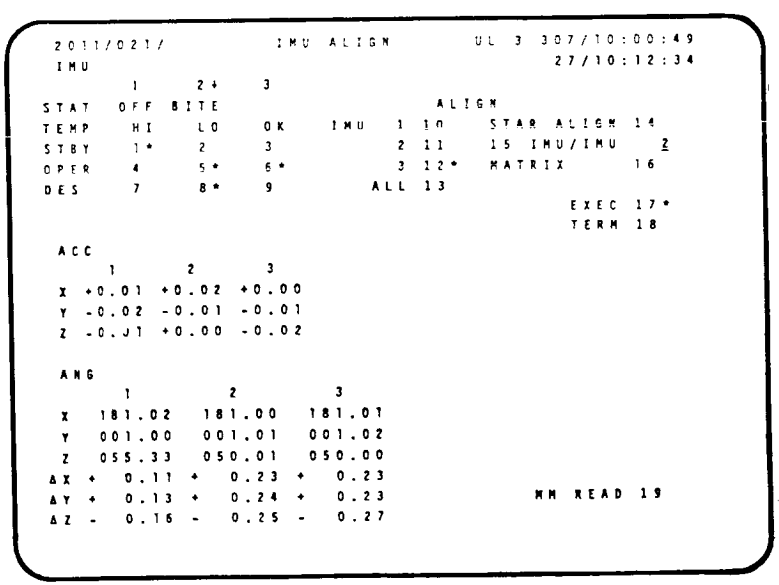


*Cathode Ray Tube Display*

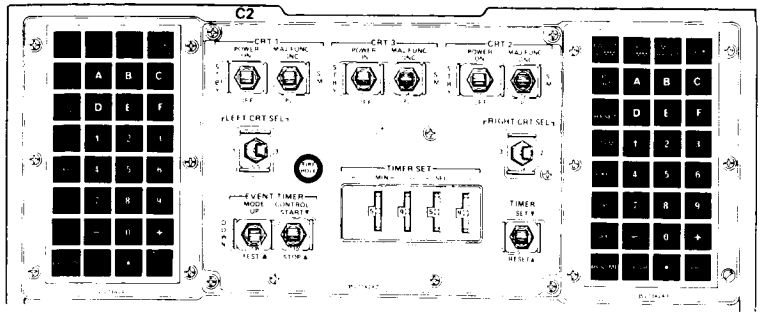


*Panel C2*

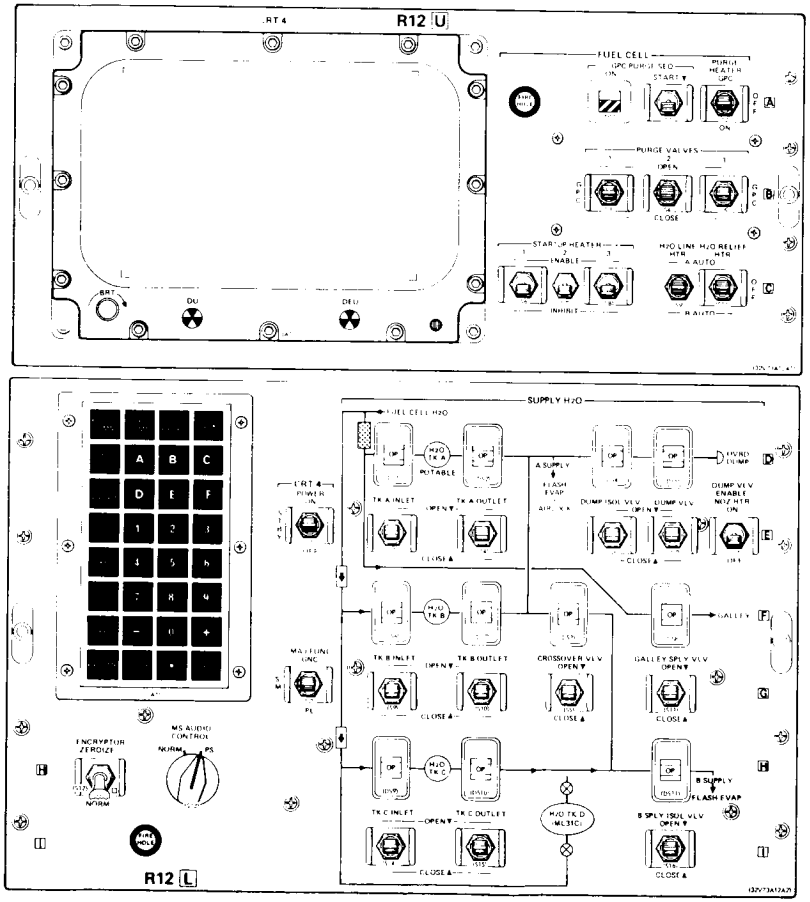


*Panel R12*

There are 10 number keys, six letter keys (used for hexadecimal inputs), two algebraic keys, a decimal key, and 13 special key functions. Using these keys, the flight crew can ask the GPC more than 1,000 questions about the mission and condition of the vehicle.

Each of the four DEUs responds to computer commands, transmits data, executes its own software to process keyboard inputs and sends signals to drive displays on the CRTs (or display units). The four DEUs store display data, generate the GPC/keyboard unit and GPC/display unit interface displays, update and refresh on-screen data, check keyboard entry errors and echo entries to the CRT (or DU).

There are three CRTs (or display units) on flight deck forward display and control panel F7 and one at the side aft flight deck station on panel R12. Each CRT is 5 by 7 inches.

The display unit uses a magnetic-deflected, electrostatic-focused CRT. When supplied with deflection signals and video input, the CRT displays alphanumeric characters, graphic symbols and vectors on a green-on-green phosphorous screen activated by a magnetically controlled beam. Each CRT has a brightness control for ambient light and flight crew adjustment.

The DEUs are connected to the display/keyboard data buses by multiplexer interface adapters that function like those of the GPCs. Inputs to the DEU are from a keyboard or a GPC. The CRT switches on panel C2 designate which keyboard controls the forward DEUs and CRT (or DUs). When the *left CRT sel* switch is positioned to *1*, the left keyboard controls the left CRT 1; if positioned to *3*, it controls the center CRT 3. When the *right CRT sel* switch is positioned to *2*, the right keyboard controls the right CRT 2; if positioned to *3*, it controls the center CRT 3. If the *left CRT sel* and *right CRT sel* switches are both positioned to *3*, keystrokes from both keyboards are interleaved. Thus, flight crew inputs are made on the keyboards and data is output from the GPCs on the CRT displays.

The aft station panel R12 keyboard is connected directly to the aft panel R12 DEU and CRT (or DU); there is no select switch.

Each DEU/DU pair, usually referred to as a CRT, has an associated power switch. The *CRT 1 power, on, stby, off* switch on panel C2 positioned to *stby* or *on* allows control bus power to activate RPCs and sends MNA power to DEU/DU 1. The *stby* position warms up the CRT filament. The *on* position provides high voltage to the CRT. The *CRT 2* switch on panel C2 functions the same as the *CRT 1* switch, except that CRT 2 is powered from MNB. The *CRT 3* switch on panel C2 functions the same as the *CRT 1* switch, except that CRT 3 is powered from MNC. The *CRT 4* switch on panel R12 functions the same as the CRT 1 switch, except that CRT 4 is powered from MNC. The respective keyboards receive 5 volts of ac power to illuminate the keys. Each DEU/DU pair uses about 300 watts of power when on and about 230 watts in standby.

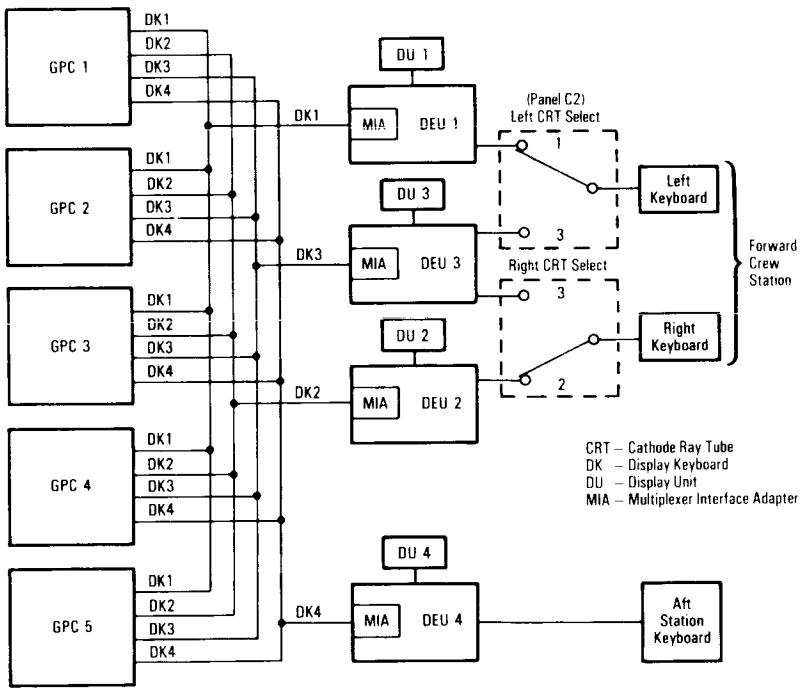


*Display Electronics Unit and Keyboard Data Bus/GPC Interfaces*

The *CRT 1, 3, 2, major func, GNC, SM* and *PL* switches on panel C2 tell the GPCs which of the different functional software groups is being processed by the keyboard units and what information is presented on the CRT. The *CRT 4, major func, GNC, SM* and *PL* switches on panel R12 function in the same manner.

Positioning the *display electronics unit 1, 2, 3, 4* switches on panel O6 to *load* initiates a GPC request for data stored in mass memory through a GPC before operations begin. The information is sent from the mass memory to the GPC and then loaded from the GPC into the DEU memory.

It is possible to do in-flight maintenance and exchange DU 4 with DU 1 or 2. DU 3 cannot be changed out because of the control and display panel configuration. Also, either forward keyboard can be replaced by the aft keyboard. The DEUs are located behind panels in the middeck. DEUs 1 and 3 are on the left, and DEUs 2 and 4 are on the right. DEU 4 can replace any of the others; however, if DEU 2 is to be replaced, only the cables are changed because 2 and 4 are next to each other.



The DEUs and DUs are cooled by the cabin fan system. The keyboard units are cooled by heat dissipation.

**Master Timing Unit**. The GPC complex requires a stable, accurate time source because its software uses Greenwich Mean Time to schedule processing. Each GPC uses the master timing unit to update its internal clock. The MTU provides precise frequency outputs for various timing and synchronization purposes to the GPC complex and many other orbiter subsystems. Its three time accumulators provide GMT and mission elapsed time, which can be updated by external control. The accumulator's timing is in days, hours, minutes, seconds, and milliseconds up to one year.

The master timing unit is a stable, crystal-controlled frequency source that uses two oscillators for redundancy. The signals from one of the two oscillators are passed through signal shapers and frequency drivers to the three GMT/MET accumulators.

The MTU outputs serial digital time data (GMT/MET) on demand to the GPCs through the accumulators. The GPCs use this information for their reference time and indirectly for time-tagging GN&C and systems management processing. The MTU also provides continuous digital timing outputs to drive the four digital timers in the crew compartment—two mission timers and two event timers. In addition, the MTU also provides signals to the pulse code modulation master units, payload signal processor and FM signal processor, as well as various payloads.

The GPCs start by using MTU accumulator 1 as their time source. Every second, each GPC checks the accumulator time against its own internal time. If the time is within tolerance (less than one millisecond), the GPC updates its internal clock to the time of the accumulator, which is more accurate, and continues to use that accumulator. However, if the time is out of tolerance, the GPC will try the other MTU accumulators and then the lowest numbered GPC until it finds a successful comparison.

The GPCs do not use the mission elapsed time that they

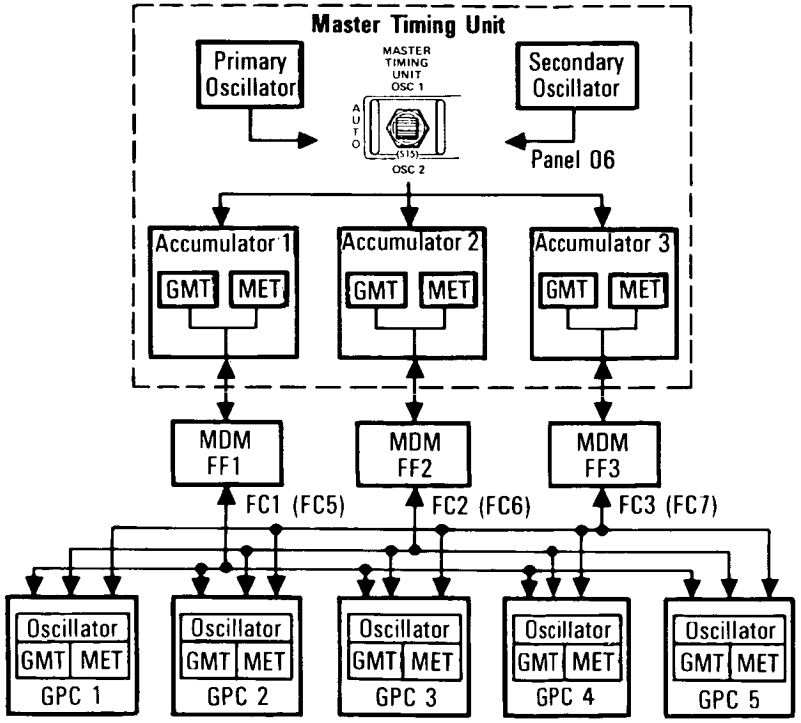


FC – Flight Critical
GMT – Greenwich Mean Time
MET – Mission Event Time
MDM – Multiplexer/Demultiplexer

*GPC/Master Timing Unit Operational Interface*

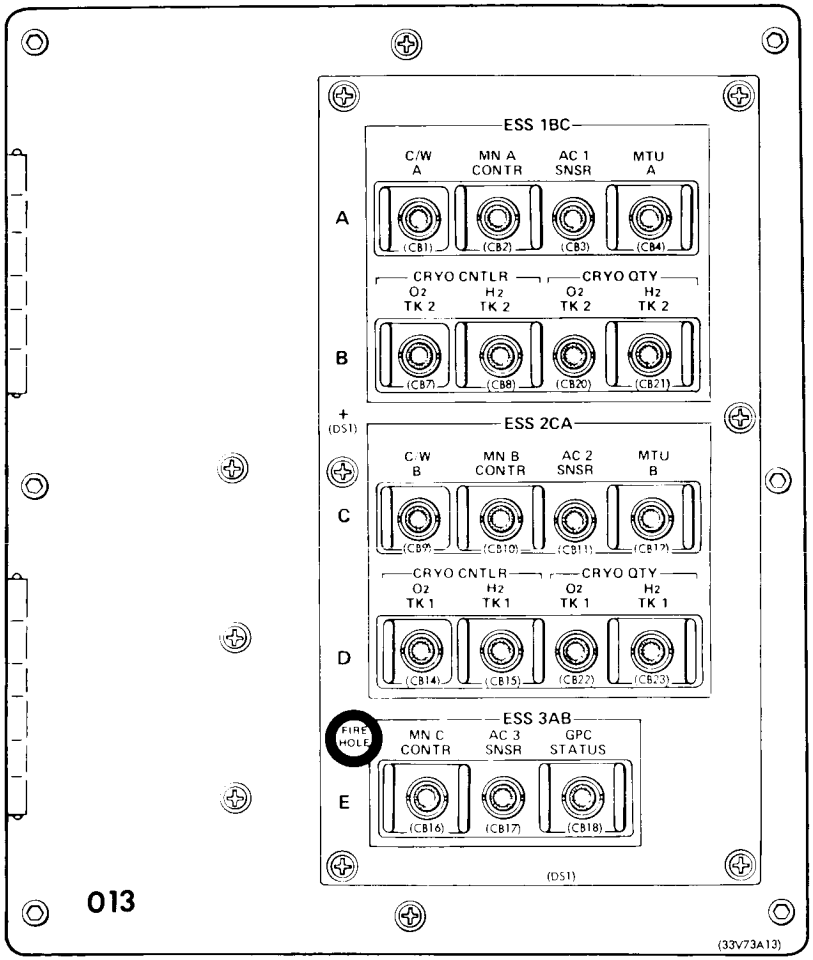


*Panel O13*

receive from the master timing unit because they compute MET on the basis of current GMT and lift-off time.

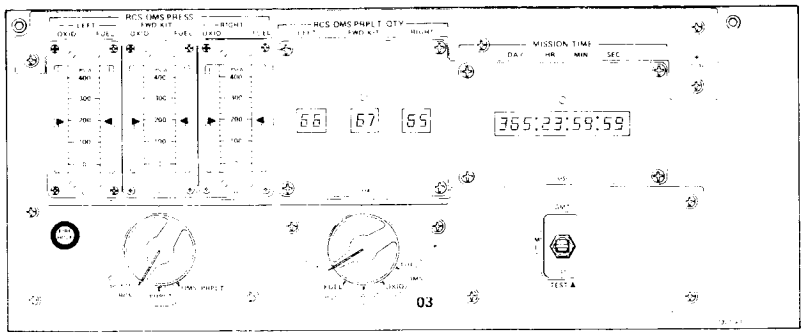


*Panel O3*

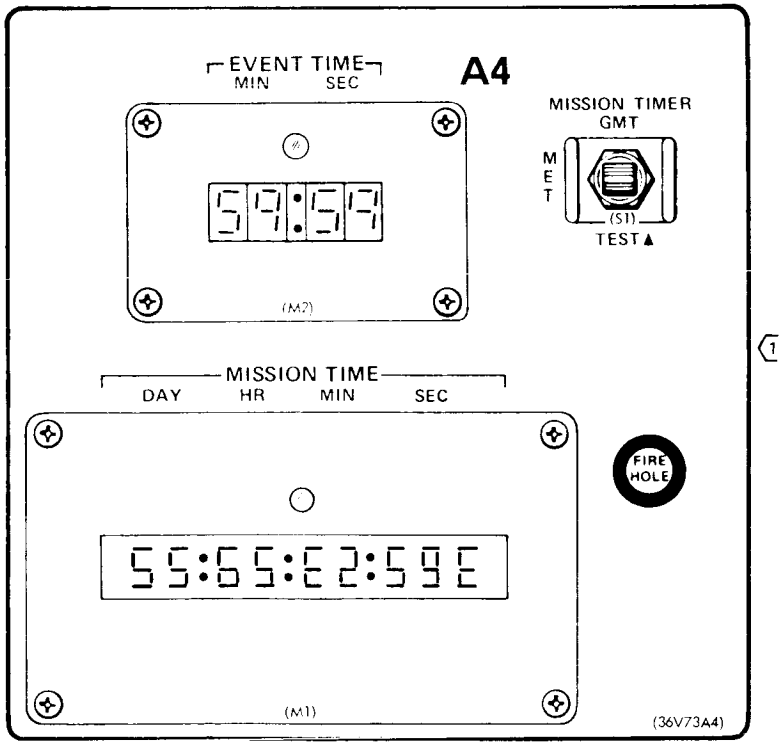


*Panel A4*

The master timing unit is redundantly powered by the *MTU A* and *MTU B* circuit breakers on panel O13. The *master timing unit OSC 1, auto, OSC 2* switch on panel O6 controls the MTU. When the switch is in *auto* and a time signal from the MTU is out of tolerance, the MTU automatically switches to the other oscillator. Normally, the MTU is activated by oscillator 1 with the switch in *auto*. The *OSC 1* or *OSC 2* position manually selects OSC 1 or OSC 2.

The MTU is located in crew compartment middeck avionics bay 3B and is cooled by a water coolant loop cold plate. The only hardware displays associated with the MTU are the mission and event timers. The mission timers are located on panels O3 and A4. They can display either GMT or MET in response to the *GMT* or *MET* switch positions. The forward event timer is on panel F7 and its control switches are on panel C2. The aft event timer is on panel A4 and its control switches are on panel A6.

The master timing unit contractor is Westinghouse Electric Corp., Systems Development Division, Baltimore, Md.



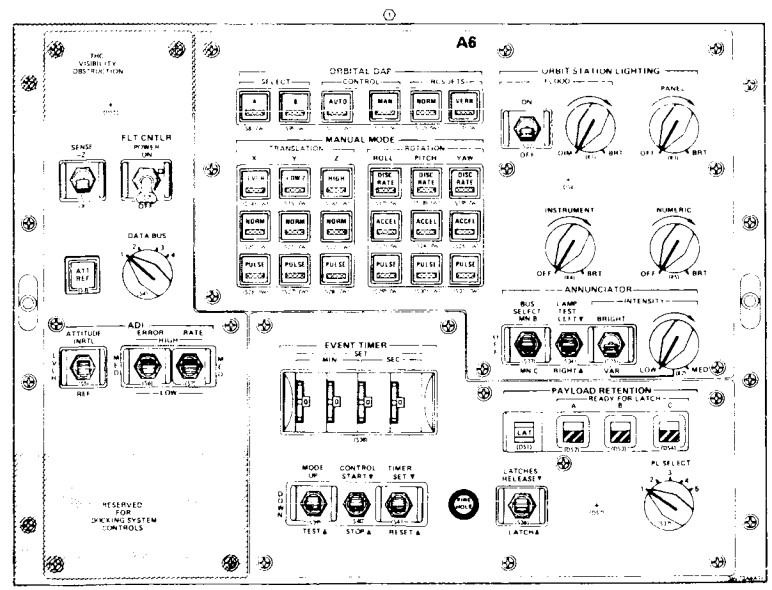


*Panel A6*

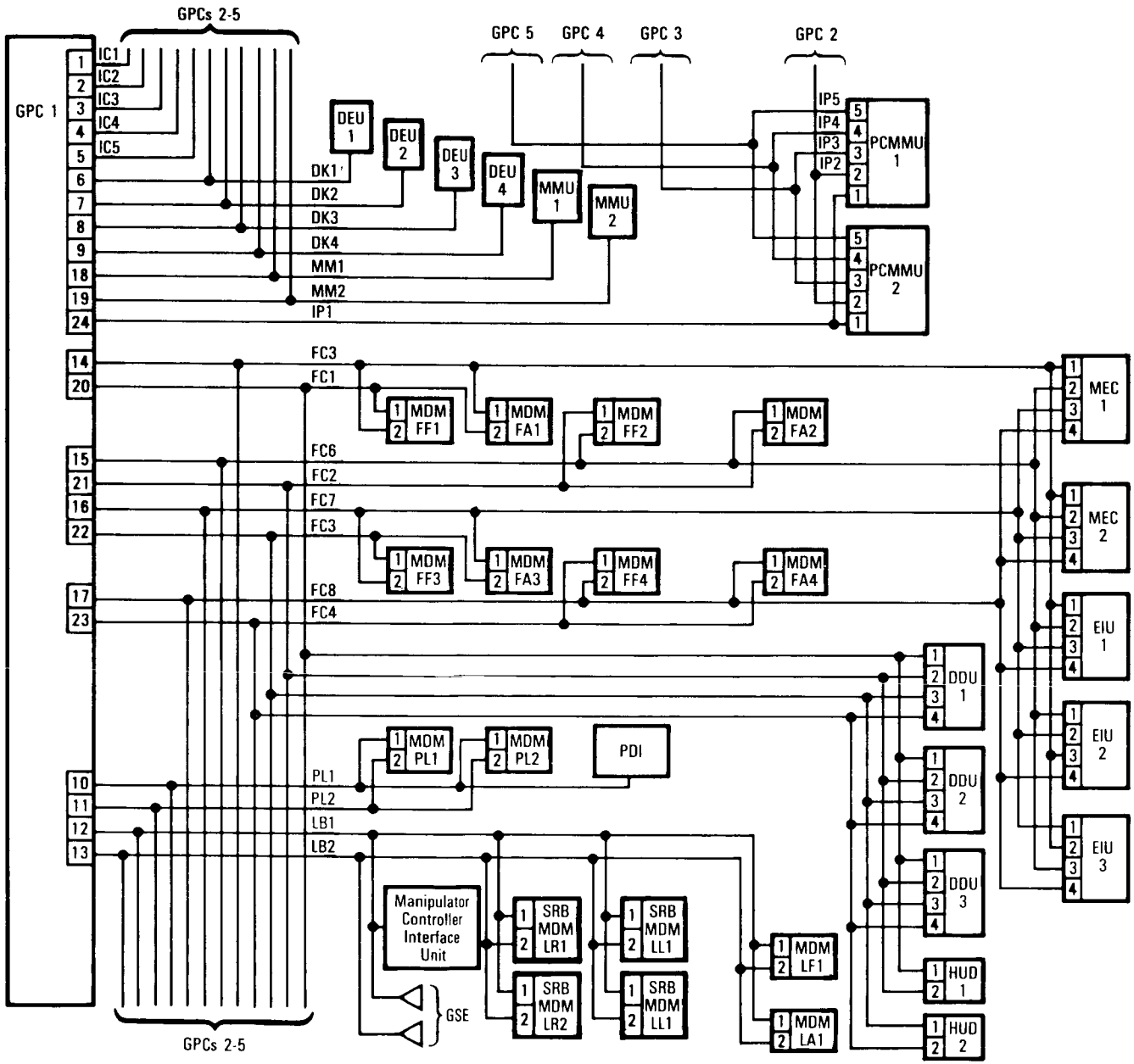


DDU — Display Driver Unit
DEU — Display Electronics Unit
DK — Display Keyboard
EIU — Engine Interface Unit
FC — Flight Critical
GSE — Ground Support Equipment
HUD — Head-up Display
IC — Intercomputer
LA — Launch Aft
LB — Launch/Boost
LF — Launch Forward
LL — Launch Left
LR — Launch Right
MDM — Multiplexer/Demultiplexer
MEC — Master Events Controller
MMU — Mass Memory Unit
PCMMU — Pulse Code Modulation Master Unit
PDI — Payload Data Interleaver
PL — Payload

*Computer Data Bus Network*

**Computer Data Bus Network.** The orbiter computer data bus network consists of a group of twisted, shielded wire pairs (data buses) that support the transfer of serial digital commands from the GPCs to vehicle hardware and vehicle systems data to the GPCs. The computer data bus network is divided into specific groups that perform specific functions.

Flight-critical data buses tie the GPCs to flight-critical MDMs, display driver units, head-up displays, main engine interface units and master events controllers. Intercomputer communication data buses are for GPC-to-GPC transactions. Mass memory data buses conduct GPC/mass memory unit transactions. Display keyboard data buses are for GPC/display electronic unit transactions. Instrumentation/pulse code modulation master unit data buses are for GPC/PCMMU transactions. Launch/boost data buses tie the GPCs to ground support equipment, launch forward and launch aft MDMs, solid rocket booster MDMs and the remote manipulator system manipulator control interface unit. Payload data buses tie the GPCs to payload MDMs and the payload data interleaver.

Although all data buses except the instrumentation/PCMMU buses are connected to all five GPCs, only one GPC at a time controls (transmits commands over) each bus. However, several GPCs may listen (receive data) from the same bus simultaneously. The flight crew can select the GPC that controls a given bus.

Each data bus, with the exception of the intercomputer communication data buses, is bidirectional; that is, traffic can flow in either direction. The intercomputer communication data bus traffic flows in only one direction.

There are five intercomputer communication data buses. The following information is exchanged over the IC buses for proper data processing system operation: input/output errors, fault messages, GPC status matrix data, display electronics unit major function switch settings, GPC/CRT keyboard entries, resident GPC memory configuration, memory configuration table, operational sequences, master timing unit, internal GPC time, system-level display information, uplink data and state vector.

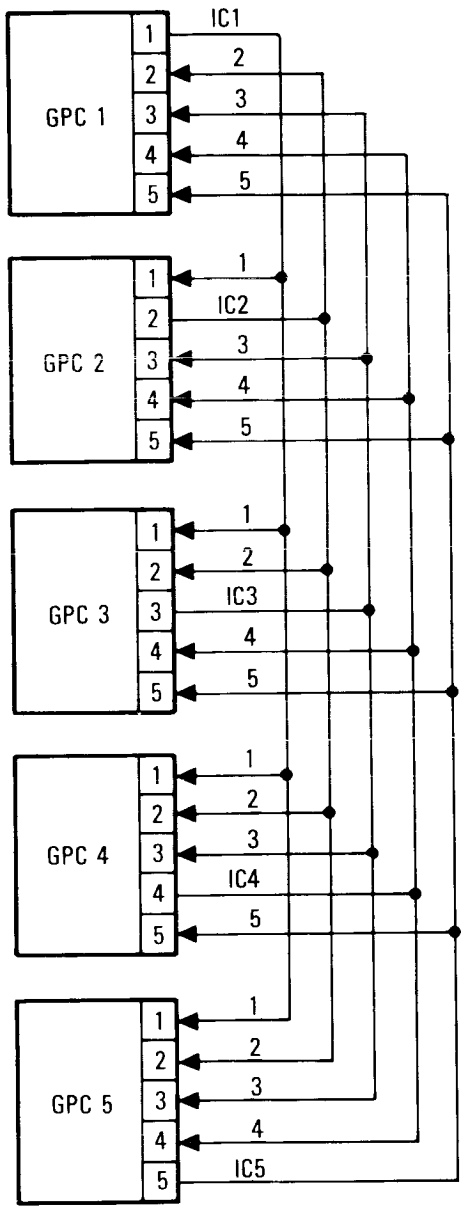


*Intercomputer Communication Data Buses*

All GPCs processing primary avionics software exchange status information over the IC data buses. During critical mission phases (launch, ascent and entry), usually GPCs 1, 2, 3 and 4 are assigned to perform GN&C tasks, operating as a cooperative redundant set, with GPC 5 as the backup flight system. One of the PASS GPCs acts as a commander of a given data bus in the flight control scheme and initiates all data bus transactions.

Cross-strapping the four intercomputer communication buses to the four PASS GPCs allows each GPC access to the status of data received or transmitted by the other GPCs so that identical results among the four PASS GPCs can be verified. The four PASS GPCs are loaded with the same software programs. Each IC bus is assigned to one of the four PASS GPCs in the command mode, and the remaining GPCs operate in the listening mode for the bus. Each GPC can receive data with the other three GPCs, pass data to the others, request data from the others and perform any other tasks required to operate the redundant set. In addition, GPC 5 requires certain information to perform its function as the backup flight system because it must listen to the transactions on the IC data bus.

Flight-critical buses tie the GPCs to flight-critical MDMs, display driver units, head-up displays, main engine interface units and master events controllers. These buses are directed into groups of four compatible with the grouping of four PASS GPCs. Four of these buses—FC1, 2, 3 and 4—connect the GPCs with the four flight-critical forward MDMs, the four aft flight-critical MDMs, the three DDUs and the two HUDs. The other four flight-critical buses—FC5, 6, 7 and 8—connect the GPCs to four forward MDMs, the four aft MDMs, the two mission events controllers and the three main engine interface units. The specific manner in which these units interface is referred to as a string. A string is composed of two flight-critical data buses—one from the first group (FC1, 2, 3 or 4) and one from the second group (FC5, 6, 7 or 8).

The GPC in the command mode issues data requests and commands to the applicable vehicle systems over its assigned flight-critical (dedicated) bus. The remaining three buses in each group are assigned to the remaining GPCs in the listening mode. A GPC operating in the listening mode can only receive data. Thus,

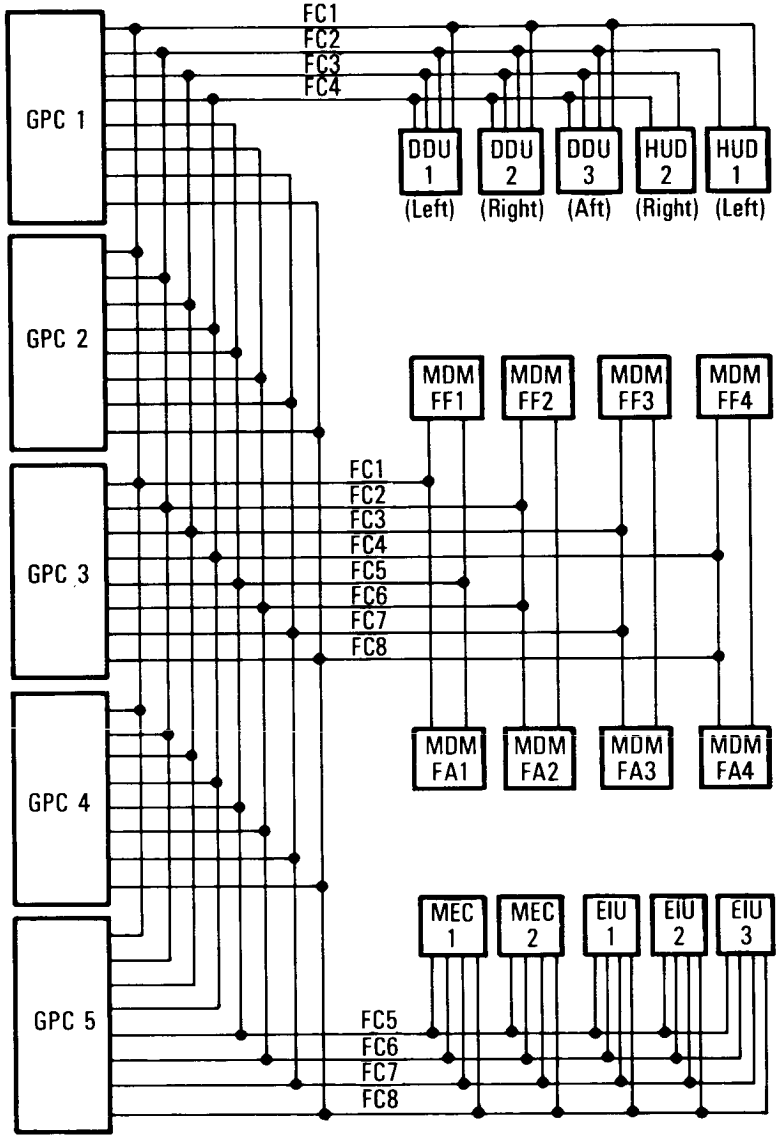


*Flight-Critical Data Buses*

if GPC 1 operates in the command mode on FC1 and FC5, it listens on the three remaining buses. For example, GPC 1 is assigned as the commander of string 1, which includes flight-critical data bus 1 and flight-critical forward MDM 1. GPC 1's transmitter is enabled on FC1, and the three remaining non-commander PASS GPCs need to receive the same redundant information at the same time and verified as consistent identical information; thus, their receivers must also be enabled on FC1 to listen in on the data bus.

In this example, when all GPCs require a time update from the master timing unit, GPC 1 is the only GPC that actually issues the command to the MTU because it is in command of the intercomputer communication data bus connected to the MDM that interfaces with accumulator 1 of the MTU. All five GPCs receive this time update because they all are listening to the response data transmitted over their own dedicated IC bus.

Each flight-critical bus in a group of four is commanded by a different GPC. Multiple units of each GN&C hardware item are wired to a different MDM and flight-critical bus.

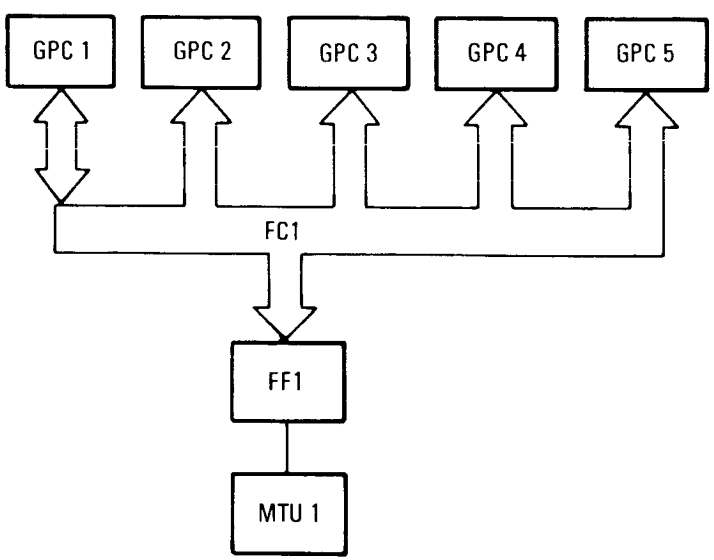


*GPC Communicating Through the Forward MDM 1 With Master Timing Unit*

In this example, string 1 consists of FC data buses 1 and 5; MDMs flight forward 1 and flight aft 1 and their hard-wired hardware, controls and displays; the three EIUs; the two MECs; the three DDUs; HUD 1; and their associated displays. Thus, four strings are defined in this manner.

During launch, ascent and entry, when there are four PASS GN&C GPCs, each of the four strings is assigned to a different GPC to maximize redundancy. All flight-critical units are redundant, and the redundant units are on different strings. The string concept provides failure protection during dynamic phases by allowing exclusive command of a specific group of vehicle hardware by one GPC, which can be transferred to another GPC in case of failure. Additional redundancy is provided because each FF and FA MDM is connected to the GPCs by two flight-critical data buses; thus, all or part of one string can be lost and all functions will still be retained through the other string.

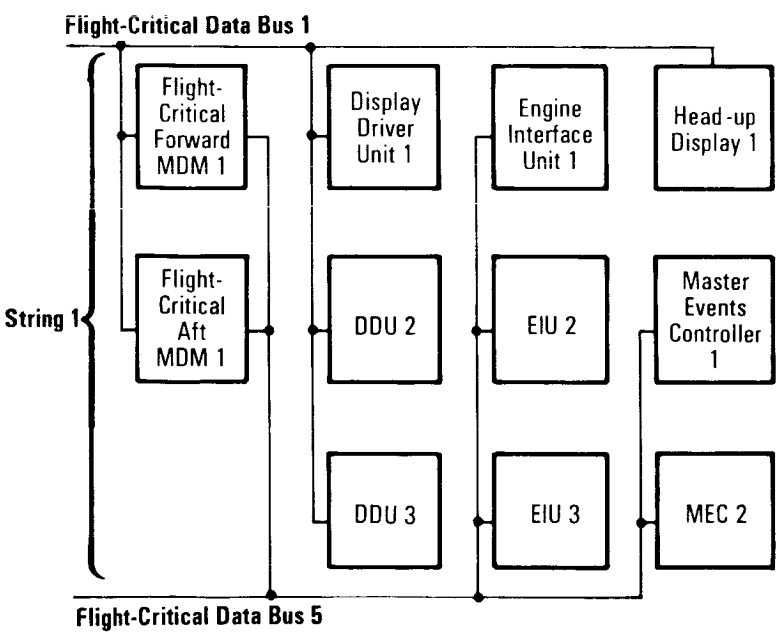


*Data Processing System Components of String 1*

The four display electronics unit keyboard data buses, one for each DEU, are connected to each of the five GPCs. The computer in command of a particular keyboard data bus is a function of the current *major func* switch setting of the associated CRT, current memory configuration, GPC/CRT keyboard entries and the position of the backup flight control CRT switches.

Two payload data buses interface the five GPCs with the two payload MDMs (also called payload forward MDMs), which interface with orbiter systems and payloads. A payload data interleaver is connected to payload data bus 1. Each payload MDM is connected to two payload data buses. Up to five safety-critical payload status parameters may be hard-wired; then these parameters and others can be recorded as part of the vehicle's systems management, which is transmitted and received over two payload buses. To accommodate the various forms of payload data, the payload data interleaver integrates payload data for transmission to ground telemetry.

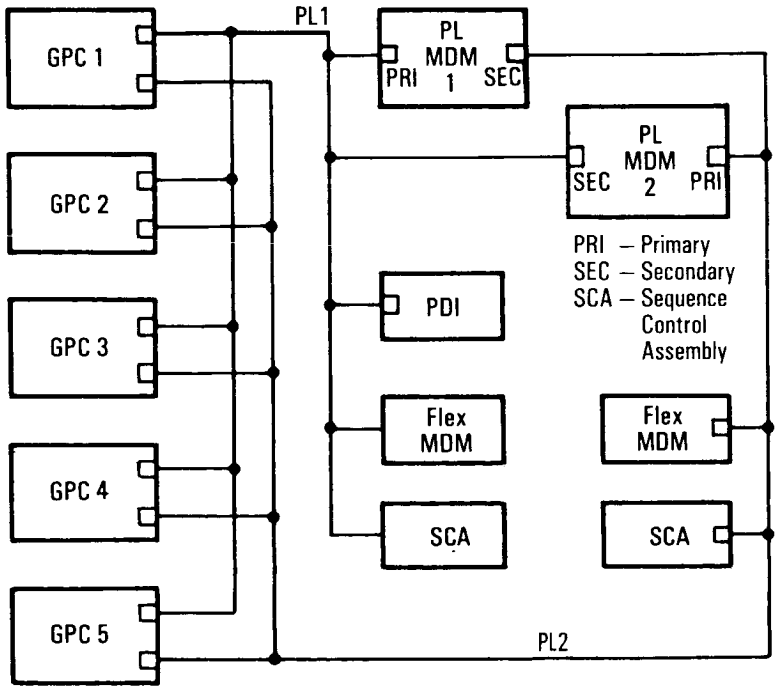


*Payload Data Buses*

The five instrumentation/pulse code modulation master unit data buses are unique in that each GPC commands its own individual data bus to two PCMMUs. All the other data buses go to every GPC.

Flight controllers in the Mission Control Center monitor the status of the vehicle's onboard systems through data transmissions

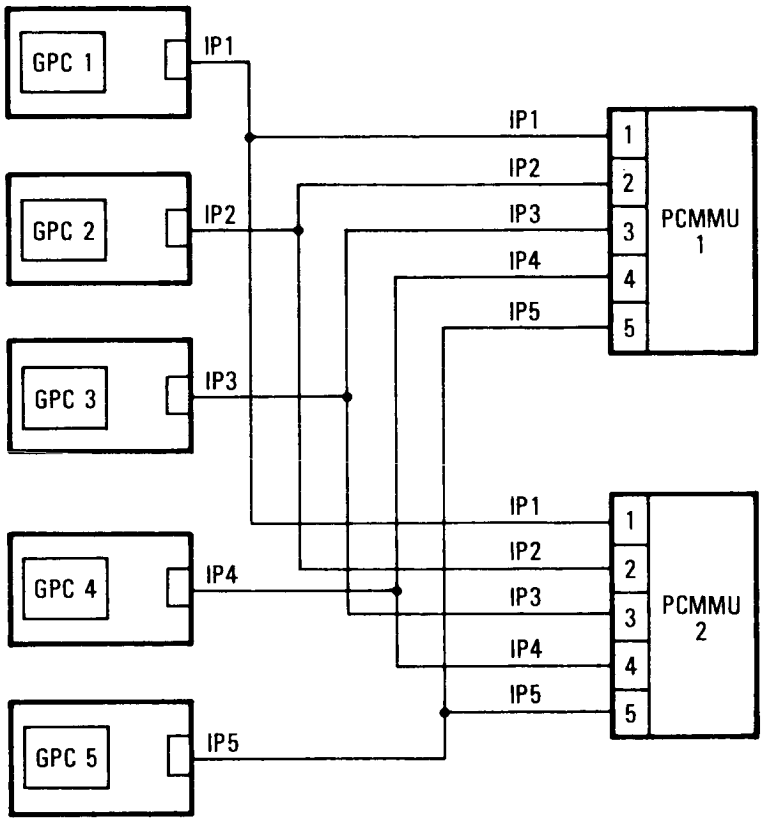


*Instrumentation/Pulse Code Modulation Master Unit Computer Data Bus Interface*

LIBRARY
National Aeronautics and Space Administration
Washington, D.C. 20546

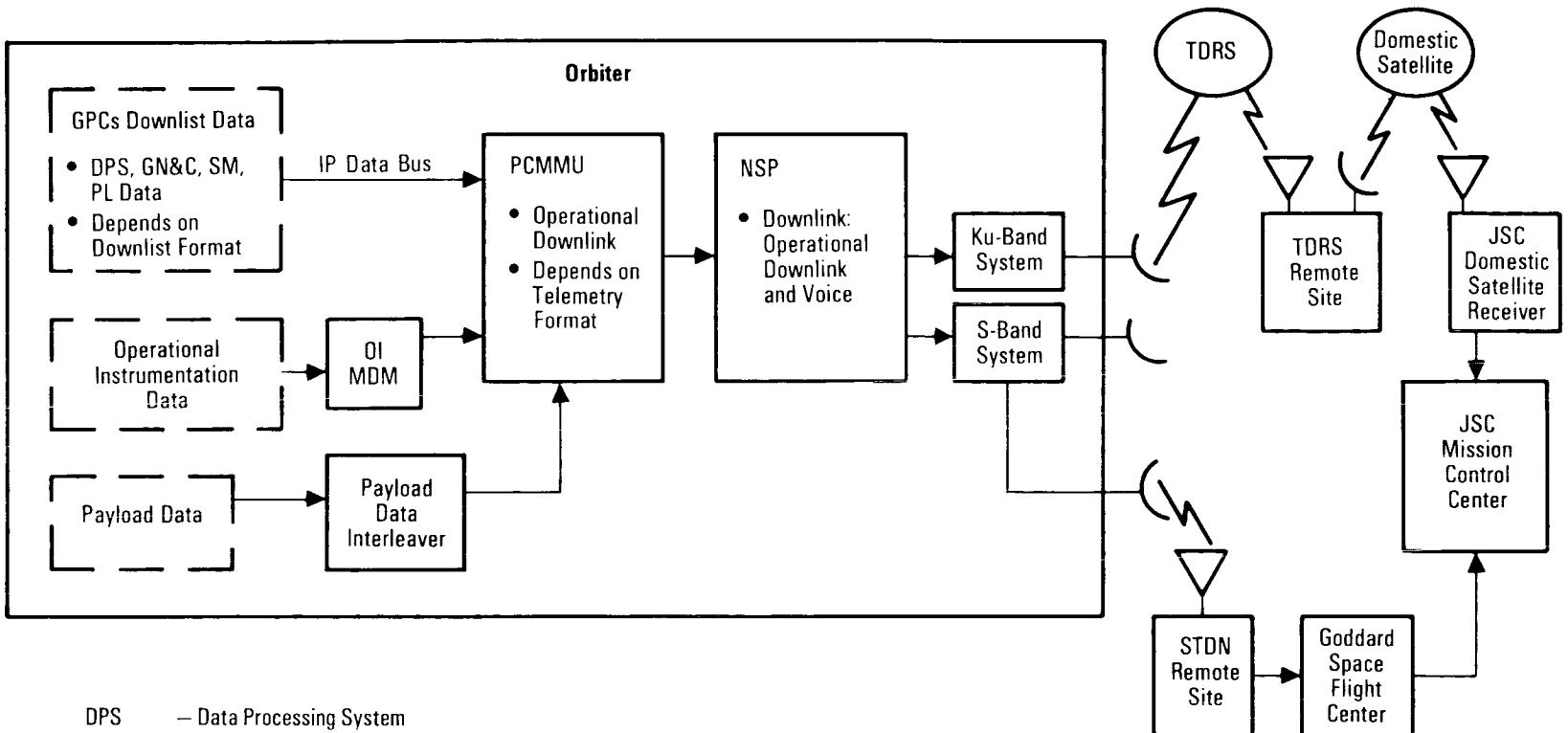


DPS — Data Processing System
GN&C — Guidance, Navigation and Control
IP — Instrumentation/Pulse Code Modulation Master Unit Data Bus
NSP — Network Signal Processor
OI — Operational Instrumentation
PCMMU — Pulse Code Modulation Master Unit
SM — Systems Management
STDN — Space Flight Tracking and Data Network
TDRS — Tracking and Data Relay Satellite

*Functional Real-Time Downlink Data Flow*

from the vehicle to the ground. These transmissions, called downlink, include GPC-collected data, payload data, instrumentation data and onboard voice. The GPC-collected data, called downlist, includes a set of parameters chosen before flight for each mission phase.

The system software in each GPC assimilates the specified GN&C, systems management, payload or DPS data according to the premission-defined format for inclusion in the downlist. Each GPC is physically capable of transmitting its downlist to the current active PCMMU over its dedicated instrumentation/PCMMU data bus. Only one PCMMU is powered at a time. It interleaves the downlist data from the different GPCs with the instrumentation and payload data according to the telemetry format load programmed in the PCMMU. The resulting composite data set, called the operational downlink, is transmitted to the network signal processor. Only one NSP is powered at a time. In the NSP, the operational downlink is combined with onboard recorded voice for transmission to the ground. The S-band system transmits the data to the space flight tracking and data network remote site ground stations, which send it to the MCC. Or the downlink is routed through the orbiter's Ku-band system to the Tracking and Data Relay Satellite system.

Uplink is the method by which ground commands originating in the MCC are formatted, generated and transmitted to the orbiter for validation, processing and eventual execution by onboard software. This capability allows the ground to control software processing, change modes in orbiter hardware and store or change software in GPC memory and mass memory.

From MCC consoles, operators issue commands and request uplink. The command requests are formatted into a command load for transmission to the orbiter either by the STDN sites and

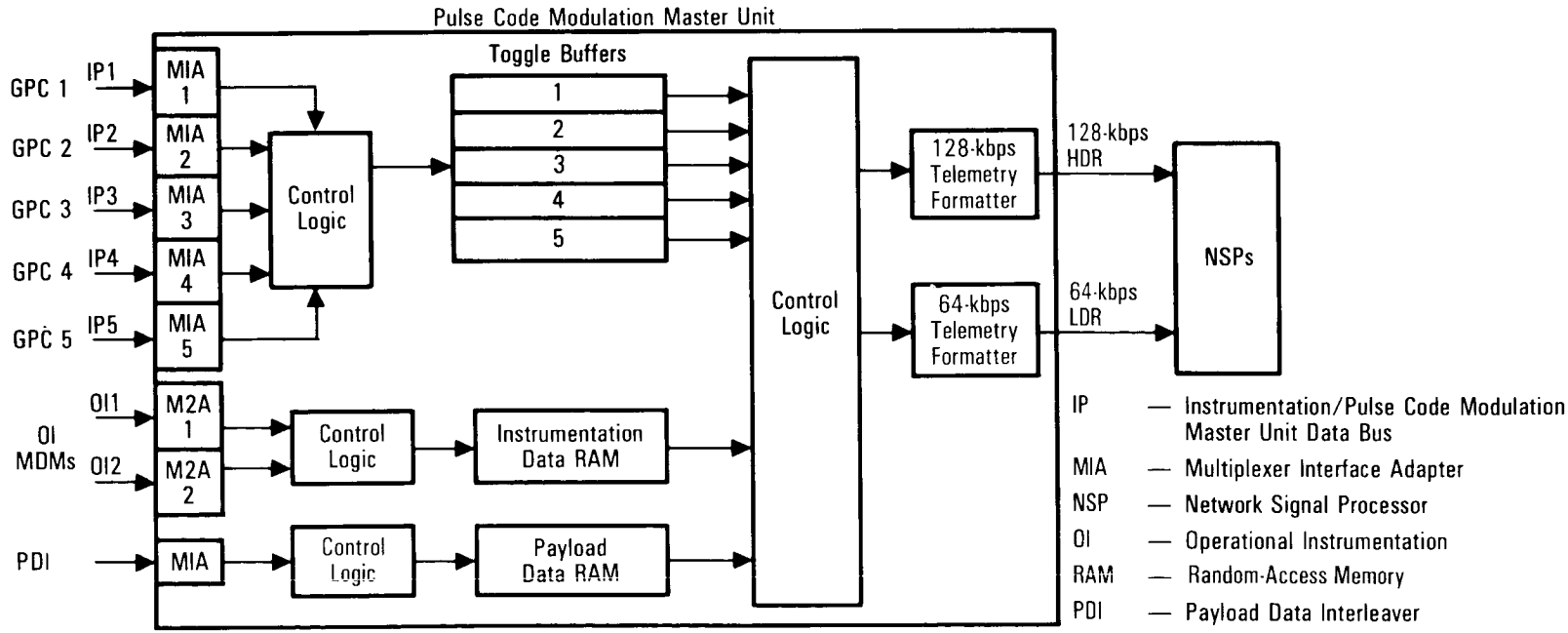


*Functional Downlink Data to Pulse Code Modulation Master Unit*

S-band or by the Ku-band system. The S-band or Ku-band transponder receivers aboard the orbiter send the commands to the active network signal processor. The NSP validates the commands until they are requested by the GPCs through an FF MDM. The GPCs also validate the commands before executing them. Those GPCs not listening directly to the flight-critical data buses receive uplink commands over the intercomputer communication data buses.

The PCMMU also contains a programmable read-only memory for accessing subsystem data, a random-access memory in which to store data and a memory in which GPC data is stored for incorporation into the downlink.

To prevent the uplink of spurious commands from somewhere other than the MCC, the flight crew can control when the GPCs accept uplink commands and when uplink is blocked. The GPC *block* position of the *uplink NSP* switch on panel C3 inhibits uplink commands during ascent and entry when the orbiter is not over a ground station or in TDRS coverage. The flight crew selects this switch position when the capsule communicator at the MCC requests loss-of-signal configuration. The flight crew selects the *enable* position of the switch during ascent or entry when the capsule communicator requests acquisition-of-signal configuration.

Two launch data buses, also referred to as launch/boost data buses, are used primarily for ground checkout and launch phase activities. They connect the five GPCs with ground support equipment/launch processing system, the launch forward (LF1) and launch aft (LA1) MDMs aboard the orbiter, and the two left and right SRB MDMs (LL1, LL2, LR1 and LR2). The GSE/LPS interface is disconnected at lift-off by the T-0 umbilical. The solid rocket booster interfaces are disconnected at SRB separation. Launch data bus 1 is used on orbit for interface with the remote manipulator controller by the systems management GPC.

**Multiplexers/Demultiplexers**. There are 23 multiplexers/demultiplexers aboard the orbiter; 16 are part of the DPS, connected directly to the GPCs and named according to their location in the vehicle and hardware interface. The remaining seven MDMs are part of the vehicle instrumentation system and send vehicle instrumentation data to the pulse code modulation master unit.

The data processing system MDMs consist of flight-critical forward MDMs 1 through 4, flight-critical aft MDMs 1 through 4, payload MDMs 1 and 2, SRB launch left MDMs 1 and 2 and launch right MDMs 1 and 2, and GSE/LPS launch forward 1 and launch aft 1.

Of the seven operational instrumentation MDMs, four are located forward (OF1, OF2, OF3 and OF4) and three are located aft (OA1, OA2 and OA3).

The system software in each redundant set of GPCs activates a GN&C executive program and issues commands to the bus and MDM to provide a set of input data. Each MDM receives the command from the GPC assigned to it, acquires the requested data from the GN&C hardware wired to it and sends the data to the GPCs.



The DPS MDMs convert and format serial digital GPC commands into separate parallel discrete, digital and analog commands for various vehicle system hardware. This operation is called demultiplexing. The MDMs also multiplex, or convert, and format the discrete, digital and analog data from vehicle systems into serial digital data for transmission to the GPCs. Each MDM has two redundant multiplexer interface adapters that function the same as the GPC MIAs and are connected to two data buses. The MDM's other functional interface is its connection to the appropriate vehicle system hardware by hard-wired lines.

When the sets of GN&C hardware data arrive at the GPCs through the MDMs and data buses, the information is generally not in the proper format, units or form for use by flight control, guidance or navigation. A subsystem operating program for each type of hardware processes the data to make it usable by GN&C software. These programs contain the software necessary for hardware operation, activation, self-testing and moding. The level of redundancy varies from two to four, depending on the particular unit. The software that processes data from redundant GN&C

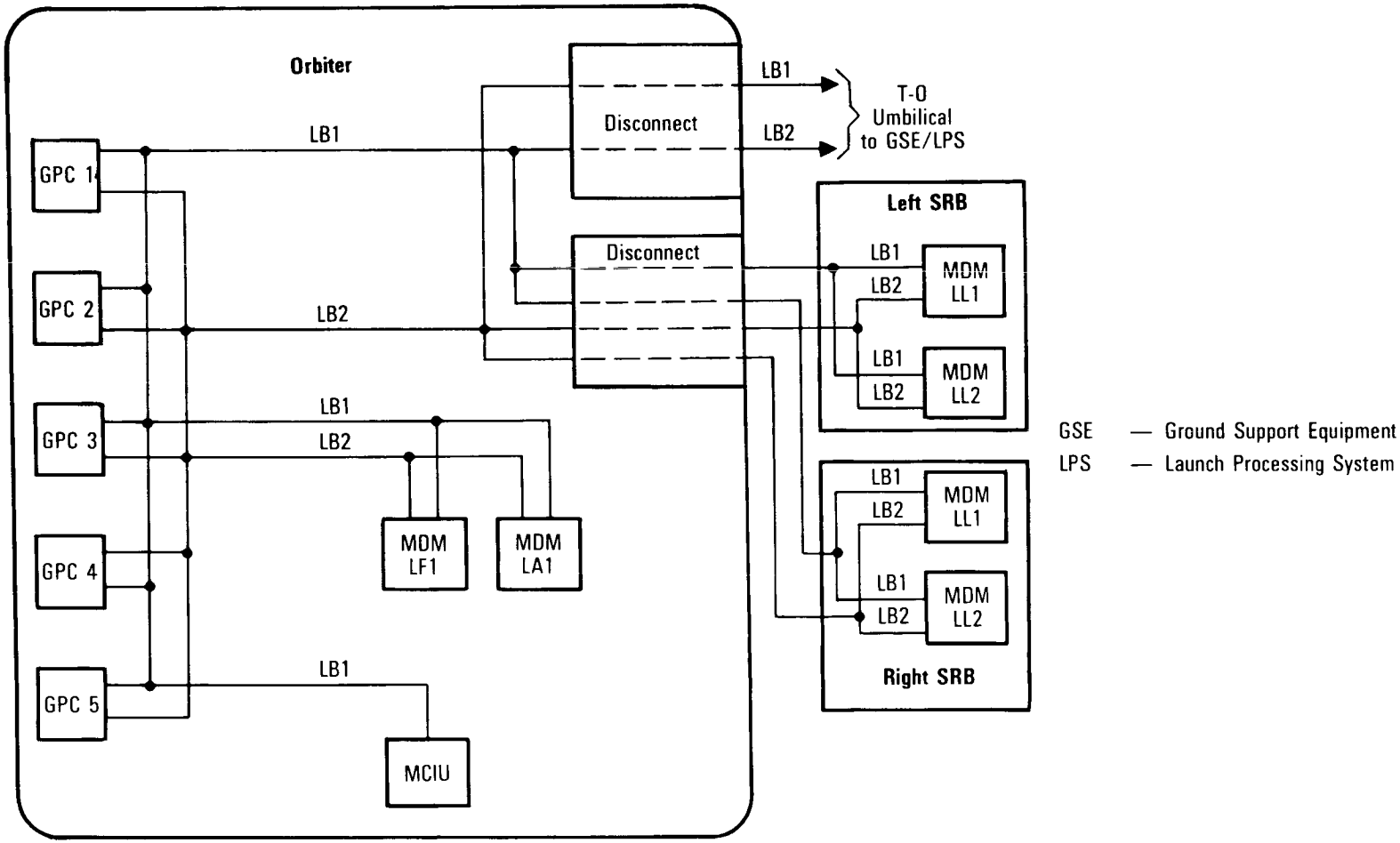


*Launch/Boost Data Buses*

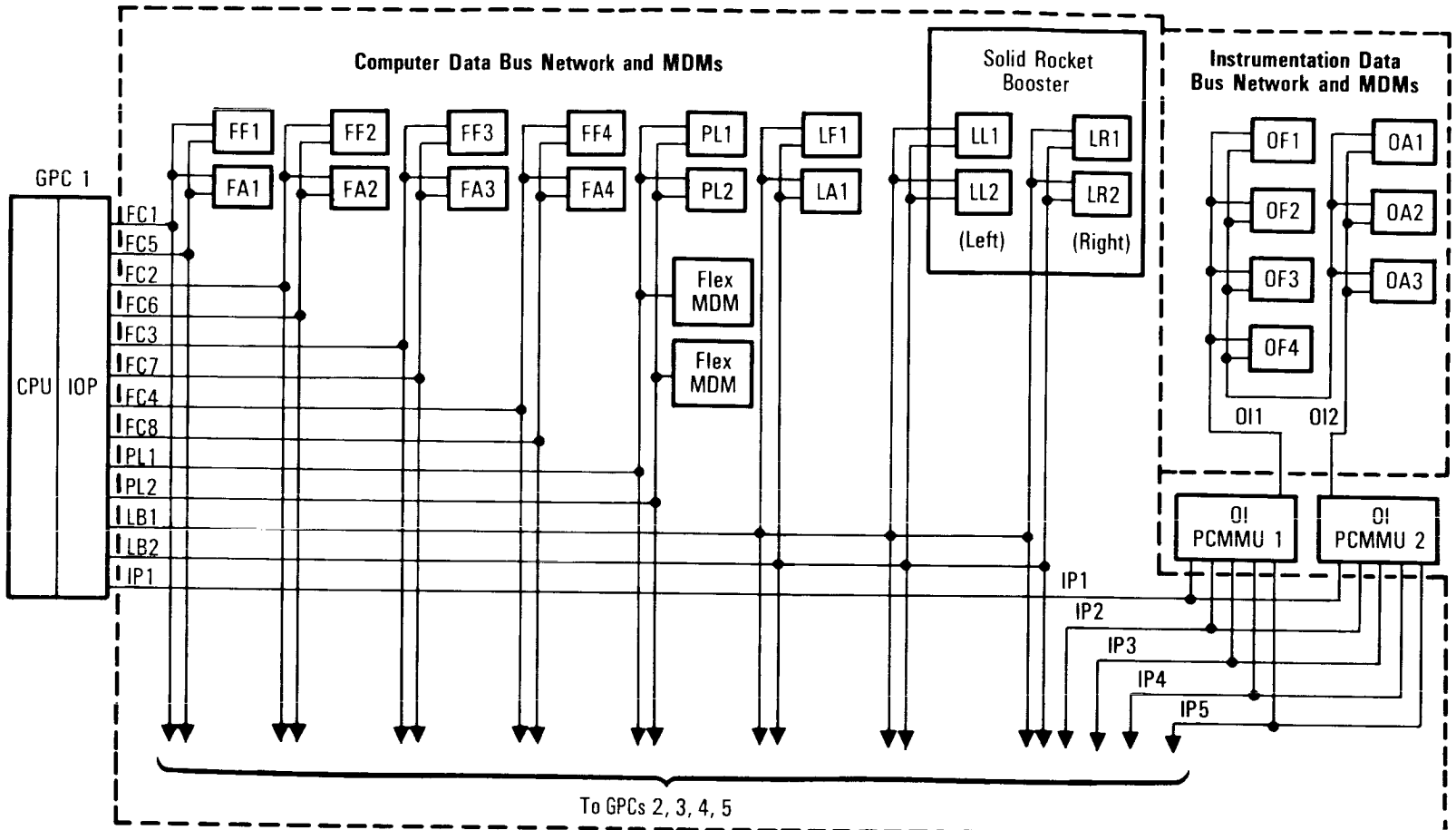


FC — Flight Critical
FA — Flight Aft
FF — Flight Forward
PL — Payload
IP — Instrumentation/Pulse Code Modulation Master Unit
LA — Launch Aft
LF — Launch Forward
LB — Launch/Boost
LR — Launch Right
LL — Launch Left
OF — Operational Forward
OA — Operational Aft
OI — Operational Instrumentation

*Multiplexers/Demultiplexers*

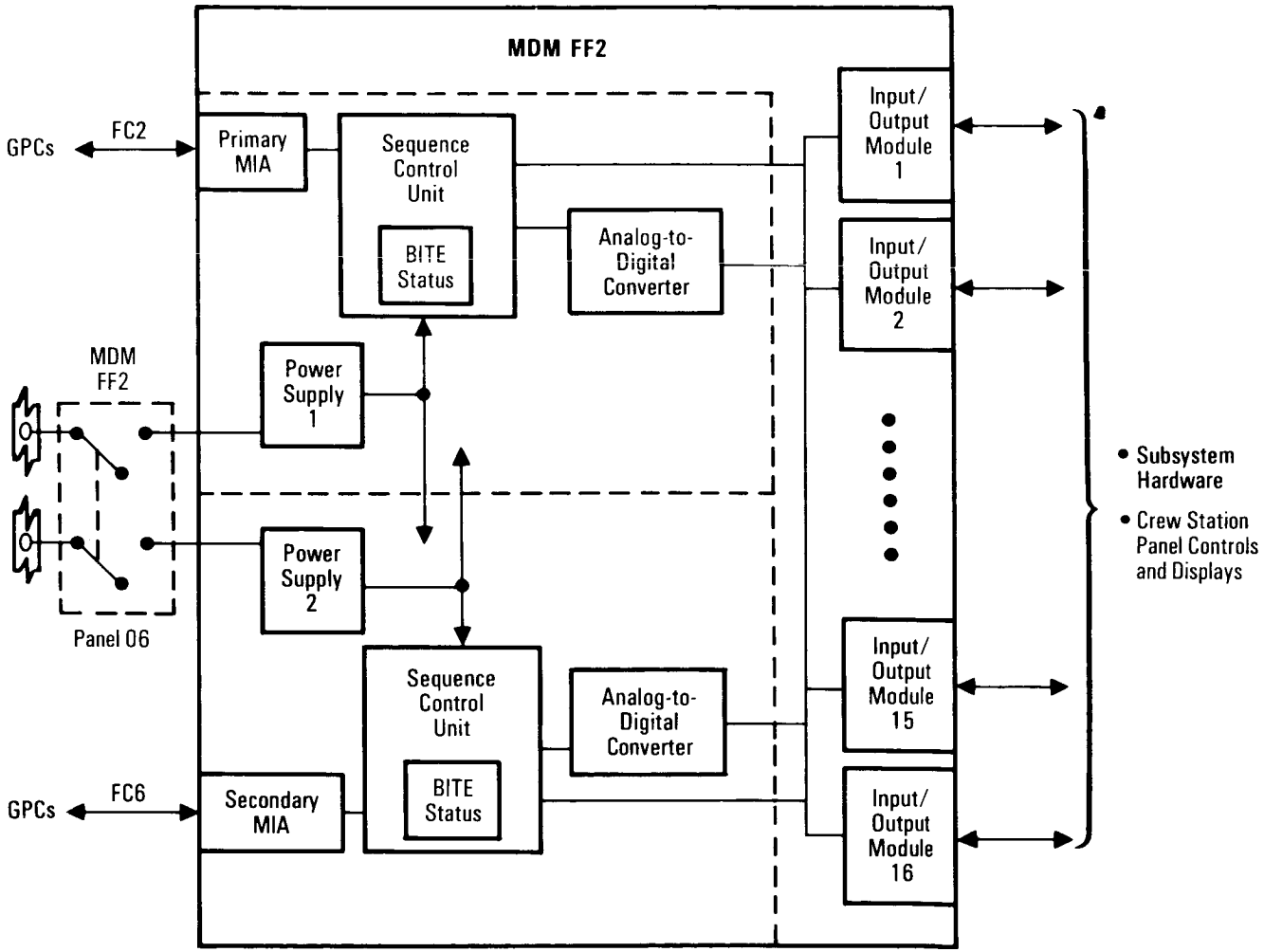


*Multiplexer/Demultiplexer Functional Block Diagram*

hardware is called redundancy management. It performs two functions: (1) selecting, from redundant sets of hardware data, one set of data for use by flight control, guidance and navigation and (2) detecting out-of-tolerance data, identifying the faulty unit and announcing the failure to the flight crew and to the data collection software.

In the case of four redundant hardware units, the redundancy management software uses three and holds the fourth in reserve. It utilizes a middle value select until one of the three is bad and then uses the fourth. If one of the remaining three is lost, the software downmodes to two and uses the average of two. If one of the remaining two is lost, the software downmodes to one and passes only the data it receives.

The three main engine interface units between the GPCs and the three main engine controllers accept GPC main engine commands, reformat them and transfer them to each main engine controller. In return, the EIUs accept data from the main engine controller, reformat it and transfer it to GPCs and operational instrumentation. Main engine functions, such as ignition, gimbaling, throttling and shutdown, are controlled by each main engine controller internally through inputs from the guidance equations that are computed in the orbiter GPCs.

Each flight-critical data bus is connected to a flight forward and flight aft MDM. Each MDM has two MIAs, or ports, and each port has a channel through which the GPCs can communicate with an MDM; however, the FC data buses can interface with only one MIA port at a time. Port moding is the software method used to control the MIA port that is used in an MDM. Initially, these MDMs operate with MIA port 1; if a failure occurs in MIA port 1, the flight crew can select MIA port 2. Since port moding involves a pair of buses, both MDMs must be ported at the same time. The control of all other units connected to the affected data buses is unaffected by port moding.

Payload data bus 1 is normally connected to the primary MIA port of payload MDM 1 and payload data bus 2 is connected to the primary MIA port of payload MDM 2. Payload data bus 1 can be connected to the secondary MIA port of payload MDM 2 and payload data bus 2 can be connected to the secondary MIA port of payload MDM 1 by flight crew selection.

The two launch data buses are also connected to dual MDM MIA ports. The flight crew cannot switch these ports; however, if an input/output error is detected on LF1 or LA1 during ascent, an automatic switchover occurs.

The only hardware controls for the MDMs are the *MDM FC* and *MDM PL* power switches on panel O6. These are on/off switches that provide or remove power for the four aft and four forward flight-critical MDMs and PL1, PL2 and PL3 MDMs. The *PL3 MDM* switch is unwired and is not used. There are no flight crew controls for the SRB MDMs.

Each MDM is redundantly powered by two main buses. The power switches control bus power for activation of a remote power controller for main power bus to an MDM. The main buses power separate power supplies in the MDM. Loss of either the main bus or MDM power supply does not cause a loss of function because each power supply powers both channels in the MDM. Turning power off to an MDM resets all the commands to subsystems.

The SRB MDMs receive power through SRB buses A and B; they are tied to the orbiter main buses and controlled by the master events controller circuitry. The launch forward and aft MDMs receive their power through the preflight test buses.

The FF1, PL1 and LF1 MDMs are located in the forward avionics bays and are cooled by water coolant loop cold plates. LA1 and the FA MDMs are in the aft avionics bays and are cooled by Freon coolant loop cold plates. MDMs LL1, LL2, LR1 and LR2 located in the SRBs are cooled by passive cold plates.

Modules and cards in an MDM depend on the hardware components accessed by that type of MDM. An FF MDM and an FA MDM are not interchangeable. However, one FF MDM may be interchanged with another or one payload MDM with another.

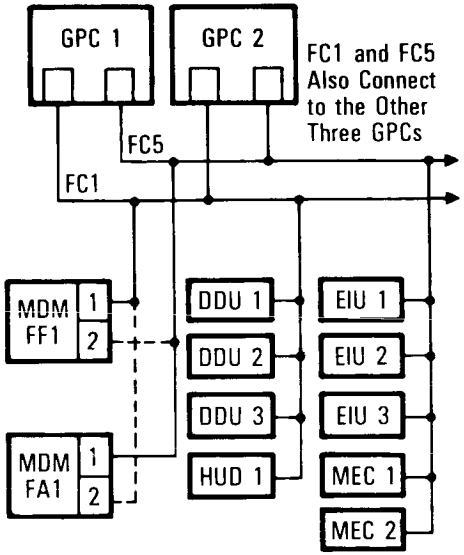


*String 1 Primary Mode*

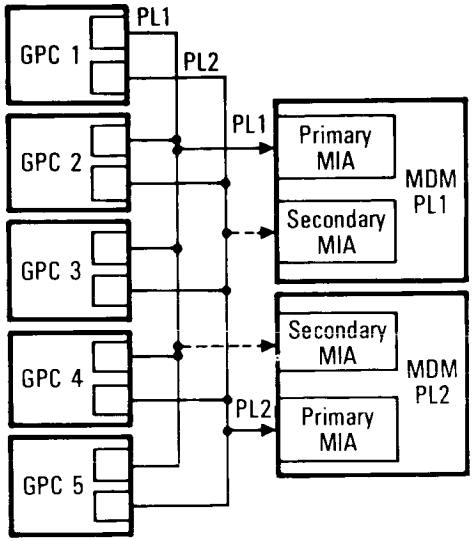


*PL MDM Primary Mode*

DDU — Display Driver Unit
EIU — Engine Interface Unit
FA — Flight Aft
FC — Flight Critical
FF — Flight Forward
HUD — Head-up Display
MDM — Multiplexer/Demultiplexer
MEC — Master Events Controller
MIA — Multiplexer Interface Adapter
PL — Payload

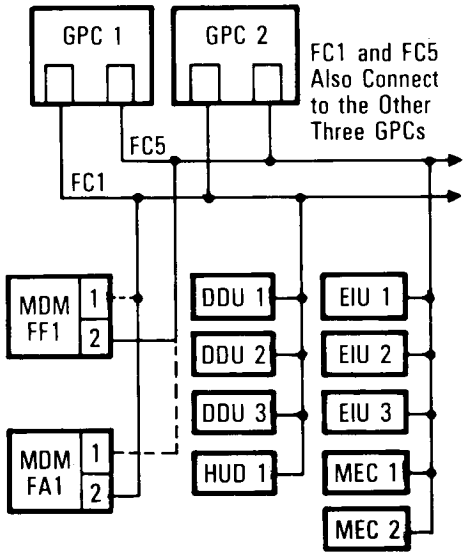


*String 1 Secondary Mode*

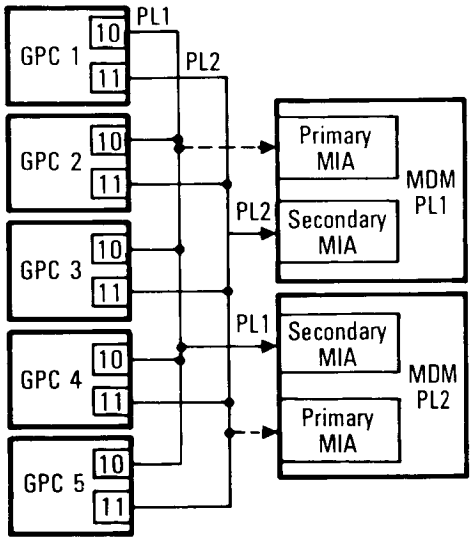


*PL MDM Secondary Mode*

Each MDM is 13 by 10 by 7 inches and weighs 36.7 pounds. MDMs use less than 80 watts of power.

The MDM contractor is Honeywell Inc., Sperry Space Systems Division, Phoenix, Ariz.

**Master Events Controllers.** The two master events controllers under GPC control send signals to arm and safe pyrotechnics and command and fire pyrotechnics during the solid rocket booster/external tank separation process and the orbiter/external tank separation process. The MEC contractor is Rockwell International, Autonetics Group, Anaheim, Calif.

**Data Bus Isolation Amplifiers.** Data bus isolation amplifiers are the interfacing devices for the GSE/LPS and the SRB MDMs. They transmit or receive multiplexed data in either direction. The amplifiers enable multiplexed communications over the longer data bus cables that connect the orbiter and GSE/LPS. The receiving section of the amplifiers detects low-level coded signals, discriminates against noise and decodes the signal to standard digital data at a very low bit error rate; the transmit section of the amplifiers then re-encodes the data and retransmits it at full amplitude and low noise.

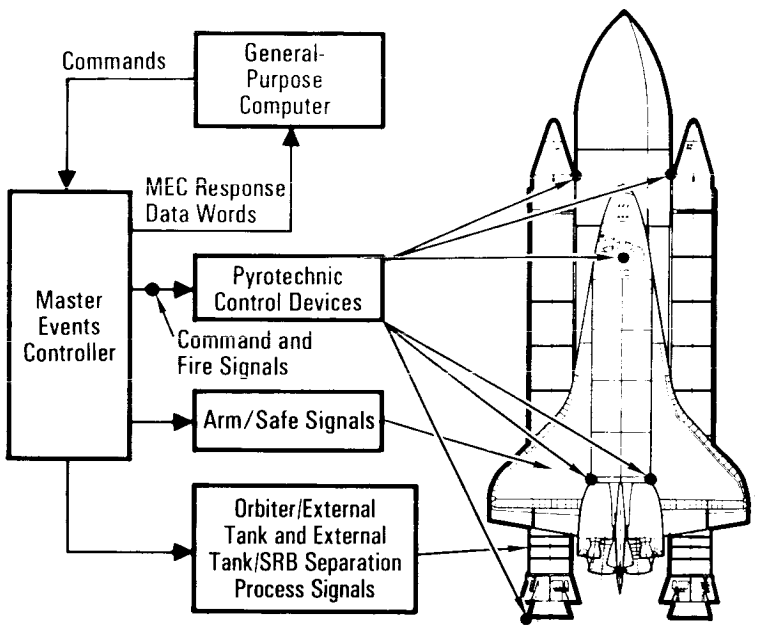


*Master Events Controller*

Data bus couplers couple the vehicle multiplexed data and control signals from the data bus and cable studs connected to the various electronic units. The couplers also perform impedance matching on the data bus, line termination, dc isolation and noise rejection.

Each data bus isolation amplifier is 7 by 6 by 5 inches and weighs 7.5 pounds. Each data bus coupler is 1 cubic inch in size and weighs less than 1 ounce. The contractor for the data bus isolation amplifiers and data bus couplers is Singer Electronics Systems Division, Little Falls, N.J.

**Backup Flight Control.** Even though the four primary avionics software system GPCs control all GN&C functions during the critical phases of the mission, there is always a possibility that a generic failure could cause loss of vehicle control. Thus, the fifth GPC is loaded with different software created by a different company than the PASS developer. This different software is the backup flight system. To take over control of the vehicle, the BFS monitors the PASS GPCs to keep track of the current state of the vehicle. If required, the BFS can take over control of the vehicle upon the press of a button. The BFS also performs the systems management functions during ascent and entry because the PASS GPCs are operating in GN&C. BFS software is always loaded into GPC 5 before flight, but any of the five GPCs could be made the BFS GPC if necessary.

The BFS interface programs, events and applications controllers, and GN&C are provided by the Charles Stark Draper Laboratory Inc., Cambridge, Mass. The remainder of the software, as well as the integration of the total backup flight control system, is provided by Intermetrics and Rockwell International. The GN&C software is written in HAL/S by Intermetrics of Boston, Mass.

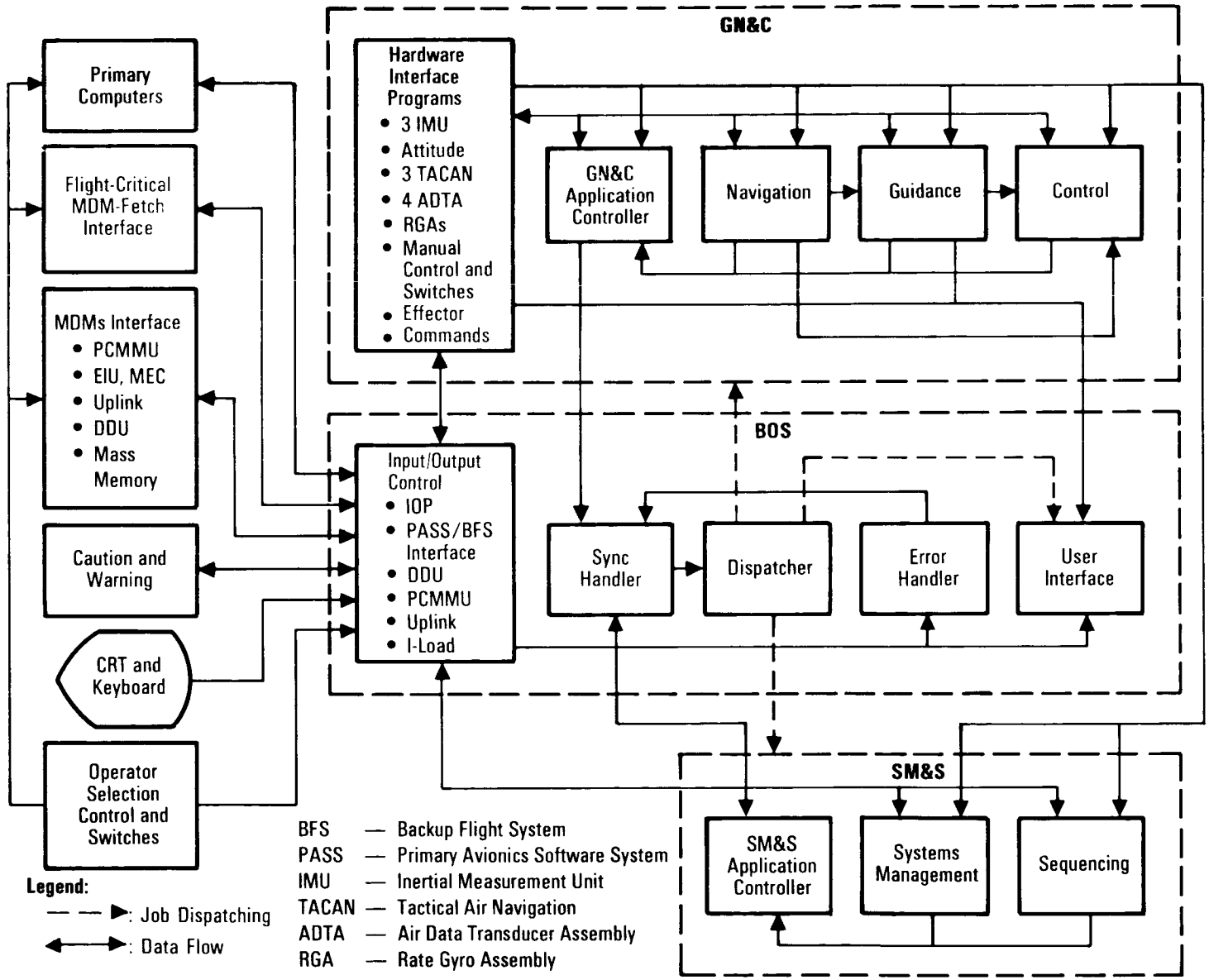


*Backup Flight System Flow Diagram*

Since the BFS is intended to be used only in a contingency, its programming is much simpler than that of the PASS. Only the software necessary to complete ascent or entry safely, maintain vehicle control in orbit and perform systems management functions during ascent and entry is included. Thus, all the software used by the BFS can fit into one GPC and never needs to access mass memory. For added protection, the BFS software is loaded into the MMUs in case of a BFS GPC failure.

The BFS, like PASS, consists of system software and applications software. System software in the BFS performs basically the same functions as it does in PASS. These functions include time management, PASS/BFS interface, multifunction CRT display system, input/output, uplink/downlink and engage/disengage control. The system software is always operating when the BFS GPC is not in halt.

Applications software in the BFS has different major functions, GN&C and systems management; but all of its applications software resides in main memory at one time, and the BFS can process software in both major functions simultaneously. The GN&C functions of the BFS, designed as a backup capability, support the ascent phase beginning at major mode 102 and the deorbit/entry phase beginning at major mode 301. In addition, the various ascent abort modes are supported by the BFS. The BFS provides only limited support for on-orbit operations through major modes 106 or 301. Because the BFS is designed to monitor everything the PASS does during ascent and entry, it has the same major modes as the PASS in OPS 1, 3 and 6.

The BFS systems management contains software to support the ascent and entry phases of the mission. Whenever the BFS GPC is in the run or standby mode, it runs continuously; however, the BFS does not control the payload buses in standby. The systems management major function in the BFS is not associated with any operational sequence.

Even though the five general-purpose computers and their switches are identical, the GPC *mode* switch on panel O6 works differently for a GPC loaded with BFS. Since halt is a hardware-controlled state, no software is executed. The standby mode in the BFS GPC is totally different from its corollary in the PASS GPCs. When the BFS GPC is in standby, all normal software is executed as if the BFS were in run, the only difference being that BFS command of the payload data buses is inhibited in standby. The BFS is normally put in run for ascent and entry and in standby whenever a PASS systems management GPC is operating. If the BFS is in standby or run, it takes control of the flight-critical and payload data buses if engaged. The *mode* talkback indicator on panel O6 indicates *run* if the BFS GPC is in run or standby and displays a barberpole if the BFS is in halt or has failed.

The BFS is synchronized with PASS so that it can track the PASS and keep up with its flow of commands and data. Synchronization and tracking take place during OPS 1, 3 and 6. During this time, the BFS listens over the flight-critical data buses to the requests for data by PASS and to the data coming back. The BFS depends on the PASS GPCs for all of its GN&C data and must be synchronized with the PASS GPCs so that it will know when to receive GN&C data over the FC buses. When the BFS is in sync and listening to at least two strings, it is said to be tracking PASS. As long as the BFS is in this mode, it maintains the current state vector and all other information necessary to fly the vehicle in case the flight crew needs to engage it. The BFS uses the same master timing unit source as PASS and keeps track of Greenwich Mean Time over the flight-critical buses for synchronization.

The BFS also monitors some inputs to PASS CRTs and updates its own GN&C parameters accordingly. When the BFS GPC is tracking the PASS GPCs, it cannot command over the FC buses but may listen to FC inputs through the listen mode.

The BFS GPC controls its own instrumentation/PCMMU data bus. The BFS GPC intercomputer communication data bus is not used to transmit status or data to the other GPCs; and the MMU data buses are not used except during initial program load and MMU assignment, which use the same *IPL source* switch used for PASS IPL.

A major difference between the PASS and BFS is that the

BFS can be shifted into OPS 1 or 3 at any time, even in the middle of ascent or entry.

The *BFC* lights on panels F2 and F4 remain unlighted as long as PASS is in control and the BFS is tracking. The lights flash if the BFS loses track of the PASS and stands alone. The flight crew must then decide whether to engage the BFS or try to initiate BFS tracking again by a reset. When BFS is engaged and in control of the flight-critical buses, the *BFC* lights are illuminated and stay on until the BFC is disengaged.

Since the BFS does not operate in a redundant set, its discrete inputs and outputs, which are fail votes from and against other GPCs, are not enabled; thus, the *GPC matrix status* light on panel O1 for the BFS GPC does not function as it does in PASS. The BFS can illuminate its own light on the *GPC matrix status* panel if the watchdog timer in the BFS GPC times out or if the BFS GPC does not complete its cyclic processing.

To engage the BFS, which is considered a last resort to save the vehicle, the crew presses a BFS engage momentary push button located on the commander's or pilot's rotational hand controller. As long as the RHC is powered and the BFS *GPC output* switch is in *backup* on panel O6, depressing the engage push button on the RHC engages the BFS and causes PASS to relinquish control during ascent or entry. There are three contacts in each engage push button, and all three contacts must be made to engage the BFS. The signals from the RHC are sent to the backup flight controller, which handles the engagement logic.

When the BFS is engaged, the *BFC* lights on panels F2 and F4 are illuminated; the BFS *output* talkback indicator on panel O6 turns gray; all PASS GPC *output* and *mode* talkback indicators on panel O6 display a barberpole; the BFS controls the CRTs selected by the *BFS CRT select* switch on panel C3; *big X* and *poll*

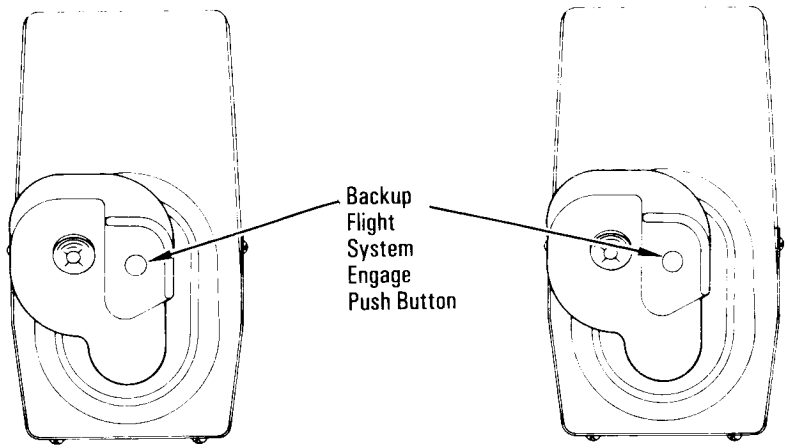


*Commander's Rotational Hand Controller*

*Pilot's Rotational Hand Controller*



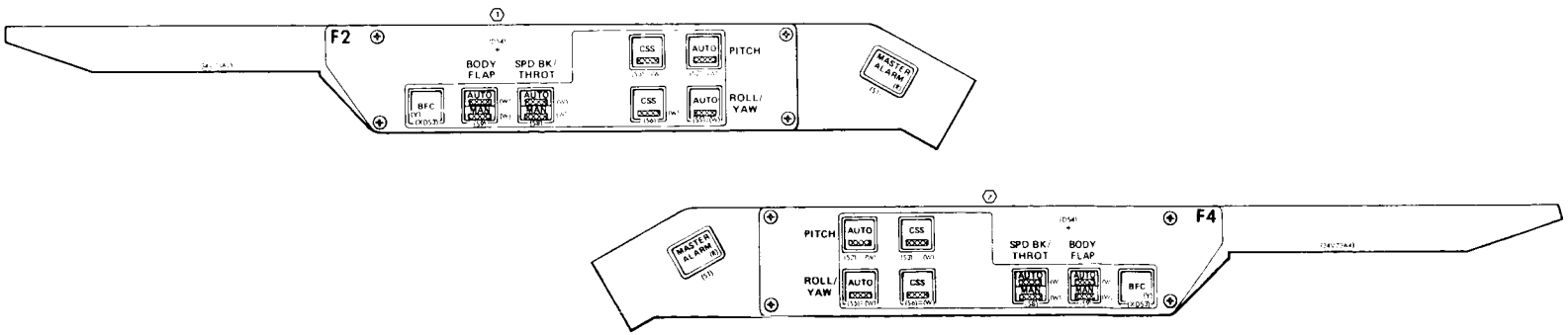


***Panels F2 and F4***

*fail* appear on the remaining CRTs; and all four *GPC status matrix* indicators for PASS GPCs are illuminated on panel O1.

When the BFS is disengaged and the *BFC CRT* switch on panel O3 is positioned to *on*, the BFS commands the first CRT indicated by the *BFC CRT select* switch. The *BFC CRT select* switch positions on panel C3 are *1+2*, *2+3* and *3+1*. When the BFS is engaged, it assumes control of the second CRT as well.

If the BFS is engaged during ascent, the PASS GPCs can be recovered on orbit to continue a normal mission. This procedure takes about two hours, since the PASS inertial measurement unit reference must be re-established. To disengage the BFS after all PASS GPCs have been hardware-dumped and software-loaded, the PASS GPCs must be taken to GN&C OPS 3. Positioning the *BFC disengage* momentary switch on panel F6 to the *up* position disengages the BFS. The switch sends a signal to the BFC that resets the *engage* discretes to the GPCs. The BFS then releases control of the flight-critical buses as well as the payload buses if it is in standby, and the PASS GPCs assume command.

Indications of the PASS engagement and BFS disengagement are as follows: *BFC* lights on panels F2 and F4 are out, BFS *output* talkback indicator on panel O6 displays a barberpole, PASS *output* talkback indicators on panel O6 are gray and *BFS release/PASS control* appears on the CRT. After disengagement, the PASS and BFS GPCs return to their normal pre-engaged state.

If the BFS is engaged, there is no manual thrust vector control or manual throttling capability during first- and second-stage ascent. If the BFS is engaged during entry, the speed brake is positioned using the speed brake/thrust controller and the body flap is positioned manually. The BFC system also augments the control stick steering mode of maneuvering the vehicle with the commander's rotational hand controller.

The software of the BFC system is processed only for the commander's attitude director indicator, horizontal situation indicator and RHC. The BFC system supplies attitude errors on the CRT trajectory display, whereas PASS supplies attitude errors to the ADIs; however, when the BFC system is engaged, the errors on the CRT are blanked.

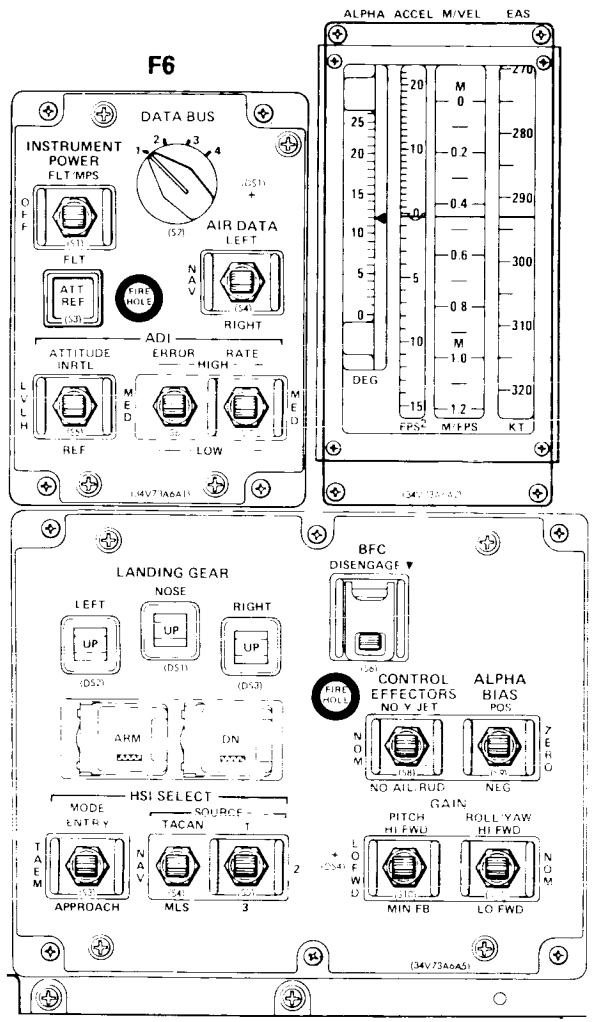


*Panel F6*

**GUIDANCE, NAVIGATION AND CONTROL.** Guidance, navigation and control software command the GN&C system to effect vehicle control and to provide the sensor and controller data needed to compute these commands. The process involves three steps: guidance equipment and software first compute the orbiter location required to satisfy mission requirements, navigation then tracks the vehicle's actual location, and flight control then transports the orbiter to the required location.

A redundant set of four orbiter general-purpose computers forms the primary avionics software system; a fifth GPC is used as the backup flight system.

The GPCs interface with the various systems through the orbiter's flight forward and flight aft multiplexers/demultiplexers. The data buses serve as a conduit for signals going to and from the various sensors that provide velocity and attitude information as well as for signals traveling to and from the orbiter propulsion systems, orbiter aerodynamic control surfaces, and displays and controls.

The GN&C system consists of two operational modes: auto and manual (control stick steering). In the automatic mode, the primary avionics software system essentially allows the GPCs to fly the vehicle; the flight crew simply selects the various operational sequences. The flight crew may control the vehicle in the

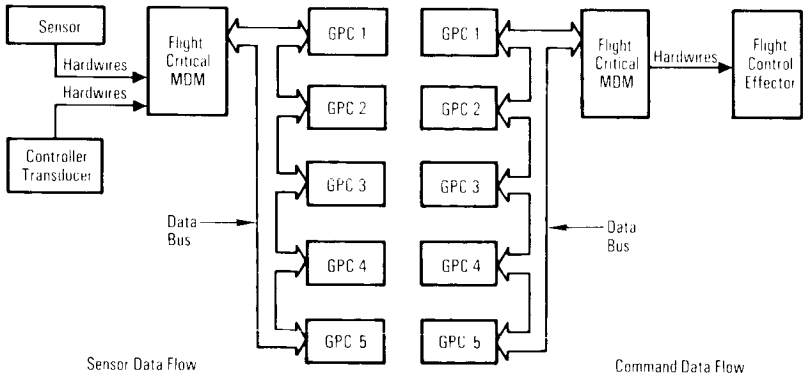


*Data and Command Interfaces*

control stick steering mode using hand controls, such as the rotational hand controller, translational hand controller, speed brake/thrust controller and rudder pedals. The translational hand controller is available only for the commander, but both the commander and pilot have a rotational hand controller.

In the control stick steering mode, flight crew commands must still pass through and be issued by the GPCs. There are no direct mechanical links between the flight crew and the orbiter's various propulsion systems or aerodynamic surfaces; the orbiter is an entirely digitally controlled, fly-by-wire vehicle.

During launch and ascent, most of the GN&C commands are directed to gimbal the three space shuttle main engines and solid rocket boosters to maintain thrust vector control through the vehicle's center of gravity at a time when the amount of consumables is changing rapidly. In addition, the GN&C controls SSME throttling for maximum aerodynamic loading of the vehicle during ascent—referred to as max q—and to maintain an acceleration of no greater than 3 g's during the ascent phase. To circularize the orbit and perform on-orbit and deorbit maneuvers, the GN&C commands the orbital maneuvering system engines. At external tank separation, on orbit and during portions of entry, GN&C controls commands to the reaction control system. In atmospheric flight, GN&C controls the orbiter aerodynamic flight control surfaces.

Functions of GN&C software include flight control, guidance, navigation, hardware data processing and flight crew display. Specific function tasks and their associated GN&C hardware vary with each mission phase.

Vehicle control is maintained and in-flight trajectory changes are made during powered flight by firing and gimbaling engines. During atmospheric flight, these functions are performed by deflecting aerosurfaces. Flight control computes and issues the engine fire and gimbal commands and aerosurface deflection commands.

Flight control includes attitude processing, steering, thrust

vector control and digital autopilots. Flight control receives vehicle dynamics commands (attitudes, rates and accelerations) from guidance software or flight crew controllers and processes them for conversion to effector commands (engine fire, gimbal or aerosurface). Flight control output commands are based on errors for stability augmentation. The errors are the difference between the commanded attitude, aerosurface position, body rate or body acceleration and the actual attitude, position, rate or acceleration.

Actual attitude is derived from inertial measurement unit angles, aerosurface position is provided by feedback transducers in the aerosurface servoamplifiers, body rates are sensed by rate gyro assemblies, and accelerations are sensed by accelerometer assemblies. In atmospheric flight, flight control adjusts control sensitivity based on air data parameters derived from local pressures sensed by air data probes and performs turn coordination using body attitude angles derived from IMU angles. Thus, GN&C hardware required to support flight control is a function of the mission phase.

The guidance steering commands used by the flight control software are augmented by the guidance software or are manually commanded by the hand controller or speed brake/thrust controller. When flight control software uses the steering commands computed by guidance software, it is termed automatic guidance; when the flight crew is controlling the vehicle by hand, it is called control stick steering. The commands computed by guidance are those required to get from the current state (position and velocity) to a desired state (specified by target conditions, attitude, airspeed and runway centerline). The steering commands consist of translational and rotational angles, rates and accelerations. Guidance receives the current state from navigation software. The desired state or targets are part of the initialized software load and some may be changed manually in flight.

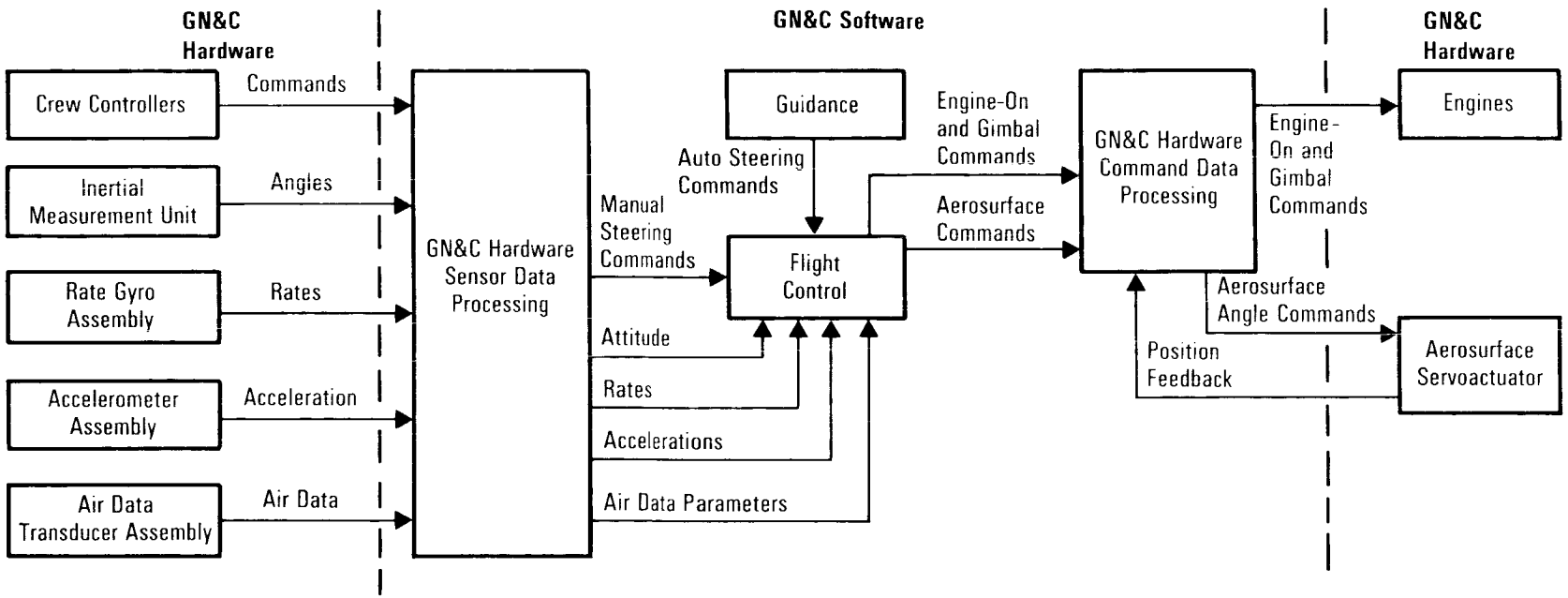


*Flight Control Interfaces*

The navigation system maintains an accurate estimate of vehicle position and velocity, referred to as a state vector. From position, attitude and velocity, other parameters (acceleration, angle of attack) are calculated for use in guidance and for display to the crew. The current state vector is mathematically determined from the previous state vector by integrating the equations of motion using vehicle acceleration as sensed by the IMUs and/or computed from gravity and drag models. The alignment of the IMU and, hence, the accuracy of the resulting state vector deteriorate as a function of time. Celestial navigation instruments (star trackers and crewman optical alignment sight) are used to maintain IMU alignment in orbit. For entry, the accuracy of the IMU-derived state vector is, however, insufficient for either guidance or the flight crew to bring the spacecraft to a pinpoint landing. Therefore, data from other navigation sensors—air data system, tactical air navigation, microwave scan beam landing system and radar altimeter—is blended into the state vector at different phases of entry to provide the necessary accuracy. The three IMUs maintain an inertial reference and provide velocity changes until the microwave scan beam landing system is acquired. Navigation-derived air data are needed during entry as inputs to guidance, flight control and flight crew dedicated displays. Such data are provided by tactical air navigation, which supplies range and bearing measurements beginning at 160,000 feet; the air data system provides information at about Mach 3. Tactical air navigation is used until the microwave scan beam landing system is acquired or an altitude of 1,500 feet is reached if MSBLS is not available.

During rendezvous and proximity operations, the onboard navigation system maintains the state vectors of both the orbiter and target vehicle. During close operations (separation of less than 15 miles), these two state vectors must be very accurate in order to maintain an accurate relative state vector. Rendezvous radar measurements (range and range rate) are used for a separation of about 15 miles to 100 feet to provide the necessary relative state vector accuracy. When two vehicles are separated by less than 100 feet, the flight crew relies primarily on visual monitoring (aft and overhead windows and closed-circuit television).

In summary, GN&C hardware sensors used by navigation include IMUs, star trackers, the crewman optical alignment sight, tactical air navigation, air data system, microwave scan beam landing system, radar altimeter and rendezvous radar. The GN&C hardware sensors used by the flight control system are accelerometer assemblies, orbiter rate gyro assemblies, solid rocket booster rate gyro assemblies, controllers and aerosurface servoamplifiers.



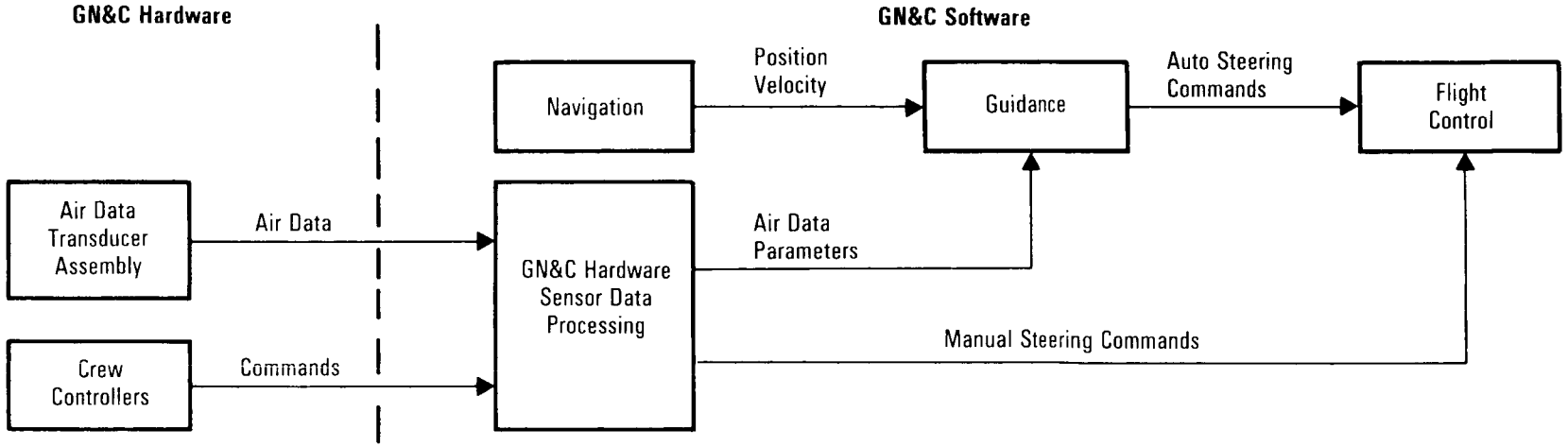


*Guidance Interfaces*

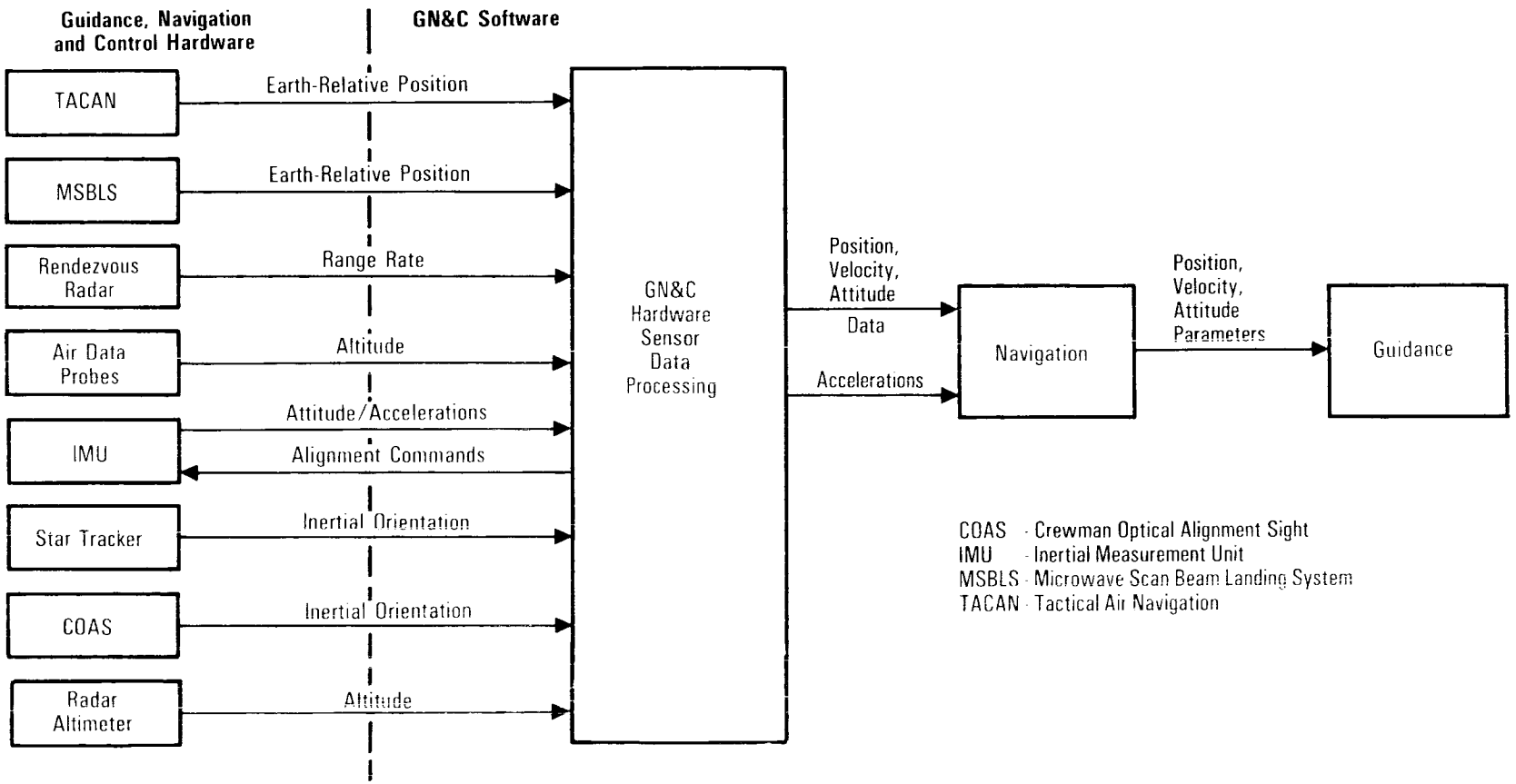


*Navigation Interfaces*

**Flight Control System Hardware**. Each piece of GN&C hardware is hard-wired to one of eight flight-critical multiplexers/demultiplexers, which are connected to each of the five GPCs by data buses. Each GPC is assigned to command on one or more data buses; assignments can be changed.

A sensor, controller or flight control effector cannot be assigned or rerouted to another MDM during flight, but the MDM it is wired to can be assigned to a different GPC. Each multiple unit of each type of GN&C hardware is hard-wired to a different MDM. For example, there are four accelerometer assemblies on board the orbiter. AA 1 is wired to forward flight MDM 1 and is part of string 1, AA 2 is wired to FF MDM 2 on string 2, AA 3 is wired to FF MDM 3 on string 3, and AA 4 is wired to FF MDM 4 on string 4.

**Navigation Aids**. Navigation aids on board the orbiter include the three inertial measurement units, three tactical air navigation units, two air data probe assemblies, three microwave scan beam landing systems and two radar altimeters.

**Inertial Measurement Units**. The IMUs consist of an all-attitude, four-gimbal, inertially stabilized platform. They provide inertial attitude and velocity data to the GN&C software functions. Navigation software uses the processed IMU velocity and attitude data to propagate the orbiter state vector. Guidance uses the attitude data, along with state vector from the navigation software, to develop steering commands for flight control. Flight control uses the IMU attitude data to convert the steering commands into control surface, engine gimbal (thrust vector control) and reaction control system thruster fire commands.

Although flight could be accomplished with only one, three IMUs are installed on the orbiter for redundancy. The IMUs are

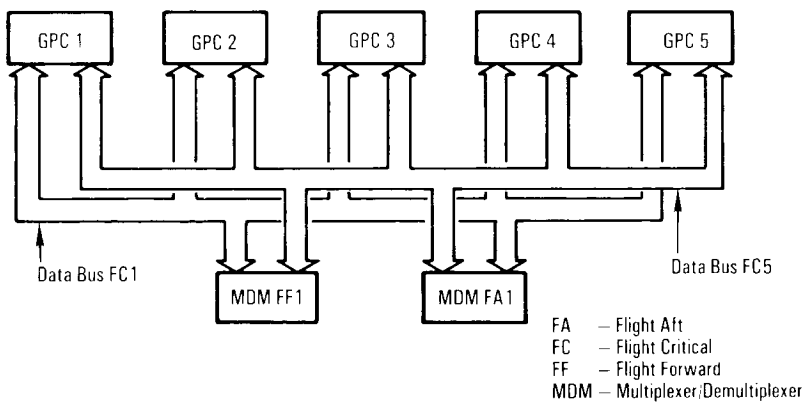


*General-Purpose Computer String*

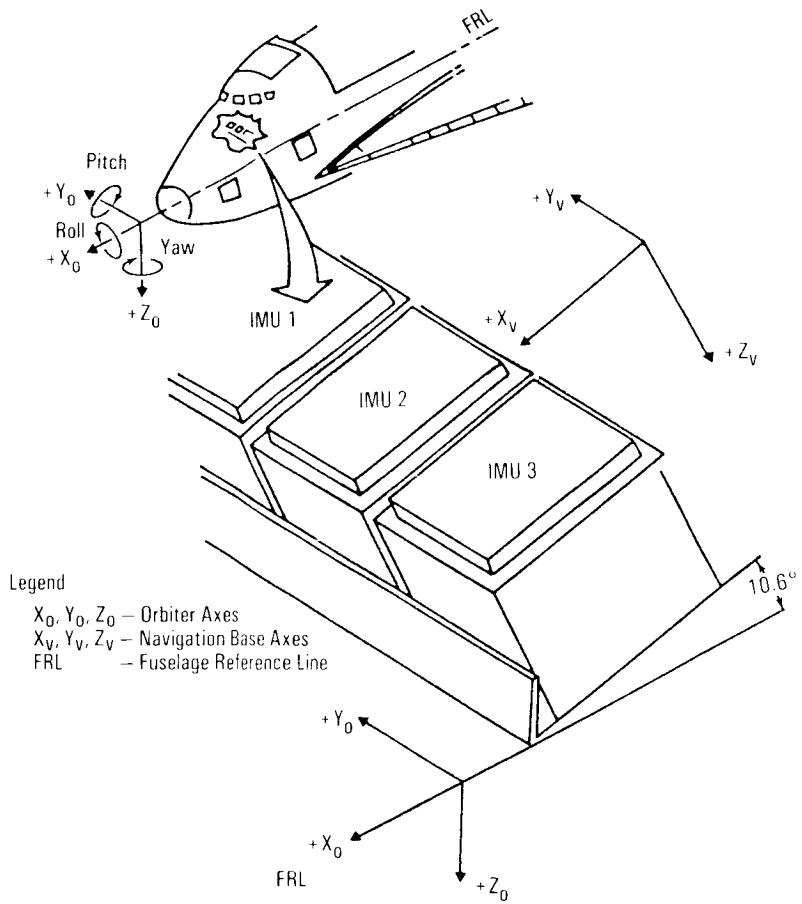


*Inertial Measurement Units*

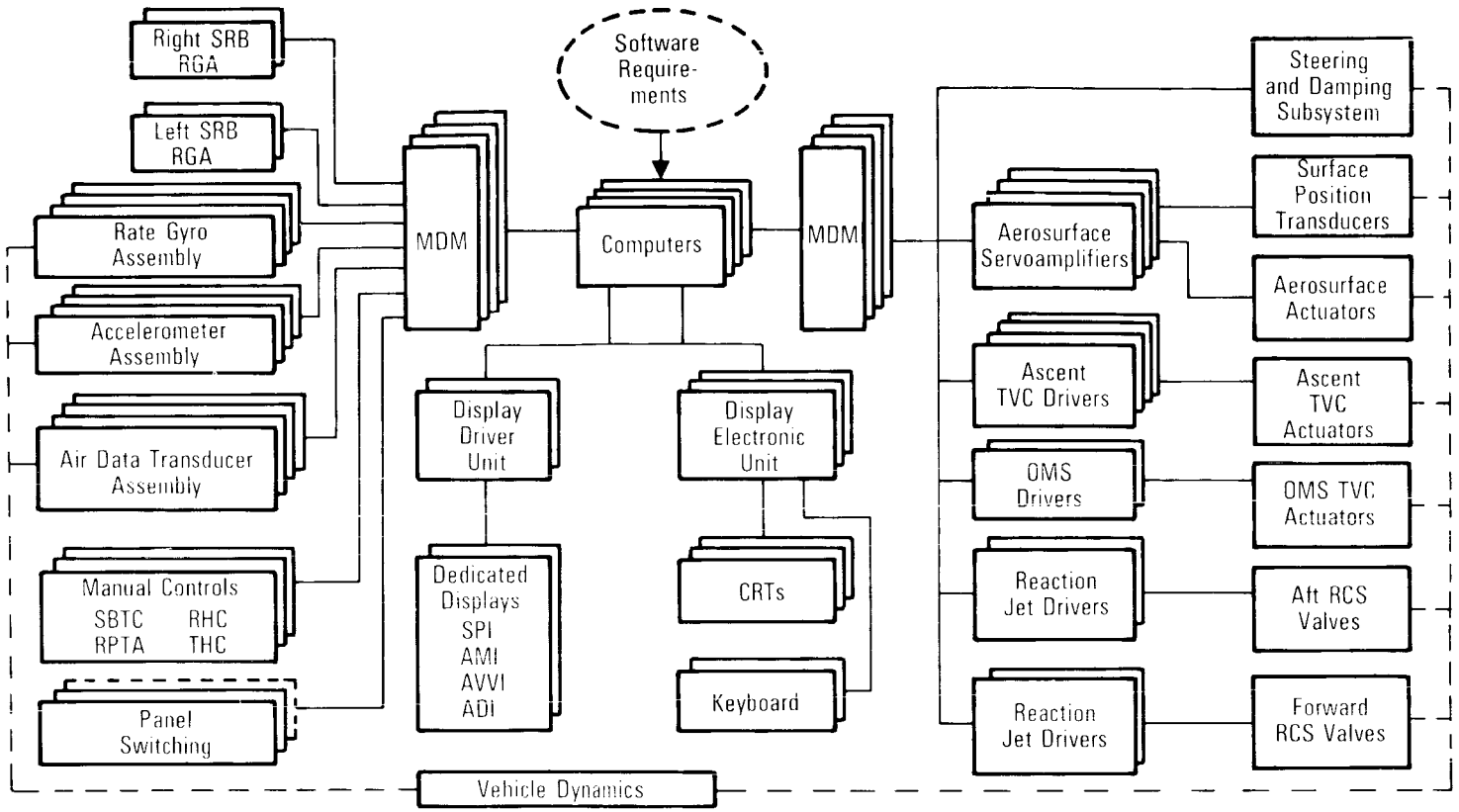


ADI - Attitude Director Indicator
AMI - Alpha Mach Indicator
AVVI - Altitude/Vertical Velocity Indicator
CRT - Cathode Ray Tube
MDM - Multiplexer/Demultiplexer
RCS - Reaction Control System
RGA - Rate Gyro Assembly
RHC - Rotational Hand Controller
RPTA - Rudder Pedal Transducer Assembly
SBTC - Speed Brake/Thrust Controller
SPI - Surface Position Indicator
SRB - Solid Rocket Booster
THC - Translational Hand Controller
TVC - Thrust Vector Control

*Flight Control System*

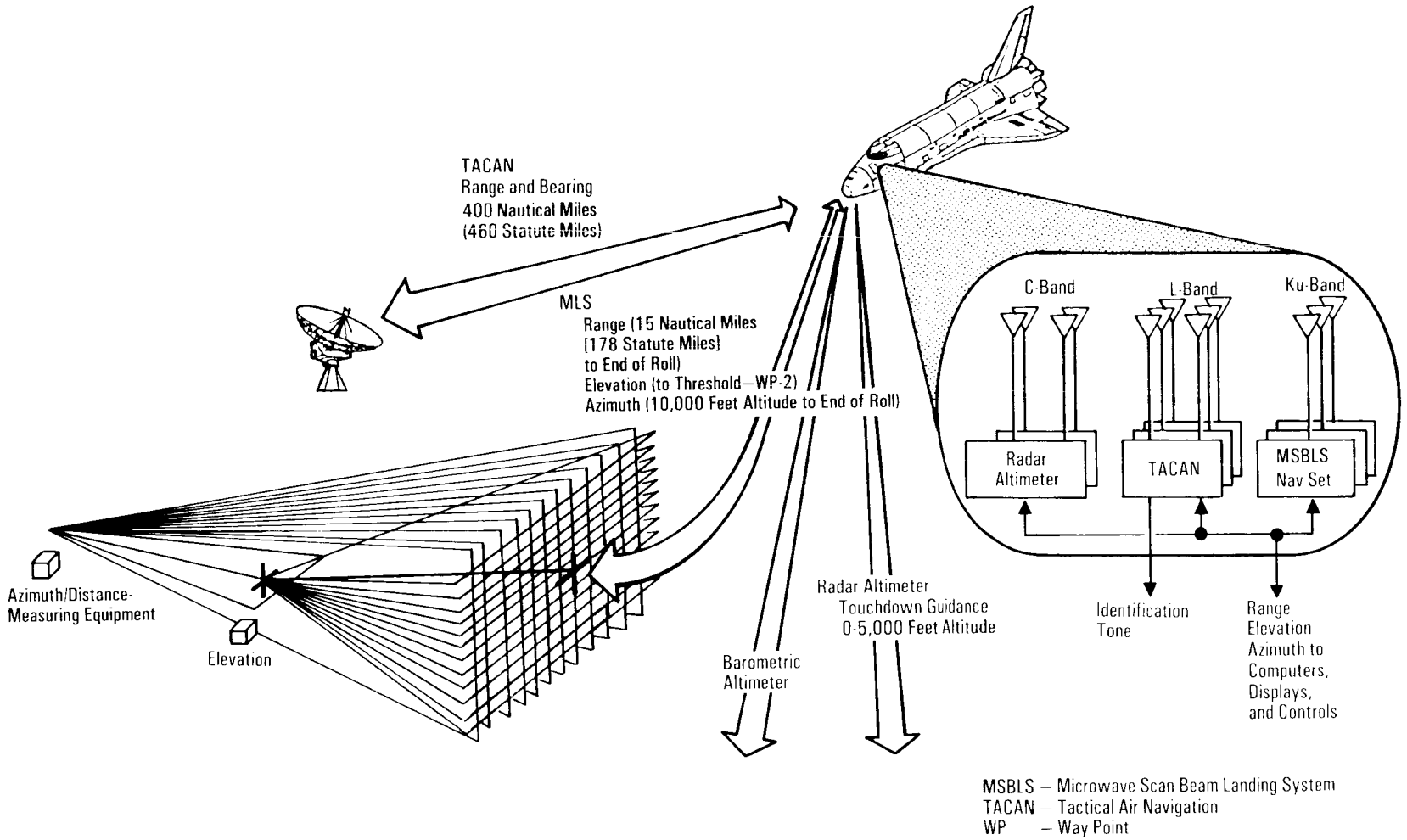


*Navigation Aid Systems*

mounted on the navigation base, which is located inside the crew compartment flight deck forward of the flight deck control and display panels. The navigation base mounting platform is pitched down 10.6 degrees from the orbiter's plus X body axis. The navigation base provides a platform for the IMUs that can be repeatedly mounted with great accuracy, enabling the definition of transformations that relate IMU reference frame measurements to any other reference frame.

The IMU consists of a platform isolated from vehicle rotations by four gimbals. Since the platform does not rotate with the vehicle, its orientation remains fixed, or inertial, in space. The gimbal order from outermost to innermost is outer roll, pitch, inner roll and azimuth. The platform is attached to the azimuth gimbal. The inner roll gimbal is a redundant gimbal used to provide an all-attitude IMU while preventing the possibility of gimbal-lock (a condition that can occur with a three-gimbal system and cause the inertial platform to lose its reference). The outer roll gimbal is driven from error signals generated from disturbances to the inner roll gimbal. Thus, the inner roll gimbal will remain at its null position, orthogonal to the pitch gimbal.

The inertial sensors consist of two gyros, each with two degrees of freedom, that provide platform stabilization. The gyros are used to maintain the platform's inertial orientation by sensing rotations of the platform caused by vehicle-rotation-induced friction at the gimbal pivot points. The gyros output a signal that is proportional to the motion and is used by the gimbal electronics to drive the appropriate gimbals to null the gyro outputs. Thus, the platform remains essentially undisturbed, maintaining its inertial orientation while the gimbals respond to vehicle motion. One gyro—called the vertical gyro—is oriented so its input axes are aligned with the X and Y platform axes; its input axes provide IMU platform roll and pitch stabilization. The second gyro is oriented so that one input axis lies along the platform's Z axis and the other lies in the X-Y plane. This gyro—the azimuth gyro—provides platform yaw stabilization with the Z input axis, while the second input axis is used as a platform rate detector for built-in test equipment. Each gyro contains a two-axis pick-off that senses deflection of the rotating wheel. The gyro also contains a pair of two-axis torquers that provide compensation torquing for gyro drift and a means to reposition the platform.

The spin axis of a gyro is its axis of rotation. The inertial stability of the spin axis is a basic property of gyroscopes and is used in stabilization loops, which consist of the gyro pick-off, gimbals and gimbal torquers. When the vehicle is rotated, the platform also tends to rotate due to friction at the gimbal pivot points. Since the gyro casing is rigidly mounted to the platform, it will also rotate. The gyro resists this rotation tendency to remain inertial, but the resistance is overcome by friction. This rotation is detected by the pick-offs as a deflection of the rotating gyro wheel. A signal proportional to this deflection is sent to the gimbal electronics, which routes the signals to the appropriate torquers, which in turn rotate their gimbals to null the pick-off point. When the output is nulled, the loop is closed.

Four resolvers in an IMU are used to measure vehicle atti-

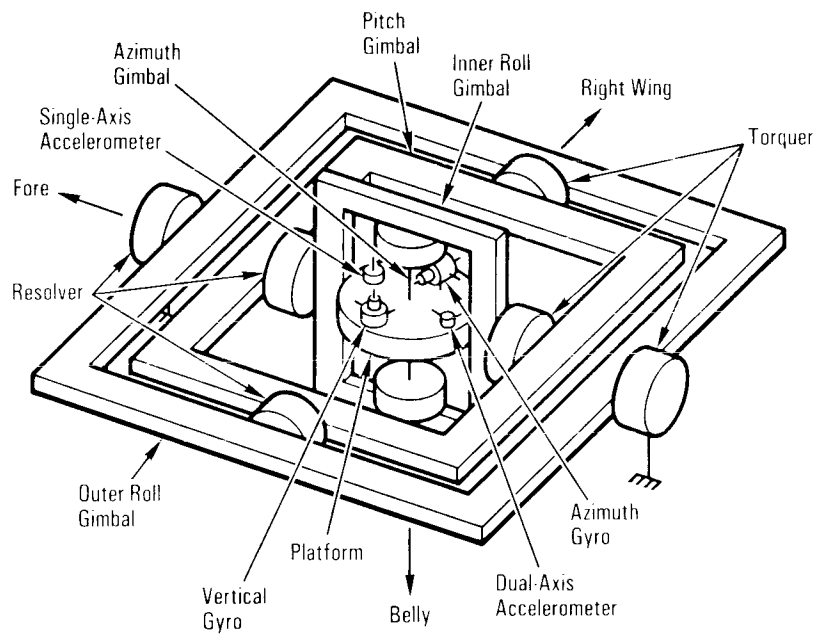


*Inertial Measurement Unit Platform Assembly and Coordinate System*

tude. A resolver is located at one of two pivot points between adjacent gimbals. The IMU resolvers are electromechanical devices that apply the principle of magnetic induction to electrically measure the angle between two adjacent gimbals. This electrical signal is then transformed into a mechanical angle by the IMU electronics. There are two resolvers on each gimbal: one-speed (1X) and eight-speed (8X). The 1X electrical output represents a coarse measurement of the true gimbal mechanical angle. For greater resolution, the 8X electrical output represents a measurement eight times that of the true angle. These outputs are converted to an angle measurement in the IMU electronics and are sent to the GPCs, where they are combined into a single gimbal angle measurement and are used to determine vehicle attitude. Attitude information is used by flight control for turn coordination and steering command guidance. An attitude director indicator displays attitude and navigation data.

Two accelerometers in each IMU measure linear vehicle accelerations in the IMU inertial reference frame; one measures the acceleration along the platform's X and Y axes, the other along the Z axis. The accelerometer is basically a force rebalance-type instrument. When the accelerometer experiences an acceleration along its input axes, it causes a pendulum mass displacement. This displacement is measured by a pick-off device, which generates an electrical signal that is proportional to the sensed acceleration. This signal is amplified and returned to a torquer within the accelerometer, which attempts to reposition the proof mass to its null (no output) position.

The velocity data measured by the IMU are the primary sources that propagate the orbiter state vector during ascent and entry. On orbit, a sophisticated drag model is substituted for IMU velocity information, except during large vehicle accelerations. During large on-orbit accelerations, IMU velocity data are used in navigation calculations.

Platform attitude can be reoriented by two methods: slewing or pulse torquing. Slewing rotates the platform at a high rate (72 degrees per minute), while pulse torquing rotates it very slowly (0.417 degree per minute). Platform reorientation relies on another property of gyroscopes: precession. If a force is applied to a spinning gyroscope, the induced motion is 90 degrees from the input force. In each IMU, a two-axis torquer is located along the input axes of both gyros. Commands are sent to the torquers from the GPC to apply a force along the input axes. The result is a deflection of the gyro spin axis that is detected and nulled by the stabilization loops. Since the gyro spin axis is forced to point in a new direction, the platform has to rotate to null the gyro outputs.

The three IMUs have skewed orientations—their axes are not coaligned and are not aligned with the vehicle axes. This is done for two reasons. First, gimbaled platforms have problems at certain orientations. This skewing ensures that no more than one IMU will have an orientation problem for a given attitude. Skew allows resolution of a single-axis failure on one IMU by multiple axes on another IMU since the possibility of multiple-axis failure is more remote. Second, skewing is also used by redundancy management to determine which IMUs have failures.

The IMU platform is capable of remaining inertial for vehicle rotations of up to 35 degrees per second and angular accelera-



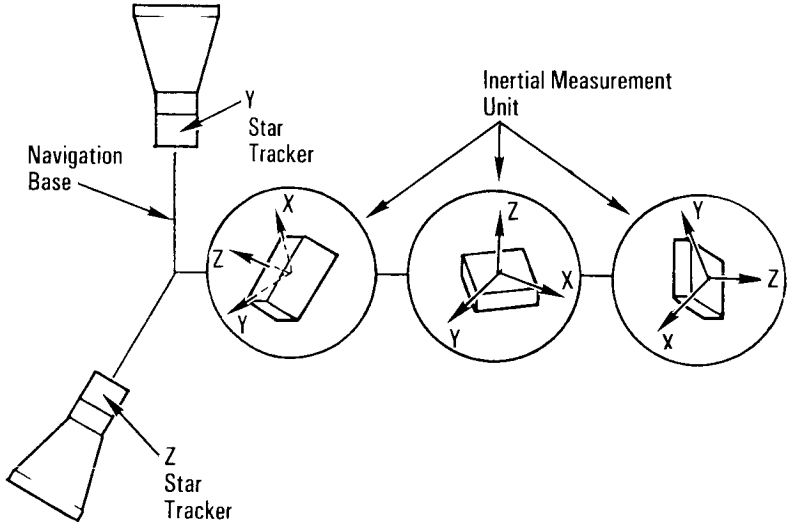


*Inertial Measurement Unit Skew*

tions of 35 degrees per second squared. Each IMU interfaces with the five onboard GPCs through a different flight forward multiplexer/demultiplexer of the data bus network. Under GPC control, each IMU is capable of orienting its platform to any attitude, determining platform alignment relative to a reference and providing velocity and attitude data for flight operations.

Very precise thermal control must be maintained in order to meet IMU performance requirements. The IMU thermal control system consists of an internal heater system and a forced-air cooling system. The internal heater system is completely automatic and is powered on when power is initially applied to the IMU. It continues to operate until the IMU is powered down. The forced-air cooling consists of three fans that serve all three IMUs. Only one fan is necessary to provide adequate air flow. The IMU fan pulls cabin air through the casing of each IMU and cools it in an IMU heat exchanger before returning it to the cabin. Each IMU fan is controlled by an individual *on/off* switch located on panel L1.

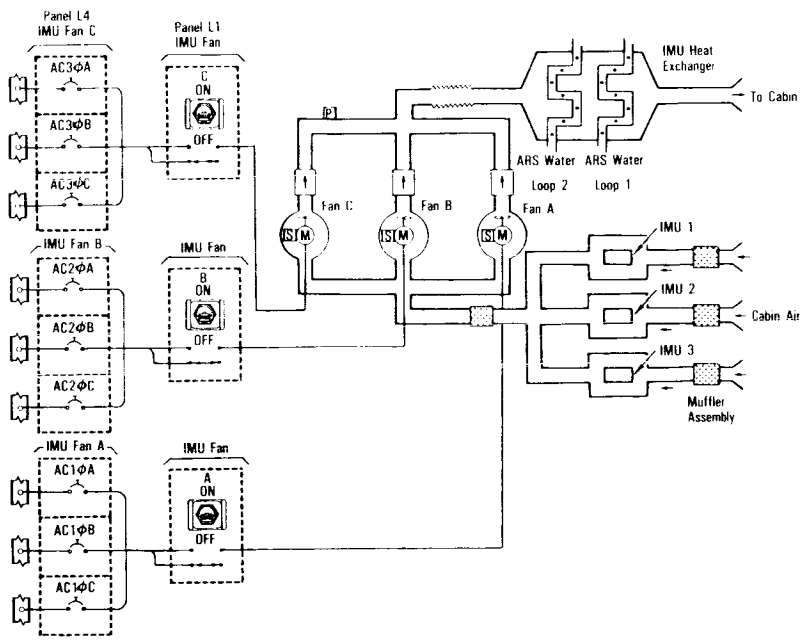


*IMU Air Circulation*

Each IMU is supplied with redundant 28-volt dc power through separate remote power controllers when control bus power is applied to the RPCs by the IMU power switch. The *IMU 1, 2* and *3 on/off* power switches are located on panels O14, O15 and O16, respectively. Loss of one control bus or one main bus will not cause the loss of an IMU.

Each IMU has two modes of operation: a warm-up/standby mode and an operate mode. When the respective IMU switch is positioned to *on*, that IMU is powered and enters the warm-up/standby mode, which applies power only to the heater circuits. It takes approximately 30 minutes for the IMU to reach its operating range, at which time the IMU enters a standby mode, when it can

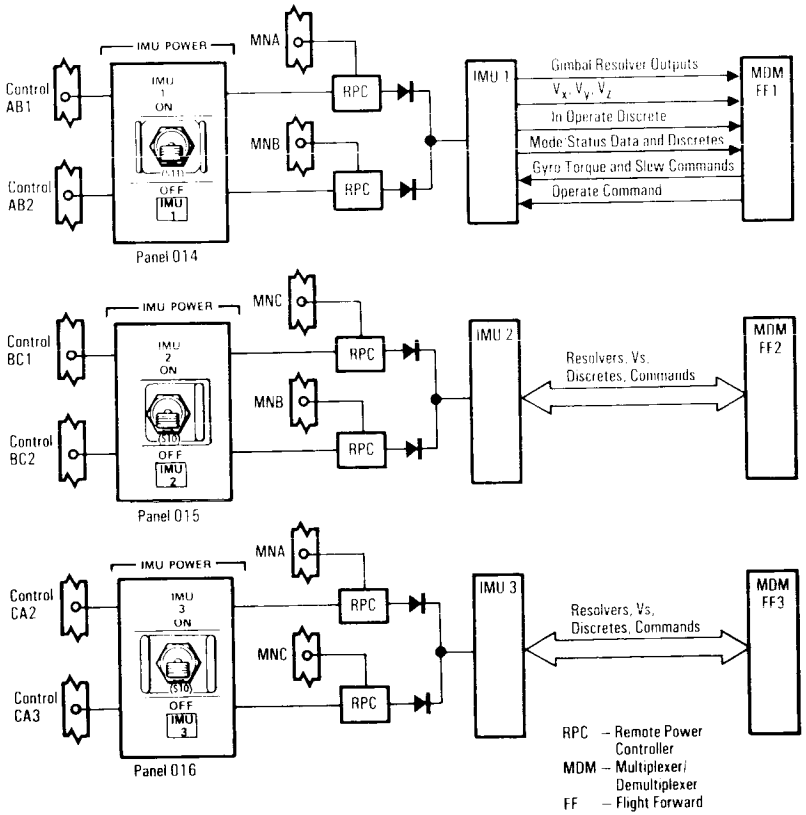


*Inertial Measurement Unit Power and Data Interfaces*

be moded to the operate mode by flight crew command in GN&C OPS 2, 3 or 9.

To mode the IMU to operate, the controlling GPC sends the *operate* discrete to the IMU through the forward flight multiplexer/demultiplexer. The IMU, upon receiving this command, initiates its run-up sequence.

The run-up sequence first cages the IMU—a process of reorienting the IMU gimbals and then mechanically locking them into place so that the gyros may begin to spin. When the IMU is caged, its platform orientation will be known when it becomes inertial. The caged orientation is defined as the point at which all resolver outputs are zero. This causes the IMU platform to lie parallel to the navigation base plane with its coordinate axes lying parallel to the navigation base's coordinate axes.

Once the IMU gimbals are caged, the gyros begin to spin and power is applied to the remaining IMU components. When the gyros have reached the correct spin rate, the stabilization loops are powered, and the IMU becomes inertial. At this time, the IMU returns an *in operate mode* discrete to the GPC, indicating that the run-up sequence is complete. This process requires approximately 38 seconds.

The IMUs are in operate by the time the flight crew enters the vehicle before launch and remain in that state for the duration of the flight unless powered down to minimize power consumption. While in the operate mode, the IMU maintains its inertial

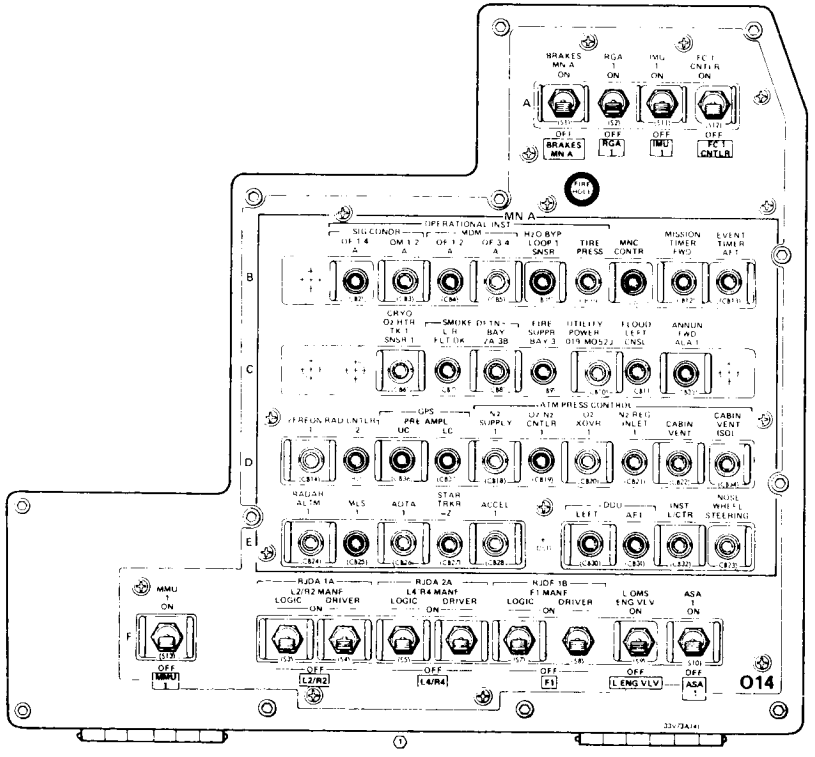


*Panel O14*

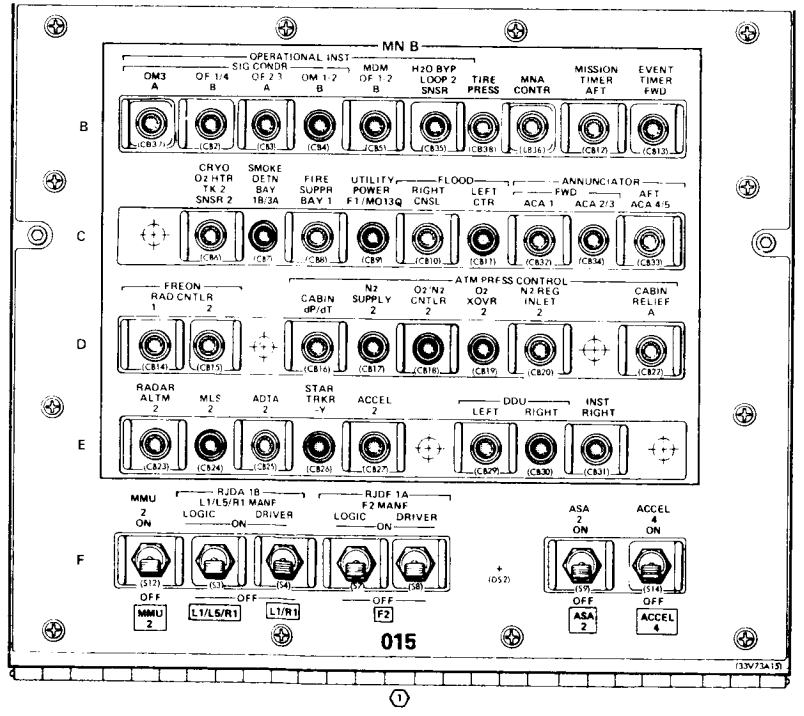


*Panel O15*

orientation and is used for calibrations and preflight, flight and on-orbit alignments.

Before preflight, the IMUs are taken through three levels of calibration to correct for hardware inaccuracies: factory calibration, hangar calibration and preflight calibration. Sixty-one IMU parameters are developed during this extensive calibration period. These parameters are stored in the orbiter GPC mass memory units and are used in the software to compensate for hardware inaccuracies.

At T minus two hours during the launch countdown, the IMU calibration is complete and the IMUs are ready for the preflight alignment. At T minus one hour and one minute, the Launch Control Center initiates this alignment by a display electronics unit equivalent. (A DEU equivalent is simply a ground command that looks to the GPCs like a crew keyboard input.)

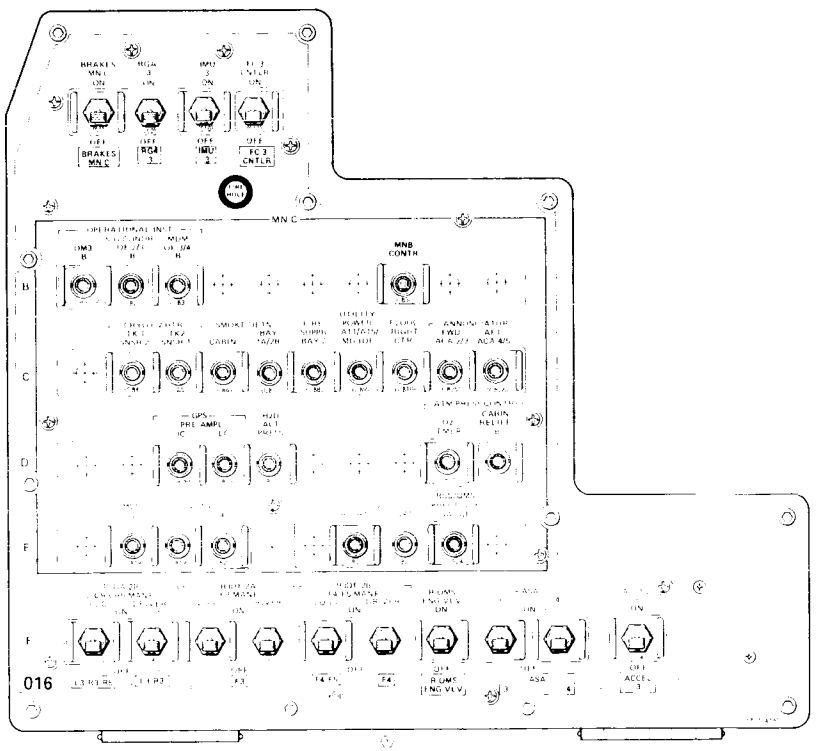


*Panel O16*

Preflight alignment requires 48 minutes to complete and consists of two different operations: gyrocompass alignment and velocity/tilt initialization.

In the gyrocompass alignment, each IMU is oriented so that the desired relative skew is achieved when the platforms are at their alignment orientation. During this phase, the IMUs are placed in two orientations relative to the north-west-up coordinate system. These two orientations differ only in a 90-degree rotation about the up axis. Data are collected for 90 seconds by the accelerometers to remove any misalignment resulting from the reorientation. The accelerometers are used here because their accuracy is much better than that of the resolvers and the acceleration due to Earth rotation is definitely known. Therefore, any unexpected acceleration is due to IMU misalignment. Once this misalignment is nulled, the platform is torqued about the north axis to compensate for Earth rotation. Data are then collected for 10 minutes to measure platform drifts. This sequence of data collecting is repeated at the second orientation. The relative attitude errors for each IMU pair are also computed, first with resolver data and

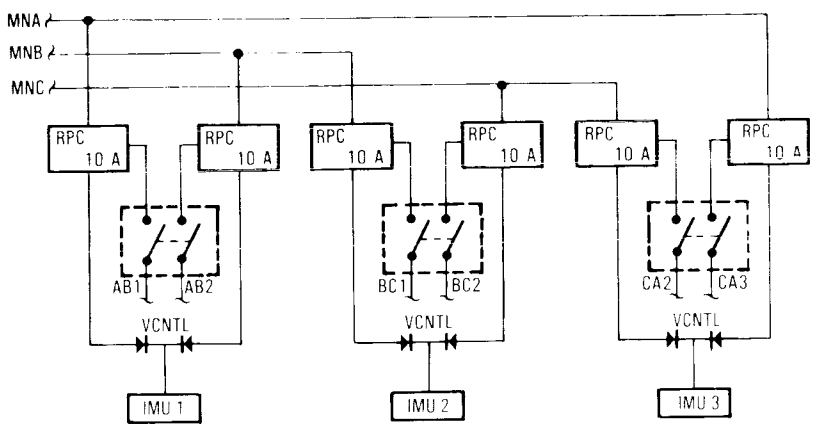


*Inertial Measurement Unit Electrical Power Interface*

then with accelerometer data. The two values are subtracted and transformed into body coordinates. A factory-calibrated relative resolver error term is then subtracted, and a reasonableness test is performed to check the relative alignment between each IMU pair to assure a good preflight alignment. The velocity/tilt initialization mode is then entered, during which the drifts experienced while waiting for the OPS 1 transition are estimated. The compensation developed by these drifts is applied to the gyros from the OPS 1 transition to T minus 12 minutes and is also used to compute the current platform to the mean of 1950 reference stable member matrix at the OPS 1 transition. In addition, a level-axis test is performed on each platform three times a second; failure to pass this test requires the alignment to be repeated.

At T minus 22 seconds, a one-shot data transfer from the primary avionics software system to the backup flight system is commanded by display electronics unit equivalent. IMU compensation data computed by the PASS GPCs in OPS 9 are sent to the BFS GPC at this time so that it will have the same data for controlling the IMUs if it is engaged.

At the OPS 1 transition, the IMUs enter the "tuned inertial" drift compensation mode. It is tuned because a compensation factor computed in the velocity/tilt is applied to the IMU gyros. At T minus 12 seconds, this compensation is removed and the IMUs enter the "free inertial" mode. The IMUs are now flight ready, and all functions, both hardware and software, remain the same throughout the flight.

During ascent, the IMUs provide accelerometer and resolver data to the GN&C software to propagate the state vector, determine attitude and display flight parameters.

During the orbital flight phase, the IMUs provide GN&C software with attitude and accelerometer data.

On-orbit alignments are necessary to correct platform misalignment caused by uncompensated gyro drift.

During entry, IMU operation differs only in the manner in which accelerometer data are used by navigation.

The IMU can be safely powered off from either the warm-up/standby mode or the operate mode. If an IMU is moded to standby, an internal timer inhibits moding operation for three minutes to allow the gyros to spin to a stop so that the proper sequencing to the operate mode can occur.

The IMU software scheme is designed to select the best data for GPC use and to detect system failures. This scheme is referred to as redundancy management.

In the event of an IMU failure, the *IMU* red caution and warning light on panel F7 will be illuminated. If temperatures are out of limits or if built-in test equipment detects a failure, a fault message and SM alert will be annunciated.

The accuracy of the IMU deteriorates with time. If the errors are known, they can be physically or mathematically corrected. Software based on preflight calibrations is used to compensate for most of the inaccuracy. The star trackers and crewman optical alignment sight are used to determine additional inaccuracies.



The IMU subsystem operating program processes the data from the IMUs and converts it to a usable form for other users. The following computations are performed in the IMU SOP: conversion of velocities to the mean of 1950 coordinates; conversion of resolver outputs to gimbal angles; computation of accelerations for displays; performance of additional software built-in test equipment checks; support of selection, control and monitoring of IMU submodes of the operate mode; and computation of torquing commands based on the misalignment determined by the star trackers, crewman optical alignment sight or another IMU. Misalignments are due to gyro drifts.

Each KT-70 IMU is 10.28 inches high, 11.5 inches wide and 22 inches long and weighs 58 pounds.

A new high-accuracy inertial navigation system will be phased in to augment the present KT-70 IMU during 1988-89. The HAINS will provide spares support for the inertial navigation system and will eventually phase out the KT-70 IMU design. Benefits of the HAINS include lower program costs over the next decade,

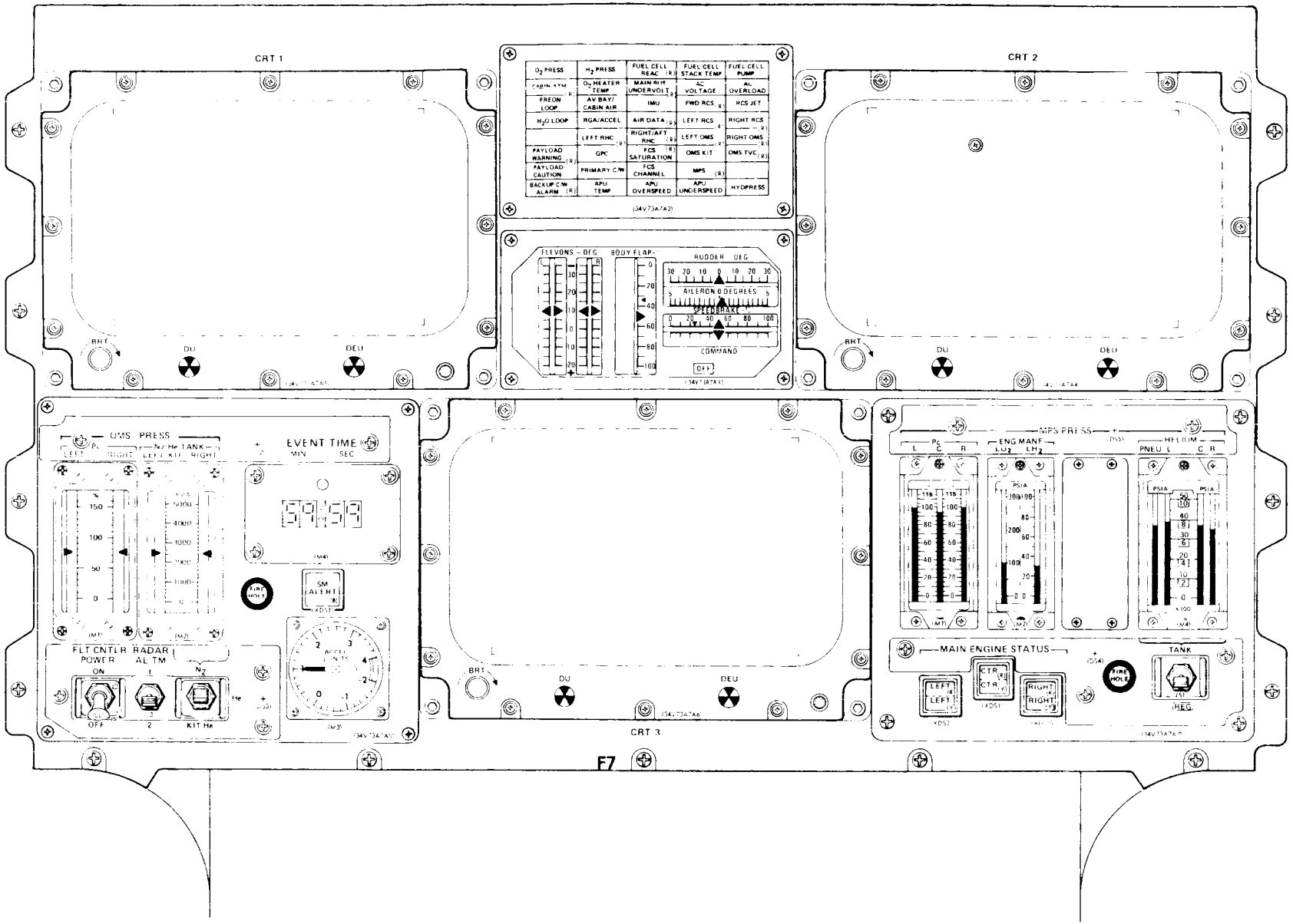
CRT 1
CRT 2
CRT 3
BRT
DU
DEU
O2 PRESS
H2 PRESS
FUEL CELL REAC
FUEL CELL STACK TEMP
FUEL CELL PUMP
CABIN ATM
O2 HEATER TEMP
MAIN BUS UNDERVOLT
AC VOLTAGE
AC OVERLOAD
FREON LOOP
AV BAY/ CABIN AIR
IMU
FWD RCS
RCS JET
H2O LOOP
RGA/ACCEL
AIR DATA
LEFT RCS
RIGHT RCS
LEFT RHC
RIGHT/AFT RHC
LEFT OMS
RIGHT OMS
PAYLOAD WARNING
GPC
FCS SATURATION
OMS KIT
OMS TVC
PAYLOAD CAUTION
PRIMARY C/W
FCS CHANNEL
MPS
BACKUP C/W ALARM
APU TEMP
APU OVERSPEED
APU UNDERSPEED
HYDPRESS
ELEVONS - DEG
BODY FLAP
RUDDER DEG
AILERON 0 DEGREES
SPEEDBRAKE
COMMAND
OFF
OMS PRESS
LEFT
RIGHT
N2/He TANK
EVENT TIME
MIN
SEC
FIRE HOLE
SM ALERT
FLT CNTLR POWER
RADAR
AL TM
ON
OFF
KIT He
MPS PRESS
ENG MANF
HELIUM
PNEU
PSIA
MAIN ENGINE STATUS
LEFT
CTR
RIGHT
TANK
HEG

F7

*Panel F7*

ongoing production support, improved performance, lower failure rates, and reduced size and weight. The HAINS is 9.24 inches high, 8.49 inches wide and 22 inches long. The unit weighs 43.5 pounds. The HAINS also contains an internal dedicated microprocessor with memory for processing and storing compensation and scale factor data from the vendor's calibrations, thereby reducing the need for extensive initial load data for the orbiter GPCs. The HAINS is both physically and functionally interchangeable with the KT-70 IMU.

The IMU contractor is Singer Electronics Systems Division, Little Falls, N.J.

**Star Trackers**. The star tracker system is part of the orbiter's navigation system. Its two units are located just forward and to the left of the commander's plus X window in a well outside the pressurized crew compartment—an extension of the navigation base on which the IMUs are mounted. The star trackers are slightly inclined off the vehicle's negative Y and negative Z axes, for which they are named. The star trackers are used to align the IMUs on board the orbiter as well as to track targets and provide line-of-sight vectors for rendezvous calculations.

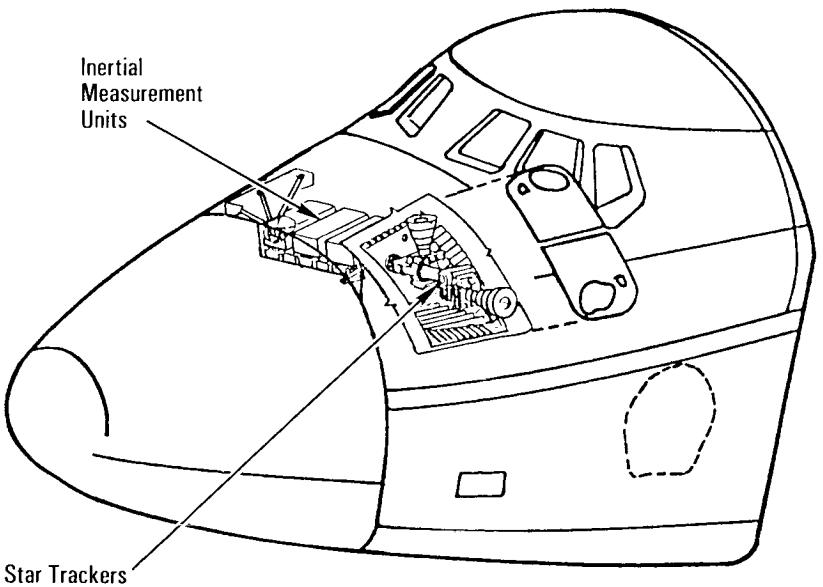


*Location of Star Trackers*

Alignment of the IMUs is required approximately every 12 hours to correct IMU drift, within one to two hours before major on-orbit thrusting duration or after a crewman optical alignment sight IMU alignment. IMU alignment is accomplished by using the star trackers to measure the line-of-sight vector to at least two stars. With this information, the GPC calculates the orientation between these stars and the orbiter to define the orbiter's attitude. A comparison of this attitude with the attitude measured by the IMU provides the correction factor necessary to null the IMU error.

The GPC memory contains inertial information for 50 stars chosen for their brightness and their ability to provide complete sky coverage.

The star trackers are oriented so that the optical axis of the negative Z star tracker is pointed approximately along the negative Z axis of the orbiter and the optical axis of the negative Y star tracker is pointed approximately along the negative Y axis of the orbiter. Since the navigation base provides the mount for the IMUs and star trackers, the star tracker line of sight is referenced to the navigation base and the orbiter coordinate system; thus, the GPC knows where the star tracker is pointed and its orientation with respect to the IMUs.

Each star tracker has a door to protect it during ascent and entry. The doors are opened on orbit to permit use of the star trackers.

To enable the star tracker doors to open, the *star tracker power minus Y* and *minus Z* switches on panel O6 must be positioned to *on*. The *star tracker door control sys 1* and *sys 2* switches on panel O6 control one three-phase ac motor on each door. Positioning the *sys 1* switch to *open* controls motor control logic and drives the minus Y and minus Z star tracker door by electromechanical actuators to the open position. Limit switches stop the

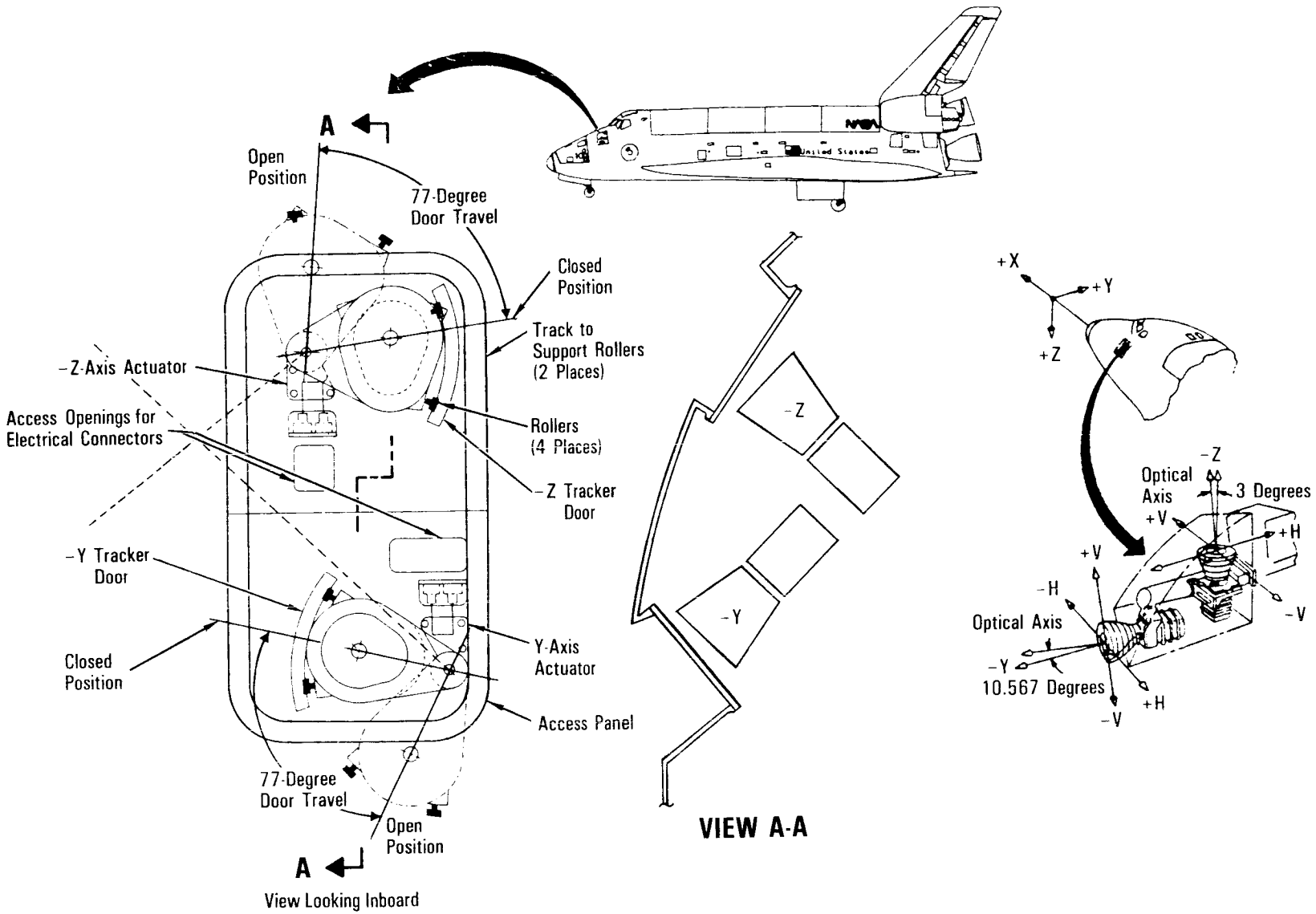




*Star Trackers*

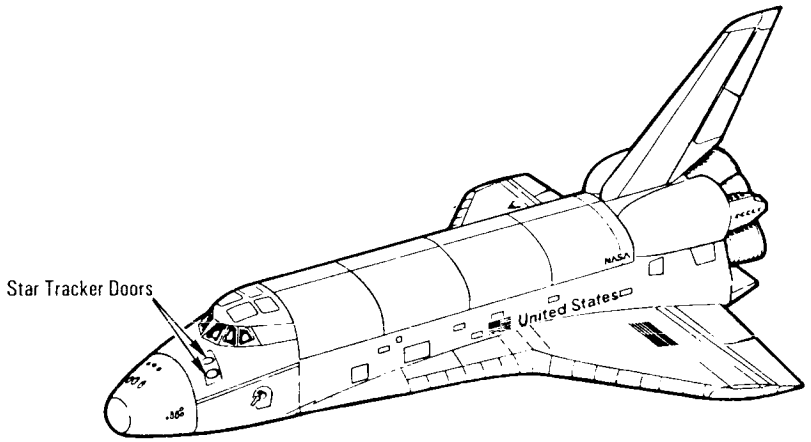


*Star Tracker Door Locations*

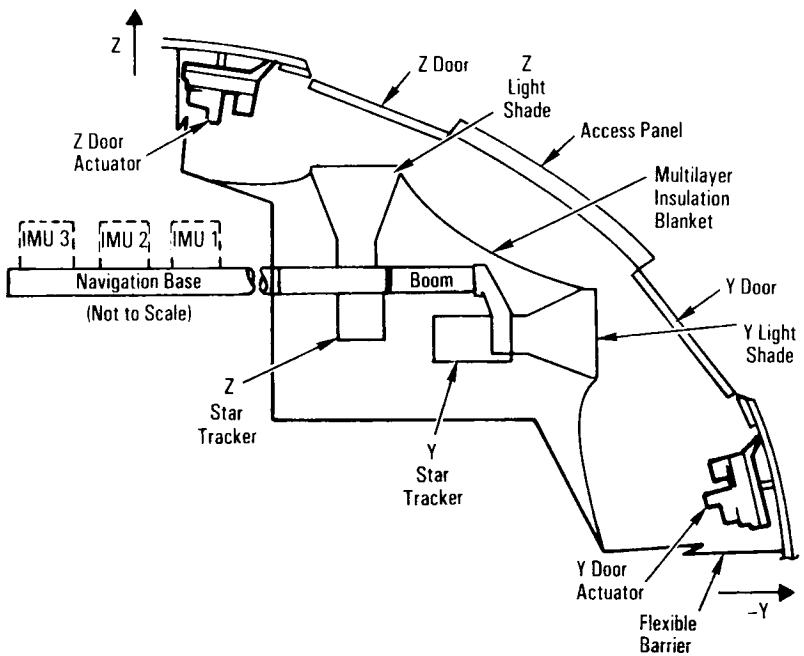


*Internal View of Tracker Subsystem (Looking Aft)*

motors when the doors are open and control a talkback indicator above the *sys 1* switch. The talkback indicator indicates when the doors are open. Setting the *sys 2* switch to *open* controls a redundant ac motor and electromechanical actuators to open the minus Y and minus Z star tracker door, and limit switches stop the motors when the doors are open and control the talkback indicator above the *sys 2* switch in the same manner as for system 1. Positioning the *sys 1* switch to *close* drives the minus Y and minus Z door closed; the talkback indicator above the switch indicates *cl*. The door opening or closing time with two motors is six seconds; with one motor, it is 12 seconds. Setting the *sys 2* switch to *close*

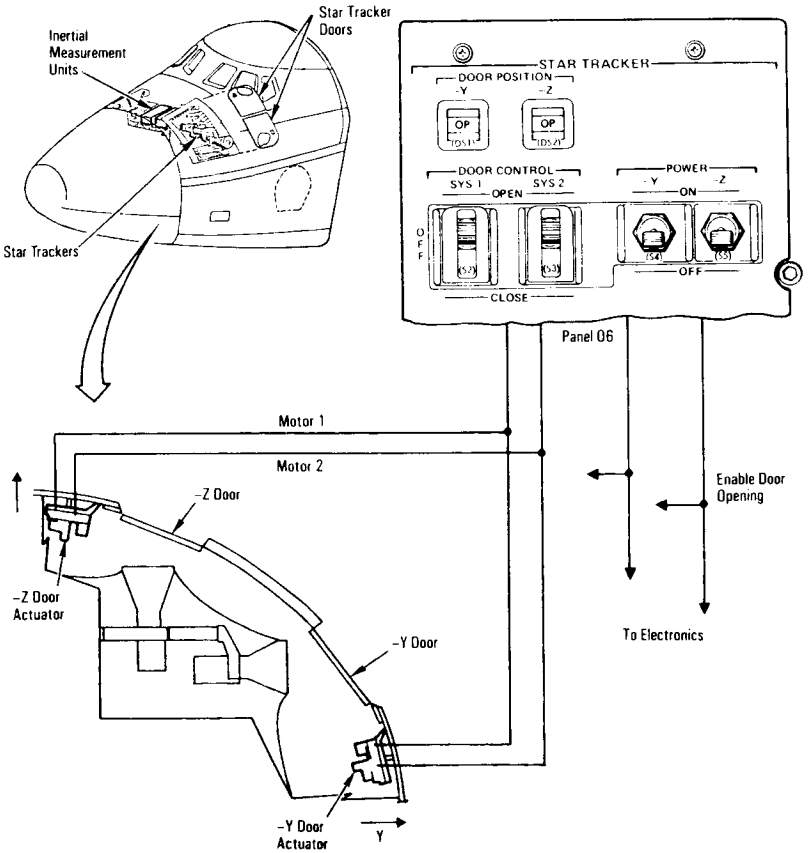


*Star Tracker Doors*

drives the system 2 motors and closes the minus Y and minus Z door; the talkback indicator above the switch indicates *cl*. The indicators indicate barberpole when a door is between open or closed. The *off* position of the *sys 1* or *2* switch removes power from the corresponding motor control logic circuitry.

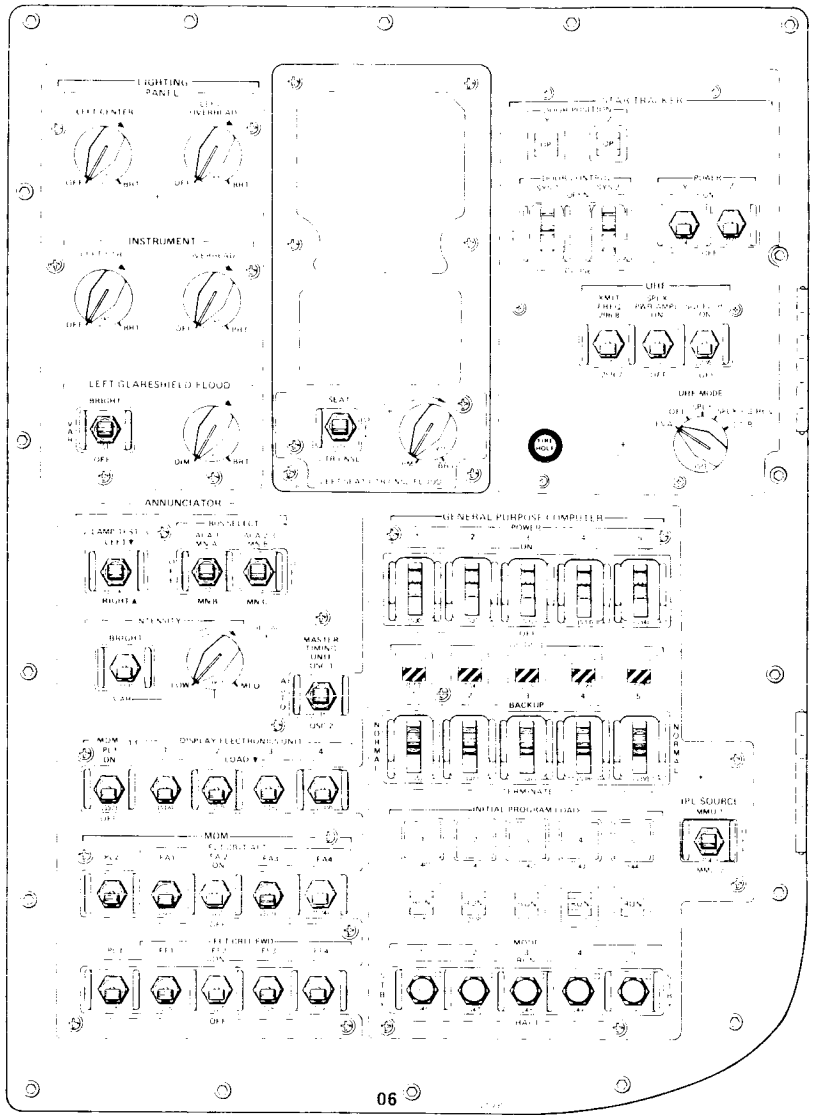


*Panel O6*

The difference between the inertial attitudes defined by the star tracker and the IMU is processed by software and results in IMU torquing angles. If the IMU gimbals are physically torqued or the matrix defining its orientation is recomputed, the effects of the IMU gyro drift are removed and the IMU is restored to its inertial attitude. If the IMU alignment is in error by more than 1.4 degrees, the star tracker is unable to acquire and track stars. In this case, the crewman optical alignment sight must be used to realign the IMUs to within 1.4 degrees; the star trackers can then be used to realign the IMUs more precisely. The star tracker cannot be used if the IMU alignment error is greater than 1.4 degrees because the angles the star tracker is given for searching are based on current knowledge of the orbiter attitude, which is based on IMU gimbal angles. If that attitude is greatly in error, the star tracker may acquire and track the wrong star.

In addition to aligning the IMUs, the star trackers can be used to provide angular data from the orbiter to a target. This capability can be used during rendezvous or proximity operations with a target satellite.



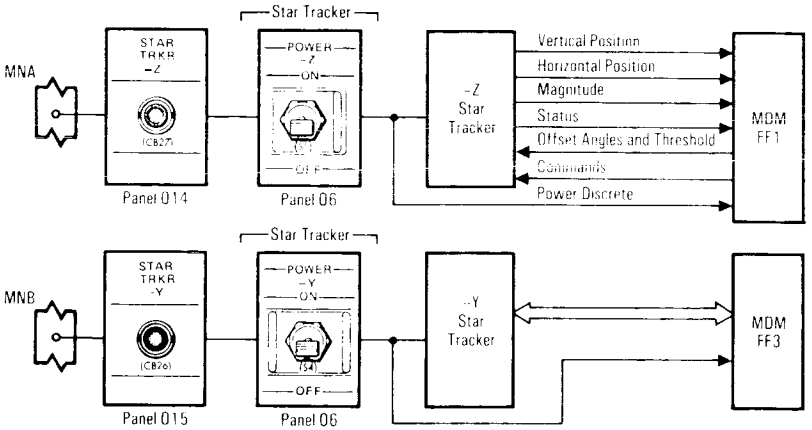


*Power and Data Interfaces of the Star Trackers*

The star tracker includes a light shade assembly and an electronics assembly mounted on top of the navigation base. The light shade assembly defines the tracker field of view (10 degrees square). Its shutter mechanism may be opened manually by the crew using an entry on the cathode ray tube display, or it can be opened and closed automatically by a bright object sensor or target suppress software. The bright object sensor reacts before a bright object, such as the sun or moon, can damage the star tracker (the sensor has a larger field of view than the star tracker shutter). The target suppress software reacts to a broad light source (such as the sunlit Earth), which may not trip the bright object sensor but could produce overall illumination large enough to cause photo currents larger than desired.

The electronics assembly contains an image dissector tube mounted on the underside of the navigation base. The star tracker itself does not move—the field of view is scanned electronically. The star tracker may be commanded to scan the entire field of view or a smaller offset field of view (1 degree square) about a point defined by horizontal and vertical offsets. An object is tracked when the proper intensity and the correct location are sensed. Star tracker outputs are the horizontal and vertical position within the field of view of the object being tracked and its intensity.

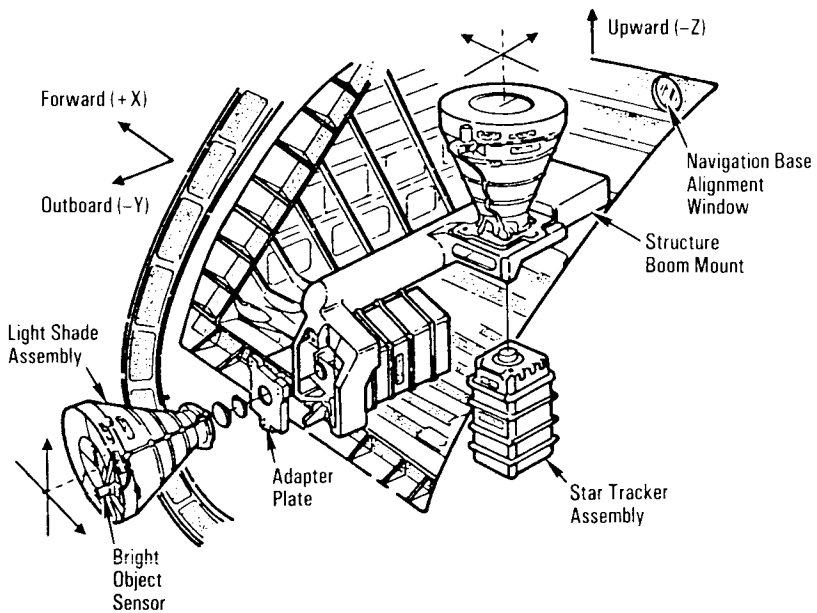


*View Into Star Tracker Cavity*

There is no redundancy management for the star tracker assemblies; they operate independently, and either can do the whole task. They can be operated either separately or concurrently.

The star tracker subsystem operating program supports the modes that are commanded manually: self-test, star track, target track, break track and term/idle. Self-test consists of software and hardware tests. In the star track mode, the star tracker does an offset scan search for the star, acquires it and tracks it. The star may be selected by the flight crew or GPC; in either case, field-of-view and occultation checks are made. Target track is the same as star track, but the flight crew must specify the target and its threshold. Break track forces the star tracker to stop tracking a star and to perform a search scan from the current location to track the next star it acquires. In the term/idle mode, the star tracker continues its operation, but all star tracker software processing ceases.

In addition, the star tracker SOP maintains the star table. When a star tracker has acquired and tracked a star and the data has passed software checks, the star identification, time tag and line-of-sight vector are stored. The identification and time elapsed since time tag are displayed in the star table. When two or three stars are in the table, the angular difference between their line-of-sight vectors is displayed. The difference between the star tracker and star catalog angular differences is displayed as an error. The star tracker SOP selects line-of-sight vectors of two stars in the star table for IMU alignment and outputs an *align ena* discrete. The software selects the star pair whose angular difference is closest to 90 degrees or the pair whose elapsed time of entry into the table is less than 60 minutes. The flight crew may manually override the SOP selection or clear the table if desired.

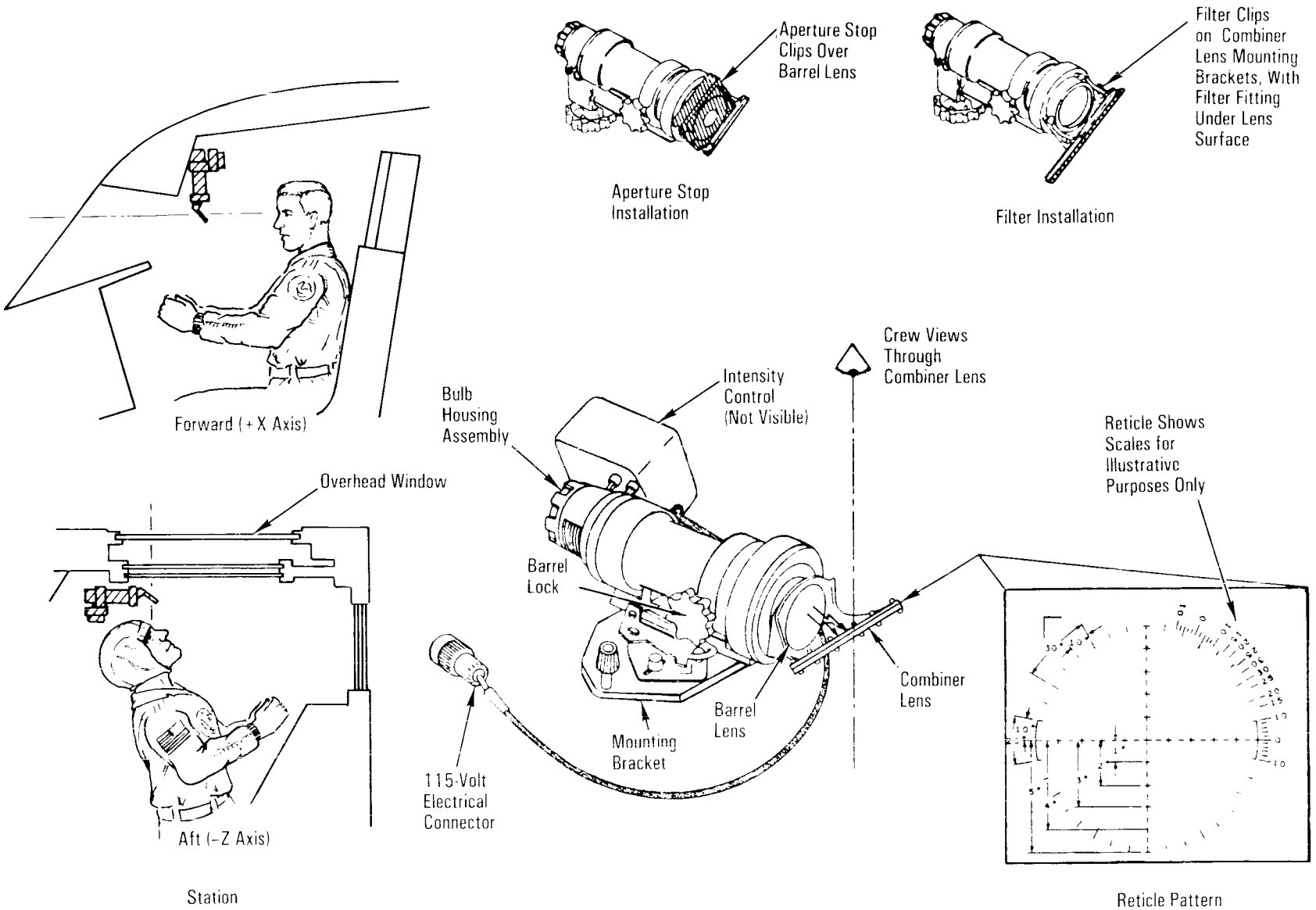


*Crewman Optical Alignment Sight*

The SOP also determines and displays star tracker status.

The contractor for the star trackers is Ball Brothers, Boulder, Colo.

**Crewman Optical Alignment Sight.** The crewman optical alignment sight is used if inertial measurement unit alignment is in error by more than 1.4 degrees, rendering the star tracker unable to acquire and track stars. The COAS must be used to realign the IMUs to within 1.4 degrees. The star trackers can then be used to realign the IMUs more precisely.

The COAS is mounted at the commander's station so the crew can check for proper attitude orientation during ascent and deorbit thrusting periods. For on-orbit operations, the COAS at the commander's station is removed and installed next to the aft flight deck overhead right minus Z window.

The COAS is an optical device with a reticle projected on a combining glass that is focused on infinity. The reticle consists of 10-degree-wide vertical and horizontal cross hairs with 1-degree marks and an elevation scale on the right side of minus 10 to 31.5 degrees. A light bulb with variable brightness illuminates the reticle. The COAS requires 115-volt ac power for reticle illumination. The COAS is 9.5 by 6 by 4.3 inches and weighs 2.5 pounds.

After mounting the COAS at the aft flight station, the flight crew member must manually maneuver the orbiter until the selected star is in the field of view. The crew member maneuvers the orbiter so that the star crosses the center of the reticle. At the instant of the crossing, the crew member makes a mark by depressing the most convenient *att ref* push button; the three *att ref* push buttons are located on panels F6, F8 and A6. At the time of the mark, software stores the gimbal angles of the three IMUs. This process can be repeated if the accuracy of the star's centering is in doubt. When the crew member feels a good mark has been taken, the software is notified to accept it. Good marks for two stars are required for an IMU alignment. The separation between the two stars should be between 60 and 120 degrees.

By knowing the star being sighted and the COAS's location and mounting relationship in the orbiter, software can determine a line-of-sight vector from the COAS to the star in an inertial coordinate system. Line-of-sight vectors to two stars define the attitude of the orbiter in inertial space. This attitude can be compared to the attitude defined by the IMUs and can be realigned to the more correct orientation by the COAS sightings if the IMUs are in error.

The COAS's mounting relative to the navigation base on which the IMUs are mounted is calibrated before launch. The constants are stored in software, and COAS line-of-sight vectors are

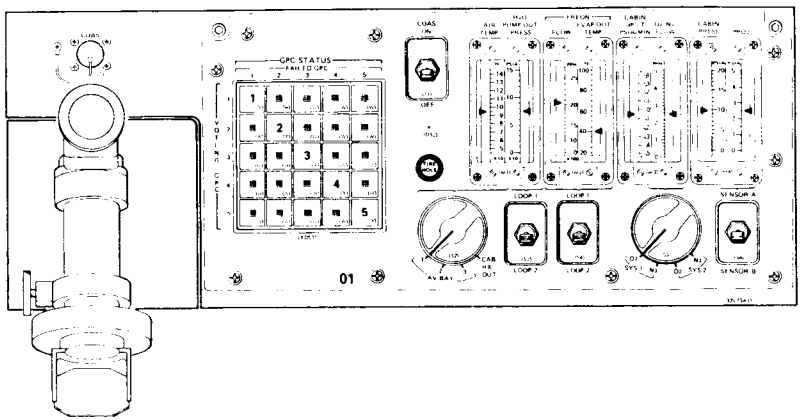


*Panel O1*

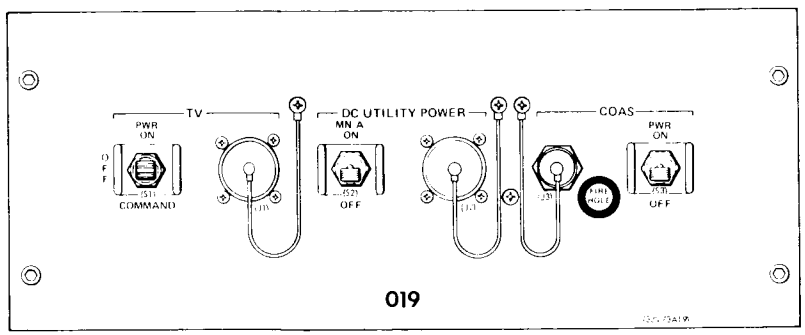


*Panel O19*

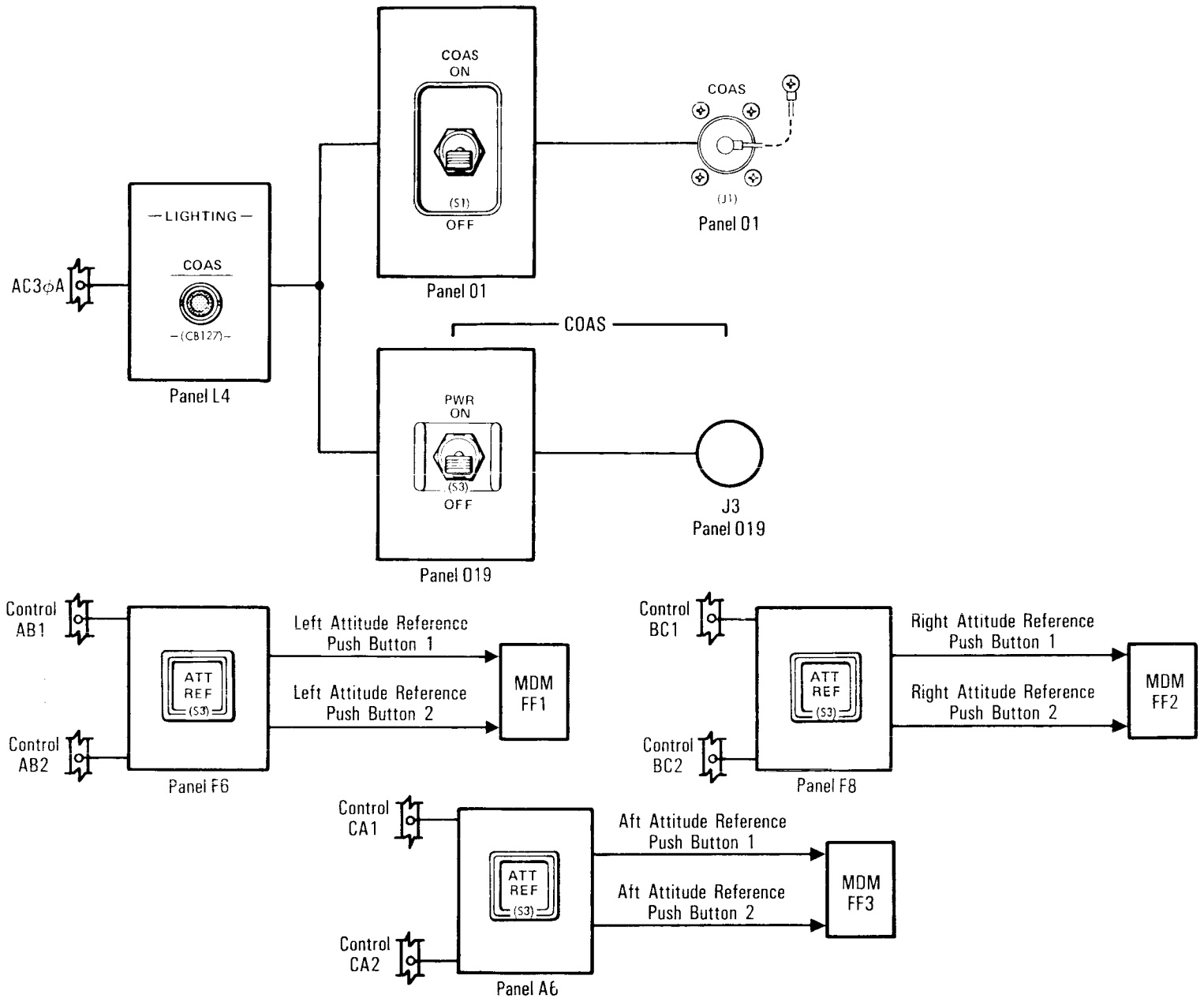


*Power and Data Interfaces of Crewman Optical Alignment Sight and Attitude Reference Push Buttons*

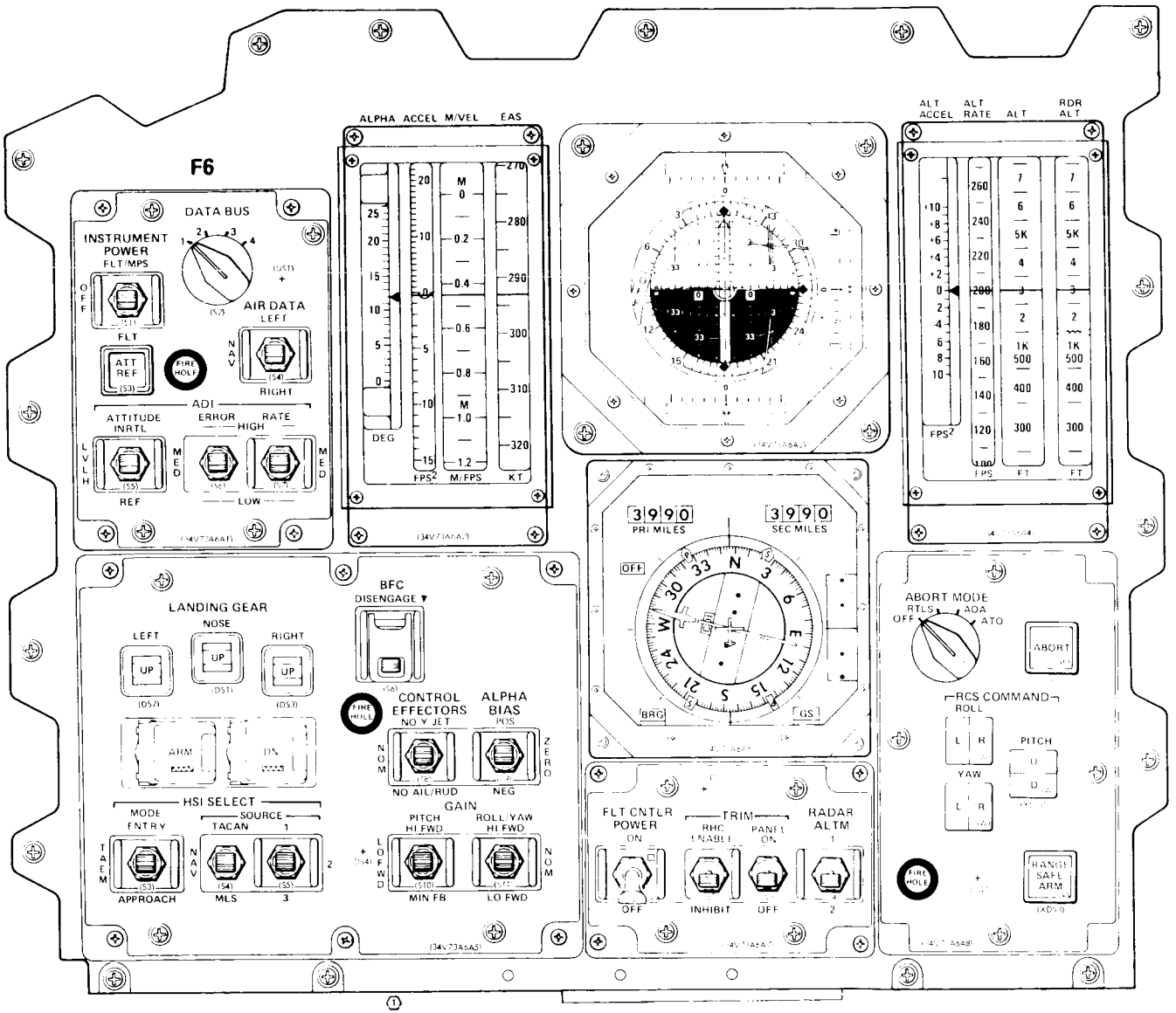
F6
DATA BUS
INSTRUMENT POWER
FLT/MPS
AIR DATA
LEFT
RIGHT
FLT
ATT REF
FIRE HOLE
ADI
ATTITUDE INRTL
ERROR
RATE
HIGH
LOW
REF
ALPHA ACCEL M/VEL EAS
DEG
FPS²
M/FPS
KT
ALT ACCEL
ALT RATE
ALT
RDR ALT
FPS
FT
PRI MILES
SEC MILES
OFF
BRG
GS
LANDING GEAR
NOSE
LEFT
RIGHT
UP
ARM
DN
BFC
DISENGAGE
CONTROL EFFECTORS
NO Y JET
ALPHA BIAS
POS
NO AIL/RUD
NEG
NOM
ZERO
HSI SELECT
MODE
ENTRY
SOURCE
TACAN
APPROACH
MLS
GAIN
PITCH
HI FWD
ROLL/YAW
MIN FB
LO FWD
FLT CNTLR POWER
ON
OFF
TRIM
RHC ENABLE
PANEL ON
INHIBIT
RADAR ALTM
ABORT MODE
RTLS
AOA
ATO
ABORT
RCS COMMAND
ROLL
PITCH
YAW
RANGE SAFE ARM

*Panel F6*

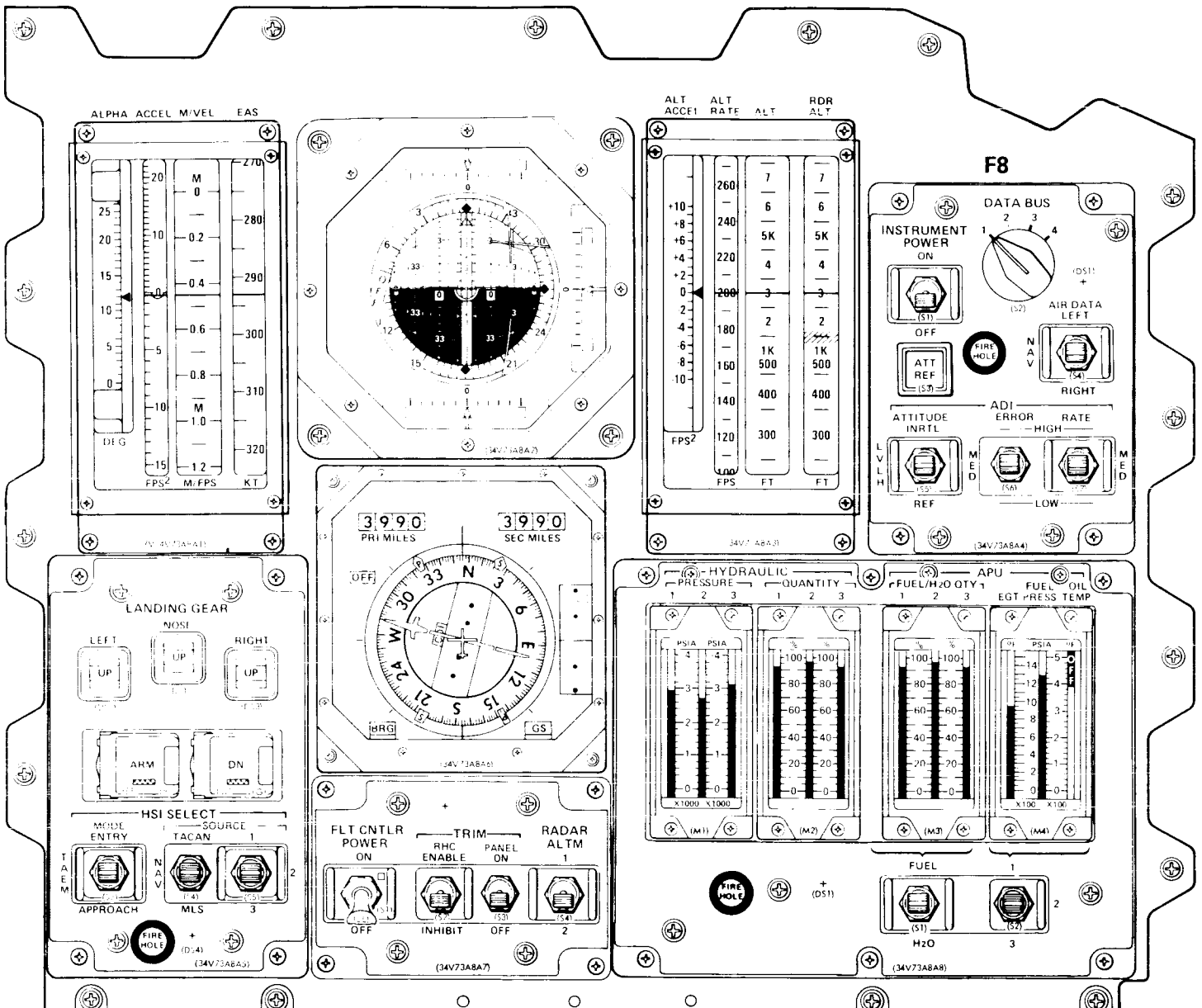
F8
ALPHA ACCEL M/VEL EAS
DEG
FPS2 M/FPS KT
ALT ACCEL ALT RATE ALT RDR ALT
FPS2
FPS FT FT
DATA BUS
INSTRUMENT POWER
ON
OFF
ATT REF
AIR DATA LEFT
RIGHT
ADI
ATTITUDE INRTL
ERROR RATE
HIGH
LOW
REF
LANDING GEAR
NOSE
LEFT
RIGHT
UP
ARM
DN
HSI SELECT
MODE ENTRY
SOURCE
TACAN
APPROACH
MLS
FIRE HOLE
3990
PRI MILES
3990
SEC MILES
OFF
BRG
GS
FLT CNTLR POWER
ON
OFF
TRIM
RHC ENABLE
PANEL ON
INHIBIT
OFF
RADAR ALTM
HYDRAULIC
PRESSURE
QUANTITY
APU
FUEL/H2O QTY
FUEL OIL
EGT PRESS TEMP
PSIA
FUEL
H2O
(34V73A8A1)
(34V73A8A2)
(34V73A8A3)
(34V73A8A4)
(34V73A8A6)
(34V73A8A7)
(34V73A8A8)

*Panel F8*

based on known relationships between the COAS line of sight and the navigation base.

COAS can also be used to visually track targets during proximity operations or to visually verify tracking of the correct star by the minus Z star tracker.

COAS data processing is accomplished in the star tracker SOP. This SOP accepts and stores crew inputs on COAS location, star identification or calibration mode; accepts marks; computes and stores the line-of-sight vectors; enables IMU alignment when two marks have been accepted; and computes, updates and provides display data.

**TACAN.** The onboard tactical air navigation units determine slant range and magnetic bearing of the orbiter to a TACAN or VHF omnirange TACAN ground station.

The ground-based TACAN and VHF omnirange TACAN

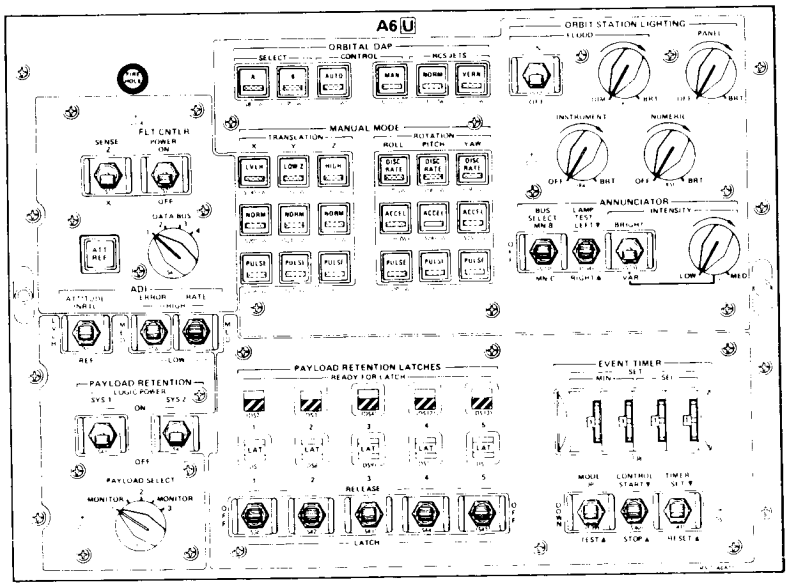


*Panel A6*

stations constitute a global navigation system for military and civilian aircraft operating at L-band frequencies (1 gigahertz).

The orbiter is equipped with three TACAN sets that operate redundantly. Each TACAN has two antennas: one on the orbiter's lower forward fuselage and one on the orbiter's upper forward fuselage. The antennas are covered with reusable thermal protection system tiles.

The onboard TACAN sets are used for external navigation and for the orbiter during the entry phase and return-to-launch-site abort. Normally, several ground stations will be used after leaving L-band communications blackout and during the terminal area energy management phases. TACAN's maximum range is 400 nautical miles (460 statute miles).

Each ground station has an assigned frequency (L-band) and a three-letter Morse code identification. The ground station transmits on one of 252 (126X, 126Y) preselected frequencies (channels) that correspond to the frequencies the onboard TACAN sets are capable of receiving. These frequencies are spaced at 63-MHz intervals.

The TACAN ground station beacon continuously transmits pulse pairs on its assigned frequency. The orbiter TACAN receivers pick up these pulse pairs, and the TACAN data processors decode them to compute bearing. The onboard TACAN sets detect the phase angle between magnetic north and the position of the orbiter with respect to the ground station. The ground beacon is omnidirectional; when the orbiter is over the ground station, or nearly so, it is in a cone of confusion. Within this cone, bearing is unusable.

Periodically, the onboard TACAN sets emit an interrogation pulse that causes the selected TACAN ground station to respond with distance-measuring equipment pulses. The slant range (orbiter to ground station) is computed by the onboard TACAN sets by measuring the elapsed time from interrogation to valid reply and subtracting known system delays. As the orbiter approaches a ground TACAN station, the range decreases. After a

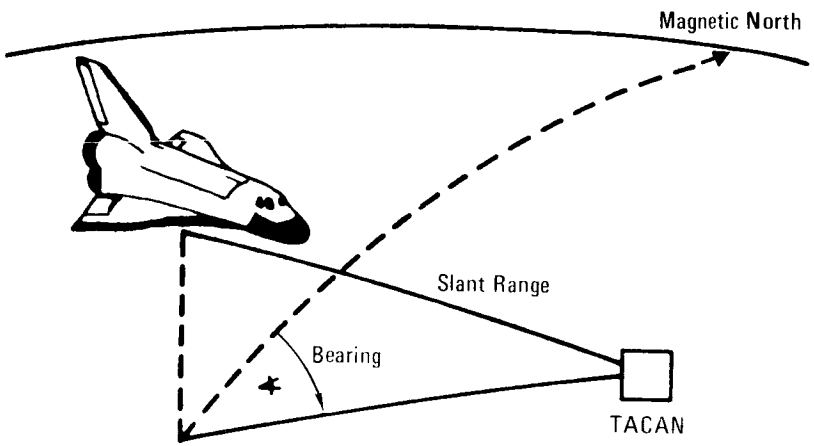


*Tactical Air Navigation*

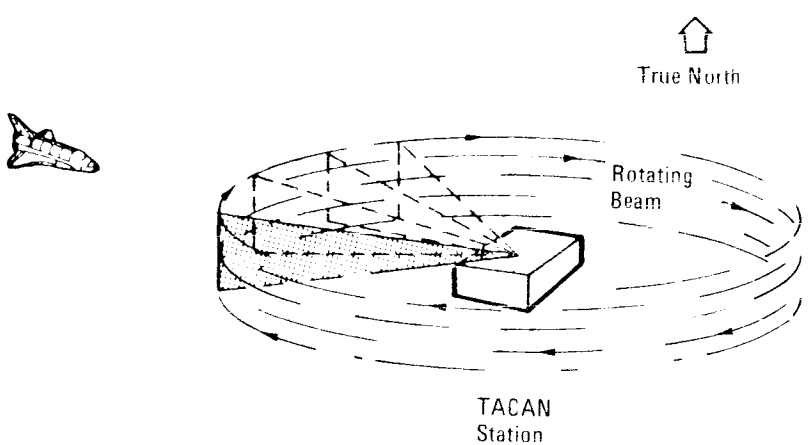


- TACAN station transmits RF burst when beam points to true north.
  - Aircraft receiver times interval from burst to beam impingement and derives bearing.

*TACAN Operation*

course has been selected, the onboard TACAN sets derive concise deviation data.

The range and bearing data are used to update the state vector position components after the data are transformed by the TACANs in the entry phase (or return to launch site) by navigation and for display on the horizontal situation indicators on panels F6 and F8, as well as for display of raw TACAN data on the cathode ray tube.

Each of the onboard TACANs has an *ant sel* switch on panel O7. In the *auto* position, the onboard GPCs automatically select the upper L-band antenna or lower L-band antenna for that TACAN. The *upper* and *lower* positions of each TACAN *ant sel* switch allow the flight crew to select the upper or lower L-band antenna manually.

Each of the onboard TACANs is controlled by its *mode* rotary switch on panel O7. The modes are off, receive, transmit and receive, and GPC. In the GPC mode, the onboard GPCs control TACAN ground station channel selection automatically, and both bearing and range are processed by hardware and software. In the transmit and receive mode, both bearing and range are processed by hardware and software, but TACAN ground station channels are selected manually using the four thumbwheels for that TACAN on panel O7. The first three thumbwheels (left to right) select the channel (frequency), and the fourth selects the X or Y. In the receive mode, only bearing is received and processed by the hardware; the thumbwheels for that TACAN would be used to select the channel.

Approximately every 37 seconds, the selected ground TACAN station transmits its three-letter identification to the onboard TACAN. In order for the Morse code identification to be verified by the commander and pilot, *TACAN ID* audio controls are located on panel O5 for the commander and panel O9 for the pilot. The *TACAN on/off* switch is positioned to *on* to transmit the TACAN identification. The *TACAN 1*, *2* and *3* switch selects the onboard TACAN that will transmit the TACAN identification

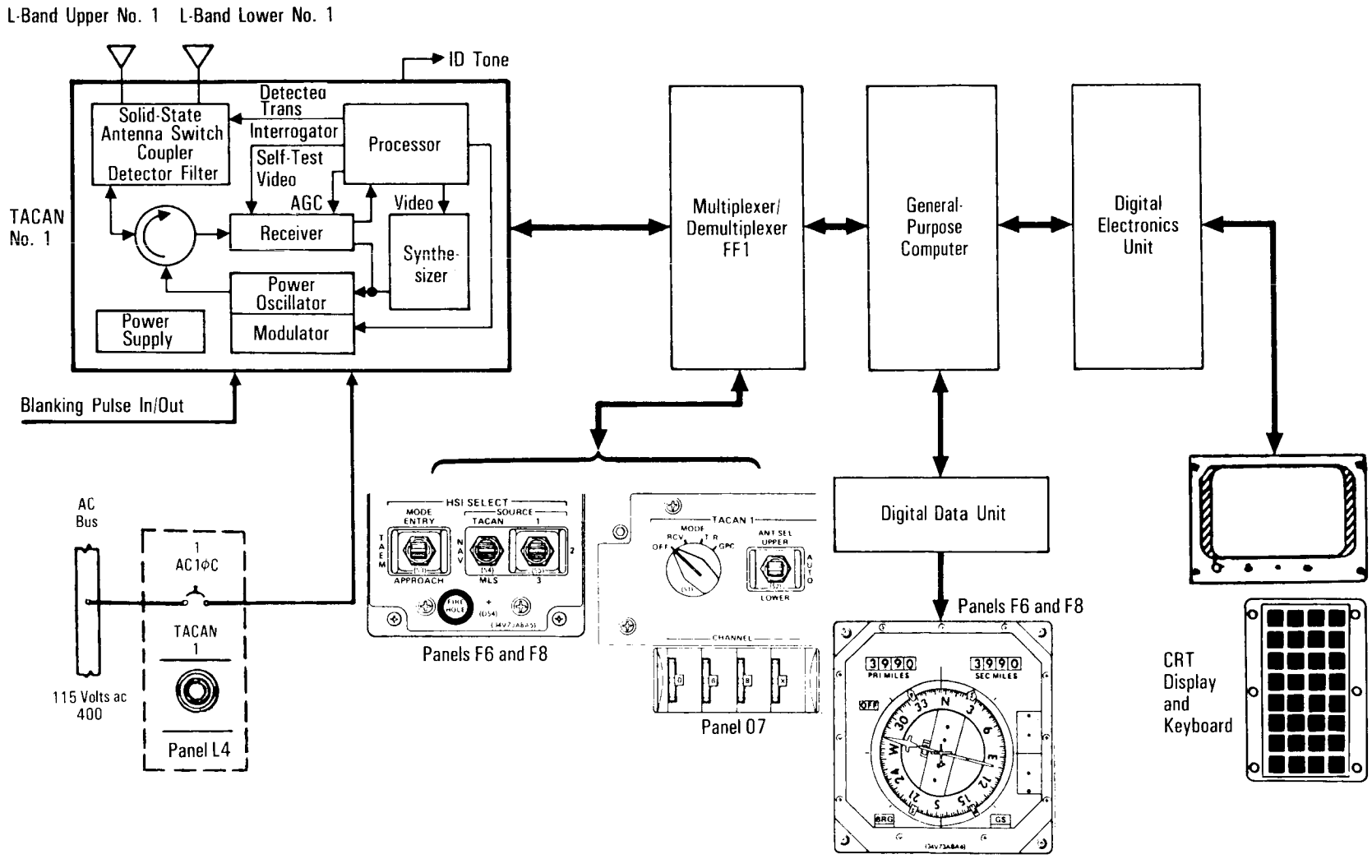


*TACAN Receiver/Transmitter*

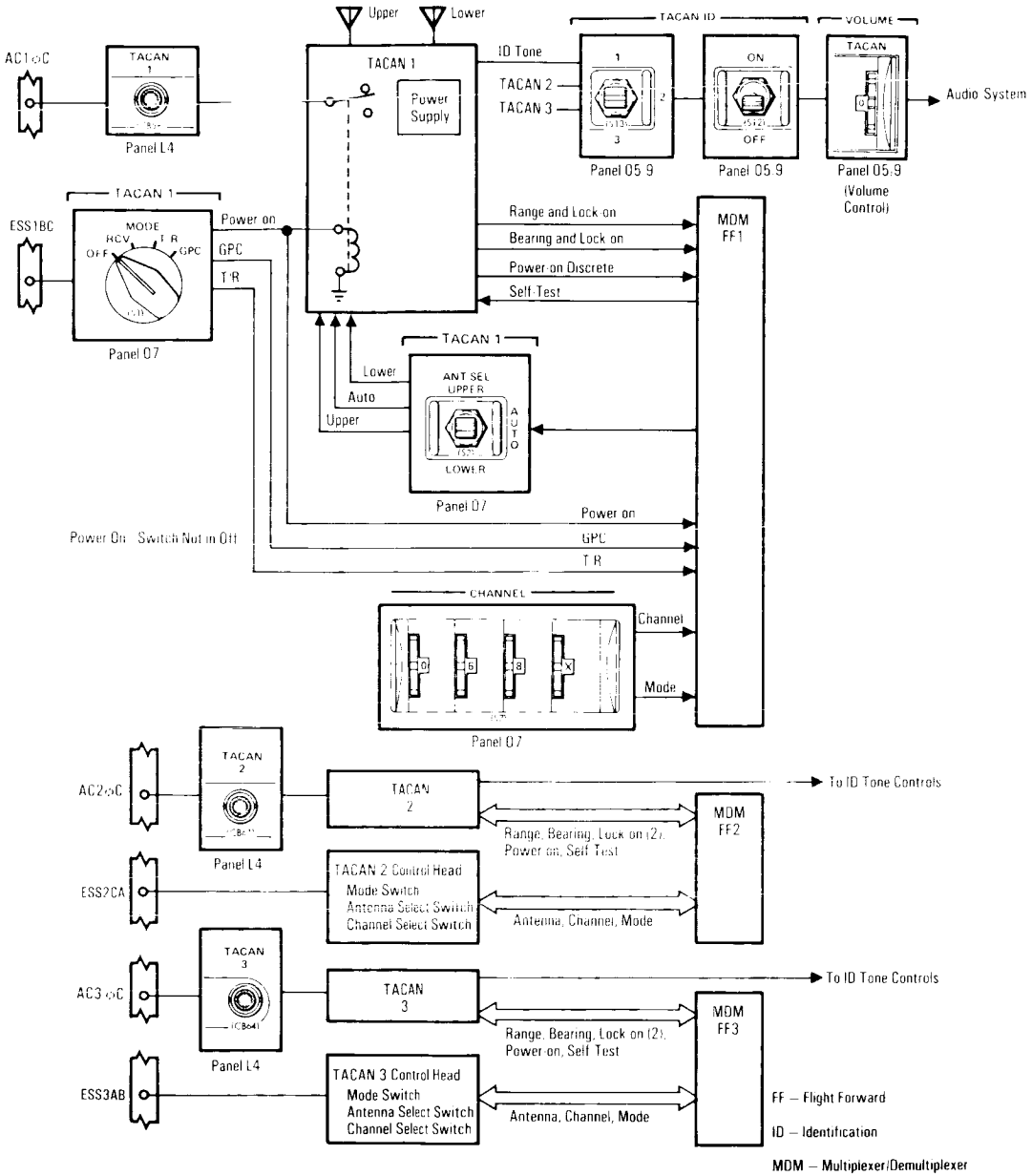


*TACAN Power and Data Interfaces*

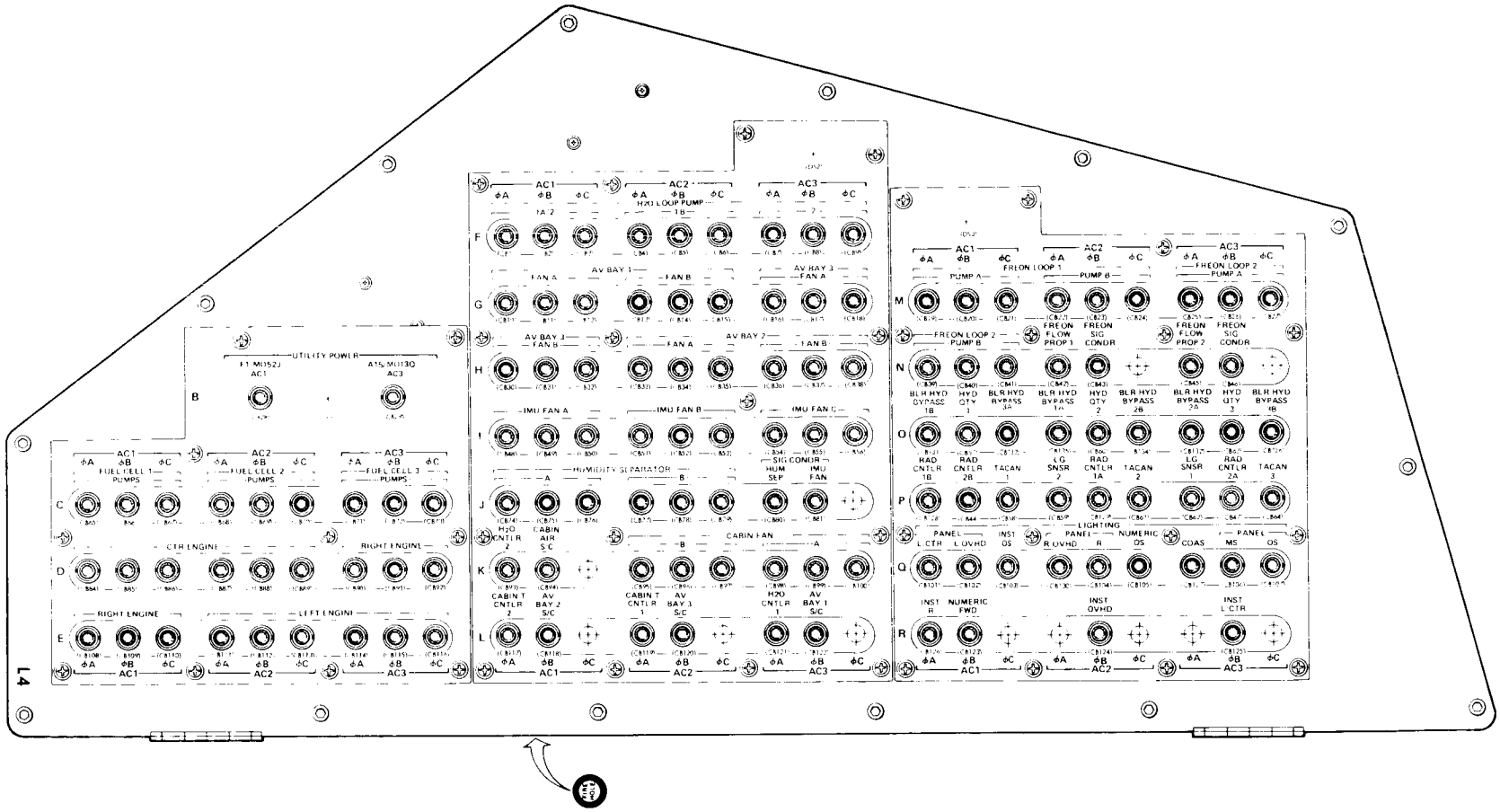
L4
UTILITY POWER
F1 MO52J
AC1
A15 MO130
AC3
FUEL CELL 1
PUMPS
FUEL CELL 2
PUMPS
FUEL CELL 3
PUMPS
CTR ENGINE
RIGHT ENGINE
RIGHT ENGINE
LEFT ENGINE
H2O LOOP PUMP
AV BAY 1
FAN A
FAN B
AV BAY 3
FAN A
AV BAY 3
FAN B
AV BAY 2
FAN A
FAN B
IMU FAN A
IMU FAN B
IMU FAN C
HUMIDITY SEPARATOR
SIG CONDR
HUM SEP
IMU FAN
H2O CNTLR 2
CABIN AIR S/C
CABIN FAN
CABIN T CNTLR 2
AV BAY 2 S/C
CABIN T CNTLR 1
AV BAY 3 S/C
H2O CNTLR 1
AV BAY 1 S/C
FREON LOOP 1
PUMP A
PUMP B
FREON LOOP 2
PUMP A
FREON LOOP 2
PUMP B
FREON FLOW PROP 1
FREON SIG CONDR
FREON FLOW PROP 2
FREON SIG CONDR
BLR HYD BYPASS 1B
HYD QTY 1
BLR HYD BYPASS 3A
BLR HYD BYPASS 1A
HYD QTY 2
BLR HYD BYPASS 2B
BLR HYD BYPASS 2A
HYD QTY 3
BLR HYD BYPASS 4B
RAD CNTLR 1B
RAD CNTLR 2B
TACAN 1
LG SNSR 2
RAD CNTLR 1A
TACAN 2
LG SNSR 1
RAD CNTLR 2A
TACAN 3
LIGHTING
PANEL L CTR
L OVHD
INST OS
PANEL R OVHD
R
NUMERIC OS
COAS
PANEL MS
OS
INST R
NUMERIC FWD
INST OVHD
INST L CTR

*Panel L4*

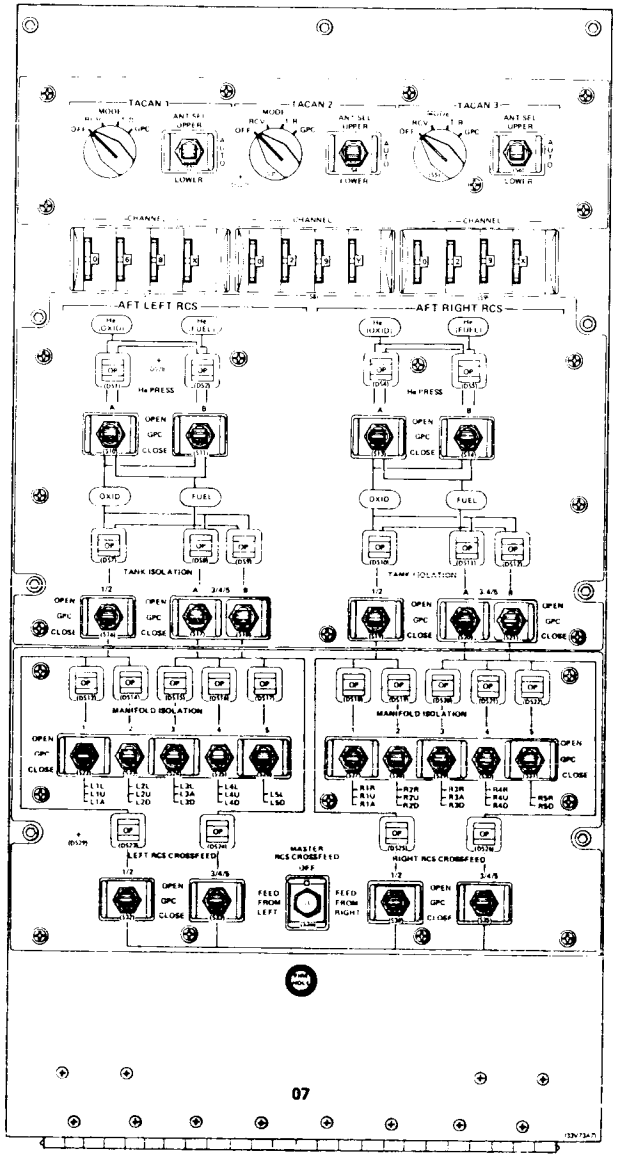


*Panel O7*

code, and the *TACAN on/off* switch is positioned to *on* to transmit the code to the orbiter's audio system, thus the commander and pilot. *Volume TACAN* thumbwheels on panels O5 and O9 control the volume setting of the TACAN identification code to the commander and pilot.

In the GPC mode, 10 TACAN ground stations are programmed into the software and are divided into three geometric regions: the acquisition region (three stations), the navigation region (six stations), and the landing site region (one station).

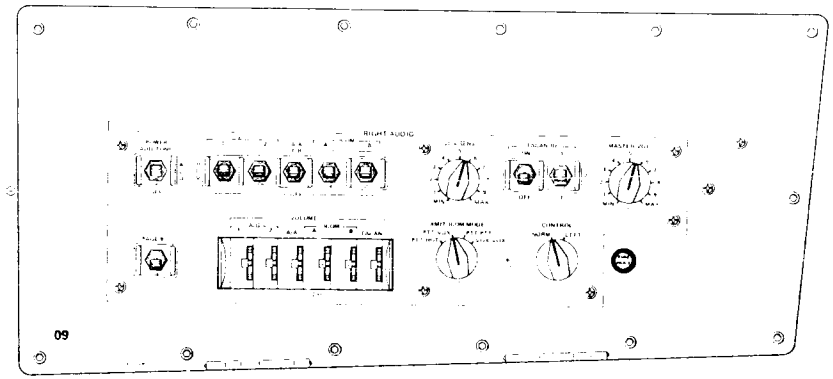


*Panel O9*

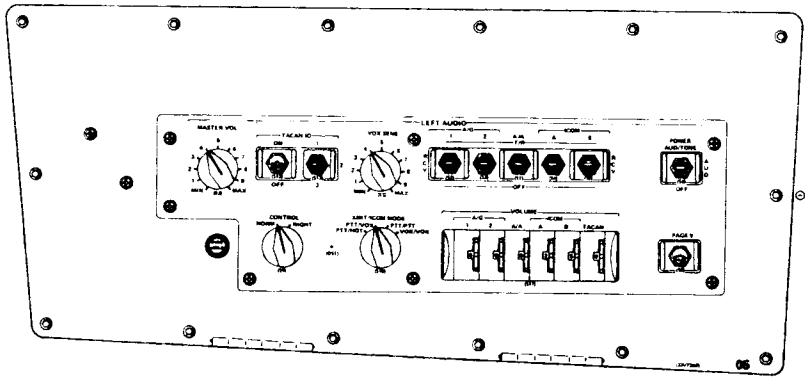


*Panel O5*

During orbital operations, landing sites are grouped into minitable and maxitable programs. The maxitable programs provide data sets that support a broad range of trajectories for contingency deorbits and enable reselection of runway and navigation and data sets for those deorbits. The minitable consists of three runways determined by the flight crew, one of which is initialized as a primary runway. The minitable is transferred from entry operations and becomes unchangeable. Entry guidance is targeted from one of the three runways selected by the crew, initialized with the primary runway for the well-defined trajectory and nominal end-of-mission data sets. Since the TACAN units are placed in groups of 10 and 10 TACAN units from one group (primary) form the TACAN half of the minitable, the secondary and alternate runways should be from the same group as the primary runway to assure TACAN coverage.

The acquisition region is the area in which the onboard TACAN sets automatically begin searching for a range lock-on of three ground stations at approximately 160,000 feet. After one TACAN acquires a range lock, the other two will lock on to the same ground station. When at least two TACAN sets lock on, TACAN range and bearing are used by navigation to update state vector until microwave scan beam landing system selection and acquisition at approximately 18,000 feet.

When the distance to the landing site is approximately 120 nautical miles (138 statute miles), the TACAN begins the navigation region of interrogating the six navigation stations. As the spacecraft progresses, the distance to the remaining stations is computed. The next-nearest station is automatically selected when the spacecraft is closer to it than to the previous locked-on station. Only one station is interrogated when the distance to the landing site is less than approximately 20 nautical miles (23 statute miles). Again, the TACAN sets will automatically switch from the last locked-on navigation region station to begin searching for the landing site station. TACAN azimuth and range are provided on the horizontal situation indicator. TACAN range and bearing cannot be used to produce a good estimate of the altitude position component, so navigation uses barometric altitude derived from the air data system probes, which are deployed by the fight crew at approximately Mach 3.

If the microwave scan beam landing system is not acquired, TACAN data can be used until an altitude of 1,500 feet. When runways with MSBLS are acquired, MSBLS operation can be automatic. The flight crew is provided with the controls and displays necessary to evaluate MSBLS performance and take over manually if required. The runways with MSBLS must be in the primary or secondary slot in the minitable for the minitable to copy the MSBLS data. The maxitable is an initial-loaded table of 18 runway data sets and MSBLS data for runways and 50 TACAN data sets. In orbital operations, the landing site function provides the capability to transfer data from the maxitable to the minitable.

TACAN data is processed in the TACAN subsystem operating program, which converts range and bearing to units of feet and radians.

TACAN redundancy management consists of processing and mid-value-selecting range and bearing data. The three TACAN sets are compared to determine if a significant difference is detected. When all three TACAN sets are good, redundancy management selects middle values of range and bearing. If one of the two parameters is out of tolerance, the remaining two will average that parameter. If a fault is verified, the *SM alert* light is illuminated, and a cathode ray tube fault message occurs for the applicable TACAN set.

The three convection-cooled TACAN sets are located in the orbiter crew compartment middeck avionics bays. Each set is 7.62 inches high, 7.62 inches wide and 12.53 inches long and weighs 30 pounds.

The TACAN contractor is Hoffman Electronics Corporation, Navigation Communication System Division, El Monte, Calif.

**Air Data System.** Two air data probes are located on the left and right sides of the orbiter's forward lower fuselage. During the ascent, on-orbit, deorbit and initial entry heat load environment phases, the probes are stowed inside the forward lower fuselage. The air data probe (except for the probe itself) is covered by ther-

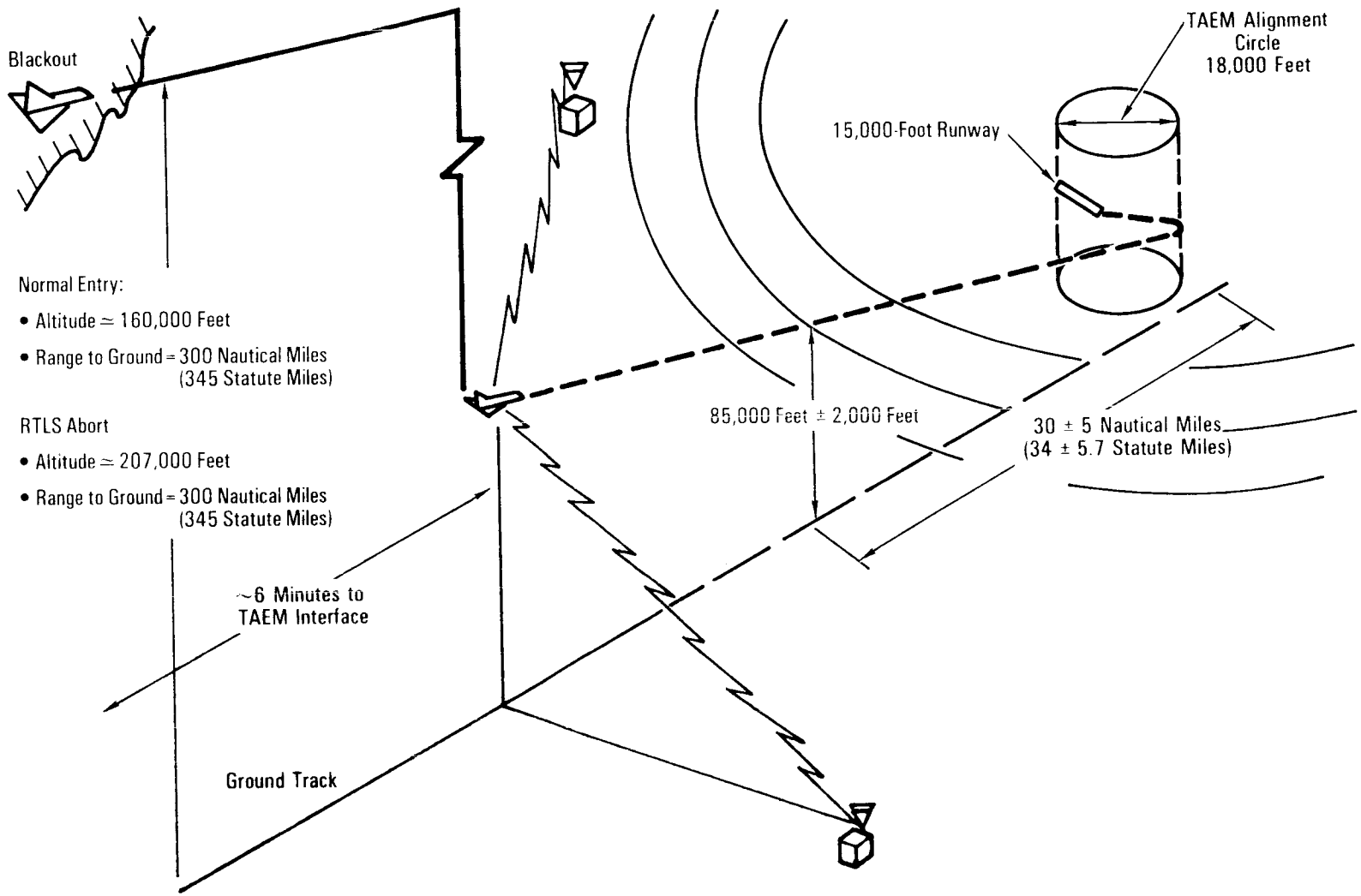


*TACAN Approach Geometry*

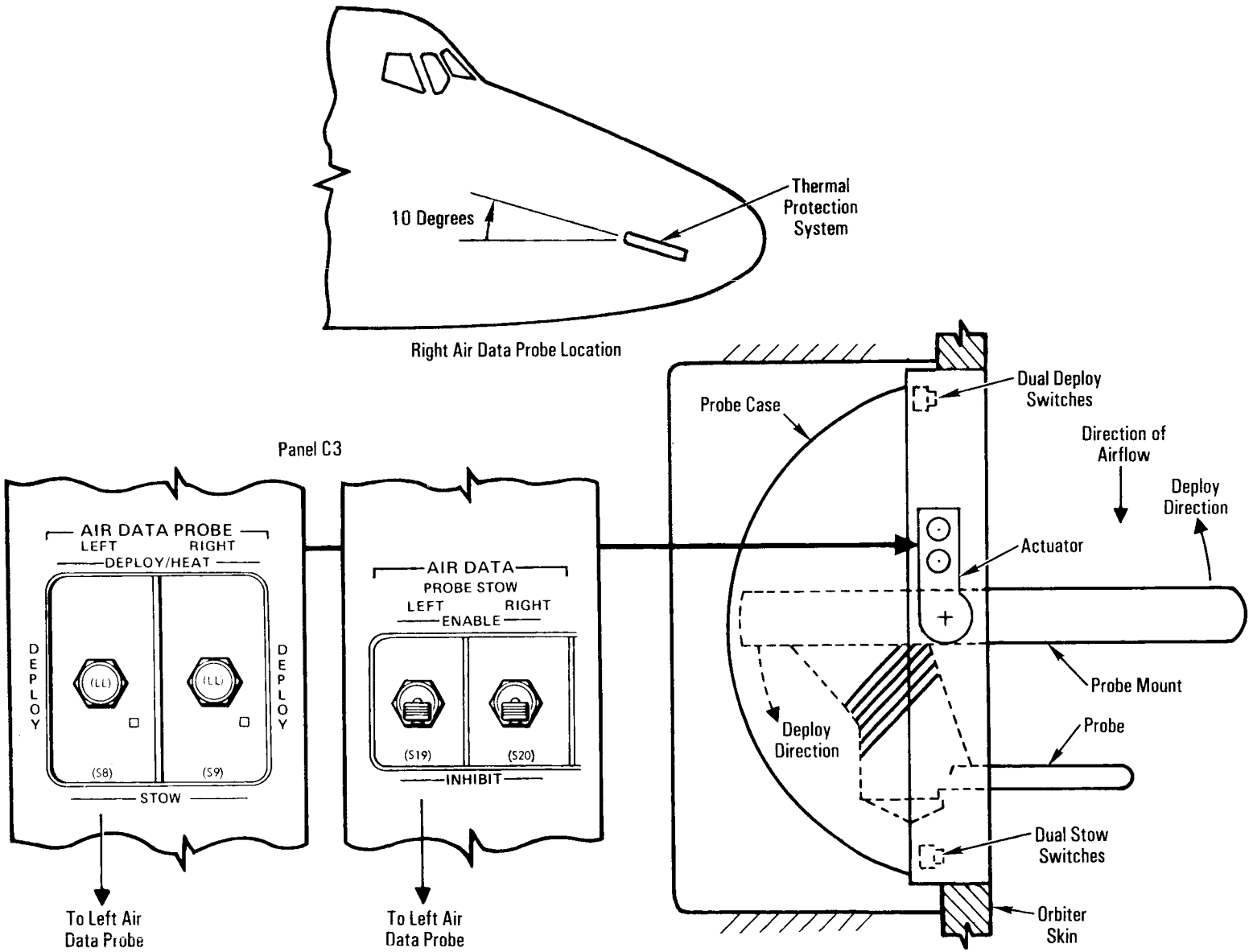


*Air Data Probe*

mal protection system tiles while in the stowed position. At approximately Mach 3, the air data probes are deployed.

The air data system provides information on the movement of the orbiter in the air mass (flight environment).

The air data system senses air pressures related to spacecraft movement through the atmosphere to update navigation state vector in altitude; provide guidance in calculating steering and speed brake commands; and update flight control law computations and provide display data for the commander's and pilot's alpha Mach indicators, altitude/vertical velocity indicators and CRTs. The AMIs display essential flight parameters relative to the spacecraft's travel in the air mass, such as angle of attack (alpha), acceleration, Mach/velocity and knots equivalent airspeed. The altitude/vertical velocity indicators display such essential flight parameters as radar altitude, barometric altitude, altitude rate and altitude acceleration.

Each probe is independently deployed by an actuator consisting of two ac motors connected to rotary electromechanical actuator and limit switches. Each probe is controlled by its *air data probe* switch on panel C3. To deploy the air data probes, the *left* and *right* switches are positioned to *deploy*. The redundant motors for each probe drive the probe to the deployed position. When the probe is fully deployed, limit switches remove electrical power from the motors. Deployment time is 15 seconds for two-motor operation and 30 seconds for single-motor operation. The *deploy* position deploys the probe without electrical heaters. The *deploy/heat* position also deploys the air data probes with heaters powered.

The *air data probe stow left* and *right* switches on panel C3 are used during ground turnaround operations to stow the respective probe. Positioning the respective switch to *enable* and positioning the corresponding *air data probe* switch to *stow* stows the corresponding air data probe. The *air data probe stow inhibit* position opens the ac motor circuits, disables the stow and protects microswitches.

Each air data probe has four pressure-port sensors and two temperature sensors. The pressures sensed are static pressure, total pressure, angle-of-attack upper pressure and angle-of-attack lower pressure. The four pressures are sensed at ports on each probe: static pressure at the side, total pressure at the front and angle-of-attack lower near the bottom front. The probe-sensed pressures are connected by a set of pneumatic lines to two air data transducer assemblies. The two temperature sensors are installed on each probe and are wired to an ADTA. The pressures sensed by the left probe are connected by pneumatic tubing to ADTAs 1 and

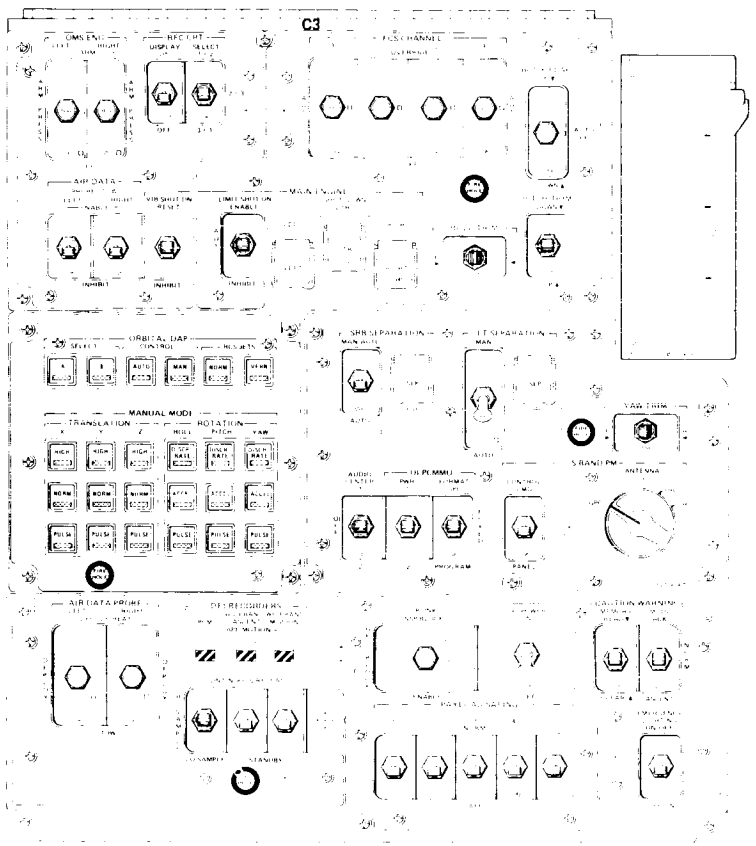


*Panel C3*

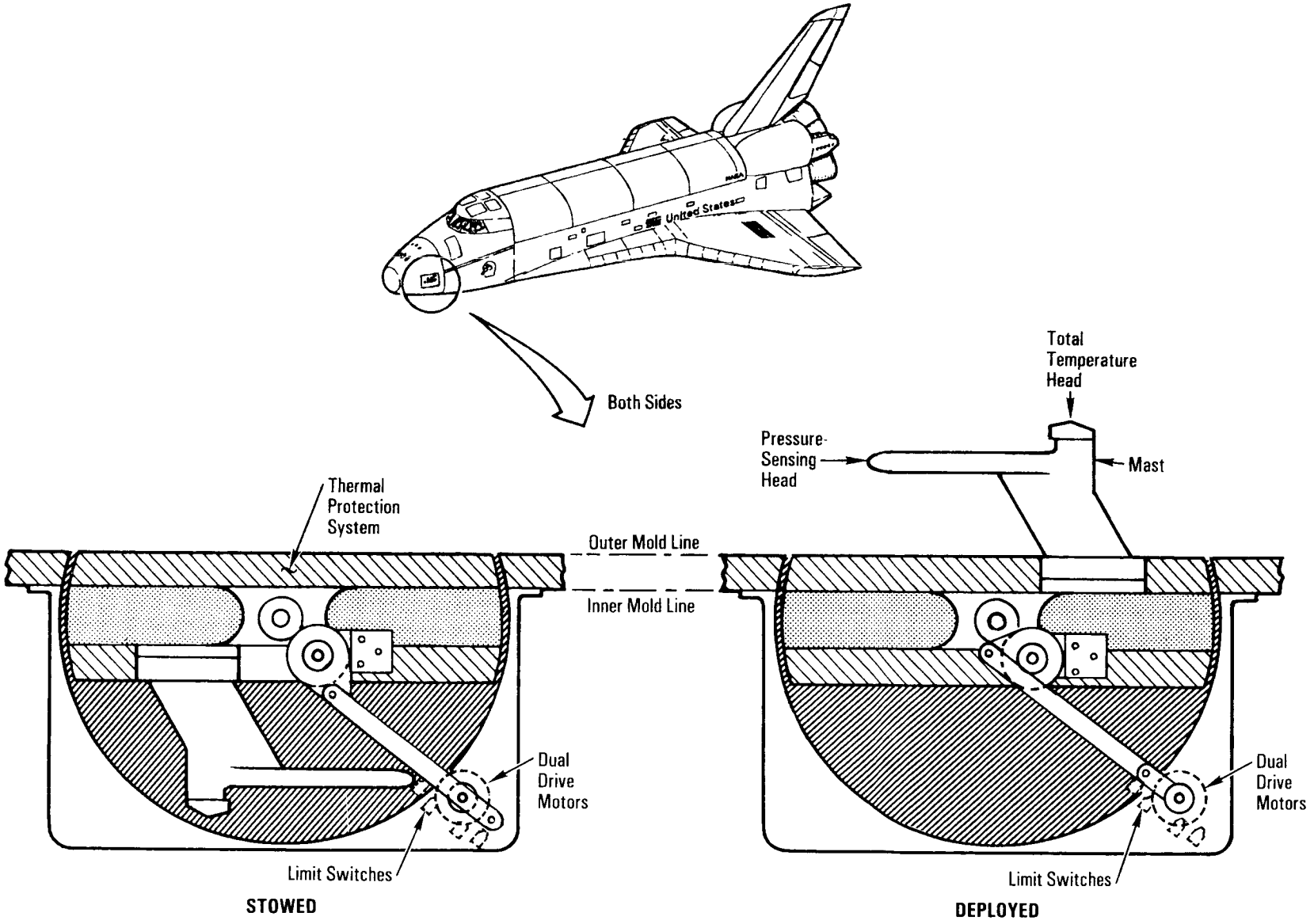


*Air Data Probe Assembly*

3. Those sensed by the right probe are connected to ADTAs 2 and 4. Temperatures and sensed pressure from the probes are sent to the same ADTAs.

Within each ADTA, the pressure signals are directed to four transducers, and the temperature signal is directed to a bridge. The pressure transducer analogs are converted to digital data by digital-processor-controlled counters. The temperature signal is converted by an analog-to-digital converter. The digital processor corrects errors, linearizes the pressure data and converts the temperature bridge data to temperatures in degrees centigrade. These data are sent to the digital output device, which converts the signals into serial digital format, and then to the onboard computers to update the navigation state vector. The data are also sent to the commander's and pilot's altitude/vertical velocity indicators, alpha Mach indicators and CRT.

The ADTA SOP uses ADTA data to compute angle of attack, Mach number (M), equivalent airspeed (EAS), true airspeed (TAS), dynamic pressure (q), barometric altitude (h) and altitude rate (ḣ).

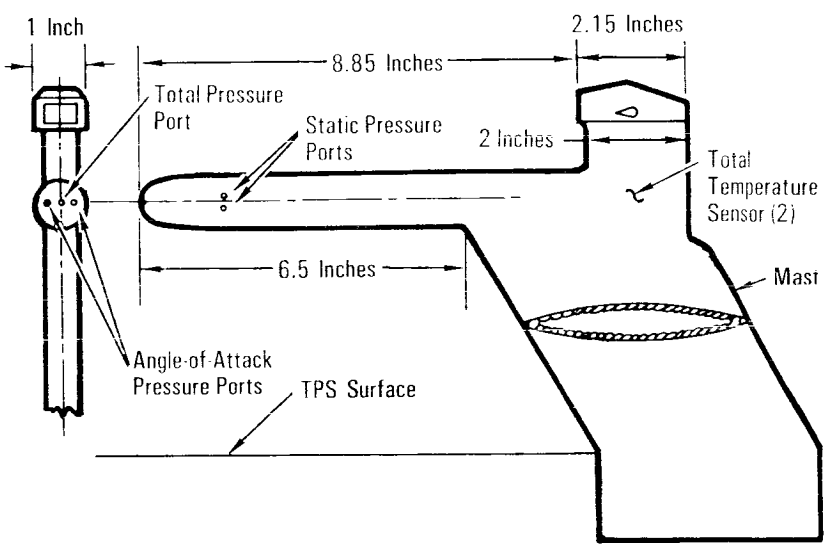


Mast Heater and Total Temperature Heater Not Shown

*Air Data Probe*

The altitude/vertical velocity indicators and alpha Mach indicators are located on panels F6 and F8 for the commander and pilot, respectively. The information to be displayed on the commander's AVVI and AMI is controlled by the commander's *air data* switch on panel F6, and the pilot's AVVI and AMI data are controlled by the pilot's *air data* switch on panel F8. When the commander's or pilot's switch is positioned to *nav*, the AVVIs and AMIs receive information from the navigation attitude processor. When the air data probes are deployed, the commander's and pilot's switches can be positioned to *left* or *right* to receive information from the corresponding air data probe.

The AVVIs display altitude deceleration (*alt accel*) in feet per second squared, rate in feet per second, navigation/air data system (*nav/ADS*) in feet and radar (*rdr*) altitude in feet. The AVVI's

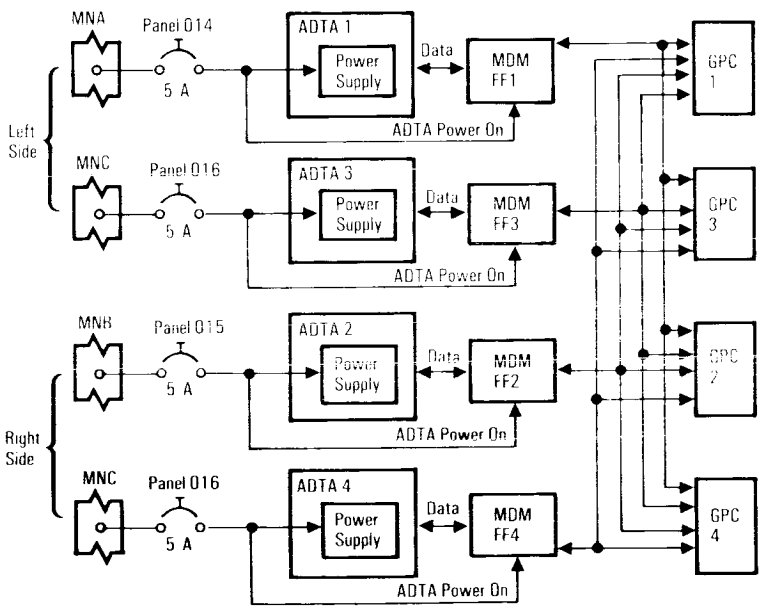


*Air Data Transducer Assembly Power Interface Functional Block Diagram*

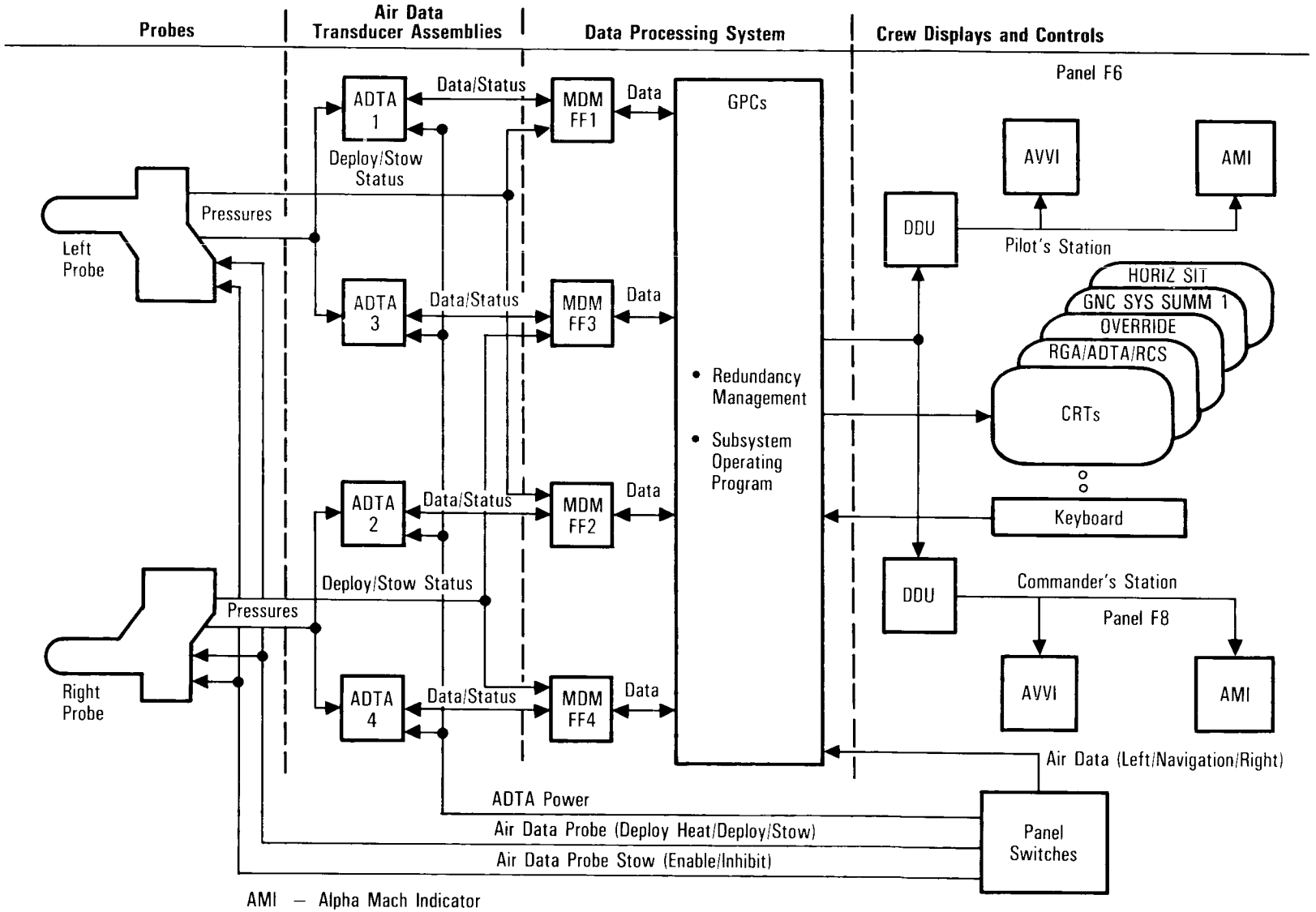


AMI — Alpha Mach Indicator
AVVI — Altitude/Vertical Velocity Indicator
DDU — Display Driver Unit
FF — Flight Forward

*Air Data System Functional Block Diagram*

altitude acceleration indicator remains on the navigation attitude processor from the IMUs. In addition, the radar altimeters on the AVVIs will not receive information until the orbiter reaches an altitude of 5,000 feet.

The AMIs display angle of attack (*alpha*) in degrees, acceleration (*accel*) in feet per second squared, Mach number or velocity (*M/vel*) in feet per second and equivalent airspeed (*EAS*) in knots. The AMI's acceleration indicator remains on the navigation attitude processor from the IMUs.

All but the alpha indicators (a moving drum) and the altitude acceleration indicators (a moving pointer displayed against a fixed line) are moving tapes behind fixed lines. The AMI's angle-of-attack indicator reads from minus 18 to plus 60 degrees, the acceleration indicator from minus 50 to plus 100 feet per second squared, the Mach/velocity indicator from Mach zero to 4 and 4,000 to 27,000 feet per second, and equivalent airspeed from zero to 500 knots. The AVVIs read altitude acceleration from minus 13.3 to plus 13.3 feet per second squared, altitude rate from minus 2,940 to plus 2,940 feet per second, altitude from minus 1,100 to plus 400,000 feet and then changes scale to plus 40 to plus 165 nautical miles (barometric altitude), and radar altitude from zero to plus 9,000 feet.

Failure warning flags are provided for all four scales on the AVVIs and AMIs. The flags appear in the event of a malfunction in the indicator or in received data. In the event of power failure, all four flags appear.

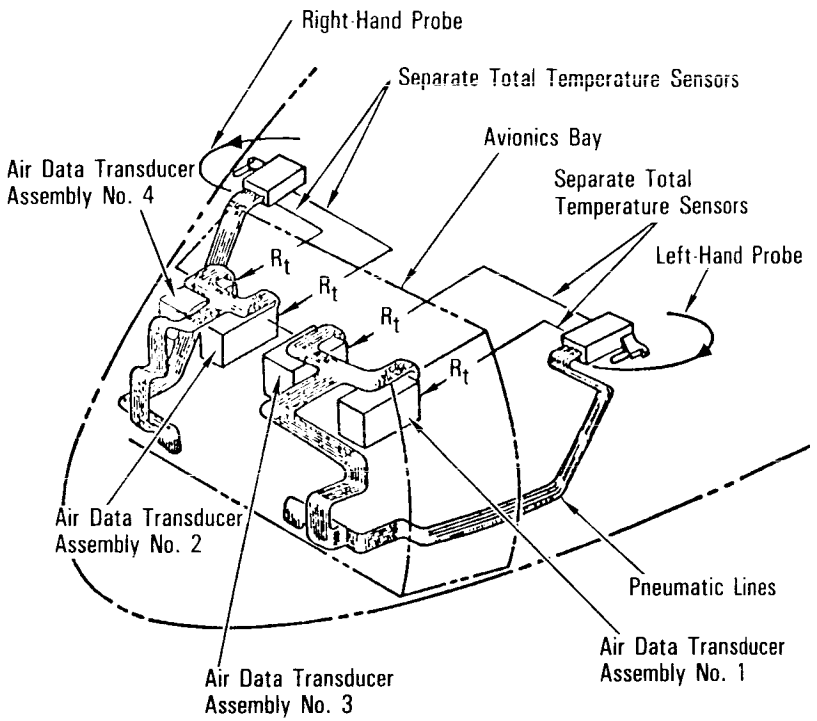


*Air Data System*

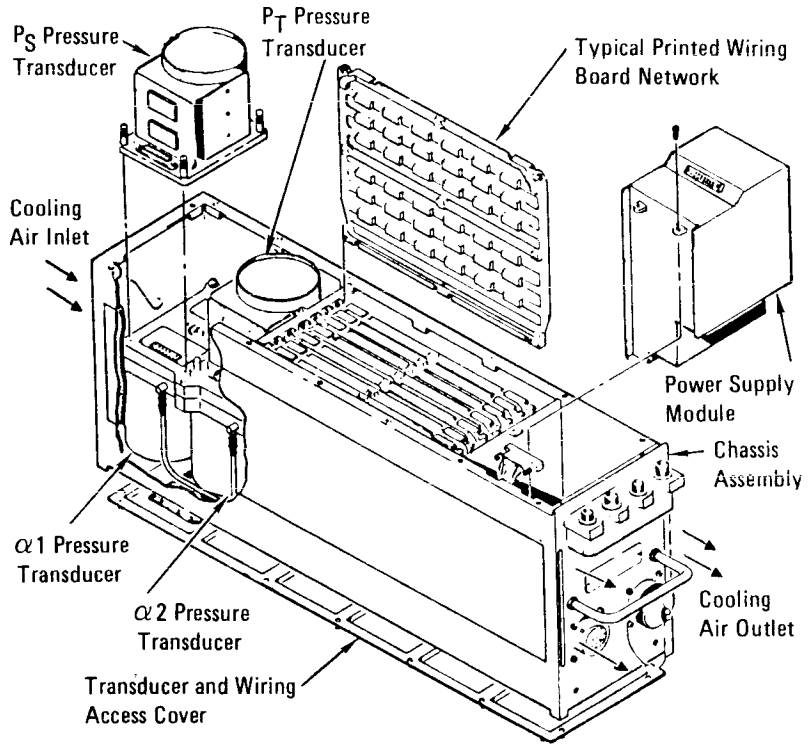


*Air Data Transducer Assembly*

The four computers compare the pressure readings from the four ADTAs for error. If all the pressure readings compare within a specified value, one set of pressure readings from each probe is summed, averaged and sent to the software. If one or more pressure signals of a set of probe pressure readings fail, the failed set's data flow from that ADTA to the averager is interrupted, and the software will receive data from the other ADTA of that probe. If both probe sets fail, the software operates on data from the two ADTAs connected to the other probe. The best total temperature from all four ADTAs is sent to the software. A fault detection will illuminate the *air data* red caution and warning light on panel F7, the *backup* caution and warning alarm light, and the *master alarm* and will also sound the audible tone and generate a fault message on the CRT. A communication fault will illuminate the *SM alert* light.

The four ADTAs are located in the orbiter crew compartment middeck forward avionics bays and are convection cooled. Each is 4.87 inches high, 21.25 inches long and 4.37 inches wide and weighs 19.2 pounds.

The air data probe sensor contractor is Rosemount Inc., Eden Prairie, Minn. The air data transducer assembly contractor is AirResearch Manufacturing Co., Garrett Corp., Torrance, Calif. The contractor for the air data probe deploy system is Ellanef, Corona, N.Y.

**Microwave Scan Beam Landing System.** The three onboard microwave scan beam landing systems are airborne Ku-band receiver/transmitter navigation and landing aids with decoding and computational capabilities. The MSBLS units determine slant range, azimuth and elevation to the ground stations alongside the landing runway. MSBLS is used during terminal area energy management, the approach and landing flight phases and return-to-launch-site aborts. When the channel (specific frequency) associated with the target runway approach is selected, the orbiter's MSBLS units receive elevation from the glide slope ground portion and azimuth and slant range from the azimuth/distance measuring equipment ground station.

The orbiter is equipped with three independent MSBLS sets, each consisting of a Ku-band receiver/transmitter and decoder. Data computation capabilities determine elevation angle, azimuth angle and orbiter range with respect to the MSBLS ground station. The MSBLS provides highly accurate three-dimensional navigation position information to the orbiter to compute state vector components for steering commands that maintain the orbiter on its proper flight trajectory. The three orbiter Ku-band antennas are located on the upper forward fuselage nose. The three MSBLS and decoder assemblies are located in the crew compartment middeck avionics bays and are convection cooled.

The ground portion of the MSBLS consists of two shelters: an elevation shelter and an azimuth/distance-measuring equipment shelter. The elevation shelter is located near the projected touchdown point, with the azimuth/DME shelter located near the

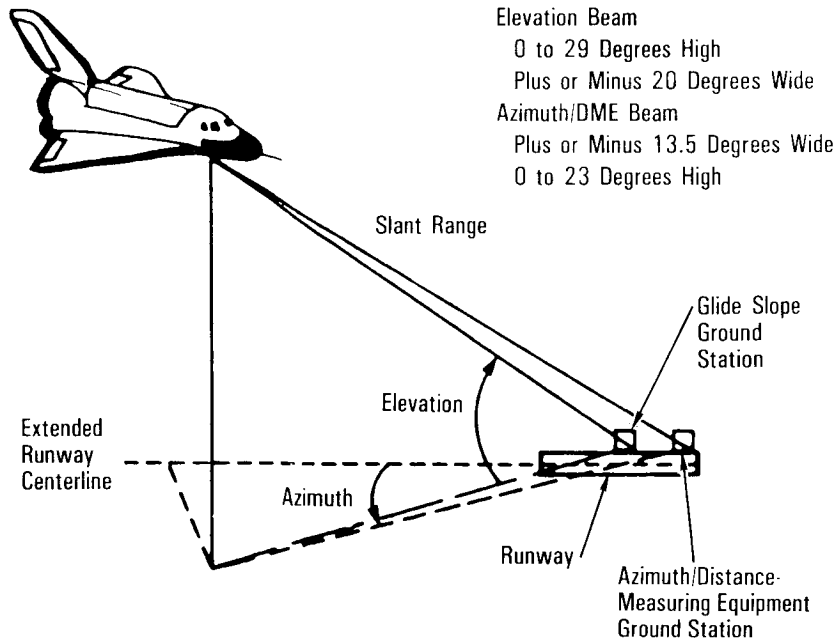


*Microwave Scan Beam Landing System*

far end of the runway. Both ends of the runway are instrumented to enable landing in either direction.

The MSBLS ground station signals are acquired when the orbiter is close to the landing site and has turned on its final leg. This usually occurs on or near the heading alignment cylinder, about 8 to 12 nautical miles (9 to 13 statute miles) from touchdown at an altitude of approximately 18,000 feet.

Final tracking occurs at the terminal area energy management "autoland" interface at approximately 10,000 feet altitude and 8 nautical miles (9 statute miles) from the azimuth/DME station.

The MSBLS angle and range data are used to compute steering commands until the orbiter is over the runway approach threshold, at an altitude of approximately 100 feet. If the autoland system is used, it may be overridden by the commander or pilot at any time using the control stick steering mode.

The commander's and pilot's horizontal situation indicators display the orbiter's position with respect to the runway. Elevation

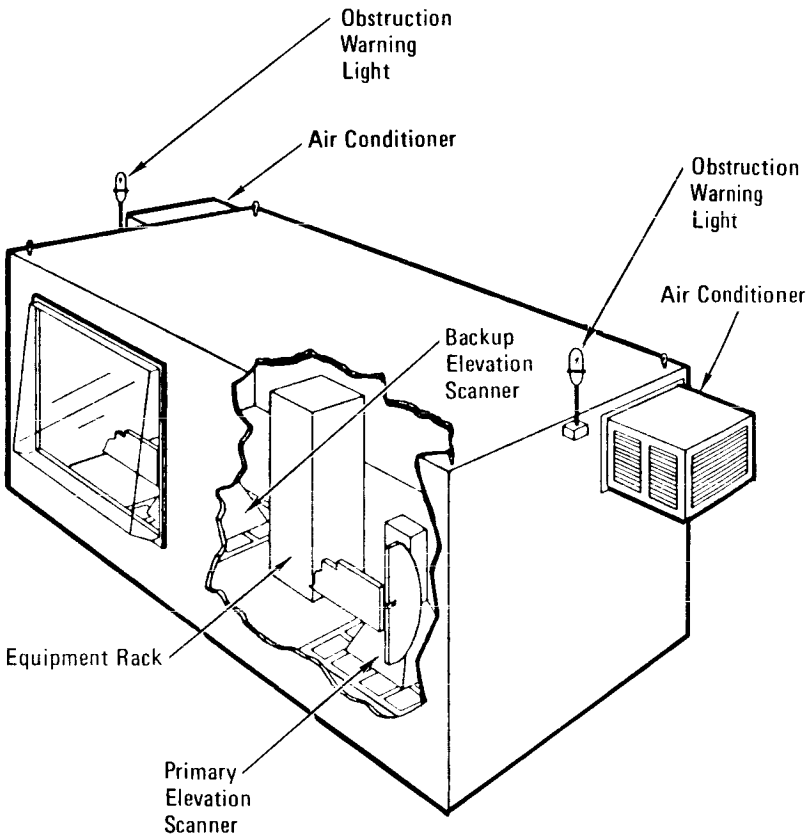


*Elevation Shelter and Equipment*

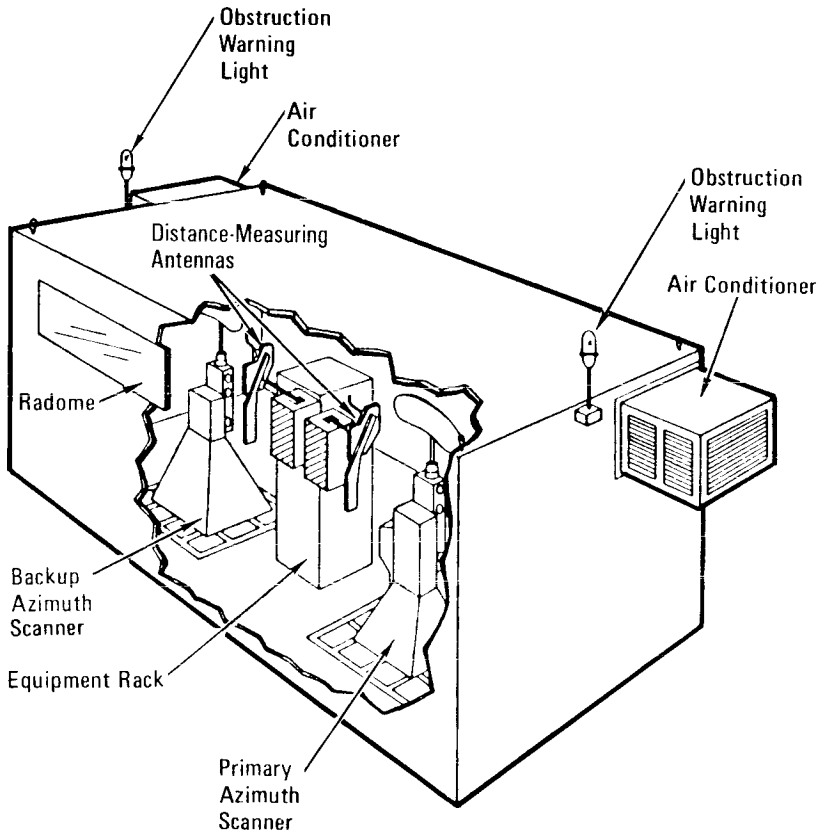


*Azimuth/Distance-Measuring Equipment Shelter and Equipment*

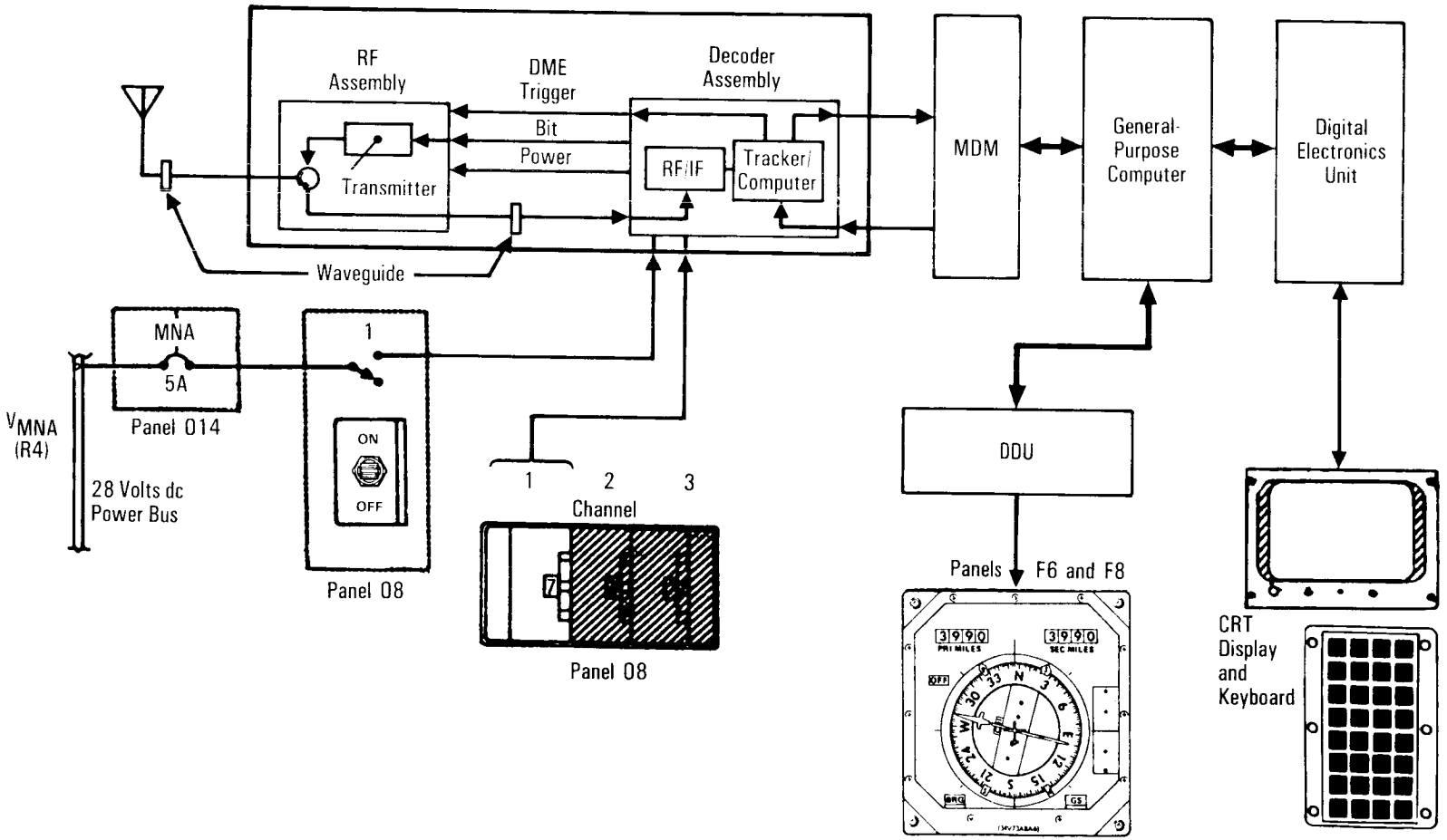


*Microwave Scan Beam Landing System Interfaces*

and azimuth are shown relative to a GPC-derived glide slope on a glide slope indicator; course deviation needles and range are displayed on a mileage indicator. When the orbiter is over the runway threshold, the radar altimeter is used to provide elevation (pitch) guidance. Azimuth/DME data are used during the landing rollout.

The three orbiter MSBLS sets operate on a common channel during the landing phase. The MSBLS ground station transmits a DME solicit pulse. The onboard MSBLS receiver responds with a DME interrogation pulse. The ground equipment responds by transmitting a return pulse. A decoder in the onboard MSBLS decodes the pulses to determine range, azimuth and elevation.

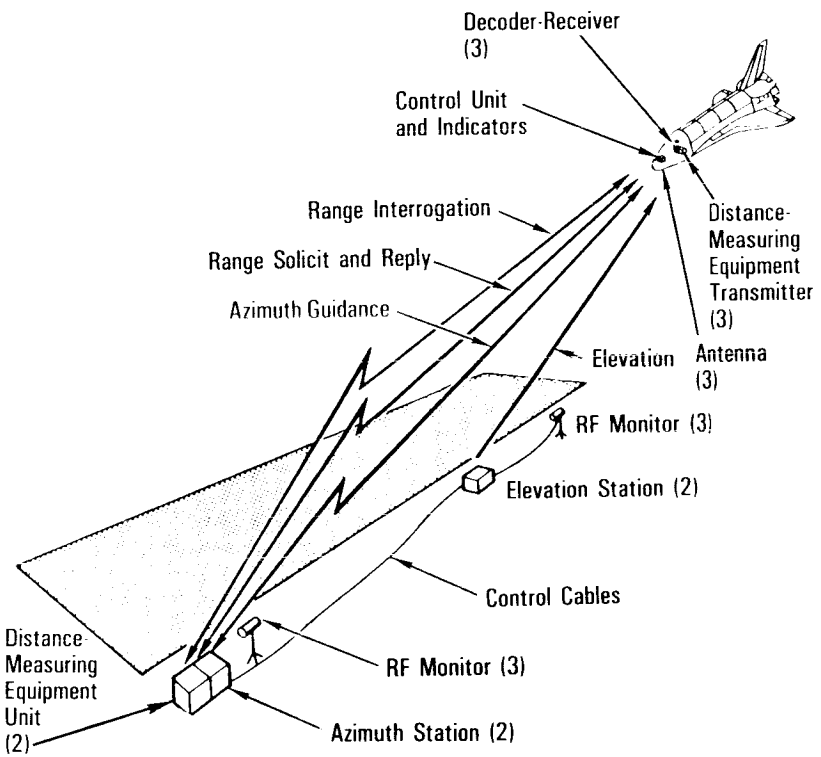


*Major Microwave Scan Beam Landing System Components and Radio Frequency Links*

Range is a function of the elapsed time between interrogation pulse transmission and signal return. Azimuth pulses are returned in pairs. The spacing between the two pulses in a pair identifies the pair as azimuth and indicates which side of the runway the orbiter is on; spacing between pulse pairs defines the angular position from runway centerline. The spacing between the two pulses in a pair identifies the pair as elevation, and the spacing between pulse pairs defines the angular position of the orbiter above the runway.

The elevation beam is 1.3 to 29 degrees high and 25 degrees to the left and right of the runway. The azimuth/DME beam is zero to 23 degrees high and 13.5 degrees to the left and right of the runway.

Each RF assembly routes range, azimuth and elevation information in RF form to its decoder assembly, which processes the information and converts it to digital words for transmission to the onboard GN&C via the multiplexers/demultiplexers for the GPCs.



Elevation, azimuth and range data from the MSBLS are used by the GN&C system from the time of acquisition until the runway approach threshold is reached. After that point, the azimuth and range data are used to control rollout. Altitude data are provided separately by the orbiter's radar altimeter.

Since the azimuth/DME shelters are at the far ends of the runway, the MSBLS can provide useful data until the orbiter is stopped. Azimuth data give position in relation to the runway centerline, while the DME gives the distance from the orbiter to the end of the runway.

Each MSBLS has an *on/off* power switch on panel O8 and on the channel (frequency) selection thumbwheel on panel O8. Positioning the *MLS 1*, *2* and *3* switch provides power to the corresponding microwave scan beam landing system. MSBLS 1 receives power from main bus A, MSBLS 2 from main bus B and MSBLS 3 from main bus C. Positioning the *channel 1*, *2* and *3* thumbwheels selects the frequency (channel) for the ground station at the selected runway for the corresponding MSBLS.

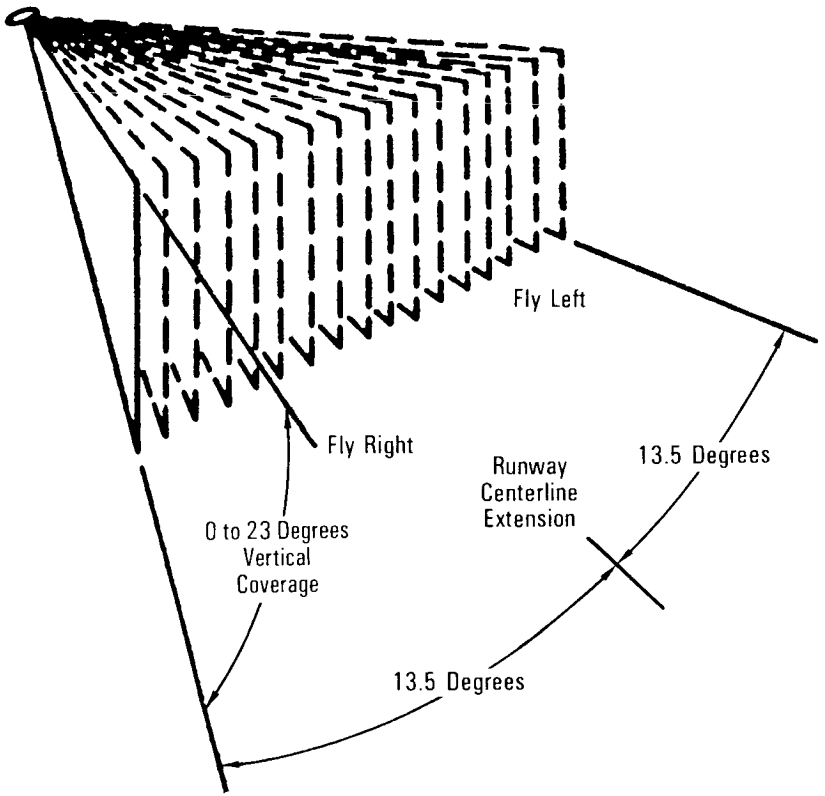


*Microwave Scan Beam Landing System Azimuth Coverage and Distance-Measuring Equipment*

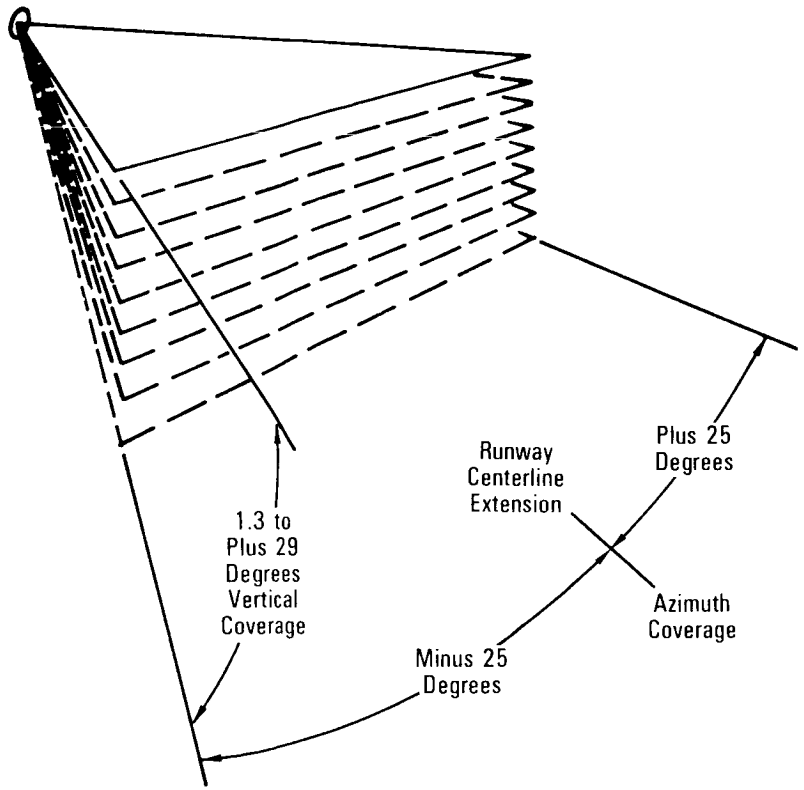


*MSBLS Elevation Coverage*

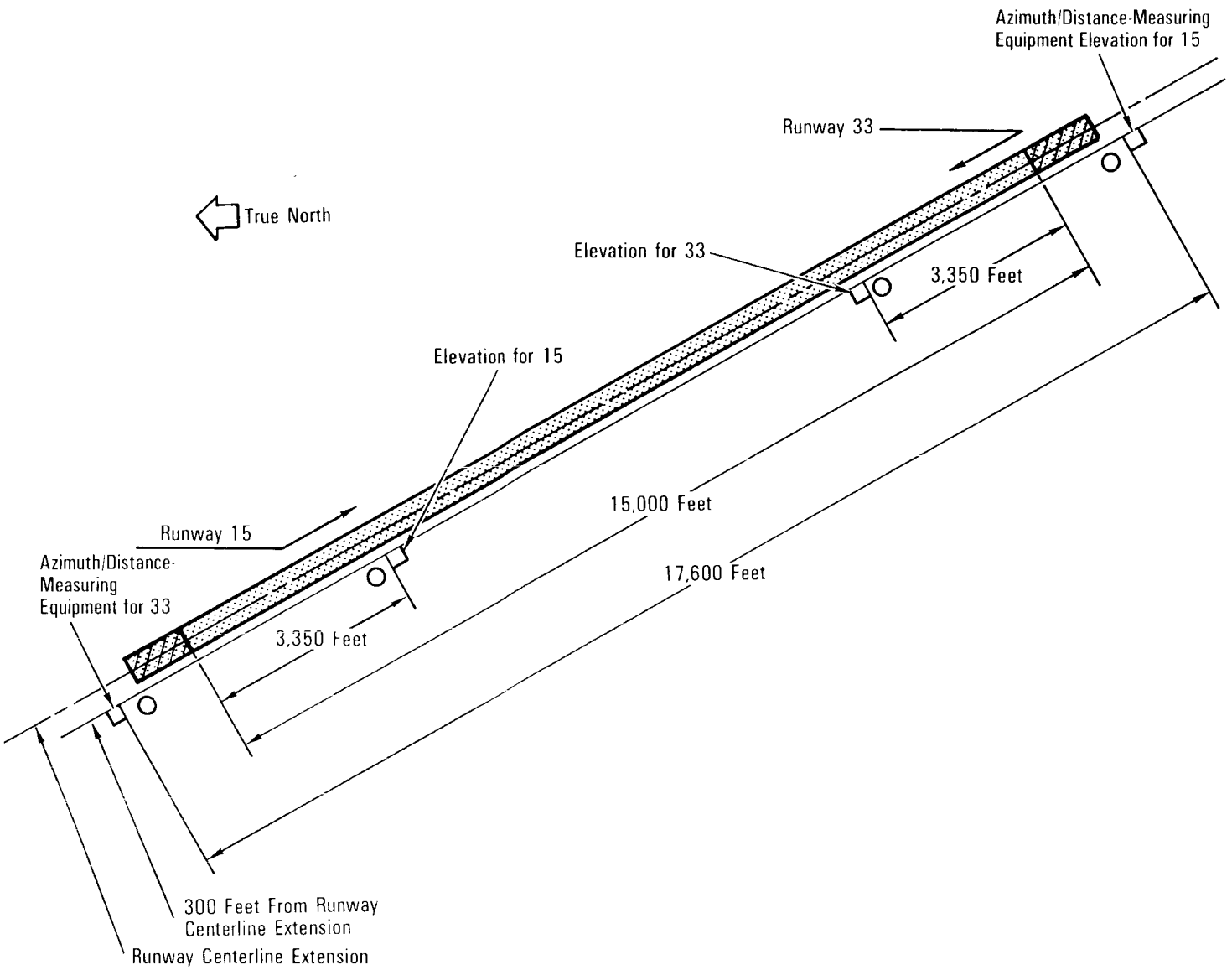


*Microwave Scan Beam Landing System Locations at the Kennedy Space Center Runway*

Redundancy management mid-value-selects azimuth and elevation angles for processing navigation data. The three MSBLS sets are compared to identify any significant differences among them.

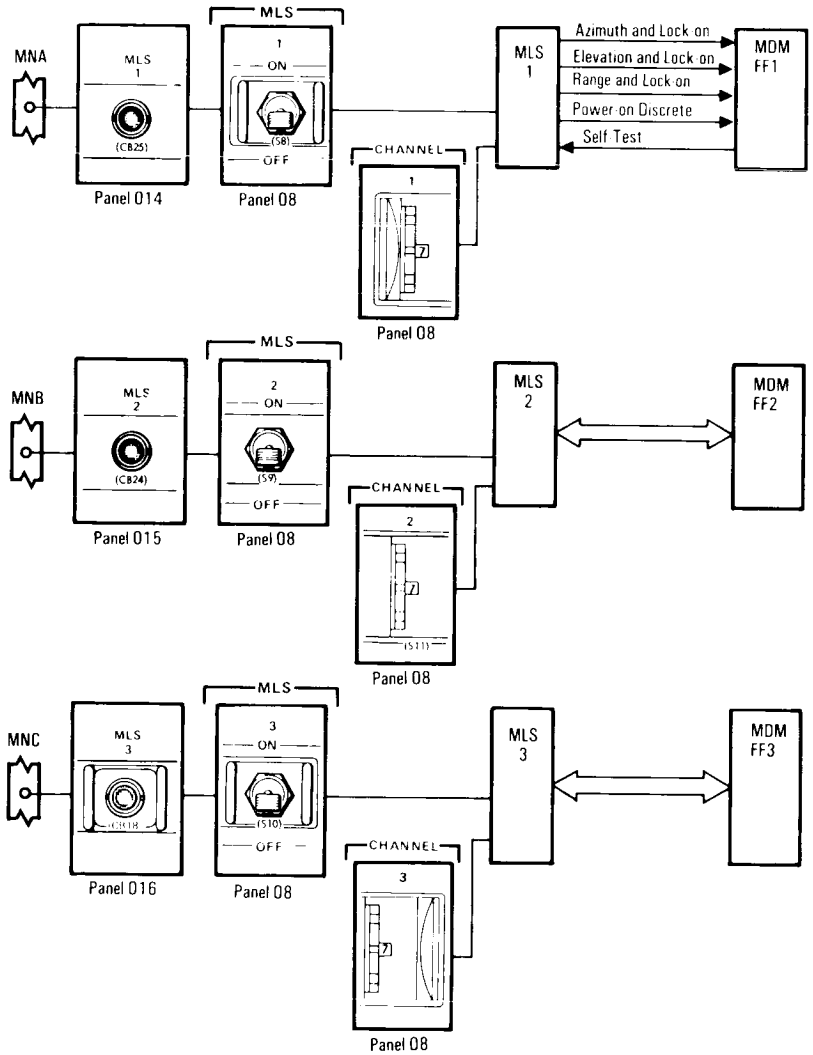


*Microwave Scan Beam Landing System Power and Data Interfaces*

When data from all three MSBLS sets are valid, redundancy management selects middle values of three ranges, azimuths and elevations. In the event that only two MSBLS sets are valid, the two ranges, azimuths and elevations are averaged. If only one MSBLS set is valid, its range, azimuth and elevation are passed for display. When a fault is detected, the *SM alert* light is illuminated, and a CRT fault message is shown.

Each MSBLS decoder assembly is 8.25 inches high, 5 inches wide and 16.16 inches long and weighs 17.5 pounds. The RF assembly is 7 inches high, 3.5 inches wide and 10.25 inches long and weighs 6 pounds.

The MSBLS contractor is Eaton Corp., AIL Division, Farmingdale, N.Y.

**Radar Altimeter.** The two radar altimeters on board the orbiter measure absolute altitude from the orbiter to the nearest terrain within the beamwidth of the orbiter's antennas.

The RAs constitute a low-altitude terrain-tracking and altitude-sensing system based on the precise time it takes an electromagnetic energy pulse to travel from the orbiter to the nearest object on the ground below and return during altitude rate changes of as much as 2,000 feet per second. This enables tracking of mountain or cliff sides ahead or alongside the orbiter if these obstacles are nearer than the ground below and warns of rapid changes in absolute altitude.

The two independent RAs consist of a transmitter and receiver antenna. The systems can operate simultaneously without affecting each other. The four C-band antennas are located on the lower forward fuselage. The two receiver/transmitters are located in the middeck forward avionics bays and are convection cooled.

Each RA transmits a C-band (4,300 MHz modulated at 8.5 kHz) pulse through its transmitting antenna. The signal is reflected by the nearest terrain, and the leading edge of the return radar echo is locked on by the RA through its receiving antenna. The altitude outputs by the RA are analog voltages that are pro-

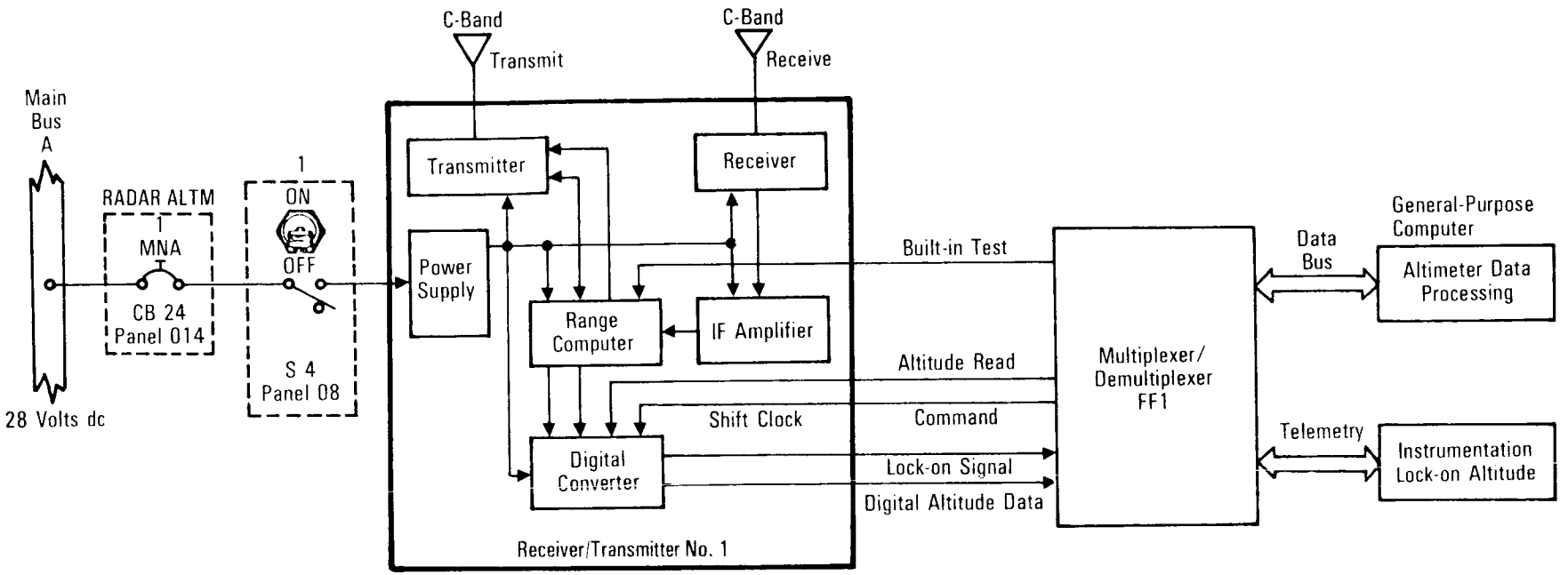


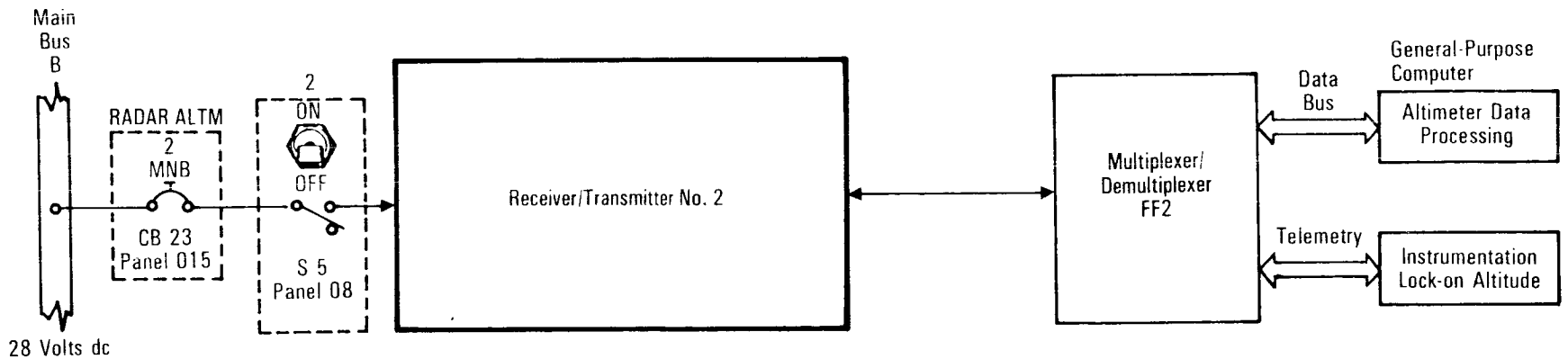


*Radar Altimeter*

portional to the elapsed time required for the ground pulse to return, which is a function of height or distance to the nearest terrain. The range output of the RA is from zero to 5,000 feet. The RA will not lock on if the orbiter has large pitch or roll angles.

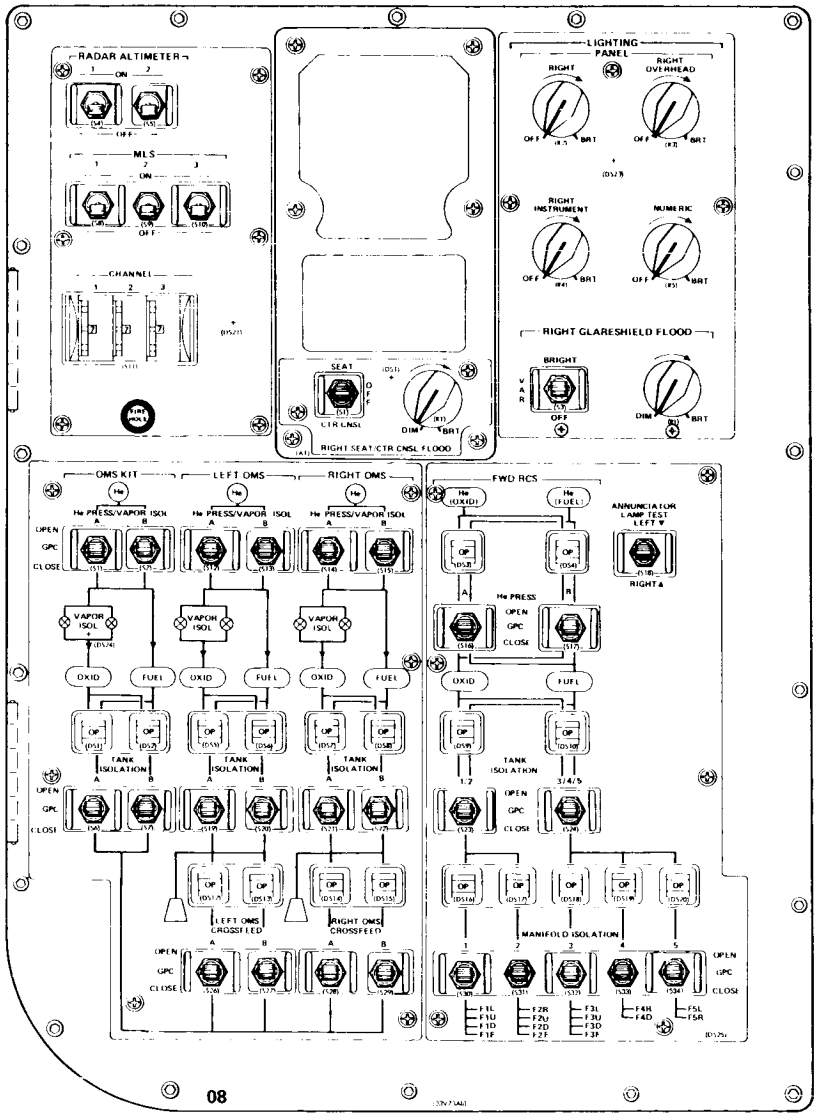


*Panel O8*

The onboard GPCs process the data for the autoland mode and touchdown guidance after the orbiter has crossed the runway threshold from an altitude of 100 feet down to touchdown. If the autoland mode is not used, the GPCs process the data for display on the commander's and pilot's altitude/vertical velocity meters from 5,000 feet.

The commander and pilot can select RA 1 or 2 for display on their respective AVVI. The commander's *radar al tm 1* and *2* switch is located on panel F7, and the pilot's switch is located on panel F8. The *radar altimeter on/off 1* and *2* power switches are on panel O8. Positioning *radar altimeter 1* to *on* provides electrical power to RA 1 from main bus A; positioning *radar altimeter 2* to *on* provides electrical power to RA 2 from main bus B.

The display scale on the commander's and pilot's AVVI raw data recorder indicators ranges from 5,000 to zero feet. Altitude is displayed on a moving tape. Above 9,000 feet, the scale will be

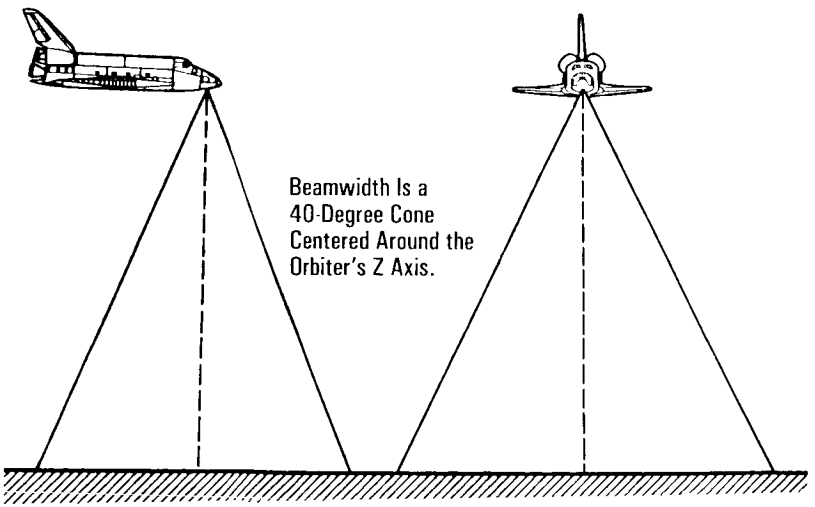


*Radar Altimeter Antenna Beamwidth Coverage*

pegged. At 1,500 feet, the raw data recorder indicator changes scale. The RA *off* flag will appear if there is a loss of power, loss of lock, data good-bad or after three communications faults.

Because there are only two radar altimeters on board the orbiter, the altitude data from the two units are averaged in redundancy management when the radar altimeter is used for the autoland mode.

Each radar altimeter receiver/transmitter measures 3.13 inches high, 7.41 inches long and 3.83 inches wide and weighs 4.5 pounds.

The radar altimeter contractor is Honeywell Inc., Minneapolis, Minn.

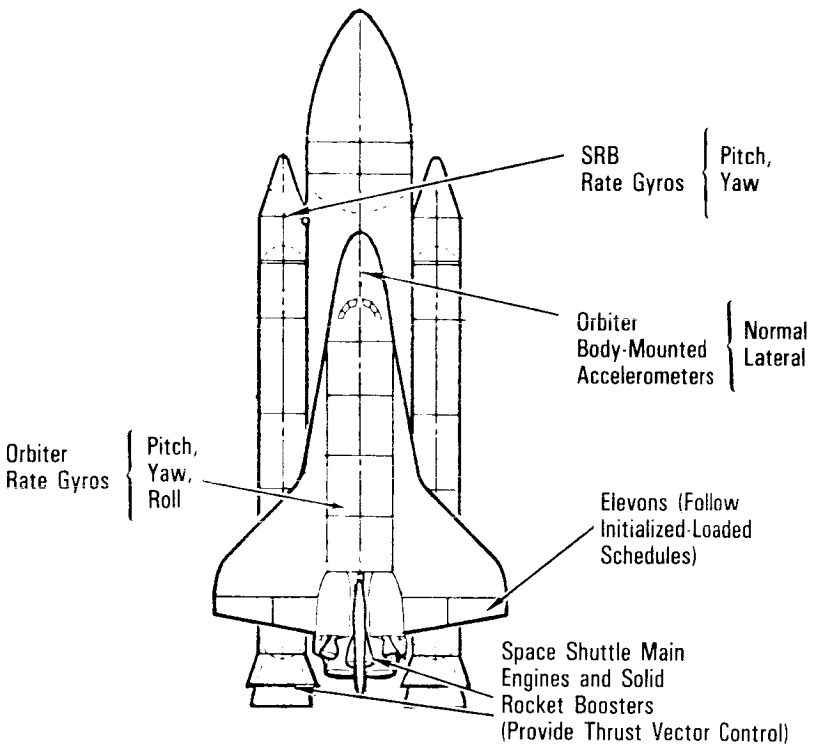


*Flight Control Hardware*

**Accelerometer Assemblies.** There are four accelerometer assemblies aboard the orbiter, each containing two identical single-axis accelerometers, one of which senses vehicle acceleration along the lateral (left and right) vehicle Y axis while the other senses vehicle acceleration along the vertical (normal, yaw and pitch) Z axis.

The AAs provide feedback to the flight control system concerning acceleration errors, which are used to augment stability during first-stage ascent, aborts and entry; elevon load relief during first-stage ascent; and computation of steering errors for display on the commander's and pilot's attitude director indicators during terminal area energy management and approach and landing phases.

The lateral acceleration readings enable the flight control system to null side forces during both ascent and entry. The normal acceleration readings indicate the need to relieve the load on the wings during ascent. During entry, the normal acceleration measurements cue guidance at the proper time to begin ranging. During the latter stages of entry, these measurements provide feedback for guidance to control sink rate. In contrast, the accelerometers within the IMUs measure three accelerations used in navigation to calculate state vector changes.

Each accelerometer consists of a pendulum suspended so that its base is in a permanent magnetic field between two torquer magnets. A lamp is beamed through an opening in one of the torquer magnets; photodiodes are located on both sides of the other torquer magnet. When acceleration deflects the pendulum toward one photodiode, the resulting light imbalance on the two photodiodes causes a differential voltage, which increases the magnetic field on one of the torquer magnets to return the pendulum to an offset position. The magnitude of the current that is required to accomplish this is proportional to the acceleration. The polarity of the differential voltage depends on the direction of the pendulum's movement, which is opposite to the direction of acceleration. The only difference between the lateral and normal accelerometers is the position in which they are mounted within the assembly. When the acceleration is removed, the pendulum returns to the null position. The maximum output for a lateral

accelerometer is plus or minus 1 g; for a normal accelerometer, the maximum output is plus or minus 4 g.

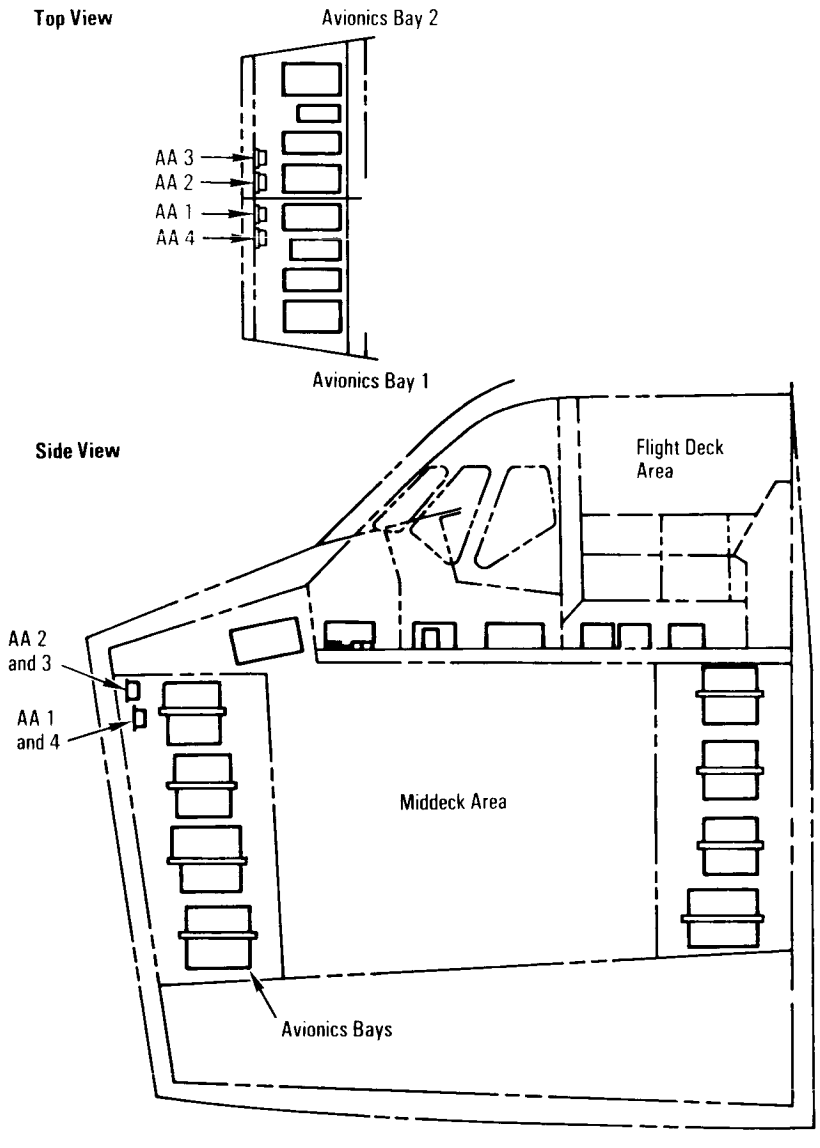


*Orbiter Accelerometer Locations*

The accelerations transmitted to the forward MDMs are voltages proportional to the sensed acceleration. These accelerations are multiplexed and sent to the GPCs, where an accelerometer assembly subsystem operating program converts the eight accelerometer output voltages to gravitational units. This data is also sent to the CRTs and attitude director indicator error needles during entry.

The accelerometer assemblies provide fail-operational redundancy during both ascent and entry. The four AAs employ a quad mid value software scheme to select the best data for redundancy management and failure detection.

Accelerometer 1 is powered from main bus A through the *accel 1* circuit breaker on panel O14. Accelerometer 2 is powered

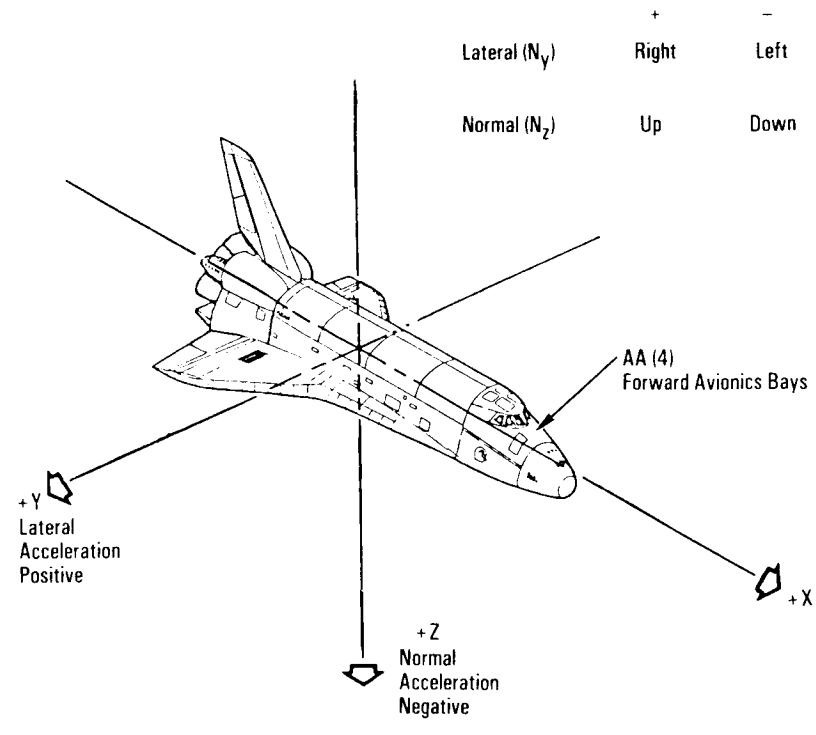


*Accelerometer Assembly Location and Acceleration Axes*

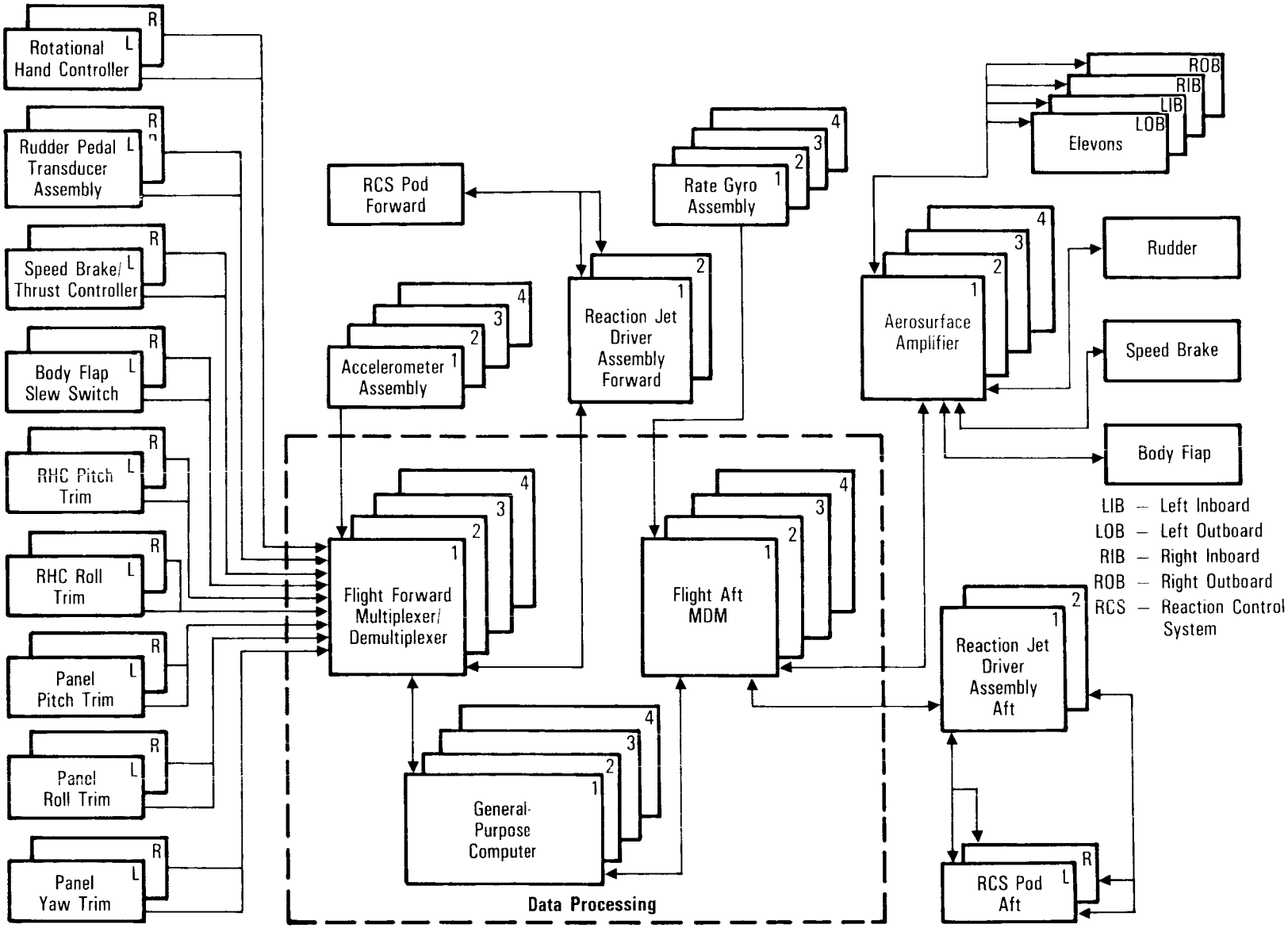


*Flight Control System Hardware*

from main bus B through the *accel 2* circuit breaker on panel O15. Accelerometer 3 is controlled by the *accel 3 on/off* switch on panel O16. When the switch is positioned to *on*, power from control buses controls remote power controllers, which supplies main bus A and main bus C to accelerometer 3. The *accel 4 on/off* switch on panel O15 operates similarly, except that accelerometer 4 receives power from main bus B and main bus C. The accelerometers are turned off once on orbit and on again before entry.

An *RGA/accel* red caution and warning light on panel F7 will be illuminated if an accelerometer fails.

The four AAs are located in crew compartment middeck forward avionics bays 1 and 2. The AAs are convection cooled and require a five-minute warm-up period.

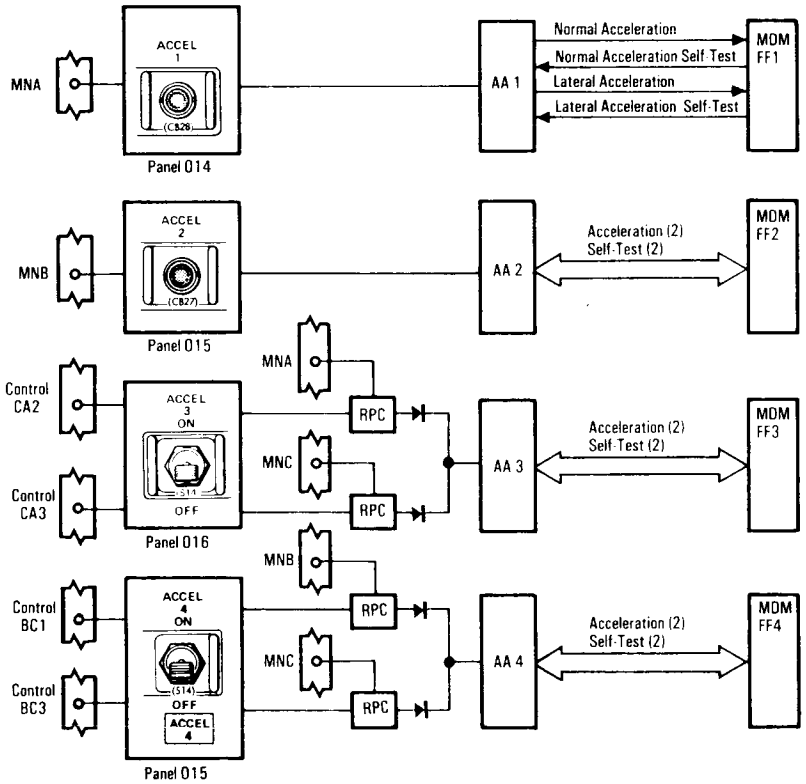


*Accelerometer Assembly Power and Data Interfaces*

The accelerometer contractor is Honeywell Inc., Clearwater, Fla.

**Orbiter Rate Gyro Assemblies.** The orbiter rate gyro assemblies are used by the flight control system during ascent, entry and aborts as feedbacks to final rate errors that are used to augment stability and for display on the commander's and pilot's attitude director indicator rate needles on panels F6 and F8. The four orbiter RGAs are referred to as RGAs 1, 2, 3 and 4.

The RGAs sense roll rates (about the X axis), pitch rates (about the Y axis) and yaw rates (about the Z axis). These rates are used by the flight control system to augment stability during both ascent and entry.

Each RGA contains three identical single-degree-of-freedom rate gyros so that each gyro senses rotation about one of the vehicle axes. Thus, each RGA contains one gyro-sensing roll rate (about the X axis), one gyro-sensing pitch rate (about the Y axis) and one gyro-sensing yaw rate (about the Z axis).

Each gyro has three axes. A motor forces the gyro to rotate about its spin axis. When the vehicle rotates about the gyro input axis, a torque results in a rotation about the output axis. An electrical voltage proportional to the angular deflection about the output axis—representing vehicle rate about the input axis—is generated and transmitted through the flight aft MDMs to the GPCs and RGA SOP. This same voltage is used within the RGA to generate a counteracting torque that prevents excessive gimbal movement about the output axis. The maximum output for roll rate gyros is plus or minus 40 degrees per second; for the pitch and yaw gyros, the maximum output is plus or minus 20 degrees per second.

The RGA SOP converts the voltage rate into units of degrees per second.

The *RGA 1, 2, 3* and *4 on/off* power switches are located on panels O14, O15, O16 and O15, respectively. The redundant power supplies for RGAs 1 and 4 prevent the loss of more than one rate gyro assembly if main bus power is lost.

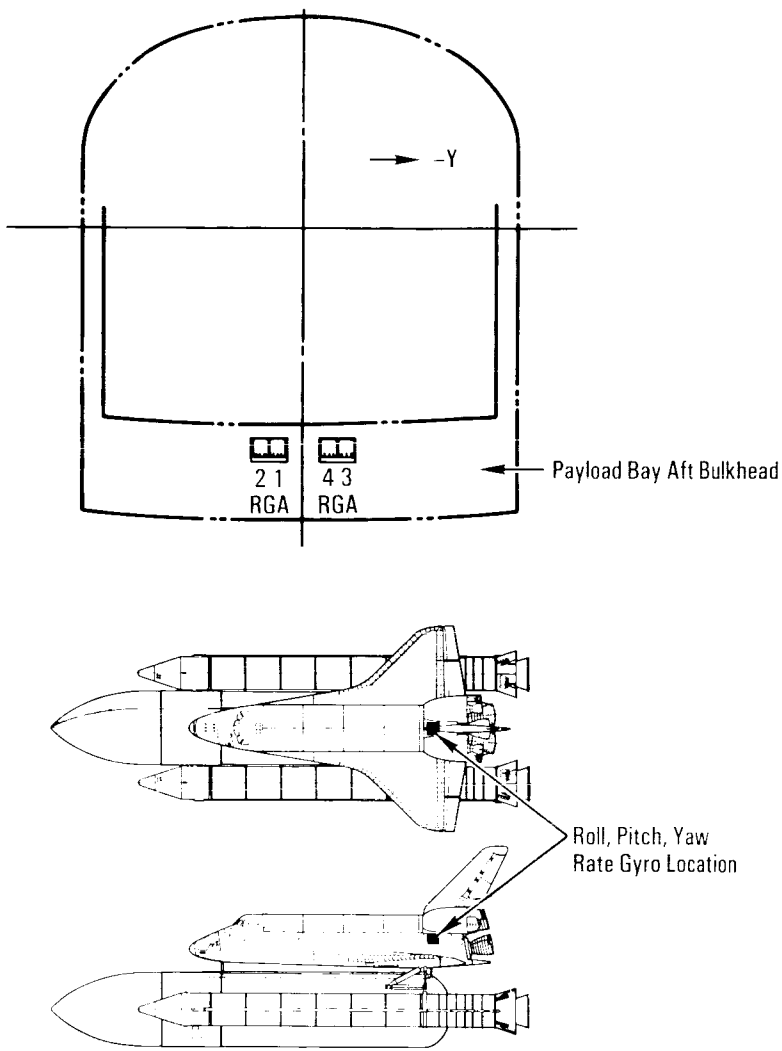


*Orbiter Rate Gyro Locations*

The RGAs remain off on orbit except during flight control system checkout to conserve power.

The RGAs afford fail-operational redundancy during both ascent and entry. A quad mid value software scheme selects the best data for use in redundancy management and failure detection.

The *RGA/accel* red caution and warning light on panel F7 will be illuminated to inform the flight crew of an RGA failure.

The RGAs are located on the aft bulkhead below the floor of the payload bay. They are mounted on cold plates for cooling by the Freon-21 coolant loops. The RGAs require a five-minute warm-up time.

The RGA contractor is Northrop Corp., Electronics Division, Norwood, Mass.

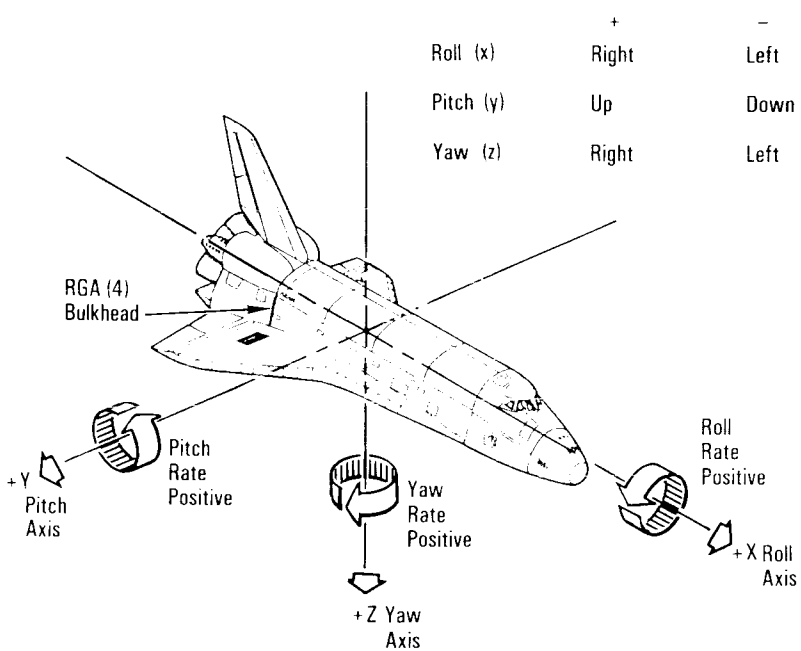


*Solid Rocket Booster Rate Gyro Assembly Location and Rotation Axes*

**Solid Rocket Booster Rate Gyro Assemblies.** The solid rocket booster RGAs are used exclusively during first-stage ascent as feedback to find rate errors from lift-off to two to three seconds before SRB separation. There are three RGAs on each SRB, each containing two identical single-degree-of-freedom rate gyros for sensing rates in the vehicle pitch and yaw axes similar in function to the orbiter RGAs. The maximum outputs for the SRB RGAs are 10 degrees per second.

The SRB RGAs sense pitch and yaw rates, but not roll rates, during the first stage of ascent. Because the SRBs are more rigid than the orbiter body, these rates are less vulnerable to errors created by structural bending. They are thus particularly useful in thrust vector control.

The three RGAs in each SRB are mounted on the forward ring within the forward skirt near the SRB-external tank attach point.

The SRB RGA SOP converts the 12 voltages representing a rate into units of degrees per second. These rates are used by the flight control system during first-stage ascent as feedback to identify rate errors, which are used for stability augmentation. The pitch and yaw axes and a combination of rate, attitude and accel-



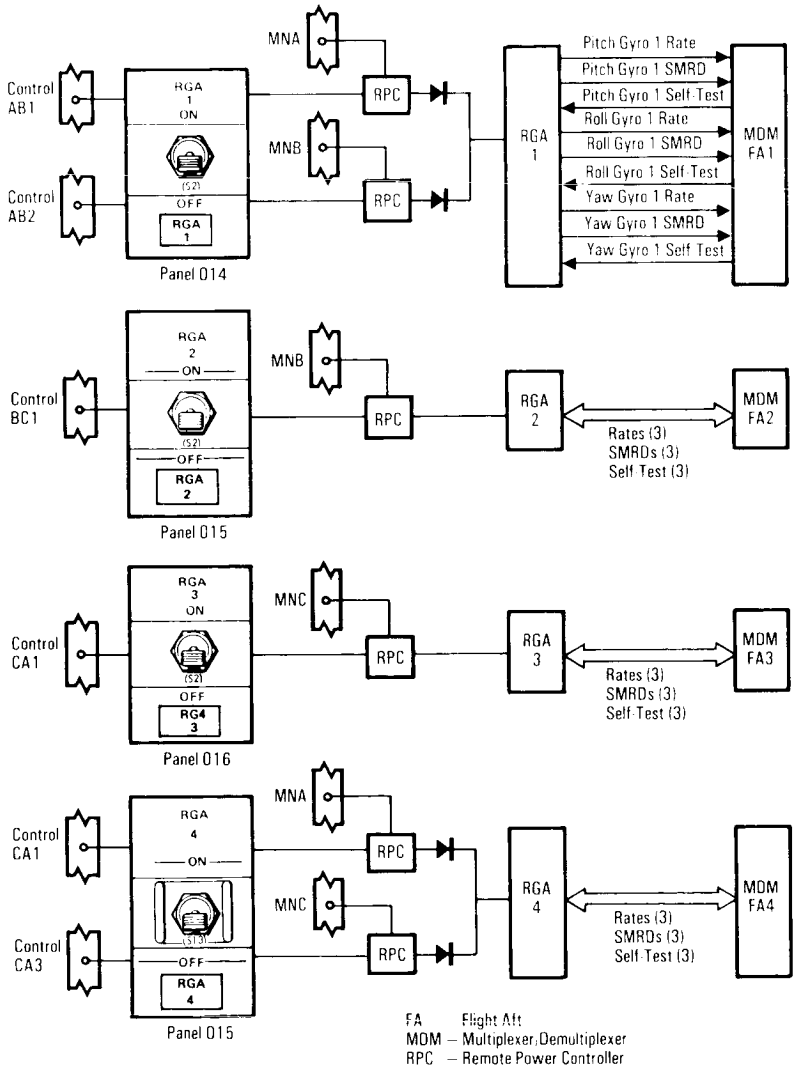


*Rate Gyro Assembly Power and Data Interfaces*

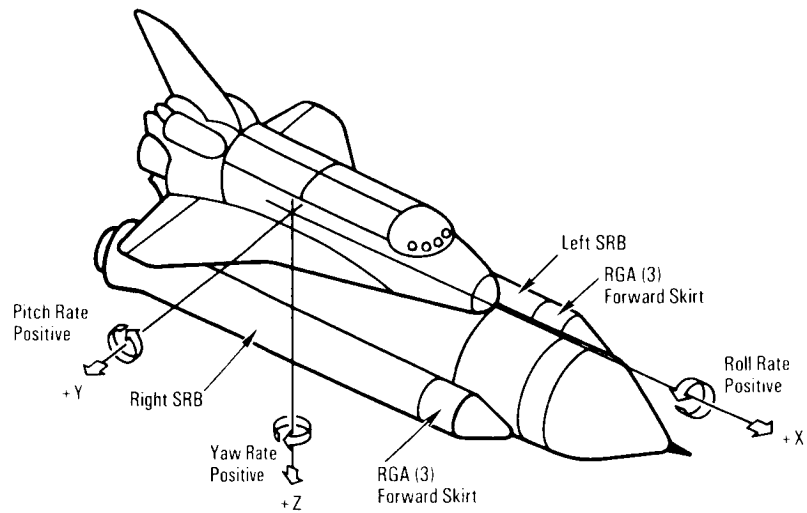


*Rate Gyro Assembly Location and Rotation Axes*

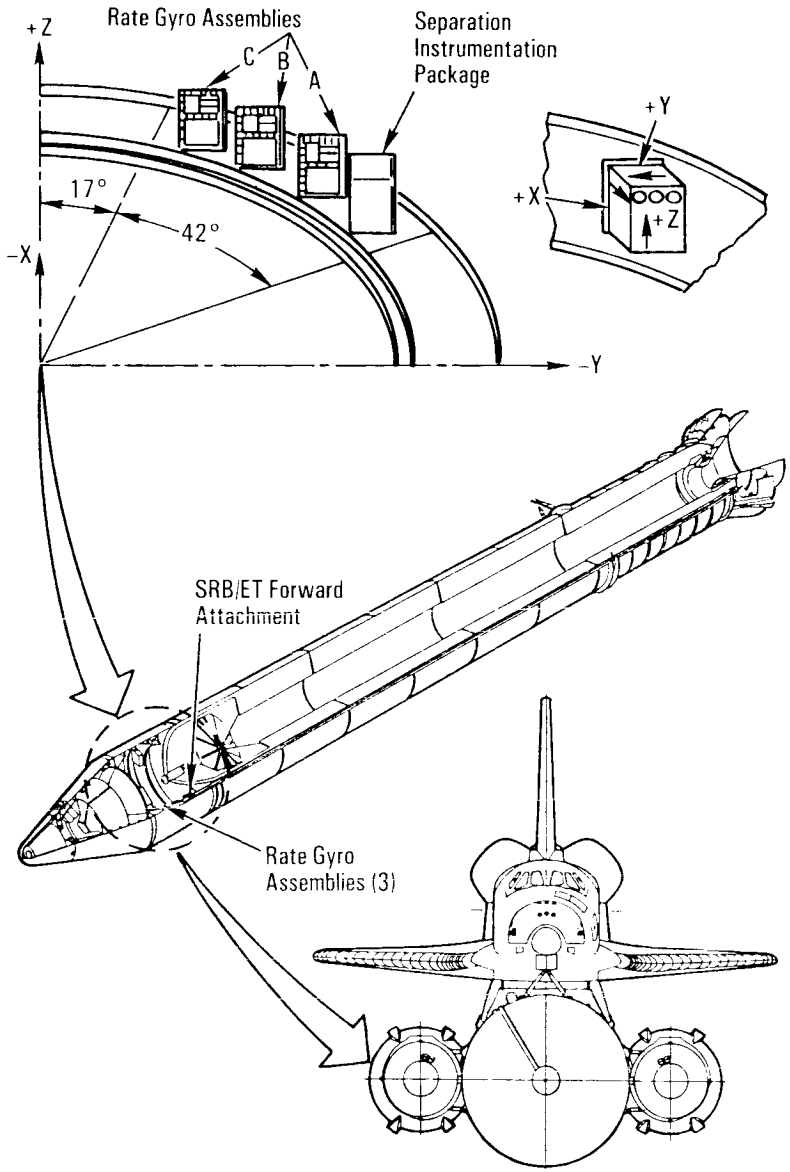


*Solid Rocket Booster Rate Gyro Locations*

eration signals are blended to provide a common signal to the space shuttle main engines and SRB thrust vector control during first stage. In the roll axis, rate and attitude are summed to provide a common signal to the SSMEs and SRB thrust vector control.

Each of the SRB RGAs is hard-wired to a flight aft MDM to the GPCs through flight-critical buses 5, 6 and 7. In the GPCs, the SOP applies the rate compensation equation to each of the left or right pitch and yaw rates. The compensated rate signals are sent to redundancy management, where the mid value software scheme selects the best data for use and failure detection.

The SRB RGAs are commanded to null and switched out of the flight control system two to three seconds before SRB separation; SRB yaw and pitch rate data are then replaced with orbiter pitch and yaw RGA data.

The *RGA/accel* red caution and warning light on panel F7 will be illuminated to inform the flight crew of an RGA failure.



The RGA contractor is Northrop Corp., Electronics Division, Norwood, Mass.

**Rotational Hand Controller.** There are three rotational hand controllers on the orbiter crew compartment flight deck: one at the commander's station, one at the pilot's station and one at the aft flight deck station. Each RHC controls vehicle rotation about three axes: roll, pitch and yaw. During ascent, the commander's and pilot's RHCs may be used to gimbal the SSMEs and SRBs. For insertion and deorbit, the commander's and pilot's RHCs may be used to gimbal the orbital maneuvering system engines and to command thrusting of the reaction control system engines. On orbit, the commander's, pilot's and aft flight station RHCs may be used to command RCS engine thrusting. During entry, the commander's and pilot's RHCs may be used to command RCS engine thrusting during the early portion of entry and may be used to position the orbiter elevons in roll and pitch axes in the latter portion of entry.

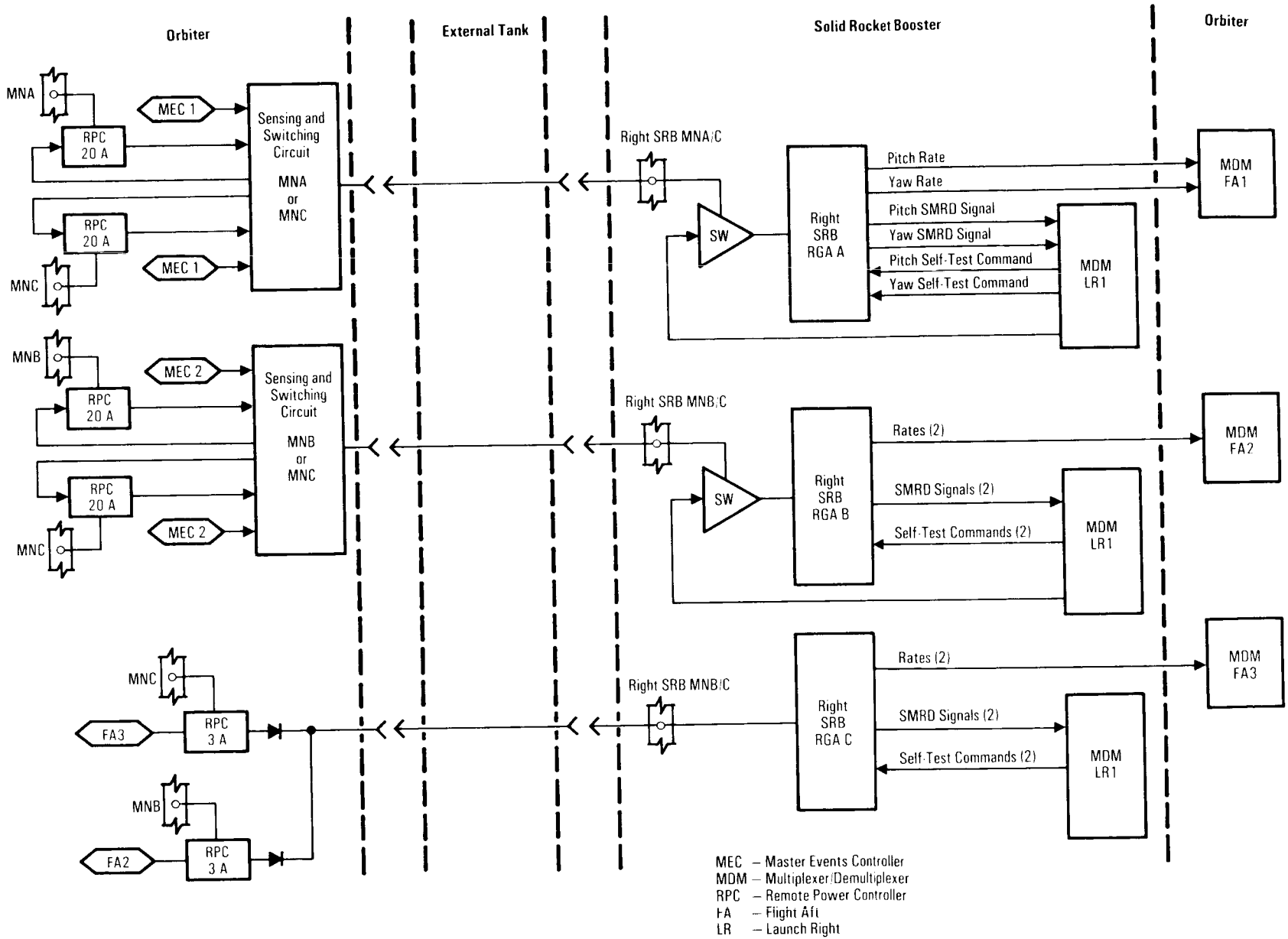


*Solid Rocket Booster Rate Gyro Assembly Power and Data Interfaces*

Human factors dictate that an RHC deflection produce a rotation in the same direction as the flight crew member's line of sight. The aft flight station RHC is used only on orbit. An *aft sense -Z* switch on panel A6 selects the line-of-sight reference about the minus Z axis (overhead windows), and the *-X* position selects the line-of-sight reference about the minus X axis (aft windows) in order for aft RHC commands to be correctly transformed to give the desired orbiter movement.

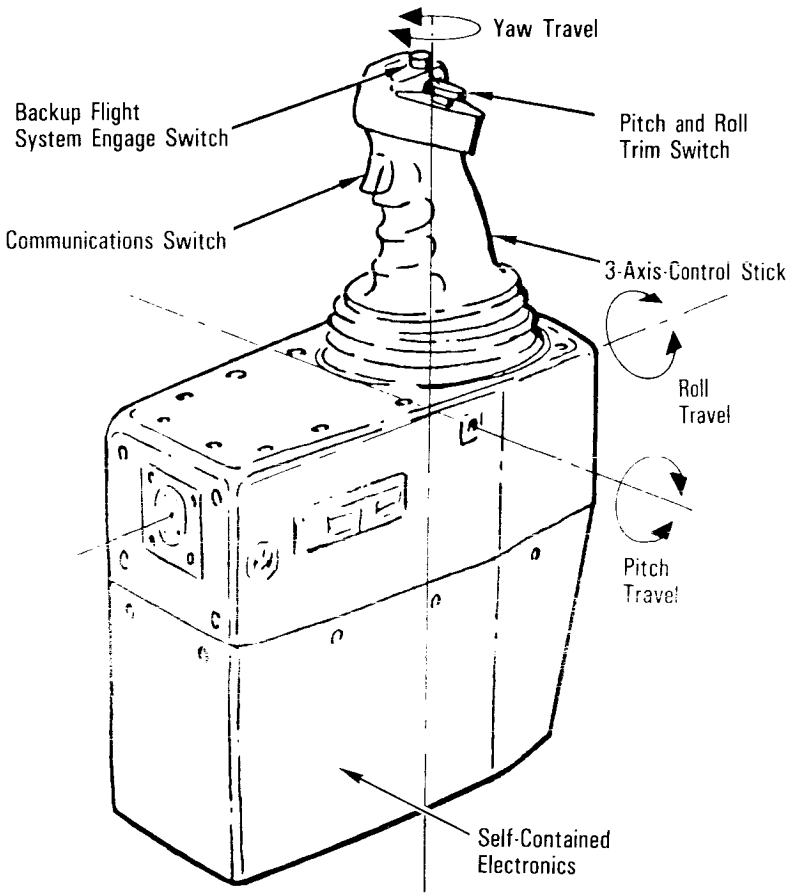


*Rotational Hand Controller*

Several switches are located on the RHC. A backup flight system (*BFS*) mode button on the commander's and pilot's RHCs engage the BFS when depressed. The commander's, pilot's and aft flight station RHCs have a two-contact *trim* switch that can be pushed forward or aft to add a trim rate to the RHC pitch command; pushing it left or right adds a roll trim rate. The aft RHC's *trim* switch is inactive. The *communications* switch on each RHC is a push-to-talk switch that enables voice transmission when the switch is depressed.

Each RHC contains nine transducers: three redundant transducers sense pitch deflection, three sense roll deflection and three sense yaw deflection. The transducers produce an electrical signal proportional to the deflection of the RHC. The three transducers are called channels 1, 2 and 3; the channel selected by redundancy management provides the command. Each channel is powered by a separate power supply in its associated display driver unit. Each controller is triply redundant; thus, it takes only one good signal from a controller for the controller to operate.

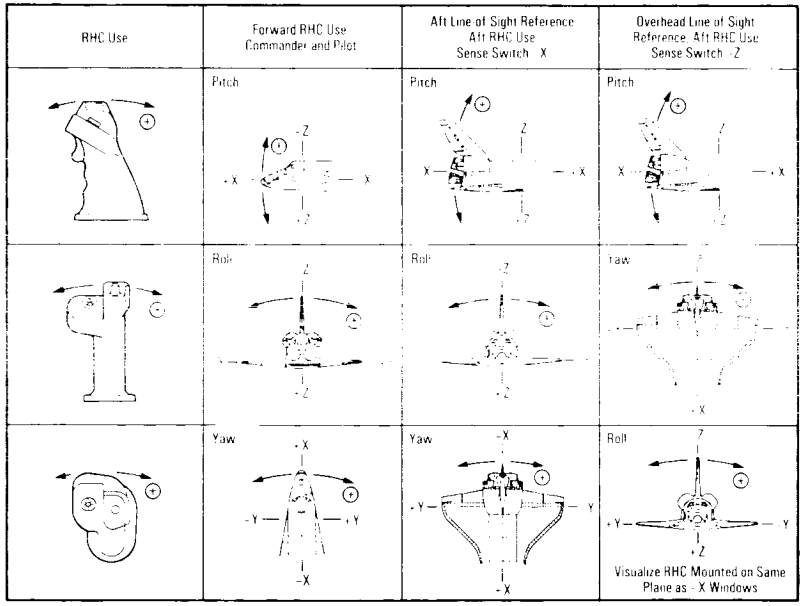


*Positive Deflections of the Rotational Hand Controller by Axis*

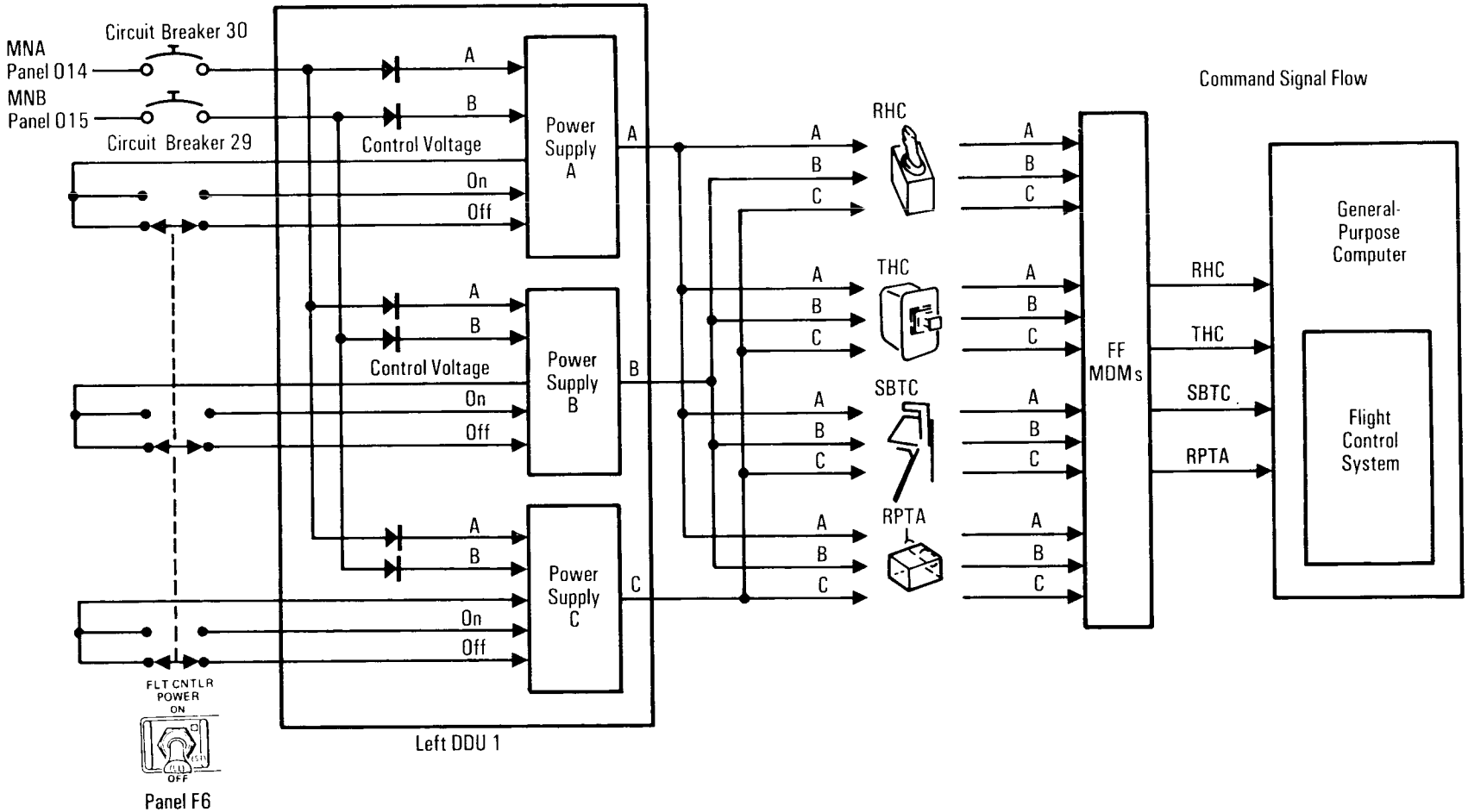


*Flight Controller Power Distribution—Commander*

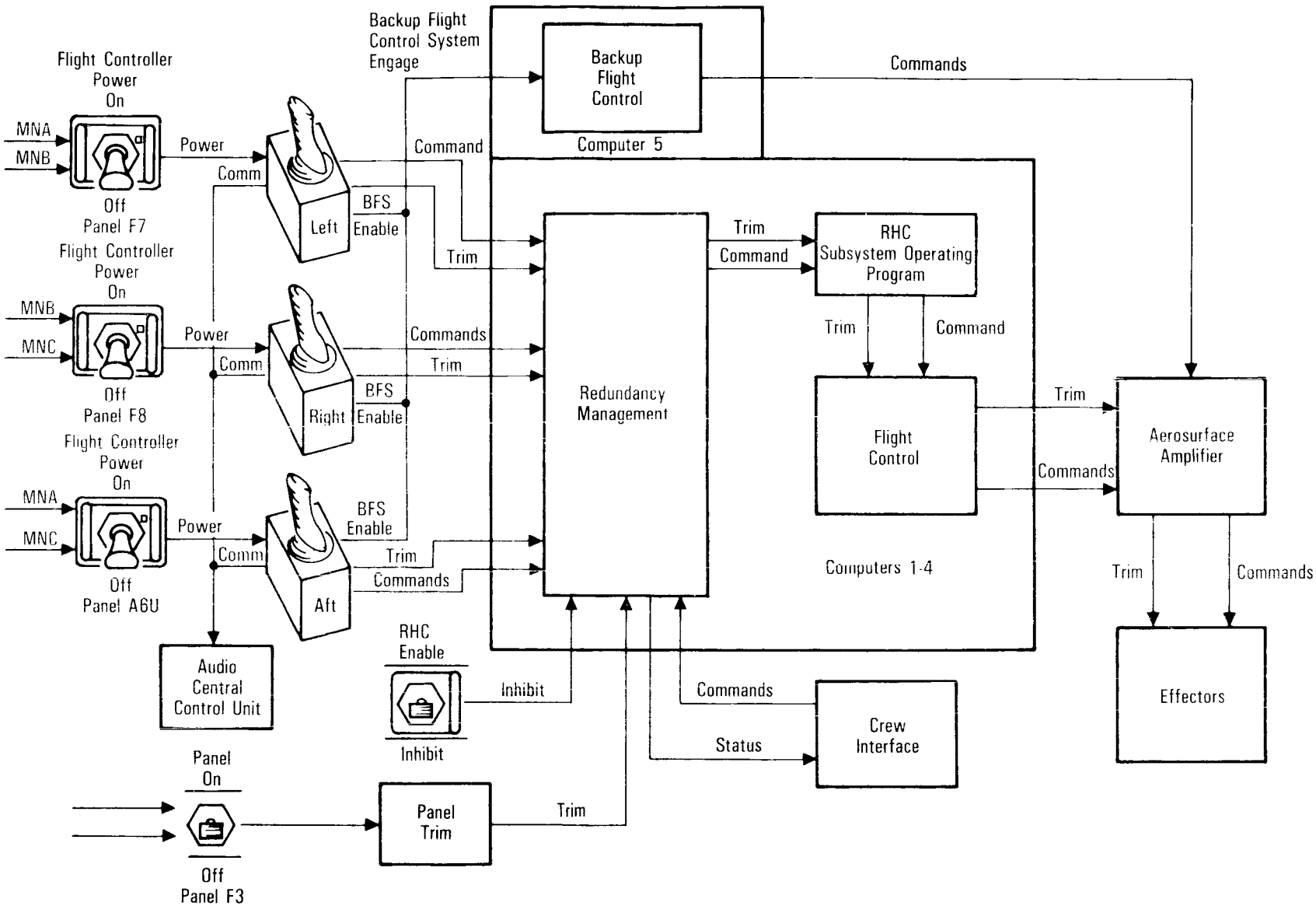


*Rotational Hand Controller*

Each RHC has an initial dead band of 0.25 of a degree in all three axes. To move the RHC beyond the dead band, an additional force is required. When the amount of deflection reaches a certain level, called the softstop, a step increase in the force required for further deflection occurs. When a software detent position is exceeded, that RHC assumes control.

The softstop occurs at 19.5 degrees in the roll and pitch axes and at 9.5 to 10.5 degrees in the yaw axis. To reach the softstop in the roll axes, 40.95 inch-pounds of static torque deflection are required; 38.2 inch-pounds are needed in pitch and 7 inch-pounds in yaw.

The mechanical hardstop that can be obtained in an axis is 24.3 degrees in the roll and pitch axis and 14.3 degrees in the yaw axis.

Software normally flows from the RHCs to the flight control system through redundancy management and a SOP before it is passed to the aerojet digital autopilot.

In a nominal mission, the flight crew has manual control of the RHC during every major mode except terminal countdown. When an RHC deflection exceeds the detent in an axis, the RHC SOP generates a discrete signal that converts the RHC from the automatic mode to control stick steering, or hot stick. However, during ascent when the ascent digital autopilot is active, a *CSS pitch* and/or *roll/yaw* mode push button light indicator on panel F2 or F4 must be depressed in order for manual inputs to be implemented into the flight control system from the commander's

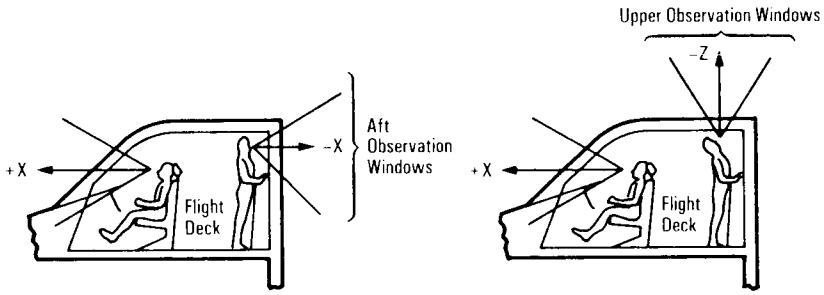


*Aft Station Windows*

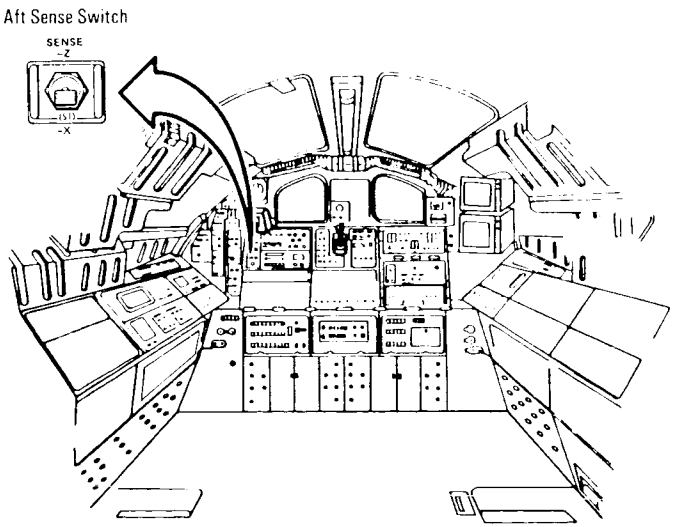


*Aft Sense Switch, Panel A6*

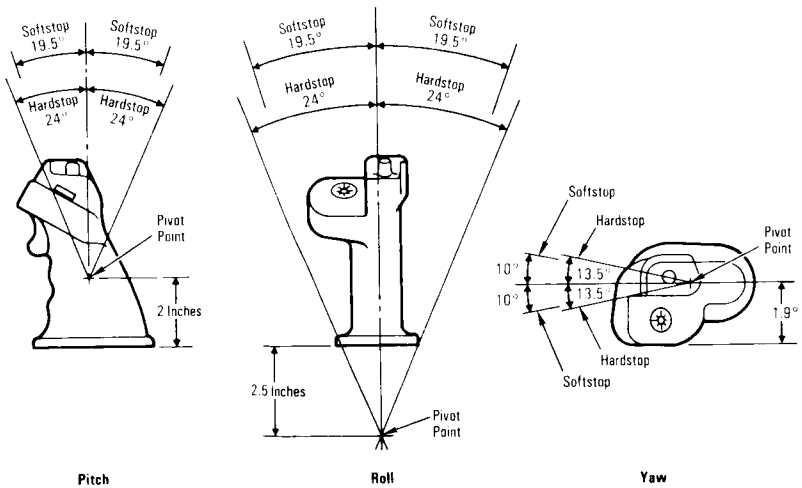


*Rotational Hand Controller Mechanical Limits*

or pilot's RHC. When a *CSS pitch* or *roll/yaw* push button light indicator is depressed on panels F2 or F4, the white light for the push button indicator will be illuminated and that axis will be downmoded from automatic to CSS.

When the flight crew commands three-axis motion using the RHC, the GPCs process the RHC and motion sensor commands; and the flight control system interprets the RHC motions (fore and aft, right and left, clockwise and counterclockwise) as rate commands in pitch, roll and yaw and then processes the flight control law (equations) to enhance control response and stability. If conflicting commands are given, no commands result.

During orbital flight, any one of the three stations can input three-axis control commands to the flight control system. During entry and landing, the commander and pilot have two-axis (roll and pitch only) capability. Roll, pitch and yaw aerosurface deflection trim is controlled by the panel *trim* switches, while roll and pitch vehicle rate trim is controlled with the *trim* switches on the RHC. For a return-to-launch-site abort, both the commander's and pilot's RHC have three-axis capability during major mode 601 and roll and pitch during major modes 602 and 603.

The commander's RHC is powered when the *flt cntlr* (controller) *on/off* switch on panel F7 is positioned to *on*. The pilot's RHC is powered when the *flt cntlr on/off* switch on panel F8 is positioned to *on*. The aft RHC is powered when the *flt cntlr on/off* switch on panel A6 is positioned to *on*.

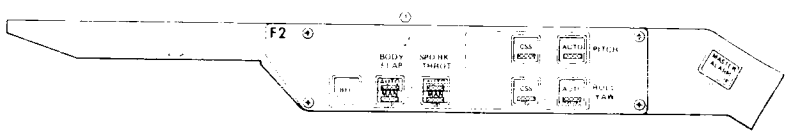


*Panel F2*

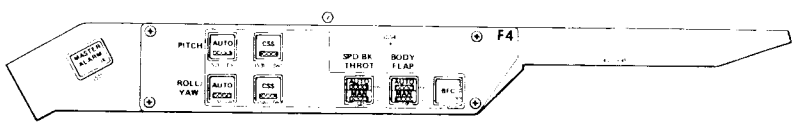


*Panel F4*

If a malfunction occurs in the commander's or pilot's RHC, the red *RHC* caution and warning light on panel F7 is illuminated.

The RHC contractor is Honeywell Inc., Clearwater, Fla.

**Translational Hand Controller.** There are two translational hand controllers: one at the commander's station and one at the aft flight deck station. The commander's THC is active during orbit insertion, on orbit and during deorbit. The aft flight deck station THC is active only on orbit. The THCs are used for manual control of translation along the longitudinal (X), lateral (Y) and vertical (Z) vehicle axes using the RCS.

Each THC contains six three-contact switches, one in the plus and minus directions for each axis. Moving the THC to the right commands translation along the plus Y axis and closes three switch contacts (referred to as channels 1, 2 and 3). Redundancy management then selects the channel and provides the command.

An *aft sense* switch on panel A6 selects the line-of-sight reference along the minus X or minus Z axis of the orbiter for the aft THC. The *aft sense* switch must be in the *-X* position for aft windows and *-Z* for the overhead windows in order for the aft THC commands to be correctly transformed to give the desired orbiter movement.

The normal displacement of a THC is 0.5 of an inch from the center null position in both directions along each of the three THC axes. A force of 2 pounds is required to deflect either THC 0.5 of an inch in all axes.

The redundant signals from the forward and aft THC pass through a redundant management process and a SOP before being passed to the flight control system. If both the forward and aft THCs generate conflicting translation commands, the output translation command is given.

In what is referred to as the transition digital autopilot mode, the commander's THC is active and totally independent of the flight control orbital digital autopilot (*DAP*) push buttons on

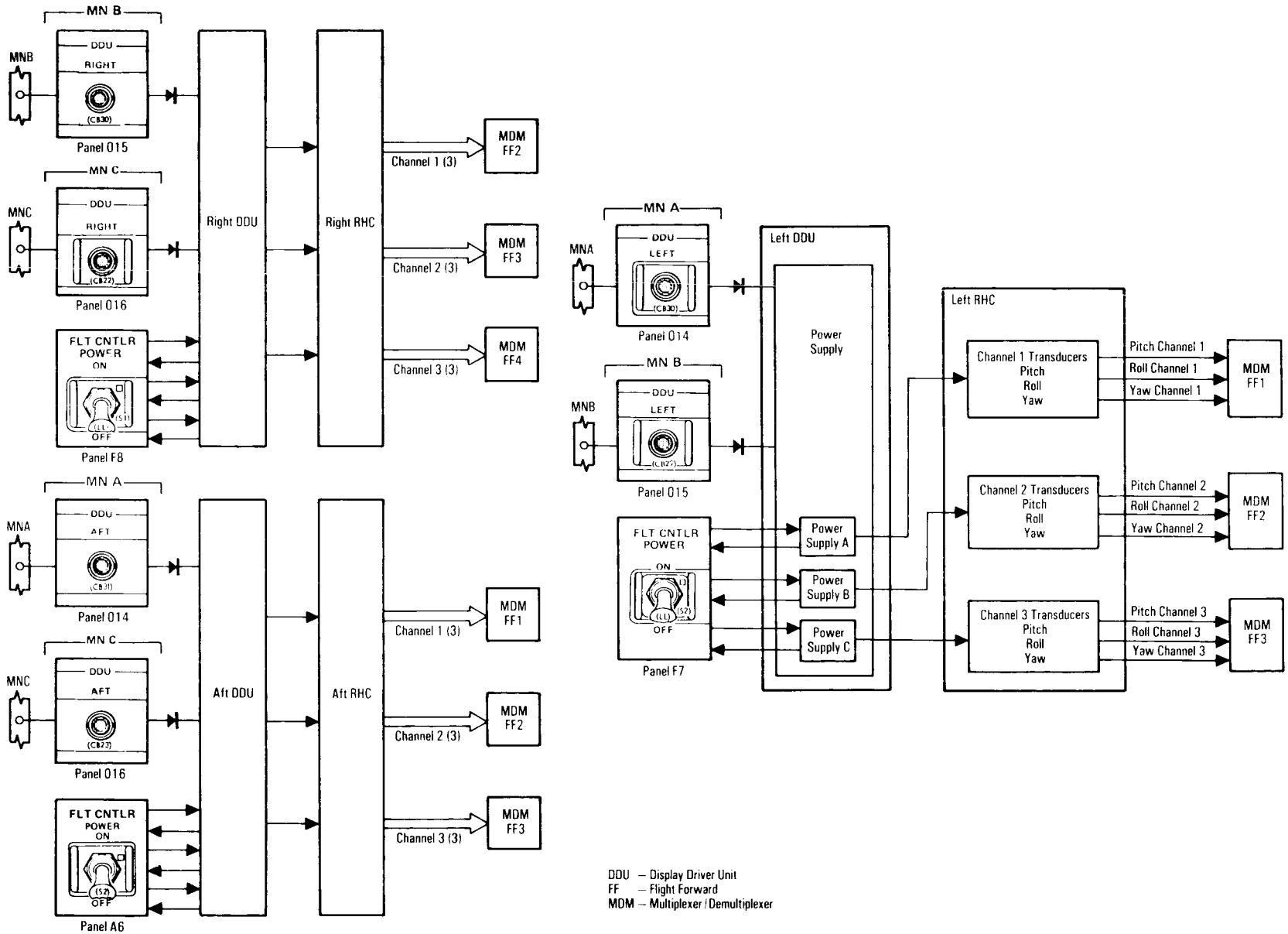


*Rotational Hand Controller Power and Data Interfaces*

panel C3 or A6 or the position or status of the RHC. Whenever the commander's THC is out of detent plus or minus X, Y or Z, translation acceleration commands are sent directly to the RCS jet selection logic for continuous RCS thrusting periods. Rotational commands may be sent simultaneously with translation commands within the limits of the RCS jet selection logic; if both plus X and minus Z translations are commanded simultaneously, plus X translation is given priority.

The commander's THC is powered when the *flt cntlr on/off* switch on panel F7 is positioned to *on*. The aft THC is powered when the *flt cntlr on/off* switch on panel A6 is positioned to *on*.

The THC contractor is Honeywell Inc., Clearwater, Fla.

**Control Stick Steering Push Button Light Indicators.** The *pitch auto*, *CSS* and *roll/yaw auto*, *CSS* push button light indicators are located on panel F2 for the commander and on panel F4 for the pilot. Each push button light indicator is triply redundant. During entry, depressing a *CSS* push button light indicator will mode flight control to augmented manual in the corresponding

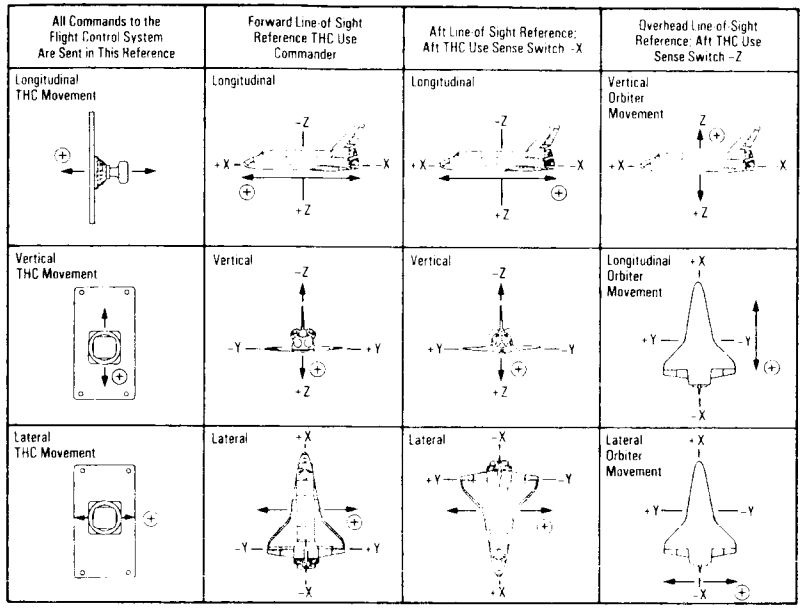


*Positive Deflections of the Translational Hand Controller*



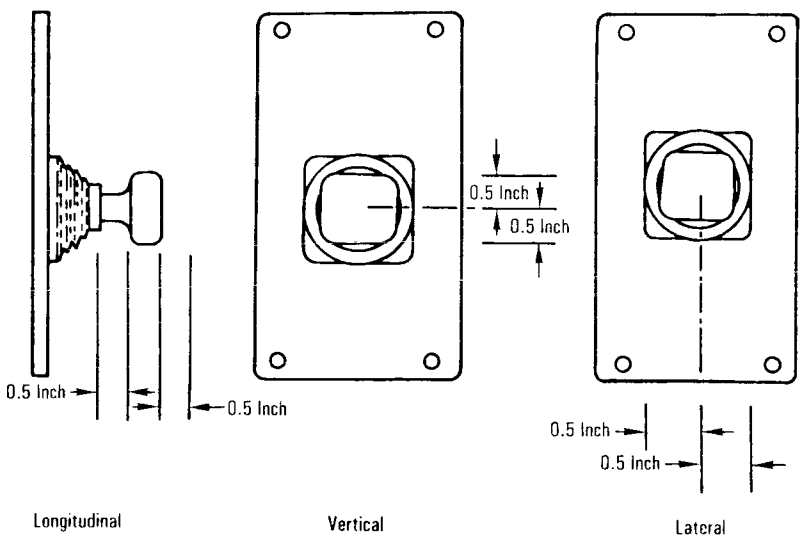


*Translational Hand Controller*

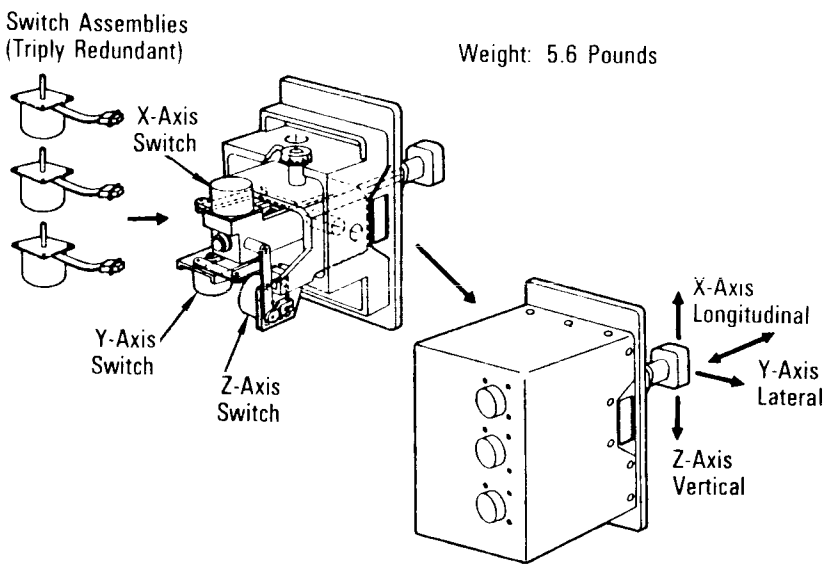


*Translational Hand Controller*

axis, illuminate both *CSS* lights and extinguish both *auto* lights for that axis. Depressing a *CSS* push button light indicator to *auto* will return flight control in that axis to auto, extinguish both *CSS* lights and illuminate both *auto* lights. During ascent, depressing any of the four *CSS* push button light indicators will mode flight control to augmented manual in all axes, illuminate all four *CSS* push button light indicators and extinguish all four *auto* lights. Depressing any of the four push button light indicators to *auto* will mode flight control to automatic, illuminate all four *auto* push button light indicators and extinguish the *CSS* push button light indicators.

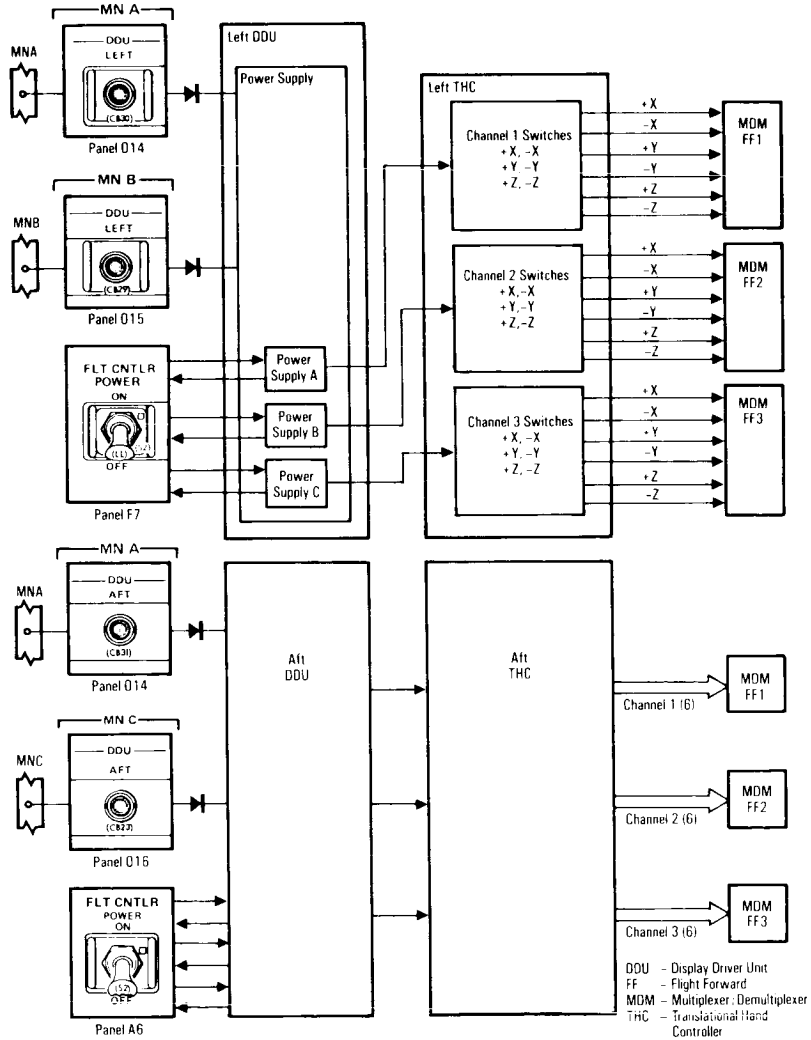


*Translational Hand Controller Power and Data Interfaces*

**Rudder Pedals.** There are two pairs of rudder pedals: one each for the commander and pilot. The commander's and pilot's rudder pedals are mechanically linked so that movement on one side moves the other side. When a pedal is depressed, it moves a mechanical input arm in a rudder pedal transducer assembly. Each RPTA contains three transducers—channels 1, 2 and 3—and generates an electrical signal proportional to the rudder pedal deflection. An artificial feel is provided in the rudder pedal assemblies.

The rudder pedals command orbiter rotation about the yaw axis by positioning the rudder during atmospheric flight. In atmospheric flight, flight control software performs automatic turn



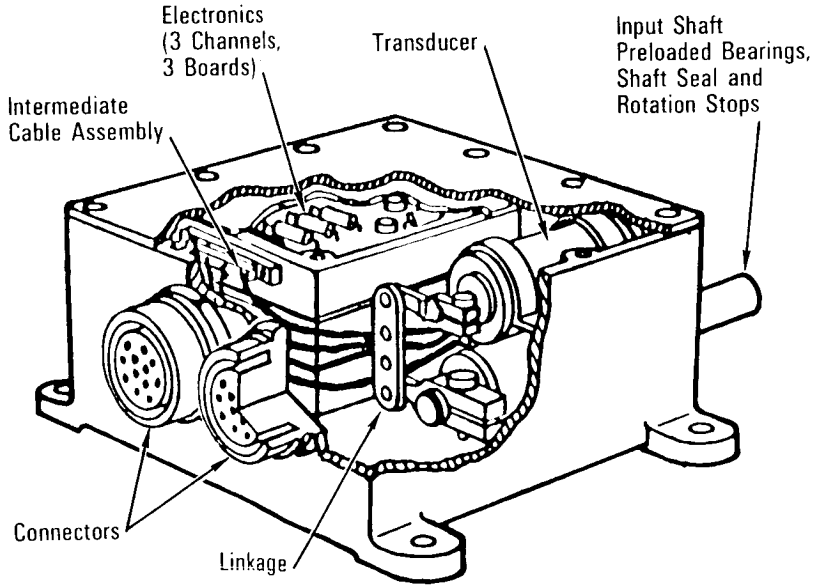


*Rudder Pedal Transducer Assembly*

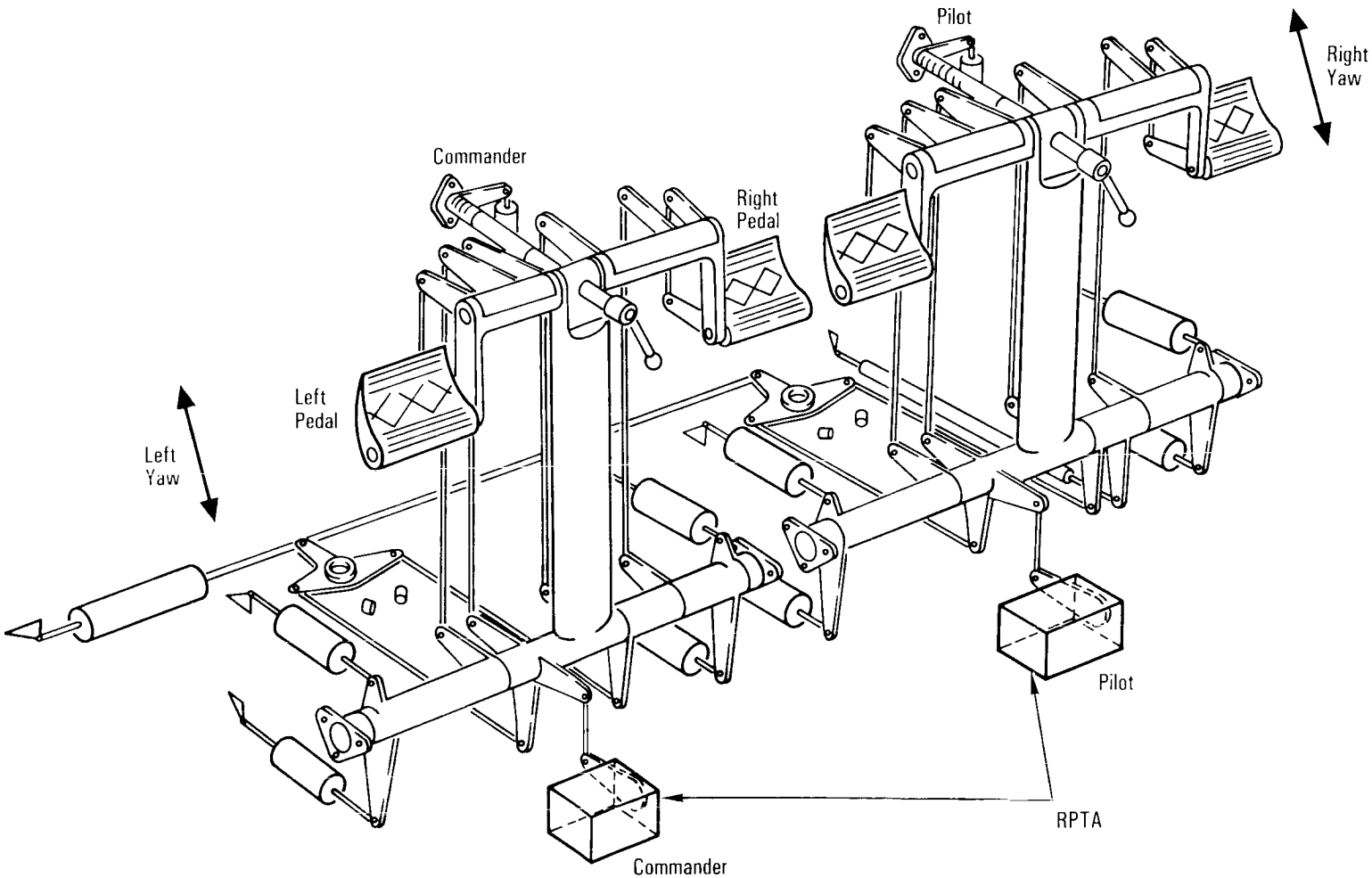


*Rudder Pedal Transducer Assembly*

coordination; thus the rudder pedals are not used until the wings are level before touchdown.

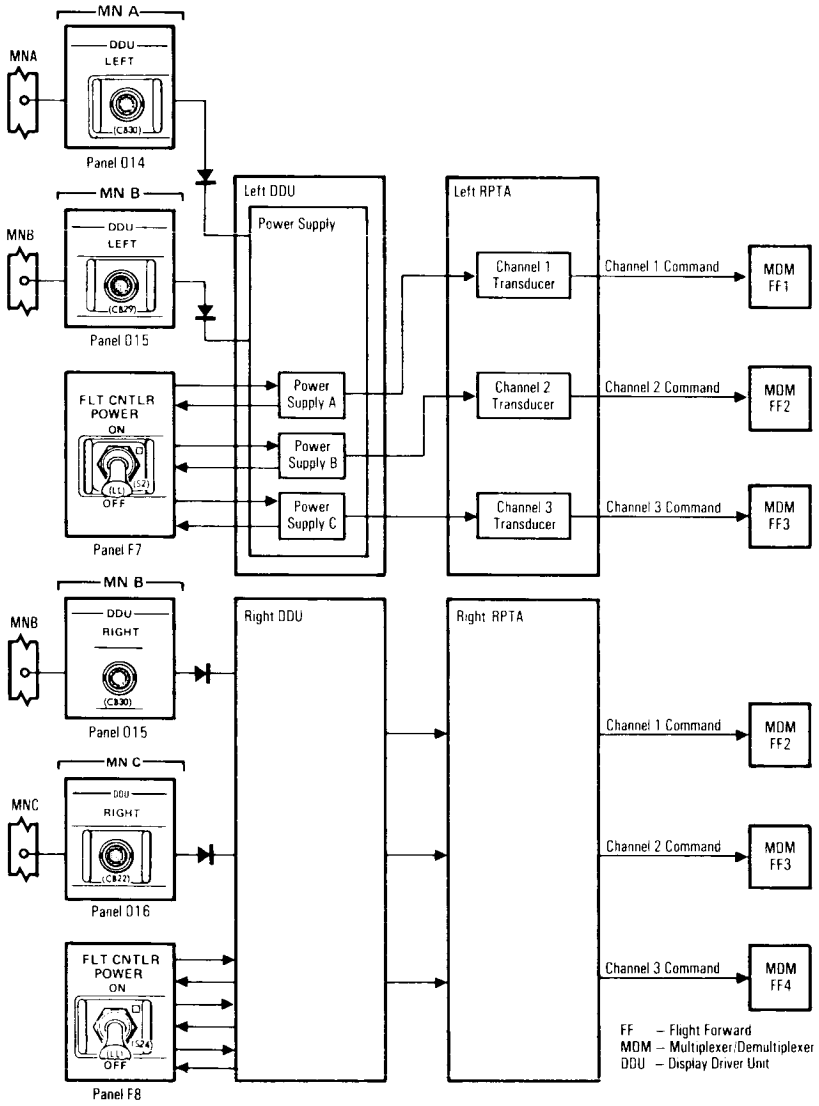


*Rudder Pedal Transducer Assembly Power and Data Interfaces*

The RPTA SOP converts the selected left and right commands from volts to degrees; selects the largest of the left and right commands for output to flight control software after applying a dead band; and if redundancy management declares an RPTA bad, sets that RPTA to zero.

The rudder pedals can be adjusted 3.25 inches forward or aft from the neutral position in 0.81-inch increments (nine positions). The breakout force is 10 pounds. A pedal force of 70 pounds is required to depress a pedal to its maximum forward or aft position.

The rudder pedals provide two additional functions unrelated to software after touchdown. Rudder pedal deflections provide nose wheel steering, and depressing the upper portion of the pedals by applying toe pressure provides braking. Differential braking may be used for nose wheel steering.

The commander's RPTA is powered when the *flt cntlr on/off* switch on panel F7 is positioned to *on*. The pilot's RPTA is powered when the *flt cntlr on/off* switch on panel F8 is positioned to *on*.

The RPTA contractor is Honeywell Inc., Clearwater, Fla.

**Speed Brake/Thrust Controller.** There are two speed brake/thrust controllers: one on the left side of the flight deck forward on panel L2 for the commander and one on the right side of the center console on panel C3 for the pilot. The SBTCs serve two distinct functions: during ascent, the pilot's speed brake/thrust controller may be used to vary the thrust level of the three SSMEs. During entry, the commander's or pilot's speed brake/thrust controller may be used to control aerodynamic drag (hence airspeed) by opening or closing the speed brake.

Depressing a *takeover* switch (with three contacts) on each SBTC switches to manual control of the SSME thrust level setting (pilot's only) or speed brake position. Each SBTC contains three transducers—channels 1, 2 and 3, which produce a voltage proportional to the deflection. Redundancy management selects the output.

In the case of the SSME thrust-level setting, the top half of both *spd bk/throt* push button light indicators on panels F2 and F4 will be illuminated, indicating *auto*. Only the pilot's SBTC can be enabled for manual throttle control. The pilot depresses the *takeover* push button on the SBTC, causing the general-purpose computer throttle command to be frozen at its current value. While depressing the *takeover* button, the pilot moves the SBTC to match the frozen GPC command. Manual control is established when the match is within 4 percent. When the match is achieved, the *spd bk/throt man* push button light indicator on panel F4 will

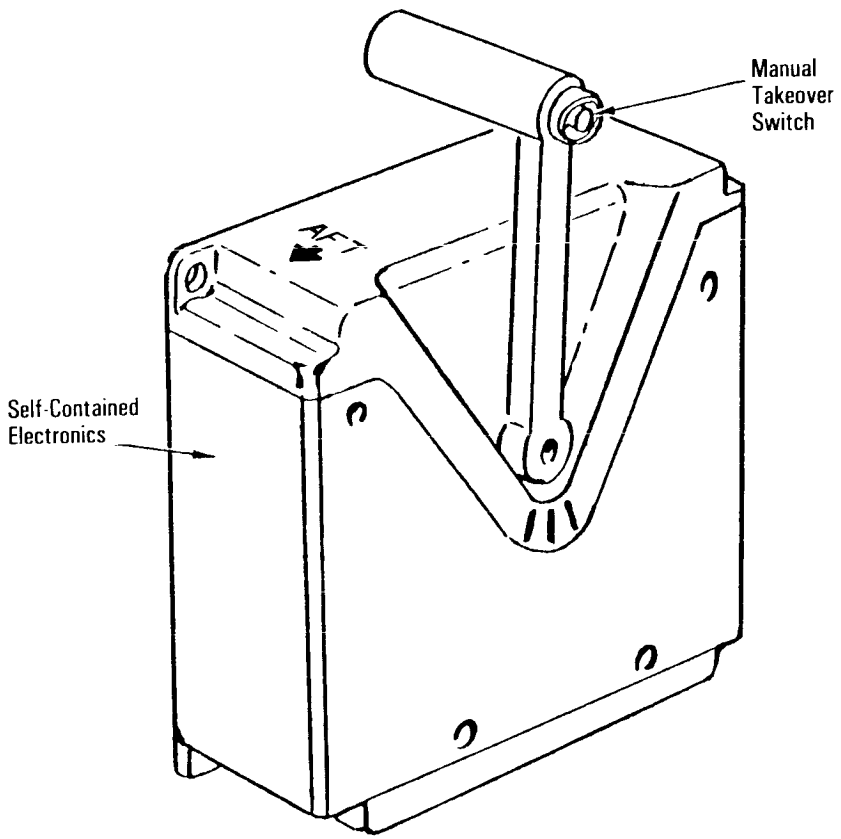


*Speed Brake/Thrust Controller*

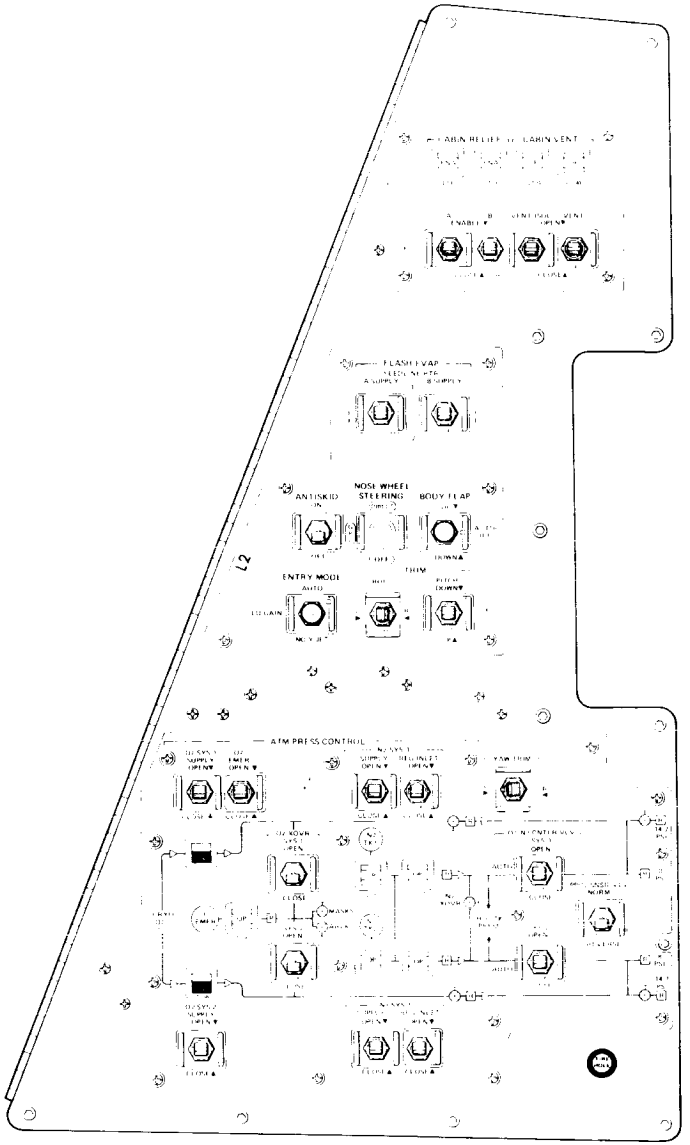


*Panel L2*

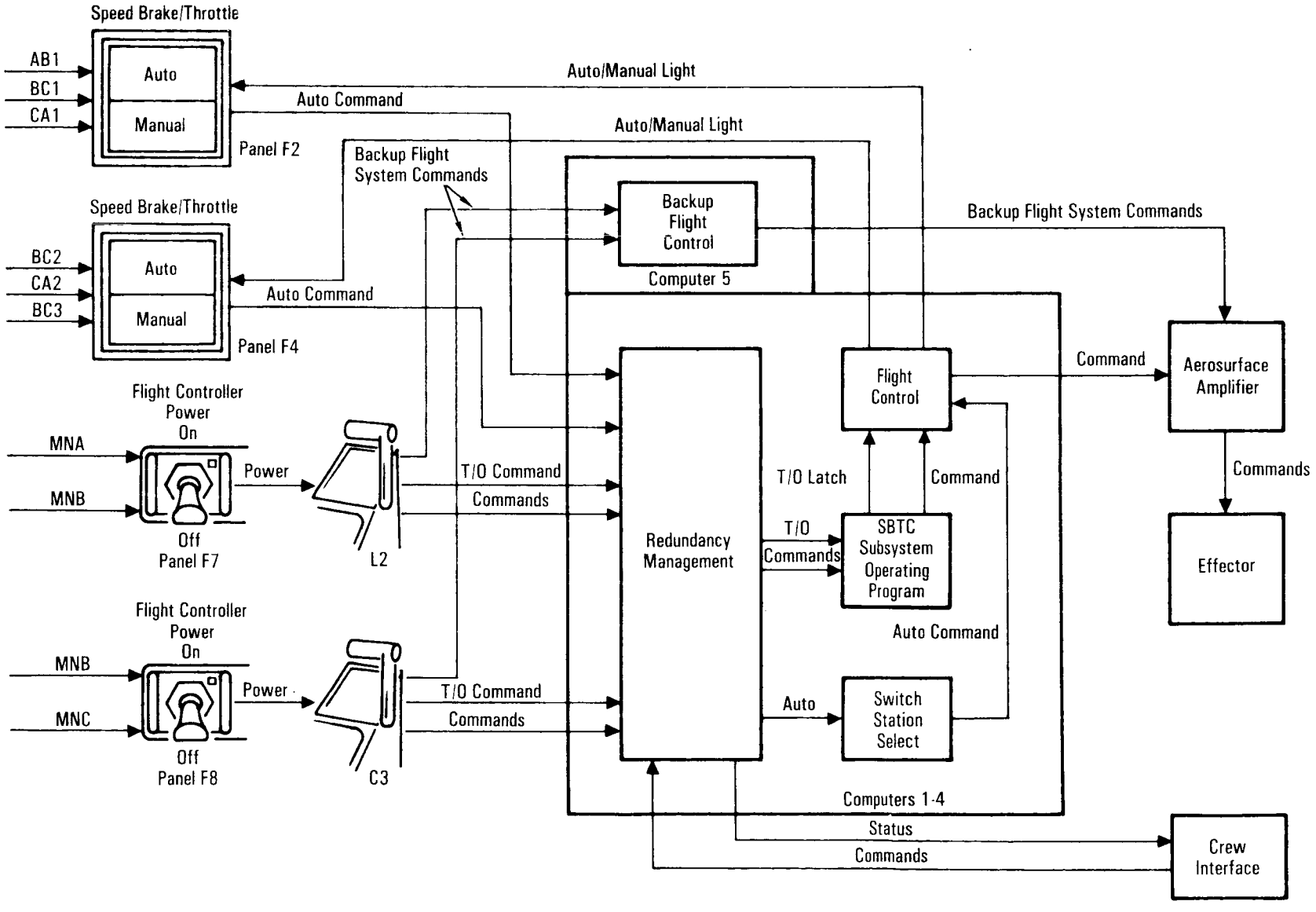


*Speed Brake/Thrust Controller*

be illuminated and the *auto* light extinguished. The *takeover* push button is then released. If the *takeover* push button is released before a match is achieved, the system reverts to GPC auto commands. Under manual throttle command, depressing either or both push button light indicators on panel F2 or F4 will cause the system to revert to the GPC auto commands, extinguishing the pilot's *man* light and illuminating the *auto* lights on panels F2 and F4. Transferring back to auto during a return-to-launch-site abort leaves the throttle at the last-commanded manual setting until 3 g's, and the vehicle is held at 3 g's.

If the speed brake mode is in automatic and the commander or pilot wishes to control the speed brake manually, momentarily depressing the *takeover* push button grants control of the SBTC to the crew member who depressed the switch. The speed brake is driven to the position currently commanded by the SBTC. The *spd bk/throt man* push button light indicator on panel F2 will be illuminated if the commander takes control, extinguishing the *auto* light. If the pilot takes control, the *spd bk/throt man* push button light indicator on panel F4 will be illuminated, and the commander's light will be extinguished. To place the speed brake under software control, either or both *spd bk/throt* push button indicators on panel F2 or F4 can be depressed, and the *auto* lights on panels F2 and F4 will be illuminated.

At the forward setting, the SSME thrust level is the greatest, and the speed brake is closed. Rotating the SBTC back decreases the SSME thrust level or opens the speed brake.

The SBTC SOP converts the selected SSME throttle command to a setting in percent and the selected speed brake command from volts to degrees. In addition, the SBTC SOP selects the speed brake command from the SBTC whose *takeover* button was depressed last. If both *takeover* buttons are depressed simultaneously, the commander's SBTC is given control. If redundancy management declares an SBTC bad, the command is frozen.

The commander's SBTC is powered by the *flt cntlr on/off* switch on panel F7 when positioned to *on*. The pilot's SBTC is powered when the *flt cntlr on/off* switch on panel F8 is positioned to *on*.

The SBTC contractor is Honeywell Inc., Clearwater, Fla.

**Body Flap Switch.** There are two *body flap* switches: one for the commander on panel L2 and one for the pilot on panel C3. Each switch is a lever-locked switch spring loaded to the center position. The body flap switches provide manual control for posi-

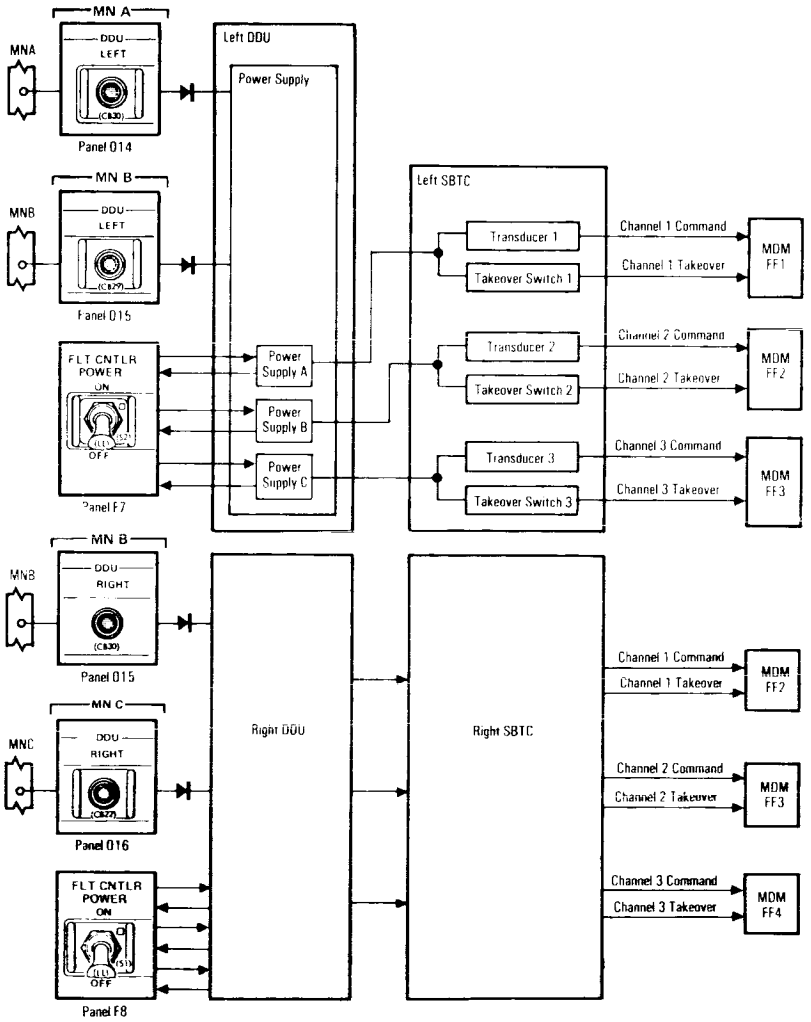


*Speed Brake/Thrust Controller Power and Data Interfaces*

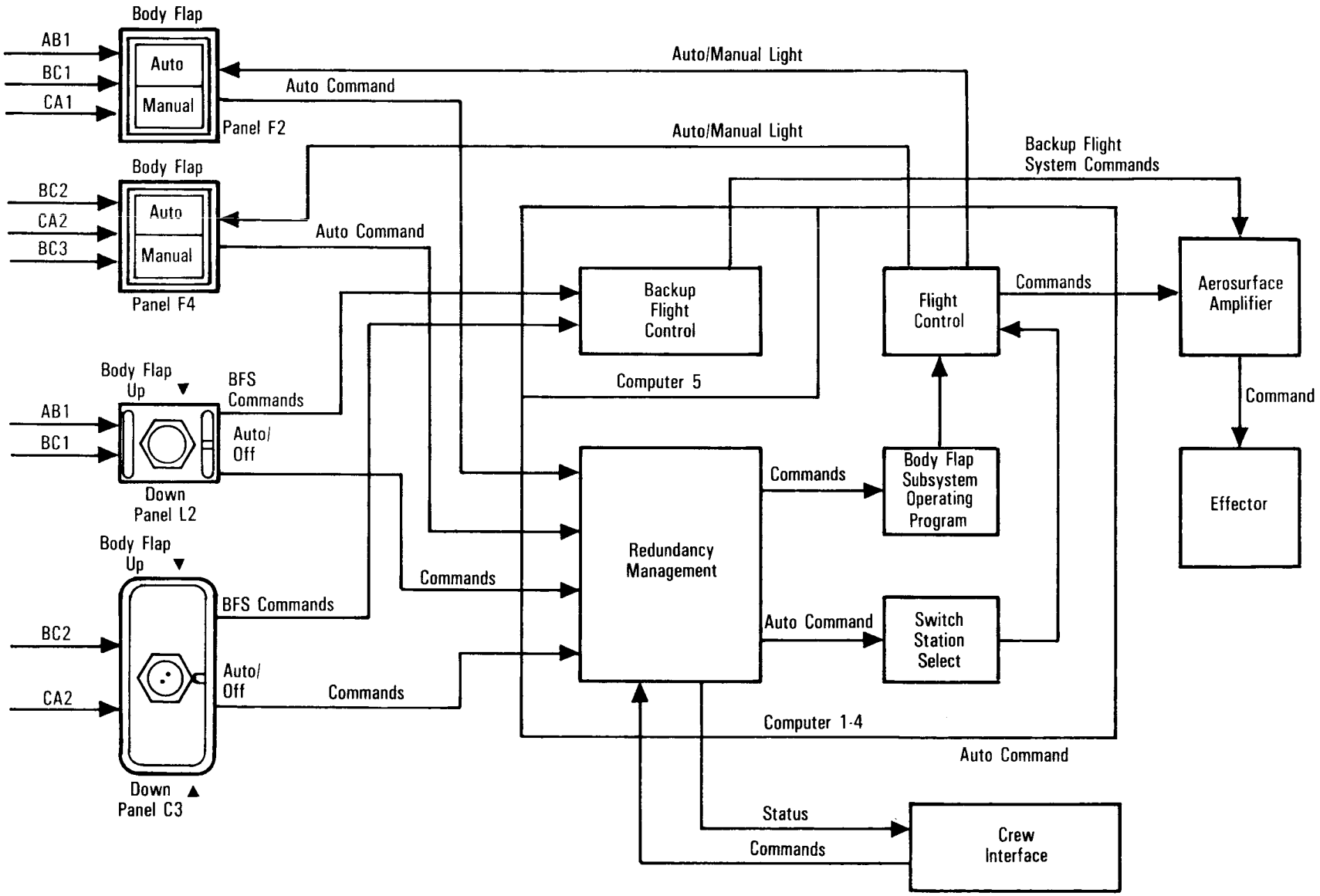
Body Flap
AB1
BC1
CA1
Auto
Manual
Panel F2
Auto/Manual Light
Auto Command
Body Flap
BC2
CA2
BC3
Auto
Manual
Panel F4
Auto/Manual Light
Auto Command
Backup Flight System Commands
Backup Flight Control
Flight Control
Commands
Aerosurface Amplifier
Computer 5
Command
Body Flap Up
BFS Commands
AB1
BC1
Auto/ Off
Down
Panel L2
Commands
Body Flap Subsystem Operating Program
Effector
Redundancy Management
Body Flap Up
BFS Commands
BC2
CA2
Auto/ Off
Commands
Auto Command
Switch Station Select
Computer 1-4
Auto Command
Down
Panel C3
Status
Commands
Crew Interface

*Body Flap*

tioning the body flap for SSME thermal protection and for reducing elevon deflections during the entry phase.

The body flap can be switched from its automatic mode to its manual mode by moving either switch from the *auto/off* position to the *up* or *down* position. These are momentary switch positions; when released, the switch returns to *auto/off*. The white *body flap man* (lower half) of the push button light indicator on panel F2 or F4 is illuminated, indicating manual control of the body flap. To regain automatic control, the *body flap* push button light indicator on panel F2 or F4 is depressed, extinguishing the *man* white light and illuminating the *auto* white light. The push button indicator can also be depressed to *man* for manual body flap control. The push button light indicator is triply redundant.

The *up* and *down* positions of each switch have two power supplies from a control bus.

If the commander and pilot generate conflicting commands, a body-flap-up command will be output to flight control because up has priority.

**RHC/Panel Enable/Inhibit.** The dual-redundant *trim RHC/panel enable/inhibit* switches on panel F3 provide signals to the GPCs, prohibiting software execution of the associated *RHC* and *panel trim* switch inputs while in the *inhibit* position. The *enable* position is not wired to the GPCs, permitting the *RHC* and *panel trim* switch inputs, which allows trimming.

When the *trim RHC/panel* switch on the left side of panel F3 is in *enable*, the commander's RHC trim switches command vehicle pitch and roll rates in major modes 304 and 305 (entry) and major modes 602 and 603 (return to launch site). The three *trim* switches on panel L2 for the commander are used to move the aerosurfaces in roll, pitch and yaw.

When the *trim RHC/panel* switch on the right side of panel F3 is in *enable*, the pilot's RHC trim switches command vehicle pitch and roll rates in major modes 304, 305, 602 and 603. The three *trim* switches on panel C3 for the pilot are used to move the aerosurfaces in roll, pitch and yaw.

Redundancy management processes the two sets of switches. If two switches generate opposing commands, the resultant trim command in that axis is zero.

**Trim Switches.** The commander's *trim roll l* (left), *r* (right); the *yaw trim l, r;* and *trim pitch up, down* switches are located on panel L2. The pilot's switches are located on panel C3. The commander's *trim* switches on panel L2 are enabled when the *trim panel on/off* switch on the left side of panel F3 is positioned to *on*. The pilot's *trim* switches on panel C3 are enabled when the *trim panel on/off* switch on the right side of panel F3 is positioned to *on*. The corresponding *trim RHC/panel enable/inhibit* switch must be in *enable* in order for trimming to take place.

Each of the three *trim* switches on panels L2 and C3 are spring loaded to the center *off* position.

Redundancy management processes the two sets of switches. If two switches generate opposing commands, the resultant trim command in that axis is zero.

**Aerosurface Servoamplifiers.** Aerosurface servoamplifiers are electronic devices that receive aerosurface commands during atmospheric flight from the flight control system software and



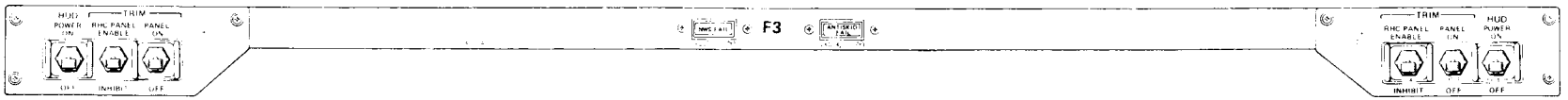


*Panel F3*

electrically position hydraulic valves in aerosurface actuators, causing aerosurface deflections.

Each aerosurface is driven by a hydraulic actuator controlled by a redundant set of electrically driven valves (ports). There are four of these valves for each aerosurface actuator, except the body flap, which has only three. These valves are controlled by the selected ASAs.

There are four ASAs located in aft avionics bays 4, 5 and 6. Each ASA commands one valve for each aerosurface, except the body flap. ASA 4 does not command the body flap.

In addition to the command channels from the ASAs to the control valves, there are data feedback channels to the ASAs from the aerosurface actuators. Each aerosurface has four associated position feedback transducers that are summed with the position command to provide a servoloop closure for one of the four independent servoloops associated with the elevons, rudder and speed

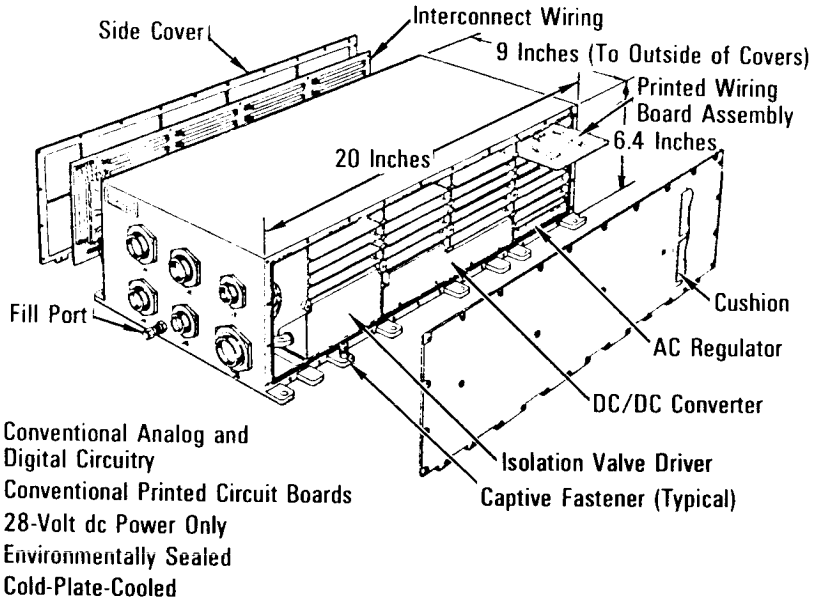


*Aerosurface Servoamplifier*

brake. The body flap utilizes only three servoloops. The path from an ASA to its associated servovalve in the actuators and from the aerosurface feedback transducers to an ASA is called a flight control channel; there are, thus, four flight control channels, except for the body flap.

Each of the four elevons located on the trailing edges has an associated servoactuator that positions it. Each servoactuator is supplied with hydraulic pressure from the three orbiter hydraulic systems. A switching valve is used to control the hydraulic system that becomes the source of hydraulic pressure for that servoactuator. The valve allows a primary source of pressure (P1) to be supplied to that servoactuator. If the primary hydraulic pressure drops to around 1,200 to 1,500 psig, the switching valve allows the first standby hydraulic pressure (P2) to supply that servoactuator. If the first standby hydraulic pressure drops to around 1,200 to 1,500 psig, the secondary standby hydraulic source pressure (P3) is then supplied to that servoactuator. The yellow *hyd press* caution and warning light will be illuminated on panel F7 if the hydraulic pressure of system 1, 2 or 3 is below 2,400 psi and will also illuminate the red *backup* caution and warning alarm light on panel F7.

Each elevon servoactuator receives command signals from each of the four ASAs. Each actuator is composed of four two-stage servovalves that drive a modulating piston. Each piston is summed on a common mechanical shaft, creating a force to position a power spool that controls the flow of hydraulic fluid to the actuator power ram, controlling the direction of ram movement, thus driving the elevon to the desired position. When the desired position is reached, the power spool positions the mechanical shaft to block the hydraulic pressure to the hydraulically operated ram, locking the ram at that position. If a problem develops within a servovalve or it is commanded to a position different than the positions of the other three within an actuator, secondary delta pressure should begin to rise to 2,200 psi. Once the secondary delta pressure is at or above 2,200 psia for more than 120 seconds, the corresponding ASA sends an isolation command to the servovalve, opening the isolation valve, bypassing the hydraulic pressure to the servovalve, and causing its commanded pressure to the power spool to drop to zero, effectively removing it from opera-

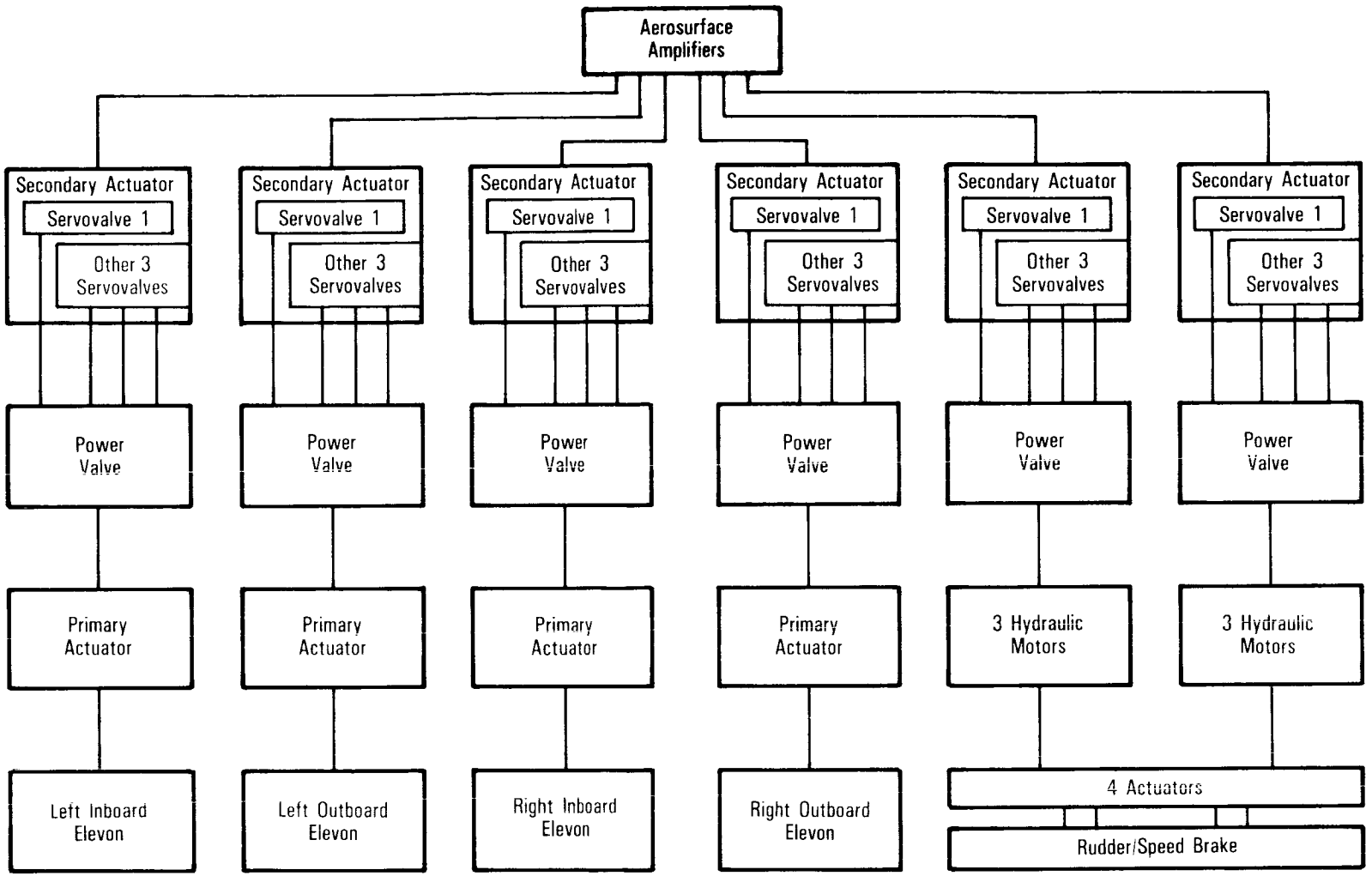


*Aerosurface Amplifiers*

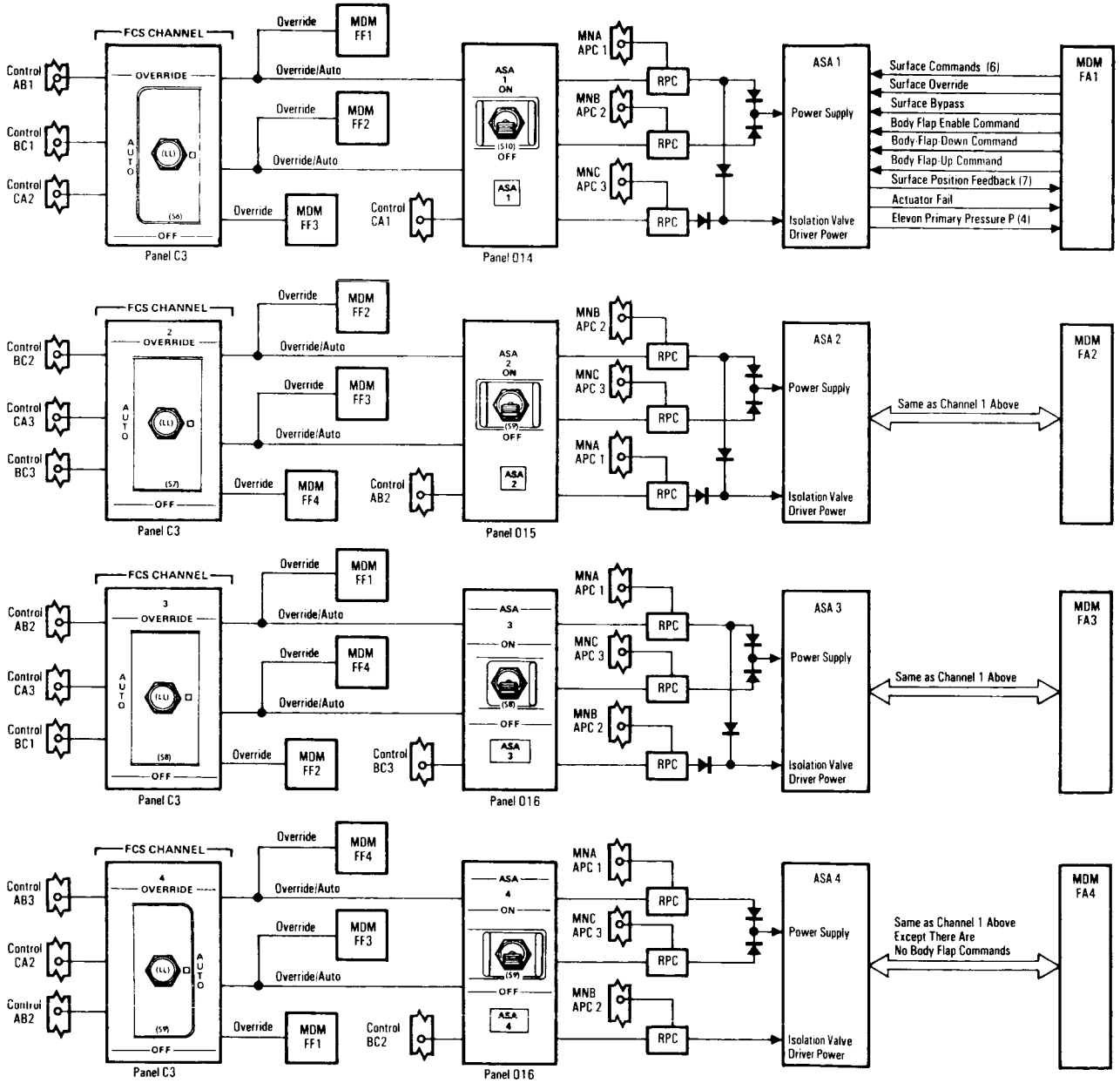


*Power and Data Interfaces of Aerosurface Servoamplifiers*

tion. The pressure differential is sensed by a primary linear differential pressure transducer across the modulating piston when the respective *FCS channel* switch on panel C3 is in *auto*. This automatic function prevents excessive transient motion to that aerosurface, which could result in loss of the orbiter due to slow manual redundancy.

The *FCS channel* yellow caution and warning light on panel F7 will be illuminated to inform the flight crew of a failed channel. A red *FCS saturation* caution and warning light on panel F7 will be illuminated if one of the four elevons is set at more than plus 15 degrees or less than minus 20 degrees.

There are four *FCS channel* switches on panel C3—*FCS channels 1, 2, 3* and *4*; each has an *override, auto* and *off* position. The switch for a channel controls the channel for the elevons, rudder/speed brake and body flap, except channel 4, which has no body flap commands. When an *FCS channel* switch is in *auto* and that channel was bypassed, it can be reset by positioning the applicable switch to *override*. When an *FCS channel* switch is positioned to *off*, that channel is bypassed.

In each elevon servoactuator ram, there are four linear ram position transducers and four linear ram secondary differential pressure transducers. The ram linear transducers provide position feedback to the corresponding servoloop in the ASA, which is then summed with the position command to close the servoloop. This feedback is then summed with the elevon ram linear secondary differential pressures to develop an electrohydraulic valve

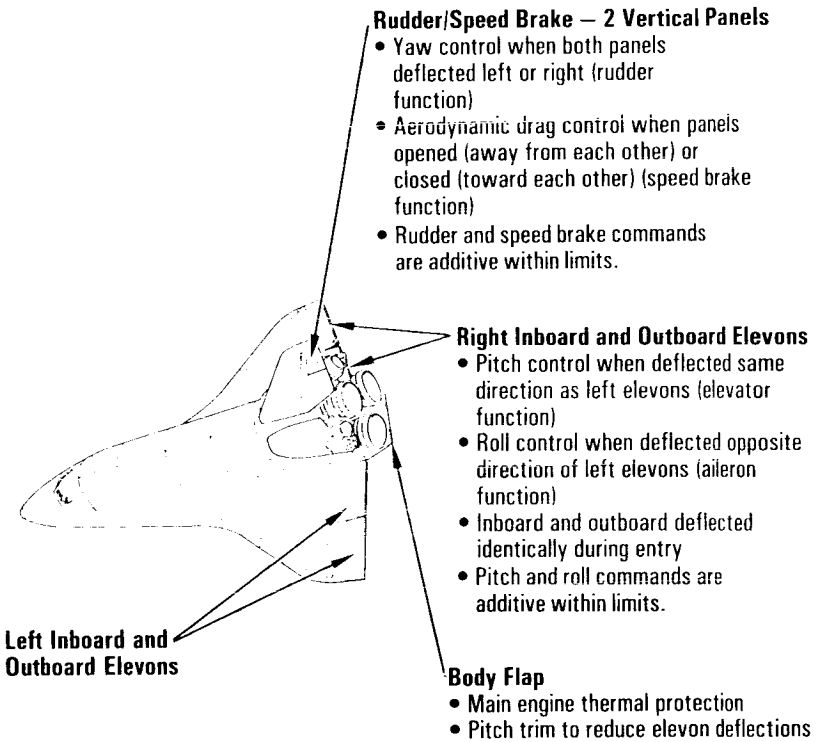


*Aerodynamic Surfaces and Associated Control Axes*

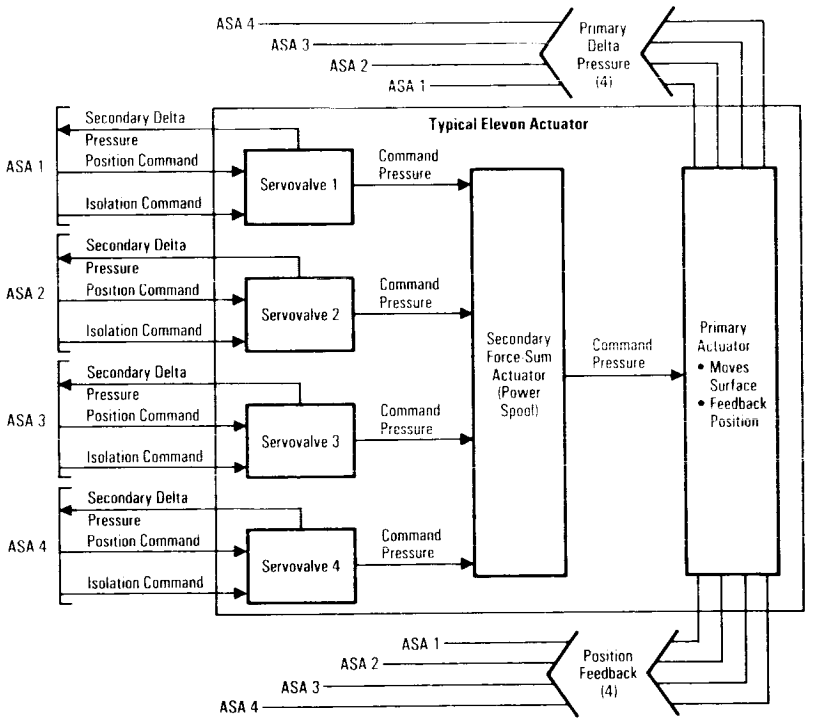


*Typical Elevon Actuator*

drive current that is proportional to the error signal in order to position the ram. The maximum elevon deflection rate is 20 degrees per second.

During ascent, the elevons are deflected to reduce wing loads caused by rapid acceleration through the lower atmosphere. In this scheme, the inboard and outboard elevons are deflected together. By the time the vehicle reaches approximately Mach 2.5, the elevons have reached a null position, where they remain. This is accomplished by the initialized-loaded program.

The rudder/speed brake, which consists of upper and lower panels, is located on the trailing edge of the orbiter's vertical stabilizer. One servoactuator positions the panels together to act as a rudder; another opens the panels at the rudder's flared end so it functions as a speed brake.

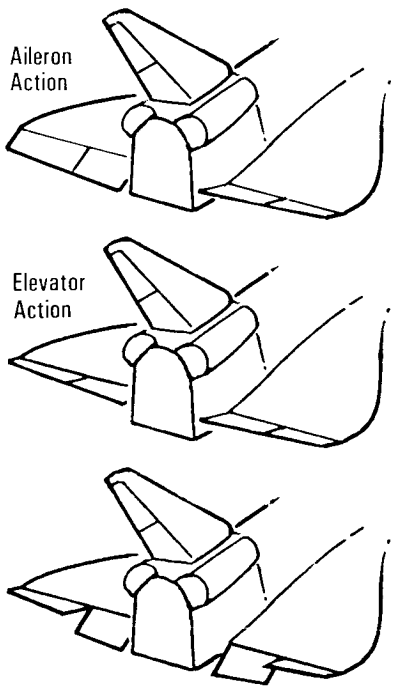


**Roll**

- The Right Elevon up and the Left Elevon Down Causes Right Roll.
- The Left Elevon up and the Right Elevon Down Causes Left Roll.

**Pitch**

- Both Elevons up Causes Nose up Pitch.
- Both Elevons Down Causes Nose Down Pitch.

**Load Relief**

- The Inboard Panels Deflect Together.
- The Outboard Panels Deflect Together.

*Elevon Function*

The rudder and speed brake servoactuator receives four command signals from the four ASAs. Each servoactuator is composed of four two-stage servovalves that function like those of the elevons. The exception is that the rudder's power spool controls the flow of hydraulic fluid to the rudder's three reversible hydraulic motors and the power spool for the speed brake controls the flow of hydraulic fluid in the speed brake's three hydraulic reversible motors. Each rudder and speed brake hydraulic motor receives hydraulic pressure from only one of the orbiter's hydraulic systems. Each hydraulic motor has a hydraulic brake. When the motor is supplied with hydraulic pressure, the motor's brake is released. When the hydraulic pressure is blocked to that hydraulic motor, the hydraulic brake is applied, holding that motor and the corresponding aerosurface at that position.

The three hydraulic motors provide output to the rudder differential gearbox, which is connected to a mixer gearbox that drives rotary shafts. These rotary shafts drive four rotary actuators, which position the rudder panels.

The three speed brake hydraulic motors provide power output to the speed brake differential gearbox, which is connected to the same mixer gearbox as that of the rudder. This gearbox drives rotary shafts, which drive the same four rotary actuators involved with the rudder. Within each of the four rotary actuators, plane-

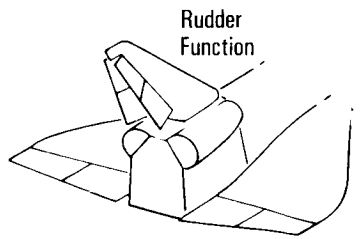


- The Rudder Provides Lateral Directional Control.
- Both Panels Deflected Right Cause the Nose to Yaw Right.
- Both Panels Deflected Left Cause the Nose to Yaw Left.

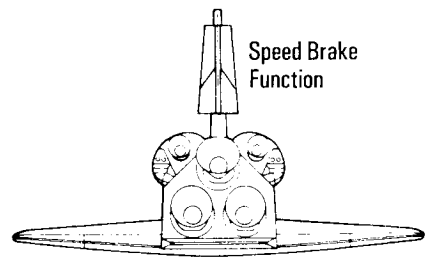


- The Rudder Panels Deflected in Opposite Directions Form the Speed Brake.
- The Speed Brake Is Used for Vehicle Drag and Pitch Modulation.

*Rudder/Speed Brake Function*

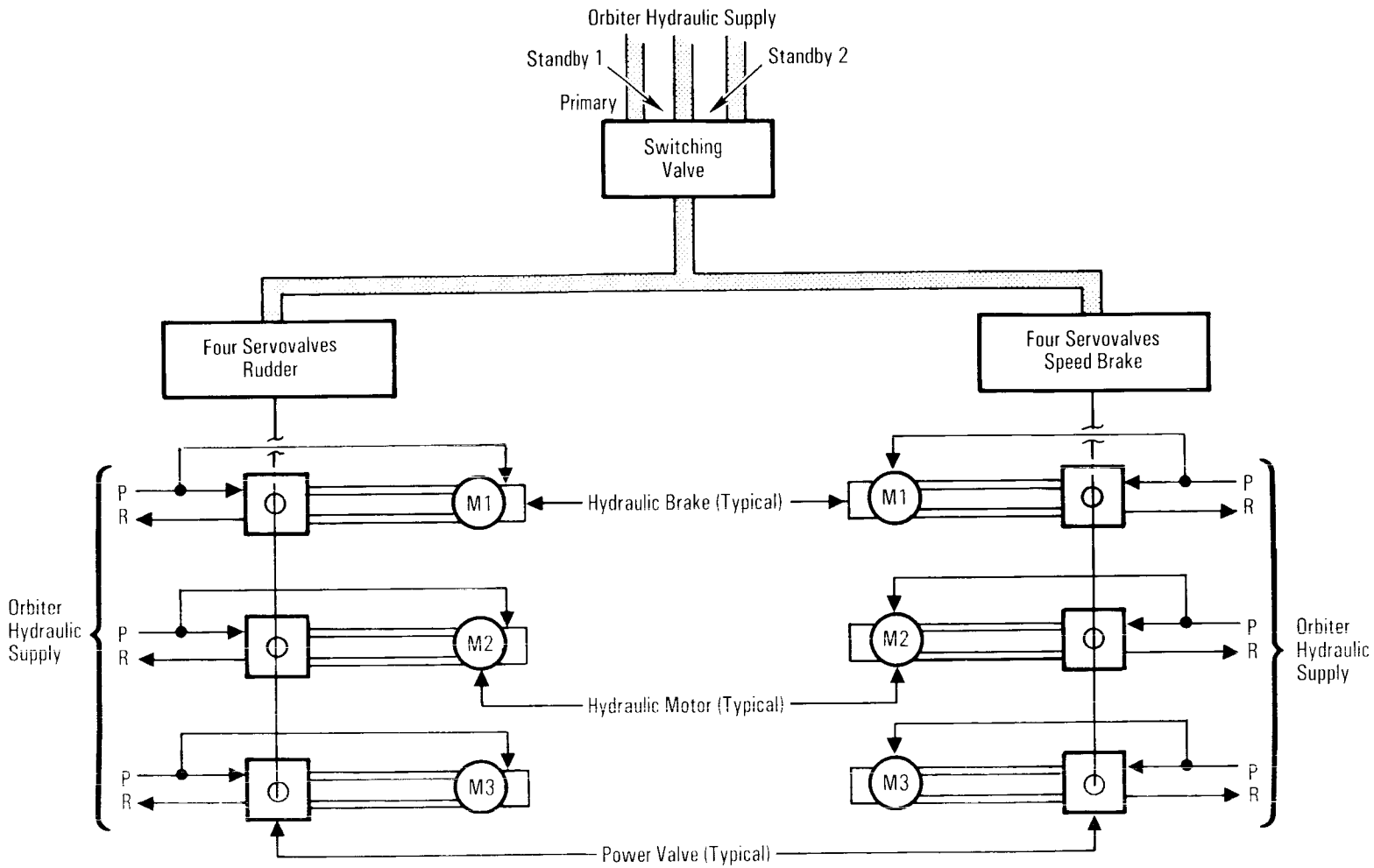


*Rudder/Speed Brake Hydraulic Supply Overview*

tary gears blend the rudder positioning with the opening of the rudder flared ends.

There are four rotary position transducers on the rudder differential gearbox output and one differential linear position transducer in each rudder servoactuator. The rotary position transducers provide position feedback to the corresponding servoloop in the ASA. The feedback is summed with the linear differential pressures that develop the electrohydraulic valve drive current in proportion to the error signal in order to position the rudder.

There are also four rotary position transducers on the speed brake differential gearbox output and one differential linear pressure transducer in each speed brake servoactuator.

The rotary position transducers provide position feedback to the corresponding servoloop in the ASA, which is summed with the position command to close the servoloop. These are then summed with the linear differential pressures that develop the electrohydraulic valve drive current in proportion to the error signal to position the speed brake.

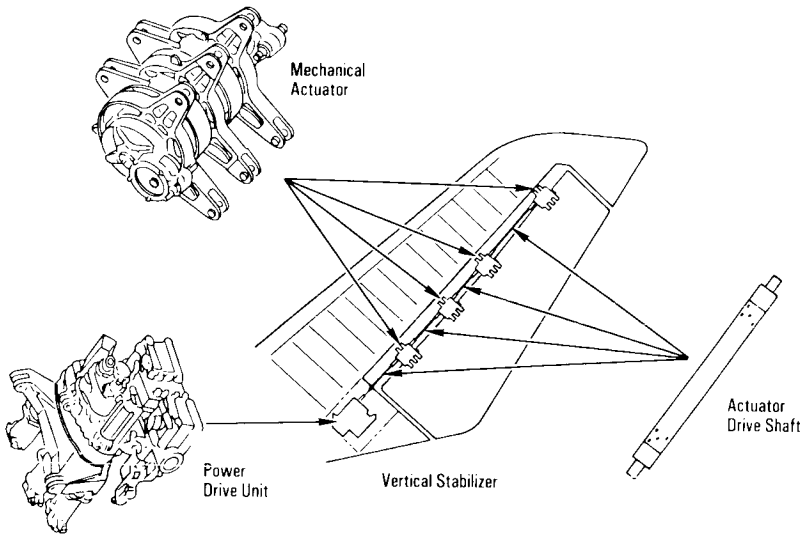


*Rudder/Speed Brake Actuator Location*

If a problem occurs in one of the four rudder or speed brake servoactuator channels, the corresponding linear differential pressure transducer will cause the corresponding ASA to signal a solenoid isolation valve to remove the pressure from the failed channel and bypass it if that *FCS channel* switch is in *auto*. The *FCS channel* switches' *override* and *off* positions and the *FCS channel* caution and warning light function the same as for the elevons. The *hyd press* light indicates a hydraulic failure. The rudder deflection rate is a maximum of 14 degrees per second. The speed brake deflection rate is approximately 10 degrees per second. If two of the three hydraulic motors fail in the rudder or speed brake, about half the design speed output will result from the corresponding gearbox due to its velocity summary nature.

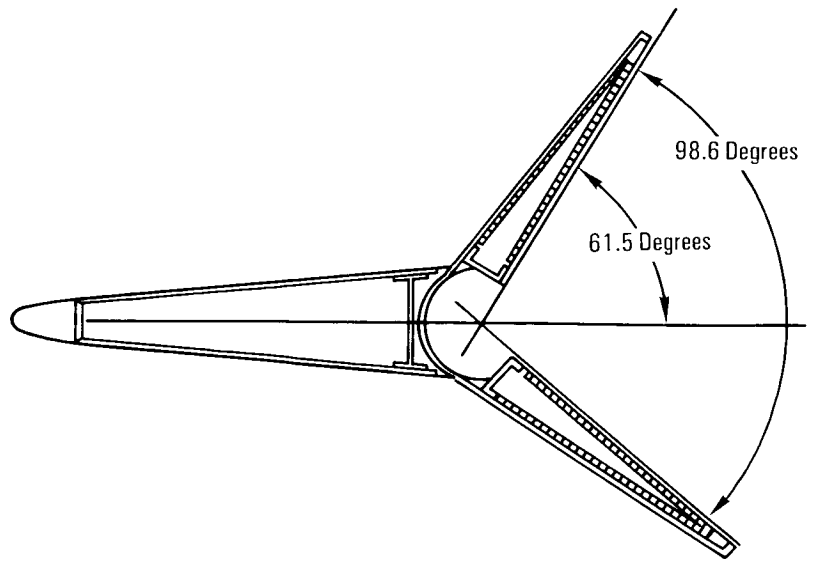


- The Maximum Combined Rudder and Speed Brake Deflection Is ±61.5 Degrees.
- The Maximum Speed Brake Deflection Is 98.6 Degrees.
- The Maximum Rudder Deflection Is ±27.1 Degrees.
- For Full Rudder Deflection of ±27.1 Degrees, the Speed Brake Can Open a Maximum of 68.8 Degrees (Half Angle of 34.4 Degrees).
- For Full Speed Brake Deflection of 98.6 Degrees (Half Angle of 49.3 Degrees), the Rudder Can Deflect ±12.2 Degrees.

*Combined Rudder/Speed Brake Deflection*

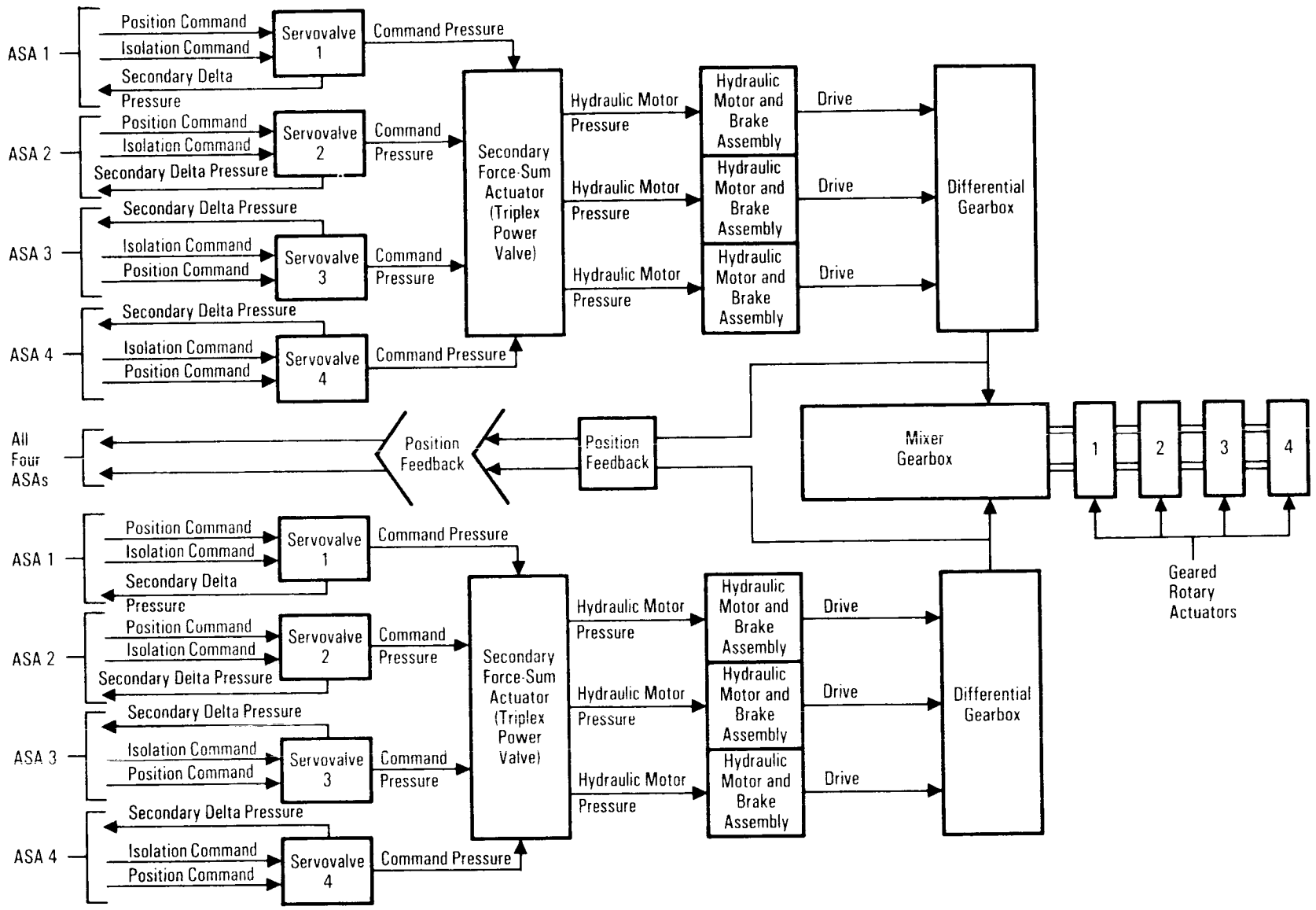


*Rudder/Speed Brake Actuation Subsystem*

Three servoactuators at the lower aft end of the fuselage are used to position the body flap; each is supplied with hydraulic pressure from an orbiter hydraulic system and has a solenoid-operated enable valve controlled by one of the three ASAs (the fourth ASA is not used for the body flap commands). Each solenoid-operated enable valve supplies hydraulic pressure from one orbiter hydraulic system to a corresponding solenoid-operated pilot valve, which is, in turn, controlled by one of the three ASAs. When the individual pilot valve receives a command signal from its corresponding ASA, it positions a common mechanical shaft in the control valve, allowing hydraulic pressure to be supplied to the hydraulic motors (normally one pilot valve is enabled and moves the other two). The hydraulic motors are reversible, allowing the body flap to be positioned up or down. The hydraulic brake associated with each hydraulic motor releases the hydraulic motor for rotation. When the desired body flap position is reached, the control valves block the hydraulic pressure to the hydraulic motor and apply the hydraulic brake, holding that hydraulic motor at that position. Each hydraulic motor provides the power output to a differential gearbox, which drives a rotary shaft, and four rotary actuators, which position the body flap. The rotary position transducer associated with each rotary actuator provides position feedback to the ASAs; the fourth ASA is used to provide position feedback to the flight control system software.

If the *FCS channel* switches are in *auto*, the ASAs will isolate a body flap channel through the solenoid-operated enable valve if the corresponding solenoid-operated pilot valve malfunctions or the control valve associated with the pilot valve does not provide the proper response and allows the hydraulic pressure fluid to recirculate. The *FCS channel* switches and *FCS channel* caution and warning light function the same as for the elevons. If the hydraulic system associated with the hydraulic motor fails, the remaining two hydraulic motors will position the body flap, and the *hyd press* caution and warning light will be illuminated. The body flap deflection rate is approximately 4.5 degrees per second.

Each ASA is hard-wired to a flight MDM. Flight control commands originate from guidance software or from controllers. These inputs go to the flight control software, where they are augmented and then routed to the ASAs.

There are several subsystem operating programs associated with the ASA commands and data. The SOPs convert elevon, rudder and speed brake commands from flight control software from degrees to millivolts; set commands to body flap valves based on an enable command from body flap redundancy management and up/down commands from flight control; convert position feedback to degrees for the elevons, rudder, speed brake and body flap; compute elevator position from elevon position feedbacks; calculate body flap and speed brake deflections as percentages; calculate elevon and rudder positions for display on the surface position indicator; monitor the *FCS channel* switches and if any are positioned to *override*, set the override command for that ASA; monitor hydraulic system pressures for failures; and rate-limit aileron and elevator commands according to the number of failures.

Each ASA is mounted on a cold plate and cooled by the Freon-21 coolant loops. Each is 20 inches long, 6.4 inches high and 9.12 inches wide and weighs 30.2 pounds.

The ASA contractor is Honeywell Inc., Clearwater, Fla.



**Digital Autopilot.** The digital autopilot is the heart of flight control software. It is composed of several software modules that interpret maneuver requests; compare them to what the vehicle is doing; and generate commands for the appropriate effectors, as needed, to satisfy the requests. There are different DAPS for different flight phases and various modes and submodes within each.

At main engine cutoff, the transition digital autopilot becomes active, sending attitude hold commands to the reaction control system. External tank separation is automatically commanded 18 seconds after main engine cutoff, and the transition DAP immediately sets commands to fire the orbiter's minus Z RCS jets, causing the orbiter to translate in the minus Z direction. When a rate of negative 4 feet per second is reached, RCS fire commands are removed. The transition DAP is used from MECO until transition to OPS 2 (on orbit).

In the transition DAP mode, the external tank separation module initialized by the external tank separation sequencer com-

pares Z-delta velocities from the DAP attitude processor with an initialized-loaded desired Z-delta velocity. Before this value is reached, the transition DAP and steering processor send commands to the RCS jet selection logic, which uses a table lookup technique for the primary RCS jets and commands 10 RCS jets to fire in the plus Z direction. When the desired Z-delta velocity is reached, the translation command is set to zero. Rotation commands are permitted during the external tank separation sequence.

The RCS jet selection module receives both RCS rotation and translation commands and outputs 75 discretes to the primary RCS jets to turn the 38 jets on or off by applying the table lookup technique.

The RCS reaction jet driver forward and aft assemblies provide the turn-on/turn-off jet selection logic signals to the RCS jets. There is also a driver redundancy management program that permits only "good" RCS jets to be turned on. The *RCS jet* yellow caution and warning light indicates a failed-on, failed-off or leaking RCS jet.

The 19 RCS jets thrusting in the plus or minus Z direction provide Z translation and roll or pitch rotation control and are considered independent of other axes. The 12 RCS jets thrusting in the plus or minus Y direction provide Y translation and yaw rotation only. The seven RCS jets thrusting in the plus or minus X direction provide X translation only.

Insertion flight control is accomplished using the transition DAP. The transition DAP uses commands from guidance for automatic maneuvers to orbital maneuvering system burn attitude using RCS jets. During OMS-1 and OMS-2 (or only OMS-1 in a

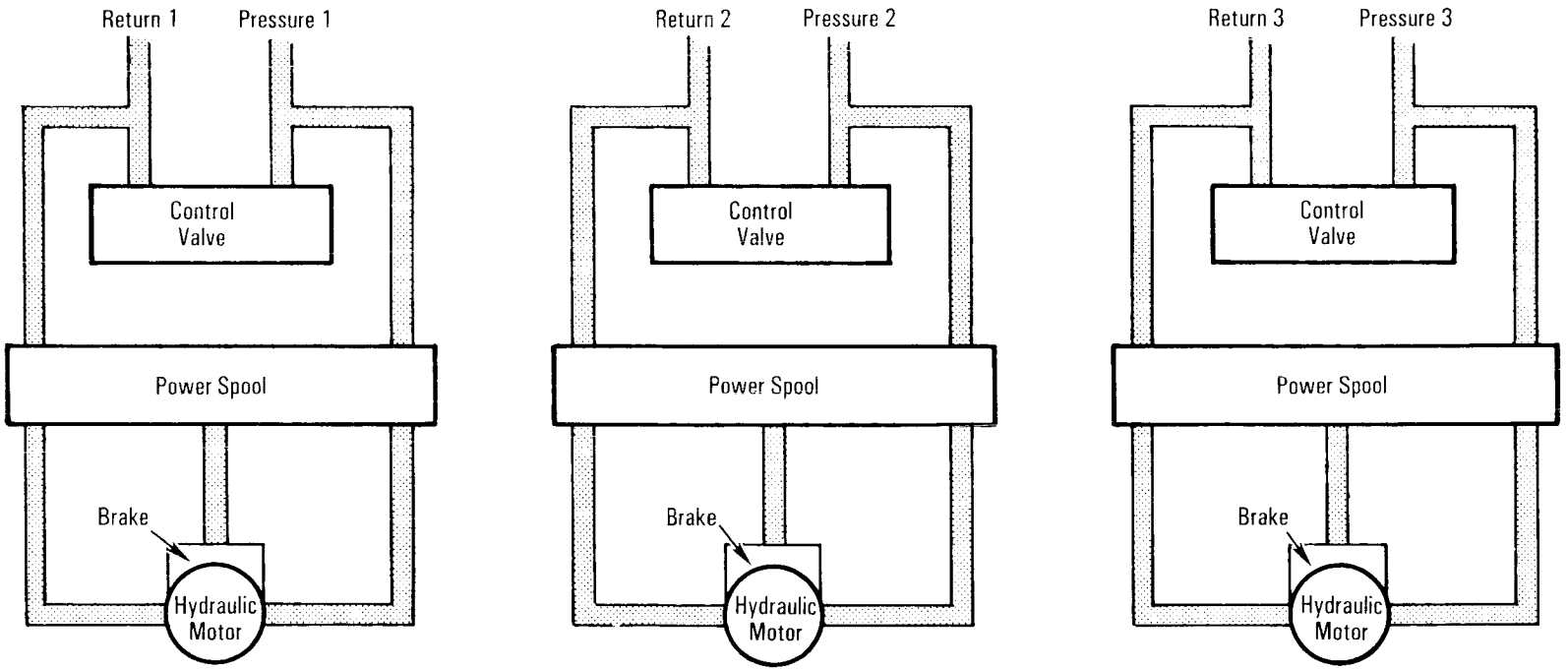


*Body Flap Actuator Hydraulic Supply*

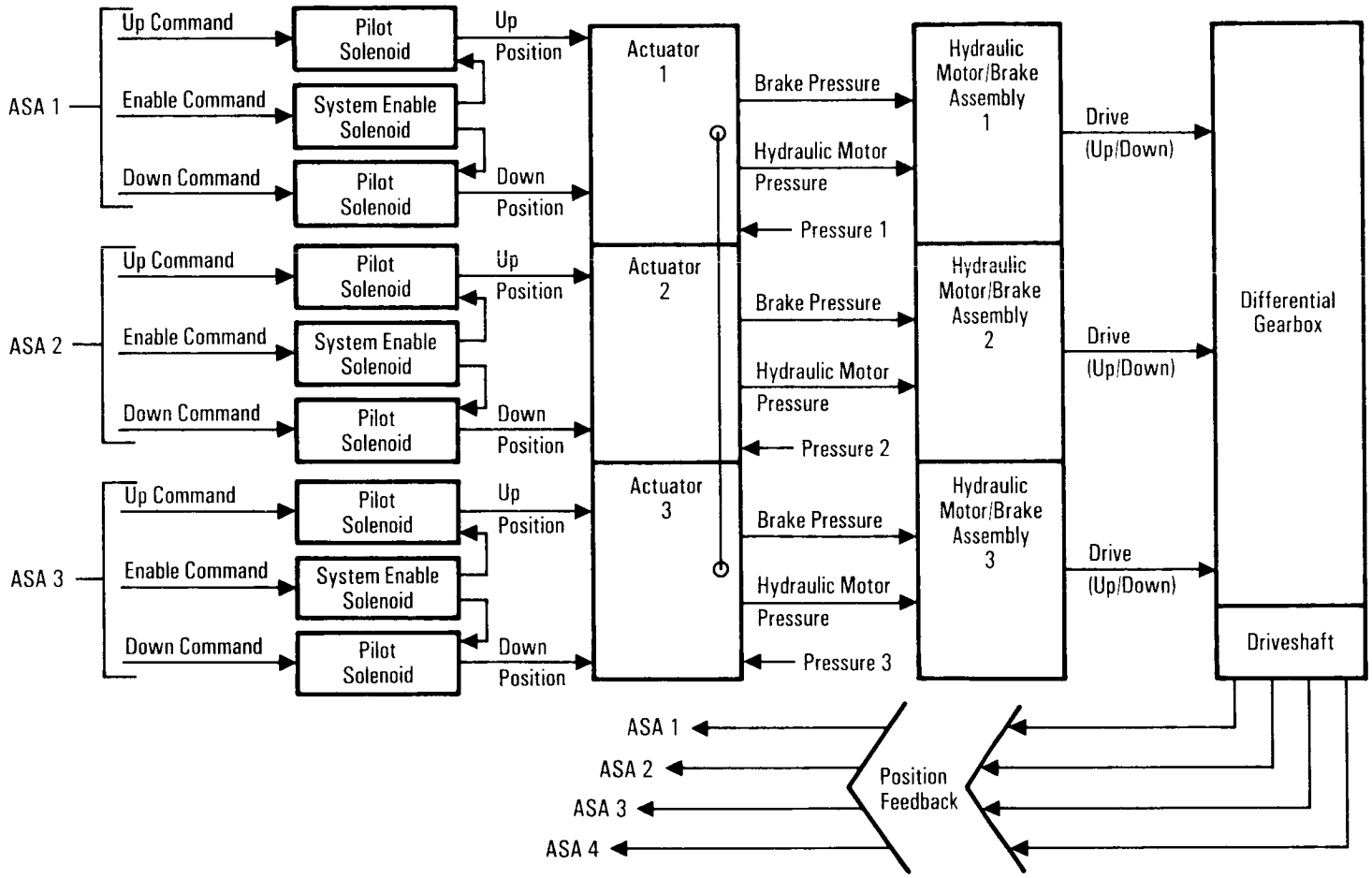


*Body Flap Power Drive Unit*

direct insertion), the transition DAP uses the OMS engines and RCS jets, as required. The transition DAP also receives commands from the flight crew through the commander's THC and the commander's or pilot's RHC. The transition DAP then takes these commands and converts them into appropriate RCS commands. The transition DAP monitors the resultant attitude and attitude rates and sends the necessary commands to achieve the targeted attitude and attitude rate within premission-specified dead bands.

The transition DAP reconfiguration logic controls the moding, sequencing and initialization of the control law modules and sets gains, dead bands and rate limits. The steering processor is the interface between the guidance or manual steering commands and the transition DAP. The steering processor generates commands to the RCS processor, which generates the RCS jet command required to produce the commanded spacecraft translation and rotation using attitude and rotational rate signals or translation or rotation acceleration commands.

The flight crew interfaces with the transition DAP through the forward RHCs and THC and indirectly through entries to the OMS *mnv exec* CRT displays and the *DAP* panel push button light indicators on panel C3.

In the transition DAP, the commander's THC is active and totally independent of the *DAP* push button light indicators or RHC position or status. Whenever the commander's THC is out of detent plus or minus X, Y or Z, translation acceleration commands are sent directly to the RCS jet selection logic for continuous RCS jet firing. Rotational commands may be sent simultaneously with translation commands within the limits of the RCS jet selection logic; if both plus X and minus Z translations are commanded simultaneously, plus X translation receives priority.

For rotations, the flight crew can select either automatic or manual control through the use of the *DAP* panel push button light indicators or by moving the RHC. In manual, the capability exists to rotate in any axis in a pulse mode, in which each RHC deflection results in a single burst of jet fire, or in a discrete rate mode, in which RHC deflection results in a specified rate being commanded in that axis for the entire time the RHC is deflected. It is also possible to go to a free drift mode, in which no RCS jets are fired, or to an attitude hold mode, in which the DAP sends commands to maintain the current attitude with null rates within premission-specified dead bands. Also, if the RHC is deflected beyond a certain point, continuous RCS jet firings will result. In translation, movement of the THC results in continuous jet firings.

The orbital maneuvering system processor generates OMS engine gimbal actuator thrust vector control commands to produce the desired spacecraft/engine relationship for the commanded thrust direction.

For the OMS thrusting period, the orbital state (position and vector) is produced by navigation incorporating inertial measurement unit delta velocities during powered and coasting flight. This state is sent to guidance, which uses target inputs through the CRT to compute thrust direction commands and commanded attitude for flight control and thrusting parameters for CRT display. Flight control converts the commands into OMS engine gimbal angles (thrust vector control) for an automatic thrusting period. OMS thrust vector control for normal two-engine thrusting is entered by depressing the *orbital DAP auto* push button light indicator with both RHCs within software detents. OMS manual thrust vector control for both OMS engines is entered by depressing the *orbital man DAP* push button light indicator or by moving the commander's or pilot's RHC out of detent; the flight crew supplies the rate commands to the TVC system instead of guidance. The manual RHC rotation requests are proportional to RHC deflections and are converted into gimbal angles. OMS thrust in either case is applied through the spacecraft's center of gravity.

The DAP controls the orbiter in response to automatic or manual commands during insertion and on orbit. The effectors used to produce control forces and moments on the orbiter are the two OMS engines and the 38 primary RCS engines. The forward and aft RCS engines also provide attitude control and three-axis translation during external tank separation, insertion and on-orbit

maneuvers and roll control for a single-OMS-engine operation. The OMS provides propulsive and three-axis control for orbit insertion, orbit circularization, orbit transfer and rendezvous. Failure of a single OMS engine will not preclude a nominal orbit insertion.

Before OMS ignition, the spacecraft is maneuvered to the OMS ignition attitude by using the RHC and RCS jets, reducing transient fuel losses. Normally, the first OMS thrusting period raises the orbiter's low elliptical orbit after the external tank is jettisoned, and the second OMS thrusting places the spacecraft into the circular orbit designated for that mission. For orbital maneuvers that use the OMS, any delta velocities greater than 6 feet per second use the two OMS engines. Some missions use a direct insertion, requiring only one OMS thrusting period.

Automatic thrust vector control for one OMS engine is identical to that for two, except that the RCS processor is responsible for roll control. Single-OMS-engine thrust is also through the spacecraft's center of gravity, except when pitch or yaw rate commands are non-zero. If the left or right OMS engine fails, an *OMS TVC* red light on panel F7 will be illuminated.

Since an OMS cutoff is based on time rather than velocity, a velocity residual may exist following the cutoff. The residual is zeroed by the RCS through the THC.

The orbital flight control software includes an RCS DAP, an OMS TVC DAP and an attitude processor module to calculate vehicle attitude as well as logic to govern the selection of a DAP. The attitudes calculated by the attitude processor are displayed on the attitude display indicator along with another crew display, universal pointing, which is available in major mode 201 (orbit coast). The vehicle attitude is used by the DAP to determine attitude and rate errors.

The only time the RCS DAP is not used in OPS 2 is during an OMS burn. This DAP controls vehicle attitudes and rates through the use of RCS jet fire commands. Either the larger primary jets or the less powerful vernier jets are used for rotational maneuvers, depending on whether *norm* or *vern* is selected on the panel C3 *orbital DAP* panel. The choice of primary or vernier thrusters depends on fuel consumption considerations and how quickly the vehicle needs to be maneuvered to satisfy a mission objective.

The rotation rates and dead bands, translation rate and certain other DAP options can be changed by the flight crew during the orbit phase using the DAP CRT display. The flight crew can load the DAP with these options in two ways: one option set may be accessed by depressing the *DAP A* push button on the *orbital DAP* panel, the other by depressing the *DAP B* push button. For convenience, each planned DAP configuration is given a number and is referred to by that number and the DAP used to access it. Typically, the DAP A configurations will have larger dead bands and higher rates than the DAP B configurations. The wide dead bands are used to minimize fuel usage, while the tight dead bands allow greater precision in executing maneuvers or in holding attitude.



The RCS DAP can operate in both an automatic and a manual rotation mode, depending on whether the flight crew selects the *auto* or *man* push button light indicators on the *orbital DAP* panel. The manual mode is also accessed when the RHC is moved out of its detent (neutral) position. In both the automatic and manual modes, the rotation rate is controlled by the selection of DAP A or B and the information loaded in the *DAP config* display. In addition, in automatic, the DAP determines the required attitude to be achieved from universal pointing and then computes the RCS jet fire commands necessary to achieve these requirements within the current set of dead bands. In the manual rotation mode, the RCS DAP converts flight crew inputs with any of the three RHCs to RCS jet fire commands, depending on whether *pulse, disc rate* or *accel* is selected on the *orbital DAP* panel. Simply, when *pulse* is selected, a single burst of jet fire is produced with each RHC deflection. The resultant rotational rate is specified on the *DAP config* display. When *disc rate* is selected, jet firings continue to be made as long as the RHC is out of detent in

order to maintain the rotational rate specified on the *DAP config* display. When *accel* is selected, continuous jet firings are made as long as the RHC is out of detent.

Another manual RCS DAP mode, local vertical/local horizontal, is used to maintain the current attitude with respect to the rotating LVLH reference frame. It is selected through the *LVLH* push button on the *orbital DAP* panel.

The RCS DAP has only a manual translation capability, which is executed through the forward or aft THC. Only the primary RCS jets are used. Deflections of the THC result in RCS jet firings based on the *transition DAP* mode push button light indicator selected on the *orbital DAP* panel. *Pulse* results in a single burst of jet fire. *Norm* results in continuous jet firings with a specified subset of the available jets. *High* results in all upfiring jets firing continuously in a Z translation. And *low* enables a special technique that accomplishes a Z translation using the forward- and aft-firing RCS jets in order to not fire directly toward a target (avoiding plume impingement and contamination of a target payload).

The OMS thrust vector control DAP is available when an OMS burn is executed in major mode 202 (maneuver execute) through the *orbit mnvr exec* display. The TVC DAP uses the guidance-generated velocity requirements and converts these into the appropriate OMS gimbal commands to achieve this target, assuming *auto* is selected on the *orbital DAP* panel. It generates the OMS fire commands; the OMS shutdown commands; and if necessary due to OMS engine failure, required RCS commands to maintain attitude control. If *manual* is selected, the TVC DAP uses inputs from the RHC to control attitude during the burn.

As with the transition DAP, there are many subtleties in the operation of the orbital DAP.

There are 24 *orbital DAP* push button light indicators on panels C3 and A6. Assuming no electrical, computer bus (MDM) or hardware failures that could affect the operation of the push button light indicators, inputs made to one panel will be reflected in the configuration of the other panel. All of the push button light indicators are active in the orbital DAP, but only a subset of these are operational in the transition DAP or when the backup flight system is engaged. None of the push button light indicators are operational during ascent or entry. As with other aft flight deck controls, aft panel A6 push button light indicators are only operational while the vehicle is on orbit.

The *orbital DAP select, control, RCS jets,* and *manual mode translation* and *rotation* push button light indicators are illuminated by flight control when that mode is implemented in the flight control system in the transition or orbital DAP.

The *orbital DAP select A* or *B* push button light indicator selects the values the DAP will use from the DAP configuration parameter limits CRT display software loads. The values of attitude dead band, rate dead band and vehicle change in rotation rate are a function of the DAP selection (*A* or *B*) and RCS jet selection (*norm* or *vern*). The *select A* push button light indicator is illuminated when depressed and *select B* is extinguished. If *select B* is depressed, *select B* is illuminated and *select A* is extinguished.

When the automatic mode is selected by depressing the *auto* push button light indicator, the indicator is illuminated and the *man* push button light indicator is extinguished.

Automatic rotation commands are supplied by the universal pointing processor. The universal pointing processor, through the operational sequence display, provides three-axis automatic maneuver, tracking local vertical/local horizontal about any body vector, rotating about any body vector at the DAP discrete rate, and stopping any of these options and commanding attitude hold. The parameters of these maneuvers are displayed in current attitude, required attitude, attitude error and body rates. Either total or DAP attitude errors may be selected for display on the attitude display indicator error needles.

The automatic maneuver option is used to calculate a commanded vehicle attitude and angular rate or to hold a vehicle attitude. The desired inertial commanded and rotation attitude is

input into the operational sequence display in pitch, yaw and roll. When the maneuver option is selected, universal pointing sends the required attitude increment and body rate to flight control, and flight control performs the maneuver when the DAP is in automatic.

The automatic rotation option calculates a rotation about a desired body axis. This option is used for passive thermal control, also known as barbecue. Pitch and yaw body components of the desired rotational axis are first input. The orbiter is maneuvered automatically or manually so that the rotational axis is oriented properly in inertial space. When the rotational option is selected, universal pointing will calculate the required body attitude and send it to flight control. Flight control performs the maneuver if the DAP is in automatic.

The LVLH automatic option calculates the attitude necessary to maintain LVLH with a desired body orientation. LVLH, which is available only on orbit in automatic or manual, calculates the attitude necessary to track the center of the Earth with a given body vector. First, pitch and yaw body components of the desired pointing vector are input. Then omicron roll angle about the body vector is input. When the LVLH option is selected, the required LVLH attitude and its associated maneuver are calculated and sent to flight control. When the LVLH attitude is reached, universal pointing will calculate an attitude and send it to flight control. Flight control performs the maneuver if the DAP is in automatic.

The automatic stop/attitude hold option cancels universal pointing processing of the automatic maneuver, rotation or LVLH options. When the stop/attitude hold option is selected, universal pointing will cancel the processing of the maneuver options and send the current attitude to flight control. When flight control is in automatic, attitude hold will be initiated about the current attitude.

The nine *rotation* push button light indicators on panel C3 or A6 are meaningless when *auto* is selected. The transition or orbital DAP can be switched to manual by depressing the *man* push button light indicator or by positioning the RHC out of detent while

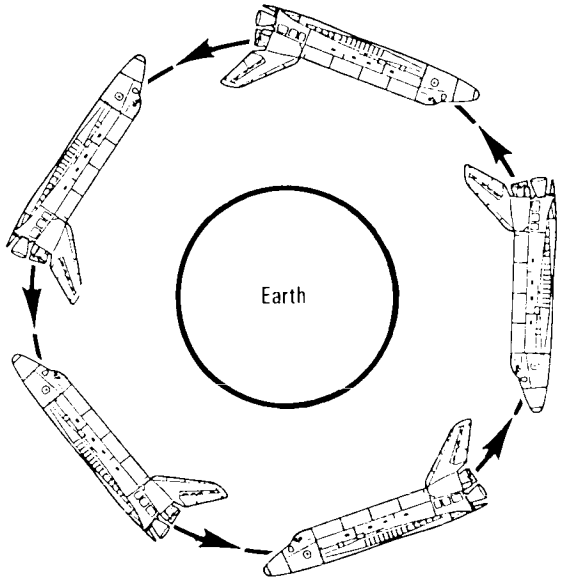


*Local Vertical/Local Horizontal*

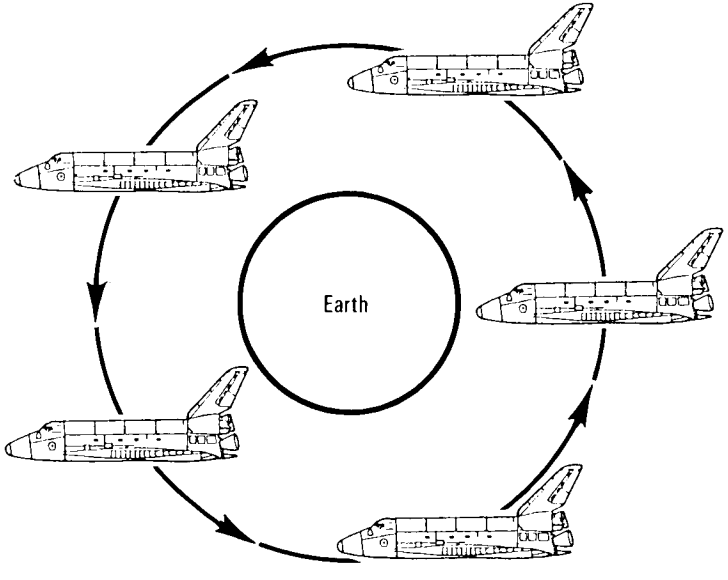


*Inertial*

operating in the automatic mode. In the manual mode, the *man* light is illuminated and the *auto* light is extinguished. When the manual mode is selected, the nine *rotation roll, pitch* and *yaw* push button light indicators determine the kind of control the RHC will provide.

There are three RCS rotation submodes available in the orbital DAP: automatic, manual or LVLH. LVLH is not available in the transition DAP; thus the choice in transition DAP is automatic or manual. Within each of these submodes are submodes that depend on conditions, such as the DAP push button light indicator configuration and the RHC state. Manual RCS translation modes are independent.

Depressing the *RCS jets norm* push button enables the primary RCS jets for rotational and translational firings and disables the vernier RCS jets. The *RCS jets norm* light is illuminated and the *RCS jets vern* light is extinguished.

Depressing the *RCS jets vern* push button enables the vernier RCS jets for rotational (not translational) RCS firings and disables the primary RCS jets. The *RCS jets vern* light is illuminated and the *RCS jets norm* light is extinguished.

The *manual mode rotation, roll, pitch* and *yaw* push button light indicators are used on orbit and during transition DAP operations. The RCS rotation is selected on an axis-by-axis basis. For example, pitch could be in discrete rate, yaw in acceleration and roll in pulse.

Depressing the *rotation disc rate* push button for an axis causes the appropriate primary or vernier RCS jets to fire to attain a predetermined rotational rate in that axis while the RHC is out of detent. When the RHC is returned to detent, the rate is nulled and attitude hold is re-established. When depressed, the *disc rate* push button light indicator is illuminated and the *accel* or *pulse* indicators are extinguished for that axis. Rotation units are in degrees per second.

Depressing the *rotation accel* push button for an axis causes the primary or vernier jets to fire when the RHC is out of detent, producing a moment with the same sense as the RHC deflection in that axis. The jets remain on as long as the RHC is out of detent and shut off when the RHC is returned to detent, allowing attitude to drift freely. When depressed, the *accel* push button light indicator is illuminated and the *disc rate* or *pulse* push button light indicators are extinguished for that axis. The *accel* push button light indicator is not functional in the transition DAP, but the same effect can be achieved by taking the RHC beyond the soft-stop in any mode.

Depressing the *rotation pulse* push button for an axis causes the primary or vernier jets to fire for preset increments in response to each deflection of the RHC in that axis. No further firing occurs until the RHC is returned to detent and is again deflected, allowing attitude to drift. When depressed, the *pulse* push button light indicator is illuminated and the *disc rate* or *accel* push button light indicators are extinguished for that axis. The units for rotation pulse are in degrees per second, and the resulting vehicle rate will be a product of the pulse size and number of pulses.



Depressing the *LVLH* push button light indicator places the DAP in a manual mode. With rotation in discrete rate for all three axes and the RHC in detent, LVLH hold will be maintained and the *LVLH* push button light indicator will remain on.

The *manual mode translation* push button light indicators are used on orbit, and mixed modes are permitted on an axis-by-axis basis. Except for the case of the automatic minus Z external tank separation firing, all RCS translations must be performed manually. In transition DAP, none of the *translation* push button light indicators will be illuminated. Depressing the *translation high* push button light indicator causes all nine up-firing primary plus Z jets to be fired as long as the THC is held out of detent in that axis. For a minus Z translation, the high Z mode functions identically to the normal Z and low Z. The *Z high* push button light indicators are illuminated and the *low Z*, *Z norm* and *Z pulse* push button light indicators are extinguished.

Depressing the *low Z* push button inhibits all up-firing jets in order to prevent plume damage to payloads or injury to extravehicular activity crew members. If a plus Z translation is

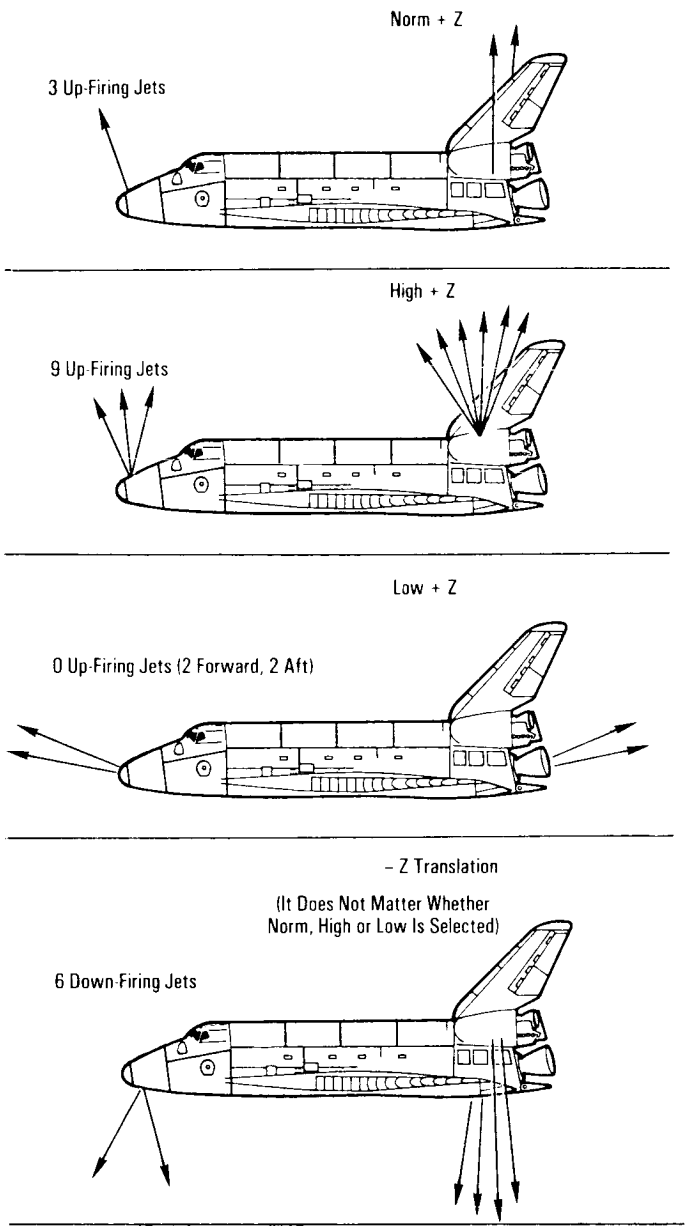


*Z Translations*

requested, plus X and minus X jets are fired simultaneously, producing a downward translation because the X jets are oriented in such a way that they have small plus Z thrust components. Minus Z uses the six down-firing jets with the selected *high* or *norm Z*. The jets continue to fire as long as the THC is out of detent. The *low Z* push button light indicators are illuminated and the *Z high* push button light indicator is extinguished.

Depressing the *norm* push button light indicator for an axis causes the appropriate primary jets in that axis to be fired for as long as the THC is out of detent. This mode is used for most RCS translations and propellant dumps. The *norm* push button light indicators are illuminated and the *pulse* and *Z high* indicators are extinguished.

Depressing the *pulse* push button light indicator for an axis causes the appropriate primary jets to fire for a preset increment in response to each deflection of the THC. The firing duration is a function of pulse size. No further firing occurs until the THC is returned to detent and is again deflected. The *pulse* push button light indicators are illuminated and the *norm* or *Z high* indicators are extinguished.

**Rendezvous Thrusting Maneuvers.** Following insertion, a spacecraft's orbit is essentially fixed, although effects, such as venting and atmospheric drag, can cause orbital perturbations. OMS or RCS thrusting periods can be used to correct or modify the orbit, as required, for mission operations. The direction and magnitude of the thrusting period, as well as the time of application, determine the resulting shape of the orbit.

A posigrade thrusting period increases the speed at the point of application and will raise every point of the orbit except the thrusting point. A retrograde thrusting period decreases the speed at the point of application and will lower every point of the orbit except the thrusting point.

An out-of-plane thrusting period alters the inclination of the spacecraft's orbital plane. It does not change the vehicle's period of orbit or height above the Earth.

A radial thrusting period is one in which the thrust is applied in a direction perpendicular to the spacecraft's velocity vector and in the vehicle's orbital plane. With the vehicle in a circular orbit, a radial thrusting period would be applied along the radius vector either toward or away from the center of the Earth.

**Component Locations.** The various black boxes of the avionics systems are located in the crew compartment flight deck, middeck avionics bays and the aft avionics bays.

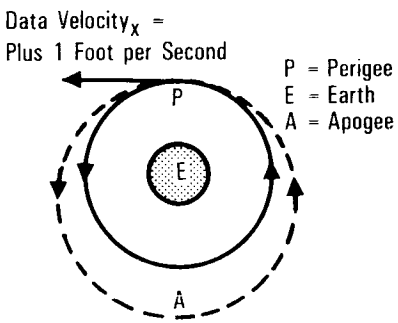


*Posigrade Thrusting Maneuver*

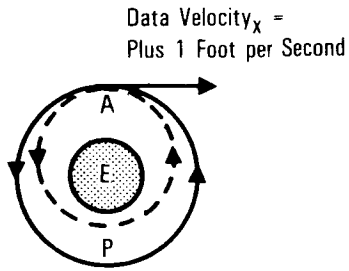


*Retrograde Thrusting Maneuver*

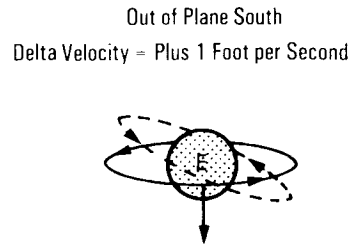


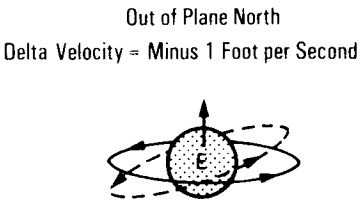


*Out-of-Plane Thrusting Maneuver*

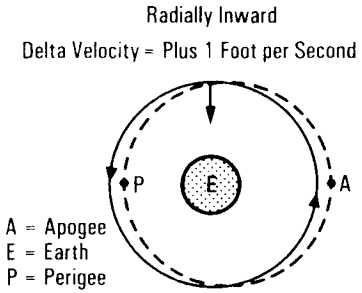


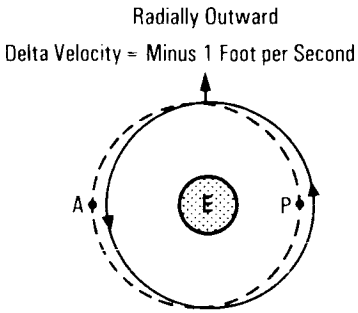


*Radial Thrusting Maneuver*

ACA — Annunciator Control Assembly
AMEU — Alpha Mach Indicator Electronic Unit
ATU — Audio Terminal Unit
AVVEU — Altitude Vertical Velocity Indicator Electronic Unit
DEU — Display Electronics Unit
DDU — Display Driver Unit
IMU — Inertial Measurement Unit
IU — Interface Unit
MDM — Multiplexer/Demultiplexer
$PPO_2$ — Partial Pressure Oxygen

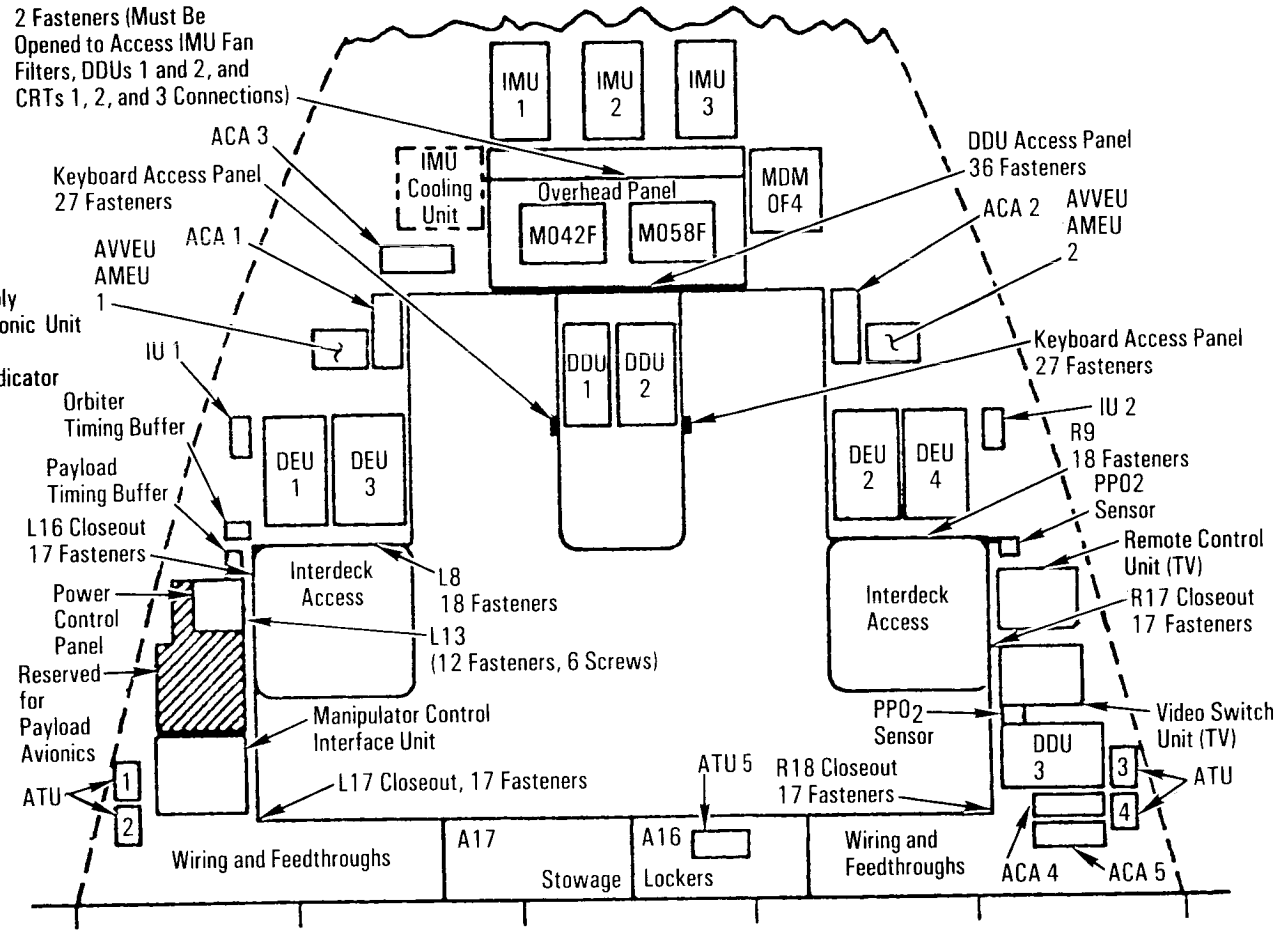


*Component Locations—Flight Deck*

ADTA – Air Data Transducer Assembly
ACCU – Audio Central Control Unit
BFCS – Backup Flight Control System
CICU – Communication Interface Control Unit
CPU – Central Processor Unit – General-Purpose Computer
DSC – Dedicated Signal Conditioner
IMU – Inertial Measurement Unit
IOP – Input/Output Processor – GPC
LCA – Load Controller Assembly
LF – Launch Forward
MCA – Motor Controller Assembly
MDM – Multiplexer/Demultiplexer
MSBLS – Microwave Scan Beam Landing System
PCA – Power Controller Assembly
PCM – Pulse Code Modulation
RJDF – Reaction Jet Driver Forward
TACAN – Tactical Air Navigation

Note: New Upgraded GPC Single Unit Installed in CPUs 1 and 4

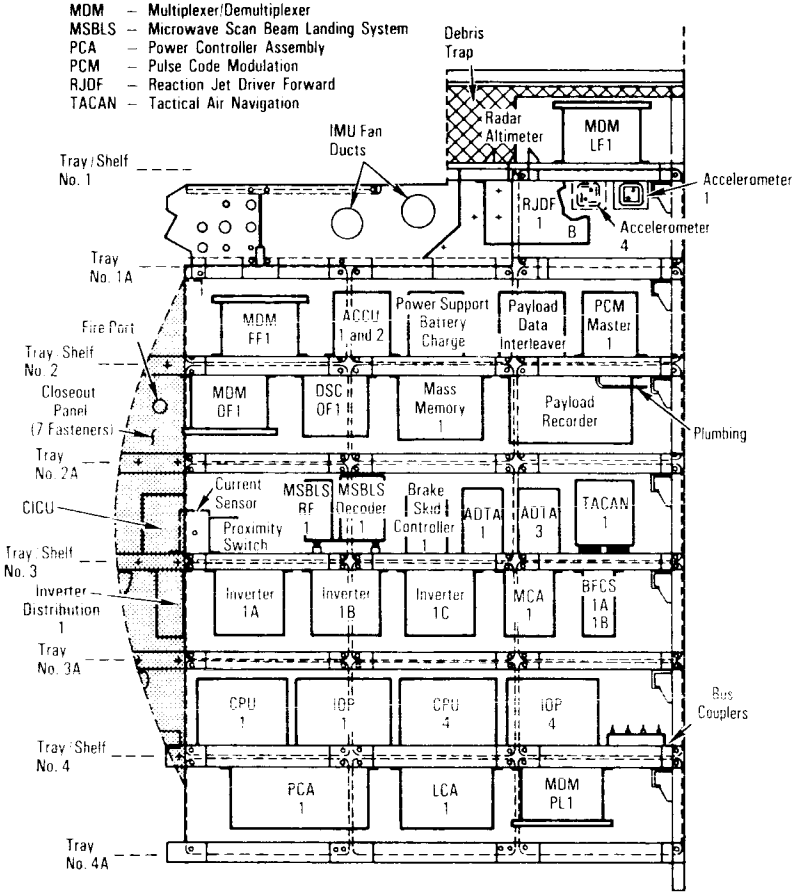


*Component Locations—Bay 1*

ADTA – Air Data Transducer Assembly
BFCS – Backup Flight Control System
CPU – Central Processor Unit
DSC – Dedicated Signal Conditioner
FCA – Forward Controller Assembly
IOP – Input/Output Processor
MDM – Multiplexer/Demultiplexer
MSBLS – Microwave Scan Beam Landing System
OI – Operational Instrumentation
PCMMU – Pulse Code Modulation Master Unit
PI – Payload Interrogator
PSP – Payload Signal Processor
RJDF – Reaction Jet Driver Forward

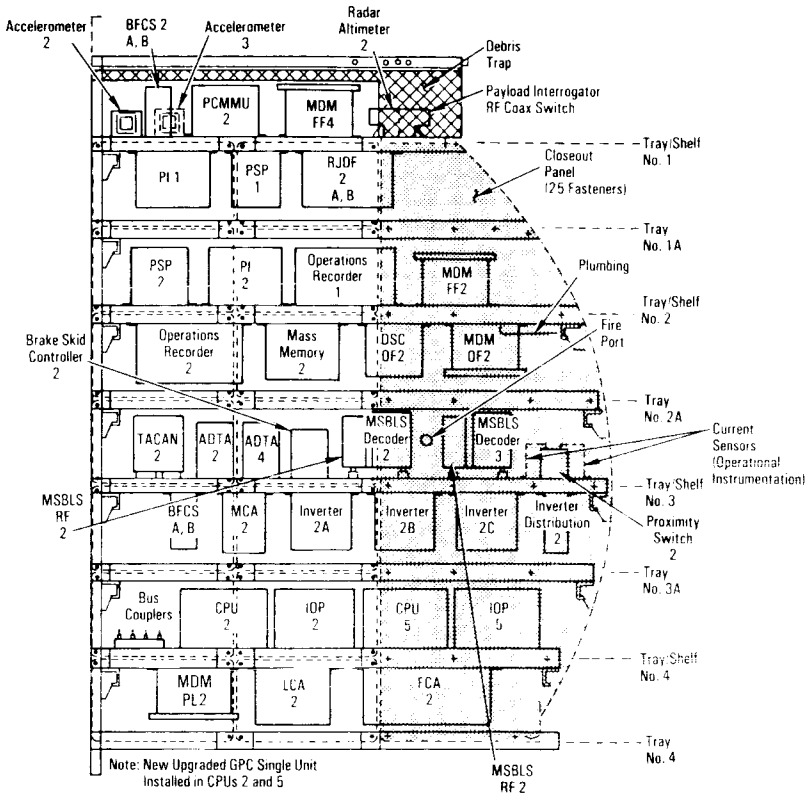


Note: New Upgraded GPC Single Unit Installed in CPUs 2 and 5

*Component Locations—Bay 2*

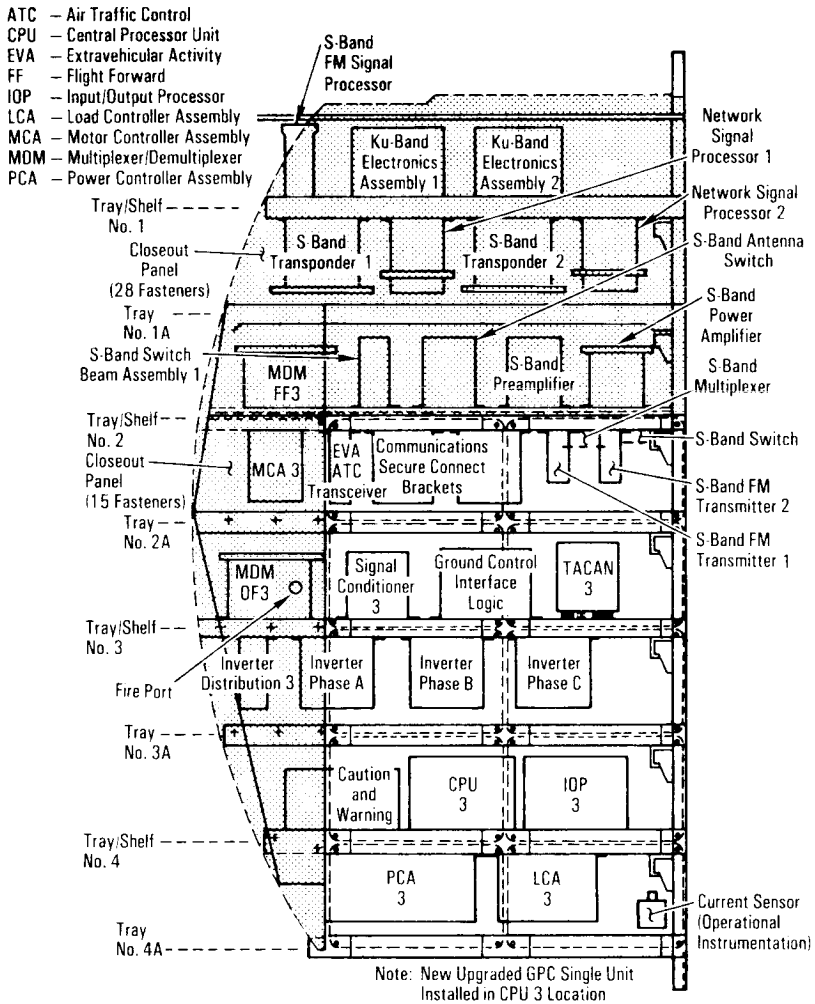


*Component Locations—Bay 3A*

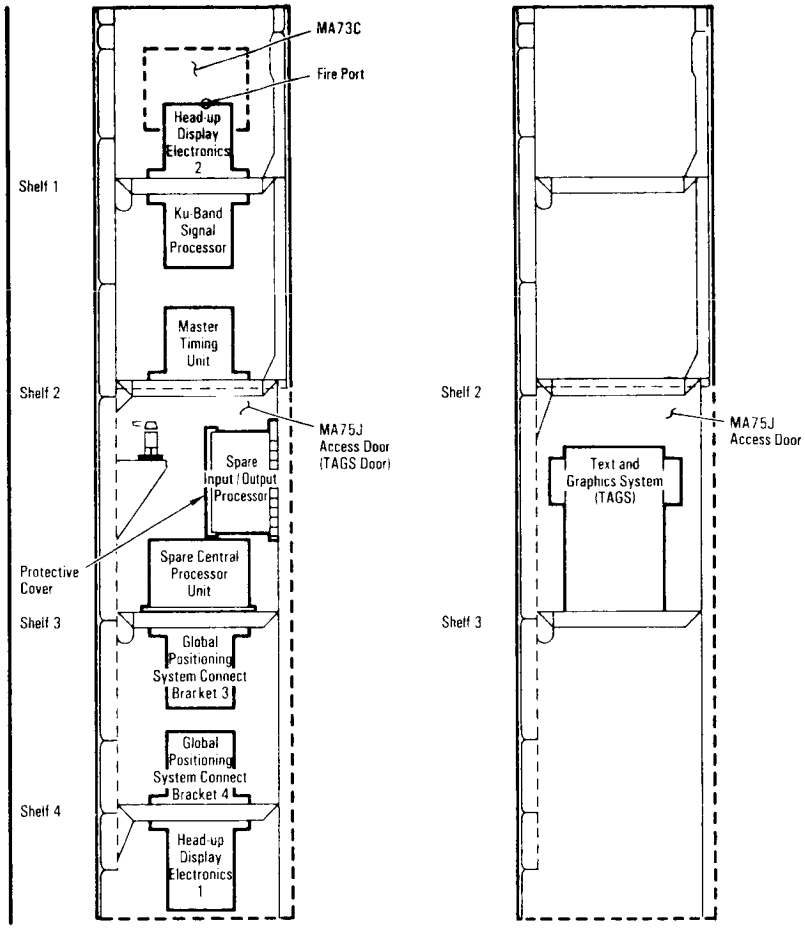


Note: New, upgraded general-purpose computer single unit is installed in CPU location. When TAGS is installed, CPU and IOP are not installed.

*Component Locations—Bay 3B*

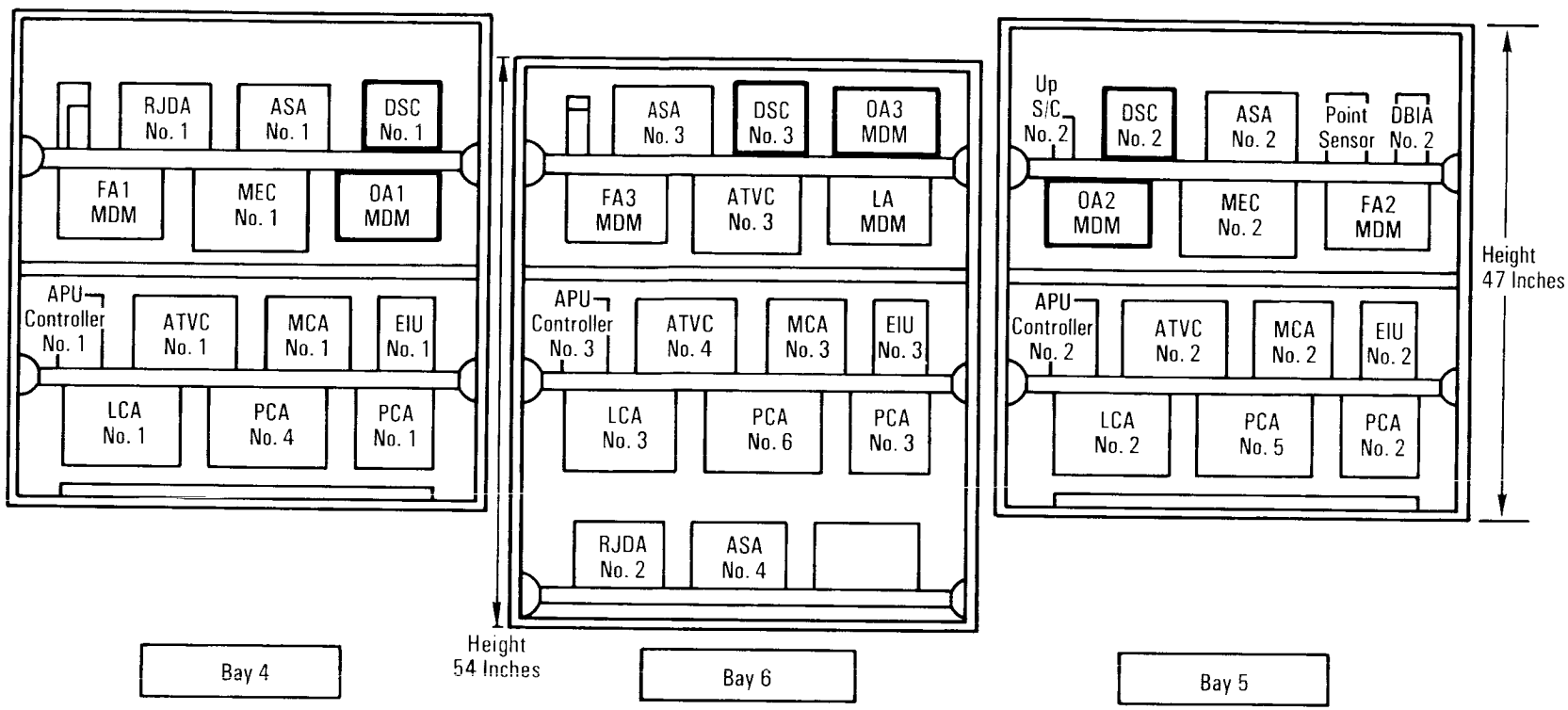


APU – Auxiliary Power Unit
ASA – Aerosurface Servoamplifier
ATVC – Ascent Thrust Vector Control
DBIA – Data Bus Isolation Amplifier
DSC – Dedicated Signal Conditioner
EIU – Engine Interface Unit
FA – Flight Aft
LA – Launch Aft

LCA – Load Controller Assembly
MCA – Motor Controller Assembly
MDM – Multiplexer/Demultiplexer
MEC – Master Events Controller
OA – Operational Aft
PCA – Power Controller Assembly
RJDA – Reaction Jet Driver Aft

*Aft Bay Avionics Equipment Installation*

**DEDICATED DISPLAY SYSTEMS.** The dedicated displays provide the flight crew with information required to fly the vehicle manually or to monitor automatic flight control system performance. The data on the dedicated displays may be generated by the navigation or the flight control system software or more directly by one of the navigation sensors. The dedicated displays are located in front of the commander's and pilot's seats and on the aft flight deck panel by the aft-facing windows.

The dedicated displays are the attitude director indicators on panels F6, F8 and A1; horizontal situation indicators on panels F6 and F8; alpha Mach indicators on panels F6 and F8; altitude/vertical velocity indicators on panels F6 and F8; surface position indicator on panel F7; reaction control system activity lights on panel F6; g-meter on panel F7; and head-up display on the glareshield in front of the commander's and pilot's seats.

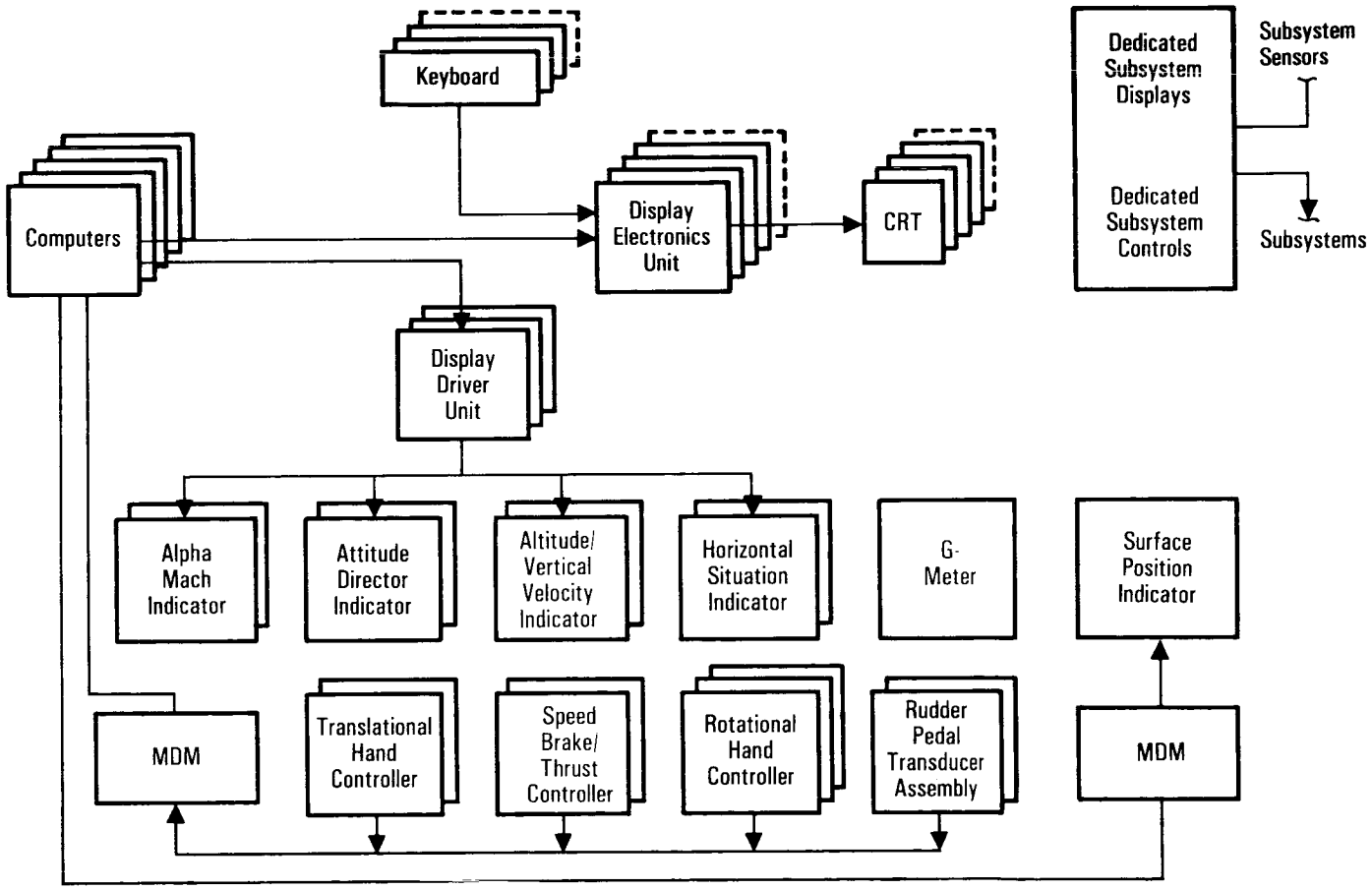


*Dedicated Display and Control System*

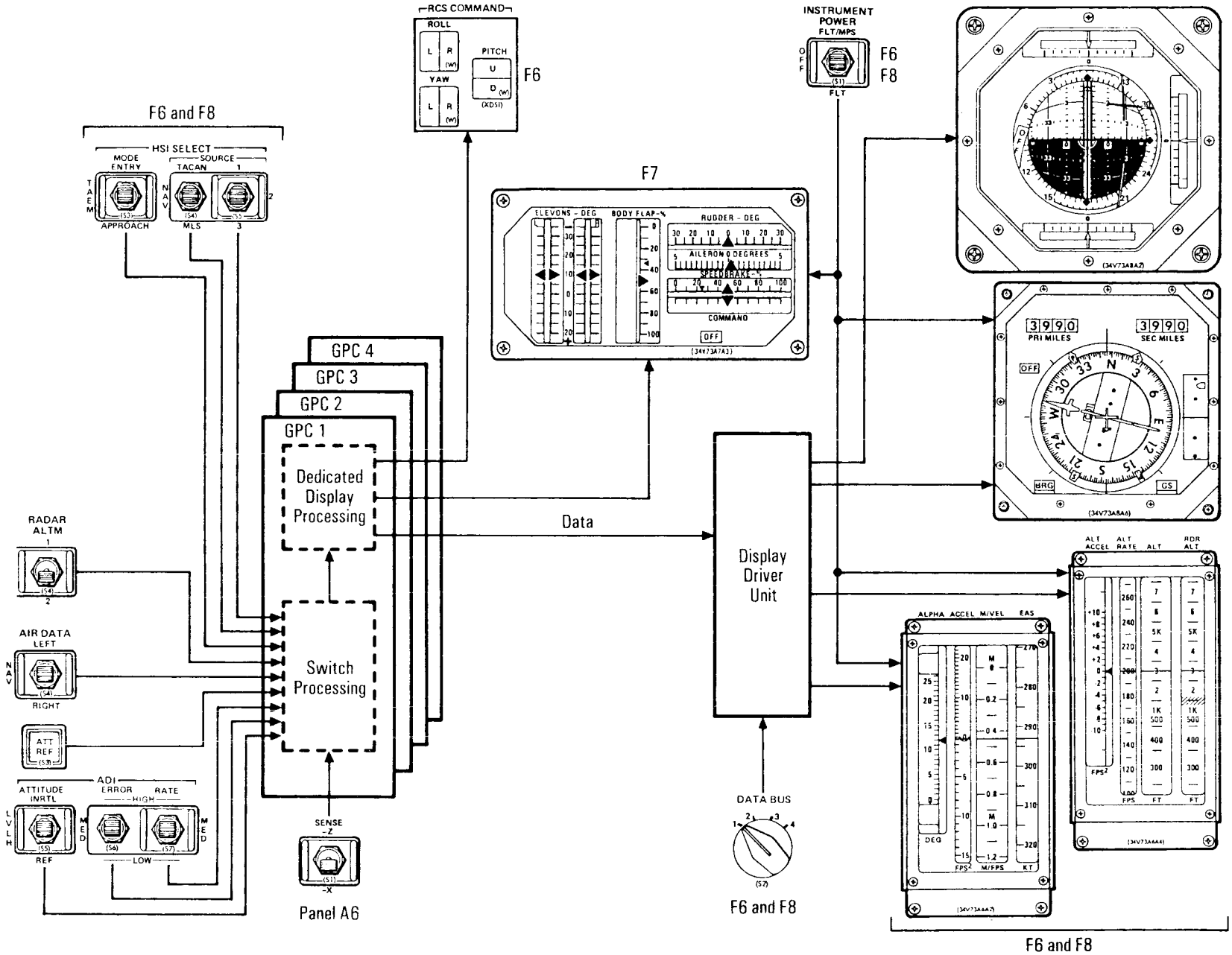


*Dedicated Display System General Data Flow*

Not all of the dedicated displays are available in every operational sequence or major mode. Their availability is related to the requirements of each flight phase.

The display driver unit is an electronic mechanism that connects the general-purpose computers and the primary flight displays. The DDU receives data signals from the computers and decodes them to drive the dedicated displays. The unit also provides dc and ac power for the ADIs and the rotational and translational hand controllers. It contains logic for setting flags on the dedicated instruments for such items as data dropouts and failure to synchronize. The orbiter contains three DDUs: one at the commander's station, one at the pilot's station and one at the aft station.

All display parameters, regardless of their origin, are ultimately processed through the dedicated display processor software (except for the g-meter, which is totally self-contained). The display parameters are then routed to the respective displays through either a DDU or multiplexer/demultiplexer; DDUs send data to the ADI, HSI, AMI and AVVI displays, while MDMs provide data for the SPI and RCS activity lights.

There are three display driver units. One interfaces with the ADI, HSI, AVVI and AMI displays on panel F6 at the commander's station, and the second interfaces with the same instruments on panel F8 at the pilot's station. The third unit interfaces with the ADI at the aft flight station.

Associated with each DDU is a *data bus* select switch. The commander's switch is on panel F6, and the pilot's is on panel F8. The select switch for the aft flight station is on panel A6. Positions *1, 2, 3* and *4* allow the flight crew to select any one of four forward flight-critical data buses (FC1 through 4) as the data source for that DDU and its dedicated displays. Because the flight-critical data buses are dedicated to specific orbiter general-purpose computers, the *data bus* select switch also provides a means of assessing the health of individual computers, if they are assigned to FC1, 2, 3 or 4.

The commander's attitude director indicator is powered from the main bus A and B DDU circuit breakers on panels O14 and O15 through DDU 1 power supply D, which provides ac and dc power. The pilot's ADI is powered from the main B and C DDU circuit breakers on panels O15 and O16 through DDU 2 power supply D, which also provides ac and dc power. The aft flight station ADI is powered from the main A and C DDU circuit breakers on panels O14 and O16 through DDU 3 power supply D, which provides ac and dc power.

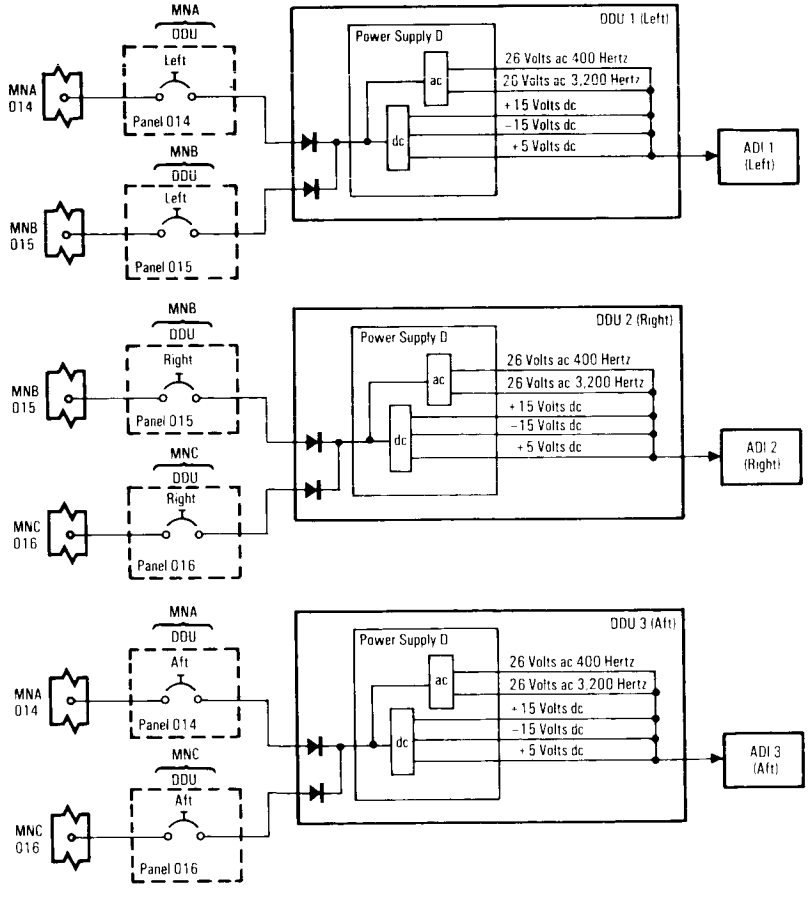


*Attitude Director Indicator Power*

The *instrument power flt MPS/off/flt* switch on panel F6 supplies main bus A power to the commander's HSI, AMI and AVVI displays; the single SPI; and the main propulsion instruments when positioned to *flt MPS*. The *instrument power on/off* switch on panel F8 supplies main bus B power to the pilot's HSI, AMI and AVVI displays and the hydraulic and auxiliary power unit displays.

The RCS activity lights receive power from annunciator control assemblies.

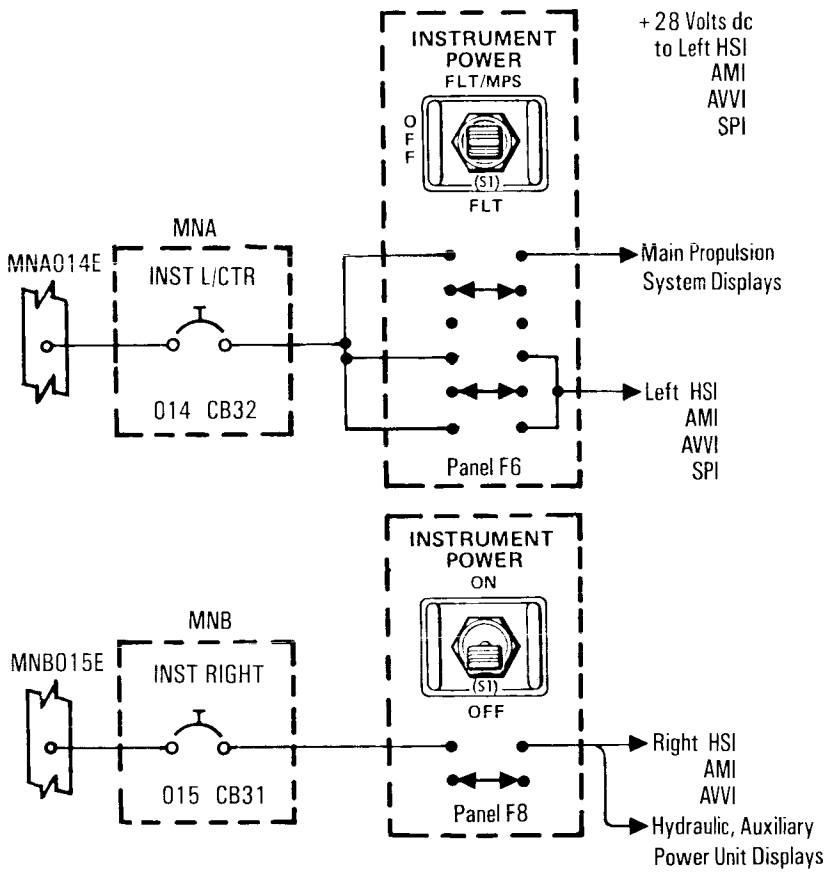


*Power for Alpha Mach Indicator, Altitude/Vertical Velocity Indicator, Horizontal Situation Indicator and Surface Position Indicator*

The DDU contractor is Rockwell International, Collins Radio Group, Cedar Rapids, Iowa.

**Attitude Director Indicator.** The commander's and pilot's ADIs are supported throughout the mission, while the aft ADI is active only during orbital operations. They give the crew attitude information as well as attitude rate and attitude errors, which can be read from the position of the pointers and needles. Each ADI has a set of switches by which the crew can select the mode or scale of the readout. The commander's switches are located on panel F6, the pilot's on panel F8 and the aft switches on panel A6.

The orbiter's attitude is displayed to the flight crew by an enclosed ball (sometimes called the eight ball) that is gimbaled to represent three degrees of freedom. The ball, covered with numbers indicating angle measurements (a zero is added as the last digit of each), moves in response to software-generated commands to depict the current orbiter attitude in terms of pitch, yaw and roll.



The *ADI attitude* select switch determines the unit's frame of reference: *inrtl* (inertial), *LVLH* (local vertical/local horizontal), and *ref* (reference). The *inrtl* position allows the flight crew to view the orbiter's attitude with respect to the inertial reference frame, useful in locating stars. The *LVLH* position shows the orbiter's attitude from an orbiter-centered rotating reference frame with respect to Earth. The *ref* position is primarily used to see the orbiter's attitude with respect to an inertial reference frame defined when the flight crew last depressed the *att ref* push button. It is useful when the crew flies back to a previous attitude or monitors a maneuvering system thrusting period for attitude excursions. The two forward switches are active during ascent, orbital and transition flight phases but have no effect during entry, the latter part of a return to launch site or phases when the backup flight system is driving the ADIs. The aft switch, like the aft ADI, is operational only in orbit.

Each attitude director indicator has a set of three rate pointers that provide a continuous readout of vehicle body rotational rates. Roll, pitch and yaw rates are displayed on the top,

right and bottom pointers, respectively. The center mark on the graduated scale next to the pointers shows zero rates, while the rest of the marks indicate positive or negative rates. The *adi rate* switch for each indicator unit determines the magnitude of full-scale deflection. When this switch is positioned to *high* (the coarsest setting), the pointer at the end of the scale represents a rotation rate of 10 degrees per second. When the switch is positioned to *med*, a full-range deflection represents 5 degrees per second. In the *low* position (the finest setting), a pointer at either end of the scale is read at a rate of 1 degree per second. These pointers are "fly to" in the sense that the rotational hand controller must be moved in the same direction as the pointer to null a rate.

Attitude Director Indicator Displays 360-Degree Maneuvers in Roll, Pitch and Yaw
- Positive Roll Command—Ball Rotates Counterclockwise
- Positive Pitch Command—Ball Rotates From Top to Bottom
- Positive Yaw Command—Ball Rotates From Right to Left
- Error Needle Deflections to Positive Commands
  - Roll—Left
  - Pitch—Down
  - Yaw—Left
- Rate Pointer Deflection to Positive Commands
  - Roll—Right
  - Pitch—Up
  - Yaw—Right

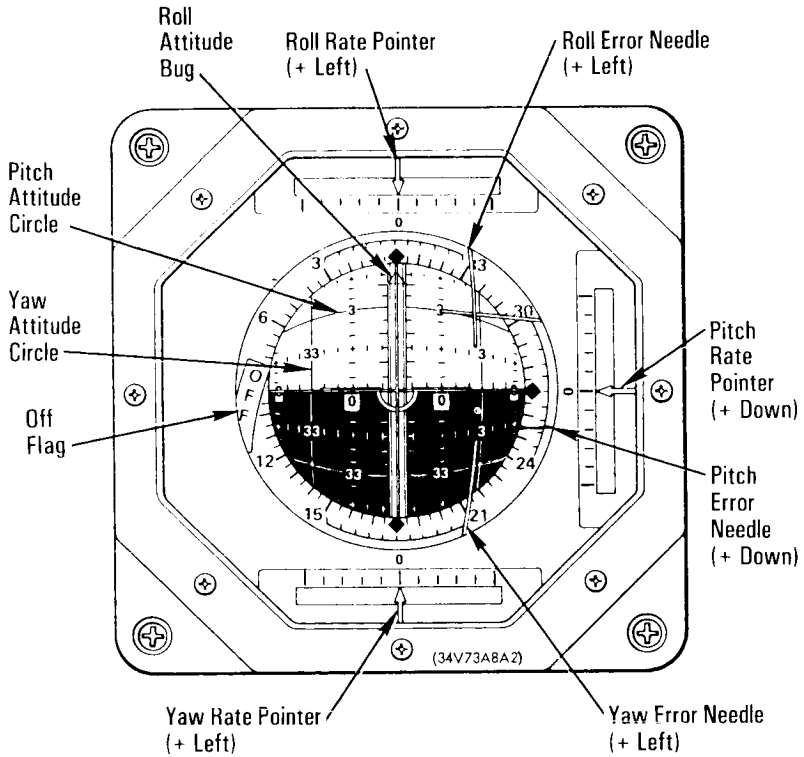


*Attitude Director Indicator*

ADI rate readings are independent of the selected attitude reference. During ascent, the selected rates come directly from the solid rocket booster or orbiter rate gyros to the ADI processor for display on the rate pointers. During entry, only the pitch rate follows the direct route to the ADI display. The selected roll and yaw

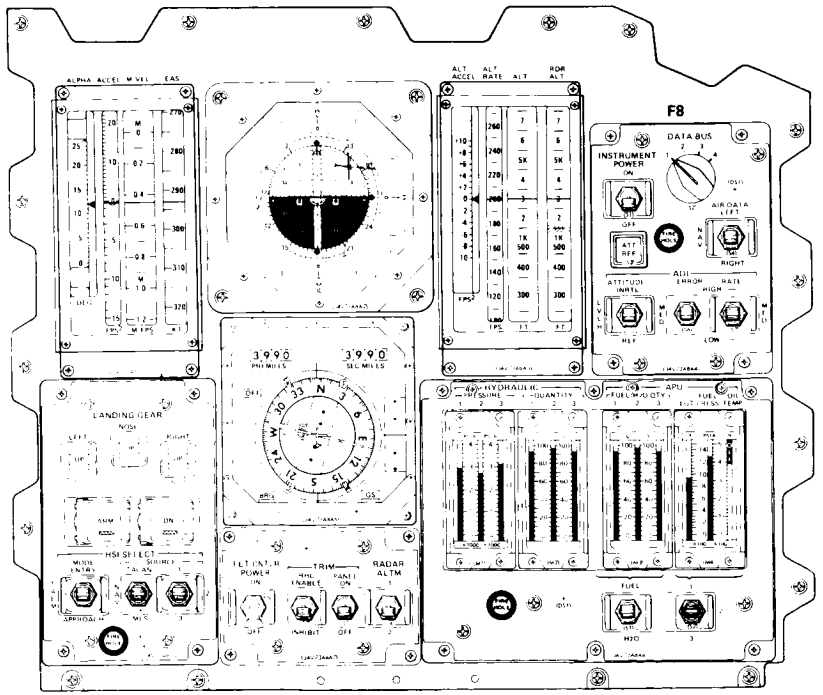


*Panel F8*

rates first flow through flight control, where they are processed and output to the ADI as stability roll and yaw rates. (This transformation is necessary because, in aerodynamic flight, control is achieved about stability axes, which in the cases of roll and yaw differ from body axes.)

Three needles on each attitude director indicator display vehicle attitude errors. These needles extend in front of the ADI ball, with roll, pitch and yaw arranged just as the rate pointers are. Like the rate indicators, each error needle has a background scale with graduation marks that allow the flight crew to read the magnitude of the attitude error. The errors are displayed with respect to the body-axis coordinate system and, thus, are independent of the selected reference frame of the attitude display.

The ADI error needles are driven by flight control outputs that show the difference between the required and current vehicle attitude. These needles are also "fly to," meaning that the flight crew must maneuver in the direction of the needle to null the needle. For example, if the pitch error needle points down, the flight crew must manually pitch down to null the pitch attitude error. The amount of needle deflection indicating the number of degrees of attitude error depends upon the *adi error* switch for each ADI. In the *high* position, the error needles represent 10 degrees, *med* represents 5 degrees and *low* represents 1 degree.

At the aft flight station on panel A6, the *aft sense* switch allows the flight crew to use the aft ADI, RHC and translational hand controller in a minus X or minus Z control axis sense. These two options of the aft ADI and hand controllers correspond to the visual data out of the aft viewing (negative X) or overhead viewing (negative Z) windows.

Each ADI has a single flag labeled *off* on the left side of the display whenever any attitude drive signal is invalid. There are no flags for the rate and error needles; these indicators are driven out of view when they are invalid.

The ADI contractor is Lear Siegler, Grand Rapids, Mich.

**Horizontal Situation Indicator.** The horizontal situation indicator for the commander and pilot displays a pictorial view of the vehicle's position with respect to various navigation points and shows a visual perspective of certain guidance, navigation and control parameters, such as directions, distances and course/glide path deviation. The flight crew uses this information to control or monitor vehicle performance. The HSIs are active during the entry and landing and ascent/RTLS phases.

Each HSI provides an independent source to compare with ascent and entry guidance, a means of assessing the health of individual navigation aids during entry and information needed by the flight crew to fly manual ascent, RTLS and entry.

Three switches are associated with each horizontal situation indicator. The commander's select switches are on panel F6 and the pilot's are on panel F8. The *HSI select mode* switch selects the mode—entry, TACAN or approach. The *HSI select source* switch selects TACAN, navigation or microwave scan beam landing system; its *1, 2, 3* switch selects the data source. When positioned to



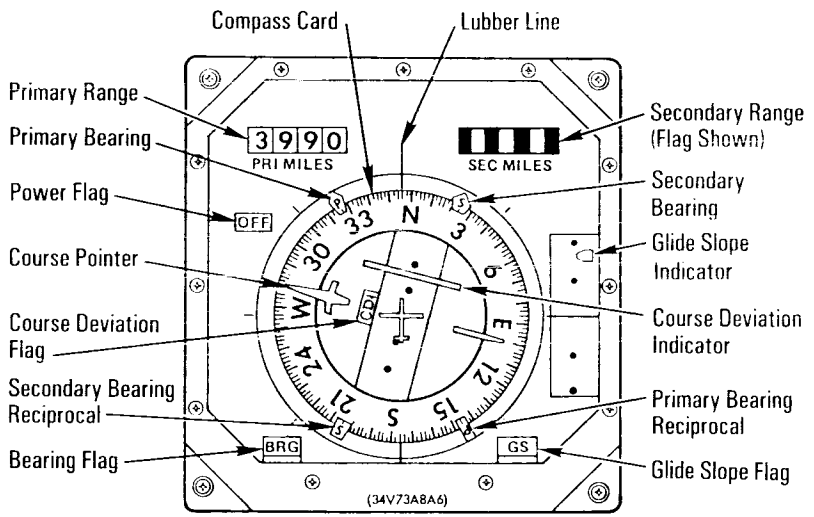


*Horizontal Situation Indicator Display*

*nav*, the HSI is supplied with data from the navigation attitude processor and the *1, 2, 3* switch is not used. In *TACAN*, the HSI is supplied with data derived from the *1, 2, 3* switch, thus TACAN 1, 2 or 3. In *MLS*, the HSI is supplied with data derived from the *1, 2, 3* switch, thus MLS 1, 2 or 3.

Each HSI displays magnetic heading (compass card), selected course, runway magnetic course, course deviation, glide slope deviation, primary and secondary bearing, primary and secondary range, and flags to indicate validity.

Each HSI consists of a case-enclosed compass card measuring zero to 360 degrees. At the center of the compass card is an aircraft symbol, fixed with respect to the case and about which the compass card rotates.

The magnetic heading (the angle between magnetic north and vehicle direction measured clockwise from magnetic north) is displayed by the compass card and read under the lubber line located at the top of the indicator dial. (A lubber line is a fixed line

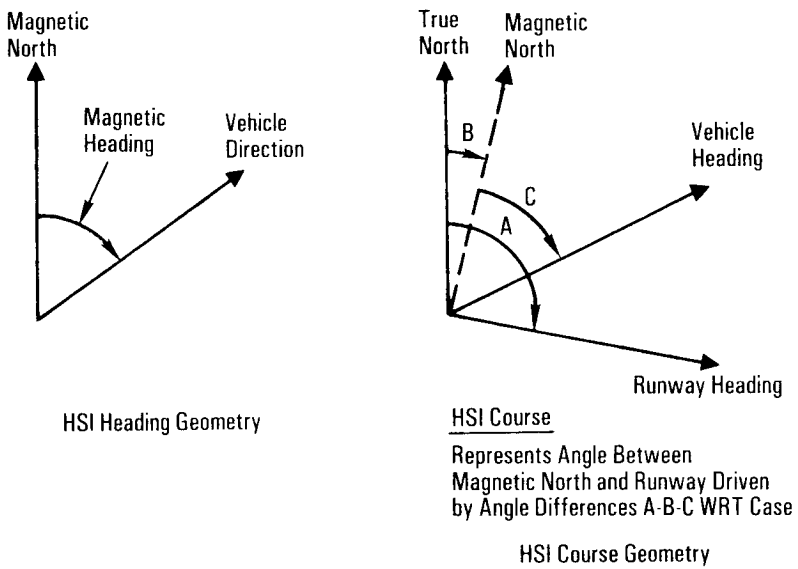


*Horizontal Situation Indicator Geometries*

on a compass aligned to the longitudinal axis of the craft.) The compass card is positioned at zero degrees (north) when the heading input is zero. When the heading point is increased, the compass card rotates counterclockwise.

The course pointer is driven with respect to the HSI case rather than the compass card. Therefore, a course input (from the DDU) of zero positions the pointer at the top lubber line, regardless of compass card position. To position the course pointer correctly with respect to the compass card scale, the software must subtract the vehicle magnetic heading from the runway azimuth angle (corrected to magnetic north). As this subtraction is done continuously, the course pointer appears to rotate with the compass card, remaining at the same scale position. An increase in the angle defining runway course results in a clockwise rotation of the course pointer.

Course deviation is an angular measurement of vehicle displacement from the extended runway centerline. On the HSI, course deviation is represented by the deflection of the deviation bar from the course pointer line. Full scale on the course deviation scale is plus or minus 10 degrees in terminal area energy management and plus or minus 2.5 degrees during approach and landing. The course deviation indicator is driven to zero during entry. When the course deviation input is zero, the deviation bar is aligned with the end of the course pointer. With the pointer in the top half of the compass card, an increase in course deviation to the left (right) causes the bar to deflect the right (left). Therefore, the course deviation indicator is a fly-to indicator for flying the vehicle to the extended runway centerline. Software processing also ensures that the CDI remains fly to, even when the orbiter is heading away from the runway.

In the TAEM example, at a range of 9 nautical miles (10 statute miles), the CDI would read about 7.5 degrees, with the extended runway centerline to the right of the orbiter. In course deviation geometry, if the orbiter is to the left of the runway, it must fly right (or if the orbiter is to the right of the runway, it must fly left) to reach the extended runway centerline. The corresponding course deviation bar would deflect to the right (or to the left in

the latter case). The reference point at the end of the runway is the microwave landing system station. The sense of the CDI deflection is a function of vehicle position rather than vehicle heading.

Glide slope deviation, the distance of the vehicle above or below the desired glide slope, is indicated by the deflection of the glide slope pointer on the right side of the HSI. An increase in glide slope deviation above (below) the desired slope deflects the pointer downward (upward); the pointer is a fly-to indicator. In the HSI example, the pointer shows the vehicle to be below the desired glide slope by about 4,000 feet (in TAEM, each dot represents 2,500 feet).

The "desired glide slope" is actually only a conceptual term in HSI processing. At any instant, glide slope deviation is really the difference between the orbiter altitude and a reference altitude computed in the same fashion as the guidance reference altitude. Also included in the reference altitude equation are factors for a "heavy orbiter" and for high winds.

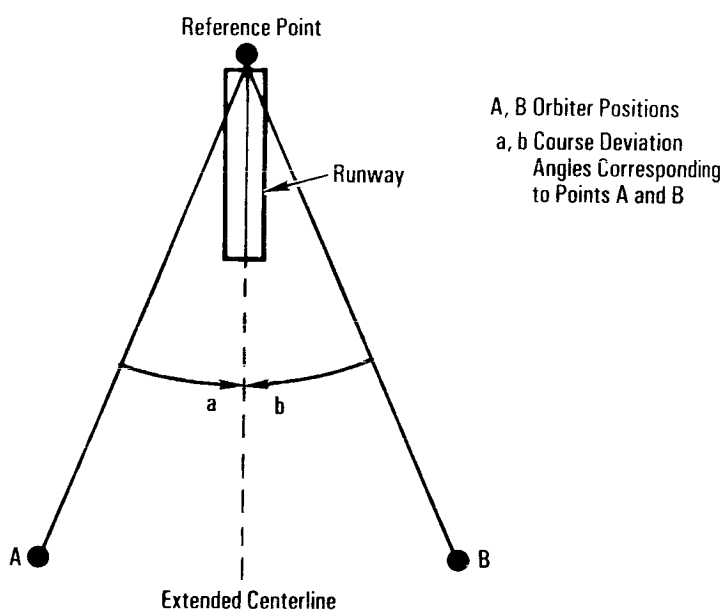


*Course Deviation Geometry*

The GSI computation is not made during entry or below 1,500 feet during approach and landing; therefore, the pointer is stowed and the GSI flag is displayed during those intervals.

The primary and secondary bearing pointers display bearings relative to the compass card. These bearings are angles between the direction to true or magnetic north and to various reference points as viewed from the orbiter. For the bearing pointers to be valid, the compass card must be positioned in accordance with vehicle heading input data.

When the bearing inputs are zero, the pointers are at the top lubber line, regardless of compass card position. Like the course pointer, the bearing pointer drive commands are developed by subtracting the vehicle heading from the calculated bearing values. This allows the pointers to be driven with respect to the HSI case but still be at the correct index point on the compass card scale.

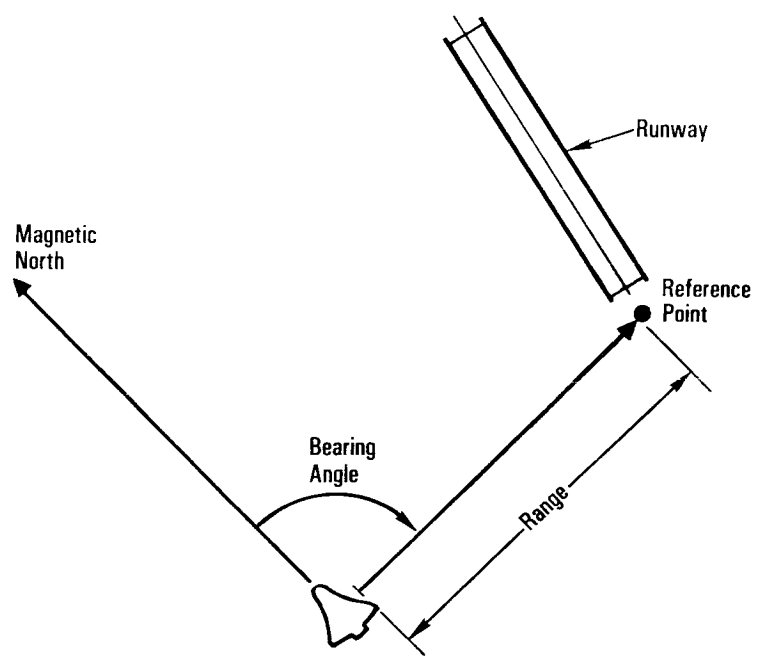


*Horizontal Situation Indicator Bearing and Range Geometry*

When the bearing inputs are increased, the pointers rotate clockwise about the compass card. The pointer does not reverse when it passes through 360 degrees in either direction.

For example, if the primary bearing is 190 degrees and the secondary bearing is 245 degrees, the bearing reciprocals are always 180 degrees from (opposite) the pointers. The definition of primary and secondary bearing varies with the flight regime.

The HSI is capable of displaying two four-digit values in the upper left and right side of its face. These numbers are called primary and secondary range, respectively. Each display ranges from zero to 3,999 nautical miles (4,602 statute miles). While their meaning depends on the flight regime, both numbers represent range in nautical miles from the vehicle to various points relative to the primary and secondary runways. In the HSI example, the primary range is 9 nautical miles (10 statute miles); the barberpole in the secondary range slot is an invalid data indication.

The HSI has four flags—*off, brg* (bearing), *GS* (glide slope) and *CDI*—and two barberpole indications that can respond to separate DDU commands, identifying invalid data. *Off* indicates that the entire HSI display is invalid because of insufficient power. *Brg* indicates invalid course, primary bearing, and/or secondary bearing data. *GS* indicates invalid glide slope deviation. *CDI* indicates invalid course deviation data. Barberpole in the range slots indicates invalid primary or secondary range data.

When the *HSI source* switch is in *nav*, the entire HSI display is driven by navigation-derived data from the orbiter state vector. This makes the HSI display dependent on the same sources as the navigation software (IMU, selected air data, selected navigational aids), but the display is independent of guidance targeting parameters. As stated previously, when the *TACAN/nav/MLS* switch is in the *nav* position, the *source 1, 2, 3* switch is not processed.

The *TACAN* or *MLS* position of the source switch should be used only when TACAN or MLS data are available. TACAN data can be acquired in Earth orbit but would be unavailable during blackout; therefore, *TACAN* is generally not selected until acquisition after blackout. *MLS* has a range of 20 nautical miles (23 statute miles) and is normally selected after the orbiter is on the heading alignment cylinder.

The glide slope deviation pointer is stowed when the entry mode is selected and the flag is displayed. The GSI in TAEM indicates deviation from guidance reference attitude in plus or minus 5,000 feet. The GSI in approach indicates guidance reference altitude for approach and landing in plus or minus 1,000 feet; it is not computed below 1,500 feet and the flag deploys.

In the entry mode, the compass card heading indicates the magnetic heading of the vehicle's relative velocity vector. In TAEM and approach, the compass card indicates magnetic heading of the body X axis.

In the entry mode, the course deviation indicator is a valid software zero with no flag. In TAEM, the CDI indicates the deviation from the extended runway centerline, plus or minus 10 degrees. In approach, the CDI indicates the deviation from the extended runway centerline, plus or minus 2.5 degrees.



In the entry mode, the primary bearing indicates the spherical bearing to way point 1 for the nominal entry point at the primary landing runway. The secondary bearing indicates the spherical bearing to WP-1 for the NEP to the secondary landing runway. In TAEM, the primary bearing indicates the bearing to WP-1 on selected HAC for the primary runway. The secondary bearing indicates the bearing to the center of the selected HAC for the primary runway. In approach, the primary and secondary bearings indicate the bearing to WP-2 at the primary runway.

In the entry mode, the primary range indicates the spherical surface range to WP-2 on the primary runway via WP-1 for NEP. The secondary range indicates the spherical surface range to WP-2 on the secondary runway via WP-1 for NEP. In TAEM, the primary range indicates the horizontal distance to WP-2 on the primary runway via WP-1. The secondary range indicates the horizontal distance to the center of the selected HAC for the primary runway. In approach, the primary and secondary ranges indicate the horizontal distance to WP-2 on the primary runway.

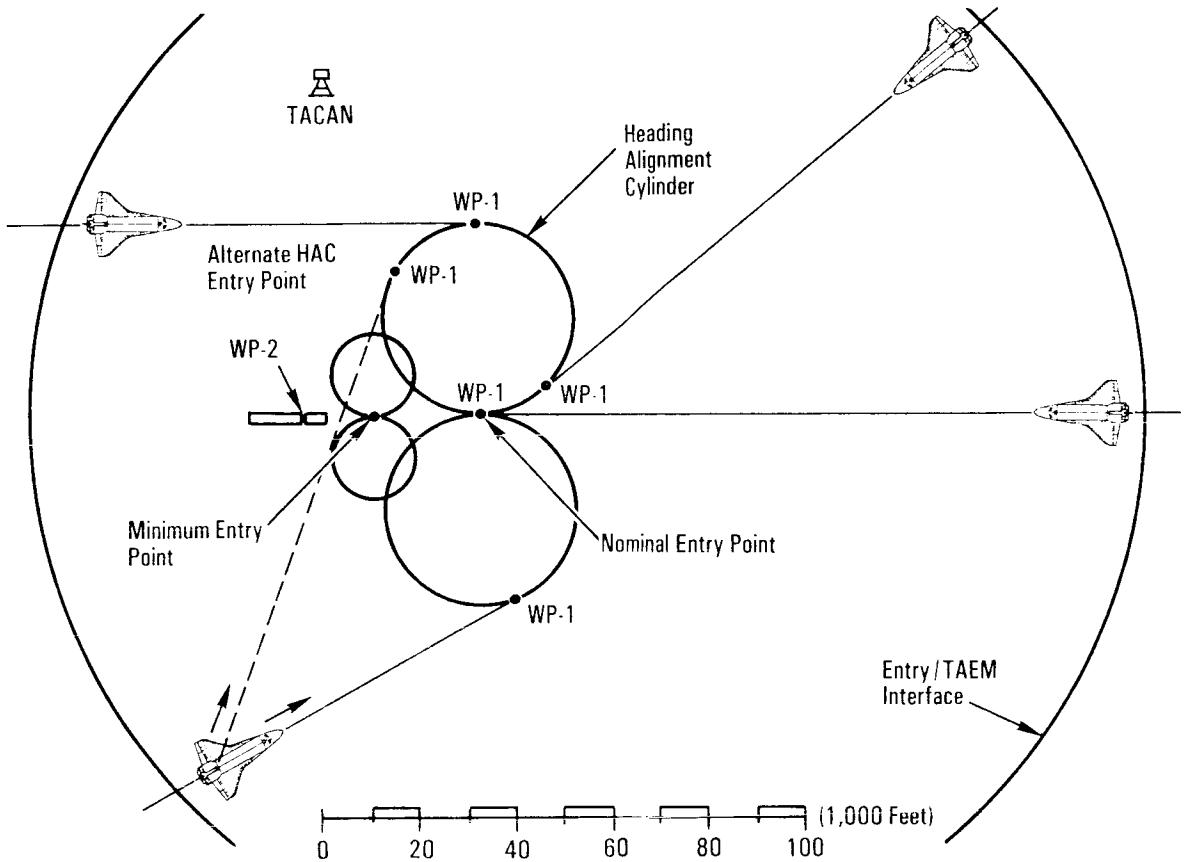


| TAEM Interface | |
|---|---|
| Height | ≈ 85,000 Feet |
| Velocity | ≈ 2,500 Feet per Second |
| Range | ≈ 52 Nautical Miles (59 Statute Miles) |
| Heading | ≤ 10 Degrees from Tangent to HAC |

| Approach / Landing Interface | |
|---|---|
| Height Equivalent Airspeed | ≈ 10,000 Feet ≈ 290 Feet per Second |
| Cross Range | ≤ 1,000 Feet |
| Range | ≈ 5 Nautical Miles (5 Statute Miles) |

*Flight Path Geometry—Top View*

During ascent major modes 102 and 103 (first and second stage) and RTLS, the horizontal situation indicator provides information about the target insertion orbit. The compass card displays heading with respect to TIO, and north on the compass card points along the TIO plane. The heading of the body plus X axis with respect to the target insertion orbit is read at the lubber line.

The course pointer provides the heading of the Earth-relative velocity vector with respect to the TIO plane. The CDI deflection indicates the estimated sideslip angle, the angle between the body X axis and the relative velocity vector.

The primary bearing pointer during major modes 102 and 103 is fixed on the compass card at a predetermined value to provide a turnaround heading in the event of an RTLS abort. During RTLS major mode 601, the pointer indicates the heading to the landing site runway. The secondary bearing provides the heading of the inertial velocity vector with respect to the TIO plane.

The horizontal situation CRT display allows the flight crew to configure the software for nominal winds or high head winds. The software item entry determines the distance from the runway threshold to the intersection of the glide slope with the runway centerline. The high-wind entry pushes the intercept point close to the threshold. The distance selected is factored into the computation of reference altitude from which the GSI is derived.

The HSI contractor is Rockwell International, Collins Radio Group, Cedar Rapids, Iowa.

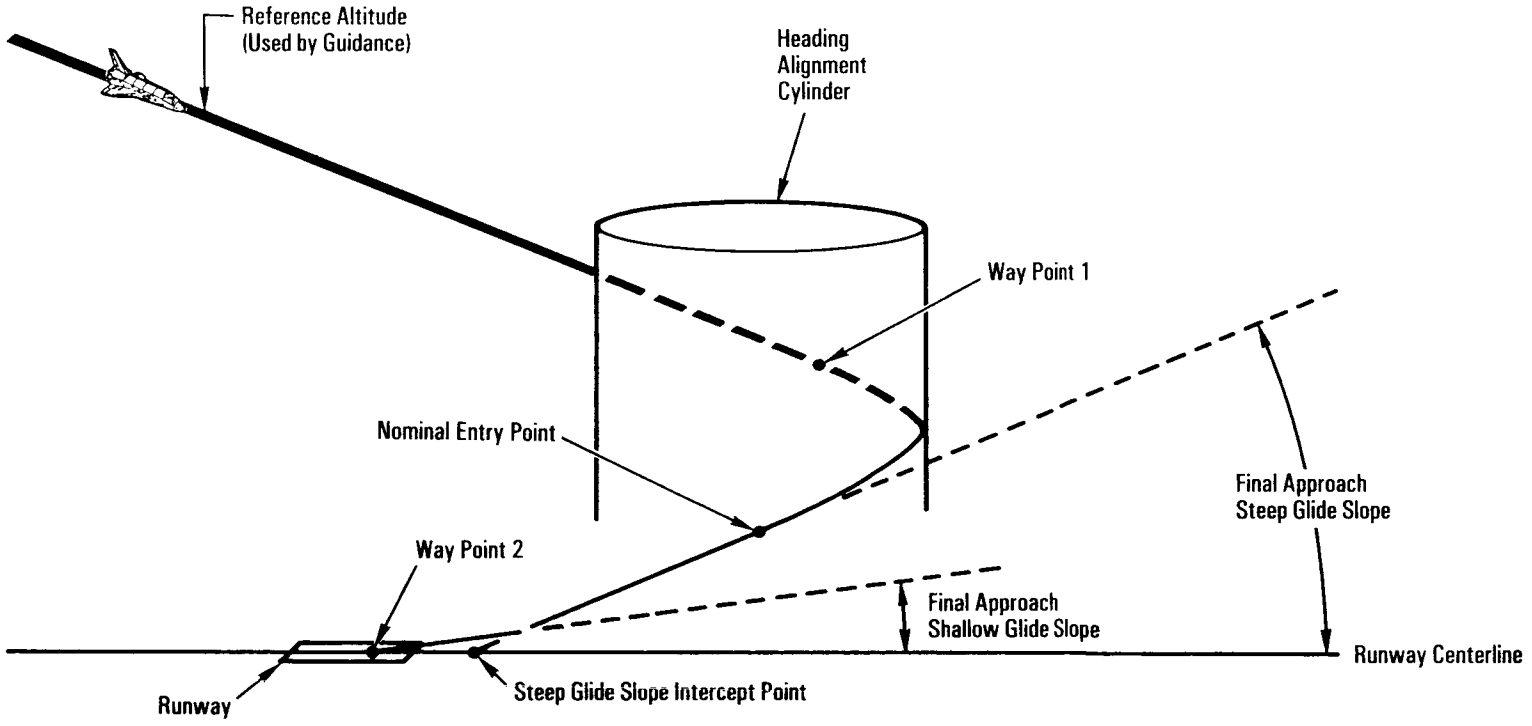


*Flight Path Geometry — Side View*

**Alpha Mach Indicator**. The two alpha Mach indicators are located next to the attitude director indicators on panels F6 and F8. The AMIs consists of four tape meters displaying angle of attack (*alpha*), vehicle acceleration (*accel*), vehicle velocity (*M/vel*) and equivalent airspeed (*EAS*). The two units are driven independently but can have the same data source.

*Alpha* displays vehicle angle of attack, defined as the angle between the vehicle plus X axis and the wind-relative velocity vector (negative wind vector). *Alpha* is displayed by a combination moving scale and moving pointer. For angles between minus 4 degrees and plus 28 degrees, the scale remains stationary and the pointer moves to the correct reading. For angles less than minus 4 degrees or greater than plus 28 degrees, the pointer stops (at minus 4 or plus 28 degrees) and the scale moves so that the correct reading is adjacent to the pointer. The *alpha* tape ranges from minus 18 to plus 60 degrees with no scale changes. The negative scale numbers (below zero) have no minus signs; the actual tape has black markings on a white background on the negative side and white markings on a black background on the positive side.

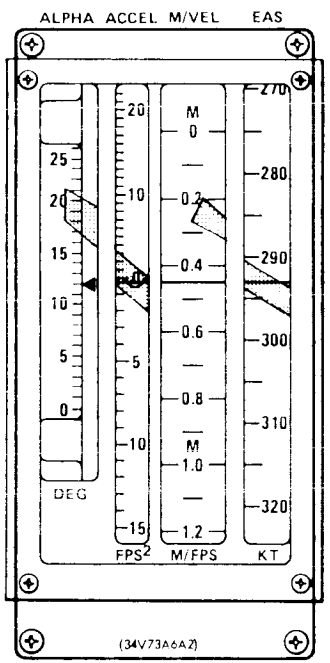


- Alpha −18 to +60 Degrees
- Acceleration −50 to +100 Feet per Second$^2$
- M/vel Mach 0 to 4; 4,000 to 27,000 Feet per Second
- Equivalent Airspeed 0 to 500 Knots
- Failure Warning Flags
  - Malfunction Within Indicator
  - Malfunction in Received Data
  - Power Failure (All Flags Appear)

*Alpha Mach Indicator*

The *accel* scale displays vehicle drag acceleration, which is the deceleration along the flight path. This is a moving tape upon which acceleration is read at the fixed lubber line. The tape range is minus 50 to plus 100 with a scale change at zero feet per second squared. Minus signs are assumed on the *accel* scale also; the negative region has a black background and the positive side has a white background.

The *M/vel* scale displays Mach number or relative velocity. Mach number is the ratio of vehicle airspeed to the speed of sound in the same medium. Relative velocity in this case is the vehicle air-

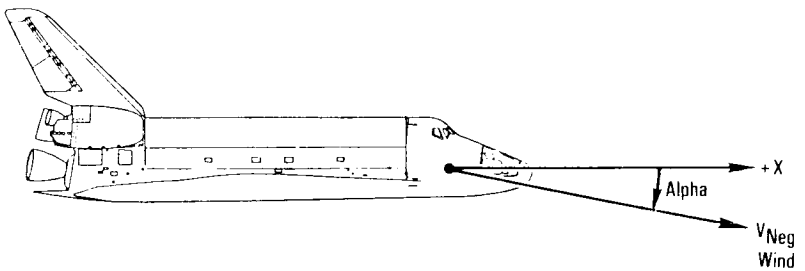


*Angle of Attack*

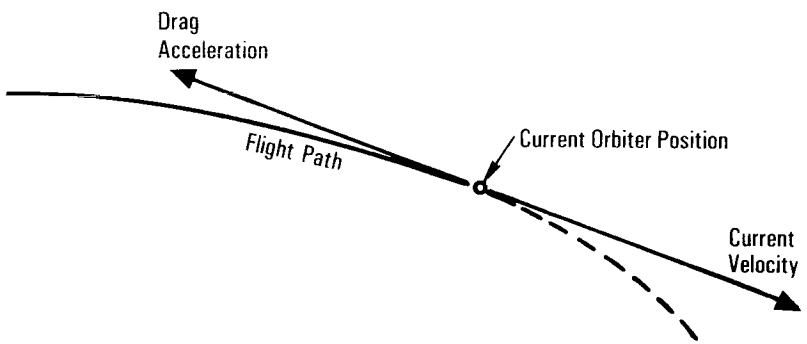


*Acceleration*

speed. The actual parameter displayed is always Mach number; the tape is simply rescaled above Mach 4 to read relative velocity in thousands of feet per second (above 2,000 feet per second, Mach number = $V_{REL}/1{,}000$). The M/vel scale is a moving tape from which Mach/velocity is read at the fixed lubber line. The scale ranges from zero to 27 with a scale change at Mach 4.

The *EAS* scale is used to display equivalent airspeed. On the moving-tape scale, equivalent airspeed is read at the fixed lubber line. The tape range is zero to 500 knots, and scaling is 1 inch per 10 knots.

Each scale on the AMI displays an *off* flag if the indicator malfunctions, invalid data are received at the DDU or a power failure occurs (all flags appear).

The *air data* source select switch on panel F6 for the commander and panel F8 for the pilot determines the source of data for the AMI and altitude/vertical velocity indicator. The *nav* position of the *air data* switch ensures that the *alpha*, *Mach* and *EAS* on the AMI are the same parameters sent to guidance, flight control, navigation and other software users; accel comes from navigation software.

The *left, right* position of the *air data* switch selects predetermined data from the left or right air data probe assembly after deployment of the left and right air data probes at Mach 3 for *alpha*, *M/vel* and *EAS* display. *Accel* is always derived from navigation software during entry. It is driven to zero during terminal area energy management and approach and landing.

**Altitude/Vertical Velocity Indicator**. The altitude/vertical velocity indicators are located on panel F6 for the commander and panel F8 for the pilot. These indicators display vertical acceleration (*alt accel*), vertical velocity (*alt rate*), barometric altitude (*alt*) and radar altitude (*rdr alt*).

The *alt accel* indicator, which displays altitude acceleration of the vehicle, is read at the intersection of the moving pointer and the fixed scale. The scale range is minus 13.3 to 13.3 feet per second squared, and the scaling is 6.67 feet per second squared per inch. Software limits acceleration values to plus or minus 12.75 feet per second squared.

The *alt rate* scale displays vehicle altitude rate, which is read at the intersection of the moving tape and the fixed lubber line. The scale range is minus 2,940 to plus 2,940 feet per second with scale changes at minus 740 feet per second and plus 740 feet per second. The negative and positive regions are color-reversed: negative numbers are white on a black background and positive numbers are black on white.

The *alt* scale, a moving tape read against a fixed lubber line, displays the altitude of the vehicle above the runway (barometric altitude). The scale range is minus 1,100 feet to plus 165 nautical miles (189 statute miles), with scale changes at minus 100, zero, 500 feet and plus 100,000 feet. The scale is in feet from minus

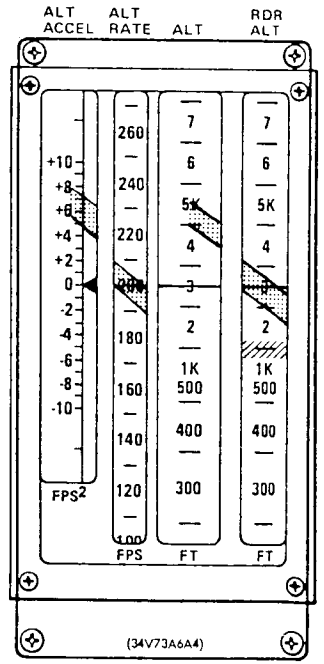


- Altitude Acceleration −13.3 to +13.3 Feet per Second$^2$
- Altitude Rate −2,940 to +2,940 Feet per Second
- Altitude −1,100 Feet to 165 Nautical Miles
- Radar Altitude 0 to 9,000 Feet
- Failure Warning Flags
  - Malfunction Within Indicator
  - Malfunction in Received Data
  - Power Failure (All Flags Appear)

*Altitude / Vertical Velocity Indicator*

1,100 to plus 400,000 and in nautical miles from plus 40 to plus 165 (46 to 189 statute miles). Feet and nautical miles overlap from plus 40 to plus 61 nautical miles (46 to 70 statute miles).

The *rdr alt* scale is a moving tape read against a fixed lubber line. It displays radar altitude (corrected to wheels) during major mode 305, below 9,000 feet (normally not locked in until below 5,000 feet; prior to radar altimeter lock-on, the meter is "parked" at 5,000 feet). The scale ranges from zero to 9,000 feet with a scale change at 1,500 feet. Each scale on the AVVI displays an *off* flag in the event of indicator malfunction, invalid data received at the DDU or power failure (all flags appear).

With the *air data* source switch in the *nav* position, the *alt accel*, *alt rate*, and *alt* scales are navigation-derived. The *rdr alt* indicator is controlled by the *radar altm* switch on panel F6 for the commander and panel F8 for the pilot. *Radar altm* positioned to *1* selects radar altimeter 1; *2* selects radar altimeter 2.

The *air data* switch is positioned to *left* or *right* to select the right or left air data probe, respectively, after air data probe deployment at Mach 3. The *alt* and *alt rate* scales receive information from the selected air data probe. *Alt accel* receives navigation data. The *rdr alt* scale receives data from the *radar alt* select switch.

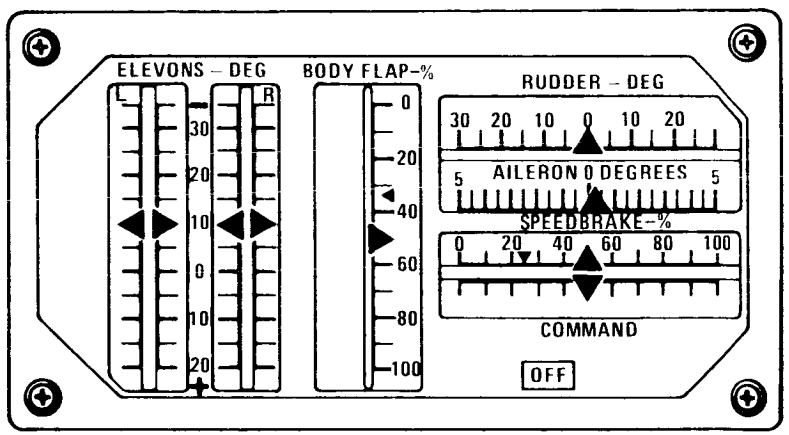


*Surface Position Indicator*

**Surface Position Indicator**. The surface position indicator is a single display on panel F7 that is active during entry and during the entry portion of RTLS. The SPI displays the actual and commanded positions of the elevons, body flap, rudder, aileron and speed brake.

The four elevon position indicators show the elevon positions

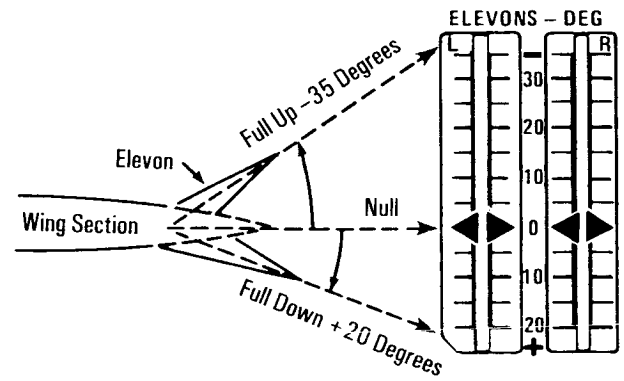


*Surface Position Indicator Elevon Travel*

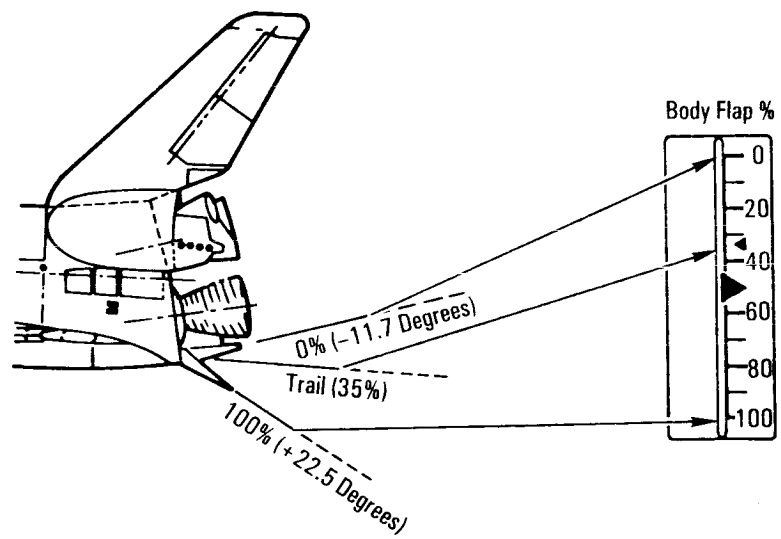


*Surface Position Indicator Elevon Travel*

in the order of appearance as viewed from behind the vehicle (from left to right: left outboard, left inboard, right inboard, right outboard). The scales all range from plus 20 to minus 35 degrees, which are also the software limits to the elevon commands. The pointers are driven by four separate signals and can read different values, but normally the left pair is identical and the right pair is identical. Positive elevon is below the null line and negative is above.

The body flap scale reads body flap positions from zero to 100 percent of software-allowed travel. Zero percent corresponds to full up (minus 11.7 degrees); 100 percent corresponds to full down (plus 22.5 degrees). The small pointer at 35 percent is fixed and shows the trail position.

Rudder position is displayed as if viewed from the rear of the vehicle. Deflection to the left of center represents left rudder. The scale is plus 30 degrees (left) to minus 30 degrees (right), but software limits the rudder command to plus or minus 27.1 degrees.

The aileron display measures the effective aileron function of the elevons in combination. Aileron position equals the average of the left and right elevon divided by two. Deflection of the pointer to the right of center indicates a roll-right configuration (left elevons down, right elevons up) and vice versa. The scale is minus 5 to plus 5 degrees, with minus 5 at the left side. The aileron command can exceed plus or minus 5 degrees (maximum plus or minus 10 degrees), in which case the meter saturates at plus or minus 5 degrees.

The speed brake position indicator indicates the actual position on the upper scale and commanded position on the lower scale. The position ranges zero to 100 percent; zero percent is fully closed and 100 percent is fully open, which corresponds to 98 degrees with respect to the hinge lines. The small point at 25 percent is fixed and represents the point at which the speed brake surfaces and the remainder of the tail form a smooth wedge.

The speed brake command is scaled identically to position and has the same travel limits. It always represents the speed brake auto guidance command. The *off* flag is set only for internal meter problems or during OPS 8 display checkout.

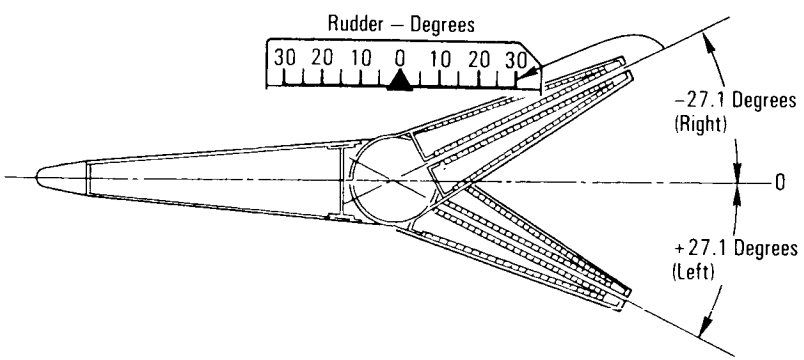


*Surface Position Indicator Rudder Travel*

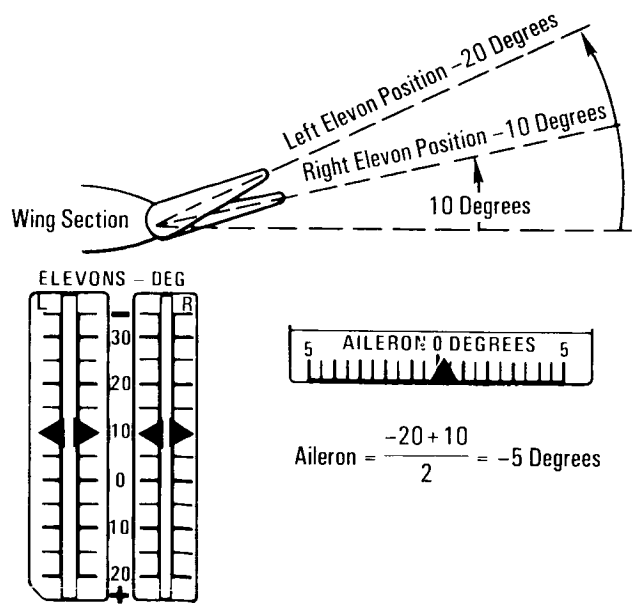


*Surface Position Indicator Aileron Travel*

**Flight Control System Push Button Light Indicators.** These indicators are located on panel F2 for the commander and panel F4 for the pilot. The flight control system's push button light indicators transmit flight crew moding requests to the digital autopilot in the flight control software and reflect selection by illuminating the effective DAP state.

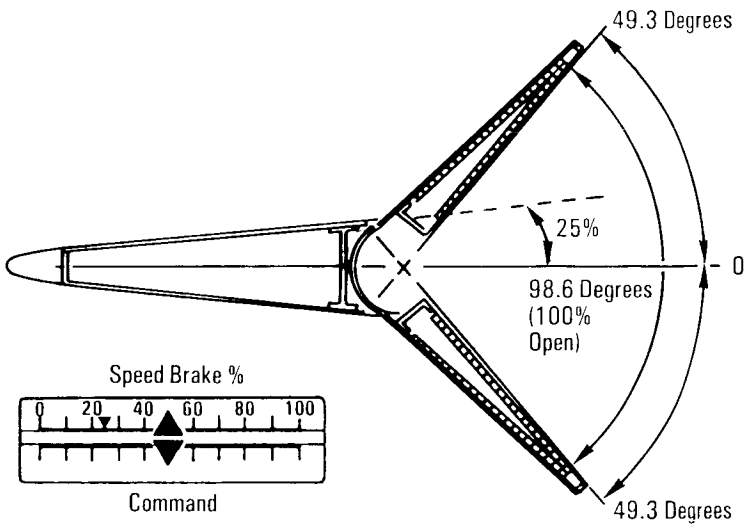


*Surface Position Indicator Top View of Open Speed Brake*

The push button light indicators are used to command and reflect the status of the pitch control mode. The *pitch* and *roll/yaw* indicators transmit moding requests to the digital autopilot and indicate the effective state of the pitch, roll and yaw DAP channels by lighting.

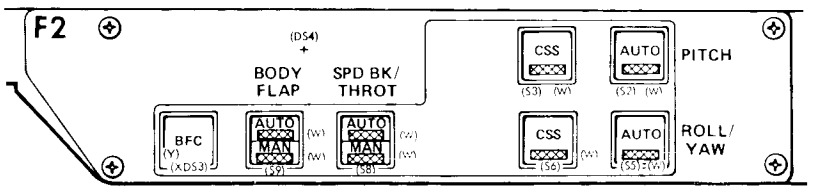


*Flight Control Mode Push Button Light Indicators Panel F2 (Panel F4 Identical)*

| Lights | Left/Right Light Logic | | Causes |
|---|---|---|---|
| *Pitch auto* | Both on or both off | Auto, CSS mutually exclusive | *Pitch auto* push button light indicator depressed |
| *Pitch CSS* | Both on or both off | | *Pitch CSS* push button light indicator depressed or RHC out of detent in pitch |
| *Roll/yaw auto* | Both on or both off | Auto, CSS mutually exclusive | *Roll/yaw auto* push button light indicator depressed |
| *Roll/yaw CSS* | Both on or both off | | *Roll/yaw CSS* push button light indicator depressed or RHC out of detent in roll or yaw |
| *Spd bk/throt* | | | |
| *Aut* | Both on or both off | Auto, man. mutually exclusive | Neither SBTC out of detent and push button light indicator is then depressed |
| *Man* | One on, one off | | Either SBTC out of detent |
| *Body flap* | | | |
| *Aut* | Both on or both off | Auto, man. mutually exclusive | *Auto* push button light indicator depressed and neither slew switch active |
| *Man* | Both on or both off | | Either slew switch active or inactive (*auto/off*) and neither *auto* push button light indicator depressed |

*Flight Control System Mode Push Button Light Indicator Light Logic*

*Auto* indicates that control is automatic and no crew inputs are required. *CSS* is control stick steering; crew inputs are required but are smoothed by the DAP (stability augmentation, turn coordination).

The *spd brk/throt* (speed brake/throttle) push button light indicator has two separate lights, *auto* and *man* (manual), to indicate that the DAP speed brake channel is in the automatic or manual mode. The push button light indicator transmits only the *auto* request.

The *body flap* push button light indicator also has separate *auto* and *man* lights, indicating the state of the body flap channel. Like the *spd brk/throt* push button light indicator, the *body flap* indicator transmits only the *auto* request.

**Reaction Control System Command Lights**. The reaction control system command lights on panel F6 are active during the entry and RTLS flight phases. Their primary function is to indicate RCS jet commands by axis and direction; secondary functions are to indicate when more than two yaw jets are commanded and when the elevon drive rate is saturated.

During major modes 301 through 304, up until the roll jets are no longer commanded (dynamic pressure exceeds 10 pounds per square foot), the *roll l* and *r* lights indicate that left or right roll

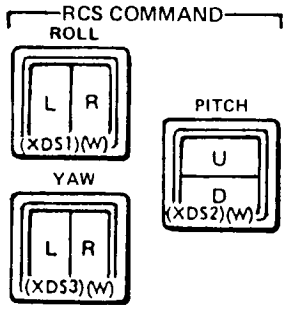


*Panel F6*

commands have been issued by the DAP. The minimum light-on duration is extended so that the light can be seen even during minimum-impulse firings. When dynamic pressure is greater than or equal to 10 pounds per square foot, the *roll* lights are quiescent until 50 pounds per square foot, after which time both lights are illuminated whenever more than two yaw jets are commanded on.

The *pitch u* and *d* lights indicate up and down pitch jet commands until dynamic pressure equals 20 pounds per square foot, after which the pitch jets are no longer used. When dynamic pressure is 50 pounds per square foot or more, the *pitch* lights, like the *roll* lights, assume a new function: both light whenever the elevon surface drive rate exceeds 20 degrees per second (10 degrees per second if only one hydraulic system is left).

The *yaw l* and *r* lights function as yaw jet command indicators throughout entry until the yaw jets are disabled at Mach 1. The yaw lights have no other functions.

**G-Meter**. The g-meter is a self-contained accelerometer and display unit mounted on panel F7. It senses linear acceleration along the Z axis (normal) of the vehicle. A mass weight in the unit is supported vertically by two guide rods and is constrained by a constant-rate helical spring. The inertial force of the mass is proportional to the inertial force of the vehicle and, hence, to the input acceleration, under conditions of constant acceleration. Displacement of the mass is translated to pointer displacement through a rack-and-pinion gear train whose output is linear with input acceleration. The display indicates acceleration from minus 2 g's to plus 4 g's. The g-meter requires no power and has no software interface. Like all the dedicated displays, it has an external variable incandescent lamp.

**Head-up Display**. The head-up display is an optical miniprocessor that cues the commander and/or pilot during the final phase of entry and particularly in the final approach to the runway. With minimal movement of their eyes from the forward windows (head up) to the dedicated display instruments (head down), the commander and pilot can read data from HUDs located in

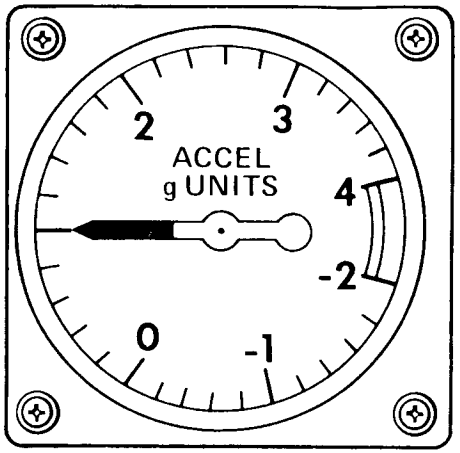


*G-Meter Display*

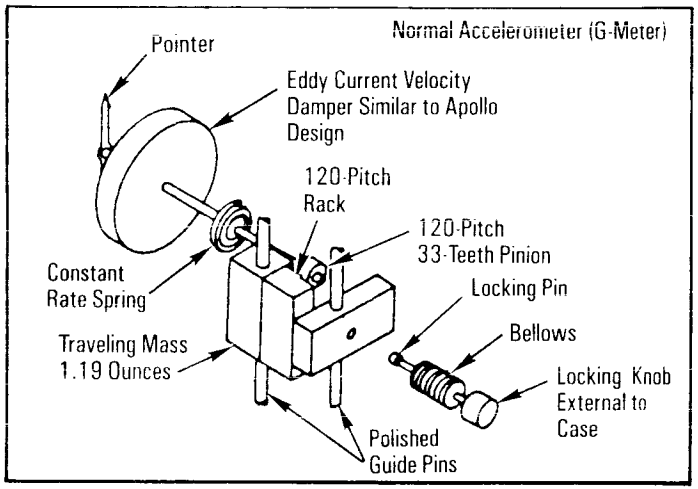


*G-Meter Design*

front of them on their respective glareshields. The HUD displays the same data presented on several other instruments, including the ADI, SPI, AMI and AVVI.

The HUD allows out-of-the-window viewing by superimposing flight commands and information on a transparent combiner in the window's field of view. The baseline orbiter, like most commercial aircraft, presents conventional electromechanical display on a panel beneath the glareshield, which necessitates that the flight crew look down for information and then up to see out the window. During critical flight phases, particularly approach and landing, this is not an easy task. In the orbiter, with its unique vehicle dynamics and approach trajectories, this situation is even more difficult.

Since the orbiter is intended to be in service for several years, the addition of a HUD was considered appropriate. Most recent military aircraft include HUD systems, as do several European airliners. Additionally, since the display portion of some existing HUD systems could be easily installed in the orbiter, the HUD system requirements for the orbiter were patterned after existing hardware to minimize development costs.

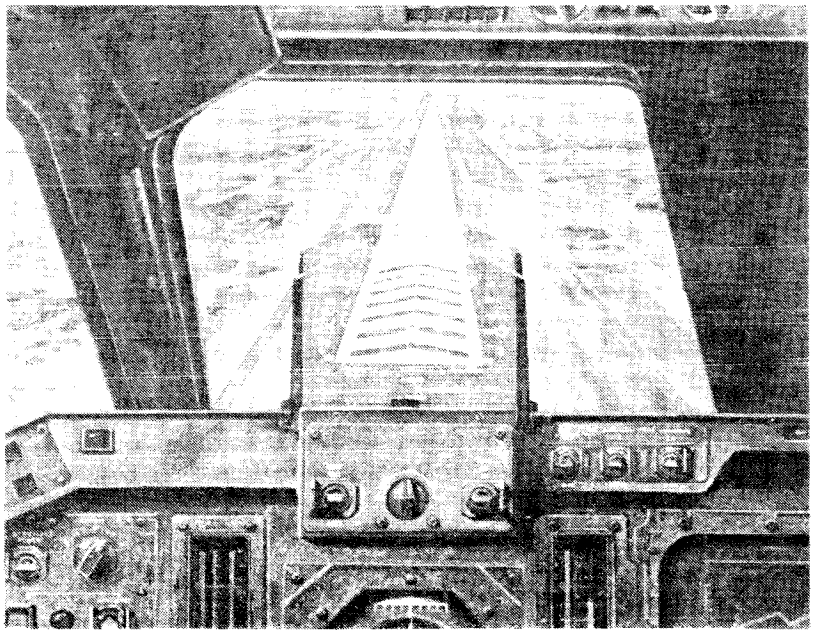

*Head-up Display*

While the display portion of the orbiter system could be similar to existing HUD systems, the drive electronics could not. Since the orbiter avionics systems are digital and minimal impact on the orbiter was paramount, the HUD drive electronics were designed to receive data from the orbiter data buses. Most existing HUD drive electronics use analog data or a combination analog/digital interface. In the orbiter system, the HUD drive electronics utilize, to the maximum extent possible, the same data that drive the existing electromechanical display devices.

The orbiter display device, designed by Kaiser Electronics of San Jose, Calif., uses a CRT to create the image, which is then projected through a series of lenses onto a combining glass (a system very similar to one they developed and produce for the Cobra jet aircraft). Certain orbiter design requirements, such as vertical viewing angles, brightness and unique mounting, dictated some changes from the Cobra configuration.

A *HUD power on/off* switch located on the left side of panel F3 provides and terminates electrical power to the commander's HUD. The same switch is also located on the right side of panel F3 for the pilot's HUD.

Each HUD is a single-string system but connected to two data buses for redundancy. It is an electronic/optical device with two sets of combiner glasses located above the glareshield in the direct line of sight of the commander and the pilot. Essential flight information for vehicle guidance and control during approach and landing is projected on the combiner glasses and collimated at infinity.

For example, looking through the HUD and out the window in the final phase of the preflare maneuver, the commander might see EAS = 280 knots (left scale), altitude = 500 feet (right scale), and orbiter heading (+) slightly to the left of runway centerline, which indicates a light crosswind from the left. The velocity vector symbol ▷ —O— ◁ is just crossing the runway overrun. The guidance diamond is centered inside the velocity vector symbol. The flare triangles on the wing tips indicate that the pilot is following the flare command precisely. The lighted outline of the start of the runway zone appears at the top of the combiner. The HUD can display speed brake command and position; discrete messages, such as gear; and, during rollout, deceleration and wing-leveling parameters.

The images, generated by a small CRT and passed through a series of lenses, are displayed to the flight crew on the combiners as lighted symbology. The transmissiveness of the combiner allows the crew to look through it and see actual targets like the runway.

For instance, if the crew is conducting an instrument approach at 7,000 feet on the final approach course in a solid overcast, the base of which is at 5,000 feet, the lighted outline of the runway would be displayed on the combiner. However, when the orbiter exits the overcast at 5,000 feet, the lighted outline of the runway would be superimposed on the real runway. As the orbiter proceeds down the steep glide slope, the velocity vector is superimposed over the glide slope aim point. At preflare altitude, flare triangles move up to command the pullout. The pilot maintains the velocity vector symbol between the triangles. After a short period of stabilized flight on the shallow glide slope, the guidance diamond commands a pitch-up until the nose is about 8 degrees above the horizon, which is essentially the touchdown attitude. After touchdown, during the rollout phase, the crew maintains the approximate touchdown attitude, plus 6 degrees theta (nose above the horizon), until 180 knots equivalent airspeed and then commands a derotation maneuver.

The HUD has proved to be a valuable landing aid and is considered the primary pilot display during this critical flight phase.

## TERMINAL COUNT

The terminal count phase extends from T minus 20 minutes (T refers to lift-off time) through solid rocket booster ignition. Prior to T minus 20 minutes, prelaunch functions are controlled by a ground computer network at the launch site. This is called the launch processing system. The orbiter general-purpose computers interact with the processing system from T minus 20 minutes (when they are loaded with OPS 1 software and formed into the four GPCs referred to as the primary avionics software system) until lift-off. This interaction consists of commands being sent by the LPS to the computers, which carry out the commands and then respond to the LPS action until it is completed.

A planned 10-minute hold occurs at T minus nine minutes, when last-minute launch preparations are made.

Launch countdown is controlled by the LPS until 31 seconds before launch, when the onboard computers' automatic launch sequence software is enabled by launch processing system command. From this point on, the computers take control of the sequencing of events and perform functions by the onboard clock, but will honor hold, resume count and recycle commands from the LPS.

The computer launch sequence sets flags to command the arming of SRB ignition and hold-down release system pyro initiator controllers and the T-0 umbilical release PICs. After a delay, the SRB ignition PIC voltages are monitored for acceptable levels. The hold-down release system PICs and the T-0 umbilical release system PICs are monitored by the LPS. The computer launch sequence logic initiates a countdown hold if the SRB ignition PIC voltages fall below an acceptable level at any time before space shuttle main engine start commands are issued. If the SRB ignition PIC voltages are not acceptable after the start commands are issued, the engines are shut down.

The computer launch sequence also controls certain critical main propulsion system valves and monitors the engine-ready indications from the main engines. The MPS start commands are issued by the onboard GPCs at T minus 6.6 seconds (staggered start—engine 3, engine 2, engine 1—at 120-millisecond intervals), and the sequence monitors the thrust buildup of each engine. All three engines must reach the required 90 percent of thrust at three seconds; otherwise, an orderly shutdown is commanded and safing functions are initiated.

Normal thrust buildup to the required 90-percent thrust level results in the engines being commanded to the lift-off position at T minus three seconds as well as the fire 1 command being issued to arm the SRBs. At T minus three seconds, the vehicle base bending load modes are allowed to initialize (movement of approximately 25.5 inches, measured at the top of the external tank, with movement toward the external tank).

At T minus zero, the two SRBs are ignited, under command of the four onboard GPCs; the four explosive bolts on each SRB are initiated (each bolt is 28 inches long and 3.5 inches in diameter); the two T-0 umbilicals (one on each side of the spacecraft) are retracted; the onboard master timing unit, event timer and mission event timers are started; the three main engines are at 100 percent; and the ground launch sequence is terminated, initiating the onboard GPCs.

The ascent digital autopilot configuration logic, upon ascent initialization, places the main engine nozzles in the start position, places the SRB nozzles in the null position and places the orbiter aerosurfaces in the launch position. Upon receipt of the command to prepare main engines for lift-off, the engines are commanded to the launch position.

There are no guidance functions performed during prelaunch. Also, there are no active flight control functions, except for the commands to gimbal the engines for test and launch positions and slewing of the aerosurfaces.

Navigation is initialized during prelaunch. At T minus eight seconds, the launch pad location (latitude, longitude and attitude)

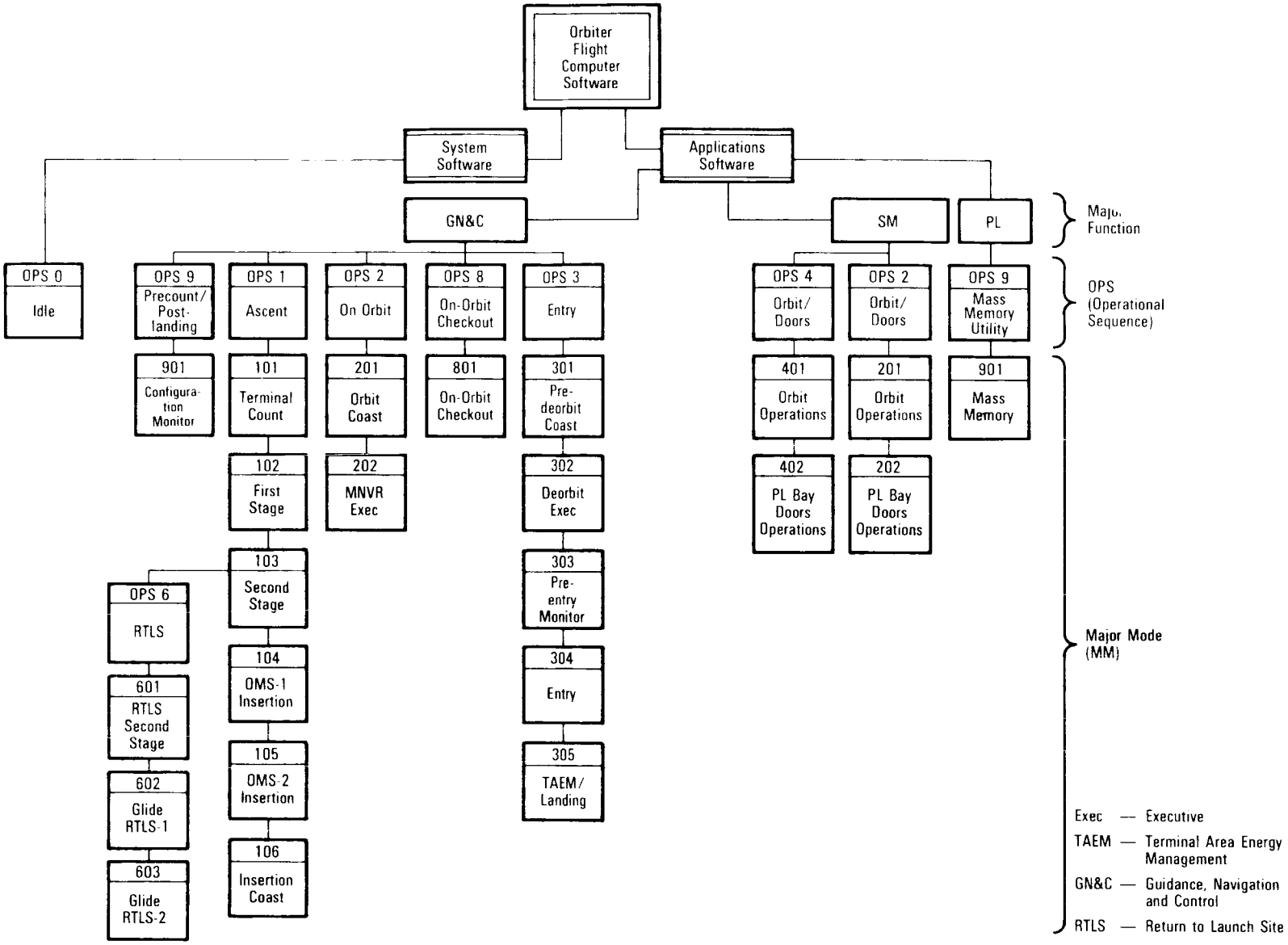


*Orbiter Flight Computer Software*

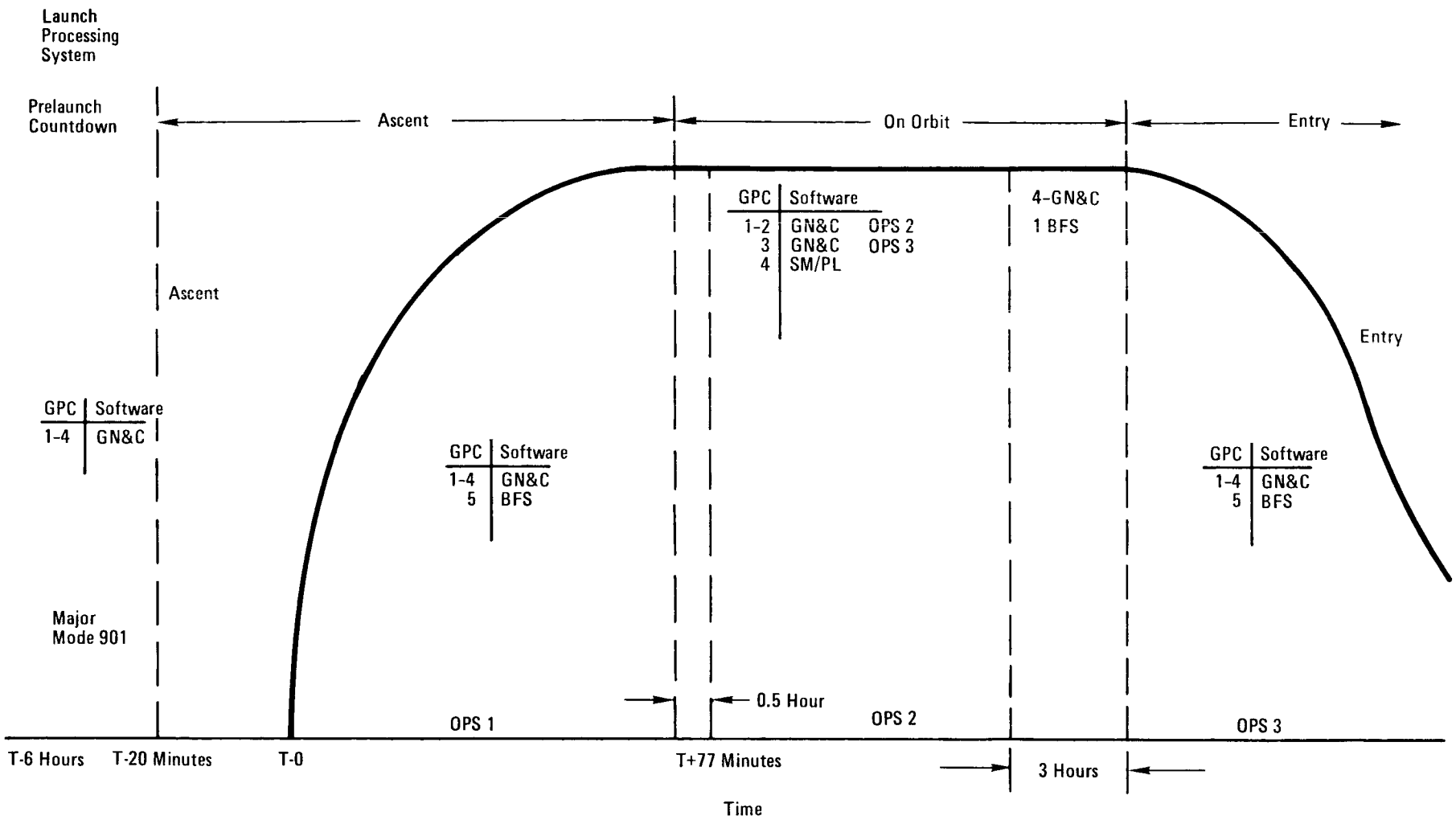


*Orbiter Computer Configuration for Nominal Mission Scenario*

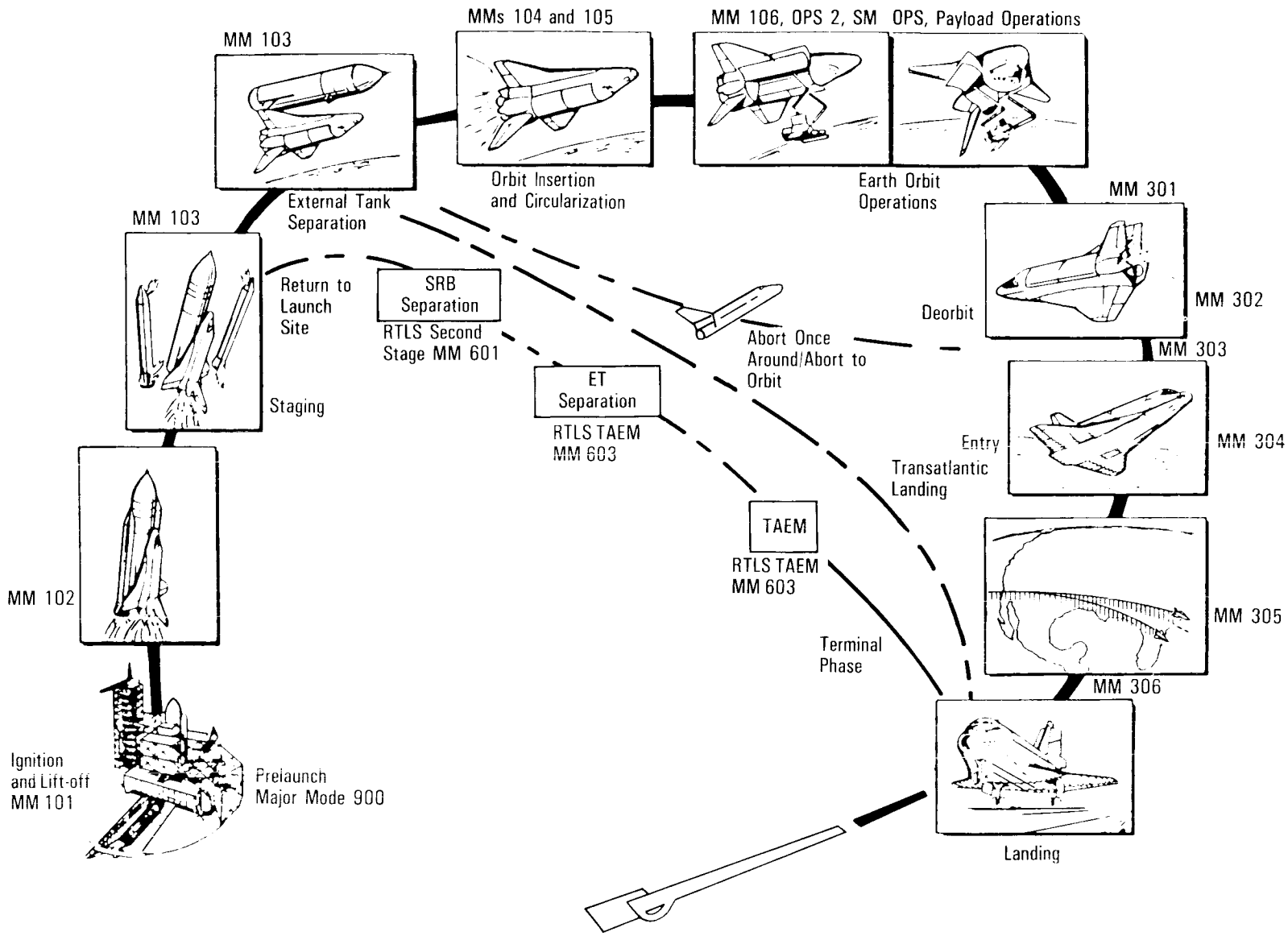


*Mission Profile Software*

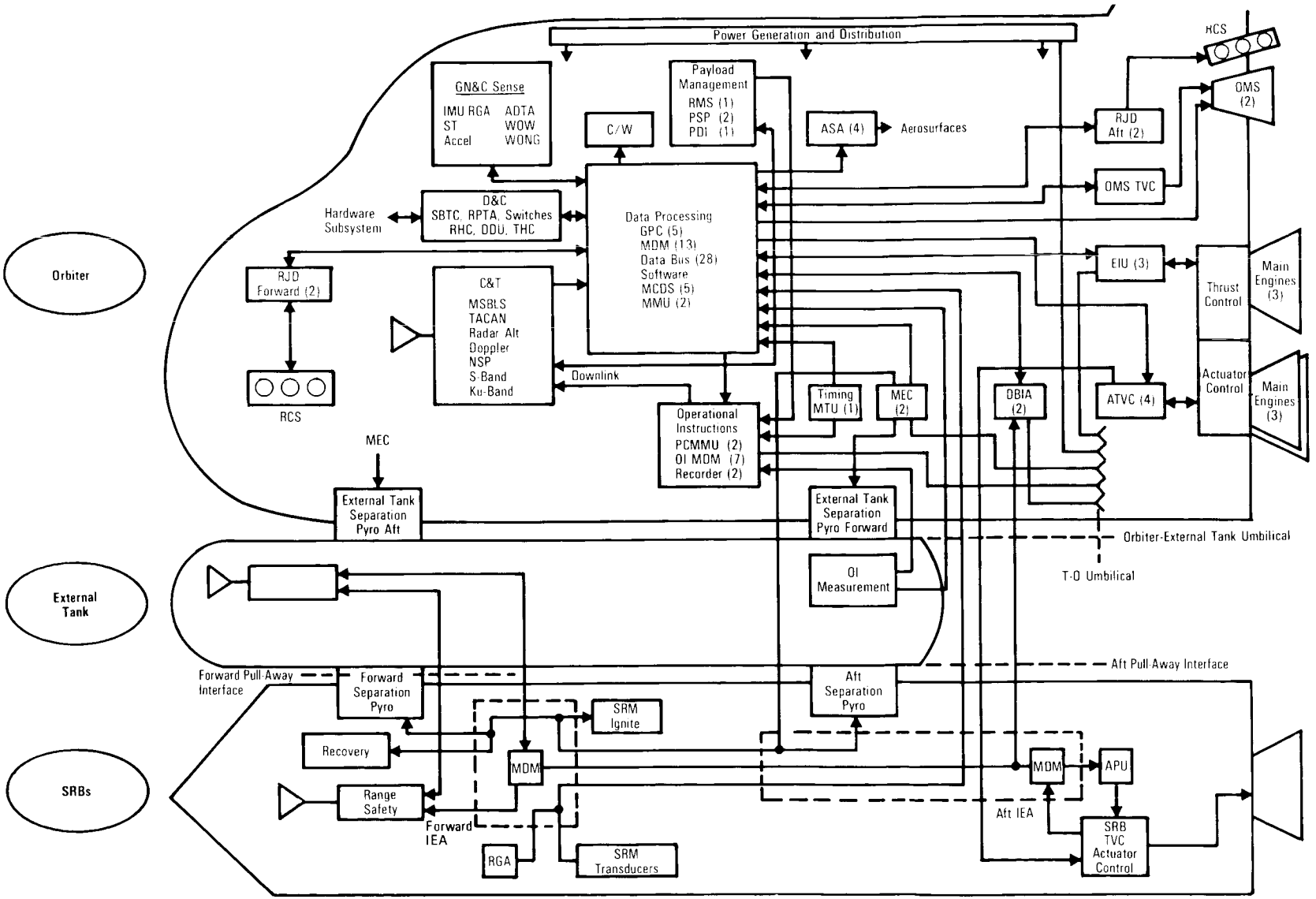
Orbiter
External Tank
SRBs
Power Generation and Distribution
GN&C Sense
IMU RGA ADTA
ST WOW
Accel WONG
C/W
Payload Management
RMS (1)
PSP (2)
PDI (1)
ASA (4)
Aerosurfaces
RCS
OMS (2)
RJD Aft (2)
OMS TVC
Hardware Subsystem
D&C
SBTC, RPTA, Switches
RHC, DDU, THC
Data Processing
GPC (5)
MDM (13)
Data Bus (28)
Software
MCDS (5)
MMU (2)
EIU (3)
Thrust Control
Main Engines (3)
RJD Forward (2)
C&T
MSBLS
TACAN
Radar Alt
Doppler
NSP
S-Band
Ku-Band
Downlink
Actuator Control
Main Engines (3)
RCS
Timing MTU (1)
MEC (2)
DBIA (2)
ATVC (4)
Operational Instructions
PCMMU (2)
OI MDM (7)
Recorder (2)
MEC
External Tank Separation Pyro Aft
External Tank Separation Pyro Forward
Orbiter-External Tank Umbilical
T-0 Umbilical
OI Measurement
Forward Pull-Away Interface
Forward Separation Pyro
Aft Separation Pyro
Aft Pull-Away Interface
SRM Ignite
Recovery
MDM
MDM
APU
Range Safety
Forward IEA
Aft IEA
RGA
SRM Transducers
SRB TVC Actuator Control

*Avionics*

of the navigation base is transformed to a position vector. Launch Complex 39-A at the Kennedy Space Center in Florida is at 28 degrees 36 minutes 29.7014 seconds north latitude and 80 degrees 36 minutes 15.4166 seconds west longitude. The space shuttle vehicle is oriented on the launch pad with its negative Z body axis (tail) pointed south. The inertial measurement units are set inertial at T minus 20 minutes but are biased for Earth rotation until T minus 12 seconds, when the bias is removed. Launch Complex 39-B at the Kennedy Space Center is at 28 degrees 37 minutes 26 seconds north latitude and 80 degrees 37 minutes 15.09 seconds west longitude. The shuttle vehicle is also oriented on this pad with the negative Z body axis (tail) pointed south.

## FIRST STAGE

First-stage ascent extends from SRB ignition through SRB separation, or SRB staging. The sequence of major guidance, navigation and control events proceeds as folllows: The vehicle lifts off the pad 0.3 second after SRB ignition, rising vertically in attitude hold until the SRBs' nozzles clear the lightning rod tower by approximately 41 feet. The vehicle begins a combined roll, pitch and yaw maneuver that positions the orbiter head down, with wings level and aligned with the launch pad. The orbiter flies upside down during the ascent phase. This orientation, together with trajectory shaping, establishes a trim angle of attack that is

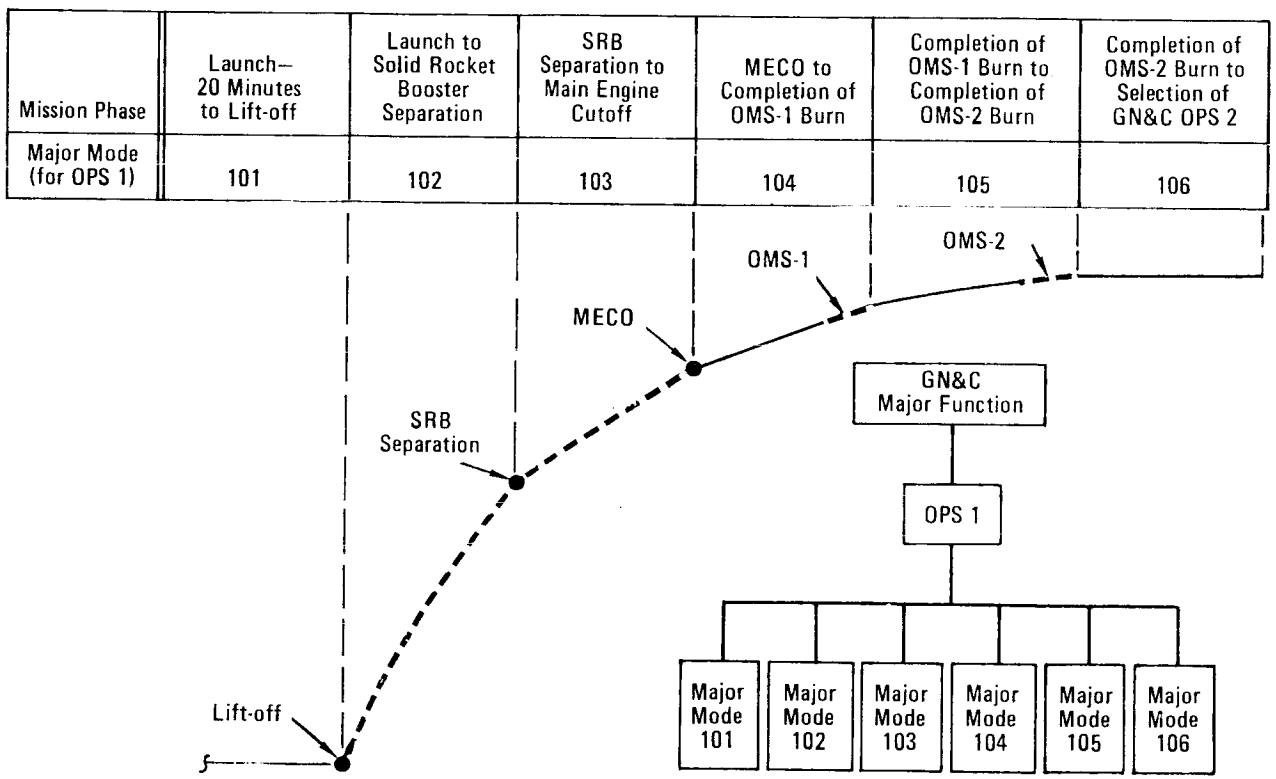


*Ascent Major Modes*

favorable for aerodynamic loads during the region of high dynamic pressure, resulting in a net positive load factor, as well as providing the flight crew with use of the ground as a visual reference. By about 20 seconds after lift-off, the vehicle is at 180 degrees roll and 78 degrees pitch.

During the first 90 seconds of flight, the flight control system provides load relief by making adjustments to reduce vehicle loads at the expense of maintaining a precise trajectory profile. A special schedule of elevon position with respect to velocity is followed to protect the wings from excessive loads and to hold the body flap and rudder/speed brake in place. The surface position indicator displays the position of the aerosurfaces. To keep the dynamic pressure on the vehicle below a specified level, on the order of 580 pounds per square foot (max q), the main engines are throttled

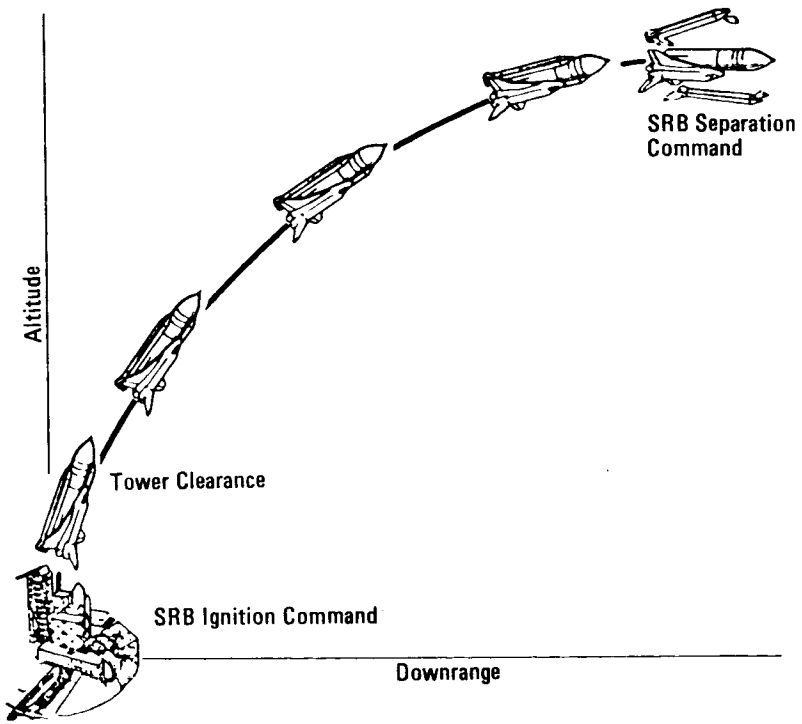


*First-Stage Ascent*

down at approximately 26 seconds and throttled back up at approximately 60 seconds. This also reduces heating on the vehicle. Because of the throttling at this time, the term "thrust bucket" evolved. Maximum dynamic pressure occurs shortly after throttle up.

Thrust vector control is the hub of flight control. In the ascent phase, the four ascent thrust vector control drivers respond to commands from the guidance system. Thus the TVC commands from guidance are transmitted to the ATVC drivers, which transmit electrical signals proportional to the commands to the servoactuators on each main engine and solid rocket booster.

Thrust vector control closes the acceleration and rate loops within the outer attitude loops to generate body axis attitude error rates, which eventually are nulled out by the main engines and SRBs. The main propulsion system processor of the digital autopilot converts body axis and attitude error signals generated in TVC into pitch and yaw nozzle deflection commands for the main engines. The SRB processor of the DAP accomplishes the same functions as the MPS, except that it is referred to as rock and tilt instead of pitch and yaw.

The SRB pitch and yaw rate gyros are used exclusively during first-stage ascent, and control is switched to the orbiter rate gyros when the SRBs are commanded to null in preparation for separation. Pitch and yaw axes and a combination of rate, attitude and acceleration signals are blended to effect a common signal to the main engines and the TVC for both SRBs. In the roll axis, rate and attitude are summed to provide a common signal to both the main engines' and SRBs' TVC.

First-stage guidance is active from SRB ignition through SRB separation plus four seconds. In this stage, guidance uses a preflight-planned (canned) table of roll, pitch and yaw attitudes referenced to relative velocity. There are canned tables defined for the cases of three good main engines, as well as for left, center or right main engine failed cases. In addition to sending commands to flight control to obtain proper vehicle attitude, guidance also sends commands to the MPS throttle in accordance with a

preflight-defined throttle schedule, which is a function of relative velocity unless the flight crew has taken manual control of the throttle.

Navigation during first stage propagates the vehicle state vector through use of inertial measurement unit data and a gravity model. This function can be used to aid in driving the cathode ray tube's predictor.

Boost guidance is responsible for performing the "table lookup" of the appropriate roll, pitch and yaw command, depending on relative velocity. The table used is determined by the number of main engines thrusting. If one engine fails, guidance automatically recognizes the failure and lofts the trajectory, commanding the remaining two engines to a higher thrust percent, in the case of a contingency abort, for the remainder of first-stage ascent. For intact aborts, the throttle remains at the nominal maximum setting. Each main engine controller is used during the ascent phase to monitor the operation of an engine, issue inhibit commands to prevent a second engine from automatically shutting down when one has shut down, monitor the state of flight deck crew displays and switches from the switch processor and issue appropriate commands. The controllers also monitor guidance, navigation and control software for the proper time to check the main propulsion system liquid oxygen and liquid hydrogen low-level sensors, monitor GN&C software for proper time of main engine cutoff, and issue the command to close the main propulsion system liquid oxygen and liquid hydrogen prevalves after engine shutdown.

No GN&C-related crew actions are planned for first-stage ascent unless a failure occurs. To ensure that the auto flight control system is maintaining the expected ascent profile, the flight crew can verify that the vehicle is at the correct pitch attitude (via the attitude director indicator) and altitude rate (via the altitude/vertical velocity indicator) at each of five designated times during first-stage ascent. The flight crew can monitor that the main engines correctly throttle down and up. They can also ensure that the $P_c < 50$ message (chamber pressure greater than 50 psi) correctly appears on the major mode 102 (first stage) ascent trajectory CRT display before SRB separation and that SRB separation occurs on time. Manual intervention by the crew is required if these events are not automatically accomplished. The crew is also responsible for monitoring main engine performance. During first-stage ascent, only limited information is available to the crew on the PASS and backup flight system major mode 102 displays.

In the automatic mode, flight control during first-stage ascent uses commands sent to it from guidance. If the flight crew has selected control stick steering, commands are input through the rotational hand controller. Feedback from external sensors (rate gyro assemblies and accelerometers) is used to generate commands to reposition the SRB nozzles and main engine gimbals. Flight control sends the current vehicle attitude rates and the errors between current and desired attitudes to the ADI for display to the crew. As mentioned earlier, flight control also performs load relief by orienting the vehicle to reduce normal and lateral accelerations and by commanding the elevons to alleviate hinge moment loads in accordance with the premission-defined elevon schedule. If the crew does select CSS, the resultant control mode is discrete rate/attitude hold. In this mode, when the RHC is moved,



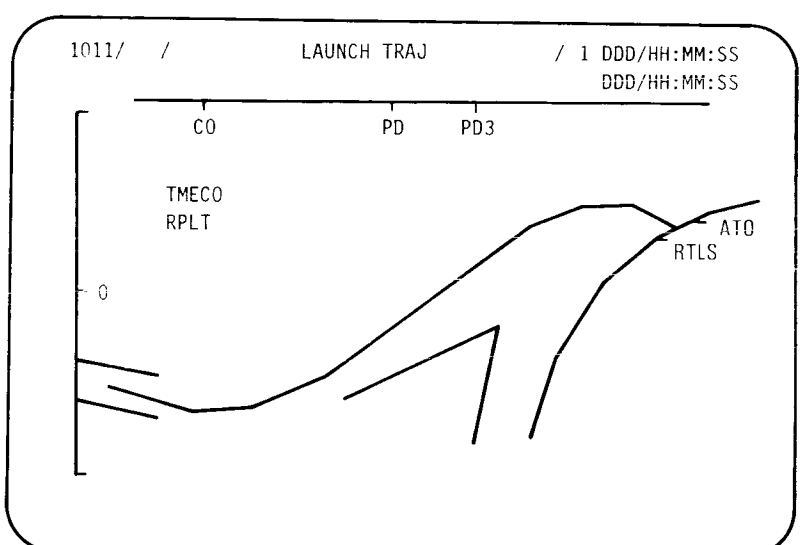


*PASS Launch Trajectory Display*

a specified attitude rate is commanded as long as the stick is out of its neutral, detent position. When the stick is in detent, attitude hold commands are generated by flight control. Moreover, load relief is not performed by the software when the crew selects CSS.

The next major event is SRB separation, which occurs six seconds after the SRB separation sequence software detects both SRB chamber pressures below 50 psi within 4.3 seconds of each other and detects vehicle rates within specified limits. These checks ensure that neither SRB is burning at separation and that the SRBs will not recontact the ET after separation. SRB separation occurs at about two minutes after launch. At separation, the first stage is complete, and the software automatically shifts to major mode 103 (second stage).

SRB separation is normally performed automatically by the onboard GPCs; however, the flight crew can command separation through use of the SRB separation switches on panel C3. The SRB *separation auto/man* (manual) switch is positioned to *man* and the SRB *sep* push button depressed.

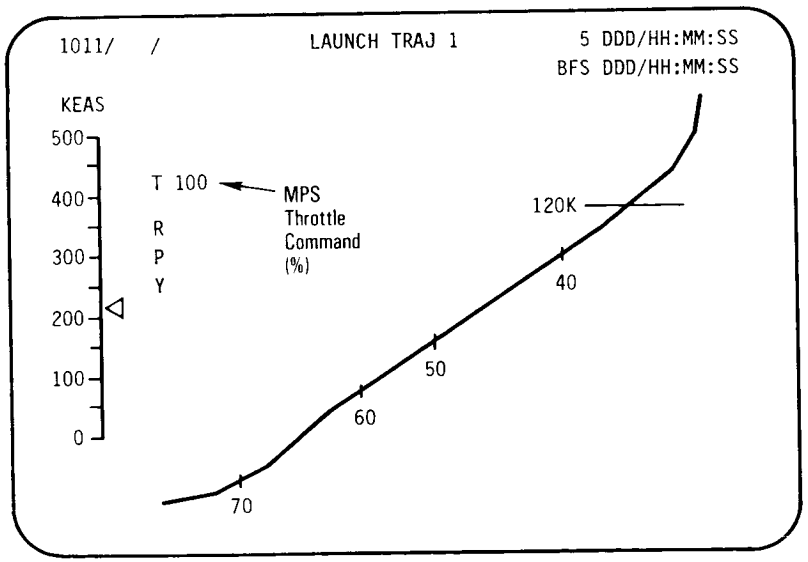


*BFS Launch Trajectory Display*

This manual function for SRB separation provides a backup for the automatic function; however, the manual function uses the same separation logic as the automatic. The automatic sequence is initiated by the software in the GPCs when the SRB chamber pressure is below 50 psi.

At SRB separation command, a three-axis attitude hold is

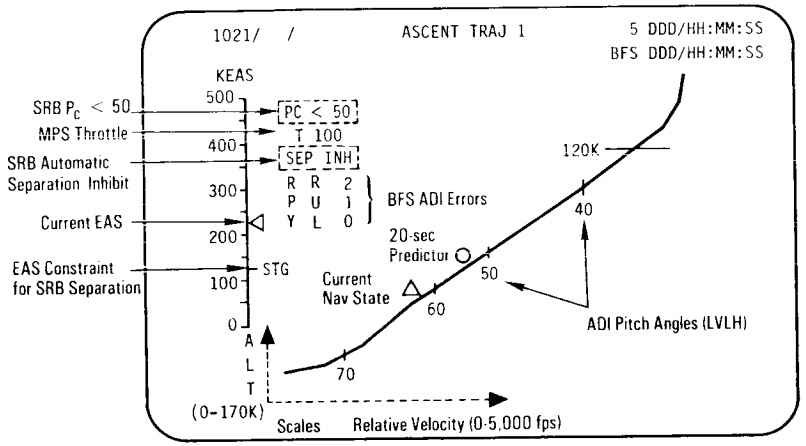


*Backup Flight System Ascent Trajectory 1 Display*

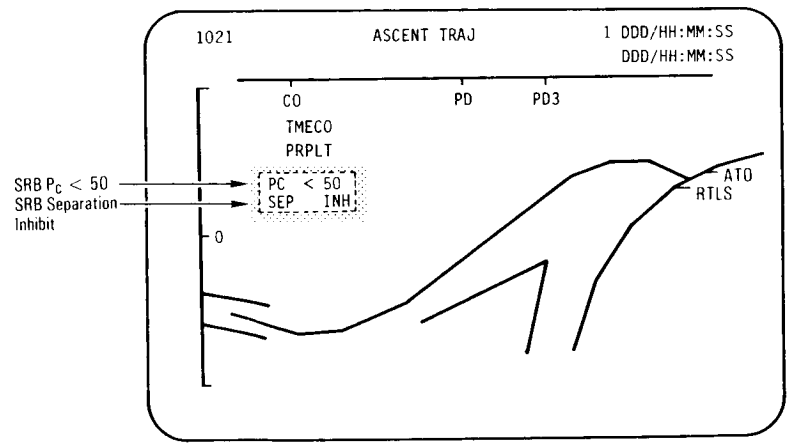


*Primary Avionics Software System Ascent Trajectory Display in Major Mode 102*

commanded by the reaction control system for four seconds. When the SRB separation command is received, the SRB nozzles are positioned to null, and the flight control system is switched to the orbiter rate gyro assemblies. Four seconds after SRB separation, second-stage main engine guidance takes over. In addition, if a main engine shutdown is detected, the failed engine is positioned to null, and trim changes are commanded on the remaining engines.

## SECOND STAGE

Second-stage ascent begins at SRB separation and extends through main engine cutoff and external tank separation. The GN&C software is in major mode 103 (second stage) at this time, calculating the required main engine steering commands to achieve preflight-defined MECO conditions. After SRB separation, attitude hold is commanded until guidance converges.

The orbiter rate gyro assemblies are used by flight control as feedbacks to find errors that are used for stability augmentation during ascent, entry and aborts and for display on the commander's and pilot's ADIs. In second-stage ascent, the body-mounted accelerometers are not used, and the elevons are held in position.

Second-stage navigation is the same as that of first stage. Second-stage flight control continues through MECO.

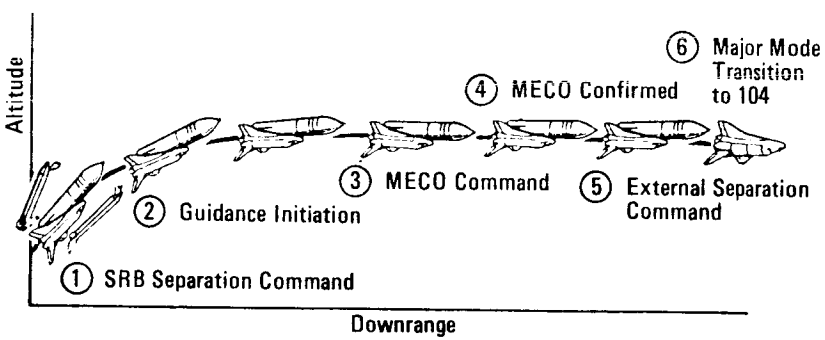


*Second-Stage Ascent*

Second-stage guidance uses a cyclic, closed-loop scheme to calculate the necessary commands to take the vehicle to a specified set of target MECO conditions. These conditions include cutoff velocity, radius from Earth, flight path angle, orbital inclination and longitude of the ascending node. The targeting scheme is called powered explicit guidance 1. Guidance also governs the main engine throttle command so that acceleration does not exceed 3 g's. The predicted time of MECO (TMECO) is calculated and displayed to the crew on the ascent trajectory display. Follow-

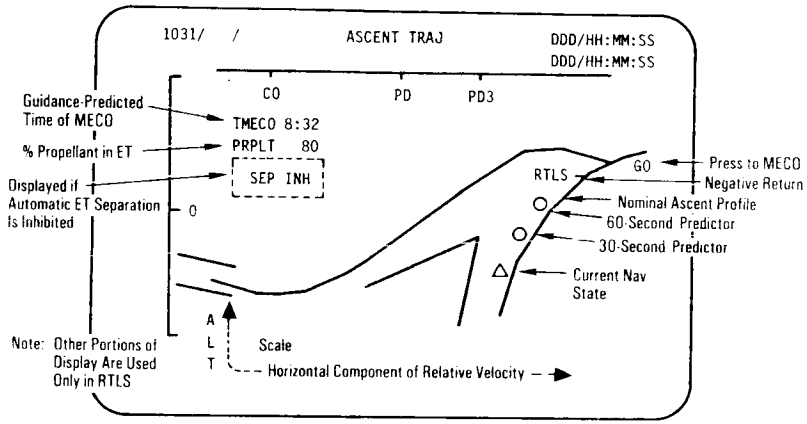


*PASS Ascent Trajectory Display in Major Mode 103*

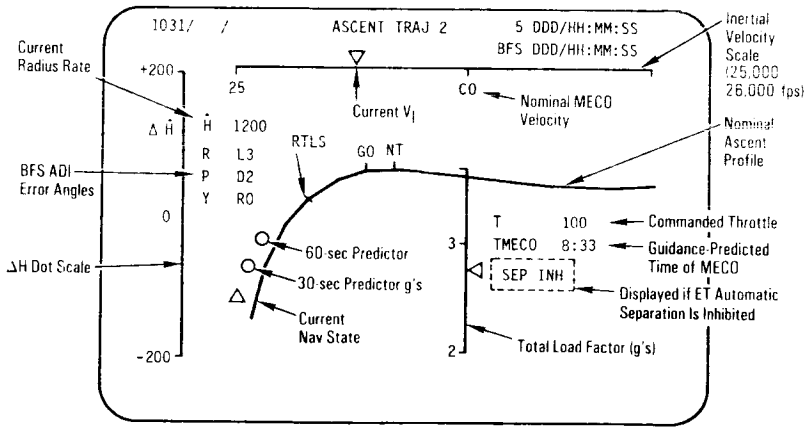


*BFS Ascent Trajectory 2 Display*

ing SRB separation, it may take the PEG 1 guidance algorithm several cycles to converge and for TMECO to become stable. Forty seconds before MECO, guidance begins targeting only for the desired cutoff velocity, ignoring position constraints.

The main engines are throttled down at approximately seven minutes 40 seconds into the mission to maintain 3 g's for physiological and structural constraints. Approximately 10 seconds before MECO, the MECO sequence begins; about three seconds later the main engines are commanded to begin throttling at 10-percent thrust per second to 65-percent thrust. This is held for approximately 6.7 seconds, and the engines are shut down.

At MECO, the vehicle attitude commands (roll, pitch and yaw) are frozen, and body rate damping is maintained during the coast period by the reaction control system, which is accomplished by the transition digital autopilot. During this period, an automatic sequence is initiated by GN&C moding, sequencing and control that confirms that all main engines have shut down, the MECO confirmed flag is set, the MPS prevalves are closed and a flag is set for the external tank separation sequence after the MPS prevalves for all main engines have been commanded closed. The ET separation software sends the necessary commands to close the 17-inch orbiter/external tank feed line liquid oxygen and hydrogen disconnect valves, dead-faces the orbiter/ET interface, tests for the 17-inch feed line disconnect valves' closure, dead-faces the orbiter/ET interface, unlatches and retracts the 17-inch disconnects within the orbiter aft fuselage, arms the two aft and one forward orbiter/ET structural separation pyro initiator controllers, and fires the ET liquid oxygen tank tumble vent valve.

ET separation is performed automatically by the onboard general-purpose computers. If automatic ET separation is inhibited due to the various orbiter/ET separation tests, separation can occur only if an out-of-tolerance condition comes back within tolerance or if the flight crew elects to continue the separation by overruling the inhibit. The manual separation would be accomplished by positioning the *ET separation* switch on panel C3 to



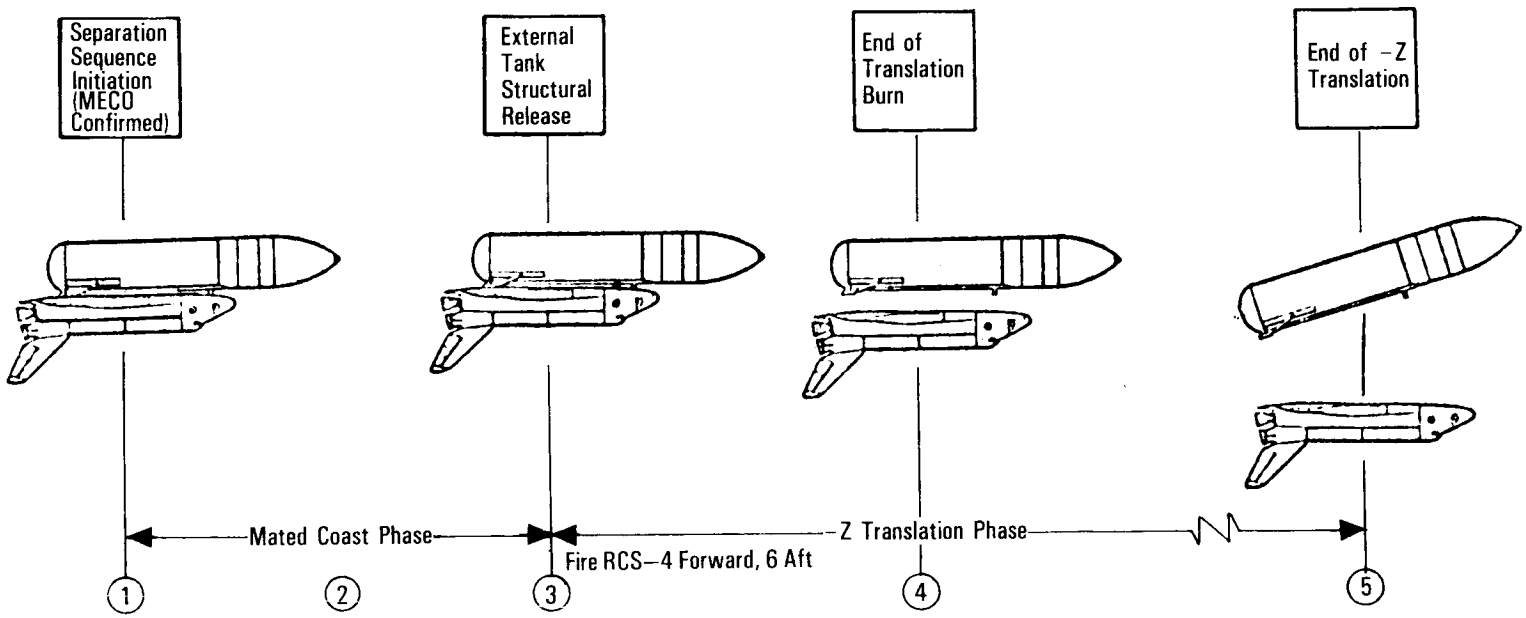


*External Tank Separation*

*man* and depressing the *ET separation* push button. Once automatic or manual ET separation is initiated, the orbiter/ET structural separation PICs are fired, separating the ET from the orbiter.

In the automatic orbiter/ET separation sequence, the transition DAP commands separation 18 seconds after main engine cutoff.

After ET separation, the two umbilical doors (one each for the 17-inch liquid oxygen and liquid hydrogen umbilical disconnects) are closed automatically for the entry phase. If the automatic function fails to close the umbilical doors, the flight crew can manually close them by using the *ET umbilical door* switches on panel R2.

After initiation of the orbiter/ET separation sequence, there is approximately 11 seconds of mated coast before the orbiter and external tank separate. The ET tumble system produces a tumble rate of 10 to 50 degrees per second after separation. In Kennedy Space Center launches, the external tank is on a suborbital trajectory that normally results in an impact location in the Indian Ocean. Except for direct-insertion launches from Kennedy Space Center, the tank impacts in the Pacific Ocean. External tank breakup nominally occurs during entry into the Earth's atmosphere at an altitude of approximately 185,000 feet.

Just before orbiter/ET separation, the reaction control system is inhibited. It is re-enabled immediately after ET separation to an inertial attitude hold. The transition DAP then commands the RCS to thrust the four forward and six aft negative RCS jets for a minus Z translation to achieve a 4-foot-per-second separation vertically, ensuring orbiter clearance from the arc of the rotating tank. When the required separation is achieved, the thrusting commands to the negative RCS jets are removed. The orbiter continues to coast away from the tank in the inertial attitude hold mode, gaining additional vertical clearance.

When the orbiter has gained the necessary separation, the orbiter/ET separation is flagged complete, and Mission Control is responsible for issuing a go/no-go for the impending orbital maneuvering system thrusting sequence. The software makes an automatic transition to major mode 104 (OMS-1 insertion) when the negative Z translation is complete.

During second-stage ascent, the flight crew monitors the onboard systems to ensure that the major GN&C events occur correctly and on time. These events include closed-loop guidance convergence, 3-g throttling, MECO, ET separation and the negative Z translation following ET separation. To monitor these events, the flight crew uses the dedicated displays—the *main engine status* lights on panel F7 and the PASS ascent trajectory and the BFS ascent trajectory 2 displays.

The crew can monitor guidance convergence by noting if the guidance-computed time of MECO is stabilized on the ascent trajectory display. If not, the crew takes manual control of the vehicle. They can also ensure that acceleration does not exceed 3 g's via the BFS ascent trajectory 2 display as well as the *accel* tape on the alpha Mach indicator. The crew can monitor MECO velocity on the BFS ascent trajectory 2 display as well as on the *M/vel* tape on the AMI. MECO is detected by the illumination of three red *main engine status* lights and by the main propulsion system chamber pressure meters on panel F7 going to zero.

Depending on mission requirements, the crew may be required to translate in the plus X direction, using the translational hand controller for 11 seconds, to allow the external tank camera to photograph the tank.

At specified points during second-stage ascent, the Mission Control Center will make voice calls to the crew indicating their status with respect to aborts. For example, the "negative return" call indicates that it is too late to select a return-to-launch-site abort.

## ASCENT ABORT MODES

Selection of an ascent abort mode may become necessary if there is a failure that affects vehicle performance, such as the fail-

ure of a main engine or an orbital maneuvering system failure. Other failures dictating early termination of a flight, such as a cabin leak, might require the selection of an abort mode.

There are two basic types of ascent abort modes for space shuttle missions: intact aborts and contingency aborts. An intact abort would provide a safe return of the orbiter to a planned landing site, while a contingency abort is designed to permit the crew to survive following more severe failures when an intact abort is not possible. A contingency abort would generally result in a ditch operation.

There are four types of intact abort modes: return to launch site, transatlantic landing, abort to orbit and abort once around.

The ATO mode is designed to allow the vehicle to achieve a temporary orbit that is lower than the nominal orbit. This mode requires less performance and permits time to evaluate problems and to choose either an early deorbit burn or an OMS maneuver to raise the orbit and continue the mission.

The AOA would permit the vehicle to fly once around the Earth and make a normal entry and landing. This mode generally involves two OMS burns, with the second burn being a deorbit maneuver. There are two types of AOA trajectories: a normal AOA and a shallow AOA (which is considered only for contingency aborts). The entry trajectory for the normal AOA is similar to the nominal entry trajectory. The shallow AOA results in a flatter entry trajectory, which is less desirable than that of the normal AOA but uses less propellant in the OMS maneuvers. The shallow entry trajectory is less desirable because it exposes the vehicle to a longer period of atmospheric heating and to less predictable aerodynamic drag forces.

The TAL abort is designed to permit an intact landing on the other side of the Atlantic Ocean. This mode would result in a ballistic trajectory, which does not require an OMS maneuver.

The RTLS would require flying downrange to dissipate propellant and turning around under power to return directly to a landing at or near the launch site.

There is a definite order of preference for the various abort modes. The type of failure and the time of the failure would determine which type of abort is selected. In cases where performance loss is the only factor, the preferred modes, in order, would be ATO, AOA, TAL and RTLS. The mode chosen would be the highest one that could be completed with the remaining vehicle performance. For certain support system failures, such as cabin



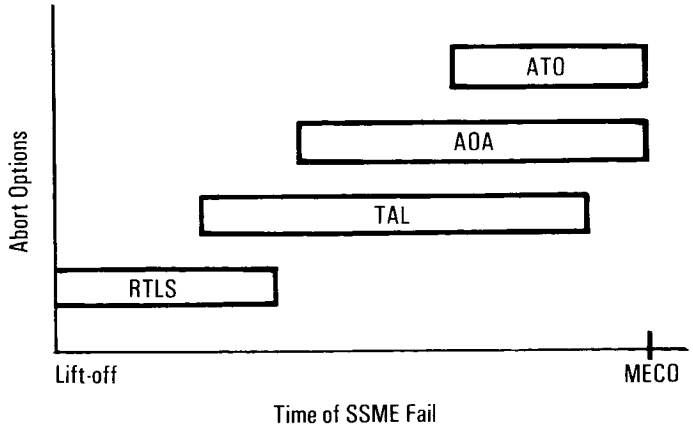


*Typical Abort Mode Options*

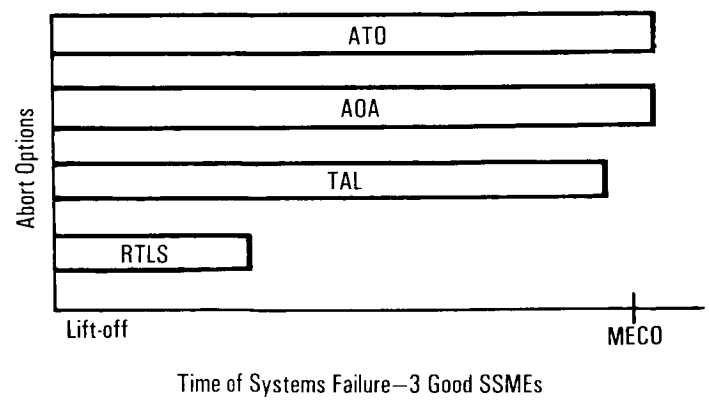


*Abort Mode Options With Three Good SSMEs*

leaks or vehicle cooling problems, the preferred mode might be the one that would end the mission most quickly. In these cases, TAL or RTLS might be preferable to AOA or ATO. A contingency abort would never be chosen if another abort option existed.

The Mission Control Center is primarily responsible for calling aborts, since the controllers have more precise knowledge of the orbiter's state vector (through the use of sophisticated tracking equipment and ground computer resources) than the crew can obtain from the onboard navigation system. Before MECO, Mission Control periodically calls the crew to tell them which abort mode is (or is not) available. If ground communications are lost, the flight crew has onboard methods, such as cue cards, dedicated displays and GN&C CRT display information, from which to determine the current abort region.

The abort mode selected would depend on the cause and timing of the failure causing the abort and on which mode is safest or improves the chances for mission success. If the emergency is a main engine failure, the flight crew and MCC would select the best option available at the time of the failure. If the problem is a system failure that jeopardizes the vehicle, the abort mode that would result in the earliest vehicle landing would be chosen. RTLS and TAL would be the quickest options (35 minutes), whereas an AOA would require approximately 90 minutes. Which of these is selected would depend on the time of the failure with three good main engines.

The flight crew would select the abort mode by positioning the *abort mode* switch on panel F6 and depressing the *abort* push button on the panel. This switch is a rotary model with *off*, *RTLS*, *TAL-AOA-S* (shallow) and *ATO* positions.

**RETURN TO LAUNCH SITE.** The RTLS abort mode is designed to allow the return of the orbiter, crew and payload to the Kennedy Space Center launch site, approximately 25 minutes after lift-off. The RTLS profile would accommodate the loss of thrust from one main engine between lift-off and approximately four minutes and 20 seconds, at which time not enough MPS propellant remains to return to the launch site. An RTLS would also be used if a time-critical failure occurred that required the earliest possible landing, such as a cabin leak or major cooling system failure. In the last two situations, all three engines would still be burning, which leads to the term "three-engine RTLS."

An RTLS is composed of three stages: a powered stage, during which the main engines would still be burning; an ET separation phase; and the glide phase, during which the orbiter would glide to a landing at the Kennedy Space Center. The powered RTLS phase would begin with crew selection of the RTLS abort, after SRB separation. This is done by positioning the *abort* rotary switch on panel F6 to *RTLS* and depressing the *abort* push button. The time at which the RTLS is selected would depend on the reason for the abort. For example, a three-engine RTLS is selected at the latest possible time, approximately three minutes 45 seconds into the mission, whereas an RTLS due to an engine-out condition at lift-off would be chosen at the earliest time, approximately two minutes 20 seconds into the mission (after SRB separation). Upon selection of the RTLS, the ascent trajectory display would change to RTLS trajectory, and several portions of the display related to RTLS would become active. Also, the software major mode would change from 103 to 601 (RTLS second stage).



The vehicle would continue downrange to dissipate excess MPS propellant. The goal is to retain only enough propellant to turn the vehicle around, fly back toward the Kennedy Space Center and achieve MECO conditions so that the vehicle can glide to the Kennedy Space Center after ET separation. During the downrange phase, a pitch-around maneuver would be initiated (the time depends in part on the time of a main engine failure) to orient the orbiter/ET configuration to a head-up attitude, pointing toward the launch site. At this time, the vehicle would still be moving away from the launch site, but the main engines would be thrusting to null the downrange velocity. In addition, excess OMS and RCS propellant would be dumped by continuous OMS and RCS jet firings to improve the orbiter weight and center of gravity for the glide phase and landing. The guidance software would compute the necessary MPS throttle commands to reach the desired MECO point with less than 2 percent excess propellant remaining in the external tank. At MECO minus 20 seconds, a

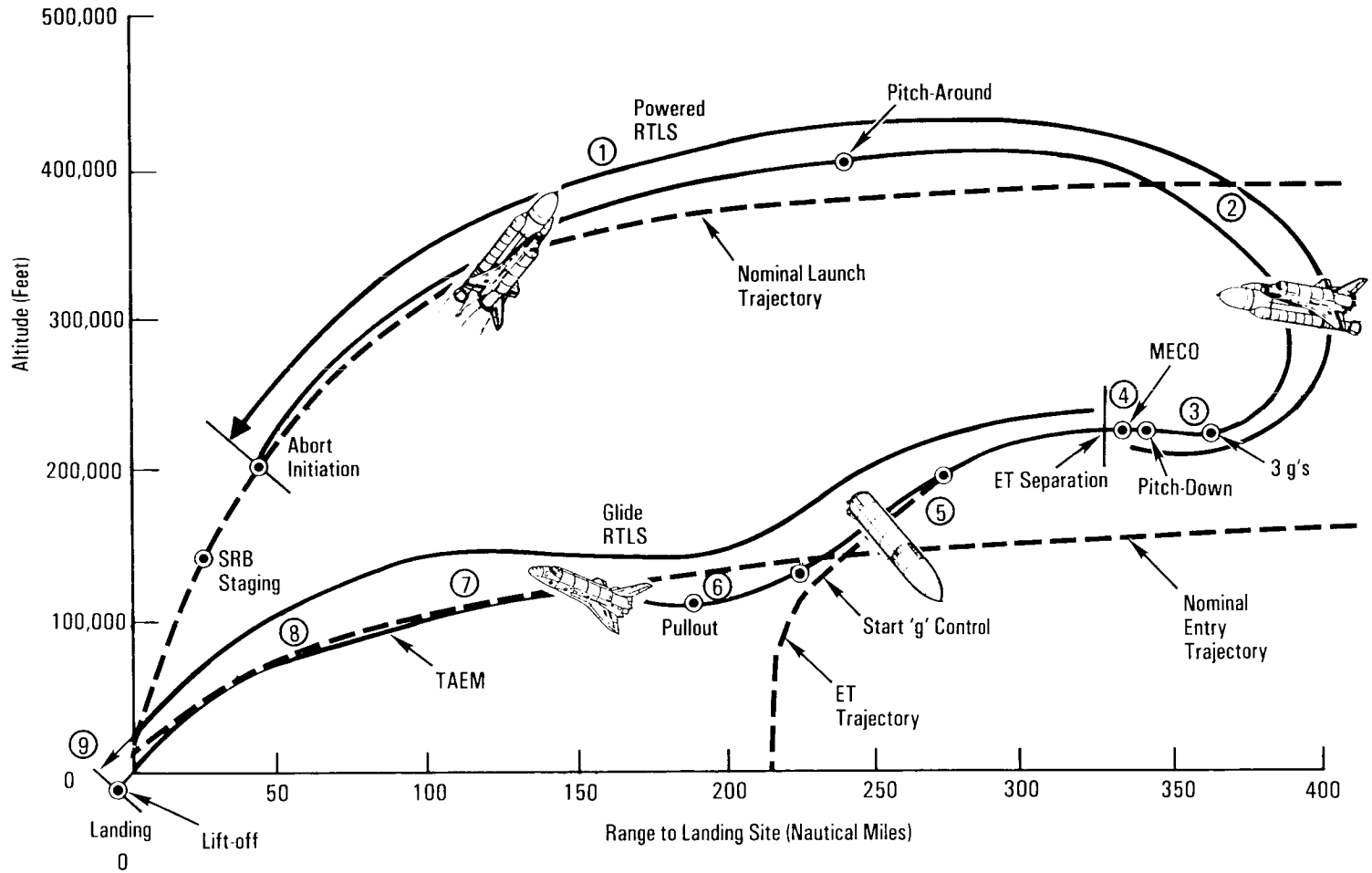


*Return to Launch Site Flight Phases*

pitch-down maneuver (called powered pitch-down) would take the mated vehicle to the required ET separation attitude and pitch rate. After MECO is commanded, the tank separation sequence would begin, including negative Z translation after tank separation, ensuring that the orbiter did not recontact the tank and that the orbiter had achieved the necessary pitch attitude to begin the glide phase of the abort.

After the negative Z translation maneuver is completed, the software would go to major mode 602 (glide RTLS-1), and the glide phase of the abort would begin. First, guidance would send commands to stabilize the trajectory after tank separation and to adjust the orbiter's angle of attack for range control. From then on, the abort would be handled like a normal entry.

**TRANSATLANTIC LANDING.** The TAL abort mode was developed to improve the options available in cases where a main engine fails after the last RTLS opportunity but before the first time that an AOA can be accomplished with only two main engines or a major orbiter system failure occurs after the last RTLS opportunity, making it imperative to land as quickly as possible.

In a TAL abort, the vehicle would continue on a ballistic trajectory across the Atlantic Ocean, landing on a predetermined runway approximately 45 minutes after launch. The landing site, which is located near the nominal ascent ground track of the orbiter in order to make the most efficient use of main engine propellant, must have the necessary runway length and U.S. State Department approval. Weather conditions must also be nominal. The three landing sites that have been identified for a due-east launch are Moron, Spain; Dakar, Senegal; and Ben Guerir, Morocco (on the west coast of Africa).

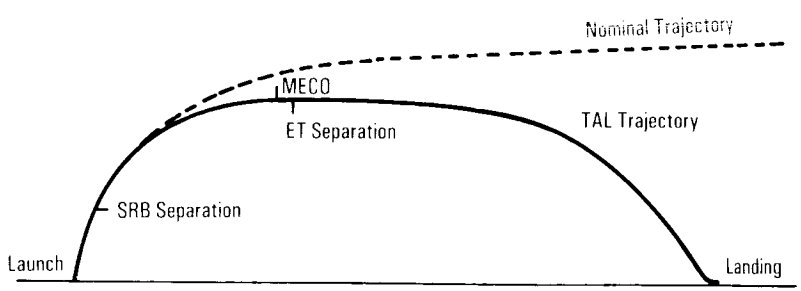


*Transatlantic Landing Abort Option*

The onboard software is designed to accomplish a TAL automatically under most circumstances. To select the TAL abort mode, the crew must place the *abort* rotary switch in the *TAL/AOA* position on panel F6 and depress the *abort* push button before MECO. (Depressing it after MECO selects the AOA abort mode.) The title on the ascent trajectory display then would read TAL TRAJ. The TAL software would begin sending commands to steer the vehicle toward the plane of the landing site. It would also roll the vehicle head-up before MECO and send commands to begin an OMS propellant dump (by burning the propellants through the OMS engines and the RCS jets). This dump is necessary to increase vehicle performance (by decreasing weight), to place the center of gravity in the proper place for vehicle control and to reduce the vehicle's landing weight. The software also would target for a specified MECO configuration to ensure that the vehicle had enough energy to glide to the runway. The crew must mode the software to OPS 3 (entry) after external tank separation and set up the entry display for a TAL landing site. From that point on, the TAL would be handled like a nominal entry.

**ABORT TO ORBIT.** The ATO would be used to boost the orbiter to a safe orbital altitude if performance has been lost and it is impossible to reach the planned altitude. If a main engine fails in a region that results in a MECO underspeed, the Mission Control Center would determine that an abort mode is necessary and would inform the crew. In addition, the crew can verify the nominal OMS burn solutions on the OMS-1 maneuver execute display and burn them instead of the nominal targets. Similarly, they would load the ATO OMS-2 burn targets and use them for OMS-2. This results in the orbiter being placed in a circular orbit.

Another reason for an ATO is loss of OMS performance due to various failures, such as loss of two OMS engines, loss of one OMS propellant tank or loss of main bus A and B electrical power.

In these cases, the OMS-1 burn would be delayed about 10 minutes, and the ATO OMS-1 targets would be used. This would result in an approximately 105- by 80-nautical-mile (120- by 92-statute-mile) orbit, which is considered safe for 24 hours. Thus, an OMS-2 burn would not be necessary immediately. The delayed ATO would be accomplished by loading the delayed ATO targets in the OMS-1 maneuver execute display and performing only the OMS-1 burn. If an underspeed existed at MECO so that an ATO or worse abort would be required, the OMS-1 burn must not be delayed. An underspeed would result in the apogee moving close to the post-MECO orbiter position. Delaying OMS-1 would cause the burn to be performed after apogee, which requires increased delta velocity and, thus, more propellant.

**ABORT ONCE AROUND**. The AOA abort mode would be used when vehicle performance has been lost to such an extent that either it is impossible to achieve a viable orbit or not enough OMS propellant is available to accomplish the OMS-1, OMS-2 and deorbit burns. AOA would also be used in cases in which a major system problem (cabin leak, loss of cooling) made it necessary to land quickly. In this abort, one OMS burn would be made to adjust the post-MECO orbit so that a second OMS burn would cause the vehicle to deorbit and land at the AOA landing site (Northrup, Edwards Air Force Base or Kennedy Space Center). Thus, in an AOA, the orbiter would circle the Earth once and land approximately 90 minutes after lift-off.

Several options are available to perform an AOA. Selection of the OMS-1 targets would be based on whether the abort were caused by a MECO underspeed, a system problem or an OMS/RCS performance problem. Selection of the OMS-2 targets would depend on whether a MECO underspeed existed and its magnitude. (The AOA OMS-2 burn is really a deorbit burn.) One set of targets would result in a steeper trajectory than would the other as the vehicle enters the atmosphere (entry interface); thus, this trajectory is referred to as a steep AOA. This is a more normal trajectory and stays well within the vehicle's thermal limits after it pene-



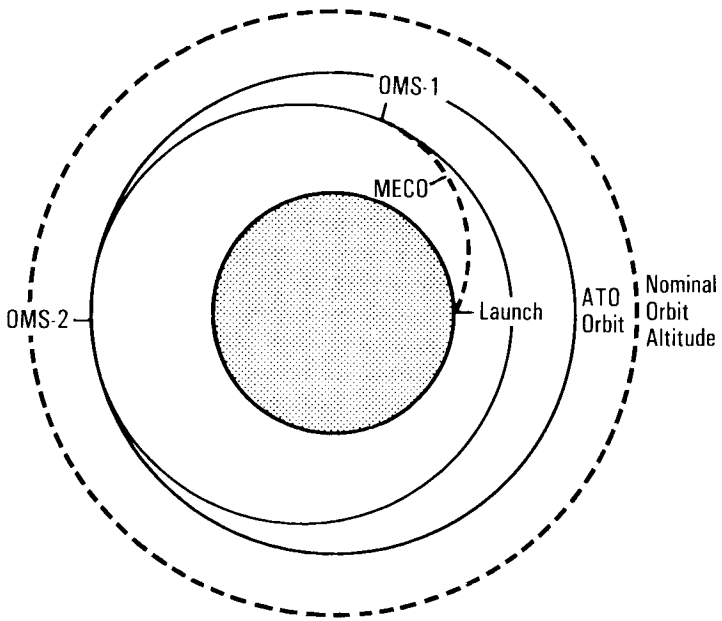


*Abort-to-Orbit Option*

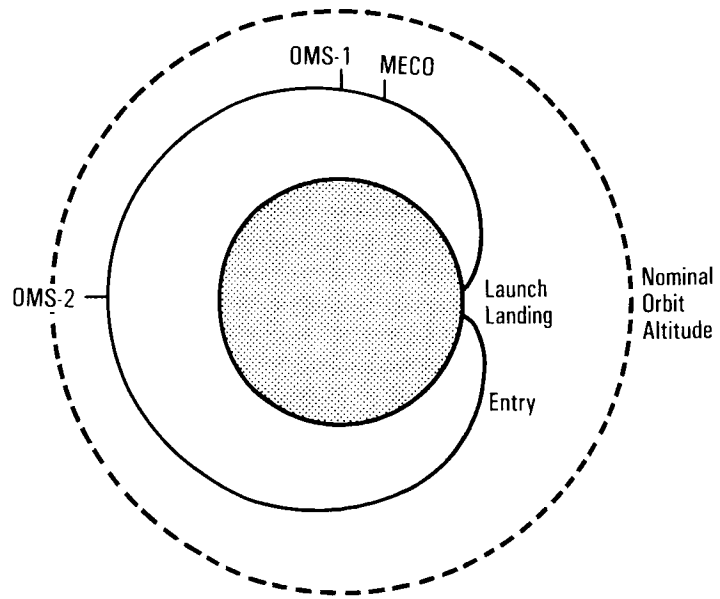


*Abort-Once-Around Option*

trates the atmosphere. It would require more delta velocity and consequently more propellant for the deorbit burn. Thus, if the MECO underspeed were severe or if both OMS helium tanks had failed, the shallow AOA targets would be used, resulting in a more shallow trajectory at entry interface and placing the vehicle closer to the skip-out boundary and its thermal limits.

The flight crew would determine that an AOA is required by Mission Control Center call and by checking the OMS-1 target solution against the OMS targeting cue card. Depending on the kind of AOA required, the crew would load the required OMS-1 targets and execute the burn. They would then position the software mode to OPS 3 and load the appropriate OMS-2 (deorbit) targets. After the burn is executed, the flight crew would fly to a landing at the preplanned site, much as they would for a nominal entry.

**CONTINGENCY ABORT**. Contingency aborts are caused by loss of more than one main engine or failures in other systems. Loss of one main engine while another is stuck at a low thrust setting may also necessitate a contingency abort. Such an abort would maintain orbiter integrity for in-flight crew escape if a landing cannot be made at a suitable landing site.

Contingency aborts due to system failures other than those involving the main engines would normally result in an intact recovery of vehicle and crew. Loss of more than one main engine may, depending on engine failure times, result in a safe runway landing. However, in most three-engine-out cases during ascent, the orbiter would have to be ditched. The in-flight crew escape system would be used before ditching the orbiter.

## MANUAL THRUST VECTOR CONTROL

This capability is provided during first- and second-stage ascent by substituting the inputs from the rotational hand controller for the automatic commands from guidance to gimbal the main engines and SRBs during first stage or the main engines during second stage. The digital autopilot remains active to process the flight crew's input. This is referred to in this mission phase as manual thrust vector control. MTVC is available at lift-off (SRB ignition command plus 0.365 second). One of the control stick steering push buttons at the glareshield/eyebrow panel F2 or F4 must be depressed before MTVC is available.

Once MTVC is activated, the vehicle is in a rate command/attitude hold mode in all axes. When the RHC is in detent, with MTVC selected, the vehicle is in attitude hold. The DAP holds the vehicle in the attitude it had when the RHC was in detent. A rate command equal to zero replaces the rate command generated in guidance and control steering. The attitude error for the DAP is computed by integrating the measured rates of the rate gyro assemblies. However, there are limits on vehicle rates and attitude errors. If the limits are exceeded when attitude hold is requested by placing the RHC in detent, attitude hold will not be initiated until the rates and errors are within limits.

When the RHC is removed from detent, a rate command proportional to the amount of deflection replaces the rate command previously generated. The attitude error is zeroed. The larger the deflection of the RHC, the larger the command. The flight control system compares these commands with inputs from the rate gyro assemblies and accelerometer assemblies (what the vehicle is actually doing—motion sensors) and generates control signals to produce the desired rates. When the commander or pilot releases the RHC, it returns to center and the vehicle maintains its current attitude (zero rates).



## ORBIT INSERTION

Following MECO, the orbiter's altitude and velocity will vary depending on the mission requirements. For example, an 80-nautical-mile (92-statute-mile) altitude with an inertial velocity of approximately 25,660 feet per second would place the orbiter in a suborbital trajectory so that the ET would enter following separation. In order to boost the orbiter to a viable orbit that does not degrade appreciably during the mission and satisfies mission objectives, two propulsive thrusting periods are made with the OMS engines, except in the case of a direct insertion, when only one OMS thrusting period is required to circularize the orbit. The

first thrusting period is referred to as OMS-1 and boosts the orbiter to the desired apogee; the second burn is called OMS-2 and typically circularizes the orbit.

The optimal orbital altitude (the altitude that satisfies mission and payload goals) is determined before launch. During flight, however, problems, such as main engine and SRB performance loss and OMS propellant leaks or certain electrical power system failures, may prevent the vehicle from achieving the optimal orbit. In these cases, the OMS-1 and OMS-2 burns would be changed to compensate for the failure by selecting a delayed OMS-1, AOA or ATO abort option.

The main events that occur during the orbit insertion phase include execution of the OMS-1 thrusting period, typically about two minutes after MECO; an MPS propellant dump, which begins during OMS-1; positioning of the main engine nozzles for entry; shutdown of the three auxiliary power units; MPS power-down; and MPS vacuum inerting to ensure that all traces of MPS propellants are vented to space.

**ON ORBIT**

The major GN&C-related orbital tasks include achieving the proper position, velocity and attitude necessary to accomplish the mission objectives. To do this, the GN&C computer maintains an accurate state vector, targets and initiates maneuvers to specified attitudes and positions, and points a specified orbiter body vector at a target. These activities are planned with several constraints in mind, including fuel consumption, vehicle thermal limits, payload requirements and rendezvous/proximity operations considerations.

The GN&C software for the majority of on-orbit operations is called OPS 2 (on orbit), which is further divided into major mode 201 (orbit coast, in which the majority of attitude and pointing operations occur) and major mode 202 (maneuver execute, in which OMS translations are targeted and executed). GN&C software is also used for the flight control system checkout before deorbiting (OPS 8). In this configuration, the crew checks out the navigation aid systems, the dedicated displays, the RCS jets, the aerosurfaces and the hand controllers.

The navigation software available in OPS 2 has several important features. As before, it propagates the orbiter state vector. During coasting flight, the software uses a model of atmospheric drag acceleration to propagate the state vector. If translational thrusts are anticipated, the flight crew can set a flag for navigation to use IMU-sensed acceleration, when above a noise threshold value. When this flag has been set via an item entry on an orbit display, the flight crew can monitor the thrust that is sensed.

Another navigation option that may be available on orbit is called rendezvous navigation. When this option is enabled by a flight crew input on the relative navigation display, the software maintains a target state vector and the orbiter state vector. In this mode, it is possible for navigation to use external sensor data from the star tracker, crewman optical alignment sight or rendezvous radar (based on reasonableness tests) to compute the orbiter target state vector. This assumes that the target vector is accurate.

On orbit, the accuracy of the orbiter state vector depends on the accuracy of the IMUs and the accuracy of the modeled drag acceleration. Since there is currently no method on board the orbiter to compute independently corrections to the state vector, periodic updates are sent from Mission Control to correct any errors that develop with the onboard state vector.



Another feature available in navigation in OPS 2 is the landing site update function, which allows the crew to select different runways to be used in the entry guidance computations. The crew interfaces with this capability through the universal pointing display only in major mode 201.

One of on-orbit software's several features, universal pointing is used to compute attitude changes required to point a specified orbiter body axis at a specified target, to maneuver to a predetermined attitude, to rotate the orbiter about a specified body axis or to maintain attitude hold. Although the complete capabilities of the universal pointing software are available only in major mode 201, a subset is available in major mode 202 and OPS 8 (on orbit).

Another guidance feature is PEG 7, or external delta-

velocity, targeting for OMS or RCS burns. This targeting scheme is identical to that used in OPS 1 (ascent) and OPS 3 (entry). In this mode, guidance sends the commands to flight control to execute a burn specified by an ignition time and delta velocities in the local vertical coordinate system at ignition. Commands continue to be generated until the original delta-velocity requirement is met. This option is available in major mode 202 via the orbit maneuver execute display.

The third guidance capability is an on-orbit targeting scheme that is used to compute the parameters required to move the orbiter to a specified target offset position in a given amount of time. This feature, which is used to do onboard targeting of rendezvous maneuvers, is enabled via the orbit targeting CRT display. The actual thrusting period is still accomplished via the orbit maneuver execute display.

The orbit flight control software includes an RCS DAP, an OMS thrust vector control DAP, a module called an attitude processor to calculate vehicle attitude and logic to govern which DAP is selected. The attitudes calculated by the attitude processor are displayed on the ADI along with another crew display, universal pointing, which is available in major mode 201. The vehicle attitude is used by the DAP to determine attitude and rate errors.

The RCS DAP, used in OPS 2 at all times except when an OMS burn is in progress, controls vehicle attitudes and rates using RCS jet fire commands. Either the larger primary jets or the less powerful vernier jets are used for rotational maneuvers, depending on whether *norm* or *vern* is selected on the panel C3 *orbital DAP* panel. That selection depends on fuel-consumption considerations and how quickly the vehicle must be maneuvered to satisfy a mission objective.

The rotation rates and dead bands, translation rate and certain other options for the DAP may be changed by the crew during the orbit phase using the DAP configuration display. The crew can load the DAP with these options two ways at a time. One set is



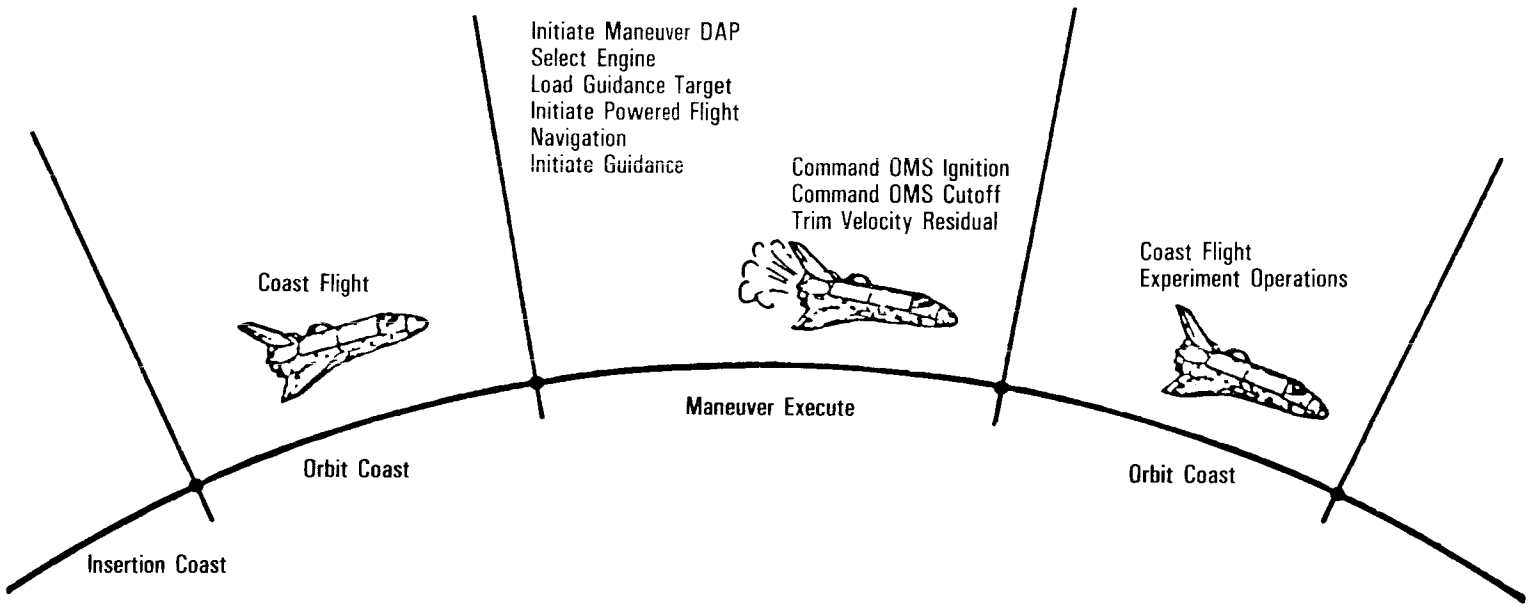


*Orbital Operations Sequence*

accessed by depressing the *DAP A* push button on the *orbital DAP* panel and the other by depressing the *DAP B* push button. For convenience, each planned DAP configuration is given a number and is referenced to that number and to the DAP used to access it. Typically, the DAP A configurations have larger dead bands and higher rates than the DAP B configurations. The wide dead bands are used to minimize fuel usage, while the tight dead bands allow more precision in executing maneuvers or in holding attitude.

The RCS DAP has both an automatic and a manual rotation mode. The one that is used depends on crew selection of the *auto* or *man* push buttons on the *orbital DAP* panel. The manual mode is also accessed when the RHC is moved out of its detent (neutral) position. In both the automatic and manual modes, the rotation rate is controlled by the selection of DAP A or DAP B and the information loaded in the DAP configuration display. Moreover, in automatic, the DAP determines the required attitude to be achieved from universal pointing. It then computes the RCS jet fire commands necessary to achieve these requirements within the current set of dead bands. In the manual rotation mode, the RCS DAP converts flight crew inputs with any of the three RHCs to RCS jet fire commands, depending on whether *pulse*, *disc rate* or *accel* is selected on the *orbital DAP* panel. Simply stated, in pulse, a single burst of jet fire is produced with each RHC deflection. The resultant rotational rate is specified on the DAP configura-

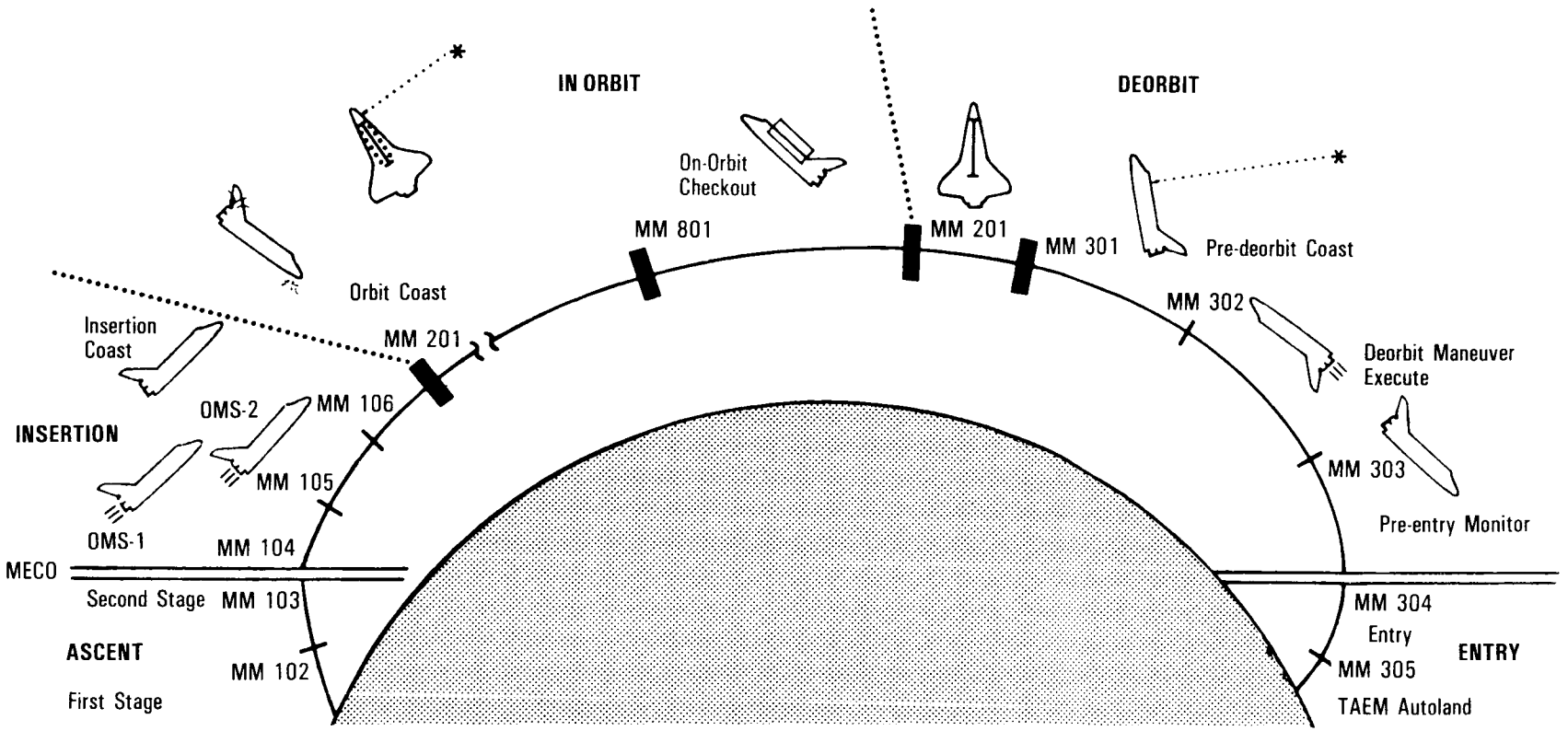


*Orbit Insertion, Orbital Operations, Deorbit*

tion display. In discrete rate, jet firings continue to be made as long as the RHC is out of detent to maintain the rotational rate specified on the DAP configuration display. In acceleration, continuous jet firings are made as long as the RHC is out of detent.

Another manual RCS DAP mode—local vertical/local horizontal—is used to maintain the current attitude with respect to the rotating LVLH reference frame. It is selected through the *LVLH* push button on the *orbital DAP* panel.

The RCS DAP has only a manual translation capability, which is executed through the forward or aft THC. Only the primary RCS jets are used. Deflections of the THC result in the firing of the RCS jets, depending on which transition DAP mode push button is selected on the *orbital DAP* panel. In pulse, a single burst of jet fire results; in normal, there are continuous jet firings with a specified subset of the available jets; in high, all upfiring jets fire continuously in a Z translation; and in low, a special technique is used to perform a Z translation with the forward- and aft-firing RCS jets in order not to fire directly toward a target (this avoids plume impingement and contamination of a target payload).

The OMS thrust vector control DAP is available when an OMS burn is executed in major mode 202 via the orbit maneuver execute display. The TVC DAP uses the guidance-generated delta-velocity requirements and converts these into the appropriate OMS gimbal commands to achieve this target, assuming *auto* is selected on the *orbital DAP* panel. It generates the OMS fire commands; the OMS shutdown commands; and, if necessary because of OMS engine failure, RCS commands required to maintain attitude control. If *manual* is selected, the TVC DAP uses inputs from the RHC to control attitude during the burn.

As with the transition DAP, there are many subtleties in the operation of the orbital DAP.

## ON-ORBIT CHECKOUT

During OPS 8 major mode 801, the orbital checkout of orbiter systems used during entry is performed, usually the day before deorbit. These activities take about 15 minutes. System checkout is performed in two parts. The first part, which requires the use of one auxiliary power unit/hydraulic system, involves the repositioning of the left and right main engine nozzles for entry and the cycling of aerosurfaces, hydraulic motors and hydraulic switching valves. After the checkout is completed, the auxiliary power unit is deactivated. The second part consists of a check of all the crew dedicated displays; self-test of the microwave scan beam landing system, TACAN, accelerometer assemblies, radar altimeter, rate gyro assemblies and air data transducer assemblies; and a check of the hand controllers, rudder pedal transducer assemblies, speed brake, panel trim switches, RHC trim switches, speed brake takeover push button and mode/sequence push button light indicators.

## DEORBIT

Deorbit guidance, navigation and flight control software operates through the transition DAP to provide maneuvering of the spacecraft to the OMS deorbit ignition attitude, OMS thrusting commands, OMS engine gimbaling for thrust vector control and RCS thrusting commands, in conjunction with use of the DAP similar to that for orbit insertion.

In returning home, the orbiter must be sufficiently decelerated by an OMS retrograde burn that when it enters the atmosphere, it maintains control and glides to the landing site. For the nominal end of mission, a retrofiring of approximately 2.5 minutes is performed at the appropriate point in the vehicle's trajectory. For this maneuver, the orbiter is positioned in a tail-first thrusting attitude. Deorbit thrusting is nominally accomplished with the two OMS engines and must establish the proper entry velocity and range conditions. It is possible to downmode to one OMS engine (with RCS roll control) or, in the event that both OMS engines malfunction, to plus X aft RCS jets.

Approximately four hours before deorbit, the environmental control and life support system radiator bypass/flash evaporator system is checked out, since the flash evaporator is used to cool the Freon-21 coolant loops when the ECLSS radiators are deactivated and the payload bay doors are closed. The high-load evapo-

rator cools the coolant loops until the ECLSS ammonia boilers are activated by the GPCs at an altitude of some 140,000 feet. The orbiter IMUs are aligned, the star trackers are deactivated and the star tracker doors are closed.

About one hour before deorbit, the crew members take their seats. The spacecraft is then manually maneuvered using the RCS jets to the deorbit attitude (retrograde). About 30 minutes before deorbit, the OMS is prepared for deorbit thrusting. This consists of OMS thrust vector control gimbal checks, OMS data checks, orbiter vent door closure and single auxiliary power unit start. At the completion of the single OMS deorbit burn, the crew manually maneuvers the spacecraft to the required entry attitude (nose first) using the RCS jets. The propellants remaining in the forward RCS are dumped through the forward RCS engines, if required, and the two remaining APUs are started and remain operating through entry and landing rollout. Thermal conditioning of the spacecraft's hydraulic fluid system is also begun, if required.

The deorbit phase of the mission includes the deorbit burn preparations, including the loading of burn targets and maneuvering to burn attitude; the execution and monitoring of the burn; reconfiguration after the burn; and a coast mode until the atmosphere (and dynamic pressure buildup) is reached at approximately 400,000 feet. This is called the entry interface.

The deorbit and entry flight software is called OPS 3. Major mode 301 is a deorbit coast mode in which deorbit targets can be loaded, although the burn cannot be executed in this mode. This mode is necessary to execution of the burn. After the burn, a software transition is made to another coast mode, major mode 303, which is used to prepare for penetration into the atmosphere.

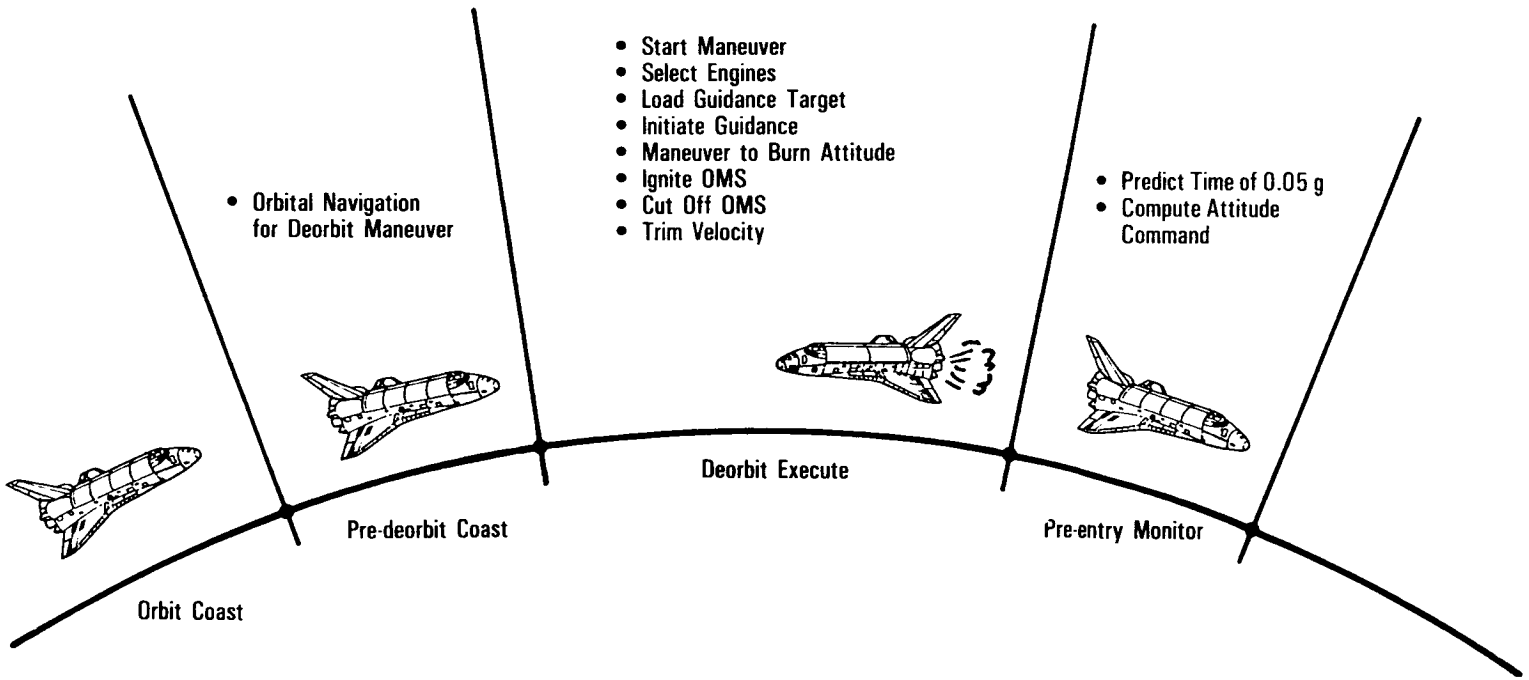


*Deorbit Sequence*

During the deorbit phase, navigation again propagates the orbiter state vector based upon a drag model or upon inertial measurement unit data if sensed vehicle accelerations are above a specified threshold. During OPS 3, navigation maintains and propagates three orbiter state vectors, each based on a different IMU. From these three state vectors, a single orbiter state vector is calculated using a mid value selection process and is passed on for use by guidance, flight control, dedicated display and CRT display software. Three separate state vectors are propagated to protect the onboard software from problems resulting from two IMU data failures. In such a case, once the bad IMU is detected and deselected, the state vector associated with the remaining good IMU will not have been polluted. This three-state vector system is used only during OPS 3 since this phase is most critical with respect to navigation errors and their effects on vehicle control and an accurate landing.

Another feature available during this phase is the software's computation of a statistical estimate of the error in the state vector propagation, which is used later in flight when external sensor data are available. Also, in this phase, it is possible for the crew or the Mission Control Center to input a delta state vector to correct navigation.

Guidance during deorbit is similar to that used in the orbit insertion phase. The PEG 4 scheme is used to target the deorbit burn and guide the vehicle during the burn, although the required conditions are different. The deorbit burn targets are for the proper conditions for entry interface, including altitude, position with respect to the Earth and thus the landing site, and satisfaction of certain velocity/flight path angle constraints. Together these ensure that the vehicle can glide to the landing site within thermal limits. Deorbit burn targets are specified before flight for a nominal mission, but it is possible for the ground to uplink changes or for the flight crew to recompute them using an onboard hand-held calculator program. It is also possible to specify that OMS fuel be wasted during the burn (burned out of plane) to establish an acceptable orbiter center of gravity for entry.

The crew is responsible for loading these targets on the deorbit maneuver execute display. Guidance then computes the necessary vehicle attitude to be established before the burn and displays it to the crew. As in OPS 1, it is possible to load an external delta-velocity (PEG 7) target, but this option is not normally used.

Flight control during the deorbit phase is similar to that used during orbit insertion—i.e., the transition DAP is once again in effect.

The flight crew interfaces with the guidance, navigation and flight control software during the deorbit phase via CRT display inputs, RHC/THC maneuvers and ADI monitoring. The major CRT display used is the deorbit maneuver execute. In major modes 301 and 303, the display is deorbit maneuver coast; whereas in major mode 302, it is deorbit maneuver execute. This display is identical in format to the OMS-1 maneuver execute and orbit maneuver execute displays, although there are some differences in its capabilities between OPS 1, 2 and 3. It is used to set up and tar-

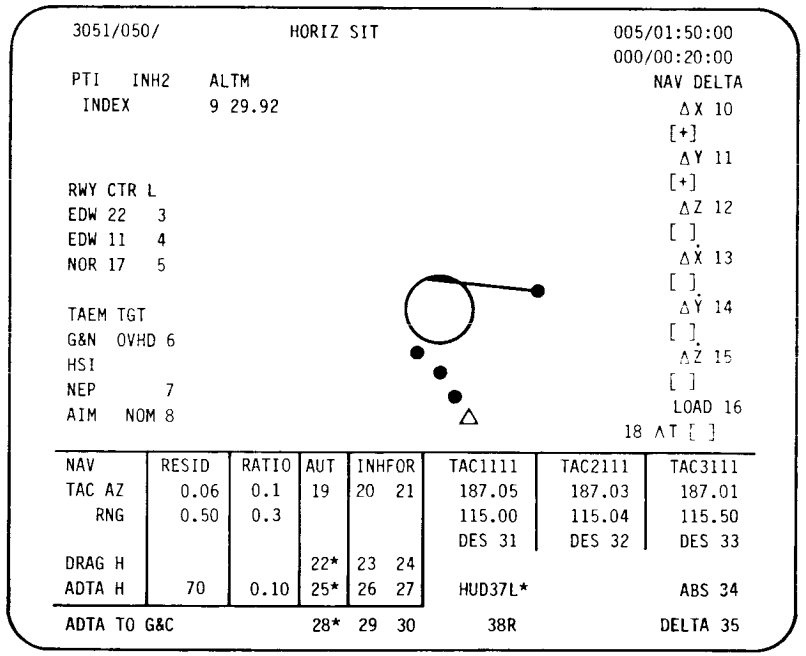


*Horizontal Situation Display*

get the OMS burn, to specify fuel to be wasted during the burn, to display the required burn attitude, to initiate an automatic maneuver to that attitude and to monitor the progress of the burn.

Another CRT display available during the deorbit phase is the horizontal situation. During deorbit preparation, the crew may verify that the display is ready for use during entry (correct runway selection, altimeter setting, etc.), but its other capabilities are not utilized until after entry interface.

The flight crew's task during this phase includes entering the correct burn targets in the deorbit maneuver execute display and maneuvering to burn attitude, either automatically or manually using the RHC. The burn itself is typically executed in auto, and the flight crew's task is to monitor the burn's progress in terms of velocities gained and OMS performance.

In cases of OMS failures (engine, propellant tank, data path), the flight crew must be prepared to reconfigure the system to ensure that the burn can safely continue to completion, that sufficient RCS propellant remains for entry and that the orbiter center of gravity stays within limits.

## ENTRY

The entry phase of flight begins approximately five minutes before entry interface, which occurs at an altitude of 400,000 feet. At EI minus five minutes, the orbiter is at an altitude of about 557,000 feet, traveling at 25,400 feet per second, and is approximately 4,400 nautical miles (5,063 statute miles) from the landing site. The goal of guidance, navigation and flight control software is to guide and control the orbiter from this state (in which aerodynamic forces are not yet felt) through the atmosphere to a precise landing on the designated runway. All of this must be accomplished without exceeding the thermal or structural limits of the orbiter.

The entry phase is divided into three separate phases because of the unique software requirements. Entry extends from EI minus five minutes to terminal area energy management interface at an altitude of approximately 83,000 feet, at a velocity of 2,500 feet per second, 52 nautical miles (59 statute miles) from the runway and within a few degrees of tangency with the nearest heading alignment cylinder in major mode 304.

TAEM extends to the approach and landing capture zone, defined as the point when the orbiter is on glide slope, on airspeed, and on runway centerline, which occurs below 10,000 feet and is the first part of major mode 305. The orbiter attains subsonic velocity at an altitude of approximately 49,000 feet about 22 nautical miles (25 statute miles) from the runway.

Approach and landing begins at the approach and landing capture zone, an altitude of 10,000 feet and Mach 0.9 and extends through the receipt of the weight-on-nose-gear signal after touchdown, which completes major mode 305.

The forward RCS jets are inhibited at entry interface.

At 400,000 feet, a pre-entry phase begins in which the orbiter is maneuvered to zero degrees roll and yaw (wings level) and a predetermined angle of attack for entry. The flight control system



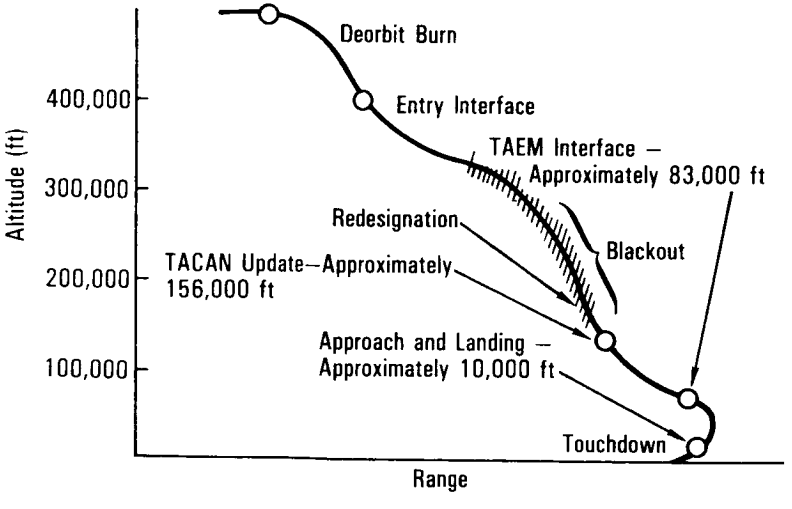


*Entry Flight Profile*

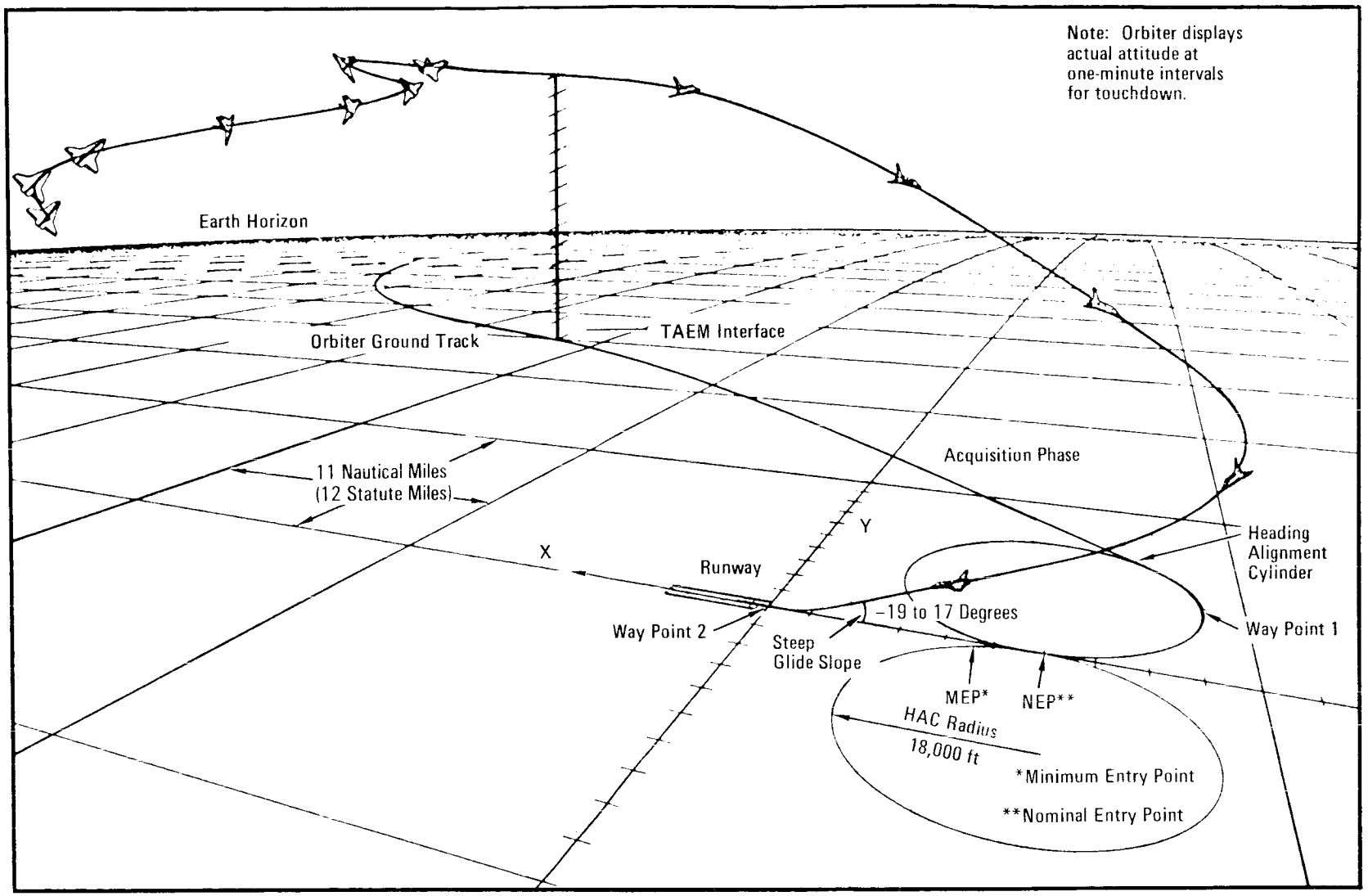


*Entry Flight Profile*

issues the commands to the roll, yaw and pitch RCS jets for rate damping in attitude hold for entry into the Earth's atmosphere until 0.176 g is sensed, which corresponds to a dynamic pressure of 10 pounds per square foot, approximately the point at which the aerosurfaces become active.

When the orbiter is in atmospheric flight, it is flown by varying the forces it generates while moving through the atmosphere, like any other aerodynamic vehicle. The forces are determined primarily by the speed and direction of the relative wind (the airstream as seen from the vehicle). The direction of the airstream is described by the difference between the direction that the vehicle is pointing (attitude) and the direction that it is moving (velocity). It may be broken into two components: angle of attack (vertical component) and sideslip angle (horizontal component).

To rotate the orbiter in the atmosphere, aerodynamic control surfaces are deflected into the airstream. The orbiter has seven aerodynamic control surfaces. Four of these are on the trailing edge of the wing (two per wing). They are called elevons because they combine the effects of elevators and ailerons on ordinary airplanes. Deflecting the elevons up or down causes the vehicle to pitch up or down. If the right elevons are deflected up and the left elevons are deflected down, the orbiter will roll to the right—that is, the right wing falls and the left wing rises. The fifth control surface is the body flap, located on the rear lower portion of the aft fuselage. It provides thermal protection for the three main engines during entry, and during atmospheric flight it provides pitch trim to reduce elevon deflections. The sixth and seventh control surfaces are the rudder/speed brake panels, located on the aft portion of the vertical stabilizer. When both panels are deflected right or left, the spacecraft will yaw, moving the spacecraft's nose right or left, thus acting as a rudder. If the panels are opened at the trailing edge, aerodynamic drag force will increase, and the spacecraft will slow down. Thus, the open panels are called a speed brake.

On the flight deck display and control panel (panel F7 between the commander and pilot) are the surface position indicators, which display the position of each aerodynamic control surface.

The aft RCS jets maneuver the spacecraft until a dynamic pressure of 10 pounds per square foot is sensed; at this point, the orbiter's ailerons become effective, and the aft RCS roll jets are deactivated. At a dynamic pressure of 20 pounds per square foot, the orbiter's elevators become effective, and the aft RCS pitch jets are deactivated. The orbiter's speed brake is used below Mach 10 to induce a more positive downward elevator trim deflection. At Mach 3.5, the rudder become activated, and the aft RCS yaw jets are deactivated (approximately 45,000 feet).

Entry flight control is maintained with the aerojet DAP, which generates effector and RCS jet commands to control and stabilize the vehicle during its descent from orbit. The aerojet DAP is a three-axis rate command feedback control system that uses commands from guidance in automatic or from the flight crew's RHC in control stick steering. Depending on the type of command and the flight phase, these result in fire commands to the RCS or deflection commands to the aerosurfaces.

In the automatic mode, the orbiter is essentially a missile, and the flight crew monitors the instruments to verify that the



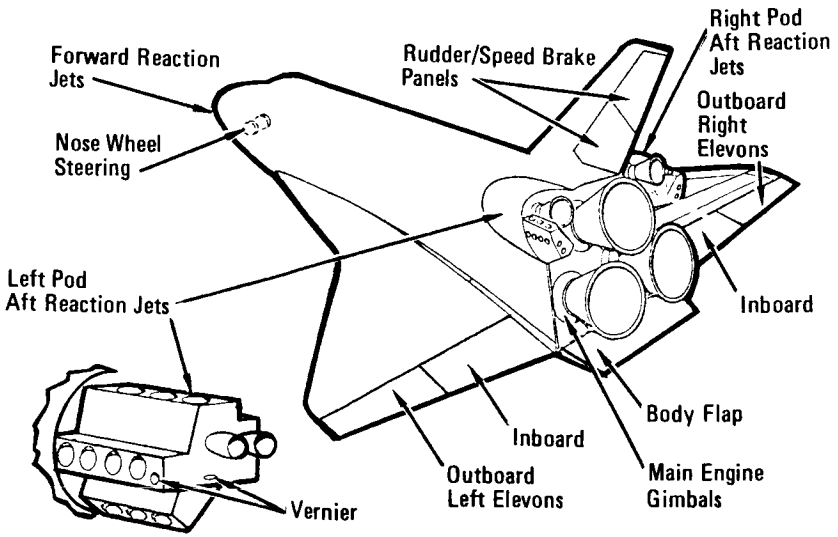


*Flight Control Hardware Effector Elements*

vehicle is following the correct trajectory. The onboard computers execute the flight control laws (equations). If the vehicle diverges from the trajectory, the crew can take over at any time by switching to CSS. The orbiter can fly to a landing in the automatic mode (only landing gear extension and braking action on the runway are required by the flight crew). The autoland mode capability of the orbiter is used by the crew usually to a predetermined point in flying around the heading alignment cylinder. In flights to date, the crew has switched to CSS when the orbiter is subsonic. However, autoland provides information to the crew displays during the landing sequence.

The commander and pilot can select automatic or CSS flight control modes. The crew can select separate modes for pitch and roll and yaw (roll and yaw must be in the same mode). The body flap and speed brake have automatic and manual modes.

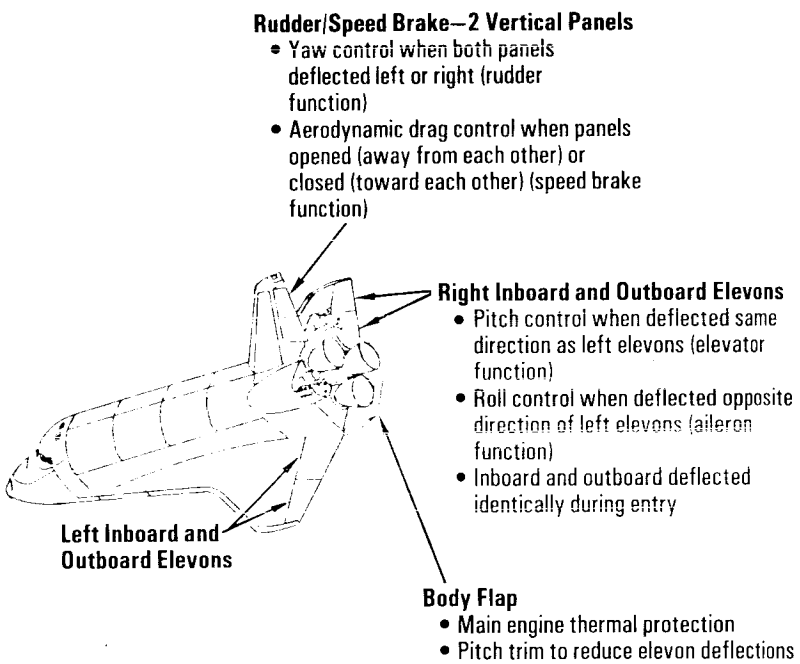


*Aerodynamic Surfaces*

Automatic pitch provides automatic control in the pitch axis, and the automatic roll and yaw provides automatic control in the roll and yaw axes. During entry, the automatic mode uses the RCS jets until dynamic pressure permits the aerosurfaces to become effective; the aft RCS jets and spacecraft aerosurfaces are then used together until dynamic pressure becomes sufficient for aerosurface control only.

Control in the pitch axis is provided by the elevons, speed brake and body flap. The elevons provide control to guidance normal acceleration commands, control of pitch rate during slap-down (landing) for nose wheel load protection, and static load relief after slap-down for main landing gear wheel and tire load protection. The speed brake provides control to guidance surface deflection (open/close, increase/decrease velocity) command. The body flap provides control to null elevon deflection.

Control in the roll and yaw axes is provided by the elevons and rudder. The elevons provide control to guidance bank angle command during terminal area energy management and autoland and control to guidance wings-level command during flat turns, 5 feet above touchdown. The rudder provides yaw stabilization during TAEM and autoland and control to guidance yaw rate command during flat turn and subsequent phases.

When the orbiter is in the automatic pitch and roll and yaw modes, the crew's manual control stick steering commands are inhibited. In the CSS mode, the crew flies the orbiter by deflecting the RHC and rudder pedals. The flight control system interprets the RHC motions as rate commands in pitch, roll or yaw and controls the RCS jets and aerosurfaces. The larger the deflection, the larger the command. The flight control system compares these commands with inputs from rate gyros and accelerometers (what the vehicle is actually doing—motion sensors) and generates control signals to produce the desired rates. If the crew releases the RHC, it will return to center, and the orbiter will maintain its present attitude (zero rates). The rudder pedals position the rudder during atmospheric flight; however, in actual use, because flight control software performs automatic turn coordination, the rudder pedals are not used until the wings are leveled before touchdown.

The CSS mode is similar to the automatic mode except that the crew can issue three-axis commands, affecting the spacecraft's motion. These are augmented by the feedback from the same spacecraft motion sensors, except for the normal acceleration (velocity) accelerometer assemblies, to enhance control response and stability.

The commander's or pilot's RHC commands are processed by the GPCs in the CSS mode together with data from the motion sensors. The flight control module processes the flight control laws and provides commands to the flight control system, which positions the aerosurfaces in atmospheric flight.

Control in the roll and yaw axes is provided by the elevon and the rudder. The elevons augment the RHC control. The rudder interface between the roll and yaw channel automatically positions the rudder for coordinated turns. A rudder pedal transducer assembly is provided at the commander and pilot stations. The two rudder pedal assemblies are connected to their respective RPTAs. Because of the roll and yaw interface, rudder pedal use should not be required until just before touchdown. There is an artificial feel in the rudder pedal assemblies. The RPTA commands are processed by the GPCs, and the flight control module commands the flight control system to position the rudder.

In the CSS mode, the commander's and pilot's *RHC trim* switches, in conjunction with the *trim enable/inhibit* switch, activate or inhibit the *RHC trim* switch. When the *RHC trim* switch is positioned forward or aft, it adds a trim rate to the RHC pitch command; positioning it left or right adds a roll trim.

Manual control (CSS mode) in the pitch axis is provided by the elevons, speed brake and body flap. The elevons provide augmented control through the RHC pitch command. The speed brake can be switched to its manual mode at either the commander's or pilot's station by depressing a takeover switch on the speed brake/thrust controller handle. Manual speed brake control can be transferred from one station to the other by activating the takeover switch. When the SBTC is at its forward setting, the speed brake is closed. Rotating the handle aft, positions the speed brake at the desired position (open) and holds it. To regain automatic speed brake control, the push button must be depressed again. In the manual mode, speed brake commands are processed by the GPCs, and the flight control module commands the flight control system to position the speed brake and hold it at the desired position. The body flap can be switched to its manual mode at panel C3 by moving a toggle switch from *auto/off* to *up* or *down* for the desired body flap position. These are momentary switch positions; when released, the switch returns to *off*.

In the entry phase, the RCS commands roll, pitch and yaw. Lights on the commander's panel F6 are used to indicate the presence of an RCS command from the flight control system to the RCS jet selection logic; however, this does not indicate an actual RCS jet thrusting command. The minimum light-on duration is extended to allow the light to be seen even for minimum-impulse RCS jet thrusting commands. After the roll and pitch aft RCS jets are deactivated, the roll indicator lights are used to show that three or more yaw RCS jets have been requested. The pitch indicator lights are used to show elevon rate saturation.



At approximately 265,000 feet, the spacecraft enters a communications blackout, which lasts until the orbiter reaches an altitude of approximately 162,000 feet. Between these altitudes, heat is generated as the spacecraft enters the atmosphere, ionizing atoms of air that form a layer of ionized gas particles around the spacecraft. Radio signals between the spacecraft and the ground cannot penetrate this sheath of ionized particles, and radio communications are blocked for approximately 16 minutes.

During the entry subphase, the primary objective is to dissipate the tremendous amount of energy that the orbiter possesses when it enters the atmosphere so that it does not burn up (entry angle too steep) or skip out of the atmosphere (entry angle too shallow), stays within structural limits, and arrives at the TAEM interface with the altitude and range to the runway necessary for a landing. This is accomplished by adjusting the orbiter's drag acceleration on its surface using bank commands relative to vehicle velocity. During TAEM, as the name implies, the goal is to manage the orbiter's energy while the orbiter travels along the heading

alignment cylinder, which lines up the vehicle on the runway centerline. A HAC is an imaginary cone that, when projected on the Earth, lies tangent to the extended runway centerline.

Guidance performs different tasks during the entry, TAEM and approach and landing subphases. During the entry subphase, guidance attempts to keep the orbiter on a trajectory that provides protection against overheating, overdynamic pressure and excessive normal acceleration limits. To do this, it sends commands to flight control to guide the orbiter through a tight corridor limited on one side by altitude and velocity requirements for ranging (in order to make the runway) and orbiter control and on the other side by thermal constraints. Ranging is accomplished by adjusting drag acceleration to velocity so that the orbiter stays in that corridor. Drag acceleration can be adjusted primarily in two ways: by modifying the angle of attack, which changes the orbiter's cross-sectional area with respect to the airstream, or by adjusting the orbiter's bank angle, which affects lift and thus the orbiter's sink rate into denser atmosphere, which in turn affects drag. Using angle of attack as the primary means of controlling drag results in faster energy dissipation with a steeper trajectory but violates the thermal constraint on the orbiter's surfaces. For this reason, the orbiter's bank angle (roll control) is used as the primary method of controlling drag, and thus ranging, during this phase. Increasing the roll angle decreases the vertical component of lift, causing a higher sink rate. Increasing the roll rate raises the surface temperature of the orbiter, but not nearly as drastically as does an equal angle of attack command. The orbiter's angle of attack is kept at a high value (40 degrees) during most of this phase to protect the upper surfaces from extreme heat. It is modulated at certain times to "tweak" the system and is ramped down to a new value at the end of this phase for orbiter controllability. Using bank angle to adjust drag acceleration causes the orbiter to turn off course. Therefore, at times, the orbiter must be rolled back toward the runway. This is called a roll reversal and is commanded as a function of azimuth error from the runway. The ground track during this phase, then, results in a series of S-turns.

If the orbiter is low on energy (the current range-to-go is much greater than nominal at current velocity), entry guidance will command lower-than-nominal drag levels. If the orbiter has too much energy (the current range-to-go is much less than nominal at current velocity), entry guidance will command higher-than-nominal drag levels to dissipate the extra energy.

Roll angle is used to control cross range. Azimuth error is the angle between the plane containing the orbiter's position vector and the heading alignment cylinder tangency point and the plane containing the orbiter's position vector and velocity vector. When the azimuth error exceeds an initialized-loaded number, the orbiter's roll angle is reversed.

Thus, descent rate and downranging are controlled by bank angles—the steeper the bank angle, the greater the descent rate and the greater the drag. Conversely, the minimum-drag altitude is wings level. Cross range is controlled by bank reversals.

The entry thermal control phase is designed to keep the thermal protection system's bond line within design limits. A constant heating rate is maintained until the velocity is below 19,000 feet per second.



In the equilibrium glide phase, the orbiter effects a transition from the rapidly increasing drag levels of the temperature control phase to the constant drag level of the constant drag phase. Equilibrium glide is defined as flight in which the flight path angle, the angle between the local horizontal and the local velocity vector, remains constant. This flight regime provides the maximum downrange capability. It lasts until drag acceleration reaches 33 feet per second squared.

The constant drag phase begins at 33 feet per second squared. Angle of attack is initially 40 degrees, but it begins to ramp down until it reaches approximately 36 degrees by the end of this phase.

The transition phase is entered as the angle of attack continues to ramp down, reaching about 14 degrees at TAEM interface, with the vehicle at an altitude of some 83,000 feet, traveling 2,500 feet per second (Mach 2.5), and 52 nautical miles (59 statute

miles) from the runway. At this point, control is transferred to TAEM guidance.

During these entry phases, the orbiter's roll commands keep the orbiter on the drag profile and control cross range.

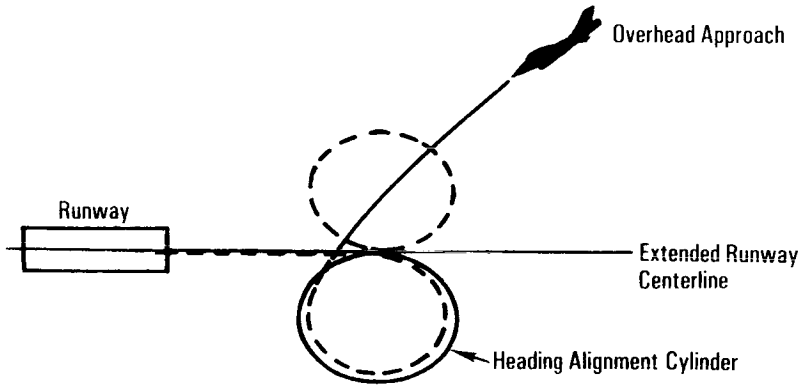


*Overhead Approach*

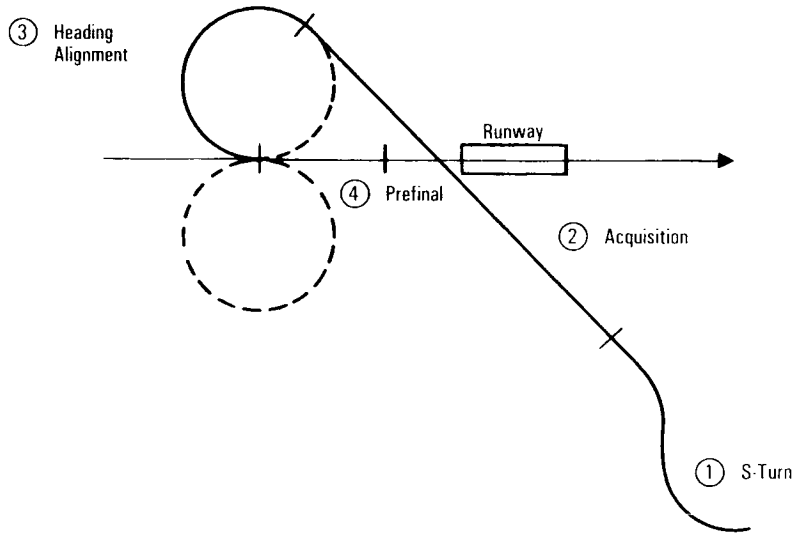


*TAEM Guidance Subphases Overhead Approach*

TAEM guidance steers the orbiter to the nearest of two heading alignment cylinders, whose radii are approximately 18,000 feet and whose locations are tangent to and on either side of the runway centerline on the approach end. Normally, the software is set to fly the orbiter around the HAC on the opposite side of the extended runway centerline. This is called the overhead approach. If the orbiter is low on energy, it can be flagged to acquire the HAC on the same side of the runway. This is called the straight-in

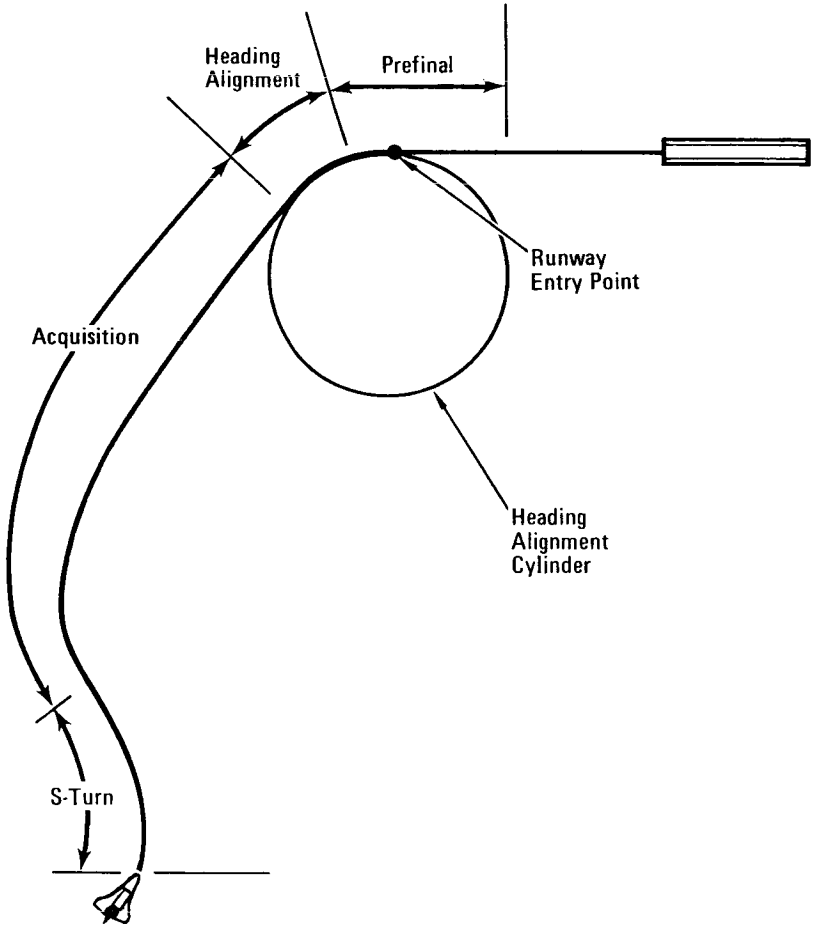


*Straight-in Approach*

approach. In TAEM guidance, excess energy is dissipated by an S-turn, and the speed brake can be used to modify drag, lift-to-drag ratio and the flight path angle under high-energy conditions. This increases the ground track range as the orbiter turns away from the nearest HAC until sufficient energy is dissipated to allow a normal approach and landing guidance phase capture, which begins at 10,000 feet at the nominal entry point. The orbiter can also be flown near the velocity for maximum lift over drag or wings level for the range stretch case, which moves the approach and landing guidance phase to the minimum entry point.

At TAEM acquisition, the orbiter is turned until it is aimed at a point tangent to the nearest HAC and continues until it reaches way point 1. At way point 1, the TAEM heading alignment phase begins, in which the HAC is followed until landing runway alignment, plus or minus 20 degrees, is achieved. As the orbiter comes around the HAC, it should be lined up on the runway and at the proper flight path angle and airspeed to begin the steep glide slope to the runway.

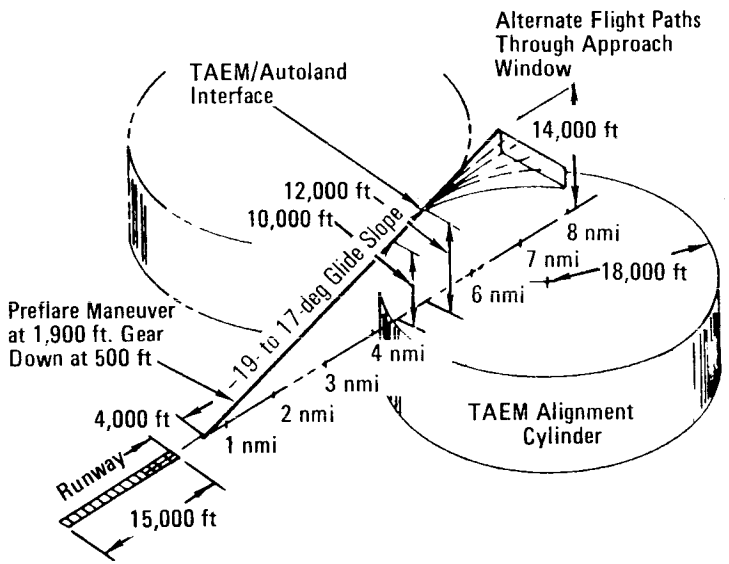


*TAEM/Approach and Landing*

In the TAEM prefinal phase, the orbiter leaves the HAC, pitches down to acquire the steep glide slope, increases airspeed and banks to acquire the runway centerline, continuing until it is on the runway centerline, on the outer glide slope and on airspeed.

The approach and landing guidance phase begins with the completion of the TAEM prefinal phase and ends when the orbiter comes to a complete stop on the runway. The approach and landing interface airspeed requirement at an altitude of 10,000 feet is approximately 290 knots, plus or minus 12 knots, equivalent airspeed, 6.9 nautical miles (7.9 statute miles) from touchdown.

Autoland guidance is initiated at this point to guide the orbiter to the minus 19- to 17-degree glide slope (which is more than seven times that of a commercial airliner's approach) aimed at a target approximately 0.86 nautical mile (1 statute mile) in front of the runway. The descent rate in the latter portion of TAEM and approach and landing is greater than 10,000 feet per minute (approximately 20 times higher than a commercial airliner's standard 3-degree instrument approach angle). The steep



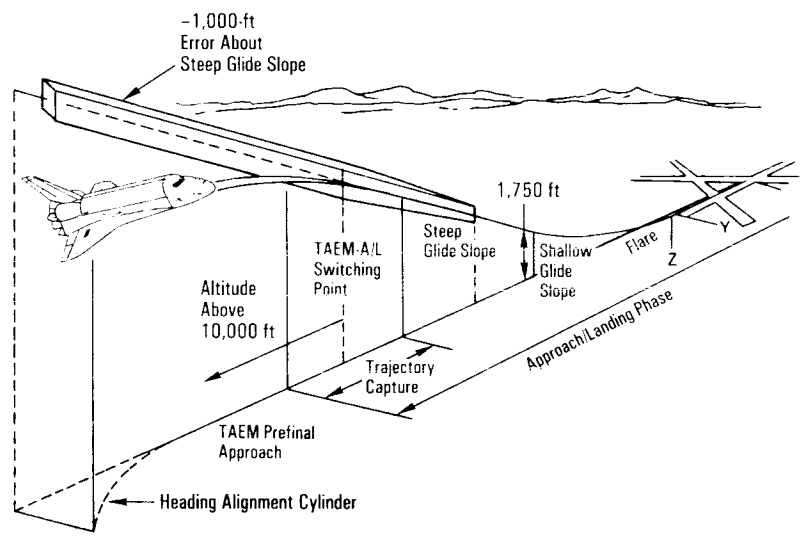


*Approach and Landing Guidance Subphases*

glide slope is tracked in azimuth and elevation, and the speed brake is positioned as required.

Approximately 1,750 feet above the ground, guidance sends commands to keep the orbiter tracking the runway centerline, and a preflare maneuver is started to position the orbiter on a shallow 1.5-degree glide slope in preparation for landing, with the speed brake positioned as required. At this point, the crew deploys the landing gear.

Final flare is begun at approximately 80 feet to reduce the sink rate of the vehicle to less than 9 feet per second. After the spacecraft crosses the runway threshold—way point 2 in the autoland mode—navigation uses the radar altimeter vertical component of position in the state vector for guidance and navigation computations from an altitude of 100 feet to touchdown. Touchdown occurs approximately 2,500 feet past the runway threshold at a speed of 184 to 196 knots (211 to 225 mph). As the airspeed drops below 165 knots (189 mph), the orbiter begins derotation in preparation for nose gear slap-down.

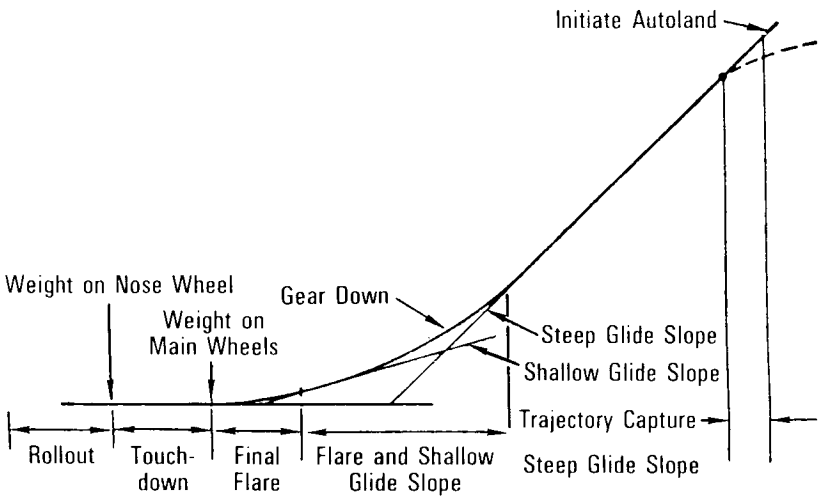


*Approach and Landing Profile*

The navigation system used from entry to landing consists of the IMUs and navigation aids (TACAN, air data system, microwave scan beam landing system and radar altimeter). The three IMUs maintain an inertial reference and provide delta velocities until MSBLS is acquired.

Navigation-derived air data—obtained after deployment of the two air data probes at approximately Mach 3—is needed from entry through landing as inputs to the guidance, flight control and crew display. TACAN provides range and bearing measurements and is available at approximately 145,000 feet, nominally accepting the data into the state vector before 130,000 feet. It is used until MSBLS acquisition, which provides range, azimuth and elevation commencing at approximately 18,000 feet. Radar altimeter data are available at approximately 9,000 feet.

TACAN acquisition and operation are completely automatic, but the crew has the necessary controls and displays to evaluate TACAN system performance and to take over if required. When the distance to the landing site is approximately 120 nautical miles (138 statute miles), TACAN begins interrogating six navigation region stations. As the spacecraft proceeds, the distances to the remaining stations and to the next-nearest station are computed, and the next-nearest station is selected automatically if the spacecraft is closer to it than it is to the previous locked-on station. Only one station is interrogated if the distance to the landing site is less than approximately 20 nautical miles (23 statute miles). Again, TACAN automatically switches from the last locked-on navigation region station to begin searching for the landing site station. TACAN azimuth and range are provided on the CRT displaying the horizontal situation. TACAN range and bearing cannot be used to produce a good estimate of the altitude position component, so navigation uses barometric altitude derived from the air data system probes.

MSBLS acquisition and operation are also completely automatic, and the flight crew can evaluate system performance and take over if necessary. MSBLS acquisition occurs at approximately 18,000 feet and about 8 nautical miles (9.2 statute miles) from the

runway. The range and azimuth measurements are provided by a ground antenna located at the end of the runway and to the left of the runway centerline. Elevation measurements are given by a ground antenna to the left of the runway centerline, about 2,624 feet from the runway threshold.

During entry, the commander's and pilot's altitude director indicators become two-axis balls displaying body roll and pitch attitudes with respect to local vertical/local horizontal. These are generated in the attitude processor from IMU data. The roll and pitch error needles each display the body roll and pitch attitude error with respect to entry guidance commands by using the bank guidance error and the angle of attack error generated from the accelerometer assemblies. In atmospheric flight, the roll attitude error and the normal acceleration error are displayed by the roll and pitch error needles, respectively. The sideslip angle is displayed on the yaw error needle. The roll and pitch rate needles display stability roll and body rates by using stability roll rate, rate gyro rate and pitch rate. The yaw rate needle displays stability yaw rate. After main landing gear touchdown, the yaw error with respect to runway centerline and nose gear slap-down pitch rate error are displayed on the roll and pitch error needles. During rollout, the pitch error indicator indicates pitch error rate.

During entry, the commander's and pilot's horizontal situation indicators display a pictorial view of the spacecraft's location with respect to various navigation points. The navigation attitude processor provides the inputs to the HSI until the communications blackout is passed, at approximately 145,000 feet. TACAN is then acquired and accepted for HSI inputs at about 130,000 feet until MSBLS acquisition at approximately 18,000 feet some 8 nautical miles (9.2 statute miles) from the runway.

When the approach mode and MSBLS source are selected for the commander's and pilot's HSI, data from the MSBLS replaces TACAN data. MSBLS azimuth, elevation and range are used from acquisition until the runway threshold is reached, and azimuth and range are used to control rollout.

At an altitude of 9,000 feet, radar altimeter 1 or 2 can be selected to measure the nearest terrain within the beamwidth of the altimeters. This indication is given to the altitude/vertical velocity indicator radar, altitude and meter display from 5,000 feet to landing.

The left and right air data system probes are deployed by the flight crew at about Mach 3. This system senses air pressures related to orbiter movement through the atmosphere for updating the navigation state vector in altitude, guidance in steering and speed brake command calculations, flight control for control law computations, and for display on the alpha Mach indicators and altitude/vertical velocity indicators.

The AMIs display essential flight parameters relative to the spacecraft's travel in the air mass, such as angle of attack, acceleration, velocity and knots of equivalent airspeed. The source of data for the AMIs is determined by the position of the *air data* select switch. Before the deployment of the air data system probe, the AMIs receive inputs from the navigation attitude processor. When the air data probes are deployed, the left or right air data system provides the inputs to all AMIs except the acceleration indicator, which remains on the navigation attitude processor, and the radar altitude. Neither is operational until the orbiter descends to 5,000 feet.

The three rate gyro assemblies of the flight control system measure and supply output data proportional to the orbiter's attitude rates about its three body axes, while the three accelerometer assemblies measure and supply output data proportional to the orbiter's normal (vertical) and lateral (right and left) accelerations. These assemblies are incorporated into the flight control system for augmenting stability because of the orbiter's marginal stability in its pitch and yaw axes at subsonic speeds.

The three IMUs constitute an all-attitude stabilized platform that also measures and supplies output data proportional to the spacecraft's attitude (rotation) and acceleration (velocity). They augment the rate gyro assemblies and accelerometer assemblies.

The rate gyro assembly pitch rate (rotation) and the accelerometer assembly normal acceleration (velocity) are used to generate elevon (elevator) deflection commands. The rate gyro assem-

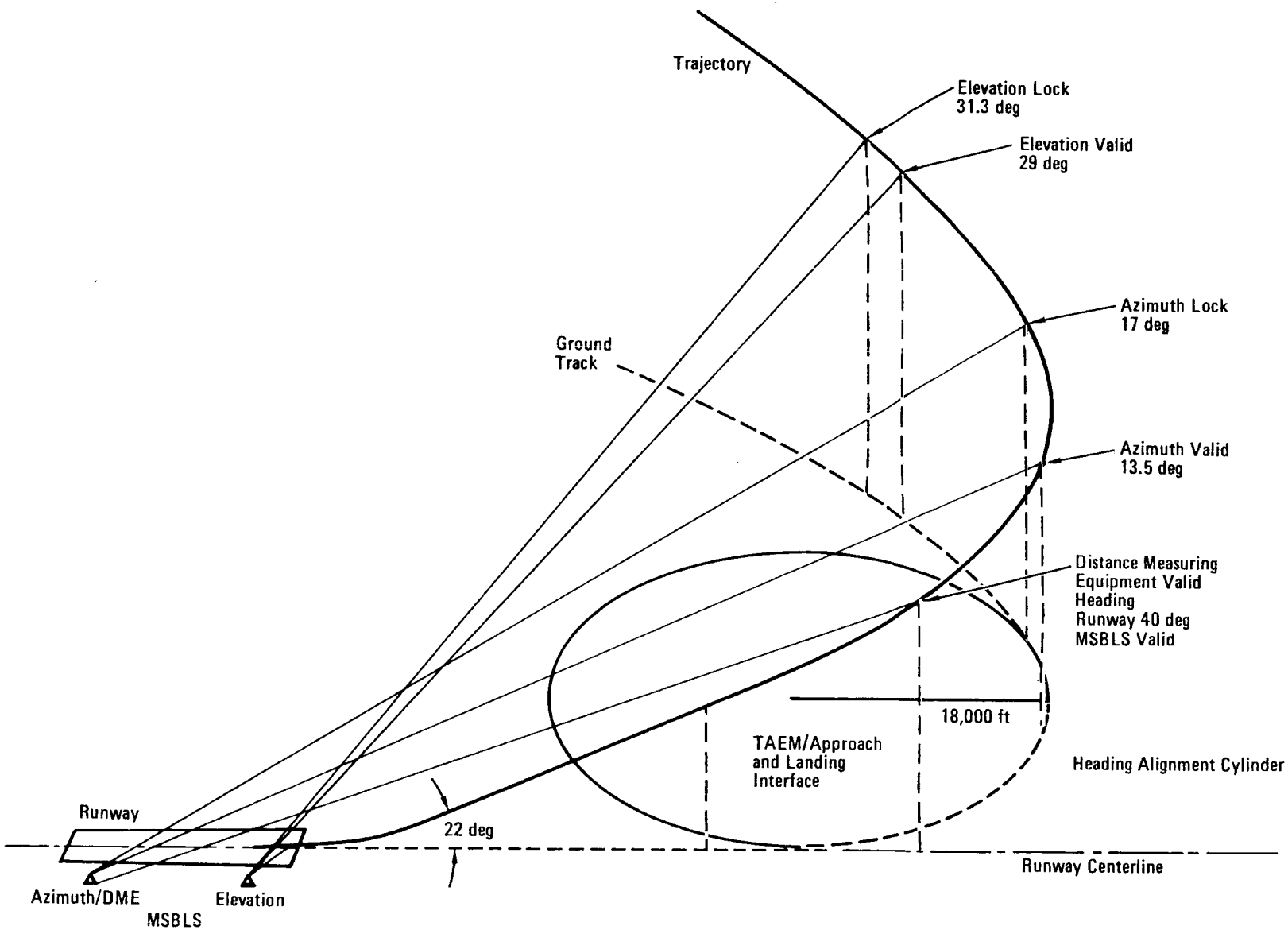


*Microwave Scan Beam Landing System*

bly yaw rate (rotation) and the accelerometer assembly lateral acceleration generate the rudder deflection required for directional stability. The rate gyro assembly roll rate (rotation) generates the elevon (aileron) deflection command required for lateral (roll) stability. The speed brake and body flap positions generate the elevon deflection required for trim near neutral to maximize roll effectiveness of the elevons.

In the entry phase, navigation software functions as it did during the deorbit phase (three state vectors corresponding to each IMU) except that additional external sensor data are sequentially incorporated. These data provide the accuracy necessary to bring the orbiter to a pinpoint landing and, to some extent, to maintain vehicle control. The TACAN system, which becomes available at about 156,000 feet, provides slant range and magnetic bearing to various fixed stations around the landing site. It is used until the orbiter is approximately 1,500 feet above the ground, at which point it is rendered ineffective by ground reflection. The air data system, which includes two transducer assemblies attached to a probe on the left side of the vehicle and two on the right side, provides pressures from which angle of attack, Mach number, equivalent airspeed, true airspeed, dynamic pressure, barometric altitude and altitude rate are computed. Only barometric altitude is used by navigation. The other parameters are used by guidance and flight control as well as for display to the flight crew. The probes are normally deployed around Mach 3. The MSBLS precisely determines slant range, azimuth and elevation relative to the landing runway. For landing at runways with MSBLS ground stations, MSBLS data become available at 20,000 feet for processing by navigation.

One other tool used by navigation is a drag altitude software sensor, which uses a model of the atmosphere to correlate the drag acceleration measured by the IMUs to altitude. This measurement, then, is only as good as the atmospheric model on which it is based. The model is not perfect. However, it has been determined through testing and analysis that drag altitude data are important in keeping downrange and altitude errors bounded during the blackout portion of entry (from approximately 265,000 to 162,000 feet). During this time, the ground is unable to uplink state vector corrections to the orbiter, and TACAN data are not available because of the heat-generated ionization of the atmosphere around the vehicle.

Navigation also maintains a statistical estimate of the expected error in the state vector. This is called a covariance matrix and is propagated along with the state vector. When an external sensor, such as TACAN, becomes available to the navigation software, a check is made to see if the data lie within the current expected range of error. Flight crew controls are provided on an onboard CRT horizontal situation display to force the software to accept or inhibit the external sensor data whether or not the data lie within the expected range. Another control on the display may be selected to allow the software to use the external sensor data to update its state vector so long as the data lie within the expected range.

About five minutes before entry interface, the crew adjusts the software to major mode 304. During this mode, which lasts until TAEM interface, five CRTs become available sequentially and are used to monitor auto guidance and the orbiter trajectory compared to the planned entry profile. The five displays are identical except for the central plot, which shows the orbiter's velocity versus range or energy/weight versus range with a changing scale as the orbiter approaches the landing site. This plot also includes static background lines that allow the crew to monitor the orbiter's progression compared to planned entry profiles.

Once TAEM interface is reached, the software automatically makes a transition to major mode 305. The CRT vertical situation 1 display then becomes available. It includes a central plot of orbiter altitude with respect to range. This plot has three background lines that represent the nominal altitude versus range profile, a dynamic pressure limit in guidance profile and a maximum lift-over-drag profile. At 30,000 feet, the scale and title on the display change to vertical situation 2, and the display is used through landing. When the approach and landing interface conditions are met, a flashing A/L appears on the display.

Another prime CRT display used during entry is the horizontal situation. In addition to providing insight into and control over navigation parameters, this display gives the crew orbiter position and heading information once the orbiter is below 200,000 feet.

The entry trajectory, vertical situation and horizontal situation CRT displays, then, are used by the flight crew to monitor the GN&C software. They can also be used by the crew to determine whether a manual takeover is required.

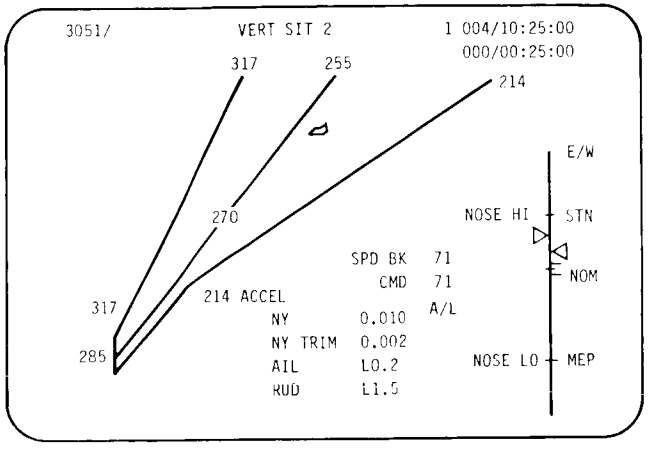


*Vertical Situation 2 Display*

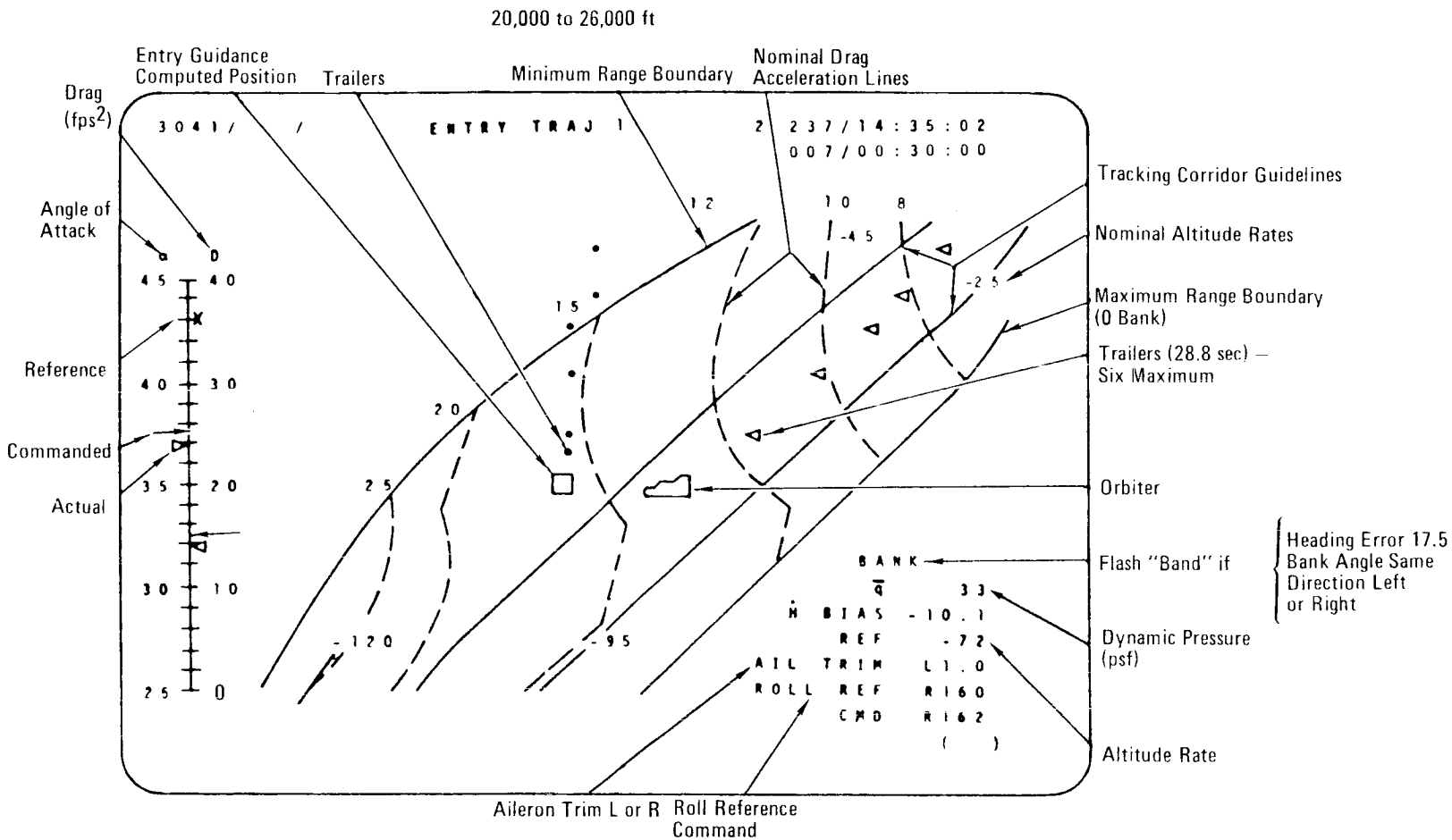


*Entry Trajectory*

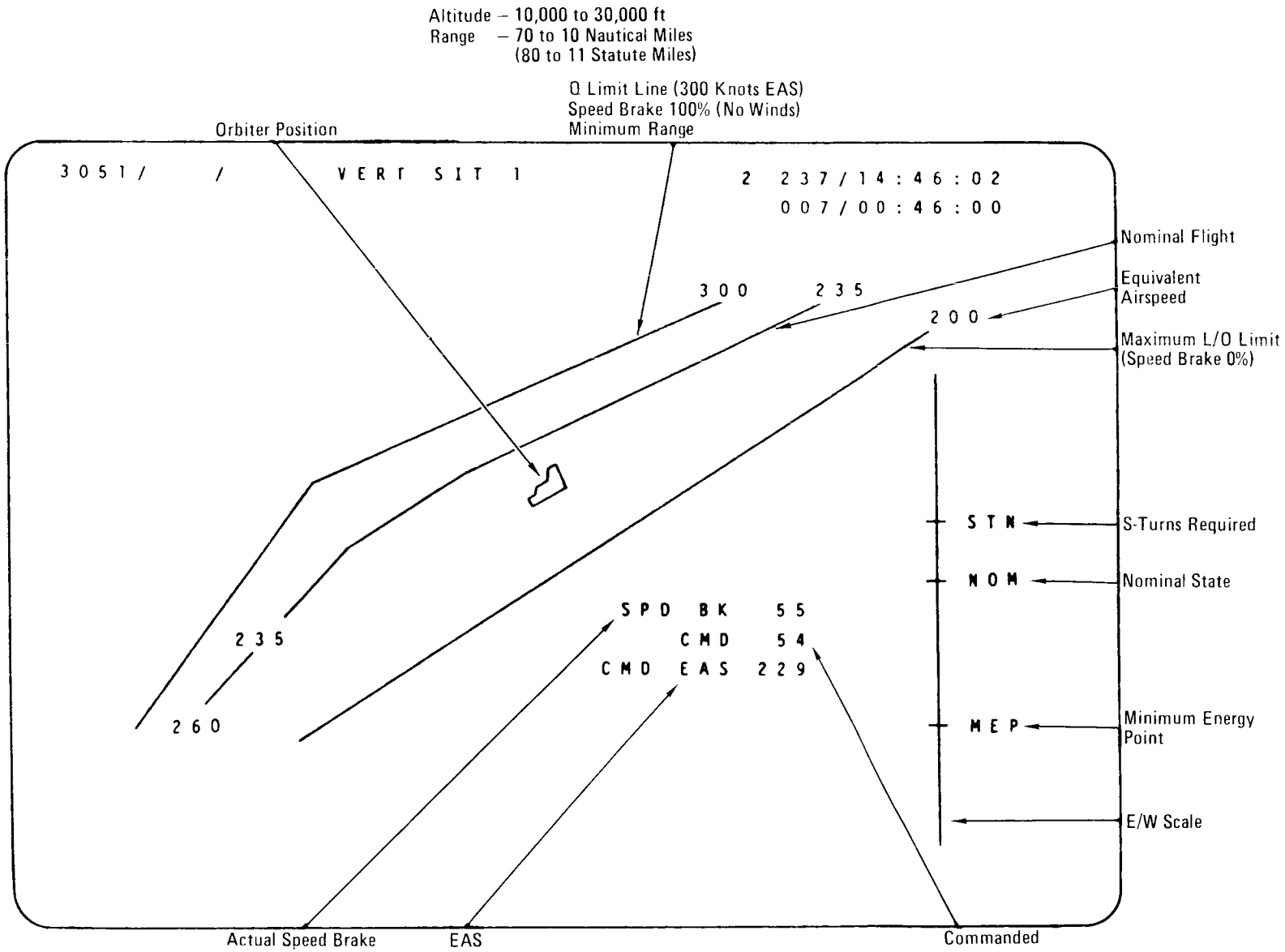


*Vertical Situation Display*

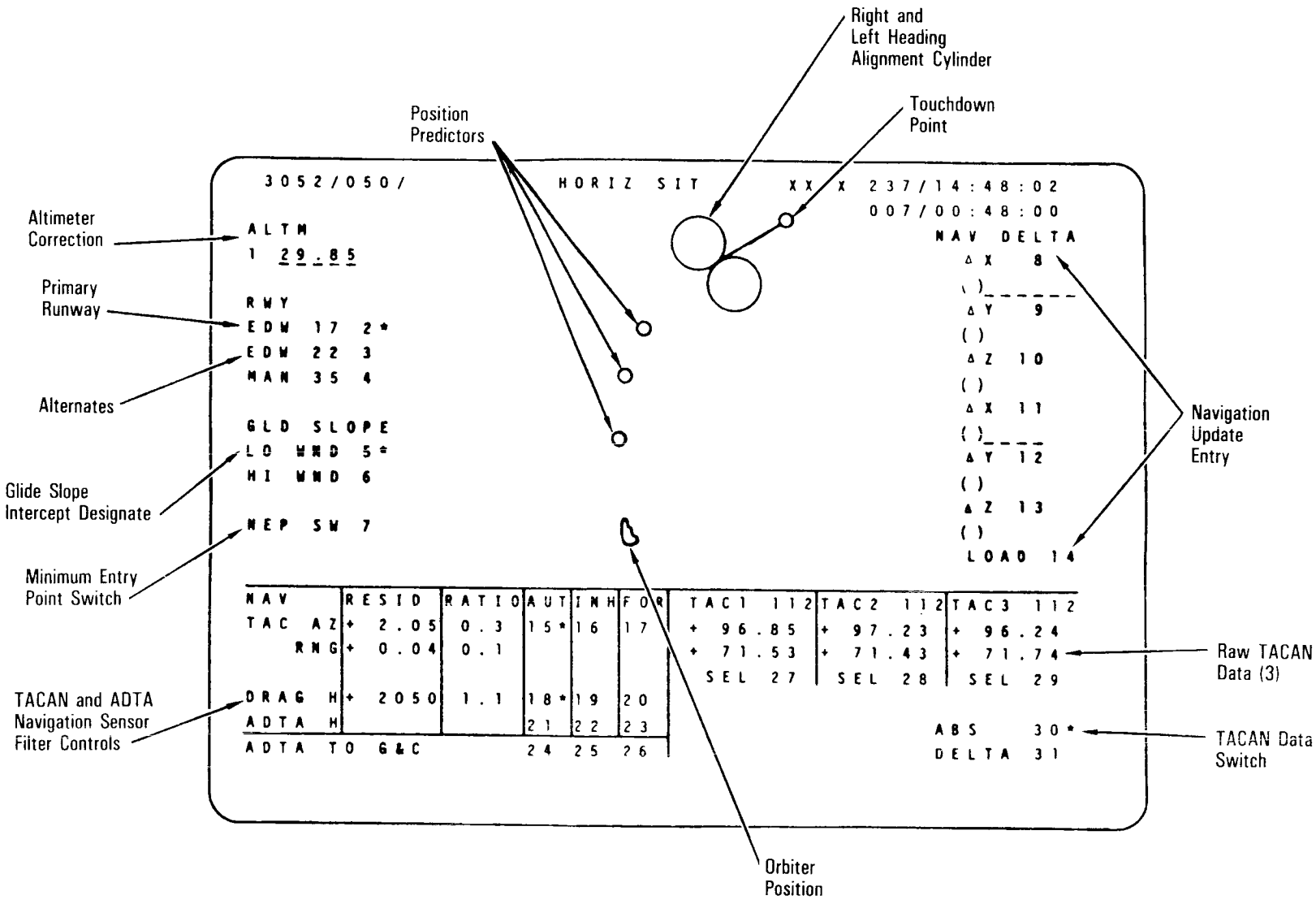


*Horizontal Situation Display*

## DISPLAYS AND CONTROLS

The crew compartment of the orbiter contains the most complicated displays and controls ever developed for an aerodynamic vehicle. The displays and controls exist in a variety of configurations, with toggle, push button, thumbwheel and rotary switches. Meters are circular and rectangular dials and rectangular tapes. Switches and circuit breakers are positioned in groups corresponding to their functions.

All controls are protected against inadvertent activation. Toggle switches are protected by wicket guards, and lever lock switches are used wherever inadvertent action would be detrimental to flight operations or could damage equipment. Cover guards are used on switches where inadvertent actuation would be irreversible.

The displays and controls in the orbiter crew compartment enable the flight crew members to supervise, control and monitor the space shuttle mission and vehicle. They include controllers, cathode ray tube displays and keyboards, coding and conversion electronics for instruments and controllers, lighting, timing devices, and a caution and warning system.

The displays and controls are designed so that a crew of two can perform normal operations in all mission phases (except payload operations). They are designed to enable a safe return to Earth from either the commander's or pilot's seat; flight-critical displays and controls are accessible from the forward flight deck station from launch to orbital operations and from deorbit to landing rollout.

All displays and controls have dimmable floodlighting in addition to integral meter lighting.

There are more than 2,020 displays and controls in the forward and aft flight decks and middeck of the orbiter. This represents more than 100 times the number of controls and displays found in the average automobile.

*Orbiter Displays and Controls Breakdown*

| Display or Control | Quantity |
|---|---|
| Toggle switches | 827 |
| Circuit breakers | 430 |
| Push button switches | 415 |
| Rotary switches | 53 |
| Thumbwheel switches | 29 |
| Timers | 4 |
| Vernier potentiometers | 97 |
| Rotational hand controllers | 3 |
| Translational hand controllers | 2 |
| Crewman optical alignment sight | 1 |
| Meters (round, tape, straight) | 88 |
| Event and mode lights | 58 |
| Horizontal situation indicators | 2 |
| Attitude director indicators | 2 |
| Cathode ray tubes | 4 |
| Caution and warning panels (includes fire panel) | 3[a] |
| Computer status board | 1[b] |

[a] 170 indicator lights
[b] 25 indicator lights

Orbiter displays and controls consist of panel displays, mechanical controls and electrically operated controls. Generally, the displays and controls are grouped by function and arranged in operational sequence from left to right or top to bottom with the most critical and most frequently used devices located to maximize the crew's performance and efficiency.

The displays and controls are divided between the forward flight station and aft flight station. The forward station contains all the equipment necessary for the operation of the orbiter. The aft flight station contains displays and controls necessary for rendezvous and docking and for controlling the remote manipulator system and payloads.

The forward flight control area panels are labeled L for the left, or commander's position; R for the right, or pilot's position;

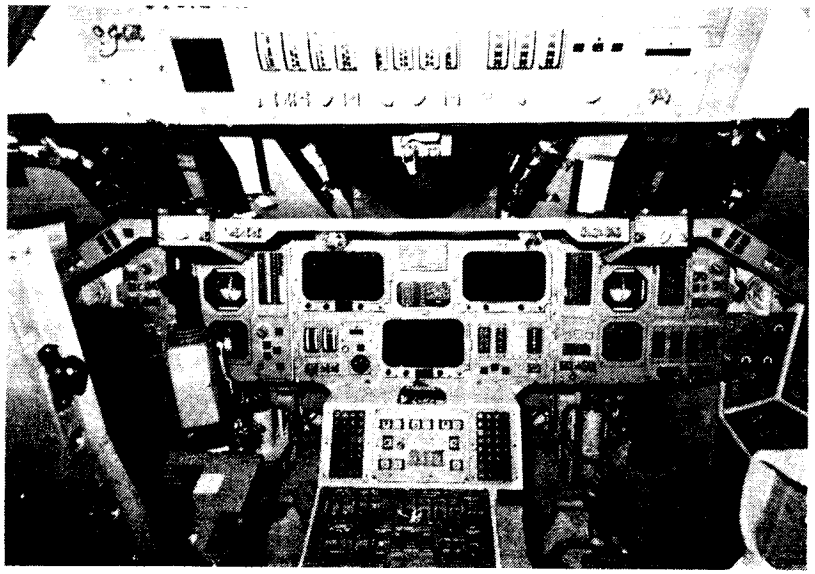

*Forward Displays and Controls*

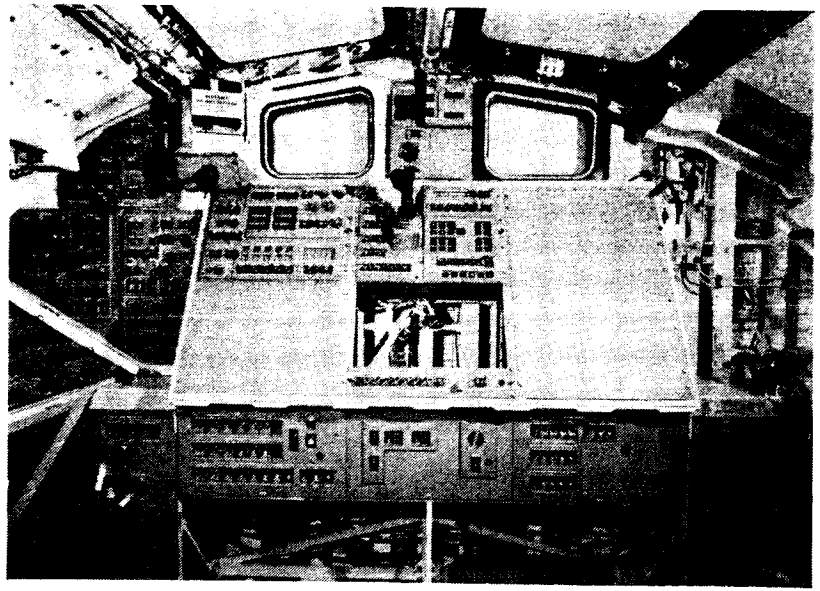

*Aft Station Displays and Controls*

F for the front section; O for the overhead position, and C for the lower center section.

The left panels contain circuit breakers, controls and instrumentation for the environmental control and life support system, communications equipment, heating controls, and the trim and body flap controls. The commander's speed brake and thrust controller is on the left panel. The right panels contain more circuit breakers; controls for the fuel cells, hydraulic system, auxiliary power units and engines; and the pilot's communication controls. Electrical power distribution controls are also located on the right-hand panels. The pilot's speed brake and thrust controller is to his left on the center console.

The overhead panel contains lighting controls, the computer voting panel and fuel cell purge controls. The center console contains the flight control system channel selector, air data equipment, and communication and navigation controls. It also contains fuel cell circuit breakers and the pilot's trim and body flap controls.



The center forward panel contains the three cathode ray tube display sets, the caution and warning system, aerosurface position indicators, backup flight control displays, and the fire protection system displays and controls. There are primary flight displays for both the commander and the pilot as well as auxiliary power unit and hydraulic displays and controls for the landing gear. The glareshield contains the head-up display.

The commander and the pilot have a rotational hand controller with integral switching to activate the backup flight control system. The commander also has a translational hand controller.

The aft flight station contains left, right and center panels. The panels contain the power reactant storage and distribution cryo tank heater control, auxiliary power unit and hydraulic heater controls, reaction control system and orbital maneuvering system heater controls, Ku-band and remote manipulator system pyro jettison controls, communication and utility power plug-ins, translational and rotational hand controllers, an attitude director

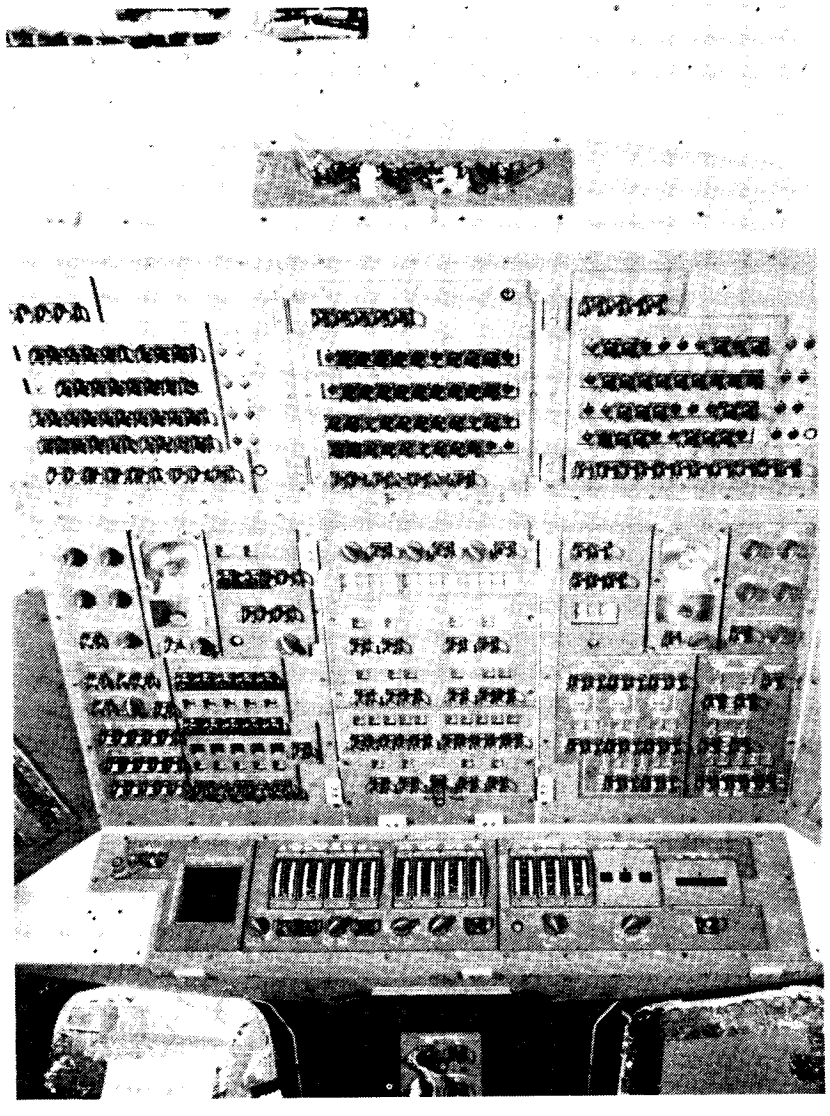

*Overhead Displays and Controls*

indicator, Ku-band and S-band communications controls, recorder controls, payload controls, remote manipulator system controls, closed-circuit television controls, a cathode ray tube and keyboard system.

The contractors involved are: Abbott Transistor, Los Angeles, Calif. (transformers); Aerospace Avionics Inc., Bohemia, N.Y. (propellant quantity indicator and annunciators); Aiken Industries, Mechanical Product Division, Jackson, Mich. (thermal circuit breakers); Applied Resources, Fairfield, N.J. (rotary switch); Bendix Corp., Teterboro, N.J. (surface position, alpha Mach, altitude/vertical velocity indicators); Bendix Corp., Davenport, Iowa (accelerometer indicator); SLI System, West Caldwell, N.J. (mission and event timer); Armtec Industries Inc., Manchester, N.H. (digital select thumbwheels, toggle switches); Eldec Corp., Lynwood, Wash. (tape meter); Honeywell Inc., Clearwater, Fla. (flight control system); IBM Corp., Federal Systems Division, Electronics Systems Center, Owego, N.Y. (cathode ray tube display unit, computer keyboard), ILC Technology, Sunnyvale, Calif. (cabin interior and exterior lighting); J.L. Products, Gardena, Calif. (push button switch); Lear Siegler, Grand Rapids, Mich. (attitude director indicator); Martin Marietta, Denver, Colo. (caution and warning status display, limit module); Weston Instruments, Newark, N.Y. (event indicator, electrical indicator meter); Collins-Rockwell, Cedar Rapids, Iowa (display driver unit, horizontal situation indicator); Aeropanel, Parisippany, N.J. (integrally illuminated panels); Betatronix, Hauppauge, N.Y. (potentiometers).

## PAYLOAD ASSIST MODULE

The payload assist module (formerly called the spinning solid upper stage) is designed as a higher altitude booster of satellites deployed in near Earth orbit but operationally destined for higher altitudes.

The PAM is used to boost various satellites to geosynchronous transfer orbit (22,300 miles) or other higher energy orbits after deployment from the space shuttle vehicle. There are three versions of the PAM that can be used aboard the space shuttle. The PAM-D is capable of launching satellites weighing up to 2,750 pounds. The PAM-DII is for satellites weighing up to 4,150 pounds. The PAM-A is for satellites weighing up to 4,400 pounds. The PAMs are also used for non-geosynchronous transfer orbits.

The PAM's deployable (expendable) stage consists of a spin-stabilized, solid-fueled rocket motor; a payload attach fitting to mate with the unmanned spacecraft; and the necessary timing, sequencing, power and control assemblies.

The reusable airborne support equipment consists of the cradle structure for mounting the deployable system in the space shuttle orbiter payload bay; a spin system to provide the stabilizing rotation; a separation system to release and deploy the stage and unmanned spacecraft; and the necessary avionics to control, monitor and power the system.

The PAM stages are supported through the spin table at the base of the motor and through restraints at the PAF. The forward restraints are retracted before deployment.

The PAM-Ds and DIIs have a sunshield that provides thermal protection of the PAM/unmanned spacecraft when the space shuttle orbiter payload bay doors are open on orbit.

The PAM's ASE consists of all the reusable hardware elements that are required to mount, support, control, monitor, protect and operate the PAM's expendable hardware and unmanned spacecraft from lift-off to deployment from the space shuttle. It will also provide the same functions for the safing and return of the stage and spacecraft in case of an aborted mission. The ASE is designed to be as self-contained as possible, thereby minimizing dependence on orbiter or flight crew functions for its operation. The major ASE elements include the cradle for structural mounting and support, the spin table and drive system, the avionics system to control and monitor the ASE and the PAM vehicle, and the thermal control system.

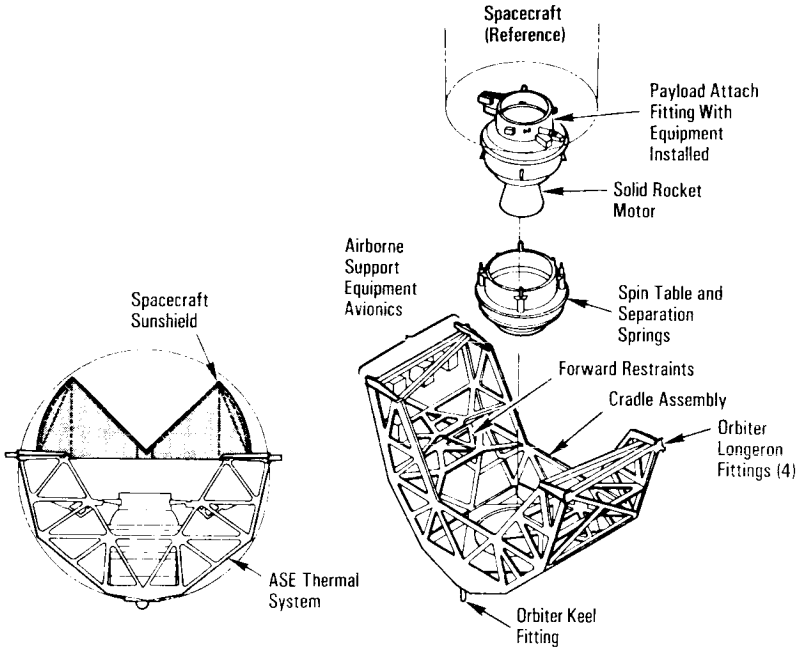


*PAM System*

The cradle assembly provides the vertical structural mounting support for the PAM/unmanned spacecraft assembly in the orbiter payload bay. The cradle is 15 feet wide. The length of the cradle is 93 inches static and 96 inches dynamic. The open-truss-structure cradle is constructed of machined aluminum frame sections and chrome-plated steel longeron and keel trunnions.

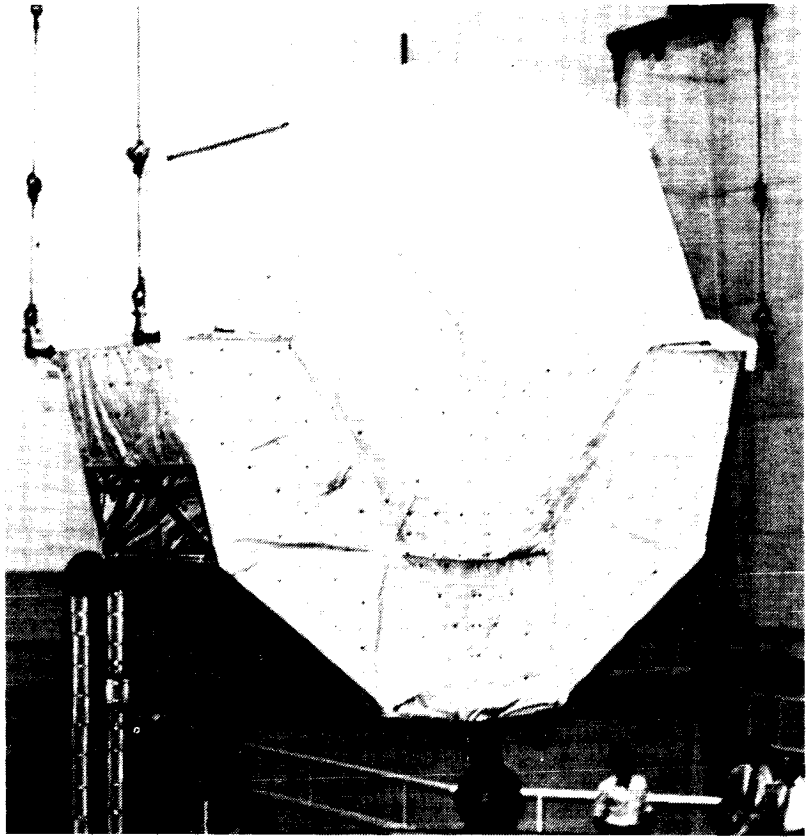

*PAM Interfaces*

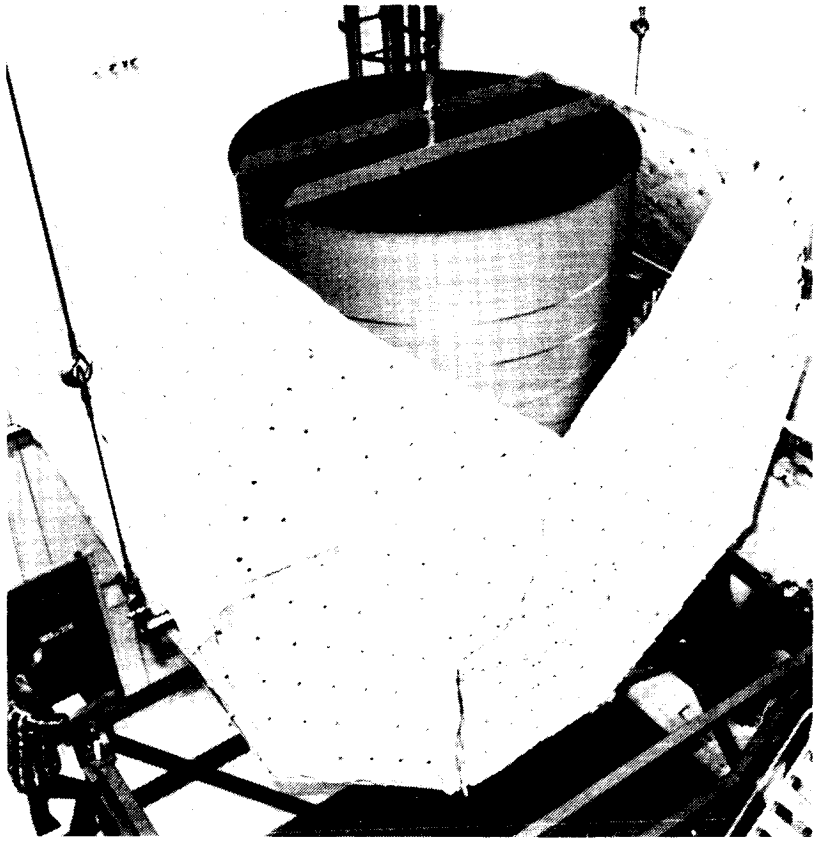

*PAM Sunshield Closed*



The spacecraft-to-cradle lateral loads are reacted by forward retractable reaction fittings between the PAF and cradle, which are driven by redundant dc electrical motors. After the reaction fittings are retracted, the spin table is free to spin the PAM and unmanned spacecraft when commanded.

The spin table consists of three subsystems—spin, separation and electrical interface. The spin subsystem consists of the spin table, the spin bearing, the rotating portion of the spin table, a gear and gear support ring, two redundant drive motors, a despin braking device, and a rotational index and locking mechanism. The separation subsystem includes four compression springs mounted on the outside of the rotating spin table, each with an installed preload of 1,400 pounds and a Marman-type clamp band assembly.

The electrical interface subsystem consists of a slip ring assembly to carry electrical circuits for the PAM and spacecraft across the rotating spin bearing. The electrical wiring from the slip ring terminates at electrical disconnects at the spin table separation

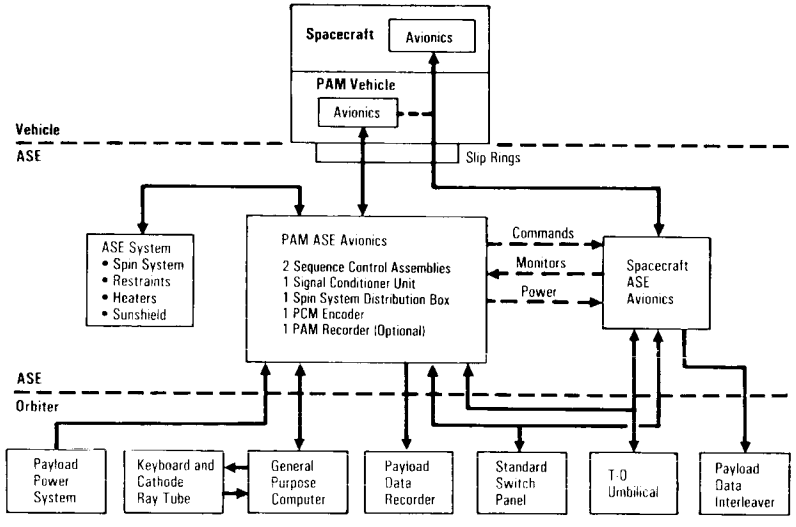


*PAM Sunshield Open*

point. The slip ring assembly is used to carry safety-critical command and monitor functions and those commands required before separation from the spin table.

The system provides a capability for spin rates between 45 and 100 rpm. Upon command, the spin table will be spun up to the nominal rpm by two electric motors, either of which can produce the required torque. When the spin table rpm has been verified and the proper point in the parking orbit has been reached, redundant, debris-free, explosive bolt cutters are fired upon command from the electrical ASE to separate the band clamp (which is mechanically retained on the spin table), and the springs provide the thrust to attain a separation velocity of approximately 3 feet per second.

In case of an abort mode after spinup, the multiple-disc stack friction-type braking device will despin the PAM and unmanned spacecraft assembly, and the spin drive motor will slowly rotate the assembly until the solenoid-operated indexing and locking device is engaged. Upon confirmation by the ASE that the spin table is properly aligned and locked, the restraint arms will be re-engaged.

The PAM-D PAF structure is a machined forging and provides the subsystem mounting installations and mounts on the forward ring of the motor case. PAM-DII offers two structural designs for the PAF, one of aluminum monocoque and the other of graphite epoxy. The two cradle reaction fittings provide structural support to the forward end of the PAM stage and unmanned spacecraft and transmit loads to the ASE cradle structure. The forward interface of the PAF provides the spacecraft mounting and separation system. One Marman-type clamp band is preloaded as required to properly support the spacecraft, and separation is achieved by redundant bolt cutters. Four separation springs, mounted inside the PAF, provide the impetus for clear separation. For PAM-D, installed preload for each spring is approximately 200 pounds with a spring stroke of 5.25 inches, providing a spacecraft separation velocity of about 3 feet per second. The electrical interface connectors between the PAM and the spacecraft are mounted on brackets on opposite sides of the PAF. Other subsystems mounted on the PAF include the redundant safe and arm device for motor ignition and telemetry components (if desired) and the optional S-band transmitter.



The electrical ASE minimizes the number of operations to be performed by the flight crew so that greater attention can be paid to monitoring functions that are critical to safety and reliability.

Flight crew control functions include system power on, solid rocket motor arming, deployment ordnance arming, emergency deployment and sequence control assembly control.

The electrical ASE performs sunshield opening and closing, control and monitoring of restraint withdrawal, spin table spin and deployment functions; arms (and disarms, if necessary) the SRM; controls and monitors the PAM vehicle's electrical sequencing system (and telemetry system, when used); and provides wiring to carry required spacecraft functions. And, as a mission option, it provides control and monitoring of spacecraft systems.

The PAM thermal control system alleviates severe thermal stresses on both the unmanned spacecraft and the PAM system. The system consists of thermal blankets mounted on the cradle to

provide thermal protection and a sunshield mounted on the cradle to control the solar input to and heat loss from the payload when the orbiter payload bay doors are open.

Thermal blankets consisting of multilayered insulation are mounted to the forward and aft sides of the cradle. The orbiter payload bay liner provides thermal protection on the sides and the bottom.

The sunshield consists of multilayered Mylar lightweight insulation supported on a tubular frame. The sunshield panels on the sides are stationary. The portion of the shield covering the top of the PAM/unmanned spacecraft is a clamshell structure that remains closed to protect against thermal extremes when the orbiter payload bay doors are open. The sunshield resembles a two-piece baby buggy canopy. The clamshell is opened by redundant electric rotary actuators operating a control-cable system.

The PAM-D/unmanned spacecraft sunshield accommodates spacecraft up to 86 inches in diameter. The PAM-DII/unmanned spacecraft sunshield accommodates spacecraft up to 115 inches in diameter.

The PAM expendable hardware consists of the Thiokol solid-fueled rocket motor, the payload attach fitting, and its functional system.

The avionics and other systems are common to both the PAM-D and PAM-DII. The PAM-DII, however, required revision or new design of the cradle and structural parts due to the larger volume required and heavier weight than the PAM-D. The PAM-DII utilizes a Thiokol Star 63D motor for greater performance.

PAM-DII functions in the same manner as PAM-D and utilizes all existing PAM-D parameters of preparation, interface, sequence and operation. PAM-DII's thermal, mechanical, and electrical interface and environment are comparable to the PAM-D's.

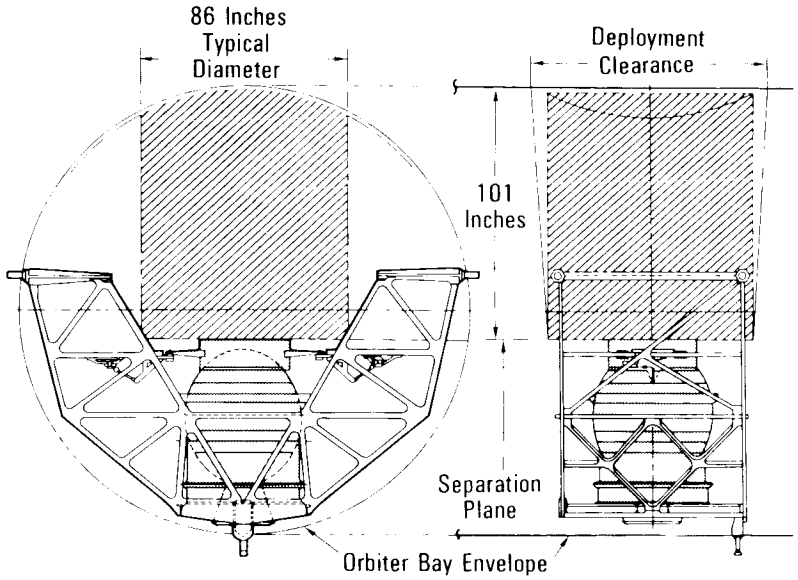


*PAM-D Orbiter Vertical Installation*



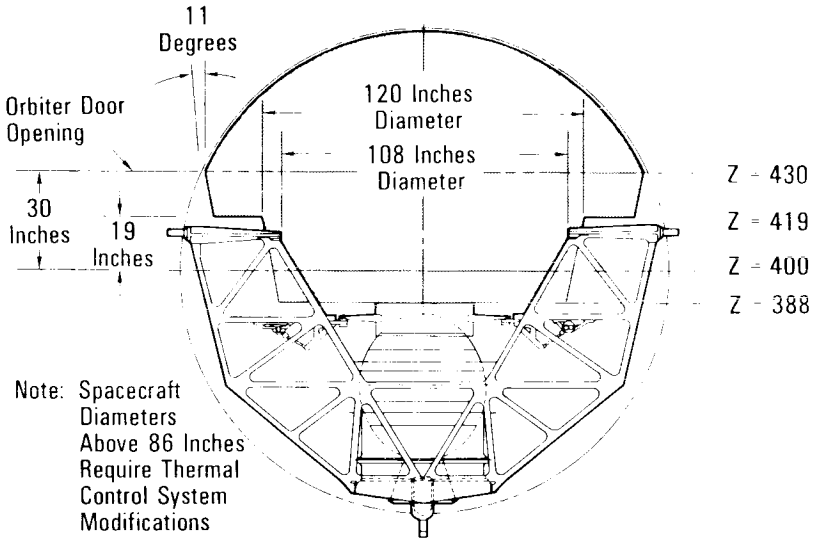


*Maximum Spacecraft Envelope With PAM-D*

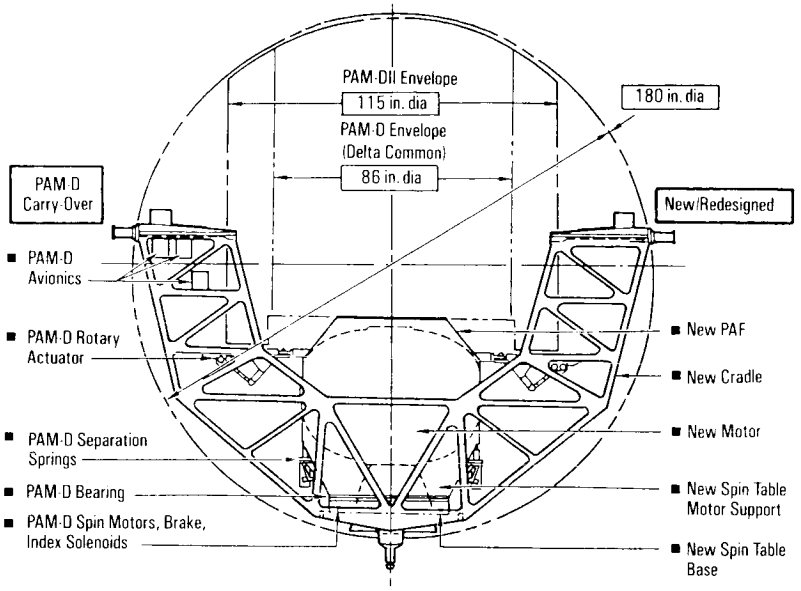


*PAM-DII Flight System Hardware Derivation*

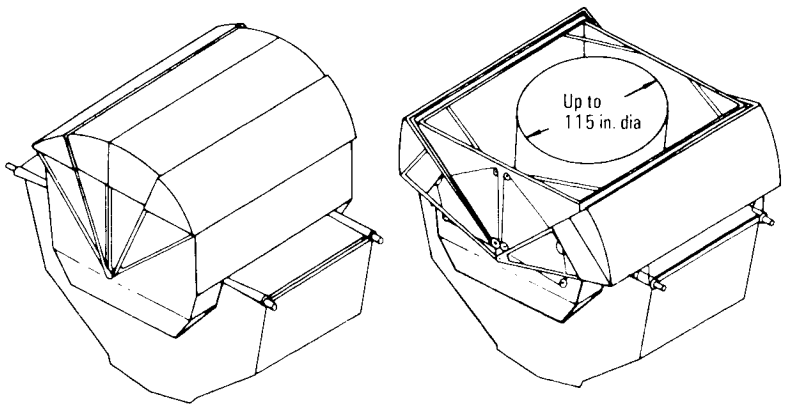


*PAM-DII Sunshield*

The payload assist modules are designed and built by McDonnell Douglas Astronautics Co., Huntington Beach, Calif.

## INERTIAL UPPER STAGE

The inertial upper stage will be used with the space shuttle to transport NASA's Tracking and Data Relay satellites to geosynchronous orbit, 22,300 statute miles from Earth. The IUS was also selected by NASA for the Magellan, Galileo and Ulysses planetary missions.

The IUS was originally designed as a temporary stand-in for a reusable space tug and was called the interim upper stage. Its name was changed to inertial upper stage (signifying the satellite's guidance technique) when it was realized that the IUS would be needed through the mid-1990s.

The IUS was developed and built under contract to the Air Force Systems Command's Space Division. The Space Division is executive agent for all Department of Defense activities pertaining to the space shuttle system and provides the IUS to NASA for space shuttle use. In August 1976, after 2.5 years of competition, Boeing Aerospace Company, Seattle, Wash., was selected to begin preliminary design of the IUS.

The IUS is a two-stage vehicle weighing approximately 32,500 pounds. Each stage is a solid rocket motor. This design was selected over those with liquid-fueled engines because of its relative simplicity, high reliability, low cost and safety.

The IUS is 17 feet long and 9.5 feet in diameter. It consists of an aft skirt, an aft stage solid rocket motor with 21,400 pounds of propellant generating 45,600 pounds of thrust, an interstage, a forward stage solid rocket motor with 6,000 pounds of propellant generating 18,500 pounds of thrust and using an extendable exit cone, and an equipment support section. The equipment support section contains the avionics that provide guidance, navigation, telemetry, command and data management, reaction control and

electrical power. All mission-critical components of the avionics system and thrust vector actuators, reaction control thrusters, motor igniter and pyrotechnic stage separation equipment are redundant to ensure better than 98-percent reliability.

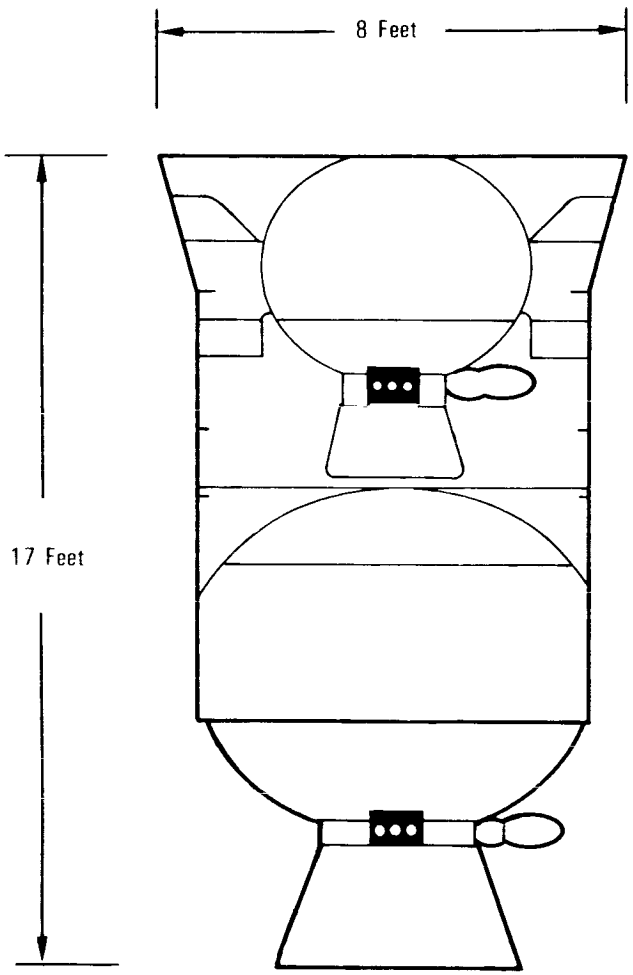


*Inertial Upper Stage*

**AIRBORNE SUPPORT EQUIPMENT.** The IUS ASE is the mechanical, avionics and structural equipment located in the orbiter. The ASE supports and provides services to the IUS and the spacecraft in the orbiter payload bay and positions the IUS/spacecraft in an elevated position for final checkout before deployment from the orbiter.

The IUS ASE consists of the structure, batteries, electronics and cabling to support the IUS and spacecraft combination. These ASE subsystems enable the deployment of the combined vehicle and provide or distribute and control electrical power to the IUS and spacecraft and provide communication paths between the IUS, spacecraft and the orbiter.

The ASE incorporates a low-response spreader beam and torsion bar mechanism that reduces spacecraft dynamic loads to less than one-third what they would be without this system. In addition, the forward ASE frame includes a hydraulic load leveler system to provide a balanced loading at the forward trunnion fittings.



The ASE data subsystem allows data and commands to be transferred between the IUS and spacecraft and the appropriate orbiter interface. Telemetry data include spacecraft data received over dedicated circuits via the IUS and spacecraft telemetry streams. An interleaved stream is provided to the orbiter to transmit to the ground or transfer to ground support equipment.

The structural interfaces in the orbiter payload bay consist of six standard non-deployable attach fittings on each longeron that mate with the ASE aft and forward support frame trunnions and two payload retention latch actuators at the forward ASE support frame. The IUS has a self-contained, spring-actuated deployment system that imparts a velocity to the IUS at release from the raised deployment attitude. Ducting from the orbiter purge system interfaces with the IUS at the forward ASE.

**IUS STRUCTURE.** The IUS structure is capable of transmitting all of the loads generated internally and also those generated by the cantilevered spacecraft during orbiter operations and

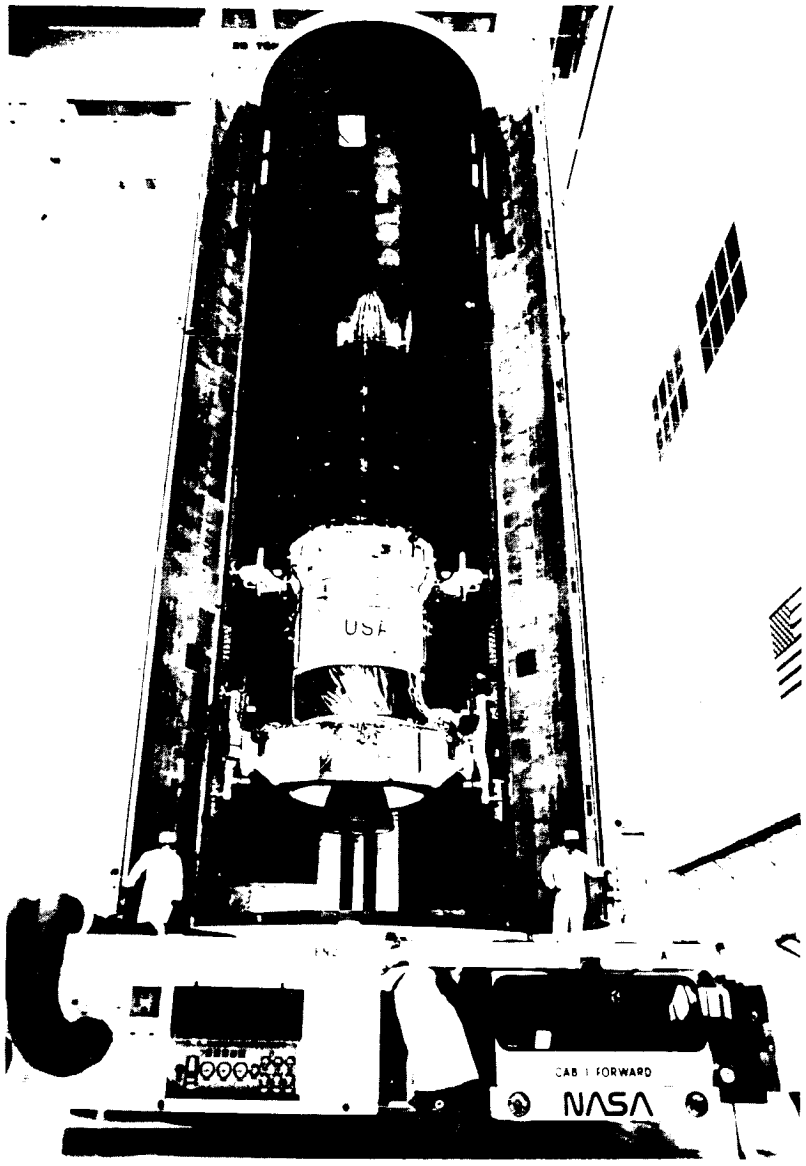


*IUS/TDRS With Airborne Support Equipment in Payload Canister Transporter*

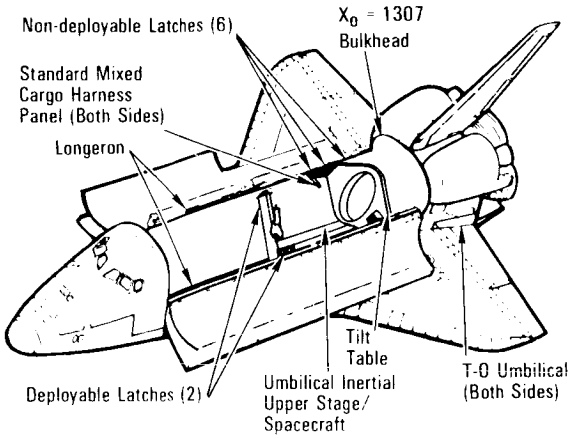


*Inertial Upper Stage Airborne Support Equipment*

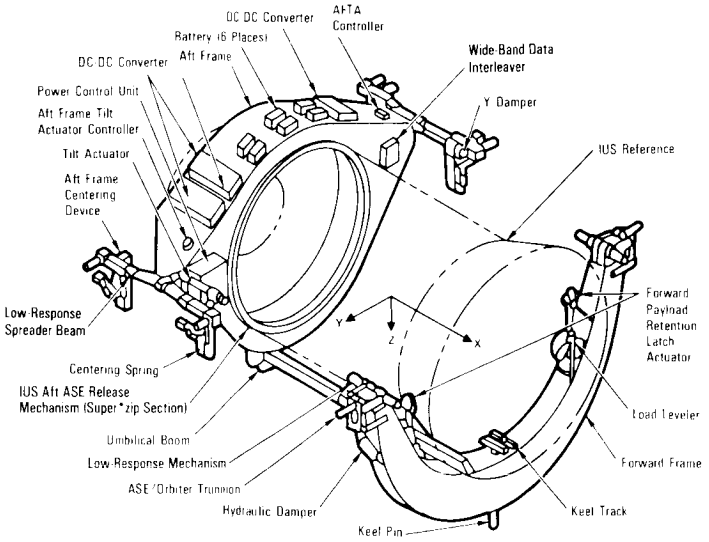


*Inertial Upper Stage Airborne Support Equipment*

IUS free flight. In addition, the structure supports all of the equipment and solid rocket motors within the IUS and provides the mechanisms for IUS stage separation. The major structural assemblies of the two-stage IUS are the equipment support section, interstage and aft skirt. The basic structure is made from aluminum skin-stringer construction with six longerons and ring frames.

**EQUIPMENT SUPPORT SECTION**. The ESS houses the majority of the IUS avionics and control subsystems. The top of the ESS contains the 10-foot-diameter interface mounting ring and electrical interface connector segment for mating and integrating the spacecraft with the IUS. Thermal isolation is provided by a multilayer insulation blanket across the interface between the IUS and spacecraft. All line replaceable units mounted in the ESS can be removed and replaced via access doors even when the IUS is mated with the spacecraft.

**IUS AVIONICS SUBSYSTEM**. The avionics subsystem consists of the telemetry, tracking and command; guidance and navigation; data management; thrust vector control; and electrical power subsystems. This includes all of the electronic and electrical

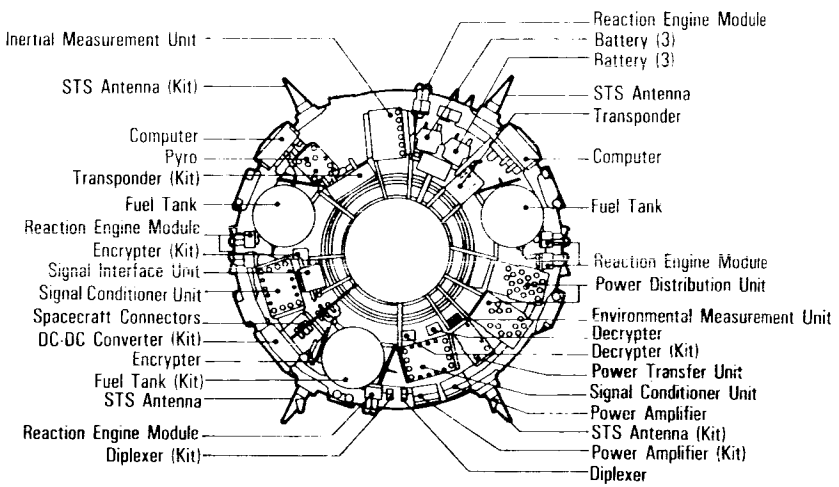


*Inertial Upper Stage Equipment Support Section*

hardware used to perform all computations, signal conditioning, data processing and software formatting associated with navigation, guidance, control, data management and redundancy management. The IUS avionics subsystem also provides the communications between the orbiter and ground stations and electrical power distribution.

Data management performs the computation, data processing and signal conditioning associated with guidance, navigation and control; safing and arming and ignition of the IUS two-stage solid rocket motors and electroexplosive devices; command decoding and telemetry formatting; and redundancy management and issues spacecraft discretes. The data management subsystem consists of two computers, two signal conditioner units and a signal interface unit.

Modular general-purpose computers use operational flight software to perform in-flight calculations and to initiate the vehicle thrust and attitude control functions necessary to guide the IUS and spacecraft through a flight path determined on board to a final orbit or planned trajectory. A stored program, including data known as the onboard digital data load, is loaded into the IUS flight computer memory from magnetic tape through the memory load unit during prelaunch operations. Memory capacity is 65,536 (64K) 16-bit words.

The signal conditioner unit provides the interface for commands and measurements between the IUS avionics computers and the IUS pyrotechnics; power; reaction control system; thrust vector control; telemetry, tracking and command; and the spacecraft. The SCU consists of two channels of signal conditioning and distribution for command and measurement functions. The two channels are designated A and B. Channel B is redundant to channel A for each measurement and command function.

The signal interface unit performs buffering, switching, formatting and filtering of TT&C interface signals.

Communications and power control equipment are mounted at the orbiter aft flight deck payload station and operated in flight

by the orbiter flight crew mission specialists. Electrical power and signal interfaces to the orbiter are located at the IUS equipment connectors. Cabling to the orbiter equipment is provided by the orbiter. In addition, the IUS provides dedicated hardwires from the spacecraft through the IUS to an orbiter multiplexer/demultiplexer for subsequent display on the orbiter cathode ray tube of parameters requiring observation and correction by the orbiter flight crew. This capability is provided until IUS ASE umbilical separation.

To support spacecraft checkout or other IUS-initiated functions, the IUS can issue a maximum of eight discretes. These discretes may be initiated either manually by the orbiter flight crew before the IUS is deployed from the orbiter or automatically by the IUS mission-sequencing flight software after deployment. The discrete commands are generated in the IUS computer either as an event-scheduling function (part of normal onboard automatic sequencing) or a command-processing function initiated from an uplink command from the orbiter or Air Force Consolidated Satellite Test Center to alter the onboard event-sequencing function and permit the discrete commands to be issued at any time in the mission.

During the ascent phase of the mission, the spacecraft's telemetry is interleaved with IUS telemetry, and ascent data are provided to ground stations in real time via orbiter downlink. Telemetry transmission on the IUS RF link begins after the IUS and spacecraft are tilted for deployment from the orbiter. Spacecraft data may be transmitted directly to the ground when the spacecraft is in the orbiter payload bay with the payload bay doors open or during IUS and spacecraft free flight.

IUS guidance and navigation consist of strapped-down redundant inertial measurement units. The redundant IMUs consist of five rate-integrating gyros, five accelerometers and associated electronics. The IUS inertial guidance and navigation subsystem provides measurements of angular rates, linear accelerations and other sensor data to data management for appropriate processing by software resident in the computers. The electronics provides conditioned power, digital control, thermal control, synchronization and the necessary computer interfaces for the inertial sensors. The electronics are configured to provide three fully independent channels of data to the computers. Two channels each support two sets of sensors and the third channel supports one set. Data from all five gyro and accelerometer sets are sent simultaneously to both computers.

The guidance and navigation subsystem is calibrated and aligned on the launch pad. The navigation function is initialized at lift-off, and data from the redundant IMUs is integrated in the navigation software to determine the current state vector. Before vehicle deployment, an attitude update maneuver may be performed by the orbiter.

If for any reason the computer is powered down before deployment, the navigation function is reinitialized by transferring orbiter position, velocity and attitude data to the IUS vehicle. Attitude updates are then performed as described above.

The IUS vehicle uses an explicit guidance algorithm (gamma guidance) to generate thrust steering commands, solid rocket motor ignition time and RCS vernier thrust cutoff time. Before each SRM ignition and each RCS vernier, the vehicle is oriented to a thrust attitude based on nominal performance of the remaining propulsion stages. During SRM burn, the current state vector determined from the navigation function is compared to the desired state vector, and the commanded attitude is adjusted to compensate for the buildup of position and velocity errors caused by off-nominal SRM performance (thrust, specific impulse).

Vernier thrust compensates for velocity errors resulting from SRM impulse and cutoff time dispersions. Residual position errors from the SRM thrusting and position errors introduced by impulse and cutoff time dispersions are also removed by the RCS.

Attitude control in response to guidance commands is provided by thrust vector control during powered flight and by reaction control thrusters during coast. Measured attitude from the guidance and navigation subsystem is compared with guidance commands to generate error signals. During solid motor thrusting,

these error signals drive the motor nozzle actuator electronics in the TVC subsystem. The resulting nozzle deflections produce the desired attitude control torques in pitch and yaw. Roll control is maintained by the RCS roll-axis thrusters. During coast flight, the error signals are processed in the computer to generate RCS thruster commands to maintain vehicle attitude or to maneuver the vehicle. For attitude maneuvers, quarternion rotations are used.

TVC provides the interface between IUS guidance and navigation and the SRM gimbaled nozzle to accomplish powered-flight attitude control. Two complete electrically redundant channels minimize single-point failure. The TVC subsystem consists of two controllers, two actuators and four potentiometers for each IUS SRM. Power is supplied through the SCU to the TVC controller that controls the actuators. The controller receives analog pitch and yaw commands that are proportioned to the desired nozzle angle and converts them to pulsewidth-modulated voltages to power the actuator motors. The motor drives a ball screw that extends or retracts the actuator to position the SRM nozzle. Potentiometers provide servoloop closure and position instrumentation. A staging command from the SCU allows switching of the controller outputs from IUS first-stage actuators to the IUS second-stage actuators.

The IUS's electrical power subsystem consists of avionics batteries, IUS power distribution units, power transfer unit, utility batteries, pyrotechnic switching unit, IUS wiring harness and umbilical, and staging connectors. The IUS avionics subsystem distributes electrical power to the IUS and spacecraft interface connector for all mission phases from prelaunch to spacecraft separation. The IUS system distributes orbiter power to the spacecraft during ascent and on-orbit phases. ASE batteries supply power to the spacecraft if orbiter power is interrupted. Dedicated IUS and spacecraft batteries ensure uninterrupted power to the spacecraft after deployment from the orbiter. The IUS will also accomplish an automatic power-down if high-temperature limits are experienced before the orbiter payload bay doors are opened. Dual buses ensure that no single power system failure can disable both A and B channels of avionics. For the IUS two-stage vehicle, four batteries (three avionics and one spacecraft) are carried in the IUS first stage. Five batteries (two avionics, two utility and one spacecraft) supply power to the IUS second stage after staging. The IUS battery complement can be changed to adapt to mission-unique requirements and to provide special spacecraft requirements. Redundant IUS switches transfer the power input among spacecraft, ground support equipment, ASE and IUS battery sources.

Stage 1 to stage 2 IUS separation is accomplished via redundant low-shock ordnance devices that minimize the shock environment on the spacecraft. The IUS provides and distributes ordnance power to the IUS/spacecraft interface for firing spacecraft ordnance devices in two groups of eight initiators: a prime group and a backup group. Four separation switches or breakwires provided by the spacecraft are monitored by the IUS telemetry system to verify spacecraft separation.

**IUS SOLID ROCKET MOTORS.** The two-stage IUS vehicle incorporates a large SRM and a small SRM. These motors employ movable nozzles for thrust vector control. The nozzles are positioned by redundant electromechanical actuators permitting up to 4 degrees of steering on the large motor and 7 degrees on the small motor. Kevlar filament-wound cases provide high strength at minimum weight. The large motor's 145-second thrusting period is the longest ever developed for space. Variations in user mission requirements are met by tailored propellant off-loading or on-loading. The small motor can be flown either with or without its extendible exit cone, which provides an increase of 14.5 seconds in the delivered specific impulse of the small motor.

**IUS REACTION CONTROL SYSTEM.** The IUS RCS is a hydrazine monopropellant positive-expulsion system that controls the attitude of the IUS and spacecraft during IUS coast periods, roll during SRM thrustings and delta velocity impulses for accurate orbit injection. Valves and thrusters are redundant, which permits continued operation with a minimum of one failure.

The IUS baseline includes two RCS tanks with a capacity of 120 pounds of hydrazine each. Production options are available to

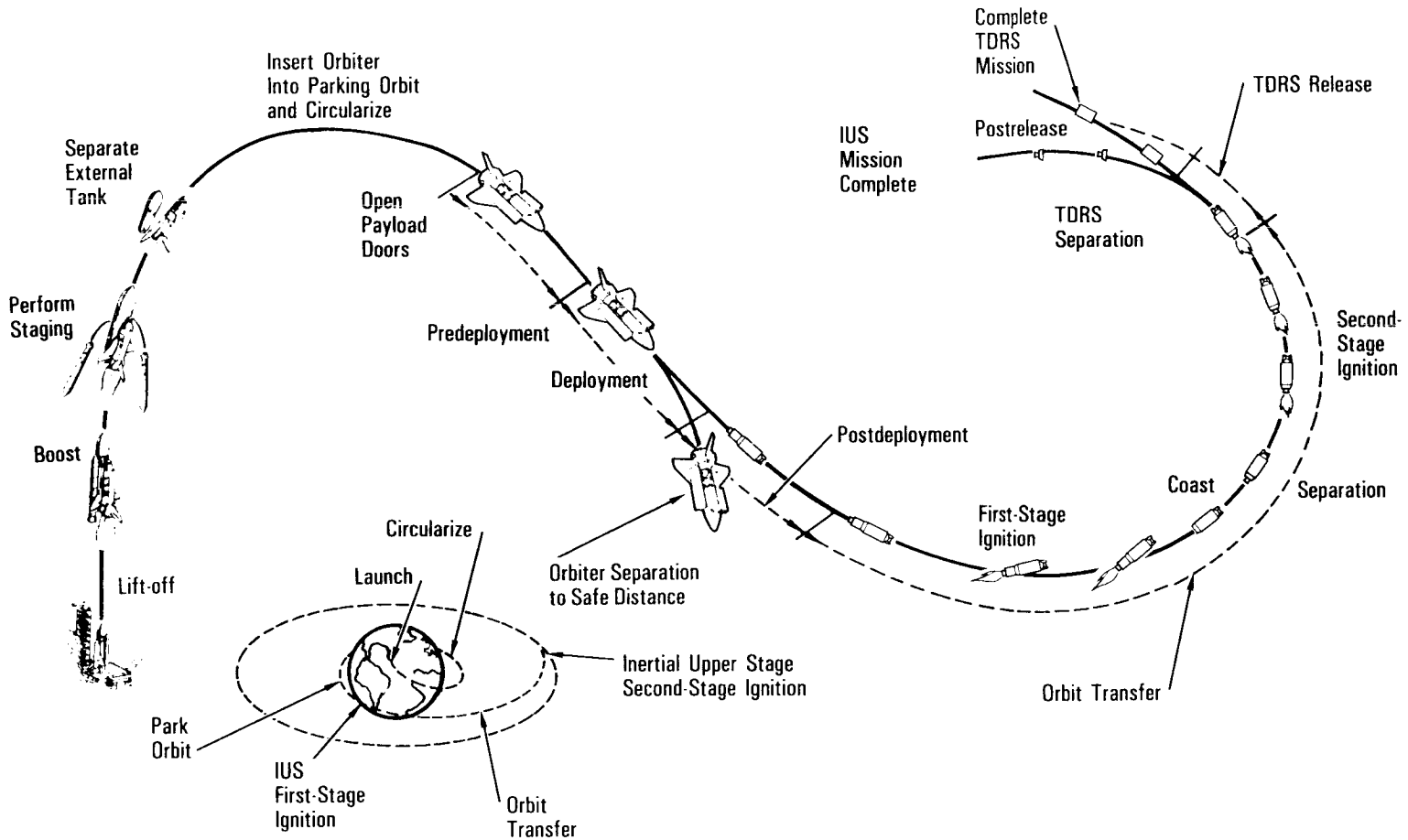


*Sequence of Events for Typical Geosynchronous Mission*

add a third tank or remove one tank if required. To avoid spacecraft contamination, the IUS has no forward-facing thrusters. The system is also used to provide the velocities for spacing between multiple spacecraft deployments and for a collision/contamination avoidance maneuver after spacecraft separation.

The RCS is a sealed system that is serviced before spacecraft mating. Propellant is isolated in the tanks with pyrotechnic squib-operated valves that are not activated until 10 minutes after IUS deployment from the orbiter. The tank and manifold safety factors are such that no safety constraints are imposed on operations in the vicinity of the serviced tanks.

**IUS-TO-SPACECRAFT INTERFACES.** The spacecraft is attached to the IUS at a maximum of eight attachment points. They provide substantial load-carrying capability while minimizing thermal transfer across the interface.

Power and data transmission to the spacecraft are provided by several IUS interface connectors. Access to these connectors can be provided on the spacecraft side of the interface plane or through the access door on the IUS equipment bay.

The IUS provides a multilayer insulation blanket of aluminized Kapton with polyester net spacers and an aluminized beta cloth outer layer across the IUS and spacecraft interface. All IUS thermal blankets are vented toward and into the IUS cavity. All gases within the IUS cavity are vented to the orbiter payload bay. There is no gas flow between the spacecraft and the IUS. The thermal blankets are grounded to the IUS structure to prevent electrostatic charge buildup.

**FLIGHT SEQUENCE.** After the orbiter payload bay doors are opened in Earth orbit, the orbiter maintains a preselected attitude to fulfill payload thermal requirements and constraints except during those operations that require special attitudes (e.g., orbiter inertial measurement unit alignments, RF communications and deployment operations).

On-orbit predeployment checkout is followed by an IUS command link check and spacecraft RF command check, if required. The state vector is uplinked to the orbiter for trim maneuvers the orbiter performs. The state vector is transferred to the IUS.

The forward ASE payload retention latch actuator is released and the aft frame ASE electromechanical tilt actuator tilts the IUS and spacecraft combination to 29 degrees. This extends the spacecraft into space just outside the orbiter payload bay, which allows direct communication with Earth during systems checkout. The orbiter is then maneuvered to the deployment attitude. If a problem develops within the spacecraft or IUS, they can be restowed.

Before deployment, the flight crew switches the spacecraft's electrical power source from orbiter power to IUS internal power. Verification that the spacecraft is on IUS internal power and that all IUS and spacecraft predeployment operations have been successfully completed will be ascertained by evaluating data contained in the IUS and spacecraft telemetry. IUS telemetry data are evaluated by the IUS Mission Control Center at Sunnyvale, Calif., and the spacecraft data by the spacecraft Control Center. Analysis of the telemetry will result in a go/no-go decision for IUS and spacecraft deployment from the orbiter.

When the orbiter flight crew is given a go decision, the orbiter flight crew will activate the ordnance that separates the IUS and spacecraft's umbilical cables. The flight crew will then command the electromechanical tilt actuator to raise the tilt table to a 59-degree deployment position. The orbiter's RCS thrusters are inhibited, and the Super*zip ordnance separation device physically separates the IUS and spacecraft combination from the tilt table. Compressed springs provide the force to jettison the IUS and spacecraft from the orbiter payload bay at approximately 0.4 foot per second. The IUS and spacecraft are deployed in the shadow of the orbiter or in Earth eclipse. The tilt table is lowered to minus 6 degrees after deployment. Approximately 19 minutes after deployment, the orbiter's orbital maneuvering system engines are ignited to separate the orbiter from the IUS and spacecraft.

The IUS and spacecraft are now controlled by computers on board the IUS. Approximately 10 minutes after the IUS and spacecraft are ejected from the orbiter, the IUS onboard computers send out discrete signals that are used by the IUS or spacecraft to begin mission sequence events. All subsequent operations are sequenced by the IUS computer from transfer orbit injection through spacecraft separation and IUS deactivation. Following RCS activation, the IUS maneuvers to the required thermal attitude and performs any required spacecraft thermal control maneuver.

Approximately 45 minutes after IUS and spacecraft ejection from the orbiter, the SRM-1 ordnance inhibits are removed. At this time, the bottom of the orbiter is oriented toward the IUS and spacecraft to protect the orbiter windows from the IUS SRM-1 plume. The IUS will then recompute SRM-1 ignition time and maneuver to the proper attitude for the SRM-1 thrusting period. When the transfer orbit or planetary trajectory injection opportunity is reached, the IUS computer will enable and apply ordnance power, arm the safe and arm devices and ignite the first-stage SRM. The SRM-1 thrusting period lasts approximately 145 seconds to provide sufficient thrust for the orbit transfer phase of a geosynchronous mission or to provide the predetermined contribution of thrust for planetary trajectory for planetary missions. The IUS first stage and interstage are separated from the second stage before the IUS reaches the apogee point of its trajectory for geosynchronous missions.

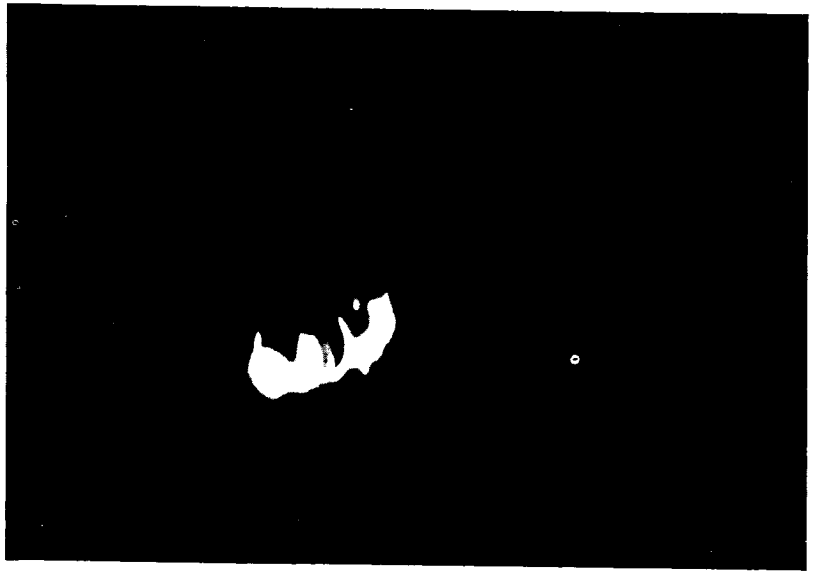

*Inertial Upper Stage Tracking and Data Relay Satellite Deployment*

If sufficient coast time is available during the coast phase, the IUS can perform the maneuvers required by the spacecraft for thermal protection or communication reasons.

For geosynchronous missions, the second-stage motor is ignited at apogee and its thrusting period lasts approximately 103 seconds, which provides the final injection to geosynchronous orbit. Planetary missions use SRM-2 thrust to obtain proper injection energy. The IUS then supports spacecraft separation and performs a final collision and contamination avoidance maneuver before deactivating its subsystems.

Boeing's propulsion team member, Chemical Systems Division of United Technologies, designed and tests the two solid rocket motors. Supporting Boeing in the avionics area are TRW, Cubic and the Hamilton Standard Division of United Technologies. TRW and Cubic provide IUS telemetry, tracking and command subsystem hardware. Hamilton Standard provides guidance system hardware support. Delco, under subcontract to Hamilton Standard, provides the avionics computer.

In addition to the actual flight vehicles, Boeing is responsible for the development of ground support equipment and software for the checkout and handling of the IUS vehicles from factory to launch pad.

Boeing also integrates the IUS with various satellites and joins the satellite with the IUS, checks out the configuration and supports launch and mission control operations for both the Air Force and NASA. Boeing also develops airborne support equipment to support the IUS in the space shuttle and monitors it while it is in the orbiter payload bay.

The IUS, without the two SRMs, is fabricated and tested at the Boeing Space Center, Kent, Wash. SRMs are shipped directly from Chemical Systems Division in California to the eastern launch site at Cape Canaveral, Fla. Similarly, the Boeing-manufactured IUS subsystems are shipped from Washington to the eastern launch site. IUS/SRM buildup is done in the Solid Motor Assembly Building and the IUS and spacecraft are mated in the Vertical Processing Facility at the Kennedy Space Center. The combined IUS and spacecraft payload is installed in the orbiter at the launch pad. Boeing is building 22 IUS vehicles under its contract with the Air Force.

## SPACELAB

On Sept. 24, 1973, a memorandum of understanding was signed between the European Space Agency, formerly known as the European Space Research Organization, and NASA with NASA's George C. Marshall Space Flight Center as lead center for ESA to design and develop Spacelab.

Spacelab is developed on a modular basis and can be varied to meet specific mission requirements. Its four principal components are the pressurized module, which contains a laboratory with a shirt-sleeve working environment; one or more open pallets that expose materials and equipment to space; a tunnel to gain access to the module; and an instrument pointing subsystem. Spacelab is not deployed free of the orbiter.

ESA had 11 member nations at the time of Spacelab development: Belgium, Denmark, France, Ireland, Italy, the Netherlands, Spain, Sweden, Switzerland, the United Kingdom and West Germany. All except Sweden participated in the Spacelab program.

An industrial consortium headed by ERNO-VFW Fokker (Zentralgesellschoft VFW-Fokker mbh) was named by ESA in June 1974 to build the pressurized modules. Five 10-foot-long, unpressurized, U-shaped pallet segments were built by the British Aerospace Corporation under contract to ERNO-VFW Fokker. The IPS is built by Dornier.

NASA astronauts called mission specialists, as well as non-career astronauts called payload specialists, fly aboard Spacelab to operate experiments. Payload specialists are nominated by the scientists sponsoring the experiments aboard Spacelab. They are accepted, trained and certified for flight by NASA. Their training includes familiarization with experiments and payloads as well as information and procedures to fly aboard the space shuttle. From one to four payload specialists can be accommodated for a Spacelab flight. These specialists ride into space and return to Earth in the orbiter crew compartment cabin, but they work with Spacelab on orbit. Because Spacelab missions, once on orbit, may operate on a 24-hour basis, the flight crew is usually divided into two teams.

**PRESSURIZED MODULE, OR LABORATORY.** The pressurized module, or laboratory, is available in two segments. One, called the core segment, contains supporting systems, such as data processing equipment and utilities for the pressurized modules and pallets (if pallets are used in conjunction with the pressurized modules). The laboratory has fixtures, such as floor-mounted racks and a workbench. The second, called the experiment segment, provides more working laboratory space and contains only floor-mounted racks. When only one segment is needed, the core segment is used. Each pressurized segment is a cylinder 13.5 feet in outside diameter and 9 feet long. When both segments are assembled with end cones, their maximum outside length is 23 feet.

The pressurized segment or segments are structurally attached to the orbiter payload bay by four attach fittings consisting of three longeron fitting sets (two primary and one stabilizing) and one keel fitting. The segment or segments are covered with passive thermal control insulation.

The ceiling skin panel of each segment contains a 51.2-inch-diameter opening for mounting a viewport adapter assembly, a Spacelab window adapter assembly or scientific airlock; if none of these items are used, the openings are closed with cover plates that are bolted in place. The module shell is made from 2219-T851 aluminum plate panels. Eight rolled integral-machined waffle patterns are butt-welded together to form the shell of each module segment. The shell thickness ranges from 0.6 of an inch to 0.14 of an inch. Rings machined from aluminum-roll ring forgings are butt-welded to the skin panels at the end of each shell. Each ring is 20 inches long and 195.8 inches in diameter at the outer skin line. Forward and aft cones bolted to the cylinder segments consist of six aluminum skin panels machined from 2219-T851 aluminum plate and butt-welded to each other and to the two end rings. The end rings are machined from aluminum-roll ring forgings. The end cones are 30.8-inch-long truncated cones whose large end is 161.9 inches in outside diameter and whose small end is 51.2 inches in outside diameter. Each cone has three 16.4-inch-diameter cutouts: two located at the bottom of the cone and one at the top. Feedthrough plates for routing utility cables and lines can be installed in the lower cutouts of both end cones. The Spacelab viewport assembly can be installed in the upper cutout of the aft

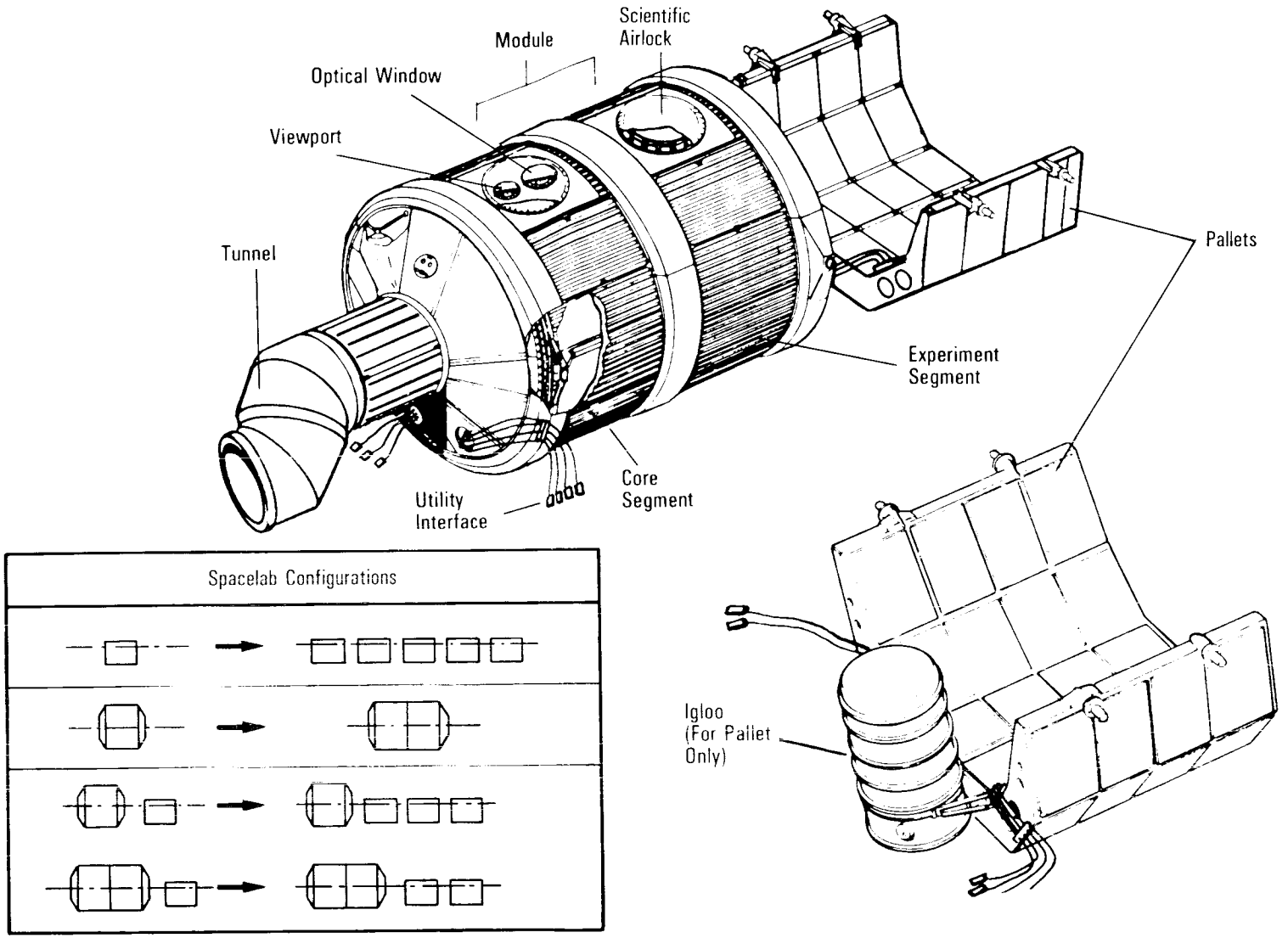


*Spacelab External Design Features*

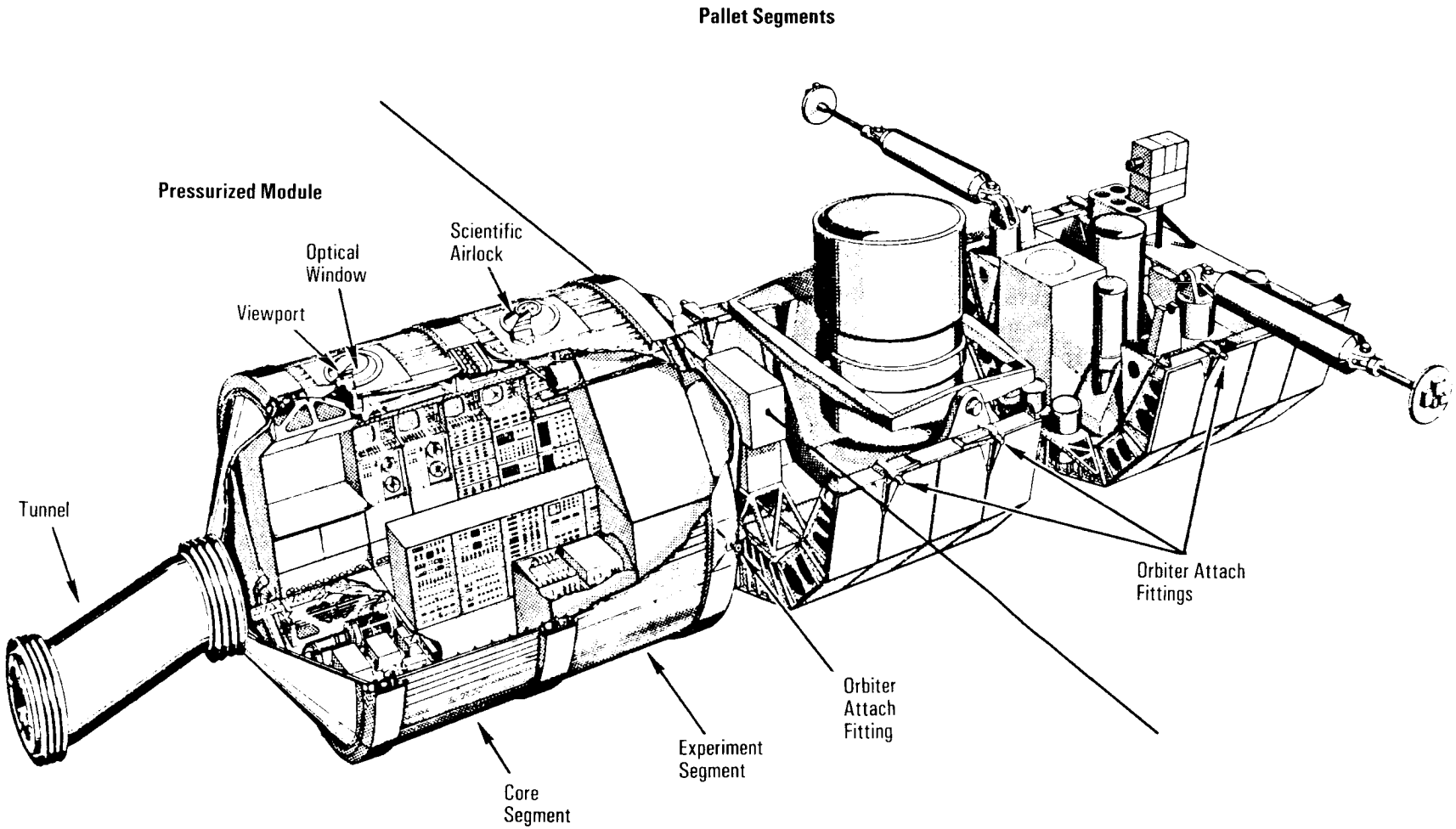


*European Space Agency's Spacelab*

end cone, and the upper cutout of the forward end cone is for the pressurized module vent and relief valves. The pressurized modules are designed for a lifetime of 50 missions. Nominal mission duration is seven days.

Because of the orbiter's center-of-gravity conditions, the Spacelab pressurized module or modules cannot be installed at the forward end of the payload bay. Therefore, a pressurized tunnel is provided for equipment and crew transfer between the orbiter's pressurized crew compartment and the Spacelab pressurized module or modules. The transfer tunnel is a cylindrical structure with an internal unobstructed diameter of 40 inches. The cylinder is assembled in sections to allow length adjustment for different module configurations. Two tunnel lengths can be used—a long tunnel of 18.88 feet and a short tunnel of 8.72 feet. The joggle section of the tunnel compensates for the 42.1-inch vertical offset of the orbiter middeck to the Spacelab pressurized module's centerline. There are flexible sections on each end of the tunnel near the orbiter and Spacelab interfaces. The tunnel is built by McDonnell Douglas Astronautics Company, Huntington Beach, Calif.

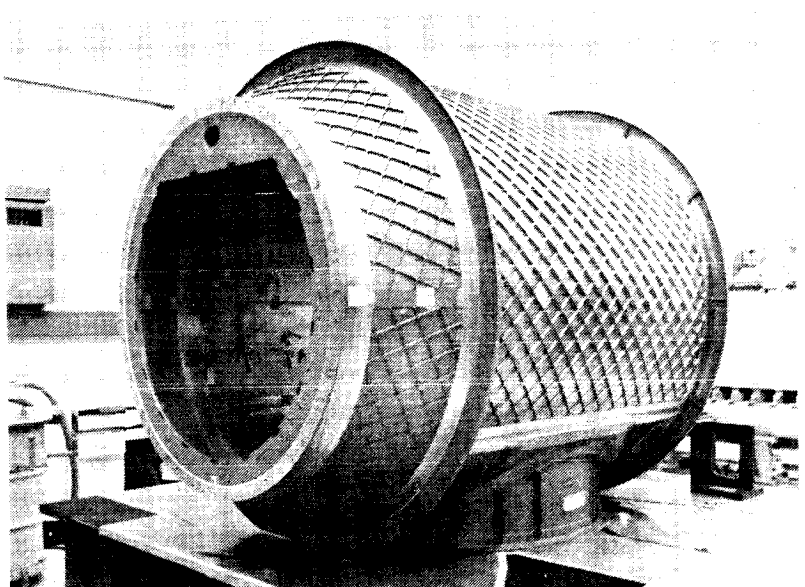

*Tunnel Adapter*

The airlock in the middeck of the orbiter, the tunnel adapter, hatches, the tunnel extension and the tunnel itself permit the flight crew members to transfer from the orbiter middeck to the Spacelab pressurized module or modules in a pressurized shirt-sleeve environment. The airlock, tunnel adapter, tunnel and Spacelab pressurized module or modules are at ambient pressure before launch. In addition, the middeck airlock, tunnel adapter and hatches permit crew members outfitted for extravehicular activity to transfer from the airlock/tunnel adapter in space suits to the payload bay without depressurizing the orbiter crew compartment and Spacelab module or modules. If an EVA is required, no flight crew members are permitted in the Spacelab tunnel or module.

**INSTRUMENT POINTING SUBSYSTEM.** Some research to be accomplished on Spacelab missions requires that instruments



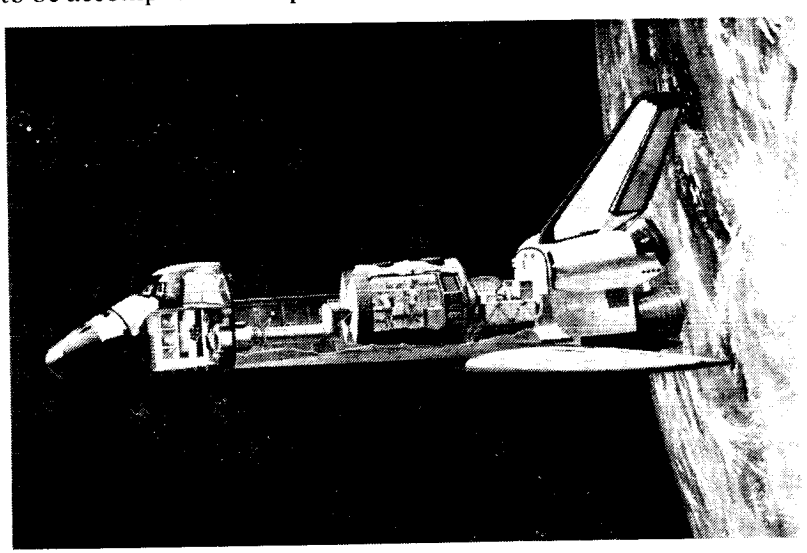

*Spacelab*

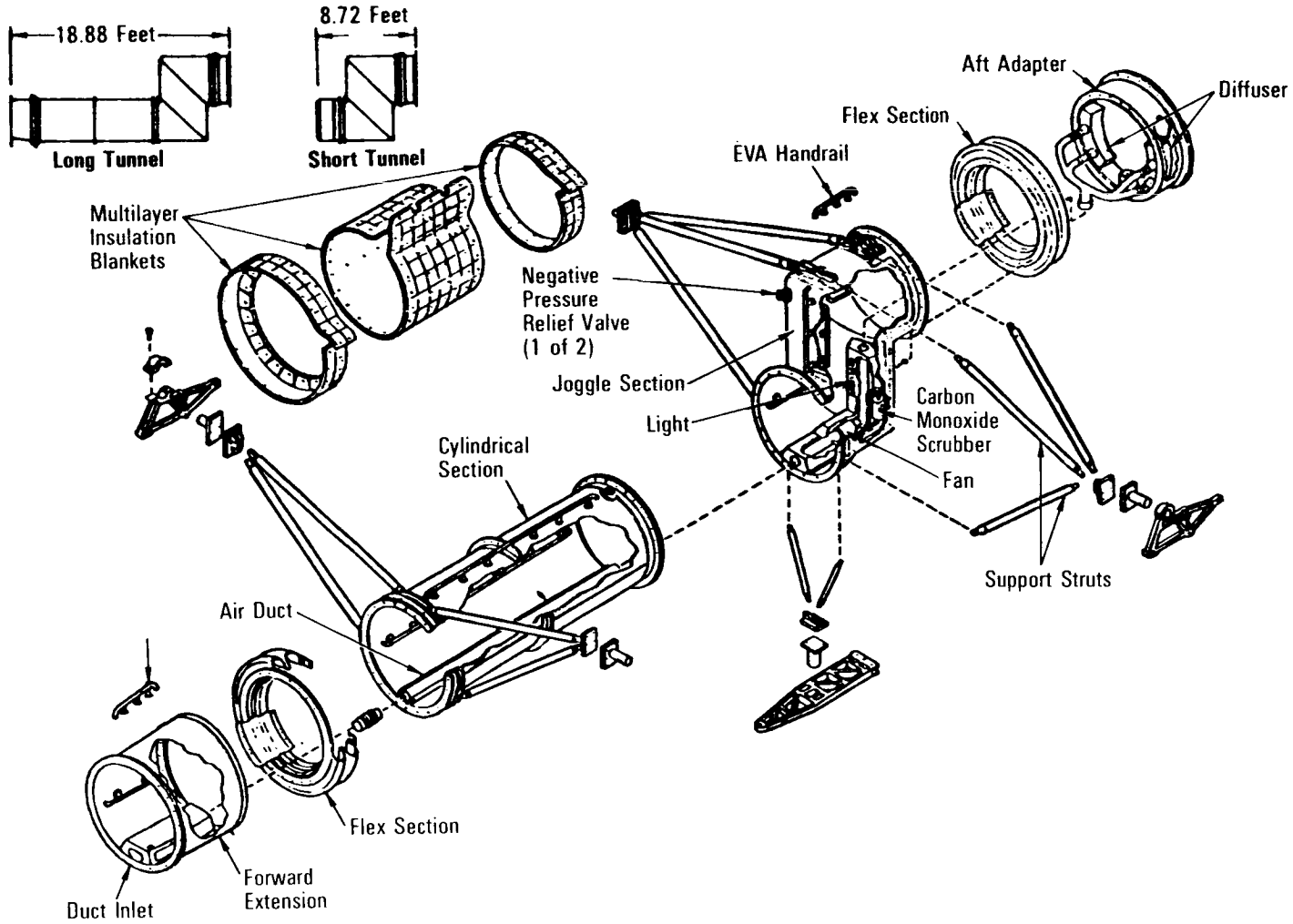


*Spacelab Transfer Tunnel*

be pointed with very high accuracy and stability at stars, the sun, the Earth or other targets of observation. The IPS provides precision pointing for a wide range of payloads, including large single instruments or a cluster of instruments or a single small-rocket-class instrument. The pointing mechanism can accommodate instruments of diverse sizes and weights (up to 15,432 pounds) and can point them to within 2 arc seconds and hold them on target to within 1.2 arc seconds.

The IPS consists of a three-axis gimbal system mounted on a gimbal support structure connected to the pallet at one end and to the aft end of a payload at the other, a payload clamping system to support the mounted experiment elements during launch and landing, and a control system based on the inertial reference of a three-axis gyro package and operated by a gimbal-mounted minicomputer.

The basic structural hardware is the gimbal system, which includes three bearing/drive units, a payload/gimbal separation mechanism, a replaceable extension column, an emergency jettisoning device, a support structure and rails, and a thermal control system. The gimbal structure itself is minimal, consisting only of a yoke, an inner gimbal and an outer gimbal to which the payload is attached by the payload-mounted integration ring.

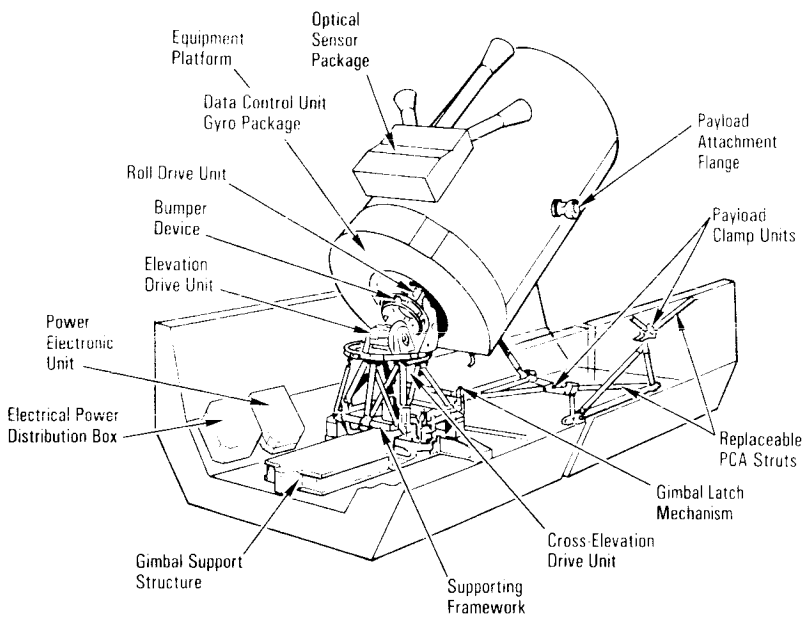


*Instrument Pointing Subsystem*

The three identical drive units are so arranged that their axes intersect at one point. From pallet to payload, the order of the axes is elevation, cross-elevation and azimuth. Each drive assembly includes three wet-lubricated ball bearings, two brushless dc-torquers and two single-speed/multispeed resolvers.

The gimbal/payload separation mechanism is located between the outer gimbal and the payload integration ring. This device prevents the payload and the pointing mechanism from exerting excessive loads on each other during launch and landing. For orbital operations, the outer gimbal and integration ring are pulled together and locked.

The operating modes of the different scientific investigations vary considerably. Some require manual control capability, others long periods of pointing at a single object, others slow scan mapping, still others high angular rates and accelerations. Performance in all these modes requires flexibility, which is achieved by computer software. The IPS is controlled through the Spacelab subsystem computer and a data display unit and keyboard. It can be operated either automatically or by the Spacelab crew from the pressurized module and also from the payload station on the orbiter aft flight deck.

The IPS has two operating modes, which depend on whether the gimbal resolver or gyro is used for feedback control of attitude. An optical sensor package consisting of one boresighted fixed-head star tracker and two skewed fixed-head star trackers is used for attitude correction and also for configuring the IPS for solar, stellar, or Earth viewing.

**PALLET ONLY**. Each pallet is more than a platform for mounting instrumentation; with an igloo attached, it can also cool equipment, provide electrical power and furnish connections for commanding and acquiring data from experiments. When only

pallets are used, the Spacelab pallet portions of essential systems required for supporting experiments (power, experiment control, data handling, communications, etc.) are protected in a pressurized, temperature-controlled igloo housing.

The pallets are designed for large instruments, experiments requiring direct exposure to space or systems needing unobstructed or broad fields of view, such as telescopes, antennas and sensors (e.g., radiometers and radars). The U-shaped pallets are covered with aluminum honeycomb panels. A series of hard points attached to the main pallet structure is provided for mounting heavy payload equipment. Up to five segments can be flown on a single mission. Each pallet train is held in place in the payload bay by a set of five attach fittings, four longeron sill fittings and one keel fitting. Pallet-to-pallet joints are used to connect the pallets to form a single rigid structure called a pallet train. Twelve joints are used to connect two pallets.

Cable ducts and cable support trays can be bolted to the forward and aft frame of each pallet to support and route electrical cables to and from the experiments and subsystem equipment mounted on the pallet. All ducts mounted on the starboard (right) side of the pallet are used to route subsystem cables, and all ducts on the port (left) side carry experiment utility cables. The ducts and cable trays are made of aluminum alloy sheet metal. In addition to basic utilities, some special accommodations are available for pallet-mounted experiments.

The igloo is attached vertically to the forward end frame of the first pallet. Its outer dimensions are approximately 7.9 feet in height and 3.6 feet in diameter. The igloo is a closed cylindrical shell made of aluminum alloy. A removable cover allows full access to the interior. The igloo houses subsystems and equipment in a pressurized, dry-air environment at sea-level atmospheric pressure (14.7 psia). Two feedthrough plates accommodate utility lines and a pressure relief valve. The igloo is covered with multilayer insulation.

**ELECTRICAL POWER.** The Spacelab electrical power distribution subsystem controls and distributes main, essential and emergency dc and ac power to Spacelab subsystems and experiment equipment. Orbiter fuel cell power plants 2 and 3 provide dc power to orbiter main buses B and C, respectively. In addition, through the orbiter main bus tie system (managed and controlled from orbiter display and control panels R1 and F9), dc power is distributed from orbiter main bus C to the orbiter primary payload 1 bus and the Spacelab power control box through four (redundant) main dc power feeders. The orbiter electrical power distribution system is capable of distributing 7 kilowatts maximum continuous (12 kilowatts peak) power to Spacelab subsystems and experiments during on-orbit phases. This is equivalent to supply-

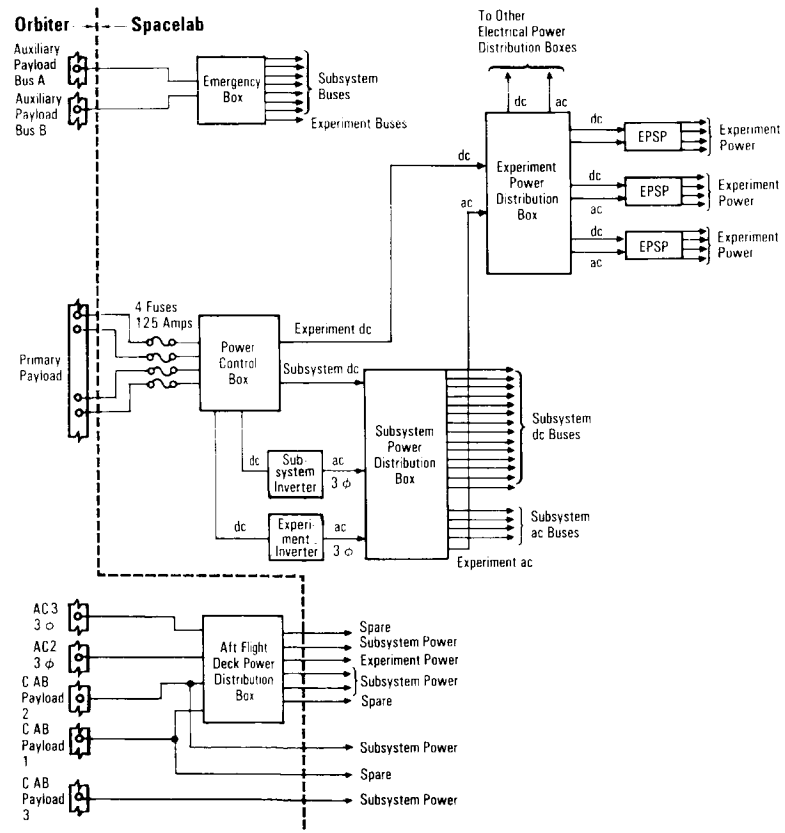


*Orbiter Spacelab Electrical Power Distribution*

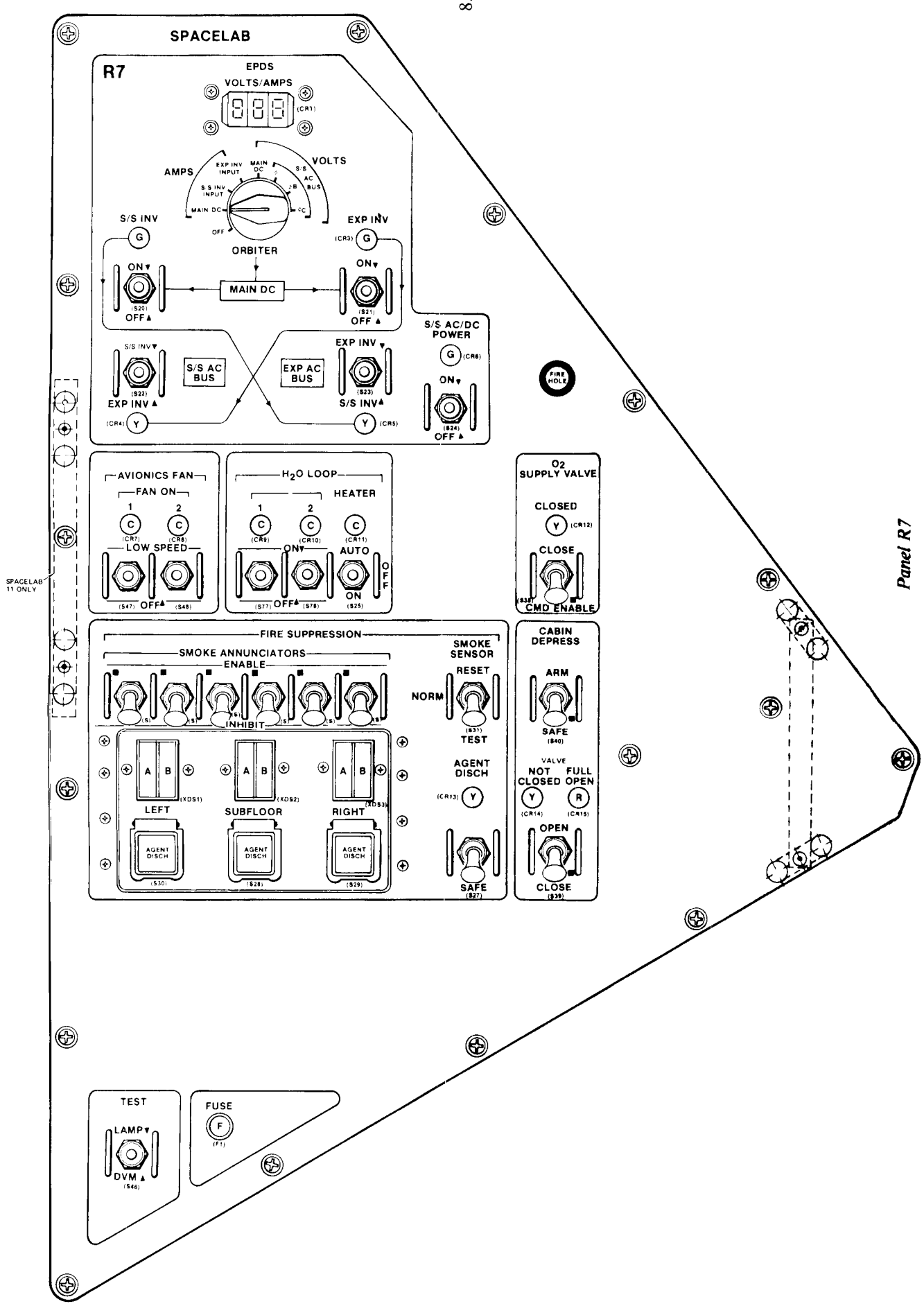
SPACELAB
R7
EPDS
VOLTS/AMPS
(CR1)
AMPS
VOLTS
EXP INV INPUT
MAIN DC
S/S AC BUS
S/S INV INPUT
MAIN DC
OFF
ORBITER
S/S INV
G
EXP INV
(CR3)
G
ON
(S20)
OFF
MAIN DC
ON
(S21)
OFF
S/S AC/DC POWER
G
(CR6)
ON
(S24)
OFF
S/S INV
(S22)
EXP INV
S/S AC BUS
EXP AC BUS
EXP INV
(S23)
S/S INV
(CR4)
Y
Y
(CR5)
FIRE HOLE
AVIONICS FAN
FAN ON
1
2
C
C
(CR7)
(CR8)
LOW SPEED
(S47)
OFF
(S48)
H2O LOOP
HEATER
1
2
C
C
C
(CR9)
(CR10)
(CR11)
ON
AUTO
OFF
(S77)
OFF
(S78)
ON
(S25)
O2 SUPPLY VALVE
CLOSED
Y
(CR12)
CLOSE
(S38)
CMD ENABLE
SPACELAB 11 ONLY
FIRE SUPPRESSION
SMOKE ANNUNCIATORS
ENABLE
INHIBIT
SMOKE SENSOR
RESET
NORM
(S31)
TEST
AGENT DISCH
(CR13)
Y
SAFE
(S27)
A
B
(XDS1)
LEFT
AGENT DISCH
(S30)
A
B
(XDS2)
SUBFLOOR
AGENT DISCH
(S28)
A
B
(XDS3)
RIGHT
AGENT DISCH
(S29)
CABIN DEPRESS
ARM
SAFE
(S40)
VALVE
NOT CLOSED
FULL OPEN
Y
R
(CR14)
(CR15)
OPEN
CLOSE
(S39)
TEST
LAMP
DVM
(S46)
FUSE
F
(F1)

Panel R7

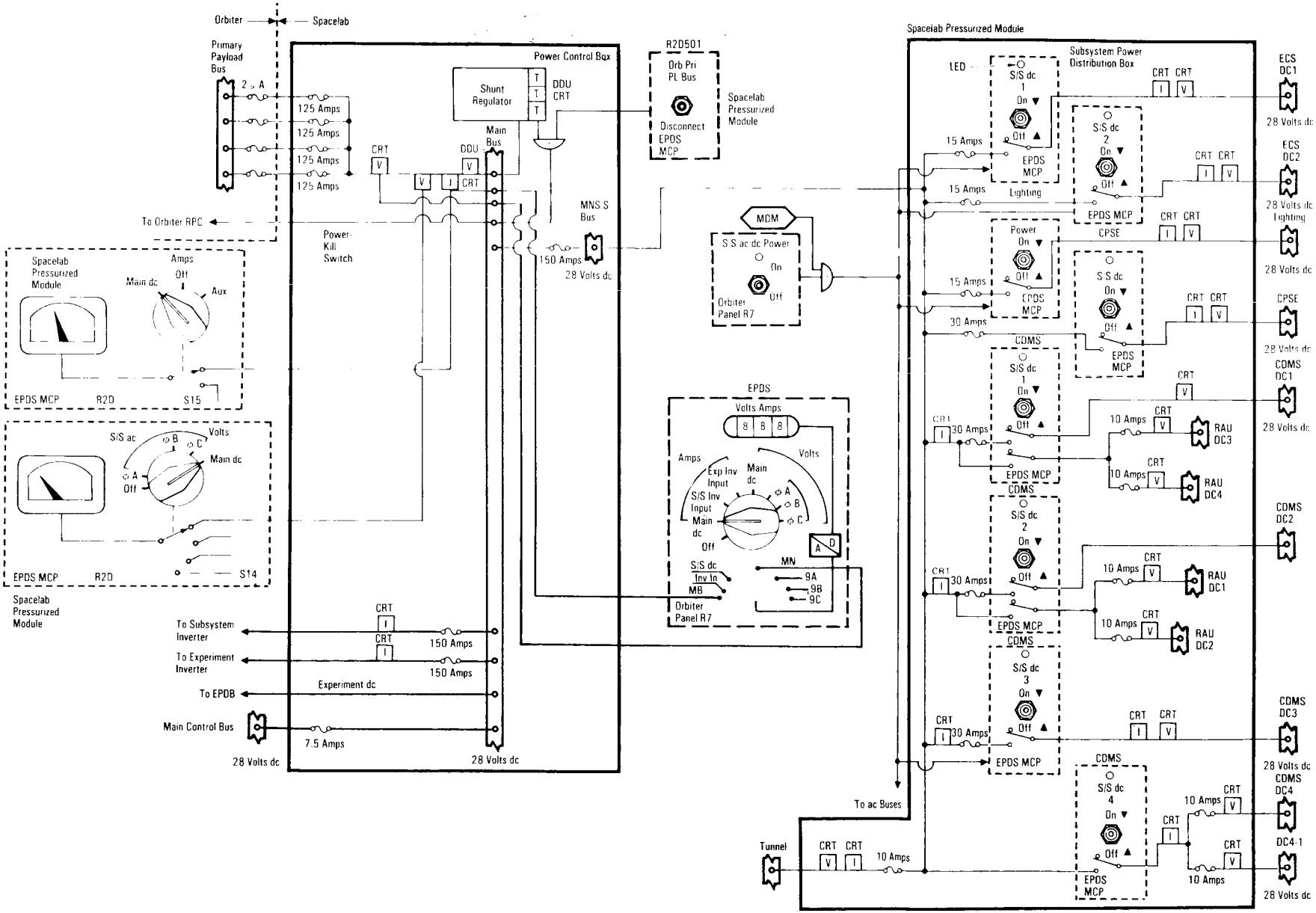


*Orbiter-to-Spacelab Electrical Power Distribution—Subsystem dc Power Distribution*



LIBRARY
National Aeronautics and Space Administration
Washington, D.C. 20546

ing 14 average homes with electrical power. If a single fuel cell fails on orbit, the system remains operational with a maximum power level of 5 kilowatts continuous and 8 kilowatts peak.

The primary dc power received in the Spacelab from the orbiter primary payload bus is nominally 28 volts, a maximum of 32 volts and a worst-case minimum of 23 volts. The four redundant power feeders from the orbiter supply the Spacelab power control box with power through 125-amp fuses. Spacelab main bus voltage and current readings are available on orbiter CRT Spacelab displays. For the igloo/pallet configuration, the main bus dc voltage and amperage are also available to the flight crew from the EPDS *volts/amps* digital meter and rotary switch on panel R7 at the orbiter crew compartment aft flight deck mission specialist station. The Spacelab power control box is installed in the subfloor of the Spacelab pressurized core segment and in the igloo of the pallet-only configuration.

In the Spacelab pressurized module configuration, the main dc voltage and amperage are available in the pressurized module on the control center rack EPDS monitoring and control panel. The voltage reading is obtained by setting the *volts* rotary switch on the EPDS MCP to the *main dc* position, and the amperage reading is obtained by setting the *amps* rotary switch to the *main dc* position. The meters on the EPDS MCP panel have only colored zones to indicate nominal (green) or off-nominal (red) readings. The amp readout for main dc power has an additional color field (yellow) to indicate a peak power loading condition.

In the pressurized module configuration, the EPDS MCP provides a manually operated *orb PRI PL bus* disconnect switch, which acts as a kill-power switch for the main dc power to the module. When this switch is positioned momentarily to the *disconnect* position, all Spacelab subsystem functions supplied by normal dc and ac power cease to operate, and the Spacelab water pump, Freon pump and avionics delta pressure caution channels are activated.

The Spacelab subsystem power distribution box distributes the subsystem dc bus and ac bus power into subsystem-dedicated feeders. In the pressurized module configuration, all outputs except the tunnel and environmental control subsystem ac and experiment ac outputs are remotely switched by latching relays. Power protection circuits and command activation are controlled by the remote amplification and advisory box. In the subsystem power distribution box, the dc power line feeds several subsystem power buses controlled by switches on the electrical power distri-

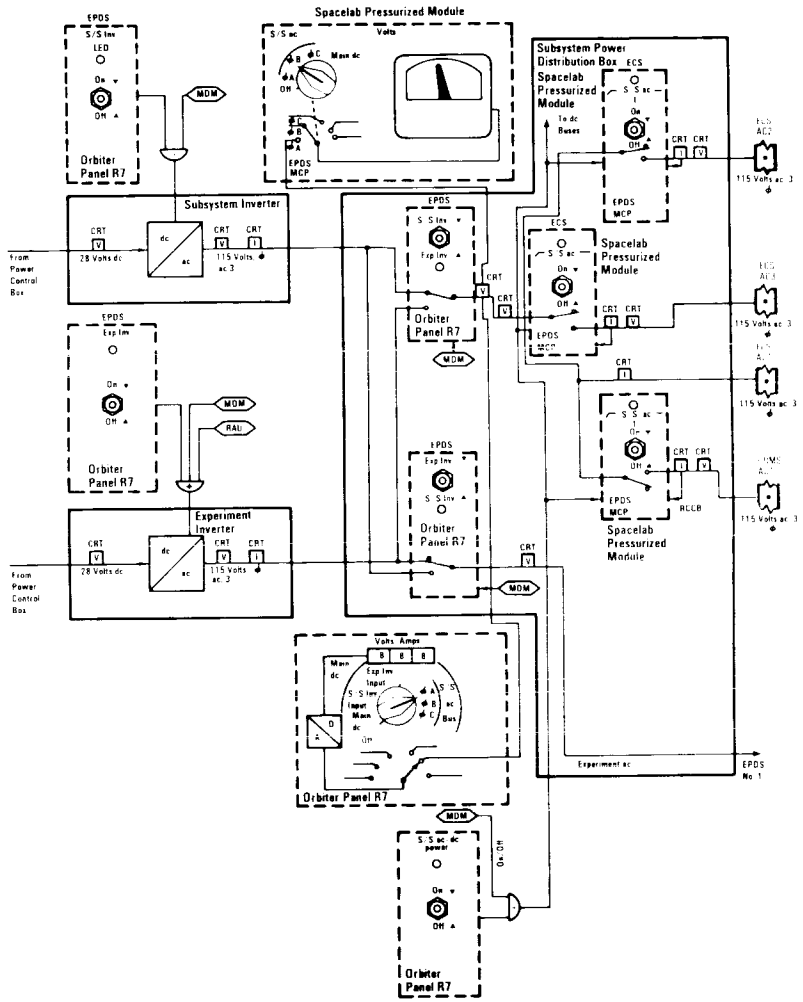


*Spacelab Electric Power Distribution—Subsystem ac Power Distribution*

bution subsystem monitoring and control panel. In the pallet-only configuration, all outputs are remotely switched by latching relays.

Various Spacelab systems' operations are controlled on orbit from panel R7 in the orbiter crew compartment aft flight station. In either the pallet-only or pressurized module configuration, Spacelab power protection circuits and command activation are controlled from the remote amplification and advisory box. The subsystem power distribution box is controlled by the *S/S ac/dc power on/off* switch on the orbiter aft flight deck panel R7 or by an item command on several orbiter CRT Spacelab displays. The status of this switch on panel R7 is displayed on the orbiter CRT and indicated by a green LED above the manual switch on panel R7. The voltages and currents of the various Spacelab subsystem buses are also available to the flight crew on the orbiter CRT Spacelab subsystem power display.

The dc power in the Spacelab power control box is directed through two parallel 150-amp fuses, one to the Spacelab subsystem dc/ac inverter and the other to a Spacelab experiment dc/ac inverter. Normally, only the subsystem inverter is used to power both subsystem and experiment ac requirements, and the experiment inverter is used as a backup. Each inverter generates three-phase ac power at 117/203 volts, 400 hertz. It is possible to connect the ac experiment bus to the subsystem inverter and, conversely, the subsystem ac bus to the experiment inverter.

In the Spacelab pressurized module configuration, the inverters are mounted on cold plates in the control center rack of the core segment. In the pallet-only configuration, the inverters are mounted on cold plates on the first (forward) pallet in the orbiter payload bay.

The Spacelab subsystem inverter is activated by the *S/S inv on/off* switch on panel R7 or by orbiter Spacelab CRT command. Positioning the switch to *on* activates the subsystem inverter, and a green LED above the switch on panel R7 is illuminated, indicating the inverter is operating. Positioning the momentary left *S/S inv, exp inv* switch to *S/S inv* permits the subsystem inverter to supply ac power to the Spacelab subsystem ac bus. Similarly, positioning the momentary right *S/S inv, exp inv* switch to *S/S inv* supplies ac power to the experiment ac bus, and the yellow light below the switch is illuminated to indicate the subsystem inverter is supplying the experiment ac bus.

The Spacelab experiment inverter is activated by the *exp inv on/off* switch on panel R7 or by orbiter Spacelab CRT command. Positioning the switch to *on* activates the experiment inverter, and a green LED light above the switch is illuminated, indicating the inverter is in operation. Positioning the momentary right *exp inv, S/S inv* switch to *exp inv* supplies ac power to the experiment ac bus. Positioning the momentary left *S/S inv, exp inv* switch to *exp inv* supplies ac power to the subsystem ac bus, and the yellow light below the switch is illuminated to indicate the experiment inverter is supplying the subsystem ac bus.

The switching of Spacelab inverters between the two ac power buses may also be commanded and monitored through the orbiter CRT Spacelab subsystem ac power supply. Readings presented on the orbiter CRT display include inverter on/off status, inverter output voltage, inverter input voltage and inverter output current. The subsystem inverter input, experiment inverter input and main dc amps are available via the digital readout and rotary switch on panel R7. The main dc and subsystem ac bus phase A, B and C volts also are available via the digital readout and rotary switch on panel R7. In the Spacelab pressurized module configuration, the Spacelab EPDS monitoring and control panel provides a color readout of each subsystem ac phase.

The Spacelab inverters are protected against overvoltage and overcurrent. They are shut down automatically if the voltage exceeds 136 volts root mean square per phase. Current levels are limited to 12 amps rms per phase, and all three phases are shut down if one phase draws a current of 10 amps rms for 120 seconds.

In the pressurized module configuration, the subsystem power distribution box ac bus feeds several Spacelab subsystem power buses controlled by switches on the Spacelab EPDS MCP.

All functions on this panel can be initiated simultaneously by the *S/S ac/dc power on/off* switch on orbiter panel R7 or by item commands from the orbiter CRT Spacelab displays. The status of the commanded relays is available via orbiter CRT Spacelab displays and indicated by the green LED light above the respective switch on panel R7.

In the pallet-only configuration, subsystem ac bus power feeds several Spacelab subsystems' power buses, which can be initiated by the *S/S ac/dc power on/off* switch on orbiter panel R7 or by item commands from the orbiter CRT Spacelab displays. The status of the commanded relays is available via orbiter CRT Spacelab displays and the green LED light above the respective switches on panel R7.

Emergency and essential dc power for the pressurized module configuration is provided by the orbiter auxiliary payload buses A and B to the Spacelab emergency box. The Spacelab emergency box supplies emergency and essential power for Spacelab critical environmental control subsystem sensors and valves, fire and smoke suppression equipment, ECS water line heaters, module emergency lighting, tunnel emergency lighting, the Spacelab intercom system and the Spacelab caution and warning panel. The outputs are protected by fuses. One separately fused outlet, an experiment essential bus, is dedicated to experiments. This power is available during all flight phases and when degraded power is delivered to Spacelab. The Spacelab emergency box is located in the subfloor of the core segment.

Emergency and essential dc power for the pallet-only configuration is also provided by orbiter auxiliary payload buses A and B, which send dc power to the Spacelab emergency box located in the igloo. The Spacelab emergency box provides emergency or essential power to Spacelab subsystem equipment. The outputs are protected by fuses. One separately fused outlet, an experiment essential bus, is dedicated to experiments. The Spacelab emergency box is in the igloo. This power is available during all flight phases and when degraded power is delivered to Spacelab.

In the Spacelab pressurized module configuration, experiment power distribution boxes provide distribution, control and monitoring facilities for the experiment electrical power distribution system, which consists of a nominal redundant 28-volt experiment main dc supply and a 115-volt, 400-hertz ac experiment supply. One distribution box (EPDB 1) is located under the core segment floor on a support structure; for the long module configuration, two additional units (EPDBs 2 and 3) are installed. In the pallet-only configuration, the experiment power distribution box is mounted with other assemblies with an adapter plate on a cold plate that is fitted on a support structure and attached to the pallet.

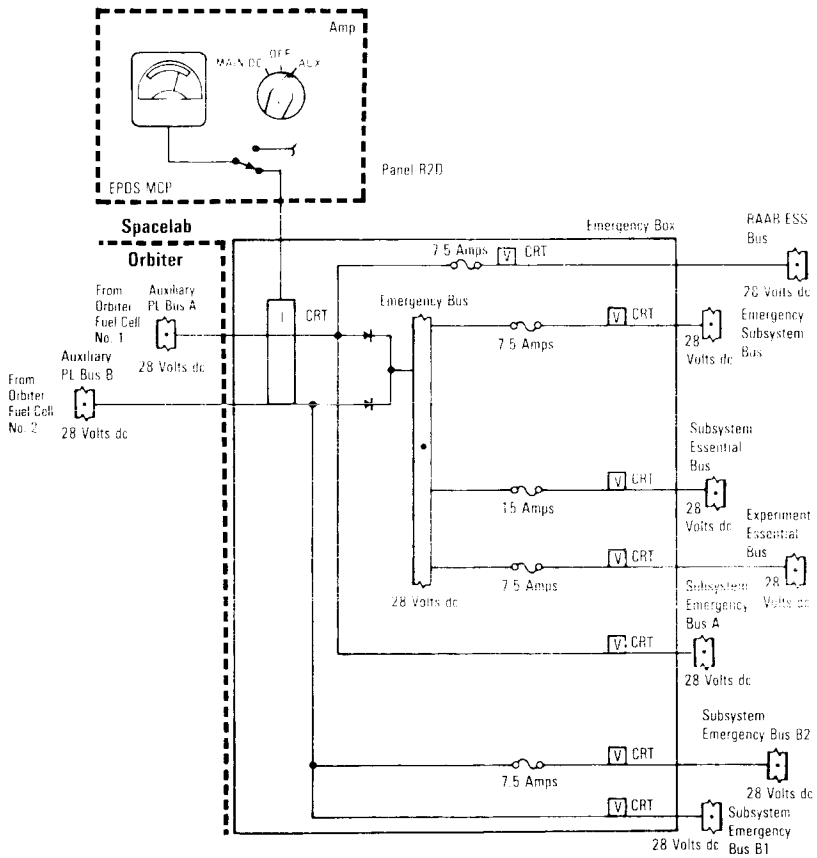


*Spacelab Pressurized Module Emergency and Essential Power Distribution*

The orbiter pressurized module CRT Spacelab displays present emergency and essential bus current, voltages for auxiliary buses A and B, output voltages for Spacelab subsystem emergency buses, output voltage for the Spacelab subsystem essential bus and output voltage for the Spacelab remote amplification and advisory box essential bus. The orbiter CRT Spacelab displays for activation/deactivation, subsystem dc power and system summary indicate an undervoltage condition for auxiliary buses A and B.

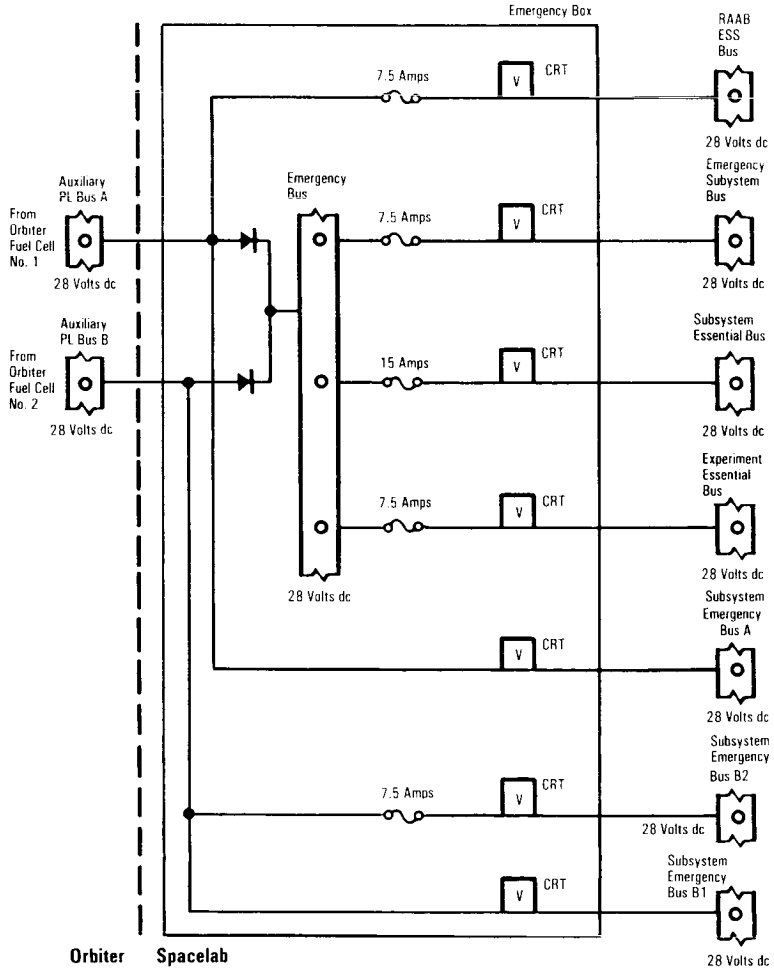


*Spacelab Pallet Emergency and Essential Power Distribution*

Nominal auxiliary bus amperage from the orbiter can be monitored on the *amps* meter (color zone only) of the Spacelab EPDS monitoring and control panel.

In the pallet-only configuration, the orbiter CRT Spacelab displays include emergency and essential bus current, voltages for auxiliary buses A and B, output voltages for Spacelab subsystem emergency buses, output voltage for the Spacelab subsystem essential bus and output voltage for the Spacelab remote amplification and advisory box essential bus. The orbiter CRT Spacelab activate/deactivate, Spacelab subsystem dc power and Spacelab system summary displays will indicate an undervoltage condition for auxiliary buses A and B.

The Spacelab power distribution box at the orbiter aft flight deck payload station distributes dc and ac power to the Spacelab

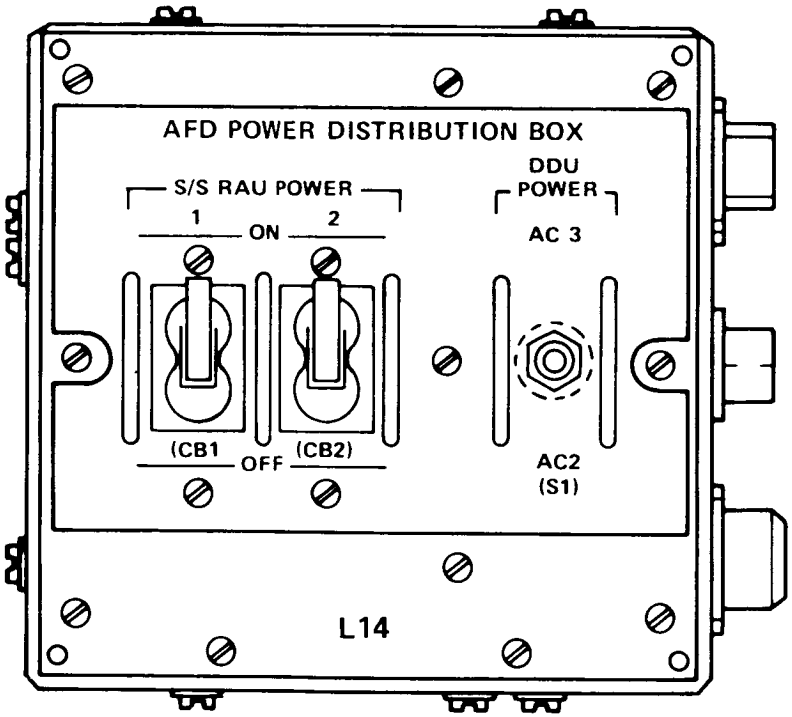


*Panel L14*

subsystem remote acquisition unit and the Spacelab data display system (a data display unit and keyboard). When a Spacelab data display system is installed at the mission station, ac power is provided from orbiter ac bus 2 or 3 via the orbiter mission station distribution panel.

Spacelab subsystem remote acquisition unit dc power comes from orbiter fuel cell 1 main bus A through auxiliary payload bus A and from orbiter fuel cell 2 main bus B to auxiliary payload bus B through the payload station distribution panel. This power is not affected by the kill switch of the primary payload bus. The aft flight deck power distribution panel L14 *S/S RAU power 1 on/off* and *S/S RAU power 2 on/off* circuit breakers are used to feed power to the RAU from either bus.

Control of the ac power supplied to the Spacelab DDU and keyboard from orbiter ac buses 2 and 3 is made possible by positioning the panel L14 *DDU power* switch to *AC2* or *AC3*. This 115-volt ac, three-phase, 400-hertz power is available only during on-orbit flight phases. Panel L14 provides no fuse protection.

In the pallet-only configuration, ac power is supplied to the Spacelab pallet or pallets from orbiter ac buses 2 and 3 by positioning the panel L14 *DDU power* switch to *AC2* or *AC3*. This power (115 volts ac, three phase, 400 hertz) is available only during on-orbit flight phases.

In the Spacelab module, the experiment power switching panel provides facilities for branching and switching dc and ac power delivered by a dedicated experiment power control box. The dc and ac output is distributed to experiments and experiment-supporting RAUs (dc only). The number of switching panels and their locations depend on the mission configuration.

The orbiter crew compartment aft flight deck panel configurations vary for Spacelab pressurized module configurations and pallet-only configurations. A Spacelab pressurized module configuration may consist of a payload specialist station data display unit at panel L11, a standard switch panel at panel L12, a keyboard at panel L11, a systems management tone generator and interconnect station at panel L14, a mission specialist station with a data display system and interconnect station at panel R14, and a floor-mounted remote acquisition unit at the payload station.

A pallet-only configuration may consist of a payload specialist station data display system at panel L11, a Spacelab-unique switch panel at panel L12, a video tape recorder at panel R11, a

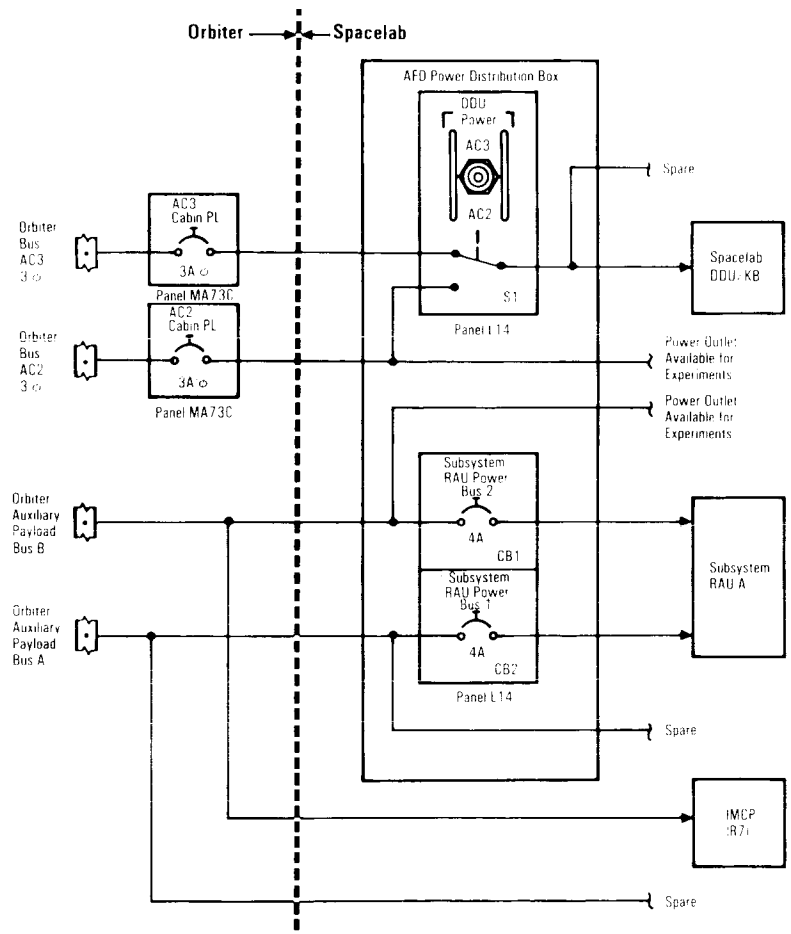


*Pressurized Module Configuration—Orbiter Aft Flight Deck Power Distribution*

high-data-rate recorder at panel L10, a systems management tone generator and interconnect station at panel L14, a Spacelab power distribution box at panel L14, and a floor-mounted Spacelab RAU at the payload station.

**COMMAND AND DATA MANAGEMENT SYSTEM.** The Spacelab command and data management system provides a variety of services to Spacelab experiments and subsystems. Most

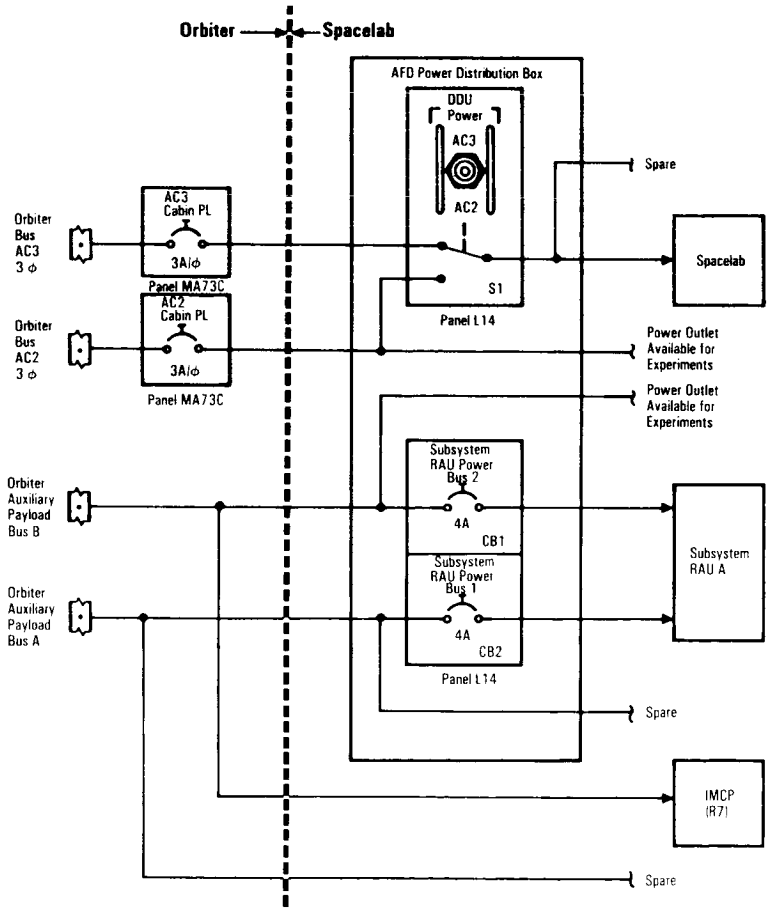


*Pallet-Only Configuration—Orbiter Aft Flight Deck Power Distribution*

of the CDMS commands are carried out through the use of the computerized system aboard Spacelab, called the data processing assembly. The DPA formats telemetry data and transfers the information to the orbiter for transmission, receives command data from the orbiter and distributes them to Spacelab subsystems, transfers data from the orbiter to experiments, and distributes timing signals from the orbiter to experiments.

The CDMS includes three identical computers and assorted peripherals. One computer is dedicated to Spacelab experiments, one supports Spacelab subsystems, and the third is a backup. The flight crew monitors and operates Spacelab subsystems and payload experiments through data display and keyboard units. The three identical MATRA 125/MS computers have a main memory capacity of 64K 16-bit words. These three computers will eventually be changed to the upgraded AP-101SL orbiter computers. The experiment computer activates, controls and monitors payload operations and provides experiment data acquisition and handling. The subsystem computer provides control and data management for basic Spacelab services that are available to support experiments, such as electrical power distribution, equipment cooling and scientific airlock operations (in the case of the pressurized module). The backup computer can function in the place of either computer.

An input/output unit buffers all communications between the computer and the rest of the subsystem. The experiment computer also has at least one RAU (and as many as eight, depending on the payload) for interfacing between experiments and the subsystem. The subsystem computer may have as many as nine acquisition units, depending on the Spacelab configuration.

The experiment and subsystem computers and their associated input/output units, as well as the shared mass memory unit and backup computer, are located in the workbench rack of the pressurized module core segment. In the pallet-only configuration, they are located in the igloo.

**Mass Memory Unit.** The MMU is a tape recorder that contains all of the operating system and applications software for the

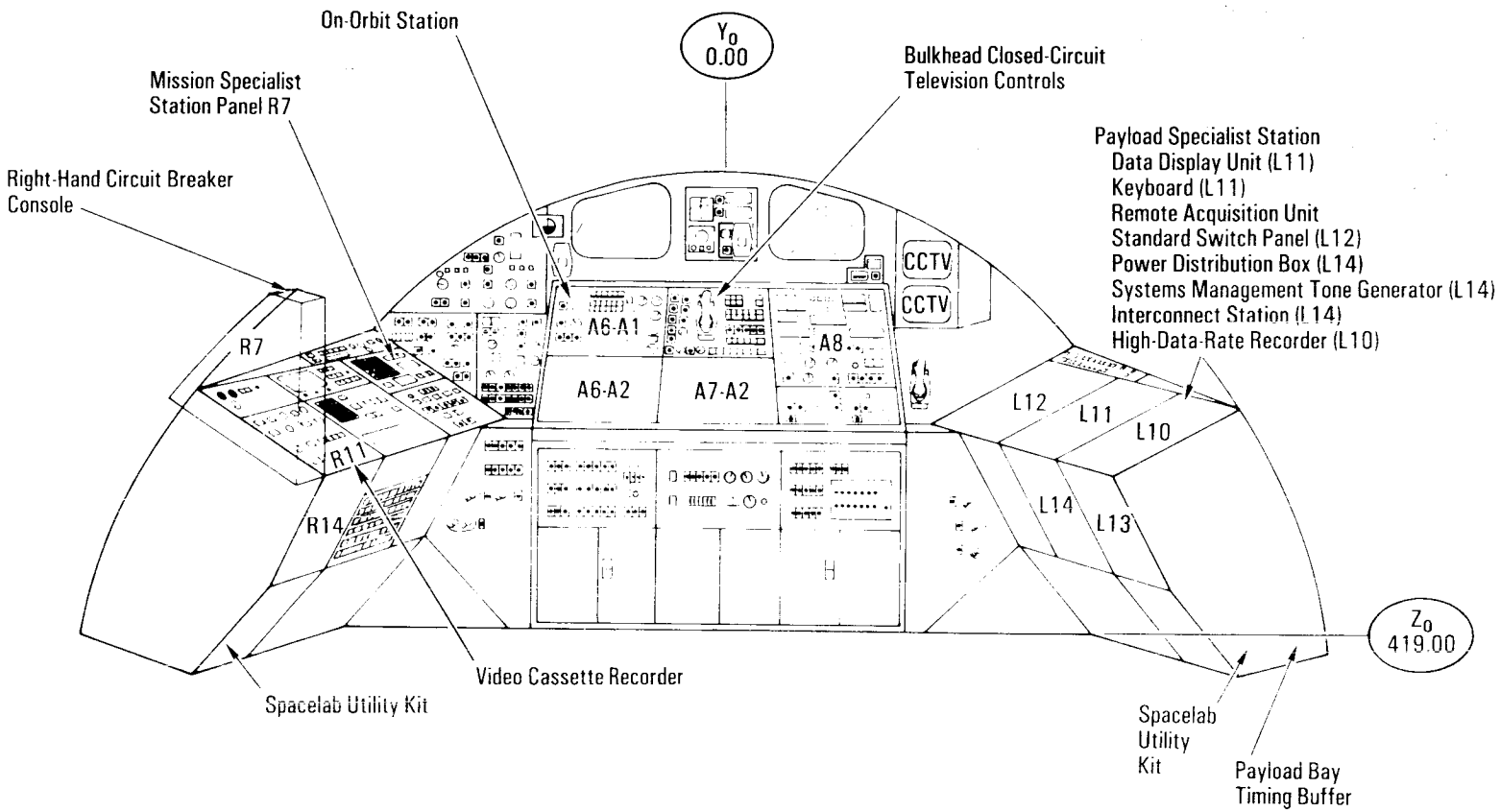


*Example of a Spacelab Pressurized Module Aft Flight Deck Panel Configuration*

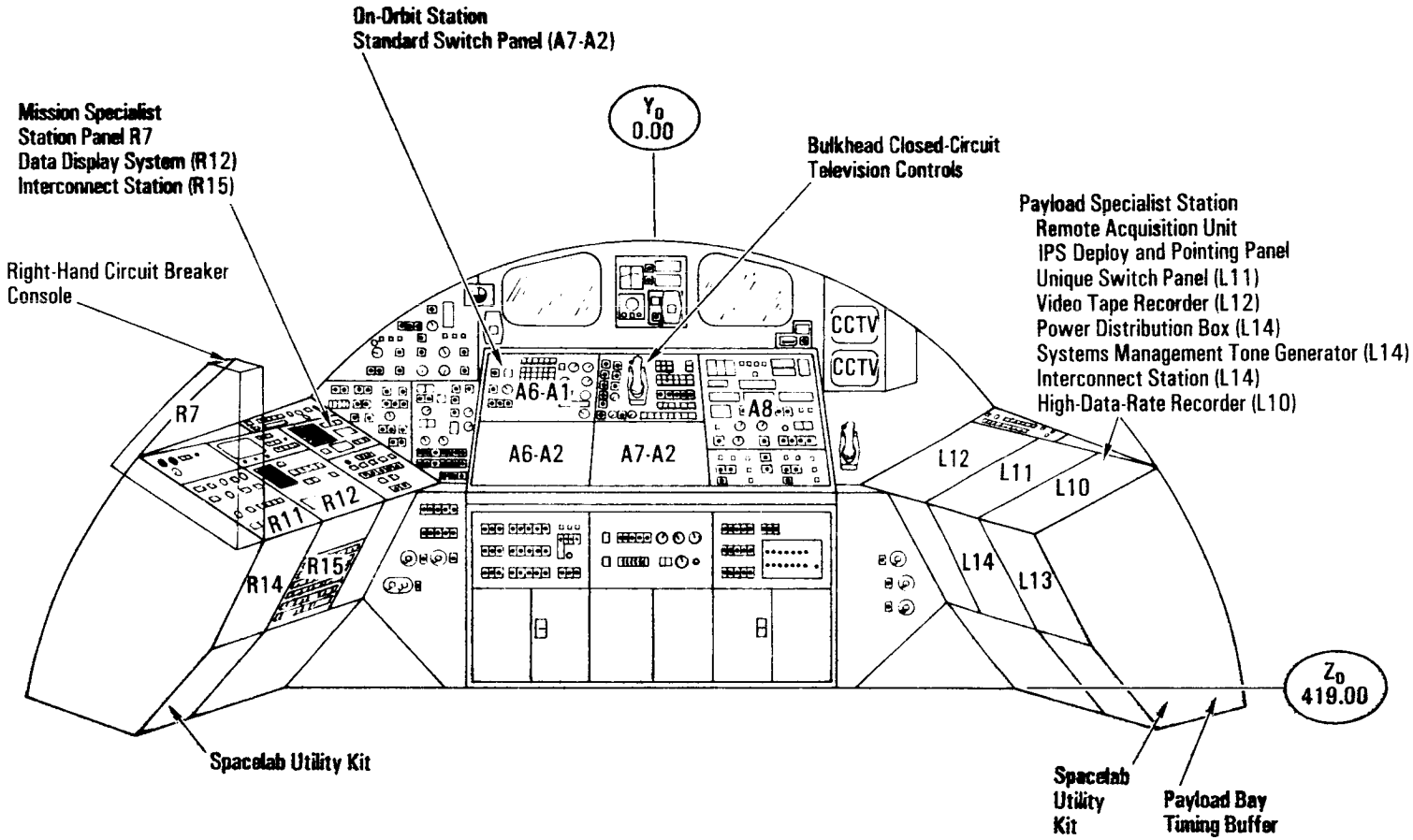


*Example of a Spacelab Pallet-Only Aft Flight Deck Panel Configuration*

subsystem and experiment computers. The memory unit provides the initial program load for the Spacelab subsystem, experiment and backup computers; it can also be used to completely reload computer memory if required. The MMU stores various files, time lines and displays. Writing onto the unit during flight is possible. Approximately half of the unit's storage capability is available for software and data supporting Spacelab experiments.

**Data Display Systems**. The data display systems are the primary onboard interface between the CDMS and the Spacelab flight crew. Each display system consists of a keyboard and a CRT data display unit. One display is located at the orbiter aft flight deck station, one at the control center rack in the pressurized module and, possibly, one at the experiment rack in the pressurized module. In the pallet-only configuration, two CRTs and DDUs can be located at the crew compartment aft flight deck station.

The keyboard consists of 25 function keys and 43 alphabet, numeral, punctuation and symbol keys of the familiar standard typewriter keyboard as well as the standard typewriter action keys, such as space and backspace. The data display unit is a 12-inch diagonal CRT screen providing a 22-line display (47 characters per line) in three colors (green, yellow and red). In addition to 128 alphanumeric symbols, the unit can also display vector graphics (1,024 different lengths and 4,096 angles). A high-intensity green flashing mode is also provided.

The display units are connected to the experiment and subsystem input/output units. Each data display unit can present information from both computers simultaneously, and each keyboard can communicate with either computer. Flight crew members can call various displays onto the screen from the keyboard for experiment evaluation and control.

Command and data management system software consists of experiment computer software and subsystem computer software, each of which includes operating systems and applications. Within the experiment computer both the operating system and the application software are wholly dedicated to the direct support of Spacelab payload experiments. The operating system provides such general services as activation, control, monitoring and deactivation of experiments as well as experiment data acquisition, display and formatting for transmission. Application software is developed for experiments that have data handling requirements beyond the capabilities of the operating system.

The subsystem computer functions mainly to monitor and control other Spacelab subsystems and equipment, such as the electrical power distribution subsystem and the environmental

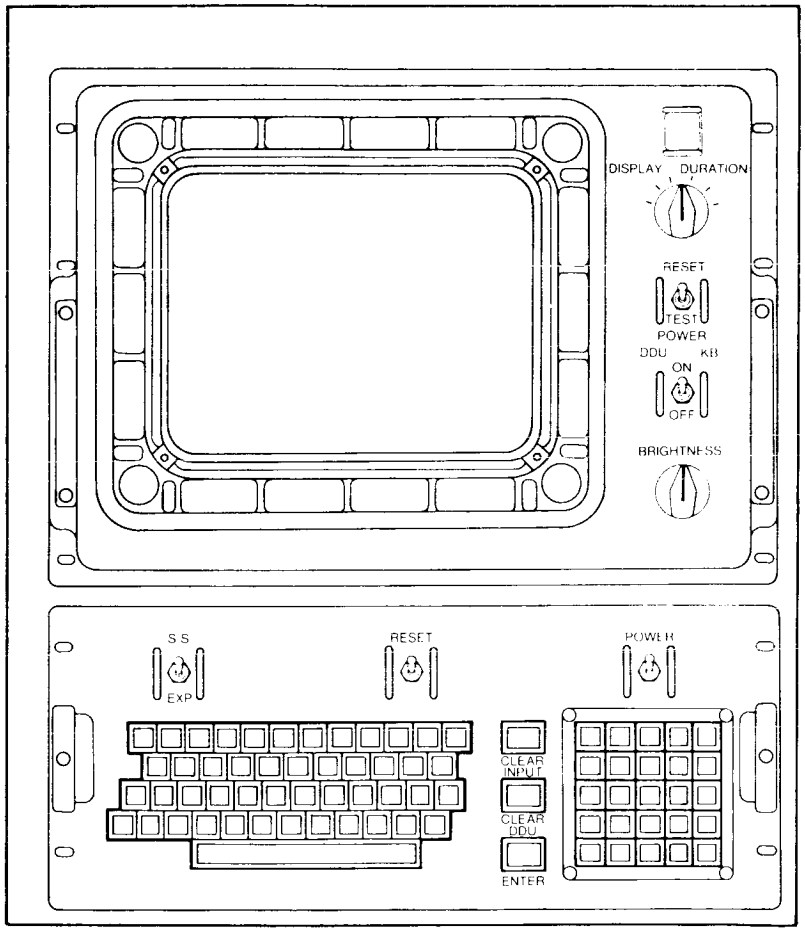


*Data Display Unit and Keyboard*

control subsystem. These functions are performed by the subsystem computer operating software.

Two orbiter payload multiplexers/demultiplexers (PF1 and PF2) are used for data communications between the orbiter general-purpose computers and the Spacelab CDMS computers. The payload MDMs are under orbiter GPC control. The orbiter pulse code modulation master units under control of the orbiter computers can access Spacelab data for performance monitoring and limit sensing. The PCMMUs contain a fetch command sequence and a random-access memory for storing fetched data. Data from the PCMMU RAM are combined with orbiter pulse code modulation data and sent to the orbiter network signal processors for transmission on the return link (previously referred to as downlink) through S-band or Ku-band. The 192-kbps data stream normally carries 64 kbps of Spacelab experiment and subsystem data.

The Spacelab experiment computer interfaces with two telemetry systems. The orbiter PCMMU allows the orbiter to acquire data for onboard monitoring of systems and provides the Mission Control Center in Houston with system performance data for real-time display and recording through the orbiter network signal processor and S-band or Ku-band. The other telemetry system, the Spacelab high-rate multiplexer, is a high-rate link to the Ku-band signal processors that sends scientific data to the Payload Operations Control Center for real-time display and to the Goddard Space Flight Center for recording.

Spacelab high-rate data acquisition is provided by a high-rate multiplexer and a high-data-rate recorder. The HRM multiplexes up to 16 experiment channels, each with a maximum of 16 Mbps, two direct-access channels with data rates up to 50 Mbps, data from the Spacelab subsystem computer, experiment data from the Spacelab experiment computer, and up to three analog voice channels from the Spacelab intercom master station in the pressurized module configuration. The three digitized channels are premultiplexed onto a single 128-kbps channel for interleaving in the format along with Greenwich Mean Time signals from the orbiter master timing unit. This composite output data steam is routed to the Ku-band signal processor for transmission on Ku-band or is sent to one of the two recorders. The HRM is located on the control center rack in the pressurized module and in the igloo for the pallet-only configuration.

In the pressurized module, the high-data-rate recorder is located at the control center rack next to the data display system; in the pallet-only configuration, it is at the aft flight deck panel L10. It records real-time, multiplexed data or data from two direct-access channels and stores the information at rates from 1 to 32 Mbps during mission periods with no downlink capability or degraded downlink capability for playback when the capability is available. The HDRR dumps in reverse order at 2, 4, 8, 12, 16, 24 or 32 Mbps. At a rate of 32 Mbps, a tape runs for 20 minutes. The recorder can be changed manually by the flight crew; however, no tape changes are planned because the time required to change tapes is very long and it is much more efficient to dump the tape.

The orbiter payload recorder serves as a backup for the Spacelab HDRR for data rates from 0.125 to 1 Mbps and can record only real-time, multiplexed data. The orbiter payload timing buffer provides mission elapsed time and Greenwich Mean Time; and the master timing unit provides 100-hertz, 1-kHz, 1,024-kHz and 4,608-kHz timing signals to the Spacelab data processing assembly. Activation of the Spacelab DPA is controlled and monitored from the orbiter CRT Spacelab displays.

**Closed-Circuit Television**. The Spacelab pressurized module video system interfaces with the orbiter closed-circuit television system and the orbiter Ku-band signal processor. The orbiter CCTV system accepts three video inputs from the Spacelab system. The orbiter monitors the TV received and/or transmits it to telemetry. A sync command signal provided by the orbiter synchronizes and remotely controls cameras within Spacelab. The orbiter also has one video output for a Spacelab TV monitor. The Spacelab accommodates a video switching unit that enables Spacelab video recorder capability. The Spacelab analog channel for experiments is directed to the orbiter Ku-band signal processor at 3 to 4.5 MHz.

In the pallet-only configuration, the orbiter's CCTV can be used along with a video tape recorder. The TV cameras installed in

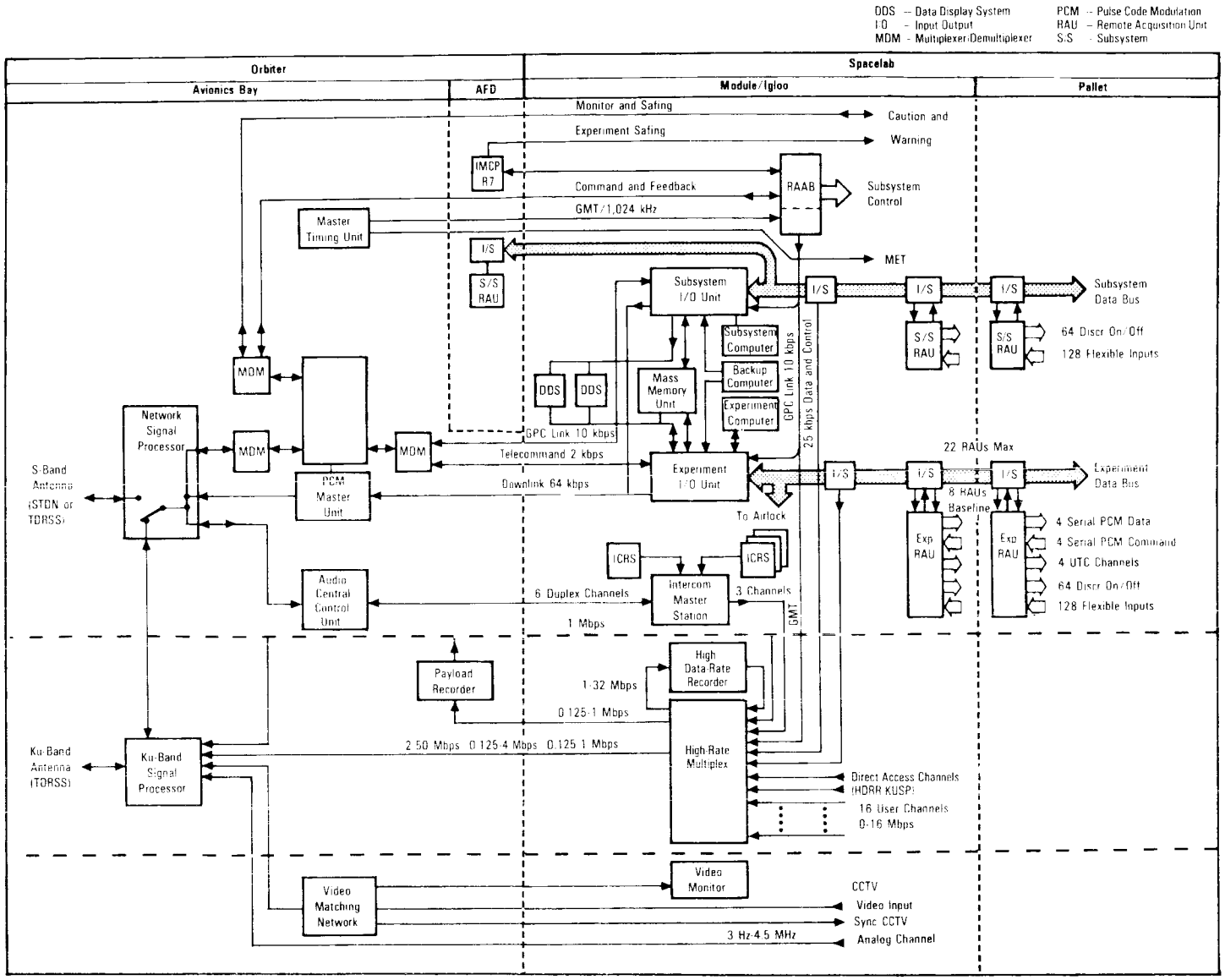


*Spacelab Command and Data Management System Interfaces With the Orbiter*

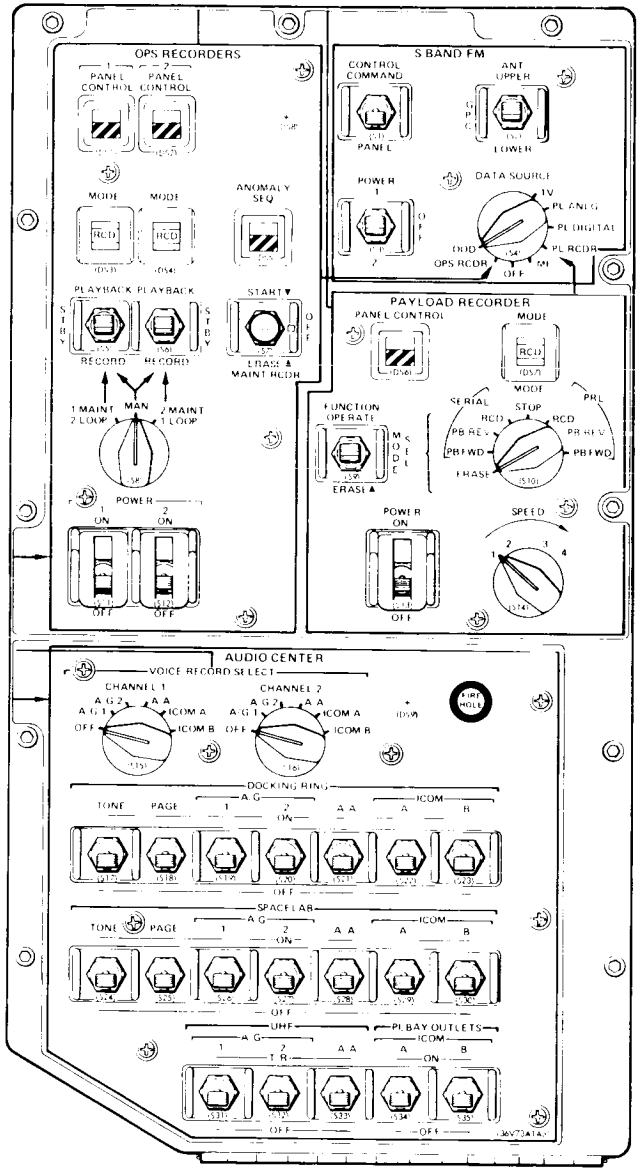


*Panel A1A3*

the payload bay vary according to mission requirements. Television data downlinked on Ku-band channel 3 are time-shared by the orbiter's CCTV system, the Spacelab TV/analog output and the Spacelab high-rate multiplexer data.

**Pressurized Module Intercom**. The Spacelab intercom master station interfaces with the orbiter audio central control unit and the orbiter EVA/ATC transceiver for communications through orbiter duplex (simultaneous talk and listen) audio channels. Audio channel 1 is air-to-ground 2, channel 2 is intercom B, and channel 3 is air-to-ground 1.

Each orbiter channel, with the exception of page, may be selected on each of the three Spacelab full-duplex channels—A/G 1 for the Payload Operations Control Center, Spacelab and A/G 2 for the orbiter/Mission Control Center—using rotary switches on the Spacelab intercom master station. The page channel is used for general address and calling purposes. Page signals can originate in the orbiter, the Spacelab or in both.



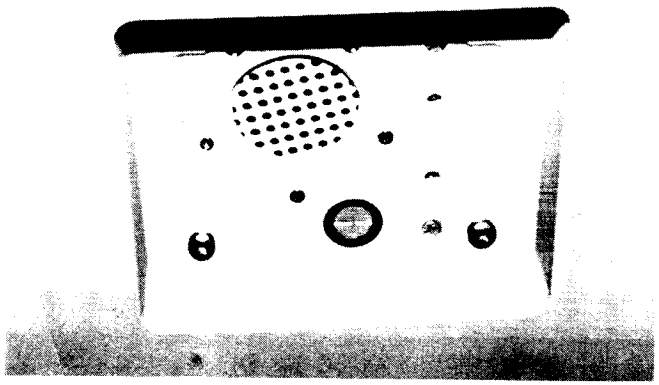

*Spacelab Pressurized Module Aural Annunciator Located Below Panel L14*

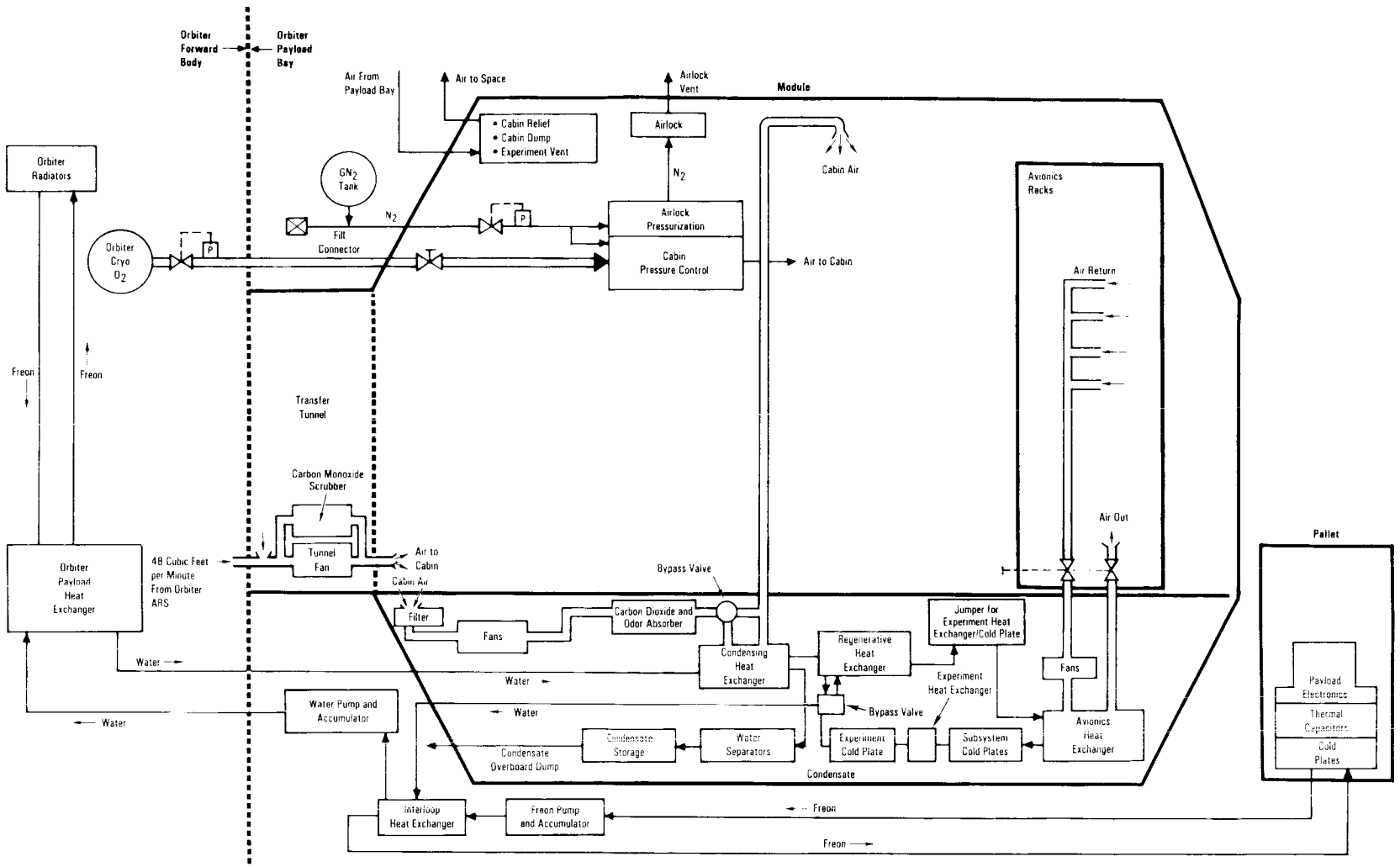


*Spacelab Pressurized Module and Orbiter Environmental Control and Life Support System Interface*

Access to orbiter channels is controlled within the orbiter. Normal voice recordings are made on the orbiter operations recorders. The Spacelab talk and listen lines are combined for distribution to the Spacelab voice digitizer in the Spacelab high-rate multiplexer for all three Spacelab channels.

**PRESSURIZED MODULE ENVIRONMENTAL CONTROL SUBSYSTEM AND LIFE SUPPORT.** The Spacelab environmental control subsystem consists of the atmosphere storage and control subsystem and the atmosphere revitalization system.

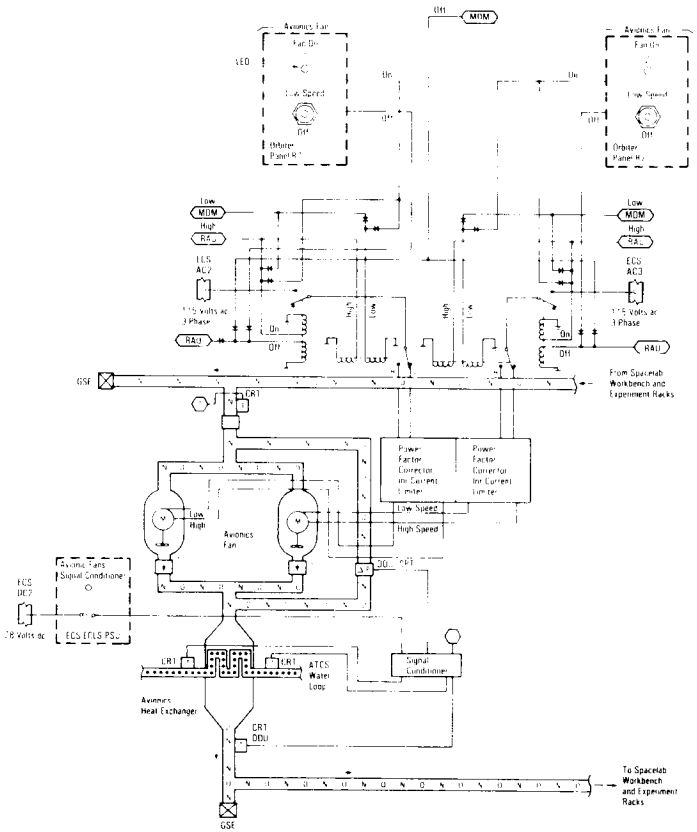


*Spacelab Avionics Loop*

The atmosphere storage and control subsystem receives gaseous oxygen from the orbiter power reactant storage and distribution system and gaseous nitrogen from a tank located on the Spacelab module's exterior. The Spacelab ASCS regulates the gaseous oxygen and nitrogen pressure and flow rates to provide a shirt-sleeve environment for the Spacelab module compatible with the orbiter cabin atmosphere.

Gaseous oxygen from the orbiter PRSD enters the Spacelab module through the upper feedthrough in the Spacelab forward end cone at 100 psi and a maximum flow rate of 14 pounds per hour. A motor-controlled valve in the Spacelab module controls the flow of gaseous oxygen. This valve, operated by Spacelab RAU commands, opens when the *$O_2$ supply valve* switch on panel R7 is in the *cmd enable* position. It closes when the switch is in the *close* position for such situations as contingency cabin atmosphere dump. A yellow LED above the switch on panel R7 is illuminated to indicate that the valve is closed. The oxygen supply valve receives 28 volts from the Spacelab emergency bus.

The Spacelab cabin depressurization assembly is primarily for contingency dump of Spacelab cabin atmosphere in case of fire that cannot be handled by the Spacelab fire suppression system. It consists of a vent with two filters, a manual shutoff valve and a motor-driven shutoff valve. The motor-driven shutoff valve is powered by the Spacelab environmental control subsystem emergency bus and controlled by the *cabin depress valve open/close* switch, a *cabin depress arm/safe* switch and valve status LEDs on orbiter panel R7. The *cabin depress arm* switch arms the Spacelab cabin depressurization motor-driven valve; and when the *cabin depress valve* switch is positioned to *open*, the Spacelab cabin depressurization assembly in the Spacelab forward end cone opens, depressurizing the Spacelab module at 0.4 pound per second. The red LED above the switch on panel R7 is illuminated to indicate that the motor-operated depressurization valve is fully open. The yellow LED above the switch on panel R7 is illuminated to indicate that the Spacelab cabin depressurization valve is not closed when the *cabin depress* switch is in *arm* and the *cabin depress valve* switch is in the *closed* position.

Air in the Spacelab avionics air loop is circulated by one of two dual-redundant fans, with check valves to prevent recirculation through the inactive fan and a filter upstream to protect both fans. For ascent and descent flight phases, as well as low-power modes on orbit, the avionics fans operate when only a few experiments are operating and require cooling.

The fans are designed to switch from four-pole to eight-pole operation. The air flow through one fan is reduced from 1,923 to 639 pounds per hour, and the power is reduced from 643 to 110 watts. The two fans, powered by separate 115-volt ac buses, are activated and deactivated at low speed (eight-pole) by the *avionics fan 1/2 low speed/off* switches on orbiter panel R7. Each switch has a yellow LED that is illuminated above the respective switch to indicate that the respective fan is activated. The fans' on/off status is also available on orbiter CRT displays and the Spacelab DDU avionics power/cooling display.

The Spacelab avionics fans can also be activated in the low-speed mode by commands from the orbiter CRT keyboard. The fans are activated in the high-speed mode (four-pole) by commands from the orbiter CRT keyboards. The orbiter MDM deactivation command deactivates both fans simultaneously, and the Spacelab RAU deactivation command turns off each fan separately. The high-speed status of the Spacelab avionics fans is available on the orbiter CRT display and the Spacelab DDU display.

**Pressurized Module/Tunnel Air Loop.** The switch for the fan located in the transfer tunnel cannot be accessed until the tunnel/Spacelab hatch is opened and the flight crew initially transfers to the Spacelab from the orbiter.

When the airlock hatch and the tunnel adapter/Spacelab hatches are open, the orbiter air revitalization system provides air at 48 cubic feet per minute through a duct that branches off of the orbiter cabin air loop downstream of the orbiter cabin heat exchanger and enters the tunnel adapter. In the tunnel adapter the duct can be controlled by a manual shutoff valve before it passes into the transfer tunnel itself. For the transfer tunnel to be entered, the tunnel adapter/Spacelab hatch must be opened and the duct passed through the tunnel hatch, where the duct expands. The fan located in the transfer tunnel draws additional air into the duct through an air inlet located just on the tunnel side of the tunnel adapter hatch.

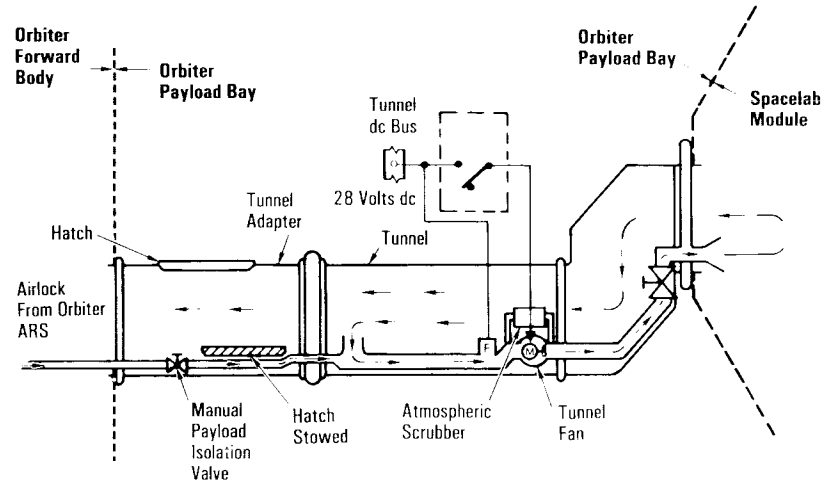


*Tunnel Adapter Hatch Open—48-Cubic-Feet-Per-Minute Duct Operating*

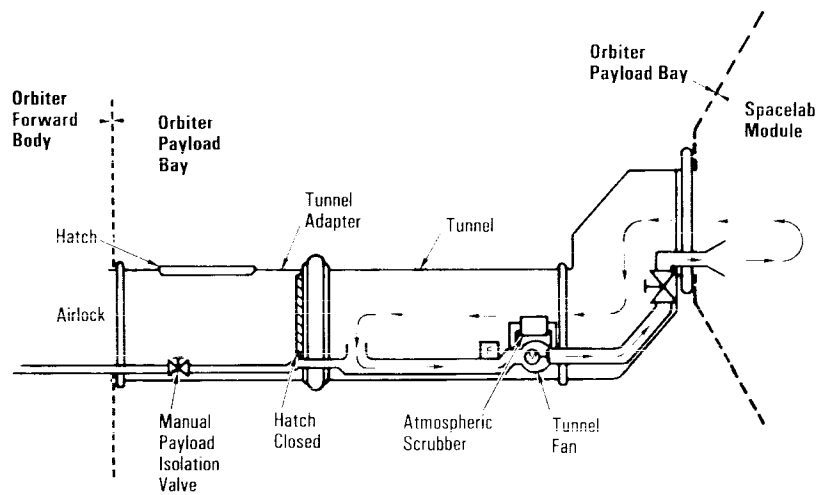


*Tunnel Adapter Hatch Closed—48-Cubic-Feet-Per-Minute Duct Not Operating*

The fan draws in additional air at a rate of 77 cubic feet per minute for a total nominal duct flow of 125 cubic feet per minute. This flow rate is delivered to the Spacelab cabin. The return air passes through the transfer tunnel itself, initially at 125 cubic feet per minute. However, 77 cubic feet per minute of air is sucked into the duct inlet at the Spacelab side of the tunnel/adapter hatch, and 48 cubic feet per minute of air enters the orbiter cabin through the tunnel adapter and airlock hatch. A scrubber in the tunnel duct removes carbon monoxide. The scrubber, located in parallel with the tunnel fan, produces an air flow of 1.5 to 4 cubic feet per minute.

The tunnel fan receives dc power from the Spacelab electrical power distribution subsystem. A delta pressure sensor located in the tunnel provides telemetry data for calculating air flow. If the Spacelab module is operating with the tunnel adapter hatch closed, air exchange is not possible. In this case the tunnel fan can be used to circulate air at 125 cubic feet per minute in the tunnel.

**Pressurized Module Active Thermal Control Subsystem.** The Spacelab active thermal control subsystem consists of a water loop to remove heat from the Spacelab module and a Freon loop to remove heat from equipment on any pallets that may be flown with the pressurized module. The water loop is normally active only during on-orbit flight phases, but the need to cool experiments during ascent and descent requires operation of the water loop in a degraded performance mode during these phases.

The Spacelab water loop is circulated by a water pump package consisting of dual-redundant pumps (primary and backup) with inlet filters, manually adjustable bypass valves, check valves to prevent recirculation through the inactive pump, and an accumulator assembly to compensate for thermal expansion within the loop and maintain a positive pump inlet pressure.

The pump package is contained in a housing and mounted on the outside of the Spacelab module's forward end cone. The nominal flow rate through one pump is 500 pounds per hour.

The Spacelab water pumps are powered by separate 115-volt buses. They are activated and deactivated by the *$H_2O$ loop pump 1/2 on/off* switches on orbiter panel R7 or by commands from the orbiter CRT keyboards. The green LED above each switch on panel R7 is illuminated to indicate that the pump is in operation. The on/off status of the Spacelab water pumps is also shown on the orbiter CRT displays.

The Spacelab Freon coolant loop removes heat from any pallets that may be flown with the pressurized module and transfers the heat of the interloop heat exchanger to the Spacelab water loop system. The flow rate is approximately 3,010 pounds per hour. From the Spacelab water loop system, the water passes through the orbiter payload heat exchanger, which transfers all the heat it has collected to the orbiter Freon coolant loops.

**Pressurized Module Caution and Warning.** The orbiter receives caution and warning inputs from Spacelab through the orbiter payload MDMs. Four channels in the Spacelab systems are dedicated to sending payload warning signals to the orbiter, and four channels in the Spacelab systems send payload caution signals to the orbiter. Nineteen remaining caution and warning input channels to the orbiter payload MDMs are available for Spacelab experiment limit sensing in the orbiter GPCs. The orbiter provides a maximum of 36 safing commands for use in response to Spacelab caution and warning conditions with 22 reserved for experiment safing commands. All safing commands are initiated at the orbiter CRT and keyboard.

The orbiter GPC can obtain data from the Spacelab command and data management system through the orbiter PCMMU as an alternative source for caution and warning.

**Pressurized Module Emergency Conditions.** There are two categories of Spacelab emergency conditions: fire/smoke in the Spacelab module and rapid Spacelab cabin depressurization. The orbiter and Spacelab annunciate these conditions and can issue safing commands if they occur. These signals are available during all flight phases.

Redundant Spacelab fire/smoke inputs are generated by two ionization chamber smoke sensors at three locations in the Spacelab. The six fire/smoke discrete signals are hard-wired to six

annunciator indicators located on panel R7. These indicators are divided into three pairs labeled *left A&B*, *subfloor A&B* and *right A&B*. The six *smoke annunciators enable/inhibit* switches on panel R7 can be used to inhibit each fire/smoke sensor's output individually. The *smoke sensor reset/norm/test* switch on panel R7 is used to reset or test all six sensors simultaneously.

Three signals, each from a different sensor location, are ORed (run through an OR gate) and connected to orbiter panel L1, which has a payload fire/smoke detection light. The three remaining signals are treated in the same manner.

When a Spacelab fire/smoke signal is detected, an emergency tone (siren) generated by the orbiter caution and warning circuitry is transmitted by the orbiter audio central control unit and announced in the Spacelab module by the loudspeaker, and the Spacelab *master alarm* light is illuminated. The six fire/smoke signals are also connected to six orbiter MDM inputs for display as emergency alert parameters on the orbiter CRT and for telemetry.

Two methods are provided for extinguishing a fire in the Spacelab module: discharging a fire suppressant into the affected area or dumping the Spacelab cabin atmosphere, when appropriate. The fire suppressant discharge consists of 15 orbiter-common fire suppression modules, each filled with the Freon 1301 suppressant agent.

The *agent discharge arm/safe* switch on orbiter panel R7 or the panel in the Spacelab module is used to safe or arm the discharge function. Each panel has a yellow indicator light that is illuminated when the discharge circuit is armed. The arming of the suppressant discharge function also shuts off the Spacelab module cabin and avionics fans to avoid diluting the suppressant's concentration. The agent can be discharged from either orbiter panel R7 or the panel in the Spacelab module by three identical sets of *agent discharge* switches, one each for the left, subfloor and right areas. The switches are protected by individual guards. Positioning one of these switches completely discharges the contents of all suppressant bottles in the indicated area of the Spacelab module. In addition, the Spacelab module $O_2$ *supply valve close/cmd enable* switch on orbiter panel R7 can be used to close off the oxygen supply from the orbiter oxygen system to deprive the fire of oxygen. Spacelab cabin atmosphere dumping is controlled by the *cabin depress arm/safe* and *valve open/close* switches on orbiter panel R7. The Spacelab motor-controlled cabin dump valve's status is indicated by the yellow *not closed* and the red *full open* indicators on orbiter panel R7 as well as by the orbiter CRT.

**PALLET-ONLY ENVIRONMENTAL CONTROL SUBSYSTEM.** The environmental control subsystem provides thermal control of Spacelab experiments and subsystems. The Spacelab Freon-21 coolant loop services the pallet systems and collects heat

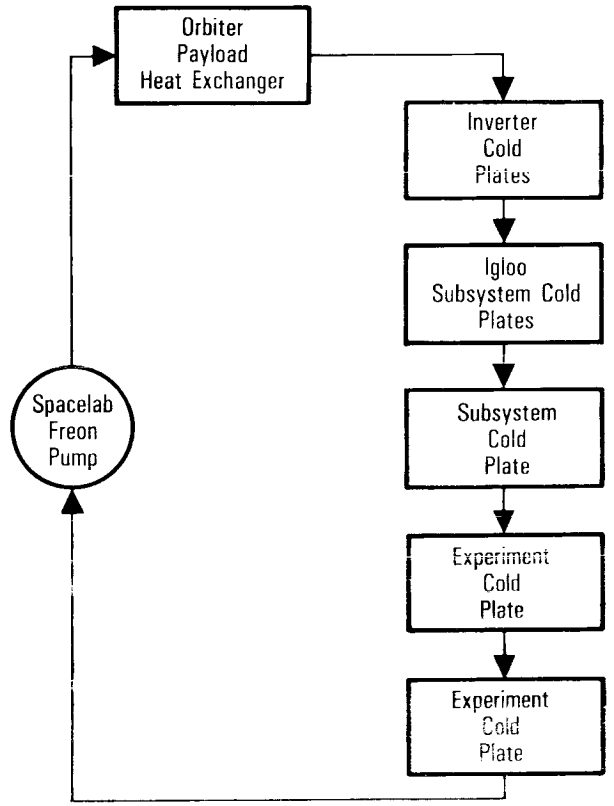


*Freon-21 Coolant Loop for Spacelab Pallets*

dissipated by the subsystem and experiment equipment. The Spacelab Freon-21 coolant loop collects heat from the pallet-mounted subsystems and experiments through cold plates, some of which have thermal capacitors to store peak heat loads. The cold plates in the Freon loop are bolted to an intermediate support structure that is attached to the pallet. A maximum of eight cold plates can be used on the pallets for a particular mission.

The subsystem equipment mounted in the igloo is also serviced by the Freon loop, which interfaces directly with the orbiter's payload heat exchanger. The Freon pump package is mounted on the front frame of the first pallet (forward) in the orbiter payload bay. Thermal coatings are applied to minimize heat leakage and the effects of solar radiation. A special paint is used to reduce the hot-case temperature of the pallet structure itself. An insulated shield installed between the pallet-mounted cold plates and the pallet structure reduces radiation exchange between them. Multilayer insulation thermal tents also protect pallet-mounted subsystems; any unused tents are available for experiments.

## GETAWAY SPECIAL PROGRAM

NASA's getaway special program, officially known as the Small, Self-Contained Payloads program, offers interested individuals or groups opportunities to fly small experiments aboard the space shuttle. To assure that diverse groups have access to space, NASA rotates payload assignments among three major categories of users: educational, foreign and commercial, and U.S. government.

Since the program was first announced in the fall of 1976, payloads have been reserved by foreign governments and individuals; U.S. industrialists, foundations, high schools, colleges and universities; professional societies; service clubs; and many others. Although persons and groups involved in space research have obtained many of the reservations, a large number of spaces have been reserved by persons and organizations outside the space community.

There are no stringent requirements to qualify for space flight. However, each payload must meet specific safety criteria and be screened for its propriety as well as its educational, scientific or technological objectives. These guidelines preclude commemorative items, such as medallions, that are intended for sale as objects that have flown in space.

GAS requests must first be approved at NASA Headquarters in Washington, D.C., by the director of the Transportation Services Office. At that point NASA screens the propriety and objectives of each request. To complete the reservation process for GAS payloads, each request must be accompanied or preceded by the payment of $500 earnest money.

Approved requests are assigned an identification number and referred to the GAS team at the Goddard Space Flight Center in Greenbelt, Md., the designated lead center for the project. The GAS team screens the proposals for safety and provides advice and consultation on payload design. It certifies that proposed payloads are safe and will not harm or interfere with the operations of the space shuttle, its crew or other experiments on the flight. The costs of any physical testing required to answer safety questions before launch are borne by the GAS customer.

NASA's space shuttle program has specific standards and conditions relating to GAS payloads. Payloads must fit NASA standard containers and weigh no more than 200 pounds. However, two or more experiments may be included in a single container if they fit in it and do not exceed weight limitations. The payload must be self-powered and not draw on the shuttle orbiter's electricity. In addition, payload designs should consider that the crew's involvement with GAS payloads will be limited to six simple activities (such as turning on and off up to three payload switches)

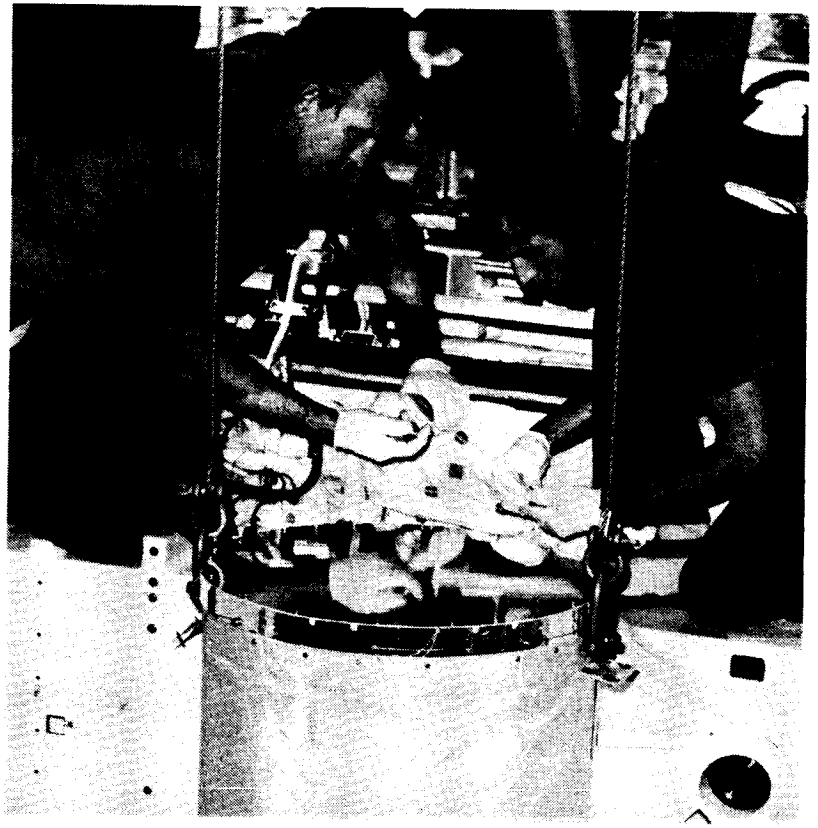

*Getaway Special Container in Payload Bay*

because crew activity schedules do not provide opportunities to either monitor or service GAS payloads in flight.

The cost of this unique service depends on the size and weight of the experiment. Getaway specials of 200 pounds and 5 cubic feet cost $10,000; 100 pounds and 2.5 cubic feet, $5,000; and 60 pounds and 2.5 cubic feet, $3,000. The weight of the GAS container, experiment mounting plate and its attachment screws, and all hardware regularly supplied by NASA is not charged to the experimenter's weight allowance.

The GAS container provides internal pressure, which can be varied from near vacuum to about one atmosphere. The bottom and sides of the container are always thermally insulated, and the top may be insulated or not, depending on the specific experiment. A lid that can be opened or one with a window may be required. These may also be offered as options at additional cost.

The GAS container is made of aluminum, and the circular end plates are 0.625-inch-thick aluminum. The bottom 3 inches of the container are reserved for NASA interface equipment, such as command decoders and pressure regulating systems. The container is a pressure vessel that can be evacuated before or during launch or on orbit and can be repressurized during re-entry or on orbit, as required by the experimenter.

The getaway bridge, which is capable of holding 12 canisters, made its maiden flight on STS 61-C. The aluminum bridge fits across the payload bay of the orbiter and offers a convenient and economic way of flying several GAS canisters.

For additional information about NASA's getaway special program contact the program manager, code MC, NASA Headquarters, Washington, D.C. 20546. The primary contact for payload users is the technical liaison, Code 740, NASA Goddard Space Flight Center, Greenbelt, Md. 20771.

## NASA CENTERS AND RESPONSIBILITIES

The space transportation system operates under the direction of the National Aeronautics and Space Administration.

NASA's John F. Kennedy Space Center in Florida is responsible for all launch, landing and turnaround operations for STS missions requiring equatorial orbits.

The Lyndon B. Johnson Space Center in Houston, Texas, is responsible for the integration of the complete space shuttle vehicle and is the central control point for space shuttle missions.

NASA's George C. Marshall Space Flight Center in Huntsville, Ala., is responsible for the space shuttle main engines, external tanks and solid rocket boosters.

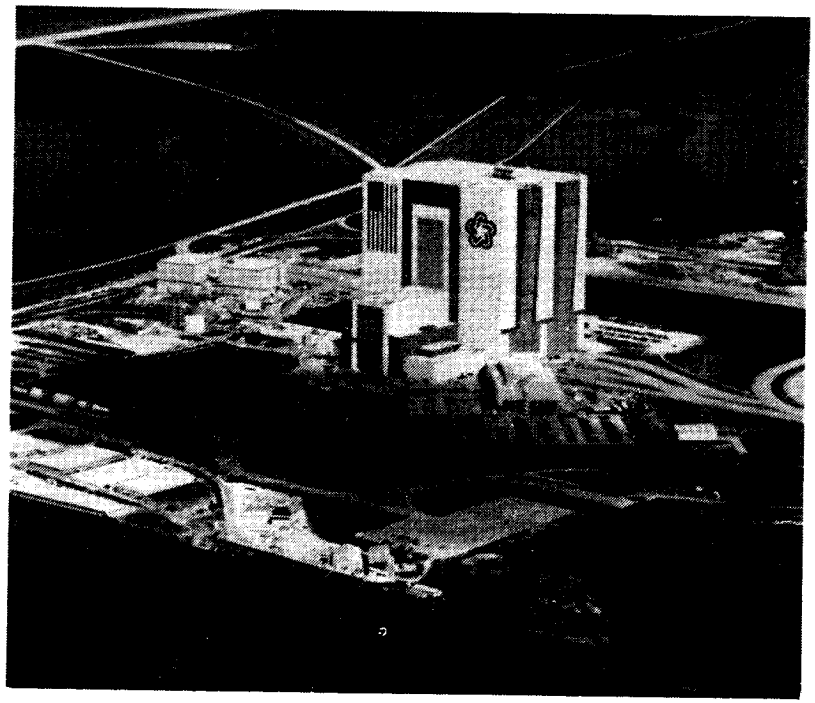

*Vehicle Assembly Building, Kennedy Space Center, Florida*

NASA's National Space Technology Laboratories at Bay St. Louis, Miss., is responsible for testing the space shuttle main engines.

NASA's Goddard Space Flight Center in Greenbelt, Md., operates a worldwide tracking station network.

The United States Air Force operates the space shuttle launch and landing facility at Vandenberg Air Force Base in California for STS missions requiring polar orbit.

### JOHN F. KENNEDY SPACE CENTER

The Kennedy Space Center has primary responsibility for prelaunch checkout, launch, ground turnaround operations and support operations for the space shuttle and its payloads. Space

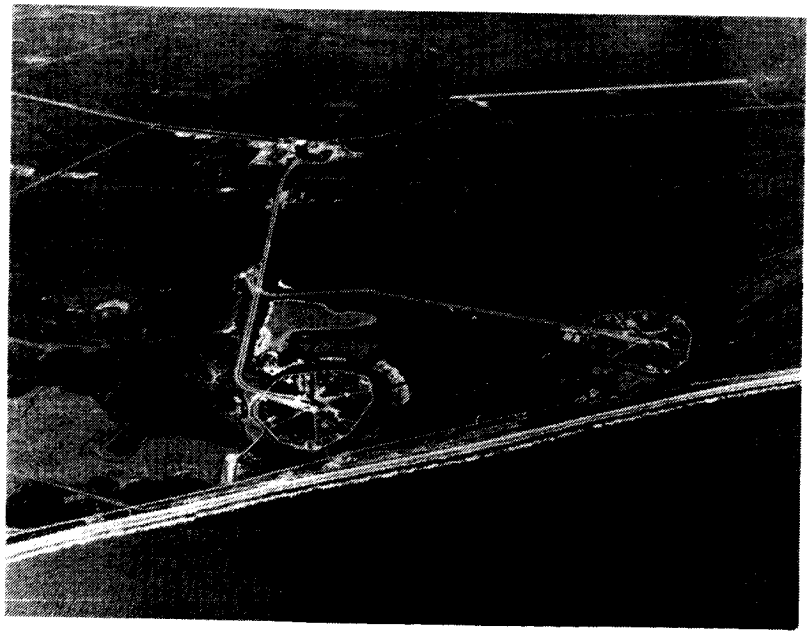

*Launch Complexes 39-A and 39-B*

shuttle payloads are processed in a number of facilities at KSC and the nearby Cape Canaveral Air Force Station. Payloads are installed in the space shuttle orbiter horizontally in the Orbiter Processing Facility or vertically at the launch pad. Payloads to be installed horizontally in the orbiter at the Orbiter Processing Facility are verified in the Operations and Checkout Building at KSC. Payloads installed vertically in the orbiter at the launch pad consist primarily of automated spacecraft involving upper stages and their payloads (e.g., satellites).

KSC's responsibility extends to ground operations management systems and plans, processing schedules, facility design and logistics in support of the space shuttle system and payloads.

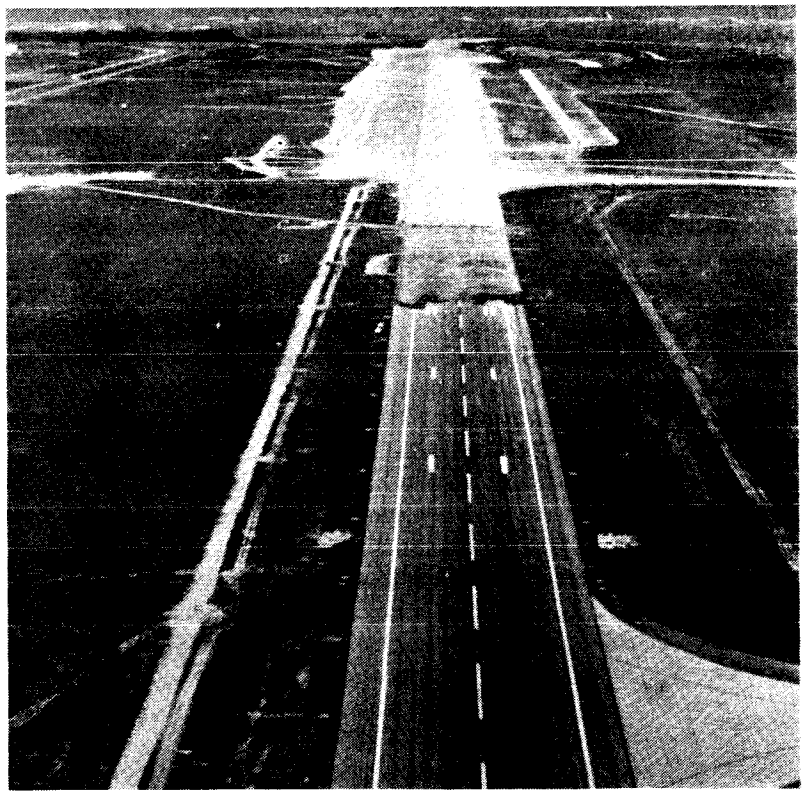

*Vandenberg Air Force Base Runway*

The center established the requirements for facilities and ground operations support at Vandenberg Air Force Base and designated contingency landing sites. KSC also supports the Department of Defense for ground operations at Vandenberg Air Force Base and maintains NASA facilities and ground support equipment there.

The launch facilities—Launch Complexes 39-A and 39-B—and the technical support base of the center's industrial area were carved out of virgin savanna and marsh in the early 1960s for the Apollo program.

In reshaping KSC for the space shuttle, planners took maximum advantage of existing buildings and structures from the Apollo program that could be modified, scheduling new ones only

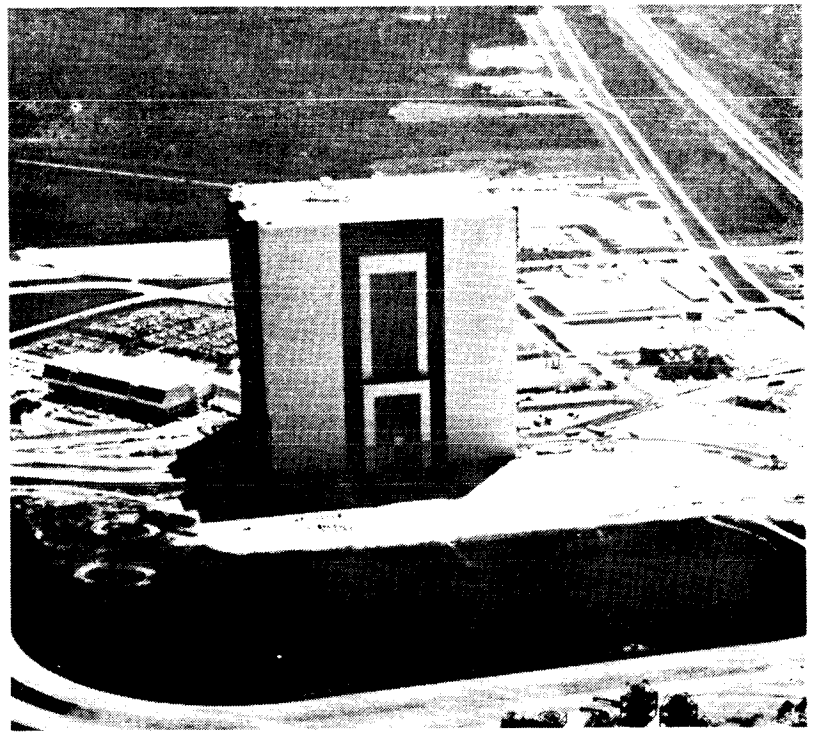

*Vehicle Assembly Building at Kennedy Space Center*

when a unique requirement existed. New facilities that have been built to support space shuttle operations are the shuttle landing facility (runway); the Orbiter Processing Facility; and recently the Orbiter Modification and Refurbishment Facility, Tile Processing Facility, Solid Rocket Booster Storage and Processing Facility, Shuttle Logistics Building and Solid Rocket Booster Assembly and Refurbishment Facility.

KSC is located at 28.5 degrees north latitude and 80.5 degrees west longitude. It encompasses approximately 140,000 acres of land and water. This area, with the adjoining bodies of water, is sufficient to afford adequate safety to the surrounding communities during space shuttle launch and landing activities.

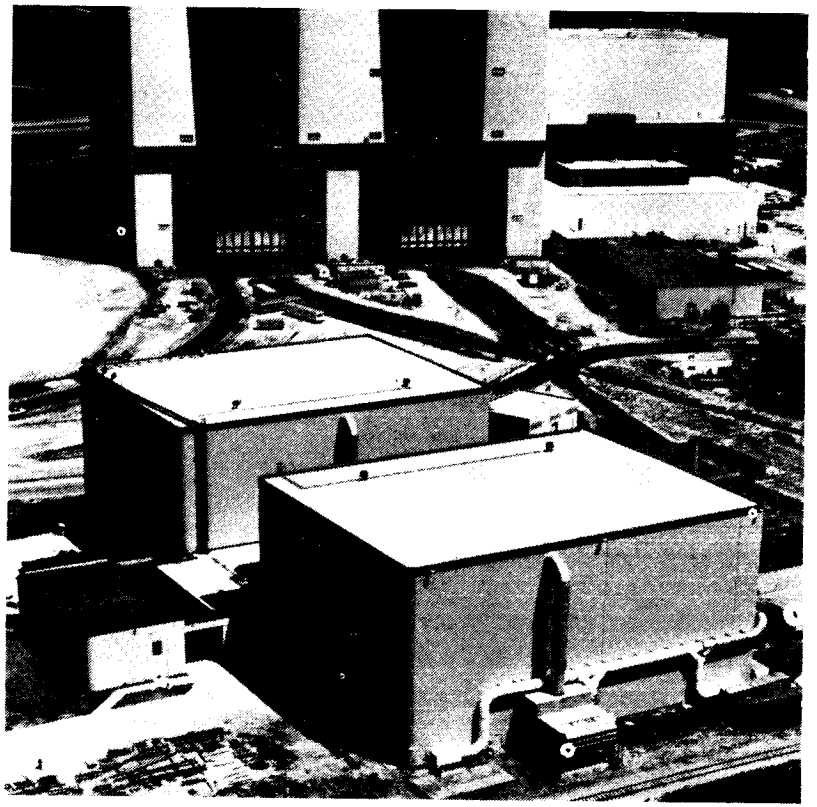

*Orbiter Processing Facility*

The shuttle processing contractor performs all launch processing and turnaround activities at the Kennedy Space Center and Vandenberg Air Force Base. Lockheed Space Operations Company, Titusville, Fla., was awarded the contract in 1983 to perform space shuttle launch processing operations previously carried out by more than a dozen separate contractors, which included the major hardware manufacturers.

The SPC is responsible for processing individual vehicle elements, integrating those elements in preparation for launch, performing cargo integration and validation activities with the orbiter, operating and maintaining assigned facilities and required support equipment and performing those tasks necessary to accomplish launch and postlaunch activities successfully.

**ORBITER PROCESSING FACILITY.** After they arrive at the Kennedy Space Center, space shuttle orbiters are processed

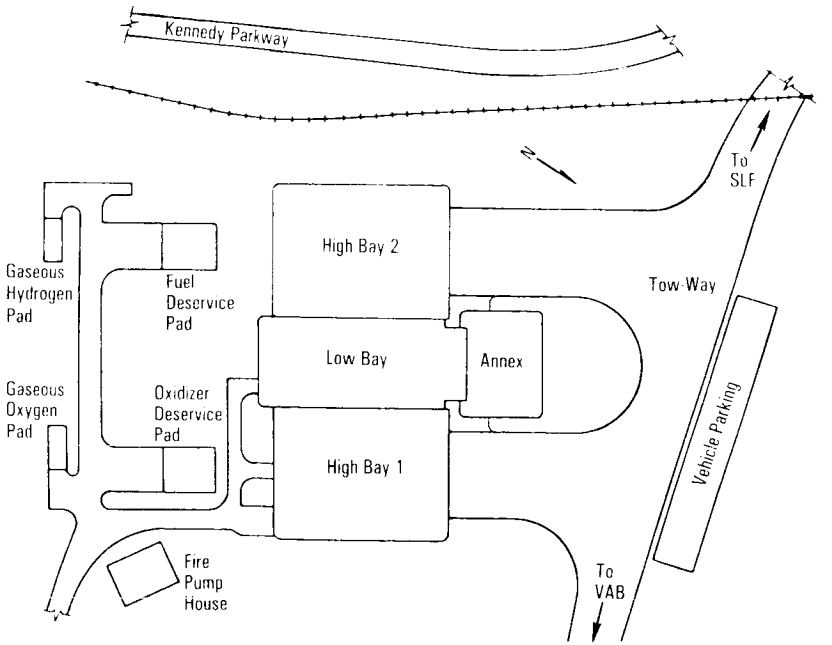


*Orbiter Processing Facility*

between missions in a structure analogous to a sophisticated hangar—the Orbiter Processing Facility. The OPF is capable of handling two orbiters in parallel. It is located near the west side of the Vehicle Assembly Building in order to minimize orbiter towing distance as the processing flow continues.

The OPF has two identical bays that are each 197 feet long, 150 feet wide and 95 feet high; have an area of 29,000 square feet; and are equipped with two 30-ton bridge cranes with a hook height of approximately 66 feet. A low bay separating the two bays is 233 feet long, 97 feet wide and 24.6 feet high. A 10,000-square-foot annex is located on the north side of the facility. Another new 34,000-square-foot, three-story annex will provide additional office space.

In the high bays, a trench system under the floor contains

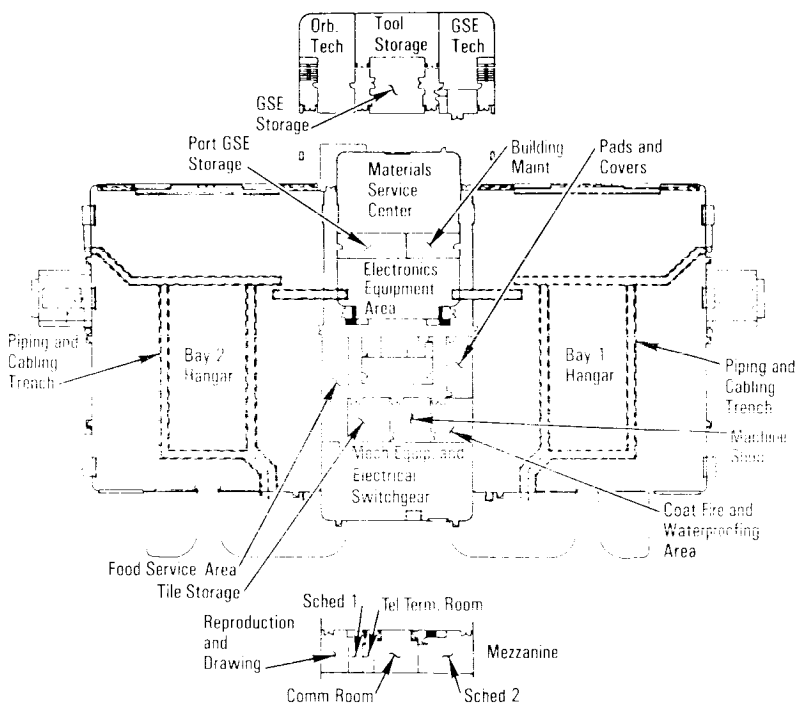


*Orbiter Processing Facility Floor Plan*

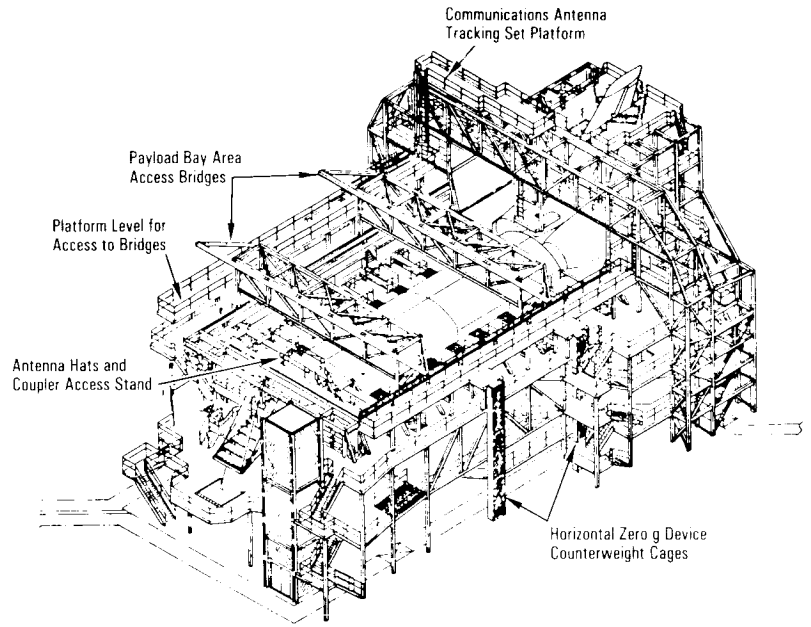


*Orbiter Processing Facility Access Platforms, Front View*



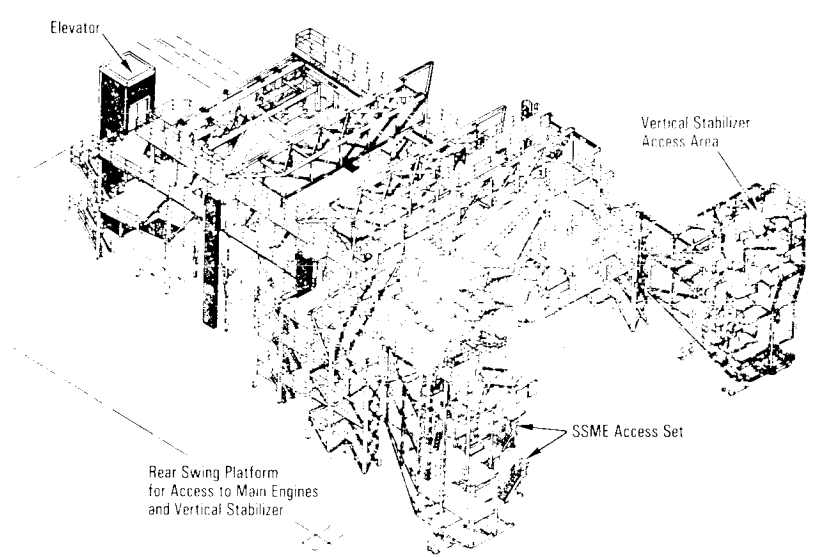


*Orbiter Processing Facility Access Platforms, Facility Rear View*

electrical, electronic, communication, instrumentation and control cabling; hydraulic supply and return plumbing; gaseous nitrogen, oxygen and helium plumbing; and compressed air distribution plumbing. Gaseous nitrogen, helium and compressed air are supplied by the systems in the Vehicle Assembly Building. All of these systems are used to support processing and maintenance of the orbiters during ground turnaround operations.

The two high bays have an emergency exhaust system in case of hypergolic spills. The low bay houses areas for electronic equipment, a launch processing system interface, mechanical and electrical equipment shops and thermal protection system repair. The low bay also includes provisions for a communications room, offices and supervisory control rooms.

Some orbiter processing activities performed in the OPF are hazardous, and personnel who are directly involved are required

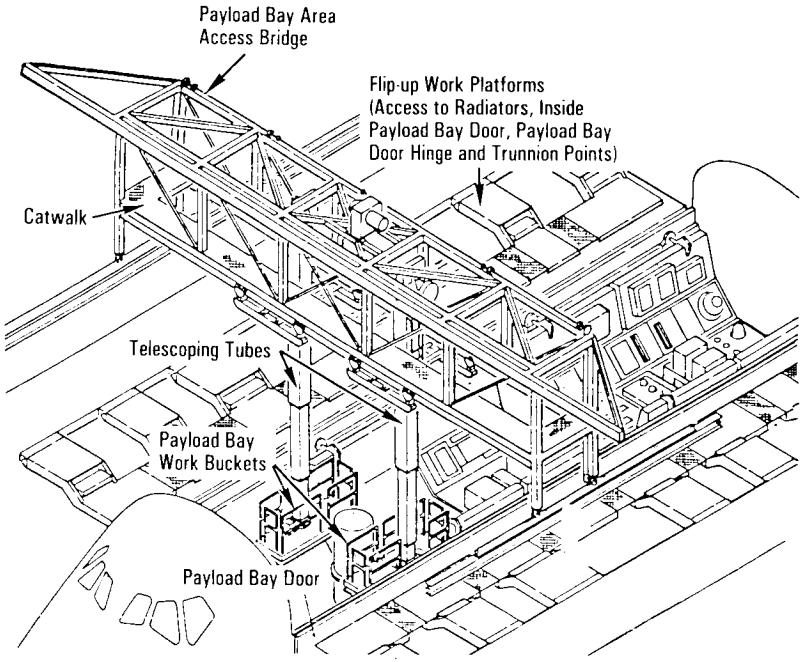


*Orbiter Processing Facility Access Platforms, Overhead View*

to wear protective suits, called self-contained atmosphere protective ensembles. The use of SCAPE suits is required during operations involving the reaction control system, orbital maneuvering system, and auxiliary power units and their hypergolic propellants.

Fire protection systems are provided in all three bays.

Two large rolling bridges span the main access bridge to provide complete access to installed payloads, radiators, internal areas of the payload bay and external areas of the payload bay doors. Each of the rolling bridges supports two independently movable trucks with a personnel bucket at the bottom of each vertically telescoping arm. The buckets are manually rotatable around a full circle. The bridges, trucks and telescoping arms are electrically powered and controlled from the buckets or the catwalk.

Flip-up work platforms parallel the payload bay area to provide access to radiators, the inside payload bay doors, payload bay door hinges and trunnion points.



Other platforms provide access to other orbiter elements.

The hinges of the payload bay doors are not designed to support the weight of the doors while they are open horizontally in the Earth's 1-g environment. A counterweight zero-gravity device supports the weight of the doors while they are open for processing in the OPF.

The orbiter processing flow begins when an orbiter lands at the shuttle landing facility after a mission in space or a ferry flight aboard the shuttle carrier aircraft. In either case, the orbiter is towed to the OPF within hours of its arrival.

Access to the crew module is established soon after the orbiter lands. Flight crew equipment is removed at that time, along with any middeck experiments flown on the mission.

Processing starts when the orbiter is jacked up off its landing gear and leveled, workstands are moved into position and prepa-

rations begin to gain access to various orbiter areas. The orbiter is connected to ground power, facility ground coolant, purge air and the LPS.

Initial safing operations include hooking up purge, vent and drain lines. Any unexpended pyrotechnics (ordnance devices), such as those used for backup landing gear deployment, are disabled and safed. Purging and deservicing of the orbiter's orbital maneuvering system/reaction control system, forward reaction control system and auxiliary power unit hypergolic systems are initiated.

Some of these are hazardous operations, which require that the OPF be cleared of all non-essential personnel. Hypergolic deservicing operations require that personnel wear SCAPE suits.

The hypergolic lines of the OMS/RCS and forward RCS are drained of trapped propellants and their interface connections are purged. Residual hypergolic fuels in onboard tanks are not usually drained.

When required, the OMS/RCS pods and the forward RCS are removed and taken to the Hypergolic Maintenance and Checkout Facility in the industrial area for maintenance.

After the orbiter has been rolled into the OPF, a purge of the space shuttle main engines is initiated to remove moisture produced as a by-product of the combustion of liquid oxygen and liquid hydrogen.

Fuel cell cryogenic tanks are drained of residual reactants and rendered inert using gaseous nitrogen in the oxygen system and gaseous helium in the hydrogen system. High-pressure gases are vented from the environmental control and life support system.

Before postflight deservicing can continue beyond initial safing operations, certain vehicle systems must be mechanically secured and personnel access installed.

Space shuttle main engine gimbal locks and engine covers are installed, and engine heat shields are removed. Aft access doors are removed, and workstands are installed in the orbiter's rear compartment.

The payload bay doors are opened, and access provisions are installed to support payload operations. Any hazardous payloads are also rendered safe during these early OPF operations.

Payloads and the associated airborne support equipment from the previous flight are removed from the orbiter payload bay, and the bay is prepared for the installation of new payloads. The remote manipulator system arm is removed or installed, as required for the next mission.

During routine deservicing operations, non-storable consumables are off-loaded from the orbiter and waste products are removed. Potable water, water from the water spray boilers and lube oil from the auxiliary power units are drained, and APU lube oil filters are removed.



After initial safing is completed, postflight troubleshooting of anomalies that occurred during launch, flight or re-entry begins.

Orbiter components are removed and repaired or replaced as required based on anomaly reviews and then retested in parallel with other processing activities.

Visual inspections are made of the orbiter's thermal protection system, selected structural elements, landing gear, tires and other systems to determine if they sustained any damage during flight and landing.

Any damage to the thermal protection system must be repaired before the next mission. TPS operations are conducted in parallel with most of the activities in the Orbiter Processing Facility. There are some 27,446 tiles and thermal blankets on the outside of each orbiter and some 6,000 thermal control blankets on the inside.

TPS maintenance is provided in the new Thermal Protection System Facility across the street from the OPF. The 33,000-square-foot facility was located near the OPF to minimize the time it takes to transport the tiles and thermal control system blankets between the two facilities. Several trips are required before the tiles and some blankets are installed on the orbiter. The closeness of the facilities is also expected to minimize damage to the delicate tiles.

During OPF processing, any vehicle modifications required in addition to routine postflight deservicing/servicing and checkout are performed. Planned modifications are typically put into work as soon as practical after the orbiter returns and are completed in parallel with prelaunch servicing whenever possible.

Modifications may be performed to meet future mission requirements, resolve an identified deficiency or enhance vehicle performance by replacing existing hardware with new, improved designs.

Orbiter modifications, if they are extensive, may be performed with the vehicle powered down. Many modifications, however, can be completed in parallel with routine servicing while the orbiter is powered up.

Where possible, modification work is completed in the OPF and Orbiter Modification and Refurbishment Facility while the orbiter is in a horizontal position. While some modification work can be carried out in the Vehicle Assembly Building or on the pad if necessary, the OPF and OMRF offer the best access and support equipment for conducting such work.

Except during hazardous operations, routine preflight servicing can begin while deservicing activities are still under way or modifications are in work. Routine servicing includes reconfiguring orbiter systems for flight, performing routine maintenance, replacing parts and installing new mission flight kits and payloads. Consumable fluids and gases are loaded aboard, and the APU lube oil system is serviced.

As systems servicing is completed, functional checks are performed to verify flight readiness prior to closeout. Any system that fails the functional check undergoes troubleshooting to identify the problem. If required, subsequent repairs or replacements are performed.

The orbiter's hydraulically activated flight control surfaces are thoroughly checked out.

A new payload may be installed in the OPF before shuttle vehicle integration or at the launch pad after shuttle integration. Depending on the particular mission, new payloads could be installed at both locations. If payloads are installed in the OPF, the orbiter-to-payload interfaces are verified before the orbiter is moved to the VAB.

A crew equipment interface test is performed during the OPF flow to identify any problems associated with flight crew equipment.

Following all space shuttle main engine work, the orbiter's main propulsion system, including the three main engines, undergoes a helium signature leak check. Successful completion of this test generally clears the way for the closeout of the aft engine compartment.

Electrically initiated pyrotechnic devices (ordnance) required for orbiter systems are installed and checked out. These include small explosive charges like those used for the backup deployment of the orbiter landing gear or emergency jettison of the remote manipulator system, Ku-band antenna, side hatch jettison and secondary emergency egress jettison.

Upon completion of all payload installation activities or any other work being performed in the payload bay, the clamshell-shaped payload bay doors are closed and latched. If no payloads are to be installed at the pad, this represents final closeout of the orbiter midbody for flight.

The final tasks to be completed in the OPF before the orbiter is moved to the Vehicle Assembly Building are to weigh the orbiter and determine its center of gravity. Vehicle performance is affected

by both weight and center of gravity, and flight programming requires an accurate determination of both parameters.

All ground support and access equipment is then removed, and the orbiter is towed into the Vehicle Assembly Building transfer aisle through the large door at the north end of the high bay.

**ORBITER MODIFICATION AND REFURBISHMENT FACILITY.** The OMRF was designed as a third bay where space shuttle orbiters could be inspected, repair work and off-line modifications could be performed, and orbiters could be stored. It is located north of the Orbiter Processing Facility.

The OMRF high bay is 197 feet long, 150 feet wide and 95 feet high, the same as the two OPF bays. The facility's electrical, mechanical and communications control rooms are located in an adjacent support bay. There is office space for personnel and a conference room with a window that overlooks the processing bay.

Only non-hazardous work will be performed in the OMRF until it is properly outfitted like the OPF to handle hazardous operations. In the meantime, work on the orbiter includes most thermal protection system operations, thermal protection system rewaterproofing, modifications that the facility can support and general maintenance.

Future upgrades to the facility will allow safing and deservicing; limited orbiter power-up using mobile electrical ground power; servicing of the orbiter's power reactant storage and distribution system; dumping of the orbiter's flight recorders, which requires support of the Launch Control Center computers; servicing of the orbiter's Freon coolant loop systems; and other tests requiring support of the Launch Control Center.

**LOGISTICS FACILITY.** The Logistics Facility is a 324,640-square-foot building located south of the Vehicle Assembly Building. It houses 190,000 space shuttle hardware parts, and about 500 NASA and contractor personnel work there. The most unusual feature of the Logistics Facility is its state-of-the-art parts retrieval system, which includes automated handling equipment to find and retrieve specific space shuttle parts.

**VEHICLE ASSEMBLY BUILDING.** The Vehicle Assembly Building, built for the vertical assembly of Saturn launch vehicles, is the heart of Launch Complex 39 and was modified to support the assembly of the space shuttle.

One of the largest buildings in the world, the VAB covers 8 acres and has a volume of 129,428,000 cubic feet. It is 525 feet tall, 715 feet long and 518 feet wide. The building is divided into a 525-foot-tall high bay and a 210-foot-tall low bay. A transfer aisle running north and south connects and transects the two bays, permitting easy movement of vehicle elements.

The high bay is divided into four separate bays. The two on the west side of the structure—Bays 2 and 4—are used for storing

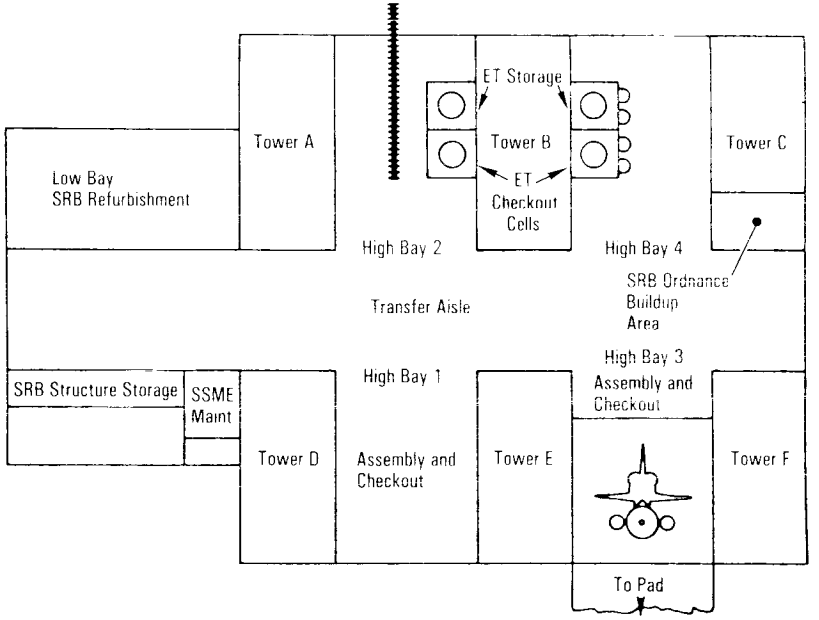


*Vehicle Assembly Building Floor Plan*

space shuttle orbiter external tanks. The two bays facing east—Bays 1 and 3—are used for the vertical assembly of space shuttle vehicles on the mobile launcher platform.

Extendable platforms, modified to fit the space shuttle configuration, move in around the vehicle to provide access for integration and final testing. When checkout is complete, the platforms move back, and the VAB doors are opened to permit the crawler-transporter to move the mobile launcher platform and assembled space shuttle vehicle to the launch pad. The high bay door is 456 feet high. It is divided into lower and upper sections. The lower door is 152 feet wide and 114 feet high with four door leaves that move horizontally. The upper door is 342 feet high and 76 feet wide with seven door leaves that move vertically.

The low bay was the initial site for refurbishment and subassembly of solid rocket booster segments. These activities now occur at a new facility north of the VAB.

Existing pneumatic, environmental control, light and water systems have been modified in both bays. The north doors to the VAB transfer aisle have also been widened 40 feet to permit the orbiter to enter when it is towed over from the Orbiter Processing Facility. The doors are slotted at the center to accommodate the orbiter's vertical stabilizer.

The Vehicle Assembly Building has more than 70 lifting devices, including two 250-ton bridge cranes.

The VAB is designed to withstand winds of up to 125 miles per hour. Its foundation rests on more than 4,200 open-end steel pilings 16 inches in diameter driven down 160 feet to bedrock.

**EXTERNAL TANK PROCESSING.** The external tank is transported to the Kennedy Space Center by barge from Martin Marietta's Michoud assembly facility at New Orleans, La. On arrival at the space center, the tank and the associated hardware are off-loaded at the barge turn basin. The external tank is transported horizontally to the Vehicle Assembly Building on a wheeled transporter and is transferred to a vertical storage or checkout cell. High Bays 2 and 4 each contain one external tank storage and one checkout cell.

The storage cells provide only the minimum access and equipment required to secure the external tank in position. After the tank is transferred to the checkout cell, permanent and mobile platforms are positioned to provide access to inspect the tank for possible damage during transit and to remove hoisting equipment. The liquid oxygen and liquid hydrogen tanks are then sampled and receive a blanket pressure of gaseous nitrogen and gaseous helium, respectively, in preparation for a normal checkout.

The external tank subsystem checkout includes an inspection of the external insulation and connection of ground support

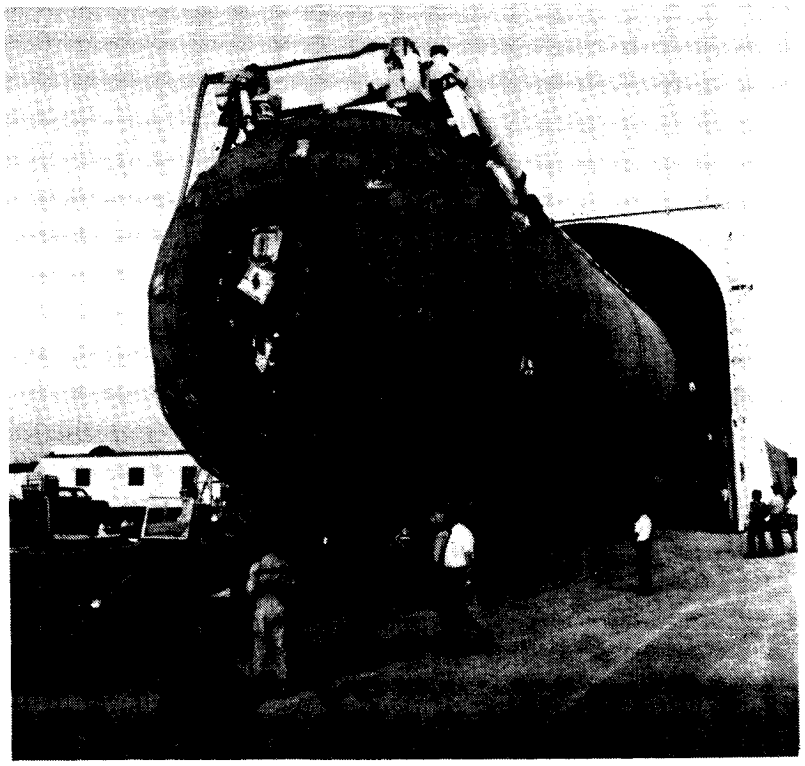

*External Tank Arrives by Barge at Kennedy Space Center*

equipment (including the launch processing system) to the appropriate interfaces. Electrical, instrumentation and mechanical function checks and tank and line leak checks are performed in parallel.

After satisfactory checkout of the external tank subsystems, ground support equipment and launch processing system equipment are removed and stored, and external tank closeout is initiated. Forward hoisting equipment is attached and work platforms are stored—or opened—in preparation for transferring the tank to the mobile launcher platform.

The external tank is hoisted vertically from the checkout cell by the 250-ton high bay crane and transferred to the mobile launcher platform in High Bay 1 or 3 for mating with the already-assembled solid rocket boosters. After the external tank and solid rocket booster are mated, the integration cell ground support equipment is connected, and intertank work platforms are installed.

A considerable amount of final closeout work is performed on the boosters and the tank after they are mated.

**SPACE SHUTTLE MAIN ENGINE WORKSHOP.** The space shuttle main engine workshop is located in the Vehicle Assembly Building in a low bay checkout cell that was converted into an enclosed, environmentally controlled engine workshop. The workshop serves as a receiving and inspection facility for SSMEs and as a support facility for all SSME operations at Kennedy.

Three engine workstands are available to support major stand-alone engine work, if required. The facility can support main engine disassembly and reassembly, checkout and leak testing.

Engines, mounted on engine handling devices and protected by a cylindrical shipping cover, arrive by truck from NASA's National Space Technology Laboratories and are off-loaded in the VAB transfer aisle next to the engine workshop. The engines are then pulled into the workshop and undergo receiving inspections. Normally, newly delivered engines are transferred to an engine installer and transported to the Orbiter Processing Facility for installation.

Routine postflight deservicing of the engines is performed in the OPF with the engines in place aboard the orbiter. More extensive between-flight servicing can be performed in the main engine

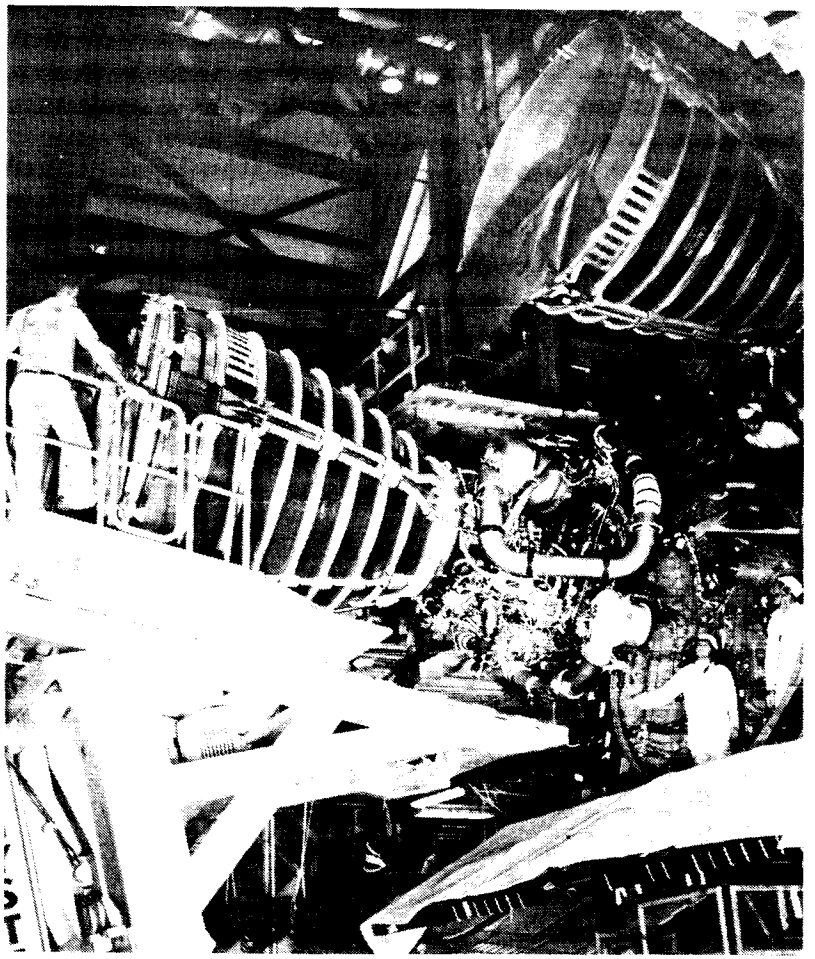

*Space Shuttle Main Engine*

workshop. The shop also supports engine removal operations and the preparation of engines for shipment back to NSTL or Rocketdyne in Canoga Park, Calif., the manufacturer of the SSMEs.

The shop provides storage for test equipment and serves as a staging area for SSME operations performed in the OPF and VAB and at the launch pad.

**SOLID ROCKET BOOSTER PROCESSING.** The solid rocket motor segments and associated hardware are shipped to the Kennedy Space Center by rail from the contractor's facility in Utah. The segments are transported horizontally and have transportation covers. End rings provide segment handling points, environmental protection, and protection of the solid-grain propellant and the outer edge of each segment from potential impact damage.

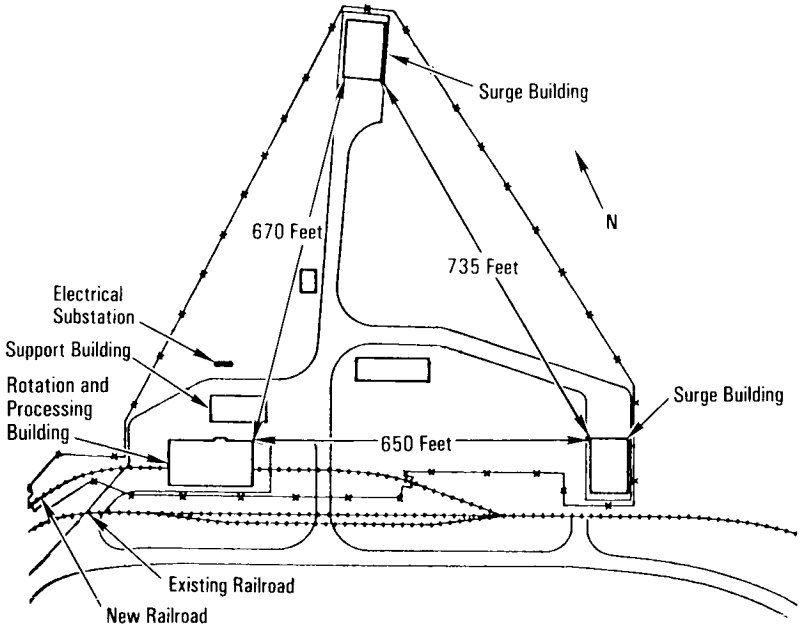


*Solid Rocket Motor Rotation, Processing and Surge Facility*

When they arrive at KSC, the segments are delivered to the solid rocket motor Rotation, Processing and Surge Facility, a group of steel-framed structures designed to withstand hurricane-force winds.

The RPSF, located north of the Vehicle Assembly Building, comprises a processing facility, a support building and two segment surge (storage) buildings. The facilities isolate hazardous operations associated with solid rocket motor rotation and processing (formerly performed in High Bay 4 of the VAB) and avert impacts to VAB launch-support capabilities.

The rotation building is 98.6 feet high and has an area of 18,800 square feet.

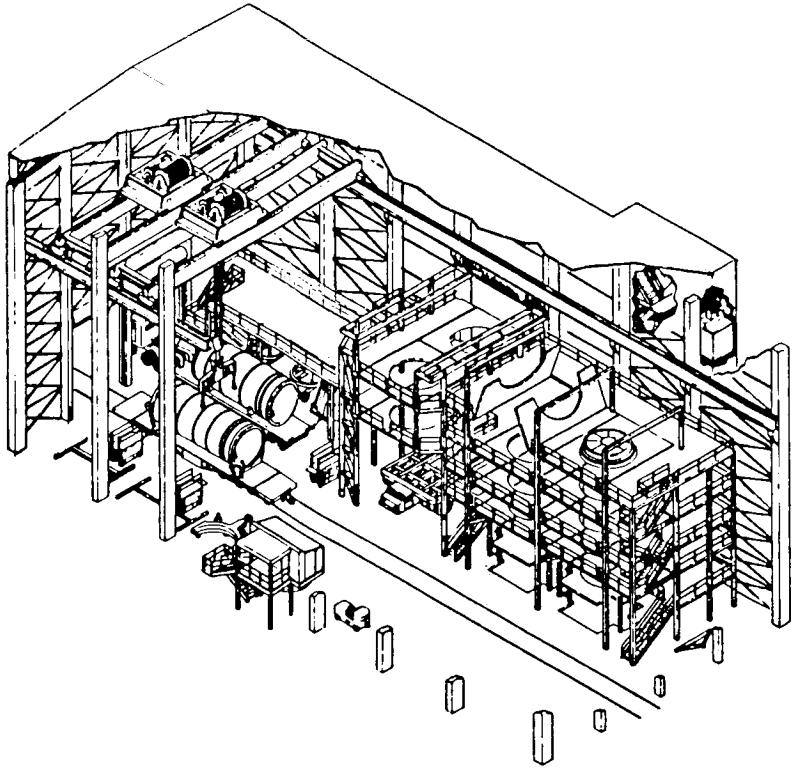

*Solid Rocket Motor Processing Facility, Interior View*

The main facility in the complex is used for solid rocket motor receiving, rotation and inspection and supports aft booster buildup. Rail tracks within the building permit railroad cars containing the segments to be positioned directly under one of the two 200-ton overhead bridge cranes. A tug vehicle capable of pulling and stopping a fully loaded segment car moves and positions railcars in the building.

Recovered booster segments are loaded onto railcars for shipment back to the manufacturer at a site on Contractor Road.

Two surge buildings located nearby contain 6,000 square feet each of floor area for storage of eight segments (one flight set). The buildings are 61 feet in height in the aft segment storage area and 43 feet in the forward and center segment storage area.

Paved roads between the processing facility, the two storage buildings and the VAB permit transporters to transfer the segments and other hardware from one facility to another.

Live solid rocket motor segments arrive at the processing facility and are positioned under one of the cranes. Handling slings are then attached to the railcar cover, and it is removed. The segment is inspected while it remains in the horizontal position.

The two overhead cranes hoist the segment, rotate it to the vertical position and place it on a fixed stand. The aft handling ring is then removed. The segment is hoisted again and lowered onto a transportation and storage pallet, and the forward handling ring is removed to allow inspections. It is then transported to one of the surge buildings and temporarily stored until it is needed for booster stacking in the VAB.

In 1986, a new Solid Rocket Booster Assembly and Refurbishment Facility was constructed at KSC after recompetition of the Marshall Space Flight Center's booster assembly contract.

Solid rocket booster operations are performed by both the shuttle processing contractor and the booster assembly contractor, who is responsible for booster disassembly and refurbishment and the assembly and checkout of forward and aft skirt subassemblies in the VAB. Booster retrieval operations, parachute refurbishment and booster stacking activities, in addition to integrated checkout, are performed by the shuttle processing contractor.

Refurbishment and subassembly operations previously performed in the VAB low bay and other outlying facilities are now conducted in the new facility located south of the VAB.

Aft skirts, fully configured and checked out in the Solid Rocket Booster Assembly and Refurbishment Facility, are delivered to the RPSF on dollies and hoisted into position on workstands. An inspected aft segment is then hoisted into position for mating with the aft skirt. When the aft segment assembly is completed and transferred to a pallet, it is transported directly to the VAB or to one of the two storage buildings.

Solid rocket booster elements, such as forward skirts, aft skirts, frustums, nose caps, recovery systems, electronics and instrumentation components, and elements of the thrust vector control system are received in this facility.



Assembly and checkout of the forward assembly (nose cap, frustum and forward skirt) and aft skirt assembly are also performed here in addition to refurbishment of recovered booster flight hardware.

The structural assemblies and components required to build up the forward assembly, aft skirt and external tank attach hardware are either shipped to KSC new or refurbished on site.

When completed, the aft skirt assemblies are transferred to the RPSF for assembly with the aft solid rocket motor segments.

An SRB hydraulic power unit "hot fire" facility is located in the southeast corner of the 44-acre site. The facility features a test stand that supports the hot-firing of the solid rocket booster's hydrazine-fueled thrust vector control system. Before each flight, the solid rocket booster aft skirt assemblies containing the TVC are transported to the facility and test-fired before the aft booster buildup.

The stacking of the solid rocket booster major assemblies begins after the buildup of aft booster assemblies at the Solid Rocket Motor Processing Facility (north of the VAB) and checkout of the forward nose skirt assemblies in the Solid Rocket Booster Assembly and Refurbishment Facility.

The booster stacking operation is accomplished in the following sequence:

1. The aft booster assemblies are transferred from the buildup area in the Rotation, Processing and Surge Facility to the High Bay 1 or 3 integration cells in the VAB and attached to the mobile launcher platform support posts.

2. Continuing serially, the aft, aft center, forward center and forward rocket motor segments are stacked to form complete solid rocket motor assemblies. As each segment is mated, the joint seal is inspected visually.

3. Segment seal integrity is then demonstrated by a leak check and decay test between the redundant seals. The forward skirt/nose assemblies are transferred from the SRB ARF to the High Bay 1 or 3 integration cell and stacked atop the completed solid rocket motor assemblies to form a complete set of boosters.

An alignment check of the complete flight set of solid rocket booster assemblies is performed after the stacking operations are completed. Integrated and automated systems testing of the assembled solid rocket boosters is accomplished on the mobile launcher platform, using the launch processing system to simulate the external tank and orbiter.

Before the space shuttle vehicle is transferred to the launch pad, solid rocket booster flight batteries are installed. Final connection of the solid rocket booster pyrotechnic systems is performed at the launch pad.

The solid rocket booster's hydraulic power units are serviced with hydrazine during the prelaunch propellant-servicing operations at the launch pad.

**HYPERGOLIC MAINTENANCE AND CHECKOUT FACILITY.** The Hypergolic Maintenance and Checkout Facility consists of three buildings in an isolated section of the KSC industrial area approximately eight miles southeast of the Vehicle Assembly Building. This area provides all facilities required to process and store the hypergolic-fueled modules that make up the orbiter's reaction control system, orbital maneuvering system and auxiliary power units.

**ORBITER MATING.** The orbiter is towed from the Orbiter Processing Facility into the transfer aisle of the Vehicle Assembly Building through the north door. When the orbiter is in position, the lifting beams are installed, and the erection slings are attached. The orbiter is then lifted, and the landing gear is retracted. The orbiter is rotated from the horizontal to the vertical position using the 250- and 175-ton cranes. It is then transferred to the space shuttle assembly area in High Bay 1 or 3 and lowered and mated to the external tank, which is already mated with the solid rocket boosters on the mobile launcher platform. After mating is completed, the erection slings and load beams are removed from the orbiter, and the platforms and stands are positioned for orbiter/external tank/solid rocket booster access. The orbiter is mated with its fin toward the transfer aisle (toward the south at the pad).

**SPACE SHUTTLE VEHICLE TESTING.** After the orbiter has been mated to the external tank/solid rocket booster assembly and all umbilicals have been connected, an electrical and mechanical verification of the mated interfaces is performed to verify all critical vehicle connections. A shuttle interface test is performed using the launch processing system to verify space shuttle vehicle interfaces and space shuttle vehicle-to-ground interfaces. The launch processing system is used to control and monitor orbiter systems as required in the Vehicle Assembly Building. After interface testing is completed, ordnance devices are installed, but not electrically connected. Final ordnance connection and flight closeout is completed at the pad.

Almost complete external access to the shuttle vehicle is provided in the Vehicle Assembly Building. Access to the payload bay is through the crew compartment since the payload bay doors cannot be opened in the Vehicle Assembly Building.

**MOBILE LAUNCHER PLATFORM.** The mobile launcher platforms are the movable launch bases for the space shuttle. Two platforms are in operational use and a third is being modified for future use. The platforms were used for the Saturn/Apollo missions and were modified for the space shuttle.

The mobile launcher platform is a two-story steel structure 25 feet high, 160 feet long and 135 feet wide. It is constructed of welded steel up to 6 inches thick. At their park site north of the Vehicle Assembly Building, in the Vehicle Assembly Building high bays and at the launch pad, the mobile launcher platforms rest on six 22-foot-tall pedestals.

Three openings are provided in the mobile launcher platform—two for solid rocket booster exhaust and one for space shuttle main engine exhaust. The solid rocket booster exhaust holes are 42 feet long and 20 feet wide. The space shuttle main engine exhaust opening is 34 feet long and 31 feet wide.

Inside the platform are two levels with rooms and compartments housing launch processing system hardware interface modules, system test sets, propellant-loading equipment and electrical equipment racks.

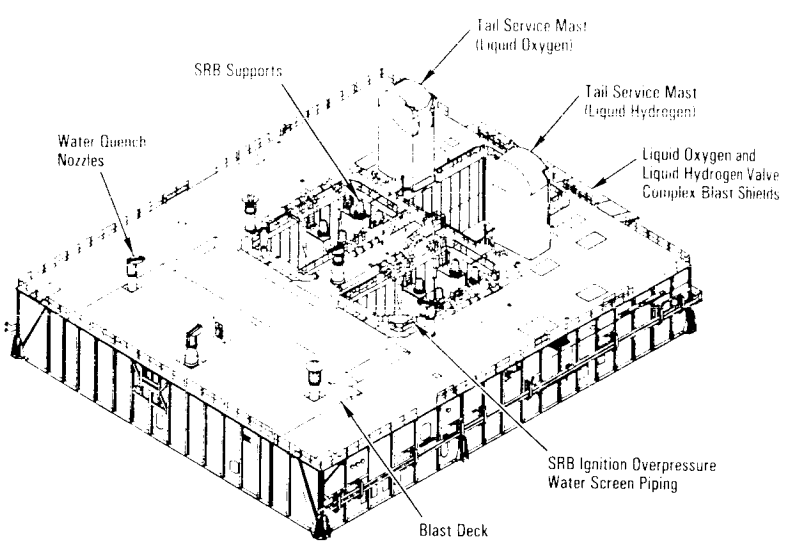


*Mobile Launcher Platform, Exterior View*

Unloaded, the mobile launcher platform weighs 8.23 million pounds. The total weight with an unfueled space shuttle aboard is 11 million pounds.

The space shuttle vehicle is supported and restrained on the mobile launcher platform during assembly, transit and pad check-

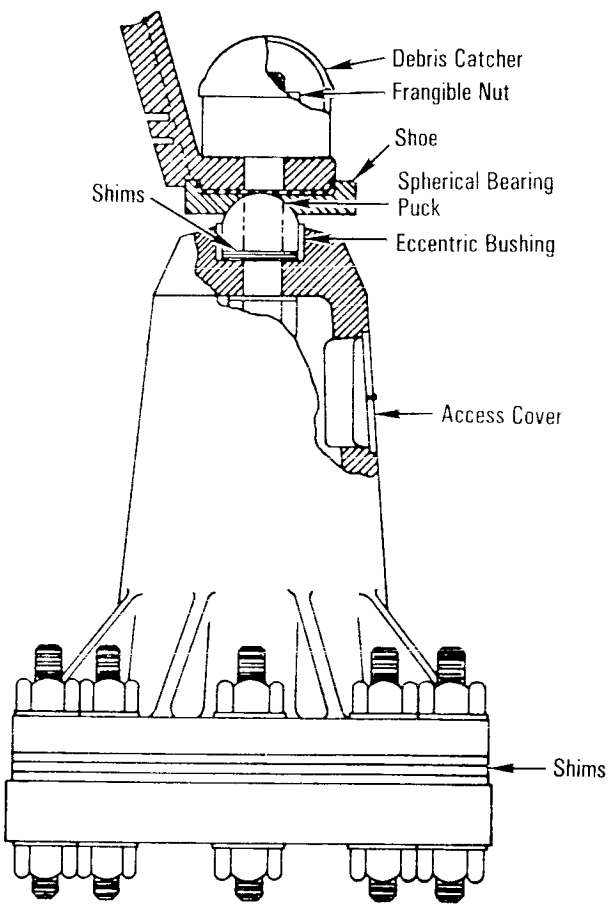


*Solid Rocket Booster Support/Hold-Down*

out by the solid rocket booster support/hold-down system. Four conical hollow supports for each booster are located in each solid rocket booster exhaust well. The supports are 5 feet high and have a base diameter of 4 feet.

Posts on the aft skirts of the SRBs rest on spherical bearings atop the mobile launcher platform hold-down posts. A 28-inch-long, 3.5-inch-diameter stud passes vertically through the SRB post, spherical bearing and hold-down post casting to secure the booster to the platform. A frangible, or explosive, nut at the top of the stud and a nut at the bottom are tightened to preload the stud to a tension of up to 850,000 pounds.

When full main engine thrust is developed during the final moments of the launch countdown, ignition signals are sent to the two SRBs. Simultaneously, the explosive nuts at the tops of the studs are triggered. The preloaded studs are expelled downward into deceleration stands ("sandbuckets") and the fractured halves of the explosive nuts are contained within spherical, 10-inch-diameter debris catchers on top of the solid rocket booster aft skirt posts. This sequence releases the solid rocket boosters and the entire space shuttle vehicle for flight.

Two tail service masts, one located on each side of the space shuttle main engine exhaust hole, support the fluid, gas and electrical requirements of the orbiter's liquid oxygen and liquid hydrogen aft T-0 umbilicals. The TSM assembly also protects the ground half of those umbilicals from the harsh launch environment. At launch, the solid rocket booster ignition command fires an explosive link, allowing a 20,000-pound counterweight to fall, pulling the ground half of the umbilicals away from the space shuttle vehicle and causing the mast to rotate into a blastproof structure. As it rotates backward, the mast triggers a compressed-gas thruster, causing a protective hood to move into place and completely seal the structure from the main engine exhaust.

Each TSM assembly rises 31 feet above the mobile launcher's deck, is 15 feet long with umbilical retracted, and is 9 feet wide. The umbilical carrier plates retracted at launch are 6 feet high, 4 feet wide and 8 inches thick, or about the size of a thick door.

The liquid oxygen umbilical runs through the TSM on the east side of the mobile launcher, and the liquid hydrogen umbilical runs through the TSM on the west.

Gaseous hydrogen, oxygen, helium and nitrogen; ground and flight system coolants; ground electrical power; and ground-to-vehicle data and communications also flow through the TSM umbilical links.

Work platforms used in conjunction with the mobile launcher platform provide access to the space shuttle main engine

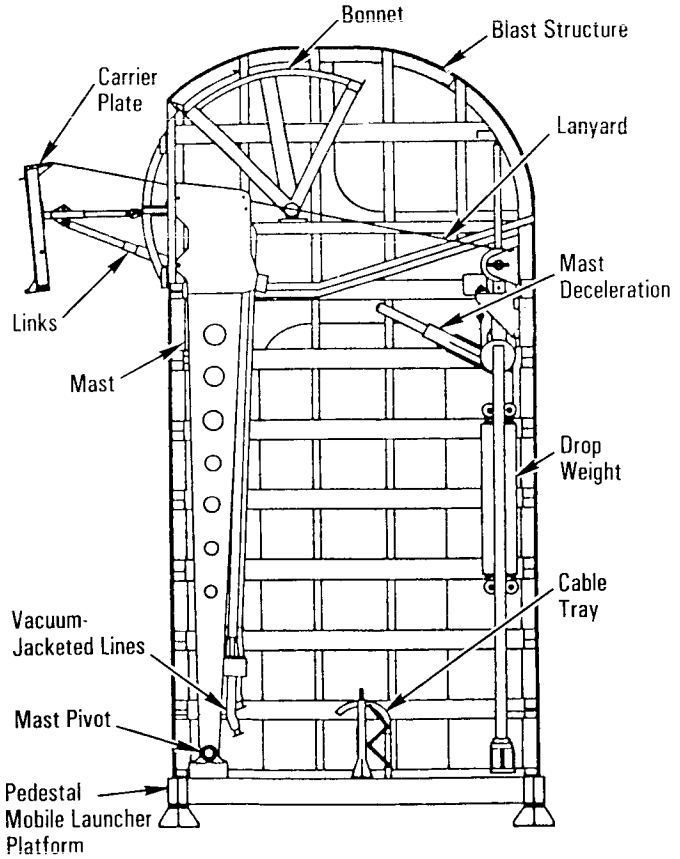


*Tail Service Mast, Interior Details*

nozzles and the solid rocket boosters after they are erected in the Vehicle Assembly Building or while the space shuttle is undergoing checkout at the pad.

The main engine service platform is positioned beneath the mobile launcher platform and raised by a winch mechanism through the exhaust hole to a position directly beneath the three engines. An elevator platform with a cutout may then be extended upward around the engine bells. The orbiter engine service platform is 34 feet long and 31 feet wide. Its retracted height is 12 feet, and the extended height is 18 feet. It weighs 60,000 pounds.

Two solid rocket booster service platforms provide access to the nozzles after the vehicle has been erected on the mobile launcher platform. The platforms are raised from storage beneath the mobile launcher into the solid rocket booster exhaust holes and hung from brackets by a turnbuckle arrangement. The solid rocket booster platforms are 4 feet high, 20 feet long and 20 feet wide. Each weighs 10,000 pounds.

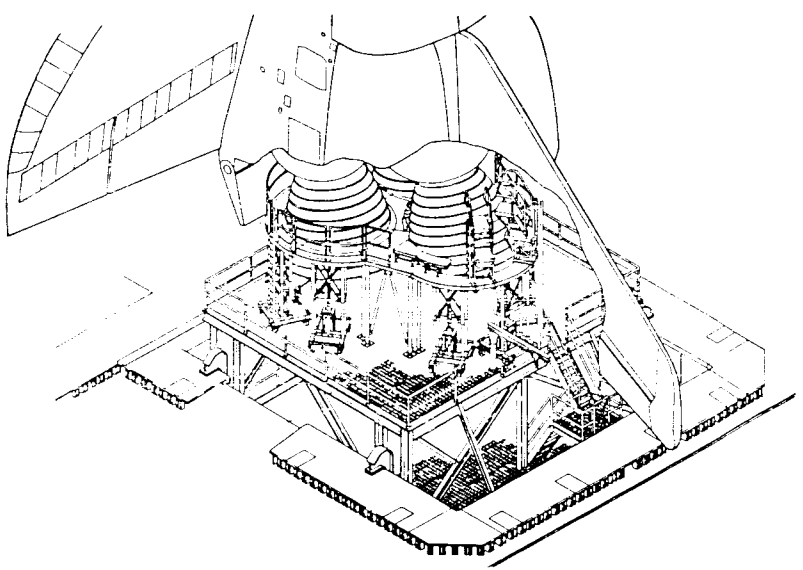

*Orbiter Engine Service Platforms at Launch Pad*

The orbiter and solid rocket booster service platforms are moved down the pad ramp to a position outside the exhaust area before launch.

**CRAWLER-TRANSPORTER.** Tracked crawler-transporter vehicles move the space shuttle vehicles between the Vehicle Assembly Building and Launch Complex 39-A or 39-B. The two transporters are 131 feet long and 114 feet wide. They move on four double-tracked crawlers, each 10 feet high and 41 feet long. Each shoe on the crawler track weighs 2,000 pounds. The transporter's maximum speed unloaded is 2 mph; loaded, it is 1 mph. Unloaded, it weighs 6 million pounds.

The transporters have a leveling system designed to keep the top of the space shuttle vehicle vertical within plus or minus 10 minutes of arc—about the dimensions of a basketball. This system also provides the leveling operations required to negotiate the 5-percent ramp leading to the launch pads and to keep the load level when it is raised and lowered on pedestals at the pad and in the Vehicle Assembly Building.



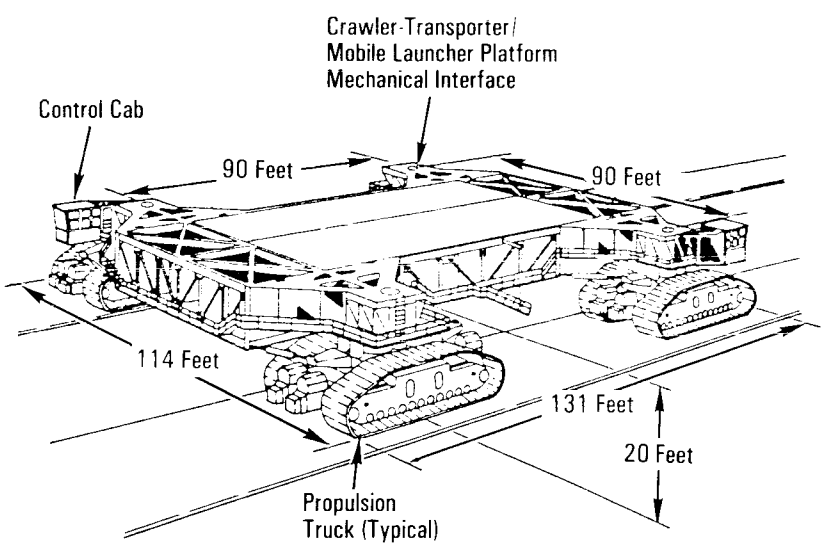


*Crawler-Transporter*

The overall height of the transporter is 20 feet, from ground level to the top deck, on which the mobile launcher platform is mated for transportation. The deck is flat and about the size of a baseball diamond (90 feet square).

Each transporter is powered by two 2,750-horsepower diesel engines. The engines drive four 1,000-kilowatt generators that provide electrical power to 16 traction motors. Through gears, the traction motors turn the four double-tracked crawlers spaced 90 feet apart at each corner of the transporter.

North of the Orbiter Processing Facility is a weather-protected crawler-transporter maintenance facility in which components of the crawler-transporters can be repaired or modified. It includes a high bay with an overhead crane for lifting heavy components and a low bay for shops, parts storage and offices. A pit has been built outside on the crawlerway to accommodate track segment removal and installation.

The crawler-transporters move on a roadway 130 feet wide, almost as broad as an eight-lane turnpike. The crawlerway from the VAB to the launch pads consists of two 40-foot-wide lanes separated by a 50-foot-wide median strip. The distance from the Vehicle Assembly Building to Launch Complex 39-A is 3.4 miles and 4.2 miles to Launch Complex 39-B. The roadway is built in three layers with an average depth of 7 feet. The top surface is river gravel. The gravel is 8 inches thick on curves and 4 inches on straightaway sections.

When the space shuttle vehicle is fully assembled and checked out in the VAB, the crawler-transporter is driven into position beneath the mobile launcher platform. The transporter jacks the mobile launcher off its pedestals, and the rollout to the launch pad begins. It takes approximately five hours for the unusual transport vehicle to make the trip from the VAB to the launch pad. During the transfer, engineers and technicians aboard the crawler, assisted by ground crews, operate and monitor systems while drivers steer the vehicle towards its destination.

After the mobile launcher platform is "hard down" on the launch pad pedestals, the crawler is backed down the ramp and returned to its parking area.

**LAUNCH COMPLEXES 39-A and 39-B.** The launch pads are roughly octagonal in shape; each contains about 0.25 of a square mile of land. The pads are elevated above the surrounding terrain: 39-A is 48 feet above sea level and 39-B 55 feet. The hardstand area at the top of each pad measures 390 by 325 feet.

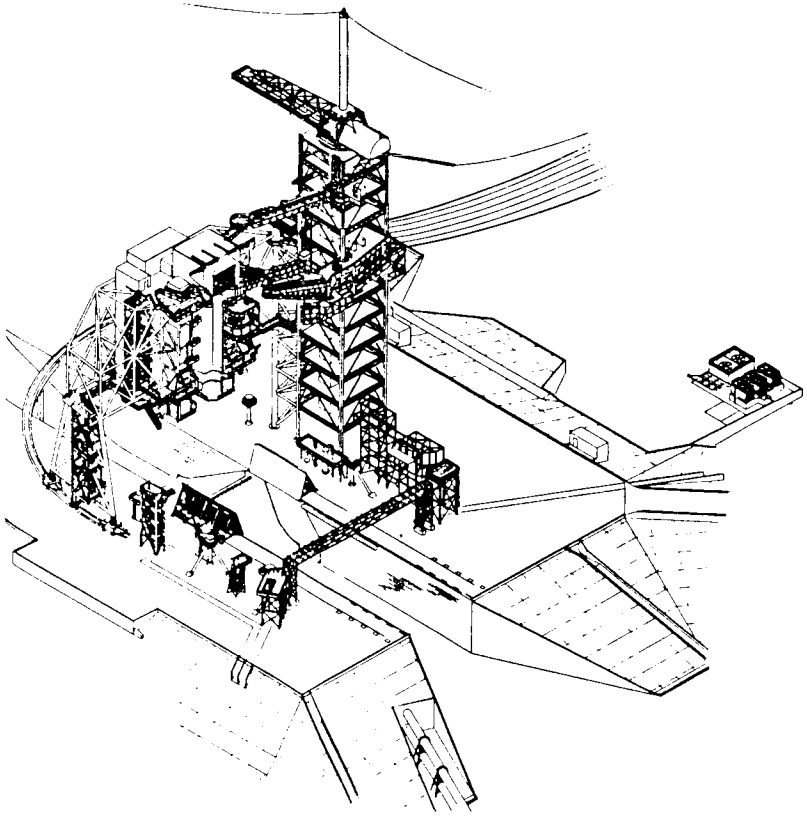

*Overhead View of Empty Pad*

**Fixed Service Structure.** The fixed service structure, located on the west side of the pad, is a square cross section steel structure that provides access to the space shuttle orbiter and to the rotating service structure. It is a part of the structure removed from the Apollo mobile launchers when they were converted for space shuttle use. The fixed service structure is essentially an open-framework structure 40 feet square that is permanently fixed to the pad surface. The fixed service structure tower supports the hinge about which the rotary bridge supporting the rotating service structure pivots as it moves between the orbiter checkout position and the retracted position. A hammerhead crane atop the fixed service structure provides hoisting services required in pad operations. Fixed service structure levels are at 20-foot intervals beginning at 27 feet above the surface of the pad. The height of the fixed service structure to the top of the tower is 247 feet. It is 265 feet to the top of the hammerhead crane, and the top of the lightning mast is 347 feet above the pad surface.

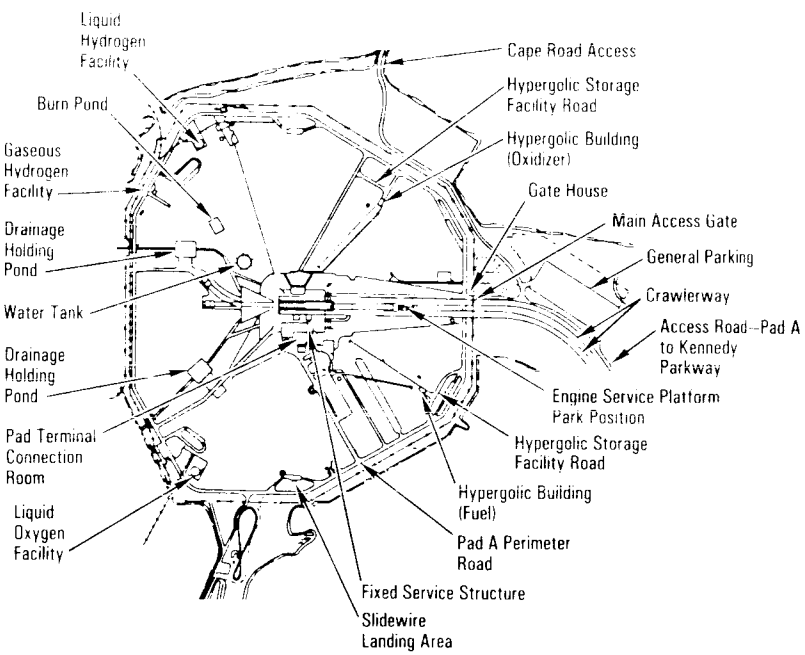


*Launch Complex 39-A Surface Arrangement (Pad 39-B Similar)*

The fixed service structure has three space shuttle service arms: an access arm and two vent arms.

The orbiter access arm swings out to the orbiter crew compartment hatch to allow personnel to enter the crew compartment. The outer end of the access arm ends in an environmental chamber (white room) that mates with the orbiter and holds six persons. The arm remains in the extended position until seven minutes 24 seconds before launch to provide emergency egress for the flight crew. The orbiter access arm is extended and retracted by four hydraulic cylinders that rotate it through an arc of 70 degrees in approximately 30 seconds. In its retracted position, the arm is latched to the fixed service structure. The orbiter access arm is

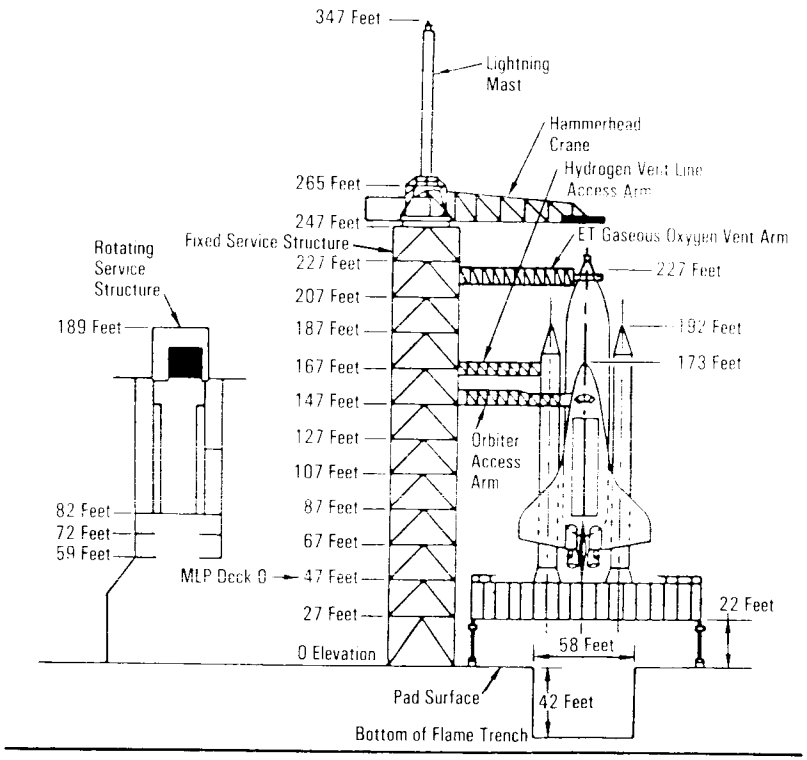


*Space Shuttle/Pad Elevations*

located 147 feet above the pad. It is 65 feet long, 5 feet wide and 8 feet high and weighs approximately 52,000 pounds.

The external tank hydrogen vent umbilical and intertank access arm consists of a retractable arm, a fixed structural platform and a vent line (assembly and mechanism). This arm provides access for the mating of the umbilical to the vehicle and access to the intertank area. It is 48 feet long and weighs 15,800 pounds. It rotates through 210 degrees to its extended position. It is retracted after umbilical/vent line mating at approximately T minus five days, leaving the umbilical vent line connected to the external tank to support tanking and launch.

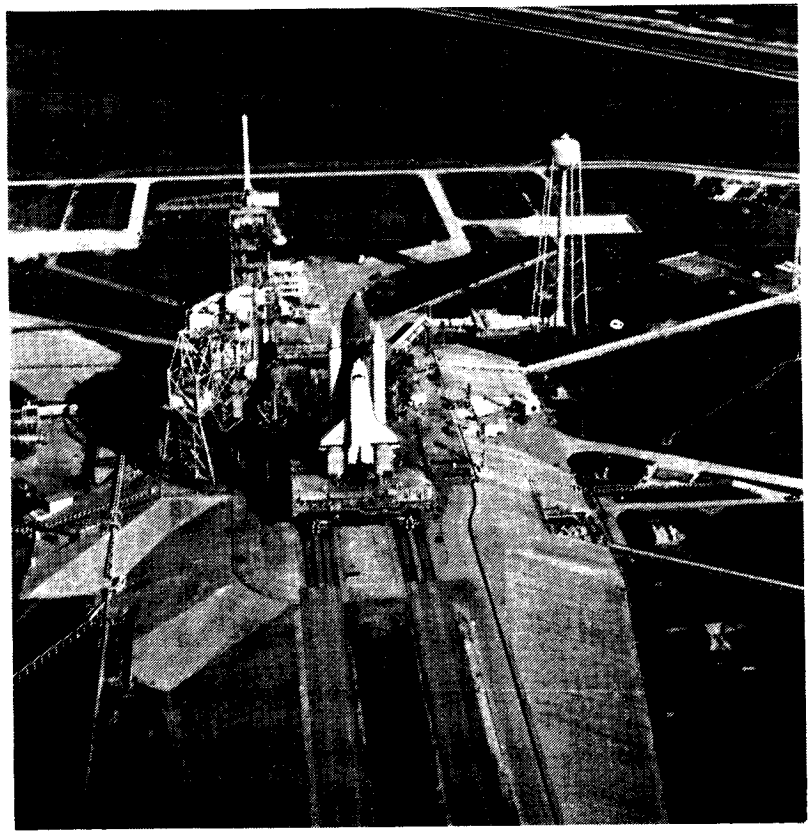

*Space Shuttle Vehicle Transport to Launch Complex*

The structural platform provides mounting interfaces, supports equipment and protects the umbilical from the launch environment. It is mounted on the northeast corner of the fixed service structure 169 feet above the pad surface and weighs approximately 100,000 pounds.

The vent line provides continuous venting of the external tank during and after hydrogen loading (tanking). It also supports vehicle service lines (small helium and nitrogen lines and electrical cables).

The external tank's gaseous oxygen vent arm system is a retractable arm and vent hood assembly designed to vent gaseous oxygen vapors away from the space shuttle vehicle. These vapors are created as the liquid oxygen in the external tank boil off (change from liquid to gas). The arm truss section is 65 feet long from tower hinge to vent hood hinge. The diameter of the vent hood is 13 feet.

Before cryogenic loading, the arm is swung into position over the external tank and the hood is lowered into position over the external tank vent louvers. Two inflatable dock seals envelop the vent louvers, providing an exhaust path between the louvers and the exhaust ducts.



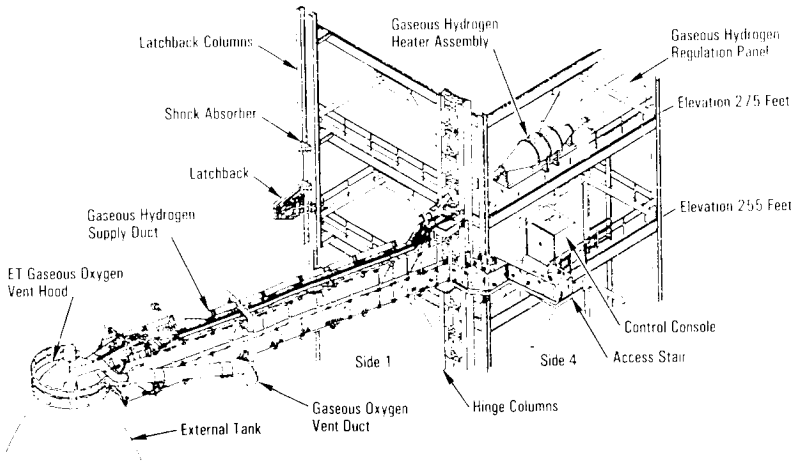


*External Tank Gaseous Oxygen Vent Arm System*

Approximately 2.5 minutes before launch, the vent hood is raised to clear the external tank (it takes approximately 25 seconds to raise the hood). The arm is then retracted to the latchback position against the fixed service structure one minute 45 seconds before launch. It is not latched at this time because of the possibility of a launch countdown hold. In the event of a launch countdown hold after the arm is retracted, the arm can be re-extended and the vent hood lowered onto the external tank. When the countdown resumes, the arm recycles through the sequence. The arm is latched when the SRB ignition signal is given at T minus zero minutes.

The fixed service structure also includes the emergency exit system, or slidewire. The slidewire provides an escape route for personnel aboard the space shuttle and on the orbiter access arm of the fixed service structure until the final 30 seconds of the countdown. Seven slidewires extend from the level to the orbiter access arm to the ground on the west side of the pad. One three-man basket with a flat bottom and netting all around is suspended from each wire and positioned on the fixed service structure for quick entry in an emergency. Each basket holds a maximum of four persons. When boarded and released, each basket slides down a 1,200-foot wire to the bunker west of the launch pad. The baskets are slowed and brought to a stop at the landing zone by a deceleration system made up of a braking system catch net and drag chain.

The lightning mast extends above the fixed service structure and surrounding pad equipment and provides protection from lightning strikes. The 80-foot-tall fiberglass mast is grounded by a cable that starts from a ground anchor 1,100 feet south of the fixed service structure, angles up and over the lightning mast, then extends back down to a second ground anchor 1,100 feet north of the fixed service structure. The mast functions as an electrical insulator holding the cable away from the fixed service structure

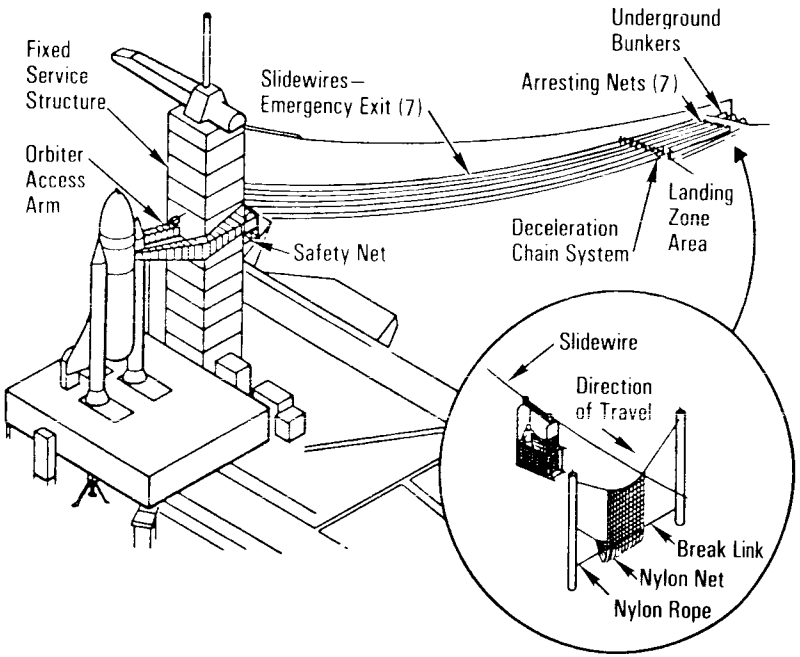


*Launch Pad Emergency Exit System*

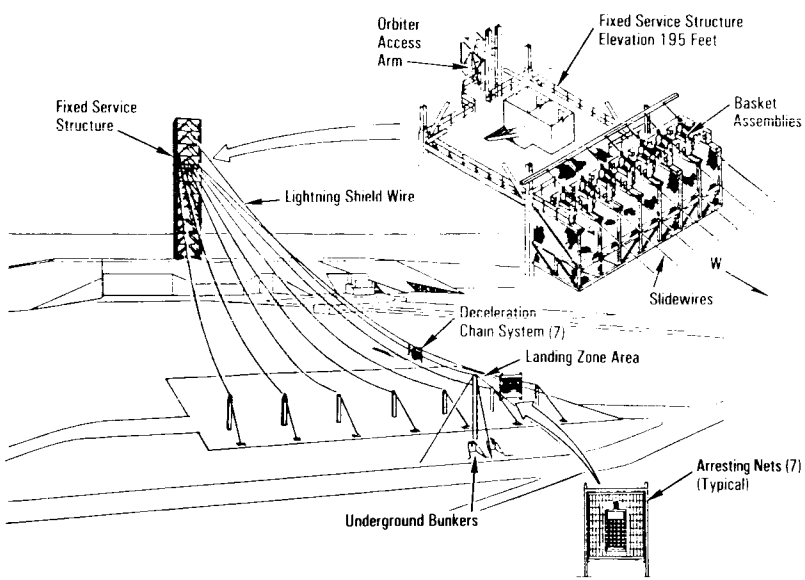


*Emergency Exit System*

and as a mechanical support in rolling contact with the cable. The mast and its support structure extend 100 feet above the fixed service structure.

**Rotating Service Structure.** The rotating service structure provides protected access to the orbiter for changeout and servicing of payloads at the pad. The structure is supported by a rotating bridge that pivots about a vertical axis on the west side of the pad's flame trench. The rotating service structure rotates through 120 degrees (one-third of a circle) on a radius of 160 feet. The hinge column rests on the pad surface and is braced to the fixed service structure. Support for the outer end of the bridge is provided by two eight-wheel, motor-driven trucks that move along circular twin rails installed flush with the pad surface. The track crosses the flame trench on a permanent bridge.

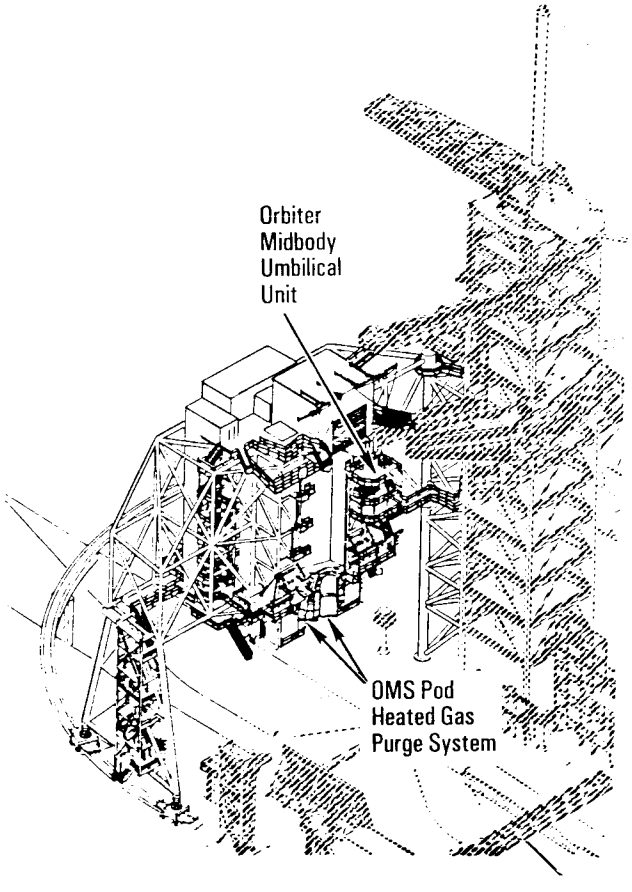


*Rotating Service Structure*

The rotating service structure is 102 feet long, 50 feet wide and 130 feet high. The elevation of the main structure above the surface of the pad ranges from 59 to 189 feet. The structure has orbiter access platforms at five levels to provide access to the payload bay while the orbiter is being serviced in the rotating service structure. Each platform has independent extendable planks that can be arranged to conform to a payload's configuration. With the exception of Spacelab and other horizontally handled payloads, satellites and experiments may be loaded into the orbiter from the rotating service structure under environmentally clean, or "white room," conditions.

The payload changeout room is the enclosed, environmentally controlled portion of the rotating service structure that supports payload delivery at the launch pad and subsequent vertical installation in the orbiter payload bay.

The orbiter midbody umbilical unit provides access and services to the midfuselage portion of the orbiter on the pad. A sliding extension platform and a horizontally moving line-handling mechanism provide access to the midbody umbilical door on the left side of the orbiter and fluids to the orbiter's power reactant storage and distribution system and payloads. Liquid oxygen and liquid hydrogen for the fuel cells and gases, such as nitrogen and helium, are provided through the umbilical unit. The unit is 22 feet long, 13 feet wide and 20 feet high. The orbiter midbody umbilical unit extends from the rotating service structure at levels ranging from 158 to 176 feet above the surface of the pad.

The hypergolic umbilical system carries hypergolic fuel and oxidizer, helium, and nitrogen service lines from the fixed service structure to the vehicle. The system also provides for rapidly mating the lines to and demating them from the vehicle. Six umbilical handling units—manually operated and locally controlled—are structurally attached to the rotating service structure.

The umbilical handling units consist of three pairs located on the left and right sides of the—

1. Aft end of the orbiter, serving the orbital maneuvering system and reaction control system.

2. Nose section, serving the forward RCS.

The orbiter midbody umbilical unit and hypergolic umbilical system connections with the orbiter are severed when the rotating service structure is prepared for retraction to its park site.

The OMS/RCS pods are made of an epoxy material that tends to absorb moisture with time, affecting its structural qualities. The only way to drive the moisture out is to heat the pods. Two large clamshell-like enclosures have been built at the base of the rotating service structure so they completely envelop the OMS/RCS pods when the rotating service structure is in position around the orbiter. These enclosures are purged with heated air as long as necessary to drive out the absorbed moisture.

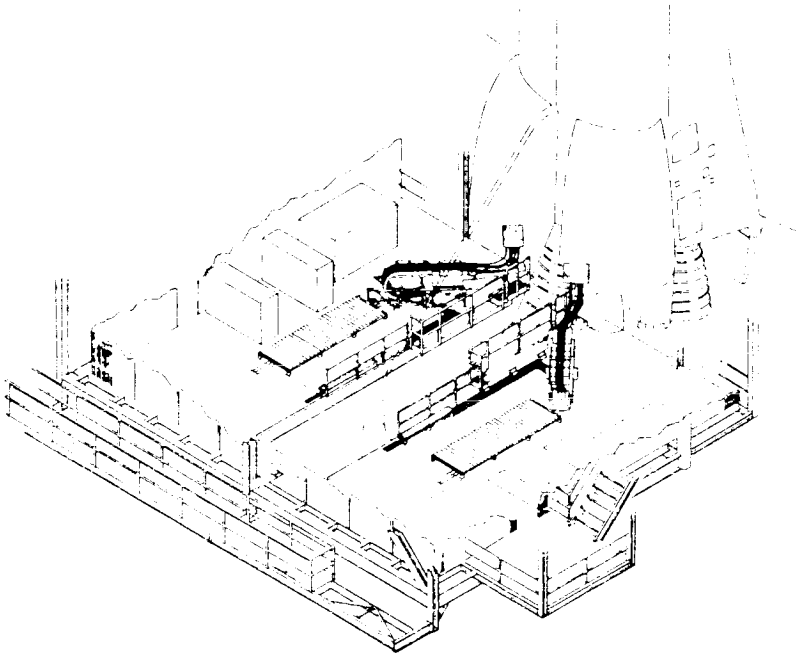

*Aft Reaction Control System/Orbital Maneuvering System Umbilical*

**Sound Suppression Water System.** A sound suppression water system is installed on the launch pads to protect the orbiter and its payloads from damage by acoustical energy reflected from the mobile launcher platform during launch. The system includes an elevated water tank with a capacity of 300,000 gallons. The tank is 290 feet high and stands on the northeast side of the pad. The water is released just before the ignition of the orbiter's three main engines and twin solid rocket boosters and flows through parallel 7-foot-diameter pipes to the pad area.

Water pours from 16 nozzles atop the flame deflectors and from outlets in the space shuttle main engine exhaust hole in the mobile launcher platform at main engine ignition (T minus 6.6 seconds). When solid rocket booster ignition and lift-off follow at T minus zero, a torrent of water flows onto the mobile launcher from six large quench nozzles, or "rainbirds," mounted on its surface.



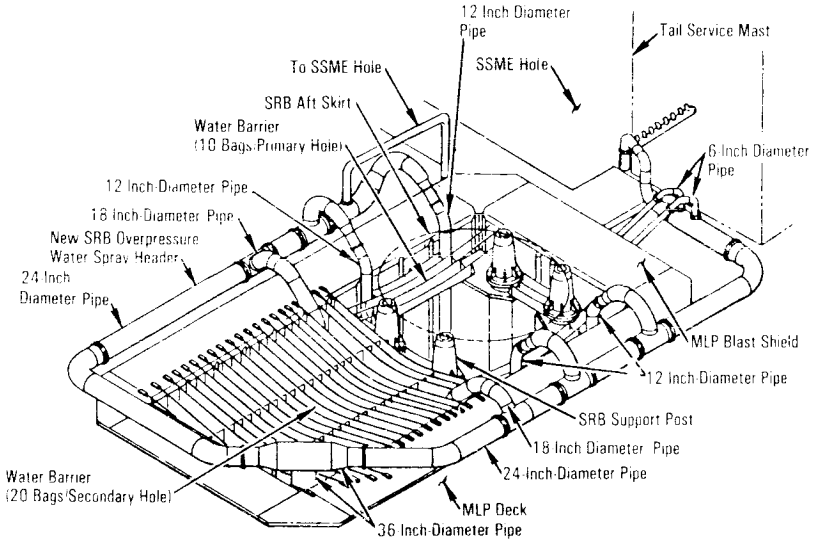


*Solid Rocket Booster Overpressure Suppression System*

Water is also sprayed into the primary solid rocket booster exhaust holes to provide overpressure protection to the orbiter at solid rocket booster ignition. The peak flow rate from the prelift-off and postlift-off systems is 900,000 gallons per minute nine seconds after lift-off.

The rainbirds are 12 feet high. Two of them, those in the center, are 42 inches in diameter. The other four are 30 inches in diameter. Acoustical levels reach their peak when the space shuttle is about 300 feet above the mobile launcher platform.

Below 300 feet, the rocket exhaust is channeled over the flame deflectors and into the flame trench. Above 300 feet, sound is reflected off the metal plates of the mobile launcher platform's surface. In terms of time, the maximum sound reflection comes about five seconds after lift-off. The problem ends after the shuttle has been airborne for about 10 seconds and has reached an altitude of 1,000 feet.

Design specifications for space shuttle payloads require an ability to withstand acoustical loads of up to 145 decibels. The system reduces the acoustical levels within the orbiter's payload bay to about 142 decibels, 3 decibels below the design requirement.

The solid rocket booster ignition overpressure suppression system was installed to alleviate the effect of the initial reflected pressure pulse when the solid rocket boosters ignite. This pressure pulse, without the overpressure suppression system, exerts a pressure on the wings and ailerons that approaches the design limit. The overpressure system is designed to reduce this pressure by a factor of 3. The system was designed and installed following STS-1 as a direct result of overpressures measured during the launch.

The system has two primary components. A water spray system fed from large headers provides a cushion of water directed down into and around the primary flame hole (directly beneath the stationary solid rocket booster). This barrier is supplemented by a series of water bags in the primary and secondary flame hole, which provides a water mass to dampen the blow-back pressure pulse. The water spray and the water barrier largely block the path of a reflected pressure wave and greatly decrease its intensity.

An engine deluge system consisting of 22 water nozzles spaced around the space shuttle main engine exhaust hole in the mobile launcher platform is designed to cool the aft end of the orbiter following flight readiness firing of the main engines and is also available in the event of an on-pad abort. After the engines are shut down, there can still be some residual hydrogen remaining in the vicinity of the main engines' nozzles that can burn for an appreciable period of time. The system is fed by a 6-inch-diameter supply line and can provide a flow of up to 2,500 gallons per minute directed at the orbiter's engine nozzle/boattail area to control hydrogen afterburning and provide cooling water.

**Space Shuttle Main Engine Hydrogen Burnoff System.** During the orbiter main engine start sequence, hydrogen vapors are exhausted into the engine nozzles before ignition. At ignition the hydrogen-rich atmosphere in the engine bell is ignited, causing a small "explosion" that could damage the engine bells. To preclude this, six hydrogen burnoff preignitors have been installed on the tail service mast, positioned toward main engines 1, 2 and 3.



Just before main engine ignition, the hydrogen burnoff ignitors are initiated and throw thousands of hot, luminescent balls into the area below the engine bells to ignite any free hydrogen. Rough combustion at main engine start is thus avoided.

**Flame Deflector System.** Pad structures are insulated from the intense heat of launch by the flame deflector system, which protects the flame trench floor and the pad surface along the top of the flame trench. The flame trench transecting the pad's mound at ground level is 490 feet long, 58 feet wide and 40 feet high. It is made of concrete and refractory brick.

The orbiter flame deflector is fixed and is 38 feet high, 72 feet long and 57.6 feet wide. The deflector weighs 1.3 million pounds.

The top of the solid rocket booster flame deflector abuts

with that of the orbiter flame deflector to form a flattened, inverted V-shaped structure beneath the mobile launcher platform's three exhaust holes. The solid rocket booster deflector is 42.5 feet high, 42 feet long and 57 feet wide. The structure weighs 1.1 million pounds.

The deflectors are built of steel and covered with a high-temperature concrete surface with an average thickness of 5 inches. There are two movable solid rocket booster side flame deflectors, one located on each side of the flame trench. They are 19.5 feet high, 44 feet long and 17.5 feet wide.

**Propellant Storage and Distribution.** Propellant servicing of the orbiter's reaction control systems, the solid rocket boosters' hydraulic power units and the external tank is performed at the pad. Cross-country lines lead from various propellant storage facilities to the pad structures and umbilical connections.

The liquid oxygen used as an oxidizer by the orbiter's main engines is stored in a 900,000-gallon storage tank located at the northwest corner of the pad with the control and distribution system. This ball-shaped storage vessel is a huge vacuum bottle designed to store cryogenic (supercold) liquid oxygen at a temperature lower than minus 297 F. One gallon of liquid oxygen weighs approximately 10 pounds. It is transferred to the pad by one of two main pumps capable of pumping 1,300 gallons per minute.

The liquid hydrogen used as a fuel by the orbiter's main engines is stored in an 850,000-gallon storage tank located at the northeast corner of the pad with the control and distribution system. This large ball-shaped storage vessel is also a huge vacuum bottle designed to contain and store liquid hydrogen, a cryogenic fluid much colder than liquid oxygen. Liquid hydrogen vaporizes at temperatures above minus 423 F at sea level. Because of its lightness (one gallon of liquid hydrogen weighs approximately 0.5 of a pound), pumps are not needed to transfer it to the pad.

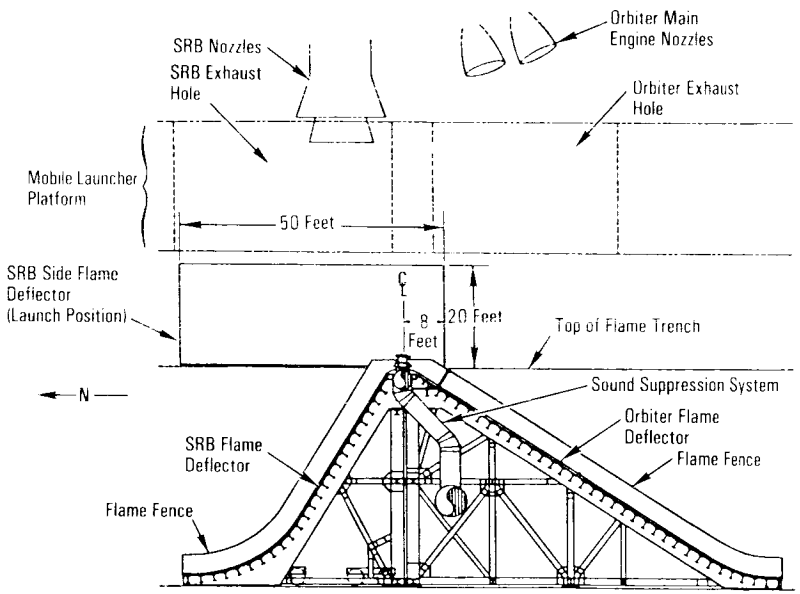


*Orbiter/Solid Rocket Booster Flame Deflector*

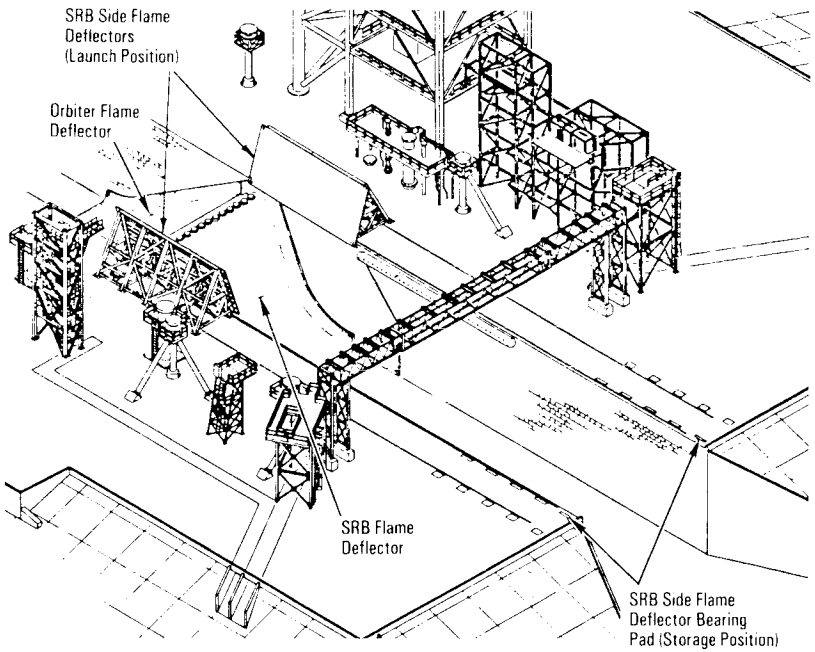


*Orbiter/Solid Rocket Booster Flame Deflectors*

Vaporizers convert a small portion of the liquid hydrogen stored in the tank into a gas, and the gas pressure exerted from the top of the tank moves the liquid hydrogen into the transfer lines and to the pad.

Vacuum-jacketed transfer lines carry these supercold fluids to the mobile launcher platform, where they are fed through the tail service masts and T-0 umbilicals to the orbiter and then to the external tank.

The hypergolic storage area and distribution system provide the propellant for the orbiter's OMS/RCS engines, which use monomethyl hydrazine as a fuel and nitrogen tetroxide as an oxidizer. These fluids are stored at ambient temperatures and are hypergolic; that is, they ignite on contact. They are stored separately in well-separated areas at the southwest and southeast corners of the pads. These propellants are fed by transfer lines to the pad and through the fixed service structure to the rotating service structure hypergolic umbilical system.

Other fluids and gases supplied on the pad include helium, nitrogen, shop air, Freon 21 and ammonia.

**PAYLOAD PROCESSING.** A wide range of payloads—some to be deployed from the space shuttle, others only to be carried into space in the payload bay and returned at the end of the mission—are delivered to KSC to undergo final processing, checkout and installation aboard the orbiter. Space shuttle payload processing is performed in parallel with vehicle processing so that fully integrated and tested payloads are ready for installation in the orbiter at the appropriate time to support the launch schedule.

In order to obtain the shortest possible space shuttle turnaround flow, KSC performs a simulated orbiter-to-cargo interface verification of the entire payload before its is installed in the orbiter.

Payloads follow one of two functional flows: they are installed horizontally in the orbiter in the OPF or vertically at the pad.

**Multiuse Mission Support Equipment.** Essential to the processing of payloads at various Kennedy Space Center shuttle facilities is the multiuse mission support equipment. This consists of the payload canister, payload canister transporter, payload strongback and payload handling fixture.

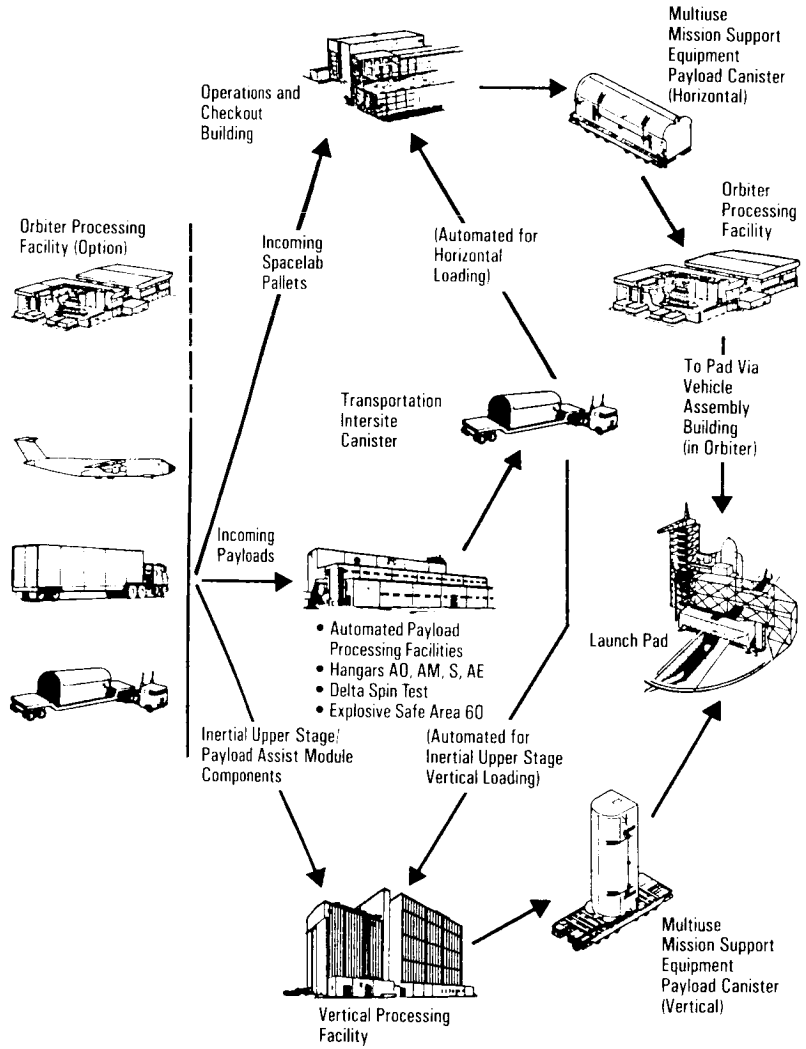


*Space Transportation System Payload Operations*

Payload Canister. The payload canister is a payload-bay-sized container that is used to transport fully integrated shuttle payloads from the Vertical Processing Facility to the launch pad's payload changeout room or from the Operations and Checkout Building to the OPF in a controlled environment.

Two identical canisters are available for use. Each is 65 feet long, 18 feet wide and 18 feet 7 inches high. They have the capability to carry vertically or horizontally processed payloads up to 15 feet in diameter and 60 feet long, matching the capacity of the orbiter payload bay. They can carry payloads weighing up to 65,000 pounds.

Payload trunnion and keel support structures support a payload loaded into the canister in the same way it is supported in the orbiter payload bay. Clamshell-shaped doors at the top of the canister operate like the orbiter payload bay doors, with the same allowable clearances.

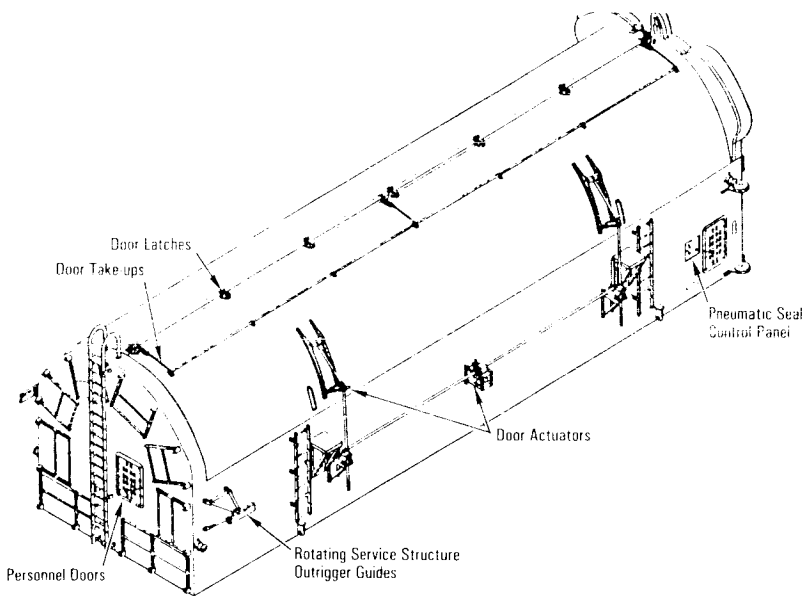


*Payload Canister*

Payload Canister Transporter. The payload canister transporter is a 48-wheel, self-propelled truck designed to operate between and within space shuttle payload processing facilities. Two are used to transport the payload canisters and their associated hardware throughout KSC. Each is 65 feet long and 23 feet wide. Their flatbeds can be lowered to 5 feet 3 inches or raised to 7 feet plus or minus 3 inches.

The transporter's wheels are independently steerable, permitting it to move forward, backward, sideways or diagonally or turn on its own axis like a carousel. It has self-contained braking and stabilization jacking systems.

A bare transporter weighs 230,000 pounds. With a full load of diesel fuel and with the environmental control system, fluids

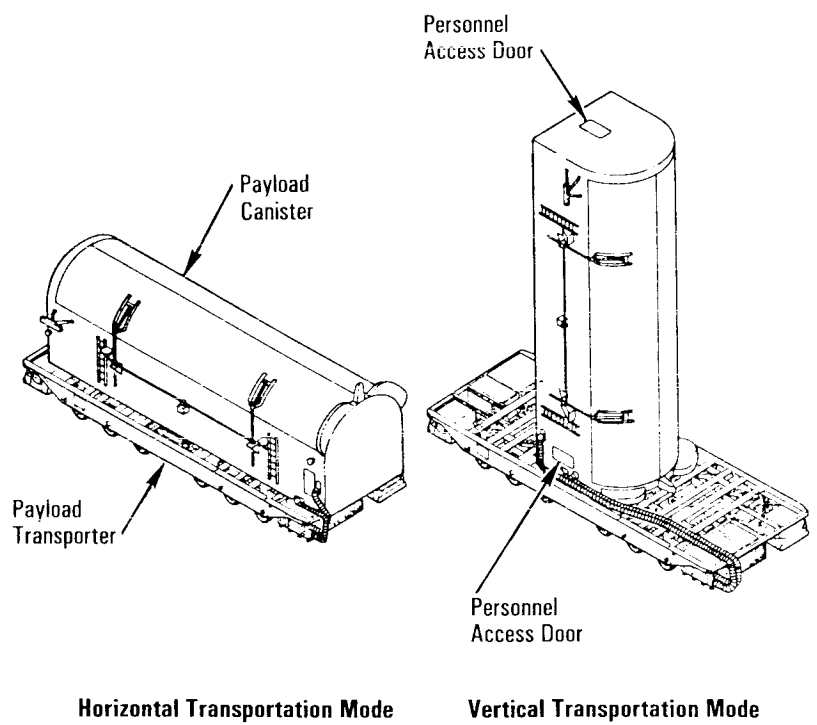


*Payload Canister Transporter*

and gas service, electrical power system, and instrumentation and communication system modules mounted, the transporter has a gross weight of 258,320 pounds.

The transporter is steerable from diagonally opposed operator cabs on each end. Its top speed unloaded is 10 mph. The maximum speed of the fully loaded transporter is 5 mph. Because payload handling will require precise movements, the transporter has a creep mode that permits it to move as slowly as 0.25 of an inch per second or 0.014 mph. Interfacility drive power is provided by a 400-horsepower diesel engine. Intrafacility drive power comes from an 82-kilowatt electric motor. The transporter can carry the payload canister in either the horizontal or vertical position.

Payload Strongback. The payload strongback provides support for all payload sections during horizontal handling. A major use of the strongback is the handling of Spacelab, but it will also be used to unload a wide variety of payloads during postflight handling in the Orbiter Processing Facility. Movable attachment points permit the strongback to be used for different payloads.

The strongback consists of a rigid steel frame with adjustable beams, brackets and clamps. It will not induce any bending or twisting loads on payload elements. The strongback is 60 feet long, 16 feet wide and 9 feet high and weighs 40,000 pounds.

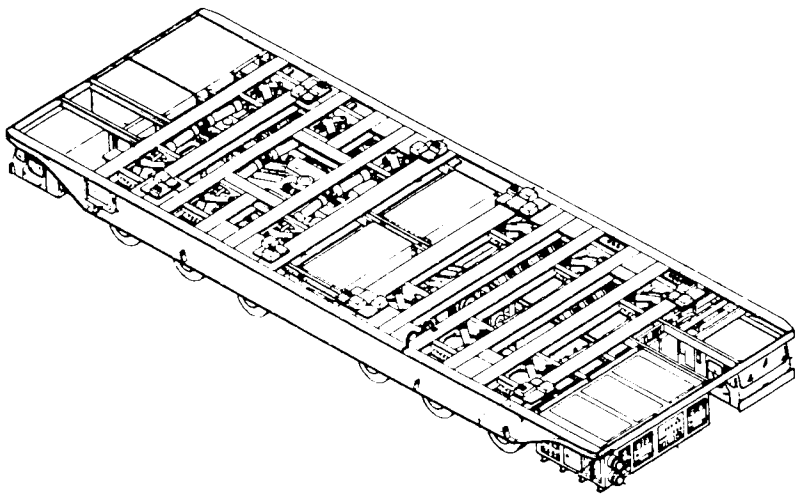

*Payload Canister Transporter*

Payload Handling Fixture. The payload handling fixture is designed for use in handling space shuttle payloads at any of the contingency landing sites. It can be transported via C-5A and can be erected in the field to support the full size and weight capacity of the space shuttle payload bay.

For horizontally processed payloads, a truck crane procured locally will lift the payload out of the space shuttle's payload bay and lower it into the PHF. For vertically installed payloads, the PHF can be rotated to a vertical position for deservicing.

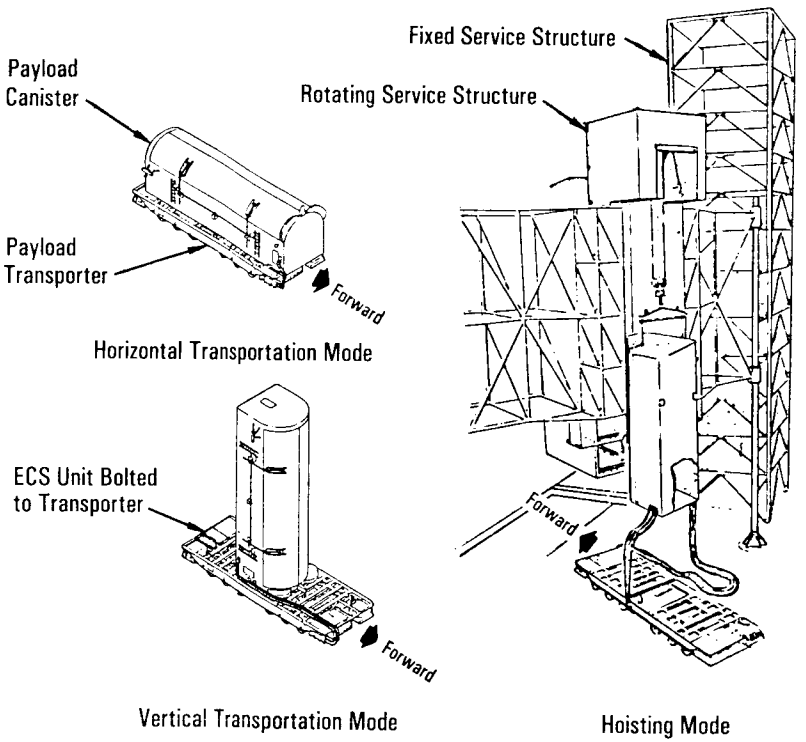


*Canister Transporter Operations*

**PROCESSING FACILITIES AT CAPE CANAVERAL AIR FORCE STATION.** Automated deployable payloads—such as telecommunications spacecraft—and their associated upper stages are received and initially processed at facilities at the Cape Canaveral Air Force Station. Other shuttle payloads, including free-flying deployable/retrievable pallets and small, self-contained payloads (getaway specials), are also processed at CCAFS facilities.

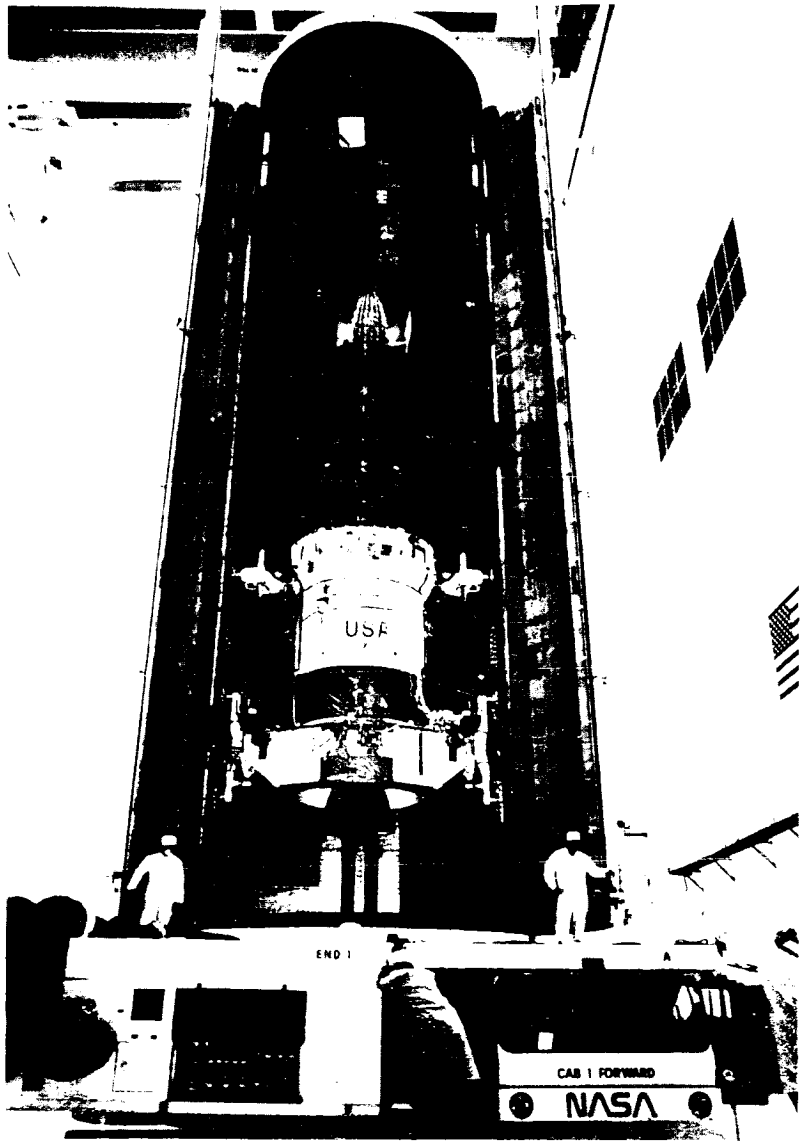


*Payload in Canister Transporter*

Building AE, Building AO, and Building AM contain high bay clean rooms used in the processing of deployable spacecraft. Hangar S supports processing of free-flyer pallets. Getaway specials are processed at the refurbished Delta Third Stage Facility.

Department of Defense payloads also are processed at CCAFS facilities.

Deployable spacecraft that are to be placed in geosynchronous orbit require an upper stage to boost them from the space shuttle's low Earth orbit to a geosynchronous transfer orbit with an apogee of approximately 22,300 miles. These upper stages are received and processed at facilities at the CCAFS.



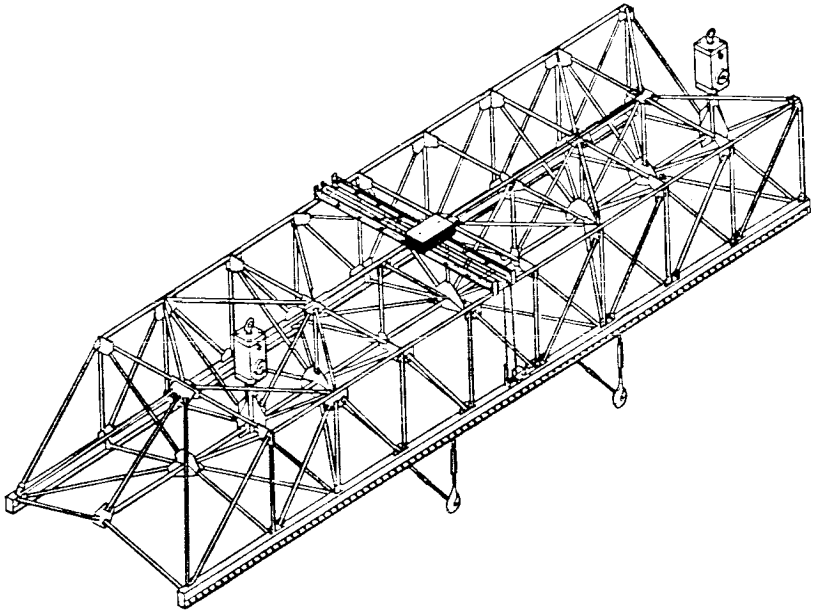

*Payload Strongback*

Explosive Safe Area 60A serves as a receiving and integration facility for the payload assist module upper stage and its associated airborne support equipment. The PAM is mated with the spacecraft at the facility, and they are transported to the Vertical Processing Facility at the Kennedy Space Center for integrated testing.

The Delta Spin Test Facility is used for balancing and testing Delta-class space transportation system upper stages for spacecraft that use spin-stabilized guidance.

The inertial upper stage is received at the Solid Motor Assembly Building in the Titan III complex at the Cape Canaveral Air Force Station. Operations in this building are under the management of the U.S. Air Force. For non-DOD missions, the IUS is moved to the Vertical Processing Facility at KSC for mating with its spacecraft. DOD spacecraft are mated at the Air Force station at the Shuttle Payload Integration Facility.

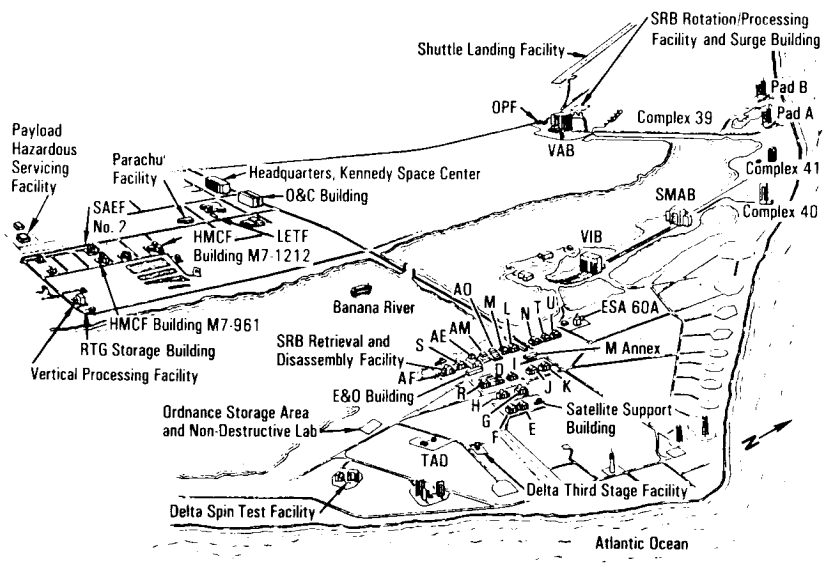


*Map of Shuttle Vehicle and Cargo Processing Facilities at Cape Canaveral Air Force Station and Kennedy Space Center*

**RADIOISOTOPE THERMOELECTRIC GENERATOR STORAGE BUILDING.** Radioisotope thermoelectric generators, which will be used to generate power on payloads, are stored in a building located in a remote part of the KSC industrial area.

**VERTICAL PROCESSING FACILITY.** The Vertical Processing Facility in KSC's industrial area is designed to accommodate all vertically processed payloads through cargo integration. The VPF consists of an environmentally controlled high bay and airlock and single-story support facilities along the sides of the high bay.

The high bay area has a ceiling height of 105 feet and a usable floor area of 10,153 square feet. Equipment enters the airlock through a 71-foot-high, 24-foot-wide door. Access to the high bay from the airlock is through a 71-foot-high by 38-foot-wide door.

Two payload workstands with six fixed platforms provide access to payloads in the high bay. Two bridge cranes, 25 tons and 12 tons, can be linked to provide 35-ton lift capability. A 10-ton monorail crane is located in the airlock. The six fixed platform levels are serviced by a 2-ton hoist.



**PAYLOAD HAZARDOUS SERVICING FACILITY.** Located west of the Vertical Processing Facility and the Hypergolic Maintenance and Checkout Facility in KSC's industrial area is the new Payload Hazardous Servicing Facility. This unique facility can double as a payload processing facility and a hazardous processing facility.

As a payload processing facility, the PHSF supports the assembly and testing of payload components and systems. As a hazardous processing facility, it supports the integration of solid rocket motors with the payloads and ordnance and hazardous fuel servicing.

The facility is environmentally controlled by a class 5,000 air at filter discharge. The temperature remains at 70 F, plus or minus 5 F.

A 70-foot-wide, 110-foot-long service bay features a 50-ton electrically operated running bridge crane with an 85-foot hook height. The payload airlock is 58 feet wide and 80 feet long and has a 15-ton electrically operated running bridge crane with a 75-foot hook height. The access doors to the PHSF are 35 feet wide and 75 feet high.

The west end of the service bay has a 20-foot by 40-foot sloped floor for fuel servicing. An emergency exhaust system is provided for diluting and removing hazardous fuel and oxidizer vapors. The service bay's fire protection system consists of a deluge system, sprinklers and fire hoses. Fuel waste and oxidizer are disposed of through trench drains in the service bay that lead to 7,500-gallon and 1,500-gallon stainless steel tanks, respectively. The drains and vents are equipped with aspirators and scrubbers.

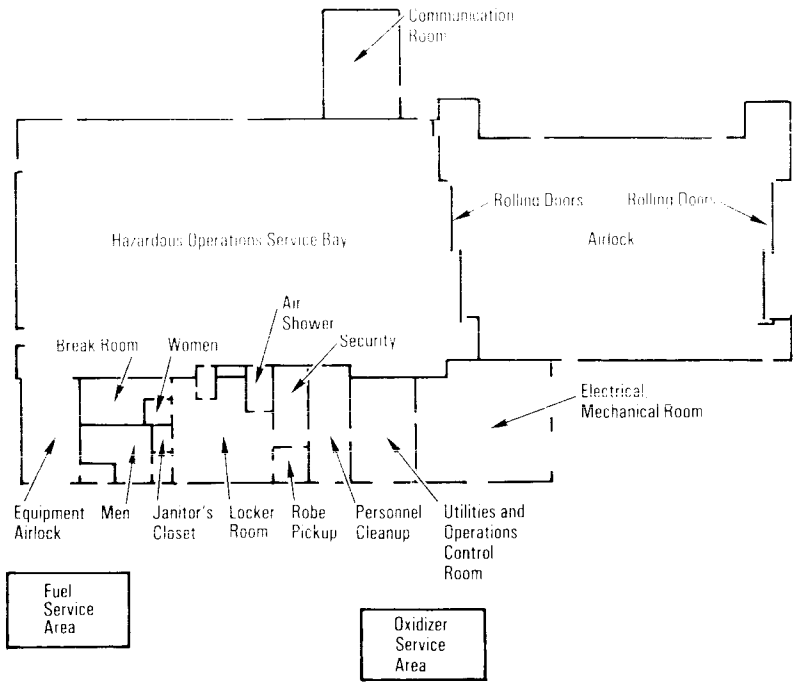


*Payload Hazardous Servicing Facility*

East of the PHSF is the Facility Control Building, which features two 1,200-square-foot payload control rooms. This facility provides two-way communication links to the PHSF service bay, Payload Processing Facility, VPF, Operations and Checkout Building and launch pad. Its location permits simultaneous operations to be conducted at the PHSF and VPF and pad even during hazardous operations at the PHSF without having to vacate the building. This building also contains offices, a ground station, electrical and mechanical shops and an area for donning SCAPE suits and equipment.

**PAYLOAD CHANGEOUT ROOM.** The payload changeout room is built into the launch pad's rotating service structure and functions as an environmentally controlled facility supporting cargo delivery to the pad and subsequent vertical installation in the orbiter cargo bay. Seals around the mating surface of the payload changeout room fit against the orbiter or payload canister and permit the payload bay or canister doors to be opened and the cargo to be removed without exposing it to outside air and contaminants. A clean-air purge in the PCR maintains environmental control during cargo operations. Payloads are removed from the payload canister and installed vertically in the orbiter using the extendable payload ground handling mechanism. Fixed and extendable work platforms provide work access in the PCR.

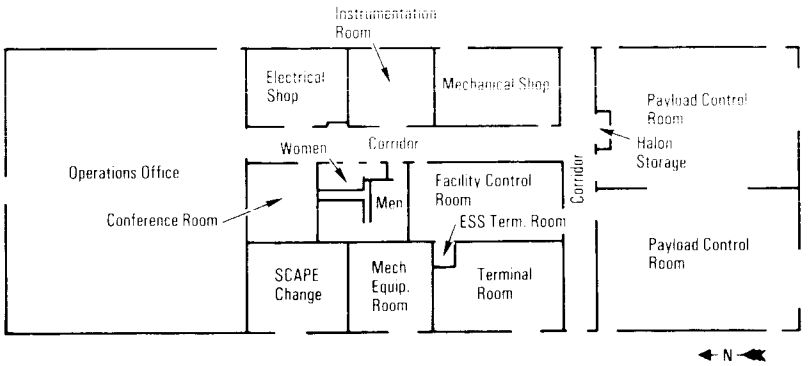


*Facility Control Building*

**VERTICAL PROCESSING/INTEGRATION OPERATIONS.** Vertically integrated payloads normally are received in payload processing facilities in Buildings AE, AO and AM and Hangar S at the Cape Canaveral Air Force Station or in the Spacecraft Assembly and Encapsulation Facility 2 in the KSC industrial area. These payloads consist primarily of automated satellites or spacecraft using upper stages, and their processing normally involves hazardous operations that are conducted in explosive safe areas located at the CCAFS. Vertical integration into a complete shuttle payload is performed in the Vertical Processing Facility.

Spacecraft undergo buildup in the clean room environments of one of the payload processing facilities to which they are initially assigned and where they receive preintegration testing.

After functional tests are completed, spacecraft are moved to a safe area for hazardous operations. These areas are the Delta Spin Test Facility and the explosive safe area at the CCAFS. Activities performed in these areas include the installation of solid propellant apogee motors or ordnance separation devices, hydrazine loading, and any other work involving items that are potentially explosive or hazardous.

Upon completion of these hazardous operations, a spacecraft is ready to be transported to the Vertical Processing Facility.

After it has been fully checked out at the appropriate facility, the spacecraft's upper stage is transported to the VPF for mating with its spacecraft.

The final integration and testing of vertically integrated payloads is accomplished in the VPF. Operations in the VPF are conducted under environmentally controlled conditions.

The entire facility is a clean room. Its temperature is controlled at 75 F and relative humidity is maintained at 45 percent, plus or minus 5 percent.

Spacecraft processing in the VPF depends on the type of upper stage involved. A spacecraft already mated with a PAM-D is removed from the transporter container and installed directly in one of two workstands. A spacecraft using an IUS is installed in one of two workstands, where it is mated with an IUS that was previously installed in the stand.

Regardless of where the upper stages are mated to their spacecraft, the entire space shuttle payload is eventually assembled in a single VPF workstand. Individual payloads (spacecraft mated with an upper stage) are tested before any combined payload testing or simulated orbiter-to-payload testing. These stand-alone tests are performed using portable test equipment or the remote ground checkout equipment.

The last major test in the Vertical Processing Facility is the cargo integration test. Cargo integration test equipment verifies payload/cargo mechanical and functional interfaces with the orbiter before the payload is shipped from the VPF to the launch pad. CITE processing of the entire payload begins with power-on health and status checks, functional tests, computer and communications interface checks (performed on the IUS), and spacecraft command and monitor tests. These are followed by a mission simulation test that simulates all normal mission functions through payload deployment.

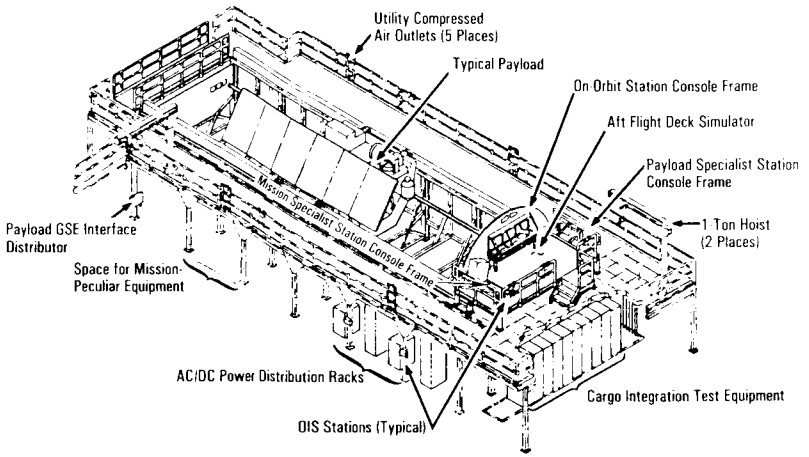


*Horizontal Cargo Integration Test Equipment Stand in O&C Building*

If required, an end-to-end test is performed with the participation of other NASA field centers involved in the payload portion of the mission.

After the completion of testing, the entire space shuttle payload is placed in the payload canister by the vertical payload handling device and transported to the launch pad. Environmental conditioning and system monitoring are provided during transport operations to the payload changeout room on the rotating service structure.

At the pad, the canister is hoisted to the proper elevation in the retracted RSS and locked into position. The environmental seals of the payload changeout room are then inflated to seal against the sides of the canister. The space between the closed doors of the PCR and the canister are purged with clean air to ensure the required cleanliness before the doors of the PCR and canister are opened.

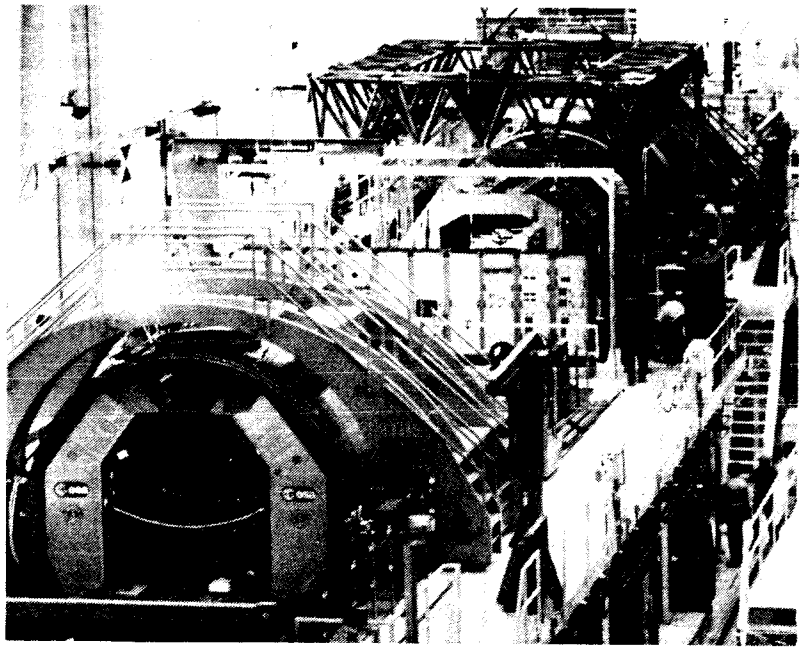

*Spacelab Horizontal Cargo Integration Test Equipment Stand in O&C Building*

The payload is then transferred from the canister into the PCR by the payload ground handling mechanism. The PGHM is retracted into the PCR, and the canister and PCR doors are closed. The environmental seal is deflated, and the canister is lowered onto its transporter and taken to a storage facility. The RSS is then moved into position to enclose the orbiter's payload bay and establish environmental seals. The space between the closed doors of the PCR and the payload bay are then purged with clean air.

After the PCR doors and payload bay doors are opened, the PGHM extends the payload into the orbiter. The payload is secured to the orbiter, and the PGHM is retracted and secured. During this operation, the PCR's environmental control is maintained, and the payload bay is purged with clean temperature- and humidity-controlled air.

**HORIZONTAL CARGO PROCESSING FACILITIES.** Horizontally integrated payloads are received, assembled and integrated in the Operations and Checkout Building before they are mated with the orbiter at the Orbiter Processing Facility. The Spacelab and its payloads constitute a large majority of the horizontal payloads.



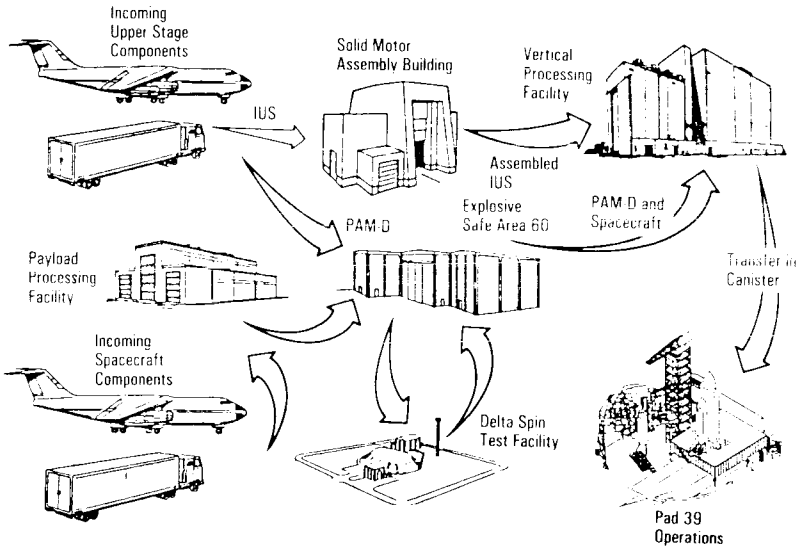


*Vertical Payload Processing Flow*

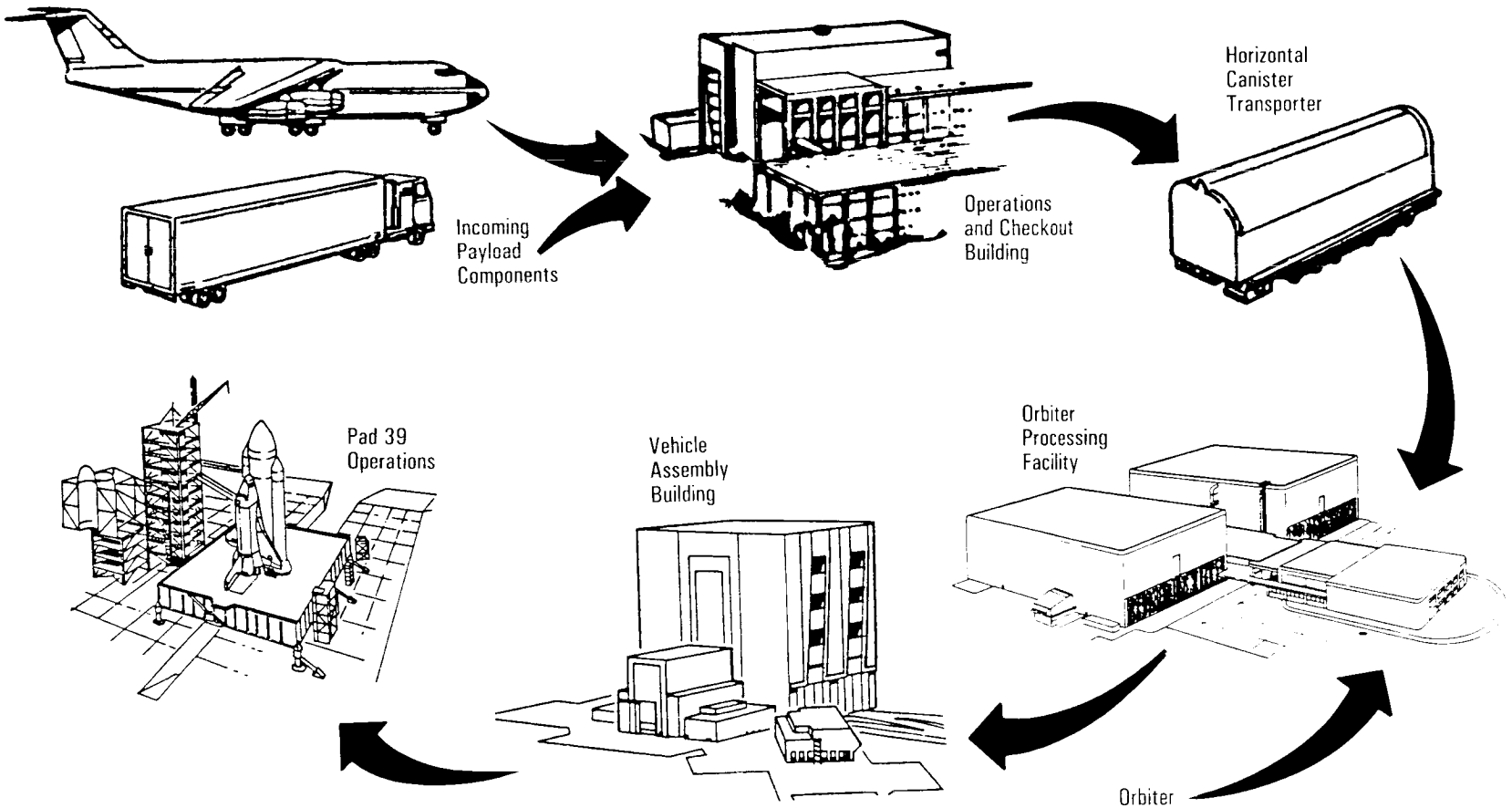


*Horizontal Payload Processing Flow*

The Operations and Checkout Building is a five-story structure containing 600,000 square feet of offices, laboratories, astronaut crew quarters and spacecraft assembly areas. It is located in the industrial area immediately east of the KSC headquarters building.

**Spacelab Assembly/Checkout Area.** The Spacelab assembly and test area is located in the Operations and Checkout Building. It is 650 feet long and 85 feet wide. It is divided into a high bay area 157 feet long and 104 feet high and a low bay area 475 feet long and 70 feet high. The assembly and test area is environmentally controlled to 75 F (plus or minus 2 F). Relative humidity is maintained below 60 percent.

The major Spacelab facilities in the O&C Building are the two integrated assembly and checkout workstands, engineering model workstand, pallet staging workstands, a rack/floor workstand, a tunnel maintenance area, an airlock maintenance area and two end cone stands.

The two integrated workstands are controlled from two automatic test equipment control rooms located on the third floor. Control of the assembly and checkout workstands can be switched to either control room.

Mechanical and electrical ground support equipment required to support Spacelab assembly and testing are located in and around the workstands. These arrangements make it possible to support two independent Spacelab processing flows.

To assist in Spacelab-orbiter interface verification, an orbiter interface adapter and two racks simulating the orbiter's aft flight deck are provided at the end of the workstand.

Orbiter electrical, gas and fluid interfaces are provided through ground support equipment cables or lines.

**Spacelab Processing/Integration Operations.** The Spacelab ground operations concept permits a user to design and develop an experiment that can be integrated with other individual experiments into a complete Spacelab payload.

The processing of Spacelab payloads begins with the integration and checkout of experiment packages and equipment with the appropriate structural mounting elements—racks for the Spacelab pressurized module and pallet segments for the experiments to be exposed to the space environment.

Experiments sponsored by the European Space Agency undergo preliminary integration in Europe before they are shipped to the United States.

All payload elements are delivered to the launch site in as near flight-ready condition as practical.

After delivery of individual experiments and payloads to the Operations and Checkout Building, the Spacelab "train" of pallets and racks is assembled using the pallet and rack stands. Following mechanical buildup of the payload train, the Spacelab elements are transferred to the Spacelab integration workstand for integration with the Spacelab module or support systems igloo.



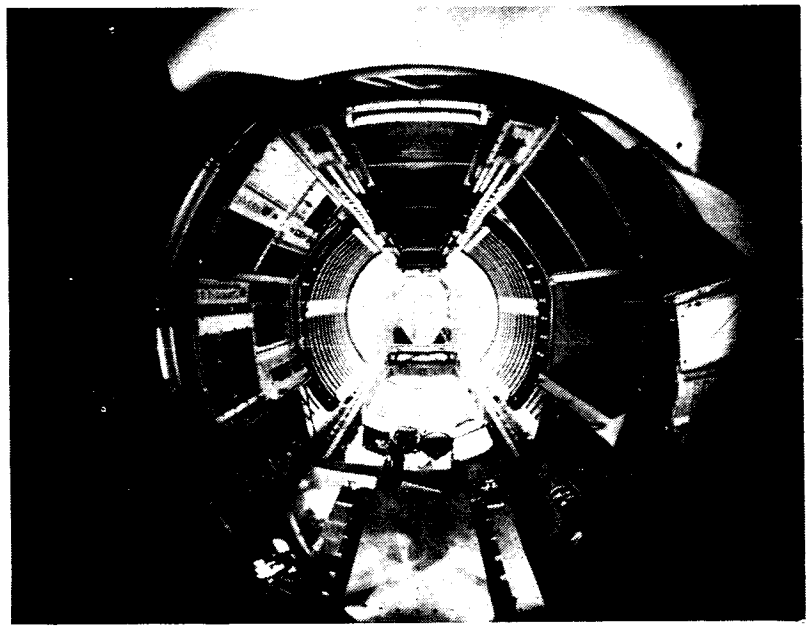

*Interior of Spacelab Pressurized Module*

Spacelab operational hardware undergoes refurbishment and buildup in parallel with payload buildup. After buildup of the total Spacelab and payload configuration in the workstand, the module's aft and forward end cones are installed, pallets are positioned, and utilities are connected between pallets and the module.

The CITE stand simulates the orbiter and supports highly realistic space shuttle/Spacelab electrical and mechanical interface testing.

Upon completion of checkout and test activities, the Spacelab is hoisted by bridge cranes and strongback, installed in the payload canister, and moved to the Orbiter Processing Facility by the payload canister transporter. Environmental conditioning, via air purge and system monitoring, are provided during the trip to the OPF.

The payload is removed from the canister and installed in the orbiter in the OPF. The payload is hoisted in a horizontal attitude from its canister, positioned over the orbiter, lowered, and secured in the payload bay. The strongback and facility crane support this operation.

After payload installation, the space shuttle/payload interfaces are connected and verified. A cargo integrated test is conducted to complete the verification of interfaces between the payload and the orbiter, including validation of payload data via the orbiter data system, where applicable.

Upon completion of testing and final closeouts, the payload bay doors are closed and latched. The payload bay environment with the doors closed is maintained by providing a purge of clean air at 70 F and a relative humidity of 30 to 50 percent. At this point, the orbiter is powered down for movement to the Vehicle Assembly Building. No power or purge is provided from this point until the completion of space shuttle vehicle assembly in the VAB. The orbiter's payload is quiescent during VAB operations, and no access is planned.

The payload purge is resumed after the shuttle elements have been mated on the mobile launcher platform. Space shuttle power is available after the mobile launcher platform and external tank interfaces have been connected and verified. The clean air purge to the payload bay is maintained while the space shuttle is being rolled out on the crawler-transporter to the pad.

The orbiter is powered down during the movement to the pad, and power is not available to a payload during this time unless it is provided by a self-contained source.

After the mobile launcher platform has been mated hard down on its mounts at the pad and umbilicals have been connected, the shuttle vehicle is powered up.

Access at the pad to payloads installed during horizontal processing at the pad is not planned, although the capability exists to open the payload bay doors and reach the payloads from the payload ground handling mechanism's extendable platforms.

**SMALL, SELF-CONTAINED PAYLOAD (GETAWAY SPECIAL) PROCESSING.** Since getaway special payloads have limited interfaces with the orbiter and are not installed in the orbiter on trunnions, they cannot be processed as standard payloads. They are received and built up in the Getaway Special Facility, formerly the Delta Third Stage Facility, at the CCAFS. They are installed in the orbiter at the Orbiter Processing Facility.

Most small, self-contained payloads do not require processing through the horizontal cargo integration test equipment facility in the Operations and Checkout Building and will be built up, attached to a special bridge beam, and installed in the orbiter much like any other bridge beam.

**LIFE SCIENCE PAYLOADS.** The flight hardware associated with life science payloads normally follows the flow for horizontally integrated payloads. However, live specimens for these payloads are received at Hangar L at the Cape Canaveral Air Force Station. Technical activities in Hangar L are managed by NASA's Ames Research Center. KSC has operations and maintenance responsibility.

Hangar L houses the Life Sciences Support Facility, which

processes space shuttle life science payloads. The facility includes laboratory and holding areas for specimens and support areas for principal investigators.

Life science specimens, or live specimens already in their flight containers, are installed in the payload bay at the launch pad from a special access platform mounted on the payload ground handling mechanism or in the orbiter middeck area of the crew cabin through the crew entry hatch.

**DEPARTMENT OF DEFENSE PAYLOADS.** The processing of Department of Defense payloads at the eastern launch site is similar to KSC payload processing, except that payload buildup and integration are accomplished in DOD facilities at the Cape Canaveral Air Force Station in a secure environment. DOD spacecraft arrive at the Skid Strip at the CCAFS and are off-loaded from the air transporter (C-5A or 747 aircraft). If assembly and checkout are required, spacecraft are transported to an assembly area—normally the Satellite Assembly Building at the CCAFS.

After spacecraft are assembled and checked out, they are transported to the Shuttle Payload Integration Facility. The SPIF is a DOD facility, similar to KSC's Vertical Processing Facility, and is located in the Solid Motor Assembly Building at the CCAFS.

Spacecraft requiring minimal assembly are transported directly to the SPIF from the Skid Strip.

Activities in the SPIF vary depending on the DOD spacecraft. Spacecraft requiring the inertial upper stage are mated with an IUS that has already been assembled and checked out in the SMAB east bay and installed in the SPIF integration cell. A spacecraft requiring a payload assist module upper stage is integrated with the PAM enroute to the SPIF and arrives fully integrated for installation in the SPIF integration cell. Spacecraft not requiring an upper stage are installed directly in the integration cell.

After all space shuttle payload elements (spacecraft or spacecraft and upper stage) that comprise a space shuttle payload have been installed in the SPIF integration cell, subsequent processing activities are fundamentally the same.

Space shuttle cargo integration testing is conducted using the DOD's orbiter functional simulator, a system similar to the cargo integration test equipment used at KSC. Following any testing unique to a payload, such as communications checks with the Payload Operations Center, the assembled and fully tested cargo is removed from the integration cell using the DOD handling fixture and inserted in the KSC-provided canister for transport from the SPIF to the shuttle launch pad.

The DOD payload is transferred to the payload changeout room in the rotating service structure and placed in the orbiter payload bay for final checkout and interface verification testing. Final ordnance connections are performed, and the DOD payload is ready for launch.

**LAUNCH CONTROL CENTER.** If the Vehicle Assembly Building is the heart of Launch Complex 39, the Launch Control Center is its brain. The LCC is a four-story structure located on the southeast side of the VAB and connected to it by an enclosed bridge for utilities.



Office space and a utilities systems control room are located on the first floor. The control data subsystem occupies the core of the second floor. Four firing rooms occupy most of the third floor. The fourth floor is used for office areas.

All four firing rooms can support software development or hardware checkout. Three firing rooms have the capability of supplying prelaunch checkouts at the OPF, VAB and launch pads.

**LAUNCH PROCESSING SYSTEM.** KSC's automated launch processing system controls and performs much of the space shuttle vehicle checkout automatically while the vehicle components are being prepared for launch. It also conducts countdown and launch operations.

During both stand-alone processing integration and shuttle vehicle integration, the LPS interfaces with the solid rocket boosters, external tank, space shuttle main engines and orbiter systems.

The LPS is divided into three major subsystems: the central data subsystem; the checkout, control and monitor subsystem; and the record and playback subsystem.

The central data subsystem consists of large-scale computers (built by Honeywell) that store test procedures, vehicle processing data, a master program library, historical data, pre- and posttest data analyses and other data. The information stored in these large-scale computers is immediately available to the smaller capacity computers of the checkout, control and monitor subsystem. The CDS is located on the second floor of the LCC.

The checkout, control and monitor subsystem consists of consoles, minicomputers and related equipment located in the LCC firing rooms and support areas. The subsystem is used to process and launch the space shuttle vehicle. Vehicle checkout, countdown and launch are conducted with the support of the information stored in the CDS.

*Launch Control Center Firing Room, Kennedy Space Center*

Automatic checkout from the firing rooms is accomplished using computer programs to monitor and record the prelaunch performance of all electrical and mechanical systems. Command signals from the CCMS computer are sent to the various components and test circuits.

While a space shuttle vehicle component is functioning, a sensor measures its performance and sends data back to the LPS for comparison against the checkout limits stored in the system's computer memory. Predetermined measurements related to test requirements, launch commit criteria and performance specifications are stored in the CCMS computers.

When the checkout program is complete, a signal indicates whether or not its performance has been satisfactory. If unsatisfactory, the CCMS computers then provide data that support isolation of the fault. The process continues throughout vehicle checkout.

The primary function of the record and playback subsystem is to record unprocessed space shuttle instrumentation data during tests and launch countdowns. These recordings can then be played back for posttest analysis when firing room personnel are troubleshooting space shuttle or LPS problems. The subsystem consists of instrumentation tape recorders, telemetry demultiplexing equipment, direct-write recorders, and computers to provide data-reduction capabilities. The subsystem also provides certain functions in support of the CCMS and CDS portions of the LPS. These include the playback of data from downrange instrumentation tapes sent to KSC for data analysis by systems engineers.

**LAUNCH PAD OPERATIONS AFTER ROLLOUT.** Operations at the launch pad are controlled from the Launch Control Center after the space shuttle has been rolled out. Once the mobile launcher platform is in place on the pad support columns, the rotating service structure is extended around the shuttle and the shuttle vehicle can be powered up. (The space shuttle can be powered up if the RSS is not extended.)

The mobile launcher platform and the space shuttle are elec-

trically and mechanically mated with the supporting pad facilities and ground support equipment, and all interfaces are verified in a series of launch pad validation checks.

In parallel with other pad activities, payload operations are performed in the RSS's payload changeout room. Spacecraft that are integrated vertically in the space shuttle vehicle arrive at the launch pad ahead of the space shuttle and are temporarily stored in the PCR. After the RSS is extended around the orbiter, the payload bay doors are opened, and the payload is installed. Payload-to-orbiter interface verifications are performed; and any required operations, such as spacecraft and upper stage battery charging, are conducted.

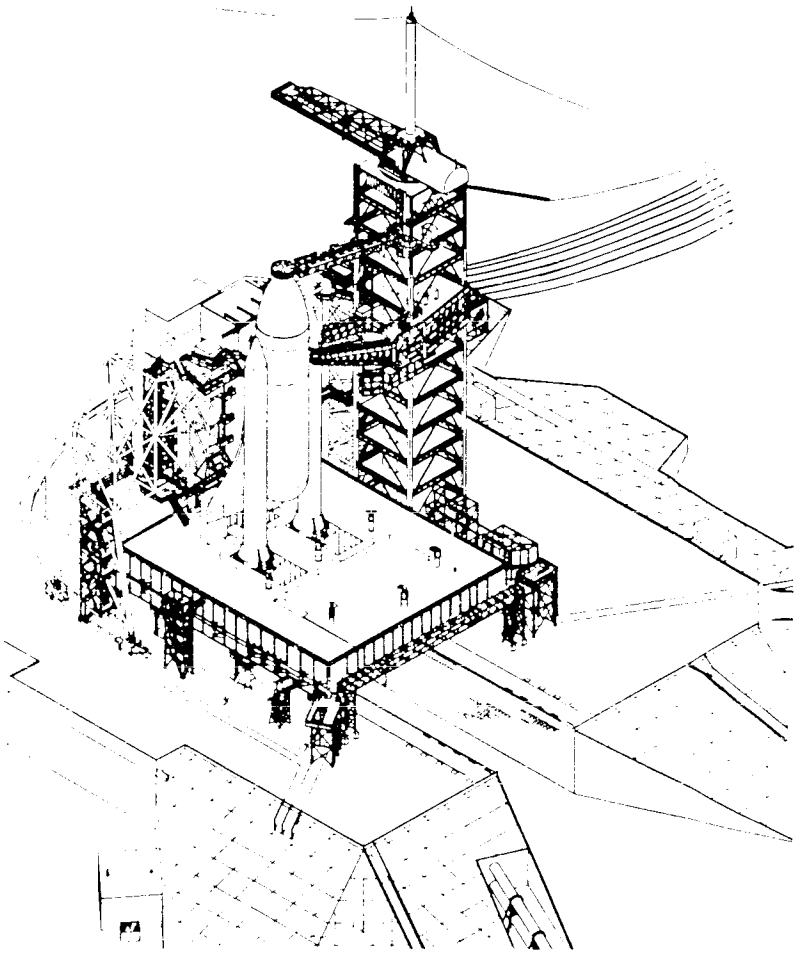

*Overhead View of Shuttle in Checkout Configuration*

Final payload and payload bay closeouts are completed in the PCR, and the orbiter payload bay doors are closed for flight.

**FLIGHT READINESS FIRING AND EXTERNAL TANK TANKING TESTS.** Procedures have been developed for conducting test firings of the space shuttle orbiter's main engines on the pad to validate the entire main propulsion system of each new orbiter. The test firing lasts approximately 20 seconds. The orbiter is not manned during flight readiness firing operations.

The launch confidence test (formerly called the wet countdown demonstration test) validates tanking procedures and verifies ET hardware under simulated flight tanking conditions. Another test verifies that the ET insulation will not debond following the cryo tanking. No flight crew is on board the vehicle during these tests.



**TERMINAL COUNTDOWN DEMONSTRATION TEST.** A terminal countdown demonstration test simulates the final hours of a launch countdown and serves as a practice exercise in which both the launch team and flight crew rehearse launch day time lines and procedures. The test culminates in a simulated ignition and automated shutdown of the orbiter's main engines. Following the simulated T-0, the flight crew is briefed on emergency egress procedures and use of the fixed service structure slidewire system.

This test supports an important function for the KSC launch team. During what is called the malfunction run, the test simulates real-time failures of vehicle and ground systems. The test also provides support crew astronauts with crew module training.

**PRELAUNCH PROPELLANT LOAD.** The prelaunch propellant load begins with setups and preparations to load hyper-

golic propellants in the orbiter's onboard OMS/RCS pods and forward RCS propellant tanks and helium in the pods and forward RCS storage tanks. During the operation, hydrazine servicing of the orbiter's auxiliary power units and solid rocket booster hydraulic power units is completed.

The pad is cleared to the perimeter gate during the hazardous operation of loading nitrogen tetroxide oxidizer and monomethyl hydrazine fuel in the orbiter's OMS/RCS pods and forward RCS and hydrazine in the APUs and SRB HPUs. Because the propellants are hypergolic, meaning they ignite on contact with one another, the oxidizer and fuel loading operations are conducted serially, not in parallel.

Another loading operation is the filling of fixed service structure Dewar tanks with cryogenic reactants. The tanks are loaded with liquid oxygen and liquid hydrogen, which subsequently are loaded into the orbiter's onboard power reactant storage and distribution tanks during the launch countdown.

**FINAL PRELAUNCH PREPARATIONS.** The shuttle vehicle is powered down on the pad for final installation/hookup of pyrotechnic devices (ordnance). Space shuttle range safety ordnance connections are completed just before the launch countdown starts.

The extravehicular mobility units—the shuttle space suits—and other flight crew equipment are stowed on the pad.

Final vehicle and facility closeouts are performed during a precountdown preparation period as the shuttle and its supporting launch pad facilities are readied for the launch countdown.

**LAUNCH COUNTDOWN.** The shuttle launch countdown has become relatively routine and standardized. The countdown time begins approximately 43 hours before the launch.

The countdown is initiated with a call to stations from the Launch Control Center firing room. This verifies that all required personnel are ready to support the countdown activities.

ET tanking preparations are begun in parallel with the activation of various vehicle systems. A built-in hold period, the duration of which depends on lift-off time, begins at the T minus 11 hours mark. The hold provides the launch team an opportunity to catch up on any preparations that may be running behind schedule and to troubleshoot any vehicle or ground support equipment problems that may constrain the count.

At the end of the T minus 11 hours hold period, the RSS is retracted, and the space shuttle vehicle is ready for ET propellant loading.

The final hours of the count include a final mission software update, completion of propellant system purges, propellant line chilling, loading of liquid hydrogen and liquid oxygen in the external tank, crew entry, terminal sequence and lift-off.

At T minus nine minutes, following a 10-minute built-in hold, the KSC-developed ground launch sequencer takes over. From this point on, all functions in the terminal count are under computer control.



**SOLID ROCKET BOOSTER RETRIEVAL, DISASSEMBLY AND REFURBISHMENT.** Associated with space shuttle operations at the Kennedy Space Center is the retrieval and refurbishment of the two reusable solid rocket boosters.

Two specially designed and constructed retrieval vessels recover the boosters and their various components. The Liberty Star and the Freedom Star are 176 feet long, have a beam of 37 feet, have a depth of 15 feet and draw 9 feet of water. Both ships are used on shuttle missions.

Of molded steel hull construction, the recovery vessels have sophisticated electronic communications and navigation equipment, including a global positioning navigation system, search radars, collision-avoidance sonars with transponders, radars, loran C, VHF and single-side-band high-frequency radio systems, direction finders, fathometers and gyro compasses. Each vessel has a displacement of 1,052 tons.

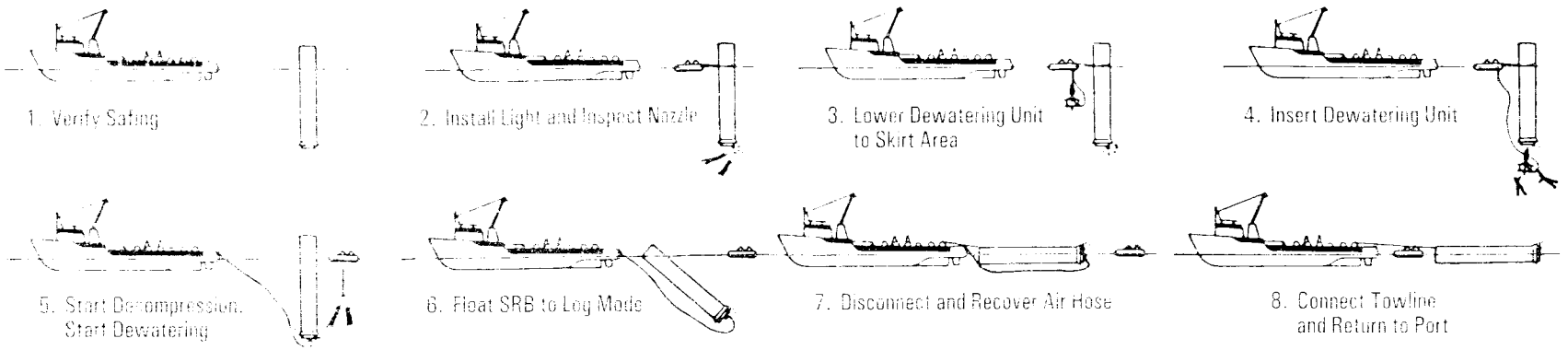


*Solid Rocket Booster Recovery Procedure*

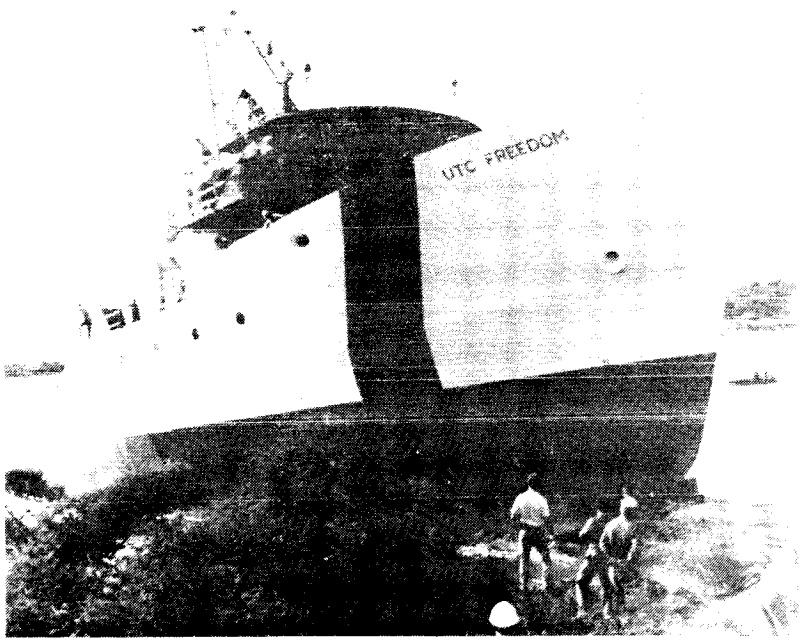


*Freedom Star SRB Recovery Ship*

At sea, propulsion is provided by twin diesel engines with a combined power output of 2,900 horsepower. Maneuvering is provided by a diesel-driven, 425-horsepower bow thruster.



The ships leave their Cape Canaveral Air Force Station berths at Hangar AF about 24 hours before launch and proceed to the predicted impact site. Traveling at a cruising speed of 10 to 12 knots per hour, they reach the area in about 10 hours. In the hours before lift-off, the ships conduct visual and electronic sweeps of the predicted impact area to ensure it is clear.

Each ship recovers one SRB casing, three main parachutes, and a frustum-drogue combination.

Recovery begins with retrieval of the main parachutes. Each recovery vessel has four large deck reels 5.5 feet across. The reels can hold two parachutes each. The parachutes' winch lines are fed onto the spools, and the parachutes are wound around them like line on a fishing reel.

Retrieval of the frustum-drogue parachute begins in the same way. The drogue parachute is wound around one of the large reels until the 5,000-pound frustum is approximately 100 feet from the

ship. The drogue parachute's shroud lines are then rolled in until the frustum can be hoisted out of the water by a 10-ton crane.

Recovery of the two spent solid rocket booster casings, the last phase of the recovery mission, is accomplished using a diver-operated plug. The diver descends to a depth of approximately 110 feet and inserts a diver-operated plug in the nozzle of each casing. A 2,000-foot-long air line is attached from the DOP to an air compressor on the retrieval vessel. Air is pumped at a pressure at 120 psi to dewater the booster and permit towing of the casing back to port.

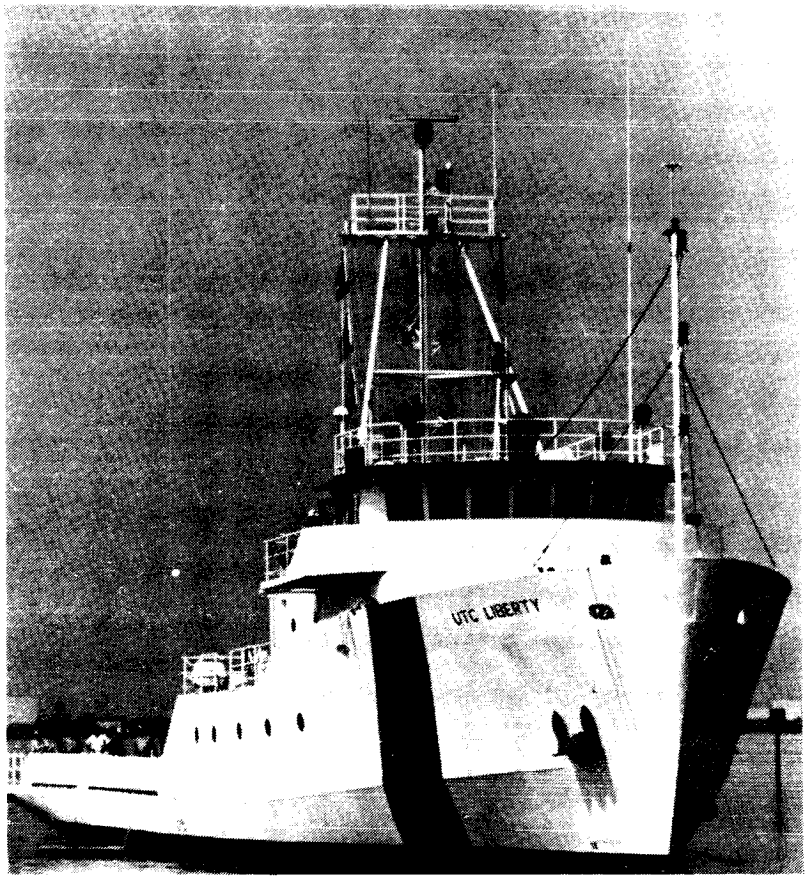


*Liberty Star SRB Recovery Ship*

Under optimum sea conditions, booster retrieval operations are completed about five hours and 30 minutes after the launch. The ships then proceed back to Cape Canaveral and up the Banana River to Hangar AF at the Cape Canaveral Air Force Station.

**Solid Rocket Booster Disassembly Facility Operations.** The Solid Rocket Booster Disassembly Facility is located in Hangar AF at the Cape Canaveral Air Force Station on the eastern shore of the Banana River. Access to the Atlantic Ocean, from which the boosters are retrieved by ship after jettison during the space shuttle launch phase, is provided by the locks at Port Canaveral. A tributary channel from the disassembly facility ties in with the main channel of the Banana River for access to the Kennedy Space Center.

Recovery vessels tow the expended boosters in the horizontal position into the disassembly facility's off-loading area, where they

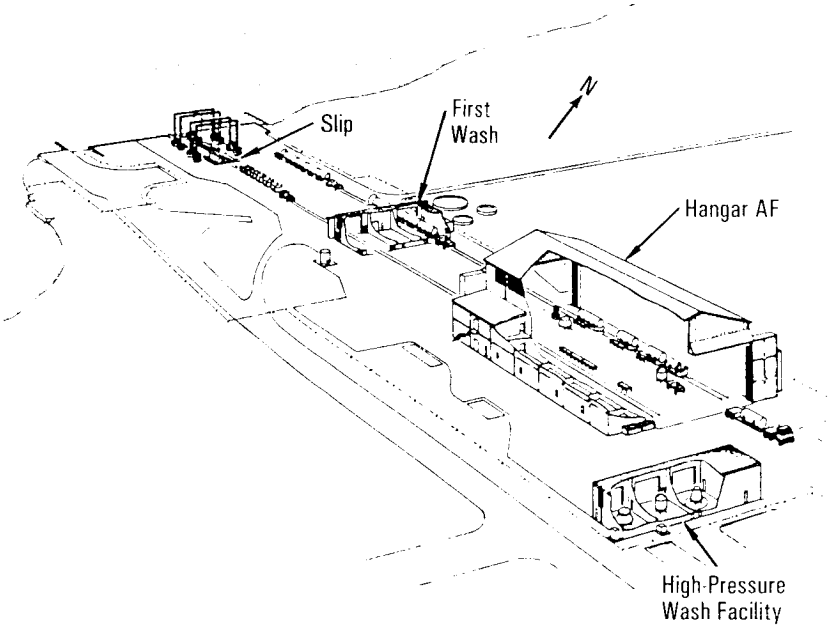


*Solid Rocket Booster Disassembly Facility at the Cape Canaveral Air Force Station*

are properly centered in a hoisting slip. Mobile gantry cranes on the hoisting slip lift the booster onto a standard-gauge tracked dolly for safing and preliminary washing. The nose cone frustums and parachutes are off-loaded for processing at other facilities. After safing and washing, the solid rocket booster casings are moved into the disassembly facility for disassembly to the level of major elements, consisting of eight solid rocket booster segments, the two aft skirt assemblies and the two forward skirt assemblies. The segments then undergo final cleaning and stripping before they are shipped to the Refurbishment Processing Facility by truck. From there, the segments are shipped by rail to the prime contractor in Utah for final refurbishing and loading with propellant.

**Parachute Refurbishment Facility.** The Parachute Refurbishment Facility is located in the Kennedy Space Center industrial area south of the Operations and Checkout Building.

Parachute systems recovered concurrently with the SRB casings are delivered to the refurbishment facility on reels provided on the retrieval vessels for that purpose. The parachutes for the solid rocket boosters are washed, dried, refurbished, assembled and stored in this facility. New parachutes and hardware from manufacturers also are delivered to the Parachute Refurbishment Facility.

Parachutes arriving from the retrieval operations are untangled, hung systematically on an overhead monorail, and transported to in-line washers and driers that wash and dry them automatically. They are then sent to the refurbishing area, which is equipped with handling equipment for producing and installing risers and associated equipment. After final inspection and acceptance, the chutes are folded and placed in canisters for reuse.

Twenty work tables 8 feet long, 6 feet wide and 30 inches high were obtained from the Johnson Space Center. Eight of these tables have been strung together to provide a structure 64 feet long and 6 feet wide for SRB parachute processing. A number of the 12 remaining tables are used in the parachute facility's major repair area.

**SHUTTLE LANDING FACILITY.** The concrete runway of the shuttle landing facility is located northwest of the Vehicle Assembly Building on a northwest/southeast alignment (330 degrees northwest/150 degrees southeast). The runway is 15,000 feet long and 300 feet wide with a 1,000-foot safety overrun at each end. A paved runway at Edwards Air Force Base in California matches the Kennedy Space Center runway in length and width and has an overrun of 5 miles that extends into a dry lake bed.

The shuttle landing facility runway is 16 inches thick in the center with the thickness diminishing to 15 inches on the sides. The runway is not perfectly flat but has a slope of 24 inches from centerline to edge. Underlying the concrete paving, completed in late 1975, is a 6-inch-thick base of soil cement.

The runway is grooved to prevent hydroplaning in wet weather. The slope of the runway from centerline to edge promotes rapid draining of any water from a heavy Florida rain to help combat hydroplaning.



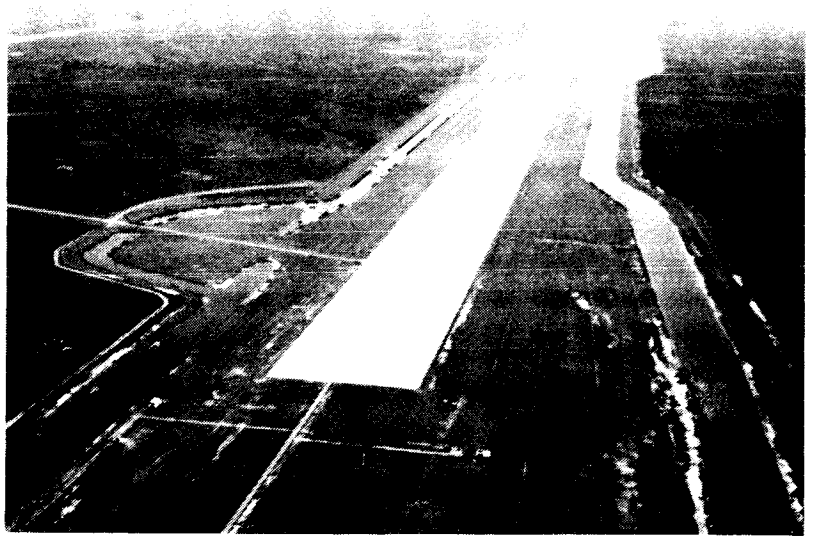

*Space Transportation System Runway at Kennedy Space Center*

Modifications have been made to the Kennedy Space Center runway. The full 300-foot width of 3,500-foot sections at both ends of the runway was ground to smooth the runway surface texture and remove cross grooves. The modified corduroy ridges are smaller than those they replaced and run the length of the runway rather than across its width. The existing landing zone light fixtures were also modified, and the markings of the entire runway and overruns were repainted. The primary purpose of the modifications is to enhance safety by reducing space shuttle orbiter tire wear during landing.

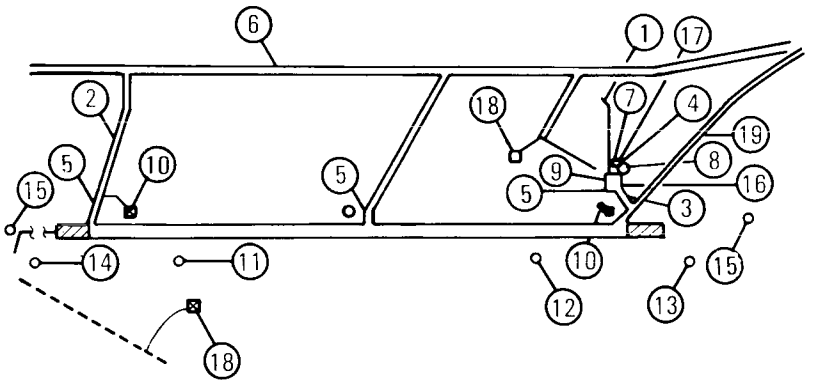

1 – Access Road A
2 – Access Road B
3 – Accessway
4 – Airfield Lighting Vault
5 – Crash/Fire/Rescue
6 – Kennedy Parkway
7 – Landing Aid Control Building
8 – Ground Support Equipment Power Panel
9 – Mate/Demate Device
10 – Meteorological Equipment Pad
11 – Microwave Scan Beam Landing System Elevation Station, Runway 15
12 – MSBLS Elevation Station, Runway 33
13 – MSBLS Azimuth/Distance Measuring Equipment Station, Runway 15
14 – MSBLS Azimuth/Distance Measuring Equipment Station, Runway 33
15 – Orbiter Target Aim Point
16 – Parking Apron
17 – RF Communications Tower
18 – Television Tower and Equipment
19 – Tow-way to Vehicle Assembly Building

*Shuttle Landing Facility*

In general terms, the runway is roughly twice as long and twice as wide as average commercial runways, although a number of domestic and foreign airports have landing strips far exceeding average dimensions. The shuttle landing facility includes a 550- by 490-foot aircraft parking apron, or ramp, located near the southeastern end of the runway. The landing facility is linked with the Orbiter Processing Facility by a 2-mile tow-way.

On the northeast corner of the shuttle landing facility ramp area is the mate/demate device used to raise and lower the orbiter from its shuttle carrier aircraft during ferry operations. The device is an open-truss steel structure with the hoists and adapters

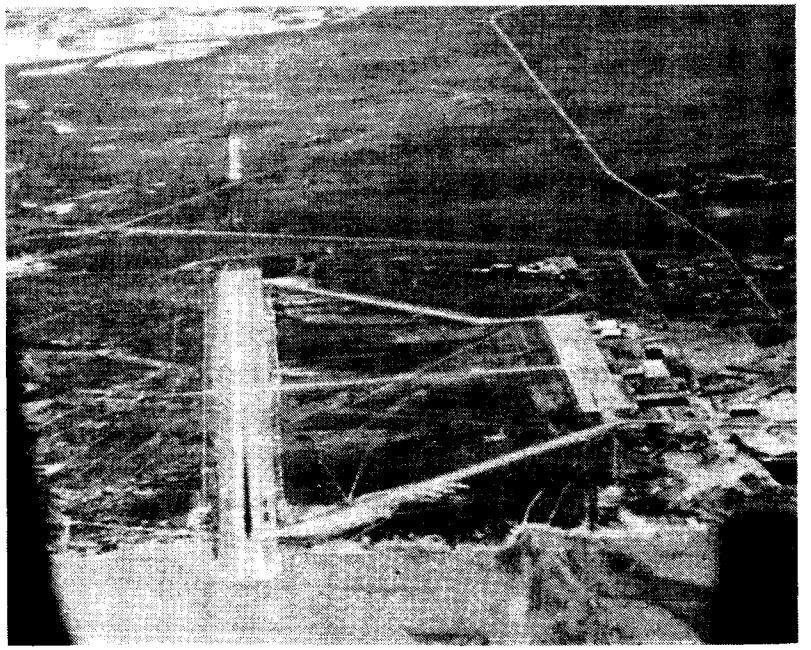

*Edwards Air Force Base Concrete Runway*

required to mate the orbiter to and demate it from the shuttle carrier aircraft. The mating and demating operations are performed before and after each ferry flight. Movable platforms for access to certain orbiter components and equipment for jacking the orbiter are also provided.

The mate/demate device is intended to be used in the open air and is designed to withstand winds of up to 125 mph. Lightning protection is included. The MDD is 150 feet long, 93 feet wide and 105 feet high. A similar device is located at NASA's Dryden Flight Research Facility, and a third is located at Vandenberg Air Force Base.

Also located at the shuttle landing facility is a landing aid control building near the aircraft parking apron. The building sup-

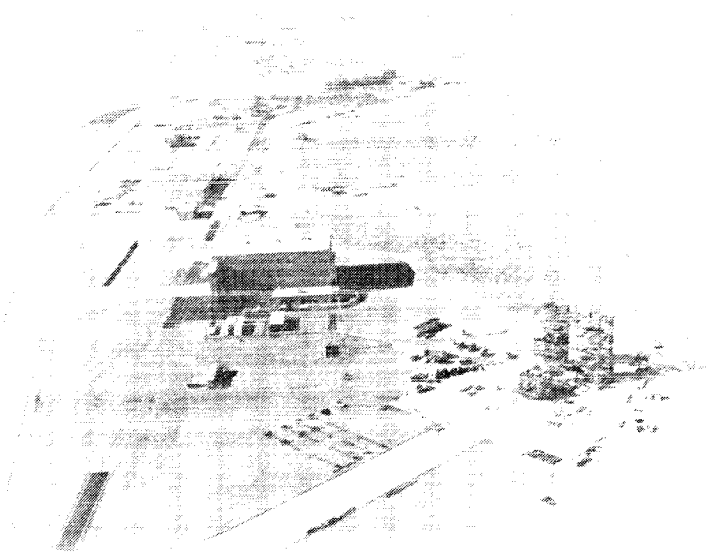

*Hugh L. Dryden Research Facility, Edwards Air Force Base, California*

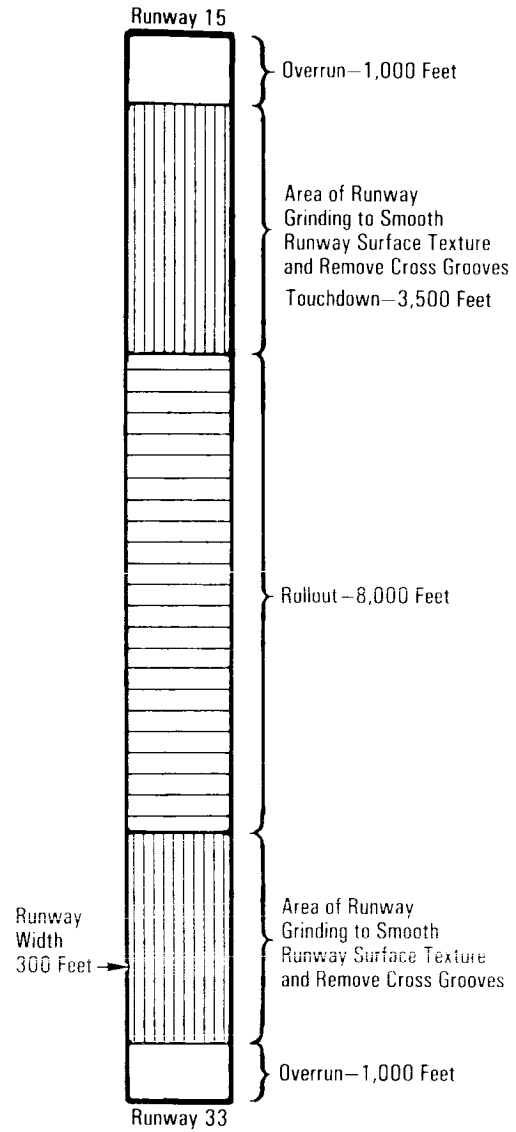


*Shuttle Landing Facility Runway Modifications at Kennedy Space Center*

ports control operations and houses the personnel who perform shuttle landing facility operations.

Landings may be made on the runway from the northwest to the southeast (Runway 15) or from the southeast to the northwest (Runway 33), and microwave scan beam landing system ground stations are duplicated to permit an approach from either direction.

Even with the sophisticated electronic approach and landing aids, visual aids have not been overlooked.

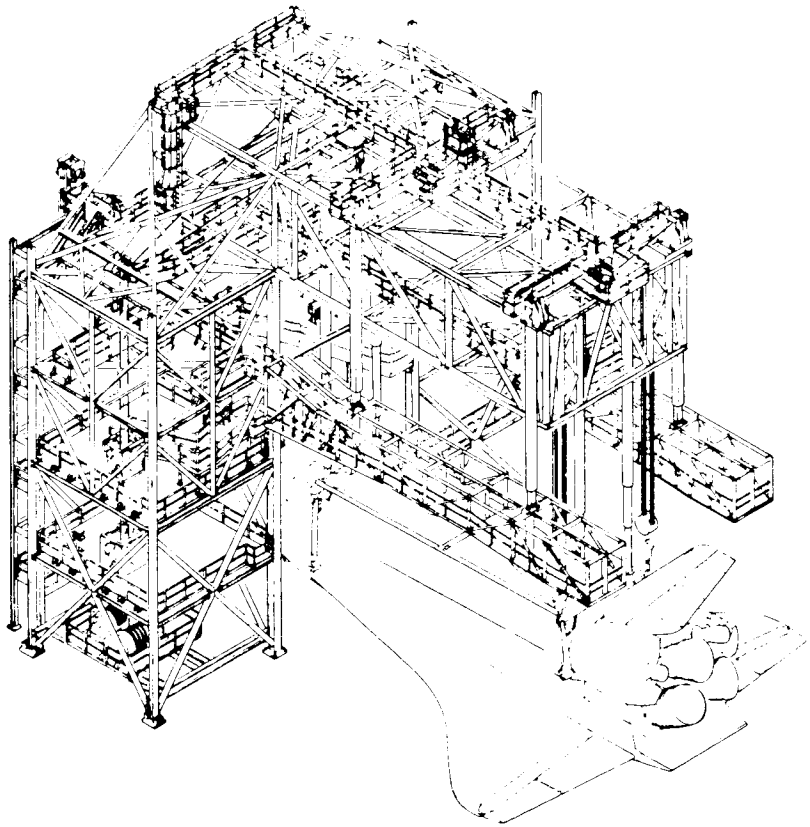

*Mate/Demate Device Exterior View*

The runway is served by a high-intensity lighting system that is common at many commercial airports. It contains a variable intensity control with five intensity settings. Runway edge lights are white except for the last 2,000 feet at each end of the runway, which are marked by amber lights. The lights marking the limits of the runway length emit red light toward the runway and green light outward from the runway end, indicating the landing threshold to pilots.

The precision approach path indicator system is a visual reference for determining the orbiter's outer glide slope approach angle.

Both ends of the runway utilize identical approach lighting systems with sequenced flashing lights. The systems, known as ALSF-2, extend 3,000 feet beyond the runway ends and have five intensity settings. The sequenced flashers are used during periods of reduced visibility and appear to pilots as a ball of light traveling toward the runway along the center of the approach lights, recurring twice each second.



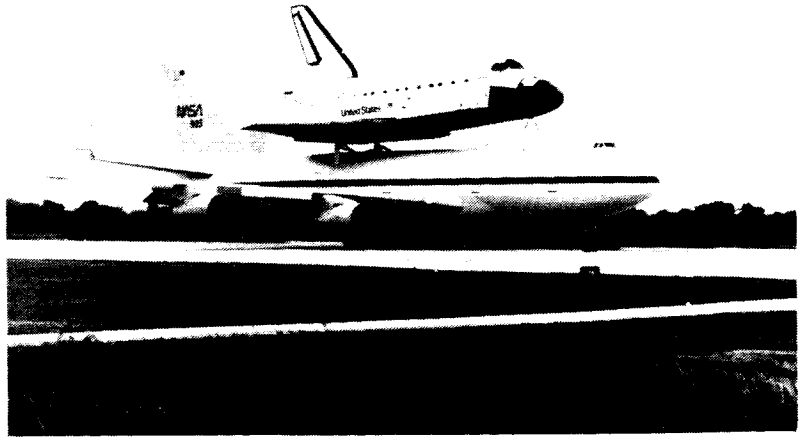

*Shuttle Carrier Aircraft With Orbiter*

The runway edge lighting and approach light systems are controlled by the operations staff from the landing aid control building.

Portable, high-intensity xenon lights are available to illuminate the touchdown zone to support orbiter landings in darkness. These lights are used because the orbiter has no landing lights of its own.

**TOWING TRACTORS**. The towing tractors at the Kennedy Space Center are similar to those that tow aircraft at commercial airports. At KSC, the tractor is used to tow orbiters, the shuttle carrier aircraft and other aircraft weighing 820,000 pounds or less between the shuttle landing facility, the Orbiter Processing Facility and the Vertical Assembly Building. It also tows the external tank transporter from the Vehicle Assembly Building turn basin dock area to the external tank checkout facility in High Bay 4 of the Vehicle Assembly Building.

The tractor is 16 feet long, 8 feet wide and 7.3 feet high. The basic weight is 65,000 pounds; its ballasted weight is 110,000 pounds. Its maximum speed is 20 mph and its towing speed is 5 mph. The towing tractor is powered by a 191-kilowatt (256-horsepower) diesel engine. Its fully automatic transmission has six forward speeds and one reverse speed. A diesel-driven ground-power generator provides the orbiter (or other aircraft being towed) with 115-volt, 400-hertz, three-phase ac electrical power.

## LYNDON B. JOHNSON SPACE CENTER

NASA's Johnson Space Center opened for business at its 1,620-acre site 25 miles southeast of Houston in February 1964.

Houston was chosen as the site for the center after an investigation of many locations throughout the United States. The selection was announced in September 1961. Personnel began moving their offices from Langley Field in Virginia to Houston in October 1961 and construction began in April 1962.

The responsibilities of the center include the design, development and testing of spacecraft and associated systems for manned flight; the selection and training of astronauts; planning and conducting manned missions; and extensive participation in the medical, engineering and scientific experiments that help man understand and improve his environment.

The facilities were designed and built to house the wide variety of technical and scientific disciplines required for JSC's mission. The center's organization was divided into several directorates responsible for specific functions—spacecraft development, astronaut training or space flight planning, for example. The organization's flexibility allows frequent realignment of the directorates to keep pace with the changing directions of manned space flight. Some of the original directorates have reorganized, merged or split into separate groups; and new directorates have been created as needed.

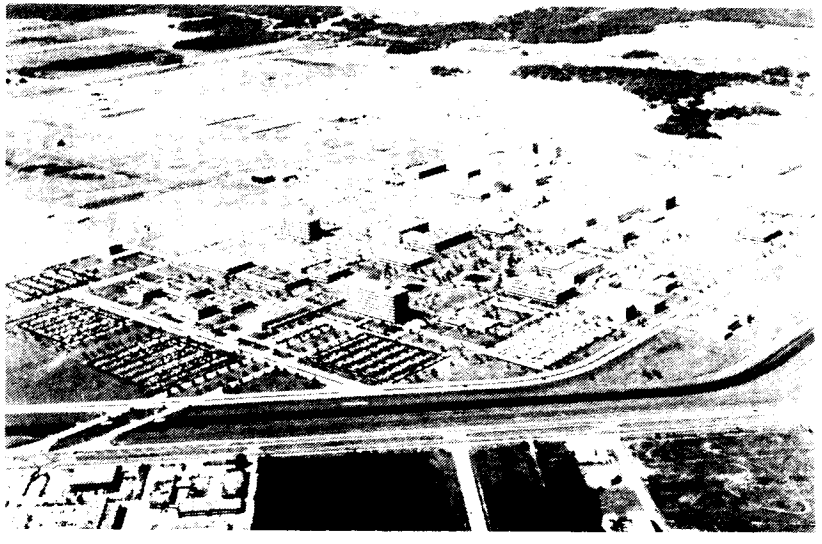

*Lyndon B. Johnson Space Center, Houston, Texas*

The Johnson Space Center program offices direct or coordinate the efforts required locally, elsewhere within NASA or by industrial contractors to fulfill specific program responsibilities. The center has program management responsibility for the space shuttle program, its overall systems engineering and system integration, and the definition of elements that require government and contractor coordination. Directorates and program offices are responsible to the center director, who in turn is responsible to the Office of Space Flight at NASA Headquarters in Washington, D.C.

The JSC facilities are situated near Clear Lake on a site that was donated to NASA by Rice University. The facilities comprise approximately 100 different buildings that range in size and use from the nine-story project management building to the tiny traffic control booths at each entrance. While many structures are devoted to office space, others are uniquely designed for special tasks.

Building 30 is the Mission Control Center. The first half of the first floor, the windowless Mission Operations wing, houses the computers, processors, control panels, tape recorders, test boards, wiring, displays, controls and distribution equipment that support activities on the second and third floors. The second half of the first floor, the more conventional looking Operations Support wing, mainly contains office space. Here in the Mission Control Center a systems engineer can determine if life-sustaining oxygen is flowing at the proper rate or if a switch is in the proper position.

Many of the special facilities at JSC are designed to help determine if spacecraft systems and materials can stand up against

*Mission Control Center—Houston*

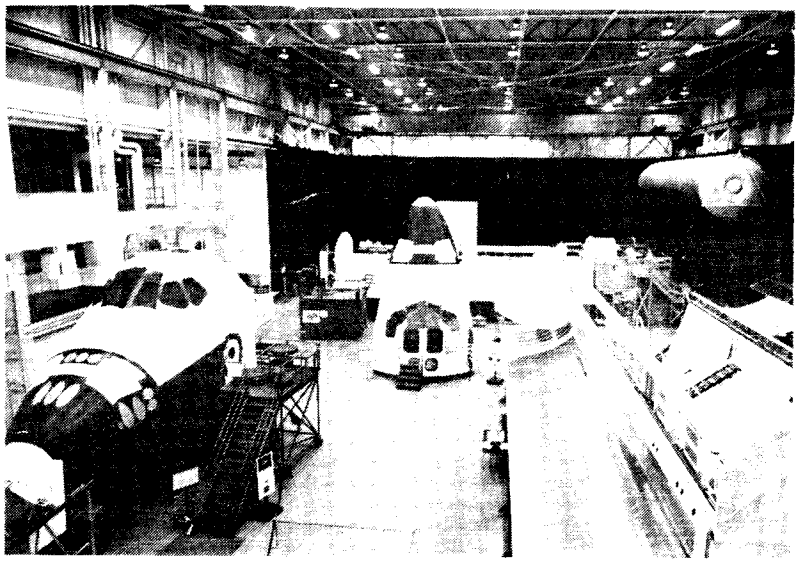

*Crew Compartment Trainer (Left), Crew Compartment Cabin Section (Center), Payload Bay Section (Left) and Manipulator Development Center (Rear) in Building 9A*



the rigors of space flight. One such facility is the Space Environment Simulation Laboratory in Building 32. It contains two vacuum chambers: one is 120 feet high by 65 feet in diameter, and the other is 43 feet high by 35 feet in diameter. A complete spacecraft or individual components can be subjected not only to spacelike vacuum but also to temperature extremes from 280 F below zero to 260 F above zero. Nearby, at the Vibration and Acoustic Test Facility in Building 49, space hardware is buffeted by equipment that simulates the shakes and sounds that the spacecraft experiences in flight. In contrast, complete silence is found in the Anechoic Chamber Test Facility in Building 14, where the foam-covered walls, floor and ceiling soak up stray signals during spacecraft communication system tests.

Just as unique are some of the specialized facilities used to test and train the personnel who fly the spacecraft. In the Space Shuttle Orbiter Mockup and Integration Laboratory in Building 9A, astronauts train in full-scale space shuttle orbiter forward crew compartments and in a 60-foot-long payload bay. Across the street is the Lunar Sample Building, Building 31A.

The Weightless Environment Training Facility in Building 29 provides controlled neutral buoyancy in water to simulate weightlessness. The facility is an essential tool in the design, testing and development of spacecraft and crew equipment; the evaluation of body restraints and handholds; the development of new procedures; and the determination of extravehicular capabilities and work load limits. For the astronaut, it allows important preflight training and familiarity with planned crew activities and the dynamics of body motion under weightless conditions.

Most of the time spent in training an astronaut for a specific mission is logged in simulators that duplicate spacecraft equipment and control panels or even the entire spacecraft cabin. The most sophisticated training devices are the mission simulators, which incorporate on-screen projections where the spacecraft windows would be. The scenes are those the crew will see during the real mission. These training devices in the Mission Simulation and

Training Facility can be tied in with the Mission Control communication system so that the crews and flight controllers can practice the entire mission many times before actual flight.

Other specialized facilities at JSC include a photography processing laboratory, a technical services shop, a printing plant, cafeterias, a fire department, a dispensary and a visitor center that houses spacecraft from the Mercury, Gemini and Apollo manned space programs. The Johnson Space Center also maintains aircraft for astronaut training, research programs and administrative travel at nearby Ellington Field, and it also operates the White Sands Test Facility in New Mexico.

Hundreds of contracting companies helped build the space program. These companies are located throughout the United States and range in size from small shops employing several people to corporations employing tens of thousands of people. The task of managing these efforts—bringing everything together in the proper place at the right time with confidence that it will work as planned—is monumental. JSC overcomes the distance problem by assigning resident managers to the spacecraft contractors' plants, where they participate in development, manufacturing and testing activities. Regular reviews and progress reports are summarized in status charts that show the progress of all program phases.

Program management defines and controls the many system interfaces to ensure compatibility of crew, spacecraft and launch vehicle; and it establishes quality control and reliability standards, as well as appropriate checkout and test procedures.

Similar management functions are performed by the NASA centers responsible for other aspects of the program: the launch vehicle at the George C. Marshall Space Flight Center in Huntsville, Ala.; tracking and communication systems at the Goddard Space Flight Center in Greenbelt, Md.; and launch facilities at the John F. Kennedy Space Center in Florida. The total effort is coordinated by NASA Headquarters to a precise schedule and rigid standards; yet the controls are flexible enough to take advantage of new technology or to recover from failures.

**MISSION CONTROL CENTER.** Since 1965, the Mission Control Center has been the nerve center for America's manned space program. The men and women who work in Building 30 have been vital to the success of every manned space flight since Gemini 4. These teams of experienced engineers and technicians monitor spacecraft systems and activities 24 hours a day during missions, using some of the most sophisticated communication, computer, data reduction and data display equipment available. They watch every movement the crew and spacecraft make, double-check every number to be sure missions are proceeding as expected and provide expertise to deal with the unexpected.

During the Mercury project, when Mission Control was at Cape Canaveral, Fla., capsules were controlled almost entirely from the ground. The capsule's manual control systems served in most cases as backups to the automated systems, and astronauts relied heavily on ground control for solutions to problems. As spacecraft became more complex in the Gemini years, dependence on the new Mission Control Center in Houston lessened slightly. During Apollo, when distance and communication breaks made it necessary, some onboard systems became primary, while others still relied on direction from Mission Control. The frequent missions of the space shuttle program required a new approach to flight control. Since the orbiter's onboard computers monitor most systems for the flight crew, the ground control team's main responsibilities are to follow flight activities and be prepared for major maneuvers, schedule changes and unanticipated events. Still, from the moment the giant solid rocket boosters ignite at lift-off to the moment the landing gear wheels roll to a stop at the end of a mission, the Mission Control Center is the hub of communication and shuttle support.

**Flight Control Rooms.** Mission Control's focal points are the two Flight Control rooms, where flight controllers get information from console computer displays or from projected displays that fill the wall at the front of the room. Almost everyone has seen the television pictures of flight controllers working feverishly at their consoles, headsets in place.

The Mission Control Center contains two functionally identical Flight Control rooms, one on the second floor and one on the third. Only the third-floor Flight Control Room is used for missions carrying classified Department of Defense payloads. Either room can be used for mission control, or both can be used simultaneously to control separate flights. More often, one team of flight controllers conducts a flight while a second team participates in highly realistic training, or simulation, for a future mission.

Flight controllers who work in the Flight Control rooms represent only the tip of the staffing iceberg in the Mission Control Center. Each of the 20 to 30 flight controllers who sit at consoles in the Flight Control Room has the help of many other engineers and flight controllers who monitor and analyze data in nearby staff support rooms.

Atop each console are abbreviations for its function. Each console has a "call sign," the name the flight controller uses when talking to other controllers over the various telephone communication circuits. In some cases, console names or initials are the same as the call signs. Mission command and control positions, their initials, call signs and responsibilities are listed below:

— Flight director (FD), call sign "Flight"—leads the flight control team and is responsible for overall space shuttle mission and payload operations and all decisions regarding safe, expedient flight.

— Space communicator (CAPCOM), call sign "Capcom"—serves as primary communicator between flight control and astronauts. The initials are a holdover from earlier manned flight, when Mercury was called a capsule rather than a spacecraft.

— Flight dynamics officer (FDO), call sign "Fido"—plans maneuvers and monitors trajectory in conjunction with guidance officer.

— Guidance officer (GDO), call sign "Guidance or Guido"—monitors onboard navigation and guidance computer software.

— Data processing systems engineer (DPS)—determines status of data processing system, including the five onboard general-purpose computers, flight-critical and launch data lines, the malfunction display system, mass memories and system-level software.

— Flight surgeon (Surgeon)—monitors crew activities, coordinates the medical operations flight control team, provides crew consultation, and advises flight director of the crew's health status.

— Booster systems engineer (Booster)—monitors and evaluates performance of space shuttle main engines, solid rocket boosters and external tank during prelaunch and ascent phases of missions.

— Propulsion systems engineer (PROP)—monitors and evaluates reaction control and orbital maneuvering systems during all phases of flight and manages propellants and other consumables available for maneuvers.

— Guidance, navigation and control systems engineer (GNC)—monitors all vehicle guidance, navigation and control systems; notifies flight director and crew of impending abort situations; advises crew regarding guidance malfunctions.

— Electrical, environmental and consumables systems engineer (EECOM)—monitors cryogenic levels for fuel cells, avionics and cabin cooling systems, electrical distribution systems, cabin pressure control systems and vehicle lighting systems.

— Instrumentation and communications systems engineer (INCO)—plans and monitors the configuration of in-

flight communications, television and instrumentation systems.

— Ground control (GC)—directs maintenance and operation activities affecting Mission Control hardware, software and support facilities; coordinates space flight tracking and data network and Tracking and Data Relay Satellite system with Goddard Space Flight Center.

— Flight activities officer (FAO)—plans and supports crew activities, checklists, procedures and schedules.

— Payload officer (Payload)—coordinates onboard and ground system interfaces between the flight control team and payload user and monitors Spacelab and upper stage systems and their interfaces with the payload.

— Maintenance, mechanical arm and crew systems engineer (MMACS), call sign "Max"—monitors operation of the remote manipulator arm and the orbiter's structural and mechanical system; follows use of onboard crew hardware and in-flight equipment maintenance.

— Public affairs officer (PAO)—provides mission commentary to supplement and explain air-to-ground transmissions and flight control operations to the news media and the public.

During missions in which a Spacelab module is carried in the orbiter's payload bay, additional flight control positions are required. A command and data management systems officer (CMDS) is responsible for data processing systems involving Spacelab's two major computers. The EECOM manages systems extended from the orbiter to the Spacelab, such as power distribution, life support, cooling and cabin fans, which require more complex monitoring. Cryogens for fuel cells, also managed by the EECOM, become more critical for Spacelab missions because of the higher power levels used and because consumption must be monitored and budgeted over a longer period. The DPS controller works closely with the CDMS officer in monitoring additional displays covering nearly 300 items.

**Multipurpose Support Room.** The Multipurpose Support Room groups participate in planning and support functions. Dedicated to multiple flights, they provide planning expertise for future flights, perform periodic support and systems checks on current flights and respond quickly to any in-flight contingency.

**Payload Operations Control Centers.** Operating in conjunction with the Flight Control rooms are Payload Operations Control centers, from which the owners of payloads or experiments carried in the orbiter's cargo bay can monitor and control their equipment. The Spacelab POCC, located at NASA's Marshall Space Flight Center in Huntsville, Ala., is the site for continual monitoring and control of Spacelab experiments and other attached payloads. It is a command post, communications center and data relay station for principal investigators, the mission flight director at the Mission Control Center in Houston and the Spacelab or shuttle crew.



Free-flying systems that are deployed, retrieved or serviced in Earth orbit by the orbiter are monitored by a POCC at NASA's Goddard Space Flight Center in Greenbelt, Md. Private sector organizations, as well as foreign governments, maintain individual Payload Operations Control centers at locations of their choice for long-term control of free-flying systems. Payloads with distant destinations, such as those exploring other planets, are controlled from the POCC at NASA's Jet Propulsion Laboratory in Pasadena, Calif.

**Communications.** Space shuttle communication and tracking are accomplished through a combination of the Tracking and Data Relay Satellite system (which consists of three geosynchronous satellites—the first put into orbit in 1983, the second to be launched in 1988 and a spare satellite to be launched later); a ground station at White Sands, N. M.; and the ground space flight tracking and data network. When the TDRSS becomes fully operational, the ground-based tracking network will be closed. The

NASA communications network, which will be augmented with a domestic satellite, links tracking stations with ground control centers. The TDRSS, which provides the principal coverage for all shuttle flights, makes it possible to monitor the flight almost continuously, increasing the probability of experiment success, reducing the need for onboard data storage and allowing in-flight experiment changes.

The Mission Control Center is supported by an emergency power building that houses generators and air-conditioning equipment for use if regular power fails. If a catastrophic failure were to shut down the Houston control center, an emergency facility at the White Sands Test Facility would be activated. The emergency control center is a stripped-down version of the Houston control center, incorporating just enough equipment to let the controllers support the flight to its conclusion.

One of the most interesting Flight Control Room support facilities is the display and control system, a series of projection screens on the front wall for a variety of displays ranging from charts that plot the spacecraft's location to actual television pictures of activities inside the space shuttle, views of Earth, payload deployment and retrieval, and extravehicular work by mission specialists. Other displays show such critical data as elapsed time after launch or the time remaining before a maneuver or other event.

Flight controllers base many of their decisions or recommendations on the information given by the display and control system. The real-time computer complex processes telemetry and tracking data to update controllers on space shuttle systems. Controllers can call up stored reference data based on simulated flights previously conducted as practice for the actual mission.

The consoles of the flight controllers in the Flight Control Room, the Multipurpose Support Room and the Payload Operations Control Center include one or more TV screens and switches to let the controller view a data display on a number of different channels. The controller may select the same display shown on the large projection screens or call up data of special interest just by changing channels. A library of prepared reference data is available to display static information, while digital-to-television display generators provide dynamic, or constantly changing, data.

In the future, these traditional consoles will be augmented with engineering work stations that provide more capability to monitor and analyze data in support of the increasing flight rate. A further update will change the means of computer support. Instead of the current mainframe central computer that drives all flight control consoles, each console will have its own smaller computer designed to monitor a specific system. These smaller computers will be linked in a network so that they can share data.

**Mission Control Support Areas.** The Flight Control Room, with its rows of consoles and its large display screens and flurry of activity, is a familiar sight to people around the world. But other equally busy areas of the Mission Control Center are just as important to the success of a flight. One such area on the first floor contains the network interface processor. It processes incoming digital data and distributes the information on a real-time basis to facilities associated with the Flight Control Room and support room displays. The system also handles the digital command signals to the spacecraft—the up-data link that lets Mission Control do such things as keep the spacecraft guidance computer's facts and figures up to date.

The data computation complex, also on the first floor, processes incoming tracking and telemetry data and compares what is happening with what should be happening. Often, it does not display the information unless something goes wrong. As the system evaluates factors such as spacecraft position and velocity, it also computes what maneuvers should be made to correct them.

The complex computes and evaluates on a real-time basis. Through high-speed electronic data from the worldwide tracking station network, including TDRSS, the complex "sees" what is happening almost at the instant it happens; and its computations are fast enough to aid in correcting a situation as it develops. The DCC also uses the data to predict where the spacecraft will be at any given time in the flight. In addition, the computers give acquisition information that helps the tracking stations point their

antennas at the spacecraft. The complex also monitors and evaluates telemetry information from the spacecraft to be sure that equipment is performing normally.

There are five primary computers in the DCC, any one of which can be used to support one Flight Control Room. Another can be used simultaneously to support another Flight Control Room. A third can be used simultaneously to support a live mission from the other Flight Control Room or to support a simulated flight for training additional teams of flight controllers. For critical mission phases, one of the computers is used as a dynamic standby, processing identical data concurrently, in case of a computer failure. The computers are also used to develop and perfect the software programs for each flight.

Another important facility is the voice communications system, which enables flight controllers to talk to one another without having to leave their consoles. The system also connects controllers with specialists in support rooms, with flight crew training facilities (where specific procedures are tested on spacecraft simulators before they are recommended to the mission crew) and with the personnel along the STDN. It also provides the voice link between Mission Control and the spacecraft.

The separately located simulation checkout and training system enables flight controllers in the Mission Control Center and flight crews in spacecraft simulators at the Johnson Space Center to rehearse a particular procedure or even a complete mission. The system even simulates voice and data reception from the STDN.

**FLIGHT CREW COMPLEMENT AND CREW TRAINING.** The orbiter crew consists of the commander and pilot. Additional crew members are a mission specialist and one or more payload specialists. The commander and a pilot, or pilot-qualified mission specialist, are needed to operate and manage the orbiter. The makeup of the rest of the crew depends on the mission's requirements, complexity and duration. The detailed responsibilities of the mission and payload specialists are tailored to meet the requirements of each flight. Crew members work 8.5-hour days.

The commander is responsible for the safety of the crew and has authority throughout the flight to deviate from the flight plan, procedures and assignments if necessary to preserve crew safety or vehicle integrity. The commander is also responsible for the overall execution of the flight plan in compliance with NASA policy, mission rules and Mission Control Center directives.

The pilot, second in command of the flight, assists the commander in all phases of orbiter flight and is delegated certain responsibilities (e.g., during two-shift orbital operations). The commander or the pilot is also available to perform specific payload operations.

The mission specialist coordinates payload operations and is responsible to the user for carrying out scientific objectives. The mission specialist resolves conflicts between payloads and approves flight plan changes caused by payload equipment failures. He or she may also operate experiments to which no payload specialist is assigned or may assist the payload specialist. During launch and recovery of payloads, the mission specialist monitors and controls them to ensure the orbiter's safety.

The payload specialist manages and operates assigned experiments or other payloads and may resolve conflicts between users' payloads and approve flight plan changes caused by payload equipment failures. The payload specialist is cross-trained to assist the mission specialist or other payload specialists in experiment operation. In some instances, the payload specialist may be responsible for all experiments on board. He or she may operate required orbiter and Spacelab payload support systems, such as the instrument pointing subsystem, the command and data management subsystem and the scientific airlocks. The payload specialist also operates certain orbiter systems, such as the hatches and the food and hygiene systems, and is trained in normal and emergency procedures for crew safety.

The responsibility for on-orbit management of orbiter systems and attached payload support systems and for extravehicular activity and payload movement with the remote manipulator sys-

tem rests with the basic crew because extensive training is required for safe and efficient operation of these systems. In general, the commander and pilot manage orbiter systems and standard payload support systems, such as Spacelab and inertial upper stage systems; the mission specialist and payload specialists manage payload support systems that are mission dependent and have an extensive interface with the payload, such as the instrument pointing subsystem.

**TRAINING FACILITIES.** The space shuttle crew training facilities include mockups, functional trainers, mathematical models compatible with various computer complexes and complete payload (experiment) simulators. The payload simulators emphasize the payload philosophy, operations, malfunctions, objectives or requirements. The training facilities are located either at the Johnson Space Center or at user locations. Several crew training facilities at the center can interface with payloads or experiments.

An orbiter 1-g trainer, a full-scale flight deck, a middeck, and a midbody (complete with payload bay) are used for crew training in habitability, extravehicular activity, ingress, egress, television operations, waste management, stowage and routine housekeeping and maintenance.

The orbiter neutral buoyancy trainer, designed for use in the Weightless Environment Test Facility, includes a full-scale crew cabin middeck, airlock and payload bay doors. It simulates a zero-gravity environment for extravehicular training. The facility is 78 feet long, 33 feet wide and 25 feet deep and holds approximately 490,000 gallons of water.

The shuttle mission simulator contains full-fidelity forward and aft crew stations. In this computer-controlled simulator, mathematical models of systems, consistent with flight dynamics, drive the crew station displays. Used for training on combined systems and flight team operations, it can simulate payload support systems with mathematical models, remote manipulator system dynamic operations with computer-generated imagery, and Spacelab support systems by interfacing with the Spacelab simulator. The SMS can interface with the Mission Control Center for integrated crew/ground simulations.

The remote manipulator system task trainer consists of an aft crew station mockup, a payload bay mockup and a mechanically operated arm. It simulates payload grappling (in the payload bay), berthing, visual operations, payload bay camera operations and manipulator software operations. The user provides helium-inflatable models to simulate the payload geometrically.

A Spacelab simulator, consisting of interior core and experiment segments with computer modeling of the Spacelab systems, is used to train flight and ground crews. This simulator is also used as a trainer for crew accommodations, habitability, stowage and safety methods.

Payload specialist training for an orbiter-only flight requires approximately 180 hours. A flight with Spacelab pallets requires

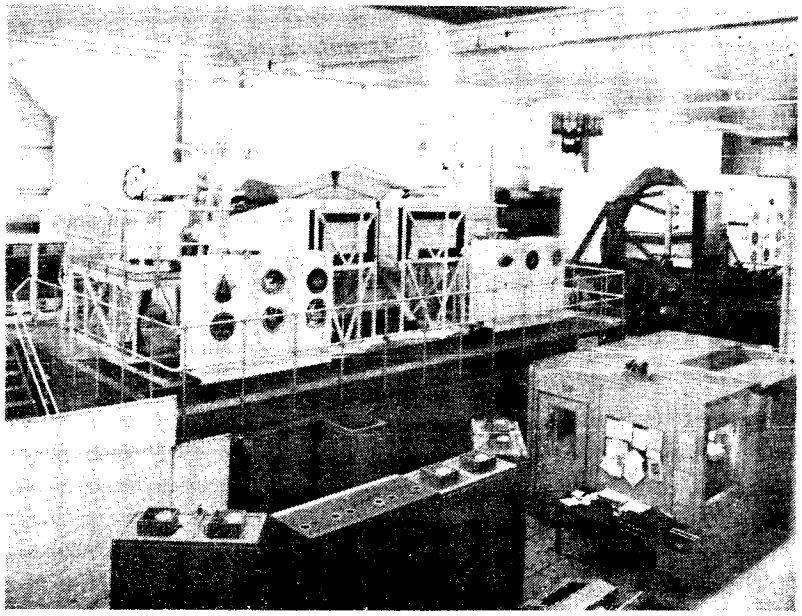

*Motion Base Shuttle Mission Simulator*

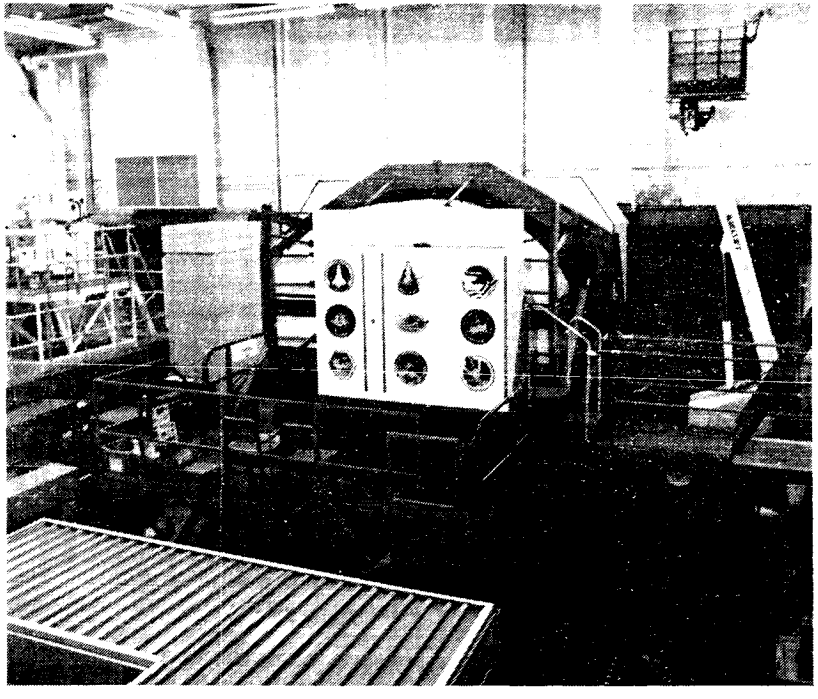

*Fixed-Base Shuttle Mission Simulator*

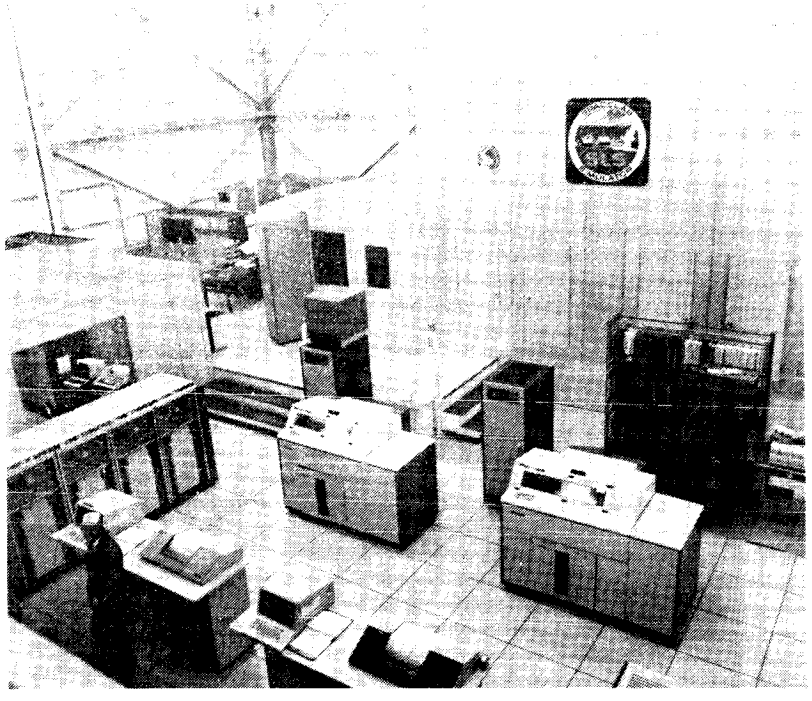

*Spacelab Simulator*



189 hours of training, and a mission with a Spacelab module requires 203 hours.

Two months of nearly full-time training approximates 320 hours of available time, half of which is spent in formal classroom and trainer/simulator instruction. The remaining time can be allocated to Johnson Space Center space shuttle payload flight plan integration and reviews, development and review of flight and mission rules, flight technique meetings and flight requirements implementation reviews. For some complex payloads (e.g., multidiscipline), the dedicated training may take more than two months. Payload specialists who have flown before take a proficiency examination and repeat any training necessary.

Payload specialist training includes tasks necessary for any crew member to function effectively during flight; this training totals approximately 124 hours. Flight-dependent training can be divided into two types: payload discipline training and training necessary to support shuttle/payload integrated operations. The second is characterized by integrated simulations involving the entire flight operations support teams. Approximately 115 hours are devoted to this training.

Payload specialist training may start as early as two years before the flight.

**TEST FACILITIES.** Communication links between the orbiter and the space flight tracking and data network through the Tracking and Data Relay Satellite system were verified by the Electronic Systems Test Laboratory at JSC. The system development tests in support of orbital tests began in the fall of 1977; before

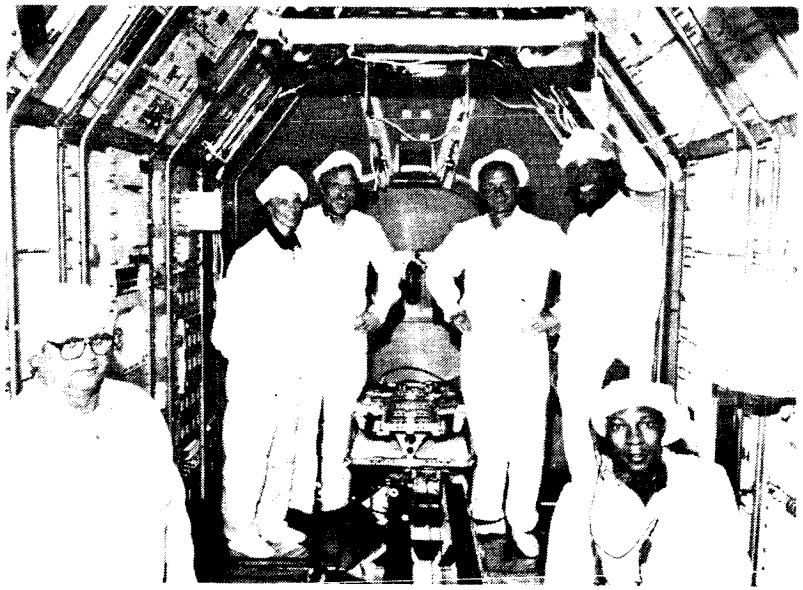

*Spacelab Simulator*

that, the laboratory supported the successful approach and landing test program.

The Shuttle Avionics Integration Laboratory is a highly specialized avionics test facility at JSC that houses a high-fidelity, end-to-end, operating avionics system. There are two test stations. The shuttle test station consists of a multistring set of flight-qualifiable avionics equipment located in flight-type equipment bays and shelves, complete with flight-type harnesses and cable runs. The guidance, navigation and control test station contains a rack-mounted avionics hardware complement limited to that necessary to perform guidance, navigation and control testing. Both stations use space shuttle flight software in conjunction with the Marshall Space Flight Center mated elements system and a subset of the Kennedy Space Center launch processing system. The mated elements system provides flight avionics hardware; flight software; flight wire harnesses; and sensor simulations for the external tank, the solid rocket boosters and the space shuttle main engines.

The Shuttle Avionics Integration Laboratory verifies the functional integrity and compatibility of the integrated space shuttle avionics system, the onboard flight software for all mission phases and the avionics interfaces with the launch processing system for the prelaunch phase. Both SAIL test stations are supported by independent vehicle flight dynamic simulation and test control facilities. Environment, aerodynamics, vehicle dynamics, sensor simulation and scene generation are provided. A space shuttle aerosurface actuator simulator verifies the performance of the avionics hardware and software with the hydraulic aerosurface actuators. Similar simulations verify the performance of the reaction control system/orbital maneuvering system, space shuttle main engines and solid rocket booster thrust vector controls. A remote manipulator system simulation is also available for hardware/software verification.

**OFF-SITE CONTRIBUTORS.** The Rockwell International Space Transportation Systems Division in Downey, Calif., was responsible to the Johnson Space Center for the design, development, test and evaluation of the space shuttle orbiter. This effort called for the fabrication and testing of two orbiters (OV-101 and OV-102), a structural test article and a main propulsion test article. The division is also responsible for the integration of the overall space transportation system. The division converted the structural test article to an operational orbiter (designated OV-099) and built two additional orbiters (OV-103 and OV-104).

NASA awarded a structural spares contract to Rockwell's Space Transportation Systems Division for the construction of an upper and lower forward fuselage, crew compartment, midfuselage, wings, aft fuselage, payload bay doors, vertical tail, forward reaction control system and a set of orbital maneuvering system/reaction control system pods. In 1987, the division was contracted to use the structural spares for the assembly of a replacement orbiter (OV-105). The orbiters are assembled at U.S. Air Force Plant 42 in Palmdale, Calif., where final orbiter testing and checkout are also performed.

The Downey facility maintained a Flight Simulation Laboratory, Avionics Development Laboratory and Flight Control

*Rockwell International's Space Transportation Systems Division, Downey, Calif.*

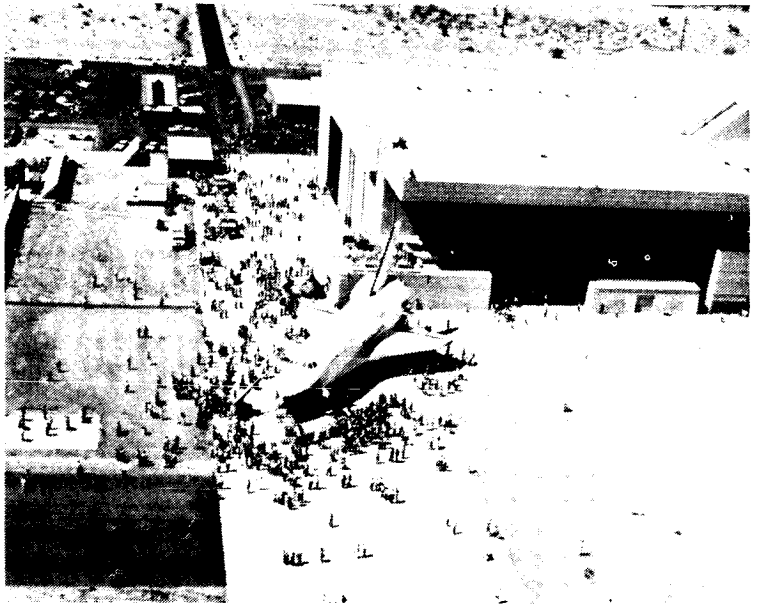

*U.S. Air Force Plant No. 42 at Palmdale, Calif., Provides Rockwell International's Space Transportation Systems Division With the Facility for Final Assembly, Test and Checkout of the Orbiter*



Hydraulics Laboratory. These laboratories supported the total orbiter system verification process with early testing on breadboard/prototype hardware and preliminary releases of NASA software. These tests laid the foundation for orbiter testing at the Palmdale facility and the final hardware and software verification testing at the Shuttle Avionics Integration Laboratory at the Johnson Space Center. Both the Flight Simulation Laboratory and Avionics Development Laboratory started with system hardware design development, proceeded into flight software evaluation and ended in a complete orbiter mission simulation that included the Flight Control Hydraulics Laboratory.

NASA's White Sands Test Facility in New Mexico certified the space shuttle orbiter's forward reaction control system and aft orbital maneuvering system and reaction control system. Rockwell International's Space Transportation Systems Division conducted the testing under the management of the Johnson Space Center.

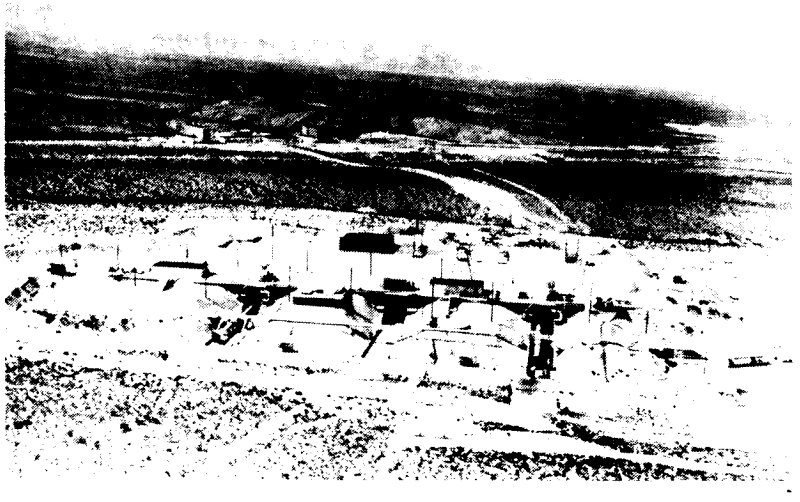

*White Sands Test Facility—New Mexico*

## GEORGE C. MARSHALL SPACE FLIGHT CENTER

The Marshall Space Flight Center is located on 1,800 acres inside the Redstone Arsenal in Huntsville, Ala. In the past, the center has been identified most often as NASA's launch vehicle development center. While this accurately describes part of the center's activities, it does not tell the whole story. Today, the center is a multiproject management, scientific and engineering establishment, with much more emphasis on projects involving scientific investigation and the application of space technology to the solution of problems on Earth. This is the center's new image, one that will be reflected in the projects of the future.

The Marshall Space Flight Center is responsible for the space shuttle main engines, the external tank and the solid rocket boosters. It is also responsible for Spacelab, the reusable, modular scientific research facility that is carried in the payload bay of the orbiter, and managing Spacelab missions. Marshall also has management responsibility for the Hubble Space Telescope, tethered satellite system and orbital maneuvering vehicle and has a substantial role in the development of the space station.

Two other sites are managed by Marshall: the Michoud Assembly Facility in New Orleans, La., which manufactures the shuttle external tank, and the Slidell Computer Complex in Slidell, La., which provides computer services to the Michoud facility.

The Rocketdyne Division of Rockwell International in Canoga Park, Calif., is responsible to the Marshall Space Flight Center for the design, development, manufacture, test and assembly of the space shuttle main engines. The Rocketdyne facility at Santa Susana, Calif., is also used for the space shuttle main engines.

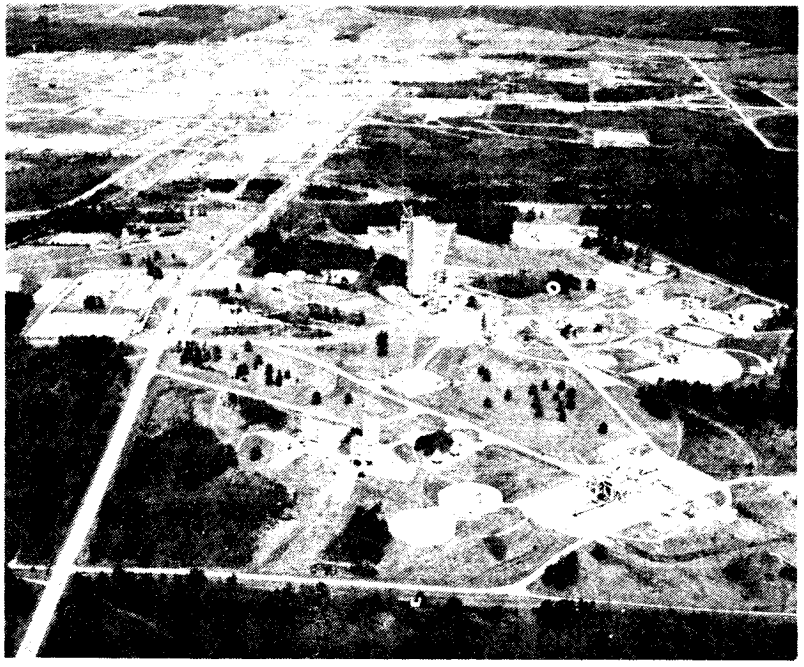

*Marshall Space Flight Center, Huntsville, Ala.*

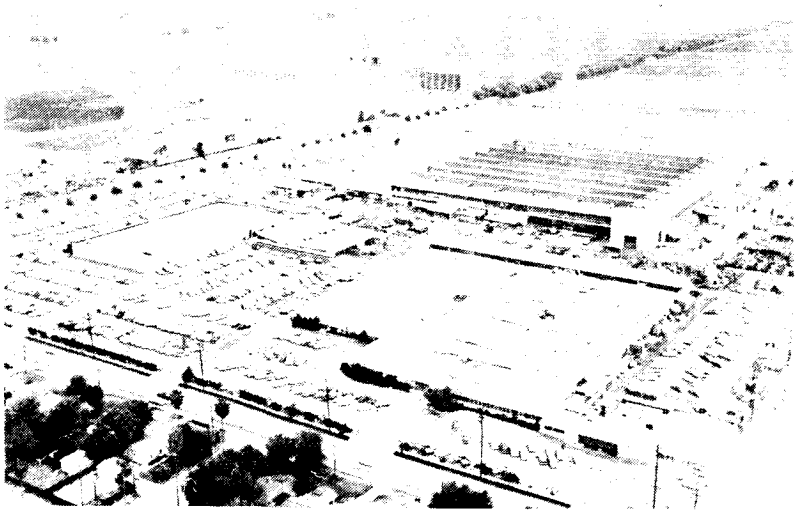

*Rockwell International's Rocketdyne Division, Canoga Park, Calif.*

Martin Marietta is responsible to Marshall and uses the Michoud facility at New Orleans for the design, development, manufacture, test and assembly of the external tank.

Morton Thiokol's Wasatch Division at Brigham City, Utah, is responsible to Marshall for the design, development, test and assembly of the solid rocket booster motors. After each shuttle mission the solid rocket booster motor casings are recovered and returned to Thiokol's Wasatch Division for refurbishment.

United Space Booster Inc. Booster Production Company in Florida is responsible to Marshall for solid rocket booster assembly, checkout and refurbishment involving non-solid-rocket-motor components and for solid rocket motor integration.

**PAYLOAD OPERATIONS CONTROL CENTER.** The Payload Operations Control Center at the Marshall Space Flight Center is a NASA facility for monitoring, coordinating and controlling on orbit operations of Spacelab payloads. It is also used for premission test and training activities.

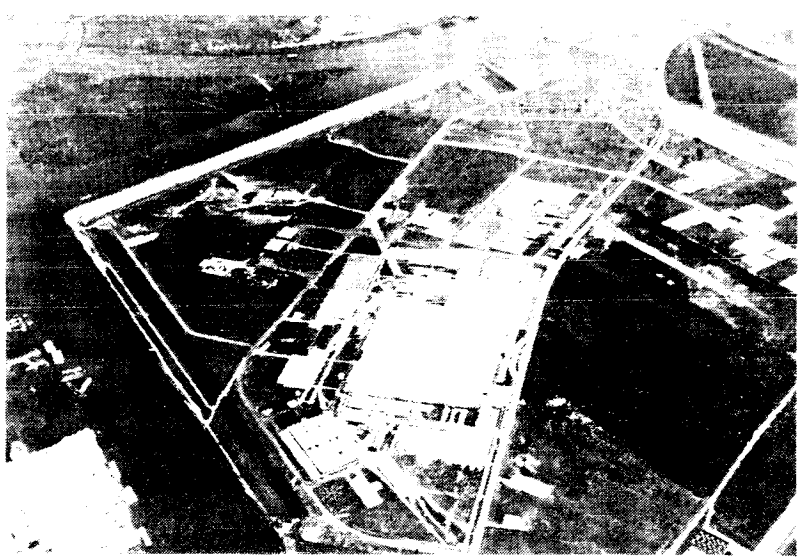

*Martin Marietta, Michoud, La., Facility*

The Payload Operations Control Center allows users on the ground to support and interact with onboard mission activities and permits direct communication between the investigator on the ground and flight crew on orbit. It provides ground command capability to operate experiments, manage payload resources and operate payload support equipment. Its facilities and services for instrument monitoring and control are made available to all users who request them. Each user area has a standard set of support equipment and space for special instrument-dedicated ground support equipment. A communication link can be arranged to allow the investigator to perform some or all operations from his own institution.

The facilities and services for instrument monitoring and control are provided within designated user areas. Investigators are concerned primarily with the user rooms, where they monitor and control their instruments. Standard equipment and services for each user room include TV monitors, a digital data monitor, intelligent terminals, strip chart recorders, communication panels,

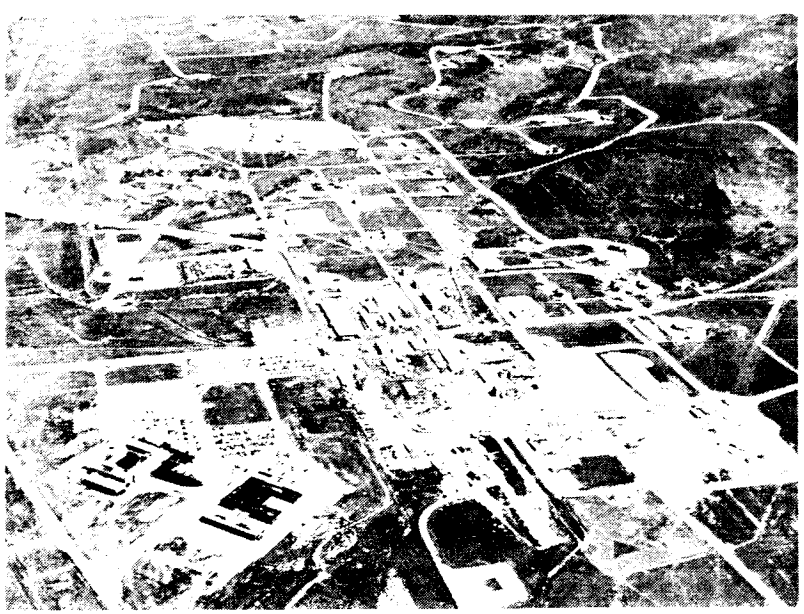

*Morton Thiokol Wasatch Division, Brigham City, Utah*

an interface data panel for data outputs to experiment ground support equipment, and miscellaneous carry-in monitors and recorders for voice and video. Space is available in each user support area for experimenters to set up their own special processing equipment in addition to the services provided by the POCC. The investigator has the additional option of operating out of his home institution by arranging for a communications link with the POCC. Investigators are responsible for defining their requirements for POCC use early in the mission cycle.

**SPACELAB TRAINING FACILITIES.** The Spacelab training facilities provide training and familiarization so that experimenters and the space shuttle flight crew can effectively support experiment flight operations and coordinate their activities with other users and support personnel.

Training requirements depend on the complexity of both the individual instruments and the integrated payload. The investigator helps determine training requirements for his instrument and participates in training the payload specialists and support personnel who may operate equipment, monitor data or assist in troubleshooting. Investigators who participate in such activities also require indoctrination and training in practices and equipment operation. Payload crew training currently begins 1.5 to two years before launch and continues through launch. Training on individual experiments and experiment instruments is normally scheduled before payload integration, which begins approximately one year before launch.

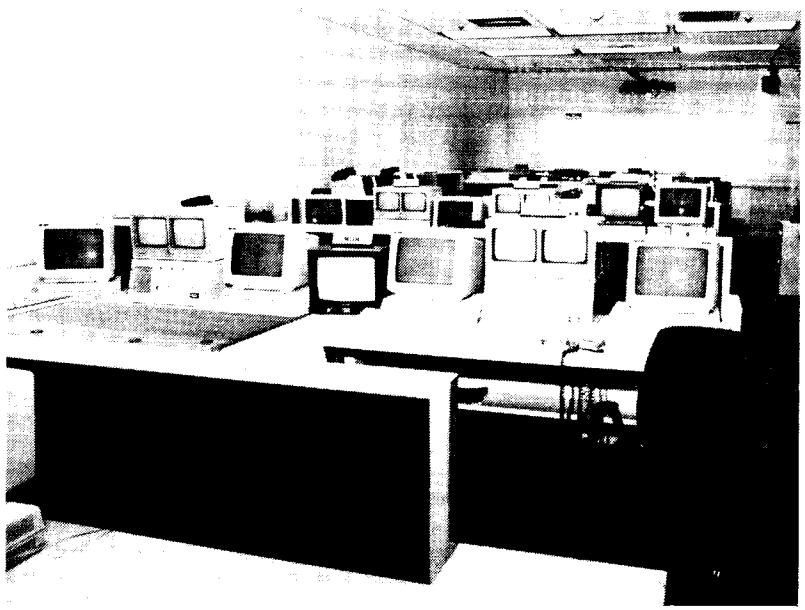

*Payload Operations Control Center*

Specific operational and support responsibilities for the space shuttle and its science payloads are assigned to several NASA field centers, a number of which have Spacelab training facilities. Training on experiment engineering models and flight hardware may also take place at the principal investigators' facilities.

The mission management team works to ensure that the mission scenario meets the needs of the investigators, that the requirements of the scientific payload match the shuttle-Spacelab resources and that all systems and instruments operate properly during flight. The team also conducts crew training in payload operation and prepares the science teams for their roles in the Payload Operations Control Center during the mission.

Marshall Space Flight Center's responsibility for integrated mission-dependent training required the development of the Payload Crew Training Complex. This training facility houses host computers, development peripherals, simulation director stations, mockups of the Spacelab pressurized modules, Spacelab pallet mockups, an orbiter aft flight deck mockup and other simulators to support the command and data management subsystem and experiments. The host simulator provides hardware and software to represent space CDMS operation, pointing system operation and the general Spacelab environment. Experiment simulators provide software experiment models that interface with the host simulator.

The Spacelab simulator facility at the Johnson Space Center consists of a full-scale, high-fidelity Spacelab core and experiment

module segment; subsystem racks; controls and displays; scientific airlock; and viewport. It uses the shuttle mission simulator computer complex to process simulation data. It does not include the tunnel area or any experiments. The Spacelab simulator provides full-task training in the operation of Spacelab support subsystems for pilots and mission and payload specialists.

The Kennedy Space Center plans and manages the ground processing of cargoes for integration in the orbiter. This typically includes receiving and preintegration checkout of experiments and test equipment, physical integration of user science instruments with the carrier, verification of the integrated payload, loading of payloads into the orbiter and final preflight validation of the integrated mission vehicle and ground systems. In most cases, payload integration and checkout require the investigator's presence.

Although designated primarily as payload integration and test areas of the Kennedy Space Center Operations and Checkout Building, both the Level IV area and the cargo integration test equipment stand contain detailed simulators of the orbiter aft flight deck (payload, on-orbit and mission stations). With their direct physical access to payload equipment, these aft flight deck simulators provide a final training opportunity during the Spacelab integration cycle for mission and payload specialists to act as test operators with flight hardware and maintain proficiency with integrated payload operations.

## NATIONAL SPACE TECHNOLOGY LABORATORIES

NASA's National Space Technology Laboratories was the site for testing the main propulsion system and remains the site for space shuttle main engine firings. In the early 1960s, the laboratory—then under control of the Marshall Space Flight Center and known as the Mississippi Test Facility—was carved out of a pine forest lowland in southwestern Mississippi to serve as the engine test site for the Apollo/Saturn lunar landing program. Taking advantage of the Pearl River and its tributaries, planners laid out the facility so that large barges could transport the huge Saturn S-IC and S-II stages, along with their liquid fuels and oxidizers, to the test stands.

Throughout the 1970s, the role of the laboratory complex—directly under NASA Headquarters—expanded. The federal/state facility now services more than a score of government agencies and dozens of programs in development and testing.

At the eastern boundary of the main facility and at the end of the main canal is the huge test stand complex where the Saturn S-IC stage was test-fired. The space shuttle main propulsion sys-

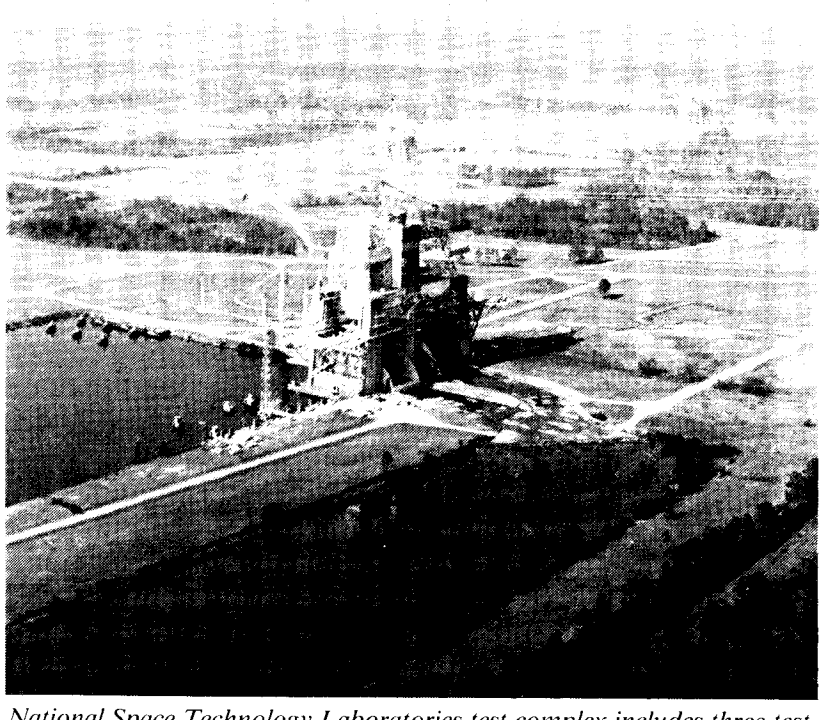

*National Space Technology Laboratories test complex includes three test stands for captive-firing space shuttle main engines. The dual stand in the foreground has two test positions. The two single-engine stands are in the background.*

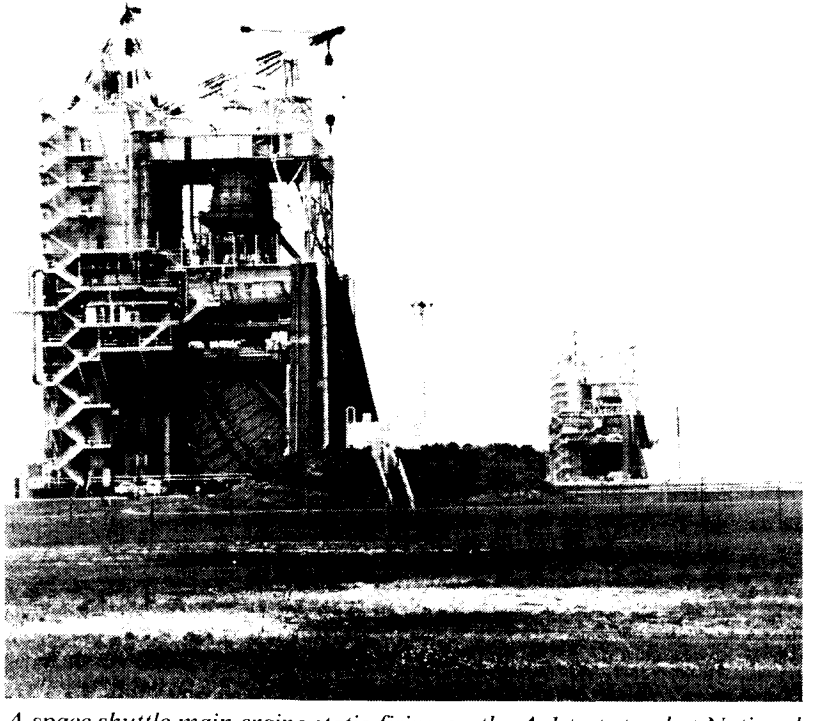

*A space shuttle main engine static firing on the A-1 test stand at National Space Technology Laboratories test complex is shown with the A-2 stand in the foreground.*

tem tests, also conducted at this complex, included firing of the three main engines. (Rockwell International's Space Transportation Systems Division in Downey, Calif., under the management of the Marshall Space Flight Center, conducted the testing.)

Approximately 1.5 miles west are two stands—A-1 and A-2—that are used to test the space shuttle main engines separately. The engines are built by Rockwell's Rocketdyne Division in Canoga Park, Calif., under the management of Marshall Space Flight Center. The test stands were also used in the 1960s and early 1970s to test the Rockwell-built Saturn S-II stages.

The main propulsion system test program consisted of a series of cryogenic (supercold) tankings and static firings designed to integrate and evaluate performance of the entire system and to demonstrate the compatibility of all interfacing elements and subsystems. Full-duration firings of the space shuttle main engines were used to verify integrated system performance, investigate off-nominal conditions and assess design changes in the system. The series of tests certified the main propulsion system for the space shuttle's first flight.

The cryogenic propellants of the main propulsion system are liquid hydrogen fuel, which must be maintained at minus 423 F, and liquid oxygen oxidizer, which must be maintained at minus 297 F.

Hardware for the propulsion system testing was the main propulsion test article, which was given the Rockwell internal identification of MPTA-098. The test article consists of a spacecraft aft fuselage and a structural truss arrangement that simulates the spacecraft's midfuselage. The three space shuttle main engines were housed in the aft fuselage and the test article was connected to an external fuel tank. For ground test acoustic fatigue protection, the test article's aft fuselage consisted of a substitute covering in place of the reusable thermal protection system installed on the outer surface of the actual spacecraft.

The portion of the orbiter hydraulic system associated with main engine valve control and thrust vector control servoactuation for engine gimbaling was included in the aft fuselage. Ground support equipment supplied the hydraulic power in place of the orbiter auxiliary power unit and hydraulic system to position the hydraulic servoactuators for the main engine valve and thrust vector control. Also included in the aft fuselage was a flight purge, vent and drain system that operated during tankings and firings for aft compartment conditioning. One ground computer, a shuttle avionics test set, was used in place of the five onboard flight computers to control the avionics and monitor functions for the test.



The external tank was a complete flight-weight tank with auxiliary drain, vent and pressurization systems required for safety reasons. The structural connections between the external tank and the simulated spacecraft were flight hardware except that the pyrotechnic devices used for in-flight separation of the external tank from the spacecraft were not included.

## GODDARD SPACE FLIGHT CENTER

The Goddard Space Flight Center, Greenbelt, Md., is responsible for operating, maintaining and controlling the space flight tracking and data network, which consists of the space network and ground network, to provide tracking, data acquisition and associated support. Operation of the network is accomplished through NASA contracts and interagency and international agreements that provide staffing and logistic support requirements for mission support. The Networks Division operates the space network, ground network, Network Control Center and NASA Ground Terminal and is responsible for testing, calibrating and configuring network resources to ensure network support capability before each mission. The Networks Division coordinates, schedules and directs all network activity and provides necessary interface coordination between Goddard Space Flight Center elements, other agencies, centers and networks to ensure STDN capability.

The STDN controlled by the NCC at Goddard is composed of the White Sands Ground Terminal and NASA Ground Terminal, White Sands, N.M.; the NASA communications network, Flight Dynamics Facility, Simulation Operations Center, all at Goddard; and the ground network. These elements are linked by voice and data communications services provided by Nascom. The prime operational communications is by data formatted into 4,800-bit blocks and transmitted via the Nascom wide-band data and message switching system. Alternate communications are provided by teletype and facsimile facilities.

The Tracking and Data Relay Satellite system will consist of two Tracking and Data Relay satellites in geosynchronous orbit and 130 degrees apart (in longitude), an on-orbit spare, and ground terminal facilities located at White Sands. The TDRS is capable of transmitting to, receiving data from, and tracking a user spacecraft in a low Earth orbit for a minimum of 85 percent of its orbit.

The White Sands Ground Terminal contains the ground terminal communications relay equipment for command, telemetry, tracking and control equipment for the TDRSS.

The NSGT is colocated with the WSGT. The NSGT is managed and operated by the Networks Division and, in combination with Nascom, is NASA's physical and electrical interface with the TDRSS. The NSGT provides the interface to the common carrier, monitors the quality of the service from the TDRSS and remotes the data quality to the NCC.

Goddard's ground tracking stations are located at Ascension Island (S-band and UHF air-to-ground); Bermuda (S-band, C-band and UHF air-to-ground); Guam (S-band and UHF air-to-ground); Kauai, Hawaii (S-band and UHF air-to-ground); Merritt Island, Fla. (S-band and UHF air-to-ground; Santiago, Chile (S-band); Ponce de Leon, Fla. (S-band); Canberra, Australia (S-band); Dakar, Senegal (UHF air-to-ground); and Wallops, Va. (C-band).

Also supporting the STDN are several instrumented United States Air Force aircraft, referred to as advanced range instrumentation aircraft, which are situated, upon request, at various locations around the world where ground stations are unable to support space shuttle missions.



The various antennas at each STDN tracking station accomplish a specific task, usually in a specific frequency band. Functioning like giant electronic magnifying glasses, the larger antennas absorb radiated electronic signals transmitted by spacecraft in a radio form called telemetry.

The major switching centers in Nascom are located at Goddard; the Jet Propulsion Laboratory, Pasadena, Calif.; Cape Canaveral, Fla.; Canberra, Australia; and Madrid, Spain.

The Nascom Division, headquartered at the Goddard Space Flight Center, is responsible for providing an operational telecommunications network for all NASA programs and projects. The Nascom network is a worldwide complex of communications services, including data, voice, teletype and television systems that are a mixture of government-owned and leased equipment as well as leased services. Nascom is responsible for the operations, maintenance and testing required to provide optimum services to users.

This communications network is composed of telephone, microwave, radio, submarine cables and communications satellites. These various systems link data flow through 11 countries of the free world with 15 foreign and domestic carriers and provide the required information between tracking sites and the Johnson Space Center in Houston, Texas, and GSFC control centers. Special wide-band and video circuitry also is utilized as needed. The Goddard Space Flight Center has the largest wide-band system in existence.

Included in the equipment of the worldwide STDN system are numerous computers located at the different stations. The computers at these remote sites control tracking antennas, handle commands and process data for transmission to the Johnson Space Center and Goddard control centers. Data from the space shuttle from all the tracking stations around the world are funneled into the main switching computers at GSFC and are rerouted to JSC without delay via domestic communications satellites. Commands generated at JSC are transmitted to the main switching computers at GSFC and switched to the proper tracking station for transmission to the space shuttle.

If NASA's Johnson Space Center Mission Control Center should be impaired for an extended period of time, an emergency control center would be established at the NASA Ground Terminal, White Sands, N.M., and manned by NASA's JSC personnel.

A station conferencing and monitoring arrangement allows various traffic managers to "conference" as many as 220 different voice terminals throughout the United States and abroad with talk/listen capability at the touch of a few buttons. The system is redundant, which accounts for its mission support reliability record of 99.6 percent. All space shuttle voice traffic is routed through SCAMA at Goddard.

Communications satellites are used to connect the Earth stations electronically and permit 10 to 20 times more data to be transmitted. Ground terminals for domestic communications satellites are situated at JSC; Kauai, Hawaii; Goldstone, Calif.; the Kennedy Space Center, Florida; NASA's Ames Dryden Flight Research Facility, California; GSFC; and White Sands, N.M.

The tracking station at Ponce de Leon Inlet, Fla. (near New Smyrna Beach) provides support during powered flight due to attenuation problems from the solid rocket booster motor plume.

The existing worldwide ground stations cover up to approximately 20 percent of a satellite's or spacecraft's orbit. Coverage is limited to brief periods when the satellite or spacecraft is within the line of sight of a given tracking station.

*Goddard Space Flight Center, Greenbelt, Md.*

## ORBITER APPROACH AND LANDING TEST PROGRAM

The first orbiter spacecraft, Enterprise (OV-101), was rolled out at Rockwell International's Palmdale, Calif., assembly facility on Sept. 17, 1976. On Jan. 31, 1977, it was transported 36 miles overland from Rockwell's assembly facility to NASA's Dryden Flight Research Facility at Edwards Air Force Base for the approach and landing test program.

The nine-month-long ALT program was conducted from February through November 1977 at the Dryden Flight Research Facility and demonstrated that the orbiter could fly in the atmosphere and land like an airplane, except without power-gliding flight.

Two NASA astronaut crews—Fred Haise and Gordon Fullerton and Joe Engle and Dick Truly—took turns flying the 150,000-pound spacecraft to free-flight landings.

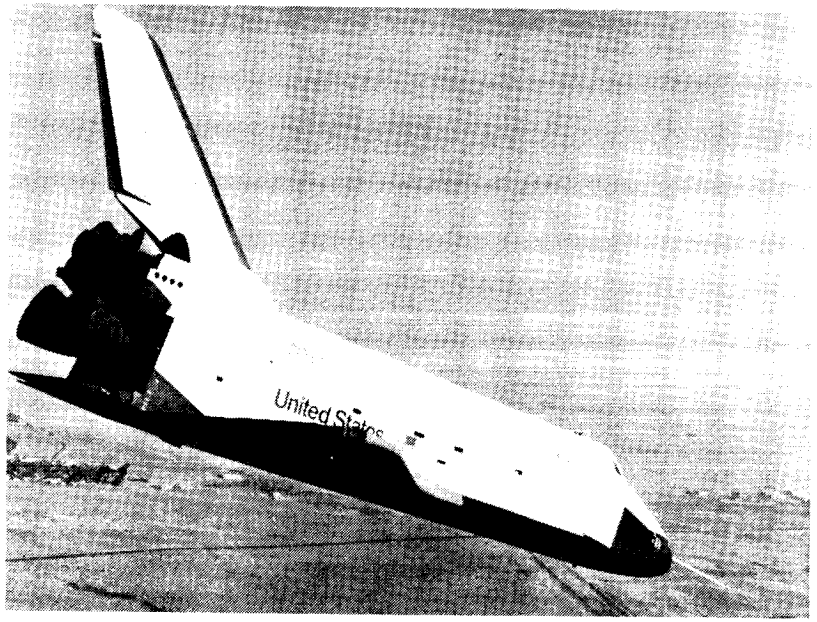


*Enterprise Approaches Edwards Air Force Base Runway in Approach and Landing Test*

The ALT program involved ground tests and flight tests.

The ground tests included taxi tests of the 747 shuttle carrier aircraft with the Enterprise mated atop the SCA to determine structural loads and responses and assess the mated capability in ground handling and control characteristics up to flight takeoff speed. The taxi tests also validated 747 steering and braking with the orbiter attached. A ground test of orbiter systems followed the unmanned captive tests. All orbiter systems were activated as they would be in atmospheric flight. This was the final preparation for the manned captive flight phase.

Five captive flights of the Enterprise mounted atop the SCA with the Enterprise unmanned and Enterprise's systems inert were conducted to assess the structural integrity and performance handling qualities of the mated craft.

Three manned captive flights that followed the five captive flights included an astronaut crew aboard the orbiter operating its flight control systems while the orbiter remained perched atop the SCA. These flights were designed to exercise and evaluate all systems in the flight environment in preparation for the orbiter release (free) flights. They included flutter tests of the mated craft at low and high speed, a separation trajectory test and a dress rehearsal for the first orbiter free flight.

In the five free flights the astronaut crew separated the spacecraft from the SCA and maneuvered to a landing at Edwards Air Force Base. In the first four such flights the landing was on a dry lake bed; in the fifth, the landing was on Edwards' main concrete runway under conditions simulating a return from space. The last two free flights were made without the tail cone, which is the spacecraft's configuration during an actual landing from Earth orbit. These flights verified the orbiter's pilot-guided approach and landing capability; demonstrated the orbiter's subsonic terminal area energy management autoland approach capability; and verified the orbiter's subsonic airworthiness, integrated system operation and selected subsystems in preparation for the first

manned orbital flight. The flights demonstrated the orbiter's ability to approach and land safely with a minimum gross weight and using several center-of-gravity configurations.

For all of the captive flights and the first three free flights, the orbiter was outfitted with a tail cone covering its aft section to reduce aerodynamic drag and turbulence. The final two free flights were without the tail cone, and the three simulated space shuttle main engines and two orbital maneuvering system engines were exposed aerodynamically.

The final phase of the ALT program prepared the spacecraft for four ferry flights. Fluid systems were drained and purged, the tail cone was reinstalled, and elevon locks were installed. The forward attachment strut was replaced to lower the orbiter's cant from 6 to 3 degrees. This reduces drag to the mated vehicles during the ferry flights.

After the ferry flight tests, OV-101 was returned to the NASA hangar at the Dryden Flight Research Facility and modified for vertical ground vibration tests at the Marshall Space Flight Center, Huntsville, Ala.

On March 13, 1978, the Enterprise was ferried atop the SCA to NASA's Marshall Space Flight Center, where it was mated with the external tank and solid rocket boosters and subjected to a series of vertical ground vibration tests. These tested the mated configuration's critical structural dynamic response modes, which were assessed against analytical math models used to design the various element interfaces.

These were completed in March 1979. On April 10, 1979, the Enterprise was ferried to the Kennedy Space Center, mated with the external tank and solid rocket boosters and transported via the mobile launcher platform to Launch Complex 39-A. At Launch Complex 39-A, the Enterprise served as a practice and launch complex fit-check verification tool representing the flight vehicles.

It was ferried back to NASA's Dryden Flight Research Facility on Aug. 16, 1979, and then returned overland to Rockwell's Palmdale final assembly facility on Oct. 30, 1979. Certain components were refurbished for use on flight vehicles being assembled at Palmdale. The Enterprise was then returned overland to the Dryden Flight Research Facility on Sept. 6, 1981.

During May and June of 1983, Enterprise was ferried to the Paris, France, Air Show, as well as to Germany, Italy, England and Canada, and was returned to the Dryden Flight Research Facility.

In the April-October 1984 time period, Enterprise was ferried to Vandenberg Air Force Base in California and to Mobile, Ala. From there it was taken by barge to New Orleans, La., for the United States 1984 World's Fair.

In November 1984 it was ferried to Vandenberg Air Force Base and used as a practice and fit-check verification tool. On May 24, 1985, Enterprise was ferried from Vandenberg Air Force Base to NASA's Dryden Flight Research Facility.

On Sept. 20, 1985, Enterprise was ferried from Dryden Flight Research Facility to the Kennedy Space Center in Florida. On Nov. 18, 1985, Enterprise was ferried from the Kennedy Space Center to Dulles Airport, Washington, D.C., and became the property of the Smithsonian Institution. The Enterprise was built as a test vehicle and is not equipped for space flight.

## SPACE SHUTTLE FLIGHT TEST PROGRAM

In preparation for the first flight into space of OV-102 (Columbia), tens of thousands of hours of tests and simulations were expended at government and contractor facilities throughout the nation to qualify all the structures, flight equipment and computer program software.

Major test programs included the 13 flights of the approach and landing test program at NASA's Dryden Flight Research Facility, Edwards Air Force Base, California. The main propulsion test article—consisting of the orbiter aft fuselage, three space shuttle main engines, external tank and truss arrangement to simulate the midfuselage—qualified the main propulsion system at NASA's National Space Technology Laboratories in Mississippi. The solid rocket boosters' solid-propellant rocket motor was qualified at Morton Thiokol's Wastach Test Facility near Brigham City, Utah. The orbiter's reaction control and orbital maneuvering systems were qualified at NASA's White Sands Test Facility near Las Cruces, N.M. Flight simulation and avionics testing qualified the space shuttle avionics at the Johnson Space Center and at Rockwell International's Space Transportation Systems Division in Downey, Calif.

The orbiter full-scale structural test article (STA-099) was tested at Lockheed's facility in Palmdale, Calif.

The initial four flights of Columbia were launched from the Kennedy Space Center and verified the design and operational capability of the space shuttle and all of the ground-based monitoring, communications and support systems. The first flight of Columbia was structured to minimize risks and complexity. The remaining test flights became progressively more complex and developed and demonstrated mission and payload capabilities. The spacecraft's performance was above and beyond expectations in all aspects. The spacecraft has demonstrated that it is a very stable platform for experiments in addition to providing a stable platform for the deployment of satellites.



## SHUTTLE CARRIER AIRCRAFT

The NASA SCA is a Boeing 747 (100 series) purchased from American Airlines on June 17, 1974. It was modified to ferry orbiters to and from various shuttle facilities and to transport and release OV-101 for the ALT program.

On Feb. 29, 1988, NASA announced plans to acquire a Boeing 747-100 to serve as a second SCA for the space transportation system. A letter contract was signed with Boeing Military Airplane Company, a division of the Boeing Company, Seattle, Wash., to reserve the aircraft for NASA use. The additional SCA will increase ferrying capability and eliminates a potential single-point failure in the space transportation system. This 747-100 will be modified to carry space shuttle orbiter's from landing sites to the processing facilities at the Kennedy Space Center in Florida. The modifications will be made by Boeing at its manufacturing facilities in Wichita, Kan. This 747-100 is nearly identical to the original SCA and was selected to minimize costs associated with modifications and operation.

Modifications to the basic 747 aircraft included removal of interior equipment (passenger seats, galleys, etc.); changes to air conditioning ducts, electrical wiring and plumbing; installation of higher thrust engines (JT9D-7AHW) and the 747-200 series rudder ratio-charger; and alteration of the longitudinal trim system to permit 2 degrees more nose-down trim. Other changes included relocation and installation of antennas, addition of bulkheads and doublers in the fuselage main deck, addition of structural doublers and tip fins to the horizontal stabilizers to improve directional stability with the orbiter on top of the aircraft, and addition of one forward and two aft support assemblies for attachment of the orbiter. The modifications increased the basic weight of the aircraft by approximately 2,800 pounds.

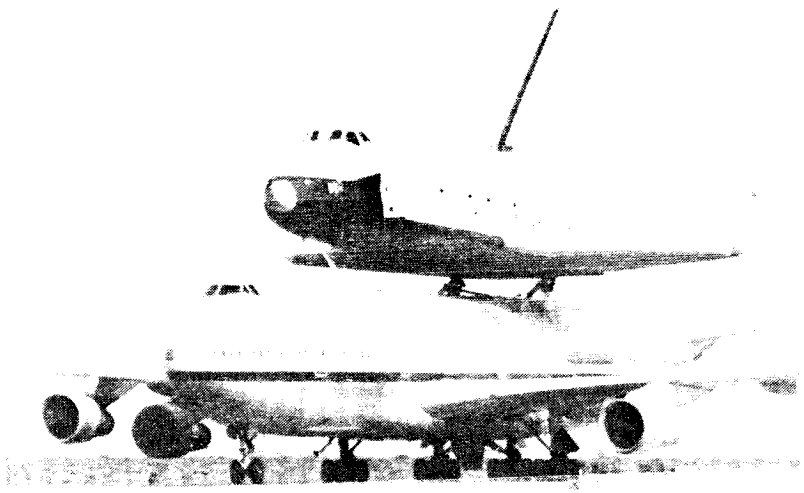

*Boeing 747 Shuttle Carrier Aircraft*

The orbiter's mated location on the 747 was based on consideration of static stability and control, structural modifications, weight and performance. Center-of-gravity limits for the 747 with the orbiter mated were 15 percent of the 747's mean aerodynamic chord for the forward limit and 33 percent MAC for the aft limit. Longitudinal stability is similar to that of the basic 747; ballast must be added so that the center-of-gravity limits are not exceeded. The ballast is carried in standard 747 cargo containers in the forward cargo compartment. The mated configuration allows the 747's center of gravity to shift approximately 10 feet upward.

For the ferry flight configuration, the tail cone fairing is installed on the orbiter to decrease aerodynamic drag and buffet, and aerosurface control locks are added to the orbiter's elevons. The orbiter is unmanned and the orbiter systems inert. A bailout system also is installed in the 747.

Some modifications to the 747 SCA are removable. These include support struts for the orbiter, horizontal tip fans and associated cabling and umbilicals.

## SPACE SHUTTLE CHRONOLOGY

| Date | Event |
|---|---|
| **1972** | |
| Aug. 9 | Rockwell receives authority to proceed, space shuttle orbiter |
| **1974** | |
| June 4 | Start structural assembly crew module, Enterprise (OV-101) |
| July 17 | Start long-lead fabrication (MPTA-098) |
| Aug. 26 | Start structural assembly aft fuselage, Enterprise (OV-101) |
| **1975** | |
| Jan. 6 | Start long-lead fabrication aft fuselage (STA-099) |
| March 27 | Midfuselage on dock, Palmdale, Enterprise (OV-101) |
| March 27 | Start long-lead fabrication aft fuselage, Columbia (OV-102) |
| May 23 | Wings on dock, Palmdale—less elevons, seals and main gear doors—Enterprise (OV-101) |
| May 27 | Vertical stabilizer on dock, Palmdale (main fin box only), Enterprise (OV-101) |
| June 24 | Start structural assembly (MPTA-098) |
| Aug. 25 | Start final assembly and closeout system installation, Enterprise (OV-101) |
| Sept. 5 | Aft fuselage on dock, Palmdale, Enterprise (OV-101) |
| Oct. 17 | Space shuttle main engine first main stage test at NSTL |
| Oct. 31 | Lower forward fuselage on dock, Palmdale, Enterprise (OV-101) |
| Nov. 17 | Start long-lead fabrication of crew module, Columbia (OV-102) |
| Dec. 1 | Upper forward fuselage on dock, Palmdale, Enterprise (OV-101) |
| Dec. 20 | First SSME 60-second duration test, NSTL |
| Dec. 31 | 1/4-scale model ground vibration test facility construction complete, Downey, Building 288 |
| **1976** | |
| Jan. 16 | Crew module on dock, Palmdale, Enterprise (OV-101) |
| Jan. 23 | MPTA-098 truss on dock, Downey |
| Feb. 16 | Start fabrication forward fuselage (STA-099) |
| March 3 | Payload bay doors on dock, Palmdale, Enterprise (OV-101) |
| March 12 | Complete final assembly and closeout system installation, Palmdale, Enterprise (OV-101) |
| March 15 | Start functional checkout, Enterprise (OV-101) |
| March 17 | Complete premate MPTA test structure, Downey, and deliver to Palmdale |
| April 2 | Crew escape system test sled on dock, Downey |
| April 3 | Complete assembly and deliver MPTA structure on dock, Lockheed test site, Palmdale |
| April 22 | Body flap on dock, Palmdale, Enterprise (OV-101) |
| May 3 | Complete MPTA-098 proof load test setup, Lockheed test site, Palmdale |
| June 14 | Start aft fuselage assembly (STA-099) |
| June 24 | Complete MPTA-098 proof load test, Lockheed test site and on dock, Palmdale |
| June 25 | Complete functional checkout, Enterprise (OV-101) |
| June 28 | Start assembly of crew module, Columbia (OV-102) |
| June 28 | Start horizontal ground vibration tests and proof load tests, Enterprise (OV-101) |
| June 29 | MPTA-098 truss assembly, Palmdale, Building 294 to Building 295 |
| June 30 | SSME dummy set on dock, Palmdale, Enterprise (OV-101) |
| July 8 | MPTA-098 on dock, Downey, without truss assembly |
| July 12 | Start installation secondary structure (MPTA-098) |

| Date | Event |
|---|---|
| Aug. 2 | Start final assembly forward fuselage (STA-099) |
| Aug. 2 | Start carrier aircraft modification |
| Aug. 20 | Complete horizontal ground vibration tests and proof load tests, Enterprise (OV-101) |
| Aug. 23 | Start Delta F modification, Enterprise (OV-101) |
| Aug. 27 | Reaction control system/orbital maneuvering system pods (simulated), approach and landing tests, on dock, Palmdale, Enterprise (OV-101) |
| Aug. | Start overland roadway construction from Palmdale to Edwards Air Force Base |
| Sept. 10 | Complete Delta F modifications, Enterprise (OV-101) |
| Sept. 13 | Start preparations for first rollout, Enterprise (OV-101) |
| Sept. 13 | Start assembly aft fuselage, Columbia (OV-102) |
| Sept. 17 | Rollout Enterprise (OV-101) |
| Sept. 17 | Complete on-stand construction, NSTL |
| Sept. 20 | Start Delta F retest, Enterprise (OV-101) |
| Oct. 1 | Start final assembly, vertical stabilizer (STA-099) |
| Oct. 1 | Start final assembly, wing (STA-099) |
| Oct. 15 | Midfuselage on dock, Palmdale (STA-099) |
| Oct. 26 | Escape system test assembly sled ship from Downey to Holloman, N.M. |
| Oct. 29 | Deliver ejection seats, Enterprise (OV-101) |
| Oct. 29 | Complete Delta F retest, Enterprise (OV-101) |
| Oct. 31 | Solid rocket booster 1/4-scale model (burnout configuration) on dock, Downey |
| Nov. 4 | Complete 747 shuttle carrier aircraft modification, rollout, Boeing |
| Nov. 18 | Start escape system sled test, Holloman, N.M. |
| Nov. 26 | Complete integrated checkout, Enterprise (OV-101) |
| Nov. 28 | Complete orbiter transporter strongback |
| Dec. 7 | Tail cone fairing on dock, Palmdale |
| Dec. 10 | Complete overland roadway construction, Palmdale to Edwards Air Force Base |
| Dec. 13 | Start assembly upper forward fuselage, Columbia (OV-102) |
| Dec. 17 | External tank 1/4-scale model on dock, Downey |

| Date | Event |
|---|---|
| **1977** | |
| Jan. 3 | Start assembly vertical stabilizer, Columbia (OV-102) |
| Jan. 14 | Complete postcheckout, Enterprise (OV-101) |
| Jan. 14 | Boeing 747 shuttle carrier aircraft delivered to DFRF |
| Jan. 25 | Complete aft fuselage assembly on dock, Palmdale (STA-099) |
| Jan. 28 | Simulated crew module on dock, Palmdale (STA-099) |
| Jan. 31 | SRB 1/4-scale model (lift-off configuration) on dock, Downey |
| Jan. 31 | Enterprise (OV-101) transported overland from Palmdale to DFRF (36 miles) |
| Jan. 31 | Mass simulated SSMEs on dock, Palmdale, Enterprise (OV-101) |
| Feb. 7 | Enterprise (OV-101)/shuttle carrier aircraft mate start |
| Feb. 10 | Midfuselage on dock, Palmdale, Columbia (OV-102) |
| Feb. 15 | Complete Enterprise (OV-101)/shuttle carrier aircraft mated ground vibration test and taxi tests |
| Feb. 18 | Conduct first inert captive flight, DFRF (2 hours, 5 minutes), Enterprise (OV-101) |
| Feb. 22 | Conduct second inert captive flight, DFRF (3 hours, 13 minutes), Enterprise (OV-101) |
| Feb. 25 | Conduct third inert captive flight, DFRF (2 hours, 28 minutes), Enterprise (OV-101) |
| Feb. 28 | Conduct fourth inert captive flight, DFRF (2 hours, 11 minutes), Enterprise (OV-101) |
| March 2 | Conduct fifth inert captive flight, DFRF (1 hour, 39 minutes), Enterprise (OV-101) |
| March 16 | Wings on dock, Palmdale (STA-099) |
| March 21 | Orbiter 1/4-scale model on dock, Downey |
| April 1 | Lower forward fuselage on dock, Palmdale (STA-099) |
| April 6 | Upper forward fuselage on dock, Palmdale (STA-099) |
| April 6 | Vertical stabilizer on dock, Palmdale (STA-099) |

| Date | Event |
|---|---|
| May 20 | Nose landing gear doors on dock, Palmdale (STA-099) |
| May 26 | Aft payload bay doors on dock, Palmdale (STA-099) |
| May 27 | Complete systems installation/final acceptance, MPTA-098, transport from Downey to Seal Beach |
| May 31 | SRB 1/4-scale model, burnout and maximum q configuration, on dock, Downey |
| May 31 | SRB 1/4-scale model, lift-off configuration, on dock, Downey |
| May 31 | Body flap on dock, Palmdale (STA-099) |
| June 3 | Ship MPTA-098 from Seal Beach, Calif., to NSTL |
| June 7 | Complete integrated checkout and hot-fire ground test, DFRF, Enterprise (OV-101) |
| June 18 | Conduct first manned captive active flight, Enterprise (OV-101)/shuttle carrier aircraft, DFRF (55 minutes, 46 seconds) |
| June 23 | Deliver first SSME to NSTL (MPTA-098) |
| June 24 | Deliver MPTA-098 to NSTL |
| June 28 | Conduct second manned captive active flight, Enterprise (OV-101)/shuttle carrier aircraft, DFRF (1 hour, 2 minutes) |
| July 5 | Start long-lead fabrication aft fuselage, Discovery (OV-103) |
| July 8 | Deliver second main engine to NSTL (MPTA-098) |
| July 14 | Deliver third main engine to NSTL (MPTA-098) |
| July 18 | Conduct 2-minute firing of SRB at Brigham City, Utah, Thiokol (2.4 million pounds of thrust) |
| July 22 | Deliver forward payload bay doors, on dock, Palmdale (STA-099) |
| July 26 | Conduct third manned captive active flight, Enterprise (OV-101)/shuttle carrier aircraft, DFRF (59 minutes, 50 seconds) |
| Aug. 12 | Conduct first free flight, ALT, tail cone on, DFRF (5 minutes, 21 seconds), Enterprise (OV-101), lake bed Runway 17 |
| Aug. 26 | Deliver wings on dock, Palmdale, Columbia (OV-102) |
| Sept. 7 | Lower forward fuselage on dock, Palmdale, Columbia (OV-102) |
| Sept. 10 | Deliver external tank MPTA-098 (Martin Marietta) to NSTL |
| Sept. 13 | Conduct second free flight, ALT, tail cone on, DFRF (5 minutes, 28 seconds), Enterprise (OV-101), lake bed Runway 17 |
| Sept. 23 | Conduct third free flight, ALT, tail cone on, DFRF (5 minutes, 34 seconds), Enterprise (OV-101), lake bed Runway 15 |
| Sept. 30 | Complete mate vertical stabilizer, Palmdale (STA-099) |
| Oct. 12 | Conduct fourth free flight, ALT, first tail cone off, DFRF (2 minutes, 34 seconds), Enterprise (OV-101), lake bed Runway 17 |
| Oct. 26 | Conduct fifth free flight, ALT, final tail cone off, DFRF (2 minutes, 1 second), Enterprise (OV-101), concrete Runway 04 |
| Oct. 28 | Lower forward fuselage on dock, Palmdale, Columbia (OV-102) |
| Nov. 4 | Start forward reaction control system development tests, White Sands Test Facility, N.M. |
| Nov. 4 | Deliver aft fuselage on dock, Palmdale, Columbia (OV-102) |
| Nov. 7 | Forward RCS on dock, Palmdale (STA-099) |
| Nov. 7 | Start final assembly and closeout system installation, Palmdale, Columbia (OV-102) |
| Nov. 15 | First ferry flight test, DFRF (3 hours, 21 minutes), Enterprise (OV-101) |
| Nov. 16 | Second ferry flight test, DFRF (4 hours, 17 minutes), Enterprise (OV-101) |
| Nov. 17 | Third ferry flight test, DFRF (4 hours, 13 minutes), Enterprise (OV-101) |
| Nov. 18 | Fourth ferry flight test, DFRF (3 hours, 37 minutes), Enterprise (OV-101) |
| Dec. 9 | Complete approach and landing flight tests, including ferry flights, Enterprise (OV-101) |

| Date | Event |
|---|---|
| Dec. 12 | Start removal for mated vertical ground vibration test modification at DFRF, Enterprise (OV-101) |
| Dec. 13 | Complete propellant load testing, NSTL (MPTA-098) |
| Dec. 31 | Deliver SSME envelope/electrical simulators on dock, Palmdale, Columbia (OV-102) |
| **1978** | |
| Jan. 10 | Vertical stabilizer on dock, Palmdale, Columbia (OV-102) |
| Jan. 18 | Second SRB firing, Thiokol |
| Feb. 10 | Complete final assembly, STA-099, Palmdale |
| Feb. 14 | STA-099 on dock, Lockheed facility, Palmdale |
| Feb. 17 | Crew module on dock, Palmdale, Columbia (OV-102) |
| Feb. 24 | Body flap on dock, Palmdale, Columbia (OV-102) |
| March 3 | Complete modification for mated vertical ground vibration test, DFRF, Enterprise (OV-101) |
| March 6 | Upper forward fuselage on dock, Palmdale, Columbia (OV-102) |
| March 10 | Ferry Enterprise (OV-101) atop shuttle carrier aircraft from DFRF to Ellington Air Force Base, Texas (approximately 3 hours, 38 minutes) |
| March 13 | Ferry Enterprise (OV-101) atop shuttle carrier aircraft from Ellington AFB to Marshall Space Flight Center, Huntsville, Ala. (approximately 2 hours) |
| March 19 | Aft payload bay doors on dock, Palmdale, Columbia (OV-102) |
| March 31 | External tank for mated vertical ground vibration tests arrives at MSFC from Martin Marietta, Michoud, La. |
| March 31 | Operational readiness date, solid rocket booster refurbishment and subassembly, Kennedy Space Center, Fla. |
| April 14 | Complete ground vibration test modification at MSFC; deliver Enterprise (OV-101) for mated vertical ground vibration test |
| April 21 | First static firing, MPTA-098, NSTL (2.5 seconds; stub nozzles) |
| April 23 | Complete final assembly and closeout system installation, ready for power-on, Columbia (OV-102) |
| April 24 | Start precombined systems test, Columbia (OV-102) |
| April 28 | Forward payload bay doors on dock, Palmdale, Columbia (OV-102) |
| May 19 | Second static firing MPTA-098, NSTL (15 seconds, 70% thrust; stub nozzles) |
| May 19 | Start forward RCS thermal tests, WSTF |
| May 26 | Start development test aft RCS, WSTF |
| May 26 | Complete forward RCS structure, Columbia (OV-102) |
| May 26 | Upper forward fuselage mate, Columbia (OV-102) |
| May 30 | Start Enterprise (OV-101)/ET mated vertical ground vibration test, MSFC |
| May 31 | Loaded SRBs (2) arrive at MSFC for mated vertical ground vibration test |
| June 15 | Third static firing, MPTA-098, NSTL (50 seconds, 90% thrust, last 5 seconds 70% thrust; stub nozzles) |
| July 3 | Deliver left-hand OMS/RCS pod to WSTF |
| July 7 | Fourth static firing, MPTA-098, NSTL (No. 2 engine 70% thrust for 90 seconds, simulated one engine out at 90 seconds, then No. 1 and No. 3 to 90% thrust—then to 70% thrust, then to 90% for 100 seconds; stub nozzles) |
| July 7 | Complete mate forward and aft payload bay doors, Columbia (OV-102) |
| July 13 | Complete forward RCS development tests, WSTF |
| July 13 | Reconfigure from boost to launch, mated vertical ground vibration test, MSFC, Enterprise (OV-101) |
| July 15 | Deliver SRBs (2) empty to MSFC for mated vertical ground vibration test |
| July 21 | First firing development test, OMS, WSTF |
| July 31 | Operational readiness date, Orbiter Processing Facility Bay 1, shuttle landing facility, and Hypergolic Maintenance Facility, KSC |
| Aug. 11 | Complete forward RCS, Columbia (OV-102) |
| Aug. 11 | Complete test preparation, STA-099, Lockheed facility, Palmdale |

| Date | Event |
|---|---|
| Aug. 11 | Complete forward RCS thermal test, WSTF |
| Aug. 14 | Start coefficient tests, STA-099, Lockheed facility, Palmdale |
| Aug. 31 | Operational readiness date, Vertical Assembly Building High Bays 3 and 4, KSC |
| Sept. 8 | Start OMS left-hand development test, WSTF |
| Sept. 20 | Start launch configuration test lift-off configuration, Enterprise (OV-101)/ET/SRBs mated vertical ground vibration test at MSFC |
| Sept. 20 | Start acoustic test, forward RCS, WSTF |
| Sept. 25 | Start precombined system test, Columbia (OV-102) |
| Sept. 29 | Complete coefficient tests, STA-099, Lockheed facility, Palmdale |
| Sept. 30 | Operational readiness date, mobile launcher platform, KSC |
| Oct. 19 | Third SRB firing, Thiokol |
| Nov. 11 | Complete forward RCS acoustic test, WSTF |
| Nov. 15 | Complete OMS development test |
| Nov. 15 | Complete aft RCS development test, WSTF |
| Nov. 30 | Operational readiness date, Pad A, KSC |
| Dec. 9 | Start OMS Phase I qualification tests, WSTF |
| Dec. 15 | Start aft RCS Phase I qualification tests, WSTF |
| Dec. 15 | Complete precombined system test, Palmdale, Columbia (OV-102) |
| **1979** | |
| Jan. 2 | Start long-lead fabrication crew module, Challenger (OV-099) |
| Jan. 30 | Start orbiter/ET/SRB burnout mated vertical ground vibration test, MSFC |
| Jan. 31 | Deliver shuttle carrier aircraft to DFRF for ferry operations |
| Jan. 31 | Start left-hand OMS Phase I qualification test, WSTF |
| Jan. 31 | Mission Control Center-Houston/Goldstone ready for operational flight test early operations |
| Feb. 3 | Complete combined systems test, Palmdale, Columbia (OV-102) |

| Date | Event |
|---|---|
| Feb. 16 | Airlock on dock, Palmdale, Columbia (OV-102) |
| Feb. 17 | Fourth SRB firing, Thiokol |
| Feb. 26 | Complete mated vertical ground vibration test program at MSFC, Enterprise (OV-101) |
| Feb. 28 | Operational readiness date, shuttle landing site, DFRF (Edwards AFB) Runway 23, for first manned orbital flight |
| March 5 | Complete postcheckout, Palmdale, Columbia (OV-102) |
| March 8 | Complete closeout inspection, final acceptance, Palmdale, Columbia (OV-102) |
| March 8 | Columbia (OV-102) transported overland from Palmdale to DFRF (38 miles) |
| March 9 | Shuttle carrier aircraft/Columbia (OV-102) test flight at NASA DFRF |
| March 17 | Space shuttle main engine 2005, first flight engine delivered to NSTL for acceptance test firings |
| March 20 | Ferry flight, shuttle carrier aircraft/Columbia (OV-102) from DFRF to Biggs Army Air Base, El Paso, Texas (3 hours, 20 minutes) |
| March 22 | Ferry flight, shuttle carrier aircraft/Columbia (OV-102) from Biggs Army Air Base to Kelly AFB, San Antonio, Texas (1 hour, 39 minutes) |
| March 23 | Ferry flight, shuttle carrier aircraft/Columbia (OV-102) from Kelly AFB to Eglin AFB, Fla. (2 hours, 12 minutes) |
| March 24 | Ferry flight, shuttle carrier aircraft/Columbia (OV-102) from Eglin AFB to KSC (1 hour, 33 minutes) |
| March 30 | Space shuttle main engine 2007, flight engine delivered to NSTL for acceptance test firing |
| April 6 | Complete Phase I qualification tests, aft RCS, WSTF |
| April 10 | Ferry flight, shuttle carrier aircraft/Enterprise (OV-101) from MSFC to KSC (1 hour, 52 minutes) |
| April 16 | Space shuttle main engine 2006, flight engine delivered to NSTL, for acceptance test firing |

| Date | Event |
|---|---|
| April 18 | Complete left-hand OMS/RCS Phase I qualification, WSTF |
| May 1 | Enterprise (OV-101)/ET/SRBs mated on mobile launcher platform, transported to Launch Complex 39-A from Vehicle Assembly Building at KSC |
| May 4 | Start forward RCS Phase I qualification tests, WSTF |
| May 4 | Fifth static firing, MPTA-098, NSTL, flight nozzles 1.5 seconds |
| May 10 | Deliver right-hand OMS/RCS from McDonnell Douglas, St. Louis, to KSC, Columbia (OV-102) |
| May 15 | Deliver left-hand OMS/RCS from McDonnell Douglas to KSC, Columbia (OV-102) |
| May 30 | Deliver ET used in mated vertical ground vibration test from MSFC to Martin Marietta for refurbishment |
| June 12 | Fifth static firing, MPTA-098, NSTL, flight nozzles (54 seconds, early cutoff, accelerometer filters) |
| June 15 | First SRB qualification firing, Thiokol, Utah, 122 seconds; nozzle extension severed at end of run as in actual mission; full cycle gimbal |
| June 21 | Start assembly crew module, Challenger (OV-099) |
| July 2 | Sixth static firing, MPTA-098, NSTL, flight nozzles (19 seconds, early cutoff—main fuel valve rupture) |
| July 23 | Enterprise (OV-101), ET, SRBs transported on mobile launcher platform from Launch Complex 39-A to Vehicle Assembly Building at KSC |
| Aug. 1 | Start long-lead fabrication crew module, Discovery (OV-103) |
| Aug. 6 | Complete limit test (STA-099), Lockheed facility, Palmdale |
| Aug. 10 | Ferry flight, shuttle carrier aircraft/Enterprise (OV-101), KSC to Atlanta (1 hour, 55 minutes) |
| Aug. 11 | Ferry flight, shuttle carrier aircraft/Enterprise (OV-101), Atlanta to St. Louis (1 hour, 50 minutes) |
| Aug. 12 | Ferry flight, shuttle carrier aircraft/Enterprise (OV-101), St. Louis to Tulsa (1 hour, 35 minutes) |
| Aug. 13 | Ferry flight, shuttle carrier aircraft/Enterprise (OV-101), Tulsa to Denver (2 hours) |
| Aug. 14 | Ferry flight, shuttle carrier aircraft/Enterprise (OV-101), Denver to Hill AFB, Ogden, Utah (1 hour, 30 minutes) |
| Aug. 15 | Ferry flight, shuttle carrier aircraft/Enterprise (OV-101), Ogden to Vandenberg AFB (2 hours, 20 minutes) |
| Aug. 16 | Ferry flight, shuttle carrier aircraft/Enterprise (OV-101), Vandenberg AFB to DFRF (1 hour, 10 minutes) |
| Aug. 23 | Enterprise (OV-101)/shuttle carrier demate, DFRF |
| Aug. 27 | Start long-lead fabrication crew module, Discovery (OV-103) |
| Aug. 31 | Complete OMS Phase II qualification tests, WSTF |
| Aug. | Second SRB qualification firing, Thiokol |
| Sept. 5 | Complete forward RCS Phase I qualification tests, WSTF |
| Sept. 12 | Start forward RCS Phase II qualification tests, WSTF |
| Sept. 21 | Start aft RCS Phase II qualification tests, WSTF |
| Oct. 5 | Complete setup and thermal tests (STA-099), Lockheed facility, Palmdale |
| Oct. 24 | Sixth static firing, MPTA-098, NSTL, flight nozzle (scrubbed, hydrogen detector oversensitive) |
| Oct. 30 | Move Enterprise (OV-101) from DFRF overland to Rockwell Palmdale facility (38 miles) |
| Nov. 2 | Start OMS left-hand pod Phase II qualification, WSTF |
| Nov. 3 | Complete Columbia (OV-102) auxiliary power unit hot fire tests, Orbiter Processing Facility, KSC |
| Nov. 4 | MPTA-098 static firing, NSTL (10 seconds, flight nozzles, SSME liquid oxygen turbine, seal cavity pressure, high-cutoff steerhorn failure) |
| Nov. 7 | Deliver STA-099 from Lockheed facility, Palmdale to Rockwell Palmdale for rework as second operational orbiter (redesignated Challenger [OV-099]) |

| Date | Event |
|---|---|
| Nov. 12 | Complete qualification test OMS engine at WSTF |
| Dec. 7 | Demate payload bay door, Palmdale, Challenger (OV-099) |
| Dec. 14 | Complete demate body flap, Palmdale, Challenger (OV-099) |
| Dec. 16 | Orbiter integrated test start, Columbia (OV-102), KSC |
| Dec. 17 | Sixth static firing, MPTA-098, NSTL, 554 seconds (340 seconds at 100% rated power level, then 90% at 385 seconds, 80% at 450 seconds, 70% at 505 seconds; 1 engine shut down—other 2 continued at 70% until 554 seconds; pogo and gimbaling tests accomplished; stub nozzles) |
| Dec. 21 | Complete demate elevons, Palmdale, Challenger (OV-099) |
| **1980** | |
| Jan. 14 | Complete orbiter integrated test, Columbia (OV-102), KSC |
| Jan. 18 | Vertical stabilizer on dock, Fairchild, N.Y., for rework, Challenger (OV-099) |
| Jan. 25 | Body flap on dock, Downey, Challenger (OV-099) |
| Jan. 25 | Payload bay doors on dock, Rockwell, Tulsa, Okla., for rework, Challenger (OV-099) |
| Jan. 28 | Start instrumentation removal and prepare midfuselage for modification, Palmdale, Challenger (OV-099) |
| Feb. 1 | Complete aft fuselage demate Palmdale, Challenger (OV-099) for rework on dock, Downey |
| Feb. 1 | Elevons on dock, Grumman, N.Y., for rework, Challenger (OV-099) |
| Feb. 1 | Complete aft RCS Phase II qualification tests, WSTF |
| Feb. 4 | Start instrumentation removal and prepare wing for modification, Palmdale, Challenger (OV-099) |
| Feb. 8 | Demate forward RCS module, Palmdale, Challenger (OV-099) |
| Feb. 14 | Final qualification firing SRB, Thiokol, Utah |

| Date | Event |
|---|---|
| Feb. 15 | Complete demate upper forward fuselage, Palmdale, Challenger (OV-099) |
| Feb. 18 | Complete left-hand OMS Phase II qualification test, WSTF |
| Feb. 20 | Complete forward RCS module qualification test, WSTF |
| Feb. 23 | Upper forward fuselage on dock, Downey for rework, Challenger (OV-099) |
| Feb. 28 | Seventh static firing, MPTA-098, NSTL, 555 seconds (No. 2 engine planned shutdown at 520 seconds, throttle down to 70% from 100%. Pogo and gimbaling tests; stub nozzles) |
| March 3 | Start detail fabrication, crew module, Discovery (OV-103) |
| March 20 | Eighth static firing, MPTA-098, NSTL, 539 seconds (started at 100%, two engines throttled to 70%, then up to 100%, two other engines throttled to 70%, then up to 100%; all three engines throttled to simulate 3-g mission profile, then to 70% and shutdown; simultaneous pogo and gimbal tests; stub nozzles) |
| March 21 | Forward RCS module on dock, Downey, for rework, Challenger (OV-099) |
| March 31 | Complete 1/4-scale model tests, Downey |
| April 16 | Ninth static firing, MPTA-098, NSTL (No. 2 engine, 4.6 seconds, shut down due to discharge. Overtemperature on high-pressure fuel turbopump; No. 1 and No. 3 shut down at 6 seconds; stub nozzles) |
| May 30 | Complete preparation lower forward fuselage modification, Palmdale, Challenger (OV-099) |
| May 30 | Ninth static firing, MPTA-098, NSTL (46 seconds into run, throttled to 70% for 18 seconds, then to 100%, to 95% at 375 seconds, to 85% at 400 seconds, 83% at 430 seconds, 75% at 460 seconds; No. 3 shut down at 480 seconds, remaining two to 60% at 490 seconds; No. 2 shut down at 565 seconds; No. 1 shut down by engine cutoff |

| Date | Event |
|---|---|
| | sensors at 575 seconds. Pogo and gimbal tests: stub nozzles) |
| June 1 | Columbia (OV-102), engine 2005 SSME fired for 520 seconds, NSTL |
| June 1 | Start fabrication/assembly wings, Discovery (OV-103) |
| June 5 | Columbia (OV-102), engine 2006 SSME fired for 520 seconds at NSTL |
| June 16 | Columbia (OV-102), engine 2007 SSME fired for 520 seconds at NSTL |
| June 20 | Start fabrication lower forward fuselage, Discovery (OV-103) |
| July 12 | Tenth static firing, MPTA-098, NSTL, shut down 105 seconds into firing due to burnthrough in engine No. 3 fuel preburner, 102% thrust, flight nozzles |
| July 28 | Start detail fabrication aft fuselage, Atlantis (OV-104) |
| Aug. 3 | Complete installation SSMEs, Columbia (OV-102), KSC |
| Sept. 1 | Start body flap modification Downey, Challenger (OV-099) |
| Sept. 29 | Start assembly crew module, Discovery (OV-103) |
| Oct. 1 | Start fabrication/assembly midfuselage, Discovery (OV-103) |
| Oct. 1 | Start fabrication/assembly midfuselage, Atlantis (OV-104) |
| Oct. 9, 10 | Removal of SSMEs from Columbia (OV-102), KSC, for modification |
| Oct. 11, 12 | Installation of OMS/RCS pods, Columbia (OV-102), KSC |
| Nov. 3 | Start initial system installation crew module Downey, Challenger (OV-099) |
| Nov. 3 | ET mated to SRBs in Vehicle Assembly Building, KSC, for STS-1 |
| Nov. 3 | Eleventh static firing, MPTA-098, NSTL, shut down 20 seconds into firing due to burnthrough in engine No. 2 nozzle, 102% thrust flight nozzles |

| Date | Event |
|---|---|
| Nov. 4 | Structural integrity test aft fuselage, Columbia (OV-102), KSC |
| Nov. 5 | ET mated to SRBs at KSC |
| Nov. 8, 9, 10 | Reinstallation of SSMEs, Columbia (OV-102), KSC |
| Nov. 10 | Start assembly aft fuselage, Discovery (OV-103) |
| Nov. 14 | Complete modifications, Columbia (OV-102), KSC |
| Nov. 16 | Complete thermal protection system installation, Columbia (OV-102), KSC |
| Nov. 21 | Complete wing modification, Palmdale, Challenger (OV-099) |
| Nov. 21 | Complete modification lower forward fuselage, Palmdale, Challenger (OV-099) |
| Nov. 24 | Transfer Columbia (OV-102) from Orbiter Processing Facility to Vehicle Assembly Building, for STS-1, KSC |
| Nov. 26 | Mating of Columbia (OV-102) to ET and SRBs in Vehicle Assembly Building, for STS-1, KSC |
| Dec. 4 | Space shuttle vehicle power-up in Vehicle Assembly Building, Columbia (OV-102), KSC |
| Dec. 4 | Eleventh static firing, MPTA-098, NSTL, stub nozzles, 591 seconds simulated flight profile, started at 100%, then to 65% at 37 seconds, then to 102% at 65 seconds, then to 65% at 438 seconds. Engine No. 2 shut down at 442 seconds, remaining two to 65% at 508 seconds, then shut down gimbal test |
| Dec. 8 | Start initial system installation aft fuselage, Discovery (OV-103) |
| Dec. 12 | Complete rework aft fuselage, Downey, Challenger (OV-099) |
| Dec. 15-18 | Columbia (OV-102) interface test in Vehicle Assembly Building, KSC |
| Dec. 19 | Start preparations for Columbia (OV-102) rollout and ordnance installation, KSC |
| Dec. 29 | Transfer Columbia (OV-102) aboard mobile launcher platform from Vehicle Assembly Building to Launch Complex 39-A for STS-1 |

| Date | Event |
|---|---|
| **1981** | |
| Jan. 5 | Emergency egress test |
| Jan. 17 | Twelfth static firing, MPTA-098, NSTL, flight nozzles, 625 seconds, 100% thrust, simulated abort mission profile, No. 1 engine shut down at 239 seconds, remaining two shut down at 625 seconds, pogo and gimbal tests. External tank test without anti-geyser line to verify feasibility of eventually removing it from later ET versions |
| Jan. 22 | ET liquid hydrogen load, KSC, Columbia (OV-102) |
| Jan. 23 | Auxiliary power unit confidence run, Columbia (OV-102), KSC, each APU serially run for 2 minutes |
| Jan. 24 | ET liquid oxygen load, KSC, Columbia (OV-102) |
| Jan. 29 | Hypergolic load, RCS, OMS, KSC, Columbia (OV-102) |
| Feb. 2 | Start initial system installation forward RCS module, Downey, Challenger (OV-099) |
| Feb. 2 | Wet countdown demonstration test simulations, KSC, Columbia (OV-102) |
| Feb. 4 | Start series of countdown demonstration tests for flight readiness firing, Columbia (OV-102), KSC |
| Feb. 13 | Left outboard elevon on dock, Palmdale, Challenger (OV-099) |
| Feb. 20 | Flight readiness firing (20-second firing of all three SSMEs), Columbia (OV-102), KSC |
| Feb. 24, 25, 26 | Start mission verification tests, Columbia (OV-102), KSC |
| March 1 | Body flap from Downey to Palmdale, Challenger (OV-099) |
| March 2 | Start fabrication/assembly payload bay doors, Discovery (OV-103) |
| March 14 | Launch verification tests, Columbia (OV-102), KSC |
| March 27 | Vertical stabilizer on dock, Palmdale, Challenger (OV-099) |
| March 30 | Elevon rework complete, on dock, Palmdale, Challenger (OV-099) |

| Date | Event |
|---|---|
| April 12 | Conduct STS-1, Columbia (OV-102), launch KSC, land Edwards AFB, Calif., Runway 23 dry lake bed on April 14, 54-hour, 20-minute, 32-second mission, landed on orbit 36 |
| April 20 | Ferry flight, Columbia (OV-102) from Edwards AFB, Calif., to Tinker AFB, Okla., 3.5-hour flight |
| April 20 | SRB stacking began on mobile launcher platform for STS-2, KSC |
| April 21 | Ferry flight, Columbia (OV-102) from Tinker AFB, Okla., to KSC, 3-hour, 20-minute flight |
| April 22 | ET for STS-2 on dock, KSC |
| June 1 | Start fabrication elevons, Atlantis (OV-104) |
| June 1 | Start fabrication vertical stabilizer, Discovery (OV-103) |
| June 1 | Start fabrication/assembly wings, Atlantis (OV-104) |
| July 2 | Upper forward fuselage on dock, Palmdale, Challenger (OV-099) |
| July 10 | Payload bay door on dock, Palmdale, Challenger (OV-099) |
| July 13 | Start fabrication crew module, Atlantis (OV-104) |
| July 14 | Crew module on dock, Palmdale, Challenger (OV-099) |
| July 17 | Complete body flap modification, Downey, Challenger (OV-099) |
| July 21 | Aft fuselage on dock, Palmdale, Challenger (OV-099) |
| July 24 | Body flap on dock, Palmdale, Challenger (OV-099) |
| July 30 | Began mating of ET to SRBs on mobile launcher platform for STS-2, KSC |
| Aug. 4 | Transfer Columbia (OV-102) from Orbiter Processing Facility to Vehicle Assembly Building, KSC |
| Aug. 26 | Transfer space shuttle aboard mobile launcher platform from Vehicle Assembly Building to Launch Complex 39-A for STS-2, KSC |
| Sept. 6 | Transport Enterprise (OV-101) overland from Palmdale, Calif., to NASA's DFRF at Edwards AFB, Calif. |

| Date | Event |
|---|---|
| Oct. 3 | ET for STS-3 on dock, KSC |
| Oct. 19 | Start detailed fabrication/assembly, body flap, Discovery (OV-103) |
| Oct. 19 | Start detailed fabrication lower forward fuselage, Atlantis (OV-104) |
| Oct. 23 | Complete airframe modifications, Palmdale, Challenger (OV-099) |
| Oct. 26 | Start initial system installation, crew module, Downey, Discovery (OV-103) |
| Oct. 26 | Start initial subsystems test power-on, Challenger (OV-099) |
| Nov. 2 | Start initial subsystems test, Palmdale, Challenger (OV-099) |
| Nov. 12 | Conduct STS-2, Columbia (OV-102), launch KSC, land Edwards AFB, Calif., Runway 23, lake bed, landed on orbit 36, Nov. 14, 54 hours, 13 minutes, 13 seconds |
| Nov. 23 | Start SRB stacking on mobile launcher platform for STS-3, KSC |
| Nov. 23 | Start assembly aft fuselage, Atlantis (OV-104) |
| Nov. 24 | Ferry flight, Columbia (OV-102) from Edwards AFB, Calif., to Bergstrom AFB, Texas, 3.5-hour flight |
| Nov. 25 | Ferry flight, Columbia (OV-102) from Bergstrom AFB, Texas, to KSC, 3-hour flight |
| Dec. 9 | Start fabrication upper forward fuselage, Atlantis (OV-104) |
| Dec. 11 | Spacelab-1 arrived KSC |
| Dec. 19 | Start mating of ET to SRBs on mobile launcher platform for STS-3 at KSC |
| **1982** | |
| Jan. 4 | Start initial system installation upper forward fuselage, Discovery (OV-103) |
| Jan. 29 | Complete initial subsystems test, including Delta F, Palmdale, Challenger (OV-099) |
| Jan. 31 | Forward RCS module on dock, Palmdale, Challenger (OV-099) |

| Date | Event |
|---|---|
| Feb. 3 | Transfer Columbia (OV-102) from Orbiter Processing Facility to Vehicle Assembly Building at KSC for STS-3 |
| Feb. 15 | Start assembly crew module, Atlantis (OV-104) |
| Feb. 15 | Right-hand OMS/RCS pod on dock at Palmdale for thermal protection system installation, Challenger (OV-099) |
| Feb. 16 | Transfer Columbia (OV-102) from Vehicle Assembly Building to Launch Complex 39-A for STS-3 |
| Feb. 28 | Complete main propulsion test program, NSTL, Miss. |
| March 3 | Left-hand OMS/RCS pod on dock at Palmdale for thermal protection system installation, Challenger (OV-099) |
| March 16 | Midfuselage on dock, Palmdale, Discovery (OV-103) |
| March 22 | Conduct STS-3, Columbia (OV-102), launch KSC, land White Sands Missile Range, N.M., lake bed Runway 17, landed on orbit 130, March 30, 192 hours (8 days), 4 minutes, 45 seconds |
| March 30 | Elevons on dock, Palmdale, Discovery (OV-103) |
| April 6 | Ferry flight, Columbia (OV-102) from White Sands Missile Range, N.M., to Barksdale AFB, La., to KSC |
| April 7 | Columbia (OV-102) at Orbiter Processing Facility, KSC |
| April 16 | Complete mating of SRBs and ET for STS-4 in Vehicle Assembly Building, KSC |
| April 16 | Complete subsystems test, Palmdale, Challenger (OV-099) |
| April 30 | Wings on dock, Palmdale, Discovery (OV-103) |
| April 30 | Lower forward fuselage on dock, Palmdale, Discovery (OV-103) |
| April 30 | Complete final acceptance test, Palmdale, Challenger (OV-099) |
| May 16 | Transfer Columbia (OV-102) from Orbiter Processing Facility to Vehicle Assembly Building, KSC, for mating for STS-4 |

| Date | Event |
|---|---|
| May 24 | Start fabrication forward RCS module, Atlantis (OV-104) |
| May 25 | Transfer Columbia (OV-102) from Vehicle Assembly Building on mobile launcher platform to Launch Complex 39-A for STS-4 |
| June 4 | Complete postcheckout operations, Palmdale, Challenger (OV-099) |
| June 21 | Complete configuration inspection, Palmdale, Challenger (OV-099) |
| June 27 | Conduct STS-4, Columbia (OV-102), launch KSC, land Edwards AFB, Calif., concrete Runway 22, on orbit 113, July 4, 168 hours (7 days), 1 hour, 9 minutes |
| June 30 | Challenger (OV-099) rollout, Palmdale |
| July 1 | Transport Challenger (OV-099) overland from Palmdale to Edwards AFB, Calif., for ferry flight to KSC |
| July 2 | Deliver mission kits for STS-5, KSC, Columbia (OV-102) |
| July 4 | Ferry flight, Challenger (OV-099) from Edwards AFB, Calif., to Ellington AFB, Texas |
| July 5 | Ferry flight, Challenger (OV-099) from Ellington AFB, Texas, to KSC |
| July 7 | Start assembly payload bay doors, Atlantis (OV-104) |
| July 14 | Ferry flight, Columbia (OV-102) from Edwards AFB, Calif., to Dyess AFB, Texas |
| July 15 | Ferry flight, Columbia (OV-102) from Dyess AFB, Texas, to KSC |
| July 16 | Upper forward fuselage on dock, Palmdale, Discovery (OV-103) |
| Aug. 5 | Vertical stabilizer on dock, Palmdale, Discovery (OV-103) |
| Sept. 3 | OMS/RCS pods on dock KSC, Challenger (OV-099) |
| Sept. 9 | Transfer Columbia (OV-102) from Orbiter Processing Facility to Vehicle Assembly Building for mating for STS-5 |
| Sept. 21 | Transfer Columbia (OV-102) from Vehicle Assembly Building on mobile launcher platform to Launch Complex 39-A at KSC for STS-5 |

| Date | Event |
|---|---|
| Oct. 4 | Start fabrication/assembly vertical stabilizer, Atlantis (OV-104) |
| Oct. 15 | Body flap on dock, Palmdale, Discovery (OV-103) |
| Nov. 11 | Conduct STS-5, Columbia (OV-102), launch KSC, land Edwards AFB, Calif., concrete Runway 22 on orbit 82, Nov. 16, 120 hours (5 days), 2 hours, 14 minutes |
| Nov. 12 | Start fabrication OMS/RCS pods, Atlantis (OV-104) |
| Nov. 21 | Ferry flight, Columbia (OV-102) from Edwards AFB, Calif., to Kelly AFB, Texas |
| Nov. 22 | Ferry flight, Columbia (OV-102) from Kelly AFB, Texas, to KSC |
| Nov. 23 | Columbia (OV-102) at Orbiter Processing Facility at KSC for modifications to support Spacelab-1, STS-9 |
| Nov. 23 | Transfer Challenger (OV-099) from Orbiter Processing Facility to Vehicle Assembly Building at KSC for mating for STS-6 |
| Nov. 30 | Transfer Challenger (OV-099) from Vehicle Assembly Building on mobile launcher platform to Launch Complex 39-A at KSC for STS-6 |
| Dec. 18 | Flight readiness firing, Challenger (OV-099), 20 seconds, Launch Complex 39-A, KSC |
| Dec. 28 | Crew module on dock, Palmdale, Discovery (OV-103) |
| **1983** | |
| Jan. 11 | Aft fuselage on dock, Palmdale, Discovery (OV-103) |
| Jan. 25 | Second flight readiness firing, Challenger (OV-099), 23 seconds, Launch Complex 39-A, KSC |
| Feb. 25 | Forward RCS on dock, Palmdale, Discovery (OV-103) |
| Feb. 25 | Complete final assembly and closeout installation, Palmdale, Discovery (OV-103) |
| Feb. 28 | Start initial subsystems test, power-on, Palmdale, Discovery (OV-103) |
| March 14 | Start fabrication/assembly body flap, Atlantis (OV-104) |

| Date | Event |
|---|---|
| April | Rockwell under contract to NASA for structural spare program consisting of an aft fuselage, crew compartment, forward RCS, lower and upper forward fuselage, midfuselage, wings (elevons), payload bay doors, vertical stabilizer (rudder/speed brake), one set of OMS/RCS pods |
| April 4 | Conduct STS-6, first flight of Challenger (OV-099), launch KSC, land Edwards AFB, Calif., concrete Runway 22, April 9 on orbit 81, 120 hours (5 days), 23 minutes, 42 seconds |
| April 14 | Ferry flight, Challenger (OV-099) from Edwards AFB, Calif., to Kelly AFB, Texas |
| April 16 | Ferry flight, Challenger (OV-099) from Kelly AFB, Texas, to KSC |
| April 17 | Challenger (OV-099) at Orbiter Processing Facility, KSC |
| May 6 | Midfuselage on dock, Palmdale, Atlantis (OV-104) |
| May 13 | Complete initial subsystems testing, including Delta F, Discovery (OV-103) |
| May 21 | Challenger (OV-099) from Orbiter Processing Facility to Vehicle Assembly Building for STS-7 |
| May 26 | Challenger (OV-099) from Vehicle Assembly Building to Launch Complex 39-A for STS-7 |
| June 13 | Wings on dock, Palmdale, Atlantis (OV-104) |
| June 17 | Elevons on dock, Palmdale, Atlantis (OV-104) |
| June 18 | Conduct STS-7, Challenger (OV-099), launch KSC, land Edwards AFB, Calif., lake bed Runway 15, June 24 on orbit 98, 144 hours (6 days), 25 minutes, 41 seconds |
| June 28 | Ferry flight, Challenger (OV-099) from Edwards AFB, Calif., to Kelly AFB, Texas |
| June 28 | Columbia (OV-102) at Orbiter Processing Facility for STS-9 |
| June 29 | Ferry flight, Challenger (OV-099) from Kelly AFB, Texas, to KSC |
| June 30 | Challenger (OV-099) at Orbiter Processing Facility for STS-8 |
| July 26 | Challenger (OV-099) from Orbiter Processing Facility to Vehicle Assembly Building for STS-8 |
| July 26 | Complete subsystems test, Palmdale, Discovery (OV-103) |
| Aug. 1 | OMS/RCS pods on dock, Palmdale, Discovery (OV-103) |
| Aug. 2 | Challenger (OV-099) from Vehicle Assembly Building to Launch Complex 39-A for STS-8 |
| Aug. 12 | Complete final acceptance test, Palmdale, Discovery (OV-103) |
| Aug. 19 | Vertical stabilizer on dock, Palmdale, Atlantis (OV-104) |
| Aug. 30 | Conduct STS-8, Challenger (OV-099), launch KSC, first night launch of space shuttle, land Edwards AFB, Calif., concrete Runway 22, Sept. 5 on orbit 98, first night landing, 144 hours (6 days), 1 hour, 8 minutes, 43 seconds |
| Sept. 9 | Ferry flight, Challenger (OV-099) from Edwards AFB, Calif., to Sheppard AFB, Texas, to KSC |
| Sept. 9 | Complete postcheckout, Discovery (OV-103), Palmdale |
| Sept. 11 | Challenger (OV-099) at Orbiter Processing Facility, KSC |
| Sept. 20 | Challenger (OV-099) power-down modification period begins at Orbiter Processing Facility, KSC |
| Sept. 23 | Columbia (OV-102) from Orbiter Processing Facility to Vehicle Assembly Building, KSC, for STS-9 |
| Sept. 28 | Columbia (OV-102) from Vehicle Assembly Building to Launch Complex 39-A, KSC, for STS-9 |
| Sept. 30 | OMS/RCS pods on dock, KSC, for Discovery (OV-103) |
| Oct. 16 | Discovery (OV-103) rollout at Palmdale |
| Oct. 17 | Columbia (OV-102) rollback from Launch Complex 39-A to Vehicle Assembly Building, KSC |
| Oct. 19 | Columbia (OV-102) from Vehicle Assembly Building to Orbiter Processing Facility, KSC |
| Oct. 28 | SSME on dock, KSC, Discovery (OV-103) |

| Date | Event |
|---|---|
| Nov. 3 | Columbia (OV-102) from Orbiter Processing Facility to Vehicle Assembly Building for remate for STS-9, KSC |
| Nov. 5 | Discovery (OV-103) overland transport from Palmdale to Edwards AFB, Calif. |
| Nov. 6 | Ferry flight, Discovery (OV-103) from Edwards AFB to Vandenberg AFB, Calif. |
| Nov. 7 | Lower forward fuselage on dock, Palmdale, Atlantis (OV-104) |
| Nov. 8 | Columbia (OV-102) moved from Vehicle Assembly Building to Launch Complex 39-A for STS-9, KSC |
| Nov. 8 | Ferry flight, Discovery (OV-103) from Vandenberg AFB, Calif., to Carswell AFB, Texas |
| Nov. 9 | Ferry flight, Discovery (OV-103) from Carswell AFB, Texas, to KSC |
| Nov. 15 | Discovery (OV-103) modification period starts, Orbiter Processing Facility, KSC |
| Nov. 17 | Challenger (OV-099) modification period retest begins at Orbiter Processing Facility, KSC |
| Nov. 23 | Challenger (OV-099) modification period retest ends at Orbiter Processing Facility, KSC |
| Nov. 28 | Conduct STS-9, Columbia (OV-102), launch KSC, land Edwards AFB, Calif., lake bed Runway 17, Dec. 8, 240 hours (10 days), 7 hours, 47 minutes, 24 seconds |
| Dec. 2 | Payload bay doors on dock, Palmdale, Atlantis (OV-104) |
| Dec. 9 | Discovery (OV-103) start Vehicle Assembly Building storage, KSC |
| Dec. 11 | Challenger (OV-099) crew equipment interface test, Orbiter Processing Facility, KSC |
| Dec. 14 | Ferry flight, Columbia (OV-102) from Edwards AFB, Calif., to Biggs Army Air Base, El Paso, Texas, to Kelly Air Force Base, San Antonio, Texas |
| Dec. 15 | Ferry flight, Columbia (OV-102) from Kelly AFB, San Antonio, Texas, to Eglin AFB, Fla., to KSC |
| Dec. 16 | Columbia (OV-102) at Orbiter Processing Facility |
| Dec. 22 | SSME on dock, KSC, Discovery (OV-103) |

| Date | Event |
|---|---|
| **1984** | |
| Jan. 3 | Discovery (OV-103) end Vehicle Assembly Building storage, transfer to Orbiter Processing Facility, KSC |
| Jan. 5 | SSME on dock, KSC, Discovery (OV-103) |
| Jan. 6 | Challenger (OV-099) transferred from Orbiter Processing Facility to Vehicle Assembly Building for mating for STS-11, KSC |
| Jan. 6 | Upper forward fuselage on dock, Palmdale, Atlantis (OV-104) |
| Jan. 11 | Challenger (OV-099) mated, transported from Vehicle Assembly Building to Launch Complex 39-A, KSC |
| Jan. 20 | Body flap on dock, Palmdale, Atlantis (OV-104) |
| Jan. 26 | Columbia (OV-102) ferry flight from KSC to Kelly AFB, Texas |
| Jan. 26 | Challenger (OV-099) confidence run, Launch Complex 39-A, KSC |
| Jan. 27 | Columbia (OV-102) ferry flight from Kelly AFB, Texas, to Edwards AFB, Calif. |
| Jan. 30 | Columbia (OV-102) overland transport from Edwards AFB, Calif., to Rockwell Palmdale assembly facility for STS-17 modification |
| Feb. 3 | Conduct 41-B (STS-11), Challenger (OV-099), launch, KSC, 168 hours (7 days), 23 hours, 15 minutes, 55 seconds, landing Feb. 11, KSC, on Runway 15 |
| Feb. 17 | Left-hand OMS/RCS pod on dock, Palmdale, Atlantis (OV-104) |
| Feb. 24 | Right-hand OMS/RCS pod on dock, Palmdale, Atlantis (OV-104) |
| March 14 | Challenger (OV-099) from Orbiter Processing Facility to Vehicle Assembly Building for mating for 41-C (STS-13) |
| March 16 | Aft fuselage on dock, Palmdale, Atlantis (OV-104) |
| March 19 | Challenger (OV-099) moved from Vehicle Assembly Building to Launch Complex 39-A for 41-C (STS-13) |

| Date | Event |
|---|---|
| March 19 | Challenger (OV-099) APU confidence run, Launch Complex 39-A |
| March 22 | Enterprise (OV-101) ferry flight from Edwards AFB, Calif., to Vandenberg AFB, Calif. |
| March 27 | Enterprise (OV-101) ferry flight from Vandenberg AFB, Calif., to Little Rock AFB, Ark. |
| March 29 | Enterprise (OV-101) ferry flight from Little Rock, Ark., to Brookley Field, Mobile, Ala. |
| April 2 | Enterprise (OV-101) overland transport to U.S. Coast Guard station at Mobile, Ala., for loading on barge |
| April 3 | Enterprise (OV-101) barge transport from Mobile, Ala., to New Orleans, La. |
| April 5 | Enterprise (OV-101) arrives at New Orleans, La., for World's Fair |
| April 6 | Conduct 41-C (STS-13), Challenger (OV-099), launch KSC, land Edwards AFB, Calif., lake bed Runway 17, April 13, 144 hours (6 days), 23 hours, 40 minutes, 7 seconds |
| April 9 | Crew compartment on dock, Palmdale, Atlantis (OV-104) |
| April 17 | Ferry flight, Challenger (OV-099) from Edwards AFB, Calif., to Kelly AFB, Texas |
| April 18 | Ferry flight, Challenger (OV-099) from Kelly AFB, Texas, to KSC |
| April 19 | Challenger (OV-099) at Orbiter Processing Facility, KSC |
| April 24 | Upper forward fuselage on dock, Palmdale, Atlantis (OV-104) |
| April 27 | Forward RCS on dock, Palmdale, Atlantis (OV-104) |
| May 12 | Discovery (OV-103) from Orbiter Processing Facility to Vehicle Assembly Building at KSC, for mating for 41-D (STS-14) |
| May 19 | Discovery (OV-103) moved from Vehicle Assembly Building to Launch Complex 39-A for 41-D (STS-14) |
| May 25 | Complete final assembly and closeout installation, Palmdale, Atlantis (OV-104) |

| Date | Event |
|---|---|
| May 28 | Start initial subsystems test, power-on, Palmdale, Atlantis (OV-104) |
| June 2 | Discovery (OV-103) flight readiness firing at Launch Complex 39-A, 18 seconds |
| June 25 | Conduct 41-D (STS-14), Discovery (OV-103) first flight, launch KSC, launch scrubbed at T-9 minutes due to general-purpose computer No. 5 disparity with primary set of general-purpose computers |
| June 26 | Conduct 41-B (STS-14), Discovery (OV-103) first flight, launch KSC, launch postponed indefinitely due to shutdown of SSMEs 3 and 2 at T-4 seconds due to slow opening of SSME 3 main fuel valve. SSME 1 never received a start command. |
| July 14 | Discovery (OV-103) rollback from Launch Complex 39-A to Vehicle Assembly Building, KSC, for remanifest of payloads |
| July 17 | Discovery (OV-103) from Vehicle Assembly Building to Orbiter Processing Facility for reconfiguration of payload bay for remanifest of payloads |
| Aug. 2 | Discovery (OV-103) from Orbiter Processing Facility to Vehicle Assembly Building for remate with original 41-D SRBs and ET, KSC |
| Aug. 9 | Discovery (OV-103) moved from Vehicle Assembly Building to Launch Complex 39-A for 41-D, KSC |
| Aug. 10 | Complete initial subsystems test, power-on, including Delta F, Palmdale, Atlantis (OV-104) |
| Aug. 28 | Remanifest 41-D mission launch for Aug. 29, postponed for 24 hours for software verification |
| Aug. 30 | Conduct 41-D (STS-14) remanifested payload, first flight of Discovery (OV-103), launch KSC, land Edwards AFB, Calif., lake bed Runway 17, Sept. 5, 144 hours (6 days), 56 minutes, 4 seconds |
| Sept. 8 | Challenger (OV-099) from Orbiter Processing Facility to Vehicle Assembly Building for mating for 41-G, KSC |
| Sept. 9 | Ferry flight, Discovery (OV-103) from Edwards AFB, Calif., to Altus AFB, Okla. |

| Date | Event |
|---|---|
| Sept. 10 | Ferry flight Discovery (OV-103) from Altus AFB, Okla., to KSC |
| Sept. 11 | Discovery (OV-103) at Orbiter Processing Facility, KSC |
| Sept. 13 | Mated 41-G (STS-17), Challenger (OV-099), transported from Vehicle Assembly Building to Launch Complex 39-A for its sixth flight |
| Oct. 5 | Conduct 41-G (STS-17) Challenger (OV-099), launch KSC, land KSC, Runway 33, Oct. 13, 192 hours (8 days), 5 hours, 23 minutes, 38 seconds |
| Oct. 18 | Discovery (OV-103) from Orbiter Processing Facility to Vehicle Assembly Building, KSC, for mating |
| Oct. 23 | Mated 51-A (STS-19), Discovery (OV-103) transported from Vehicle Assembly Building to Launch Complex 39-A, KSC, for its sixth flight |
| Oct. 26 | Complete subsystems test, Palmdale, Atlantis (OV-104) |
| Nov. 3 | Enterprise (OV-101) from World's Fair at New Orleans, La., via barge to Mobile, Ala. |
| Nov. 5 | Enterprise (OV-101) arrived at Brookley Field, Ala. |
| Nov. 7 | Conduct 51-A, Discovery (OV-103), postponed for 24 hours due to high shear winds at altitude |
| Nov. 8 | Conduct 51-A, Discovery (OV-103), launch KSC, land KSC, Runway 15, Nov. 16, 168 hours (7 days), 23 hours, 44 minutes, 56 seconds |
| Nov. 9 | Installation of right-hand OMS/RCS pod, Challenger (OV-099) (from OV-104) |
| Nov. 10 | Ferry flight, Enterprise (OV-101) from Mobile, Ala., to Kansas City, Mo. |
| Nov. 13 | Ferry flight, Enterprise (OV-101) from Kansas City, Mo., to Edwards Air Force Base, Calif. |
| Nov. 16 | Ferry flight, Enterprise (OV-101) from Edwards Air Force Base to Vandenberg Air Force Base, Calif. |
| Nov. 16 | OV-103 at Orbiter Processing Facility, KSC |
| Dec. 21 | OV-103 transferred from Orbiter Processing Facility to Vehicle Assembly Building for mating, KSC |

| Date | Event |
|---|---|
| 1985 | |
| Jan. 5 | Mated Discovery (OV-103), transported from Vehicle Assembly Building to Launch Complex 39-A for 51-C |
| Jan. 24 | Conduct 51-C, Discovery (OV-103), launch KSC, land KSC, Runway 15, Jan. 27, 72 hours (3 days), 1 hour, 33 minutes, 27 seconds |
| Jan. 27 | Discovery (OV-103) at Orbiter Processing Facility, KSC |
| Feb. 10 | Challenger (OV-099) transferred from Orbiter Processing Facility to Vehicle Assembly Building for mating, KSC |
| Feb. 15 | Mated Challenger (OV-099), transported from Vehicle Assembly Building to Launch Complex 39-A for 51-E |
| March 4 | Challenger (OV-099) rollback from Launch Complex 39-A to Vehicle Assembly Building for demate due to a timing problem with the TDRS-B satellite. Telesat-I with PAM-D and TDRS-B with IUS removed into payload changeout room at Launch Complex 39-A prior to rollback. |
| March 7 | Challenger (OV-099) transferred from Vehicle Assembly Building to Orbiter Processing Facility at KSC for remanifest of payload bay from 51-E to 51-B mission |
| March 23 | Discovery (OV-103) transferred from Orbiter Processing Facility to Vehicle Assembly Building at KSC for mating with remanifested new mission |
| March 28 | Discovery (OV-103) mated, transported from Vehicle Assembly Building to Launch Complex 39-A for remanifested new 51-B mission |
| April 6 | Atlantis (OV-104) rollout at Rockwell Palmdale assembly facility |
| April 9 | Overland transport of Atlantis (OV-104) from Palmdale to Edwards AFB, Calif. |

| Date | Event |
|---|---|
| April 10 | Challenger (OV-099) transferred from Orbiter Processing Facility to Vehicle Assembly Building for mating, KSC |
| April 12 | Conduct 51-D, fourth flight of Discovery (OV-103), launch KSC, land KSC, Runway 33, April 19, 144 hours (6 days), 23 hours, 55 minutes, 23 seconds |
| April 12 | Ferry flight, Atlantis (OV-104) from Edwards AFB, Calif., to Ellington AFB, Texas |
| April 13 | Ferry flight, Atlantis (OV-104) from Ellington AFB, Texas, to KSC |
| April 14 | Atlantis (OV-104) at Orbiter Processing Facility, KSC |
| April 15 | Challenger (OV-099) mated 51-B, transported from Vehicle Assembly Building to Launch Complex 39-A at KSC for its seventh flight |
| April 19 | Discovery (OV-103) at Orbiter Processing Facility, KSC |
| April 29 | Conduct 51-B, seventh flight of Challenger (OV-099), launch KSC, land Edwards AFB, Calif., Runway 17, May 6, 168 hours (7 days), 8 minutes, 46 seconds |
| May 10 | Ferry flight, Challenger (OV-099) from Edwards AFB, Calif., to Kelly AFB, Texas |
| May 10 | Atlantis (OV-104) transferred from Orbiter Processing Facility to Vehicle Assembly Building at KSC for temporary storage |
| May 11 | Ferry flight, Challenger (OV-099) from Kelly AFB, Texas, to KSC |
| May 11 | Challenger (OV-099) at Orbiter Processing Facility, KSC |
| May 24 | Ferry flight, Enterprise (OV-101) from Vandenberg AFB, Calif., to DFRF, Calif. |
| May 28 | Discovery (OV-103) transferred from Orbiter Processing Facility to Vehicle Assembly Building for mating, KSC |
| May 28 | Atlantis (OV-104) transferred from Vehicle Assembly Building to Orbiter Processing Facility, KSC |
| June 4 | Discovery (OV-103) mated 51-G, transported from Vehicle Assembly Building to Launch Complex 39-A, KSC |
| June 17 | Conduct 51-G, fifth flight of Discovery (OV-103), launch KSC, land Edwards AFB, Calif., lake bed Runway 23, June 24, 168 hours (7 days), 1 hour, 38 minutes, 52 seconds |
| June 24 | Challenger (OV-099) transferred from Orbiter Processing Facility to Vehicle Assembly Building for mating, KSC |
| June 28 | Ferry flight, Discovery (OV-103) from Edwards AFB, Calif., to Bergstrom AFB, Texas, to KSC |
| June 29 | Challenger (OV-099) mated 51-F, transported from Vehicle Assembly Building to Launch Complex 39-A, KSC |
| June 29 | Discovery (OV-103) at Orbiter Processing Facility, KSC |
| July 11 | Columbia (OV-102) overland transport from Rockwell Palmdale assembly facility to DFRF |
| July 12 | Conduct 51-F, eighth flight of Challenger (OV-099), launch scrubbed at T-3 seconds and shutdown of SSMEs due to loss of redundancy (channel A) on SSME 2 chamber coolant valve |
| July 14 | Ferry flight, Columbia (OV-102) from Edwards AFB, Calif., to Offutt AFB, Neb. |
| July 14 | Ferry flight, Columbia (OV-102) from Offutt AFB, Neb., to KSC |
| July 15 | Columbia (OV-102) awaiting transfer from KSC demate area to Vehicle Assembly Building transfer aisle, KSC |
| July 16 | Columbia (OV-102) at Vehicle Assembly Building transfer aisle, KSC |
| July 18 | Atlantis (OV-104) transferred from Orbiter Processing Facility to Vehicle Assembly Building High Bay 2, KSC |
| July 18 | Columbia (OV-102) transferred from Vehicle Assembly Building transfer aisle to Orbiter Processing Facility, KSC |

| Date | Event |
|---|---|
| July 29 | Conduct 51-F, eighth flight of Challenger (OV-099), launch KSC, land Edwards AFB, Calif., lake bed Runway 23, Aug. 6, 168 hours (7 days), 22 hours, 45 minutes, 26 seconds |
| July 30 | Discovery (OV-103) transferred from Orbiter Processing Facility to Vehicle Assembly Building for mating, KSC |
| July 31 | Atlantis (OV-104) transferred from Vehicle Assembly Building High Bay 2 to Orbiter Processing Facility, KSC |
| Aug. 6 | Discovery (OV-103) mated 51-I, transported from Vehicle Assembly Building to Launch Complex 39-A, KSC |
| Aug. 10 | Ferry flight, Challenger (OV-099) from Edwards AFB, Calif., to Davis-Monthan AFB, Ariz., to Kelly AFB, Texas |
| Aug. 11 | Ferry flight, Challenger (OV-099) from Kelly AFB, Texas, to Eglin AFB, Fla., to KSC |
| Aug. 11 | Atlantis (OV-104) transferred from Orbiter Processing Facility to Vehicle Assembly Building for mating, KSC |
| Aug. 12 | Challenger (OV-099) at Orbiter Processing Facility, KSC |
| Aug. 24 | Conduct 51-I, sixth flight of Discovery (OV-103), launch scrubbed at T–5 minutes due to weather |
| Aug. 25 | Conduct 51-I, sixth flight of Discovery (OV-103), launch scrubbed at T–9 minutes due to a comparison check between the primary set and backup flight control general-purpose computers |
| Aug. 27 | Conduct 51-I, sixth flight of Discovery (OV-103), launch KSC, land Edwards AFB, Calif., lake bed Runway 23, Sept. 3, 168 hours (7 days), 2 hours, 17 minutes, 42 seconds |
| Aug. 29 | Atlantis (OV-104) mated 51-J, transported from Vehicle Assembly Building to Launch Complex 39-A, KSC |
| Sept. 7 | Ferry flight, Discovery (OV-103) from Edwards AFB, Calif., to Kelly AFB, Texas |
| Sept. 8 | Columbia (OV-102) transferred from Orbiter Processing Facility to Vehicle Assembly Building, KSC, for temporary storage |
| Sept. 8 | Ferry flight, Discovery (OV-103) from Kelly AFB, Texas, to KSC |
| Sept. 8 | Discovery (OV-103) at Orbiter Processing Facility, KSC |
| Sept. 12 | Flight readiness firing of Atlantis (OV-104) for 20 seconds at Launch Complex 39-A, KSC |
| Sept. 20 | Ferry flight, Enterprise (OV-101) from Edwards AFB, Calif., to Kelly AFB, Texas, to KSC |
| Sept. 26 | Discovery (OV-103) transferred from Orbiter Processing Facility to Vehicle Assembly Building, KSC |
| Sept. 26 | Columbia (OV-102) transferred from Vehicle Assembly Building to Orbiter Processing Facility, KSC |
| Oct. 3 | Conduct 51-J, first flight of Atlantis (OV-104), launch KSC, land Edwards AFB, Calif., lake bed Runway 23, Oct. 7, 96 hours (4 days), 1 hour, 44 minutes, 38 seconds |
| Oct. 11 | Ferry flight, Atlantis (OV-104) from Edwards AFB, Calif., to Kelly AFB, Texas, to KSC |
| Oct. 12 | Challenger (OV-099) transferred from Orbiter Processing Facility to Vehicle Assembly Building for mating, KSC |
| Oct. 12 | Atlantis (OV-104) at Orbiter Processing Facility, KSC |
| Oct. 16 | Challenger (OV-099) mated 61-A, transported from Vehicle Assembly Building to Launch Complex 39-A, KSC |
| Oct. 30 | Conduct 61-A, ninth flight of Challenger (OV-099), launch KSC, land Edwards AFB, Calif., lake bed Runway 17, Nov. 6, 168 hours (7 days), 44 minutes, 51 seconds |
| Nov. 8 | Atlantis (OV-104) transferred from Orbiter Processing Facility to Vehicle Assembly Building for mating, KSC |

| Date | Event |
|---|---|
| Nov. 10 | Ferry flight, Challenger (OV-099) from Edwards AFB, Calif., to Davis-Monthan AFB, Ariz., to Kelly AFB, Texas |
| Nov. 11 | Ferry flight, Challenger (OV-099) from Kelly AFB, Texas, to Eglin AFB, Fla., to KSC |
| Nov. 11 | Challenger (OV-099) in Orbiter Processing Facility, KSC |
| Nov. 12 | Atlantis (OV-104) mated 61-B, transported from Vehicle Assembly Building to Launch Complex 39-A, KSC |
| Nov. 18 | Enterprise (OV-101) ferry flight from KSC to Dulles Airport, Washington, D.C., becomes property of Smithsonian |
| Nov. 22 | Columbia (OV-102) transferred from Orbiter Processing Facility to Vehicle Assembly Building for mating, KSC |
| Nov. 22 | Discovery (OV-103) transferred from Vehicle Assembly Building to Orbiter Processing Facility, KSC |
| Nov. 26 | Conduct 61-B, second flight of Atlantis (OV-104), launch KSC, land Edwards AFB, Calif., concrete Runway 22, Dec. 3, 144 hours (6 days), 21 hours, 4 minutes, 49 seconds |
| Dec. | Structural spare midfuselage on dock Palmdale for storage |
| Dec. 1 | Columbia (OV-102) mated 61-C, transported from Vehicle Assembly Building to Launch Complex 39-A, KSC |
| Dec. 7 | Ferry flight, Atlantis (OV-104) from Edwards AFB, Calif., to Kelly AFB, Texas, to KSC |
| Dec. 8 | Discovery (OV-103) transferred from Orbiter Processing Facility to Vehicle Assembly Building, KSC, for modification period |
| Dec. 8 | Atlantis (OV-104) in Orbiter Processing Facility, KSC |
| Dec. 16 | Challenger (OV-099), rollover from Orbiter Processing Facility to Vehicle Assembly Building, KSC |
| Dec. 19 | Conduct 61-C, seventh flight of Columbia (OV-102), launch scrubbed at T-13 seconds due to right-hand SRB auxiliary power unit turbine system B overspeed |
| Dec. 22 | Challenger (OV-099), mated 51-L, transported from Vehicle Assembly Building to Launch Complex 39-B, KSC |
| **1986** | |
| Jan. | Structural spare body flap on dock Palmdale for storage |
| Jan. 5 | Discovery (OV-103) transported from Vehicle Assembly Building to Orbiter Processing Facility, KSC |
| Jan. 6 | Conduct 61-C, seventh flight of Columbia (OV-102), launch scrubbed at T-31 seconds due to a launch facility liquid oxygen replenish valve problem |
| Jan. 7 | Conduct 61-C, seventh flight of Columbia (OV-102), launch scrubbed at T-9 minute hold due to adverse weather conditions at both transatlantic abort sites |
| Jan. 10. | Conduct 61-C, seventh flight of Columbia (OV-102), launch scrubbed at T-9 minute hold due to adverse weather conditions at KSC |
| Jan. 12 | Conduct 61-C, seventh flight of Columbia (OV-102), launch KSC, land concrete Runway 22, Edwards AFB, Calif., Jan. 18, night landing, 144 hours (6 days), 2 hours, 3 minutes, 51 seconds |
| Jan. 16 | Discovery (OV-103) transported from Orbiter Processing Facility to Vehicle Assembly Building, KSC |
| Jan. 19 | Discovery (OV-103) transported from Vehicle Assembly Building to Orbiter Processing Facility, KSC |
| Jan. 22 | Ferry flight, Columbia (OV-102) from Edwards AFB, Calif., to Davis-Monthan AFB, Ariz., to Kelly AFB, Texas |
| Jan. 23 | Ferry flight, Columbia (OV-102) from Kelly AFB, Texas, to Eglin AFB, Fla., to KSC |

| Date | Event |
|---|---|
| Jan. 23 | Discovery (OV-103) transported from Orbiter Processing Facility to Vehicle Assembly Building, KSC |
| Jan. 23 | Columbia (OV-102) at Orbiter Processing Facility, KSC |
| Jan. 27 | Conduct 51-L, tenth flight of Challenger (OV-099) launch KSC, first launch of space shuttle from Launch Complex 39-B, launch scrubbed at T-9 minute hold due to unacceptable crosswind conditions at KSC runway in the event of a return-to-launch-site abort |
| Jan. 28 | Conduct 51-L, tenth flight of Challenger (OV-099), launch KSC, first launch of space shuttle from Launch Complex 39-B, loss of vehicle and flight crew |
| March 17 | Atlantis (OV-104) rollover from Orbiter Processing Facility to transfer aisle of Vehicle Assembly Building for short-term storage, KSC |
| April 1 | Discovery (OV-103) rollover from High Bay 2 of Vehicle Assembly Building to Orbiter Processing Facility, KSC |
| April 10 | Discovery (OV-103) rollover from Orbiter Processing Facility to High Bay 2 of Vehicle Assembly Building, KSC |
| April 10 | Altantis (OV-104) rollover from transfer aisle of Vehicle Assembly Building to Orbiter Processing Facility, KSC |
| May 20 | Atlantis (OV-104) rollover from Orbiter Processing Facility to Vehicle Assembly Building High Bay 2, KSC |
| May 20 | Discovery (OV-103) rollover from Vehicle Assembly Building High Bay 2 to Orbiter Processing Facility, KSC |
| June 4 | Discovery (OV-103) rollover from Orbiter Processing Facility to High Bay 2 of the Vehicle Assembly Building, KSC |
| June 24 | Columbia (OV-102) transferred from Bay 1 to Bay 2 of the Orbiter Processing Facility, KSC |
| June 26 | Discovery (OV-103) rollover from the Vehicle Assembly Building to Bay 1 of the Orbiter Processing Facility, KSC |
| July | Structural spare vertical stabilizer (rudder/speed brake) on dock Palmdale for storage |
| Sept. 17 | Discovery (OV-103) rollover from Bay 1 of the Orbiter Processing Facility to High Bay 2 of the Vehicle Assembly Building, KSC |
| Oct. 9 | Transfer of Atlantis (OV-104) mated, minus SSMEs, from the Vehicle Assembly Building to Launch Complex 39-B for weather protection fit checks, payload bay operations, SRB flight readiness test, terminal countdown demonstration test, and emergency egress simulation, KSC |
| Oct. 30 | Transfer of Discovery (OV-103) from High Bay 2 of the Vehicle Assembly Building to Bay 1 of the Orbiter Processing Facility for modifications, KSC |
| Nov. 22 | Transfer of Atlantis (OV-104) mated from Launch Complex 39-B to Vehicle Assembly Building, KSC |
| **1987** | |
| March 13 | Transfer of Columbia (OV-102) from Bay 2 of the Orbiter Processing Facility to High Bay 2 of the Vehicle Assembly Building for storage, KSC |
| March 20 | Transfer of Atlantis (OV-104) from Vehicle Assembly Building to Bay 2 of the Orbiter Processing Facility, KSC |
| July 31 | NASA awards contract to Rockwell to build replacement orbiter (OV-105) using structural spares; authority to proceed. |
| Aug. 3 | Discovery (OV-103) power-up in Orbiter Processing Facility Bay 1 for modification retest |
| Aug. 3 | Start Palmdale facility activation/training |
| Sept. 9 | Transfer of Columbia (OV-102) from High Bay 2 of Vehicle Assembly Building to Orbiter Maintenance and Refurbishment Facility for modifications, KSC |
| Sept. 14 | Start system fabrication, assembly and initial system installation, body flap, OV-105, Palmdale |

| Date | Event |
|---|---|
| Sept. 28 | Start system fabrication, assembly and initial system installation, OV-105 |
| Sept. 28 | Start system fabrication, assembly and initial system installation, crew module, OV-105 |
| Oct. 19 | Start system fabrication, assembly and initial system installation, midfuselage, OV-105, Palmdale |
| Nov. 30 | Start system fabrication, assembly and initial system installation, vertical stabilizer, OV-105, Palmdale |
| Dec. 9 | Atlantis (OV-104) power-up in Orbiter Processing Facility Bay 2 for modification retest |
| Dec. 22 | Wings on dock Palmdale, OV-105 |
| **1988** | |
| Jan. 6 | Space shuttle main engine 1 on dock, KSC, Discovery (OV-103) |
| Jan. 11 | Start system fabrication, assembly and initial system installation forward RCS, OV-105, Downey |
| Jan. 11 | Start system fabrication, assembly and initial system installation lower forward fuselage, OV-105, Downey |
| Jan. 15 | Space shuttle main engine 2 on dock, KSC, Discovery (OV-103) |
| Jan. 21 | Space shuttle main engine 3 on dock, KSC, Discovery (OV-103) |
| Jan. 26 | Right-hand OMS/RCS pod transported from the Hypergolic Maintenance and Checkout Facility to the Orbiter Processing Facility at KSC for installation on Discovery (OV-103) |
| Jan. 29 | Left-hand OMS/RCS pod transported from the Hypergolic Maintenance and Checkout Facility to the Orbiter Processing Facility at KSC for installation on Discovery (OV-103) |
| Feb. 8 | Forward RCS transported from the Hypergolic Maintenance and Checkout Facility to the Orbiter Processing Facility at KSC for installation on Discovery (OV-103) |
| Feb. 15 | Right-hand OMS/RCS pod for OV-105 on dock, Palmdale (install as much thermal protection system as possible; otherwise, pod would remain at McDonnell Douglas, St. Louis, Mo., for a year awaiting hardware) |
| Feb. 22 | Left-hand OMS/RCS pod for OV-105 on dock, Palmdale (install as much thermal protection system as possible; otherwise, pod would remain at McDonnell Douglas, St. Louis, Mo., for a year awaiting hardware) |
| Feb. 29 | Start final assembly and closeout system installation of wings to midfuselage, OV-105, Palmdale |

## SPACE TRANSPORTATION SYSTEM CONTRACTORS

An experienced team of aerospace firms provides components and systems for the space shuttle system. Many of these firms are listed on the following pages.

| System/Component | Contractor | Location |
|---|---|---|
| AC bus sensor | Autonetics Group, Rockwell International | Anaheim, Calif. |
| AC-motor-operated RCS tank and manifold isolation valves, OMS-RCS crossfeed interconnect valves | Parker Hannifin | Irvine, Calif. |
| Accelerometer indicator (senses g forces in vehicles and displays on display and control panel) (backup) | Bendix Corp. | Davenport, Iowa |
| Accelerometer, angular, three axis (development flight instrumentation) | Systron-Donner | Concord, Calif. |
| Accelerometer, linear low-frequency (flight instrumentation, vibration-acoustic data) | Gulton Industries | Costa Mesa, Calif. |
| Accumulator, hydraulic | Parker Hannifin | Irvine, Calif. |
| Acoustic pickup, piezoelectric (development flight instrumentation, acoustic data, OV-101) | Endevco | San Juan Capistrano, Calif. |
| Active keel actuator | Ball Brothers Research Corp. | Boulder, Colo. |
| Actuation unit, body flap | Sundstrand Corp. | Rockford, Ill. |
| Actuator, payload bay door centerline latch | Hoover Electric | Los Angeles, Calif. |
| Advanced computer programming language, HAL/S (high-order assembly language/shuttle) | Intermetrics Inc. | Cambridge, Mass. |
| Advanced flexible reusable surface insulation quilted fabric blanket | Rockwell | Downey, Calif. |
| Air data sensor probe actuator | Ellanef | Corona, N.Y. |
| Air data transducer assembly and computer | AiResearch Manufacturing Co., Garrett Corp. | Torrance, Calif. |
| Airlock support component system | Carleton Controls | East Aurora, N.Y. |
| Air revitalization system (includes cabin fan assembly and debris trap, $CO_2$ absorber and temperature control avionics cooling assembly, humidity control heat exchanger assembly, avionics fans, secondary coolant pump and accumulator, primary coolant pump and accumulator) | Hamilton Standard Division, United Technologies Corp. | Windsor Locks, Conn. |
| Alignment bellows (orbital maneuvering system) | Metal Bellows Co. | Chatsworth, Calif. |
| Ammonia boiler subsystem (rejects heat during re-entry) | Fairchild Stratos | Manhattan Beach, Calif. |
| Ammonia storage module tank, midfuselage (OV-101) | Pressed Steel Tank Co. | Milwaukee, Wis. |
| Analog computer system (Rockwell simulator) | Electronics Association | West Long Branch, N.J. |

| System/Component | Contractor | Location |
|---|---|---|
| Annunciator assembly (caution/warning system) | Aerospace Avionics | Bohemia, N.Y. |
| General: | | |
| Annunciator display general requirements | | |
| Annunciator, performance monitoring | | |
| Annunciator, special | | |
| Annunciator, fire warning | | |
| Annunciator, assembly event sequence | | |
| Annunciator, assembly computer status | | |
| Annunciator, single event | | |
| Annunciator, control assembly | | |
| Indicator, quantity propellant | | |
| Floodlight incandescent overhead | | |
| Light dimmer | | |
| Antenna, UHF (approach and landing test), OV-101 | Communications Components | Costa Mesa, Calif. |
| Antennas: | Watkins Johnson | Palo Alto, Calif. |
| C-band radar altimeter antenna, L-band TACAN, UHF antenna and S-band power amplifier | | |
| UHF air traffic control voice | | |
| S-band (ALT) OV-101 | | |
| S-band, quad antenna | | |
| S-band, hemi antenna | | |
| S-band, payload antenna | | |
| Ascent and entry rates | Calspan | Buffalo, N.Y. |
| Assembly, checkout, launch operations and refurbishment of solid rocket boosters, including recovery ship operation | United Space Booster Inc. Booster Production Company | Kennedy Space Center, Cape Canaveral, Fla. |
| Atmosphere pressure control system components | Carleton Controls | East Aurora, N.Y. |
| Attenuator pads (energy absorbers for inner and outer crew escape panels during deployment) (crew escape system OV-101 and OV-102, first four flights of OV-102 only) | Hexcell Aerospace | Dublin, Calif. |
| Attitude director indicator | Lear Siegler | Grand Rapids, Mich. |
| Automated circuit | Xebec Corp. | Kansas City, Mo. |
| Automatic landing | Sperry Rand Corp., Flight Systems Division | Phoenix, Ariz. |
| Auxiliary power unit and controller | Sundstrand Corp. | Rockford, Ill. |
| Auxiliary power unit fuel isolation valves | Eaton Controls Corp. | Valencia, Calif. |
| Auxiliary power unit fuel tanks and water tanks | TRW Pressure Systems Inc. | Los Angeles, Calif. |
| Auxiliary power unit manual drain valve | Circle Seal Components | Buena Park, Calif. |
| Auxiliary power unit test point couplings | Lear Siegler | Elyria, Ohio |
| Auxiliary power unit water relief valve | Aerodyne Controls Corp. | Farmingdale, N.Y. |
| Auxiliary power unit water valves | Carleton Controls | East Aurora, N.Y. |
| Avionics software | Intermetrics Inc. | Cambridge, Mass. |

| System/Component | Contractor | Location |
|---|---|---|
| Backup flight control system | Autonetics Group, Rockwell International | Anaheim, Calif. |
| Battery charger and power supply (environmental control/life support system) | Aerospace Avionics | Bohemia, N.Y. |
| Body flap structure | Columbus Aircraft Division, Rockwell International | Columbus, Ohio |
| Booster cartridge, detonator assembly | Space Ordnance Systems Division, Trans Technology Corp. | Saugus, Calif. |
| Bulkhead feedthrough | Deutsch | Banning, Calif. |
| Bulkhead feedthrough | ITT Cannon | Phoenix, Ariz. |
| Bulkhead pen lines | Coast Metal Craft | Compton, Calif. |
| Cabin air diffuser | Anemostat Products | Scranton, Pa. |
| Cabin diffuser | Dynamics Corp. | Scranton, Pa. |
| Cabin interior lighting | ILC Technology | Sunnyvale, Calif. |
| Cable attenuator assembly for crew escape system (OV-101 and OV-102, first four flights of OV-102 only) | Aerospace Research Associates | West Covina, Calif. |
| Cable, coax prototype | Teledyne Thermatics | Elm City, N.C. |
| Calorimeter, standard | Spectran Instrument | La Habra, Calif. |
| Canister to carry payloads from checkout facilities to orbiter | Beldo Steel Corp. | Orlando, Fla. |
| Cap, liquid hydrogen/liquid oxygen, 8-inch orbiter disconnect (main propulsion system) | Fairchild Stratos | Manhattan Beach, Calif. |
| Cargo bay doors | Tulsa Division, Rockwell International | Tulsa, Okla. |
| Carrier aircraft modification | Boeing Aerospace Co. | Seattle, Wash. |
| Cartridge assembly detonator (frangible nut, tail cone separation, orbiter-carrier aircraft separation, OV-101) and orbiter-external tank separation | Space Ordnance Systems Division, Trans Technology Corp. | Saugus, Calif. |
| Cartridge, forward separation bolt, pyro, centering mechanism | Space Ordnance Systems Division, Trans Technology Corp. | Saugus, Calif. |
| Caution and warning electronics, status display, limit module | Martin Marietta | Denver, Colo. |
| Central data processing for space shuttle launch processing system, Kennedy Space Center | Honeywell Inc. | McLean, Va. |
| Central data subsystem of launch processing system (minicomputer) | Modular Computer Systems | Ft. Lauderdale, Fla. |
| Check valve (purge, vent, and drain) | Brunswick-Circle Seal | Anaheim, Calif. |
| Check valve, 1-inch helium repressurization line (main propulsion system) | Brunswick-Circle Seal | Anaheim, Calif. |
| Check valve, hydraulic | Crissair Inc. | El Segundo, Calif. |
| Check valve, oxygen, hydrogen (fuel cell and environmental control/life support system) | Aerodyne Controls Corp. | Farmington, N.Y. |
| Check valve, water | Brunswick-Circle Seal | Anaheim, Calif. |
| Check valves, purge (vertical stabilizer, forward reaction control system and plenum) | Eckel Valve | San Fernando, Calif. |
| Checkout, control and monitor subsystem | Martin Marietta | New Orleans, La. |
| Chemical processing (Rockwell facility) | Skipper and Co. | Cerritos, Calif. |
| Circuit breaker, remote control (OV-101) | AIL Division | Milwaukee, Wis. |
| Circuit breakers, thermal | Aiken Industries, Mechanical Products Division | Jackson, Mich. |

| System/Component | Contractor | Location |
|---|---|---|
| Circuit breakers, three-phase | Aiken Industries, Mechanical Products Division | Jackson, Mich. |
| Circulation pump, hydraulics, electric-motor-driven | Pneu Devices | Goleta, Calif. |
| Closed-circuit television, orbiter and remote manipulator systems | Radio Corp. of America | Princeton, N.J. |
| Coax cable | Times Wire and Cable | Wallingford, Conn. |
| Coax cable, high-temperature (flight instrumentation) | Amex System | Lawndale, Calif. |
| Coax cable, special, external temperature (communication tie, links) | Electronic Resources Inc., Tasker Industries | Los Angeles, Calif. |
| Communications test set (ground support equipment) | Motorola | Scottsdale, Ariz. |
| Connect, 1/4-inch, helium fill | Purolator Inc. | Newbury Park, Calif. |
| Connect, 5/8-inch, helium fill | Purolator Inc. | Newbury Park, Calif. |
| Connector, coax TNC bulkhead | ITT Cannon | Santa Ana, Calif. |
| Connector, coax HN | ITT Cannon | Santa Ana, Calif. |
| Connector, coax TNC | ITT Cannon | Santa Ana, Calif. |
| Connector, coax bulkhead | ITT Cannon | Santa Ana, Calif. |
| Connector, coax bulkhead | Malco Microdot Corp. | Pasadena, Calif. |
| Connector, coaxial SMA series | Sealectro | Mamaroneck, N.Y. |
| Connector, cryo | G&H Technology Co. | Santa Monica, Calif. |
| Connector, electrical | Bendix Corp. | Sidney, N.Y. |
| Connector, flexible purge gas (main propulsion system) | Arrowhead Products, division of Federal Mogul | Los Alamitos, Calif. |
| Connector, power | ITT Cannon | Santa Ana, Calif. |
| Connector, rectangular | ITT Cannon | Santa Ana, Calif. |
| Connector, triax, 93-ohm (electrical power distribution system) | Bendix Corp. | Franklin, Ind. |
| Connectors, high-density | ITT Cannon | Santa Ana, Calif. |
| Construction of solid rocket booster recovery and disassembly facility at Cape Canaveral Air Force Station | Holloway Corp. | Titusville, Fla. |
| Coupling helium fill disconnect flight half | Fairchild Stratos | Manhattan Beach, Calif |
| Coupling, flight half | Lear Siegler | Elyria, Ohio |
| Coupling, heat exchanger test point (ground support equipment) | Lear Siegler | Elyria, Ohio |
| Coupling, hypergolic servicing, nitrogen tetroxide/hydrazine (orbital maneuvering system/reaction control system) | Fairchild Stratos | Manhattan Beach, Calif. |
| Coupling, quick-disconnect, high-pressure | Snap Tite | Northridge, Calif. |
| Couplings, hypergolic | Parker Hannifin | Irvine, Calif. |
| Cover materials and inner layers — passive thermal control | Scheldahl | Northfield, Minn. |
| Crew altitude protection suit | NASA Johnson Space Center | Houston, Texas |
| Crew compartment failure warning and corrective control: | J.L. Products | Gardena, Calif. |
| Arming fire switch, push button | | |
| Push button switch | | |
| Relay | | |

| System/Component | Contractor | Location |
|---|---|---|
| Crew module panels | Los Angeles Aircraft Division, Rockwell International | Los Angeles, Calif. |
| Cryo seals, line flange (main propulsion system) | Megatek | Van Nuys, Calif. |
| Cryo temperature transducer | RDF Corp. | Hudson, N.H. |
| Cryogenic pressure relief valve | Parker Hannifin | Irvine, Calif. |
| Current level detector | American Aerospace | Farmingdale, N.Y. |
| Current, sensor ac, dc | American Aerospace | Farmingdale, N.Y. |
| Cylinders, hydrogen and oxygen, OV-101 | Airco Inc. | Industry, Calif. |
| DC RCS high-pressure helium isolation valves and low-pressure vernier engine manifold isolation valves | Consolidated Controls | El Segundo, Calif. |
| DC power contactor | Teledyne Kinetics | Solano Beach, Calif. |
| Data acquisition system (Rockwell laboratories) | Modular Computer Systems | Ft. Lauderdale, Fla. |
| Data bus coupler | Singer Electronics Systems Division | Little Falls, N.J. |
| Data bus isolation | Singer Electronics Systems Division | Little Falls, N.J. |
| Dedicated signal conditioner (subsystem pressure, temperature, etc., to multiplexer/demultiplexer) | Eldec Corp. | Lynwood, Wash. |
| Definition and planning of acquisition of ground systems to support shuttle operations at VAFB | Martin Marietta | Vandenberg Air Force Base, Lompoc, Calif. |
| Descent control and lines | Descent Controls Inc. | Costa Mesa, Calif. |
| Differential pressure transducer and electronics, propellant head pressure in main feed and fill lines (main propulsion system) | K-West | Westminster, Calif. |
| Differential pressure transducer, hydraulic actuators | Gulton Industries | Costa Mesa, Calif. |
| Diffusion bonding | Los Angeles Aircraft Division, Rockwell International | Los Angeles, Calif. |
| Digital computer (Rockwell simulator) | Xerox Corp. | El Segundo, Calif. |
| Digital select thumbwheel switch, toggle switches | Armtec Industries Inc. | Manchester, N.H. |
| Disconnect pneumatic, 1-inch, helium and gaseous nitrogen (main propulsion system) | Fairchild Stratos | Manhattan Beach, Calif. |
| Disconnect, 1½-inch, liquid oxygen overboard bleed (main propulsion system) | Fairchild Stratos | Manhattan Beach, Calif. |
| Disconnect, 2-inch, gaseous hydrogen/gaseous oxygen, orbiter-to-tank pressurization system (main propulsion system) | Ametek Calmec | Pico Rivera, Calif. |
| Disconnect, 4-inch, liquid hydrogen, orbiter-to-tank recirculation and replenishment system (main propulsion system) | Ametek Calmec | Pico Rivera, Calif. |
| Disconnect, flight half—air, gaseous nitrogen, purge | Lear Sielger | Los Angeles, Calif. |
| Disconnect, fluid | Symetrics | Canoga Park, Calif. |
| Disconnects (environmental control/life support system), Freon | Symetrics | Canoga Park, Calif. |
| Disconnects, 17-inch, liquid hydrogen and liquid oxygen, orbiter-to-external tank feed system (main propulsion system) | Parker Hannifin | Irvine, Calif. |
| Disconnects, cryogenic fluid and gas supply, between orbiter power reactant storage and distribution system fill, drain and vent lines and ground support equipment | Fairchild Stratos | Manhattan Beach, Calif. |

| System/Component | Contractor | Location |
|---|---|---|
| Disconnects, hydrogen, oxygen fill and vent (EPS) | Purolator Inc. | Newbury Park, Calif. |
| Disconnect, 8-inch, liquid hydrogen and liquid oxygen, orbiter to ground fill and drain (main propulsion system) | Parker Hannifin | Irvine, Calif. |
| Discrete pressure transducer | Celesco Industries | Canoga Park, Calif. |
| Display driver unit | Collins Radio Group, Rockwell International | Cedar Rapids, Iowa |
| Driver module controller | Autonetics Group, Rockwell International | Anaheim, Calif. |
| Dump valve, manually operated, hydraulic accumulator (ground) | Whittaker Corp. | North Hollywood, Calif. |
| Egress slide | Inflatable Systems Incorporated, a division of OEA | Denver, Colo. |
| Eight-day clock, windup (OV-101) | Waltham Precision | Waltham, Mass. |
| Ejection seats, including drogue and personnel chute (crew escape system, OV-101 and 102, first four flights of OV-102 only) | Lockheed-California Co. | Burbank, Calif. |
| Electric-motor-driven hydraulic circulation pump | Pneu Devices | Goleta, Calif. |
| Electrical indicator meter, round scale, vertical scale | Weston Instruments | Newark, N.J. |
| Electrical system inverters, dc-ac | Westinghouse Electric Aerospace Electrical Division | Lima, Ohio |
| Elevon ablator | Avco | Lowell, Mass. |
| Elevon servoactuators, OV-102 and subsequent | Moog Inc. | East Aurora, N.Y. |
| Engine interface unit (main propulsion system) | Conrac Corp. | West Caldwell, N.J. |
| Engine isolation dual check valve (main propulsion system) | Brunswick-Circle Seal | Anaheim, Calif. |
| Environmental control/life support system: | Aeroquip Corp., Marman | Los Angeles, Calif. |
| V-band coupling | | |
| Band clamp | | |
| Band clamp, lightweight | | |
| Coupling No. 10T-bolt, 40-degree | | |
| Flexible air duct | | |
| Retaining strap | | |
| 40-degree flange | | |
| Environmental control/life support system: | Arrowhead Products, division of Federal Mogul | Los Alamitos, Calif. |
| Coupling sleeve | | |
| Duct flex air | | |
| Coupling sleeve flex | | |
| Clamp cushion flex sleeve | | |
| Flexible connector | | |
| Convoluted bellows long flexible connector drain system | | |
| Escape pole | NASA Johnson Space Center | Houston, Texas |
| Event indicator | Weston Instruments | Newark, N.J. |

| System/Component | Contractor | Location |
|---|---|---|
| Event timer | SLI System | West Caldwell, N.J. |
| Exhaust duct assembly (auxiliary power unit) | SSP Products Inc. | Burbank, Calif. |
| External tank umbilical retractor actuator (retracts external tank feed line into orbiter at separation; composed of linear hydraulic actuators with integral control valves and locking devices) | Bertea Corp. | Irvine, Calif. |
| External tank | Martin Marietta | New Orleans, La. |
| Fabrication and erection of mating-demating device for orbiter and shuttle carrier aircraft at Dryden Flight Research Facility | George A. Fuller Michoud Aerospace Co., division of Northrop Corp. | Chicago, Ill. |
| Fabrication and field support of space shuttle EVA mobility unit suits | Hamilton Standard Division, United Technologies Corp. | Windsor Locks, Conn. |
| Fibrous bulk insulation – passive thermal control | Hi-Temp Insulation Inc. | Camarillo, Calif. |
| Fibrous refractory composite insulation 8 and 12 | Lockheed Missiles and Space Co. Inc. | Sunnyvale, Calif. |
| Filament-wound tank, developmental program | Brunswick | Lincoln, Neb. |
| Filter assembly, cryo | Brunswick-Wintec | El Segundo, Calif. |
| Filter (reaction control system) | Brunswick-Wintec | El Segundo, Calif. |
| Filter, ammonia, in-line | Brunswick-Wintec | El Segundo, Calif. |
| Filter, coolant return | Brunswick-Wintec | El Segundo, Calif. |
| Filter, helium (main propulsion system) | Brunswick-Wintec | El Segundo, Calif. |
| Filter, water | Brunswick-Wintec | El Segundo, Calif. |
| Filter, windshield (purge, vent and drain) | Brunswick-Wintec | El Segundo, Calif. |
| Fire extinguishers, portable | Metalcraft Inc. | Baltimore, Md. |
| Fire suppression system | Brunswick Celesco | Costa Mesa, Calif. |
| Flash evaporator system (removes heat generated by orbiter systems from two coolant loops by turning water from fuel cells into steam and venting to space) | Hamilton Standard Division, United Technologies Corp. | Windsor Locks, Conn. |
| Flex hose, low-pressure, windshield purge | Titeflex Division | Springfield, Mass. |
| Flex line assembly propulsion | Coast Metal Craft | Compton, Calif. |
| Flex line coolant loop (water coolant) | Titeflex Division | Springfield, Mass. |
| Flex metal tube assembly | Metal Bellows Co. | Chatsworth, Calif. |
| Flex metal tube, convoluted | Metal Bellows Co. | Chatsworth, Calif. |
| Flexible stainless steel hose | Titeflex Division | Springfield, Mass. |
| Flight control system (displays and controls): | Honeywell Inc. | Clearwater, Fla. |
| Rotational hand controller | | |
| Accelerometer assembly | | |
| Rudder pedal transducer assembly | | |
| Speed brake/thrust controller | | |
| Translational hand controller | | |
| Forward and aft reaction jets and orbital maneuvering system drives | | |

| System/Component | Contractor | Location |
|---|---|---|
| Floodlight, overhead, incandescent (OV-101) | Grimes Manufacturing | Urbana, Ohio |
| Flow meter, Freon | Tavis Corp. | Mariposa, Calif. |
| Flow restrictor, hydraulic | Crissair Inc. | El Segundo, Calif. |
| Forward orbiter jacks | Regent Jack Manufacturing Co. | Downey, Calif. |
| Frangible nut, orbiter-external tank aft separation, 3/4-inch | Space Ordnance Systems Division, Trans Technology Corp. | Saugus, Calif. |
| Freon coolant loop (includes fuel cell heat exchanger, Freon to water interchanger, Freon loops 1 and 2 inlet sensor, development instrumentation package, Freon pump package) | Hamilton Standard Division, United Technologies Corp. | Windsor Locks, Conn. |
| Frequency modulation | Teledynamics Division, Ambac Industries | Fort Washington, Pa. |
| Fuel cell power plant | International Fuel Cells Division, United Technologies Corp. | South Windsor, Conn. |
| Fuel cell, excess water dump nozzle | Tayco Engineering | Long Beach, Calif. |
| Fuel isolation valve (auxiliary power unit) | Consolidated Controls | El Segundo, Calif. |
| Fuel isolation valves (auxiliary power unit) | Eaton Controls Corp. | Valencia, Calif. |
| Fuel line filter (auxiliary power unit) | Brunswick-Wintec | El Segundo, Calif. |
| Fuel pump seal cavity drain catch bottle and relief valve (auxiliary power unit) | Wright Components Inc. | Clifton Springs, N.J. |
| Functional material | Remtech Inc. | Huntsville, Ala. |
| Fuse holder, dc, boltdown | Bussman Division of McGraw Edison | St. Louis, Mo. |
| Fuse, dc limiter high current | Bussman Division of McGraw Edison | St. Louis, Mo. |
| Fuse, general-purpose microminiature, axial load | Bussman Division of McGraw Edison | St. Louis, Mo. |
| Gas generator (auxiliary power unit) | Rocket Research Corp. | Redmond, Wash. |
| Gas generator assembly, pyro crew escape system (OV-101 and OV-102, first four flights of OV-102 only) | Space Ordnance Systems Division, Trans Technology Corp. | Saugus, Calif. |
| Gaseous hydrogen and gaseous oxygen valve box unit (ground support equipment) | Beech Aircraft Corp., Boulder Division | Boulder, Colo. |
| General-purpose computer processor unit and input/output processor | IBM Corp., Federal Systems Division, Electronics Systems Center | Oswego, N.Y. |
| General-purpose connector, electrical | Deutsch | Banning, Calif. |
| General-purpose fuel holder | Bussman Division of McGraw Edison | St. Louis, Mo. |
| General-purpose power contactor | Hartman Electric Manufacturing Division of A-T-O | Mansfield, Ohio |

| System/Component | Contractor | Location |
|---|---|---|
| Generator, silver/ion (environmental control/life support system—OV-101) | Chem Tric | Rosemont, Ill. |
| Gimbal joint pressure (main propulsion system) | Ametek Straza | El Cajon, Calif. |
| Ground command interface logic box (enables crew to select either crew control or NASA ground control of 250 communications functions) | Conrac Corp. | West Caldwell, N.J. |
| Ground communications system to support space shuttle at VAFB | Ford Aerospace and Communications Corp. | Palo Alto, Calif. |
| Ground coolant unit (circulate Freon through orbiter heat exchanger during ground operations, checkout, preflight, postflight) | AiResearch Manufacturing Co., Garrett Corp. | Torrance, Calif. |
| Ground support equipment/parts off-load | Tulsa Division, Rockwell International | Tulsa, Okla. |
| Ground vibration test model, 1/4-scale | Los Angeles Aircraft Division, Rockwell International | Los Angeles, Calif. |
| Guillotine assembly pyro crew escape system, OV-101 and OV-102 | OEA | Denver, Colo. |
| Hatch attenuator, main ingress/egress hatch | Ex-Cell-O-Corp., division of Cadillac Controls | Costa Mesa, Calif. |
| Hatch latch actuator | Ellanef | Corona, N.Y. |
| Hatch latch links, main hatch | Networks Electronics Corp., U.S. Bearings Division | Chatsworth, Calif. |
| Head-up display OV-102, STS-5, OV-099 and subsequent | Kaiser Electronics | San Jose, Calif. |
| Heat shield (main propulsion system) | Astech | Santa Ana, Calif. |
| Heat/pressure distribution | Calspan | Buffalo, N.Y. |
| Heater assembly/fuel tank, fuel and lube lines (auxiliary power unit) | Cox and Co. | New York, N.Y. |
| Heater electrical set (reaction control system) | Cox and Co. | New York, N.Y. |
| Heater, hydraulic components and lines | Cox and Co. | New York, N.Y. |
| Heater thermostat (auxiliary power unit) | Sundstrand Corp. | Redmond, Wash. |
| Heater, oxygen purge lines | Cox and Co. | New York, N.Y. |
| Heater, water relief valve | Cox and Co. | New York, N.Y. |
| Heater, water boiler steam vent line | Cox and Co. | New York, N.Y. |
| Heater, water, relief valve, vent nozzle and port | Cox and Co. | New York, N.Y. |
| Helium receiver (spherical), surge pressure relief of gaseous helium during ground actuation of valves and external tank disconnects (main propulsion system) | Airite Division, Sargent Industries | El Segundo, Calif. |
| Helium regulator pressure, 750 psia (main propulsion system) | Consolidated Controls | El Segundo, Calif. |
| Helium RCS pressure regulators, propellant couplings | Fairchild Stratos | Manhattan Beach, Calif. |
| High-density connector, data processing software | Bendix Corp. | Sidney, N.Y. |
| Horizontal situation indicator | Collins Radio Group, Rockwell International | Cedar Rapids, Iowa |
| Hose, high- and low-pressure (hydraulic system) | Titeflex Division | Springfield, Mass. |

| System/Component | Contractor | Location |
|---|---|---|
| Hose, swivel assembly (hydraulic system) | Titeflex Division | Springfield, Mass. |
| Hydraulic blanket and line insulation (hydraulic system) | Hi-Temp Insulation Inc. | Camarillo, Calif. |
| Hydraulic cart (ground support equipment) | Hamilton Standard Division, United Technologies Corp. | Windsor Locks, Conn. |
| Hydraulic water spray boiler disconnect supply, 1/2-inch | Lear Siegler | Elyria, Ohio |
| Hydraulic filter module assembly | Purolator Inc. | Newbury Park, Calif. |
| Hydraulic landing gear shutoff valve, nose landing gear steering and damping system | Sterer Engineering and Manufacturing | Los Angeles, Calif. |
| Hydraulic quick disconnects | Symetrics | Canoga Park, Calif. |
| Hydraulic reservoir, bootstrap | Arkwin Industries | Westbury, N.Y. |
| Hydraulic systems: | Resistoflex | Roseland, N.J. |
| Line connector, dynatube | | |
| Line connector, 90-degree dynatube | | |
| Line connector, tee dynatube | | |
| Line connector, bulkhead dynatube | | |
| Line connector, jam nut-type dynatube | | |
| Line connector, female/male adapter dynatube | | |
| Hydrazine fuel and water tanks (auxiliary power unit) | Pressure System Inc. (now TRW) | Los Angeles, Calif. |
| Hydrogen recirculation pump assembly (main propulsion system) | Sundstrand Corp. | Rockford, Ill. |
| Inconel 750 wire spring and fabric sleeving (thermal protection system) | Santa Fe Textiles | Santa Ana, Calif. |
| Indicator attitude, backup, OV-101 | Jet Electronics | Grand Rapids, Mich. |
| Indicator position (OV-101) | Aircraft Instruments Co. | Montgomery, Pa. |
| Indicator, airspeed/Mach, backup (4 inches round) (OV-101) | Sperry Rand Corp. Flight Systems Division | Phoenix, Ariz. |
| Indicator, altimeter, barometric (OV-101) | Sperry Rand Corp. Flight Systems Division | Phoenix, Ariz. |
| Indicator, angle of attack (backup) (OV-101) | Rosemount Inc. | Eden Prairie, Minn. |
| Indicator, angle of sideslip (backup) (OV-101) | Rosemount Inc. | Eden Prairie, Minn. |
| Indicator, alpha Mach | Bendix Corp. | Teterboro, N.J. |
| Indicator, altitude/vertical velocity | Bendix Corp. | Teterboro, N.J. |
| Indicator, surface position | Bendix Corp. | Teterboro, N.J. |
| Inertial measurement unit | Singer Electronics Systems Division | Little Falls, N.J. |
| Initiator assembly, pyro (crew escape system, OV-101 and OV-102, first four flights of OV-102 only) | Teledyne McCormack | Hollister, Calif. |
| Initiator assembly, pyro panel jettison (OV-101 and OV-102, first four flights of OV-102 only) | Space Ordnance Systems Division, Trans Technology Corp. | Saugus, Calif. |

| System/Component | Contractor | Location |
|---|---|---|
| Integral panel lighting | Aerospace | Boontoon, N.J. |
| Integrally illuminated panels | Aeropanel | Parsippany, N.J. |
| Interseat energy transfer and sequencer, pyro, crew escape system (OV-101 and OV-102, first four flights of OV-102 only) | Explosive Technology | Fairfield, Calif. |
| Isolation valves, high-pressure helium and low-pressure vernier engine manifold dc solenoid (reaction control system) | Consolidated Controls | El Segundo, Calif. |
| Ku waveguide assembly | Avco | Wilmington, Mass. |
| Ku-band antenna (microwave scan beam landing system) | Avco | Wilmington, Mass. |
| Ku-band radar/communication system, deployable antenna and electrical assembly | Hughes | El Segundo, Calif. |
| Latching relay, general-purpose | Leach Relay | Los Angeles, Calif. |
| Launch processing system at KSC | IBM Corp., Federal Systems Division, Electronics Systems Center | Oswego, N.Y. |
| Leading edge structural subsystem and nose cap, reinforced carbon-carbon | Vought Corp. | Dallas, Texas |
| Life support system for space shuttle extravehicular activity | Hamilton Standard Division, United Technologies Corp. | Windsor Locks, Conn. |
| Lighting panel overlay | U.S. Radium | Parsippany, N.J. |
| Limit switches, hermetic seal (electrical power and distribution) | Teledyne Kinetics | Solano Beach, Calif. |
| Limit switches, hermetic seal (electrical power and distribution system) | Hayden Switch and Instrument | Waterbury, Conn. |
| Line assembly vibration isolation mounts, feed line (main propulsion system) | Aeroflex Laboratories | Plainview, N.Y. |
| Liquid hydrogen and liquid oxygen 8-inch fill and drain assembly (main propulsion system) | Ametek Straza | El Cajon, Calif. |
| Liquid hydrogen recirculation and replenishment 2-inch and 4-inch line assembly (main propulsion system) | Ametek Straza | El Cajon, Calif. |
| Load control assemblies (forward No. 1-3, aft No. 1-3) | Autonetics Group, Rockwell International | Anaheim, Calif. |
| Load measurement system (three load sensor cells and signal conditioner; used in ALT to measure and display the flight loads during taxi, takeoff, cruise, separation and landing to shuttle carrier aircraft and orbiter crews) | Boeing Aerospace Co. | Seattle, Wash. |
| MADS recorder | Data Tape Inc., division of Kodak Corp. | Pasadena, Calif. |
| Magnetic tape recorder | Bell and Howell | Pasadena, Calif. |
| Main engine gimbal servoactuator | Moog Inc. | East Aurora, N.Y. |
| Main landing gear brake anti-skid hydraulic modules, transducers, control box and wheel sensor | Crane Co., Hydro Aire | Burbank, Calif. |
| Main landing gear strut actuator | Bertea Corp. | Irvine, Calif. |
| Main landing gear uplock actuator, hydraulic | Bertea Corp. | Irvine, Calif. |
| Main landing gear uplock release thruster actuator | Scott Inc. | Downers Grove, Ill. |
| Main propulsion test article structure and platform, orbiter overland transporter, strongback for MSFC | Aircraft Engineering Corp. | Paramount, Calif. |

| System/Component | Contractor | Location |
|---|---|---|
| Main/nose landing gear shock struts and brace assembly | Menasco Manufacturing Co. | Burbank, Calif. |
| Main/nose landing gear wheel and main landing gear brake assembly | B.F. Goodrich Co. | Troy, Ohio |
| Maintenance, modification and operations support, JSC simulation complex | Singer Electronics Systems Division | Little Falls, N.J. |
| Manipulator retention latch actuator | Ellanef | Corona, N.Y. |
| Manual drain valve (auxiliary power unit) | Circle Seal Components | Buena Park, Calif. |
| Manufacturing (crew module bulkheads) | Avco | Nashville, Tenn. |
| Manufacturing (crew module skins and bulkheads) | Vought Corp. | Dallas, Texas |
| Manufacturing (crew module skins and ejection panels) | Marvin Engineering | Inglewood, Calif. |
| Manufacturing (crew module star tracker panels) | Merco Manufacturing Co. | Anaheim, Calif. |
| Manufacturing (detail parts and subassembly, forward and aft fuselage tooling, nose gear doors) | Columbus Aircraft Division, Rockwell International | Columbus, Ohio |
| Manufacturing of aft fuselage upper truss thrust structure | Los Angeles Aircraft Division, Rockwell International | Los Angeles, Calif. |
| Mass memory/multifunction cathode ray tube display unit, keyboard display electrical unit subsystem | IBM Corp., Federal Systems Division, Electronics Systems Center | Oswego, N.Y. |
| Master events controller | Autonetics Group, Rockwell International | Anaheim, Calif. |
| Master timing unit | Westinghouse Electric Corp., Systems Development Division | Baltimore, Md. |
| Materials processing in Spacelab program | TRW Systems, Electronic Systems Division | Redondo Beach, Calif. |
| Metal bellows assembly | Metal Bellows Co. | Chatsworth, Calif. |
| Metal flex hoses (main propulsion system) | Coast Metal Craft | Compton, Calif. |
| Microwave scan beam landing set navigation set | Eaton Corp. | Farmingdale, N.Y. |
| Midfuselage, including midfuselage glove fairing | Convair Aerospace Division, General Dynamics | San Diego, Calif. |
| Mission timer | SLI System | West Caldwell, N.J. |
| Multichannel, closed loop structural test | Datum Inc. | Anaheim, Calif. |
| Multiplexer interface adapter | Singer Electronics Systems Division | Little Falls, N.J. |
| Multiplexer/demulitplexer | Honeywell Incorporated, Sperry Space Systems Division | Phoenix, Ariz. |
| Needle bearing (environmental control/life support system) | Torrington Co. | Torrington, Conn. |
| Network signal processor | TRW Systems, Electronic Systems Division | Redondo Beach, Calif. |
| Nomex felt (thermal protection system) | Globe Albany | Auburn, Maine |

| System/Component | Contractor | Location |
|---|---|---|
| Nose gear steering and damping system | Sterer Engineering and Manufacturing | Los Angeles, Calif. |
| Nose landing gear uplock actuator | Bertea Corp. | Irvine, Calif. |
| Nuts and bolts | Air Industries | Garden Grove, Calif. |
| Oil couplings (auxiliary power unit) | Symetrics | Burbank, Calif. |
| Oleophobic filter hydraulic canister | Arkwin Industries | Westbury, N.Y. |
| Operational and payload recorders | Odetics Space Born Corp. | Anaheim, Calif. |
| Operational flight crew and passenger seats | AMI (initially) | Colorado Springs, Colo. |
| Operations support and maintenance of Boeing shuttle carrier aircraft | American Airlines | Tulsa, Okla. |
| Orbital maneuvering system and reaction control system propellant ac-motor-operated tank isolation valves, manifold interconnect valves, 64 valves on each orbiter and relief valves | Parker Hannifin | Irvine, Calif. |
| Orbital maneuvering system electrical heaters | Tayco Engineering | Long Beach, Calif. |
| Orbital maneuvering system engines | Aerojet General, Technical Systems Co. | Sacramento, Calif. |
| Orbital maneuvering system engine bearings | Rexnord Inc. | Downers Grove, Ill. |
| Orbital maneuvering system engine valve components | Futurecraft Corp. | City of Industry, Calif. |
| Orbital maneuvering system gimbal actuators and controllers | AiResearch Manufacturing Co. | Torrance, Calif. |
| Orbital maneuvering system gimbal bellows assembly | SSP Products Inc. | Burbank, Calif. |
| Orbital maneuvering system heater thermostats | Sundstrand | Rockford, Ill. |
| Orbital maneuvering system nozzle extension | PSM Division of Fansteel | Los Angeles, Calif. |
| Orbital maneuvering system pod edge member | Aircraft Contours | Los Angeles, Calif. |
| Orbital maneuvering system pressure regulator/relief valve assembly | Sterer Engineering and Manufacturing | Pasadena, Calif. |
| Orbital maneuvering system propellant tanks | Aerojet Manufacturing Co. | Fullerton, Calif. |
| Orbital maneuvering system propellant tank acquisition screen | Brunswick-Wintec | El Segundo, Calif. |
| Orbital maneuvering system regulator/relief valve assembly | Sterer Engineering and Manufacturing | Los Angeles, Calif. |
| Orbital maneuvering system thermostats | Sundstrand Corp. | Rockford, Ill. |
| Orbital maneuvering system/reaction control system aft propulsion pod | McDonnell Douglas Astronautics Co. | St. Louis, Mo. |
| Orbiter/payload timing buffer | Harris Corp., Electronic Systems Division | Melbourne, Fla. |
| Orbiter audio distribution system (voice and tonal signals) | Telephonics Division, Instruments Systems Corp. | Huntington, N.Y. |
| Orbiter castings | Aerodyne Controls Corp. | Farmington, N.Y. |
| Orbiter castings | Aeroceanic Castings | Bell Gardens, Calif. |
| Orbiter computer programs | IBM Corp., Federal Systems Division, Electronics Systems Center | Oswego, N.Y. |

| System/Component | Contractor | Location |
|---|---|---|
| Orbiter floodlight system, payload bay floodlight, overhead docking floodlight, forward bulkhead floodlight and floodlight electronic assemblies | ILC Technology | Sunnyvale, Calif. |
| Orbiter Freon coolant servicing unit | Beech Aircraft Corp., Boulder Division | Boulder, Colo. |
| Orbiter payload door latch actuators (two electromechanical rotary actuators to latch payload bay doors closed; one to extend and retract radiators and operate latches to hold radiators in retracted position) | Hoover Electric | Los Angeles, Calif. |
| Orbiter structural static and fatigue testing | Lockheed-California Co. | Burbank, Calif. |
| Panel lighting controls | Allen-Bradley | El Paso, Texas |
| Panel lighting controls | Betatrom | Hauppauge, N.Y. |
| Panel lighting controls | Armtec Industries | Manchester, N.H. |
| Payload assist module D and PAM-DII | McDonnell Douglas Astronautics Co. | Huntington Beach, Calif. |
| Payload bay door actuation system (power drive units, rotary actuators, drive shaft, torque tubes, couplings) | Curtiss Wright | Caldwell, N.J. |
| Payload data interleaver | Harris Corp., Electronics Systems Division | Melbourne, Fla. |
| Payload retention latch | Ball Brothers Research Corp. | Boulder, Colo. |
| Payload signal processor | TRW Systems, Electronic Systems Division | Redondo Beach, Calif. |
| Piezoelectric accelerometer (flight instrumentation, vibration-acoustic data) | Endevco | San Juan Capistrano, Calif. |
| Position transducer, landing gear and rudder (OV-101, ALT) | Edcliff Instruments | Monrovia, Calif. |
| Potable and waste water tanks | Metal Bellows Co. | Chatsworth, Calif. |
| Potentiometers | Betatronix | Hauppauge, N.Y. |
| Potentiometer (controls and displays) | Allen-Bradley | Milwaukee, Wis. |
| Power reactant storage assembly | Beech Aircraft Corp., Boulder Division | Boulder, Colo. |
| Preamplifier assembly | AIL Division | Huntington, N.Y. |
| Pressure cartridge | Space Ordnance Systems Division, Trans Technology Corp. | Saugus, Calif. |
| Pressure relief valve, in-line potable water | Vacco Industries | El Monte, Calif. |
| Pressure storage tanks for orbital maneuvering system, main propulsion system, reaction control system, atmosphere revitalization pressure control system | Brunswick | Lincoln, Neb. |
| Pressure transducer, cryo | Statham Instruments | Oxnard, Calif. |
| Pressure transducers (low, medium, high), general systems | Statham Instruments | Oxnard, Calif. |
| Prevalves, 12-inch, shutoff propellant (main propulsion system) | Fairchild Stratos | Manhattan Beach, Calif. |
| Priority valve and hydraulic thermal control shutoff | Pneu Draulics | Montclair, Calif. |
| Probe air data sensor, flight boom | Rosemount Inc. | Eden Prairie, Minn. |

| System/Component | Contractor | Location |
|---|---|---|
| Probe system, air data sensor | Rosemount Inc. | Eden Prairie, Minn. |
| Propellant flex line assembly, orbital maneuvering system/reaction control system | Metal Bellows Co. | Chatsworth, Calif. |
| Propellant gauging system (orbital maneuvering system) | Simmonds Precision Products Inc. | Vergennes, Vt. |
| Proximity switch (landing gear operation) | Eldec Corp. | Lynwood, Wash. |
| Pulse code modulation master unit | Harris Corp., Electronics Systems Division | Melborne, Fla. |
| Pulse code modulator multiplexer | Gulton Data Systems, Gulton Industries Inc. | Albuquerque, N.M. |
| Pump, hydraulic, variable delivery | Abex Corp., Aerospace Division | Oxnard, Calif. |
| Pyro initiator controller | Martin Marietta | Denver, Colo. |
| Quick disconnects, water boiler, water fill vent | Symetrics | Canoga Park, Calif. |
| Radar altimeter | Honeywell Inc. | Minneapolis, Minn. |
| Radiator deploy actuator and latch mechanism | Curtiss Wright | Caldwell, N.J. |
| Radiators and flow control assembly system | Vought Corp. | Dallas, Texas |
| Radiometer (thermal protection system) | Spectran Instrument | La Habra, Calif. |
| Rate gyro assembly | Northrop Corp., Electronics Division | Norwood, Mass. |
| Reaction control system flexible line assembly | Metal Bellows Co. | Chatsworth, Calif. |
| Reaction control system fuel and oxidizer tanks (forward and aft) | Martin Marietta | Denver, Colo. |
| Reaction control system thrusters, 24-pound thrust | Marquardt Co., CCI Corp. | Van Nuys, Calif. |
| Reaction control system thrusters, 870-pound thrust | Marquardt Co., CCI Corp. | Van Nuys, Calif. |
| Reaction jet drivers | Honeywell Inc. | Clearwater, Fla. |
| Receiver/transmitter mount, UHF | Magnavox | Ft. Wayne, Ind. |
| Receiver/transmitter, UHF | Magnavox | Ft. Wayne, Ind. |
| Regulator valve, 850 psia, helium (main propulsion system) | Consolidated Controls | El Segundo, Calif. |
| Regulator, 750/20 psia, helium (main propulsion system) | Consolidated Controls | El Segundo, Calif. |
| Regulator, 750/20 psia, helium (main propulsion system) | Whittaker Corp. | North Hollywood, Calif. |
| Regulator, pressure, helium (series-redundant), forward and aft (reaction control system) | Fairchild Stratos | Manhattan Beach, Calif. |
| Regulators, hydrogen and oxygen, cryo | Carleton Controls | East Aurora, N.Y. |
| Relay, 10-amp | Leach Relay | Los Angeles, Calif. |
| Remote manipulator system for space shuttle orbiter (arrangement between NASA and National Research Council of Canada, supported by RCA Ltd., and CAE of Montreal, Canada) | Spar Aerospace | Toronto, Canada |
| Remote power controller | Westinghouse Electric Corp., Aerospace Electrical Division | Lima, Ohio |
| Reusable surface insulation, high-temperature and low-temperature | Lockheed Missiles and Space Co. Inc. | Sunnyvale, Calif. |
| Rudder/speed brake actuation unit and drive shaft | Sundstrand Corp. | Rockford, Ill. |

| System/Component | Contractor | Location |
|---|---|---|
| S-band quad antenna, hemispherical antenna and payload antenna | Rockwell International | Anaheim, Calif. |
| S-band multiplexer (development flight instrumentation) | Wavecom | Northridge, Calif. |
| S-band network equipment | TRW Systems, Electronic Systems Division | Redondo Beach, Calif. |
| S-band payload interrogator | TRW Systems, Electronic Systems Division | Redondo Beach, Calif. |
| S-band switch | Transco Products | Venice, Calif. |
| S-band transceiver | Teledynamics Division, Ambac Industries | Fort Washington, Pa. |
| S-band transmitter (development flight instrumentation) | Teledynamics Division, Ambac Industries | Fort Washington, Pa. |
| Safety valve, cabin air pressure | AiResearch Manufacturing Co., Garrett Corp. | Torrance, Calif. |
| Seal plate, air data sensor unit | Porter Seal | Glendale, Calif. |
| Seal, bulkhead window conditioning system | Bussman Division of McGraw Edison | St. Louis, Mo. |
| Sensor temperature probe | Rosemount Inc. | Eden Prairie, Minn. |
| Sensor temperature surface, general | Rosemount Inc. | Eden Prairie, Minn. |
| Sensor, combination heat flux | Spectran Instrument | La Habra, Calif. |
| Sensor, radiant heat flux | Spectran Instrument | La Habra, Calif. |
| Sensor, temperature thermocouple (measures main engine plume temperature on thermal protection system) | Spectran Instrument | La Habra, Calif. |
| Sensors and electronics, point level, liquid oxygen and liquid hydrogen (main propulsion system) | Simmonds Precision Motion Control Division | Vergennes, Vt. |
| Separator, hydrogen/water unit | Life Systems Inc. | Cleveland, Ohio |
| Separators—passive thermal control | Apex Mills | Los Angeles, Calif. |
| Sequencing assembly pyro, crew escape system (OV-101 and OV-102, first four flights of OV-102 only) | Space Ordnance Systems Division, Trans Technology Corp. | Saugus, Calif. |
| Service coupling (auxiliary power unit) | J.C. Carter Co. | Costa Mesa, Calif. |
| Servicing check valve | Brunswick-Circle Seal | Anaheim, Calif. |
| Servoactuator, elevon-electro command, hydraulics, OV-101 | Hydraulic Research, Textron | Valencia, Calif. |
| Severance system, pyro, ejection panel (OV-101 and OV-102, first four flights of OV-102 only) | Explosive Technology | Fairfield, Calif. |
| Shunt | R.V. Weatherford | Glendale, Calif. |
| Shutoff valve, emergency thermal control, hydraulic | Pneu Devices | Goleta, Calif. |
| Shutoff valve, ram air inlet (OV-101) | Carleton Controls | East Aurora, N.Y. |
| Shutoff valve, solenoid-operated, main engine hydraulic and hydraulic landing gear | Sterer Engineering and Manufacturing | Los Angeles, Calif. |

| System/Component | Contractor | Location |
|---|---|---|
| Shutoff valve, unidirectional/bidirectional (fuel cell, environmental control/life support system) | Consolidated Controls | El Segundo, Calif. |
| Shuttle avionics test set – Avionics Development Laboratory, Downey | Autonetics Group, Rockwell International | Anaheim, Calif. |
| Shuttle avionics test set – Johnson Space Center | Autonetics Group, Rockwell International | Anaheim, Calif. |
| Shuttle data processing complex programming at JSC | IBM Corp., Federal Systems Division, Electronics Systems Center | Oswego, N.Y. |
| Side hatch jettison thrusters | OEA | Denver, Colo. |
| Side hatch tunnel hinges and energy transfer system lines | Explosive Technology | Fairfield, Calif. |
| Smoke detection | Brunswick Celesco | Costa Mesa, Calif. |
| Sneak circuit analysis | Boeing Aerospace Co. | Houston, Texas |
| Software (guidance, navigation and control) | Charles Stark Draper | Cambridge, Mass. |
| Solenoid valve, hydrogen and oxygen, cryo | Consolidated Controls | El Segundo, Calif. |
| Solenoid valve, shutoff, air | AiResearch Manufacturing Co., Garrett Corp. | Torrance, Calif. |
| Solenoid valves and regulators, high- and low-pressure (orbital maneuvering system) | Consolidated Controls | El Segundo, Calif. |
| Solid rocket booster integration and final assembly | Marshall Space Flight Center (NASA) | Huntsville, Ala. |
| Solid rocket booster motors | Morton Thiokol Corp., Wasatch Division | Brigham City, Utah |
| Solid rocket booster structure | McDonnell Douglas Astronautics Co. | Huntington Beach, Calif. |
| Space shuttle Mission Control Operations data processing complex at JSC | IBM Corp., Federal Systems Division, Electronics Systems Center | Oswego, N.Y. |
| Space shuttle main engine feed lines, 12- to 17-inch-diameter liquid oxygen and liquid hydrogen (main propulsion system) | Arrowhead Products, division of Federal Mogul | Los Alamitos, Calif. |
| Space shuttle main engines | Rocketdyne Division, Rockwell International | Canoga Park, Calif. |
| Space shuttle orbiter data processing hardware maintenance | IBM Corp., Federal Systems Division, Electronics Systems Center | Gaithersburg, Md. |
| Space telescope assembly, fine pointing assembly and associated controls | Perkin Elmer Corp., Optical Technology Division | Danbury, Conn. |
| Space telescope support systems module (14-foot-diameter, 43-foot-long cylindrical unit houses optics, sensors, and support systems; systems engineering, analysis, integration, verification of complete assembly and support of ground and flight operations) | Lockheed Missiles and Space Co. Inc. | Sunnyvale, Calif. |
| Spacelab and U-shaped pallets | European Space Agency | Paris, France |

| System/Component | Contractor | Location |
|---|---|---|
| Spacelab integration | McDonnell Douglas Astronautics Co. | Huntsville, Ala. |
| Spacelab simulator | Singer Electronics Systems Division | Little Falls, N.J. |
| Spherical bearing, orbiter-external tank | U.S. Bearing | Chatsworth, Calif. |
| Star tracker door (consists of shutter-type door, electromechanical actuator, door supports) | Ellanef | Corona, N.Y. |
| Star tracker and light shade | Ball Brothers Research Corp. | Boulder, Colo. |
| Step-down transformer | Abbott Transistor | Burbank, Calif. |
| Strain gauge | Micro Measurements | Romulus, Mich. |
| Strain gauge signal conditioner, stresses | K-West | Westminster, Calif. |
| Support services | Lockheed Electronics | White Sands, N.M. |
| Switch, rotary | Applied Resources | Fairfield, N.J. |
| TACAN | Hoffman Electronics Corp., NavCom Systems Division | El Monte, Calif. |
| Tail cone fairing | Boeing Aerospace Co. | Seattle, Wash. |
| Tape, meter | Eldec Corp. | Lynwood, Wash. |
| Temperature resistance transducer (probe-type) | RDF Corp. | Hudson, N.H. |
| Temperature sensor/transducer, general | RDF Corp. | Hudson, N.H. |
| Temperature transducer | Rosemount Inc. | Eden Prairie, Minn. |
| Terminal boards, modular | Bell Industries | Gardena, Calif. |
| Test point and nitrogen coupling | Lear Siegler | Elyria, Ohio |
| Thermal protection system AB312 fibers | 3M Co. Inc. | St. Paul, Minn. |
| Thermal protection system Macor machinable glass ceramic | Corning Glass | Corning, N.Y. |
| Thermal protection system alumina mat | ICI United States Inc. | Wilmington, Del. |
| Thermal protection system quartz thread | J.P. Stevens Co. | Los Angeles, Calif. |
| Thermal protection system room-temperature vulcanizing adhesive | General Electric | Waterford, N.Y. |
| Thermal switch | Sundstrand Corp. | Redmond, Wash. |
| Thermocouple reference junction (thermal protection system thermocouple signal conditioner) | RDF Corp. | Hudson, N.H. |
| Thruster assembly ejection panel jettison, OV-101 and OV-102 | OEA | Denver, Colo. |
| Thruster assembly, pyro, nose gear uplock release | OEA | Denver, Colo. |
| Tires, main and nose gear | B.F. Goodrich Co. | Troy, Ohio |
| Toggle switches | Edison Electronics Division, McGraw Edison | Manchester, N.H. |
| Tool fabrication | Los Angeles Aircraft Division, Rockwell International | Los Angeles, Calif. |
| Tracking and Data Relay Satellite system | TRW Systems, Electronic Systems Division | Redondo Beach, Calif. |
| Tractor for overland transport, Palmdale to DFRF | Contractors Cargo | South Gate, Calif. |

| System/Component | Contractor | Location |
|---|---|---|
| Transducer pressure absolute, high-level | Celesco Industries | Canoga Park, Calif. |
| Transducer temperature tip | RDF Corp. | Hudson, N.H. |
| Transducer, cabin acoustic | Gulton Industries | Costa Mesa, Calif. |
| Transducer, pressure very low range | Tavis Corp. | Mariposa, Calif. |
| Transducer, pressure, pogo (main propulsion system) | Gulton Industries | Costa Mesa, Calif. |
| Transducer, sound pressure level | Gulton Industries | Costa Mesa, Calif. |
| Transformer, displays and controls | Abbott Transistor | Los Angeles, Calif. |
| Transformer, power displays and controls, 115/26 volts (OV-101) | Sterling Transformer Corp. | Brooklyn, N.Y. |
| Ullage pressure signal conditioner for external tank (monitors and controls external tank ullage pressure, liquid oxygen and liquid hydrogen tanks) | K-West | Westminster, Calif. |
| Umbilical door actuator | Hoover Electric | Los Angeles, Calif. |
| Umbilical door centerline latch actuator | Hoover Electric | Los Angeles, Calif. |
| Umbilical door latch actuator | Hoover Electric | Los Angeles, Calif. |
| Urine, waste water, oxygen and nitrogen waste dump | Tayco Engineering | Long Beach, Calif. |
| Vacuum sensors (located in upper and lower wing area, vertical stabilizer, and upper and lower sections of fuselage to measure aerodynamic pressure at re-entry and compartment pressures) | Sentran Co. | Santa Barbara, Calif. |
| Valve, 3/8-inch relief, liquid hydrogen (main propulsion system) | Brunswick-Circle Seal | Anaheim, Calif. |
| Valve, quad check (orbital maneuvering system/reaction control system) | Rocketdyne Division, Rockwell International | Canoga Park, Calif. |
| Valve, 2-inch shutoff, liquid hydrogen (main propulsion system) | Ametek Calmec | Pico Rivera, Calif. |
| Valve, 2-way pneumatic solenoid (main propulsion system) | Wright Components Inc. | Clifton Springs, N.J. |
| Valve, 3-way solenoid, helium (main propulsion system) | Wright Components Inc. | Clifton Springs, N.J. |
| Valve, 8-inch fill and drain, propellant (main propulsion system) | Fairchild Stratos | Manhattan Beach, Calif. |
| Valve, in-line liquid hydrogen/liquid oxygen emergency relief (main propulsion system) | Parker Hannifin | Irvine, Calif. |
| Valve, latching, solenoid-operated, hydraulic (hydraulic system and main propulsion system) | Wright Components Inc. | Clifton Springs, N.J. |
| Valve, manually operated (orbital maneuvering system/reaction control system) | Parker Hannifin | Irvine, Calif. |
| Valve, pressurant flow control, hydrogen and oxygen flow from orbiter main engines for external tank main propulsion system | Consolidated Controls | El Segundo, Calif. |
| Valve, pressure relief (reaction control system) | Parker Hannifin | Irvine, Calif. |
| Valve, selector, three-way, solenoid-operated, landing gear uplock and control | Sterer Engineering and Manufacturing | Los Angeles, Calif. |
| Valve, shutoff, 1-inch, liquid oxygen and liquid hydrogen relief (main propulsion system) | Fairchild Stratos | Manhattan Beach, Calif. |
| Valve, three-way, two-position hydraulic control | Arkwin Industries | Westbury, N.Y. |
| Valve, water solenoid latching | Consolidated Controls | El Segundo, Calif. |
| Valves, dual check, manually operated (main propulsion system) | Parker Hannifin | Irvine, Calif. |
| Valves, oxygen primary flow control pressure and hydraulic (main propulsion system) | Consolidated Controls | El Segundo, Calif. |
| Variable transformer (displays and controls)—OV-101 | Bomar/TIC | Newbury Park, Calif. |

| System/Component | Contractor | Location |
|---|---|---|
| Vent doors, forward and aft (electrical, mechanical actuators, torque tubes, push/pull rods, bellcranks and mechanism support for opening and closing vent/purge doors for all ground operations and flight operations) | Simmonds Precision Motion Control Division | Caldwell, N.J. |
| Vertical tail | Fairchild Republic | Farmingdale, N.Y. |
| Vibration mount assembly kit | Barry Controls | Burbank, Calif. |
| Waste collector subsystem | General Electric | Valley Forge, Pa. |
| Water and coolant system: | | |
| Coupling, 2-inch, half, quick-disconnect, female | Seaton Wilson Inc., subsidiary of Systron-Donner | Burbank, Calif. |
| Coupling, 2-inch, half, quick-disconnect, male | | |
| Water boiler, hydraulic thermal control unit | Hamilton Standard Division, United Technologies Corp. | Windsor Locks, Conn. |
| Water management control panel | Hamilton Standard Division, United Technologies Corp. | Windsor Locks, Conn. |
| Water pressure relief valve (potable water system) | Aerodyne Controls Corp. | Farmington, N.Y. |
| Water relief valve | Brunswick-Circle Seal | Anaheim, Calif. |
| Water relief valve (auxiliary power unit) | Aerodyne Controls Corp. | Farmington, N.Y. |
| Water relief valve and check valve | Brunswick-Wintec | El Segundo, Calif. |
| Water valves (auxiliary power unit) | Carleton Controls | East Aurora, N.Y. |
| Wide-band frequency-division-multiplexing unit | Aydin, Vector Division | Newtown, Pa. |
| Wide-band signal conditioner, accelerometer/acoustic | K-West | Westminster, Calif. |
| Wind tunnel (hypersonic) tests, jet plume effects | Calspan | Buffalo, N.Y. |
| Window retainers | Speedring Manufacturing Co. | Cullman, Ala. |
| Windshield and windows and side hatch window | Corning Glass | Corning, N.Y. |
| Wing (includes main landing gear doors, elevons, wing box glove) | Grumman Corp. | Bethpage, N.Y. |
| Wire, T/C | Teledyne Thermatics | Elm City, N.C. |
| Wire, TFE insulated | Teledyne Thermatics | Elm City, N.C. |
| Wire, TSP71 ohm | Teledyne Thermatics | Elm City, N.C. |
| Wire, general-purpose | Teledyne Thermatics | Elm City, N.C. |
| Wire, general-purpose | Haveg Industries Inc. | Winooski, Vt. |
| Wire, general purpose | Labarge | Santa Ana, Calif. |

## ACRONYMS AND ABBREVIATIONS

| | |
|---|---|
| A | Ampere |
| A/A | Air-to-air |
| A/G | Air-to-ground |
| A/L | Approach and landing |
| AA | Accelerometer assembly |
| ABE | Arm-based electronics |
| ACCU | Audio central control unit |
| ACE | Automatic checkout equipment |
| ACIP | Aerodynamic coefficient identification package |
| ACK | Acknowledge |
| ADI | Attitude director indicator |
| ADS | Air data system |
| ADS | Audio distribution system |
| ADTA | Air data transducer assembly |
| AFB | Air Force Base |
| AFD | Aft flight deck |
| AFRSI | Advanced flexible reusable surface insulation |
| AFSCF | Air Force Satellite Control Facility |
| AFTA | Aft frame tilt actuator |
| AGL | Above ground level |
| AGS | Anti-gravity suit |
| ALC | Aft load controller |
| ALCA | Aft load controller assembly |
| ALT | Approach and landing test |
| AMC | Aft motor controller |
| AMEU | Alpha Mach indicator electronic unit |
| AMI | Alpha Mach indicator |
| AOA | Abort once around |
| APC | Aft power controller |
| APCA | Aft power controller assembly |
| APU | Auxiliary power unit |
| ARF | Assembly and refurbishment facility |
| ARIA | Advanced range instrumentation aircraft |
| ARPCS | Atmosphere revitalization pressure control system |
| ARS | Air revitalization system |
| ASA | Aerosurface servoamplifier |
| ASCS | Atmosphere storage and control subsystem (Spacelab) |
| ASE | Airborne support equipment |
| ASI | Augmented spark igniter |
| ATC | Air traffic control |
| ATCS | Active thermal control system |
| ATE | Automatic test equipment |
| ATO | Abort to orbit |
| ATU | Audio terminal unit |
| ATVC | Ascent thrust vector control |
| AUX | Auxiliary |
| AVVEU | Altitude/vertical velocity indicator electronic unit |
| AVVI | Altitude/vertical velocity indicator |
| BDA | Backup drive amplifier |
| BFC | Backup flight control |
| BFCS | Backup flight control system |
| BFS | Backup flight system |
| BITE | Built-in test equipment |
| BSM | Booster separation motor |
| C&T | Communications and tracking |
| C/W | Caution and warning |
| CAPS | Crew altitude protection system |
| CCA | Communications carrier assembly |
| CCAFS | Cape Canaveral Air Force Station |
| CCMS | Checkout, control and monitor system |
| CCTV | Closed-circuit television |
| CCU | Crew communications unit |
| CCU | Communications carrier umbilical |
| CCV | Chamber coolant valve |
| CDF | Confined detonating fuse |
| CDI | Course deviation indicator |
| CDMS | Command and data management system |
| CDS | Central data subsystem |
| c.g. | Center of gravity |
| CEIT | Crew equipment interface test |
| CI | Course (deviation display) invalid |
| CIA | Controller interface assembly |
| CICU | Communication interface control unit |

| | |
|---|---|
| CIS | Communications interface system |
| CITE | Cargo integration test equipment |
| CIU | Communication interface unit |
| CO | Carbon monoxide |
| $CO_2$ | Carbon dioxide |
| COAS | Crewman optical alignment sight |
| CPI | Crosspointer indicator |
| CPU | Central processor unit |
| CRT | Cathode ray tube |
| CSS | Control stick steering |
| D&C | Displays and controls |
| DA | Deployed assembly |
| DA | Distribution assembly |
| DAP | Digital autopilot |
| DBC | Data bus coupler |
| DBIA | Data bus isolation amplifier |
| DBN | Data bus network |
| DCC | Data computation complex (JSC) |
| DCM | Display and control module |
| DDT&E | Design, development, test and evaluation |
| DDU | Display driver unit |
| DEA | Deployed electronics assembly |
| DEU | Display electronics unit |
| DFI | Development flight instrumentation |
| DFRF | Dryden Flight Research Facility |
| DHE | Data-handling equipment |
| DK | Display keyboard |
| DME | Distance-measuring equipment |
| DOD | Department of Defense |
| DOMSAT | Domestic satellite |
| dP/dT | Delta pressure/delta time |
| DPA | Data processing assembly |
| DPS | Data processing system |
| DSC | Dedicated signal conditioner |
| DSN | Deep-Space Network |
| DU | Display unit |
| EAFB | Edwards Air Force Base |
| EAS | Equivalent airspeed |
| ECG | Electrocardiograph |
| ECLSS | Environmental control and life support system |
| ECU | Electrical control unit |
| EED | Electroexplosive device |
| EES | Escape ejection suit |
| EI | Entry interface |
| EIU | Engine interface unit |
| EMK | Emergency medical kit |
| EMU | Extravehicular mobility unit |
| EPDS | Electrical power distribution subsystem |
| EPDU | Electrical power distribution unit |
| EPS | Electrical power system |
| ESA | European Space Agency |
| ESA | Explosive safe area (KSC) |
| ESRO | European Space Research Organization |
| ESS | Equipment support section |
| ESS | Essential |
| ESVS | Escape suit ventilation system |
| ET | External tank |
| ETR | Eastern test range |
| EVA | Extravehicular activity |
| FA | Flight aft |
| FAA | Federal Aviation Agency |
| FC | Flight control |
| FC | Flight critical |
| FC | Fuel cell |
| FCA | Forward controller assembly |
| FCL | Freon coolant loop |
| FCOS | Flight computer operating system |
| FCOS | Flight control operational software |
| FCP | Fuel cell power plant |
| FCR | Flight Control Room |
| FCS | Flight control system |
| FDF | Flight data file |
| FDM | Frequency division multiplexer |
| FES | Flash evaporator system |
| FF | Flight forward |
| FL | Forward link |
| FLCA | Forward load controller assembly |

| | |
|---|---|
| FM | Frequency modulation, frequency modulated |
| FMSP | FM signal processor |
| FPCA | Forward power controller assembly |
| fps | Feet per second |
| $fps^2$ | Feet per second squared |
| FRCI | Fibrous refractory composite insulation |
| FRCS | Forward reaction control system |
| FRSI | Flexible reusable surface insulation |
| FSS | Fixed service structure |
| G&N | Guidance and navigation |
| G/S | Guided steering |
| GCIL | Ground command interface logic |
| $GH_2$ | Gaseous hydrogen |
| $GN_2$ | Gaseous nitrogen |
| GN&C | Guidance, navigation and control |
| GMT | Greenwich Mean Time |
| $GO_2$ | Gaseous oxygen |
| GPC | General-purpose computer |
| GS | Glide slope |
| GSE | Ground support equipment |
| GSFC | Goddard Space Flight Center |
| GSI | Glide slope indicator |
| GSTDN | Ground space flight tracking and data network |
| $H_2$ | Hydrogen |
| HAC | Heading alignment cylinder |
| HAINS | High-accuracy inertial navigation system |
| HAL/S | High-order assembly language/shuttle |
| HDR | High data rate |
| HDRR | High-data-rate recorder |
| HIP | Hardware interface program |
| HiRAP | High-resolution accelerometer package |
| HIU | Headset interface unit |
| $H_2O$ | Water |
| HMCF | Hypergolic Maintenance and Checkout Facility |
| HPFT | High-pressure fuel turbopump |
| HPOT | High-pressure oxidizer turbopump |
| HPU | Hydraulic power unit |
| HRD | High-rate dosimeter |
| HRM | High-rate multiplexer |
| HRSI | High-temperature reusable surface insulation |
| HSI | Horizontal situation indicator |
| HUD | Head-up display |
| I-load | Initial-load |
| IC | Intercomputer communication |
| ICAO | International Civil Aviation Organization |
| IEA | Integrated electronic assembly |
| IMU | Inertial measurement unit |
| IOP | Input/output processor |
| IP | Instrumentation/pulse code modulation master unit data bus |
| IPL | Initial program load |
| ITA | Integrated test article |
| IU | Interface unit |
| IUS | Inertial upper stage |
| IVA | Intravehicular activity |
| JPL | Jet Propulsion Laboratory |
| JSC | Johnson Space Center |
| kbps | kilobits per second |
| KBU | Keyboard unit |
| KSA | Ku-band single access |
| KSC | Kennedy Space Center |
| KUSP | Ku-band signal processor |
| LCA | Load controller assembly |
| LCC | Launch Control Center (KSC) |
| LCG | Liquid-cooled garment |
| LCVG | Liquid cooling and ventilation garment |
| LDR | Low data rate |
| LED | Light-emitting diode |
| LESS | Leading edge structure subsystem |
| LETF | Launch Equipment Test Facility (KSC) |
| $LH_2$ | Liquid hydrogen |
| LiOH | Lithium hydroxide |
| $LO_2$ | Liquid oxygen |
| LPFT | Low-pressure fuel turbopump |

| | |
|---|---|
| LPOT | Low-pressure oxidizer turbopump |
| LPS | Launch processing system |
| LRSI | Low-temperature reusable surface insulation |
| LRU | Line-replaceable unit |
| LVLH | Local vertical/local horizontal |
| LWHS | Lightweight headset |
| MA | Multiple-access |
| MAC | Mean aerodynamic chord |
| MADS | Modular auxiliary data system |
| MBK | Medications and bandage kit |
| Mbps | Megabits per second |
| MCC | Main combustion chamber |
| MCC-H | Mission Control Center–Houston |
| MCDS | Multifunction CRT display system |
| MCIU | Manipulator controller interface unit |
| MCM | MADS control module |
| MCP | Monitoring and control panel |
| MDA | Motor drive amplifier |
| MDD | Mate/demate device |
| MDF | Mild detonating fuse |
| MDM | Multiplexer/demultiplexer |
| MEC | Master events controller |
| MECO | Main engine cutoff |
| MEP | Minimum entry point |
| MET | Mission elapsed time |
| MFV | Main fuel valve |
| MHA | Multiple headset adapter |
| MIA | Multiplexer interface adapter |
| MLG | Main landing gear |
| MLP | Mobile launcher platform |
| MLS | Microwave landing system |
| MM | Major mode or mass memory |
| MMC | Mid motor controller |
| MMCA | Mid motor controller assembly |
| MMH | Monomethyl hydrazine |
| MMS | Multimission modular spacecraft |
| MMSE | Multiuse mission support equipment |
| MMU | Manned maneuvering unit |
| MMU | Mass memory unit |
| MOV | Main oxidizer valve |
| MPC | Mid power controller |
| MPCA | Mid power controller assembly |
| MPL | Minimum power level |
| MRL | Manipulator retention latch |
| MPM | Manipulator positioning mechanism |
| MPS | Main propulsion system |
| MPSR | Multipurpose Support Room |
| MPST | Multipurpose support team |
| MPTA | Main propulsion test article |
| MRL | Manipulator retention latch |
| MSBLS | Microwave scan beam landing system |
| MSFC | Marshall Space Flight Center |
| MTU | Master timing unit |
| MTVC | Manual thrust vector control |
| $N_2$ | Nitrogen |
| NASA | National Aeronautics and Space Administration |
| Nascom | NASA communications network |
| NC | Normally closed |
| NCC | Network Control Center (GSFC) |
| NEP | Nominal entry point |
| NGT | NASA Ground Terminal |
| $NH_3$ | Ammonia |
| NLG | Nose landing gear |
| nmi | Nautical mile |
| $N_2O_4$ | Nitrogen tetroxide |
| NO | Normally open |
| NOCC | Network Operations Control Center (GSFC) |
| NSD | NASA standard detonator |
| NSGT | NASA Ground Terminal |
| NSP | Network signal processor |
| NSTL | National Space Technology Laboratories |
| NWS | Nose wheel steering |
| O&C | Operations and checkout |
| O&C | Operations and control |
| $O_2$ | Oxygen |
| OAA | Orbiter access arm |
| OBS | Operational bioinstrumentation system |

| | |
|---|---|
| OEX | Orbiter experiments |
| OFI | Operational flight instrumentation |
| OI | Operational instrumentation |
| OMRF | Orbiter Modification and Refurbishment Facility |
| OMS | Orbital maneuvering system |
| OPF | Orbiter Processing Facility |
| OPOV | Oxidizer preburner oxidizer valve |
| OPS | Operational sequence |
| OTV | Orbital transfer vehicle |
| OV | Orbiter vehicle |
| $P_c$ | Chamber pressure |
| PAF | Payload attach fitting |
| PAM | Payload assist module |
| PASS | Primary avionics software system |
| PB | Playback |
| PBI | Push button indicator |
| PBS | Protective breathing system |
| PCA | Pneumatic control assembly |
| PCA | Power controller assembly |
| PCM | Pulse code modulation |
| PCMMU | Pulse code modulation master unit |
| PCR | Payload changeout room |
| PCTR | Pad connection terminal room |
| PDF | Pocket dosimeter FEMA |
| PDH | Pocket dosimeter high |
| PDL | Pocket dosimeter low |
| PDRS | Payload deployment and retrieval system |
| PDU | Power drive unit |
| PEAP | Personal egress air pack |
| PEG | Powered explicit guidance |
| PGHM | Payload ground handling mechanism |
| PHF | Payload handling fixture |
| PHSF | Payload Hazardous Servicing Facility |
| PI | Payload interrogator |
| PIC | Pyro initiator controller |
| PL | Payload |
| PLB | Payload bay |
| PLSP | Payload signal processor |
| PLSS | Portable life support system |
| PM | Phase modulation, phase modulated |
| POCC | Payload Operations Control Center |
| POR | Point of resolution |
| POS | Portable oxygen system |
| $PPO_2$ | Oxygen partial pressure |
| PPP | Payload patch panel |
| PRL | Priority rate limiting |
| PROM | Progammable read-only memory |
| PRSD | Power reactant storage and distribution |
| psi | Pounds per square inch |
| psia | Pounds per square inch absolute |
| psid | Pounds per square inch differential |
| psig | Pounds per square inch gauge |
| PSP | Payload signal processor |
| PTC | Passive thermal control |
| PTT | Push to talk |
| QD | Quick disconnect |
| RA | Radar altimeter |
| RAAB | Remote amplifier acquisition and advisory box |
| rad | Radiation equivalent dose |
| RAM | Random-access memory |
| RAU | Remote acquisition unit |
| RCC | Reinforced carbon-carbon |
| RCS | Reaction control system |
| rem | Roentgen equivalent in man |
| RF | Radio frequency |
| RGA | Rate gyro assembly |
| RHC | Rotational hand controller |
| RJD | Reaction jet driver |
| RL | Return link |
| RM | Redundancy management |
| RMS | Remote manipulator system |
| rms | Root mean square |
| RPC | Remote power controller |
| RPL | Rated power level |
| RPSF | Rotation, Processing and Surge Facility |
| RPTA | Rudder pedal transducer assembly |
| RS | Redundant set (computers) |

| | |
|---|---|
| RSF | Refurbishment and Subassembly Facility (KSC) |
| RSS | Range safety system |
| RSS | Rotating service structure |
| RTC | Real-time command |
| RTG | Radioisotope thermoelectric generator |
| RTLS | Return to launch site |
| RTV | Room-temperature vulcanizing |
| S/M | Systems management |
| SAEF | Spacecraft Assembly and Encapsulation Facility (KSC) |
| SAIL | Shuttle Avionics Integration Laboratory (JSC) |
| SBTC | Speed brake/thrust controller |
| SCA | Sequence control assembly |
| SCA | Shuttle carrier aircraft |
| SCAMA | Station conferencing and monitoring arrangement |
| SCAPE | Self-contained atmosphere protective ensemble |
| SCF | Satellite Control Facility |
| SCM | System control module |
| SCSG | Strain gauge signal conditioner |
| SCU | Signal conditioner unit |
| SDPC | Shuttle Data Processing Complex |
| SEADS | Shuttle entry air data system |
| SEC | Secondary |
| SGLS | Space-ground link system |
| SILTS | Shuttle infrared leeside temperature sensing |
| SIP | Strain isolation pad |
| SIU | Signal interface unit |
| SLF | Shuttle landing facility (KSC) |
| SLS | Spacelab simulator |
| SMAB | Solid Motor Assembly Building |
| SMS | Shuttle mission simulator |
| SMU | Speaker/microphone unit |
| SOMS | Shuttle orbiter medical system |
| SOP | Subsystem operating program |
| SPA | Signal processor assembly |
| SPA | Steering position amplifier |
| SPC | Shuttle processing contractor |
| SPI | Surface position indicator |
| SPIDPO | Shuttle Payload Integration and Development Program Office |
| SPIF | Shuttle Payload Integration Facility |
| SPT | Steering position transducer |
| SOMS | Shuttle orbiter medical system |
| SRB | Solid rocket booster |
| SRM | Solid rocket motor |
| SSME | Space shuttle main engine |
| ST | Star tracker |
| STA | Structural test article |
| STDN | Space flight tracking and data network |
| STS | Space transportation system |
| SUMS | Shuttle upper atmosphere mass spectrometer |
| T/W | Thrust-to-weight |
| TACAN | Tactical air navigation |
| TAEM | Terminal area energy management |
| TDRS | Tracking and Data Relay Satellite |
| TDRSS | Tracking and Data Relay Satellite system |
| THC | Translational hand controller |
| TIO | Target insertion orbit |
| TLM | Telemetry |
| TPS | Thermal protection system |
| TSM | Tail service mast |
| TT&C | Tracking, telemetry and command |
| TVC | Thrust vector control |
| UHF | Ultrahigh frequency |
| VAB | Vehicle Assembly Building |
| VAFB | Vandenberg Air Force Base |
| VCU | Video control unit |
| VFM | View finder monitor |
| VHF | Very high frequency |
| VIB | Vertical Integration Building |
| VIU | Video interface unit |
| VPF | Vertical Processing Facility |
| VTR | Video tape recorder |
| WBSC | Wide-band signal conditioner |
| WCCU | Wireless crew communication unit |
| WCLS | Water coolant loop system |
| WCS | Waste collection system |

| | |
|---|---|
| WMC | Waste management compartment |
| WONG | Weight on nose gear |
| WOW | Weight on wheels |
| WP | Way point |
| WSB | Water spray boiler |
| WSGT | White Sands Ground Terminal |
| WSTF | White Sands Test Facility |
| WTR | Western test range |

# METRIC CONVERSION TABLE

| Multiply | By | To Obtain |
|---|---|---|
| **Length:** | | |
| Inches | 25.4 | Millimeters (mm) |
| Feet | 304.8 | Millimeters (mm) |
| Yards | 0.9144 | Meters (m) |
| Miles | 1.609 | Kilometers (km) |
| Inches | 2.54 | Centimeters (cm) |
| Feet | 0.3048 | Meters (m) |
| **Area:** | | |
| Square Inches | 6.452 | Centimeters Squared ($cm^2$) |
| Square Feet | 0.0929 | Meters Squared ($m^2$) |
| Square Yards | 0.8361 | Meters Squared ($m^2$) |
| 1 Acre | 0.4047 | Hectares (ha) |
| Square Miles | 2.59 | Kilometers Squared ($km^2$) |
| Square Miles | 259.1 | Hectares (ha) |
| **Volume:** | | |
| Cubic Inches | 16.39 | Cubic Centimeters ($cm^3$) |
| Cubic Feet | 0.0283 | Cubic Meters ($m^3$) |
| Cubic Yards | 0.7646 | Cubic Meters ($m^3$) |
| Fluid Ounces | 29.57 | Milliliters (mL) |
| Fluid Quarts | 0.9464 | Liters (L) |
| Gallons | 3.7854 | Liters (L) |
| Fluid Ounces | 0.0296 | Liters (L) |
| **Mass:** | | |
| Ounces | 28.35 | Grams (g) |
| Pounds (lb) | 0.4536 | Kilograms (kg) |
| 1 Ton (2,000 pounds) | 0.9072 | Metric Tons (t) |
| **Speed:** | | |
| Miles per Hour (mph) | 0.447 | Meters per Second (m/s) |
| | 1.609 | Kilometers per Hour (km/h) |
| Knots | 1.852 | Kilometers per Hour (km/h) |
| **Distance:** | | |
| Nautical Miles (nmi) | 1.852 | Kilometers (km) |
| Statute Miles (sm) | 1.609 | Kilometers (km) |
| Nautical Miles (nmi) | 1.1508 | Statute Miles (sm) |
| Statute Miles (sm) | 0.8689 | Nautical Miles (nmi) |
| Statute Miles (sm) | 1,760 | Yards |

| Multiply | By | To Obtain |
|---|---|---|
| **Acceleration:** | | |
| Inches per Second Squared | 2.54 | Centimeters per Second Squared ($cm^2/s$) |
| Feet per Second | 0.3048 | Meters per Second (m/s) |
| Meters per Second (m/s) | 2.237 | Statute Miles per Hour |
| Feet per Second | 0.6818 | Statute Miles per Hour |
| Feet per Second | 0.5925 | Nautical Miles per Hour |
| **Pressure:** | | |
| Pounds per Square Inch (psi) | 6.895 | Kilonewtons per Square Meter (kilopascals—kPa) |
| Millimeters Mercury | 133.32 | Newtons per Square Meter (Pascals—Pa) |
| Pounds per Square Inch (psi) | 51.75 | Millimeters of Mercury (mmHg) |
| **Force:** | | |
| Ounces Force | 0.278 | Newtons (N) |
| Pounds Force | 4.448 | Newtons (N) |
| Newtons | 0.225 | Pounds |
| Kilograms (kg) | 9.807 | Newtons (N) |
| **Flow Rate:** | | |
| Cubic Feet per Minute | 0.283 | Cubic Meters per Second ($m^3/s$) |
| Gallons per Minute | 3.7854 | Liters per Minute (L/m) |
| Pounds Mass per Hour | 0.4536 | Kilograms per Hour (kg/hr) |
| Pounds Mass per Minute | 0.4536 | Kilograms per Minute (kg/m) |
| Pounds Mass per Second | 0.4536 | Kilograms per Second (kg/s) |
| Pounds Mass per Cubic Foot | 16.02 | Kilograms per Cubic Meter ($kg/m^3$) |
| **Power:** | | |
| British Thermal Units (Btu) | 1.054 | Kilojoules per Hour (kj/hr) |
| Brake Horsepower | 0.7457 | Kilowatts (kw) |
| Electric Horsepower | 0.746 | Kilowatts (kw) |
| **Energy:** | | |
| Kilowatt Hours | 3.60 | Megajoules (Mj) |
| **Temperature:** | | |
| $\frac{°F - 32}{1.8}$ | | Degrees Celsius (C) |

Additional information may be obtained by contacting NASA Public Affairs offices:

Sarah G. Keegan/Barbara E. Selby
NASA Headquarters
Washington, D.C. 20546
202 453-8536

Barbara L. Schwartz
Johnson Space Center
Houston, Texas 77058
713 483-5111

Carter Dove
Goddard Space Flight Center
Greenbelt, Maryland 20771
301 286-5566

Lisa Malone
Kennedy Space Center
Florida 32899
407 867-2468

Ed Medal/Jerry Berg
Marshall Space Flight Center
Alabama 35812
205 544-0034

Ralph B. Jackson
Ames-Dryden Flight Research Facility
P.O. Box 273
Edwards, California 93523
805 258-8381

Additional information also may be obtained from Rockwell International Space Transportation Systems Division, 12214 Lakewood Boulevard, Downey, California 90241.
W.F. (Bill) Green
Public Relations/Technical Communications
213 922-2066