#235113

[illegible] CLIS: COMPLEX EIGENSOLVER N90-70472
[illegible] Engineering Information
[illegible]

Unclas
[illegible] 235113

EISI ENGINEERING INFORMATION SYSTEMS, INC.

5120 CAMPBELL AVENUE, SUITE 240
SAN JOSE, CALIFORNIA 95130

NOVEMBER 1977

EISI/A2200
Revision 1

Final Report

Contract NAS8-31974

SPAR Level 12

CEIG - Complex Eigensolver

by

W. D. Whetstone, C. E. Jones, and R. A. Moore

ENGINEERING INFORMATION SYSTEMS, INC.
5120 CAMPBELL AVENUE, SUITE 240
SAN JOSE, CALIFORNIA 95130
(408) 379-0730

Preface

This report was prepared by Engineering Information Systems, Inc. under NASA Contract NAS8-31974 for the George C. Marshall Space Flight Center of the National Aeronautics and Space Administration. The Contracting Officer's Technical Representative was L. A. Kiefling.

This document consists of the following revisions to the SPAR Reference Manual.

	Delete Pages:	Replace With Pages:
Vol-1:	TITLE	TITLE
	i	i
	(new page)	vi
	(new section)	All of Section 13
Vol-2:	TITLE	TITLE
	i, ii	i, ii
	(new section)	Pages C-1 through C-4
Vol-3:	TITLE	TITLE
	i, iv	i, iv
	(new section)	All of Section 18

Submitted by
Engineering Information Systems, Inc.

W. D. Whetstone
President

NOVEMBER 1977

EISI/A2200-1
Revision 1

SPAR
REFERENCE MANUAL
System Level 12

Volume 1
PROGRAM EXECUTION

by

W. D. Whetstone

ENGINEERING INFORMATION SYSTEMS, INC.
5120 CAMPBELL AVENUE, SUITE 240
SAN JOSE, CALIFORNIA 95130
(408) 379-0730

FOREWORD

The version of the SPAR system described in this report was developed by Engineering Information Systems, Inc., under contracts with the George C. Marshall Space Flight Center and the Langley Research Center of the National Aeronautics and Space Administration. The contracting Officer's Technical Representatives were L. A. Kiefling and John Key, MSFC, and J. C. Robinson, LaRC.

The purpose of Volume 1 of the SPAR Reference Manual is to fully define the functions and rules of operation of the system. This document is not intended to stand alone as an introductory guide for new users. It is expected that new users will either attend introductory courses, or be assisted and advised by analysts experienced in the use of SPAR. It is assumed that users are familiar with finite element theory and execution procedures (run set-up, control cards, etc.) on Univac Exec 8 or CDC systems.

Submitted by

Engineering Information Systems, Inc.

W. D. Whetstone

President

Section

13 CEIG - COMPLEX EIGENSOLVER

Section 13

CEIG - COMPLEX EIGENSOLVER

Function. CEIG solves high-order linear eigenproblems of the form:

$$\lambda^2 MX + \lambda(D + G)X + KX = 0. \tag{1}$$

Coefficient matrices M, D, and K are real and symmetric. G is real and anti-symmetric. M may be either diagonal or in SPAR-format. D, G, and K are in SPAR-format. The computed eigenvalues and eigenvectors, λ and X, are complex. The primary application of CEIG is to compute a limited number of eigensolutions for damped and/or spinning structures modelled by finite element systems of high order, i.e. many thousands of degrees of freedom.

The solution procedure used in CEIG is analogous to the one used in EIG. Beginning with initial approximations of n X's, a two-phase iterative procedure is executed:

1- A Stodola-type iteration is performed for each of the n X's.
2- A complex Rayleigh-Ritz analysis is performed, utilizing as generalized coordinates coefficients of the n improved eigenvector approximations computed in the Stodola phase. The output from the Rayleigh-Ritz analysis is a further improved set of eigenvector approximations comprised of linear combinations of the vectors computed in the Stodola phase.

To cause the iterative process to converge on different solutions, a shifting parameter, s, is introduced. Adding sMX to both sides of Eq. (1):

$$(\lambda^2 + s)MX + \lambda(D + G)X + (K - sM)X = 0. \tag{2}$$

The solution procedure is discussed in detail in Volume 2 (Theory) of the SPAR Reference Manual. Example input and results are contained in Volume 3.

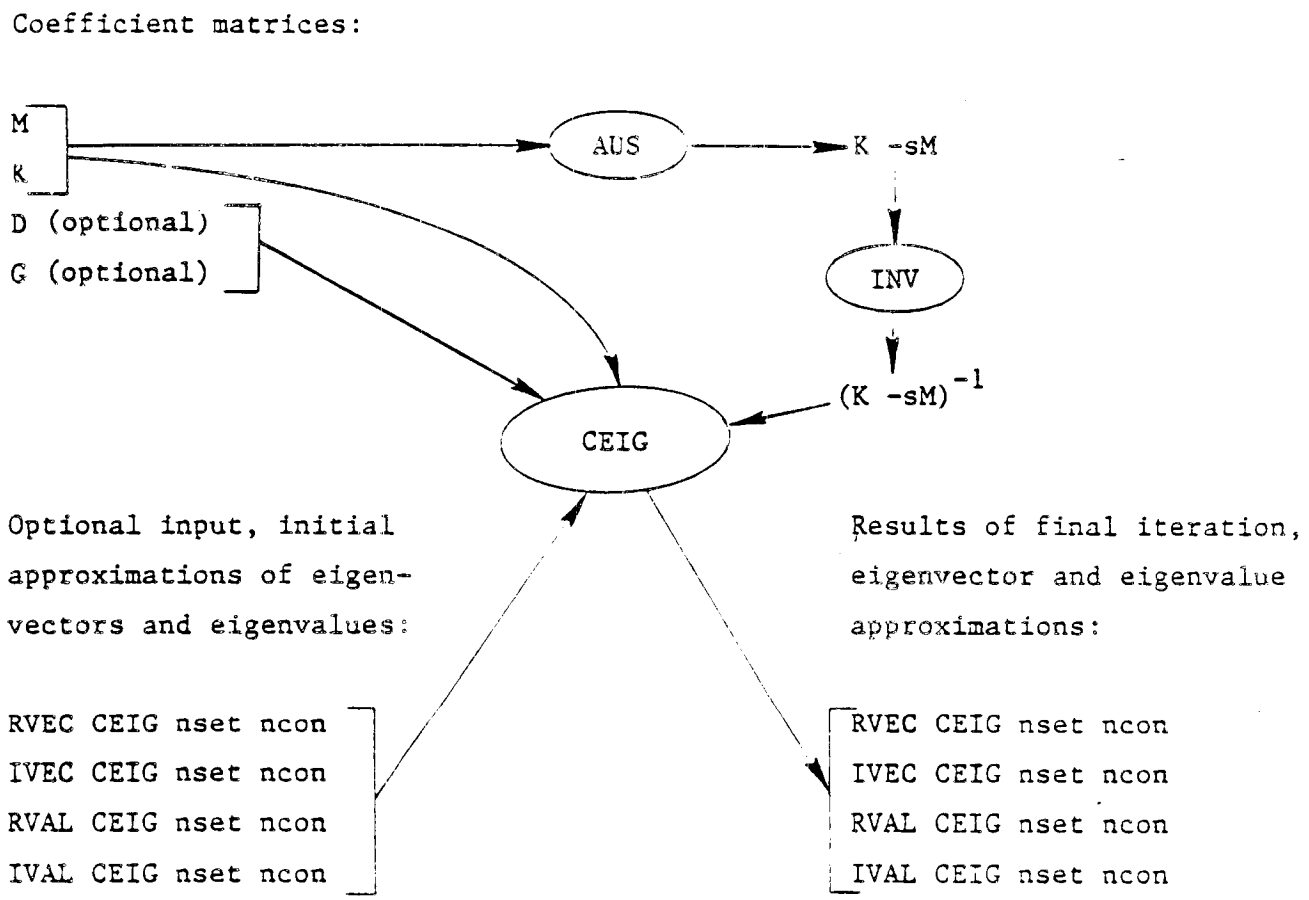

Notes:

(1) Either D or G, but not both, may be omitted.

(2) RVEC contains the real part of the eigenvector approximations.

(3) IVEC contains the imaginary part of the eigenvector approximations.

(4) RVAL contains the real part of the eigenvalue approximations.

(5) IVAL contains the imaginary part of the eigenvalue approximations.

(6) If RVEC, IVEC, RVAL, and IVAL are furnished as initial approximations, these data sets will be overwritten (not deleted and superseded by new data sets having the same name). If you wish to save the original data sets, use DCU to make copies.

(7) RVEC and IVEC are in SYSVEC format.

Figure 13-1 CEIG Data Transactions

CEIG data transactions are shown on Figure 13-1. If RVEC and IVEC do not exist, CEIG will generate RVEC (containing random numbers), and IVEC (containing zeroes). The coefficient matrices are identified by the commands indicated below. L_s and ncon are established by RESET controls.

```
@XQT CEIG
RESET P1= v1, P2= v2, - - - - -$
M=    Lib N1 N2 n3 n4$  M in Eq.(2),  default M= Ls DEM MASK MASK MASK
K=    Lib N1 N2 n3 n4$  K in Eq.(2),  default K= Ls   K MASK MASK MASK*
D=    Lib N1 N2 n3 n4$  D in Eq.(2),  no default
G=    Lib N1 N2 n3 n4$  G in Eq.(2),  no default
KINV= Lib N1 N2 n3 n4$  (K - sM)^-1 ,  default KINV= Ls  INV K ncon
```

RESET Controls.

Name	Default Value	Meaning
SOURCE	1	L_s, the primary data source library.
DEST	1	Destination library for RVEC, IVEC, RVAL, IVAL output.
LTEMP	21	Temporary library used to contain results of intermediate computations.
CM	.0	Value of the shift parameter, s, in Eq.(2).
SET	1	nset (see Fig. 13-1)
CON	1	ncon (see the KINV command above, and Fig. 13-1)
N	0	N= n, the number of initial approximations to be generated. In the default case (n=0), iteration on existing RVEC and IVEC data sets is resumed.
NDYN	6	Maximum number of iterations. Note that if NDYN=0 and N≠0, the output RVEC will contain random numbers, and IVEC will contain zeroes. It will sometimes be useful to use AUS/UNION to concatenate initial vectors so produced with other initial approximations.
CONV	$10.^{-5}$	Iteration termination controls. The measure of convergence of eigenvalues at iteration j is $e = \lvert(r_j - r_{j-1})/r_j\rvert$, where r = the modulus of the eigenvalue. An eigenvalue is converged if e is less than CONV. Execution will be terminated if at least NREQ eigenvalues have converged, and there are no unconverged eigenvalues within the range, V1 < r < V2.
V1	.0	
V2	.0	
NREQ	0	

* Note that the K= command indicates K (not K-sM), if a shift is made.

RESET Controls, continued:

Name	Default Value	Meaning
HIST	0	Any non-zero value will cause a printout to be produced displaying the history of eigenvalue approximations computed at succesive steps in the iterative procedure.
CMETHOD	1	If CMETHOD= 1, eigenvalues as computed in the Rayleigh-Ritz phase of the iterative process will be stored in RVAL and IVAL. If CMETHOD= 0, an alternate procedure is used.
CBAL	0	CBAL= 1 to utilize "balancing" in the Rayleigh - Ritz phase.

Core Requirements. The minimum core requirements of CEIG are slightly more than twice the number of system degrees of freedom (i.e. the number of joints x the no. of dof/joint) plus the greatest block length of any of the input arrays. For example, if the structure has 1000 joints and 6 dof/joint, and the greatest block length of M, K, G, D, and K^{-1} is 3584, the minimum core requirement would be slightly more than 12000 + 3584. However, it is usually best to furnish at least twice the minimum amount, in order to reduce I/O activity. CEIG automatically uses all extra core space to minimize I/O costs.

Costs. Execution costs will be approximately proportional to the number of iterations times $(C_1 + C_2 + C_3)$, as defined below. The constants c_1, c_2, and c_3 will vary from system to system.

$C_1 = c_1 \times n \times (I_{c2} + I_{c3})$, linear equation solutions, MX, KX, DX, and GX multiplications.

$C_2 = c_2 \times n^2 \times$ (no. of joints x no. of degrees of freedom/joint), inner product operations e.g. X^t (MX).

$C_3 = c_3 \times n^3$, Rayleigh - Ritz solution.

The above equations are not precise, and are intended as a rough guide only. Normally, the $c_1 \times n \times I_{c2}$ term will dominate if a few modes of a very large (e.g. many thousand d.o.f.) problem are computed. It will often be very cost-effective to use real modes computed by EIG as initial approximations.

NOVEMBER 1977

EISI/A2200-2
Revision 1

SPAR

REFERENCE MANUAL

System Level 12

Volume 2

Theory

ENGINEERING INFORMATION SYSTEMS, INC.
5120 CAMPBELL AVENUE, SUITE 240
SAN JOSE, CALIFORNIA 95130
(408) 379-0730

FOREWORD

The version of the SPAR system described in this report was developed by Engineering Information Systems Inc., under contracts with the George C. Marshall Space Flight Center and the Langley Research Center of the National Aeronautics and Space Administration. The contracting Officer's Technical Representatives were L. A. Kiefling and John Key, MSFC, and J. C. Robinson, LaRC.

The purpose of this document, which is intended for use in conjuction with Volumes 1 and 3 of the SPAR Reference Manual, is to present information concerning the basic assumptions underlying various components of the SPAR system. A separate Table of Contents is given for each Section of this volume.

Submitted by

Engineering Information Systems, Inc.

W. D. Whetstone

President

GENERAL TABLE OF CONTENTS

Chapter Title	Page Prefix	Prepared by	Contract
Elastic Beam, Membrane, and Bending Element Formulations	A	W. D. Whetstone, C. L. Yen, C. E. Jones	NAS8-26352 (NASA-MSFC), NAS1-13977 (NASA-LaRC), NAS8-30536 (NASA-MSFC)
Fluid Element Formulations	B	C. L. Yen	NAS8-30536 (NASA-MSFC)
CEIG-Complex Eigensolver	C	W. D. Whetstone, C. E. Jones	NAS9-31974 (NASA-MSFC)

CEIG - Complex Eigensolver

CEIG solves high-order linear eigenproblems of the following type:

$$\lambda^2 MX + \lambda(D + G)X + KX = 0. \tag{1}$$

Matrices M, D, and K are real and symmetric. G is real and antisymmetric. M may be diagonal or general (SPAR-format). D, G, and K are SPAR-format. The complex eigenvalues and eigenvectors, λ and X, occur in conjugate pairs.

The primary application intended for CEIG is computation of a limited number of eigensolutions for damped and/or spinning structures modelled by finite element networks of high order, i.e. many thousands of degrees of freedom.

Iterative Procedure

CEIG iterates simultaneously on approximations of n eigenvectors. In the following discussion, Y_R and Y_I are the real and imaginary parts, respectively, of the current eigenvector approximations at the beginning of an iteration cycle. That is, where the current approximation of X^j is $Y^j + iY^j$,

$$Y_R = \{Y_R^1 \; Y_R^2 \; - - \; Y_R^n\}$$

$$Y_I = \{Y_I^1 \; Y_I^2 \; - - \; Y_I^n\} \tag{2}$$

Each iteration cycle consists of the following steps. Details of individual steps are discussed later.

1- Eigenvalue approximations, $\tilde{\lambda}^j$, corresponding to each eigenvector approximation, $Y_R^j + iY_I^j$, for j = 1 througn n, are computed and compared with the corresponding eigenvalue approximations as determined in the preceeding iteration cycle. If the convergence criteria are met (see Volume 1 of the SPAR Reference Manual) execution is terminated. Otherwise, the following steps are performed.

2- A Stodola procedure is executed to establish improved eigenvector approximations, $Z_R + iZ_I$, where

$$Z_R = \{Z_R^1 \quad Z_R^2 \quad - - \quad Z_R^n\}$$

$$Z_I = \{Z_I^1 \quad Z_I^2 \quad - - \quad Z_I^n\}. \tag{3}$$

3- Preparatory to performing a Rayleigh - Ritz analysis in which coefficients of the $(Z_R^j + iZ_I^j)$'s are used as generalized coordinates, the following twelve n by n matrices are computed:

$$\begin{array}{lll} Z_R^t \; M \; Z_R, & Z_R^t \; M \; Z_I, & Z_I^t \; M \; Z_I, \\ Z_R^t \; D \; Z_R, & Z_R^t \; D \; Z_I, & Z_I^t \; D \; Z_I, \\ Z_R^t \; G \; Z_R, & Z_R^t \; G \; Z_I, & Z_I^t \; G \; Z_I, \\ Z_R^t \; K \; Z_R, & Z_R^t \; K \; Z_I, & Z_I^t \; K \; Z_I. \end{array} \tag{4}$$

4- A Rayleigh - Ritz analysis is performed, resulting in computation of new approximations of n eigenvalues, and the four E_{km} matrices used in the following step.

5- The final step in an iteration cycle is back-transformation of the eigenvectors computed in the Rayleigh - Ritz procedure:

$$\text{new} \quad Y_R = Z_R \; E_{RR} + Z_I \; E_{RI}$$

$$\text{new} \quad Y_I = Z_R \; E_{IR} + Z_I \; E_{II}. \tag{5}$$

Computation of Eigenvalue Approximations.

In Step 1 of each iteration cycle, eigenvalue approximations, $\tilde{\lambda}^j = \tilde{\lambda}^j_R + i\tilde{\lambda}^j_I$, for j = 1 through n, are determined by replacing λ and X in Eq.(1) with $\tilde{\lambda}^j$ and Y^j, and pre-multiplying by $(Y^j)^t$, as indicated by the following equations. Where

$$a = (Y^j)^t \; M \; Y^j,$$

$$b = (Y^j)^t \; D \; Y^j \quad (\text{note } (Y^j)^t \; G \; Y^j = 0 \text{ since } G = -G^t), \text{ and}$$

$$c = (Y^j)^t \; K \; Y^j, \tag{6}$$

$$a \; (\tilde{\lambda}^j)^2 + b \; \tilde{\lambda}^j + c = 0 \; . \tag{7}$$

From Eq.(7):

$$\tilde{\lambda}^j = \frac{1}{2}\left[-\frac{b}{a} \pm i\sqrt{4\,\frac{c}{a} - \left(\frac{b}{a}\right)^2} \right] . \tag{8}$$

Solution of Eq.(8) is simplified by the fact that although a, b, and c are complex, c/a and b/a are real.

Stodola Procedure.

Eq. (9) below is equivalent to Eq.(1). The +sMX and -sMX terms are introduced to furnish a means of causing the iterative procedure to converge on solutions in different regions. The parameter s is analogous to the spectral shift parameter used in inverse power iteration procedures for solving real eigenproblems.

$$(\lambda^2 + s) \; M \; X + \lambda(D + G) \; X + (K - sM) \; X = 0. \tag{9}$$

Eq.(9) may be re-written as Eqs.(10) and (11):

$$F = (\lambda^2 + s) \, M \, X + \lambda(D + G) \; X, \text{ and} \tag{10}$$

$$X = -(K - sM)^{-1} F. \tag{11}$$

In the Stodola procedure, each of the n eigenvector approximations, $Y^j = Y_R^j + iY_I^j$, for j = 1 through n, is used to compute an improved approximation, $Z^j = Z_R^j + iZ_I^j$, as follows:

- On the right side of Eq.(10), λ and X are replaced by $\tilde{\lambda}^j$ and Y^j, to compute a Stodola "force" vector, $\tilde{F} = \tilde{F}_R^j + i\,\tilde{F}_I^j$.

- Replacing F by $\tilde{F}^j$ in Eq.(11), the real and imaginary parts of Z^j are computed as:

$$Z_R^j = -(K - sM)^{-1}\,\tilde{F}_R^j ,$$
$$Z_I^j = -(K - sM)^{-1}\,\tilde{F}_I^j .$$

- Z^j is normalized such that the greatest modulus of any element is one.

Rayleigh - Ritz Procedure

Eq.(5) may be written as

$$[Y_R + i\,Y_I] = [Z_R + i\,Z_I][Q_R + i\,Q_I] \tag{12}$$

where

$$Q_R = E_{RR} = E_{II}, \text{ and } Q_I = E_{IR} = -E_{RI} .$$

The Rayleigh-Ritz procedure consists of replacing X in Eq.(1) with the above expression for $[Y_R + iY_I]$ and pre-multiplying by $[Z_R + iZ_I]^t$. This results in the following low-order complex eigenproblem:

$$[\lambda^2\overline{M} + \lambda(\overline{D} + \overline{G}) + \overline{K}]Q_R + iQ_I = 0, \tag{13}$$

where

$$\overline{M} = (Z_R^tMZ_R - Z_I^tMZ_I) + i(Z_R^tMZ_I + Z_I^tMZ_R),$$
$$\overline{K} = (Z_R^tKZ_R - Z_I^tKZ_I) + i(Z_R^tKZ_I + Z_I^tKZ_R),$$
$$\overline{D} = (Z_R^tDZ_R - Z_I^tDZ_I) + i(Z_R^tDZ_I + Z_I^tDZ_R), \text{ and}$$
$$\overline{G} = (Z_R^tGZ_R - Z_I^tGZ_I) + i(Z_R^tGZ_I + Z_I^tGZ_R).$$

The complex eigenvalues and eigenvectors at Eq.(13) are computed with a set of routines from the Eigensystem Subroutine Package, EISPACK.* Before entering the EISPACK routines, Eq.(13) must be converted to the form

$$\left[A - \lambda I\right] X = 0 \tag{15}$$

To accomplish this, let

$$\overline{Q} = \lambda Q, \text{ where } Q = \left[Q_R + iQ_I\right]. \tag{16}$$

Substituting Eq.(16) into Eq.(13) and introducing the equality $\overline{M}\,\overline{Q} = \lambda \overline{M} Q$ yields

$$\begin{bmatrix} \overline{K} & (\overline{D} + \overline{G}) \\ 0 & -\overline{M} \end{bmatrix} \begin{bmatrix} Q \\ \overline{Q} \end{bmatrix} + \lambda \begin{bmatrix} 0 & \overline{M} \\ \overline{M} & 0 \end{bmatrix} \begin{bmatrix} Q \\ \overline{Q} \end{bmatrix} = 0. \tag{17}$$

Premultiplying Eq.(17) by $\begin{bmatrix} 0 & \overline{M}^{-1} \\ \overline{M}^{-1} & 0 \end{bmatrix}$ produces the desired following form for the reduced eigenproblem:

$$\begin{bmatrix} 0 & I \\ -\overline{M}^{-1}\overline{K} & -\overline{M}^{-1}(\overline{D} + \overline{G}) \end{bmatrix} \begin{bmatrix} Q \\ \overline{Q} \end{bmatrix} - \lambda I \begin{bmatrix} Q \\ \overline{Q} \end{bmatrix} = 0. \tag{18}$$

The eigenvalues λ and eigenvectors $\left[Q\ \overline{Q}\right]^t$ of Eq.(18) occur in complex conjugate pairs. One vector representing each conjugate pair is selected and used to construct the transformation matrices E_{RR}, E_{RI}, E_{IR}, and E_{II}.

---

* The EISPACK system of eigensystem routines was developed by the Applied Mathemetics Division, Argonne National Laboratory.

NOVEMBER 1977

EISI/A2200-3
Revision 1

SPAR
REFERENCE MANUAL
System Level 12

Volume 3
DEMONSTRATION PROBLEMS

by

C. E. Jones, R. A. Moore, C. L. Yen, and W. D. Whetstone

ENGINEERING INFORMATION SYSTEMS, INC.
5120 CAMPBELL AVENUE, SUITE 240
SAN JOSE, CALIFORNIA 95130
(408) 379-0730

FOREWORD

The version of the SPAR system described in this report was developed by Engineering Information Systems, Inc., under contracts with the George C. Marshall Space Flight Center and the Langley Research Center of the National Aeronautics and Space Administration. The contracting Officer's Technical Representatives were L. A. Kiefling and John Key, MSFC, and J. C. Robinson, LaRC.

The participants in the studies reported in this document were W. D. Whetstone, C. E. Jones, and R. A. Moore. Material in Sections 2 through 9 was derived from a similar document prepared under NAS8-26352, in which C. L. Yen was also a participant.

Submitted by

Engineering Information Systems, Inc.

W. D. Whetstone

President

9.4 Effects of Pre-Tension on Vibration
9.5 Buckling of a Cantilever due to Lateral Load
9.6 Buckling due to Pure Bending
9.7 Buckling due to Thermal Load
9.8 Effects of Thermal Pre-Stress on Vibration

10 LUT (SATURN 5 LAUNCHER UMBILICAL TOWER)

11 MECHANISM

12 HYPERBOLIC PARABOLOID

13 COMPOSITE TOROIDAL SHELL

14 DYNAMIC RESPONSE AND BACK TRANSFORMATION

14.1 Cantilevered Beam
14.2 Transmission Tower

15 SUBSTRUCTURE ANALYSIS

16 NON-SYMMETRICALLY LOADED SYMMETRIC STRUCTURES

17 FLUID ELEMENTS

17.1 FLUID SLOSH IN A RIGID CONTAINER
17.2 HYDROELASTIC MODES

18 VIBRATION OF ROTATING AND DAMPED STRUCTURES

18.1 Spinning Axisymmetric Beam
18.2 Rotating Beam (Laurenson's problem)
18.3 Rotating Cantilevered L-Beam
18.4 Damped Beam
18.5 References

REFERENCES

18. VIBRATION OF ROTATING AND DAMPED STRUCTURES

The usual formulation of the linear eigenproblem for damped rotating structures, as indicated in References 1-6 at the end of this section, is:

$$\lambda^2 MX + \lambda(D + G)X + KX = 0 \quad . \tag{1}$$

In Eq (1),

M = Mass matrix

D = Damping matrix

$G = -G^t$ = Coriolis matrix, and

$K = K_e$, the elastic stiffness matrix,

$+K_c$, the centripetal force effects matrix,

$+K_g$, the initial stress stiffness matrix. (2)

In the following equations, it is assumed that M is based on a lumped mass model. The subscript i refers to joint i, for i=1 through n, the number of joints in the structure. In Eq (3), ω_x, ω_y and ω_z are constant spin rates about global axes x, y, and z.

$$W = \begin{bmatrix} w_1 & & & & & & \\ & w_2 & & & & & \\ & & \ddots & & & & \\ & & & \ddots & & & \\ & & & & \ddots & & \\ & & & & & \ddots & \\ & & & & & & w_n \end{bmatrix}, \text{ where } w_i = \begin{bmatrix} 0 & -\omega_z & \omega_y & 0 & 0 & 0 \\ & 0 & -\omega_x & 0 & 0 & 0 \\ & & 0 & 0 & 0 & 0 \\ & & & 0 & 0 & 0 \\ & & & & 0 & 0 \\ \text{anti-symmetric} & & & & & 0 \end{bmatrix} \tag{3}$$

$$G = WM + MW \tag{4}$$

$$K_c = -W^t MW \tag{5}$$

The initial stress stiffness matrix, K_g, is based on the stress state corresponding to joint motions U in Eq (6):

$$U = -(K_c + K_e)^{-1} K_c P \quad \text{where} \tag{6}$$

$$P = \begin{bmatrix} p_1 \\ p_2 \\ \cdot \\ \cdot \\ \cdot \\ \cdot \\ \cdot \\ \cdot \\ p_n \end{bmatrix}, \text{ and } p_i = \begin{bmatrix} x_i \\ y_i \\ z_i \\ 0 \\ 0 \\ 0 \end{bmatrix}. \tag{7}$$

In Eq (7), x_i, y_i and z_i are the position coordinates of joint i relative to the spin center.

In the preceding equations GX is the force due to Coriolis acceleration, $K_c X$ is the force due to centripetal acceleration, and $-K_c P$ is the centrifugal force vector caused by constant spin rate.

The purpose of this section is to verify the function of CEIG and to give examples of CEIG output.

Sections 18.1, 18.2, and 18.3 compare CEIG results with published results for several spinning structure problems. Section 18.4 illustrates computation of damped modes of a cantilevered beam. Section 18.5 illustrates application of the spectral shift parameter, s.

In several instances, eigenvectors are displayed in polar form. The following procedure was used to obtain these displays:

```
)MOT AUS
  ONLINE=0:OUTLIB=2:INLIB=2
  DEFINE P= 1 PVEC CEIG 1 1 N⍎
  DEFINE I= 1 IVEC CEIG 1 1 N⍎
     P2=SQUARE(P)
     I2=SQUARE(I)
     P2I2=SUM(P2,I2)
     PSQT=SQRT(P2I2)
     P1=RECIP(P)
     TAN=PROD(I,P1)
     PSQ=SQRT(P2)
     PSQ1=RECIP(PSQ)
     SIGN=PROD(P,PSQ1)
     PMOD=PROD(SIGN,PSQT)
  OUTLIB=1
     POLP CEIG N⍎ 0= UNION(PMOD,TAN)
  ALPHA: CASE TITLES N⍎ 0
     1'EIGENVECTOR MODULUS
     2'TANGENT OF EIGENVECTOR PHASE ANGLES
)MOT VPRT
  TPRINT POLP CEIG N⍎ 0'POLAR FORM OF EIGENVECTOR N⍎
  )TOP
```

Change all N⍎ to vector number before executing this procedure.

18.1 SPINNING AXISYMMETRIC BEAM

Vibrational modes were computed for the undamped axisymmetric cantilevered beam shown below. Results are compared with the analytical solution given in Reference 1 (Likins).

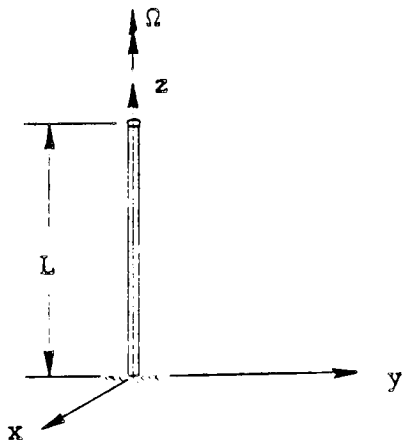

$E =$	$10. \times 10^6$	lb/in^2
$\nu =$	.3	
$\rho =$	.1	lb/in^3
$L =$	40.	in
$I_1 = I_2 =$	$4. \times 10^{-5}$	in^4
$A =$	.001	in^2
$\Omega =$	8.22	cps

In this problem, D and K_g in Eq.(1) are zero. The beam was modelled as ten E21 beam elements of equal length.

Results

Frequencies(Hz) of the non-spinning beam computed by SPAR/EIG	Frequencies (Hz) of the spinning beam: Analytical solution	SPAR/CEIG results
13.616	5.396	5.395
13.616	21.836	21.836
83.429	75.209	75.209
83.429	91.649	91.649
228.985	220.765	220.764
228.985	237.205	237.207

As indicated in Reference 1, the oscillation of the spinning beam is a circular motion of all points on the beam. The displacements in directions 1 and 2 are always 90 degrees out of phase. Mode 1 is displayed in both rectangular and polar form on the following page.

REAL PART, MODE 1 ID= 1/ 1/ 1

JOINT	1	2	3	4	5	6
1	.000 ◆	.000 ◆	.000 ◆	.000 ◆	.000 ◆	.000 ◆
2	.804-02	-.324-01	-.381-18	.109-01	.272-02	.000 ◆
3	.299-01	-.120+00	-.743-18	.195-01	.485-02	.000 ◆
4	.624-01	-.251+00	-.107-17	.258-01	.642-02	.000 ◆
5	.102+00	-.412+00	-.134-17	.300-01	.746-02	.000 ◆
6	.147+00	-.591+00	-.154-17	.324-01	.805-02	.000 ◆
7	.194+00	-.779+00	-.167-17	.334-01	.829-02	.000 ◆
8	.241+00	-.970+00	-.171-17	.336-01	.834-02	.000 ◆

IMAGINARY PART, MODE 1 ID= 1/ 1/ 1

JOINT	1	2	3	4	5	6
1	.000 ◆	.000 ◆	.000 ◆	.000 ◆	.000 ◆	.000 ◆
2	.324-01	.804-02	.370-18	-.272-02	.109-01	.000 ◆
3	.120+00	.299-01	.721-18	-.485-02	.195-01	.000 ◆
4	.251+00	.624-01	.104-17	-.642-02	.258-01	.000 ◆
5	.412+00	.102+00	.130-17	-.746-02	.300-01	.000 ◆
6	.591+00	.147+00	.150-17	-.805-02	.324-01	.000 ◆
7	.779+00	.194+00	.162-17	-.829-02	.334-01	.000 ◆
8	.970+00	.241+00	.166-17	-.834-02	.336-01	.000 ◆

POLAR FORM OF EIGENVECTOR 1 ID= 1/ 0/ 1
EIGENVECTOR MODULUS

JOINT	1	2	3	4	5	6
1	.000	.000	.000	.000	.000	.000
2	.333-01	-.333-01	.000	.113-01	.113-01	.000
3	.124+00	-.124+00	.000	.201-01	.201-01	.000
4	.259+00	-.259+00	.000	.266-01	.266-01	.000
5	.424+00	-.424+00	.000	.309-01	.309-01	.000
6	.609+00	-.609+00	.000	.334-01	.334-01	.000
7	.803+00	-.803+00	.000	.344-01	.344-01	.000
8	.100+01	-.100+01	.000	.346-01	.346-01	.000

POLAR FORM OF EIGENVECTOR 1 ID= 1/ 0/ 2
TANGENT OF EIGENVECTOR PHASE ANGLES

JOINT	1	2	3	4	5	6
1	.000	.000	.000	.000	.000	.000
2	.402+01	-.248+00	-.970+00	-.248+00	.402+01	.000
3	.402+01	-.248+00	-.970+00	-.248+00	.402+01	.000
4	.402+01	-.248+00	-.970+00	-.248+00	.402+01	.000
5	.402+01	-.248+00	-.970+00	-.248+00	.402+01	.000
6	.402+01	-.248+00	-.970+00	-.248+00	.402+01	.000
7	.402+01	-.248+00	-.970+00	-.248+00	.402+01	.000
8	.402+01	-.248+00	-.970+00	-.248+00	.402+01	.000

Input Data

The following runstream was used to produce the results described in this subsection:

```
$USE SPAR-A.,SP1.
$XQT TAB
  START 8
  MATC: 1
  JLOC: 1
  BB
    1 0.: 1.5292-04 0.: : : : $
    2 0.: .76459-04 0.: : : : $
$XQT ELD
  E25:2 2:3 3:4 4:5 5:6 6:7 7
      NSECT=2:1 1:8 8
$XQT E
$XQT EKS
$XQT TOPO
$XQT K
$XQT DCU
  CHANGE 1 K SPAR 36 0, G SPAR 36 0
$USE SPAR-A.,SP2.
$USE SPAR-B.,SP1.
$XQT TAB
  START 8
  MATC: 1 10.0+06 0.3 0.1
  JLOC: 1 0. 0. 0. 0. 0. 40. 8 1
  BA: GIVN 1 4.-05 0. 4.-05 0. 1.00-03
  MREF: 1 1 1 1 1.
  CON 1: ZERO 1 2 3 4 5 6: 1
         ZERO 6: 2,8
$XQT ELD
  E21: 1 2 1 7
$XQT E
  RESET G=386.
$XQT EKS
$XQT TOPO
$XQT K
$XQT INV
$XQT EIG
 RESET INIT=8, NREQ=6
$XQT DCU
 COPY 2,1  G SPAR 36 0
$XQT AUS
  SYSVEC: WS
     I=1 2: J=1,8: 2667.5 2667.5
  KC= PROD(WS,DEM)
  KEKC=SUM(K, -1.0 KC)
$XQT INV
 RESET K=KEKC
$XQT CEIG
 RESET  NREQ=4, HIST=1, N=6, NDYN=10
  M=1 DEM
  K=1 KEKC
  G=1 G
  KINV=1 INV KEKC
STOP
```

Create G matrix in SPAR-format, and store it in SPAR-B.

Compute modes of the non-spinning beam.

Move G from SPAR-B to SPAR-A.

Compute K_c and $(K_e - K_c)$.

Compute modes of the spinning beam.

CEIG Print-out

The following printout was produced by CEIG in executing the problem described in this subsection.

```
@XOT CEIG
 NREQ=        4
 HIST=        1
 N   =        6
 NDYN=       10
 DATA SPACE=     20000
 ITERATION  2, NO CONVERGED ROOTS
 ITERATION  3, NO CONVERGED ROOTS
 ITERATION  4, NO CONVERGED ROOTS
 ITERATION  5, NO CONVERGED ROOTS
 ITERATION  6,  2 ROOTS CONVERGED

        REAL              IMAGINARY
   3   .32492993-04     .47255000+03
   4   .23591540-04     .57584727+03
 ITERATION  7,  3 ROOTS CONVERGED

        REAL              IMAGINARY
   2   .12710052-02     .13719836+03
   3  -.53142094-02     .47254866+03
   4   .44930413-02     .57584742+03
 ITERATION  8,  3 ROOTS CONVERGED

        REAL              IMAGINARY
   2  -.87929085-04     .13719731+03
   3  -.94359861-03     .47254840+03
   4   .52474042-04     .57584481+03
 ITERATION  9,  5 ROOTS CONVERGED

        REAL              IMAGINARY
   2   .86094256-04     .13719733+03
   3   .14465808-03     .47254882+03
   4  -.88579342-04     .57584813+03
   5  -.52541564-03     .13871032+04
   6  -.11731889-02     .14904145+04
 COMPLEX EIGENVALUES, ITERATION  9
 IEQ    REAL              IMAGINARY        HZ              IERR
   1  -.15053399-03     .33900352+02    .53954104+01    .28202023-04
   2   .86094256-04     .13719733+03    .21835641+02    .16682674-06
   3   .14465808-03     .47254882+03    .75208508+02    .88798591-06
   4  -.88579342-04     .57584813+03    .91649109+02    .57633019-05
   5  -.52541564-03     .13871032+04    .22076441+03    .10890467-05
   6  -.11731889-02     .14904145+04    .23720692+03    .70946613-05
```

```
EIGENVALUE ITERATION HISTORY
MODE   1
 IT      REAL                IMAGINARY          MODULUS
  1    .00000000          .39955923+05      .39955923+05
  2    .31506806-01       .37580572+02      .37580585+02
  3    .96735473-02       .33907289+02      .33907290+02
  4   -.83769097-03       .33902792+02      .33902792+02
  5    .35620565-03       .33900350+02      .33900350+02
  6   -.65493863-04       .33901180+02      .33901180+02
  7    .19073486-03       .33900747+02      .33900747+02
  8    .21886288-03       .33901308+02      .33901308+02
  9   -.15053398-03       .33900352+02      .33900352+02
MODE   2
 IT      REAL                IMAGINARY          MODULUS
  1    .00000000          .37930914+05      .37930914+05
  2    .37309260-01       .49099084+03      .49099084+03
  3    .49033819-01       .13729155+03      .13729156+03
  4   -.37445672-01       .13715801+03      .13715801+03
  5   -.15868017-02       .13718198+03      .13718198+03
  6    .18243577-03       .13719773+03      .13719773+03
  7    .12710052-02       .13719836+03      .13719836+03
  8   -.87929085-04       .13719731+03      .13719731+03
  9    .86094256-04       .13719733+03      .13719733+03
MODE   3
 IT      REAL                IMAGINARY          MODULUS
  1    .00000000          .30247029+05      .30247029+05
  2   -.35421233+03       .39567076+03      .53105717+03
  3    .93910226-03       .47257481+03      .47257481+03
  4    .25853954-02       .47255378+03      .47255378+03
  5    .98406081-03       .47254568+03      .47254568+03
  6    .38492993-04       .47255000+03      .47255000+03
  7   -.53142094-02       .47254866+03      .47254866+03
  8   -.94359861-03       .47254840+03      .47254840+03
  9    .14465808-03       .47254882+03      .47254882+03
```

The display is terminated here for brevity - CEIG displays history for all modes, if requested.

Data Sets Produced

The following DCU TOC defines the output data sets produced by CEIG in this example.

```
TABLE OF CONTENTS, LIBRARY  1

                                  E                                T    DATA SET NAME
 IED       RR    DATE    TIME    R    WORDS     NJ  NI*NJ    V    N1    N2    N3    N4
  31      718 111777 092424    0      288      8     48   -1  RVEC  CEIG     1     1
  32      730 111777 092424    0      288      8     48   -1  IVEC  CEIG     1     1
  33      756 111777 092424    0        6      1      6   -1  RVAL  CEIG     1     1
  34      757 111777 092424    0        6      1      6   -1  IVAL  CEIG     1     1
```

18.2 ROTATING BEAM (Laurenson's problem)

Vibrational modes were computed for the undamped cantilevered beam shown below. Results are compared with those given in Reference 3. Two sets of CEIG results are given, corresponding to different values of beam torsional stiffness per unit length, K_t. The value of $K_t = .7954 \times 10^{-4}$ assumes that the cross section is rectangular. The value of $K_t = .01$ is used to effectively constrain torsional motion to permit direct comparison with Reference 3, in which torsional effects are not considered.

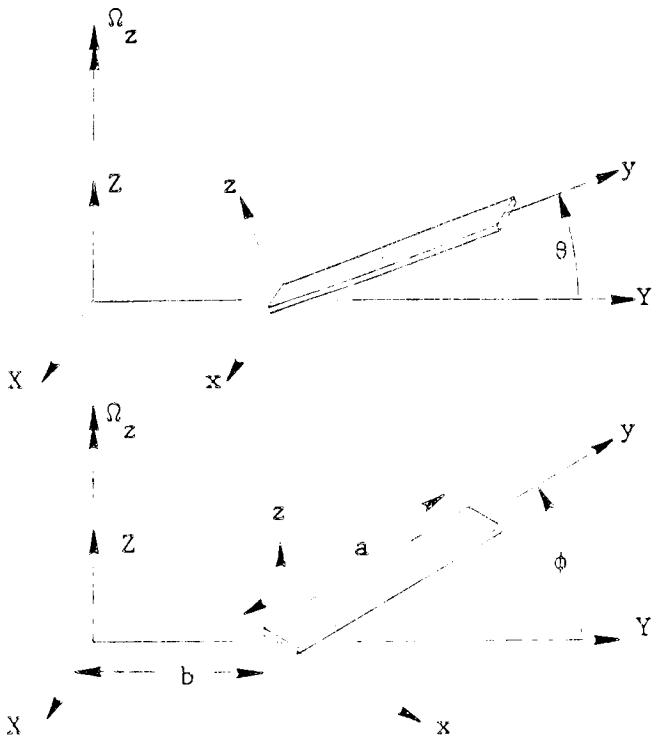

$E =$	$10. \times 10^6$	lb/in^2
$\nu =$	.3	
$\rho =$	.1	lb/in^3
$b = 2a =$	80.	in.
$I_x =$	$4. \times 10^{-5}$	in^4
$I_y =$	$6. \times 10^{-5}$	in^4
$A =$	.001	in^2
$\Omega_z =$	6.808	Hz
$\theta =$	angle in Y - Z plane	
$\phi =$	angle in X - Y plane	

In this problem, D in Eq.(1) is zero. The SPAR model consisted of seven E21 elements. The frequencies (Hz) of the non-spinning beam, as computed by SPAR/EIG were:

13.627,
16.676,
83.431, and
102.179 .

Results

Beam Inclination	Frequencies (Hz) of the spinning beam: Reference 3	CEIG, Torsion Constant K_t = .01	CEIG, Torsion Constant, K_t = $.7954 \times 10^{-4}$
$\theta = 60^\circ$, $\phi = 0$	12.0	12.185	11.318
	24.0	24.209	23.110
	85.1	84.951	84.569
	106.	106.595	102.983
$\theta = 120^\circ$, $\phi = 0$	6.1	6.032	5.593
	18.5	18.417	17.617
	79.3	79.412	79.272
	101.	101.919	100.286
$\theta = 0$, $\phi = 60^\circ$	17.4	17.675	16.284
	18.8	18.949	18.951
	87.6	87.338	84.255
	105.	105.173	105.172
$\theta = 0$, $\phi = 120^\circ$	12.7	12.965	10.880
	14.6	14.652	14.657
	83.4	82.977	79.591
	101.	101.497	101.497

Input Data

The following runstream was used to produce the results described in this subsection, for the θ= 60 degrees case.

```
$USE SPAR-A.,SP1.
$XQT TAB
 ITART 8
 MATC: 1
 JLOC: 1
 BB
  1: 1.2665-04::::$
  2: 6.3323-05::::$
$XQT ELD
 E25: NSECT=1: 2 2: 3 3: 4 4
                5 5: 6 6: 7 7
       NSECT=2: 1 1: 8 8
$XQT TOPO
$XQT E
$XQT EKS
$XQT K
$XQT DCU
 CHANGE 1 K SPAR 36 0. G SPAR 36 0
$USE SPAR-A.,SP2.
$USE SPAR-B.,SP1.
$XQT TAB
 ITART 8
 MATC: 1 10.0+6 .3 0.1
 ALTR: 2 1 60. 3 0. 3 0.  0. 80. 0.
 JLOC: NREF=2
   1 0. 0. 0. 0. 40. 0. 8 1
 BA: GIVN 1 4.-5 0. 6.-5 0. 1.-3 .7954-4
 NREF: 1 1 3 -1 0.
 CON 1:ZERO 1 2 3 4 5 6: 1
$XQT ELD
 E21: 1 2  1 7
$XQT TOPO
$XQT E
 RESET G=386.
$XQT EKS
$XQT K
$XQT INV
$XQT EIG
 RESET INIT=6. NREQ=4
```

Set up G matrix and store it in SPAR-B.

θ = *60 degrees.*

Compute modes of the non-spinning beam.

Continued on next page

SPAR runstream for θ = 60 degrees case (continued):

```
$XQT AUG
 SYSVEC: WS
  I=1 2: J=1,8: 1829.6624 1829.6624
  KC=PROD(WS, DEM)
  KEKC=SUM(K, -1.0 KC)
  TABLE(NI=6,NJ=8): P
  TRAN(SOURCE=JLOC,ILIM=3,JLIM=8,DSKIP=3)
  APPLIED FORCE 1 0=PRODUCT(KC, P)
$XQT INV
 RESET K=KEKC
$XQT SOL
 RESET K=KEKC
$XQT GSF
 RESET EMBED=1
$XQT KG
$XQT AUG
 KECG=SUM(KEKC, KG)
$XQT DCU
 COPY 2,1  G SPAR 36 0
$XQT INV
 RESET K=KECG
$XQT AUG
  DEFINE V=VIBR MODE 1 1
  DEFINE E=VIBR EVAL 1 1
    RVEC CEIG 1 1=UNION(V)
    IVEC CEIG 1 1=UNION(0. V)
    RVAL CEIG 1 1=UNION(0. E)
    IVAL CEIG 1 1=SQRT(E)
$XQT CEIG
  RESET HIST=1, NREP=4
  RESET CBAL=1
   M=     1 DEM
   K=     1 KECG
   G=     1 G
   KINV= 1 INV  KECG
STOP
```

- *Compute K_c and $K_e - K_c$*
- *APPLIED FORCE 1 1 = centrifugal force vector (SYSVEC fmt.)*
- *Compute K_g corresponding to stress state produced by centrifugal force field.*
- *Copy G into SPAR-A.*
- *Establish modes of the non-spinning structure as initial approximations of modes of the spinning structure.*
- *Compute modes of the spinning structure.*

18.3 ROTATING CANTILEVERED L-BEAM

Vibrational modes were computed for the undamped rotating L-beam shown below. In this problem, D in Eq.(1) = 0.

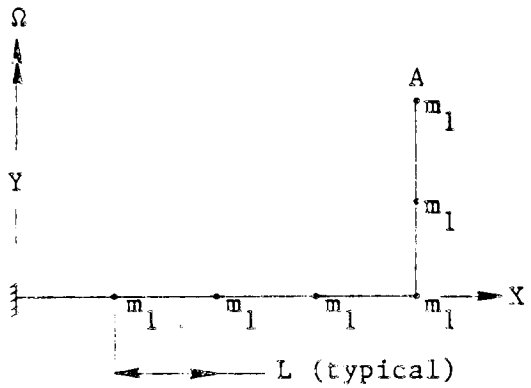

E =	$70.\times10^{9}$	n/m^2
L =	.1524	m
$I_1 = I_2 =$	3.4686×10^{-8}	m^4
A =	6.4516×10^{-4}	m^2
f= Uniform torsion constant =	5.8689×10^{-8}	m^4
m_1 =	58.3756 (six equal lumped masses, basis of M in CEIG analysis and EIG case M1).	kg
ρ =	5.9371×10^{5} (basis of DEM and CEM in EIG cases M2 & M3).	kg/m^3

On the following page, results given in Reference 4 (Patel and Seltzer) and Reference 5 (Gupta) are compared with solutions computed by SPAR/EIG for the non-spinning structure, and SPAR/CEIG for the spinning structure. References 4 and 5 do not contain all of the information necessary to define M, K, and K_g. Accordingly, an exact comparison is not possible. The author of Reference 5 indicated that K_g included only terms due to axial force. SPAR-produced K_g's include effects of axial force, shear, and moment, accounting for effects of lateral loads on torsional stability. This difference in K_g's and possible differences in the beam torsion constant may account for the differences in results, e.g. in the third mode.

Frequencies (rps) of the non-spinning structure:

Ref. 4 & 5	SPAR/EIG Case M1, six equal lumped masses.	SPAR/EIG Case M2, diagonal mass matrix.	SPAR/EIG Case M3, consistent mass matrix
11.21	11.14	12.59	12.72
11.26	11.38	12.65	12.86
31.11	30.30	35.08	39.23
39.23	39.84	49.51	52.22
112.94	119.87	120.58	128.31
138.19	141.28	147.61	152.12

Cases M1 and M2 above differ in that the terms in the diagonal mass matrix for the end node (point A) are one half those corresponding to interior nodes.

Frequencies (rps) of the spinning structure, for $\Omega = 2\pi$ rps:

The second set of frequencies (*) are results obtained neglecting K_g.

Ref. 4 & 5	SPAR/CEIG
9.52	10.07
7.79*	7.73*
14.47	14.71
12.61*	12.70*
31.44	26.40
29.84*	29.12*
41.40	41.79
41.02*	41.51*
116.47	121.07
112.75*	119.70*
139.81	142.98
138.21*	141.30*

Input Data

The following runstream was used to produce the results described in this subsection:

```
@ASG,T S1.
@USE SPAR-A.,S1.
@XQT TAB
 START 7
 MATC: 1
 JLOC: 1
 BB:    1:: 733.56944:::$
@XQT ELD
 E25: 2 2: 3 3: 4 4: 5 5: 6 6: 7 7
@XQT TOPO
@XQT E
@XQT EKS
@XQT K
 RESET SPDP=2
@XQT DCU
 CHANGE 1 K SPAR 36 0, GYRO SPAR 36 0
@ASG,T S2.
@USE SPAR-B.,S1.
@USE SPAR-A.,S2.
@XQT TAB
 START 7
 JLOC: 1 .0000 .0 .0 .4572 .0000 .0 4 1
       5 .6096 .0 .0 .6096 .3048 .0 3 1
 MATC: 1 70.+9 .25 593716.28
 BA:    GIVN 1 3.4686-8 0. 3.4686-8 0.>
                6.4516-4>
                5.8689-8
 MREF: 1 1 3 1 0.
 CON 1:ZERO 1 2 3 4 5 6: 1
 RMASS:REPEAT 6 1: 2 58.3756
@XQT ELD
 E21:  1 2  1 6
@XQT TOPO
@XQT E
@XQT EKS
@XQT K
 RESET SPDP=2
@XQT INV
@XQT EIG
 RESET INIT=12, M=RMASS, NREQ=7
```

Compute G and store it in SPAR-B.

Compute modes of non-spinning structure with M based on six equal lumped masses - SPAR/EIG case M1.

Runstream continued on next page -

SPAR runstream for L-beam (continued):

```
$XQT DCU
 COPY 2,1  GYRO SPAR 36 0
$XQT AUS
 SYSVEC: W2
   I=1 3: J=1,7: 39.478418 39.478418
 WTMW=PRODUCT(W2, PMASS)
 KW=  SUM(K, -1. WTMW)
$XQT INV
 RESET K=KW
$XQT AUS
 DEFINE V=VIBR MODE 1 1 1,6
  RVEC CEIG 1 1=UNION(V)
  IVEC CEIG 1 1=UNION(0. V)
 TABLE(NI=1,NJ=6): RVAL CEIG 1 1
  J=1,6: 0.
 TABLE(NI=1,NJ=6): IVAL CEIG 1 1
  J=1,6: 0.
$XQT CEIG
 RESET HIST=1, CONV=1.-4, NREQ=6
  M=     1 PMASS
  K=     1 KW   SPAR
  G=     1 GYRO SPAR
  KINV= 1 INV  KW
$XQT AUS
 TABLE(NI=6,NJ=7): JBLOC
  TRAN(SOURCE=JLOC,ILIM=3,JLIM=7,DSKIP=3)
 APPLIED FORCE 1 1=PRODUCT(WTMW, JBLOC)
$XQT SSOL
 RESET K=KW
$XQT GSF
 RESET EMBED=1
$XQT KG
$XQT AUS
 KWKG=SUM(KW, KG)
$XQT INV
 RESET K=KWKG
$XQT AUS
 DEFINE RVEC=RVEC CEIG 1 1
 DEFINE IVEC=IVEC CEIG 1 1
 DEFINE RVAL=RVAL CEIG 1 1
 DEFINE IVAL=IVAL CEIG 1 1
  RVEC CEIG 2 1=UNION(RVEC)
  IVEC CEIG 2 1=UNION(IVEC)
  RVAL CEIG 2 1=UNION(RVAL)
  IVAL CEIG 2 1=UNION(IVAL)
$XQT CEIG
 RESET HIST=1, CONV=1.-4, NREQ=6, SET=2
   M=     1 PMASS
   K=     1 KWKG SPAR
   G=     1 GYRO SPAR
   KINV= 1 INV  KWKG
$XQT M
$XQT EIG
 RESET M=CEM
$XQT EIG
 RESET M=DEM
```

Compute K_c in WTMW, $K_e - K_c$ in KW.

Establish modes of non-spinning structure as initial approximations of modes of the spinning structure.

Compute modes of spinning structure, neglecting K_g.

Compute K_g

Store $K_e + K_g + K_c$ in KWKG.

Establish modes computed in above CEIG execution as initial approximations for the next CEIG execution.

Compute modes of the spinning structure, including K_g effects.

Re-run EIG using consistent mass matrix (Case M3).

Re-run EIG using diagonal mass matrix (Case M2).

18.4 DAMPED BEAM

To illustrate application of CEIG to a damped structure, modes of the beam described in subsection 18.1 were computed for two damping cases. In Case A, the damping matrix is a linear combination of M and K, resulting in modes in which all components are in phase. In Case B, the damping is non-proportional, resulting in distinct phase angles for individual eigenvector components. The SPAR inputs, beginning after the runstream given in subsection 18.1, are shown below. The damping matrices were chosen arbitrarily, but small enough that none of the modes computed were supercritically damped.

Case A, proportional damping:

```
@XQT AUS
DAMP= SUM(.04 DEM, .001 K)
DEFINE V= VIBR MODE  1 1 1,6
PVEC CEIG 2 1= UNION(V)
IVEC CEIG 2 1= UNION(0. V)
TABLE(N,J=6): PVAL CEIG 2 1
   J=1,6: 0.
DEFINE E= PVAL CEIG 2 1
IVAL CEIG 2 1= UNION(E)
@XQT CEIG
RESET SET=2,NREQ=4,NDYN=8
RESET HIST=1,CBAL=1
M=1 DEM
K=1 K
D=1 DAMP
KINV=1 INV K
STOP
```

Case B, non-proportional damping:

```
@XQT AUS
SYSVEC: DMP
   I=1 2 3
   J=1,8: .0001 .0001 .0001
DAMP= SUM(DMP, .0001 K)
DEFINE V= VIBR MODE  1 1 1,6
PVEC CEIG 2 1= UNION(V)
IVEC CEIG 2 1= UNION(0. V)
TABLE(N,J=6): PVAL CEIG 2 1
   J=1,6: 0.
DEFINE E= PVAL CEIG 2 1
IVAL CEIG 2 1= UNION(E)
@XQT CEIG
RESET SET=2,NREQ=4,NDYN=8
RESET HIST=1,CBAL=1
M=1 DEM
K=1 K
D=1 DAMP
KINV=1 INV K
STOP
```

Results for Case A, proportional damping.

The following eigenvalues were computed by CEIG. See subsection 18.1 for corresponding eigenvalues computed by EIG for the undamped non-spinning beam.

COMPLEX EIGENVALUES. ITERATION 2

SEQ	REAL	IMAGINARY	HZ	IERR
1	-.36791420+01	.85467575+02	.13602592+02	.94312021-05
2	-.36791080+01	.85469540+02	.13602905+02	.11504465-04
3	-.13741185+03	.50586745+03	.80511333+02	.20376166-06
4	-.13741191+03	.50586751+03	.80511343+02	.26197924-06
5	-.10350286+04	.99936641+03	.15905416+03	.21211094-07
6	-.10350287+04	.99936700+03	.15905425+03	.20150532-06

Mode 1 is shown below in polar form. Note that all components are in phase, i.e. the phase angle is zero for all non-zero components.

POLAR FORM OF EIGENVECTOR 1 ID= 1/ 0/ 1

EIGENVECTOR MODULUS

JOINT	1	2	3	4	5	6
1	.000	.000	.000	.000	.000	.000
2	-.333-01	.462-04	.000	-.156-04	-.113-01	.000
3	-.124+00	.172-03	.000	-.279-04	-.201-01	.000
4	-.259+00	.359-03	.000	-.369-04	-.266-01	.000
5	-.424+00	.588-03	.000	-.429-04	-.309-01	.000
6	-.609+00	.844-03	.000	-.463-04	-.334-01	.000
7	-.803+00	.111-02	.000	-.477-04	-.344-01	.000
8	-.100+01	.139-02	.000	-.480-04	-.346-01	.000

POLAR FORM OF EIGENVECTOR 1 ID= 1/ 0/ 2

TANGENT OF EIGENVECTOR PHASE ANGLES

JOINT	1	2	3	4	5	6
1	.000	.000	.000	.000	.000	.000
2	-.229-06	.935-06	.301+00	.727-06	-.216-06	.000
3	-.202-06	.568-06	.301+00	.215-06	-.162-06	.000
4	-.158-06	.297-06	.300+00	-.532-07	-.660-07	.000
5	-.977-07	.162-06	.298+00	.162-07	.659-07	.000
6	-.332-07	.155-06	.296+00	.275-06	.152-06	.000
7	.184-07	.217-06	.294+00	.531-06	.201-06	.000
8	.578-07	.292-06	.293+00	.613-06	.223-06	.000

Results for Case B, non-proportional damping.

The following eigenvalues were computed by CEIG:

COMPLEX EIGENVALUES: ITERATION 3

SEQ	REAL	IMAGINARY	HZ	IERR
1	-.43699554+02	.73613965+02	.11716031+02	.13535175-04
2	-.43699545+02	.73614591+02	.11716130+02	.54920162-05
3	-.56061997+02	.52091032+03	.82905482+02	.29124361-07
4	-.56062016+02	.52091045+03	.82905503+02	.48055183-06
5	-.14429566+03	.14313303+04	.22780337+03	.10818938-05
6	-.14429565+03	.14313303+04	.22780337+03	.79551014-06

Mode 1 is shown below in polar form. Unlike the proportional damping case, phase angles are not constant.

POLAR FORM OF EIGENVECTOR 1 ID= 1/ 0/

EIGENVECTOR MODULUS

JOINT	1	2	3	4	5	6
1	.000	.000	.000	.000	.000	.000
2	.329-01	-.414-04	.000	.140-04	.111-01	.000
3	.123+00	-.154-03	.000	.251-04	.199-01	.000
4	.256+00	-.323-03	.000	-.333-04	.264-01	.000
5	.421+00	-.530-03	.000	-.389-04	.309-01	.000
6	.606+00	.763-03	.000	-.422-04	.335-01	.000
7	.801+00	.101-02	.000	-.437-04	.347-01	.000
8	.100+01	.126-02	.000	-.440-04	.350-01	.000

POLAR FORM OF EIGENVECTOR 1 ID= 1/ 0/ 2

TANGENT OF EIGENVECTOR PHASE ANGLES

JOINT	1	2	3	4	5	6
1	.000	.000	.000	.000	.000	.000
2	.204-01	-.675+02	-.177+01	-.772+02	.185-01	.000
3	.166-01	-.908+02	-.177+01	-.150+03	.122-01	.000
4	.123-01	-.148+03	-.177+01	.194+04	.483-02	.000
5	.776-02	-.458+03	-.178+01	.110+03	-.348-02	.000
6	.301-02	.389+03	-.178+01	.569+02	-.120-01	.000
7	-.158-02	.140+03	-.178+01	.404+02	-.192-01	.000
8	-.548-02	.905+02	-.178+01	.361+02	-.222-01	.000

18.5 APPLICATION OF THE SPECTRAL SHIFTING PARAMETER

Two examples are presented to illustrate the use of spectral shifting. In the first example, the problem described in subsection 18.2 is solved again using a shift of $s = 2 \times 10^6$, corresponding to 225 Hz = $(2 \times 10^6)^{1/2} / 2\pi$. Two vectors are iterated on, beginning with random numbers. The SPAR runstream and CEIG results are shown below. For comparison, the CEIG output for the execution described in subsection 18.2 is also shown. Mode 1 in the current execution, at 231.534 Hz, was the 5th mode in the original analysis. Only one mode was requested in the current execution, and the second mode was not tightly converged when iteration was terminated.

```
@XQT AUS
  KSFT=SUM(KECG, -2.+6 DEM)
@XQT INV
  RESET K=KSFT
@XQT CEIG
  RESET NREQ=1,HIST=1,N=2,NDYN=8
  RESET SET=2,CM=2.+6,CBAL=1
  M=1 DEM
  K=1 KECG
  G=1 G
  KINV=1 INV KSFT
 STOP
```

```
@XQT CEIG
 NREQ=        1
 HIST=        1
 N   =        2
 NDYN=        8
 SET =        2
 CM       .20000000+07
 CBAL=        1
 DATA SPACE=     20000
 ITERATION  2, NO CONVERGED ROOTS
 ITERATION  3, NO CONVERGED ROOTS
 ITERATION  4, NO CONVERGED ROOTS
 ITERATION  5,  1 ROOTS CONVERGED

        REAL              IMAGINARY
   1   .95409044-03      .14547690+04
 COMPLEX EIGENVALUES, ITERATION  5
 SEQ    REAL              IMAGINARY        HZ               IERR
   1   .95409044-03      .14547690+04    .23153376+03    .54856452-05
   2   .15065330+01      .17524800+04    .27891596+03    .67098925-02
```

CEIG output in the analysis described in subsection 18.2 (θ = 60, ϕ = 0 case):

```
 COMPLEX EIGENVALUES, ITERATION  5
 SEQ    REAL              IMAGINARY        HZ               IERR
   1   .23471800-08      .71110509+02    .11317593+02    .57574105-04
   2   .10427479-08      .14520416+03    .23109968+02    .27965763-04
   3  -.12036132-08      .53136387+03    .84569216+02    .91892068-06
   4  -.55217146-07      .64706008+03    .10298285+03    .38909836-06
   5   .26975399-03      .14547682+04    .23153363+03    .20977623-07
   6   .70204628-03      .17603273+04    .28016489+03    .49581944-05
```

In the second example of spectral shifting, Case B in subsection 18.4 (non-proportional damping) is solved again using a shift of 2.5×10^5, corresponding to 80 Hz = $(2.5 \times 10^5)^{1/2}/2\pi$. Two vectors are iterated on, beginning with vectors composed of random numbers. The SPAR runstream and CEIG output are shown below. For comparison, CEIG output form the original analysis is also shown. Mode 1 in the current analysis, at 82.906 Hz, was the third mode in the original analysis.

```
@XQT AUS
 SYSVEC: DMP
     I=1 2 3: J=1,8: .0001 .0001 .0001
  DAMP=SUM(DMP, .0001 K)
  KSFT= SUM(K, -2.5+5 DEM)
@XQT INV
  RESET K=KSFT
@XQT CEIG
  RESET N=2,NREQ=1,NDYN=8,HIST=1
  RESET SET=2,CBAL=1,CM=2.5+5
  M=1 DEM
  K=1 K
  D=1 DAMP
  KINV=1 INV KSFT
 STOP
```

```
@XQT CEIG
 N    =        2
 NREQ=         1
 NDYN=         8
 HIST=         1
 SET =         2
 CBAL=         1
 CM       .25000000+06
 DATA SPACE=     20000
 ITERATION  2, NO CONVERGED ROOTS
 ITERATION  3, NO CONVERGED ROOTS
 ITERATION  4,  1 ROOTS CONVERGED

        REAL              IMAGINARY
   1  -.56061996+02    .52091061+03
 COMPLEX EIGENVALUES, ITERATION  4
 SEQ    REAL              IMAGINARY        HZ                IERR
   1  -.56061996+02    .52091061+03    .82905528+02    .93489145-05
   2  -.56061982+02    .52091218+03    .82905777+02    .12329755-03
```

CEIG output for Case B in subsection 18.4:

```
 COMPLEX EIGENVALUES, ITERATION  3
 SEQ    REAL              IMAGINARY        HZ                IERR
   1  -.43699554+02    .73613965+02    .11716031+02    .13535175-04
   2  -.43699545+02    .73614591+02    .11716130+02    .54920162-05
   3  -.56061997+02    .52091032+03    .82905482+02    .29124361-07
   4  -.56062016+02    .52091045+03    .82905503+02    .48055183-06
   5  -.14429566+03    .14313303+04    .22780337+03    .10818938-05
   6  -.14429565+03    .14313303+04    .22780337+03    .79551014-06
```

18.5 REFERENCES

(1) Likins, P. W., F. J. Barbera, and V. Baddeley, "Mathematical Modeling of Spinning Elastic Bodies for Modal Analysis," AIAA Journal, Vol. 11, No. 9, September 1973, pp. 1251-1258.

(2) Likins, P. W., "Dynamics and Control of Flexible Space Vehicles," JPL Technical Report 32-1329, Pasadena, January 1970.

(3) Laurenson, R. M., "Modal Analysis of Rotating Flexible Structures," AIAA Journal, Vol. 14, No. 10, October 1976, pp. 1444-1450.

(4) Patel, J. S. and S. M. Seltzer, "Complex Eigenvalue Solution to a Spinning Skylab Problem," NASTRAN: Users' Experiences, NASA TM X-2378, September 1971, pp. 439-449.

(5) Gupta, K. K., "Free Vibration Analysis of Spinning Structural Systems," Int. J. Num. Methods in Engineering, Vol. 5, 395-418 (1973).

(6) Gupta, K. K., "On a Combined Sturm Sequence and Inverse Iteration Technique for Eigenproblem Solution of Spinning Structures," Int. J. Num. Methods in Engineering, Vol. 7, 509-518 (1973).

March 1978

Revision 2 to:
EISI/A2200

Final Report

Contract NAS8-31878

SPAR Level 13

SM - System Modification Processor

by

W. D. Whetstone and C. E. Jones

ENGINEERING INFORMATION SYSTEMS, INC.
5120 CAMPBELL AVENUE, SUITE 240
SAN JOSE, CALIFORNIA 95130
(408) 379-0730

Preface

This report was prepared by Engineering Information Systems, Inc. under NASA Contract NAS8-31878 for the George C. Marshall Space Flight Center of the National Aeronautics and Space Administration. The Contracting Officer's Technical Representative was L. A. Kiefling.

This document consists of the following revisions to the SPAR Reference Manual.

	Delete Pages:	Replace with pages:
Vol-1:	Title	Title
	(new page)	Revision Record - insert after Title page
	vi	vi
	(new section)	All of Section 14
Vol-3:	Title	Title
	iv	iv
	(new section)	All of Section 19

Submitted by
Engineering Information Systems, Inc.

W. D. Whetstone
President

EISI/A2200
Vol-1

SPAR

REFERENCE MANUAL

Volume 1

PROGRAM EXECUTION

by

W. D. Whetstone

ENGINEERING INFORMATION SYSTEMS, INC.
5120 CAMPBELL AVENUE, SUITE 240
SAN JOSE, CALIFORNIA 95130
(408) 379-0730

SPAR Reference Manual Revision Record:

System Level	EISI/A2200 Rev. No.	Date	Volumes revised
12	1	November 1977	1,2,3
13	2	March 1978	1,3

Section

13 CEIG - COMPLEX EIGENSOLVER

14 SM - SYSTEM MODIFICATION PROCESSOR

Section 14

SM - THE SYSTEM MODIFICATION PROCESSOR

Table of Contents

Section

14.1 Introduction to SM

14.1.1 Intermediate Operations Performed by SM
14.1.2 Computation of Terms in the Sensitivity Matrix

14.2 Execution and RESET Controls

14.3 Content of Input Data Sets

14.3.1 Definition of Eigenvalue and Eigenvector Targets
14.3.2 Definition of Structural Parameters
14.3.3 Estimates of Standard Deviations
14.3.4 Establishment of Limits on Parameter Changes

14.4 Determination of Changes in Structural Parameters

14.4.1 Computation of DP in SM Phase 3
14.4.2 Computation of DP Outside of SM

14.5 Application Techniques

14.6 Central Memory Requirements

14.7 Error Codes

14.1 INTRODUCTION TO SM

SM MAY BE USED TO MODIFY FINITE ELEMENT MODELS TO CAUSE SOLUTIONS COMPUTED BY EIG TO AGREE CLOSELY WITH USER-PRESCRIBED TARGET EIGENVALUES AND EIGENVECTOR COMPONENTS. THE PRIMARY APPLICATIONS INTENDED ARE:

- DESIGN OF STRUCTURES TO ACHIEVE DESIRED DYNAMIC RESPONSE CHARACTERISTICS.

- FINE TUNING OF FINITE ELEMENT MODELS TO OBTAIN AGREEMENT WITH DYNAMIC TEST RESULTS. IN THIS APPLICATION, IT IS IMPORTANT TO RECOGNIZE THAT DIFFERENCES BETWEEN TEST AND ANALYTICAL RESULTS FOR LINEAR SYSTEMS ARE GENERALLY DUE TO (1) AN EXCESSIVELY COARSE ELEMENT MESH, AND/OR (2) ERRORS IN ESTIMATES OF LUMPED STIFFNESS PARAMETERS (E.G. VIA B2D ELEMENTS). IF THE PROBLEM IS AN EXCESSIVELY COARSE MESH, THE BEST RESOLUTION IS TO REFINE THE MESH, RATHER THAN USING SM TO INTRODUCE COMPENSATING ERRORS.

EXECUTION CONTROL PARAMETERS ARE PROVIDED TO ALLOW EXPERIENCED USERS TO APPLY SM TO OTHER OBJECTIVES, E.G. REDESIGN TO ALTER BUCKLING EIGENVALUES.

THE NORMAL PROCEDURE FOR USING SM IS AS INDICATED BELOW.

1- FORM THE BASIC MODEL BY EXECUTING TAB, ELD, E, EKS, K, INV, AUS (IF REQUIRED), AND EIG.

2- COMPARE THE RESULTS PRODUCED BY EIG WITH THE DESIRED VALUES.

3- USE AUS/TABLE TO CREATE DATA SETS CONTAINING THE FOLLOWING INFORMATION:

   (A) TARGET EIGENVALUE AND EIGENVECTOR COMPONENTS (SEE 14.3.1).
   (B) DEFINITIONS OF STRUCTURAL PARAMETERS WHICH SM WILL BE PERMITTED TO ALTER (SEE 14.3.2).
   (C) CONTROL TABLES (SEE 14.3.3 AND 14.3.4).

4- EXECUTE SM. SM WILL MODIFY THE FOLLOWING BASIC STRUCTURAL DEFINTION TABLES: BA, BB, SA, AND RMAC (RIGID MASS DATA).

5- RE-EXECUTE E, EKS, K, INV, AUS (IF REQUIRED), AND EIG. IN THE EIG EXECUTION, PREVIOUSLY COMPUTED MODES SHOULD BE USED AS INITIAL APPROXIMATIONS.

REPEAT STEPS 2 - 5, AS NECESSARY.

CONVERGENCE WILL BE RAPID IF THE TARGETS ARE REASONABLE AND THE STRUCTURAL PARAMETERS ARE WELL-SELECTED. ONE OR TWO PASSES THROUGH SM ARE OFTEN SUFFICIENT. HOWEVER, SM CANNOT FUNCTION WELL IF THE STRUCTURE IS POORLY DESIGNED, IF UNATTAINABLE TARGETS ARE GIVEN, OR IF THE STRUCTURAL PARAMETERS DEFINED DO NO SIGNIFICANTLY INFLUENCE THE STATED TARGETS.

SOURCE DATA SETS REQUIRED BY SM ARE TABULATED BELOW. RESET CONTROLS ARE PROVIDED FOR NUEIG, N3EIG, N4EIG, N4PARA, NPARAS, AND NUPARA. THE SYMBOLS N2 AND N3 INDICATE ARBITRARY NAMES WHICH ARE MASKED WHEN THE DATA SETS ARE READ BY SM.

NORMAL SOURCE	LIBRARY	DATA SET NAME				CONTENTS
TAB/BA	1	BA	BTAB	2	9	E21 SECT. PROPS.
TAB/BB	1	BB	BTAB	2	10	E22, E25 K's.
TAB/SA	1	SA	BTAB	2	13	SHELL SECT. PROPS.
TAB/RMASS	1	RMAS	BTAB	2	18	RIGID MASS DATA.
ELD	1	(ALL DIRECTORIES)				
E	1	(ENTIRE E-STATE)				
TOPO	1	KMAP				
EIG	NUEIG	VIBR	EVAL	N3EIG	N4EIG	INITIAL EIGENVALUES.
EIG	NUEIG	VIBR	MODE	N3EIG	N4EIG	INITIAL EIGENVECTORS.
AUS/TABLE	NUPARA	TVAL	N2	N3	N4PARA	TARGET EIGENVALUES.
AUS/TABLE	NUPARA	TVEC	N2	N3	N4PARA	TARGET EIGENVECTOR COMPONENTS. SEE 14.3.1.
AUS/TABLE	NUPARA	PARA	N2	1	N4PARA	DEFINITION OF FIRST STRUCTURAL PARAMETER. SEE 14.3.2.
AUS/TABLE	NUPARA	PARA	N2	2	N4PARA	DEFINITION OF SECOND STRUCTURAL PARAMETER.
-				-		
-				-		
AUS/TABLE	NUPARA	PARA	N2	NPARAS	N4PARA	DEFINITION OF NPARA-TH STRUCTURAL PARAMETER.
AUS/TABLE	NUPARA	SPR	SM	N3EIG	N4EIG	CONTROL TABLE. SEE 14.3.3.
AUS/TABLE	NUPARA	SEE	SM	N3EIG	N4EIG	CONTROL TABLE. SEE 14.3.3.
AUS/TABLE	NUPARA	DPLI	SM	1	N4PARA	CONTROL TABLE SETTING LIMITS ON PERMISSIBLE ALTERATIONS OF THE STRUCTURAL PARAMETERS. SEE 14.3.4.

THE PRIMARY OUTPUT DATA SETS PRODUCED BY SM ARE, IN LIBRARY 1, MODIFIED BA, BB, SA, AND RMAS TABLES. PRODUCTION OF THESE DATA SETS CAUSES THE ORIGINAL DATA SETS HAVING THE SAME NAMES TO BE DISABLED (NOT OVERWRITTEN).

14.1.1 Intermediate Operations Performed by SM

In the following, elements of the vector X are the initial values of the eigenvalues and eigenvector components targeted as described in 14.3.1. Elements of P are the structural parameters. The structural changes (areas, moments of inertia, spring constants, shell section constitutive relations coefficients, structural weights/area, lumped rigid masses) corresponding to a unit value of the i-th parameter are defined by the user in a data set named PARA N2 i n4para, as described in 14.3.2. ΔX is defined as the change in X due to a small change in P, ΔP. If the structural changes are small enough, the following linear approximation will be useful:

$$\Delta X = T \, \Delta P$$

T is called the sensitivity matrix. The four phases of SM are:

Phase 1: X_t, the vector of target eigenvalues and eigenvector components, and X, the vector of initial values of the targeted quantities are formed, based on the user inputs described in 14.3.1.

Phase 2: The sensitivity matrix, T, is formed by performing the following operations for each of the structural parameters:

(a) Based on the contents of the PARA data set, the BA, BB, SA, and RMAS data sets are modified to constitute a unit change in the parameter.

(b) ΔK and ΔM, the changes in the system mass and stiffness matrices due to a unit change in the parameter are formed.

(c) The column of T corresponding to the parameter is formed as described in 14.1.2.

Phase 3: The change in structural parameters is computed, as described in section 14.4.

Phase 4: The BA, BB, SA, and RMAS tables are modified and stored in library 1.

ΔM is assumed to be diagonal, consisting of the sum of RMAS + the system diagonal mass matrix as normally computed in processor E. It is important to RESET G= the same values in both E and SM.

Unless inhibited via RESET control, the sensitivity matrix will be stored in library 1 at the conclusion of SM Phase 2, in a data set named SENS MATR 0 n4para.

14.1.2 Computation of Terms in the Sensitivity Matrix

In the following discussion ΔK and ΔM are changes in the system stiffness and mass matrices, K and M, corresponding to a unit change in a structural parameter. The initial eigenvalues and eigenvectors are λ_i and Y_i, for i = 1 through n. In typical applications n is usually less than 40, although there are no fixed limitations. For the initial system,

$$\lambda M Y - K Y = 0. \tag{2}$$

For the modified system,

$$(\lambda + \Delta\lambda)(M + \Delta M)(Y + \Delta Y) - (K + \Delta K)(Y + \Delta Y) = 0, \tag{3}$$

or, dropping products of Δ quantities,

$$\lambda (\Delta M Y + M \Delta Y) + \Delta\lambda M Y - \Delta K Y - K \Delta Y = 0. \tag{4}$$

Selected $\Delta\lambda$'s and components of the ΔY's are elements of the sensitivity matrix, T. $\Delta\lambda$ and ΔY are determined by approximating ΔY as follows:

$$\Delta Y_i = a_i^1 Y_1 + a_i^2 Y_2 + a_i^3 Y_3 + \ldots + a_i^n Y_n . \tag{5}$$

For simplicity, it is assumed that all generalized masses = $Y^t M Y = 1.0$. Substitution of (5) into (4) and pre-multiplying by Y_j^t results in (6).

$$a_j^i (\lambda_i - \lambda_j) + \Delta\lambda_i Y_j^t M Y_i + \lambda_i Y_j^t \Delta M Y_i - Y_j^t \Delta K Y_i = 0. \tag{6}$$

For i = j,

$$\Delta\lambda_i = Y_i^t \Delta K Y_i - \lambda_i Y_i^t \Delta M Y_i . \tag{7}$$

To maintain unit generalized mass for eigenvectors of the modified system, $(Y + \Delta Y)^t (M + \Delta M)^t (Y + \Delta Y) = 1$ requires that

$$a_i^i = \tfrac{1}{2} Y_i^t \Delta M Y_i . \tag{8}$$

After the a_j^i's have been computed from (6) and (8), selected components of ΔY are readily computed using (5).

14.2 EXECUTION AND RESET CONTROLS

IN ADDITION TO THE RESET CONTROLS TABULATED BELOW, SM PROVIDES AN OPTIONAL EXECUTION CONTROL STATEMENT:

OPER= K1, K2, K3, K4

IF KJ IS ZERO, SM PHASE J, AS DESCRIBED IN 14.1.1, WILL NOT BE PERFORMED. DEFAULT OPER= 1,1,1,1. THE PRIMARY USE OF THE OPER COMMAND IS TO BRANCH ACROSS PHASE 3 (DP COMPUTATION), AS DESCRIBED IN 14.4.2, TO EVALUATE DP EXTERNALLY.

NAME	DEFAULT VALUE	SEE SECTION	DESCRIPTION
NUPARA	1	14.1	DATA SOURCE LIBRARY, PARA DATA SETS
NUEIG	1	14.1	DATA SOURCE LIBRARY, INITIAL VIBR MODE AND VIBR EVAL DATA SETS.
NUT	1	14.1.1	DESTINATION LIBRARY, SENSITIVITY MATRIX, DATA SET NAME= SENS MATR 0 N4PARA
G	1.0	14.1.1	GRAVITATIONAL CONSTANT, MUST BE THE SAME AS IN EXECUTING PROCESSOR E.
NEGL	0	14.1.2	IF NON-ZERO, INDICATES THAT MASS MATRIX TERMS ARE TO BE NEGLECTED IN COMPUTING THE SENSITIVITY MATRIX.
NPARAS		14.1	THE NUMBER OF STRUCTURAL PARAMETERS DEFINED VIA THE PARA DATA SETS.
N4PARA	1	14.1	SEE PAGE 14-3
N3EIG	1	14.1	SEE PAGE 14-3
N4EIG	1	14.1	SEE PAGE 14-3
KTARGET	0	14.3.1	IF KTARGET= 0, THE E'S IN THE TVEC DATA SETS ARE INTERPRETED AS AMPLITUDES, AND THE SIGNS OF THE E'S ARE IGNORED. IF KTARGET= 1, THE E'S ARE INTERPRETED LITERALLY.
NSEE	0	14.4.1	
KDPX	1	14.3.4	CONTROLS PARAMETER LIMITATION METHOD

SM RESET CONTROLS, CONTINUED:

NAME	DEFAULT VALUE	SEE SECTION	DESCRIPTION
ZDV	1.-20	14.1.2	TEST USED TO IDENTIFY EQUAL EIGENVALUES IN PHASE 2(C), TO AVOID DIVIDING BY ZERO.
PZERO	1.-20	14.4.1	SINGULARITY TEST USED IN PHASE 3, PREPARATORY TO COMPUTING DP.
DPZERO	1.-20	14.3.4	ZERO-DIVIDE TEST USED IN PHASE 4, IN THE PROCESS OF APPLYING LIMITS TO DP.
HLIB	1	14.1	KMAP SOURCE LIBRARY
NUDP	0	14.4.1 14.3.4	DESTINATION LIBRARY, OPTIONAL OUTPUT FROM PHASES 3 AND 4.
OUTL	21	14.1	DESTINATION LIBRARY, OPTIONAL OUTPUT FROM PHASE 2. FOR I=1,2, - - NPARAS: DK SPAR N2 I (K CHANGE) DM SM I N4PARA (M CHANGE) DW SM I N4PARA (ELT WEIGHT CHANGE)
NUWX	24	14.4.2	DESTINATION LIBRARY FOR: FROM PHASE 1: TARG SM N3EIG N4EIG (TARGETS) X SM N3EIG N4EIG (X) FROM PHASE 3: DP SM N3EIG N4EIG (DP)

14.3 Contents of Input Data Sets

The contents of the required input data sets are described in the following subsections. It should be noted that all of the source data is in floating-point format. Integers (e.g. mode numbers, joint numbers, etc. must not have zeroes after the decimal point. That is, mode 7 must be identified as "7.", not "7.0."

14.3.1 Definition of Eigenvalue and Eigenvector Targets.

The user defines target values for the current contents of the VIBR EVAL and VIBR MODE data sets as indicated below. The symbols NTVAL and NTVEC are the number of user-selected target eigenvalues and eigenvector components, respectively. The user may choose N2, N3EIG, and N4EIG, or permit them to default.

```
$XQT AUS
TABLE( NI=2, NJ= NTVAL): TVAL N2 N3EIG N4EIG
J=1:      M, V$ Target value of eigenvalue M is V.
J=2:      M, V$ Target value of eigenvalue M is V.
-
-
J=NTVAL:  M, V$ Target value of eigenvalue M is V.

TABLE(NI=4, NJ=NTVEC): TVEC N2 N3EIG N4EIG
J=1:      M,J,K,E$ Target value, mode M, joint J, component K is E.
J=2:      M,J,K,E$ Target value, mode M, joint J, component K is E.
-
-
J=NTVEC:  M,J,K,E$ Target value, mode M, joint J, component K is E.
```

The following is an example of target definition:

```
$XQT AUS
TABLE(NI=2, NJ=3): TVAL: J=1,3
1.   2.713$          Target, eigenvalue 1, is 2.713 (rad/sec**2)
3.   3.917$          Target, eigenvalue 3, is 3.917        "
9.  14.204$          Target, eigenvalue 9, is 14.204       "
TABLE(NI=4, NJ=2)    TVEC: J=1,2
2. 120. 1.   .734$   Mode 2, joint 120, component 1 target is .734
8.  94. 5.   .424$   Mode 8, joint  94, component 5 target is .424
```

It should be noted that the target eigenvectors are normalized to unit generalized mass.

Also, see the discussion of the KTARGET RESET control.

14.3.2 Definition of Structural Parameters

Through RESET NPARAS= NPARAS, the user indicates the number of structural parameters. Each parameter is defined in a unique data set. The P-th parameter is defined as indicated below. The number of lines, NJ, is arbitrary.

```
$XQT AUS
TABLE( NI=5, NJ=NJ): PARA N2  P  N4PARA
J=1:      N,K,P,I,J$
J=2:      N,K,P,I,J$
-
-
J=NJ:     N,K,P,I,J$
```

The following modifications, performed for each of the NJ lines in the above data set, corresponds to a unit change in the P-th structural parameter.

Multiply by (1 + P) items I through J of line K of structural definition table N. N may be 9, 10, 13, or 18:

```
    N= 9 for E21 section properties, in  BA    BTAB 2  9,
    N=10 for E22 and E25 stiffnesses in  BB    BTAB 2 10,
    N=13 for shell section properties in SA    BTAB 2 13, and
    N=18 for lumped rigid mass data in   RMAS  BTAB 2 18.
```

In selecting the P's, it is important to note that the structural changes corresponding to unit values of the parameters must be small enough to justify the approximations described in 14.1.2. Extremely small values of the P's will, however, result in poor function of SM Phase 2, due to excessive round-off error.

Typical P magnitudes are .01 to .1.

The contents of the BA table is fully defined in section 3.1.13. The BB table contains 21 items per line (K11, K21, K22, - - K66). The RMAS data set is in SYCWEC format, i.e. line J refers to joint J, and the number of items per line is equal to the number of degrees of freedom per juint, usually 6. At SPAR System Level 13, the locations of moments of inertia, area, etc., within the BA table are as shown below.

Item	BA Contents
4	I1= moment of inertia about beam axis 1
5	Shear deflection constant associated with I1.
6	I2= moment of inertia about beam axis 2.
7	Shear deflection constant associated with I2.
8	Cross sectional area.
9	First torsion constant, C/G.
10	Second torsion constant, C1/E

EXAMPLES OF STRUCTURAL PARAMETER DEFINITION ARE SHOWN BELOW.

```
$XOT AUS
TABLE, NI=5, NJ=4): PARA XX 1 1: J=1,4$  DEFINE PARAMETER 1:
$ N, K,   F,   I,   J
 10,,2,,.01, 1,,21,$ MULTIPLY ITEMS 1- 21, LINE 2 OF BB   BY   1.01
  9,,6,,.03, 4,,  4,$ MULTIPLY ITEMS 4-  4, LINE 6 OF BA   BY   1.03
  9,,6,,.07, 8,,  8,$ MULTIPLY ITEMS 8-  8, LINE 6 OF BA   BY   1.07
 13,,5,,.06, 4,,  9,$ MULTIPLY ITEMS 4-  9, LINE 5 OF SA   BY   1.06

 TABLE,NI=5, NJ=3): PARA XX 2 1: J=1,3$  DEFINE PARAMETER 2:
 13,,7,,.02,10,,15,$ MULTIPLY ITEMS 10-15, LINE 7 OF SA   BY   1.02
 10,,6,,.08, 1,,10,$ MULTIPLY ITEMS 1 -10, LINE 6 OF BB   BY   1.08
 18,,1,,.05, 1,,  3,$ MULTIPLY ITEMS 1 - 3, LINE 1 OF PMAS BY 1.05
```

14.3.3 Estimates of Standard Deviations.

The user must furnish the following tables for use by SM Phase 3 in computing the structural parameter change vector, DP. In the following, N = the total number of targets = NTVAL + NTVEC, and M = the number of structural parameters (RESET NPARAS= M).
Targets 1 through NTVAL are the eigenvalue targets. Targets NTVAL+1 through N are the eigenvector component targets.

```
$XOT AUS
TABLE,NI=1, NJ=N):SPR SM N3EIG N4EIG
J=1:   E1$  ESTIMATED STANDARD DEVIATION, TARGET 1 TOLERANCE.
J=2:   E2$  ESTIMATED STANDARD DEVIATION, TARGET 2 TOLERANCE.
-
-
J=N:   EN$  ESTIMATED STANDARD DEVIATION, TARGET N TOLERANCE.

TABLE,NI=1, NJ=M):SPR SM N3EIG N4EIG
J=1:       P1$ ESTIMATE OF STANDARD DEVIATION, STRUCT. PARA. 1
J=2:       P2$ ESTIMATE OF STANDARD DEVIATION, STRUCT. PARA. 2
-
-
J=M:       PM$ ESTIMATE OF STANDARD DEVIATION, STRUCT. PARA. M
```

14.3.4 Establishment of Limits on Parameter Changes.

The parameter change vector, DP, computed in SM Phase 3 may correspond to physically unreasonable structural changes. Through the data set described below, the user establishes limits on the modification of basic structural definition tables in SM Phase 4.

```
$NOT AUS
TABLE(  NI=2, NJ=NPARAS): DPLI SM 1 N4PARA
J=1:        A, B$  Lower, upper bounds on parameter 1.
J=2:        A, B$  Lower, upper bounds on parameter 2.
-
-
J=NPARAS: A, B$  Lower, upper bounds on parameter NPARAS.
```

The lower bound, A, must not be positive, and the upper bound, B must not be negative. Typical values of the bounds are -5, 5.

It is important to select the bounds carefully to avoid negative areas, masses, etc.

Two methods of applying the limits are provided:

- If RESET KDPX=1 (default), all elements of the parameter change vector, DP, are scaled down in the same proportion, such that no elements are out of bounds.
- If RESET KDPX=0, individual elements of DP are, if out of bounds, set to the prescribed limits. Elements not out of bounds are not altered.

The RESET parameter DPZERO (default= 10** -20) is used as a zero test tolerance to avoid dividing by zero in SM Phase 4. Any element of DP of magnitude less than DPZERO is assumed to be identically zero.

Through RESET NUDP= destination library, the user may retain DP as computed in SM Phase 3, and the modified parameter change vector, DPX, for subsequent examination via DCU/PRINT.

14.4 Determination of Changes in Structural Parameters

As discussed in 14.1, the changes, ΔX, in targeted eigenvalue and eigenvector components produced by a small change in the structural parameters, ΔP is approximated as:

$$\Delta X = T \, \Delta P$$

In the following,

X_t = The vector of target eigenvalues and eigenvector components,

X = The initial values of the targeted quantities,

$= (x_1 \quad x_2 \quad x_3 \quad . \; . \; . \quad x_n)^t$, and

E = The target tolerance vector $= \Delta X - (X_t - X) = (e_1 \quad e_2 \quad . \; . \; e_n)^t$.

The basic problem is: given X_t, X, and T, find the "best" ΔP. There are many possible approaches to the solution of this type of problem, involving weighting of the performance, a function of E, and the "cost," a function of ΔP. Users may either (a) employ the method implemented in SM Phase 3, as described in 14.4.1, or (b) compute ΔP outside of SM using any method appropriate to their particular problem, as described in 14.4.2.

14.4.1 Computation of DP in SM Phase 3

The method implemented in SM Phase 3 is substantially the same as the one described in the following reference:

> Collins, J. D., Hart, G. C., Hasselman, T. K., and Kennedy, B., "Statistical Identification of Structures," AIAA Journal, Vol. 12, No. 2, February, 1974, pp. 185 - 190.

In the following discussion, n = the number of targets and m = the number of structural parameters. N is an n by n diagonal matrix, with diagonal terms $m_{ii} = 1/x_i$. Through the input data sets described in 14.3.3, the user defines the m diagonal terms of the diagonal matrix S_{rr}, and the n diagonal terms of the diagonal matrix S_{ee}:

$$S_{rr} = \begin{bmatrix} r_1^2 & 0 & 0 & & \\ 0 & r_2^2 & 0 & & \\ 0 & 0 & r_3^2 & & \\ & & & \ddots & \\ & & & & r_m^2 \end{bmatrix} \qquad S_{ee} = \begin{bmatrix} s_1^2 & 0 & 0 & & \\ 0 & s_2^2 & 0 & & \\ 0 & 0 & s_3^2 & & \\ & & & \ddots & \\ & & & & s_n^2 \end{bmatrix}$$

Two methods are provided:

If RESET NSEE= 0 (default), the s_i's are interpreted as standard deviations of e_i/x_i, and the parameter change vector is computed as follows.

$$\Delta P = \overline{G}\ N\ (X_t - X), \text{ where}$$

$$\overline{G} = S_{rr}\ \{NT\}^t\ \{\ (N\ T)\ S_{rr}\ (N\ T)^t + S_{ee}\}^{-1}$$

$$Q = I - \overline{G}\ (N\ T) = \text{accuracy measure.}$$

If RESET NSEE= 1, the s_i's are interpreted as standard deviations of the e_i's, and the following procedure is implemented.

$$\Delta P = G\ (X_t - X), \text{ where}$$

$$G = S_{rr}\ T^t\ (\ T\ S_{rr}\ T^t\ + S_{ee})^{-1}$$

$$Q = I - G\ T$$

In the special case, n = m, all of the s_i's should be set equal to zero, and the r_i's set to any non-zero values. In this case, the above reduces to:

$$\Delta P = T^{-1}\ (X_t - X).$$

A special RESET control, NUDP, is provided to furnish access to intermediate results produced by SM Phase 3, including the G and Q arrays.

14.4.2 Computation of DP outside of SM

The parameter change vector computed in Phase 3 is stored, for use in Phase 4, in a temporary library (see RESET NUVX) in a data set named DP SM n3eig n4eig. The same temporary library contains X_t and X, computed in Phase 1. Users may substitute procedures of their own design for Phase 3, as illustrated below.

```
@XQT SM
RESET NPARAS= nparas, etc.
RESET NUVX= 2$  Retain X_t, X in a non-temporary (.LT.21) library
OPER= 1 1 0 0$  Execute only Phase 1 and 2

@XQT AUS
$ Using T from library 1  (data set SENS MATR 0 n4para),and
$ X_t and X from library 2 (data sets TARG and X),
$ compute ΔP and store it in library 2 in a data set named DP SM n3eig n4eig.
-
-
@XQT SM
RESET NPARA= nparas, NUVX=2, - - - : OPER= 0 0 0 1$  Execute Phase 4, only.
```

14.5 Application Techniques

For new users of SM, the following suggestions are offered.

- In your initial executions, use a small number of parameters and targets. Execution costs will increase approximately in linear proportion to the number of parameters, and in proportion to the square of the number of modes in the VIBR MODE data set. The quality of the approximations furnished by the sensitivity matrix, T, will depend significantly on the number of modes (see 14.1.2).

- There are many ways in which difficulties may arise in target definition (e.g. conflicting targets, impossible targets). Also, structural parameters often influence the target quantities in unexpected ways. Accordingly, it is suggested that the contents of the sensitivity matrix be examined, via DCU/PRINT after exit from SM. The i-th column of the sensitivity matrix defines the influence of the i-th structural parameter on each of the target quantities.

  The DP and DPX vectors, as well as the modified BA, BB, SA, and RMAS tables should also be examined via DCU/PRINT after each pass through SM.

- If multiple passes are made through SM, be careful to re-check the order of the modes computed by EIG, particularly if the frequencies are closely spaced (e.g. the 4-th mode after one pass through SM may "become" the 5-th after the next pass).

- Be sure to RESET G to the same value in SM as in E.

- The parameter change limits in the DPLI data set should be carefully selected to avoid unreasonable or impossible situations, e.g. negative masses, areas.

14.6 CENTRAL MEMORY REQUIREMENTS

APPROXIMATE CENTRAL MEMORY REQUIREMENTS ARE TABULATED BELOW. ADD ABOUT 1000 WORDS TO THE INDICATED REQUIREMENTS TO MINIMIZE THE POSSIBILITY OF A PROGRAM STOP DUE TO INSUFFICIENT CM. THE SYMBOLS USED ARE DEFINED AS FOLLOWS.

JT= THE NUMBER OF JOINTS IN THE FINITE ELEMENT MODEL.

NDOF= THE TOTAL NUMBER OF DEGREES OF FREEDOM IN THE FINITE ELEMENT MODEL = JT * THE NUMBER OF DEGREES OF FREEDOM PER JOINT. USUALLY, NDOF = 6*JT.

NPARAS= THE NUMBER OF STRUCTURAL PARAMETERS.

NTVAL= THE NUMBER OF EIGENVALUE TARGETS.

NTVEC= THE NUMBER OF EIGENVECTOR TARGETS.

NIP= THE NUMBER OF DISTINCT EIGENVECTORS IDENTIFIED IN THE ENTIRE COLLECTION OF EIGENVECTOR TARGETS. FOR EXAMPLE, IF THE EIGENVECTOR TARGETS CONSIST OF SEVERAL COMPONENTS OF MODE 4, AND SEVERAL COMPONENTS OF MODE 7, NIP WOULD BE 2.

N= THE NUMBER OF MODES IN VIBR MODE N3EIG N4EIG.

NTPI= N(N + 1)/2.

NTARG= NTVAL + NTVEC.

LSECT= THE SUM OF THE LENGTHS OF BA, BB, IA, AND RMAS, OMITTING ANY TABLES NOT REFERENCED IN THE PARAMETER DEFINITIONS.

THE FOLLOWING CENTRAL MEMORY LENGTHS ARE NOT EXACT, AND THE USER SHOULD ADD ABOUT 1000 WORDS TO REDUCE THE POSSIBILITY OF ENCOUNTERING A PROGRAM STOP DUE TO INSUFFICIENT CM.

PHASE 1: 2*NDOF + NIP + N*(1+NIP) +3*NTVAL +7*NTVEC.

PHASE 2: THE GREATEST OF THE FOLLOWING:

(A) 3*LSECT + THE LENGTH OF THE LONGEST PAPA DATA SET, OR

(B) LSECT + JT + THE SAME SPACE REQUIREMENT AS SPAP PROCESSOR K, OR

(C) 3*NTPI + N + 3*(NTARG + NDOF).

PHASE 3: NTARG*NPARAS + 3*NTARG + NPARAS + NPARAS**2 + NTARG**2.

PHASE 4: NPARAS + THE SAME REQUIREMENT AS PHASE 2 (A).

14.7 Error Codes

The following is a short tabulation of error codes produced by SM. JT and JDF are the number of joints and the number of degrees of freedom per joint, respectively.

NERR	NIND	Meaning
LDSM	1	NPARAS .LT. 1
LDSM	2	Neither TVAL nor TVEC present, or NI in TVAL .NE. 2, or NI in TVEC .NE. 4
LDSM	3	CM insufficient to begin Phase 1
SMX	1	CM insufficient to complete Phase 1
SMX	2	CM insufficient to complete Phase 1
SMX1	1	J .LT. 1 in a TVEC data set
SMX1	2	J .GT. JT in a TVEC data set
SMX1	3	K .LT. 1 in a TVEC data set
SMX1	4	K .GT. JDF in a TVEC data set
SMA	1000	CM insufficient to begin Phase 2(A)
CORE	-	CM insufficient to begin Phase 2(B)
SMA	1	CM insufficient to begin Phase 2(C)
XPAR	100, 1	Non-existent table referenced in a PARA data set
XPAR	2	CM insufficient to complete Phase 2(A)
XPAR	3, 4	Non-existent item referenced in a PARA data set
DM	1	RMAS data set not present, or in error.
DM	2	NJ .NE. JT, or NI.NE.JDF in RMAS
DM	3	RMAS in error
DM	4, 5	Illegal RMAS item referenced in a PARA data set
TCOL	1	CM insufficient to complete Phase 2(C)
SMC	1, 2	CM insufficient to complete Phase 4
DPX	1, 2	NI or NJ incorrect in DPLI data set
DPX	3	Illegal limits specified in DPLI

EISI/A2200
Vol-3

SPAR

REFERENCE MANUAL

Volume 3

DEMONSTRATION PROBLEMS

by

C. E. Jones, R. A. Moore, C. L. Yen, and W. D. Whetstone

ENGINEERING INFORMATION SYSTEMS, INC.
5120 CAMPBELL AVENUE, SUITE 240
SAN JOSE, CALIFORNIA 95130
(408) 379-0730

9.4 Effects of Pre-Tension on Vibration
9.5 Buckling of a Cantilever due to Lateral Load
9.6 Buckling due to Pure Bending
9.7 Buckling due to Thermal Load
9.8 Effects of Thermal Pre-Stress on Vibration

10 LUT (SATURN 5 LAUNCHER UMBILICAL TOWER)

11 MECHANISM

12 HYPERBOLIC PARABOLOID

13 COMPOSITE TOROIDAL SHELL

14 DYNAMIC RESPONSE AND BACK TRANSFORMATION

14.1 Cantilevered Beam
14.2 Transmission Tower

15 SUBSTRUCTURE ANALYSIS

16 NON-SYMMETRICALLY LOADED SYMMETRIC STRUCTURES

17 FLUID ELEMENTS

17.1 FLUID SLOSH IN A RIGID CONTAINER
17.2 HYDROELASTIC MODES

18 VIBRATION OF ROTATING AND DAMPED STRUCTURES

18.1 Spinning Axisymmetric Beam
18.2 Rotating Beam (Laurenson's problem)
18.3 Rotating Cantilevered L-Beam
18.4 Damped Beam
18.5 References

19 SYSTEM MODIFICATION

19. SYSTEM MODIFICATION

Modification of the finite element model shown below was performed to illustrate the function of processor SM. Input data defining the initial configuration and the data sets required by SM are listed on the following pages. In the initial configuration, each of the three lines in BA corresponds to an identical 1 x 2 solid rectangle. Each of the three system modification parameters defined via the PARA data sets involves simultaneous changes in both rigid mass distribution and in section properties. All of the BA changes correspond to a .03 magnification of the cross section. All of the SA changes correspond to a .03 magnification of thickness.

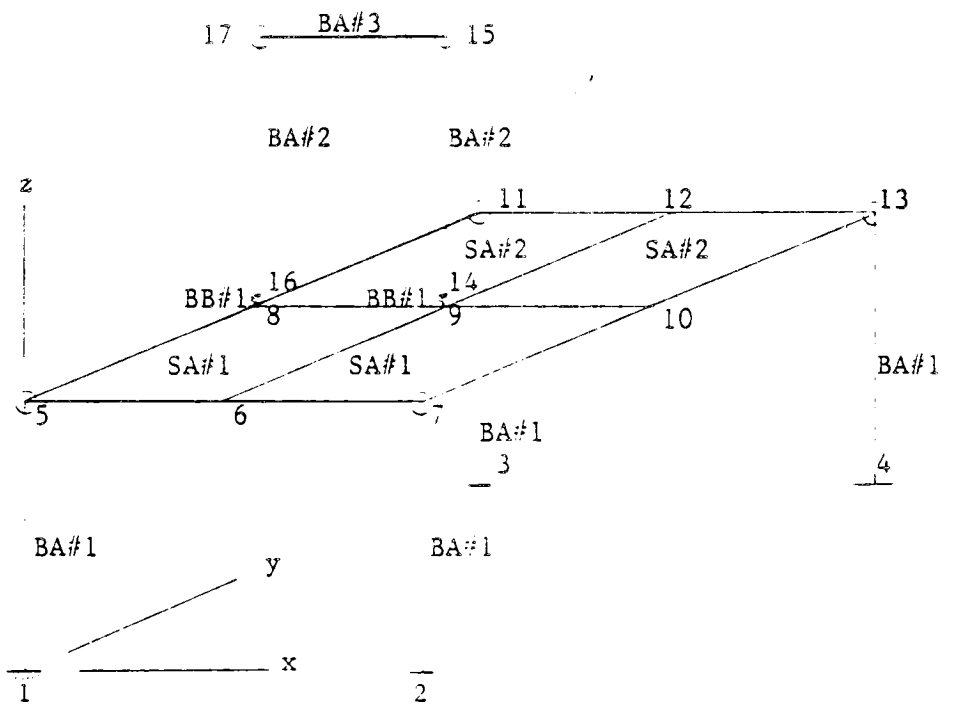

Two passes were made through SM, with the following results:

Target	Target Value	Initial Value	After SM Pass 1	After Pass 2
Eigenvalue, mode 3	32.3	26.8	31.9	32.4
Eigenvalue, mode 4	105.0	76.5	102.9	105.0
Mode 1, joint 9, direction 1	.156	.168	.157	.156
Change, parameter 1			2.713	.1806
Change, parameter 2			3.669	.2004
Change, parameter 3			4.690	.3631

The SPAR runstream for the initial model is as follows:

```
@XQT TAB
  START 17
  JLOC: 1    0.    0.    0. 100.    0.    0. 2 1
        3    0. 200.    0. 100. 200.    0. 2 1
        5    0.    0. 100. 100.    0. 100. 3 1 3
        3    0. 200. 100. 100. 200. 100.
       14   50. 100. 100.   50. 100. 200. 2 1
       16    0. 100. 100.    0. 100. 200. 2 1
  MATC: 1 30.+6 .3 .28
  MREF: 1 1 1 1 1.
        2 1 2 1 1.
  BA: GIVN 1 .67 0. .167 0. 2. .46
      GIVN 2 .67 0. .167 0. 2. .46
      GIVN 3 .67 0. .167 0. 2. .46
  BB: 1 1.+7
        0. 1.+7
        0. 0. 1.+7
        0. 0. 0. .5+6
        0. 0. 0. 0. 1.+5
        0. 0. 0. 0. 0. 1.+7
  SA: FORMAT=ISOTROPIC: 1 1.5: 2 3.0
  RMASS: CM=2.59-3: 15 100.: 17 100.
                     5  25.:  7  25.
                    11  25.: 13  25.
  JSEQ: 1/4.14/17.5/13
  CON=1: ZERO 1 2 3 4 5 6: 1.4
@XQT ELD
  E21: NSECT=1: 1 5: 2 7: 3 11: 4 13
       NSECT=2: 14 15: 16 17
       NSECT=3: NREF=2: 17 15
  E25: NREF=1: 9 14: 8 16
  E43: NSECT=1: 5 6  9  8 1 2 1
       NSECT=2: 8 9 12 11 1 2 1
@XQT E
  RESET G=386.
@XQT EKS
@XQT TOPO
@XQT K
@XQT INV
@XQT AUS
  TMASS=SUM(DEM.RMASS)
@XQT EIG
  RESET INIT=9.NREQ=7
  RESET M=TMASS
@XQT VPRT
  PRINT VIBR MODE 1 1>
       (SM EXAMPLE MODEL 5. INITIAL MODES
@XQT DCU
  TITLE 1(SM EXAMPLE MODEL 5
  TOC 1
 STOP
```

Data sets requied by SM, the SM control statements, and the runstream to recompute the modes of the modified structure are shown below:

```
@XQT AUS
  TABLE(NI=5,NJ=8): PARA SM 1 1      $  PARAMETER NUMBER 1
     J=1,8: 9.   1. .06090 8. 8.     $  A,    BA=1
            9.   1. .12550 4. 4.     $  IX,   BA=1
            9.   1. .12550 6. 6.     $  IY,   BA=1
            9.   1. .12550 9. 9.     $  C/G,  BA=1
           18.   5. .03045 1. 3.     $  RMASS, JT. 5
           18.   7. .03045 1. 3.     $  RMASS, JT. 7
           18.  11. .03045 1. 3.     $  RMASS, JT. 11
           18.  13. .03045 1. 3.     $  RMASS, JT. 13
  TABLE(NI=5,NJ=13): PARA SM 2 1     $  PARAMETER NUMBER 2
    J=1,13: 9.   2. .06090 8. 8.     $  A,    BA=2
            9.   2. .12550 4. 4.     $  IX,   BA=2
            9.   2. .12550 6. 6.     $  IY,   BA=2
            9.   2. .12550 9. 9.     $  C/G,  BA=2
            9.   3. .06090 8. 8.     $  A,    BA=3
            9.   3. .12550 4. 4.     $  IX,   BA=3
            9.   3. .12550 6. 6.     $  IY,   BA=3
            9.   3. .12550 9. 9.     $  C/G,  BA=3
           10.   1. .06090 6. 6.     $  SSS,  BB=1
           10.   1. .12250 1. 5.     $        BB=1
           10.   1. .12550 7. 21.    $        BB=1
           18.  15. .00609 1. 3.     $  RMASS, JT. 15
           18.  17. .00609 1. 3.     $  RMASS, JT. 17
  TABLE(NI=5,NJ=10): PARA SM 3 1     $  PARAMETER NUMBER 3
    J=1,10:13.   1. .03000  3.  3.   $  STR WT, SA=1
           13.   1. -.0291  4.  9.   $  MEMBRANE FLEX, SA=1
           13.   1. -.0849 10. 15.   $  BENDING FLEX,  SA=1
           13.   2. .03000  3.  3.   $  STR WT, SA=2
           13.   2. -.0291  4.  9.   $  MEMBRANE FLEX, SA=2
           13.   2. -.0849 10. 15.   $  BENDING FLEX,  SA=2
           18.   5. .01500  1.  3.   $  RMASS, JT. 5
           18.   7. .01500  1.  3.   $  RMASS, JT. 7
           18.  11. .01500  1.  3.   $  RMASS, JT. 11
           18.  13. .01500  1.  3.   $  RMASS, JT. 13
  TABLE(NI=2,NJ=3): DPLIM SM 1 1     $  PARAMETER LIMITS
     J=1,3: -10. +10.
  TABLE(NI=2,NJ=2): TVAL SM 1 1      $  EIGENVALUE TARGETS
     J=1,2: 3. 32.3  $  .905 HZ, MODE 3
            4. 105.  $  1.63 HZ, MODE 4
  TABLE(NI=4,NJ=1): TVEC SM 1 1      $  EIGENVECTOR TARGET
     J=1: 1. 9. 1. .156  $  MODE 1,JT 15,DIR 1=.156
  TABLE(NI=1,NJ=3): SEE SM 1 1
     J=1,3: 0.
  TABLE(NI=1,NJ=3): SRF SM 1 1
     J=1,3: 1.
@XQT SM
  RESET NPARAS=3, G=386.
@XQT E
  RESET G=386.
@XQT EKS
@XQT K
@XQT INV
@XQT AUS
  TMASS=SUM(DEM,RMASS)
@XQT EIG
  RESET M=TMASS,NREQ=7,HIST=0
```

Modes 1, 3, and 4 of the initial model are as shown below.

SM EXAMPLE, INITIAL MODES ID= 1/ 1/ [illegible]
EIGENVALUE= .7375698+01, FREQ= .4322 HZ

JOINT	1	2	3	4	5	6
5	-.151+00	-.838-02	-.168-04	-.142-04	-.302-04	.000
6	-.151+00	.796-04	.386-05	-.314-06	.656-05	.000
7	-.151+00	.854-02	.168-04	.139-04	-.301-04	.000
8	-.168+00	-.838-02	-.784-04	.185-05	.154-05	.181-03
9	-.168+00	.796-04	-.478-05	-.259-07	-.253-05	.181-03
10	-.168+00	.854-02	.474-04	-.164-05	.224-05	.000
11	-.185+00	-.838-02	-.182-04	.690-05	-.771-05	.000
12	-.185+00	.796-04	.192-05	.137-06	.444-06	.000
13	-.185+00	.854-02	.182-04	-.673-05	-.777-05	.000
14	-.168+00	.796-04	-.464-05	.118-05	-.174-03	.181-03
15	-.186+00	-.184-03	-.244-05	.405-05	-.152-04	.181-03
16	-.168+00	-.838-02	-.785-04	.576-05	-.172-03	.181-03
17	-.186+00	-.923-02	-.807-04	.924-05	-.153-04	.181-03

SM EXAMPLE, INITIAL MODES ID= 1/ 1/ 3
EIGENVALUE= .2679416+02, FREQ= .8238 HZ

JOINT	1	2	3	4	5	6
5	-.194-01	-.161+00	-.344-04	.276-03	.803-04	.000
6	-.194-01	-.169+00	.123-02	.371-04	-.225-05	.000
7	-.194-01	-.177+00	-.323-04	.305-03	-.101-03	.000
8	-.336-02	-.161+00	.240-02	-.173-04	.948-06	-.145-03
9	-.336-02	-.169+00	.272-02	-.527-04	-.422-06	-.145-03
10	-.336-02	-.177+00	.245-02	-.207-04	-.101-05	.000
11	.127-01	-.161+00	.346-04	.182-04	-.134-04	.000
12	.127-01	-.169+00	-.205-03	-.302-04	.498-06	.000
13	.127-01	-.177+00	.341-04	.214-04	.156-04	.000
14	-.336-02	-.169+00	.272-02	.451-03	-.217-04	-.145-03
15	-.578-02	-.256+00	.272-02	.108-02	-.795-05	-.145-03
16	-.336-02	-.161+00	.240-02	.472-03	-.212-04	-.145-03
17	-.578-02	-.248+00	.240-02	.108-02	-.799-05	-.145-03

SM EXAMPLE, INITIAL MODES ID= 1/ 1/ 4
EIGENVALUE= .7646686+02, FREQ= 1.3917 HZ

JOINT	1	2	3	4	5	6
5	.141-01	-.451-01	.330-04	.198-03	.204-04	.000
6	.141-01	-.381-01	.114-02	.103-03	.871-05	.000
7	.141-01	-.311-01	.138-04	.166-03	.669-05	.000
8	.142-03	-.451-01	.679-02	-.942-04	.915-05	.277-03
9	.142-03	-.381-01	.625-02	-.833-04	.947-05	.277-03
10	.142-03	-.311-01	.569-02	-.526-04	.273-05	.000
11	-.138-01	-.451-01	-.167-04	-.468-04	-.444-05	.000
12	-.138-01	-.381-01	-.187-03	-.605-04	-.284-05	.000
13	-.138-01	-.311-01	-.162-04	-.396-04	.171-05	.000
14	.142-03	-.381-01	.625-02	-.647-02	.924-03	.277-03
15	.950-01	.114+01	.624-02	-.144-01	.840-04	.277-03
16	.142-03	-.451-01	.679-02	-.643-02	.924-03	.277-03
17	.950-01	.112+01	.680-02	-.143-01	.840-04	.277-03

Modes 1, 3, and 4 of the modified model are shown below.

IM EXAMPLE. MODES AFTER IM PASS 2 ID= 1/ 1/ 1
EIGENVALUE= .8376646+01. FREQ= .4808 HZ

JOINT	1	2	3	4	5	6
5	.140+00	.822-02	.182-04	.102-04	.224-04	.000
6	.140+00	-.331-04	-.272-05	.202-06	-.482-05	.000
7	.140+00	-.829-02	-.182-04	-.101-04	.224-04	.000
8	.156+00	.822-02	.603-04	-.135-05	-.112-05	-.174-03
9	.156+00	-.331-04	.278-05	.247-07	.196-05	-.174-03
10	.156+00	-.829-02	-.405-04	.122-05	-.158-05	.000
11	.173+00	.822-02	.196-04	-.520-05	.593-05	.000
12	.173+00	-.331-04	-.123-05	-.863-07	-.200-06	.000
13	.173+00	-.829-02	-.196-04	.508-05	.596-05	.000
14	.156+00	-.331-04	.266-05	-.920-06	.131-03	-.174-03
15	.170+00	.173-03	.656-06	-.317-05	.115-04	-.174-03
16	.156+00	.822-02	.604-04	-.446-05	.130-03	-.174-03
17	.170+00	.889-02	.624-04	-.726-05	.116-04	-.174-03

IM EXAMPLE. MODES AFTER IM PASS 2 ID= 1/ 1/ 3
EIGENVALUE= .3236755+02. FREQ= .9055 HZ

JOINT	1	2	3	4	5	6
5	.163-01	.151+00	.375-04	-.214-03	-.626-04	.000
6	.163-01	.158+00	-.931-03	-.302-04	.155-05	.000
7	.163-01	.164+00	.355-04	-.234-03	.766-04	.000
8	.284-02	.151+00	-.193-02	.141-04	-.797-06	.123-03
9	.284-02	.158+00	-.218-02	.409-04	.291-06	.123-03
10	.284-02	.164+00	-.197-02	.164-04	.843-06	.000
11	-.107-01	.151+00	-.377-04	-.126-04	.101-04	.000
12	-.107-01	.158+00	.142-03	.240-04	-.338-06	.000
13	-.107-01	.164+00	-.373-04	-.148-04	-.117-04	.000
14	.284-02	.158+00	-.218-02	-.348-03	.150-04	.123-03
15	.452-02	.225+00	-.218-02	-.832-03	.586-05	.123-03
16	.284-02	.151+00	-.193-02	-.364-03	.146-04	.123-03
17	.452-02	.219+00	-.193-02	-.833-03	.590-05	.123-03

IM EXAMPLE. MODES AFTER IM PASS 2 ID= 1/ 1/ 4
EIGENVALUE= .1049910+03. FREQ= 1.6308 HZ

JOINT	1	2	3	4	5	6
5	-.124-01	.385-01	-.410-04	-.157-03	-.141-04	.000
6	-.124-01	.325-01	-.934-03	-.850-04	-.710-05	.000
7	-.124-01	.265-01	-.183-04	-.134-03	-.672-05	.000
8	-.372-03	.385-01	-.560-02	.784-04	-.667-05	-.235-03
9	-.372-03	.325-01	-.518-02	.685-04	-.732-05	-.235-03
10	-.372-03	.265-01	-.474-02	.437-04	-.189-05	.000
11	.116-01	.385-01	.237-04	.404-04	.301-05	.000
12	.116-01	.325-01	.154-03	.500-04	.239-05	.000
13	.116-01	.265-01	.201-04	.344-04	-.105-05	.000
14	-.372-03	.325-01	-.518-02	.620-02	-.739-03	-.235-03
15	-.762-01	-.110+01	-.517-02	.138-01	-.671-04	-.235-03
16	-.372-03	.385-01	-.560-02	.617-02	-.739-03	-.235-03
17	-.762-01	-.108+01	-.561-02	.138-01	-.671-04	-.235-03

JUNE 1978

Revision 3 to:
EISI/A2200

SPAR Reference Manual Update

SPAR Level 13A

Prepared under NASA Contracts

NAS8-32665 (Part 1 - Final Report)

and

NAS1-14464 (Interim Report)

by

W. D. Whetstone and C. E. Jones

ENGINEERING INFORMATION SYSTEMS, INC.
5120 CAMPBELL AVENUE, SUITE 240
SAN JOSE, CALIFORNIA 95130
(408) 379-0730

REVISION 3 TO:
EISI/A2200

SPAR LEVEL 13A

PREFACE

THIS REPORT WAS PREPARED BY ENGINEERING INFORMATION SYSTEMS, INC., UNDER CONTRACTS WITH THE GEORGE C. MARSHALL SPACE FLIGHT CENTER AND THE LANGLEY RESEARCH CENTER, NATIONAL AERONAUTICS AND SPACE ADMINISTRATION. THREE-DIMENSIONAL STRESS ANALYSIS CAPABILITIES WERE DEVELOPED UNDER NAS8-32665 (MSFC). THERMAL ANALYSIS CAPABILITIES WERE DEVELOPED UNDER NAS1-14464 (LARC).

THE FOLLOWING CHANGES IN THE SPAR REFERENCE MANUAL SHOULD BE MADE, USING THE REPLACEMENT PAGES CONTAINED IN THIS DOCUMENT.

	DELETE PAGES:	INSERT PAGES:
VOL-1:	OLD REVISION RECORD	NEW REVISION RECORD
	II - VI	II - V
	ALL OF SECTION 1	ALL OF SECTION 1
	2-1,2-2,2.1-1	2-1
	3-1	3-1
	3.1.1-1	3.1.1-1
	3.1.7-1,-2	3.1.7-1,-2
	3.1.9-1,-2	3.1.9-1,-2
	ALL OF SECTION 3.2	ALL OF SECTION 3.2
	6.1.5-1,6.1.6-1	6.1.5-1,6.1.6-1
	6.1.6.1-3,-4	6.1.6.1-3,-4
	6.1.6.2-3	6.1.6.2-3,-4
	6.1.6.3-1,-2	6.1.6.3-1,-2
	7.2-1,-2,-3	7.2-1,-2,-3
	8-1,-2	8-1,-2
	12-5,-6	12-5,-6
	ALL OF APPENDIX A	
VOL-2:	TITLE PAGE	TITLE PAGE
	II	II
	A-1,-2	A-1,-2
	A-6,-7,-8,-14	A-6,-7,-8,-14
	B-1,-2	B-1,-2
	C-1,-2	C-1,-2
	(NEW PAGE)	D-1
VOL-3:	III,IV	III,IV
	(NEW SECTION)	SECTION 20

SPAR Reference Manual Revision Record:

System Level	EISI/A2200 Rev. No.	Date		Volumes revised
12	1	November	1977	1,2,3
13	2	March	1978	1,3
13A	3	June	1978	1,2,3

CONTENTS

SECTION

FOREWORD

1 INTRODUCTION

1.1 NEW USER ORIENTATION
1.2 SPAR OVERVIEW

2 BASIC INFORMATION

2.1 REFERENCE FRAME TERMINOLOGY
2.2 THE DATA COMPLEX
2.3 CARD INPUT RULES

2.3.1 EQUIVALENCE OF WORD TERMINATORS
2.3.2 CONTINUATION CARDS
2.3.3 LOOP-LIMIT FORMAT

2.4 RESET CONTROLS, CORE SIZE CONTROL, AND THE ONLINE COMMAND
2.5 DATA SET STRUCTURE

2.5.1 TABLE
2.5.2 SYSVEC
2.5.3 ELDATA

2.6 ERROR MESSAGES

3 STRUCTURE DEFINITION

3.1 TAB- BASIC TABLE INPUTS

3.1.1 TEXT
3.1.2 MATERIAL CONSTANTS (MATC)
3.1.3 DISTRIBUTED WEIGHT (NSW)
3.1.4 ALTERNATE REFERENCE FRAMES (ALTREF)
3.1.5 JOINT LOCATIONS (JLOC)
3.1.6 JOINT REFERENCE FRAMES (JREF)
3.1.7 BEAM ORIENTATION (MREF)
3.1.8 BEAM RIGID LINKS (BRL)
3.1.9 E21 SECTION PROPERTIES (BA)
3.1.10 E22, E25 SECTION PROPERTIES (BB)
3.1.11 E23 SECTION PROPERTIES (BC)
3.1.12 E24 SECTION PROPERTIES (BD)
3.1.13 SHELL SECTION PROPERTIES (SA)
3.1.14 PANEL SECTION PROPERTIES (SB)
3.1.15 CONSTRAINT DEFINITION (CON)
3.1.16 JOINT ELIMINATION SEQUENCE (JSEQ)
3.1.17 RIGID MASSES (RMASS)

SECTION

3.2 ELD- ELEMENT DEFINITION PROCESSOR

3.2.1 GENERAL RULES, ELD INPUT

3.2.1.1 ERROR CONDITIONS
3.2.1.2 ELEMENT REFERENCE FRAMES
3.2.1.3 ELEMENT GROUP/INDEX DESIGNATION
3.2.1.4 THE MOD COMMAND
3.2.1.5 THE INC COMMAND

3.2.2 STRUCTURAL ELEMENT DEFINITION

3.2.2.1 LINE ELEMENTS
3.2.2.2 AREA ELEMENTS
3.2.2.3 THREE-DIMENSIONAL ELEMENTS

3.2.3 THERMAL ELEMENT DEFINITION

3.3 E- E-STATE INITIATION
3.4 EKS- ELEMENT INTRINSIC STIFFNESS AND STRESS MATRIX GENERATOR

4 SPAR FORMAT SYSTEM MATRIX PROCESSORS

4.1 TOPO - ELEMENT TOPOLOGY ANALYZER
4.2 K- THE SYSTEM STIFFNESS MATRIX ASSEMBLER
4.3 M- SYSTEM CONSISTENT MASS MATRIX ASSEMBLER
4.4 KG- SYSTEM INITIAL STRESS (GEOMETRIC) STIFFNESS MATRIX ASSEMBLER
4.5 INV- SPAR FORMAT MATRIX DECOMPOSITION PROCESSOR
4.6 PS- SPAR FORMAT MATRIX PRINTER

5 UTILITY PROGRAMS

5.1 AUS- ARITHMETIC UTILITY SYSTEM

5.1.1 MISCELLANEOUS
5.1.2 GENERAL ARITHMETIC OPERATIONS

5.1.2.1 SUM
5.1.2.2 PRODUCT
5.1.2.3 UNION
5.1.2.4 XTY, XTYSYM, XTYDIAG
5.1.2.5 NORM
5.1.2.6 RIGID
5.1.2.7 RECIP, SQRT, SQUARE
5.1.2.8 RPROD, RTRAN, RINV
5.1.2.9 LTOG, GTOL

5.1.3 Data Set Constructors

5.1.3.1 TABLE
5.1.3.2 SYSVEC
5.1.3.3 ELDATA
5.1.3.4 ALPHA

5.1.4 Substructure Operations

5.2 DCU- DATA COMPLEX UTILITY PROGRAM
5.3 VPRT- VECTOR PRINTER

6 STATIC SOLUTIONS

6.1 APPLIED LOAD INPUT

6.1.1 Point Forces and Moments Acting on Joints
6.1.2 Specified Joint Motions
6.1.3 Inertial Loading
6.1.4 Nodal Temperatures
6.1.5 Nodal Pressures
6.1.6 Loading Defined for Individual Elements

6.1.6.1 Temperatures
6.1.6.2 Dislocations
6.1.6.3 Pressure

6.2 EQNF- EQUIVALENT NODAL FORCE GENERATOR
6.3 SSOL- STATIC SOLUTION GENERATOR

7 STRESSES

7.1 GSF- STRESS DATA GENERATOR
7.2 PSF- STRESS TABLE PRINTER

8 EIG- SPARSE MATRIX EIGENSOLVER

9 DR- DYNAMIC RESPONSE

9.1 PRELIMINARY INFORMATION

9.1.1 TERMINOLOGY

9.1.1.1 LINEAR SYSTEMS
9.1.1.2 PIECEWISE LINEAR FUNCTIONS OF TIME IN PLF FORMAT

9.1.2 MATRIX SERIES EXPANSION METHOD OF TRANSIENT RESPONSE COMPUTATION

9.2 DR- LINEAR DYNAMIC RESPONSE ANALYZER

9.2.1 TRANSIENT ANALYSIS OF UNCOUPLED SYSTEMS

9.2.1.1 DTEX COMMAND
9.2.1.2 TR1 COMMAND

9.2.2 BACK TRANSFORMATION VIA THE BACK COMMAND

10 GRAPHICS

10.1 PLTA- PLOT SPECIFICATION GENERATOR

10.1.1 OPTIONAL CONTROL PARAMETERS
10.1.2 GEOMETRIC COMPOSITION COMMANDS

10.2 PLTB- PRODUCTION OF GRAPHICAL DISPLAYS
10.3 GRAPHICAL EXAMPLES

11 SUBSTRUCTURE PROCESSORS

11.1 TERMINOLOGY

11.1.1 REFERENCE FRAMES
11.1.2 SUBSTRUCTURE STATE
11.1.3 SYSTEM STATE

11.2 SYN- SYSTEM SYNTHESIS
11.3 STPP- SUBSTRUCTURE EIGENSOLVER
11.4 SSBT- BACK TRANSFORMATION

12 FLUID ELEMENTS

13 CEIG- COMPLEX EIGENSOLVER

14 SM- SYSTEM MODIFICATION PROCESSOR

SECTION 1

INTRODUCTION

1.1 NEW USER ORIENTATION

TO EXPEDITE LEARNING WHAT THE SYSTEM CAN DO AND HOW IT IS EXECUTED, IT IS RECOMMENDED THAT NEW USERS PROCEED AS FOLLOWS:

- CAREFULLY READ ALL OF SECTION 1.2.
- SCAN THE TABLES OF CONTENTS OF VOLUME 1, VOLUME 2 (THEORY), AND VOLUME 3 (DEMONSTRATION PROBLEMS).
- SCAN SECTION 2. CAREFUL READING, PARTICULARLY OF SECTION 2.5, MAY BE DEFERRED. HOWEVER, MUCH OF THE BASIC TERMINOLOGY INTRODUCED IN SECTION 2 IS USED EXTENSIVELY THROUGHOUT THE SPAR REFERENCE MANUAL.
- BRIEFLY EXAMINE THE DEMONSTRATION PROBLEMS IN VOLUME 3 OF THE SPAR REFERENCE MANUAL, PARTICULARLY EXAMPLE 1.
- READ THE PREAMBLE OF SECTION 3, AND SCAN THE REMAINDER FOR AN OVERVIEW OF HOW VARIOUS ASPECTS OF BASIC STRUCTURE DEFINITIONS ARE ACCOMPLISHED.
- SCAN SECTION 4 TO LEARN HOW SYSTEM STIFFNESS MATRICES ARE FORMED AND FACTORED.
- READ SECTION 2.5 AND 5.1.3 TO LEARN HOW TO USE SPAR'S GENERAL-PURPOSE DATA ENTRY FACILITIES.
- READ SECTION 6 TO LEARN HOW TO PERFORM STATIC ANALYSIS.
- READ SECTIONS 7 AND 5.3 TO LEARN HOW TO PRODUCE TABULAR DISPLAYS OF THE RESULTS OF STATIC ANALYSES.
- READ THE DESCRIPTIONS OF THE GRAPHICS PROCESSORS.
- SCAN THE REMAINDER OF SECTION 5.1 (ARITHMETIC UTILITY SYSTEM), TO LEARN HOW TO FORM LINEAR COMBINATIONS OF SYSTEM MATRICES, COMBINE SOLUTIONS, ETC.
- SCAN THE REMAINDER OF THE MANUAL TO GET A GENERAL VEIW OF THE FUNCTIONS OF ALL PROCESSORS.

ALTHOUGH SPAR MAY BE EXECUTED IN BATCH MODE, IT IS RECOMMENDED THAT THE USER TAKE MAXIMUM ADVANTAGE OF SPAR'S CAPABILITIES THROUGH INTERACTIVE OPERATION. TO DO SO, IT WILL BE NECESSARY TO BECOME FAMILIAR WITH THE TEXT EDITING AND FILE MANIPULATION FACILITIES (E.G. CATALOGING PERMANENT FILES, DISK-TO-TAPE COPIES, ETC.) OF THE HOST OPERATING SYSTEM.

1.2 SPAR OVERVIEW

SPAR IS A SYSTEM OF PROGRAMS USED PRIMARILY TO PERFORM STRESS, BUCKLING, AND VIBRATIONAL ANALYSIS OF LINEAR FINITE ELEMENT SYSTEMS. THE ELEMENT REPERTOIRE IS SUMMARIZED IN TABLE 1-1.

SPAR FUNCTIONS EFFECTIVELY IN BOTH BATCH AND INTERACTIVE OPERATION. MOST PROBLEMS ARE SOLVED THROUGH A COMBINATION OF BATCH AND INTERACTIVE OPERATION, USING GRAPHIC TERMINALS, LOW-SPEED TELETYPES, AND HIGH-SPEED PRINTERS WHERE APPROPRIATE.

EFFICIENT SPARSE MATRIX SOLUTION METHODS PROVIDE LOW EXECUTION COSTS, MINIMAL CENTRAL MEMORY REQUIREMENTS, AND LARGE SIZE CAPACITY, PERMITTING VERY FINE MESHES TO BE USED. STATIC, BUCKLING, AND VIBRATIONAL PROBLEMS IN THE 10,000 TO 20,000 DEGREE-OF-FREEDOM RANGE ARE SOLVED ROUTINELY. CAPACITY ON MOST UNIVAC 1100 SYSTEMS EXCEEDS 50,000 DEGREES-OF-FREEDOM.

ON UNIVAC SYSTEMS SPAR IS AN ARRAY OF SEPARATE ABSOLUTE PROGRAMS, CALLED "PROCESSORS" IN THIS MANUAL. FUNCTIONS OF THE PROCESSORS ARE BRIEFLY SUMMARIZED IN TABLE 1-2. PROCESSORS OBTAIN INPUT FROM TWO SOURCES:

- USER INPUT RECORDS FROM CARDS OR TERMINALS.

- A DATA BASE CONSISTING OF ONE OR MORE RANDOM-ACCESS "LIBRARIES," WITHIN WHICH MAY RESIDE ANY NUMBER OF NAMED "DATA SETS" PRODUCED BY OTHER SPAR PROCESSORS.

SPAR PROCESSORS DO NOT HAVE TO BE EXECUTED IN ANY PARTICULAR ORDER, PROVIDED ALL NECESSARY SOURCE DATA SETS RESIDE IN THE DATA BASE. EACH PROCESSOR AUTOMATICALLY EXTRACTS FROM THE DATA BASE ALL OF THE DATA SETS IT REQUIRES, AND INSERTS INTO THE DATA BASE THE NEWLY-GENERATED DATA SETS. DISPLAY PROCESSORS ARE PROVIDED TO PERMIT THE USER TO SELECTIVELY DISPLAY ANALYSIS RESULTS FROM THE DATA BASE. THE USER DOES NOT HAVE TO BE CONCERNED WITH THE INTERNAL CONSTITUTION OF THE LIBRARIES, OR THE DETAILS OF HOW PROCESSORS COMMUNICATE WITH THE DATA BASE.

RESTARTING IS TOTALLY AUTOMATIC. THE USER SIMPLY RE-ATTACHES THE FILE, OR FILES, CONTAINING THE DATA BASE AND RESUMES EXECUTION AS THOUGH THE PRIOR RUN HAD NOT TERMINATED.

ON UNIVAC SYSTEMS, TYPICAL RUNSTREAMS APPEAR AS SHOWN BELOW. TAB AND AUS ARE NAMES OF TWO SPAR PROCESSORS. ALL INPUT IS FREE-FIELD (SEE SECTION 2.3).

CARD IMAGE	MEANING
◆XQT TAB	BEGIN EXECUTION OF PROCESSOR TAB.
DATA CARD	INPUT CONTENT FOR INDIVIDUAL
DATA CARD	PROCESSORS IS DESCRIBED IN DETAIL
DATA CARD	IN VOLUME 1 OF THE SPAR REF. MANUAL.
DATA CARD	MANY PROCESSOR EXECUTIONS REQUIRE NO
DATA CARD	INPUT.
-	
-	
◆XQT AUS	BEGIN EXECUTION OF PROCESSOR AUS.
DATA CARD	
DATA CARD	
DATA CARD	
-	
-	
-	

ON CDC SYSTEMS, THE ENTIRE SPAR SYSTEM USUALLY RESIDES IN A SINGLE ABSOLUTE PROGRAM CONFIGURED TO SIMULATE UNIVAC OPERATION. AT MOST INSTALLATIONS, THE NAME OF THE PRIMARY ABSOLUTE PROGRAM FILE IS SPAR. CDC INPUT RECORDS APPEAR AS FOLLOWS:

```
◆XQT TAB
 DATA CARD
 DATA CARD
 DATA CARD
 -
 -

◆XQT AUS
 DATA CARD
 DATA CARD
 -
 -
 -
7/8/9    (END OF INPUT RECORD)
```

TABLE 1-1: SPAR ELEMENT REPERTOIRE.

NAME	DESCRIPTION	SEE VOLUME 1 SECTIONS:
E21	GENERAL STRAIGHT BEAM ELEMENTS SUCH AS CHANNELS, WIDE-FLANGES, ANGLES, TUBES, ZEES, ETC.	3.1.7 - 9
E22	BEAMS FOR WHICH THE INTRINSIC STIFFNESS MATRIX IS GIVEN.	3.1.10
E23	BAR - AXIAL STIFFNESS ONLY.	3.1.11
E24	PLANE BEAM.	3.1.12
E25	ZERO-LENGTH ELEMENT USED TO ELASTICALLY CONNECT GEOMETRICALLY COINCIDENT JOINTS.	3.1.10
	TWO-DIMENSIONAL (AREA) ELEMENTS:	3.1.13
E31	TRIANGULAR MEMBRANE.	
E32	TRIANGULAR PLATE.	
E33	TRIANGULAR COMBINED MEMBRANE AND BENDING ELEMENT.	
E41	QUADRILATERAL MEMBRANE.	
E42	QUADRILATERAL PLATE.	
E43	QUADRILATERAL COMBINED MEMBRANE AND BENDING ELEMENT.	
E44	QUADRILATERAL SHEAR PANEL.	3.1.14
	THREE-DIMENSIONAL SOLIDS:	3.2.2.3
S41	TETRAHEDRON (PYRAMID).	
S61	PENTAHEDRON (WEDGE).	
S81	HEXAHEDRON (BRICK).	
	COMPRESSIBLE FLUID ELEMENTS:	12., 3.2.2.3
F41	TETRAHEDRON (PYRAMID).	
F61	PENTAHEDRON (WEDGE).	
F81	HEXAHEDRON (BRICK).	

NOTES:

- SEE SECTION 7.2 FOR EXAMPLES OF STRESS OUTPUT.
- SEE VOLUME 2 (THEORY) FOR ELEMENT FORMULATION DETAILS.
- AEOLOTROPIC CONSTITUTIVE RELATIONS PERMITTED, ALL AREA ELEMENTS.
- LAMINATED CROSS SECTIONS PERMITTED FOR E33, E43.
- MEMBRANE/BENDING COUPLING PERMITTED FOR E33, E43.
- E41, E42, E43, E44 MAY BE WARPED.
- AEOLOTROPIC CONSTITUTIVE RELATIONS PERMITTED FOR 3-D SOLIDS.
- NON-STRUCTURAL MASS PERMITTED FOR LINE AND AREA ELEMENTS.

TABLE 1-2: SPAR PROCESSOR FUNCTIONS.

NAME AND SECTION REFERENCE		FUNCTION
TAB	3.1	TRANSLATES USER INPUTS INTO DATA SETS CONTAINING BASIC TABLES OF INFORMATION SUCH AS: - JOINT LOCATIONS. - MATERIAL CONSTANTS. - ELEMENT SECTION PROPERTIES. - JOINT REFERENCE FRAME ORIENTATIONS. - CONSTRAINT CONDITIONS. - RIGID LUMPED MASS DATA. (SEE SECTION 3.1 FOR A COMPLETE LIST)
ELD	3.2	PRODUCES DATA SETS CONTAINING BASIC ELEMENT DEFINITIONS, I.E. CONNECTED JOINTS, INTEGERS POINTING TO APPLICABLE LINES IN TABLES OF SECTION PROPERTIES, MATERIAL CONSTANTS, ETC.
E	3.3	GENERATES A SYSTEM OF DATA SETS CALLED THE 'E-STATE,' CONSISTING OF INDIVIDUAL ELEMENT INFORMATION PACKETS CONTAINING DATA SUCH AS ELEMENT GEOMETRY (DIMENSIONS, ORIENTATION), AND LITERAL SECTION PROPERTIES. E ALSO FORMS THE SYSTEM DIAGONAL MASS MATRIX.
EKS	3.4	COMPUTES ELEMENT STIFFNESS AND STRESS INFLUENCE MATRICES, AND INSERTS THEM INTO THE 'E-STATE'.
TOPO	4.1	ANALYZES ELEMENT INTERCONNECTION TOPOLOGY, AND PRODUCES DATA SETS USED TO GUIDE OTHER SPAR PROCESSORS IN FORMING AND FACTORING ASSEMBLED SYSTEM MATRICES.
K	4.2	FORMS SYSTEM ELASTIC STIFFNESS MATRIX.
M	4.3	FORMS SYSTEM CONSISTENT MASS MATRIX.
KG	4.4	FORMS SYSTEM GEOMETRIC (PRE-STRESS) STIFFNESS MATRIX.
FSM	12	FORMS SYSTEM MATRICES (DILITATIONAL STRAIN ENERGY, GRAVITATIONAL ENERGY, KINETIC ENERGY) ASSOCIATED WITH FLUID ELEMENTS.
INV	4.5	FACTORS SYSTEM MATRICES IN SPAR'S STANDARD SPARSE-MATRIX FORMAT, E.G. K, K+KG, K-cM.

TABLE 1-2: SPAR PROCESSOR FUNCTIONS (CONTINUED).

NAME AND SECTION REFERENCE		FUNCTION
AUS	5.1	THE ARITHMETIC UTILITY SYSTEM, COMPRISED OF AN ARRAY OF SUBPROCESSORS IN THE FOLLOWING CATEGORIES: - DATA SET CONSTRUCTORS, PROVIDING A GENERAL MEANS OF FURNISHING INPUT DATA FOR USE BY SPAR. APPLIED LOAD DATA OF ALL TYPES (MECHANICAL, THERMAL, PRESSURE, DISLOCATIONAL, TRANSIENT DYNAMIC) IS USUALLY DEFINED VIA THESE SUBPROCESSORS. - MATRIX ARITHMETIC OPERATIONS, E.G. SUMS, PRODUCTS, UNIONS. - SPECIAL FUNCTIONS, INCLUDING SUBPROCESSORS USED IN PERFORMING SUBSTRUCTURE ANALYSIS.
EQNF	6.2	COMPUTES FIXED-JOINT FORCES ASSOCIATED WITH THERMAL, DISLOCATIONAL, AND PRESSURE LOADING. COMPUTES ELEMENT GENERALIZED INITIAL STRAIN ARRAYS.
SSOL	6.3	COMPUTES JOINT MOTIONS AND REACTIONS DUE TO STATIC LOADING.
GSF	7.1	PRODUCES DATA SETS CONTAINING ELEMENT STRESSES AND INTERNAL LOADS. GSF IS USED TO COMPUTE BOTH STATIC AND DYNAMIC STRESSES.
PSF	7.2	PRODUCES TABULAR STRESS REPORTS FROM DATA SETS GENERATED BY GSF.
EIG	8	SOLVES HIGH-ORDER EIGENPROBLEMS INVOLVING SYSTEM MATRICES IN SPAR'S SPARSE MATRIX FORMAT. USED TO SOLVE BOTH VIBRATIONAL AND BUCKLING EIGENPROBLEMS.
CEIG	13	COMPUTES COMPLEX MODES AND FREQUENCIES OF DAMPED, SPINNING STRUCTURES. SYSTEM MATRICES ARE IN SPAR'S STANDARD SPARSE MATRIX FORMAT, PERMITTING ANALYSIS OF SYSTEMS OF VERY HIGH ORDER.
DR	9	COMPUTES LINEAR TRANSIENT MODAL RESPONSE.

TABLE 1-2: SPAR PROCESSOR FUNCTIONS (CONTINUED).

NAME AND SECTION REFERENCE		FUNCTION
SYN	11.2	SYNTHESIZES SYSTEM M AND K FROM SUBSTRUCTURE DATA IN THE FORM PRODUCED BY AUS SUBPROCESSORS SSPREP, SSM, AND SSK.
STRP	11.3	GENERAL PURPOSE EIGENSOLVER, FULL MASS AND STIFFNESS MATRICES. USED PRIMARILY IN ANALYZING SYSTEMS SYNTHESIZED BY SYN.
SSBT	11.4	SUBSTRUCTURE BACK-TRANSFORMATION PROCESSOR. COMPUTES JOINT MOTIONS IN INDIVIDUAL SUBSTRUCTURES FROM SYSTEM STATE DATA IN THE FORM GENERATED BY SYN AND STRP.
SM	14	THE SYSTEM MODIFICATION PROCESSOR. SM ALTERS THE BASIC DEFINITION OF THE STRUCTURE TO CAUSE MODES AND FREQUENCIES TO APPROACH TARGET VALUES DEFINED BY THE USER. TYPICAL APPLICATIONS INCLUDE TUNING FINITE ELEMENT MODELS TO AGREE WITH DYNAMIC TEST RESULTS, AND DESIGN OF VIBRATION ATTENUATORS.
PLTA	10	TRANSFORMS USER INPUTS INTO DATA SETS DETAILING THE COMPOSITION OF PLOTS TO BE PRODUCED BY PLTB.
PLTB	10	PRODUCES PLOTS OF DEFORMED OR UNDEFORMED STRUCTURE, STRESSES, ETC.
VPRT	5.3	PRINTS REPORTS OF DATA IN SPAR'S SYSVEC (SYSTEM VECTOR) FORMAT, E.G. STATIC DISPLACEMENTS, REACTIONS, VIBRATIONAL OR BUCKLING EIGENVECTORS.
DCU	5.2	THE DATA COMPLEX UTILITY PROGRAM. DCU PERFORMS UTILITY OPERATIONS SUCH AS PRINTING DATA BASE TABLES OF CONTENTS, COPYING DATA SETS FROM FILE TO FILE, PRINTING SELECTED ITEMS FROM DATA SETS, AND TRANSFERRING DATA TO OR FROM PROGRAMS OUTSIDE THE SPAR SYSTEM.
PS	4.6	PRINTS DESIGNATED PARTS OF SPAR-FORMAT SYSTEM MATRICES.

SECTION 2

BASIC INFORMATION

THIS SECTION PRESENTS BASIC INFORMATION AND DEFINES TERMINOLOGY USED THROUGHOUT THE SPAR REFERENCE MANUAL.

2.1 REFERENCE FRAME TERMINOLOGY

THE TERM "FRAME K" WILL BE USED TO REFER TO THE GLOBAL FRAME (K= 1), OR TO ANY ALTERNATE FRAME (K= 2, 3, 4, - -) THE ANALYST ELECTS TO DEFINE, AS DESCRIBED IN SECTION 3.1.4.

EACH JOINT IN THE STRUCTURE HAS ASSOCIATED WITH IT A UNIQUE "JOINT REFERENCE FRAME," TO WHICH ALL JOINT MOTIONS ARE RELATIVE. THE ORIENTATION OF INDIVIDUAL JOINT REFERENCE FRAMES IS PRESCRIBED BY THE USER, AS DESCRIBED IN SECTION 3.1.6.

EACH ELEMENT HAS AN ASSOCIATED "ELEMENT REFERENCE FRAME," TO WHICH SECTION PROPERTIES AND STRESSES ARE RELATIVE. THE USER PRESCRIBES THE ORIENTATION OF ELEMENT REFERENCE FRAMES, AS DESCRIBED IN SECTION 3.2.

2.2 THE DATA COMPLEX

The data complex may consist of any number of files considered appropriate to a particular application. There are two kinds of files, namely:

- SPAR-format direct-access libraries, resident on random-access devices (disk, drum). Libraries are the media through which programs in the SPAR system are able to communicate. Users often elect to house the entire data complex in a single library file.
- Sequential files, resident on tape, drum, or disk. A large percentage of SPAR runs do not involve any sequential files. They are primarily used to store libraries on tape between runs. See Section 5.2, TWRITE and TREAD commands. These files are also used to communicate with programs outside the SPAR system. See Section 5.2, XCOPY and XLOAD.

Files are known by SPAR logical file numbers: 1, 2, ..., 26. These are not Fortran logical unit numbers. The corresponding UNIVAC file names are SPAR-A, SPAR-B, ..., SPAR-Z. The corresponding CDC file names are SPARLA, SPARLB, ..., SPARLZ. If a SPAR program must use a file which does not already exist, it will generate internally the necessary requests to the host-operating system to assign (i.e., create) the file as a temporary file resident on random-access storage. The following examples illustrate the correspondence between UNIVAC external file names, internal file names, and SPAR logical file numbers.

SECTION 3
STRUCTURE DEFINITION

TO DEFINE THE BASIC FINITE ELEMENT MODEL OF THE STRUCTURE, THE USER PROCEEDS AS FOLLOWS.

- EXECUTE TAB TO DEFINE JOINT LOCATIONS, JOINT REFERENCE FRAME ORIENTATIONS, TABLES OF SECTION PROPERTIES, AND OTHER BASIC COMPONENTS OF THE PROBLEM DEFINITION, AS SUMMARIZED ON TABLE TAB-1 IN SECTION 3.1.

- EXECUTE AUS/TABLE TO GENERATE TABLES OF SECTION PROPERTIES FOR THREE-DIMENSIONAL SOLID AND FLUID ELEMENTS, IF REQUIRED, AS DESCRIBED IN SECTION 3.2.2.3.

- EXECUTE ELD TO GENERATE DATA SETS CONTAINING BASIC ELEMENT DEFINITIONS, I.E. CONNECTED JOINTS, INTEGERS POINTING TO APPLICABLE LINES IN TABLES OF SECTION PROPERTIES, ETC.

- EXECUTE E TO GENERATE A SYSTEM OF DATA SETS CALLED THE "E-STATE," CONSISTING OF INVIVIDUAL ELEMENT INFORMATION PACKETS CONTAINING DATA SUCH AS ELEMENT GEOMETRY (DIMENSIONS, ORIENTATION), AND LITERAL SECTION PROPERTIES.

  E ALSO PRODUCES THE SYSTEM DIAGONAL MASS MATRIX.

- EKS IS EXECUTED TO COMPUTE INDIVIDUAL ELEMENT STIFFNESS AND STRESS RECOVERY MATRICES, AND INSERT THEM INTO THE E-STATE.

ALL OF THE BASIC STRUCTURAL DEFINITION DATA SETS PRODUCED AS OUTLINED ABOVE SHOULD BE RETAINED IN LIBRARY 1.

3.1.1 TEXT

The TEXT subprocessor gives the analyst a means of embedding in the output library a data set containing alphanumeric text descriptive of the analysis being performed. Each card has a 4/8 punch in column 1, followed by a 60-character alphanumeric string. The contents of TEXT data sets may be printed using the DCU/PRINT command.

3.1.2 MATERIAL CONSTANTS (MATC)

MATC generates a table of material constants. The data sequence on the card defining the k-th entry in the table is k, E, ν, ρ, α_1, α_2, θ, where

E = Modulus of elasticity

ν = Poisson's Ratio

ρ = Weight per unit volume

α_1 = Thermal expansion coefficient, direction $\bar{x}$

α_2 = Thermal expansion ceefficient, direction $\bar{y}$

θ = Angle between axes of element reference frame (x,y) and $(\bar{x},\bar{y})$. Element reference frame orientation is discussed in Section 3.2.

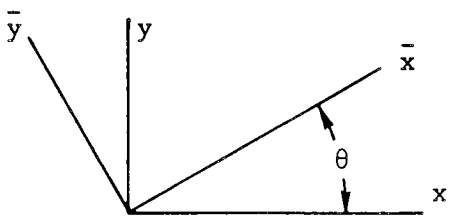

$\varepsilon_{\bar{x}} = \alpha_1 \cdot$ temperature

$\varepsilon_{\bar{y}} = \alpha_2 \cdot$ temperature

$\gamma = 0$

If θ is omitted, the program sets $\theta = 0$. If α_2 is omitted, the program sets $\alpha_2 = \alpha_1$ (isotropic material). θ must be given in <u>degrees</u>.

Reference is made to entries in the MATC table in input to TAB/SA, and in element definition input to ELD.

3.1.3 DISTRIBUTED WEIGHT (NSW)

A table of non-structural distributed weight parameters is defined. The data sequence for the input card defining the k-th entry in the table is k, W, where

for 2-node elements, W = weight per unit length, and

for 3 or 4-node elements, W = weight per unit area.

Non-structural weight attached to specific elements is defined in processor ELD by pointing to entries in the NSW table.

3.1.7 BEAM ORIENTATION (MREF)

Each two-node element has an "element reference frame" associated with it (see processor ELD discussion). Beam section properties, stresses, etc., are defined relative to these frames. The 3-axis of the frame is directed from the beam's origin to its terminus. The origin and terminus are the ends connected to joints J1 and J2, respectively, as defined in processor ELD. The beam end points coincide with J1 and J2, unless offset by rigid links defined via the BRL sub-processor.

Entries in the table produced by MREF are used to define the orientation of beam axes 1 and 2. Usually a single entry in this table will apply to many beams. Either of two data sequences may be selected through FORMAT control, as indicated below.

If FORMAT=1 (default), the data sequence defining table entry k is

k, nb, ng, isign, c

The above indicates that c is the cosine of the (smallest) angle between beam axis nb and global axis ng. Legal values of nb are 1 and 2, and ng may be 1, 2, or 3. The parameter isign resolves a possible ambiguity by indicating whether the cosine of the angle between beam axis (3-nb) and global axis ng is positive or negative, with values of +1 and -1 indicating positive and negative, respectively. Examples are shown below.

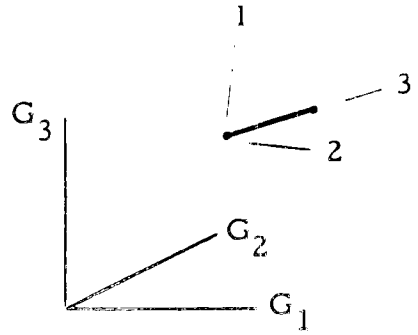

nb, ng, isign, and c are
1, 3, -1, and .9

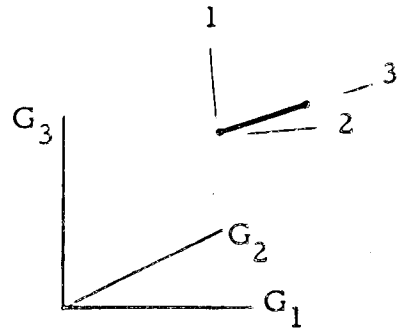

nb, ng, isign, and c are
1, 3, 1, and .9

In both of the above cases the cosine of the angle between beam axis 1 and global axis 3 is .9, and isign defines the sign of the cosine of the angle between beam axis 2 and global axis 3.

In about 95% of the cases c is either 1.0 or .0.

Care should be taken to supply meaningful information. For example, if beam axis 3 is parallel to global axis 2, it is useless to state that the cosine of the angle between global axis 2 and beam axis 1 (or 2) is zero.

In <u>FORMAT=2</u>, the data sequence defining table entry k is

k, il, x_1, x_2, x_3.

The above indicates that beam axis orientation is determined by the location of a 'third point', located at (x_1, x_2, x_3), as illustrated below. The x's are in rectangular components, relative to any frame defined in ALTREF. The NREF=n command may be used to switch to frame n (default is frame 1), anywhere in the input stream.

3.1.9 E21 SECTION PROPERTIES (BA)

BA generates a table of section properties to which reference is made during definition of type E21 elements in processor ELD. Nine classes of cross section are allowed.

The first word in each input record is a typeless word (e.g. BOX, TEE, etc.) identifying the class. A single card defines a table entry, except for DSY which requires two cards. Data sequences are as indicated below.

BOX	k,	b_1, t_1,	b_2, t_2		
TEE	k,	b_1, t_1,	b_2, t_2		
ANG	k,	b_1, t_1,	b_2, t_2		
WFL	k,	b_1, t_1,	b_2, t_2,	b_3, t_3	
CHN	k,	b_1, t_1,	b_2, t_2,	b_3, t_3	
ZEE	k,	b_1, t_1,	b_2, t_2,	b_3, t_3	
TUBE	k,	inner radius, outer radius			
GIVN	k,	I_1, α_1, I_2, α_2, a, f, f_1, z_1, z_2, θ			
DSY	k,	I_1, α_1, I_2, α_2, a, f, f_1			(card 1)
		q_1, q_2, q_3, y_{11}, y_{12}, - - - y_{41}, y_{42}			(card 2)

In the above, k identifies the table entry number. The b's and t's are cross-section dimensions defined on Figure BA-1.

In all cases the origin and terminus of the beam (see discussions of MREF, BRL, and ELD) coincide with the section centroid. For GIVN

and DSY sections,

I_1, I_2	Principal moments of inertia. For DSY sections, principal axes must coincide with the element reference frame axes.
α_1, α_2	Transverse shear deflection constants associated with I_1 and I_2, respectively. For no shear deflection, set α_i equal to zero.
a =	cross-sectional area.
f =	Uniform torsion constant.* For uniform torsion, torque = Gf x (twist angle/unit length), where G is the shear modulus.
f_1 =	Nonuniform torsion constant,* accounting for flange-bending effects on torsional stiffness, etc.
z_1, z_2	Shear center - centroid offsets.
θ	Inclination of principal axes relative to the element reference frame (see Figure BA-1). θ is in radians.

Use of the above quantities in calculating element stiffness matrices is discussed in Volume 2. Items given on the second card defining DSY sections have the following meaning:

q_1, q_2	Section shape factor such that maximum shear stress due to V_1, a shear in direction 1, is = $V_1 q_1$. q_2 is similarly defined.
q_3	Section shape factor such that maximum stress due to twisting moment T is Tq_3.
y_{i1}, y_{i2} =	Location, relative to the element reference frame, of the i-th point at which My/I combined bending stresses are to be computed. Up to 4 such points may be prescribed.

---

* In the notation of Volume 2, section A,

C = Gf, and

$C_\Gamma = Ef_1$

3.2 ELD - ELEMENT DEFINITION PROCESSOR

FUNCTION - ELD FORMS DATA SETS CONTAINING ELEMENT DEFINITIONS. ELEMENTS MAY BE DEFINED INDIVIDUALLY OR THROUGH AN ARRAY OF MESH GENERATORS. AN ELEMENT IS DEFINED BY (1) ESTABLISHING THE JOINTS TO WHICH IT IS CONNECTED, AND (2) IDENTIFYING APPLICABLE LINES IN TABLES OF SECTION PROPERTIES, ETC., USUALLY PRODUCED EITHER IN TAB OR IN AUS/TABLE. AS ELD INPUT IS PROCESSED, CHECKS ARE PERFORMED TO DETECT ERRORS SUCH AS REFERENCES TO NON-EXISTENT LINES IN SECTION PROPERTY TABLES, NON-EXISTENT JOINT NUMBERS, ETC. HOWEVER, ELD DOES NOT EXTRACT DATA FROM ANY SOURCE OTHER THAN CARD INPUT. ACCORDINGLY, IT IS NOT NECESSARY TO RE-EXECUTE ELD AFTER EACH TAB EXECUTION, UNLESS JOINT NUMBERS OR SECTION TABLE LINE NUMBERS, ETC., HAVE BEEN CHANGED.

FOR PURPOSES OF EXPLAINING ELD INPUT RULES, WE WILL CONSIDER ELD TO BE COMPRISED OF AN ARRAY OF SUBPROCESSORS, ONE FOR EACH ELEMENT TYPE (E21, E22, - - -). THE FUNCTION OF EACH SUBPROCESSOR IS TO READ INPUT CARDS DEFINING ALL OF THE ELEMENTS OF THE DESIGNATED TYPE. EACH SUBPROCESSOR IS ENTERED BY AN INPUT RECORD STATING THE ELEMENT TYPE, AS ILLUSTRATED BY THE EXAMPLE ON THE FOLLOWING PAGE. WITHIN EACH SUBPROCESSOR, COMMANDS OF THE FOLLOWING TYPE ARE PROCESSED:

- POINTER COMMANDS. THESE COMMANDS ESTABLISH THE VALUES OF POINTERS WHICH IDENTIFY APPLICABLE LINES IN TABLES OF SECTION PROPERTIES, MATERIAL CONSTANTS, AND OTHER ELEMENT ATTRIBUTES, AS DESCRIBED IN DETAIL IN SECTION 3.2.2. FOR EXAMPLE, THE COMMAND NSECT= 12 INDICATES THAT THE DATA IN LINE 12 OF THE APPROPRIATE SECTION PROPERTY TABLE APPLIES TO SUBSEQUENTLY DEFINED ELEMENTS. POINTER VALUES REMAIN IN EFFECT UNTIL SUPERSEDED BY ANOTHER POINTER COMMAND.

- MODIFICATION AND INCREMENTATION COMMANDS RELATED TO THE POINTER COMMANDS.

- ELEMENT GROUP IDENTIFICATION RECORDS:
  GROUP N' ALPHANUMERIC TITLE, ELEMENT GROUP N.

- ELEMENT CONNECTIVITY DECLARATIONS. A SINGLE N-NODE ELEMENT CONNECTING JOINTS J1, J2, - - JN IS DEFINED BY THE FOLLOWING DECLARATION:

  J1, J2, J3, - - - JN

  OTHER FORMS OF ELEMENT CONNECTIVITY DECLARATION, AS DESCRIBED IN SECTION 3.2.2, DEFINE MULTI-ELEMENT NETWORKS.

UPON CONCLUSION OF EXECUTION OF EACH SUBPROCESSOR, ALL TABLE POINTERS REVERT TO THEIR DEFAULT VALUES (SEE SECTION 3.2.2), AND THE MOD AND INC PARAMETERS REVERT TO ZERO. SUBPROCESSORS MAY BE EXECUTED IN ANY ORDER.

THE FOLLOWING EXAMPLE ILLUSTRATES THE GENERAL ARRANGEMENT OF ELD INPUT:

```
$XQT ELD
E43$                    BEGIN DEFINITION OF ALL E43 ELEMENTS:
  GROUP 1'ALPHANUMERIC TITLE FOR GROUP 1 OF E43'S.
  NSECT=3$              LINE 3 OF SECT. PROP. TABLE APPLIES.
  NMAT= 2$              LINE 2 OF THE MATERIAL PROP. TABLE APPLIES.
  NNSW=12$              LINE 12 OF THE NON-STRUCTURAL WEIGHT TABLE APPLIES.
  2 12 34 6$            ELEMENT 1 OF GROUP 1 CONNECTS JOINTS 2,12,34,6.
  9 30 24 4$            ELEMENT 2 OF GROUP 1 CONNECTS JOINTS 9,30,24,4.
  NSECT=5$              LINE 5 OF SECT. PROP. TABLE NOW APPLIES.
  20 40 15 12$          ELEMENT 3 OF GROUP 1 CONNECTS JOINTS 20,40,15,12.
  GROUP 2'ALPHANUMERIC TITLE FOR GROUP 2 OF E43'S.
  3 40 50 10$           ELEMENT 1 OF GROUP 2 CONNECTS JOINTS 3,40,50,10.
  NNSW= 4$              LINE 4 OF THE NON-STRUCT. WEIGHT TABLE NOW APPLIES.
  45 60 51 47$          ELEMENT 2 OF GROUP 2
  44 23 32 1$           ELEMENT 3 OF GROUP 2.
  -
  -
$ ALL E43'S DEFINED.  ALL TABLE POINTERS (NSECT, NMAT, ETC.),
$ REVERT TO THEIR DEFAULT VALUES.
$
$
E21$                    BEGIN DEFINING ALL E21'S:
  GROUP 1'ALPHANUMERIC TITLE FOR GROUP 1 OF THE E21'S.
  NSECT=2$
  NMAT= 4$
  NREF=5$               LINE 5 OF THE BEAM AXIS ORIENTATION TABLE APPLIES.
  NOFF=3$               LINE 3 OF THE RIGID LINK OFFSET TABLE APPLIES.
  NNSW=7$               LINE 7 OF THE NON-STRUCT. WEIGHT TABLE APPLIES.
  20 30$                ELEMENT 1 OF GROUP 1 CONNECTS JOINTS 20,30.
  22 31$                ELEMENT 2 OF GROUP 1.
  40 10$                ELEMENT 3 OF GROUP 1.
  NSECT=5: NOFF=9$
  60 83$                ELEMENT 4 OF GROUP 1.
  GROUP 2'TITLE FOR E21 GROUP 2.
  23 45$                ELEMENT 1 OF GROUP 2.
  77 12$                ELEMENT 2 OF GROUP 2.
  12 18$                ELEMENT 3 OF GROUP 2.
  -
  -
$ ALL E21'S DEFINED.  ALL TABLE POINTERS REVERT TO DEFAULT VALUES.
$
$ OTHER TYPES OF ELEMENTS ARE SIMILARLY DEFINED.
```

3.2.1 General Rules, ELD Input.

ELD has no special RESET controls. Core space requirements are LREC + (17 times the number of groups for any given element type). LREC is the output (DEF EIJ) data set block length, normally about 900 words.

It is important to be aware that when any ELD subprocessor is executed, the resultant output data sets replace any existing data sets generated during a prior execution of the same subprocessor. Accordingly, all elements of a given type must be defined whenever the corresponding ELD subprocessor is executed.

3.2.1.1 Error Conditions.

ELD checks to see that elements do not (1) connect non-existent joints, or (2) refer to non-existent lines in tables of section properties, etc. If any errors are detected, the output data sets (DEF EIJ, GD EIJ, GTIT EIJ) will be flagged as containing fatal errors, and cannot be read by downstream processors E, EKS, - - .

All erroneous items are marked by an asterisk in the ELD normal print-out (unless ONLINE=0).

3.2.1.2 Element Reference Frames.

The order in which the user specifies element connectivity, J1, J2, J3, - - Jn, determines the orientation of individual element reference frames. All element-related input and output (section properties, stresses, etc.) is relative to these frames, which are oriented as shown below.

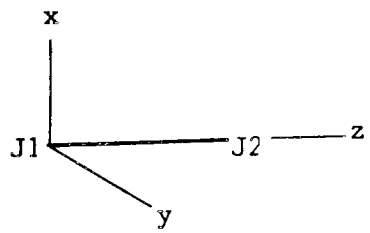

Line elements (E21, E22,- -)

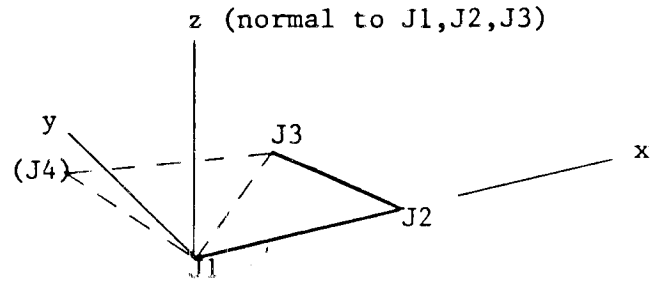

Two-Dimensional elements (E31, E43, - -)

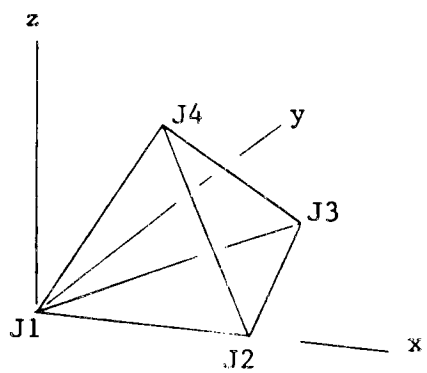

Tetrahedrons (F41, S41)

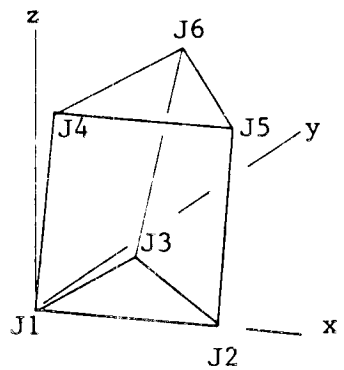

Pentahedrons (F61, S61)

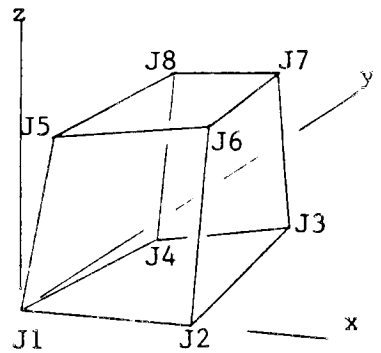

Hexahedrons (F81, S81)

All frames are right-hand rectangular. Except for the line elements, the orientation of all element reference frames is determined by the position of J1, J2, and J3, with J3 lying in quadrant 1 of the x-y plane. Line element axis orientation is established by reference to a line in the MREF table (see Sect. 3.1.7), via the NREF pointer in ELD input.

For the three-dimensional elements, the relative nodal positions must be exactly as shown. That is, J4 must be above the x-y plane in tetrahedrons; J4, J5, and J6 in pentahedrons must be above the x-y plane and connect, in order, J1, J2, and J3. In hexahedrons, J5, J6, J7, and J8 must be above the x-y plane and connect, in order, J1, J2, J3, and J4.

All two-dimensional elements and the faces of all three-dimensional elements should generally be as nearly flat as possible. See Section 3.3 (E Processor) for a discussion of how tolerances may be set on measures of excessive non-planarity and other geometric irregularities.

3.2.1.3 Element Group/Index Designation.

Elements of each type (e.g. E21, E43, S81) are ordered in groups. Within each group, each element is identified by an index number. The following illustrates how the user controls the group/index designations:

```
@XQT ELD
-
-
E21$                                  GROUP/INDEX
GROUP 1' TITLE FOR GROUP 1.
20 30$                                    1/1
40 67$                                    1/2
34 56$                                    1/3
12 10$                                    1/4
GROUP 2' TITLE FOR GROUP 2.
23 11$                                    2/1
67 34$                                    2/2
88 77$                                    2/3
GROUP 3' TITLE FOR GROUP 3.
30 10$                                    3/1
99 17$                                    3/2
67 41$                                    3/3
84 10$                                    3/4
```

Carefully selected group/index arrangements can greatly simplify the analyst's work, and improve the readability of plots and tables produced by SPAR's report-generator processors. The element group titles are retained in the data base, and are automatically used as headings in stress displays, and as captions in plots.

The group/index designations are also used in defining some types of applied loading (e.g. element pressures, temperatures, gradients, dislocations).

If GROUP cards are not used, all elements are in group 1.

Groups must be defined in serial order, beginning with group 1.

3.2.1.4 The MOD Commands.

The MOD commands summarized below are used to modify data on subsequent input records. The primary application is to facilitate merging of data decks prepared to describe individual components of a structure into a single deck describing the entire structure.

Command	Meaning of N
MOD JOINT= N	Add N to JOINT numbers.
MOD GROUP= N	Add N to GROUP numbers.
MOD NSECT= N	Add N to NSECT table pointer.
MOD NMAT= N	Add N to NMAT table pointer.
MOD NNSW= N	Add N to NNSW table pointer.
MOD NREF= N	Add N to NREF table pointer.
MOD NOFF= N	Add N to NOFF table pointer.

Example:

```
MOD JOINT 1000
-
-
  10   20:   21   33:   76   52$
$ is the same as:
1010 1020: 1021 1033: 1076 1052$
```

Example:

```
MOD GROUP 10
-
-
GROUP  3' TITLE
$ is the same as:
GROUP 13' TITLE
```

Example:

```
MOD NSECT=10
-
-
NSECT= 4
$ is the same as:
NSECT=14
```

The MOD parameters are all automatically returned to zero at the conclusion of execution of each subprocessor.
The MOD commands are substitutive, not cumulative. That is, MOD NMAT=3: - - MOD NMAT 7: - - is not equivalent to MOD NMAT=10.

3.2.1.5 The INC Commands.

The INC Commands summarized below cause the associated Table Pointers to be automatically incremented by M after each successive element is defined.

```
INC NSECT= M
INC NMAT=  M
INC NNSW=  M
INC NREF=  M
INC NOFF=  M
```

Example:

```
-
-
NSECT=31: INC NSECT=1
          10 11$
          11 12$
          12 13$
          13 14$
          14 15$
$ is the same as:
NSECT=31: 10 11$
NSECT=32: 11 12$
NSECT=33: 12 13$
NSECT=34: 13 14$
NSECT=35: 14 15$
```

The MOD commands may be used in conjunction with the INC Commands, and both may be used in conjunction with all mesh generation facilities. The above example could also be input as:

```
MOD NSECT=30
-
-
NSECT=1: INC NSECT 1: 10 11,  1 5$ (See 2-node mesh generation)
```

All INC parameters automatically revert to zero upon conclusion of execution of each subprocessor.

3.2.2 Structural Element Definition.

In this section, input language elements applicable to individual element types are described.

3.2.2.1 Line Elements (E21, E22, E23, E24, E25)

The following Table Pointers apply to line (2-node) elements:

Pointer Name	Default Value	Associated Table (see Section 3.1).
NMAT	1	MATC (Material Constants)
NSECT	1	Section properties: BA, for E21's. BB, for E22's. and E25's BC, for E23's. BD, for E24's.
NOFF	0	BRL (Rigid link offsets)
NNSW	0	NSW (Non-Structural Weight intensity)
NREF	1	Element reference frame orientation: MREF table for all types except E25. ALTREF table for E25's.

For line elements, the element connectivity declaration statement to define a single element connecting joint J1 to J2 is:

J1 J2$

For mesh generation, as detailed on the following pages, the form is:

J1 J2, NETOPT, NET(1), NET(2), NET(3)$

Two-node element network generators.

If NETOPT=1,

NI= NET(1) (default=1),
NJ= NET(2) (default=1),
JINC= NET(3).

Implied sequence:

```
      N1=J1
      IDIFF=J2-J1
      DO  200  J=1,NJ
      DO  100  I=1, NI
      N2=N1+IDIFF
      Define element connecting node N1 to N2
100   N1=N2
200   N1=J1 + J * JINC
```

Example:

J1	J2	Netopt	NI	NJ	JINC
9	12	1	4	2	100

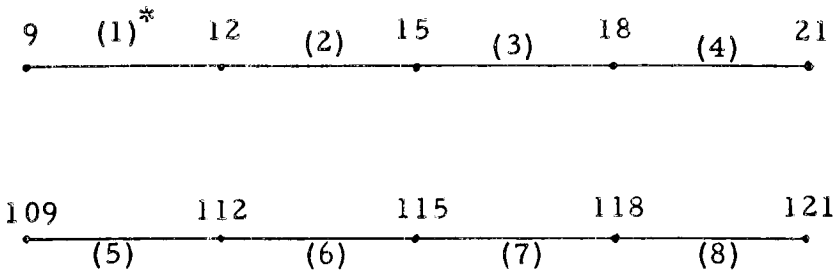

*The order in which the elements are defined is indicated by the number enclosed in parentheses. The index number identifying elements within each group are determined by the order in which the elements are defined.

Two-node element network generators (continued).

<u>If NETOPT=2,</u>

NI= NET(1) (default=1),
NJ= NET(2) (default=1),
JINC= NET(3).

Implied sequence:

```
      N1=    J1
      IDIFF= J2-J1
      DO  200  J=1,NJ
      DO  100  I=1,NI
      N2 = N1 + IDIFF (except for closing element, when I=NI)
      Define element connecting N1,N2.

100   N1=N2
200   N1=J1 + J*JINC
```

Example:

J1	J2	Netopt	NI	NJ	JINC
9	12	2	4	2	100

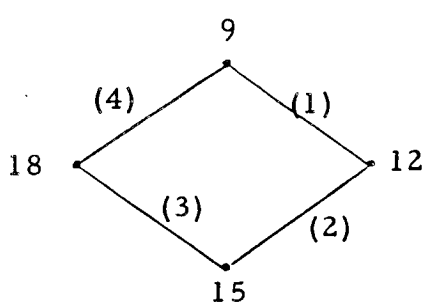

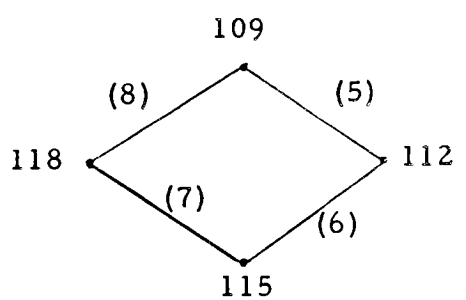

Two-node element network generators (continued).

<u>If NETOPT=3,</u>

NI= NET(1),
IINC= NET(2),
NJ= NET(3) (default=1)
JINC= NET(4).

Implied sequence:

```
        N1=J1
        N2=J2
        DO  200  J=1, NJ
        DO  100  I=1, NI
        Define element connecting N1 to N2
 100    N2 = N2 + IINC
        N1 = J1 + JINC*J
 200    N2 = J2 + JINC*J
```

Example:

J1	J2	Netopt	NI	IINC	NJ	JINC
4	37	3	4	10	2	100

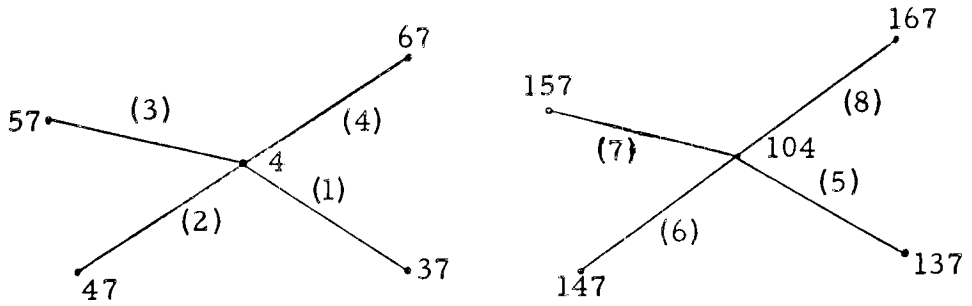

3.2.2.2 Area Elements (E31, E32, E33, E41, E42, E43, E44)

The following Table Pointers Apply to area elements:

Pointer Name	Default Value	Associated Table (see Section 3.1)
NMAT	1	MATC, material constants.
NSECT	1	Section properties: SA table for all except E44. SB table for E44.
NNSW	0	NSW, non-structural distributed weight.
NREF	1	For two-dimensional elements, NREF is not a Table Pointer. NREF is used to specify the direction of action of positive pressure: - If NREF= 0, pressure exerts no force on the element. - If NREF= 1, positive pressure acts in the direction of the 3 axis of the element reference frame. - If NREF=-1, negative pressure acts in the direction of the 3 axis of the element reference frame.

It is important to note that for all element types except E44, NMAT must be given in both the TAB/SA and ELD input.

The form of the element connectivity declaration for a single element is:

```
J1 J2 J3%      (3-node element)
J1 J2 J3 J4%   (4-node element)
```

For mesh generation, as detailed on the following pages, the forms are:

```
J1 J2 J3,        NETOPT, NET(1), NET(1), - -
J1 J2 J3 J4,     NETOPT, NET(1), NET(2), - -
```

Three-node element network generators.

If Netopt=1,

NI= NET(1),
NJ= NET(2) (default=1).

Implied sequence:

```
        IINC=  J2-J1
        JINC=  J3-J2
        N1=  J1
        N2=  J2
        N3=  J3
        N4=  J3-IINC
        DO  200  J=1, NJ
        DO  100  I=1, NI
        Define element connecting  N1, N2, N3
        Define element connecting  N3, N4, N1
        N1=  N1 + IINC
        N2=  N2 + IINC
        N3=  N3 + IINC
 100    N4=  N4 + IINC
        N1=  J1 + JINC
        N2=  J2 + JINC
        N3=  J3 + JINC
 200    N4=  N3 - IINC
```

Example:

J1	J2	J3	Netopt	NI	NJ
2	3	103	1	3	2

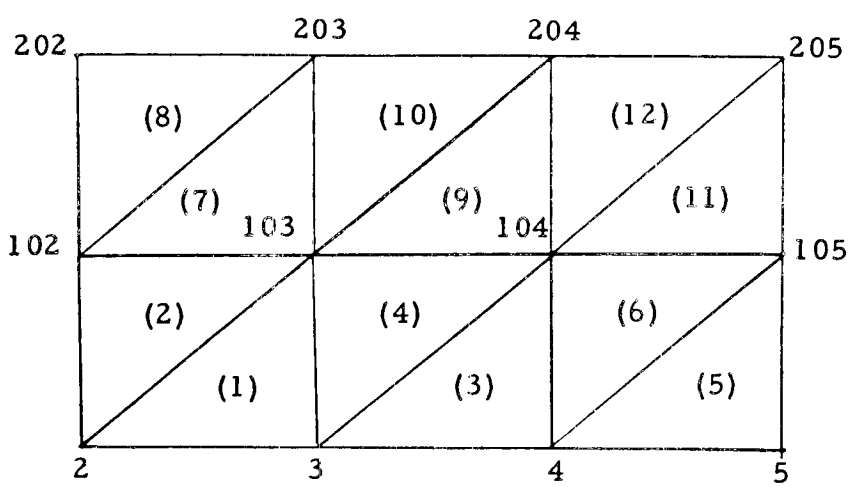

Three-node element network generators (continued).

If Netopt=2,

NI= NET(1) (NI must be greater than 1),
NJ= NET(2) (default=1),
JINC= NET(3).

Implied sequence:

```
      IINC= J3-J2
      N1= J1
      N2= J2
      DO 200 J=1, NJ
      DO 100 I=1, NI
      N3= N2 + IINC
      Define element connecting N1, N2, N3
  100 N2=N3
      N1= J1 + J*JINC
  200 N2= J2 + J*JINC
```

Example:

J1	J2	J3	Netopt	NI	NJ	JINC
2	5	7	2	6	2	30

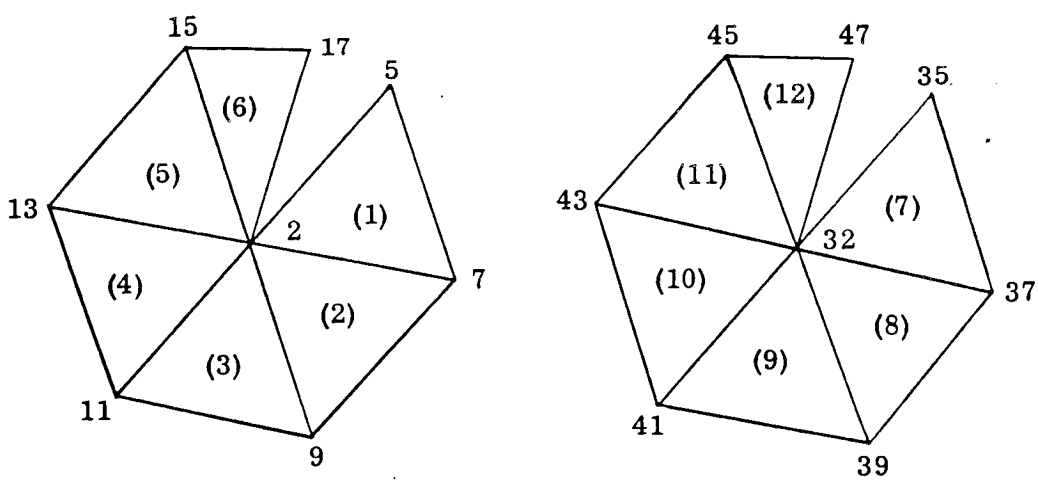

Three-node element network generators (continued).

If Netopt=3,

NI= NET(1),
NJ= NET(2) (default=1),
JINC= NET(3).

Implied sequence:

```
      IINC= J3-J2
      N1= J1
      N2= J2
      DO  200  J=1, NJ
      DO  100  I=1, NI
      N3= N2 + IINC (except closure when I=NI)
      Define element connecting N1, N2, N3
100   N2=N3
      N1 = J1 + J*JINC
200   N2 = J2 + J*JINC
```

Example:

J1	J2	J3	Netopt	NI	NJ	JINC
2	5	7	3	6	2	30

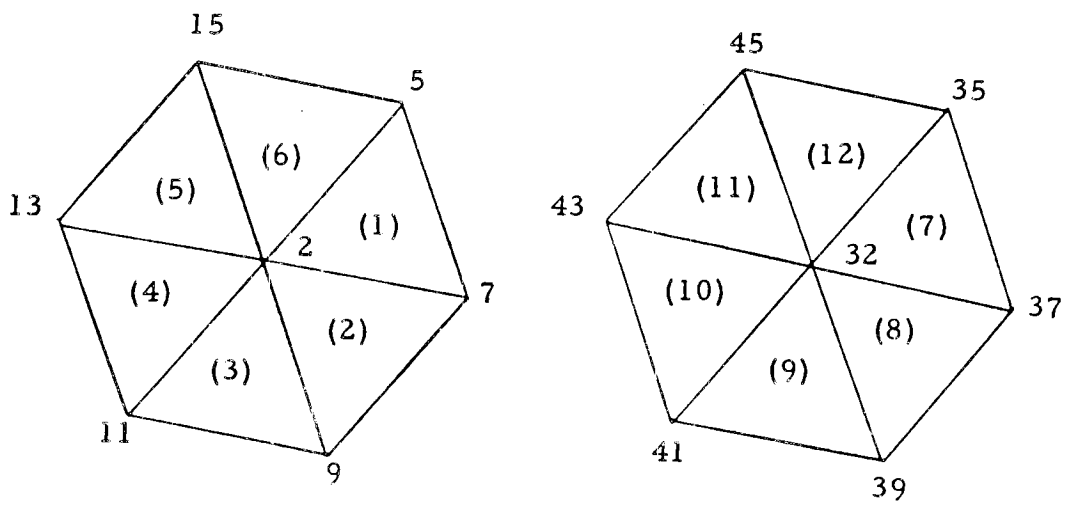

Four-node element network generators.

If Netopt=1,

```
NI=    NET(1),
NJ=    NET(2) (default=1),
NK=    NET(3) (default=1),
KINC=  NET(4).
```

Implied sequence*:

```
        IINC= J2-J1
        JINC= J4-J1
        DO  300  K=1, NK
        N1 = J1
        DO  200  J=1, NJ
        DO  100  I=1, NI
        N2= N1+IINC
        N3= N2+JINC
        N4= N1+JINC
        Define element connecting N1, N2, N3, N4
  100   N1 = N1+IINC
  200   N1 = J1+J*JINC
  300   J1 = J1+KINC
```

Example*:

J1	J2	J3	J4	NETOPT	NI	NJ	NK	KINC
2	3	23	22	1	2	3	2	200

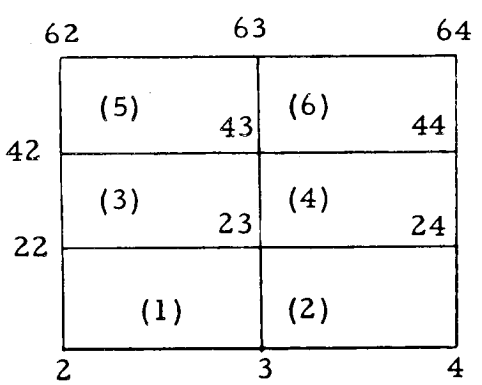

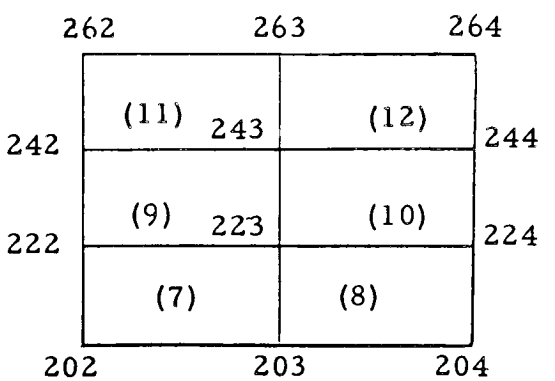

*Note: J3 must be present, although not used.

Four -node element network generators (continued).

If Netopt=2,

NI= NET(1),
NJ= NET(2) (default=1).

Implied sequence:

```
      IINC=    J2-J1
      JINC=    J4-J1
      N1=      J1
      DO  200  J=1, NJ
      DO  100  I=1, NI
      N2 = N1 + IINC
      N3 = N2 + JINC  (except closure when I=NI)
      N4 = N1 + JINC  (except closure when I=NI)
      Define element connecting N1, N2, N3, N4
  100 N1 = N1 + JINC
  200 N1 = N1 + IINC
```

Example:

J1	J2	J3	J4	Netopt	NI	NJ
1	11	12	2	2	6	3

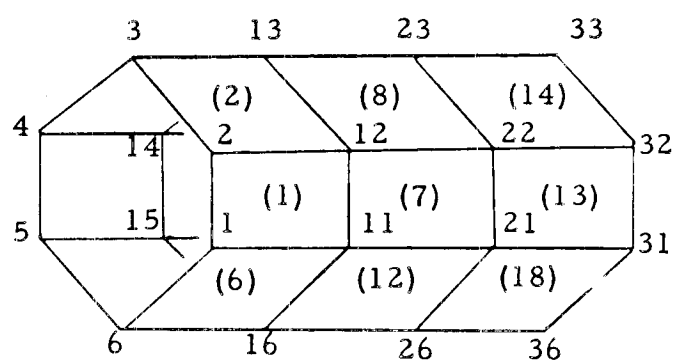

3.2.2.3 Three-Dimensional Elements

Only one table pointer, NSECT (or the synonym NPROP) applies. The default value of NSECT is 1. For fluid elements, NSECT points to a line in a table named PROP BTAB 2 20. For solids, NSECT points to a line in PROP BTAB 2 21. Before executing ELD, the user must construct these tables via AUS/TABLE, as indicated below. Mesh generation facilities are described at the end of this section.

Fluid elements F41, F61, F81:

For additional information see Section 12. It should be noted that FSM is the only processor which produces system matrices containing fluid element terms. Fluid element terms are not included in the system diagonal mass matrix, DEM, produced by processor E, nor in the system matrices produced by K, M, or KG. No form of static temperature, dislocational, or pressure loading is defined for fluid elements. GSF produces no stress data for fluid elements. Section properties are defined as follows:

```
@XQT AUS
 TABLE(NI=2, NJ= the number of different fluids):  PROP BTAB 2 20
 J=1:  ρ,  β $  Mass density, bulk modulus for fluid 1.
 J=2:  ρ,  β $  Mass density, bulk modulus for fluid 2.
 -
 -
```

Solid elements S41, S61, S81:

Solid element terms are included in the system diagonal mass matrix, DEM, produced by E, and in the system matrices produced by K and M, but not those produced by KG. Properties are defined as follows:

```
@XQT AUS
 TABLE(NI=31, NJ= number of different solids):  PROP BTAB 2 21
 J= 1$  Properties of material 1 follow.

 w>

 a11>
 a21  a22>
 a31  a32  a33>
 a41  a42  a43  a44>
 a51  a52  a53  a54  a55>
 a61  a62  a63  a64  a65  a66>
 αx   αy   αz>

 Yxx  Yyy  Yzz  Yxy  Yyz  Yzx$

 J= 2$   Properties of material 2 follow. (Same sequence as above)
 -
 -
```

In the preceeding,

w= weight density (weight/unit volume).

The a_{ij}'s are flexibility coefficients defined as follows:

$$\begin{bmatrix} \varepsilon_x \\ \varepsilon_y \\ \varepsilon_z \\ \gamma_{xy} \\ \gamma_{yz} \\ \gamma_{zx} \end{bmatrix} = \begin{bmatrix} a_{11} & & & \text{symmetric} & & \\ a_{21} & a_{22} & & & & \\ a_{31} & a_{32} & a_{33} & & & \\ a_{41} & a_{42} & a_{43} & a_{44} & & \\ a_{51} & a_{52} & a_{53} & a_{54} & a_{55} & \\ a_{61} & a_{62} & a_{63} & a_{64} & a_{65} & a_{66} \end{bmatrix} \begin{bmatrix} \sigma_x \\ \sigma_y \\ \sigma_z \\ \tau_{xy} \\ \tau_{yz} \\ \tau_{zx} \end{bmatrix},$$

For isotropic sections, all $a_{ij} = 0$, except:
$a_{11} = a_{22} = a_{33} = 1/E$,
$a_{21} = a_{31} = a_{32} = -\nu/E$, and
$a_{44} = a_{55} = a_{66} = 2(1 + \nu)/E$.

$\alpha_x \quad \alpha_y \quad \alpha_z$ = linear thermal expansion coefficients.

$Y_{xx} \quad Y_{yy} \quad Y_{zz} \quad Y_{xy} \quad Y_{yz} \quad Y_{zx}$ = reference or yield stresses for use in stress displays. See PSF discussion.

In all of the above, x, y, and z are axes of the element reference frame.

For a single element, the form of the element connectivity declaration is:

J1 J2 J3 - - - Jn$ n nodes.

Pentahedral element network generator.

For mesh generation of pentahedral elements, the form of the element connectivity declaration is:

j_a, j_b, nj, nk, jinc, kinc, iclose, netopt

Netopt is any nonzero integer. If iclose is zero, the implied sequence is:

```
    DO 100 K= 1,NK
    DO 100 J= 1,NJ
    j1= ja + (K-1)*kinc
    j2= jb + (J-1)*jinc
    j3= j2 + jinc
    j4= j1 + kinc
    j5= j2 + kinc
    j6= j3 + kinc
100 define element connecting j1, j2, - - j6.
```

The parameter iclose is zero for a normal open mesh, and 1 for closed cylindrical meshes as illustrated on the next page.

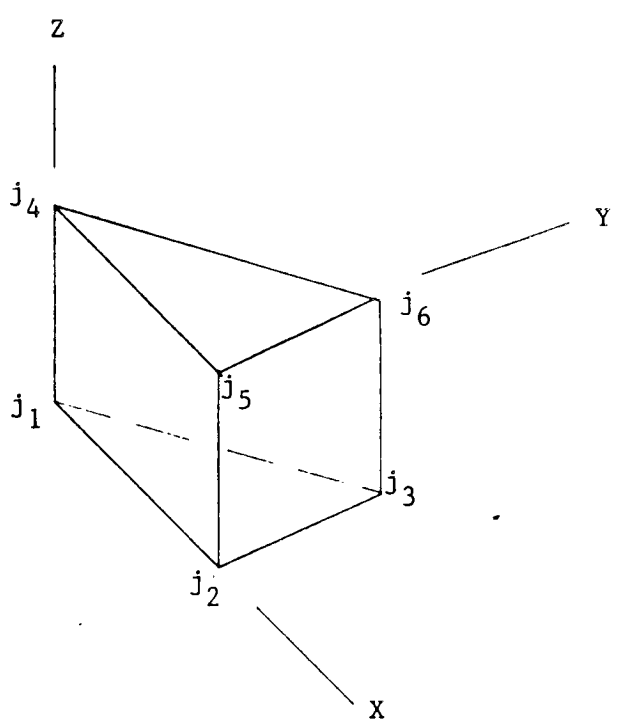

Example:

j_a= 100 (center, bottom)

j_b= 123

nj= 8 (8 wedges)

nk= 3 (3 rings)

jinc= 3

kinc= 100

iclose= 1 (closed mesh)

netopt= 1

Note that this mesh would fill the hole in the center of the cylindrical mesh example shown for hexahedrons.

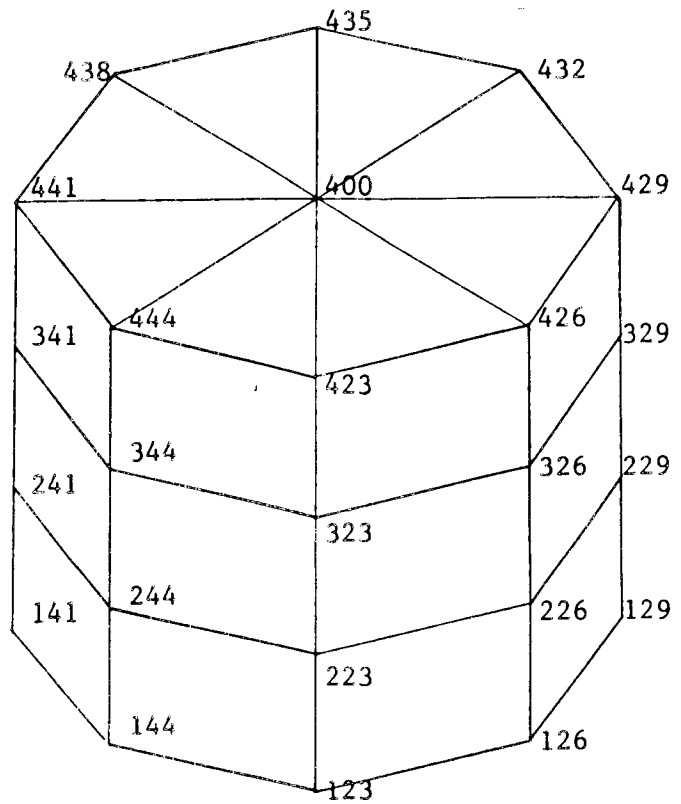

Example:

j_a= 100

j_b= 123

nj= 2 (vs 8 in above example)

nk= 3

jinc= 3

kinc= 100

iclose= 0 (vs 1 in above example)

netopt= 1

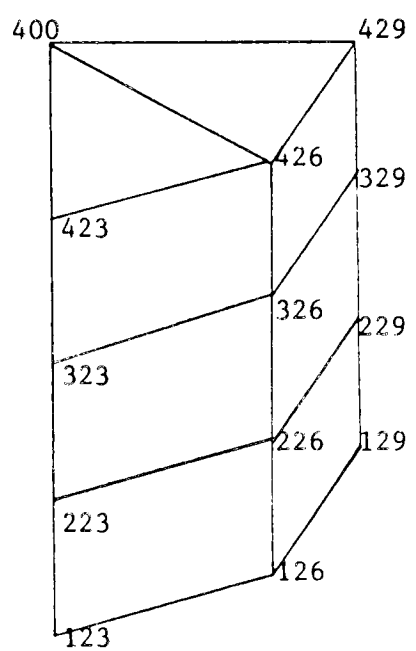

Hexahedral element network generator.

For mesh generation of hexahedral elements, the form of the element connectivity declaration is:

j_0, ni, nj, nk, iinc, jinc, kinc, iclose, netopt

Netopt is any nonzero integer. If iclose is zero, the implied sequence is:

```
DO 100 K= 1,NK
DO 100 J= 1,NJ
DO 100 I= 1,NI
j1= jo + (K-1)*kinc + (J-1)*jinc + (I-1)*iinc
j2= j1 + iinc
j3= j2 + jinc
j4= j1 + jinc
j5= j1 + kinc
j6= j2 + kinc
j7= j3 + kinc
j8= j4 + kinc
100 Define element connecting j1, j2, - - j8
```

The parameter iclose is zero for normal rectangular meshes, and 1 for closed cylindrical meshes, as illustrated on the next page.

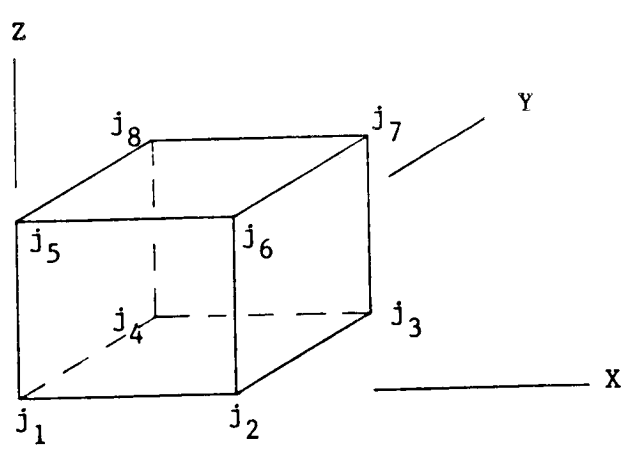

Hexahedral element network Generator (continued).

Example:

J_0= 1
ni= 4
nj= 1
nk= 1
iinc= 1
jinc= 10
kinc= 5
iclose= 0 (unclosed mesh)
netopt= 1

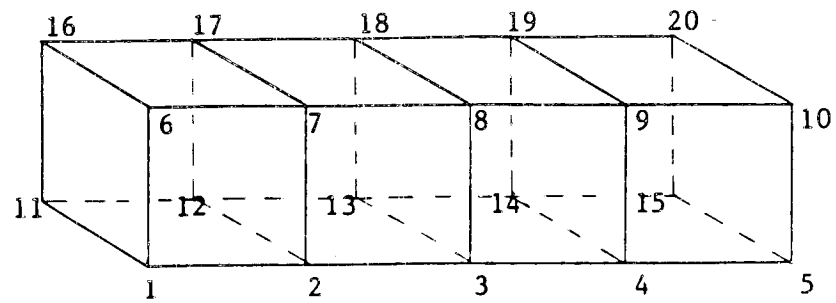

Example:

j_o= 121
ni= 8 (8 wedges)
nj= 2
nk= 3
iinc= 3
jinc= 1
kinc= 100
iclose= 1 (closed mesh)
netopt= 1

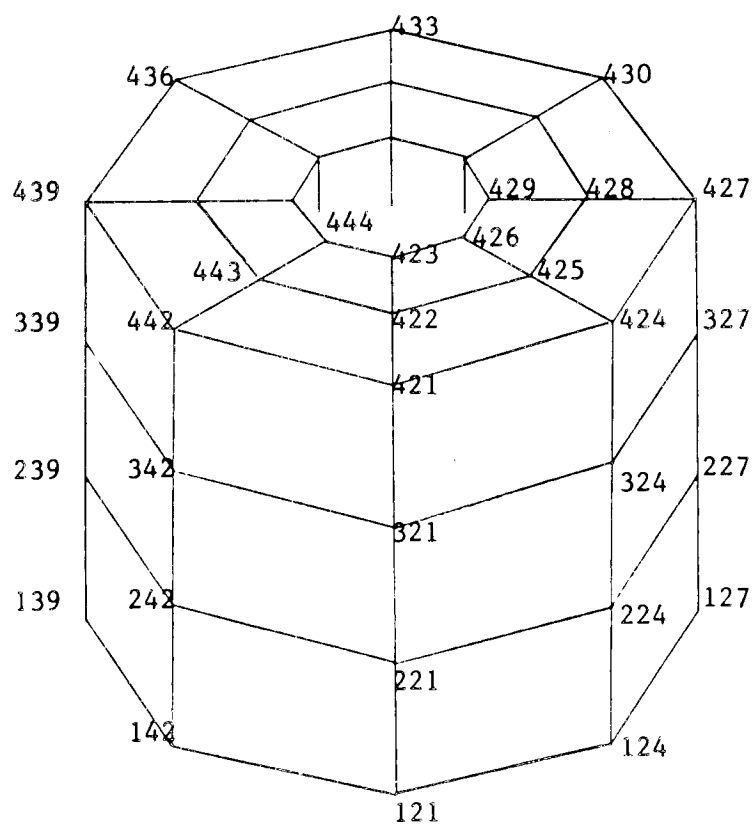

3.2.3 Thermal Element Definition

The SPAR thermal analysis processors are described in a separate document, the SPAR Thermal Analysis Reference Manual. The thermal element repertoire is summarized below.

	Line Elements	Triangular 2D elements	Quadrilateral 2D elements	Solid 3D elements
Conducting:	K21	K31	K41	K61, K81
Convecting:	C21	C31	C41	
Radiating:	R21	R31	R41	

For element type XXX (XXX is K21, R41, etc.), ELD produces the same form of output data sets as for structural elements, i.e. DEF XXX, GD XXX, GTIT XXX, and DIR XXX, permitting the thermal elements to be displayed by the SPAR graphics programs.

In a post-processing operation, ELD produces the thermal element definition data sets, TED XXX NGRP, described in the SPAR Thermal Analysis Reference Manual, subject to the following RESET controls:

Name	Default Value	Meaning
NUTED	0	If NUTED is not zero, it identifies the destination library for the TED XXX NGRP data sets. If NUTED is not zero, TED XXX NGRP data sets will be produced for all thermal element DEF XXX data sets residing in library 1, not just those created during the current execution.
LRTED	896	Nominal block length of TED XXX NGRP output.

THE INPUT RULES FOR THERMAL ELEMENTS ARE SUBSTANTIALLY THE SAME AS FOR STRUCTURAL ELEMENTS. THE MOD AND INC COMMANDS MAY BE USED, AND THE SAME MESH GENERATION FACILITIES APPLY. THE FOLLOWING POINTER COMMANDS ARE USED:

POINTER NAME	DEFAULT VALUE	MEANING
NMAT	1	THE SAME AS NMAT, NFILM, OR NRAD, AS DEFINED IN THE SPAR THERMAL ANALYSIS REFERENCE MANUAL FOR CONDUCTING, CONVECTING, AND RADIATING ELEMENTS, IN THAT ORDER. NMAT MAY BE ANY POSITIVE OR NEGATIVE INTEGER.
NSECT	1	POINTS TO A LINE IN ONE OF THE FOLLOWING TABLES, WHICH THE USER MUST CREATE VIA AUS/TABLE BEFORE EXECUTING ELD. THE TABLE PARAMETER NI MUST BE 1 FOR EACH TABLE.

DATA SET NAME	CONTENT
K AREA	K21 AREAS.
K THIC	K31 AND K41 THICKNESSES.
C CIRC	C21 CIRCUMFERENCES.
R CIRC	R21 CIRCUMFERENCES.

3.3 E-STATE INITIATION

FOR EACH ELEMENT IN THE STRUCTURE THERE IS AN 'ELEMENT INFORMATION PACKET.' DEPENDING ON THE PARTICULAR TYPE OF ELEMENT, EACH PACKET USUALLY CONTAINS INFORMATION IN EACH OF THE FOLLOWING CATEGORIES:

1- INTEGER INFORMATION SUCH AS THE CONNECTED JOINT NUMBERS, AND POINTERS IDENTIFYING APPLICABLE LINES IN TABLES OF MATERIAL CONSTANTS, SECTION PROPERTIES, ETC.

2- MATERIAL CONSTANTS.

3- GEOMETRICAL DETAILS, E.G. DIMENSIONS, ORIENTATION.

4- SECTION PROPERTIES.

5- INTRINSIC STIFFNESS MATRIX, OR EQUIVALENT.

6- STRESS RECOVERY INFLUENCE MATRIX, OR EQUIVALENT.

7- INTERNAL STRESS RESULTANTS ON WHICH KG COMPUTATIONS ARE TO BE BASED.

PROCESSOR E CONSTRUCTS PARTS 1 - 5 OF THESE PACKETS, AND LEAVES SPACE FOR PARTS 6 AND 7, BUT DOES NOT FORM THEM. FOR ELEMENT TYPE XXX (XXX IS E21, E43, S81, ETC.), THE NAME OF THE DATA SET CONTAINING THE PACKETS IS XXX EFIL.

E ALSO PRODUCES A SYSVEC-FORMAT DATA SET NAMED DEM, WHICH IS THE SYSTEM MASS MATRIX IN DIAGONAL (LUMPED MASS) FORM. DEM INCLUDES ONLY THE MASS ASSOCIATED WITH ELEMENTS AND ANY NON-STRUCTURAL MASS ATTACHED TO ELEMENTS. RIGID MASS DATA, IF ANY, DEFINED IN TAB IS NOT INCLUDED IN DEM. DEM AND RIGID MASS DATA MAY BE SUMMED, IF REQUIRED, VIA AUS/SUM. ONLY DISPLACEMENT-DEPENDENT TERMS ARE INCLUDED IN DEM, I.E. RIGID LINK OFFSETS ARE IGNORED, AND ROTATION-DEPENDENT TERMS ARE SET EQUAL TO ZERO.

INPUT TO E CONSISTS OF SUBSTANTIALLY ALL TAB AND ELD OUTPUT, AND ANY SECTION PROPERTY TABLES GENERATED VIA AUS/TABLE.

A SERIES OF EIGHT TESTS ARE PERFORMED TO DETECT GEOMETRIC IRREGULARITIES, SUCH AS BADLY PROPORTIONED ELEMENTS AND EXCESSIVELY WARPED FACES. THE FOLLOWING COMMANDS ARE PROVIDED TO FURNISH USER CONTROL OVER THESE TESTS:

T=	T1,	T2,	T3,	T4,	T5,	T6,	T7,	T8
IERR=	K1,	K2,	K3,	K4,	K5,	K6,	K7,	K8

THE DEFAULT VALUES ARE:

T=	1.-20,	.05,	1.-5,	1.-5,	20.,	1.-4,	1.-4,	1.-4
IERR=	2,	2,	0,	2,	2,	2,	2,	2

THE GEOMETRICAL TESTS ARE DESCRIBED BELOW. IF TEST J IS NOT PASSED, THE OUTPUT DATA SET (XXX EFIL) WILL HAVE AN ERROR CODE OF KJ, AS ESTABLISHED BY THE IERR COMMAND. THE TERMS USED IN THE DESCRIPTION OF THE TESTS ARE DEFINED AS FOLLOWS:

- A 'FACE' IS THE SURFACE OF A TWO-DIMENSIONAL ELEMENT, OR A FACE OF A THREE-DIMENSIONAL ELEMENT. AN 'EDGE' IS ONE OF THE LINE SEGMENTS CONSTITUTING THE BOUNDARY OF A FACE. XL IS THE LENGTH OF AN EDGE.

- CL IS CHARACTERISTIC LENGTH OF A FACE. FOR QUADRILATERAL FACES, CL IS THE SQUARE ROOT OF THE AREA. FOR TRIANGULAR FACES, CL IS THE SQUARE ROOT OF TWICE THE AREA.

- X34 IS THE DISTANCE FROM THE FOURTH NODE OF A QUADRILATERAL FACE TO THE PLANE OF THE OTHER THREE NODES.

TEST DESCRIPTION

1 ZERO LENGTH EDGE: TEST FAILS IF XL IS LESS THAN T1.

2 COLINEAR ADJACENT EDGES: TEST FAILS IF THE ANGLE BETWEEN TWO ADJACENT EDGES IS LESS THAN T2.

3 IF X34 IS GREATER THAN CL * T3, THE ELEMENT IS CONSIDERED NON-FLAT, BUT NOT NECESSARILY EXCESSIVELY WARPED.

4 FACE IS EXCESSIVELY WARPED IF X34 EXCEEDS CL * T4. ALSO, SEE THE MWARP RESET CONTROL FOR E41, E44 ELEMENTS.

5 FACE IS EXCESSIVELY OUT OF PROPORTION IF XL IS GREATER THAN CL * T5.

6 THIS TEST APPLIES ONLY TO F61 ELEMENTS, FOR WHICH THE CORRESPONDING EDGES OF THE TWO TRIANGULAR FACES MUST BE PARALLEL. THE TEST FAILS IF THIS REQUIREMENT IS NOT MET WITHIN A LINEAR TOLERANCE OF T6.

7 WHERE R IS THE 3 x 3 TRANSFORMATION MATRIX DEFINING THE ORIENTATION OF THE ELEMENT REFERENCE FRAME RELATIVE TO GLOBAL FRAME, THIS TEST FAILS IF ANY TERM OF THE PRODUCT R * R(TRANSPOSE) DIFFERS FROM THE IDENTITY MATRIX BY MORE THAN T7, AS A RESULT OF NEARLY COLINEAR EDGES.

8 THIS TEST FAILS IF THE Z COORDINATE, RELATIVE TO THE ELEMENT REFERENCE FRAME, OF ANY OF THE FOLLOWING NODES IS LESS THAN T8 TIMES THE SQUARE ROOT OF THE FACE IN THE X-Y PLANE:

- FOR TETRAHEDRONS, NODE 4.
- FOR PENTAHEDRONS, NODES 4, 5, 6.
- FOR HEXAHEDRONS, NODES 5, 6, 7, AND 8.

RESET CONTROLS:

NAME	DEFAULT VALUE	MEANING
G	1.	GRAVITATIONAL CONSTANT USED IN CONSTRUCTING THE SYSTEM DIAGONAL MASS MATRIX, DEM. IF YOU ARE USING INCH-POUND-SECOND UNITS AND WEIGHT DENSITIES WERE GIVEN IN TAB IN UNITS POUNDS PER CUBIC INCH, RESET G= 386.
LZERO	.001	ZERO-LENGTH TEST FOR 2-NODE ELEMENTS. IF AN E25 IS LONGER THAN LZERO, E25 EFIL WILL BE MARKED IN ERROR.
RCH	.0001	WHERE R IS THE 3 x 3 TRANSFORMATION MATRIX DEFINING THE ORIENTATION OF A 2-NODE ELEMENT REFERENCE FRAME RELATIVE TO THE GLOBAL FRAME, AN ERROR CONDITION EXISTS IF ANY TERM OF THE PRODUCT, R TIMES R (TRANSPOSE), DIFFERS FROM THE IDENTITY MATRIX BY MORE THAN RCH. THIS OCCURS AS A RESULT OF INCORRECT MREF INPUT.
PRTE	1	NON-ZERO PRTE RESULTS IN PRINT-OUT OF FULL DETAILS OF ANY GEOMETRICAL ERRORS DETECTED.
LIM	50	AFTER PRINTING GEOMETRY ERROR DETAILS FOR LIM ELEMENTS, NO FURTHER ERROR DETAILS WILL BE PRINTED, ALTHOUGH PROCESSING WILL CONTINUE AND AN ERROR SUMMARY WILL BE PRINTED.
MWARP	.05	FOR E41 AND E44 ELEMENTS, MWARP REPLACES THE GEOMETRY TEST PARAMETER T4 (WARP LIMIT).

CENTRAL MEMORY REQUIREMENTS:

ALL OF THE TAB-PRODUCED GEOMETRY, MATERIAL CONSTANT, AND DISTRIBUTED WEIGHT TABLE ARE HELD CONTINUOUSLY IN CENTRAL MEMORY. AS EACH ELEMENT TYPE IS PROCESSED, THE ASSOCIATED SECTION PROPERTY TABLE IS ALSO IN CENTRAL MEMORY. IN ADDITION TO THE FOREGOING, ABOUT 6000 TO 10000 WORDS SHOULD BE ALLOWED FOR I/O BUFFERS.

6.1.5 Nodal Pressures *

Nodal pressures are in a TABLE format data set named NODA PRES iset. Case 1 resides in block 1, case 2 in block 2, etc. The block length is equal to the total number of joints in the structure. The direction of action of nodal pressure on individual 3- and 4- node elements is established by the NREF statement in ELD. If NREF= 1, positive pressure acts in the +3 direction of the element reference frame. If NREF= -1, positive pressure acts in the opposite direction. If NREF= 0, the pressure loading does not act on the element. (See Section 6.1.6.3 for further information.)

The following example defines load set 9, containing two cases:

```
@XQT AUS
    TABLE: NODAL PRESSURES 9

    CASE 1
        J= 1, 6: 1.3$        Pressure at joints 1 through 6 is 1.3.
    CASE 2
        J= 2, 10: 4.2$       Pressure at joints 2 through 10 is 4.2.
        J= 20, 30: 5.0$      Pressure at joints 20 through 30 is 5.0.
```

* Pressure loading acts only on area elements, i.e. E31, E32, E33, E41, E42, E43, E44.

6.1.6 Loading Defined For Individual Elements

Applied load data defined for individual structural elements resides in ELDATA format data sets (see Section 2.5) with the following names:

Name				Type of Loading
TEMP	Eij	iset	icase	Thermal
DISL	Eij	iset	icase	Dislocational (initial mismatch)
PRES	Eij	iset	icase	Pressure

In the above list, Eij is any valid structural element type (e.g., E21, E33, E41, etc.). Note that each of these data sets corresponds to a single load case, icase, within set iset. For example, suppose that, in load set 4, case 7, thermal loads are applied to type E21 and E43 elements, and pressure loading is applied to type E43 and E33 elements. The names of the corresponding data sets would be as follows:

TEMP E21 4 7

TEMP E43 4 7

PRES E43 4 7

PRES E33 4 7

Each of the data sets contains an entry (column of data) for each structural element of the indicated type. Individual entry details for each class of loading are defined in Sections 6.1.6.1 through 6.1.6.3.

- For E31 and E33 elements, each entry contains three elements:

$$\bar{T}_1, \bar{T}_2, \text{ and } \bar{T}_3$$

The $\bar{T}_i$'s are temperatures at the element corners, as shown below.

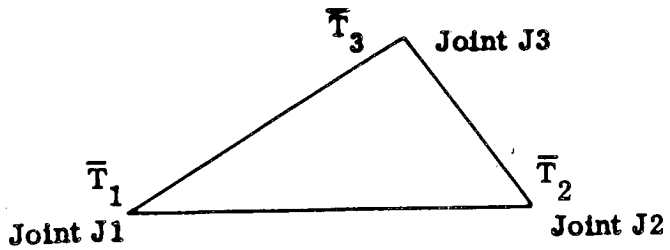

In the above, J1, J2, and J3 have the same meaning as defined in ELD. Where T_{J1}, T_{J2}, and T_{J3} are the <u>nodal temperatures</u> (if any, from block <u>icase</u> of NODA TEMP <u>iset</u>), the total effective corner temperatures are $\bar{T}_1 + T_{J1}$, $\bar{T}_2 + T_{J2}$, and $\bar{T}_3 + T_{J3}$. The temperature distribution within the element is assumed to be linear.

<u>Example</u>. Case 19 of load set 6, type E33 elements.

```
@XQT AUS
        ELDATA: TEMP E33 6
        -
        -
        CASE 19
            G= 2: E= 10: 4.5, 6.2, 9.4$
            G= 9: E= 92: 3.7, 6.8, 9.9$
```

- For E41,E43, and E44 elements, each entry contains four words:

  $\overline{T}_1$, $\overline{T}_2$, $\overline{T}_3$, and $\overline{T}_4$.

  The $\overline{T}_i$'s have the same meaning as for triangular elements. The temperature distribution in 4-node elements is assumed to be linear, resulting in stress-free deformation of the decoupled element. EQNF uses an averaging procedure to determine the linear gradients from the input temperature data. Element meshes should be made fine enough to support this assumption.

- For n-node three-dimensional solid elements (n= 4, 6, 8 for S41, S61, S81), each entry contains n words:

  $\overline{T}_1$, $\overline{T}_2$, - - - $\overline{T}_n$.

  The $\overline{T}_i$'s have the same meaning as indicated above for 4-node elements, including the use of an averaging procedure in EQNF.

- Temperature loading is not defined for E25, E32, E42, F41, F61, or F81 elements.

- The content of individual entries in DISL data sets for membrane/bending elements is as indicated below.

Element Type (EIJ)	Content of entry in DISL EIJ	Number of words/entry
E31	d_{21} d_{31} d_{32}	3
E32	d_{23} r_{21} r_{22} d_{33} r_{31} r_{32}	6
E33	d_{21} d_{31} d_{32} d_{23} r_{21} r_{22} d_{33} r_{31} r_{32}	9
E41	d_{21} d_{31} d_{32} d_{41} d_{42} d_{43}	6
E42	d_{23} r_{21} r_{22} d_{33} r_{31} r_{32} d_{43} r_{41} r_{42}	9
E43	d_{21} d_{31} d_{32} d_{41} d_{42} d_{23} r_{21} r_{22} d_{33} r_{31} r_{32} d_{43} r_{41} r_{42}	14
E44	d_{21} d_{31} d_{32} d_{41} d_{42} d_{43}	6

For j= 2,3, and 4 (corresponding to joints J2, J3, and J4), dislocational quantities d_{j3}, r_{j1}, and r_{j2} are defined as motion components of node j relative to an intrinsic frame rigidly embedded in J1, initially parallel to the element reference frame. Component d_{j3} is direction 3 motion, and r_{jk} is a rotation about axis k. For E41 and E44 elements, d_{43} is defined as displacement of node 4 normal to the plane of J1, J2, J3. The five other dislocational quantities are defined on the following figure.

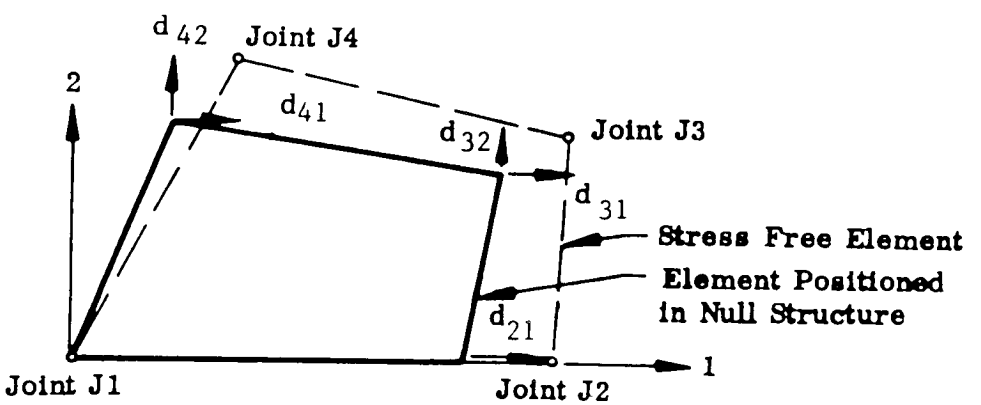

- The content of individual entries in DISL data sets for three-dimensional solid elements is as shown below.

Element Type (Sij)	Content of entry in DISL Sij	Number of words/entry
S41	d_{21} d_{31} d_{32} d_{41} d_{42} d_{43}	6
S61	d_{21} d_{31} d_{32} d_{41} d_{42} d_{43} d_{51} d_{52} d_{53} d_{61} d_{62} d_{63}	12
S81	d_{21} d_{31} d_{32} d_{41} d_{42} d_{43} . . . . d_{81} d_{82} d_{83}	18

The d_{jk}'s are defined as $d_{jk} = Y_{jk} - X_{jk}$, where:

X_{jk} = direction k position coordinate of node j (j= 1 through the number of nodes in the element), relative to the element reference frame, for the element positioned in the null structure, and

Y_{jk} = corresponding nodal locations for the stress-free element, relative to the intrinsic element frame (origin at node 1, axis 1 directed from node 1 through node 2, node 3 lying in quadrant 1 of the 1-2 plane).

Note that $d_{11} = d_{12} = d_{13} = d_{22} = d_{23} = d_{33} = 0$, by definition.

6.1.6.3 Pressure. The content of each entry (data column) within a PRES Eij <u>iset</u> <u>icase</u> data set is described below.

- For E31, E32, and E33 elements, each entry contains three words, as follows:

$$\bar{P}_1, \ \bar{P}_2, \ \bar{P}_3$$

The $\bar{P}_i$'s are pressures at the corners of the element, as shown below. The Ji's have the same meaning as defined in ELD.

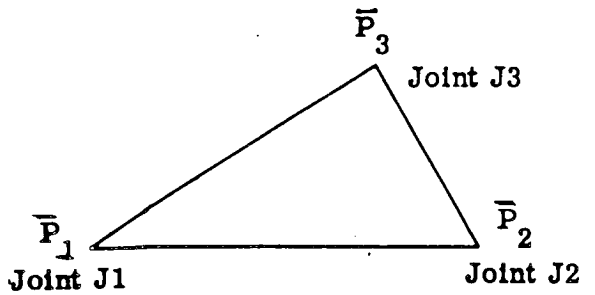

It is assumed that pressure varies linearly over the surface of the element. The 3-axis of the element reference frame is the direction of action of positive $\bar{P}_i$'s.

The NREF statement in ELD has no effect on the $\bar{P}_i$'s. The reason for this convention is to provide a means of introducing pressure loading when NREF has been set equal to zero to inhibit nodal pressure loading as defined in Section 6.1.5.

- For E41, E42, E43, and E44 elements, each entry contains four words:

$$\bar{P}_1, \bar{P}_2, \bar{P}_3, \bar{P}_4$$

The $\bar{P}_i$'s have the same meaning as defined previously for triangular elements. For purposes of determining equivalent loading, the following assumptions are made:

(1) The element is comprised of four independent triangular elements shown below.

(2) The pressure distribution in each of the four triangles is linear. The p_i's are total corner pressures.

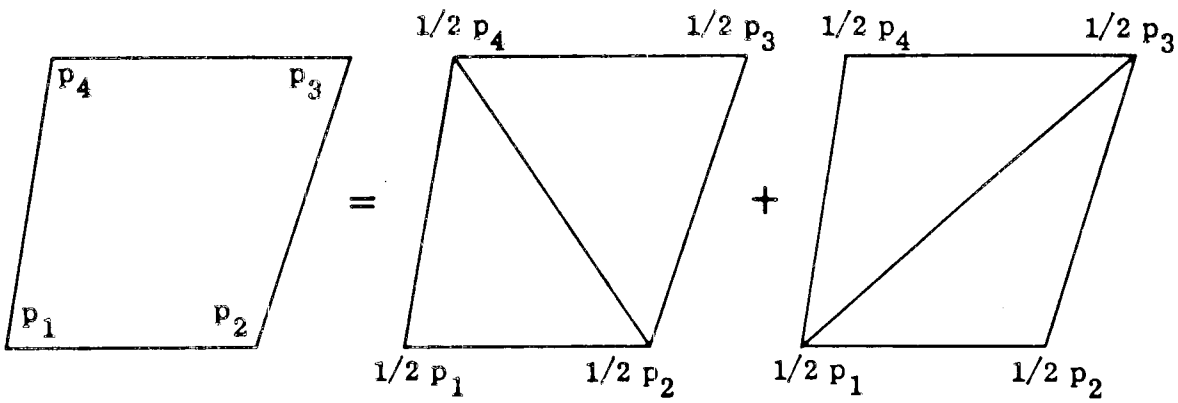

6.3 SSOL – STATIC SOLUTION GENERATOR

Function. SSOL computes displacements and reactions due to point loading applied at joints. Where iset is the load set identifier, and ncon is the constraint case (see SSOL Reset Controls and Figure 6-1), the SYSVEC-format output data sets are

STAT DISP iset ncon, and

STAT REAC iset ncon.

Each of the output data sets consists of n blocks, where n is the number of cases in the designated load set. Block 1 is the solution corresponding to case 1, block 2 corresponds to case 2, etc. The number of cases, n, is the largest of the following:

(1) n_f, the number of blocks in APPL FORC iset,

(2) n_m, the number of blocks in APPL MOTI iset, or

(3) n_e, the largest value of icase in any EQNF FORC iset icase resident in QLIB.

If n_f or n_m is less than n, the omitted input load vectors (e.g., applied forces for cases $n_f + 1$, $n_f + 2$, etc.) are assumed to be identically zero. Similarly, any omitted EQNF FORC iset icase is assumed to be identically zero.

Components of the STAT REAC iset ncon set corresponding to constrained or specified joint motion components are reactions. All other items are residual error forces; i.e., F - KU, where F = total applied forces, K = stiffness

matrix, and U = computed displacements. The error forces should always be scanned for evidence of round-off error.

If the error print (EP) option is in effect, three items, entitled F*U, U*KU, and ERR, will be printed for each load case. Where F and U are applied force and computed joint motion vectors, respectively, these three items are in order, F^tU, U^tKU, and the absolute value of $F^tU - U^tKU$ divided by the greater of F^tU or U^tKU. If joint motions are specified via APPL MOTI iset, the ERR quantity should not be interpreted as an error measure.

RESET Controls.

Name	Default Value	Meaning
K	K	Name of stiffness matrix.
CON	1	Constraint case (see INV discussion).
KLIB	1	Library containing stiffness matrix.
KILIB	1	Library containing factored stiffness matrix.
QLIB	1	Data source, destination library.
SET	1	Load set (iset).
REAC	1	Nonzero value causes STAT REAC iset ncon to be produced.
EP	1	Nonzero value causes error analysis to be performed.

7.2 PSF - STRESS TABLE PRINTER

PSF PRINTS ELEMENT STRESSES AND STRESS RESULTANTS FROM DATA CONTAINED IN THE STRS EIJ ISET ICASE DATA SETS GENERATED BY GSF. THE SECTION PROPERTY TABLES FOR ALL TWO AND THREE-DIMENSIONAL ELEMENTS (IF PRESENT) ARE RETAINED IN CENTRAL MEMORY THROUGHOUT PSF EXECUTION. ACCORDINGLY, SUFFICIENT CENTRAL MEMORY TO ACCOMMODATE BOTH OF THESE ARRAYS, PLUS ONE BLOCK OF ANY STRS EIJ DATA SET MUST BE PROVIDED.

THE FOLLOWING RESET CONTROLS ARE PROVIDED.

NAME	DEFAULT VALUE	MEANING
QLIB	1	SOURCE LIBRARY, STRS EIJ ISET ICASE, AND CASE TITL ISET.
SET	1	ISET, THE LOAD SET IDENTIFIER.
L1	1	ICASE1 (SEE SUBSEQUENT DISCUSSION).
L2		ICASE2 - DEFAULT IS THE NUMBER OF CASES (BLOCKS IN THE CASE TITL ISET DATA SET.
DISPLAY	1	DISPLAY FORMAT SELECTOR. DETAILS ARE DISCUSSED AND EXAMPLES PRESENTED LATER IN THIS SECTION.
NODES	1	FOR TWO AND THREE-DIMENSIONAL ELEMENTS, RESET NODES= 0 TO RESTRICT PRINTOUT TO ELEMENT CENTER.
CROSS	1	FOR TWO-DIMENSIONAL ELEMENTS, RESET CROSS= 0 TO RESTRICT PRINTOUT TO MID-SURFACE STRESSES.
LINES	56	LINES OF PRINT PER PAGE.
IEA	1	RESET IEA= 0 TO CAUSE THE RUN TO BE ABORTED IF AN ERROR OCCURS (E.G. DESIGNATED SOURCE DATA SETS DO NOT EXIST).

FOLLOWING THE LAST RESET CARD, ANY OF THE FOLLOWING EXECUTION CONTROL COMMANDS MAY APPEAR, IN ANY ORDER:

```
DIV=        F1,  F2,  F3,  F4$    (DEFAULT DIV= 1.,1.,1.,1.)

CFILTER=    FX,  FY,  FXY$        (NO DEFAULT)

SFILTER=  FOSS,  FONS$            (NO DEFAULT)
```

THE MEANING OF THE ABOVE COMMANDS IS DISCUSSED LATER.

FOLLOWING THE EXECUTION CONTROL CARDS (IF PRESENT), A SEQUENCE OF RECORDS IS GIVEN DESIGNATING WHICH ELEMENT TYPES ARE TO BE PROCESSED. FOR EXAMPLE,

```
E21:  E43:  E31:  S81$
```

IF NO LIST OF ELEMENT TYPES IS GIVEN, THE LIST DEFAULTS TO THE ELEMENT TYPES FOR WHICH STRESSES WERE COMPUTED BY GSF.

PRINTOUT IS PRODUCED FOR CASES ICASE1, ICASE1 + 1, ICASE1 + 2, - - - ICASE2. NOTE THAT IF THE CASE TITL DATA SET IS NOT PRESENT IN QLIB, BOTH L1 (ICASE1) AND L2 (ICASE2) SHOULD BE RESET.

FORMAT SELECTION VIA THE DISPLAY RESET IS AS FOLLOWS.

FOR 2-NODE ELEMENTS:

```
DISPLAY=1 FOR SHORT-FORM STRESS DISPLAY.
DISPLAY=2 FOR END FORCES AND MOMENTS
DISPLAY=3 FOR DETAILED STRESS DISPLAY.
```

FOR TWO-DIMENSIONAL ELEMENTS:

```
DISPLAY=1 FOR STRESSES.
DISPLAY=2 FOR MEMBRANE STRESS RESULTANTS.
DISPLAY=3 FOR BENDING STRESS RESULTANTS.
```

FOR THREE-DIMENSIONAL SOLIDS (S41, S61, S81):

```
DISPLAY=1 FOR X,Y,Z STRESS COMPONENTS, RELATIVE TO THE
          ELEMENT REFERENCE FRAME.

DISPLAY=2 FOR PRINCIPAL STRESSES.

DISPLAY=3 FOR DNS, DSS, SI, YSR, WHERE:
             DNS= OCTAHEDRAL NORMAL STRESS
                = (P1 + P2 + P3)/3, WHERE THE PI'S ARE
                  PRINCIPAL NORMAL STRESSES.

             DSS= OCTAHEDRAL SHEAR STRESS
                = (((P2-P3)**2 +(P1-P3)**2+(P1-P2)**2))**.5)/3.

             SI=  STRESS INTENSITY
                =  MAXIMUM VALUE OF PI-PJ.

             YSR= YIELD STRESS RATIO
                = 2.12132 * DSS/Yxx
                  Yxx IS UNIAXIAL YIELD STRESS, DEFINED IN
                  THE SECTION PROPERTY INPUT (SEE 3.2.2.3).
                  FOR ISOTROPIC MATERIALS, YIELD BEGINS
                  AT YSR= 1.0 (MAX. ENERGY OF DISTORTION THEOR

DISPLAY=4 FOR DISPLAY OF Sxx/Yxx, Syy/Yyy, Szz/Yzz, ETC.,
          WHERE THE YIJ'S ARE DEFINED IN THE SECTION PROPERTY
          INPUT, AS DESCRIBED IN 3.2.2.3.
```

THE FI'S IN THE DIV COMMAND ARE DIVISORS OF THE FOLLOWING CATEGORIES OF PRINTOUT, IN THE ORDER INDICATED: (1) STRESSES, (2) MEMBRANE STRESS RESULTANTS, (3) BENDING STRESS RESULTANTS, AND (4) END FORCES AND MOMENTS IN 2-NODE ELEMENTS.

THE CFILTER COMMAND RESTRICTS PRINTOUT OF STRESSES FOR LAMINATE SECTIONS. STRESS DATA WILL BE PRINTED ONLY IF, FOR SOME LAYER IN THE ELEMENT, THE ABSOLUTE VALUE OF THE FIBER-DIRECTION NORMAL STRESS EXCEEDS FX, THE ABSOLUTE VALUE OF THE TRANSVERSE DIRECTION NORMAL STRESS EXCEEDS FY, OR THE ABSOLUTE VALUE OF THE LAYER SHEAR STRESS EXCEEDS FXY.

THE SFILTER COMMAND RESTRICTS PRINTOUT OF DATA FOR THREE-DIMENSIONAL SOLIDS TO ELEMENTS FOR WHICH, AT SOME POINT, DSS EXCEEDS FOSS, OR DNS EXCEEDS FONS. IT SHOULD BE NOTED THAT IF THE NODES RESET IS USED TO LIMIT STRESS DISPLAY TO THE ELEMENT CENTER, PRINTOUT WILL BE PRODUCED IF THE SFILTER QUALIFICATION IS MET AT ANY NODE, NOT JUST THE CENTER.

THE TERMINOLOGY USED IN THE TWO-DIMENSIONAL ELEMENT STRESS DISPLAYS IS AS INDICATED ON FIGURE 7.2-1.

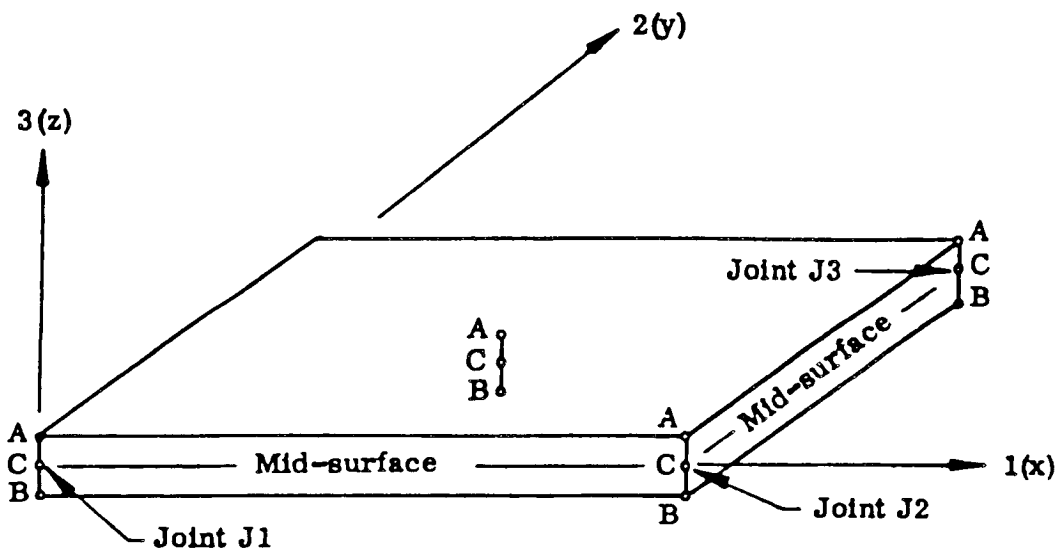

Figure 7.2-1: Stress Display Notation, Two- Dimensional Elements

PSF Example, Element Type E21 Default Display

TRANSVERSE SHEAR + TWISTING MOMENT CASE 7- 8

RING STIFFENER, Z=60 *GROUP 1

E21 STRESSES, DIVIDED BY 1000.0000

INDEX	CONNECTED JOINTS		MAX COMBINED P/A +BENDING TENSION	COMP	P/A	TRANSVERSE SHEAR STRESS S1	S2	TWIST SHEAR
1	25	26	74.21	-65.42	4.40	.00	.00	.00
2	26	27	67.87	-51.77	8.05	.00	.00	.00
3	27	28	61.20	-57.20	2.00	.00	.00	.00
4	28	29	70.70	-63.08	.81	.00	.00	.00
5	29	30	78.58	-64.64	6.97	.00	.00	.00
6	30	31	63.24	-51.73	5.75	.00	.00	.00
7	31	32	59.68	-67.33	-3.83	.00	.00	.00
8	32	25	61.52	-71.78	-5.13	.00	.00	.00

maximums of stresses occurring at eight cross-section locations

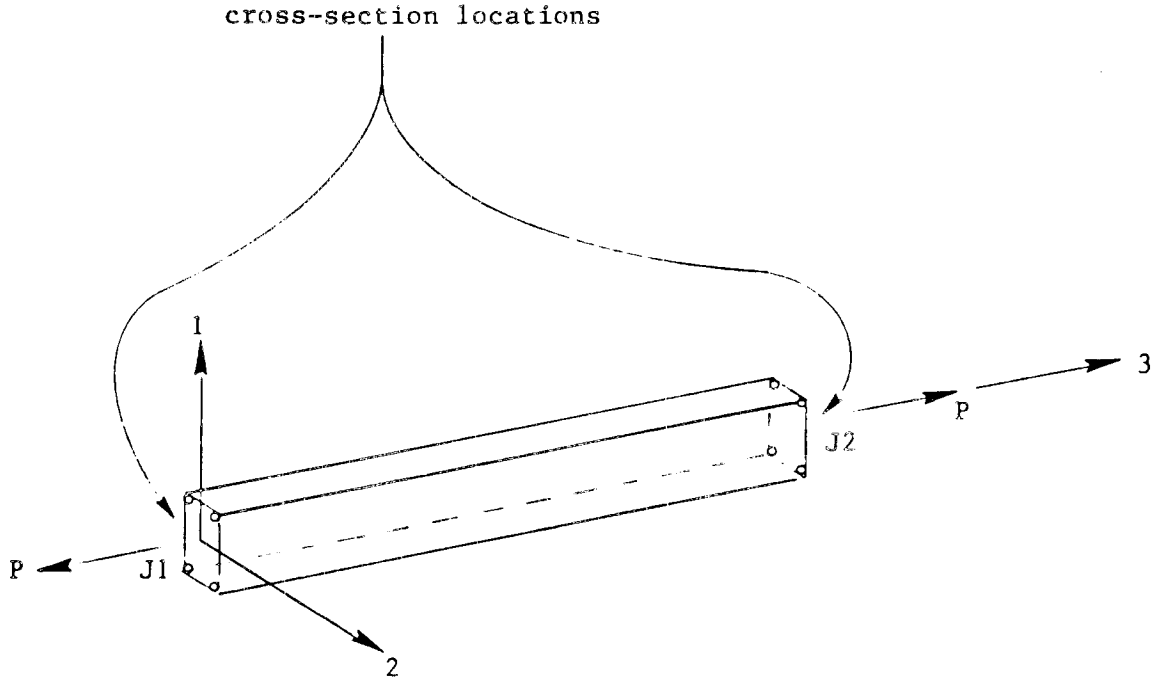

Section 8

EIG – SPARSE MATRIX EIGENSOLVER

Function. EIG solves linear vibration and bifurcation buckling eigenproblems of the types indicated by Eqs. (1) and (2).

$$rMX - KX = 0 \tag{1}$$

$$rKgX + KX = 0 \tag{2}$$

K and Kg must be in the SPAR standard sparse matrix format; M may be in either SPAR sparse matrix or diagonal format; and K must be non-singular. K need not be positive-definite in Eq. (1), but must be positive-definite in Eq. (2).

EIG implements an iterative process consisting of a Stodola (matrix iteration) procedure followed by a Rayleigh-Ritz procedure, followed by a second Stodola procedure, etc., resulting in successively refined approximations of m eigenvectors associated with the m eigenvalues of Eqs. (1) or (2) closest to zero. Closely spaced roots do not adversely affect the process.

In the following discussion of application of the process to Eq. (1), it is assumed that M and K are n x n, and that m linearly independent system vectors, $Y_1, Y_2, - - Y_m$, are known. Methods of initiating these vectors will be discussed later. Usually m is chosen to be much less than n; that is, m is usually 4 to 30, while n may be extremely large (e.g. 10000 +).

In the following discussion, Z is a general linear combination of the Y's:

$$Z = q_1 Y_1 + q_2 Y_2 + \cdot \cdot \cdot + q_m Y_m$$

$$= HQ, \text{ where}$$

$$H = (Y_1\ Y_2\ ----\ Y_m),\ \text{and}$$
$$Q = (q_1\ q_2\ ----\ q_m)^*. \tag{3}$$

The Rayleigh-Ritz procedure consists of replacing X with Z in Eq. (1); that is, substituting (3) into (1) and pre-multiplying by H^*,

$$r\ (H^*MH)Q + (H^*KH)Q = 0 \tag{4}$$

Using the Cholesky-Householder method, this low-order eigenproblem is solved for all m eigenvectors Q_1, Q_2, ----Q_m. The Rayleigh-Ritz procedure is concluded by using Eq. (3) to calculate m improved approximations of the n - order system eigenvectors,

$$\begin{aligned} Z_1 &= HQ_1 \\ Z_2 &= HQ_2 \\ - \quad & \quad - \\ - \quad & \quad - \\ Z_m &= HQ_m \end{aligned} \tag{5}$$

The Stodola (matrix iteration) step is as follows. From each Z of Eq. (5) a new Y is computed, subject to the requirement that

$$MZ = KY. \tag{6}$$

In performing MZ calculations and in solving for Y, SPAR's sparse-matrix algorithms are used. The iterative process continues by using the new Y's in another Rayleigh-Ritz procedure, etc. Vectors are regularly renormalized to avoid scaling problems.

The convergence resulting from Eq. (6) is readily observed by considering vectors Z and Y as linear combinations of the n system eigenvectors X_1, X_2 -- X_n.

Where U is the system joint motion vector, the total gravitational, dilitational, and kinetic energies resident in all fluid (F41, F61, F81) elements in the system are, in order:

$$V_{gr} = \tfrac{1}{2} U^t K_{gr} U, \qquad V_d = \tfrac{1}{2} U^t K_d U, \qquad \text{and} \qquad T_f = \tfrac{1}{2} \dot{U}^t M_f \dot{U} .$$

Processor FSM generates the matrices K_{gr}, K_d, and M_f, and stores them in SPAR format system matrix data sets named FG, FK, and FM, in order. FSM requires one input record, which defines the acceleration of the fluid relative to the global reference frame; i.e. a_x is acceleration in global direction x, etc.:

@XQT FSM

G= a_x, a_y, a_z $ *No default; all 3 components must be given. Total acceleration must be normal to the free surface of the fluid.*

The following RESET controls are provided in FSM:

Name	Default Value	Meaning
HLIB	1	Library containing KMAP, produced by processor TOPO.
OUTLIB	1	Destination library for outputs FG, FK, FM.
LREC	2200	Output data set block length.

The core space required by FSM is as follows:

The block length of KMAP
+ 3 x the output data set block length
+ 3 x ndf^2 x ksize, where

ndf is the number of degrees of freedom per joint (usually 3 or 6), and ksize is a parameter generated by processor TOPO.

The default core size is normally adequate, even for very large systems.

12.4 APPLICATION OF MATRICES GENERATED BY FSM

There are many applications for the matrices generated by FSM, including computation of rigid-wall fluid slosh modes and hydroelastic modes, as illustrated in examples in Volume 3 of the SPAR Reference Manual.

When forming linear combinations of FG, FK, FM, K, M, KG, DEM, RMASS, etc., it is extremely important to be aware of the potential effects of round-off error; especially when using the single precision version of EIG on UNIVAC systems, which have only 36 bits per word. If you are not certain of the relative magnitudes of corresponding terms in matrices to be summed, use processor PS to examine them. In some applications it is possible to get around round-off problems by changing stiffnesses. For example, the rigid-wall fluid slosh problem is:

$$M_f X + (K_{gr} + K_d) X = 0 \ .$$

If terms of K_d are six orders of magnitude greater than those of K_{gr}, it is reasonable to instead solve the following eigenproblem:

$$M_f X + (K_{gr} + .001\ K_d) X = 0 \ .$$

Both problems have substantially identical low-frequency solutions, since the fluid is virtually incompressible in both cases. When assumptions of this kind are made, it is necessary to make post-solution checks of their validity. In this example, a good check would be to use AUS to assure that $X^t K_d X \ / \ X^t K_{gr} X$ is much smaller than 1.

It should also be noted that since $(K_{gr} + K_d)$ is singular, fluid meshes generally possess many zero-frequency circulation modes. Accordingly, spectral shifts are necessary in computing slosh modes.

It should also be noted that the element volume summary printed by FSM may indicate a correct total volume for a mesh containing input errors; e.g. an interior node may be badly out of position without affecting the total volume.

EISI/A2200

Vol-2

SPAR

REFERENCE MANUAL

Volume 2

THEORY

by

W. D. Whetstone, C. E. Jones, and C. L. Yen

ENGINEERING INFORMATION SYSTEMS, INC.
5120 CAMPBELL AVENUE, SUITE 240
SAN JOSE, CALIFORNIA 95130
(408) 379-0730

GENERAL TABLE OF CONTENTS

Section

A Elastic Beam, Membrane, and Bending Element Formulations

B Fluid Element Formulations

C CEIG - Complex Eigensolver

D Three-Dimensional Solid Element Formulations

Section A

ELASTIC BEAM, MEMBRANE, AND BENDING ELEMENT FORMULATIONS

Table of Contents

Subsection	Contents	Page
1	Stiffness Matrices 1.1 Beams 1.2 Flat membrane and bending elements 1.3 Warped quadrilateral elements	A-2
2	Mass Matrices	A-15
3	Geometric Stiffness Matrices	A-19

The following table summarizes the correspondence between the element formulations (e.g., K21, M62, etc.) discussed in this section and the SPAR element designations (E21, E22, etc.).

Element Type		Stiffness Matrix Formulation	Mass Matrix Formulation	Geometric Stiffness Matrix Formulation
E21	Gen. Beam	K21	M62	BEAMKG
E22	Direct K	(see page A-4)	none	BARKG
E23	Bar	(see page A-4)	M32	BARKG
E24	Plane beam	(see page A-4)	M62	BEAMKG
E25	Direct K, L=0	(see page A-4)	none	none
E31	Membrane	TM	M33	GTM
E32	Bending	TPB7	M63	none
E33	Mem. + bending	TM+TPB7	M63	GTP
E41	Membrane	QMB5	M34	GQM
E42	Bending	QPB11	M64	none
E43	Mem. + bending	QMB5+QPB11	M64	GQP
E44	Shear panel	QMB1	M34	GQM

1. Stiffness Matrices

Individual element K's computed by the routines K21, TM, QPB11, etc., indicated in the table on page 1-1 are relative to intrinsic reference frames imbedded in the elements. As indicated on Figure 1-1, the intrinsic frames move with the elements as the structure deforms.

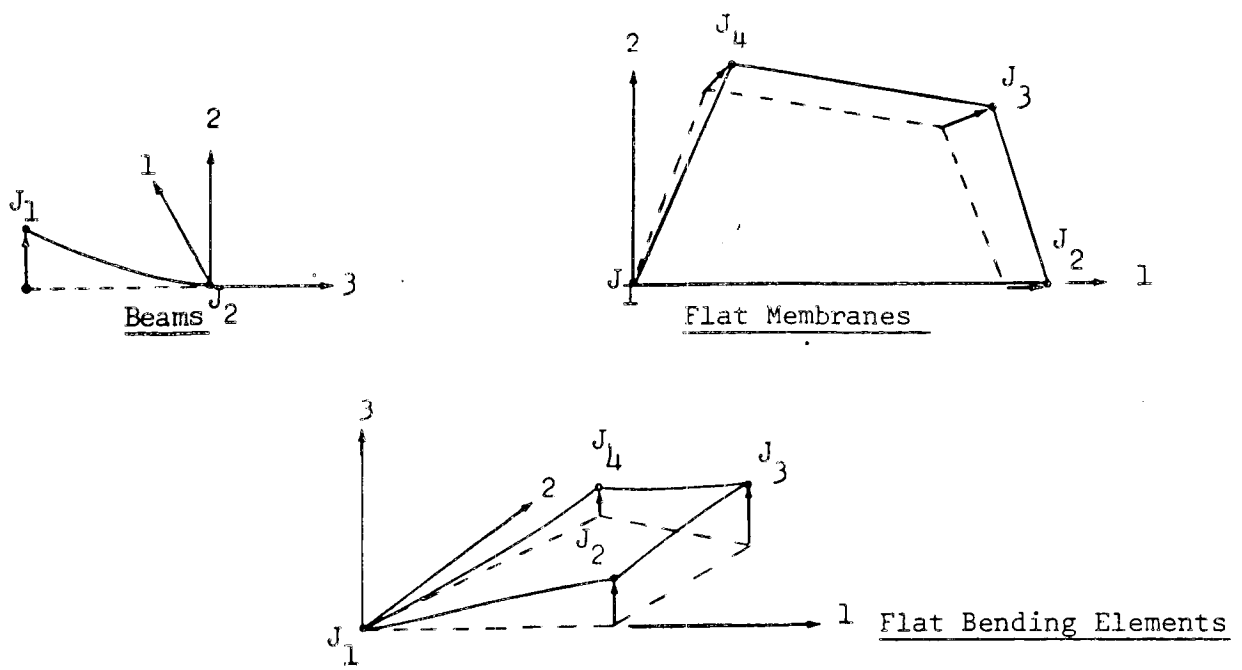

- Dashed lines indicate undeformed shape.
- For beams, the origin of the intrinsic frame is imbedded in (rotates with)
- joint J2, to which the beam terminus connects.
- For bending elements, the origin of the intrinsic frame is imbedded in J1.
- In the undeformed state, the intrinsic frames coincide with the local "element reference frames."

FIGURE 1-1 INTRINSIC FRAMES

The basis on which the beam element intrinsic K's are computed is discussed in section 1.1. The basis for computing K's for flat membrane and bending elements is discussed in section 1.2.

Computation of intrinsic K's for warped quadrilateral E41, E43, and E44 elements is discussed in section 1.3.

In equation (1-3), s_{11}, s_{15} and s_{55} are associated with bending about principal axis 2; s_{22}, s_{24}, and s_{44} with bending about principal axis-1.

On Figure 1-3, components of the element intrinsic deformation vector, and the associated point forces, p_i , and moments are shown.

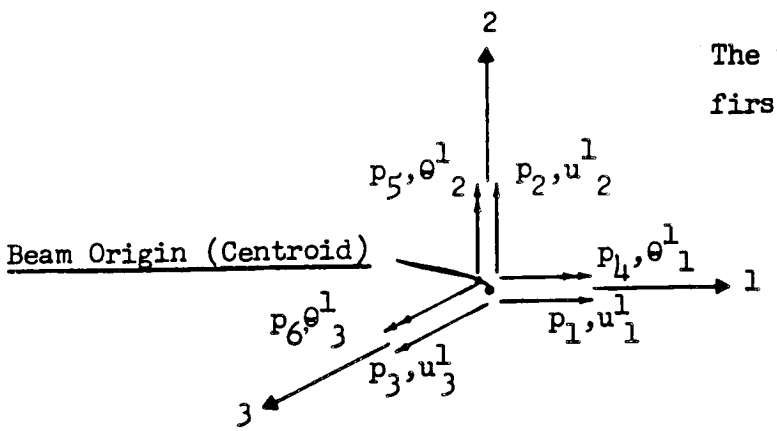

The u^i_j's correspond to the first of equation (1-1).

FIGURE 1-3: FORCES, DEFORMATIONS RELATIVE TO INTRINSIC FRAME

In order to identify K, the equilibrium relation between the p_i's (Fig. 1-3) and f_i's (Fig. 1-2) will be established. In the following, θ, z_1, and z_2 are as defined on Figure 1-2. Also, $c = \cos\theta$, $s = \sin\theta$.

$$\begin{bmatrix} p_1 \\ p_2 \\ p_3 \\ p_4 \\ p_5 \\ p_6 \end{bmatrix} = \begin{bmatrix} 1 & 0 & 0 & 0 & 0 & 0 \\ 0 & 1 & 0 & 0 & 0 & 0 \\ 0 & 0 & 1 & 0 & 0 & 0 \\ 0 & 0 & 0 & 1 & 0 & 0 \\ 0 & 0 & 0 & 0 & 1 & 0 \\ -z_2 & z_1 & 0 & 0 & 0 & 1 \end{bmatrix} \begin{bmatrix} c & -s & 0 & 0 & 0 & 0 \\ s & c & 0 & 0 & 0 & 0 \\ 0 & 0 & 1 & 0 & 0 & 0 \\ 0 & 0 & 0 & c & -s & 0 \\ 0 & 0 & 0 & s & c & 0 \\ 0 & 0 & 0 & 0 & 0 & 1 \end{bmatrix} \begin{bmatrix} f_1 \\ f_2 \\ f_3 \\ f_4 \\ f_5 \\ f_6 \end{bmatrix}, \quad (1\text{-}5)$$

or,

$$p = T\,f, \qquad (1\text{-}6)$$

where T is defined by equation (1-5), and $p = \left[p_1\ p_2 \cdots p_6\right]^t$.

The kinematical relation indicated by equation (1-7) may readily be verified.

$$\delta = T^t\,U\,. \qquad (1\text{-}7)$$

From equations (1-4), (1-6), and (1-7),

$$p = T\ S\ T^t U, \text{ or}$$
$$K = T\ S\ T^t. \qquad (1\text{-}8)$$

If the shear center and centroid coincide, and the intrinsic frame axes are in principal planes,

$$K = S.$$

The following symbols will be used in identifying the eight non-zero s_{ij}'s.

L	=	length of beam.
A	=	cross sectional area,
E	=	modulus of elasticity,
G	=	shear modulus,
I_1, I_2	=	cross-section moments of inertia about principal axes 1 and 2, respectively,
α_1, α_2	=	transverse shear deflection constants (see Timoshenko "Strength of Materials," Part 1, p. 170),
C	=	uniform torsion constant, and
C_1	=	non-uniform torsion constant (see Timoshenko "Strength of Materials," Part 2, p. 255-273).

The axial spring constant is

$$s_{33} = AE/L.$$

The torsional constant is

$$s_{66} = \frac{C}{L}\left(1 - \frac{\tanh b}{b}\right)^{-1}, \quad \text{where} \quad b = \frac{L}{2}\sqrt{C/C_1}$$

which assumes <u>no warping of end cross sections</u>.

Under the usual assumptions of Timoshenko beam theory,

$$\delta_1 = f_1 \frac{L^3}{3\ EI_2} - f_5 \frac{L^2}{2\ EI_2} + f_1 \frac{\alpha_2 L}{GA}$$

$$\delta_5 = -f_1 \frac{L^2}{2\ EI_2} + f_5 \frac{L}{EI_2};$$

or where $e_1 \equiv \frac{EI_2}{GA}\alpha_2$ and $k_1 \equiv \frac{EI_2}{e_1 + L^2/12}$,

$$\begin{bmatrix} \delta_1 \\ \\ \delta_5 \end{bmatrix} = \frac{L^2}{EI_2}\begin{bmatrix} \left(\frac{L}{3} + \frac{e_1}{L}\right) & -\frac{1}{2} \\ -\frac{1}{2} & \frac{1}{L} \end{bmatrix}\begin{bmatrix} f_1 \\ \\ f_5 \end{bmatrix}$$

and

$$\begin{bmatrix} f_1 \\ \\ f_5 \end{bmatrix} = k_1\begin{bmatrix} \frac{1}{L} & \frac{1}{2} \\ \frac{1}{2} & \left(\frac{L}{3} + \frac{e_1}{L}\right) \end{bmatrix}\begin{bmatrix} \delta_1 \\ \\ \delta_5 \end{bmatrix}$$

From the above, the first set of bending stiffness constants may be identified as:

$$s_{11} = \frac{1}{L}k_1,$$

$$s_{15} = \frac{1}{2}k_1, \text{ and}$$

$$s_{55} = \left(\frac{L}{3} + \frac{e_1}{L}\right)k_1.$$

Also,

$$s_{22} = \frac{1}{L}k_2,$$

$$s_{24} = -\frac{1}{2}k_2, \text{ and}$$

$$s_{44} = \left(\frac{L}{3} + \frac{e_2}{L}\right)k_2,$$

where the definitions of k_2 and e_2 are analogous to those of k_1 and e_1.

1.3 Warped Quadrilateral Membrane and Bending Elements

Intrinsic deformation vectors for slightly warped quadrilateral elements are defined the same as indicated in Eq. (1-1) for flat elements, except that the deformation components of node 4 (u_i^4, θ_i^4) are parallel to the $\bar{x}$ - $\bar{y}$ - $\bar{z}$ frame shown below.

x - y - z =
Intrinsic Frame

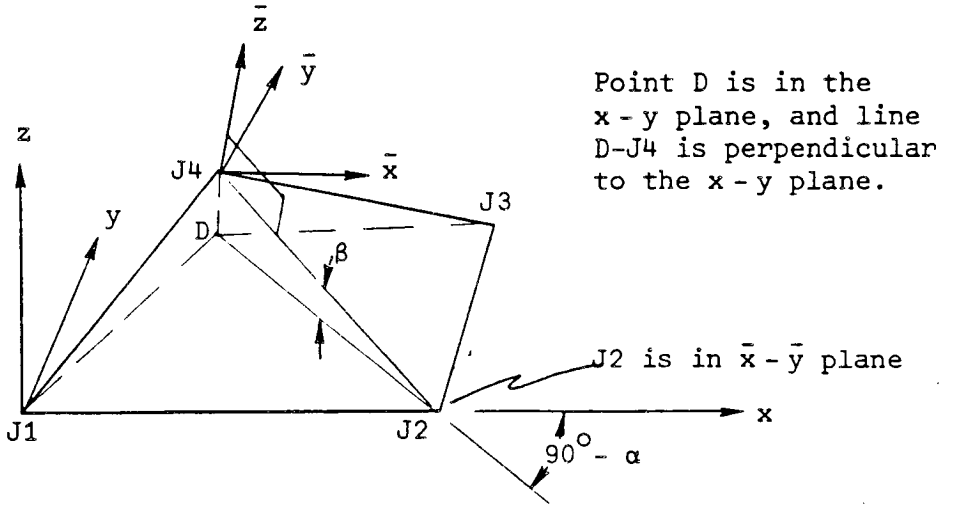

Point D is in the x - y plane, and line D-J4 is perpendicular to the x - y plane.

The orientation of $\bar{x}$ - $\bar{y}$ - $\bar{z}$ is defined by the following sequence of rotations, beginning with $\bar{x}$ - $\bar{y}$ - $\bar{z}$ parallel to x - y - z:

(1) Rotate α about $\bar{z}$ until J2 is in the $\bar{y}$-$\bar{z}$ plane.
(2) Rotate β about $\bar{x}$ until J2 is on the negative $\bar{y}$ axis.
(3) Rotate -α about $\bar{z}$.

As a result of the above sequence, J2 lies in the $\bar{x}$-$\bar{y}$ plane, and $\bar{x}$ and $\bar{y}$ are nearly parallel to x and y, provided that the warping is slight (i.e., $\beta \leq .05$).

The basic assumption used in forming stiffness matrices for warped quadrilateral elements is that the terms of the intrinsic K are the same as if the element were flat, i.e. the same as if J4 were in the x-y plane. As an example of the effect of this assumption, note that for E41 elements, a displacement of J4 in the direction of $\bar{z}$ will produce no stress in the element.

Warping is taken into account only in computing element stiffness matrices, <u>not</u> in computing consistent mass or geometric stiffness matrices.

Section B

FLUID ELEMENT FORMULATIONS

Fluid element types F41 (tetrahedron), F61 (pentahedron), and F81 (hexahedron) are illustrated on Figure 1.

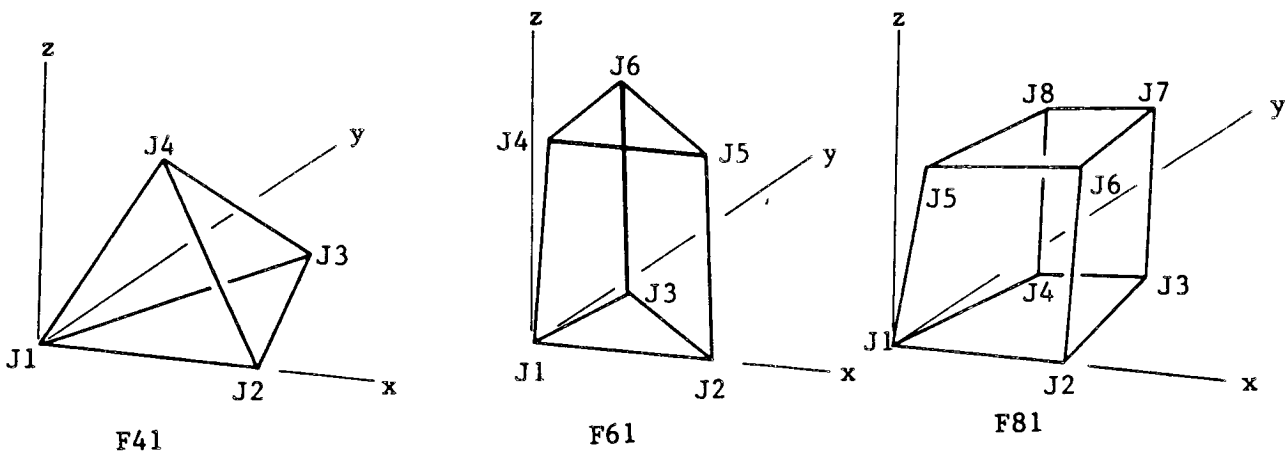

Figure 1: Fluid Elements

Individual element state vectors, q, for each element type are summarized below.

$$\text{For F41's:}\quad q = \begin{bmatrix} U_{11} \\ U_{21} \\ U_{31} \\ U_{12} \\ U_{22} \\ U_{32} \\ \cdot \\ \cdot \\ \cdot \\ U_{14} \\ U_{24} \\ U_{34} \end{bmatrix}. \qquad \text{For F61's:}\quad q = \begin{bmatrix} U_{11} \\ U_{21} \\ U_{31} \\ U_{12} \\ U_{22} \\ U_{32} \\ \cdot \\ \cdot \\ \cdot \\ U_{16} \\ U_{26} \\ U_{36} \end{bmatrix}. \qquad \text{For F81's:}\quad q = \begin{bmatrix} U_{11} \\ U_{21} \\ U_{31} \\ U_{12} \\ U_{22} \\ U_{32} \\ \cdot \\ \cdot \\ \cdot \\ U_{18} \\ U_{28} \\ U_{38} \end{bmatrix}. \tag{1}$$

U_{ij} is the direction-i displacement of node j, relative to the local element reference frame.

For an individual element, dilitational elastic energy, $\bar{V}_d$, gravitational potential energy, $\bar{V}_{gr}$, and kinetic energy, $\bar{T}_f$, are expressed as quadratic forms in the U_{ij}'s as follows.

$$\bar{V}_d = \tfrac{1}{2}\, q^t\, \bar{K}_d\, q = \tfrac{1}{2}\, \frac{k}{V_e} \int_{\text{Surface}} w_s^2\, dS\ , \tag{2}$$

$$\bar{V}_{gr} = \tfrac{1}{2}\, q^t\, \bar{K}_{gr}\, q = \tfrac{1}{2}\, m g_n \int_{\text{Surface}} w_s^2\, dS, \text{ and} \tag{3}$$

$$\bar{T}_f = \tfrac{1}{2}\, \dot{q}^t\, \bar{M}_f\, \dot{q} = \tfrac{1}{2}\, m \int_{\text{Volume}} (\dot{u}^2 + \dot{v}^2 + \dot{w}^2)\, dV. \tag{4}$$

In the above equations

k = fluid bulk modulus,

V_e = element volume,

w_s = displacement normal to the element surface,

m = fluid mass density,

g_n = component of gravitational acceleration normal to the surface, and

u,v,w = displacement components of a fluid particle on the interior of an element.

Section C

CEIG - Complex Eigensolver

CEIG solves high-order linear eigenproblems of the following type:

$$\lambda^2 MX + \lambda(D + G)X + KX = 0. \tag{1}$$

Matrices M, D, and K are real and symmetric. G is real and antisymmetric. M may be diagonal or general (SPAR-format). D, G, and K are SPAR-format. The complex eigenvalues and eigenvectors, λ and X, occur in conjugate pairs.

The primary application intended for CEIG is computation of a limited number of eigensolutions for damped and/or spinning structures modelled by finite element networks of high order, i.e. many thousands of degrees of freedom.

Iterative Procedure

CEIG iterates simultaneously on approximations of n eigenvectors. In the following discussion, Y_R and Y_I are the real and imaginary parts, respectively, of the current eigenvector approximations at the beginning of an iteration cycle. That is, where the current approximation of X^j is $Y^j + iY^j$,

$$Y_R = \{Y_R^1 \; Y_R^2 \; - - \; Y_R^n\}$$

$$Y_I = \{Y_I^1 \; Y_I^2 \; - - \; Y_I^n\} \tag{2}$$

Each iteration cycle consists of the following steps. Details of individual steps are discussed later.

1- Eigenvalue approximations, $\tilde{\lambda}^j$, corresponding to each eigenvector approximation, $Y_R^j + iY_I^j$, for j = 1 through n, are computed and compared with the corresponding eigenvalue approximations as determined in the preceeding iteration cycle. If the convergence criteria are met (see Volume 1 of the SPAR Reference Manual) execution is terminated. Otherwise, the following steps are performed.

2- A Stodola procedure is executed to establish improved eigenvector approximations, $Z_R + iZ_I$, where

$$Z_R = \{Z_R^1 \quad Z_R^2 \quad -- \quad Z_R^n\}$$

$$Z_I = \{Z_I^1 \quad Z_I^2 \quad -- \quad Z_I^n\}. \tag{3}$$

3- Preparatory to performing a Rayleigh - Ritz analysis in which coefficients of the $(Z_R^j + iZ_I^j)$'s are used as generalized coordinates, the following twelve n by n matrices are computed:

$$\begin{array}{lll} Z_R^t \; M \; Z_R, & Z_R^t \; M \; Z_I; & Z_I^t \; M \; Z_I, \\ Z_R^t \; D \; Z_R, & Z_R^t \; D \; Z_I, & Z_I^t \; D \; Z_I, \\ Z_R^t \; G \; Z_R, & Z_R^t \; G \; Z_I, & Z_I^t \; G \; Z_I, \\ Z_R^t \; K \; Z_R, & Z_R^t \; K \; Z_I, & Z_I^t \; K \; Z_I. \end{array} \tag{4}$$

4- A Rayleigh - Ritz analysis is performed, resulting in computation of new approximations of n eigenvalues, and the four E_{km} matrices used in the following step.

5- The final step in an iteration cycle is back-transformation of the eigenvectors computed in the Rayleigh - Ritz procedure:

$$\text{new} \quad Y_R = Z_R \; E_{RR} + Z_I \; E_{RI}$$

$$\text{new} \quad Y_I = Z_R \; E_{IR} + Z_I \; E_{II}. \tag{5}$$

Section D

Three-Dimensional Solid Element Formulations

For element types S41, S61, and S81, the basis of individual element formulations is as follows.

Stiffness and stress matrices are based on the assumed stress field-minimum complementary energy (Pian) method, which is described in general terms in Section A, Volume 2 of this manual. For S61 and S81, the assumed stress field is as follows:

$$
\begin{aligned}
\sigma_x &= \beta_1 + \beta_7\, y + \beta_8\, z + \beta 16\, yz \\
\sigma_y &= \beta_2 + \beta_9\, x + \beta_{10}\, z + \beta 17\, xz \\
\sigma_z &= \beta_3 + \beta_{11}\, x + \beta_{12}\, y + \beta 18\, xy \\
\tau_{xy} &= \beta_4 + \beta_{13}\, z \\
\tau_{yz} &= \beta_5 + \beta_{14}\, x \\
\tau_{zx} &= \beta_6 + \beta_{15}\, y
\end{aligned}
$$

For S41, only $\beta_1 - \beta_6$ apply (constant stress).

Consistent mass matrices, as computed in processor M, are based on the same formulation as described in Section B for fluid elements S41, S61, and S81. In processor E, diagonal mass matrices are computed by, in effect, computing consistent mass matrices, then summing terms to obtain the same nodal forces under uniform translational acceleration as would be computed using the consistent mass matrix.

Initial stress stiffness matrices, K_g, are <u>not</u> computed for S41, S61, or S81 in processor KG.

TABLE OF CONTENTS

Section

i FOREWORD

ii INTRODUCTION

1 TUBULAR BEAM

2 VIBRATION OF A CIRCULAR MEMBRANE

3 CIRCULAR PLATE

3.1 Vibrational Characteristics
3.2 Buckling due to Compressive Edge Load
3.3 Lateral Deflection, Including Prestress Effects

4 RECTANGULAR PLATE

4.1 Vibrational Characteristics
4.2 Buckling due to Unidirectional Compression
4.3 Effect of Prestress on Buckling Load
4.4 Buckling due to Uniform Compression
4.5 Effects of Prestress on Vibrational Characteristics
4.6 Buckling due to Linearly Varying Edge Load
4.7 Buckling due to Edge Shear
4.8 Buckling due to Thermal Load
4.9 Effects of Thermal Prestress on Vibrational Characteristics

5 VIBRATION OF A CONICAL SHELL

6 CYLINDRICAL SHELL

6.1 Vibrational Characteristics
6.2 Buckling due to Axial Compression
6.3 Effects of Pre-Tensioning on Buckling due to External Pressure
6.4 Buckling due to External Pressure
6.5 Effects of Pressurization on Buckling due to Axial Compression

7 BUCKLING OF A CYLINDRICAL SHELL DUE TO TORSIONAL LOADING

8 SPHERICAL SHELL

8.1 Vibrational Characteristics of a 60° Sector
8.2 Vibrational Characteristics of a 30° Sector
8.3 Stress due to Pressure Loading
8.4 Buckling of 10° Sector due to Pressure

9 BEAM

9.1 Vibration of a Cantilever
9.2 Column Buckling
9.3 Beam-Column Effects

9.4 Effects of Pre-Tension on Vibration
9.5 Buckling of a Cantilever due to Lateral Load
9.6 Buckling due to Pure Bending
9.7 Buckling due to Thermal Load
9.8 Effects of Thermal Pre-Stress on Vibration

10 LUT (SATURN 5 LAUNCHER UMBILICAL TOWER)

11 MECHANISM

12 HYPERBOLIC PARABOLOID

13 COMPOSITE TOROIDAL SHELL

14 DYNAMIC RESPONSE AND BACK TRANSFORMATION

14.1 Cantilevered Beam
14.2 Transmission Tower

15 SUBSTRUCTURE ANALYSIS

16 NON-SYMMETRICALLY LOADED SYMMETRIC STRUCTURES

17 FLUID ELEMENTS

17.1 FLUID SLOSH IN A RIGID CONTAINER
17.2 HYDROELASTIC MODES

18 VIBRATION OF ROTATING AND DAMPED STRUCTURES

18.1 Spinning Axisymmetric Beam
18.2 Rotating Beam (Laurenson's problem)
18.3 Rotating Cantilevered L-Beam
18.4 Damped Beam
18.5 References

19 SYSTEM MODIFICATION

20 THREE DIMENSIONAL STRESS ANALYSIS

20.1 Beam Bending
20.2 Torsion of a Square Prism
20.3 Pressurized Sphere
20.4 Rotating Disk

REFERENCES

20. THREE DIMENSIONAL STRESS ANALYSIS

Comparisons are made between analytical solutions and results obtained using the three-dimensional solid elements. In comparisons of this type, there are always questions as to the most appropriate choice of mesh geometry and boundary conditions. The data input for each example is listed, defining completely all aspects of the finite element models. Since the input is quite brief, detailed explanations of basic problem parameters are not duplicated in the text.

20.1 BEAM BENDING

The finite element model illustrated below was used to analyze bending of a bar of square cross-section, for comparison with the analytical solution given in Chapter 15, "The Mathematical Theory of Elasticity," by A. E. H. Love. The applied loading was self-equilibrating; accordingly statically-determinate constraint was imposed. End shear loads were distributed parabolically, and the end couple formed by linearly-varying direct stresses. Since the three-dimensional elements use only nodal displacements as generalized displacements, it was not possible to match displacement derivitives at the origin with those of the usual analytical solution; accordingly, rigid body motion in the analytical solution was selected such that lateral displacement at (0,0,4) was identical to that of the finite element solution.

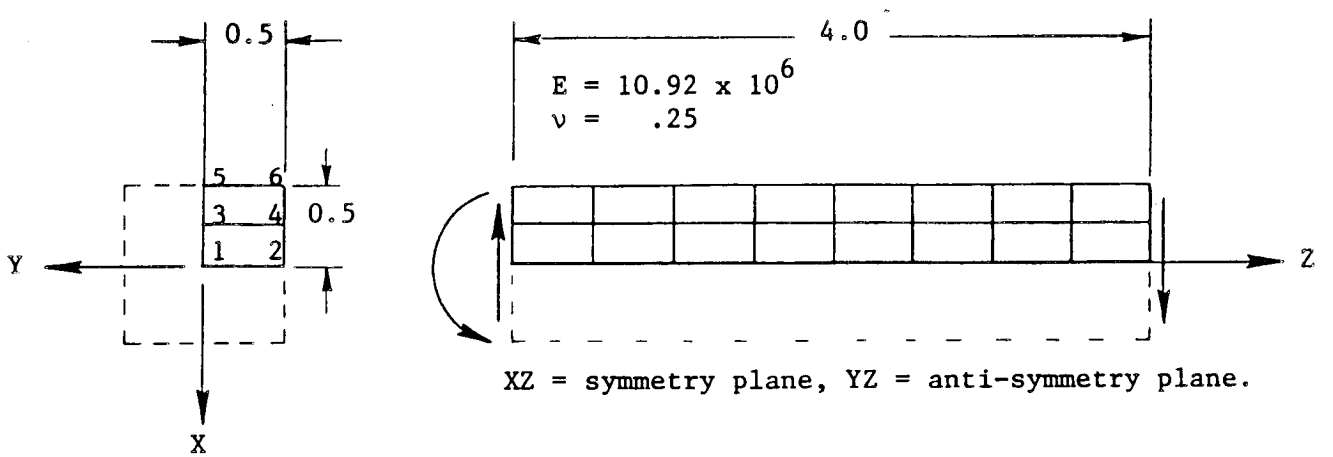

XZ = symmetry plane, YZ = anti-symmetry plane.

Direction Z normal stresses throughout the model agreed with the analytical solution to 4 decimal places. Displacements are compared on the following page. Transverse shear stresses are compared below:

	S81	Analytical
At x = -.125, y =-.25:	-137.5	-138.2
At x = -.375, y =-.25:	-62.5	-64.3

Comparison of displacements, beam bending solution:

	S81 solution			Analytical solution		
JOINT	1	2	3	1	2	3
1	.000 ◆	.000 ◆	.000 ◆	.000 ◆	.000 ◆	.000 ◆
2	-.127-04	.000 ◆	.000 ◆	-.137-04	.000 ◆	.000 ◆
3	.344-05	.000 ◆	-.197-05	.343-05	.000 ◆	-.197-05
4	-.926-05	.131-04	-.236-05	-.103-04	.137-04	-.248-05
5	.138-04	.000 ◆	.000 ◆	.137-04	.000 ◆	-.528-06 ◆
6	.105-05	.260-04	-.558-06	.000	.275-04	-.400-06
7	.633-04	.000 ◆	.000 ◆	.638-04	.000 ◆	.000 ◆
8	.513-04	.000 ◆	.000 ◆	.518-04	.000 ◆	.000 ◆
9	.663-04	.000 ◆	.496-04	.668-04	.000 ◆	.495-04
10	.543-04	.121-04	.489-04	.548-04	.120-04	.490-04
11	.754-04	.000 ◆	.103-03	.758-04	.000 ◆	.102-03
12	.634-04	.241-04	.102-03	.638-04	.240-04	.103-03
13	.222-03	.000 ◆	.000 ◆	.224-03	.000 ◆	.000 ◆
14	.212-03	.000 ◆	.000 ◆	.213-03	.000 ◆	.000 ◆
15	.225-03	.000 ◆	.943-04	.226-03	.000 ◆	.942-04
16	.214-03	.103-04	.935-04	.216-03	.103-04	.937-04
17	.232-03	.000 ◆	.192-03	.234-03	.000 ◆	.192-03
18	.222-03	.206-04	.191-03	.224-03	.206-04	.192-03
19	.463-03	.000 ◆	.000 ◆	.466-03	.000 ◆	.000 ◆
20	.455-03	.000 ◆	.000 ◆	.458-03	.000 ◆	.000 ◆
21	.466-03	.000 ◆	.132-03	.468-03	.000 ◆	.132-03
22	.457-03	.858-05	.131-03	.460-03	.859-05	.131-03
23	.472-03	.000 ◆	.268-03	.475-03	.000 ◆	.267-03
24	.463-03	.172-04	.267-03	.466-03	.172-04	.267-03
25	.773-03	.000 ◆	.000 ◆	.777-03	.000 ◆	.000 ◆
26	.767-03	.000 ◆	.000 ◆	.770-03	.000 ◆	.000 ◆
27	.775-03	.000 ◆	.163-03	.779-03	.000 ◆	.163-03
28	.768-03	.687-05	.162-03	.772-03	.687-05	.162-03
29	.780-03	.000 ◆	.330-03	.784-03	.000 ◆	.329-03
30	.773-03	.137-04	.329-03	.777-03	.137-04	.329-03
31	.114-02	.000 ◆	.000 ◆	.114-02	.000 ◆	.000 ◆
32	.113-02	.000 ◆	.000 ◆	.114-02	.000 ◆	.000 ◆
33	.114-02	.000 ◆	.187-03	.114-02	.000 ◆	.187-03
34	.113-02	.515-05	.186-03	.114-02	.515-05	.186-03
35	.114-02	.000 ◆	.378-03	.115-02	.000 ◆	.377-03
36	.114-02	.103-04	.377-03	.114-02	.103-04	.377-03
37	.154-02	.000 ◆	.000 ◆	.155-02	.000 ◆	.000 ◆
38	.154-02	.000 ◆	.000 ◆	.155-02	.000 ◆	.000 ◆
39	.155-02	.000 ◆	.204-03	.155-02	.000 ◆	.204-03
40	.154-02	.343-05	.203-03	.155-02	.343-05	.204-03
41	.155-02	.000 ◆	.412-03	.155-02	.000 ◆	.412-03
42	.154-02	.686-05	.411-03	.155-02	.687-05	.412-03
43	.198-02	.000 ◆	.000 ◆	.199-02	.000 ◆	.000 ◆
44	.198-02	.000 ◆	.000 ◆	.198-02	.000 ◆	.000 ◆
45	.198-02	.000 ◆	.214-03	.199-02	.000 ◆	.214-03
46	.198-02	.165-05	.214-03	.198-02	.172-05	.214-03
47	.198-02	.000 ◆	.433-03	.199-02	.000 ◆	.432-03
48	.198-02	.334-05	.432-03	.199-02	.343-05	.432-03
49	.243-02	.000 ◆	.000 ◆	.243-02	.000 ◆	.000 ◆
50	.242-02	.000 ◆	.000 ◆	.243-02	.000 ◆	.000 ◆
51	.243-02	.000 ◆	.218-03	.243-02	.000 ◆	.218-03
52	.242-02	.654-06	.217-03	.243-02	-.205-12	.217-03
53	.243-02	.000 ◆	.439-03	.243-02	.000 ◆	.439-03
54	.242-02	.149-05	.439-03	.243-02	-.409-12	.439-03

Data input for finite element solution, beam bending example:

```
@XQT TAB
  START 54 4,5,6
  JLOC: 1  .00  .00  .00  .00 -.50  .00 2 1 9
        6  .00  .00 4.00  .00 -.50 4.00
        5 -.50  .00  .00 -.50 -.50  .00 2 1 9
        6 -.50  .00 4.00 -.50 -.50 4.00
        3 -.25  .00  .00 -.25 -.50  .00 2 1 9
        6 -.25  .00 4.00 -.25 -.50 4.00
  CON=1: ZERO 1 2 3: 1: ZERO 3: 5
         SYMMETRY PLANE=2
         ANTISYMMETRY PLANE=1
  MATC: 1 10.92+6 .25 .098
@XQT AUS
  TABLE(NI=31,NJ=1): PROP BTAB 2 21
     J=1: .098>
          9.1575-8>
          -2.2894-8  9.1575-8>
          -2.2894-8 -2.2894-8 9.1575-8>
           0.      0.      0.      2.3810-7>
           0.      0.      0.      0.      2.3810-7>
           0.      0.      0.      0.      0.      2.3810-7>
          12.6-6 12.6-6 12.6-6 1. 1. 1. 1. 1. 1.
@XQT ELD
  S81: 2 8 1 2 6 -1 2 0 1
@XQT E
  RESET G=386.
@XQT EKS
@XQT TOPD
@XQT K
@XQT INV
@XQT AUS
  ALPHA: CASE TITLE 1 1
     1'TRANSVERSE SHEAR LOAD = 100 LBS
  SYSVEC: APPL FORC 1 1
     CASE 1: I=1: J=49,50: 4.4928
                  J=51,52: 6.640
                  J=53,54: 1.3672
                  J=1,2: -4.4928
                  J=3,4: -6.640
                  J=5,6: -1.3672
             I=3: J=1,2: -12.5
                  J=3,4: -75.
                  J=5,6: -62.5
@XQT SSDL
@XQT VPRT
  LINES=54
  TPRINT STAT DISP 1 1>
     'DISPLACEMENTS, 54 JOINT 1X1 BEAM, REGULAR GRID
  TPRINT STAT REAC 1 1>
     'REACTIONS, 54 JOINT 1X1 BEAM, REGULAR GRID
@XQT GSF
@XQT PSF
@XQT DCU
  TITLE 1'54 JOINT 1X1 SQUARE BEAM, REGULAR GRID
  TOC 1
 STOP
```

20.2 TORSION OF A SQUARE PRISM

The finite element model shown below was used to analyze torsion of a square prism, for comparison with the analytical solution given on page 275 of "Theory of Elasticity," by S. Timoshenko and J. N. Goodier. The applied loading consisted of specified displacements at joints 122 through 242, corresponding to a rotation of .01 radians about the Z axis.

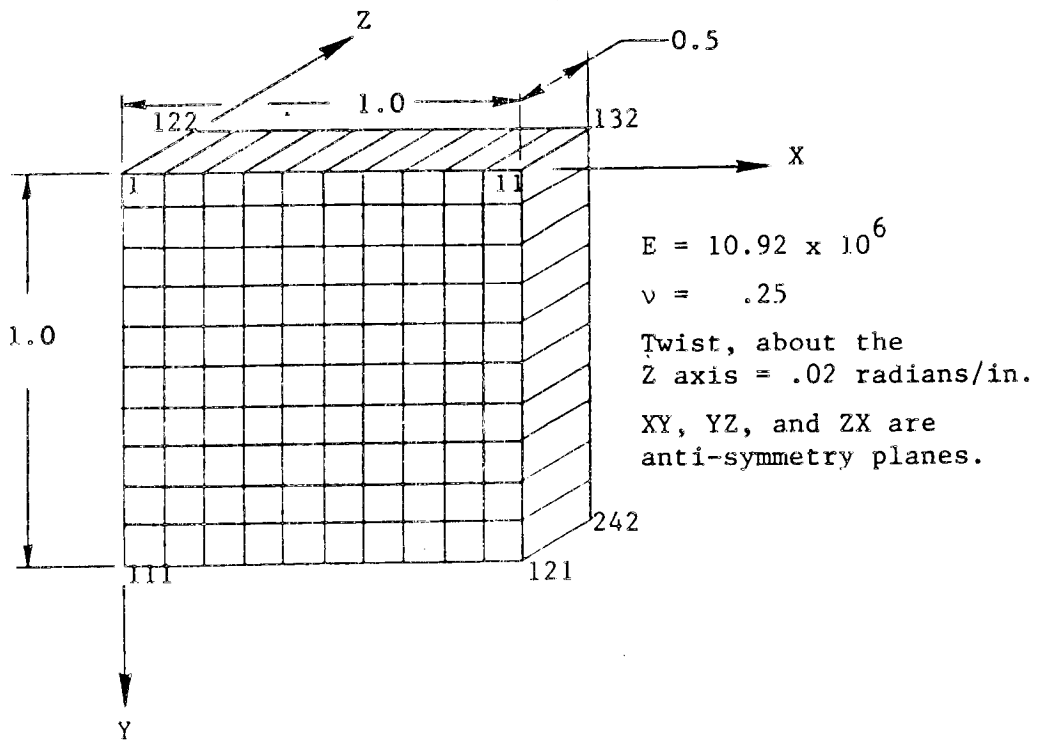

The assumed stress field on which the S81 elements are based is such that for this solution, the shear stresses within each element are constant. Except in the vicinity of corner node 121 (x = 1, y = 1), where the stress is zero, the finite element results compared closely with the analytical solution. At the locations of maximum stress, (1,0) and (0,1), the error in the finite element solution was less than 1%. Errors in mid-element stresses near node 121 were typically 5%.

Cross-section warping results are shown on the next page.

Comparison of cross-section warping, torsion of square prism:

	S81		Analytical solution
JOINT	3	JOINT	3
23	.000 ◆	23	.000 ◆
24	-.440-05	24	-.438-05
25	.341-08	25	.531-09
26	.220-04	26	.219-04
27	.705-04	27	.701-04
28	.154-03	28	.153-03
29	.281-03	29	.280-03
30	.459-03	30	.457-03
31	.695-03	31	.693-03
32	.995-03	32	.992-03
33	.136-02	33	.136-02
45	.000 ◆	45	.000 ◆
46	-.440-04	46	-.437-04
47	-.705-04	47	-.701-04
48	-.617-04	48	-.614-04
49	-.304-07	49	.209-08
50	.133-03	50	.132-03
51	.355-03	51	.353-03
52	.683-03	52	.680-03
53	.113-02	53	.113-02
54	.172-02	54	.171-02
55	.244-02	55	.244-02
67	.000 ◆	67	.000 ◆
68	-.153-03	68	-.152-03
69	-.281-03	69	-.280-03
70	-.357-03	70	-.355-03
71	-.355-03	71	-.353-03
72	-.246-03	72	-.244-03
73	-.320-08	73	.454-08
74	.413-03	74	.411-03
75	.102-02	75	.102-02
76	.186-02	76	.185-02
77	.293-02	77	.292-02
89	.000 ◆	89	.000 ◆
90	-.363-03	90	-.362-03
91	-.695-03	91	-.693-03
92	-.963-03	92	-.960-03
93	-.113-02	93	-.113-02
94	-.117-02	94	-.116-02
95	-.102-02	95	-.102-02
96	-.652-03	96	-.649-03
97	.189-08	97	.745-08
98	.996-03	98	.990-03
99	.239-02	99	.238-02
111	.000 ◆	111	.000 ◆
112	-.697-03	112	-.696-03
113	-.136-02	113	-.136-02
114	-.196-02	114	-.195-02
115	-.244-02	115	-.244-02
116	-.279-02	116	-.278-02
117	-.293-02	117	-.292-02
118	-.282-02	118	-.281-02
119	-.239-02	119	-.238-02
120	-.152-02	120	-.151-02
121	-.648-07	121	.895-05

Data input, finite element solution, torsion of square prism:

```
@XQT TAB
  START   242 4,5,6
  JLOC:    1 0. 0. 0.0 1. 0. 0.0 11 1 11
          11 0. 1. 0.0 1. 1. 0.0
         122 0. 0. 0.5 1. 0. 0.5 11 1 11
          11 0. 1. 0.5 1. 1. 0.5
  CON=1: ANTISYMMETRY PLANE=1
         ANTISYMMETRY PLANE=2
         ANTISYMMETRY PLANE=3
         NONZERO 1 2: 122,242
  JSEQ:  REPEAT 11 11 0: 1/11,122/132
  MATC:  1 10.92+6 .25 .098
@XQT AUS
  TABLE(NI=31,NJ=1): PROP BTAB 2 21
     J=1:    .098>
            9.1575-8>
           -2.2894-8  9.1575-8>
           -2.2894-8 -2.2894-8 9.1575-8>
            0.      0.      0.      2.3810-7>
            0.      0.      0.      0.      2.3810-7>
            0.      0.      0.      0.      0.      2.3810-7>
           12.6-6 12.6-6 12.6-6 1. 1. 1. 1. 1. 1.
@XQT ELD
  S81:    1 10 10 1 1 11 121 0 1
@XQT E
  RESET G=386.
@XQT EKS
@XQT TOPO
@XQT K
@XQT INV
@XQT AUS
  ALPHA: CASE TITLE
     1/TWIST = .02 RADIANS/INCH
  R= RIGID(1): DEFINE R6= R AUS 1 1 6,6
  APPLIED MOTIONS 1= UNION(.01 R6)
  SYSVEC,U: APPLIED MOTIONS 1
     OPERATION= XSUM: I=1 2 3: J=1,121: 0. 0. 0.
@XQT SSOL
@XQT AUS
  DEFINE SR= STAT REAC 1
  DEFINE R6= R AUS 1 1 6,6
  BASE REAC 1= UNION(SR)
  SYSVEC,U: BASE REAC 1
     OPERATION= XSUM: I=1 2 3: J=122,242: 0. 0. 0.
  TORQUE= XTY(4. BASE, R6)
@XQT DCU
  PRINT 1 TORQUE
@XQT VPRT
  HEADING=1
  TPRINT STAT DISP 1 1/SPAR JOINT DISPLACEMENTS
@XQT GSF
@XQT PSF
  DIV=1.+3
  S81
 STOP
```

20.3 PRESSURIZED SPHERE

The finite element model shown below was used to analyze a pressurized sphere, for comparison with the analytical solution given on page 142 of "The Mathematical Theory of Elasticity," by A. E. H. Love.

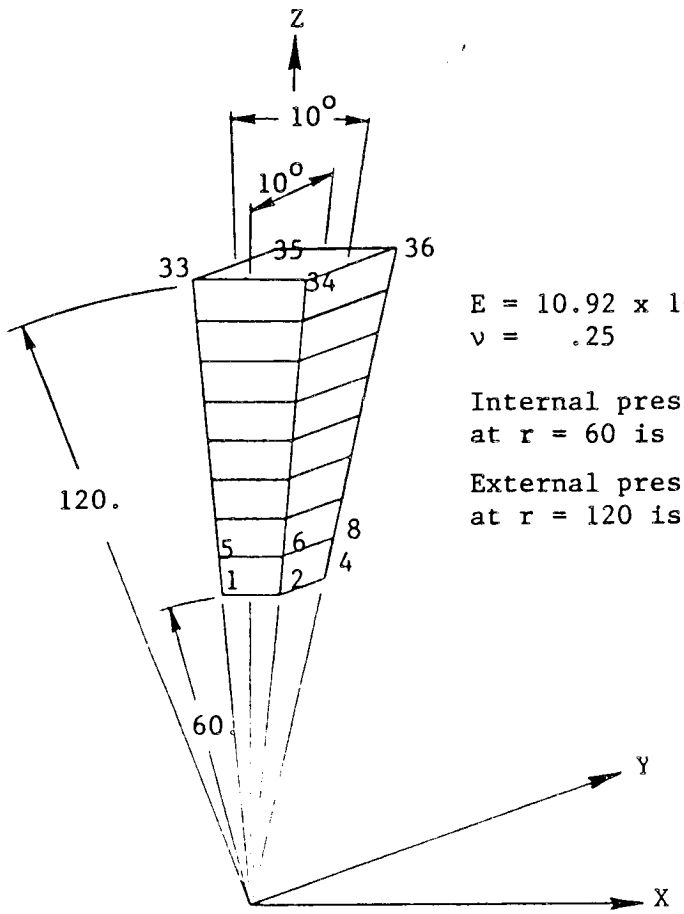

$E = 10.92 \times 10^6$
$\nu = .25$

Internal pressure at r = 60 is 40.

External pressure at r = 120 is 2200.

Results are shown on the following page.

Radial displacements in the pressurized sphere, as computed in the finite element analysis, are compared below with the analytical solution:

S81 solution		Analytical solution	
JOINT	3	JOINT	3
1	-.155-01	1	-.153-01
5	-.146-01	5	-.144-01
9	-.142-01	9	-.140-01
13	-.141-01	13	-.140-01
17	-.142-01	17	-.141-01
21	-.146-01	21	-.144-01
25	-.150-01	25	-.149-01
29	-.155-01	29	-.154-01
33	-.161-01	33	-.159-01

Stresses in the finite element model are compared below with the analytical solution:

S81 solution						Analytical solution		
GRP-IND◆		JOINT	SX	SY	SZ		σ_x, σ_y	σ_z
1/	1◆	MID	-.358+04	-.358+04	-.459+03	1	-.35494+04	-.42683+03
1/	2◆	MID	-.328+04	-.328+04	-.105+04	2	-.32541+04	-.10175+04
1/	3◆	MID	-.308+04	-.308+04	-.143+04	3	-.30608+04	-.14042+04
1/	4◆	MID	-.295+04	-.295+04	-.169+04	4	-.29289+04	-.16680+04
1/	5◆	MID	-.285+04	-.285+04	-.188+04	5	-.28359+04	-.18540+04
1/	6◆	MID	-.279+04	-.279+04	-.201+04	6	-.27684+04	-.19890+04
1/	7◆	MID	-.274+04	-.274+04	-.211+04	7	-.27182+04	-.20892+04
1/	8◆	MID	-.270+04	-.270+04	-.219+04	8	-.26802+04	-.21653+04

Input data for the finite element model of the pressurized sphere was as follows:

```
@XQT TAB
  START 36 1,2,4,5,6
  TITLE'SPHERICAL SEGMENT, R0=120, R1=60
  JLOC:    1  -5.229  -5.229  59.772  5.229  -5.229  59.772 2 1 9
           4 -10.459 -10.459 119.543 10.459 -10.459 119.543
           3  -5.229   5.229  59.772  5.229   5.229  59.772 2 1 9
           4 -10.459  10.459 119.543 10.459  10.459 119.543
  ALTREF: 2 2 -5. 1 +4.98107:  3 2 +5. 1 +4.98107
           4 2 +5. 1 -4.98107:  5 2 -5. 1 -4.98107
  JREF:    NREF=2: 1,33,4:  NREF=3: 2,34,4
           NREF=5: 3,35,4:  NREF=4: 4,36,4
  MATC:    1 10.92+6 .25 .098
  CON=1
@XQT AUS
  TABLE(NI=31,NJ=1): PROP BTAB 2 21
     J=1:    .098>
            9.1575-8>
           -2.2894-8  9.1575-8>
           -2.2894-8 -2.2894-8 9.1575-8>
            0.      0.      0.      2.3810-7>
            0.      0.      0.      0.      2.3810-7>
            0.      0.      0.      0.      0.      2.3810-7>
           12.6-6 12.6-6 12.6-6 1. 1. 1. 1. 1. 1.
@XQT ELD
  S81:     1 1 1 8 1 2 4 0 1
@XQT E
  RESET G=386.
@XQT EKS
@XQT TOPO
@XQT K
@XQT INV
@XQT AUS
  SYSVEC: APPL FORC 1 1
           I=3: J=1,4: 1093.84: J=33,36: -240659.
  ALPHA: CASE TITLE 1 1
           1'INSIDE PRESSURE=40, OUTSIDE PRESSURE=2200
@XQT SSDL
@XQT GSF
@XQT PSF
 STOP
```

20.4 ROTATING DISK

The finite element model shown below was used to perform an analysis of the quasi-static response of a rotating cylindrical disk, for comparison with the analytical solution given on page 148, "The Mathematical Theory of Elasticity," by A. E. H. Love. The XY plane is the mid-plane of the disk. The system diagonal mass matrix was used in computing the centrifugal force field due to the rotation about the Z axis.

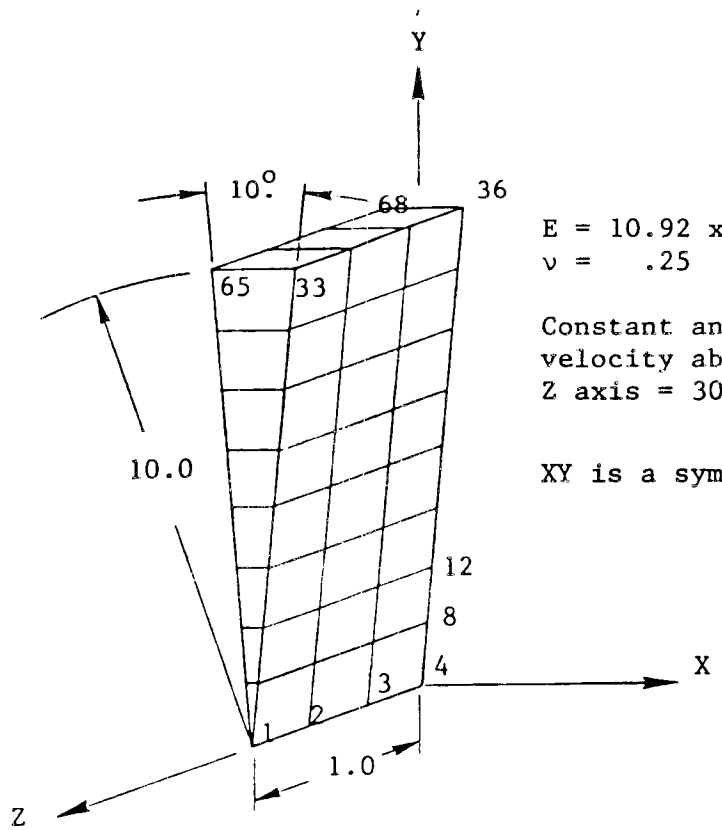

$E = 10.92 \times 10^6$
$\nu = .25$

Constant angular velocity about the Z axis = 3000 rad/sec.

XY is a symmetry plane.

Results are shown on the following pages.

Stresses computed in the finite element analysis are compared below with the analytical solution. All S61 and S81 elements were defined such that the element reference frames were parallel to the global frame. Accordingly, SX and SY are circumferential and radial normal stress, respectively.

			S81 stresses			Analytical solution	
GRP-	IND◆	JOINT	SX	SY		SX	SY
1/	1◆	MID	.911+05	.898+05	1	.91215+05	.89709+05
1/	2◆	MID	.880+05	.840+05	2	.88091+05	.83907+05
1/	3◆	MID	.834+05	.753+05	3	.83405+05	.75205+05
1/	4◆	MID	.771+05	.637+05	4	.77157+05	.63601+05
1/	5◆	MID	.694+05	.493+05	5	.69347+05	.49097+05
1/	6◆	MID	.600+05	.317+05	6	.59975+05	.31692+05
1/	7◆	MID	.488+05	.113+05	7	.49041+05	.11386+05
1/	8◆	MID	.910+05	.897+05	8	.91109+05	.89603+05
1/	9◆	MID	.879+05	.839+05	9	.87985+05	.83801+05
1/	10◆	MID	.833+05	.752+05	10	.83299+05	.75099+05
1/	11◆	MID	.770+05	.636+05	11	.77051+05	.63496+05
1/	12◆	MID	.692+05	.492+05	12	.69241+05	.48991+05
1/	13◆	MID	.599+05	.317+05	13	.59870+05	.31586+05
1/	14◆	MID	.487+05	.113+05	14	.48936+05	.11280+05
1/	15◆	MID	.908+05	.894+05	15	.90898+05	.89392+05
1/	16◆	MID	.877+05	.837+05	16	.87774+05	.83590+05
1/	17◆	MID	.830+05	.750+05	17	.83088+05	.74887+05
1/	18◆	MID	.768+05	.634+05	18	.76840+05	.63284+05
1/	19◆	MID	.690+05	.488+05	19	.69030+05	.48780+05
1/	20◆	MID	.598+05	.317+05	20	.59658+05	.31375+05
1/	21◆	MID	.486+05	.115+05	21	.48724+05	.11069+05

			S61 stresses		Analytical solution	
GRP-	IND◆	JOINT	SX	SY	SX	SY
1/	1◆	MID	.926+05	.926+05	.92625+05	.92328+05
1/	2◆	MID	.925+05	.925+05	.92519+05	.92222+05
1/	3◆	MID	.923+05	.923+05	.92308+05	.92010+05

Displacements computed in the finite element analysis are compared below with the analytical solution. Direction 1 is radial, and direction 3 is parallel to the Z axis.

Finite element solution

JOINT	1	3
1	.000 ◆	-.426-02
2	.000 ◆	-.284-02
3	.000 ◆	-.142-02
4	.000 ◆	.000 ◆
5	.791-02	-.420-02
6	.793-02	-.280-02
7	.794-02	-.140-02
8	.795-02	.000 ◆
9	.155-01	-.405-02
10	.156-01	-.270-02
11	.156-01	-.135-02
12	.156-01	.000 ◆
13	.226-01	-.380-02
14	.227-01	-.253-02
15	.227-01	-.127-02
16	.227-01	.000 ◆
17	.288-01	-.344-02
18	.289-01	-.230-02
19	.289-01	-.115-02
20	.289-01	.000 ◆
21	.338-01	-.298-02
22	.339-01	-.199-02
23	.340-01	-.998-03
24	.340-01	.000 ◆
25	.374-01	-.242-02
26	.376-01	-.161-02
27	.377-01	-.807-03
28	.377-01	.000 ◆
29	.393-01	-.171-02
30	.395-01	-.115-02
31	.396-01	-.574-03
32	.396-01	.000 ◆
33	.393-01	-.118-02
34	.394-01	-.781-03
35	.395-01	-.390-03
36	.395-01	.000 ◆

Analytical solution

JOINT	1	3
1	.000 ◆	-.424-02
2	.000 ◆	-.283-02
3	.000 ◆	-.142-02
4	.000 ◆	-.634-10◆
5	.789-02	-.418-02
6	.792-02	-.280-02
7	.793-02	-.140-02
8	.794-02	-.627-10◆
9	.155-01	-.403-02
10	.155-01	-.270-02
11	.156-01	-.135-02
12	.156-01	-.604-10◆
13	.225-01	-.378-02
14	.226-01	-.253-02
15	.226-01	-.127-02
16	.227-01	-.566-10◆
17	.287-01	-.342-02
18	.288-01	-.229-02
19	.288-01	-.115-02
20	.289-01	-.513-10◆
21	.337-01	-.296-02
22	.338-01	-.198-02
23	.339-01	-.993-03
24	.339-01	-.444-10◆
25	.373-01	-.240-02
26	.374-01	-.161-02
27	.375-01	-.805-03
28	.376-01	-.360-10◆
29	.392-01	-.173-02
30	.393-01	-.116-02
31	.394-01	-.584-03
32	.395-01	-.261-10◆
33	.390-01	-.966-03
34	.392-01	-.652-03
35	.393-01	-.329-03
36	.393-01	-.147-10◆

The following input data was used to generate the finite element solution for the rotating disk:

```
@XQT TAB
  START 68 4,5,6
  TITLE'ROTATING DISK, STRESS MODEL
  ALTREF: 2 3 5.: 3 3 -5.
  JLOC:    FORMAT=2
           NREF=2: 33  0. 0. 1.  0. 0. 0. 4 1 9
                    4 10. 0. 1. 10. 0. 0.
           NREF=3:  1  0. 0. 1.  0. 0. 0. 4 1 9
                    4 10. 0. 1. 10. 0. 0.
  JREF:    NREF=-2: 37,68: NREF=-3: 5,36
  CON=1:   ZERO 2: 1,68: ZERO 1: 1,4
           SYMMETRY PLANE= 3
  JSEQ:    1/4
           REPEAT 8 4: 5/8, 37/40
  MATC:    1 10.92+6 .25 .098
@XQT AUS
  TABLE(NI=31,NJ=1): PROP BTAB 2 21
     J=1:    .098>
            9.1575-8>
           -2.2894-8  9.1575-8>
           -2.2894-8 -2.2894-8 9.1575-8>
            0.      0.      0.      2.3810-7>
            0.      0.      0.      0.      2.3810-7>
            0.      0.      0.      0.      0.      2.3810-7>
           12.6-6 12.6-6 12.6-6 1. 1. 1. 1. 1. 1.
@XQT ELD
  S81:     40 1 7 3 -32 4 -1 0 1
  S61:     39 7 3 40 8 4
           38 6 2 39 7 3
           37 5 1 38 6 2
@XQT E
  RESET G=386.
@XQT EKS
@XQT TOPO
@XQT K
@XQT INV
@XQT AUS
  TABLE(NI=1,NJ=68): X
     TRAN(SOURCE=JLOC,ILIM=1,JLIM=68,SBASE=0,SSKIP=2)
  TABLE(NI=1,NJ=68): Y
     TRAN(SOURCE=JLOC,ILIM=1,JLIM=68,SBASE=1,SSKIP=2)
  X2= SQUARE(X):      Y2= SQUARE(Y)
  X2Y2= SUM(X2, Y2): RR= SQRT(X2Y2)
  TABLE(NI=3,NJ=68): R
     TRAN(SOURCE=RR,ILIM=1,JLIM=68,DSKIP=2)
  APPL FORC 1 1= PROD(9.+6 DEM, R)
  ALPHA: CASE TITLE 1 1
     1'ANGULAR VELOCITY = 3000 RADIANS PER SECOND
@XQT SSOL
@XQT VPRT
  TPRINT STAT DISP 1 1
  TPRINT STAT REAC 1 1
@XQT GSF
@XQT PSF
 STOP
```