N15

NASA

7N-46-TM

277399

P.12

Empirical Determination of Phases of Diffracted X-rays from Mosaic Crystals

By

Celia C. Chiu
Englewood, New Jersey

Hong-Yee Chiu
Institute for Space Studies
Goddard Space Flight Center, NASA
New York, New York

(NASA-TM-103055) EMPIRICAL DETERMINATION OF PHASES OF DIFFRACTED X RAYS FROM MOSAIC CRYSTALS (NASA) 12 p

N90-70734

Unclas

00/46 0277399

Abstract

A new principle of X-ray interferometry is shown to be capable of yielding relative phases of X-rays diffracted from mossaic crystals. Conventional X-ray generators can be used to provide the necessary beam.

Successful operation of X-ray interferometers has demonstrated that conventional X-ray generators can be used to generate two coherent beams producing first order interference.[1] Up to date, however, the intersecting angle of the two beams is always the same as the beam splitting angle which is twice the Bragg angle of the lattice planes that split an incident ray into two via Borrmann effect in perfect crystals.[2] By using two coherent beams, as will be shown later, it is possible to obtain two simultaneously diffracted rays from two different sets of planes into a common direction, and from a combination of intensity measurements, to extract phase information of the diffracted rays.[3] However, in order to be of geneneral use to crystallographers in structural determination, the intersection angle of the two beams must be continuously variable over a useful range, so that diffraction conditions may be satisfied for any two different and arbitrarily chosen sets of planes.

X-ray optics differs from conventional optics in two respects: (a) The only practical method of reflection over large angles is via Bragg reflection over a fixed (Bragg) angle; (b) The only practical method of beam splitting is via Borrmann effect and the beam splitting angle is always twice the Bragg angle for the corresponding set of planes. In order for the two beams to be coherent, the following conditions must be satisfied: (c) A pair of beams originating from the same source point (beam splitting point) must intersect at some point; (d) The phase difference between two beams within a pair must be the same for all pairs at their respective intersection points; and (e) The angle of intersection must be freely variable over a

useful range.

Figure 1 shows a proposed interferometer for use in diffraction. A single perfect crystal is carved into an L shaped slab with two perpendicular sides R and T. R is parallel and T is perpendicular to a set of selected lattice planes LP. An incident ray of wave length λ at Bragg angle θ onto T will set up wave fields and propagate along the lattice planes to the exit surface, where it is evenly split into two beams, I_1 and I_2. One of these two beams, I_1, is directed towards R. Upon Bragg reflection from the set of lattice planes LP of R,[4] I_1 will become parallel to I_2. A plane of symmetry SP exists such that all pairs of rays from the same source points have mirror symmetry with respect to SP.

If a plane NP normal to I_1 and I_2 is introduced, the path length of both I_1 and I_2 to this plane is source point dependent. In order to eliminate the source position dependence, a pair of wedges are introduced which causes I_2 to traverse an extra path through bending and rebending. The geometry of the wedges is such that upon arriving at NP the difference in the path lengths of I_1 and I_2 becomes source position independent. The wedge geometry is determined by the condition of Borrmann transmission, the compensation of path length differences, and that the eventually transmitted beam I_2 is colinear with itself before path correction (so that mirror symmetry of I_1 and I_2 is preserved). One geometry that satisfies these conditions is such that the two wedges are mirror images of each other and the surface of

one side of the wedge makes an angle $\frac{\pi}{2} - \theta' + \eta$ with the set of planes responsible for Borrmann transmission at an incident (Bragg) angle θ', η is the wedge angle given by:

$$\tan \eta = \frac{\sin \theta \cos \theta'}{\cos \theta (1 - \cos \theta')} \tag{1}$$

These wedges have the property that the source dependence of path length differences is always corrected for independent of the linear position of the wedge, which determines the absolute length of the corrected path. By adding multiple reflection path extenders[4] and adjustments of the position of the wedges, the path lengths I_1 and I_2 can be made to be identical (at least theoretically). Because of the presence of the wedges, the intensities of I_1 and I_2 will differ and that of I_2 will be source dependent. Appropriately shaped absorbers can be used to correct these differences.

I_1 and I_2 then fall onto two sets of lattice planes (mirrors) M_1 and M_2, which are mounted in such a way that they always satisfy Bragg reflection conditions and can rotate about an axis in central directions of I_1 and I_2. By suitable adjustments it is possible to bring the two reflected rays I_1 and I_2 to intersect at T. Because of the symmetry in design, all pairs of rays intersect with the same path difference. The intersection angle δ in terms of the normal angle ϕ of M_1 and M_2 is:

$$\cos \delta = \cos^2 2\theta_m - \sin^2 2\theta_m \cos 2\phi \tag{2}$$

where θ_m is the Bragg angle of M_1 and M_2. The range of δ is

from 0 to $4\theta_m$. For example, for $\lambda = 1.54$ Å, $\theta_m = 45^o$ for Ge(333) plane, and ζ can vary from nearly 0° to 180°.

After Borrmann transmission and subsequent reflections and transmissions, the bandwidth of I_1 and I_2 are sufficiently small, and their directions are well defined to within a few seconds of arc. Theoretically calculated photon correlation length is of the order of 30μ for a beam width of 1 sec of arc. Bonse and Hart reported that coherence is achieved at 10μ and disappears at 100μ.[5]

In order to achieve the best signal to noise performance and to facilitate data collection, we propose the following method of simultaneous diffraction. The geometry of diffraction is shown in Figure 2. The angle of intersection ζ is so chosen that upon entering the sphere of reflection, both ends of a selected reciprocal vector $\underset{\sim}{H}_o$ serves as origins of reciprocal lattices for the two rays I_1 and I_2. If the crystal now rotates about $\underset{\sim}{H}_o$ as axis, at a certain angle a reciprocal lattice point P will pass through the surface of the sphere of reflection defined by $\underset{\sim}{H}_o$, and I_1 and I_2 will then be simultaneously diffracted by two corresponding planes $\underset{\sim}{H}_1$ and $\underset{\sim}{H}_2$ such that $\underset{\sim}{H}_1 - \underset{\sim}{H}_2 = \underset{\sim}{H}_o$. If an appropriate $\underset{\sim}{H}_o$ is chosen, a whole collection of simultaneous reflections among pairs of planes $\underset{\sim}{H}_A$ and $\underset{\sim}{H}_B$ such that $\underset{\sim}{H}_A - \underset{\sim}{H}_B = \underset{\sim}{H}_o$ can be determined from a single setting of ζ.

We now show that phase relationships can be extracted from the two simultaneously diffracted rays. The time independent component of the diffracted wave from planes $\underset{\sim}{H}$, $F(\underset{\sim}{H})$, is determined by the structure within a unit cell of the crystal:

$$F(\underset{\sim}{H}) = \sum_{n=1}^{N} f_n \exp 2\pi i \underset{\sim}{r}_n \cdot \underset{\sim}{H} \tag{3}$$

where f_n is the scattering factor of the nth atom and $\underset{\sim}{r}_n$ is the vector for its location in the unit cell and the sum extends over all atoms in the unit cell. $F(\underset{\sim}{H})$ is a complex quantity and we can write

$$F(\underset{\sim}{H}) = |F(\underset{\sim}{H})| e^{i\psi(\underset{\sim}{H})} \tag{4}$$

where $\psi(\underset{\sim}{H})$ is the phase difference between the diffracted and incident ray and is the quantity of interest. A complete knowledge of $|F(\underset{\sim}{H})|^2$ (which determines the intensities of diffracted rays) and the phase angle $\psi(\underset{\sim}{H})$ determines the structure of the sample . Current state of crystallography centers around the determination of $\psi(\underset{\sim}{H})$ via indirect methods.

The two simultaneously diffracted beams of I_1 and I_2 will interfere, giving rise to an intensity determined by $|F_s|^2 = |F(\underset{\sim}{H}_1) + F(\underset{\sim}{H}_2)|^2$. The relative phase $\psi_{12} = \psi(\underset{\sim}{H}_1) - \psi(\underset{\sim}{H}_2)$ between reflections from $\underset{\sim}{H}_1$ and $\underset{\sim}{H}_2$ is then

$$\cos \psi_{12} = \frac{|F_s|^2 - |F(\underset{\sim}{H}_1)|^2 - |F(\underset{\sim}{H}_2)|^2}{2|F(\underset{\sim}{H}_1)| \cdot |F(\underset{\sim}{H}_2)| \cdot \cos \gamma_c} \tag{5}$$

where $|F(\underset{\sim}{H}_1)|^2$ and $|F(\underset{\sim}{H}_2)|^2$ are intensities when I_2 is blocked and when I_1 is blocked. $|F(\underset{\sim}{H}_1)|^2$ and $|F(\underset{\sim}{H}_2)|^2$ will have comparable magnitudes since they both are diffracted from lattice planes. $\cos \gamma_c$ is a correction factor for polarization effects since Borrmann transmitted rays are 100 % polarized.

In this paper we have neglected all technological problems and crystallographic corrections. A complete treatment on the polarization effects and on the technological feasibility of this interferometer is in preparation. [6]

Celia C. Chiu
Englewood, N. J.
and
Hong-Yee Chiu
Goddard Institute for Space Studies
2880 Broadway, New York, N. Y., 10025

Mailing address: Goddard Institute for Space Studies
2880 Broadway, New York, N. Y., 10025

References and Notes

1. U. Bonse and M. Hart, Applied Phys. Lett., 6, 155 (1965), Z. Physik, 188, 154 (1965), 190, 455 (1966), 194, 1, 455 (1966).

2. An excellent summary of Borrmann effect and related topics is found in B. W. Batterman and H. Cole, Rev. Mod. Phys. 36, 681 (1964).

3. In certain special n-beam cases phase information has been extracted from coherent beams generated within the specimen (B. Post, in preparation). These studies contribute significant insights to the dynamical theory of X-ray diffraction. However, the stringent requirements demanded by these studies hinder their general application to structural determination.

4. Refractive effects will require that R be flexed by a small amount in order to satisfy Bragg reflection conditions. We are grateful to Dr. B. W. Batterman for pointing this to us.

5. U. Bonse and M. Hart, Acta. Cryst. A24, 240 (1968), Z. Physik, 214, 16 (1968).

6. We thank Drs. B. W. Batterman, H. Bernstein, H. Berman, E. Hoff, R. J. Liefeld, B. Post and E. E. Salpeter for discussions.

Figure Captions

Figure 1. Schematic diagram of an interfero-diffractometer.

Figure 2. Geometry of simultaneous diffractions of two coherent beams into a common direction.

Figure 1

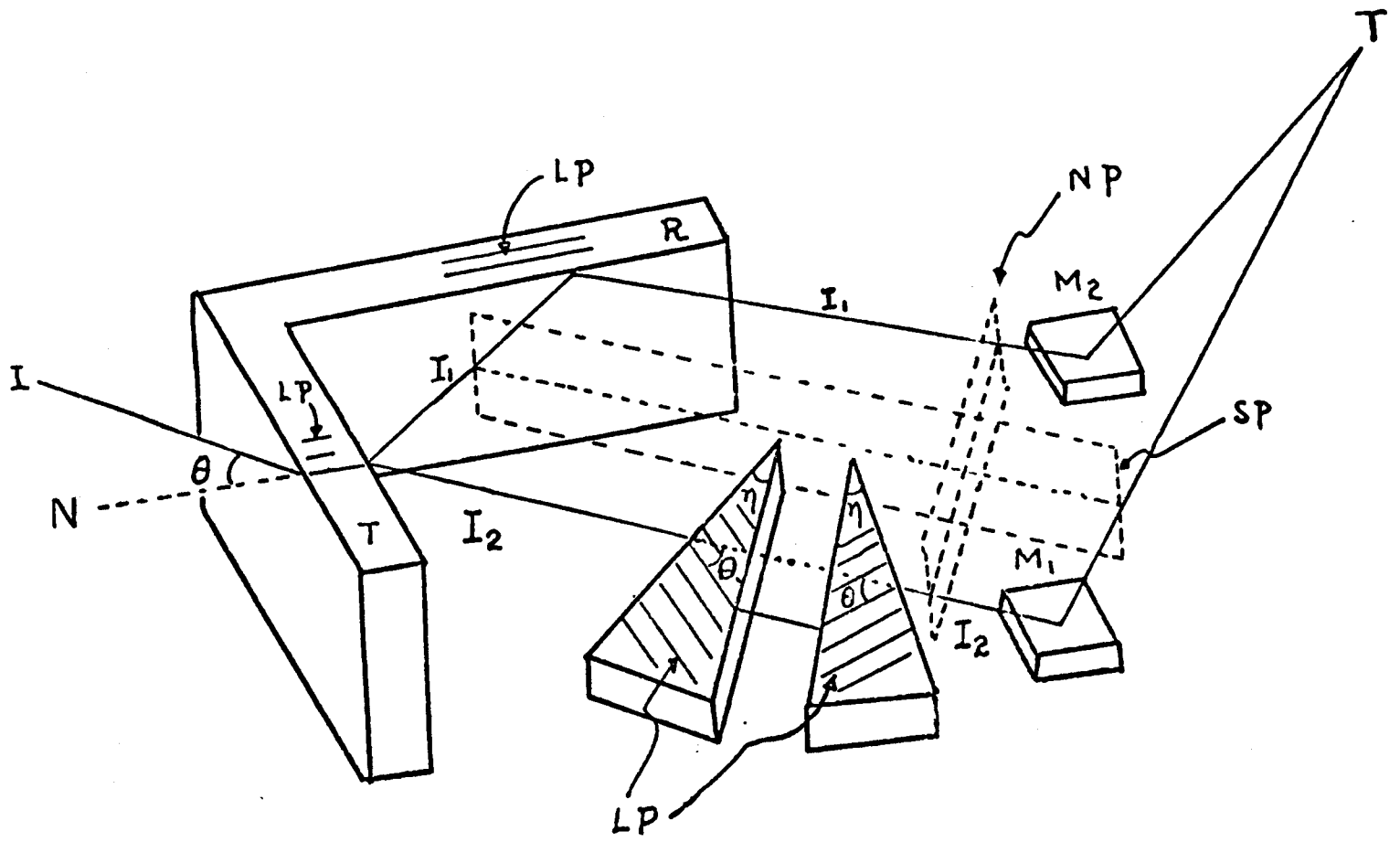

Figure 2

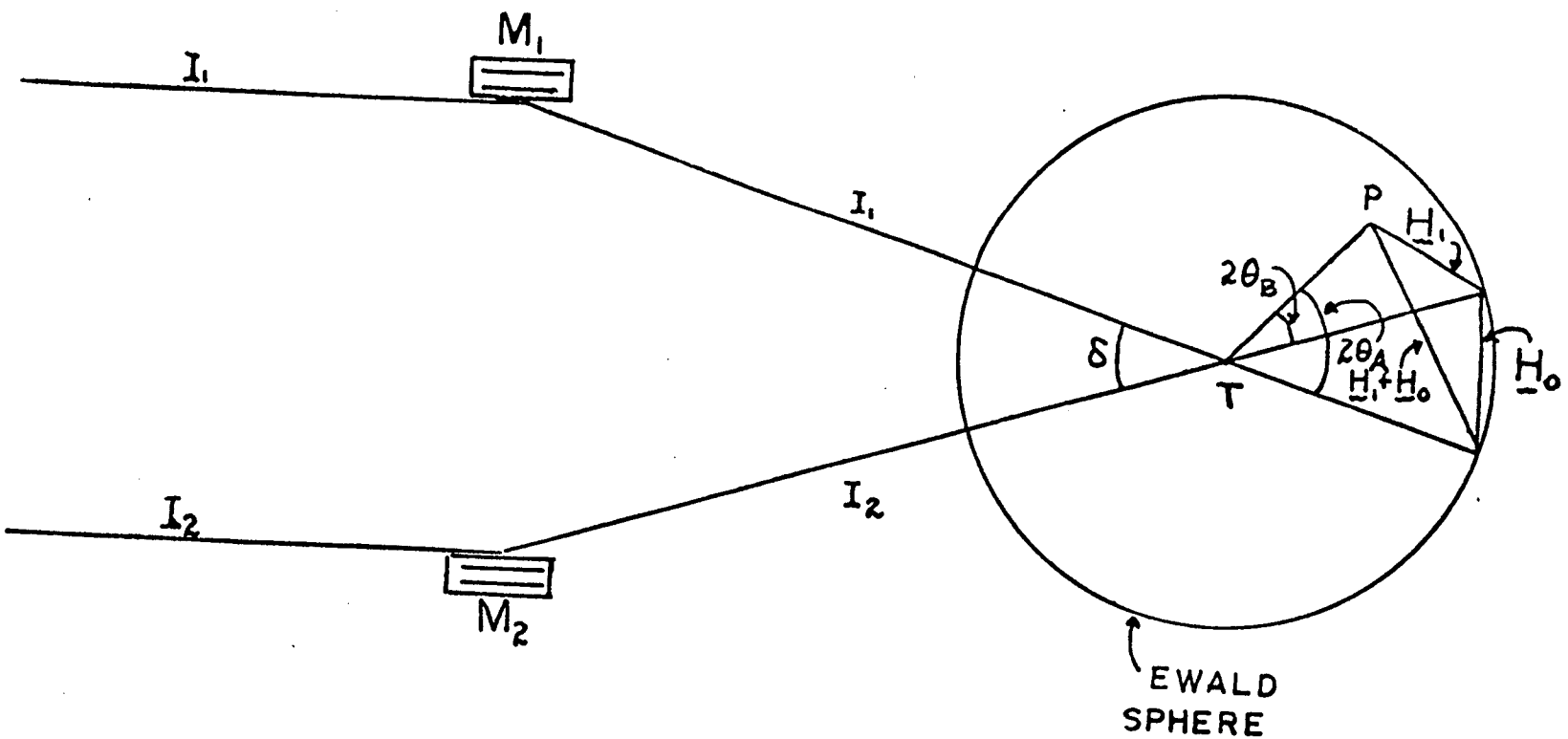
M_1
I_1
I_1
I_2
I_2
M_2
P
H_1
$2\theta_B$
$2\theta_A$
δ
T
$H_1 + H_0$
H_0
EWALD
SPHERE