IN-SPACE RESEARCH, TECHNOLOGY AND ENGINEERING (RT&E) WORKSHOP

VOLUME 3 OF 8

FLUID MANAGEMENT

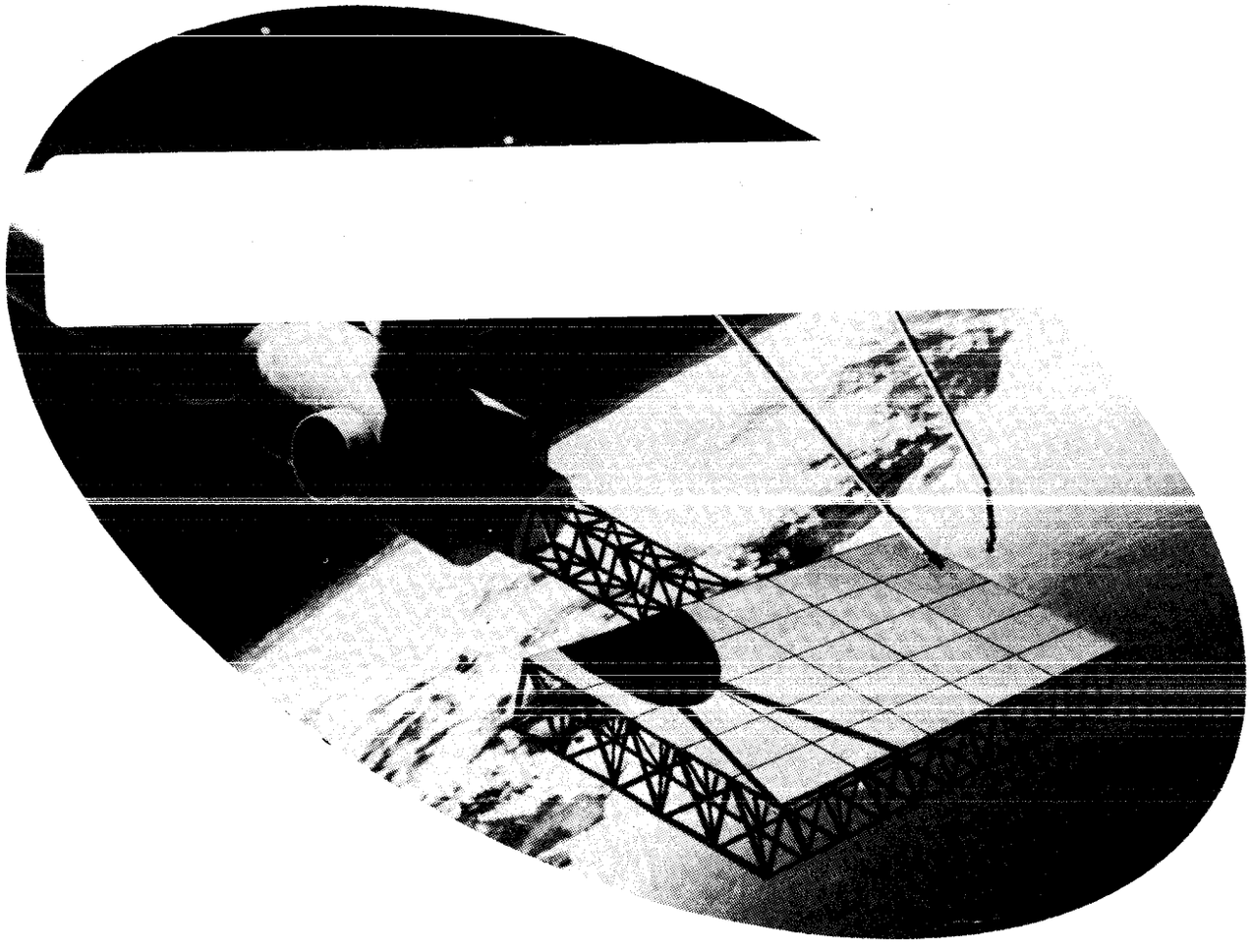

NATIONAL CONFERENCE CENTER
WILLIAMSBURG, VIRGINIA
OCTOBER 8-10, 1985

NASA
National Aeronautics and
Space Administration

Langley Research Center
Hampton, Virginia 23665

OAST
Office of Aeronautics
and Space Technology
Washington, DC

NOTICE

The results of the OAST Research, Technology, and Engineering Workshop which was held at the National Conference Center, Williamsburg, Virginia, October 8-10, 1985 are contained in the following reports:

VOL 1	Executive Summary
VOL 2	Space Structure (Dynamics and Control)
VOL 3	Fluid Management
VOL 4	Space Environmental Effects
VOL 5	Energy Systems and Thermal Management
VOL 6	Information Systems
VOL 7	Automation and Robotics
VOL 8	In-Space Operations

Copies of these reports may be obtained by contacting:

NASA Langley Research Center
Attn: 288/Dr. Roger A. Breckenridge
Hampton, VA 23665

Commercial Telephone: (804) 865-4834
Federal Telephone System: 928-4834

FLUID MANAGEMENT

TABLE OF CONTENTS

PAGE

FOREWARD 1

INTRODUCTION 2

WORKSHOP THEME 3

SUMMARY AND CONCLUSIONS 4

PANEL SUMMARY

Fluid Management 8
Joseph F. Slomski

THEME PRESENTATION MATERIAL

Cryogenic Fluid Management Facility (CFMF) 20
Jack Salzman (LeRC)

Helium Transfer in Space 32
Peter Kittel (ARC)

Long-Term Cryogenic Storage Experiment 42
David Riemer (Beechcraft/LeRC)

Facilities for Developing a Liquid Stream Space Technology 46
E. P. Muntz (Univ. of Southern California)

Tethered Fluid Storage/Transfer 62
Robert Middleton, Georg von Tiegenhausen (MSFC)

Propellant Storage, Transfer, and Reliquefaction 63
John Maloney (GDC/MSFC)

Ultrasonic Fluid Management 67
William Durgin (Worcester Polytechnic)

Two-Phase Fluid Management for Liquid Metals 71
Ted Mroz (LeRC)

Two-Phase Fluid Behavior and Management 76
Jack Salzman (LeRC)

Liquid-Vapor Flow Regimes in Microgravity Flight Experiment 80
John R. Schuster (GDC/JSC)

PAGE

Long-Term Cryogenic Storage Facility Demonstration 84
John R. Schuster (GDC/MSFC)

Overview of MIT Low G Fluid Effort 88
R. John Hansman (MIT)

Quantized Vortex Structure in Superfluid Helium 93
Peter V. Mason (JPL)

FOREWORD

Within NASA, the Office of Aeronautics and Space Technology (OAST) has the responsibility for timely development of needed new technologies. Traditionally, the development of new concepts, new materials, designs, and engineering techniques for aeronautics has been accomplished in close cooperation with the aircraft industry and with the great American universities. On the other hand, NASA, as the primary user of space flight, has been its own principal customer for new space technologies.

A new era of permanent presence in space is beginning with the Space Station. This permanent presence will permit and promote commercial ventures and privately funded research in the tradition of university/industry cooperation.

The RT&E workshop in Williamsburg represents a significant milestone for NASA and the space engineering community. It marked the initiation of a long-term program of outreach by NASA to focus the needs of universities, industry, and government for in-space experiments and to begin building a strong national user constituency for space research and engineering.

These proceedings represent a "first-cut" planning activity to involve universities, industry, and other government agencies with NASA to establish structure and content for a national in-space RT&E program. More interactions are needed - more workshops will follow. Program adjustments will be made. A truly national program will evolve, and its beginnings are presented here with the hope and determination needed to make it a program we can all take pride in.

- Raymond Colladay

INTRODUCTION

Among the purposes of the Research, Engineering, and Technology Workshop, an interest in validating the RT&E theme concept has some direct effect on the form of these proceedings. The original five themes, which were themselves a target for validation or recommeded changes, have become seven. During preparations for the workshop, the submitted papers and attendance plans made it evident that the fifth "theme", In-space Operations, was too broad, and would need to be split. As the workshop got underway, a further split occurred, brought about by the different levels of maturity, and needs for technology planning in several sub-disciplines. Thus, these proceedings are presented under seven themes. The volume of presentations, and the quantity of information generated by the individual panel summaries has led to the decision to prepare the proceedings in several volumes.

The first volume is an executive summary and includes the summary presentations made by the panel co-chairmen in the final plenary session. The accompanying seven volumes, of which this is one, each represent a specific "theme", and include the un-edited original presentation material used in that particular panel workshop. Each of these separate "theme" volumes also include the Foreword, the general Summary and Conclusions, and the Chairman's presentation charts and narrative summary. Thus, each should represent a self-standing volume to reflect the proceedings relevant to its respective Panel deliberations and output, as well as the reflection in the general Workshop results.

WORKSHOP THEME

Fluid Management

--Fuel Storage and Transfer

--Fluid Behavior

--Sensor Concepts

SUMMARY AND CONCLUSIONS

NASA's In-Space Research, Technology, and Engineering (RT&E) Workshop brought together representatives of the university community, private sector, and government agencies to discuss future needs for in-space experiments in support of space technology development and the derivative requirements for space station facilities to support in-space RT&E.

The workshop provided an excellent forum for establishing an interactive process for building a national in-space experiments program. It enabled NASA to present to the user community (university and private sector) experiment concepts for NASA's technology development activities in support of future space missions. The meetings also began a process by which industry and university researchers will be able to bring their own TDM requirements to NASA's planning process.

This conference reached three primary goals: first, it expanded and validated NASA's in-space experiment theme areas, including Space Structure (Dynamics and Control), Space Environmental Effects, Fluids Management, Energy Systems and Thermal Management, Automation and Robotics, Information Systems and In-Space Operations; second, it began the development of a user community network which will interface with NASA throughout the lifetime of the in-space experiment program; and third, it formed the basis for the establishment of on-going working groups which will continue to interest and coordinate requirements for in-space RT&E activities.

As an adjunct to the conference, NASA/OAST announced plans to initiate a long-term program to encourage and support industry and university experiments. NASA's modest investment in this program is initially targeted for generating experiment

ideas and concepts. It is anticipated that this base of concepts will lead to cooperatively funded experiments between NASA, industry, and academia and thereby, begin to build an active in-space RT&E program.

Several key points emerged from this conference regarding the adequacy of the TDM data base that should be addressed in future planning activities. First, many of the experiments could be performed on the ground, i.e., they do not justify a space experiment. Secondly, many of the experiments address near-term or current applications and do not take into account advanced system requirements. The TDM data base must look beyond extensions of current programs to reflect future needs and trends to have an effective and useful impact on space station planning and design. This will require increased input from industry and university researchers and engineers.

In order to address these concerns, it is imperative that a long-range planning view be taken in which industry and university researchers help NASA derive the technology development program. The following recommendations have been developed on the basis of the workshop:

1. Development of an on-going RT&E university and industry advisory group;
2. Continuation of in-space RT&E symposia to act both as outreach mechanisms and as working sessions to refine the TDM data base;
3. Development of an RT&E information clearinghouse;
4. Development and continuation of the new experiments outreach activity announced at the RT&E workshop;
5. Development of an "impacts assessment group" which will focus its energy on identifying experiment accommodation requirements to impact the design of in-space facilities, i.e., space station and others.

If carried out, these recommendations constitute movement toward development of an effective NASA/industry/university partnership in a National In-Space RT&E Program. This will also enable NASA/OAST to have an effective voice in space station planning, which is essential toward the success of a future in-space activities. The workshop, by promoting the process of NASA/industry/university interactions and by pointing out concerns with the developing TDM data base has provided an important first step towards a successful long-term space technology development effort.

IN-SPACE RESEARCH, TECHNOLOGY, AND ENGINEERING WORKSHOP

FLUID MANAGEMENT

JOE SLOMSKI	OAST	CO-CHAIRMAN
RALPH EBERHARDT	MMDA	CO-CHAIRMAN
JOHN HENDRICKS	UNIV. OF ALABAMA	EXEC. SECRETARY
JACK SALZMAN	LERC	MEMBER
DAVID ELLIOTT	JPL	MEMBER
WILLIAM CLIFF	BATTELLE	MEMBER
GEORGE ORTON	MDAC	MEMBER
DAVE RIEMER	BEECH AIRCRAFT	MEMBER
DAVID NORTON	TEXAS A&M	MEMBER
ROGER A. BRECKINRIDGE	LARC/SSO	EX-OFFICIO

118

FLUID MANAGEMENT SUMMARY

Joseph F. Slomski

Fluid management in space is required for space station, orbit maneuvering vehicles (OMV), orbit transfer vehicles (OTV), scientific payloads, and applications and research satellites. A wide range of fluids are used for these programs and applications; they include cryogens, storable propellants and fluids, superfluid helium and even liquid metals in advanced thermal applications such as solar dynamic power systems.

Orbital fluid management technology includes both fundamental fluid behavior and processes in the low-gravity space environment and fluid management systems which incorporate specific design features to meet on-orbit fluid handling requirements. A very limited data base exists for fundamental fluid behavior in low-gravity. Research areas include free surface behavior, thermal non-equilibrium processes, multi-phase flow, bubbles/droplets/aerosols in vacuum and low-gravity, all aspects of the physics of fluids and special instrumentation/diagnostics for understanding these phenomena. The space station provides an excellent test bed environment for conducting basic research in these technology areas. This data will be useful not only in assisting designers to properly configure fluid systems for space operations but will minimize risks of costly fluid management systems where numerous fluid management technologies are integrated into a somewhat complex integrated system.

Technology is generally available for storable fluid management systems; current systems are working in space, such as the Space Shuttle Orbital Maneuvering System (OMS) and Reaction Control System (RCS) tanks, and numerous communications satellites. Storable fluid transfer and resupply is not proven and a resupply servicer is needed in conjunction with the IOC space station. Special hardware elements such as quantity

gaging instrumentation, diagnostics instruments, quick disconnects and fluid couplings require further development.

Much of the detailed technology is not available for cryogenic systems. Some superfluid helium data has been obtained on a recent Shuttle Spacelab mission, and the IRAS mission involved the flight performance of a superfluid helium Dewar incorporating a porous plug space vent feature. Only small, specialty systems are operational for other cryogens, including the supercritical power/life support and instrument cooling Dewar systems which are not applicable to the large scale required for OTVs and their associated space depots and resupply tankers.

Experimental programs, including systems demonstrations, are needed to provide the appropriate design data base. Scale-up of experimental results to the large space-based systems is an important technology issue, as is long-term space operation. Safety, reliability, and maintainability are important system life cycle cost issues which have a limited data base for reusable system design and operations definition. The timeliness of experimental programs in these technology areas is keyed to the IOC and growth space station concepts and configurations; some fluid management technologies may need to be addressed now to impact Phase C/D space station design or influence SCAR for the growth station. Other technology investigations must be appropriately timed to support customer utilization at the space station and on the co-orbiting platforms.

PANEL 2 - FLUID MANAGEMENT

- ATTENDANCE - OVER 70 PARTICIPANTS
- PRESENTATIONS - 16 PAPERS IN 2 DAYS
- DATA BASE - 16 EXPERIMENTS ADDED TO DATA BASE

TYPES OF FLUIDS

1. STORABLES
2. CRYOGENICS
3. LIQUID HELIUM
4. LIQUID METALS

POTENTIAL INNOVATIVE SPACE TECHNOLOGIES FROM ONE AREA OF FUNDAMENTAL FLUIDS

RESEARCH

RESEARCH AREA

- STUDY OF LOW AND FINITE VAPOR PRESSURE LIQUID STREAMS FLYING FREE IN SPACE

THINGS STUDIED

- DISTRIBUTION AND STATE OF THE BREAK-UP PRODUCTS OF LIQUID STREAMS IN SPACE, INCLUDING PROPAGATION CHARACTERISTICS OF THE STREAMS OVER LARGE DISTANCES

WHERE STUDIES

- INITIALLY ON SHUTTLE
- DEVELOPING TO LONG SPACE STATION TEST RANGE IN ORDER TO USE LARGE BUT ACCESSIBLE DISTANCES PROVIDED BY THE STATION

POTENTIAL TECHNOLOGIES

- STRUCTURAL AND SURFACE REFURBISHMENT AND REPAIR
- LIQUID DROPLET RADIATOR
- CONTAINERLESS MATERIAL TRANSPORT
- ULTRA LOW CONTAMINATION SMALL THRUSTERS
- OTV AEROBRAKE
- CONSEQUENCES OF CRYOGEN AND OTHER LIQUID LEAKS

FUNDAMENTAL FLUID BEHAVIOR/PROCESSES

PHENOMENA IN LOW GRAVITY

FUNDAMENTAL RESEARCH AREA	(1992) REF IOC SS	(1997) GROWTH SS AND OTV	CUSTOMER UTILIZATION		
			COMMERCIAL	SCIENCE	TECHNOLOGY
FREE SURFACE BEHAVIOR		X	X	X	X
THERMAL NON-EQUILIBRIUM PROCESSES		X	X	X	X
MULTIPHASE FLOW (LIQUID/VAPOR, SOLID/VAPOR, LIQUID METAL, ETC.)	X	X	X	X	X
BUBBLES/DROPLETS/AEROSOLS			X	X	X
PHYSICS OF FLUIDS			X	X	X
SPECIAL INSTRUMENTATION		X	X	X	X

SYSTEMS FLUID MANAGEMENT

SYSTEMS FLUID MANAGEMENT	(1992) REF IOC SS	(1997) GROWTH SS AND OTV	CUSTOMER UTILIZATION		
			COMMERCIAL	SCIENCE	TECHNOLOGY
o LONG TERM STORAGE					
- CRYO AND HELIUM		X	X	X	X
- DEGRADATION IN SPACE		X			
o FLUID TRANSFER AND RESUPPLY					
- STORABLE (PROPELLANTS, OTHER STORABLE FLUIDS)	X	X	X		
- CRYOGENICS (THERMAL CONDITIONING, COMPONENTS)		X	X		
- HELIUM	?	X		X	X
- ADDITIONAL TECHNOLOGIES (INSTRUMENTATION, DIAGNOSTICS, QD'S/ COUPLINGS)	X			X	X
o FLUID LOOPS (SEPARATORS, CIRCULATORS, CONDENSORS)	X	X	X	X	X

EXISTING/PLANNED FLUID SYSTEM FLIGHT EXPERIMENT

- o STORABLES
  - ORBITAL RESUPPLY SYSTEM - (FLEW OCT. 1984)
  - STORABLE FLUID MANAGEMENT DEMO. - (FLEW JAN. 1985, 1986, 1987)
  - ORBITAL SPACECRAFT CONSUMABLES RESUPPLY SYSTEMS - 1990
- o CRYOS
  - CRYOGENIC FLUID MANAGEMENT FACILITY - 1991, 1992, 1993
  - LONG-TERM TEST BED - 1992 (2-5 YEARS)
- o HELIUM
  - SPACELAB SUPERFLUID HELIUM EXP. (FLEW 1985)
  - HELIUM TRANSFER EXP. - 1988
- o INSTRUMENTATION/DIAGNOSTICS/HARDWARE GAGING/FLOW INSTRUMENTATION STUDIES/STORABLE FLIGHT QUICK - DISCONNECT
- o FLUID LOOPS
  - TWO-PHASE SPACE STATION THERMAL MANAGMENT
  - FLUID EXPERIMENT - 1987-1988

RECOMMENDATIONS (NOT RANKED)

- o ACCELERATE CRYOGENIC FLUID TECHNOLOGY DEMOS
- o MAINTAIN HELIUM TRANSFER EXPERIMENT DATE
- o RESOLVE NEEDS FOR:
  - HELIUM DEPOT ON SPACE STATION
  - TWO-PHASE FLOW LOOPS FOR SPACE STATION
- o DEVELOP FLUID RESEARCH FACILITY (ALL FLUIDS) FOR SPACE STATION
- o DEVELOP FLIGHT TEST, ULTRA-LOW G, DRAG FREE ENVIRONMENT FOR SHUTTLE FLUIDS TESTS NOW.
- o EXPAND BASIC, LOW-G, FLUID MANAGEMENT RESEARCH NOW FOR BASIC REEARCH AND TO MINIMIZE RISKS IN MORE COSTLY SYSTEM DEMOS

FUTURE ACTIVITY

RECOMMENDATIONS

- o ESTABLISH OAST LOW-G FLUID MANAGEMENT ADVISORY COMMITTEE WITH NASA/INDUSTRY/UNIVERSITY PARTICIPATION
- o FOLLOW-UP MEETING IN 6 MONTHS
  - OAST FEEDBACK/RECOMMENDATIONS
  - INTERACTION BETWEEN PANELS
- o INPUTS FROM INTEGRATION/SAFETY FOR FLIGHT EXPERIMENTS

GOALS OF PROPOSED OAST LOW-G FLUID MANAGEMENT COMMITTEE

- REVIEW PROGRAMS AND MAKE RECOMMENDATIONS
- DISSEMINATION OF INFORMATION ON EXISTING WORK
- ORGANIZE A SPECTRUM OF FLUID RT&E PROGRAMS
- PROMOTE JOINT UNIVERSITY/INDUSTRY NATIONAL LAB COOPERATION
- PROMOTE INTERACTIONS WITH PROFESSIONAL ENGINEERING SOCIETIES

OMIT TO END

THEME

PRESENTATION

MATERIAL

THE CRYOGENIC FLUID MANAGEMENT FACILITY

FLIGHT EXPERIMENT PROJECT

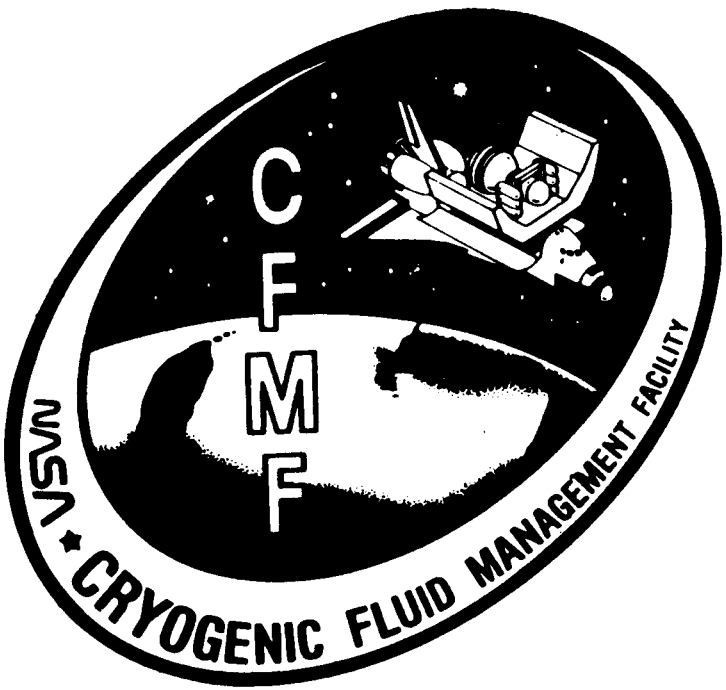

CRYOGENIC FLUID MANAGEMENT FACILITY

AGENDA

* CFMF BROAD OBJECTIVE
* CFMF TECHNICAL OBJECTIVES
* CFMF APPROACH
* CFMF SYSTEM DESCRIPTION
* SELECTED CFMF TECHNOLOGIES
* PROJECT STATUS/SCHEDULE

CRYOGENIC FLUID MANAGEMENT FACILITY

CFMF BROAD OBJECTIVE

PROVIDE TECHNOLOGY TO ENABLE DESIGN OF EFFICIENT SYSTEMS FOR MANAGING SUBCRITICAL CRYOGENIC FLUIDS IN THE SPACE ENVIRONMENT INCLUDING STORAGE, SUPPLY, AND TRANSFER

CRYOGENIC FLUID MANAGEMENT FACILITY

CFMF TECHNICAL OBJECTIVES

* LIQUID STORAGE
  - THERMAL PROTECTION SYSTEM PERFORMANCE
    - STORAGE TANK (DEWAR)
    - RECEIVER TANK (THICK MLI)
  - PRESSURE/STRATIFICATION CONTROL
    - PERFORMANCE OF THERMODYNAMIC VENTS

* LIQUID SUPPLY
  - FLUID ACQUISITIONING/POSITIONING
    - STORAGE TANK TOTAL COMMUNICATION LIQUID ACQUISITION DEVICE (LAD) PERFORMANCE
    - RECEIVER TANK PARTIAL COMMUNICATION LIQUID ACQUISITION DEVICE (LAD) PERFORMANCE
    - RECEIVER TANK RCS SETTLING & OUTFLOW
  - PRESSURIZATION SYSTEM PERFORMANCE
    - AUTOGENOUS
    - HELIUM

CRYOGENIC FLUID MANAGEMENT FACILITY

CFMF TECHNICAL OBJECTIVES (CONT'D)

* LIQUID TRANSFER
  - THERMAL CONDITION OF OUTFLOW
  - LIQUID QUANTITY GAGING
  - MASS FLOW METERING (TWO-PHASE DETECTION)
  - CHILLDOWN
    - TRANSFER LINE
    - RECEIVER TANK
  - RECEIVER TANK NO-VENT FILL
  - SUPPLY TANK AND ACQUISITION DEVICE REFILL
  - VENTING OF NONCONDENSIBLE HELIUM
  - RECEIVER TANK REFILL

CRYOGENIC FLUID MANAGEMENT FACILITY

APPROACH:

DESIGN, FABRICATE, AND CARRY INTO SPACE A REUSABLE TEST BED TO PROVIDE THE TECHNOLOGY REQUIRED TO MANAGE CRYOGENS IN SPACE.

- CONDUCT EXPERIMENTS IN SPACE TO VERIFY LOW-G FLUID & THERMAL ANALYTICAL MODELS
- VERIFY MODELS TO ESTABLISH DESIGN CRITERIA FOR SUBCRITICAL CRYOGENIC SYSTEMS IN SPACE
- LIQUID HYDROGEN TEST FLUID
- DESIGN FOR SEVEN SHUTTLE FLIGHTS (CURRENT MISSION PLANNING FOR THREE FLIGHTS)
- UTILIZE AVAILABLE EXPERTISE AT LeRC, MSFC, JSC, GSFC, KSC, ARC, JPL

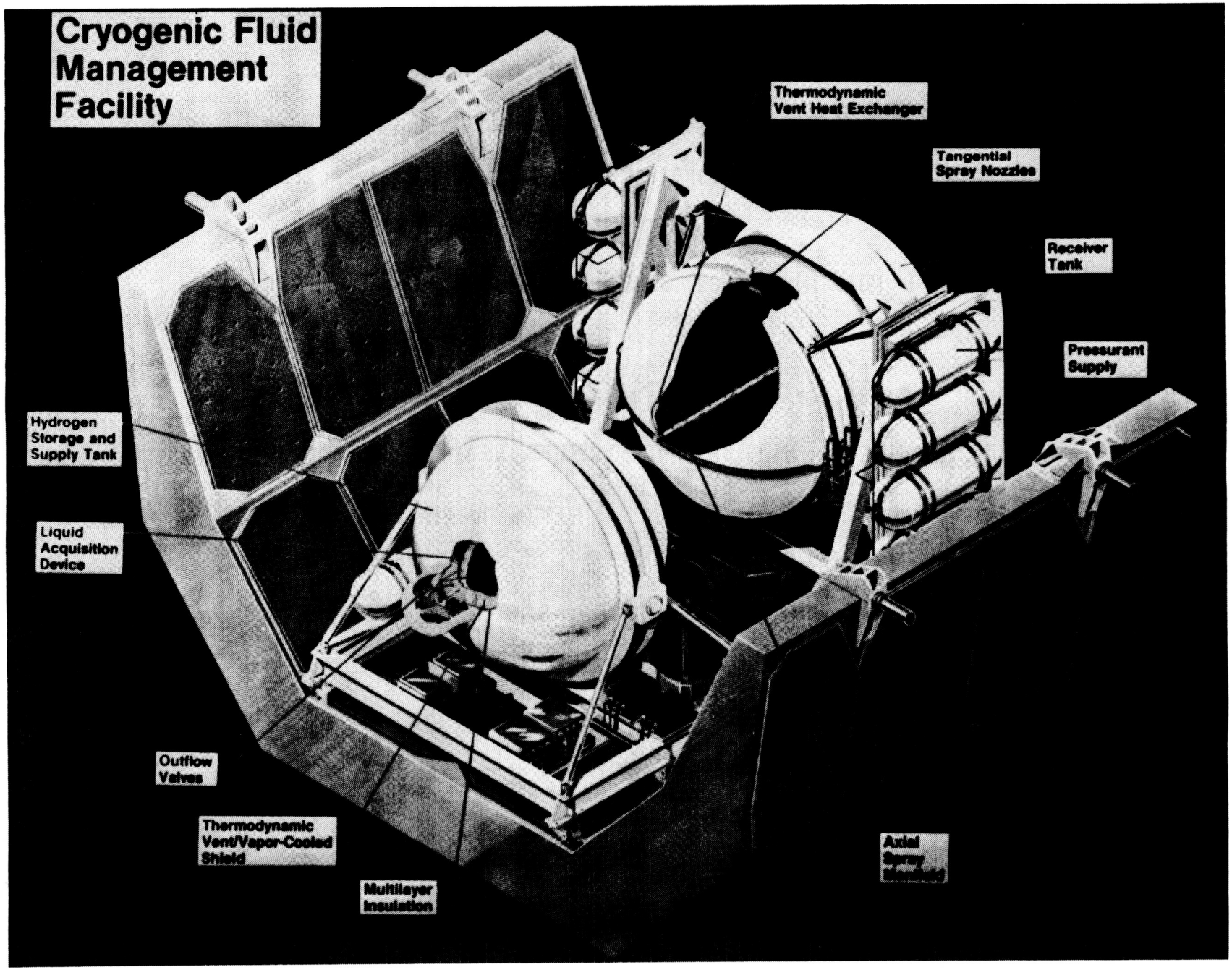
Cryogenic Fluid Management Facility
Thermodynamic Vent Heat Exchanger
Tangential Spray Nozzles
Receiver Tank
Pressurant Supply
Hydrogen Storage and Supply Tank
Liquid Acquisition Device
Outflow Valves
Thermodynamic Vent/Vapor-Cooled Shield
Multilayer Insulation
Axial Spray

CRYOGENIC FLUID MANAGEMENT FACILITY

RECEIVER TANK CHILLDOWN

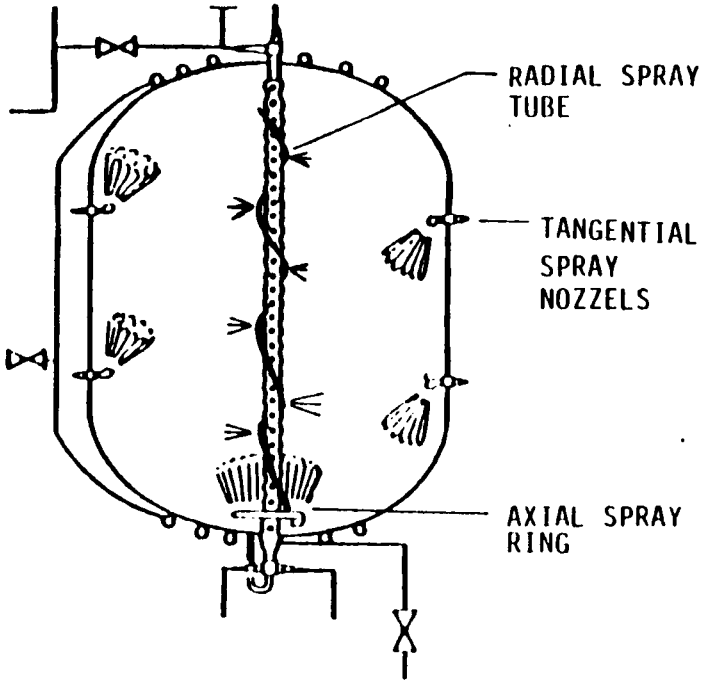

OBJECTIVES:

- EFFICIENTLY REDUCE THE TANK STRUCTURE TEMPERATURE TO ALLOW FOR NON-VENTED FILL
- STUDY HEAT TRANSFER RATES AND MECHANISMS IN THE SPACE ENVIRONMENT

KEY PARAMETERS:

- TANK MASS TO VOLUME RATIO
- TANK TEMPERATURE
- LH2 INJECTION TECHNIQUE
- LH2 CHARGE DENSITY

CRYOGENIC FLUID MANAGEMENT FACILITY

NO-VENT FILL

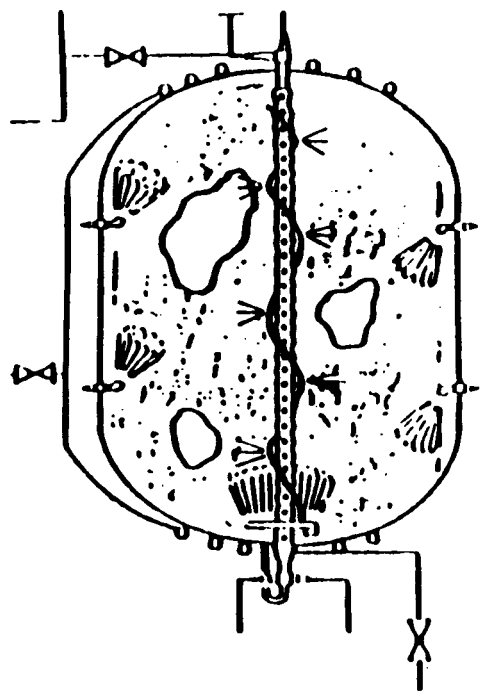

OBJECTIVES:

- DEMONSTRATE CAPABILITY FOR EFFECTIVE NO-VENT FILL IN LOW-G BY CONDENSATION OF ULLAGE VAPOR

KEY PARAMETERS:

- INITIAL TANK TEMPERATURE
- FINAL TANK PRESSURE
- LH2 INJECTION TECHNIQUE
- L/V INTERFACE AREA
- CONDENSATION RATES

CRYOGENIC FLUID MANAGEMENT FACILITY

ANALYTICAL COMPUTER MODELING

OBJECTIVES:

- DEVELOPMENT OF THE CRYOGENIC SYSTEM ANALYSIS MODEL (CSAM) COMPUTER CODE TO ACCURATELY SIMULATE THE PERFORMANCE OF CRYOGENIC SYSTEMS IN THE SPACE ENVIRONMENT
- FLEXIBLE DATA I/O
- VERIFICATION AND REFINEMENT BY CFMF FLIGHT EXPERIMENTS

KEY ANALYSES:

- TRANSIENT HEAT TRANSFER NETWORK
- INTERNAL TANK AND PIPE THERMODYNAMICS
- HEAT EXCHANGER SIMULATION OF TVS

CRYOGENIC FLUID MANAGEMENT FACILITY

POTENTIAL APPLICATIONS

- EARTH-TO-ORBIT TRANSPORT OF CRYOGENIC FLUIDS INCLUDING SCAVENGING (TANKER)
- ORBITAL STORAGE OF CRYOGENIC FLUIDS (DEPOT)
- ON-ORBIT FUELING/REFUELING OF PROPULSIVE STAGES
  SPACE BASED OTV, OMV, ETC./TOP-OFF OF GROUND-BASED VEHICLES
- SPACE STATION SUBSYSTEM CRYOGENIC FLUID REPLENISHMENT
  AUX. PROPULSION/ENERGY STORAGE/LIFE SUPPORT/THERMAL CONTROL
- EXPERIMENT AND SATELLITE CRYOGENIC FLUID SUPPLY AND RESUPPLY
  REACTANTS/COOLANTS/PROPELLANTS
- SHUTTLE ENHANCEMENT
  ORBITAL STAY TIME (POWER AND LIFE SUPPORT)/OMS PERFORMANCE
- SPACE BASED LASER CRYOGENIC FLUID SUPPLY AND RESUPPLY
  REACTANTS/COOLANTS/PROPELLANTS

NATIONAL AERONAUTICS AND
SPACE ADMINISTRATION

LEWIS RESEARCH CENTER

SPACE EXPERIMENTS OFFICE

NASA

CRYOGENIC FLUID MANAGEMENT FLIGHT EXPERIMENT

MASTER SCHEDULE
(3 MISSIONS)

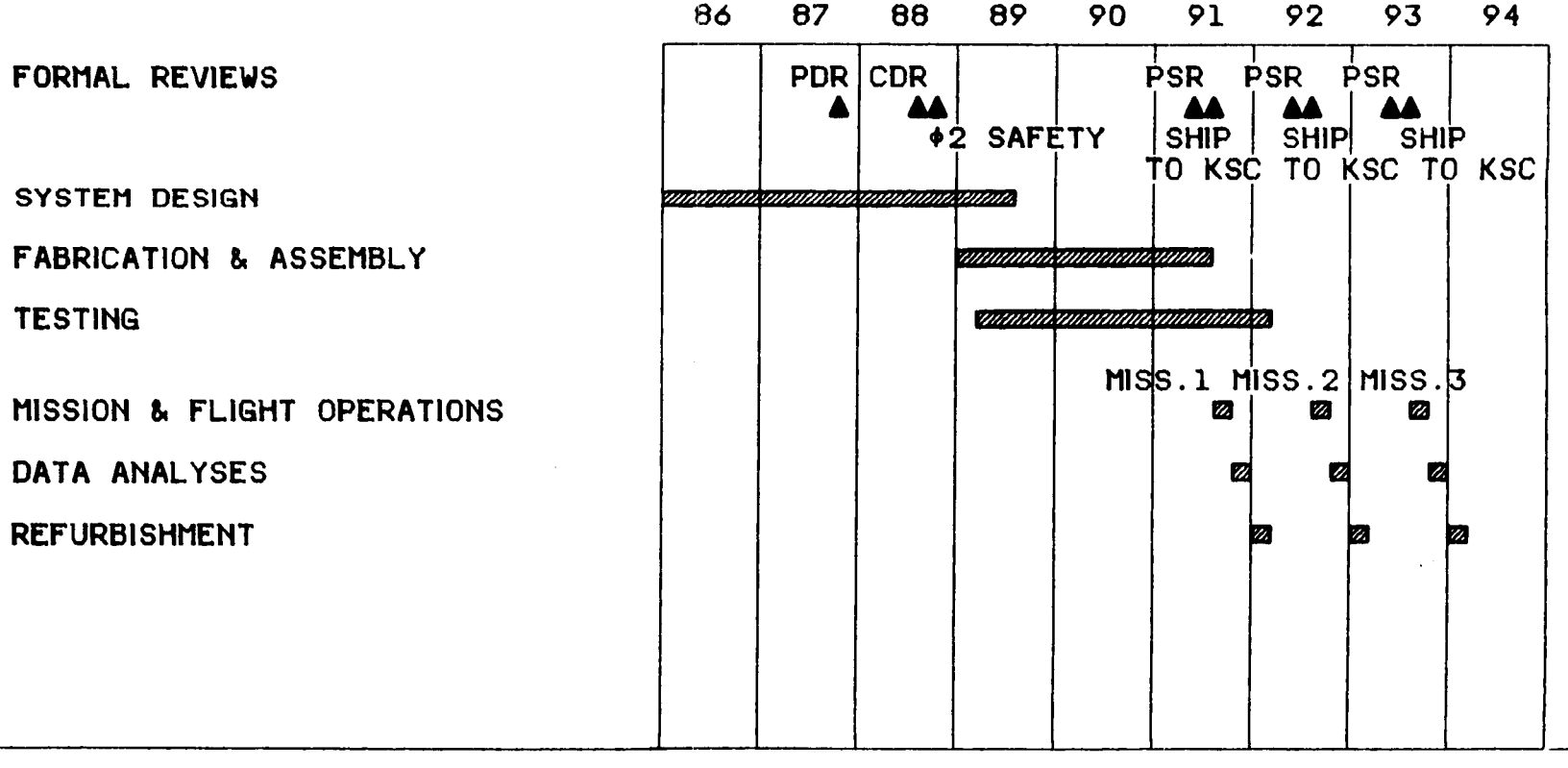

HELIUM TRANSFER IN SPACE

IN SPACE R, T & E WORKSHOP

WILLIAMSBURG, VIRGINIA

OCTOBER 8-10, 1985

PETER KITTEL

NASA, AMES RESEARCH CENTER

HELIUM TRANSFER IN SPACE

OBJECTIVES

THE OBJECTIVE IS TO DEVELOP AND DEMONSTRATE THE TECHNOLOGY REQUIRED FOR THE ON-ORBIT RESUPPLY OF LIQUID HELIUM. SEVERAL PLANNED NASA MISSIONS WOULD BENEFIT BY BEING RESUPPLIED. THOSE INCLUDE SIRTF, AXAF, LDR, SUPERMAG, GP-B, HST, AND PIRT. THE PROPERTIES OF LIQUID HELIUM (ESPECIALLY IN THE SUPERFLUID STATE BELOW 2.2 K) ARE SUFFICENTLY DIFFERENT FROM THOSE OF OTHER CRYOGENS, THAT A SEPERATE DEVELOPMENT EFFORT HAS BEEN STARTED. THIS IS A JOINT ARC, GSFC, JSC EFFORT. THE GOAL IS TO HAVE A SERVICING KIT READY BY THE MID TO LATE 1990'S.

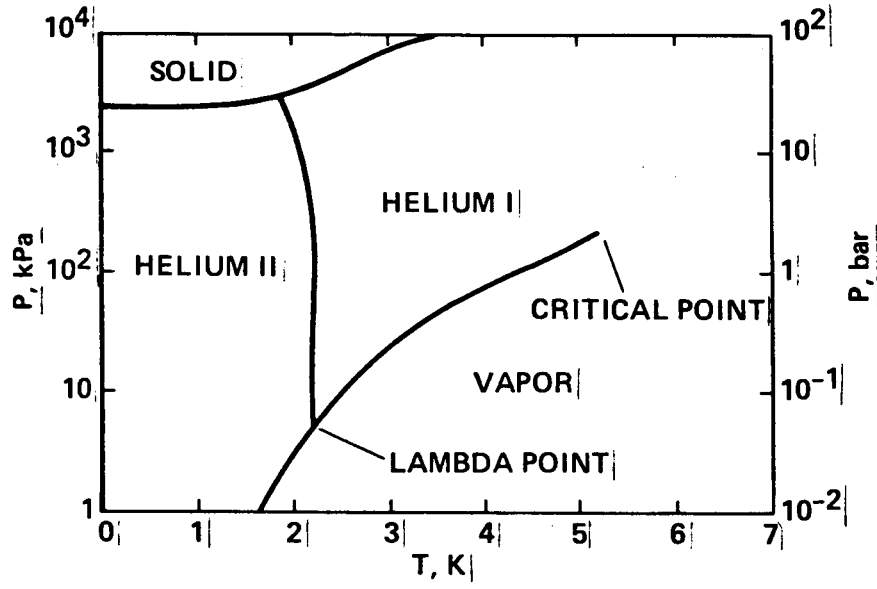

Phase diagram for helium

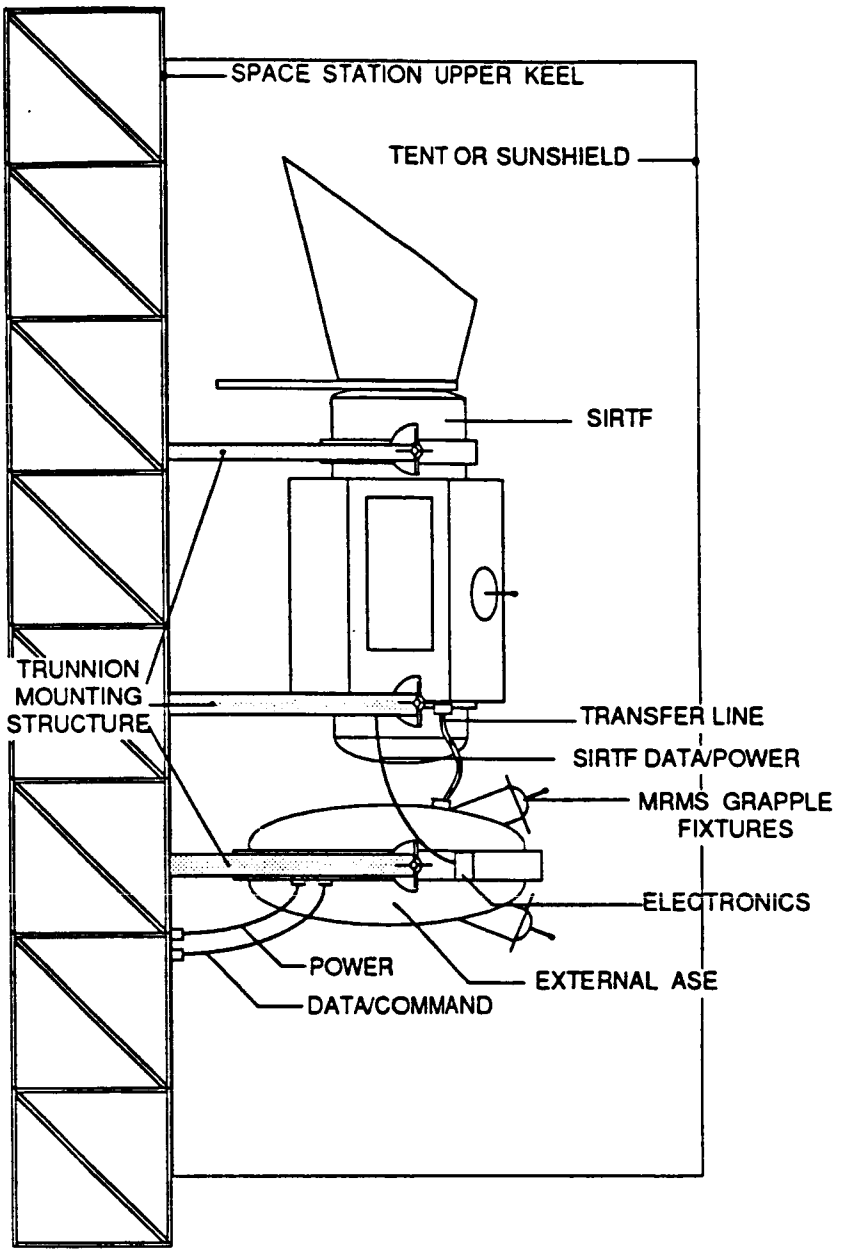

Figure 1-14 Replenishment on Space Station

LIQUID HELIUM RESUPPLY

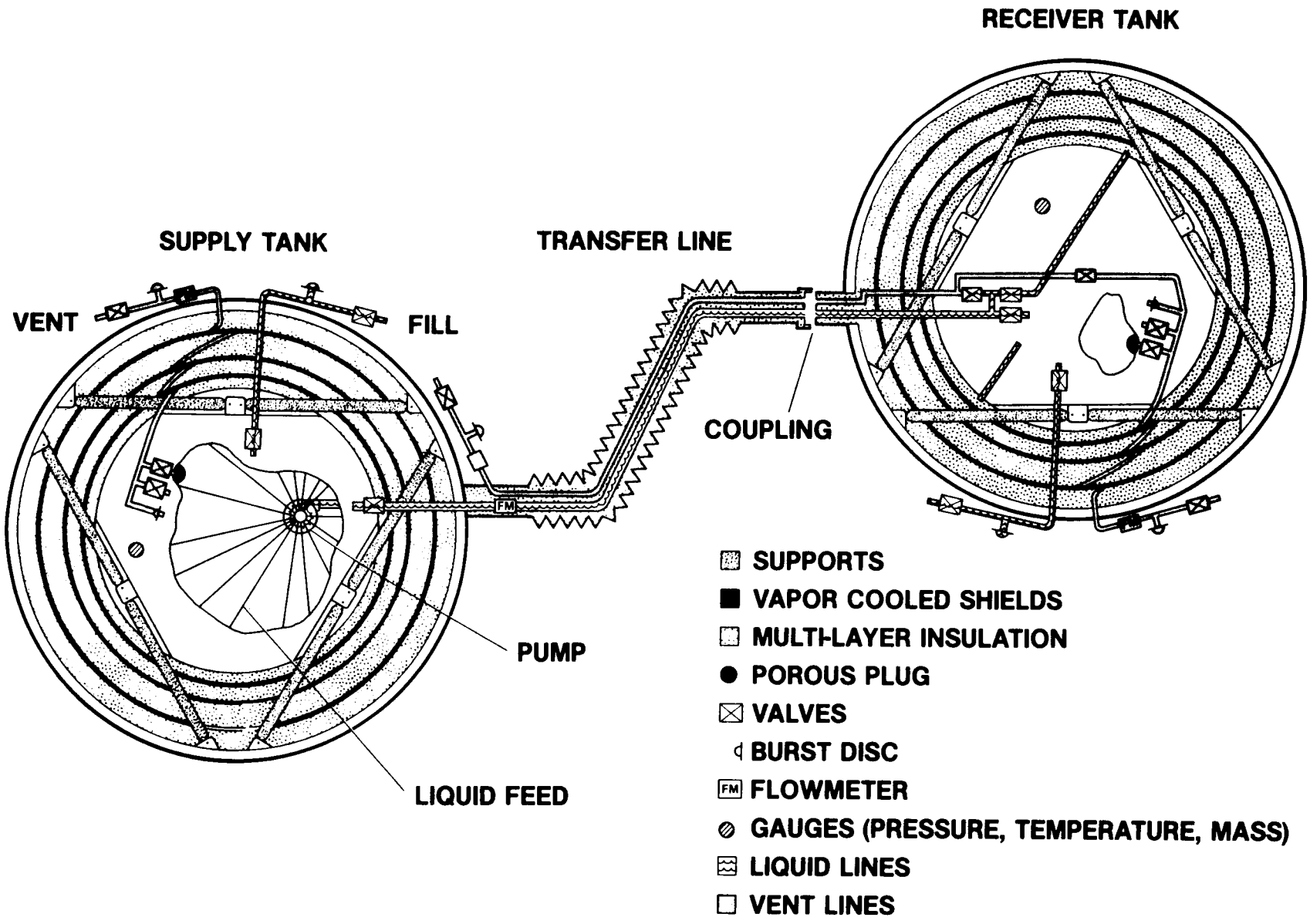

HELIUM TRANSFER IN SPACE

EXPERIMENT DESCRIPTION

IT IS PREMATURE TO DEFINE A SPACE STATION EXPERIMENT. ALTHOUGH WE ENVISION THE FOLLOWING EXPERIMENTS COULD BE NEEDED.

- EFFECT OF SMALL GRAVITY GRADIENT ON CONTAINMENT AND ACQUISITION OF LOW SUFACE TENSION FLUIDS
- SYSTEM VERIFICATION

DEVELOPMENT STATUS

- WORKSHOP HELD 8/85
- HITCHHIKER EXPERIMENTS UNDER DEVELOPMENT
    - SUBSCALE TECHNOLOGY DEMONSTRATIONS

HELIUM TRANSFER IN SPACE WORKSHOP

SPONSOR: AMES RESEARCH CENTER AND OAST
P. KITTEL - CHAIRMAN

DATES: 20-21 AUGUST 1985

LOCATION: NATIONAL BUREAU OF STANDARDS, BOULDER CO.

PURPOSE: EVALUATE CURRENT STATE OF TECHNOLOGY FOR THE ORBITAL RESUPPLY OF LIQUID HELIUM

PARTICIPATION: GOVERMENT
UNIVERSITY
INDUSTRY
FOREIGN

FORMAL PRESENTATION:

- TOPICS
  - PROGRAM OVERVIEW
  - SYSTEM STUDIES
  - COMPONENT DEVELOPMENT
    - PUMPS (THERMOMECHANICAL, CENTRIFUGAL, JET)
    - PHASE SEPARATION (SWIRL, POROUS PLUGS)
    - TRANSFER LINES
  - ANALYSIS (TRANSFER LINES, COOL DOWN, PUMPS)
  - SPACE FLIGHT
    - PAST EXPERIENCE WITH HELIUM (SL-2, IRT, SFHE)
    - PLANS
  - RELATED WORK
    - CFMF
- PROCEEDING TO BE PUBLISHED IN CRYOGENICS

GENERAL DISCUSSION LEAD BY PANEL

SUMMARY OF TECHNOLOGIES THAT REQUIRE FURTHER DEVELOPMENT.

1) TRANFER LINES - DEVELOP LOW HEAT LEAK LINES AND UNDERSTAND THE INTERACTION BETWEEN THE LINE AND THE PUMP;
2) THE COUPLING OF THE TRANFER LINE - UNKNOWN PERFORMANCE OF BAYONETS WITH SUPERFLUID;
3) GAUGING - MASS AND FLOW METERS NEED TO BE DEVELOPED TO ACCURATELY CONTROL A REMOTE AND EVENTUALLY AUTOMATED TRANSFER;
4) FLUID BEHAVIOR - THE PHASE SEPARATION AND COLLECTION OF LIQUID IN THE RECEIVER IN 0-G NEEDS TO BE DEMONSTRATED;
5) PHASE SEPARATION - DEVELOP A SEPARATOR FOR THE HIGH VENT RATES EXPECTED IN THE SUPPLY TANK;
6) COOL DOWN - PROCESS UNKNOWN IN TRANSFER LINE AND IN RECEIVER;
7) FOUNTAIN EFFECT PUMP - NOT WELL CHARACTERIZED. PHYSICAL LIMITATIONS ARE NOT KNOWN;
8) CENTRIFUGAL PUMP - NEEDS FURTHER TESTING IN SUPERFLUID;
9) LIQUID ACQUISITION FOR THE PUMPS - NOT DEVELOPED AND A SYSTEM DEVELOPED FOR A SMALL SCALE FLIGHT TEST MAY NOT WORK FOR A FULL SIZED TANK; AND
10) OTHER OPTIONS SHOULD BE STUDIED - SUCH AS PRESSURIZED TRANSFERS AND THE USE OF THE ACTIVE PHASE SEPARATOR.

EXPERIMENT TITLE: Helium Resupply Kit

PROPOSED FLIGHT DATE - 1996 YEAR

OPERATIONAL DAYS REQUIRED - 5

MASS - 3200 KG

VOLUME:

STORED: W — x D 4 m x H 1.7 m = 22 M^3

DEPLOYED: W — x D 4 m x H 1.7 m = 22 M^3

INTERNALLY ATTACHED No (YES/NO)
EXTERNALLY ATTACHED Yes (YES/NO)
FORMATION FLYING No (YES/NO)

ORIENTATION (inertial, solar, earth, other) n.a.

EXTRA-VEHICULAR ACTIVITY REQUIRED:

SET-UP: 2 Hrs/Day 1 No. of days

OPERATIONS: _____ Hrs/Day _____ No. of days _____ Interval

SERVICING: 2 Hrs/Day 1 No. of days TBD Interval

INTRA-VEHICULAR ACTIVITY REQUIRED:

SET-UP: _____ Hrs/Day _____ No. of days

OPERATIONS: 24 Hrs/Day 3 No. of days TBD Interval

SERVICING: _____ Hrs/Day _____ No. of days _____ Interval

POWER REQUIRED:

0.1 KW AC or DC (circle one)

24 Hrs/Day 3 No. of days

DATA RATE: 0.5 Megabits/second

DATA STORAGE: TBD Gigabits

LONG TERM CRYOGENIC STORAGE EXPERIMENT

EXPERIMENT OBJECTIVE:

- DEMONSTRATE ON-ORBIT LONG TERM STORAGE AND TRANSFER OF CRYOGENIC FLUIDS.
- EXPERIMENT WILL TEST AND EVALUATE VARIOUS STATE-OF-THE ART CRYOGENIC TECHNOLOGIES USED IN LONG TERM CRYOGENIC STORAGE.
- EFFICIENT LONG TERM STORAGE OF CRYOGENS IS ESSENTIAL TO MINIMIZE COST AND LAUNCH FREQUENCY ASSOCIATED WITH ORBITAL RESUPPLY.
- ONLY TECHNOLOGIES REQUIRING ON-ORBIT NEAR ZERO-G ENVIRONMENT FOR PROOF OF PERFORMANCE WILL BE INCLUDED.
- ON-ORBIT EVALUATION OF THESE TECHNOLOGIES WILL PROVIDE THE TECHNOLOGICAL BASIS FOR IMPROVEMENTS IN HARDWARE REQUIRING LONG TERM CRYOGENIC STORAGE, SUCH AS THE ORBITAL TRANSFER VEHICLE (OTV) AND THE SPACE STATION TANK FARM.

LONG TERM CRYOGENIC STORAGE EXPERIMENT

EXPERIMENT DESCRIPTION:

- EXPERIMENT WILL UTILIZE AT LEAST ONE HIGH PERFORMANCE CRYOGENIC DEWAR HARD-MOUNTED TO THE SPACE STATION.
- AS A MINIMUM, THE FOLLOWING CRYOGENIC TECHNOLOGIES WILL BE EVALUATED:

ZERO-G QUANTITY GAGING	DUAL STAGE SUPPORTS
THERMODYNAMIC VENT SYSTEMS	ACTIVE REFRIGERATION
PARA-ORTHO H_2 CONVERSION	THICK MULTI-LAYER INSULATION
SUN-SHIELDS	CAPILLARY ACQUISITION

- EXPERIMENT WILL BE MODULAR IN DESIGN TO ALLOW EASY HARDWARE INTERCHANGE FOR MAXIMUM EXPERIMENT VERSATILITY.

Beechcraft
Boulder Division

LONG TERM CRYOGENIC STORAGE EXPERIMENT

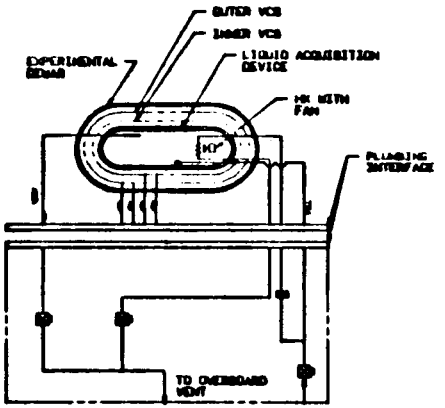

INTERNAL
THERMODYNAMIC VENT

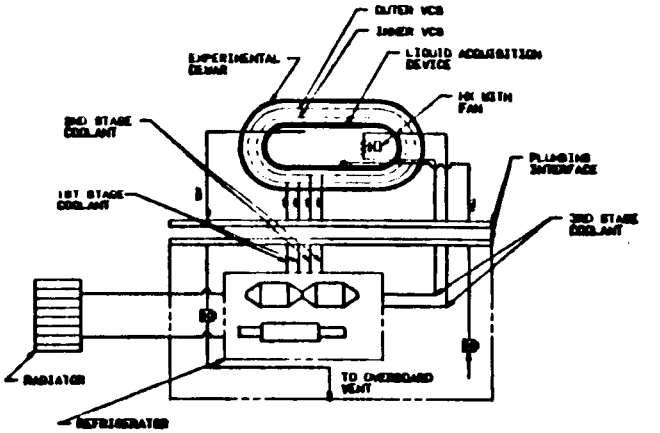

REFRIGERATION

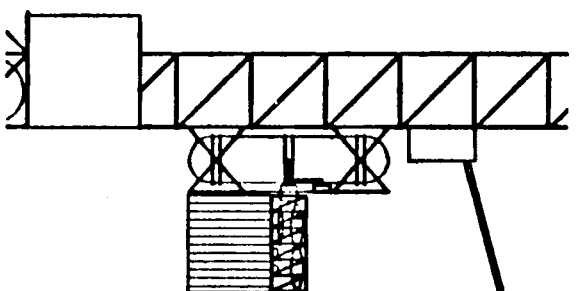

GENERAL
ARRANGEMENT

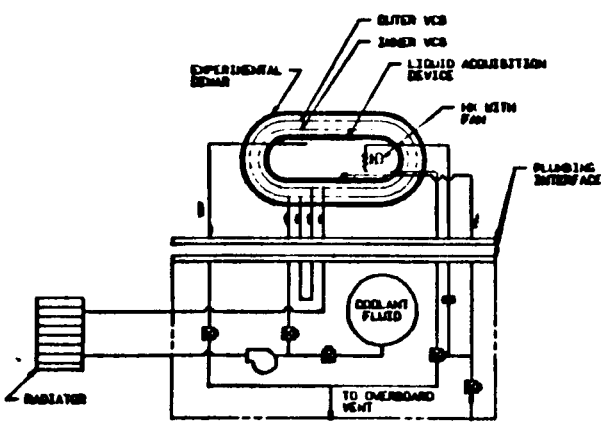

RADIATOR

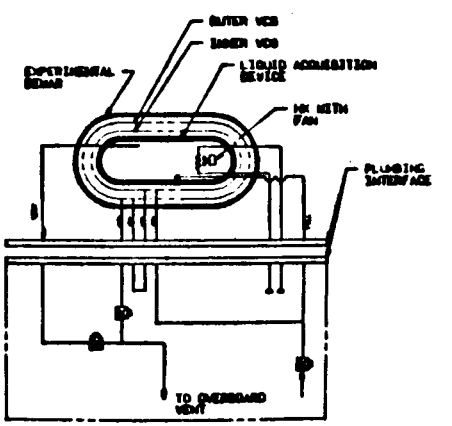

VAPOR-COOLED SHIELD

Beechcraft
Boulder Division

EXPERIMENT TITLE: Long Term Cryogenic Fluid Storage

PROPOSED FLIGHT DATE: 1992 YEAR

OPERATIONAL DAYS REQUIRED: 1825 Days (5 years)

MASS: 3200 KG

VOLUME:

STORED: W 3.4 x L 6.1 x H 4.6 = 95.4 M^3

DEPLOYED: W 3.4 x L 6.1 x H 4.6 = 95.4 M^3

INTERNALLY ATTACHED _____ (YES / NO)
EXTERNALLY ATTACHED _____ (YES / NO)
FORMATION FLYING _____ (YES / NO)

ORIENTATION (inertial, solar, earth, other) Not Critical

EXTRA-VEHICULAR ACTIVITY REQUIRED:

SET-UP:	4	Hrs/Day	4	No. of Days		
OPERATIONS:	--	Hrs/Day	--	No. of Days	--	Interval
SERVICING:	8	Hrs/Day	1	No. of Days	2/yr	Interval

INTRA-VEHICULAR ACTIVITY REQUIRED:

SET-UP:	8	Hrs/Day	5	No. of Days		
OPERATIONS:	1	Hrs/Day	1	No. of Days	1 wk	Interval
SERVICING:	--	Hrs/Day	--	No. of Days	--	Interval

POWER REQUIRED:

2 KW AC or DC (Circle One)

24 Hrs/Day 1825 No. of days

DATA RATE: 1 Bit/Sec Megabits/second (To Data Storage)

DATA STORAGE: 1 Megabit Gigabits

FACILITIES FOR DEVELOPING A LIQUID STREAM SPACE TECHNOLOGY

by

E.P. Muntz
and
Melissa Dixon

University of Southern California
Department of Aerospace Engineering
University Park, Los Angeles, California 90089-0192

Presented at NASA In-Space Research, Technology and Engineering Workshop,
Williamsburg
October 8,9,10, 1981

OBJECTIVE

Facilities necessary for the investigation of several proposed uses of free-flying liquid streams in space are outlined. Extensive in-space development of the technology is anticipated before useable space systems could be designed.

POSSIBILITIES WHEN LIQUID STREAMS ARE EXPOSED TO A HIGH VACUUM

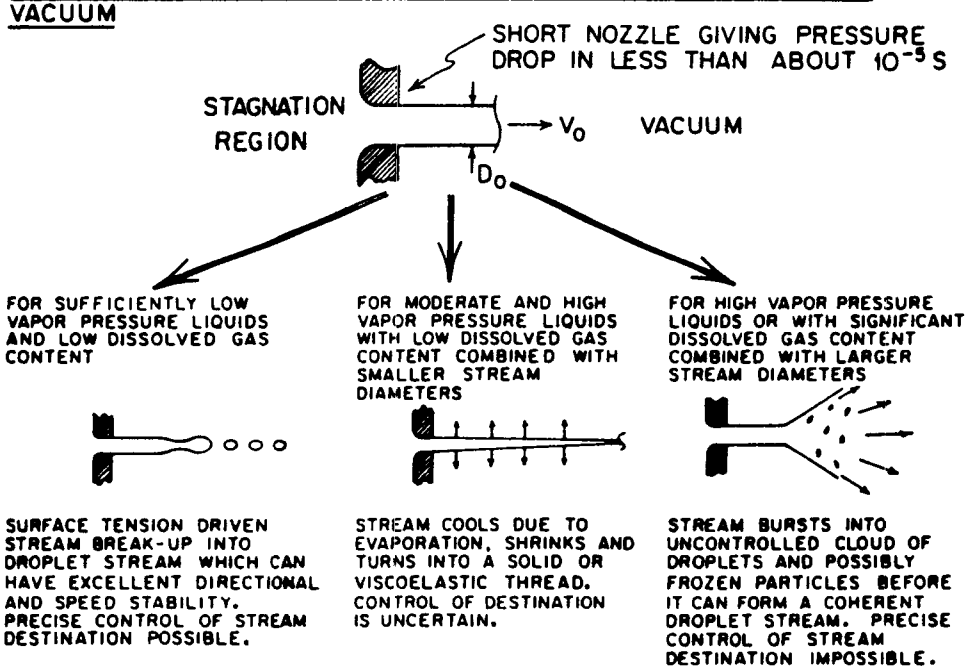

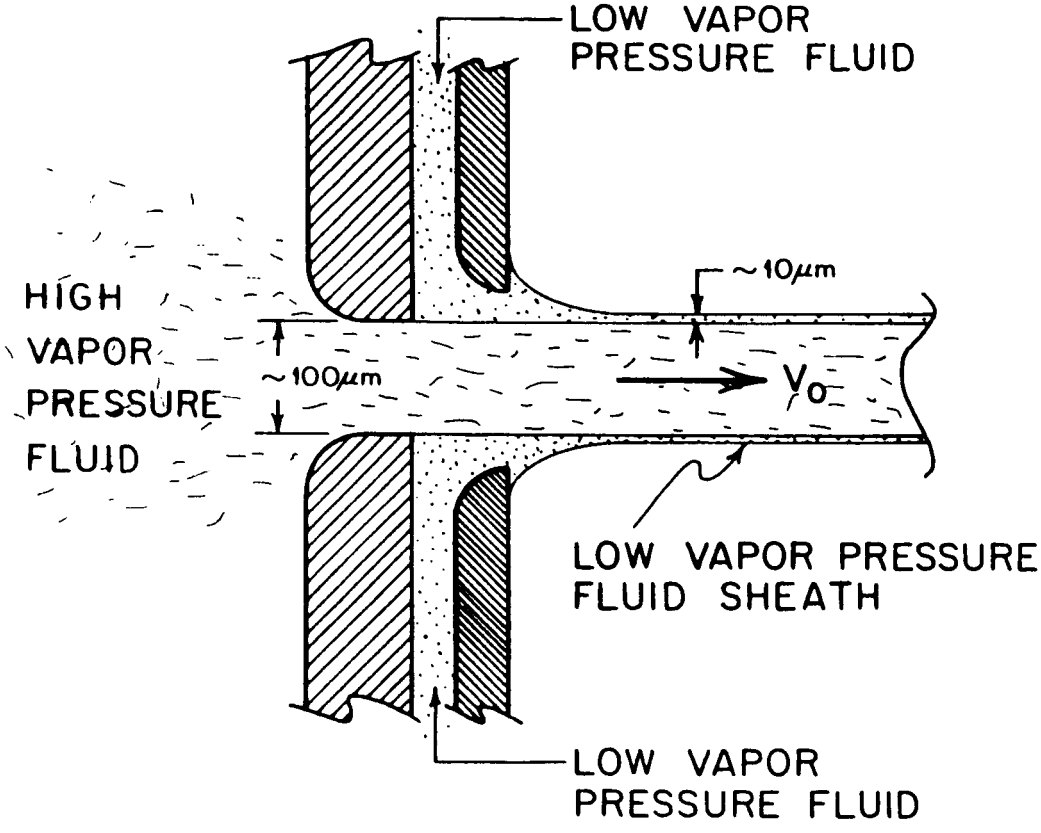
LOW VAPOR
PRESSURE FLUID
~10μm
HIGH
VAPOR
PRESSURE
FLUID
~100μm
V_o
LOW VAPOR PRESSURE
FLUID SHEATH
LOW VAPOR
PRESSURE FLUID

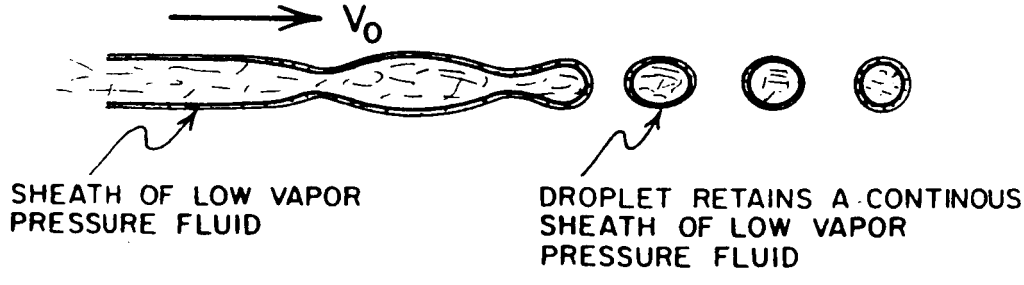
V_o
SHEATH OF LOW VAPOR
PRESSURE FLUID
DROPLET RETAINS A CONTINOUS
SHEATH OF LOW VAPOR
PRESSURE FLUID

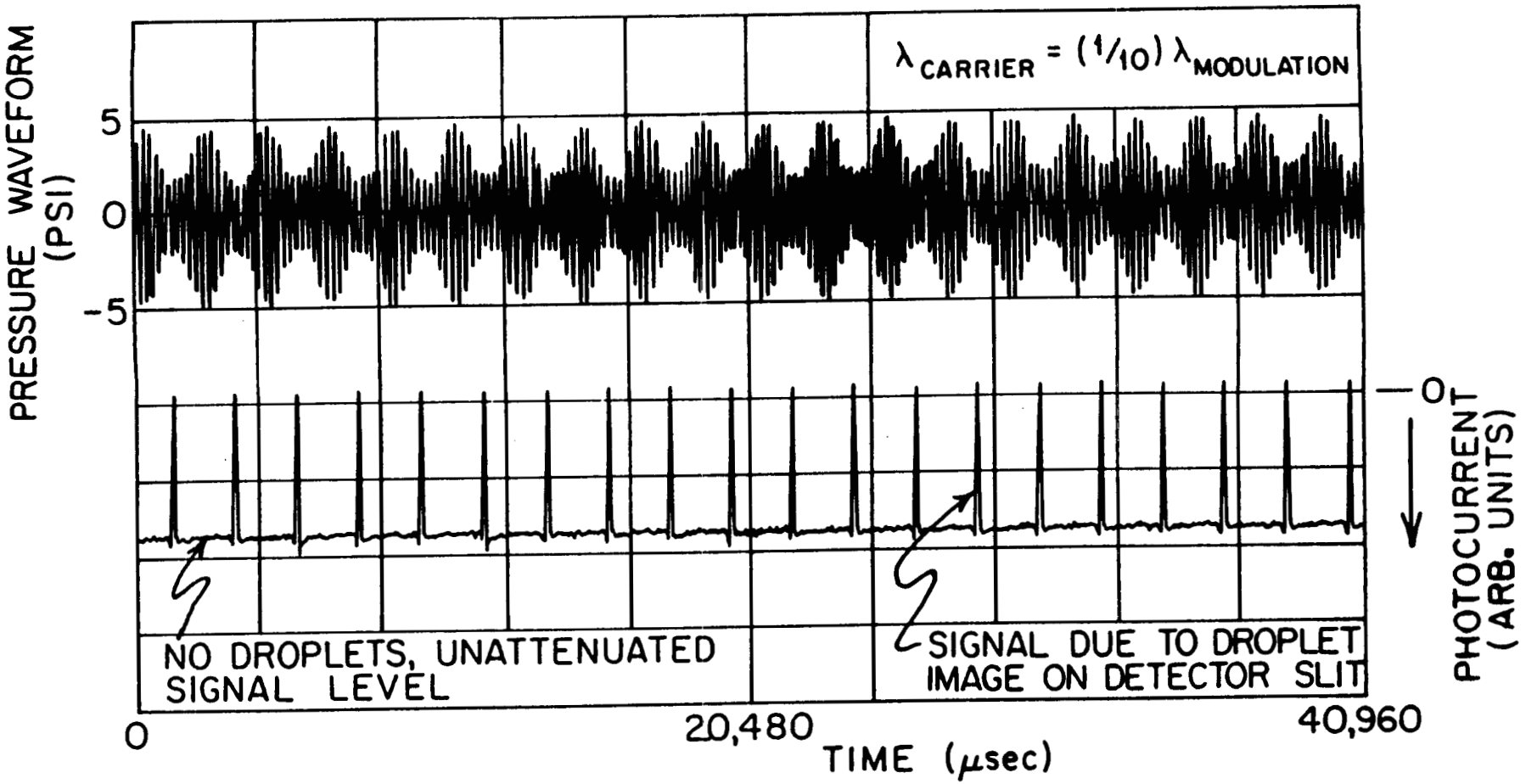
PRESSURE WAVEFORM (PSI)
5
0
-5
$\lambda_{CARRIER} = (1/10)\,\lambda_{MODULATION}$
0
PHOTOCURRENT (ARB. UNITS)
NO DROPLETS, UNATTENUATED SIGNAL LEVEL
SIGNAL DUE TO DROPLET IMAGE ON DETECTOR SLIT
0
20,480
40,960
TIME (μsec)

BREAK-UP AND COALESCENCE OF AMPLITUDE MODULATED CAPILLARY STREAM

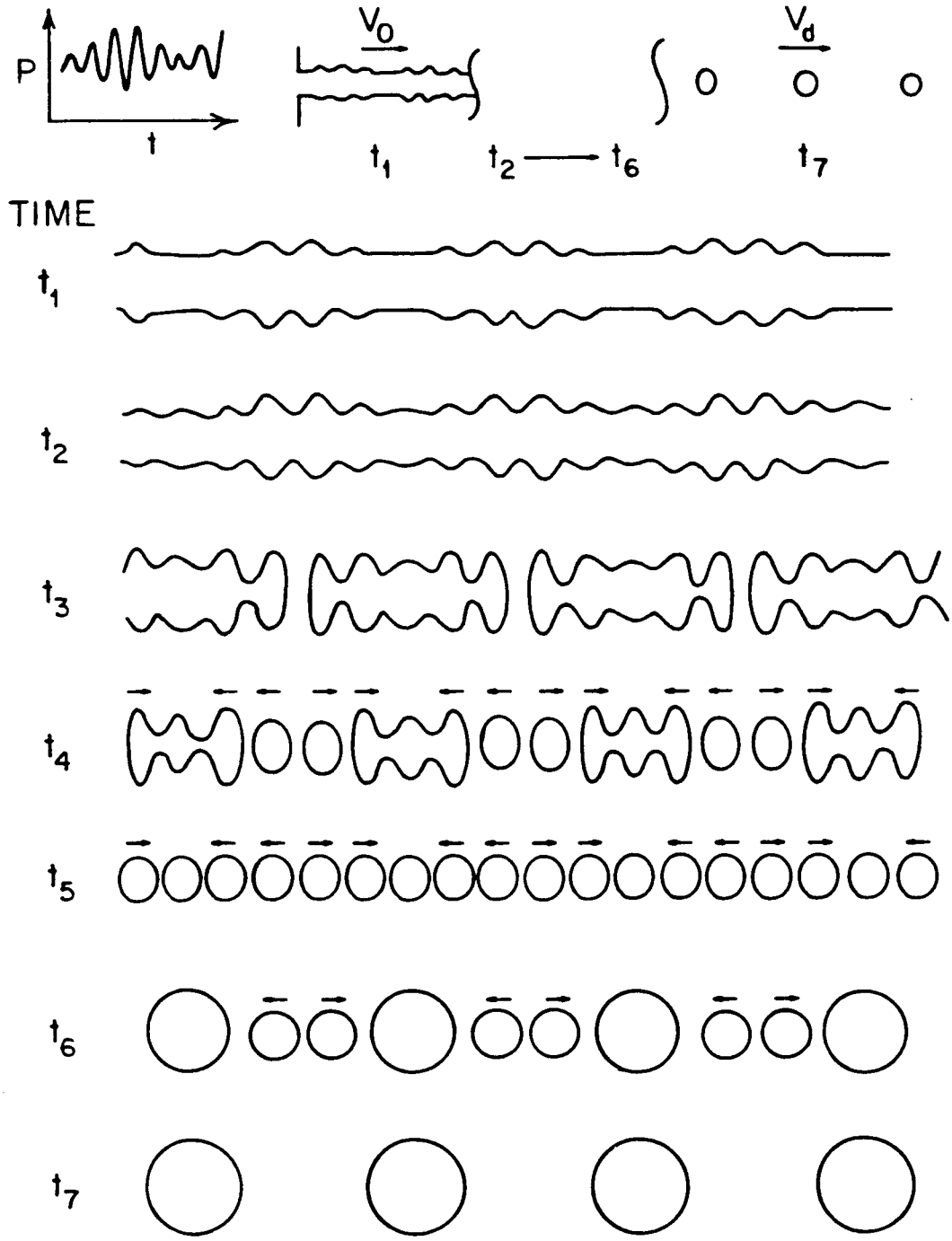

Arrows represent motion relative to V_d

PLAUSIBLE ESTIMATES OF THE DIRECTIONAL AND DROPLET TO DROPLET SPEED STABILITY BASED ON PRELIMINARY EXPERIMENTS AND ANALYSIS

- o DROPLET STREAM DIRECTIONAL STABILITY OF ± 1μ radian
- o DROPLET TO DROPLET SPEED STABILITY OF $\pm 5 \times 10^{-6}$
- o THIS PERFORMANCE ACHIEVED FOR STREAMS A FEW HUNDRED μm DIAMETER WITH LIQUID VAPOR PRESSURE UP TO ABOUT 1 TORR.

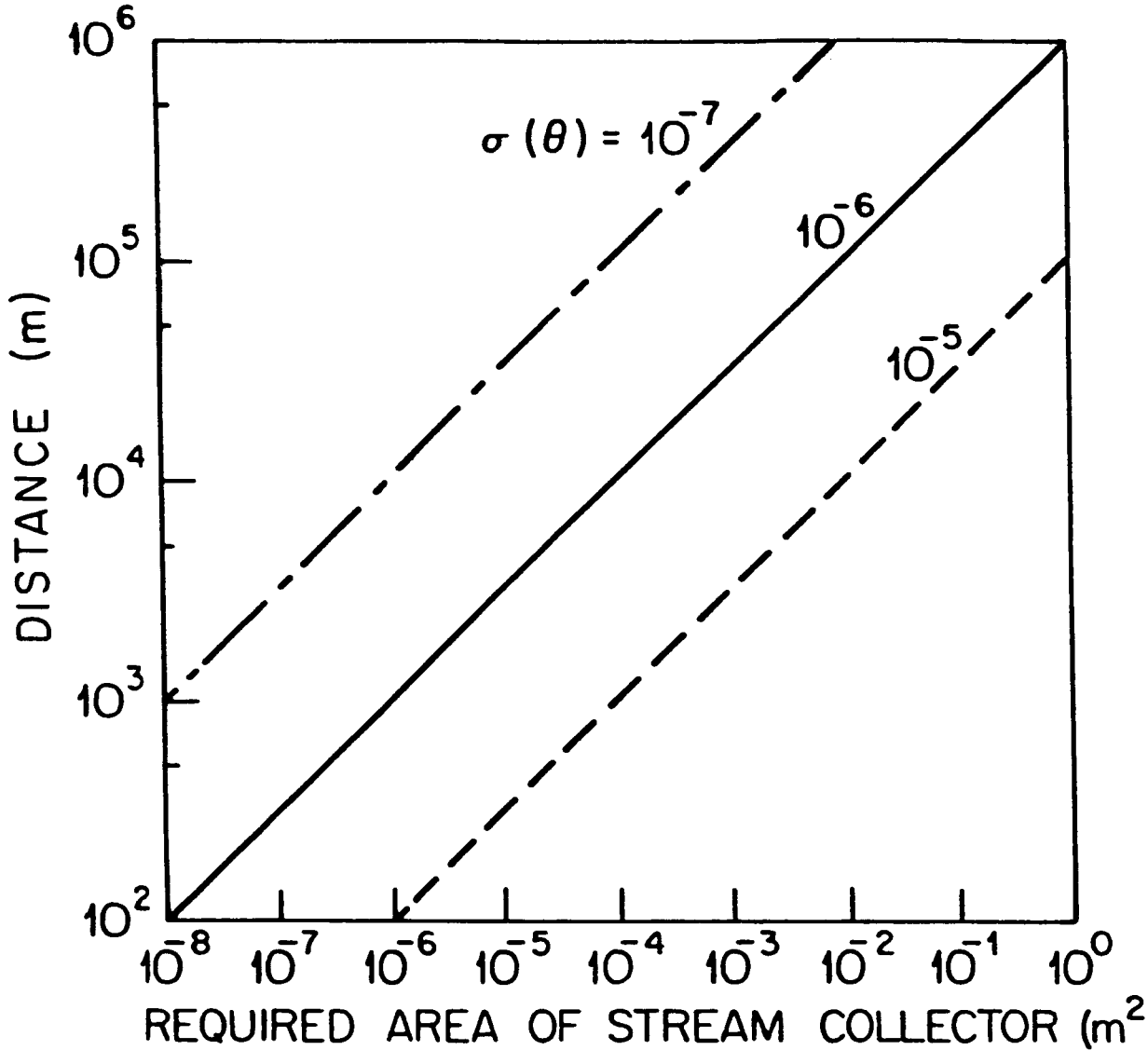
10^6
10^5
10^4
10^3
10^2
DISTANCE (m)
$\sigma(\theta) = 10^{-7}$
10^{-6}
10^{-5}
10^{-8} 10^{-7} 10^{-6} 10^{-5} 10^{-4} 10^{-3} 10^{-2} 10^{-1} 10^{0}
REQUIRED AREA OF STREAM COLLECTOR (m^2)

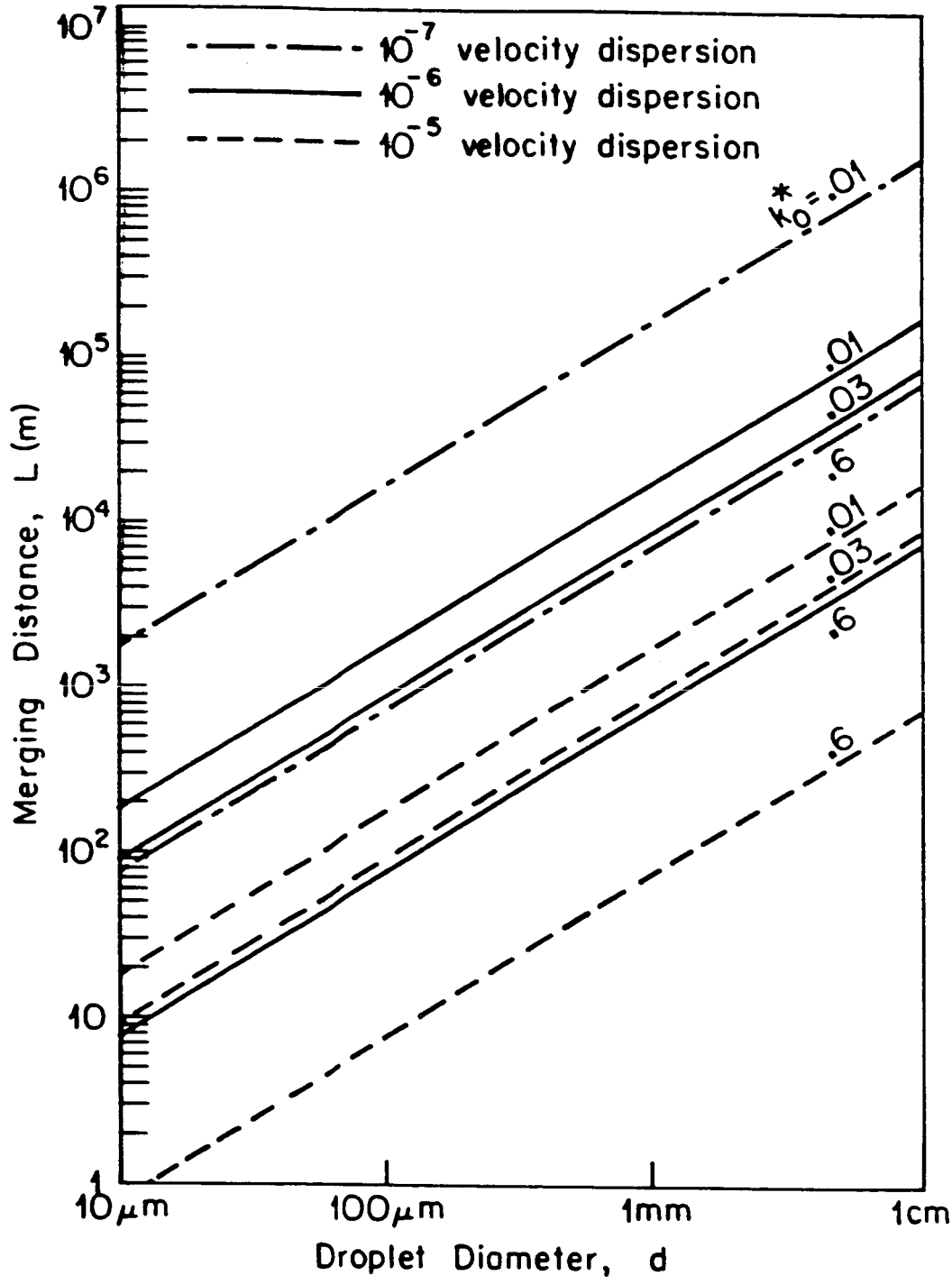
10^{-7} velocity dispersion
10^{-6} velocity dispersion
10^{-5} velocity dispersion
$k_0^* = .01$
.01
.03
.6
.01
.03
.6
.6
10^7
10^6
10^5
10^4
10^3
10^2
10
1
Merging Distance, L (m)
10μm
100μm
1mm
1cm
Droplet Diameter, d

EXPERIMENT DESCRIPTION

Space Applications of Controlled Free-Flying Liquid Streams

- o Have identified potential uses for free-flying liquid streams in space.
- o Many of these proposed liquid stream systems would require extensive space experiments during their development cycle.
- o Initial consideration of the control of low and finite vapor pressure liquid streams in space, along with potential applications, are presented in two references:

  1. E.P. Muntz and M. Dixon, 'The Characteristics, Control and Uses of Liquid Streams in Space' AIAA-75-0305, 1985.
  2. E.P. Muntz and M. Dixon, 'Applications to Space of Free-Flying Controlled Streams of Liquids', AIAA-85-1029, 1985.

Ranked List of Applications

(from least speculative at top to most speculative at bottom)

- o Space construction, refurbishment and repair
- o Liquid thrusters
- o Liquid droplet radiator
- o Material transport
- o Planetary gas scavenging
- o Aeroassisted deceleration

Demonstrated Liquid Droplet Stream Performance Parameters

- o Directional stability, $\pm$ 1 μ radian
- o Drop to drop speed stability, $\pm$ 1.5 $\times$ 10^{-6}
- o Drop spacing up to about 20 drop diameters, corresponding to a non-dimensional wave number (k_o^*) of about 0.02 ($k_o^* = \pi D./\lambda$)

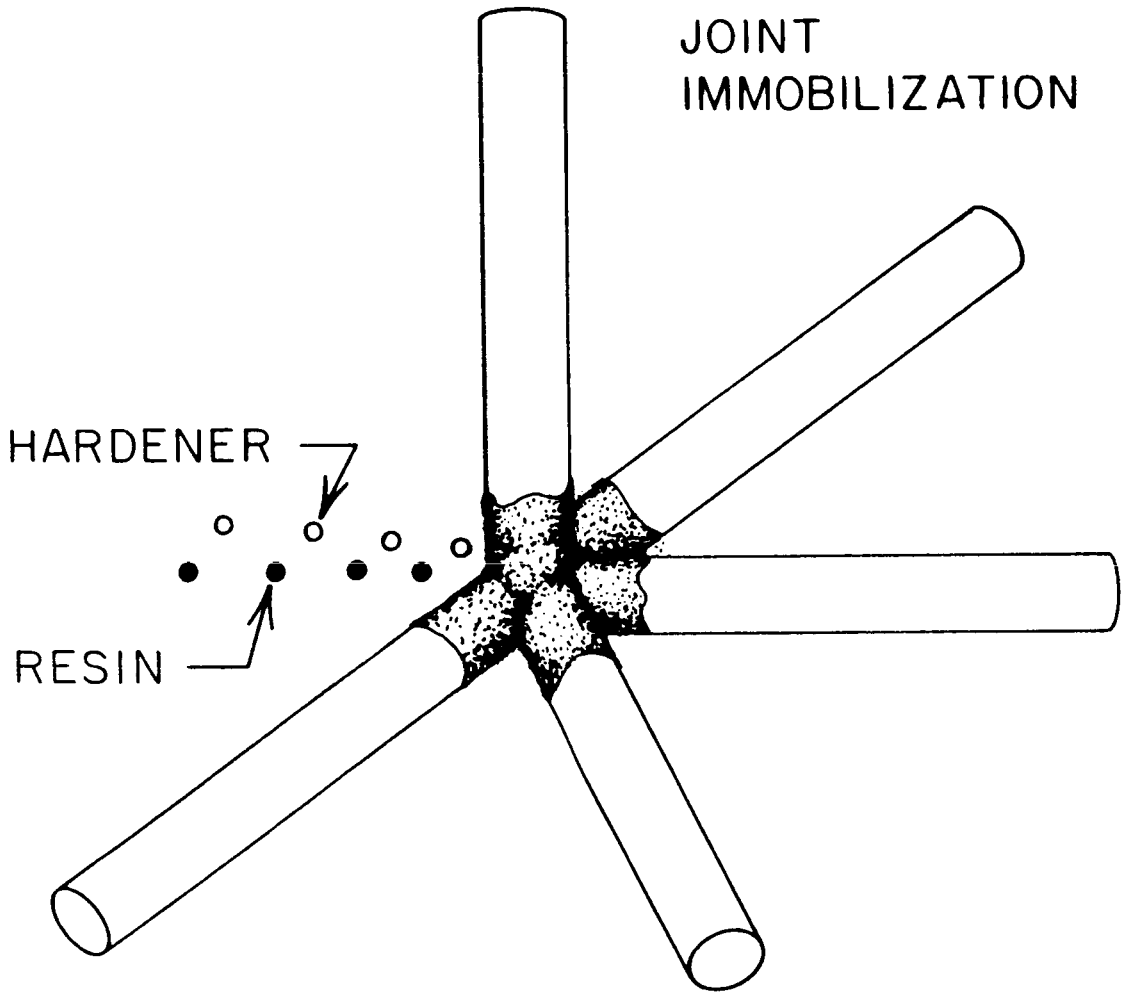

1μ RAD DISPERSION EQUIVALENT
TO 1mm RESOLUTION AT 1km

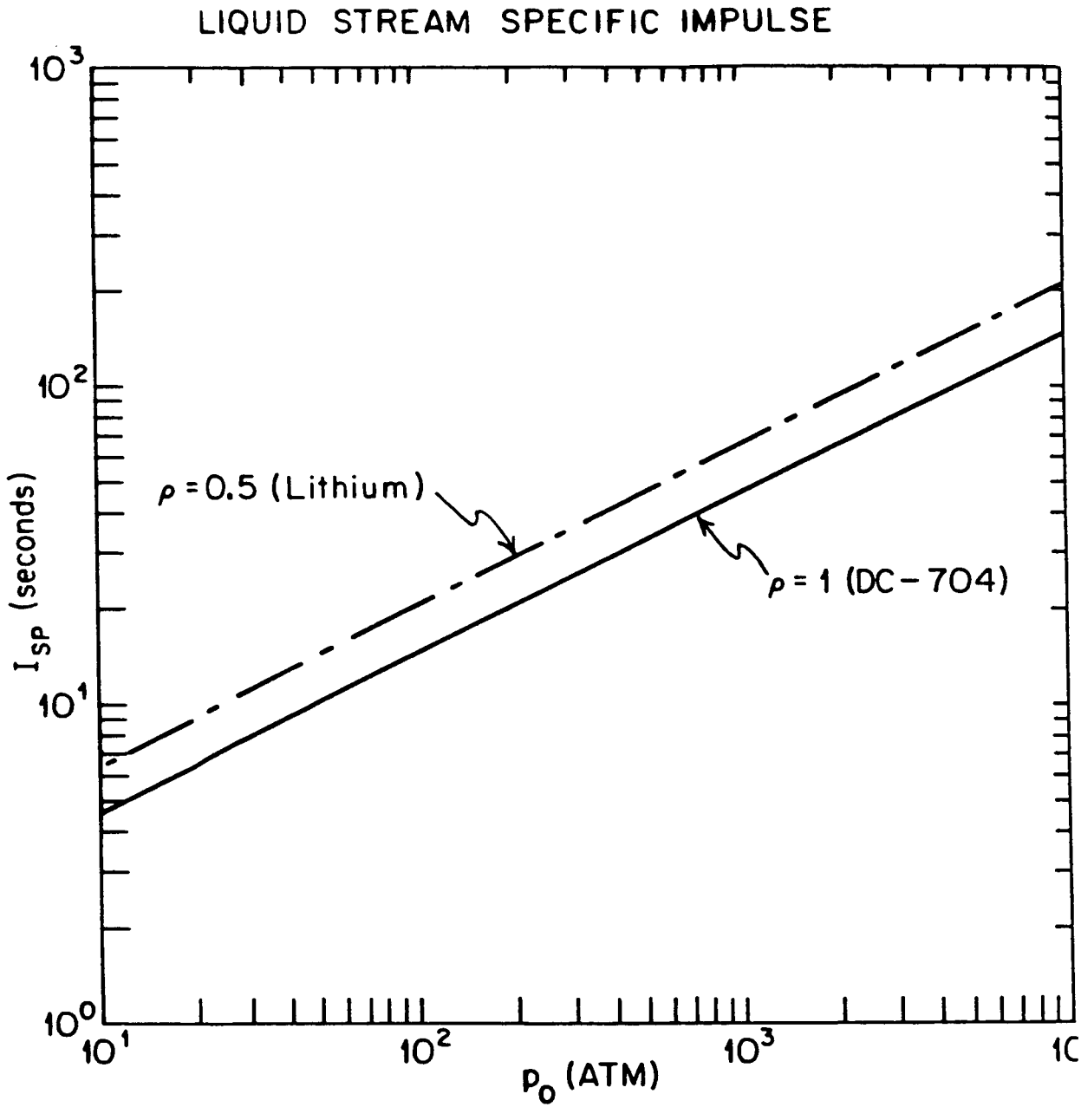
LIQUID STREAM SPECIFIC IMPULSE
10^3
10^2
10^1
10^0
I_{SP} (seconds)
ρ = 0.5 (Lithium)
ρ = 1 (DC-704)
10^1
10^2
10^3
p_0 (ATM)

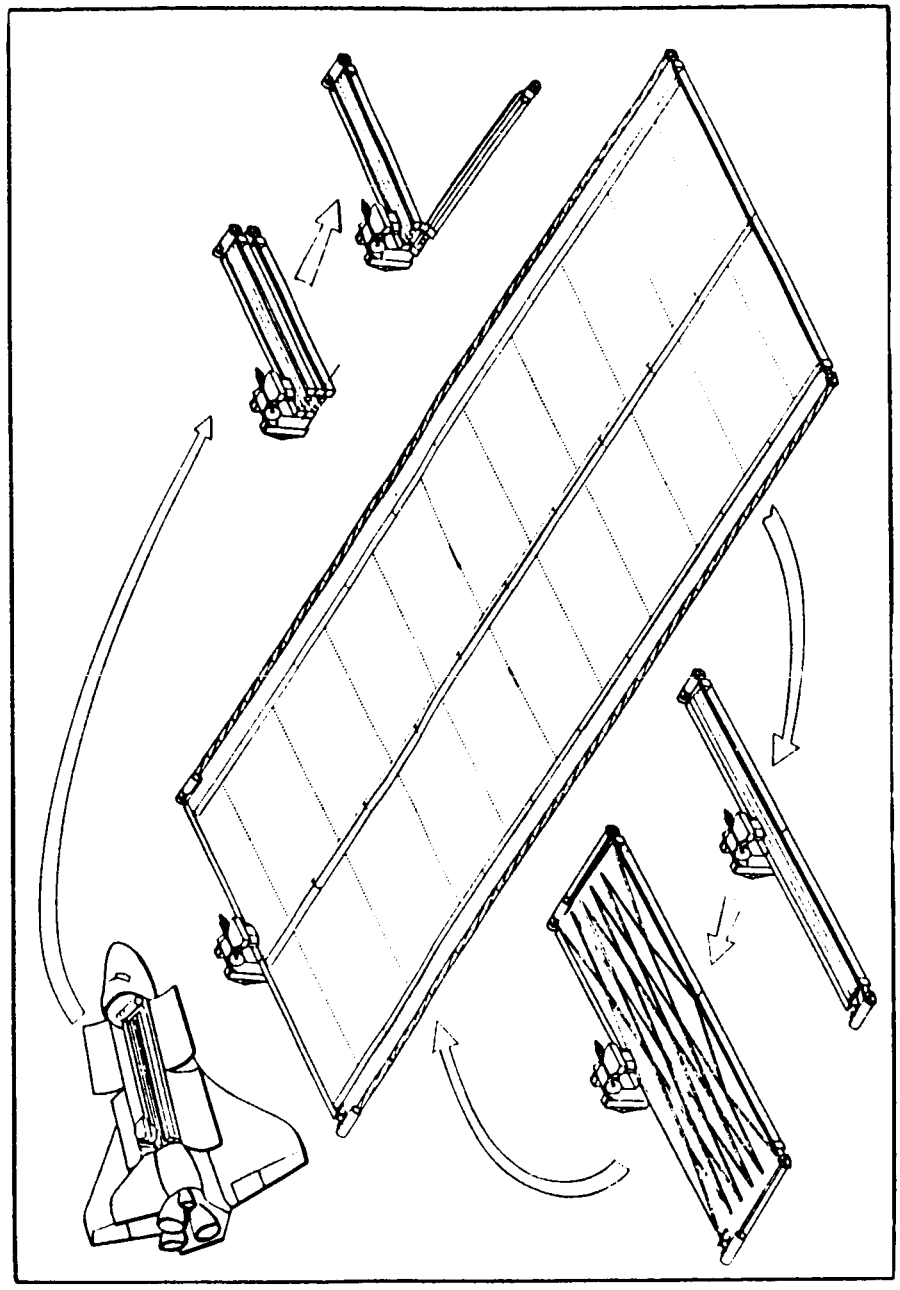

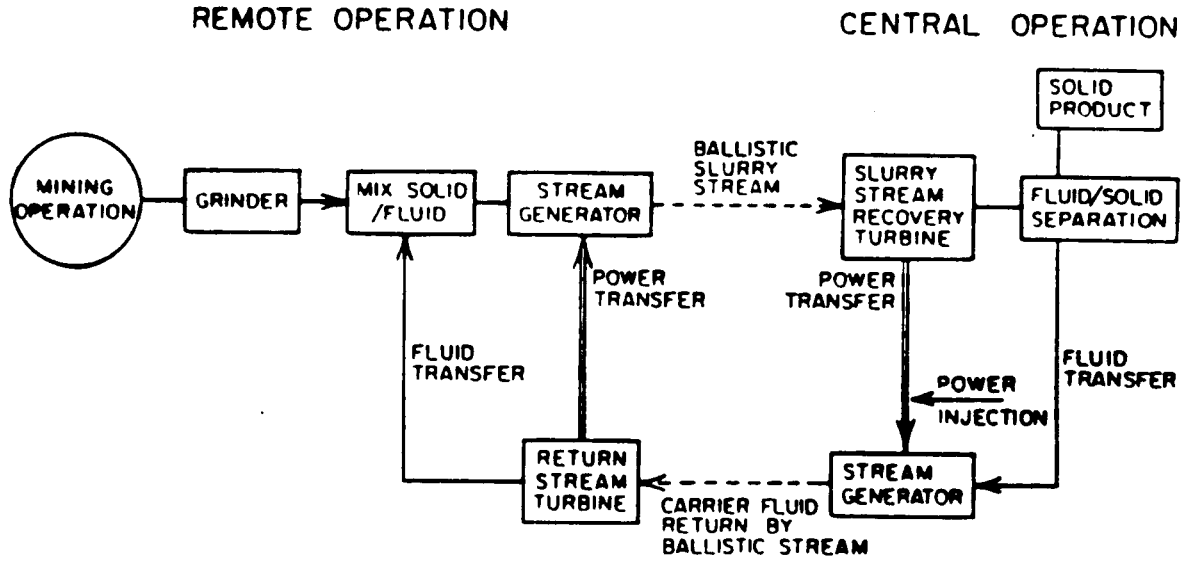
REMOTE OPERATION
CENTRAL OPERATION
MINING OPERATION
GRINDER
MIX SOLID /FLUID
STREAM GENERATOR
BALLISTIC SLURRY STREAM
SLURRY STREAM RECOVERY TURBINE
FLUID/SOLID SEPARATION
SOLID PRODUCT
POWER TRANSFER
POWER TRANSFER
FLUID TRANSFER
FLUID TRANSFER
POWER INJECTION
RETURN STREAM TURBINE
STREAM GENERATOR
CARRIER FLUID RETURN BY BALLISTIC STREAM

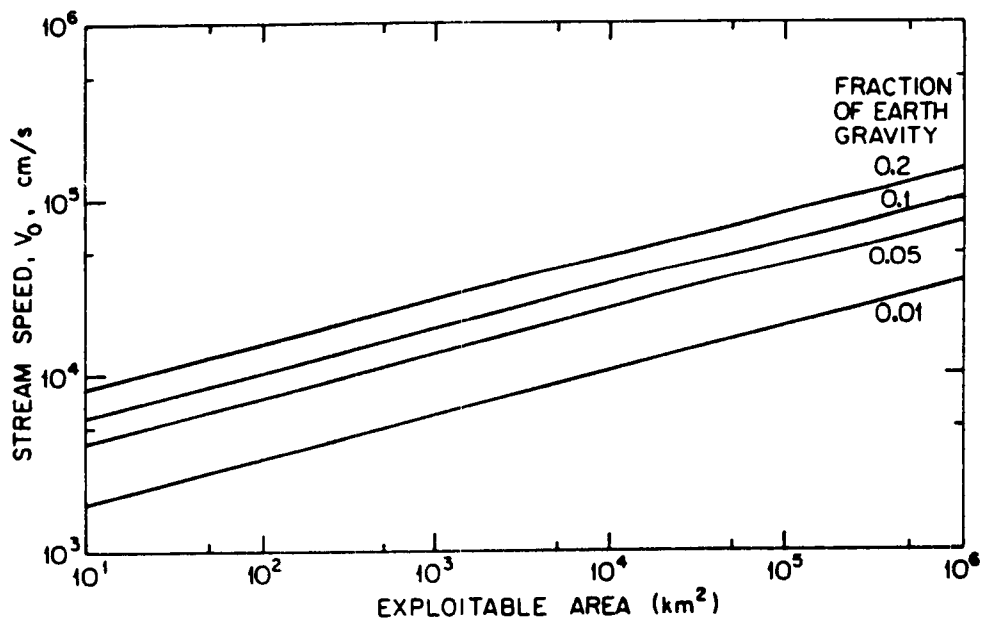
FRACTION
OF EARTH
GRAVITY
0.2
0.1
0.05
0.01
STREAM SPEED, V_0, cm/s
10^6
10^5
10^4
10^3
10^1
10^2
10^3
10^4
10^5
10^6
EXPLOITABLE AREA (km^2)

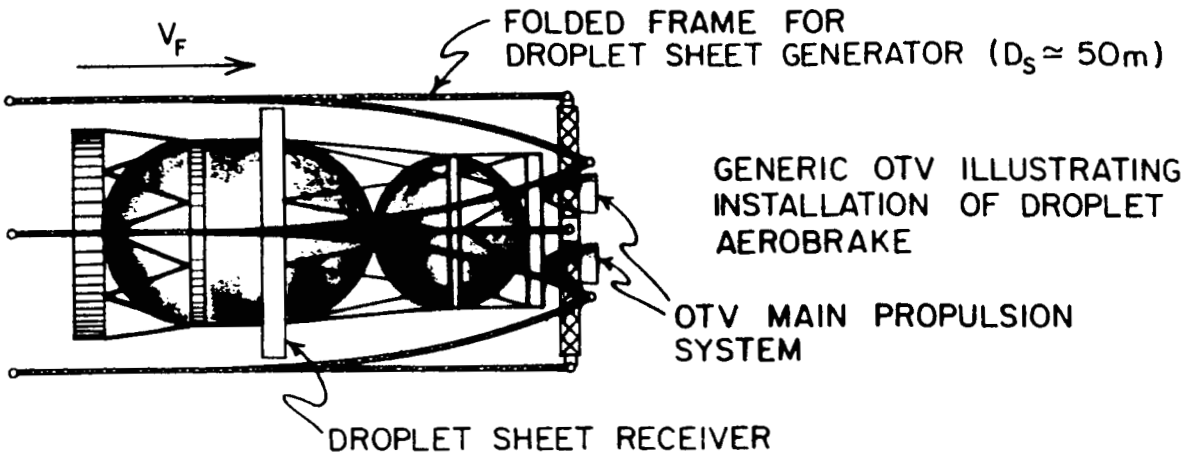

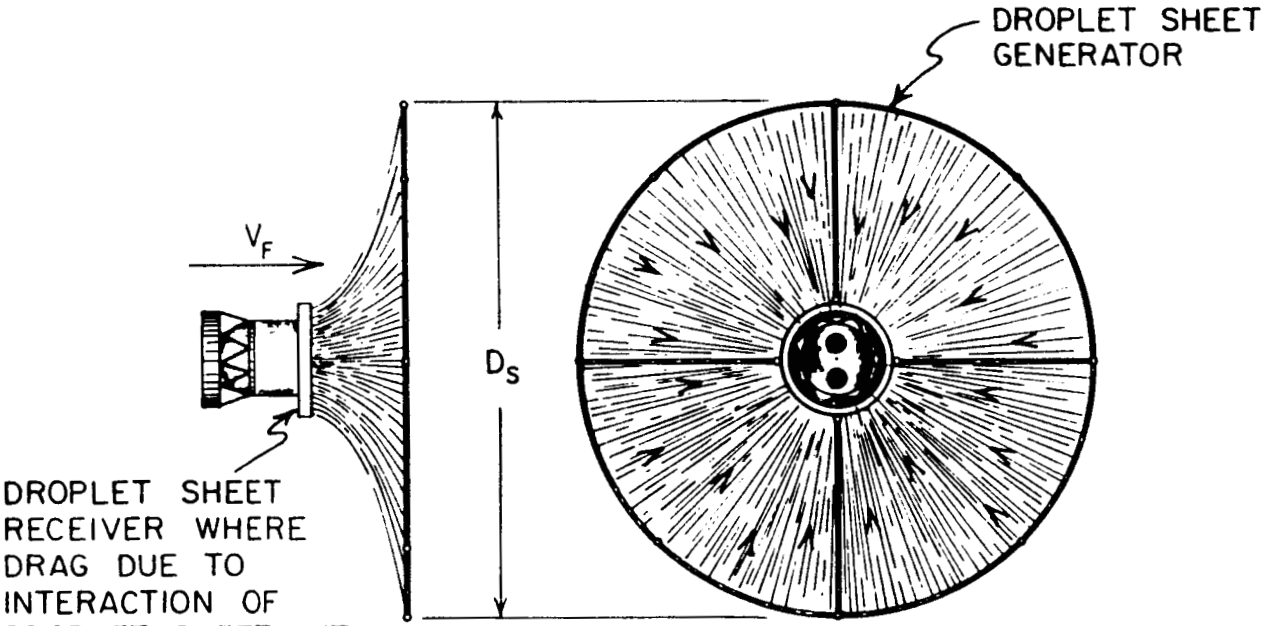

DEPLOYED DROPLET AEROBRAKE

FOR 10^4 kg OTV BRAKING FROM 10 km/s TO 8 km/s

ALTITUDE (km)	IMPACT MOMENTUM (ρV^2, N/m^2)	MEAN FREE PATH (m)	SHEET SIZE, D_S (m)	SHEET MASS ($\rho_\ell = 1$, kg)	LIQUID TEMP (°K)
120	4	1.5	50	1×10^2	730
140	6×10^{-1}	10.0	150	1×10^3	450

SPACE FACILITY REQUIREMENTS

Near Term (STS orbiter only)

1. Enclosed flight tube approximately 1 shuttle bay long and up to 1 m diameter for initial low g tests of stream generators and receivers. Enclosure is light-weight and only used to contain stray liquid.

2. Folded flight tube for propagation experiments up to 100 m.

3. Unprotected flight up to a few kms with a small free-flyer (GAS can launched?) as stream receiver.

Longer Term (Space Station)

4. Prototype and demonstration systems for repair, material transport and propulsion - with possible requirement for molecular shields in initial tests.

5. Possible test of L.D.R. performance.

Longer Term (Non-Space Station)

6. Tests of: aeroassisted braking and planetary gas scavenging.

SUMMARY

- o Basic facility for initial development work is an instrumented, (video and other optical primarily), up to 100 m long, 1 m diameter flight tube held at ambient pressure and with capability of being selectively exposed to optical and physical local environments. Details could be worked out but not completed at present.

- o Other requirements would depend very much on specific use being investigated so that it is difficult to identify generic requirements without further study.

TDM 2544 Tethered Fluid Storage/Transfer

PI: MSFC/Georg von Tiesenhausen

Objective

To use a gravity-gradient stabilized tether attached o the space station, to produce an acceleration that will settle propellants. With settled propellants the refueling of orbital transfer vehicles, orbital maneuvering vehicles, and large satellites can be simplified.

Description

The depot will most probably be a liquid oxygen hydrogen, storage and transfer facility for an orbital transfer vehicle. To store these propellants the heat transfer into the tanks must be controlled using radiation coatings, superinsulated blankets, vapor cooled shields, and a thermodynamic vent system. To transfer these propellants to the orbital transfer vehicle, the depot will require liquid and gas lines, a pump or compressor, valving, and a means of attaching the OTV to the depot. The tether and fluid motion will also have controlled using a tether reel, fluid baffles, and probably an attitude control system and momentum wheels. This depot should be in place around 1995.

PROPELLANT STORAGE, TRANSFER, AND RELIQUEFACTION
TDMX 2572

JOHN MALONEY

OBJECTIVE: THE THREE PRINCIPAL OBJECTIVES OF THIS TDM ARE TO DEMONSTRATE

1. THE PASSIVE THERMAL CONTROL TECHNOLOGIES REQUIRED FOR LONG TERM STORAGE OF CRYOGENIC PROPELLANTS IN THE SPACE ENVIRONMENT,

2. THE ABILITY TO TRANSFER THESE CRYOGENS FROM ONE TANK TO ANOTHER IN A ZERO-GRAVITY ENVIRONMENT INCLUDING CONNECT, CHILLDOWN, FILL PURGING AND SAFING, AND DISCONNECT.

3. THE PERFORMANCE OF A PROPELLANT RELIQUEFACTION SYSTEM ON ORBIT.

PROPELLANT STORAGE, TRANSFER, AND RELIQUEFACTION
TDMX 2572

JOHN MALONEY

DESCRIPTION: EQUIPMENT

- SUPPLY AND RECEIVER TANKS
- RELIQUEFLIER
- SUPPORTING ACTIVE AND PASSIVE SYSTEMS

OPERATION

- INSTALL, CHECKOUT, AND STABLIZE SYSTEM
- CONDUCT SIX CHILLDOWN AND TRANSFER TESTS
- OPERATE RELIQUEFIER CONTINUOUSLY FOR TWENTY-NINE DAYS

EVALUATION

- PERFORMANCE OF SUPPLY TANK THERMAL CONTROL SYSTEM
- NO-VENT FILL OF RECEIVER TANK
- RELIQUEFIER COEFFICIENT OF PERFORMANCE AND RELIABILITY

PROPELLANT TRANSFER, STORAGE & RELIQUEFACTION TDM

TDMX 2572

Equipment	Wt (lb)
Receiver tank	95
Receiver tank acquisition system	65
Receiver tank MLI	25
Supply tank	170
Supply tank acquisition system	230
Supply tank MLI	108
Transfer lines	182
Data control & interface electronics	290
Electrical system	190
Shuttle interface lines	162
Supporting truss structure	580
Space station controls & displays	170
RMS	350
Propellant reliquefaction body structure	200
Propellant reliquefaction equip	600
Radiators	450
LH_2	2,032
Total	5,899

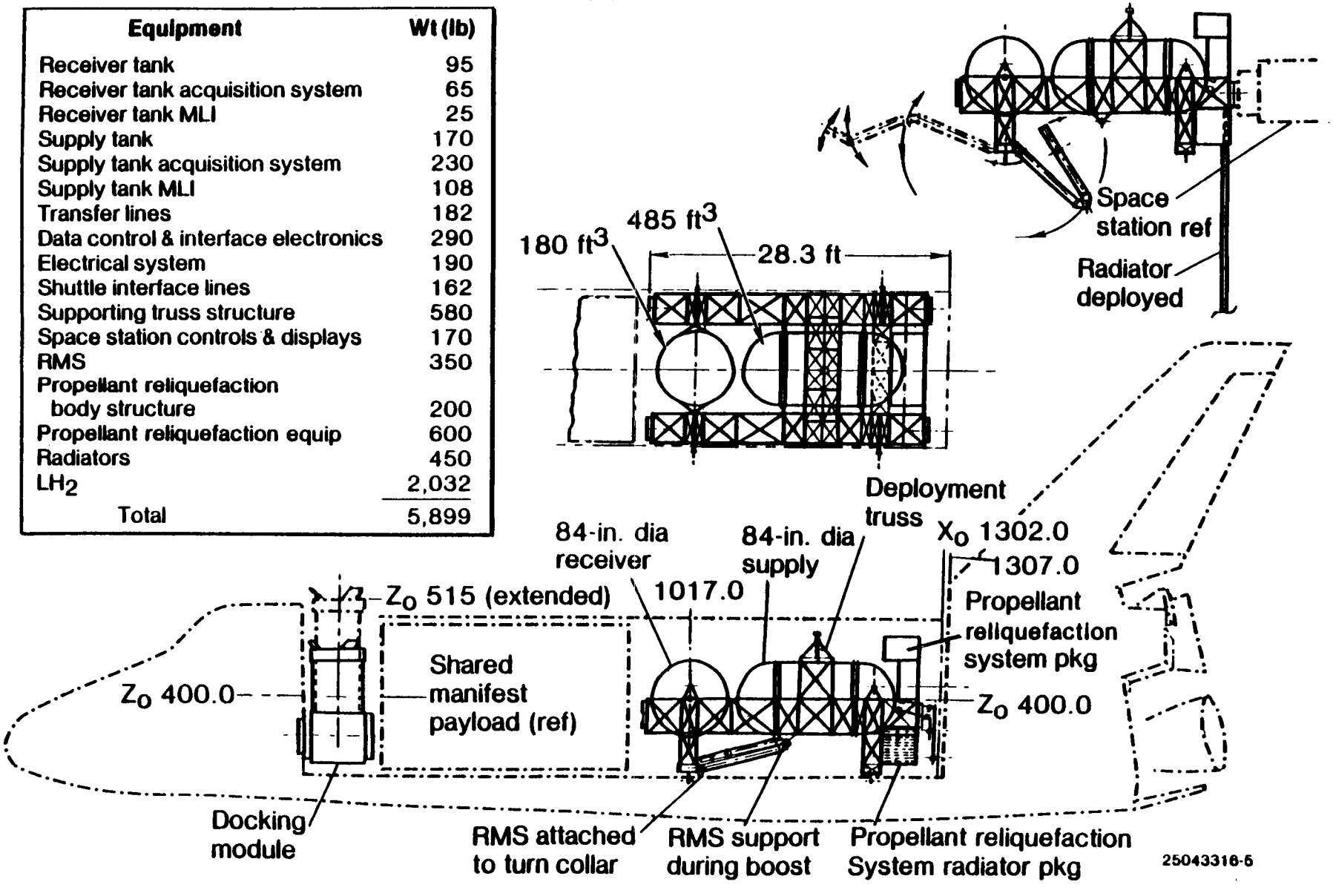

EXPERIMENT TITLE: CRYOGENIC PROPELLANT TRANSFER, STORAGE AND RELIQUEFACTION
TDMX2572

PROPOSED FLIGHT DATE - JANUARY 1993 YEAR

OPERATIONAL DAYS REQUIRED - 31

MASS - 3300 KG

VOLUME:

STORED: W _____ x L _____ x H _____ = _____ M^3

DEPLOYED: W ~~3.2~~ 5.0 x L ~~3.2~~ 10.0 x H ~~2.6~~ 5.0 = ~~32.5~~ 250 M^3

INTERNALLY ATTACHED NO (YES/NO)
EXTERNALLY ATTACHED YES (YES/NO)
FORMATION FLYING NO (YES/NO)

ORIENTATION (inertial, solar, earth, other) NOT CRITICAL

EXTRA-VEHICULAR ACTIVITY REQUIRED:

SET-UP: 3 Hrs/Day 1 No. of days

OPERATIONS: _____ Hrs/Day _____ No. of days _____ Interval

SERVICING: _____ Hrs/Day _____ No. of days _____ Interval

INTRA-VEHICULAR ACTIVITY REQUIRED:

SET-UP: 8 Hrs/Day 2 No. of days

OPERATIONS: 8.5 Hrs/Day 6 No. of days 6D Interval

SERVICING: 2 Hrs/Day 29 No. of days _____ Interval

POWER REQUIRED:

1.5 KW AC or DC (circle one)

24 Hrs/Day 29 No. of days

DATA RATE: 1.2 Megabits/second

DATA STORAGE: 2.16 Gigabits

Ultrasonic Fluid Measurement

W. Durgin

<u>Objective</u>: Determination of liquid quantity and configuration under static and dynamic conditions.

Important for: Consumption
Resupply
Manufacturing

<u>Methodology</u>: Ultrasonic sounding measure distance to liquid/vapor interface.

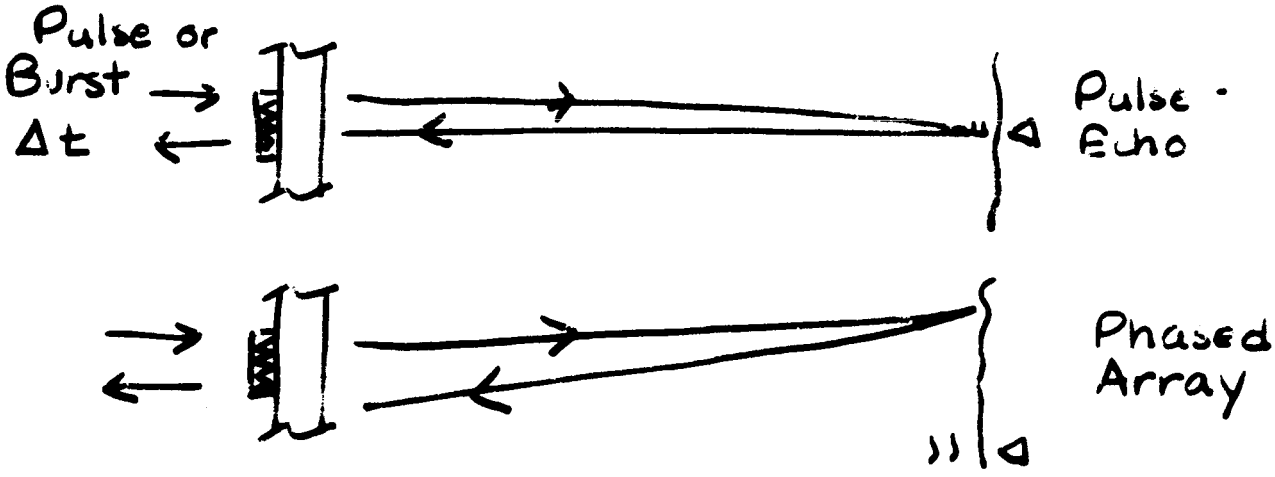

<u>Experiment</u>: Utilize tank with fluid stimulant.

Vary quantity
Replaceable transducers
Various accelerations

Ultrasonic Fluid Measurement

W. Durgin

<u>Issues</u>: Assume static case with small contact angle - liquid spreads to minimum energy configuration

- Minimum number of pulse - echo measurements to determine quantity and configuration

For dynamic case resulting from acceleration, heat transfer, resupply, etc. How many are needed?

Can phased arrays reduce the number of tank penetrations?

How should baffles and aquisition devices be placed to enable measurement?

Can the liquid motion be reasonably predicted based on acceleration or other perturbation such that the number of tank penetrations can be minimized?

Ultrasonic Fluid Measurement

W. Durgin

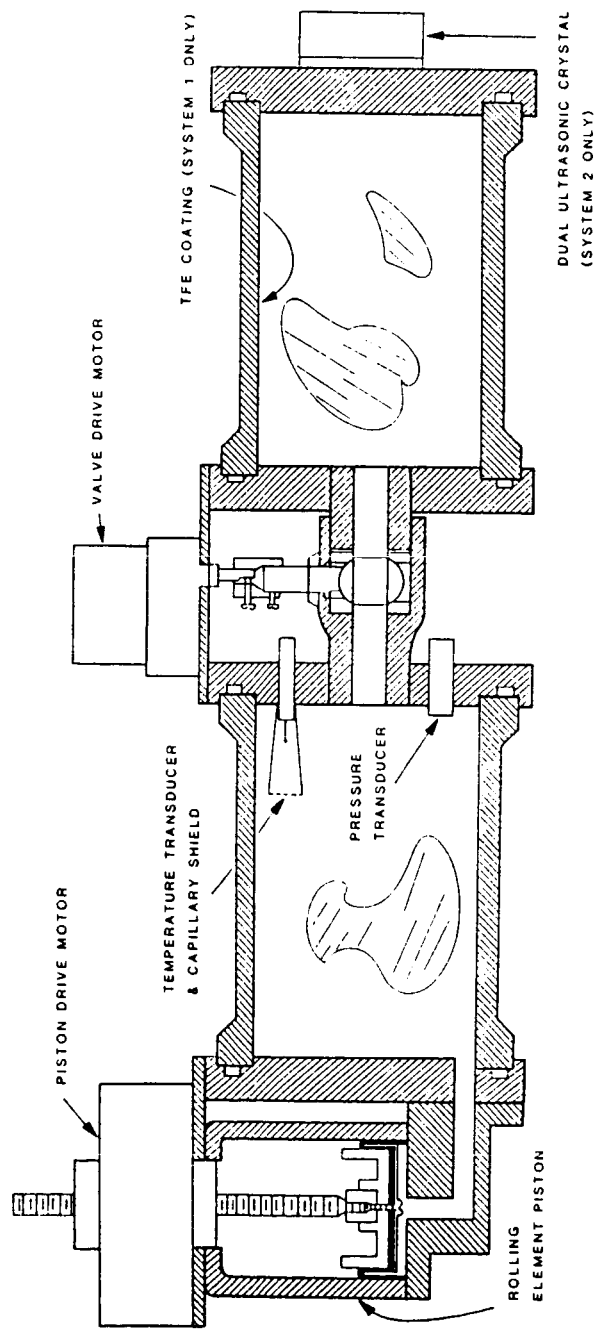

Experiment for G408
Shuttle Flight 1986

Experiment Title: Ultrasonic Fluid Measurement
W. Durgin
Proposed Flight Date: 1989 on
Operational Days Required: 10
Mass - 250 KG
Volume: 0.25 M^3
Stored: W 0.5 x L 0.5 x H 1.0 = 0.25 M^3
Deployed: W same x L x H = M^3

Internally Attached yes
Externally Attached yes
Formation Flying no

Orientation: Specified Accelerations

Extra-Vehicular Activity Required: None

Intra-Vehicular Activity Required:

Set-up:	4	Hrs/Day	1	No. of Days
Operations:	1	Hrs/Day	10	No. of Days
Servicing:	4	Hrs/Day	4	No. of Days

Power Required:

10 KW DC
24 Hrs/Day 10 No. of Days

Data Rate: low Megabits / second

Data Storage: 10 Megabits

TWO PHASE ~~LIQUID~~ FLUID MANAGEMENT FOR LIQUID METALS

TED MROZ

NUCLEAR & THERMAL SYSTEMS OFFICE

SOLAR DYNAMIC PROJECT

LEWIS RESEARCH CENTER

TWO PHASE FLUID MANAGEMENT FOR LIQUID METALS

EXPERIMENT DESCRIPTION

THE EXPERIMENT IS DESIGNED WITH AN EXTERNAL ELECTRICALLY HEATED SMALL SCALE (~10KW) LIQUID METAL LOOP TO SIMULATE A HIGH-TEMPERATURE RANKINE CYCLE SPACE POWER SYSTEM WHICH GENERATES A VAPOR WITH A TEST BOILER AND AN EM PUMP. IN TURN, THE VAPOR IS EXPANDED BY A NOZZLE (SIMULATING A TURBINE) AND THE EXHAUST IS EXPERIMENTALLY CONDENSED IN ONE OR MORE TEST CONDENSERS TO EVALUATE EFFICIENCY OF MICROGRAVITY CONDENSERS AT LOW TEMPERATURE AND LOW PRESSURE (HIGH CYCLE EFFICIENCY) CONDITIONS. HEAT PIPES MAY BE EMPLOYED TO SIMULATE A SYSTEM RADIATOR.

SUBSTANTIAL GROUND TESTING AND ANALYSIS WILL BE CONDUCTED TO VERIFY EXPERIMENT DESIGN, PERFORMANCE AND SAFETY DESIGN REQUIREMENTS.

TWO PHASE FLUID MANAGEMENT
FOR
LIQUID METALS

EXPERIMENT OBJECTIVES

THE OVERALL OBJECTIVE OF THIS EXPERIMENT IS TO DEVELOP THE R & T BASE NEEDED BY HIGH TEMPERATURE RANKINE CYCLE SPACE POWER SYSTEMS FOR DESIGN OF FORCED FLOW CONDENSATION SYSTEMS UNDER MICROGRAVITY CONDITIONS USING WETTING AND NON-WETTING LIQUID METAL FLUIDS. THIS OBJECTIVE ENCOMPASSES SUCCESSFUL VAPOR CONDENSATION AT THE LOWEST PRESSURE CONSISTENT WITH MAXIMIZING CYCLE EFFICIENCY & MINIMUM ELECTRO-MAGNETIC PUMP NPSH REQUIREMENTS AND MINIMIZING HEAT TRANSFER CONACT AREA.

SOLAR RANKINE CYCLE

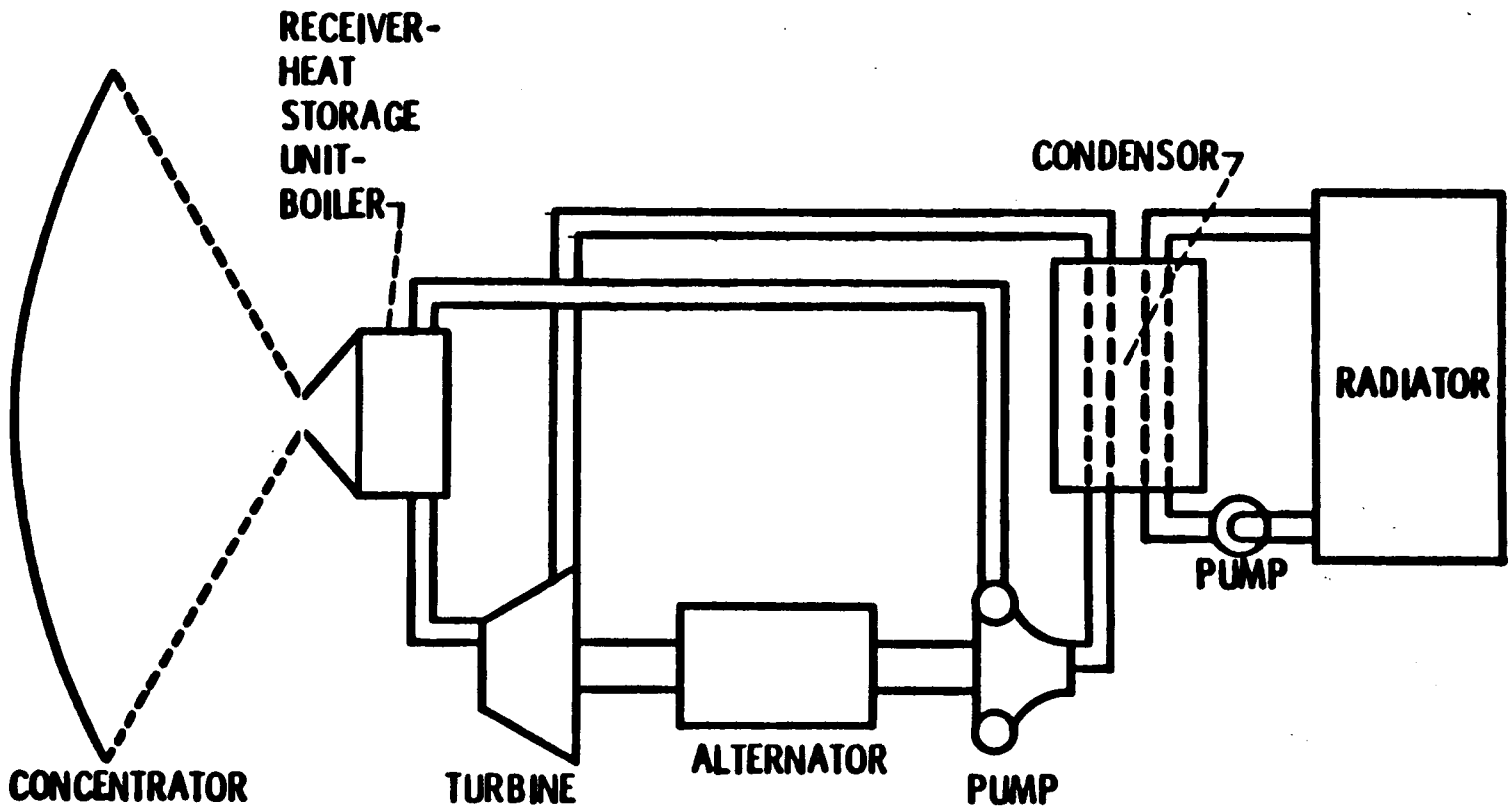

CD-85-15999

EXPERIMENT TITLE: TWO PHASE FLUID MANAGEMENT FOR LIQUID METALS

PROPOSED FLIGHT DATE - TBD YEAR

OPERATIONAL DAYS REQUIRED - 2 - 30

MASS - TBD KG

VOLUME: TBD

STORED: W ___ x L ___ x H ___ = ___ M^3

DEPLOYED: W ___ x L ___ x H ___ = ___ M^3

INTERNALLY ATTACHED ___ (~~YES/NO~~)
EXTERNALLY ATTACHED ___ (~~YES/NO~~)
FORMATION FLYING ___ (~~YES/NO~~)

ORIENTATION (inertial, solar, earth, other) SPACE

EXTRA-VEHICULAR ACTIVITY REQUIRED:

SET-UP: 8 Hrs/Day 1 No. of days

OPERATIONS: 24 Hrs/Day 2-30 No. of days — Interval

SERVICING: 0 Hrs/Day — No. of days — Interval

INTRA-VEHICULAR ACTIVITY REQUIRED:

SET-UP: — Hrs/Day — No. of days

OPERATIONS: — Hrs/Day — No. of days — Interval

SERVICING: — Hrs/Day — No. of days — Interval

POWER REQUIRED:

TBD KW AC or DC (circle one)

TBD Hrs/Day TBD No. of days

DATA RATE: TBD Megabits/second

DATA STORAGE: TBD Gigabits

SPACE EXPERIMENTS OFFICE

NASA

TWO-PHASE FLUID BEHAVIOR AND MANAGEMENT

JACK SALZMAN

OBJECTIVES: EXPLOIT THE UNIQUE CAPABILITIES OF EXISTING AND FUTURE MICROGRAVITY TEST FACILITIES TO PROVIDE A BASIC UNDERSTANDING OF TWO-PHASE FLUID BEHAVIOR UNDER REDUCED GRAVITY CONDITIONS AND TO DEVELOP THE SPECIFIC TECHNOLOGY DATA BASES NEEDED TO ENABLE TWO-PHASE FLUID MANAGEMENT DURING END-OF-THE-CENTURY SPACE MISSIONS.

- o DEFINE A PROGRESSIVE SERIES OF COORDINATED MICROGRAVITY FLUID DYNAMICS AND HEAT TRANSFER EXPERIMENTS.
  - ANALYSIS AND COMPUTATIONAL MODELING
  - GROUND-BASED MICROGRAVITY TESTS
  - SHUTTLE EXPERIMENT REQUIREMENTS
  - SPACE STATION EXPERIMENT REQUIREMENTS
- o ACQUIRE BASIC UNDERSTANDING OF CONTROLLING PROCESSES/ASSEMBLE GENERIC DATA BASES.
  - FREE SURFACE BEHAVIOR
  - TWO-PHASE FLOWS
  - MULTIPHASE HEAT TRANSFER
  - BUBBLE/DROPLET DYNAMICS
- o DEVELOP COMPONENT/SYSTEM TECHNOLOGY DATA BASES
  - CONTAINMENT/CONTROL/TRANSFER DEVICES
  - LIQUID-GAS SEPARATORS
  - PUMPS/CONDENSORS
  - SENSORS/CONTROL INSTRUMENTATION

TWO-PHASE FLUID BEHAVIOR AND MANAGEMENT

DESCRIPTION:

- o MICROGRAVITY EXPERIMENTS FOCUSED ON PROVIDING EMPIRICAL DATA TO GUIDE AND VALIDATE ANALYTICAL AND COMPUTATIONAL MODELING OF TWO-PHASE FLUID BEHAVIOR AND PHENOMENA.
  - EXPAND ON EXISTING KNOWLEDGE/DATA BASES
  - INTEGRATE RESULTS FROM FUTURE MISSIONS (E.G., CFMFE, TDM'S, CODE E FLUID PHYSICS EXPERIMENTS)

- o EXPERIMENTS TAILORED TO EXPLOIT UNIQUE CAPABILITIES OF AVAILABLE FACILITIES.
  - GROUND BASED FACILITY EXPERIMENTS (HIGHLY FLEXIBLE/ACCESSIBLE, INEXPENSIVE)
  - SHUTTLE EXPERIMENTS (VARIABLE/CONTROLLED G-LEVELS, LIMITED EXPERIMENTER INTERACTION)
  - SPACE STATION EXPERIMENTS (HIGH QUALITY LONG DURATION MICROGRAVITY, HARDWARE/RESOURCE SHARING)

- o EXPERIMENTS STRUCTURED TO PROGRESSIVELY BUILD UNDERSTANDING AND DATA BASES, E.G.

Ø1	Ø2	Ø3
FREE SURFACE CONFIGURATION	FREE SURFACE DYNAMICS	CONTAINMENT/CONTROL DEVICES
FREE SURFACE STABILITY	MULTIPHASE HEAT TRANSFER	PUMP/FLOW LOOPS
ADIABATIC FLOW	FLOW BOILING	BOILERS/CONDENSORS
BUBBLE/DROPLET FORMATION, ETC.	BUBBLE/DROPLET COALESCENCE, ETC.	LIQUID-GAS SEPARATORS, ETC.

- o CONCURRENT DEVELOPMENT OF SENSORS AND INSTRUMENTATION FOR MASS/QUALITY/FLOW MEASUREMENTS.

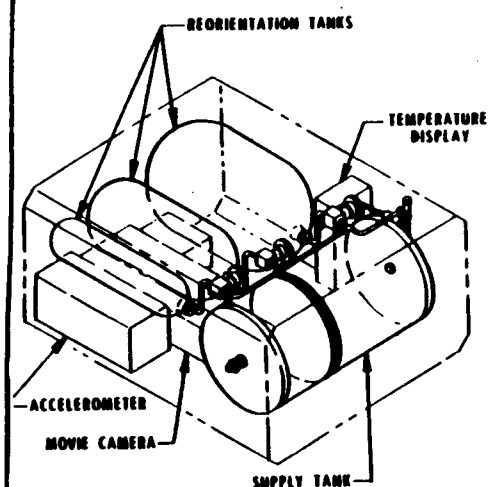

PRECURSOR SHUTTLE EXPERIMENT

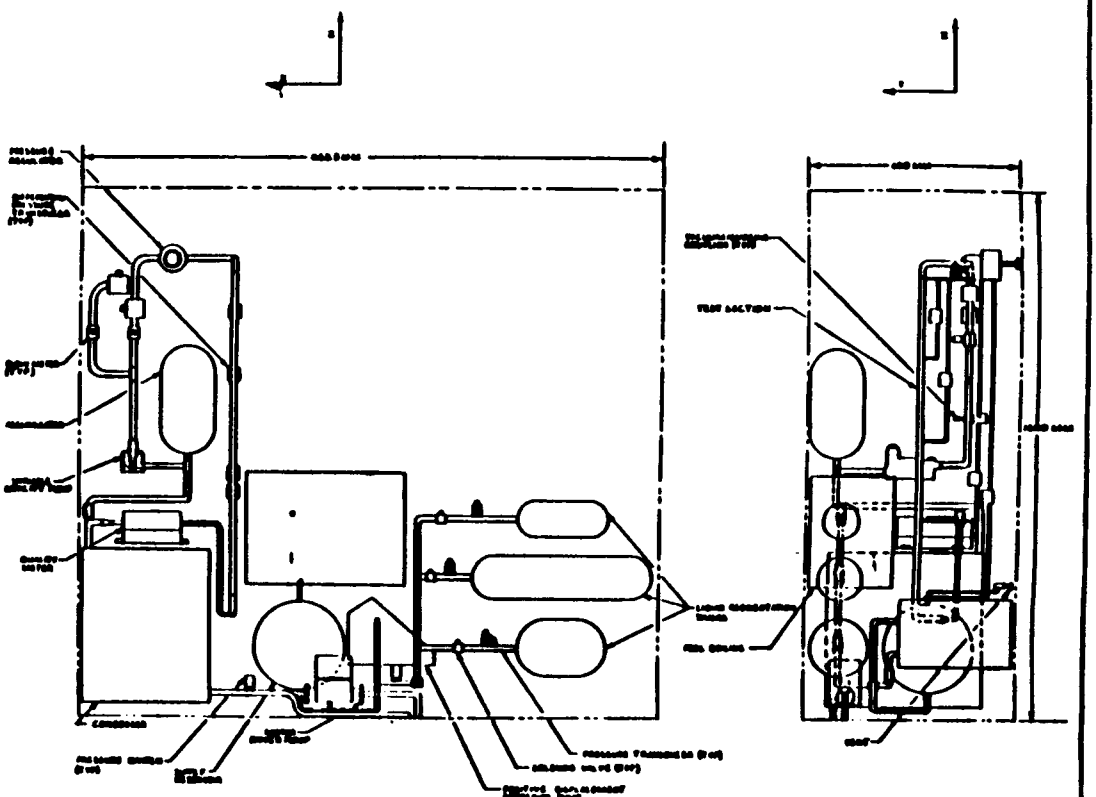

SPACE STATION MULTIPLE EXPERIMENT RACK

TYPICAL TWO-PHASE FLUID BEHAVIOR AND MANAGEMENT EXPERIMENTS

(BEECH AIRCRAFT CORPORATION, CONTRACT NAS 3-23160)

TWO-PHASE FLUID BEHAVIOR AND MANAGEMENT

TYPICAL SPACE STATION EXPERIMENT REQUIREMENTS

PROPOSED FLIGHT DATE:	1993
OPERATIONAL DAYS:	5 DAYS AT REGULAR INTERVALS (3 - 4 PER YEAR)
MASS:	200 KG (50 KG OF CONSUMABLES)
VOLUME:	W (0.8M) x L (1.5M) x H (2.0M) = $2.4M^3$
ATTACHMENT:	FIXTURE INSIDE A LABORATORY FACILITY
ORIENTATION:	SPACE STATION LOCATION WHICH MINIMIZES THE EFFECTIVE G-LEVEL
NO EXTRA-VEHICULAR ACTIVITY	
INTRA-VEHICULAR ACTIVITY REQUIRED:	8 HRS/DAY FOR 5 DAYS (3 - 4 TIMES PER YEAR)
POWER REQUIRED:	1.3 KW DC
	4 HRS/DAY FOR 5 DAYS (3 - 4 TIMES PER YEAR)
DATA RATE:	LESS THAN MEGABITS/SECOND
DATA STORAGE:	LESS THAN GIGABITS

LIQUID-VAPOR FLOW REGIMES IN MICROGRAVITY FLIGHT EXPERIMENT

EXPERIMENT OBJECTIVE

THE OVERALL OBJECTIVE IS TO PRODUCE A DATA BASE FOR THE BEHAVIOR OF TWO-PHASE FLUID (GAS/LIQUID) FLOWS IN THE ABSENCE OF GRAVITY. THIS DATA BASE IS NEEDED TO AID DEVELOPMENT OF A NEW GENERATION OF SYSTEMS FOR THERMAL CONTROL OF HIGH-POWERED SPACECRAFT, FLUID MANAGEMENT ABOARD SPACECRAFT, AND TO SUPPORT SCIENTIFIC AND INDUSTRIAL ACTIVITIES IN LOW EARTH ORBIT. THE FIRST EXPERIMENTAL TASK THAT WILL BE UNDERTAKEN IS THE DEFINITION OF ADIABATIC TWO-PHASE FLUID FLOW REGIMES IN THE MICROGRAVITY ENVIRONMENT. THESE EXPERIMENTS ARE OF SHORT DURATION AND WILL BE CARRIED OUT IN THE MIDDECK OF THE SHUTTLE ORBITER.

JOHN R. SCHUSTER

LIQUID-VAPOR FLOW REGIMES IN MICROGRAVITY FLIGHT EXPERIMENT

EXPERIMENT DESCRIPTION

THE EXPERIMENTAL SYSTEM WILL BE CONTAINED IN TWO LOCKERS ON THE SHUTTLE ORBITER MIDDECK. THE FLUID SYSTEM THAT WILL BE STUDIED CONSISTS OF A COCURRENT FLOW OF AIR AND WATER IN A TRANSPARENT TEST SECTION. CHARACTERIZATION OF THE FLOW WILL BE ACCOMPLISHED BY MEASURING PARAMETERS SUCH AS PRESSURE DROP, FLOWRATE, QUALITY, AND LIQUID FILM THICKNESS, AND BY CINEMATOGRAPHIC RECORDING TO ESTABLISH THE REPRESENTATIVE FLOW REGIMES AND TRANSITIONS. AIR WILL BE SUPPLIED FROM THE LOCKER INTERIOR BY A BLOWER AND WILL JOIN THE WATER AT THE TEST SECTION. THE MIXTURE WILL FLOW ADIABATICALLY DOWN THE TEST SECTION, AND ENTER A GAS/LIQUID SEPARATOR. THE AIR WILL BE EXHAUSTED TO THE LOCKER INTERIOR, AND THE WATER WILL BE PUMPED BACK TO THE TEST SECTION. THE ORBITER REACTION CONTROL SYSTEM (RCS) MAY BE USED TO PROVIDE CONTROLLED, SUSTAINED ACCELERATION FOR LOW GRAVITY SIMULATION. INSTRUMENTATION DATA WILL BE RECORDED FOR LATER PROCESSING.

JOHN R. SCHUSTER

LIQUID-VAPOR FLOW REGIMES IN MICROGRAVITY FLIGHT EXPERIMENT

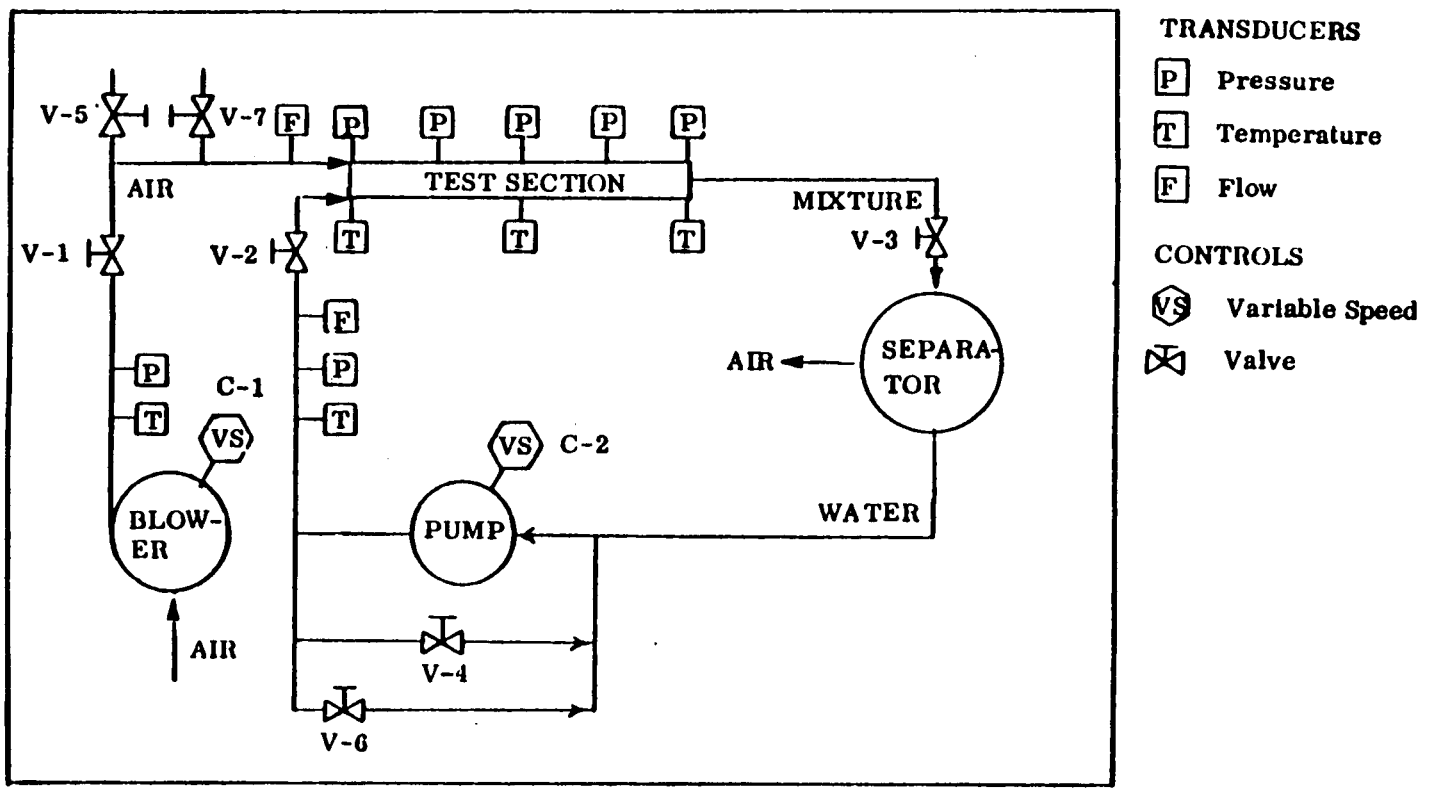

Flow Regime/Pressure Drop Experiment Flow Schematic

JOHN R. SCHUSTER

EXPERIMENT TITLE: Liquid-Vapor Flow Regimes in Microgravity Flight Experiment

PROPOSED FLIGHT DATE - 1988 (Shuttle) YEAR

OPERATIONAL DAYS REQUIRED - 1

MASS - 200 KG

VOLUME:

STORED: W 0.4 x L 0.5 x H 0.5 = 0.1 M^3

DEPLOYED: W _____ x L _____ x H _____ = _____ M^3

INTERNALLY ATTACHED Yes (YES/NO)
EXTERNALLY ATTACHED No (YES/NO)
FORMATION FLYING No (YES/NO)

ORIENTATION (inertial, solar, earth, other) N/A

EXTRA-VEHICULAR ACTIVITY REQUIRED:

SET-UP: _____ Hrs/Day _____ No. of days

OPERATIONS: _____ Hrs/Day _____ No. of days _____ Interval

SERVICING: _____ Hrs/Day _____ No. of days _____ Interval

INTRA-VEHICULAR ACTIVITY REQUIRED:

SET-UP: 0.5 Hrs/Day 1 No. of days

OPERATIONS: 1.5 Hrs/Day 1 No. of days 1 Interval

SERVICING: _____ Hrs/Day _____ No. of days _____ Interval

POWER REQUIRED:

2.0 KW AC or DC (circle one)

1.5 Hrs/Day 1 No. of days

DATA RATE: _____ Megabits/second

DATA STORAGE: _____ Gigabits

John R. Schuster

LONG TERM CRYOGENIC STORAGE FACILITY DEMONSTRATION

EXPERIMENT OBJECTIVE

THE OVERALL OBJECTIVE IS TO DEMONSTRATE THE PERFORMANCE OF KEY THERMAL AND FLUID MANAGEMENT TECHNOLOGIES REQUIRED FOR AN ORBITAL CRYOGENIC PROPELLANT STORAGE FACILITY, VERIFYING NASA GOALS OF LONG-TERM CRYOGENIC STORAGE WITH A MINIMUM OF LIQUID LOSS, EASE OF UTILIZATION, AND MINIMUM MAINTENANCE. ON-ORBIT TESTING WILL INCLUDE STS SHORT-DURATION TESTS AND REASONABLY LONG (3-5 YEARS) DURATION TESTS ABOARD THE IOC SPACE STATION. GOALS WILL BE TO VERIFY INITIAL OPERABILITY OF SYSTEMS IN THE MICROGRAVITY, LOW EARTH ORBIT ENVIRONMENT, AND THEN TO EVALUATE PERFORMANCE OVER AN EXTENDED OPERATING PERIOD, WITH OPPORTUNITIES FOR ON-ORBIT MAINTENANCE AND REPLACEMENT/REPAIR OF COMPONENTS.

JOHN R. SCHUSTER

LONG TERM CRYOGENIC STORAGE FACILITY DEMONSTRATION

EXPERIMENT DESCRIPTION

THE EXPERIMENTAL SYSTEMS TESTED IN THE STS AND AT THE IOC SPACE STATION WILL BE BASICALLY THE SAME. FOR THE STS THE EXPERIMENT WILL REMAIN IN THE CARGO BAY. IT WILL INCLUDE A PREFILLED HYDROGEN STORAGE DEWAR AND AN EXPERIMENTAL TANK. THERE WILL BE PROVISIONS FOR FILLING THE EXPERIMENTAL TANK ONCE ORBIT IS ACHIEVED. PROTOTYPICAL THERMAL AND FLUID MANAGEMENT FEATURES WILL BE PROVIDED, INCLUDING THICK MULTILAYER INSULATION, LOW CONDUCTANCE PENETRATIONS, A LOW α/ε SURFACE COATING, A THERMODYNAMIC VENT SYSTEM, AND POSSIBLY A VAPOR-COOLED SHIELD AND PARA-ORTHO CONVERTER FOR BOILOFF. ACTIVE THERMAL CONTROL FEATURES COULD INCLUDE REFRIGERATION OR RELIQUEFACTION EQUIPMENT. FLUID MANAGEMENT FEATURES COULD INCLUDE A LIQUID ACQUISITION DEVICE, LIQUID TRANSFER COMPONENTS AND MASS GAUGING. THE STS SHORT-DURATION TESTS WILL NOT REQUIRE EVA; SHUTTLE CREW INTERACTION WILL BE DIRECTED TO PERFORMING THE EXPERIMENT, WITH DATA RECORDED FOR LATER ANALYSIS. FOR THE IOC SPACE STATION TESTS THE EXPERIMENT WILL BE DEPLOYED ON THE SPACE STATION STRUCTURE, AND EVA WOULD BE USED FOR REPLACEMENT OR REPAIR OF CERTAIN COMPONENTS, SUCH AS A REFRIGERATION UNIT. TELEPRESENCE OPERATIONS COULD ALSO BE USED FOR SYSTEM SERVICING AND ORU REPLACEMENT.

JOHN R. SCHUSTER

LONG TERM CRYOGENIC STORAGE FACILITY DEMONSTRATION

POSSIBLE IOC SPACE STATION TEST ARTICLE

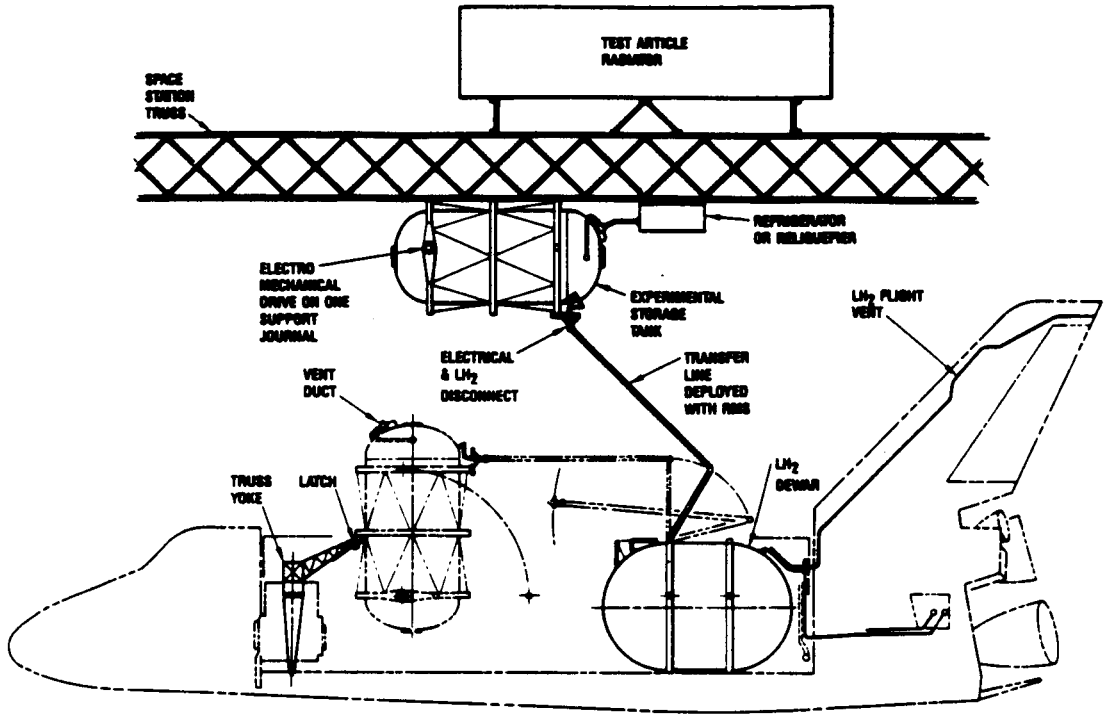

POSSIBLE STS MISSION TEST ARTICLE

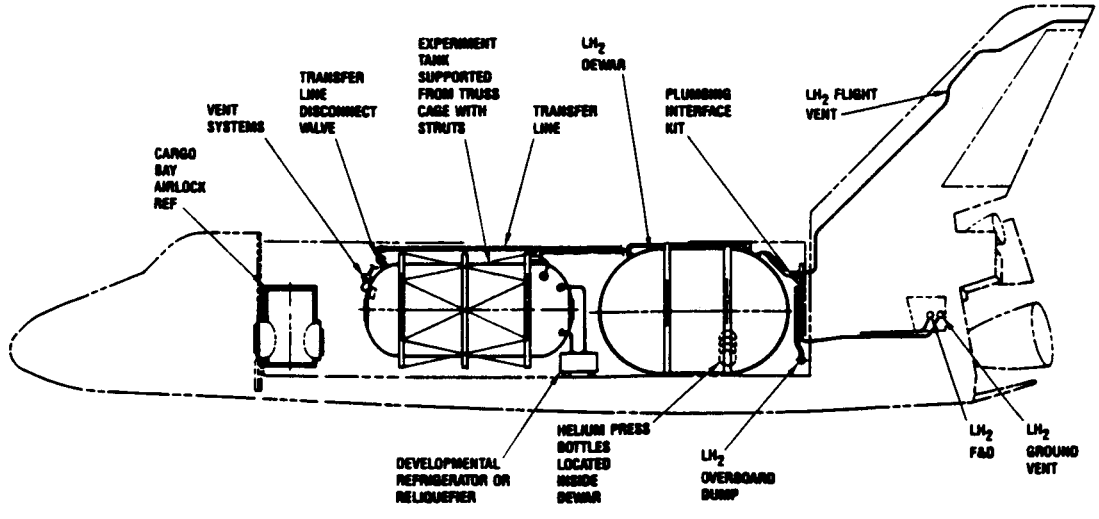

EXPERIMENT TITLE: Long Term Cryogenic Storage Facility Demonstration

PROPOSED FLIGHT DATE - 1991 (Shuttle) 1993 (IOC Station) YEAR

OPERATIONAL DAYS REQUIRED - 1825

MASS - 600 KG + Dewar Mass

VOLUME:

STORED: W 2 x L 3.5 x H 2 = 14 M^3

DEPLOYED: W 2 x L 7 x H 6 = 84 M^3 + Dewar Volume

INTERNALLY ATTACHED No (YES/NO)
EXTERNALLY ATTACHED Yes (YES/NO)
FORMATION FLYING No (YES/NO)

ORIENTATION (inertial, solar, earth, other) Earth

EXTRA-VEHICULAR ACTIVITY REQUIRED:

SET-UP: 16 Hrs/Day 1 No. of days

OPERATIONS: _____ Hrs/Day _____ No. of days _____ Interval

SERVICING: 4 Hrs/Day 1 No. of days 180 Interval

INTRA-VEHICULAR ACTIVITY REQUIRED:

SET-UP: _____ Hrs/Day _____ No. of days

OPERATIONS: _____ Hrs/Day _____ No. of days _____ Interval

SERVICING: _____ Hrs/Day _____ No. of days _____ Interval

POWER REQUIRED:

1.0 KW (AC) or DC (circle one)

24 Hrs/Day 1825 No. of days

DATA RATE: _____ Megabits/second

DATA STORAGE: _____ Gigabits

IN-SPACE RT&E WORKSHOP

FLUID MANAGEMENT PANEL

R. JOHN HANSMAN
DEPT. OF AERO. & ASTRO.
MIT

- OVERVIEW OF MIT LOW G FLUID EFFORT
  - FLUID STRUCTURE INTERACTIONS
  - INSTRUMENTATION
- COMMENTS ON IN-SPACE TESTING

FLUID/STRUCTURE INTERACTION

OBJECTIVE:
- o SIMPLE EXPERIMENTS TO VALIDATE ANALYSIS & GROUND BASED TESTING
- o ORBITAL PARAMETER TESTING

DESCRIPTION:
- o MOTIVATED BY HIGH FLUID MASS FRACTIONS
- o SIMPLE COUPLED FLUID/STRUCTURE EXPERIMENTS TO VALIDATE AND SUPPORT
  - o ANALYTICAL MODELS
  - o GROUND BASED TESTING
  - o LOW G SIMULATION
- o NONLINEAR EFFECTS IMPORTANT

REQUIREMENTS:
- o CREW INTERACTION
- o DATA ACQUISITION
- o FLUID MEASUREMENT SYSTEM
- o NON WATER BASED FLUIDS

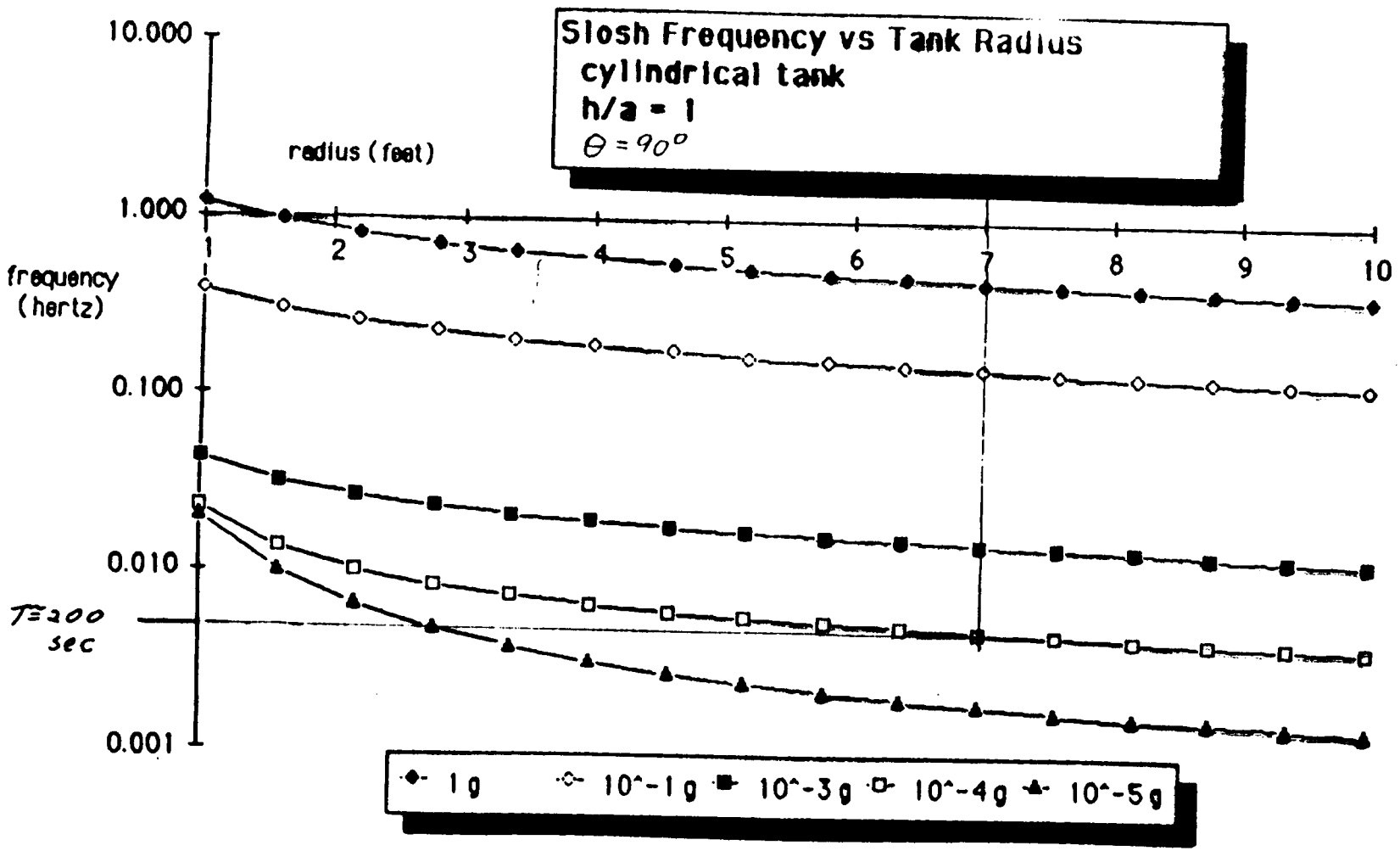

1ST LATERAL SLOSH FREQUENCY vs. TANK RADIUS FOR A CYLINDRICAL TANK AT SEVERAL GRAVITY LEVELS. THE CONTACT LINE OF THE FREE SURFACE AND THE TANK WALL IS FREE (NO HYSTERESIS). CONTACT LINE STICKING CAN INCREASE THIS FREQUENCY BY A FACTOR OF 5 IN LOW GRAVITY FOR VARIOUS FLUIDS.

ORBITAL FLUID MEASUREMENT

OBJECTIVE: DEVELOP AND VALIDATE MEASUREMENT SYSTEMS FUNCTIONAL IN THE ORBITAL ENVIRONMENT

- o DIAGNOSTIC
- o OPERATIONAL GUAGING

DESCRIPTION: DIFFICULT MEASUREMENT PROBLEM

- o NEEDED FOR: FLIGHT EXPERIMENT SUPPORT
  FLUID MANAGEMENT
  SERVICING
- o POTENTIAL SYSTEM:
  ULTRASONIC
  RF
  NUCLEAR
  INFRASONIC, PVT
- o 1D FLUID CONFIGURATIONS

REQUIREMENTS:

- o FLIGHT EVALUATION OF GUAGING CONCEPTS
- o DIAGNOSTIC SUPPORT FOR FLUID MANAGEMENT EXPERIMENTS

BASIC LOW G FLUIDS EXPERIMENTS

OBJECTIVE: FURTHER UNDERSTAND FLUID BEHAVIOR IN THE MICROGRAVITY ENVIRONMENT

DESCRIPTION: NEED SMALL SCALE EXPERIMENTS TO STUDY SPECIFIC FLUID BEHAVIOR

- o CONTACT ANGLE
- o MULTIPLE PHASE
  - BOILING
- o MICROCONVECTION
  - MARINGONI
- o RELAXATION TIME EXPERIMENTS
- o SURFACE TENSION DRIVEN SYSTEMS
- o NONLINEAR FLUID BEHAVIOR

REQUIREMENTS: SMALL EXPERIMENT FACILITY

- o CREW INTERACTION
- o DATA ACQUISITION
- o FLUID MEASUREMENT SYSTEMS
- o NON WATER BASED FLUIDS
- o CRYOS

QUANTIZED VORTEX STRUCTURE IN SUPERFLUID HELIUM

INVESTIGATORS

P. V. MASON
D. D. ELLEMAN
E. TWARD
T. G. WANG
D. PETRAC
H. JACKSON

OCTOBER 8-10, 1985

IN-SPACE RESEARCH, TECHNOLOGY, AND ENGINEERING WORKSHOP

- EXPERIMENT OBJECTIVE

The objective of this experiment is to investigate the formation and distribution of quantized vortices in freely suspended rotating drops of superfluid helium.

Helium below 2.17 Kelvin undergoes a transition to a quantum liquid in a ground state, in which it is unable to support rotation. When bulk helium is set into rotation it is threaded by vortices of normal helium, each of which has one quantum of rotation. The quantitative study of such vortices would be greatly enhanced by observing them in freely suspended drops, which is only possible in a near zero-g environment.

PROPERTIES OF SUPERFLUID HELIUM

TECHNOLOGICAL

- O COLDEST READILY AVAILABLE CRYOGEN; 0.8 KELVIN
- O THERMAL SUPERCONDUCTOR; 1000 X COPPER
  - O HIGH CONDUCTIVITY MAINTAINED IN THIN FILMS
- O EXHIBITS FOUNTAIN PRESSURE
  - O USEFUL FOR LIQUID VAPOR SEPARATION IN ZERO GRAVITY
- O VISCOSITY EXTREMELY LOW AND NON-LINEAR

SCIENTIFIC

- O EXHIBITS EXTREMELY COMPLEX BEHAVIOR
  - O APPEARS TO BE TWO INTERPENETRATING LIQUIDS
- O ALLOWS EXTREMELY PRECISE TESTS OF THEORIES OF COLLECTIVE MOTIONS AND CRITICAL POINT PHENOMENA

PVM/9-18-85
PAGE 2

EXPERIMENT DESCRIPTION

The experiment will be contained in a cryostat capable of maintaining a temperature of 2 Kelvin (-172 C). A three-axis acoustic suspension system will be used to suspend a drop of liquid helium of 1 to 2 cm in diameter. The drop will be rotated by varying the phasing of the excitation on two axes.

The vortices will be made visible by decorating them with micro spheres. Once decorated, they will be observed by optical means; closed circuit TV will be used for low-resolution real-time observation, and cine cameras for permanent storage of high resolution images.

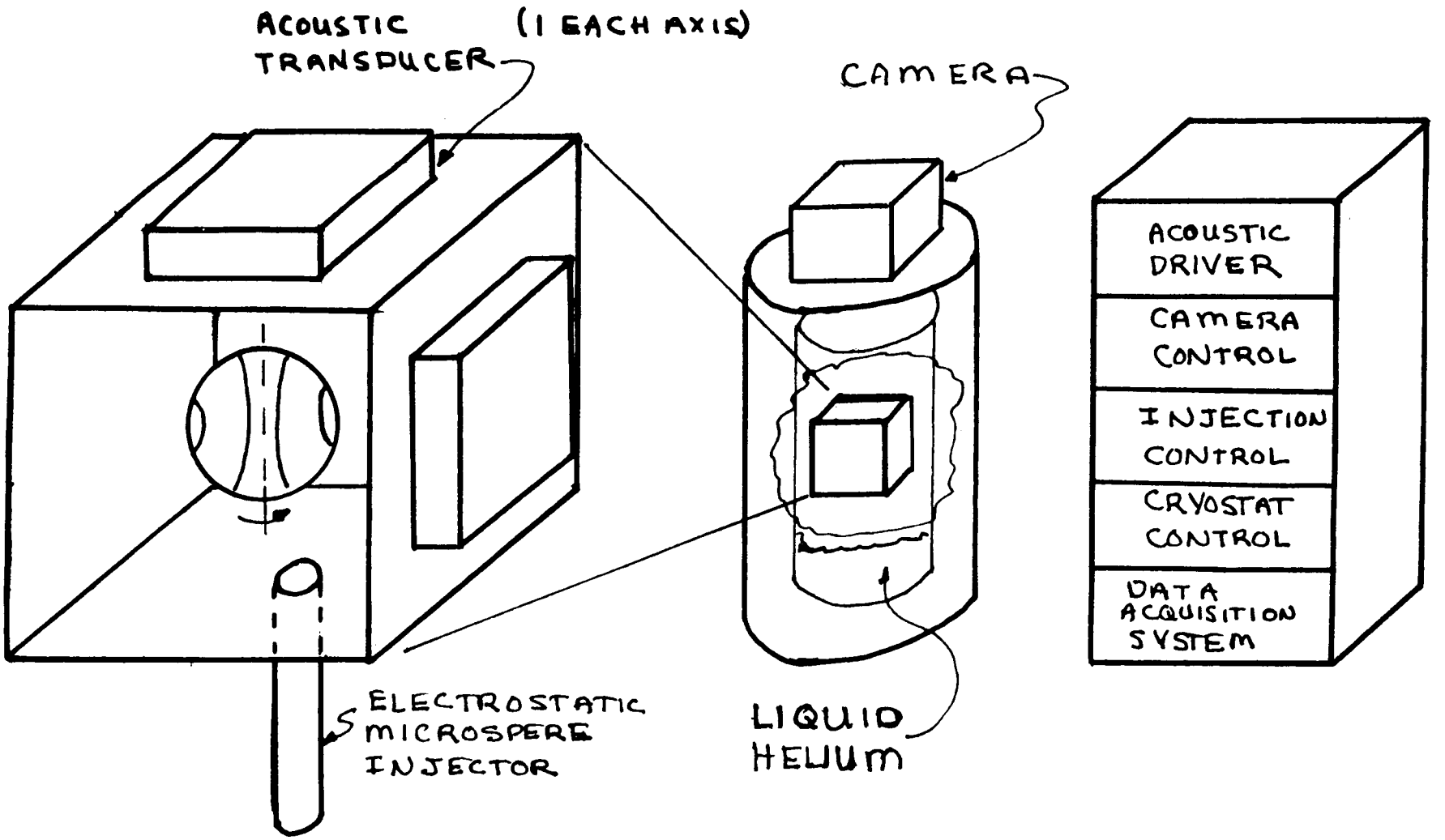

QUANTIZED VORTEX EXPERIMENT

ACCOMMODATION REQUIREMENTS

EXPERIMENT TITLE: QUANTIZED VORTICES IN SUPERFLUID HELIUM

PRINCIPAL INVSTIGATOR(S): P. MASON, D. ELLEMAN, D. PETRAC, M. TWARD, H. JACKSON, T. WANG

ADDRESS: M/S 183-901 JET PROPULSION LABORATORY, PASADENA, CA 91109

PROPOSED FLIGHT DATE 1991 – 1995 YEAR(S)

OPERATIONAL DAYS REQUIRED 10 (PER YEAR)

MASS 200 KG

VOLUME:

STORED W 1m x L 1m x H 2m = 2m³ M3

DEPLOYED W 1m x L 1m x H 2m = 2m³ M3

INTERNALLY ATTACHED YES (YES/NO)
EXTERNALLY ATTACHED NO (YES/NO)
FORMATION FLYING NO (YES/NO)

ORIENTATION (inertial, solar, earth, other) INERTIAL

EXTRA-VEHICULAR ACTIVITY REQUIRED: NONE

SET-UP:	_____	Hrs/Day	_____	No. of days.		
OPERATIONS:	_____	Hrs/Day	_____	No. of days.	_____	Interval
SERVICING:	_____	Hrs/Day	_____	No. of days.	_____	Interval

INTRA-VEHICULAR ACTIVITY REQUIRED:

SET-UP:	2	Hrs/Day	10	No. of days.		
OPERATIONS:	5	Hrs/Day	10	No. of days.	_____	Interval
SERVICING:	1	Hrs/Day	10	No. of days.	_____	Interval

POWER REQUIRED:

1 KW AC or DC (circle one)

5 Hrs/Day 10 No. of days

DATA RATE: 0.1 Megabits/second

DATA STORAGE: 10 Gigabits

SPECIAL REQUIREMENT: LIQUID HELIUM

JPL

SPACELAB 2 SUPERFLUID HELIUM EXPERIMENT

PROGRAM DESCRIPTION

PROGRAM START	SEPTEMBER 1977	
LAUNCH AND FLIGHT	JULY-AUGUST 1985, 8 DAYS	
PROGRAM END	SEPTEMBER 1986	
TOTAL COST	$4.07 MILLION	
INVESTIGATORS	P. MASON	PI AND EXPT. MANAGER
	D. COLLINS	COINVESTIGATOR
	E. ELLEMAN	"
	H. JACKSON	"
	D. PETRAC	" AND INSTRUMENT MANAGER
	T. WANG	COINVESTIGATOR
ENGINEERING	P. COWGILL	INSTRUMENT MANAGER
	R. SPENCER	ELECTRONICS COGNIZANT ENGINEER
	A. ENGEL	ELECTRONICS

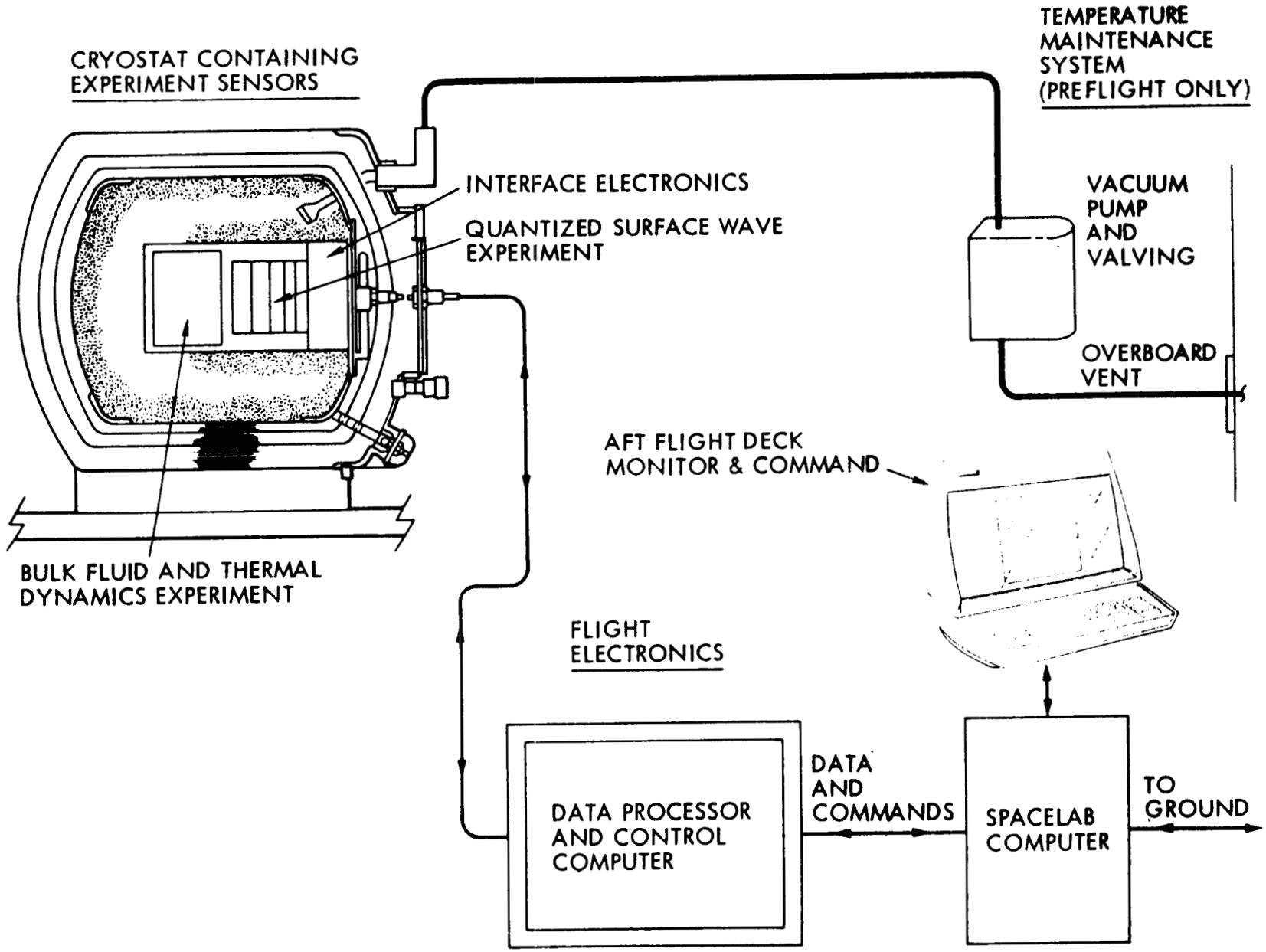
CRYOSTAT CONTAINING EXPERIMENT SENSORS
TEMPERATURE MAINTENANCE SYSTEM (PREFLIGHT ONLY)
INTERFACE ELECTRONICS
QUANTIZED SURFACE WAVE EXPERIMENT
VACUUM PUMP AND VALVING
OVERBOARD VENT
AFT FLIGHT DECK MONITOR & COMMAND
BULK FLUID AND THERMAL DYNAMICS EXPERIMENT
FLIGHT ELECTRONICS
DATA PROCESSOR AND CONTROL COMPUTER
DATA AND COMMANDS
SPACELAB COMPUTER
TO GROUND

OBJECTIVES

DEMONSTRATE REFLYABLE SUPERFLUID CRYOSTAT FOR EXPERIMENTAL PURPOSES

DETERMINE THE SLOSH FREQUENCIES, MODE SHAPES AND DAMPING OF SUPERFLUID HELIUM IN ZERO GRAVITY

DETERMINE THE TEMPERATURE FLUCTUATIONS AND DISTRIBUTION OF SUPERFLUID HELIUM IN ZERO GRAVITY

DEVELOP APPARATUS TO MEASURE THE DISPERSION AND ATTENUATION OF QUANTIZED SURFACE WAVES IN SFHE

JPL

ACHIEVEMENTS

BULK FLUID AND THERMAL DYNAMICS EXPERIMENT

- TEMPERATURE DISTRIBUTION AND FLUCTUATIONS OBTAINED FOR ENTIRE FLIGHT
- COVERED ENTIRE SPAN OF NORMAL SHUTTLE ACCELERATION ENVIRONMENT
- RESOLUTION OF 10 MICROKELVIN
- FLUID MOTIONS OBTAINED FOR TEMPERATURE RANCE OF 2.1 TO 2.5 VS INTENDED 1.5 TO 2.1 K

INSTRUMENT SENSOR HEAD

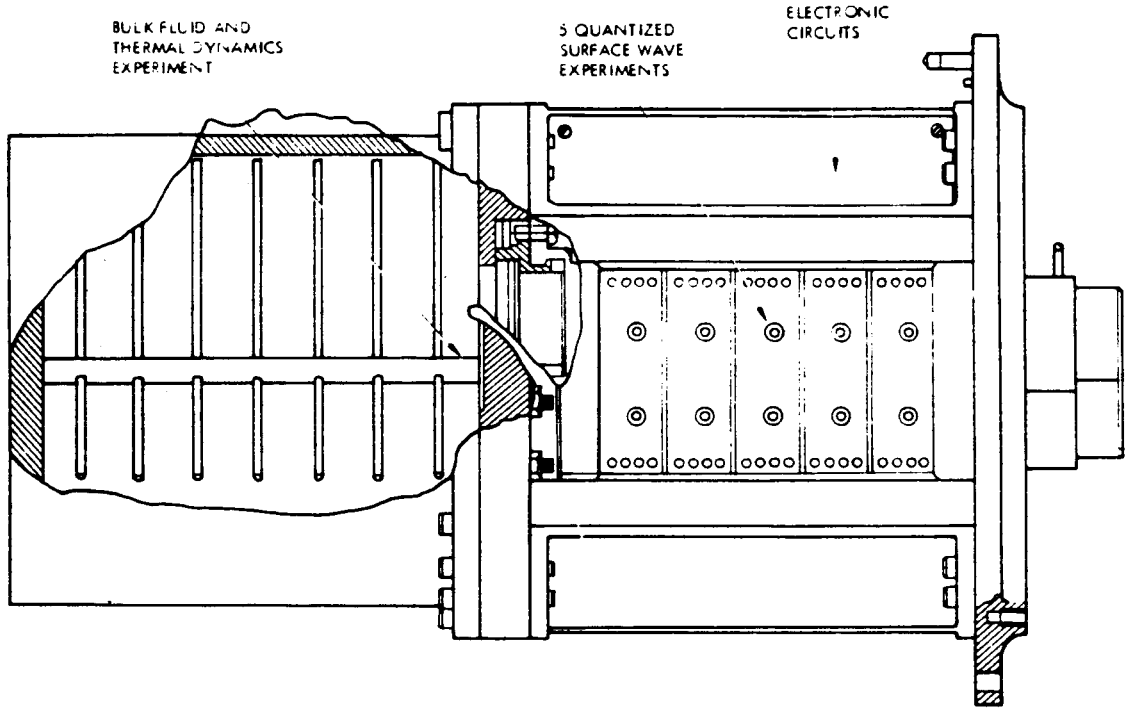

P. Mason 8/29/85

FY'86 SFHe DATA ANALYSIS

	OCT	NOV	DEC	JAN	FEB	MARCH	APRIL	MAY	JUNE	JULY	AUG	SEPT
DATA MANAGEMENT PLAN	▼											
TAPES ARRIVE FROM GSFC	▼											
POST-FLIGHT CALIBRATION	▬	▬	▬	▬	▬	▬	▬					
DATA REDUCTION	▬	▬	▬	▬	▬	▬	▬	▬	▬	▬	▬	▬
DATA ANALYSIS												
90 DAY MEETING & REPORT		▼										
AIAA SPACELAB 2 CONFERENCE				▼								
ICEC CONFERENCE							▼					
FINAL REPORT												▼
END OF PROGRAM												▼

FLIGHT AND POST-FLIGHT DATA TO LAMBDA POINT EXPERIMENT