IN-SPACE RESEARCH, TECHNOLOGY AND ENGINEERING (RT&E) WORKSHOP

VOLUME 6 OF 8

INFORMATION SYSTEMS

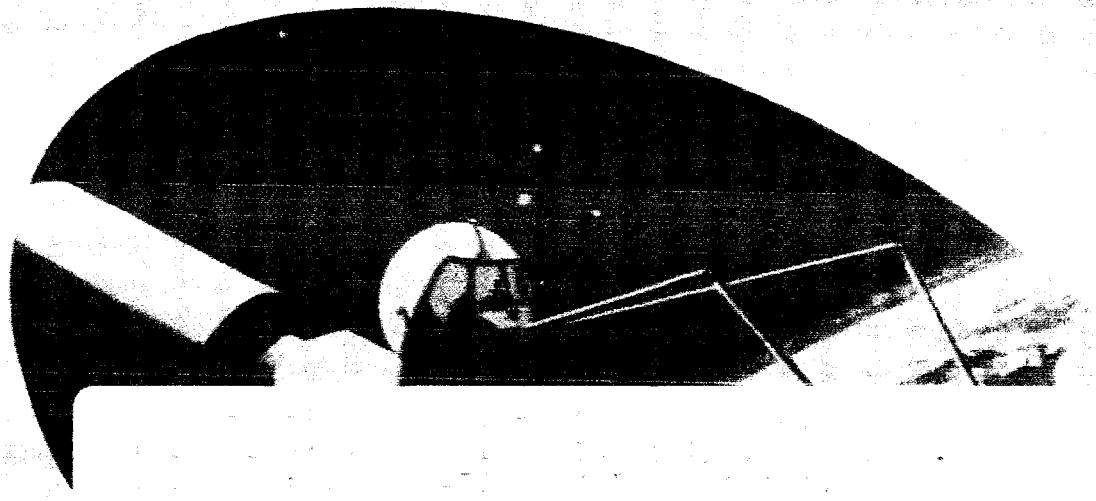

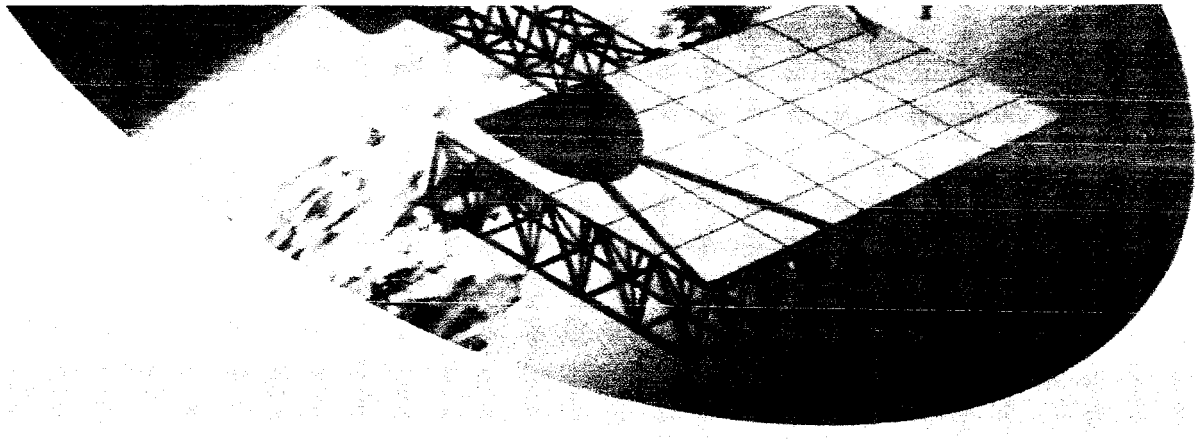

NATIONAL CONFERENCE CENTER
WILLIAMSBURG, VIRGINIA
OCTOBER 8-10, 1985

NASA
National Aeronautics and
Space Administration

Langley Research Center
Hampton, Virginia 23665

OAST
Office of Aeronautics
and Space Technology
Washington, DC

NOTICE

The results of the OAST Research, Technology, and Engineering Workshop which was held at the National Conference Center, Williamsburg, Virginia, October 8-10, 1985 are contained in the following reports:

VOL 1	Executive Summary
VOL 2	Space Structure (Dynamics and Control)
VOL 3	Fluid Management
VOL 4	Space Environmental Effects
VOL 5	Energy Systems and Thermal Management
VOL 6	Information Systems
VOL 7	Automation and Robotics
VOL 8	In-Space Operations

Copies of these reports may be obtained by contacting:

NASA Langley Research Center
Attn: 288/Dr. Roger A. Breckenridge
Hampton, VA 23665

Commercial Telephone: (804) 865-4834
Federal Telephone System: 928-4834

INFORMATION SYSTEMS

TABLE OF CONTENTS

PAGE

FOREWORD 1

INTRODUCTION 2

WORKSHOP THEME 3

SUMMARY AND CONCLUSIONS 4

PANEL SUMMARY

Information Systems 8
Bruce A. Conway

THEME PRESENTATION MATERIAL

Multi-Function Space Antenna Range Technology 27
Yahya Rahmat-Samii (JPL)

Multi-Beam and Multi-Frequency Antenna Technology 30
Yahya Rahmat-Samii (JPL)

Maser Precision Time Generation 33
Lute Maleki (JPL)

Optical Interferometry Spacecraft Tracking 36
James Lesh (JPL)

Laser Communications and Tracking Development 39
Jon Schwartz (JPL)

Deep Space Optical DSN Terminal 42
Jon Schwartz (JPL)

40-105 GHz Propagation Experiment 45
Godfrey Anzic (LeRC)

High-Voltage Traveling Wave Tube Amplifier 50
Denis Connolly (LeRC)

Sensor Systems Technology Laboratory 54
Arthur L. Newcomb (LaRC)

PAGE

CO_2 Doppler Lidar Wind Measurement 58
Robert Hess (LaRC)

Acoustic Control Technology Development Experiment . 62
David A. McCurdy, David G. Stephens (LaRC)

Advanced Orbiting VLBI Technology on the Space Station 66
James F. Jordan, John C. Mankins (JPL)

Satellite Doppler Meteorological Radar 70
Leo Station (LaRC)

Microwave Remote Sensing - Passive 77
Bruce Kendall (LaRC)

Manned Observation Techniques 81
D. L. Amsbury (JSC)

Space Based Radar (SBR) 84
John C. Cleary (RADC)

FOREWORD

Within NASA, the Office of Aeronautics and Space Technology (OAST) has the responsibility for timely development of needed new technologies. Traditionally, the development of new concepts, new materials, designs, and engineering techniques for aeronautics has been accomplished in close cooperation with the aircraft industry and with the great American universities. On the other hand, NASA, as the primary user of space flight, has been its own principal customer for new space technologies.

A new era of permanent presence in space is beginning with the Space Station. This permanent presence will permit and promote commercial ventures and privately funded research in the tradition of university/industry cooperation.

The RT&E workshop in Williamsburg represents a significant milestone for NASA and the space engineering community. It marked the initiation of a long-term program of outreach by NASA to focus the needs of universities, industry, and government for in-space experiments and to begin building a strong national user constituency for space research and engineering.

These proceedings represent a "first-cut" planning activity to involve universities, industry, and other government agencies with NASA to establish structure and content for a national in-space RT&E program. More interactions are needed - more workshops will follow. Program adjustments will be made. A truly national program will evolve, and its beginnings are presented here with the hope and determination needed to make it a program we can all take pride in.

- Raymond Colladay

INTRODUCTION

Among the purposes of the Research, Engineering, and Technology Workshop, an interest in validating the RT&E theme concept has some direct effect on the form of these proceedings. The original five themes, which were themselves a target for validation or recommeded changes, have become seven. During preparations for the workshop, the submitted papers and attendance plans made it evident that the fifth "theme", In-space Operations, was too broad, and would need to be split. As the workshop got underway, a further split occurred, brought about by the different levels of maturity, and needs for technology planning in several sub-disciplines. Thus, these proceedings are presented under seven themes. The volume of presentations, and the quantity of information generated by the individual panel summaries has led to the decision to prepare the proceedings in several volumes.

The first volume is an executive summary and includes the summary presentations made by the panel co-chairmen in the final plenary session. The accompanying seven volumes, of which this is one, each represent a specific "theme", and include the un-edited original presentation material used in that particular panel workshop. Each of these separate "theme" volumes also include the Foreword, the general Summary and Conclusions, and the Chairman's presentation charts and narrative summary. Thus, each should represent a self-standing volume to reflect the proceedings relevant to its respective Panel deliberations and output, as well as the reflection in the general Workshop results.

WORKSHOP THEME

Information Systems

--Sensor Systems

--Computer/Data Systems

--Communications Systems

SUMMARY AND CONCLUSIONS

NASA's In-Space Research, Technology, and Engineering (RT&E) Workshop brought together representatives of the university community, private sector, and government agencies to discuss future needs for in-space experiments in support of space technology development and the derivative requirements for space station facilities to support in-space RT&E.

The workshop provided an excellent forum for establishing an interactive process for building a national in-space experiments program. It enabled NASA to present to the user community (university and private sector) experiment concepts for NASA's technology development activities in support of future space missions. The meetings also began a process by which industry and university researchers will be able to bring their own TDM requirements to NASA's planning process.

This conference reached three primary goals: first, it expanded and validated NASA's in-space experiment theme areas, including Space Structure (Dynamics and Control), Space Environmental Effects, Fluids Management, Energy Systems and Thermal Management, Automation and Robotics, Information Systems and In-Space Operations; second, it began the development of a user community network which will interface with NASA throughout the lifetime of the in-space experiment program; and third, it formed the basis for the establishment of on-going working groups which will continue to interest and coordinate requirements for in-space RT&E activities.

As an adjunct to the conference, NASA/OAST announced plans to initiate a long-term program to encourage and support industry and university experiments. NASA's modest investment in this program is initially targeted for generating experiment

ideas and concepts. It is anticipated that this base of concepts will lead to cooperatively funded experiments between NASA, industry, and academia and thereby, begin to build an active in-space RT&E program.

Several key points emerged from this conference regarding the adequacy of the TDM data base that should be addressed in future planning activities. First, many of the experiments could be performed on the ground, i.e., they do not justify a space experiment. Secondly, many of the experiments address near-term or current applications and do not take into account advanced system requirements. The TDM data base must look beyond extensions of current programs to reflect future needs and trends to have an effective and useful impact on space station planning and design. This will require increased input from industry and university researchers and engineers.

In order to address these concerns, it is imperative that a long-range planning view be taken in which industry and university researchers help NASA derive the technology development program. The following recommendations have been developed on the basis of the workshop:

1. Development of an on-going RT&E university and industry advisory group;
2. Continuation of in-space RT&E symposia to act both as outreach mechanisms and as working sessions to refine the TDM data base;
3. Development of an RT&E information clearinghouse;
4. Development and continuation of the new experiments outreach activity announced at the RT&E workshop;
5. Development of an "impacts assessment group" which will focus its energy on identifying experiment accommodation requirements to impact the design of in-space facilities, i.e., space station and others.

If carried out, these recommendations constitute movement toward development of an effective NASA/industry/university partnership in a National In-Space RT&E Program. This will also enable NASA/OAST to have an effective voice in space station planning, which is essential toward the success of a future in-space activities. The workshop, by promoting the process of NASA/industry/university interactions and by pointing out concerns with the developing TDM data base has provided an important first step towards a successful long-term space technology development effort.

IN-SPACE RESEARCH, TECHNOLOGY, AND ENGINEERING WORKSHOP

INFORMATION SYSTEMS

BRUCE CONWAY	LANGLEY RES. CTR.	CO-CHAIRMAN
PETER KURZHALS	McDONNELL ACFT. CORP.	CO-CHAIRMAN
C. F. GARTRELL	GRC	EXEC. SECRETARY
D. CONNOLLY	LEWIS RES. CTR.	MEMBER
R. DICKINSON	JET PROPULSION LAB.	MEMBER
K. WILLSHIRE	LARC/SSO	EX-OFFICIO

5,-82

188.

INFORMATION SYSTEMS SUMMARY

Bruce A. Conway

The Information Systems theme subpanel was established as a separate part of Panel 5A of the In-Space Operations Theme, in order to 1) provide for additional consideration and emphasis of the information systems areas of sensors, computers/data systems, and communications, and 2) conduct an in-depth review of automation and robotics.

Inputs in the form of reports and oral briefings on 16 technology development experiments pertinent to this theme were reviewed and assessed. The panel then defined a set of objectives for the theme area. In setting forth a set of objectives/capabilities needed to permit technology validation (for in-space application) in the three disciplines of information systems, several gaps in requirements and proposed thrusts were identified. These omissions/gaps were identified by examining OAST's "National Missions for Technology Focus" (supplemented by DoD, commercialization, and international considerations) and projecting a time-ordered series of required capabilities in information systems for various missions. In several cases, particularly in the computer/data systems discipline, no space station-related missions proposed would achieve these required capabilities. Also, some capabilities had not been identified and were only defined after examination of the major mission drivers. The rationale for in-space technology development and verification was discussed and summarized by the panel, and an "accommodations impact" on the space station through the information systems technology capability development was assessed. In the station accommodation assessment, three issues were raised for consideration by space station configuration and systems planners. Finally, recommendations for space station and technology development mission implementation were developed, based on the desired technology

capabilities, experiments/missions already proposed, and perceived gaps in the capability/experiment definitions.

Primary objectives defined by the panel, which applied to the three disciplines are 1) to develop/evolve/enable new sensing, data, and communications options, and 2) to enable the in-space characterization, qualification, and optimization of information systems elements. Technology issues or gaps include the lack of clear user identification of data capacities (rates and storage requirements) and the uncertainty in needs for spacecraft environment sensing. In addition, input identifying DoD, other NASA, and commercial activities or potential involvements was also lacking.

The rationale for developing and verifying through in-space experiments, the technology capabilities necessary in information systems includes the long duration exposure of electronic systems in the unique radiation environment (of significance to the substantial electronics portion of the information systems), and zero-gravity effects (of major concern in the utilization of large antenna structures in communications and microwave remote sensing applications). Also, the panel noted the lack of advocacy to test electronic systems in space prior to operational usage. They stated that credibility of in-space demonstrations is crucial to technology acceptance by potential users/appliers.

In developing technology capability objectives and assessing their achievement through in-space research, technology and engineering, three in-space station accommodation issues related to the information systems technology areas were raised: 1) a need to extend the OMV's capabilities; 2) the requirement to have separate, dedicated technology facility modules; and 3) the need for identifying and reserving dedicated experiment locations on the space station structure. Other accommodation impacts were identified,

but are expected to prove tractable. The accommodation issues led to recommendations for consideration by space station configuration and systems planners:

1. Extend OMV capabilities (range, formation-flying, enhanced technology support equipment attached to OMV).
2. Provide major dedicated technology laboratory facilities (including work stations, specialized equipment and instrumentation).
3. Provide multipurpose technology test sites onboard the station (considering exposure, field-of-view, data links, swept volume, isolation, and growth compatibility).

Recommendations related to the pursuance of technology development missions are as follows:

1. Define "missing" technology missions (including in-space electronics qualification and high capacity data storage/high data rate systems).
2. Review mission timing and applications, on a periodic basis, with projected science, applications, and commercial users.

In summary, in-space research, technology, and engineering appears to be a necessary ingredient in developing advanced capabilities which permit the full utilization of space. This in-space R, T & E is the only mechanism for information systems electronics and large antenna technologies to be effectively developed <u>and</u> verified. Finally, the development of the manned space station provides a unique capability and opportunity to effectively pursue the achievement of the enhanced capabilities required in improved information systems and their applications.

INFORMATION SYSTEMS

- o OBJECTIVES
- o CANDIDATE MISSIONS
- o MAJOR MISSION DRIVERS
  - SENSOR SYSTEMS
  - COMPUTER SYSTEMS
  - COMMUNICATION SYSTEMS
- o STATION ACCOMMODATION IMPACT
- o ACCOMMODATION ISSUES
- o RECOMMENDATIONS

INFORMATION SYSTEMS

OBJECTIVES

SENSOR SYSTEMS

- ENABLE IN-SPACE CHARACTERIZATION/OPTIMIZATION OF SENSOR SYSTEM ELEMENTS
- DEVELOP/EVOLVE NEW REMOTE SENSING OPTIONS

COMPUTER/DATA SYSTEMS

- PROVIDE IN-SPACE ELECTRONICS QUALIFICATION CAPABILITY
- EVOLVE HIGH-SPEED ONBOARD SIGNAL PROCESSING CAPABILITY
- PROVIDE LARGE CAPACITY ONBOARD DATA STORAGE AND RETRIEVAL CAPABILITY

COMMUNICATIONS SYSTEMS

- ENABLE NEW COMMUNICATION OPTIONS
- PROVIDE CAPABILITY FOR IN-SPACE COMMUNICATION SYSTEMS CHARACTERIZATION/OPTIMIZATION

INFORMATION SYSTEMS

TECHNOLOGY ISSUES/CONCERNS/GAPS

- NO CLEAR IDENTIFICATION OF DATA CAPACITIES - RATES, STORAGE REQUIREMENTS
- S/C ENVIRONMENT SENSING LARGELY OVERLOOKED IN EXPERIMENT PROPOSALS
- APPLICABLE DOD/CODE E/OTHER ACTIVITIES SHOULD BE IDENTIFIED
- COMMERCIAL INVOLVEMENT NEEDS ENHANCING
- NO EXPERIMENTS PROPOSED IN IMAGING SENSORS, IR RADIOMETER AREAS

INFORMATION SYSTEMS
CANDIDATE MISSION

1.	TDMX	MULTI-FUNCTION SPACE ANTENNA RANGE TECHNOLOGY
2.	TDMX	MULTI-FUNCTION MULTI-FREQUENCY SPACE ANTENNA RANGE TECHNOLOGY
3.	TDMX	MASER PRECISION TIME GENERATION
4.		40 - 105 GHZ PROPAGATION EXPERIMENT
5.		HIGH VOLTAGE TWT AMPLIFIER
6.	TDMX - 2224	DEEP SPACE OPTICAL DSN TERMINAL
7.		OPTICAL INTERFEROMETRY SPACECRAFT TRACKING
8.	TDMX - 2221	LASER COMMUNICATIONS AND TRACKING EXPERIMENT
9.	TDMX - 2261	SENSOR SYSTEMS TECHNOLOGY LABORATORY
10.	TDMX - 2366	CO_2 LIDAR WIND MEASUREMENT
11.	TDMX - 2264	MICROWAVE REMOTE SENSING (CO-ORBITING) FREE-FLYER
12.		ADVANCED ORBITING VLBI
13.	TDMX - 2523	ACOUSTIC CONTROL TECHNOLOGY
14.		LASER COMMUNICATIONS
15.		SATELLITE DOPPLER METEROLOGICAL RADAR EXPERIMENT
16.	TDMX - 2216	MANNED OBSERVATION TECHNIQUES

NATIONAL MISSIONS FOR TECHNOLOGY FOCUS

	1980's	1990's	2000's	2010's
TRANSPORTATION	SSME IMPROVEMENTS	ADVANCED CRYO ENGINE; SPACE BASED OTV; HEAVY LIFT VEHICLES	SHUTTLE II; HEAVY LIFT VEHICLES	TRANSLUNAR OTV; ADVANCED ETO VEHICLE
SPACECRAFT	COMET RENDEZVOUS	SATURN ORBITER TITAN PROBE; MARINER MARK II; EARTH OBSERVING SYSTEMS; LEO	MARS/COMET SAMPLE RETURN; PLANETARY PROBES; EARTH OBSERVING SYSTEMS; GEO CONTINUOUS COVERAGE	OUTER PLANET ORBITERS
LARGE SPACE SYSTEMS		IOC SPACE STATION; GROWTH SPACE STATION; MOBILE COMMUNICATIONS SATELLITE	GEO PLATFORM; LARGE DEPLOYABLE REFLECTOR; MOBILE COMMUNICATIONS SATELLITE	LUNAR BASE; MANNED MARS LANDING; LARGE COMMERCIAL FACILITY

NASA

OAST

INFORMATION SYSTEMS

TRANSPORTATION	
ADVANCED CRYOGENIC ENGINE	ACE
SPACE BASED OTV	SOTV
SHUTTLE II	STS
HEAVY LIFT VEHICLES	ALV
TRANSLUNAR OTV	TOTV
ADVANCED ETO VEHICLE	AEV
SPACECRAFT	
SATURN ORBITER, TITAN PROBE	SOTP
LEO EOS	LEOS
GEO EOS	GEOS
MARS/COMET SAMPLE RETURN	MCSR
PLANETARY PROBES	PP
OUTER PLANET PROBES	OPP
LARGE SPACE SYSTEMS	
MOBILE COMMUNICATIONS SATELLITE	MCS
IOC SPACE STATION	ISS
GROWTH SPACE STATION	GSS
LARGE DEPLOYABLE REFLECTOR	LDR
LARGE COMMERCIAL FACILITY	LCF
LUNAR BASE	LB
MANNED MARS LANDING	MML
OTHER	
DOD SUPPORT	DS
COMMERCIALIZATION SUPPORT	CS
INTERNATIONAL SUPPORT	IS

SENSORS

MAJOR MISSION DRIVERS

TECHNOLOGY THRUST		RELATED STATION MISSIONS	ENABLING CAPABILITY	ENHANCING CAPABILITY
IN-SPACE CHARACTERIZATION/OPT.				
IOC +4	SPACE STATION SENSOR CALIBRATION LAB	TDMX-2261, TDMX-2265 TDMX-2266, TDMX-2264, VLBI	LEOS, LCF, MML	SOTV, TOTV, LEOS, GEOS, MCSR, PP, OPP, GSS, DS, CS, IS
NEW REMOTE SENSING OPTION				
IOC	BASIC EARTH OBSERVATION SENSORS	TDMX-2366, TDMX-2264 TDMX-2265	LEOS	LCF, DS, CS, IS
IOC +7	SPACECRAFT ENVIRON-MENT SENSORS (INTERNAL AND EXTERNAL)	TDMX-2523	LB, MML, GSS	TOTV, LB, DS
IOC +2	LARGE APERTURE HIGH FREQUENCY ANTENNA REFLECTOR	TDMX-2264, VLBI	LEOS, GEOS, MCS	GSS, CS, IS
IOC +3	RELATIVISTIC PHENOMENA SENSORS	TDMX-2263		
IOC +5	ADVANCED EARTH OBSERVATION SENSORS	TDMX-2265	GEOS, LEOS	DS, CS, IS

COMPUTER SYSTEMS

MAJOR MISSION DRIVERS

TECHNOLOGY THRUST		RELATED STATION MISSIONS	ENABLING CAPABILITY	ENHANCING CAPABILITY
o IN-SPACE ELECTRONICS QUALIFICATION				
IOC +1	CIRCUIT EVALUATION LAB	TBD		ALL MISSIONS
IOC +3	COMPONENT EVALUATION LAB	TBD		ALL MISSIONS
o HIGH-SPEED ONBOARD SIGNAL PROCESSING				
IOC +2	GIGAFLOP PROCESSOR	TBD	LEOS	GSS
IOC +10	10 GIGAFLOP PROCESSOR	TBD	GEOS	GSS
o LARGE CAPACITY ONBOARD STORAGE				
IOC	TERRABIT ERASABLE RECORDER	TBD	LEOS	ISS

COMMUNICATIONS SYSTEMS

MAJOR MISSION DRIVERS

TECHNOLOGY THRUST		RELATED STATION MISSIONS	ENABLING CAPABILITY	ENHANCING CAPABILITY
o IN-SPACE CHARACTERIZATION/OPT.				
IOC	BASIC ANTENNA RANGE	1. TDMX 2211		MCS, LDR, IS
IOC	OPTICAL ANTENNA RANGE	6. TDMX 2224	MCSR, OPP	PP, IS
		8. TDMX 2221		GSS, IS
IOC	COMPONENT TEST FACILITY	4. TDMX ????		LCF,GSS,CS,DS
		5. TDMX ????		LCF,GSS,CS,DS
IOC +2	ADVANCED ANTENNA RANGE	2. TDMX 2212	GEOS	CS, MCS, LDR, IS, DS
o NEW COMM. OPTIONS				
IOC +2	500 MBps OPTICAL LINK	14. TDMX ????	TDAS	EOS, MCSR
IOC +5	40 TO 100 GHz SPECTRUM UTILIZATION	4. TDMX ????	TDAS	
IOC +6	50M MULTIBEAM REFLECTOR	TDMX 2212	MCS	
IOC +7	4 PI-STER. LOCAL	8. TDMX		GSS
IOC +12	100M DBS ANTENNA	TDMX 2264, TDDMX 2212	EOS	

WHY IN-SPACE?

- LONG EXPERIMENT TIME IN SPACE ENVIRONMENT
  - UNIQUE RADIATION ENVIRONMENT
  - ZERO-G EFFECTS (PARTICULARLY ON LARGE SYSTEMS/ STRUCTURES)
- ATMOSPHERIC TRANSMISSION NEEDED FOR COMM/SENSOR EXPERIMENTS
- OBSERVATIONS EXO ATMOSPHERE REQUIRED
- LARGE SPACE PLATFORM REQUIRED TO SUPPORT LARGE SYSTEMS (E.G. LARGE ANTENNAS)
- EVALUATION/CHARACTERIZATION OF EARTH OBSERVATION SENSORS
- CREDIBILITY OF IN-SPACE DEMONSTRATIONS CRUCIAL TO TECHNOLOGY ACCEPTANCE

STATION ACCOMMODATION IMPACT

- o CONTAMINATION
  - RFI, ACOUSTICS, OUTGASSING, ETC.
- o LARGE DEPLOYED VOLUME REQUIREMENTS
- o EXTREME DATA STORAGE SYSTEM NEEDS
- o LINK DATA RATE REQUIREMENTS NEAR TDRSS LIMIT
- o GENERALLY MODEST MASS/POWER NEEDS
- o CONTROL SYSTEMS CONCERNS
  - ISOLATION, MOMENTUM MANAGEMENT, STRINGENT POINTING, ACTIVE CONTROL, ETC.
- o CONSIDERABLE CREW INTERACTION WITH EXPERIMENTS

ACCOMMODATION ISSUES

- NEED TO EXTEND OMV RANGE
- MAJOR TECHNOLOGY FACILITY MODULE(S) REQUIRED
- DEDICATED EXPERIMENT LOCATION NEEDED

INFORMATION SYSTEMS

RECOMMENDATIONS - STATION

- o PROVIDE MULTIPURPOSE TECHNOLOGY TEST SITES ONBOARD STATION
  - EXPOSURE FOV, SWEPT VOLUME
  - UTILITIES
  - HIGH RATE DATA LINK
  - GROWTH-COMPATIBLE
  - ISOLATION
- o EXTENDED OMV CAPABILITIES (OR DEVELOP SMART PLATFORMS)
  - RANGE
  - ENHANCED FORMATION-FLYING
  - OMV-ATTACHED TECHNOLOGY SUPPORT EQUIPMENT
- o PROVIDE MAJOR DEDICATED TECHNOLOGY LAB FACILITIES
  - WORK STATIONS
  - SPECIALIZED EQUIPMENT
  - INSTRUMENTATION

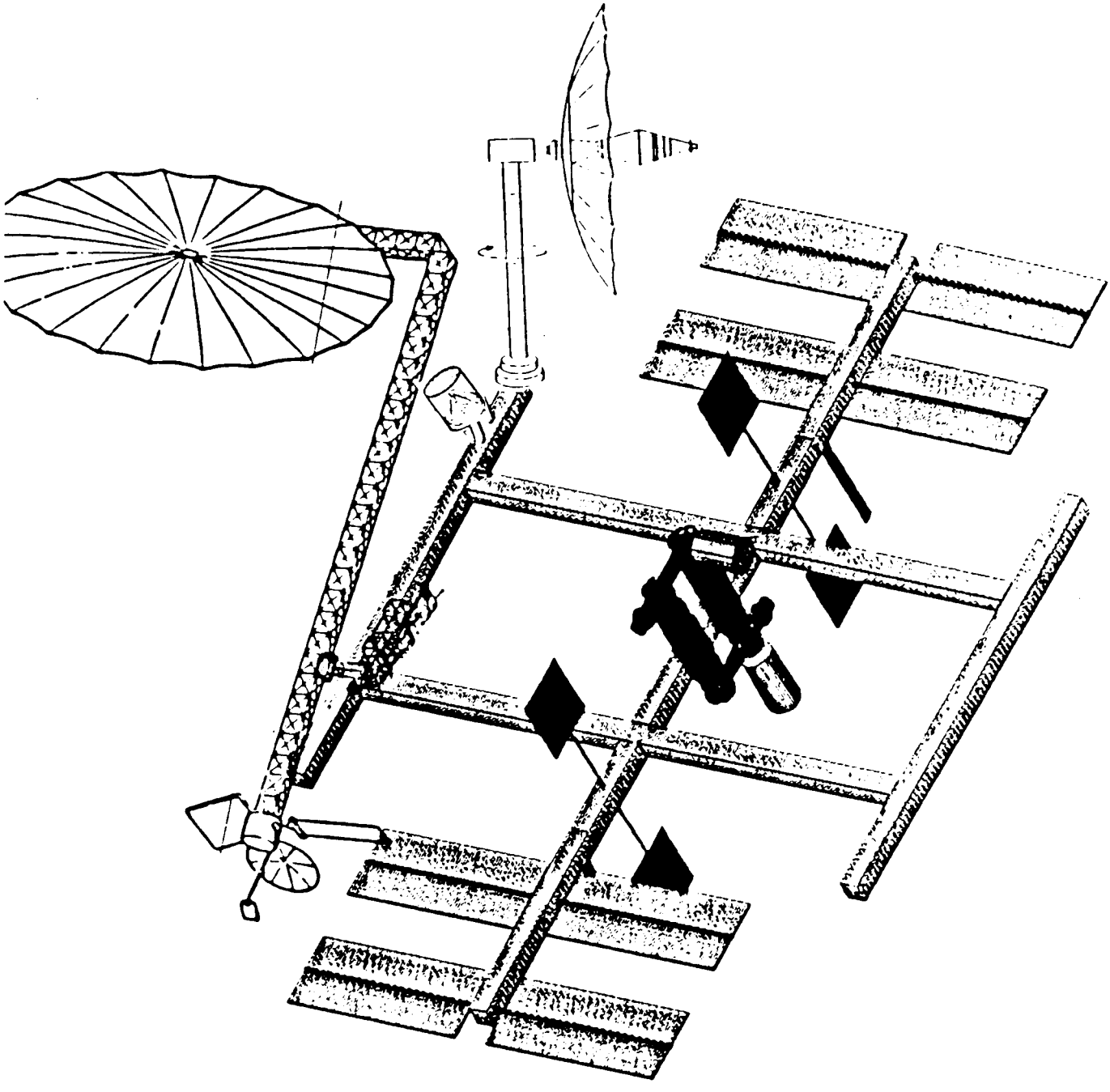

INFORMATION SYSTEMS

RECOMMENDATIONS - MISSION

- o DEFINE "MISSING" TECHNOLOGY MISSIONS
  - IN-SPACE ELECTRONICS QUALIFICATION
  - HIGH CAPACITY DATA STORAGE
  - HIGH DATA RATE SYSTEMS
  - 500 MB/S OPTICAL LINK
- o REVIEW MISSION TIMING AND APPLICATIONS WITH PROJECTED USERS
  - SCIENCE, APPLICATIONS
  - COMMERCIAL

THEME

PRESENTATION

MATERIAL

JPL

SPACE STATION TECHNOLOGY DEVELOPMENT MISSION TDMX-2211

MULTI-FUNCTION SPACE ANTENNA RANGE TECHNOLOGY

Yahya Rahmat-Samii, JPL , Pasadena, CA

EXPERIMENT OBJECTIVE

The objective of this proposal is to provide the techniques and technology to enable multi-function antenna range pattern measurement capabilities aboard the Space Station. This will include both far-field and near-field measurement techniques and surface holography. The Space Station will permit antenna qualification testing in a 0-g thermal vacuum environment, and RF pattern performance measurements of Large Space Antennas (LSA) that are equipped with subsystems and equipment for active control of surface distortions and feed structure deflections.

EXPERIMENT DESCRIPTION

A sequence of technology experiments will be conducted with experiments attached to the Station and its OMV. The equipment will consist of an antenna positioner, a space test antenna, a pattern recorder, and a set of range illuminator and gain standard antennas. The positioner will provide both the angular recording increment movements as well as the motion compensation for isolation from station movements. The pattern recorder will incorporate the motion compensation angle calibration, amplitude calibration, and positioner control capabilities linked with the OMV controls. The range and gain standard illuminators will be designed for OMV pointing for far-field ranges. For the near-field operation, small electric probes mounted on arms which allow incremental movement of the probes, will be positioned in front of the antenna. The sampling probe locations will be accurately determined with an internal laser measuring system or with a quality controlled position indicator. A novel near-field configuration is proposed which should allow the measurements of a variety of reflector and array antennas in single or multiple beam operations.

JPL

TDMX 2211: MULTI-FUNCTION SPACE ANTENNA RANGE TECHNOLOGY

(VOLUME 3)

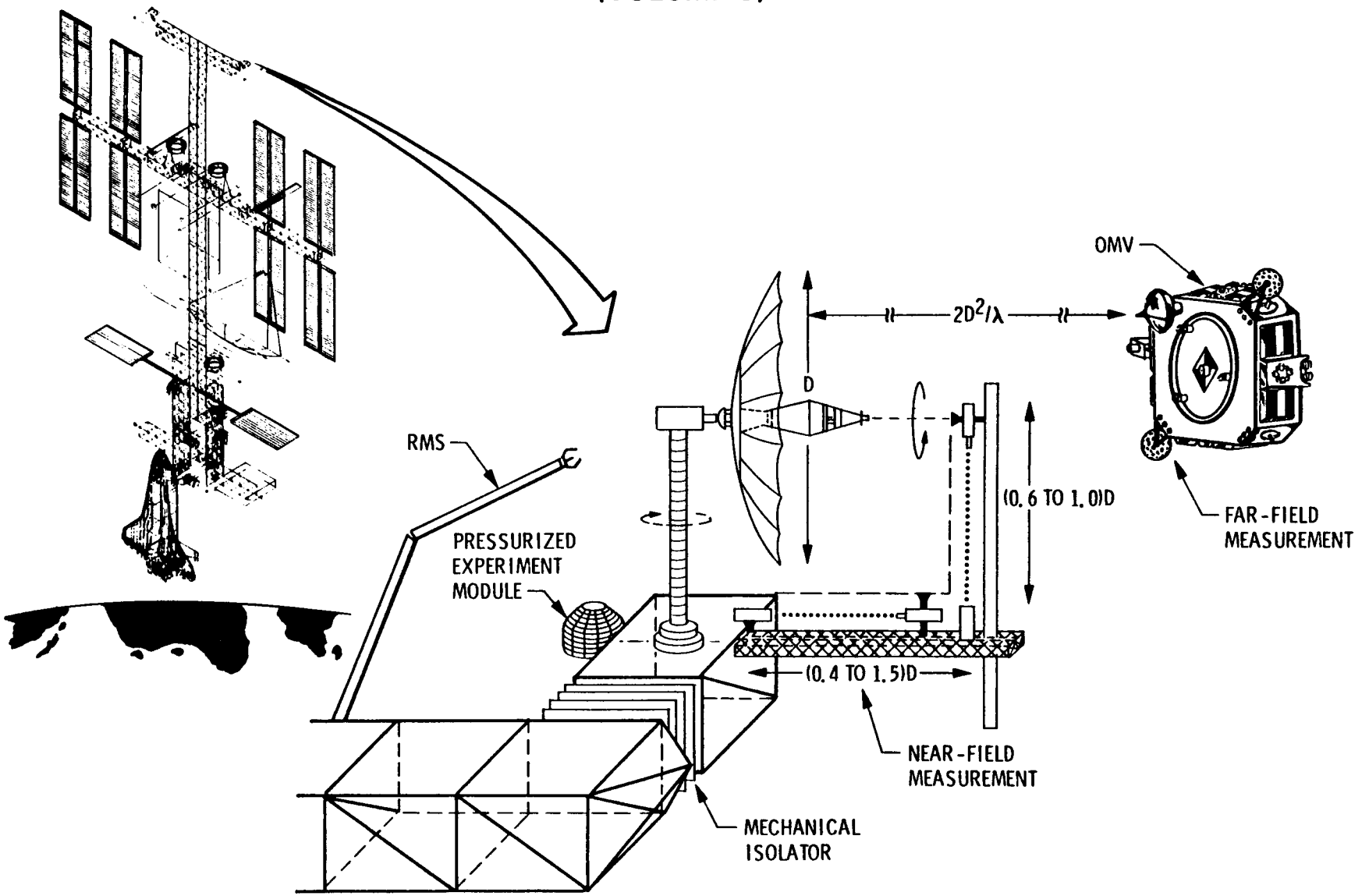

EXPERIMENT TITLE: 2211: MULTI-FUNCTION SPACE ANTENNA RANGE TECHNOLOGY

PRINCIPAL INVESTIGATOR: YAHYA RAHMAT-SAMII

ADDRESS: JET PROPULSION LABORATORY, 4800 OAK GROVE DR., PASADENA, CA 91109

PROPOSED FLIGHT DATE - 1993 YEAR

OPERATIONAL DAYS REQUIRED - 8

MASS - 1512 KG

VOLUME:

STORED: W 3.5 x L 4 x H 4 = 56 M^3

DEPLOYED: W 4.8 x L 7.2 x H 9.6 = 330 M^3

INTERNALLY ATTACHED YES (YES/NO)
EXTERNALLY ATTACHED YES (YES/NO)
FORMATION FLYING YES (YES/NO)

ORIENTATION (inertial, solar, earth, other) ZENITH

EXTRA-VEHICULAR ACTIVITY REQUIRED:

SET-UP: 8 Hrs/Day 6 No. of days

OPERATIONS: 2.5 Hrs/Day 2 No. of days 2 Interval

SERVICING: 1 Hrs/Day 2 No. of days 2 Interval

INTRA-VEHICULAR ACTIVITY REQUIRED:

SET-UP: 1 Hrs/Day 2 No. of days

OPERATIONS: 2 Hrs/Day 8 No. of days 2 Interval

SERVICING: 1/2 Hrs/Day 2 No. of days 2 Interval

POWER REQUIRED:

0.7 KW AC or DC (circle one)

8 Hrs/Day 8 No. of days

DATA RATE: 0.01 Megabits/second

DATA STORAGE: 0.256 Gigabits

JPL

SPACE STATION TECHNOLOGY DEVELOPMENT MISSION TDMX-2212

MULTI-BEAM AND MULTI-FREQUENCY ANTENNA TECHNOLOGY
~~MULTI-FUNCTION SPACE ANTENNA RANGE TECHNOLOGY~~

Yahya Rahmat-Samii, JPL , Pasadena, CA

EXPERIMENT OBJECTIVE

The objective of the experiment will be to enhance the capability of the established near-field and far-field test ranges aboard the space station based on TDMX 2211.

EXPERIMENT DESCRIPTION

Specifically, the near-field facility will be extended to accurately collect the near-field data for a variety of antenna configurations at different frequencies. A choice has been made to use a novel scheme, based on the combination of a plane-polar and cylindrical near-field probing configuration. The overall dimension of the setup depends on the physical size of the antenna being tested. It is anticipated that the actual mechanical design will allow expansion in a modular fashion. A laser ranging system will be used to identify the location of the measuring probes during data asquisition. Orthomode probes will be implemented to measure near-field components of the antenna simultaneously to reduce the measurement time. This is achieved by implementing multi-channel receivers.

Efficient and properly tailored computer software will be used to transfer the near-field data into the far-field characterization of the antenna performance. The goals are to accurately control the location and movement of the probes with respect to the antenna and to provide amplitude and phase stability during the measurement interval. This may require a mechanical isolator to detach the proposed experimental configuration from the unwanted dynamics of the space station.

To evaluate the accuracy of the results obtained using the measured near-field data and to provide a direct far-field measurement, the orbit maneuvering vehicle (OMV) will be used to support antenna illuminators, capable of operating at several frequencies, for far-field measurements. The positioning of the OMV will be controlled by a laser target ranging mechanism. Tailored receiving and recording configurations will be used to generate the contour plots and the necessary data resulting from the measurements.

JPL

TDMX 2212: MULTI-BEAM AND MULTI-FREQUENCY ANTENNA TECHNOLOGY

(VOLUME 4)

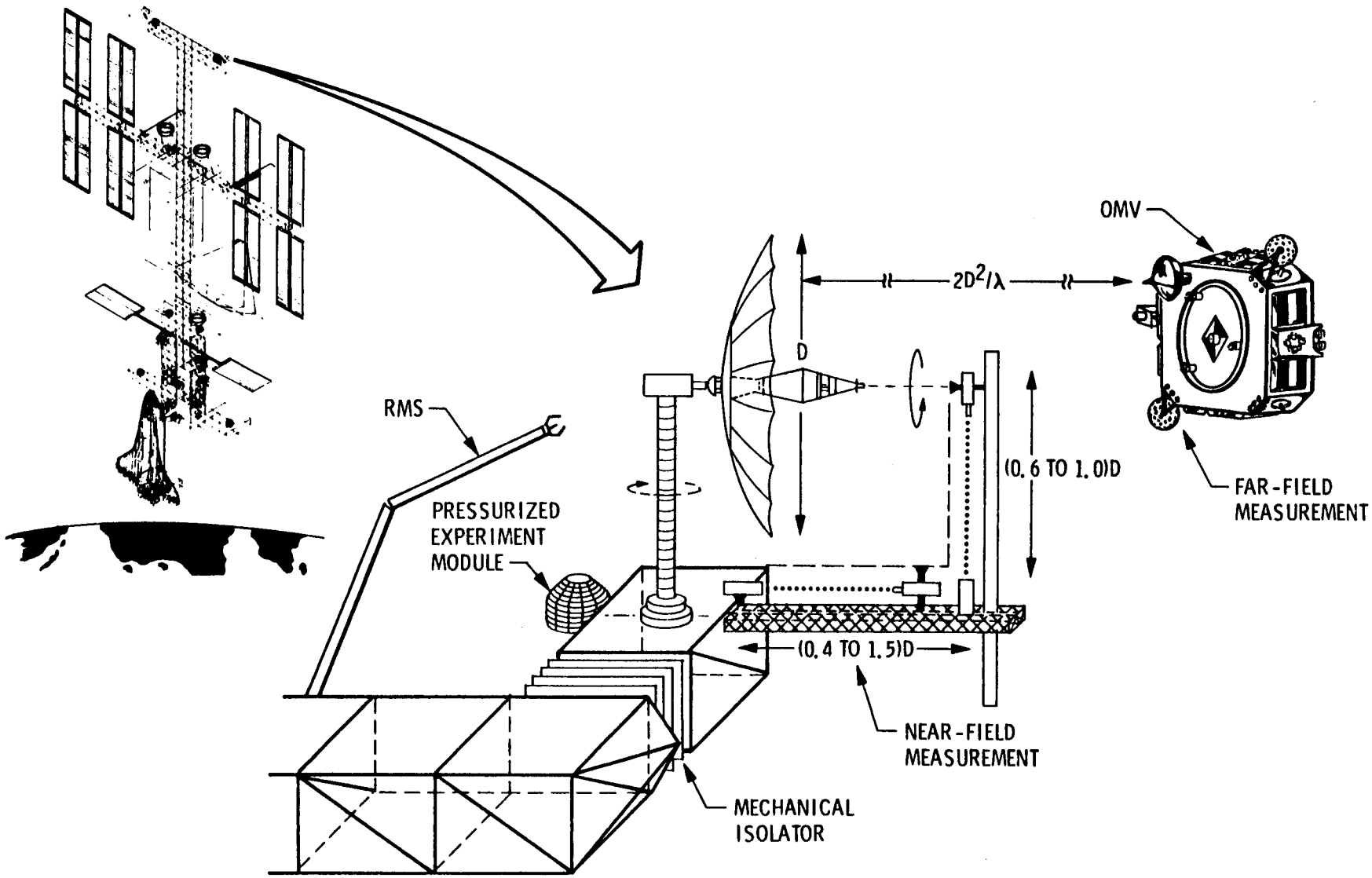

EXPERIMENT TITLE: 2212: MULTI-FUNCTION SPACE ANTENNA RANGE TECHNOLOGY

PRINCIPAL INVESTIGATOR: YAHYA RAHMAT-SAMII

ADDRESS: JET PROPULSION LABORATORY, 4800 OAK GROVE DR., PASADENA, CA 91109

PROPOSED FLIGHT DATE - 1994-1995 YEAR

OPERATIONAL DAYS REQUIRED - 30

MASS - 4000 KG

VOLUME:

STORED: W 4.8 x L 9 x H 4.0 = 172 M^3

DEPLOYED: W 55 x L 82.5 x H 82.5 = 374,343 M^3

INTERNALLY ATTACHED YES (YES/NO)
EXTERNALLY ATTACHED YES (YES/NO)
FORMATION FLYING YES (YES/NO)

ORIENTATION (inertial, solar, earth, other) ZENITH

EXTRA-VEHICULAR ACTIVITY REQUIRED:

SET-UP: 8 Hrs/Day 8 No. of days

OPERATIONS: 4 Hrs/Day 20 No. of days 2 Interval

SERVICING: 2 Hrs/Day 2 No. of days 2 Interval

INTRA-VEHICULAR ACTIVITY REQUIRED:

SET-UP: 2 Hrs/Day 4 No. of days

OPERATIONS: 4 Hrs/Day 20 No. of days 2 Interval

SERVICING: 1 Hrs/Day 2 No. of days 2 Interval

POWER REQUIRED:

0.7 KW (AC) or DC (circle one)

8 Hrs/Day 30 No. of days

DATA RATE: 0.01 Megabits/second TO EARTH

DATA STORAGE: 0.256 Gigabits

JPL

TDMX 2223: MASER PRECISION TIME GENERATION

(VOLUME 6)

POTENTIAL USERS:

- ORBITING VERY LONG BASELINE INTERFEROMETRY
- GRAVITY WAVE EXPERIMENTS
- RELATIVITY EXPERIMENTS
- NAVIGATION/COMMUNICATIONS

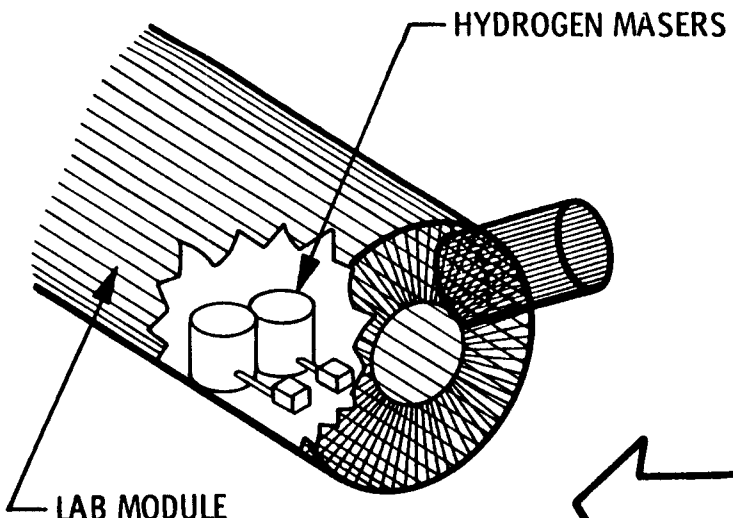

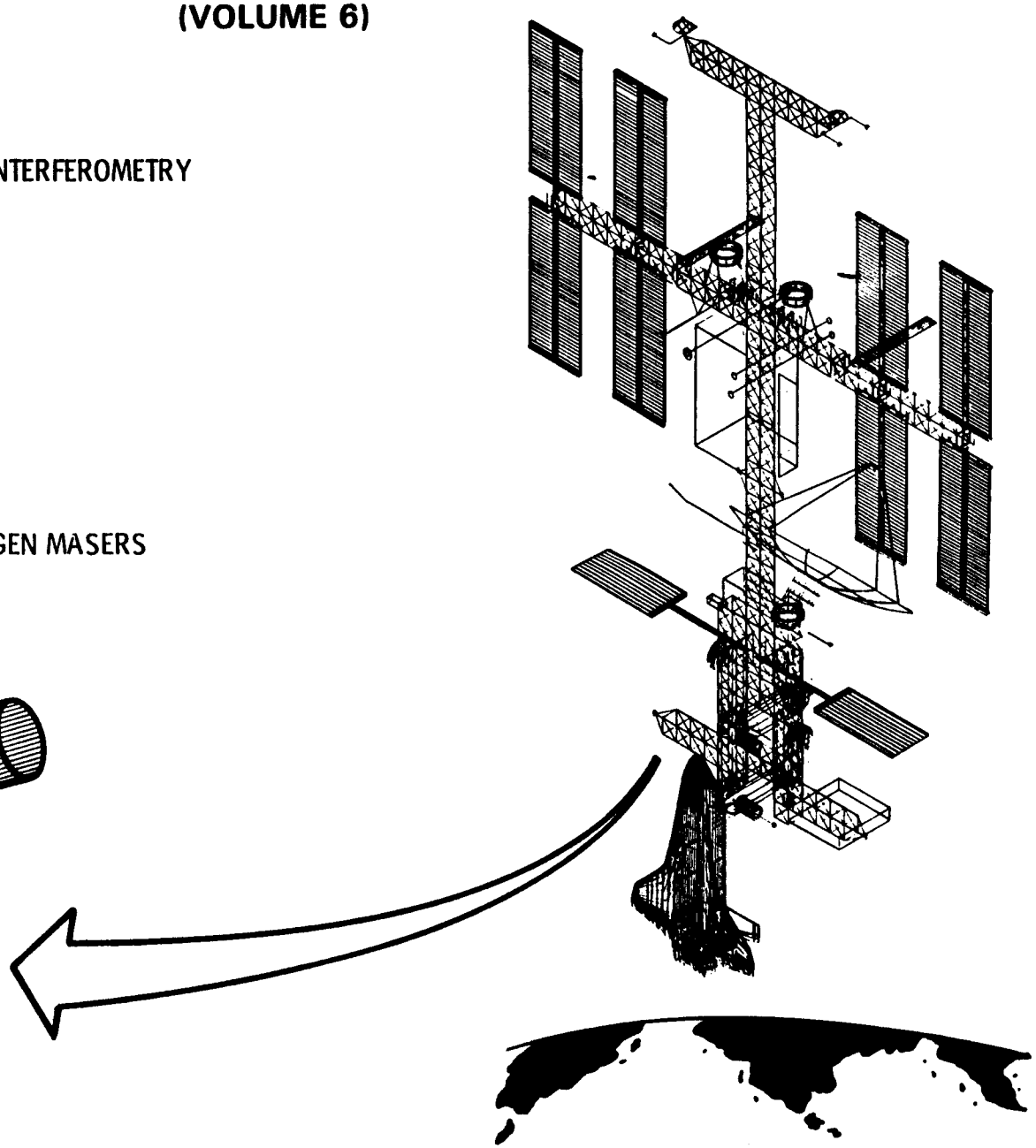

JPL

SPACE STATION TECHNOLOGY DEVELOPMENT MISSION TDMX-2223

MASER PRECISION TIME GENERATION

Lute Maleki, JPL , Pasadena, CA

EXPERIMENT OBJECTIVE

This experiment involves the use of hydrogen masers for generation of precise time and frequency on the Space Station.

The objective of the experiment is to provide real time precision time and frequency codes to multiple users. Simultaneous monitoring of the stability performance of the masers and a comparison of their drift enables the determination of environmental factors on maser performance. Frequency and time characteristics of masers provide investigation of clock transport properties over orbital distances.

The overall purposes of this experiment are to provide a capability for generation and transfer of precise time and frequency data in support of navigation, communication, and data transfer; to provide a precise source of frequency and time for science experiments including: VLBI, gravity wave detection, and clock transfer investigations; to study various aspects of hydrogen maser technology influenced by the absence of gravity and atmosphere.

EXPERIMENT DESCRIPTION

The current TDMX 2223 experiment concept will use two hydrogen masers for the generation of precise frequencies with stabilities in the range of parts in 10^{15}, and precise time in the range of 100 nanoseconds (ns).

Each maser module consists of a physics package, the control electronics, and the receiver electronics. Time and frequency code generators interfaced with each maser provides the codes at their output. A time code of 1 Hz with a jitter of less than 50 ns will be provided, as well as frequency codes at 1, 5, and 10 MHz. An intercomparison assembly performs stability data collection and processing, at a level of part in 10^{15} or better.

The experiment uses two hydrogen masers and associated code generators that provide precise frequency and time for users. A network of optical fiber links carry frequency and time signals to various locations on board the Station where users are located. The experiment includes a capability for continuous measurement of the frequency drift through intercomparison of the frequencies generated by the two masers.

EXPERIMENT TITLE: 2223: MASER PRECISION TIME GENERATION

PRINCIPAL INVESTIGATOR: DR. LUTE MALEKI

ADDRESS: JET PROPULSION LABORATORY, 4800 OAK GROVE DR., PASADENA 91109

PROPOSED FLIGHT DATE - 1993 YEAR

OPERATIONAL DAYS REQUIRED - 300

MASS - 500 KG

VOLUME:

STORED: W 2 x L 1 x H 2 = 4 M^3

DEPLOYED: W 2 x L 1 x H 2 = 4 M^3

INTERNALLY ATTACHED YES (YES/NO)
EXTERNALLY ATTACHED NO (YES/NO)
FORMATION FLYING NO (YES/NO)

ORIENTATION (inertial, solar, earth, other) NA

EXTRA-VEHICULAR ACTIVITY REQUIRED:

SET-UP: NA Hrs/Day _____ No. of days

OPERATIONS: NA Hrs/Day _____ No. of days _____ Interval

SERVICING: NA Hrs/Day _____ No. of days _____ Interval

INTRA-VEHICULAR ACTIVITY REQUIRED:

SET-UP: NA Hrs/Day _____ No. of days

OPERATIONS: NA Hrs/Day _____ No. of days _____ Interval

SERVICING: NA Hrs/Day _____ No. of days _____ Interval

POWER REQUIRED:

0.3 KW (AC) or DC (circle one)

24 Hrs/Day 300 No. of days

DATA RATE: 300 Megabits/second

DATA STORAGE: 0.1 Gigabits

IN-SPACE OPERATIONS - A, PANEL 5C

8 OCT. 1985

OPTICAL INTERFEROMETRY

SPACECRAFT TRACKING

JIM LESH, JPL, PASADENA, CA

OBJECTIVE:

DEVELOP TECHNOLOGY & TECHNIQUES FOR METRIC TRACKING OF DEEP SPACE EXPLORATION SPACECRAFT EQUIPPED WITH LASER COMMUNICATION LINK CAPABILITY

EXPERIMENT DESCRIPTION:

LASER TRACKING INTERFEROMETER/CCD ARRAY SIGNAL PROCESSING FOR IMAGING S/C & CELESTIAL OBJECTS IN ANGLE SPACE

OPTICAL INTERFEROMETRY SPACECRAFT TRACKING

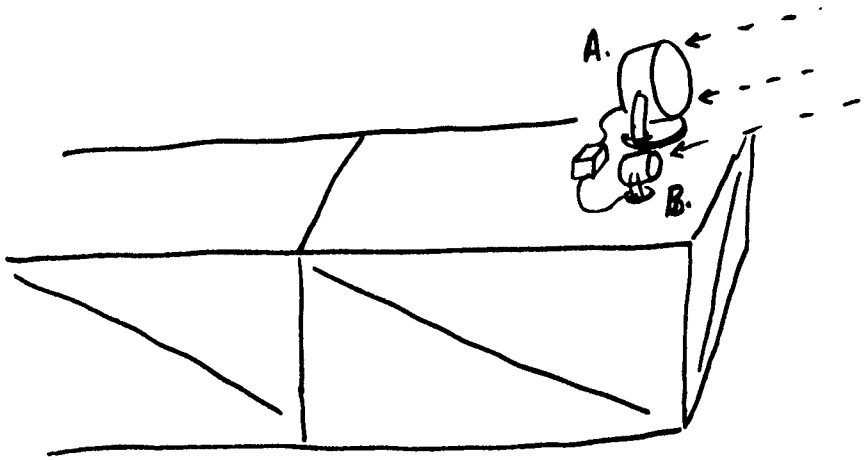

A. SIGNAL PROCESSING

B. INTERFEROMETER

ACCOMMODATION REQUIREMENTS

EXPERIMENT TITLE: OPTICAL INTERFEROMETRY SPACECRAFT TRACKING

PRINCIPAL INVSTIGATOR(S): JAMES LESH

ADDRESS: JPL, 4800 OAK GROVE DRIVE, PASADENA, CA 91103

PROPOSED FLIGHT DATE 1994 YEAR(S)

OPERATIONAL DAYS REQUIRED 10 (PER YEAR)

MASS 50 KG

VOLUME:

STORED W 0.5 x L 0.5 x H 0.4 = 0.1 M3

DEPLOYED W 2.0 x L 0.4 x H 0.4 = 0.32 M3

INTERNALLY ATTACHED YES (YES/NO)
EXTERNALLY ATTACHED YES (YES/NO)
FORMATION FLYING YES (YES/NO)

ORIENTATION (inertial, solar, earth, other) OMV, SPACE

EXTRA-VEHICULAR ACTIVITY REQUIRED:

SET-UP:	4	Hrs/Day	2	No. of days.		
OPERATIONS:	2	Hrs/Day	10	No. of days.	7	Interval
SERVICING:	1	Hrs/Day	2	No. of days.	14	Interval

INTRA-VEHICULAR ACTIVITY REQUIRED:

SET-UP:	4	Hrs/Day	2	No. of days.		
OPERATIONS:	4	Hrs/Day	10	No. of days.	7	Interval
SERVICING:	2	Hrs/Day	5	No. of days.	7	Interval

POWER REQUIRED:

1.0 KW (AC) or DC (circle one)

4 Hrs/Day 10 No. of days

DATA RATE: 0.3 Megabits/second

DATA STORAGE: 1.0 Gigabits

JPL

SPACE STATION TECHNOLOGY DEVELOPMENT MISSION TDMX-2221

LASER COMMUNICATIONS AND TRACKING DEVELOPMENT

Jon Schwartz, JPL , Pasadena, CA

EXPERIMENT OBJECTIVE

The purpose of the experiment is to develop and demonstrate the technology for providing spherical-coverage, medium-range, low-power laser communications and tracking around the Space Station in the presence of moving vehicles and structural members. This experiment will allow us to demonstrate the essential switching/rerouting concept for providing continuous communications and tracking and to study the optimal parameters for designing future laser Very Large Scale Integration (VLSI) superwafers.

EXPERIMENT DESCRIPTION

Several 1-cm-diameter telescope/1-mW laser assemblies (nodes) are used, and are attached to various Space Station appendages. These laser nodes will be connected to a central control instrumentation (probably via fiber optic cables) to create an interconnected network of laser beam transmitters/receivers which provide alternate routes for communications and tracking in case of blockage or poor reception. The experiment will be conducted by having an Orbit Maneuvering Vehicle (OMV), equipped with laser nodes, fly several orbits around the Space Station. The control instrumentation will engage a network switching routine in an attempt to provide continuous communications and tracking with the OMV. The network performance such as acquisition delay, tracking continuity, and bit error rate will be recorded for evaluation.

JPL

TDMX 2221: LASER COMMUNICATIONS AND TRACKING DEVELOPMENT

(VOLUME 5)

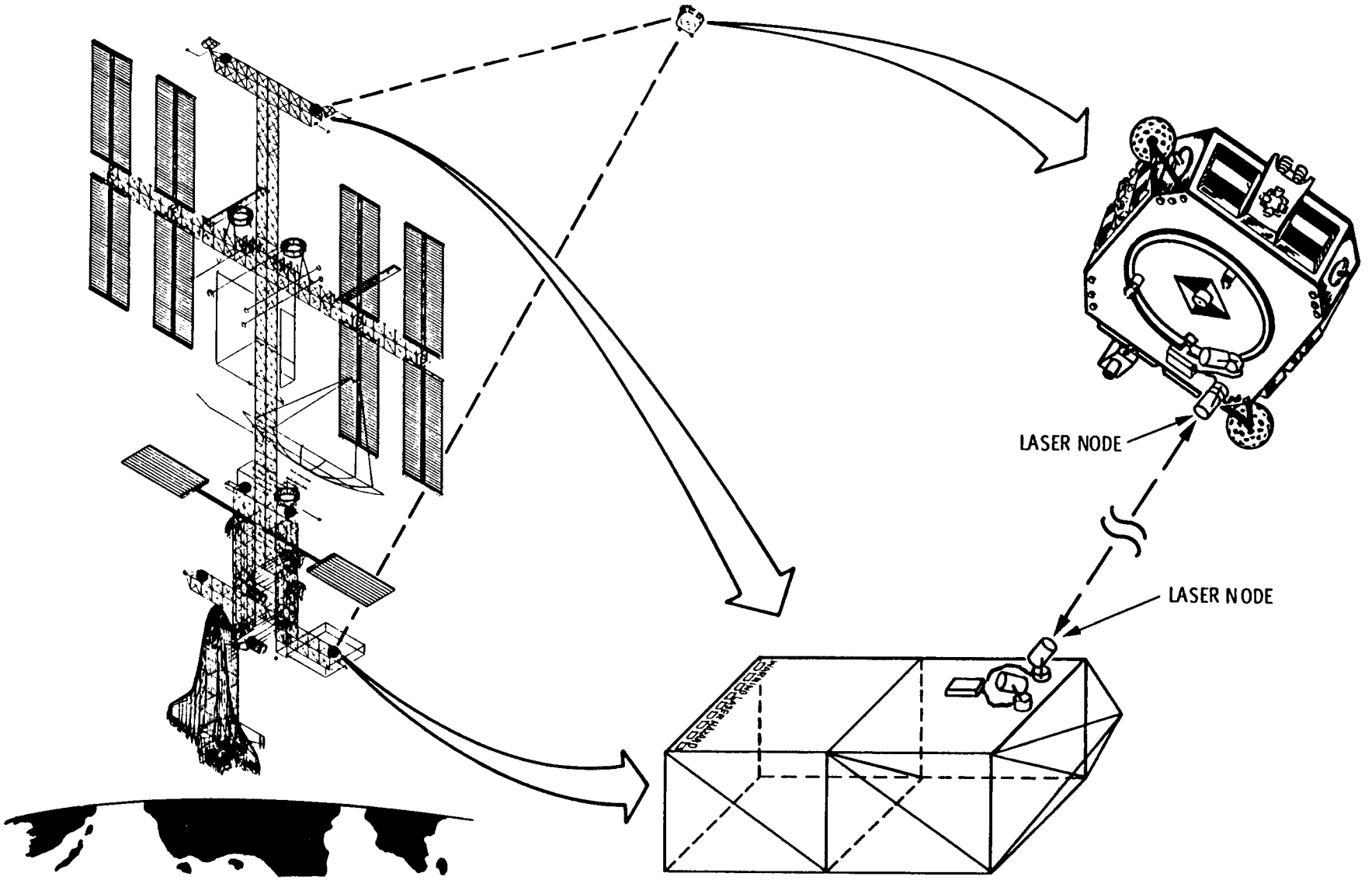

EXPERIMENT TITLE: 2221: LASER COMMUNICATIONS & TRACKING DEVELOPMENT

PRINCIPAL INVESTIGATOR: JON A. SCHWARTZ

ADDRESS: JET PROPULSION LABORATORY, 4800 OAK GROVE DR., PASADENA, CA 91109

PROPOSED FLIGHT DATE - 1994 **YEAR**

OPERATIONAL DAYS REQUIRED - 6

MASS - 60 **KG**

VOLUME:

STORED:

(INTERNAL)	W	0.5 m	x L	1.0 m	x H	1.0 m	=	0.5	M^3
(EXTERNAL)	W	0.3 m	x L	0.5 m	x H	0.1 m	=	0.015	M^3

DEPLOYED:

(INTERNAL)	W	0.5 m	x L	1.0 m	x H	1.0 m	=	0.5	M^3
(EXTERNAL)	W	0.1 m*	x L	0.15 m*	x H	0.1 m*	=	0.0015*	M^3

*For each of 10 units

INTERNALLY ATTACHED YES **(YES/NO)**
EXTERNALLY ATTACHED YES **(YES/NO)**
FORMATION FLYING YES **(YES/NO)**

ORIENTATION (inertial, solar, earth, other) OMV

EXTRA-VEHICULAR ACTIVITY REQUIRED:

SET-UP: 4 **Hrs/Day** 4 **No. of days**

OPERATIONS: _____ **Hrs/Day** _____ **No. of days** _____ **Interval**

SERVICING: _____ **Hrs/Day** _____ **No. of days** _____ **Interval**

INTRA-VEHICULAR ACTIVITY REQUIRED:

SET-UP: _____ **Hrs/Day** _____ **No. of days**

OPERATIONS: 4 **Hrs/Day** 6 **No. of days** 4 **Interval**

SERVICING: 2 **Hrs/Day** 8 **No. of days** 4 **Interval**

POWER REQUIRED:

1.0 **KW** (AC) **or DC (circle one)**

4.0 **Hrs/Day** 6 **No. of days**

DATA RATE: 0.01 **Megabits/second**

DATA STORAGE: 0.03 **Gigabits**

SPACE STATION TECHNOLOGY DEVELOPMENT MISSION TDMX-2224

DEEP SPACE OPTICAL DSN TERMINAL

Jon Schwartz, JPL , Pasadena, CA

EXPERIMENT OBJECTIVE

The main objective of this experiment is to determine the performance of a laser deep space communications terminal in the Space Station environment. This includes tradeoff studies between pointing and tracking mechanisms (mechanical vs. electronic), the development of capabilities for quick data acquisition, and point-ahead tracking under the momentum effects caused by docking and movement of interoperating vehicles and the Space Station. The communication link is also tested under various background noise sources such as sunlight, scattered light from planets and stars, and for different surface reflector panels. These results will help to define the final form of future space-based optical receiving stations.

EXPERIMENT DESCRIPTION

The TDM as currently defined would use a 10-cm-diameter laser uplink transmitter as a beacon tracking signal generator and a 1-m-diameter photon bucket collector as an optical telemetry receiver, along with supporting optomechanical and electronic components and subsystems. This equipment will be mounted on the Space Station exterior. Companion experiment packages that include a 10-cm-diameter telescope/laser assembly will be mounted aboard an Orbital Maneuvering Vehicle (OMV) flying at a distance of up to 10^8 m from the Space Station. The optical communication link will then be tested under various conditions.

We use a 10-cm-diameter telescope and 50-mW laser to generate a beacon tracking signal.

The imaging optics consist of lenses, mirrors, optical detectors (that provide transmission paths between telescope and laser or optical detectors), and pointing/tracking optics (that provide fine tracking and pointing adjustment). The control electronics will help to achieve autonomous acquisition and tracking between transmitter and receiver. The communication electronics will generate and decode signals and interface with the Space Station pulse position modulated (PPM) database for communications with ground stations.

JPL

TDMX 2224: DEEP SPACE OPTICAL DSN TERMINAL

(VOLUME 7)

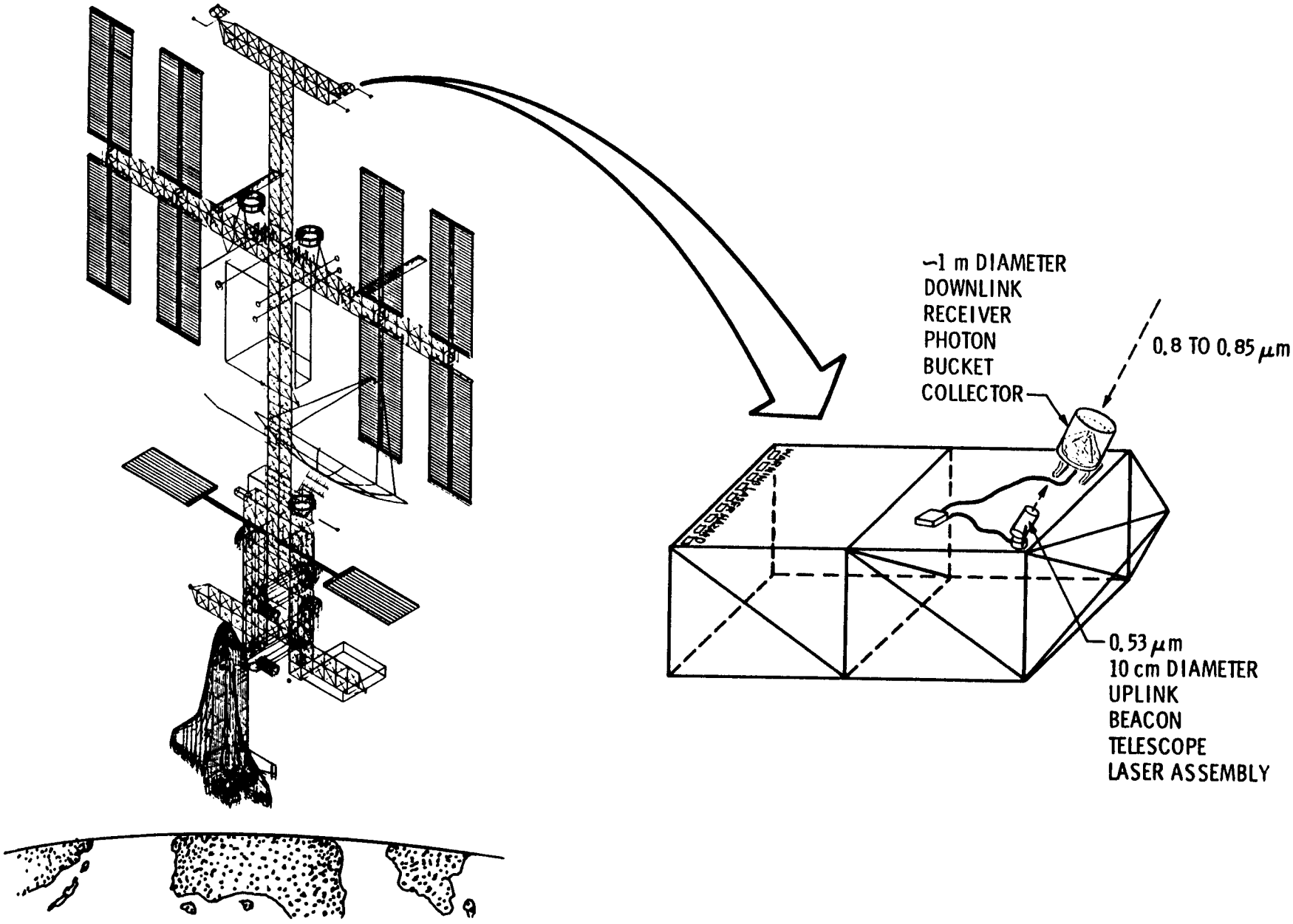

EXPERIMENT TITLE: 2224: DEEP SPACE OPTICAL DSN TERMINAL

PRINCIPAL INVESTIGATOR: JON A. SCHWARTZ

ADDRESS: JET PROPULSION LABORATORY, 4800 OAK GROVE DR., PASADENA, CA 91109

PROPOSED FLIGHT DATE - 1993 YEAR

OPERATIONAL DAYS REQUIRED - 10

MASS - 200 KG

VOLUME:

STORED: W 1.2 m x L 1.2 m x H 1.0 m = 1.44 M^3

DEPLOYED: W 2.0 m x L 2.0 m x H 2.0 m = 8.0 M^3

INTERNALLY ATTACHED NO (YES/NO)
EXTERNALLY ATTACHED YES (YES/NO)
FORMATION FLYING YES (YES/NO)

ORIENTATION (inertial, solar, earth, other) OMV

EXTRA-VEHICULAR ACTIVITY REQUIRED:

SET-UP: 4 Hrs/Day 2 No. of days

OPERATIONS: _____ Hrs/Day _____ No. of days _____ Interval

SERVICING: 2 Hrs/Day 2 No. of days 4 Interval

INTRA-VEHICULAR ACTIVITY REQUIRED:

SET-UP: _____ Hrs/Day _____ No. of days

OPERATIONS: 4 Hrs/Day 4 No. of days 4 Interval

SERVICING: 2 Hrs/Day 4 No. of days 4 Interval

POWER REQUIRED:

1.0 KW AC or DC (circle one)

4 Hrs/Day 10 No. of days

DATA RATE: 0.3 Megabits/second

DATA STORAGE: 1.0 Gigabits

40 – 105 GHz PROPAGATION EXPERIMENT

G. ANZIC

OBJECTIVE

ESTABLISH DATA BASE FOR ATMOSPHERIC PROPAGATION OF 40 TO 105 GHz MILLIMETER WAVE SIGNALS BY UTILIZING THE SPACE STATION AS SIGNAL SOURCE AND A NUMBER OF GROUND STATIONS AS DATA COLLECTION POINTS. THE FOLLOWING FREQUENCIES WILL BE OF INTEREST:

SERVICE	FREQUENCY	
	DOWN LINK	*UP LINK*
FIXED	40.0–41.0	50.0–51.0
	102.0–105.0	92.0–95.0
BROADCAST	41.0–43.0	
	84.0–86.0	
SATELLITE MOBILE	43.0–48.0	
	66.0–71.0	
	95.0–101.0	

40–105 GHz PROPAGATION EXPERIMENT

APPROACH

- PERFORM TECHNOLOGY ASSESSMENT STUDY TO AID IN EXPERIMENT DESIGN (LINKS, REQUIREMENTS, ETC.)
- DEVELOP SPACE SEGMENT PACKAGE (TRANSMITTERS, ANTENNAS, ETC.)
- DEVELOP GROUND STATIONS (PLL RECEIVERS, TRACKING ANTENNAS, ETC.)
- STANDARDIZE DATA COLLECTION SYSTEM FORMATS
- PROVIDE EXPERIMENTERS (NUMBER, LOCATION, ETC.)
- PROCESS DATA

40-105 GHz PROPAGATION EXPERIMENT

EXPERIMENT DESCRIPTION

The 40-105 gigahertz propagation experiment will consist of three main segments. The space segment, the data collections segment (experimenters, ground stations) and the data processing segment.

Multiple radiofrequency sources with steerable antennas, power supply and control circuitry are envisioned to comprose the space segment package of the experiment.

The data collection segment will consist of a number of suitably located ground stations capable of receiving and recording the signal parameters from the space station after they have been affected by the earth's atmosphere. Due to relatively large signal margin (referenced to clear sky) requirements at these frequencies antenna steering will be required on both the space and ground segments of the link. Automated antenna tracking between the experiment participants and the space station orbit passes (estimated 15 minutes per pass)will be required.

The data processing segment of the experiment will consist of the collection and processing of the standard format tapes produced by the experimenters (ground stations). Reduced propagation data will be distributed to better define the future links in the frequencies of interest.

Godfrey Anzic
NASA Lewis Research Center
21000 Brookpark Road
M. S. 54-5
Cleveland, OH 44135

40-105 GHz PROPAGATION EXPERIMENTS

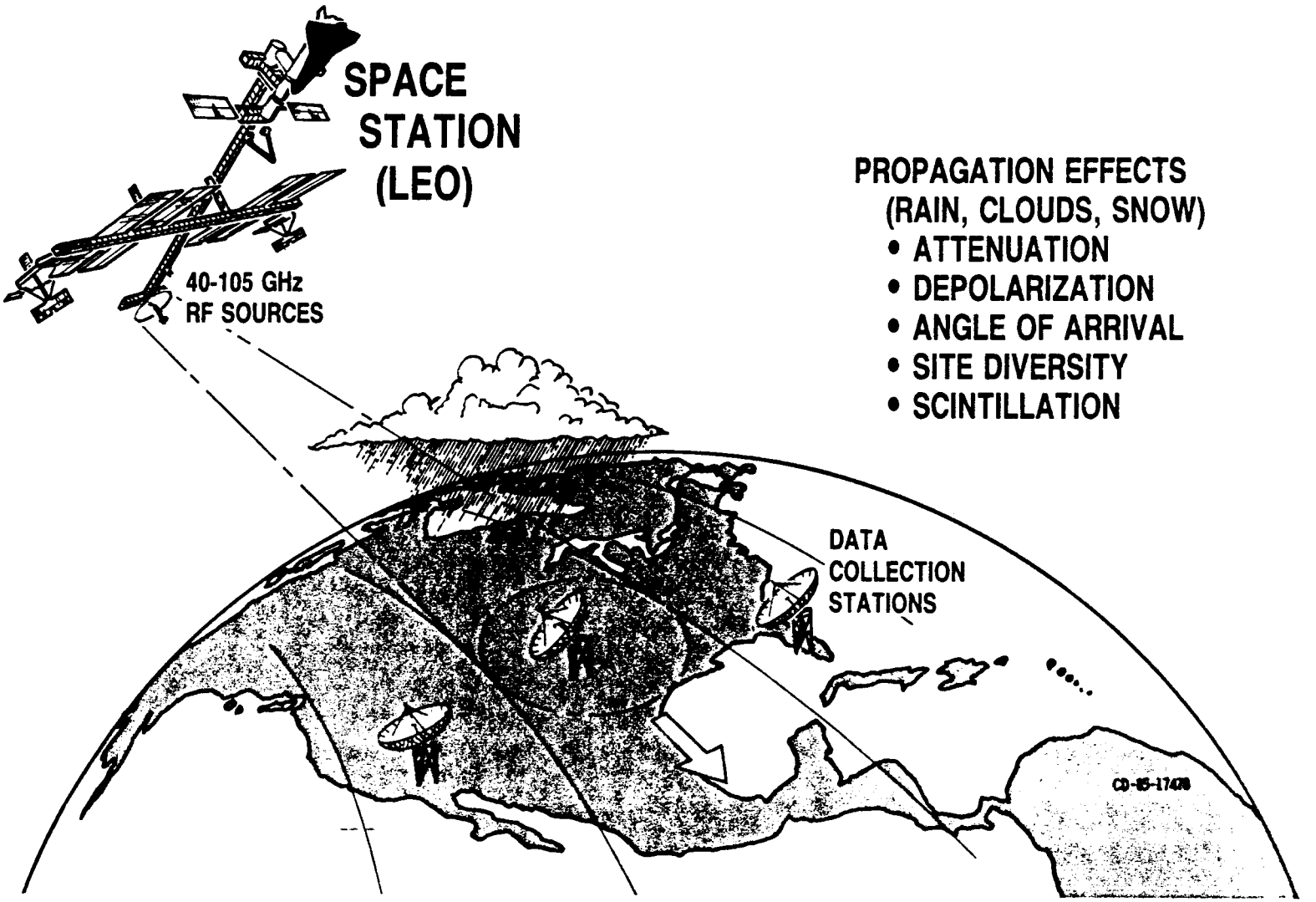

PROPAGATION EFFECTS
(RAIN, CLOUDS, SNOW)

- ATTENUATION
- DEPOLARIZATION
- ANGLE OF ARRIVAL
- SITE DIVERSITY
- SCINTILLATION

EXPERIMENT TITLE: 40-105 GHz Propagation Experiment

PROPOSED FLIGHT DATE - 1994 YEAR

OPERATIONAL DAYS REQUIRED - 3 years (continuous)

MASS - 400 KG

VOLUME:

STORED: W 1.5 x L 1 x H 1 = 1.5 M^3

DEPLOYED: W 2.5 x L 1 x H 0.5 = 1.75 M^3

INTERNALLY ATTACHED no (YES/NO)
EXTERNALLY ATTACHED yes (YES/NO)
FORMATION FLYING no (YES/NO)

ORIENTATION (inertial, solar, earth, other) earth

EXTRA-VEHICULAR ACTIVITY REQUIRED:

SET-UP: 10 Hrs/Day 1 No. of days

OPERATIONS: 0 Hrs/Day 0 No. of days 0 Interval

SERVICING: 5 Hrs/Day 1 No. of days 6 mo. Interval

INTRA-VEHICULAR ACTIVITY REQUIRED:

SET-UP: 0 Hrs/Day 0 No. of days

OPERATIONS: 0 Hrs/Day 0 No. of days 0 Interval

SERVICING: 0 Hrs/Day 0 No. of days 0 Interval

POWER REQUIRED:

0.5 KW AC or DC (circle one)

24 Hrs/Day 1000 No. of days

DATA RATE: 0.1 Megabits/second

DATA STORAGE: 0 Gigabits

Godfrey Anzic
NASA Lewis Research
21000 Brookpark Road
Mail Stop 54-5
Cleveland, OH 44135

EXPERIMENT OBJECTIVE

TO DEMONSTRATE THE OPERATION IN SPACE OF HIGH VOLTAGE POWER SUPPLIES AND TRAVELING WAVE TUBES THAT WILL BE REQUIRED FOR EFFICIENT, RELIABLE MILLIMETER WAVELENGTH COMMUNICATIONS LINKS, PARTICULARLY IN THE BAND FROM 59 TO 64 GHz. TO REDUCE THE RISK AND INCREASE THE ASSURANCE OF RELIABILITY FOR ALL FUTURE HIGH VOLTAGE APPLICATIONS IN SPACE.

HIGH VOLTAGE TRAVELING WAVE TUBE AMPLIFIER

EXPERIMENT DESCRIPTION

MILLIMETER WAVE POWER AMPLIFIERS WITH EFFICIENCIES IN EXCESS OF 40 PER CENT HAVE BECOME TECHNICALLY FEASIBLE AND WILL ENABLE THE ECONOMICAL UTILIZATION OF THE 59 TO 64 GHZ BAND FOR FUTURE INTERSATELLITE COMMUNICATIONS. WHILE RESEARCH PROCEEDS ON HIGH EFFICIENCY TRAVELING WAVE TUBES (TWT'S) THE NEXT OBSTACLE TO THIS DEVELOPMENT WILL BE THE NEED FOR SPACE QUALIFIED POWER SUPPLIES CAPABLE OF OPERATION IN THE RANGE FROM 15 TO 20 kV.

CONVENTIONAL SATELLITE TECHNOLOGY EMPLOYS POTTING TO HOLD OFF HIGH VOLTAGES. THIS TECHNIQUE USUALLY PRODUCES SATISFACTORY RESULTS FOR VOLTAGES BELOW A FEW kV, ALTHOUGH A NUMBER OF NOTABLE FAILURES HAVE BEEN TRACED TO THE USE OF POTTING.

FOR VOLTAGES ABOVE 10kV IT IS NECESSARY TO MAKE USE OF THE TECHNOLOGY PIONEERED ON THE COMMUNICATIONS TECHNOLOGY SATELLITE THAT COMBINED A NOVEL METHOD OF OPEN CONSTRUCTION WITH THE NATURAL INSULATING PROPERTIES OF THE VACUUM OF SPACE TO ACHIEVE FAILURE FREE OPERATION IN SPACE AT 12 kV.

PROPOSED HERE IS A PLAN TO DESIGN, BUILD AND QUALIFY FOR USE IN SPACE A POWER SUPPLY CAPABLE OF RELIABLE OPERATION AT UP TO 20 kV. THIS SUPPLY WOULD BE MOUNTED EXTERNAL TO SPACE STATION AND WOULD BE DESIGNED TO OPERATE A TWT IN THE 59 TO 64 GHz BAND, BUT WOULD INCORPORATE GENERIC FEATURES THAT COULD BE APPLIED TO ALL FUTURE HIGH VOLTAGE SYSTEMS. THE EXPERIMENT WOULD BE INSTRUMENTED TO PROVIDE DATA ON VOLTAGES, CURRENTS, TEMPERATURES AND RF POWER LEVELS TO EVALUATE THE SYSTEM PERFORMANCE AND IDENTIFY ANY ANOMALIES THAT MAY OCCUR.

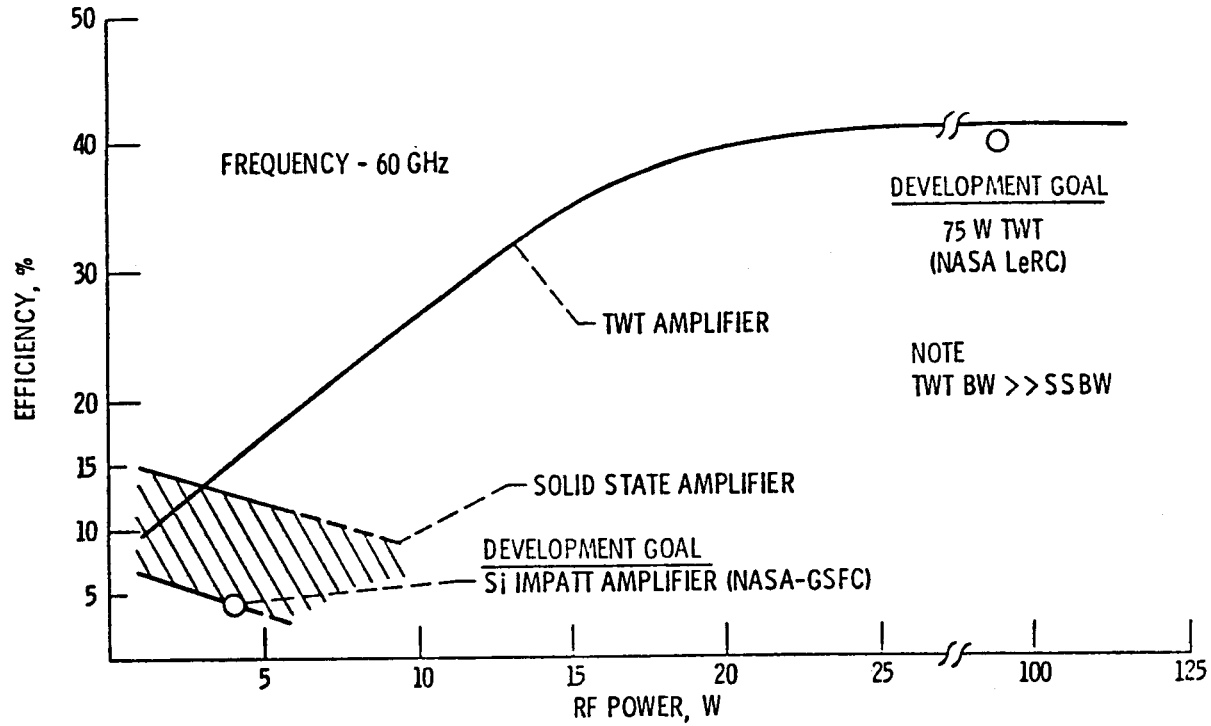

RF power vs efficiency.

ACCOMODATION REQUIREMENTS

EXPERIMENT TITLE: High Voltage Traveling Wave Tube Amplifier

PROPOSED FLIGHT DATE - 1994 YEAR

OPERATIONAL DAYS REQUIRED - 2 years

MASS - 4 KG

VOLUME:

STORED W .5 x L .75 x H .5 = 0.2 M3

DEPLOYED W .25 x L 0.5 x H .25 = 0.03 M3

INTERNALLY ATTACHED no (YES/NO)
EXTERNALLY ATTCHED yes (YES/NO)
FORMATION FLYING no (YES/NO)

ORIENTATION (inertial, solar, earth, other) TBD

EXTRA-VEHICULAR ACTIVITY REQUIRED:

4 Hrs/Day 1 No. of days.

INTRA-VEHICULAR ACTIVITY REQUIRED:

8 Hrs/Day 5 No. of days

POWER REQUIRED:

0.2 KW AC or DC (circle one)

24 Hrs/Day 730 No. of days

DATA RATE: 0.001 Megabits/second

DATA STORAGE: 0.1 Gigabits

Sensor Systems Technology Laboratory

TDMX 2261

OBJECTIVE:

Exploiting the manned presence, create a facility permitting on-site development, calibration, maintenence and modification of Sensors and Sensor Systems. The facility would make possible:

- ☐ Cost effective Sensor development and verification of new Sensor concepts and techniques
- ☐ An unattenuated view of the Earth, Sun and cold space for Sensor evaluation, verification, calibration and alignment in a post-launch microgravity environment
- ☐ Maintenance, repair and retrofitting of existing Sensors and Sensor Systems
- ☐ Algorithm development and confirmation

DESCRIPTION:

The Sensor Systems Technology Laboratory (SSTL) host would be a dedicated standard manned module as described in the Space Station Reference Configuration Description (JSC 19989). This module would house the necessary calibration, test and maintenance equipment, including an externally mounted Heliostat to direct Solar energy through a specially ported window to the internal test station. A deployable, remotely controlled pointing platform is necessary for unobscured, direct Sensor viewing of Earth nadir and limb, cold space, the Solar disk and selected targets on or about the Space Station complex. For these purposes a small specially designed airlock module, using standard interfaces, is envisioned to contain, deploy and provide shirtsleeve access to it's pointing controlled platform. The initial configuration of the SSTL would accomodate passive Sensors and Sensor Systems with growth to active devices as concepts mature. A specially equipped Lidar module would be a logical step in this growth phase.

474/Art newcomb, LaRC, X3761

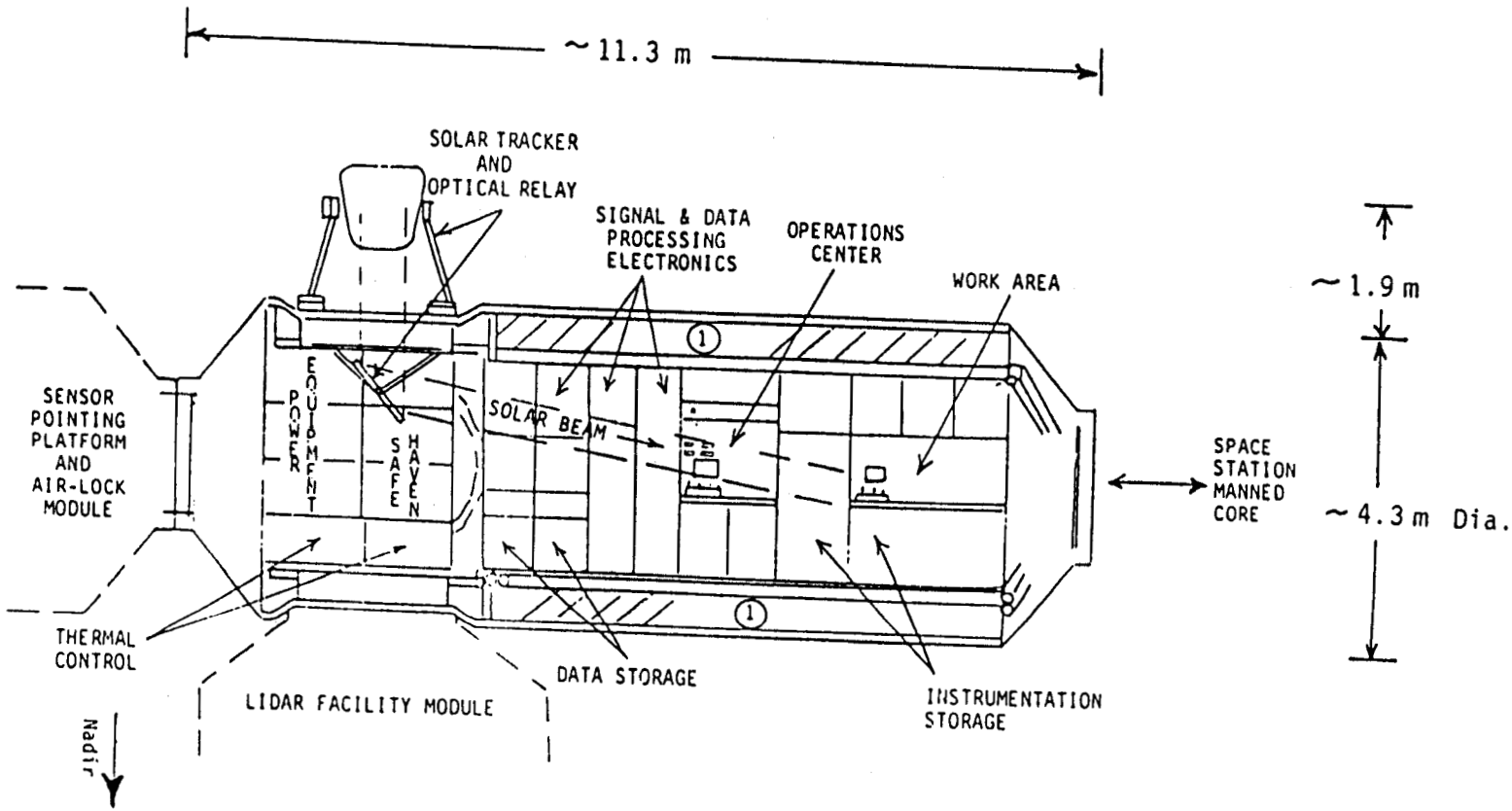

NOTE: 1. Module Service Equipment (ECLSS, etc.) in overhead and under floor where possible.

Figure 1 TDMX 2261

Sensor Systems Technology Laboratory

The main SSTL module is the IOC and will be equipped for a number of optical assembly, test, alignment and characterization tasks. It will include calibration standards, instrument quality power supplies, sensor peculiar data processing electronics as well as the Solar Tracker/Heliostat and the optical instruments needed for Sensor Systems evaluation.

474/Art Newcomb, LaRC, X3761

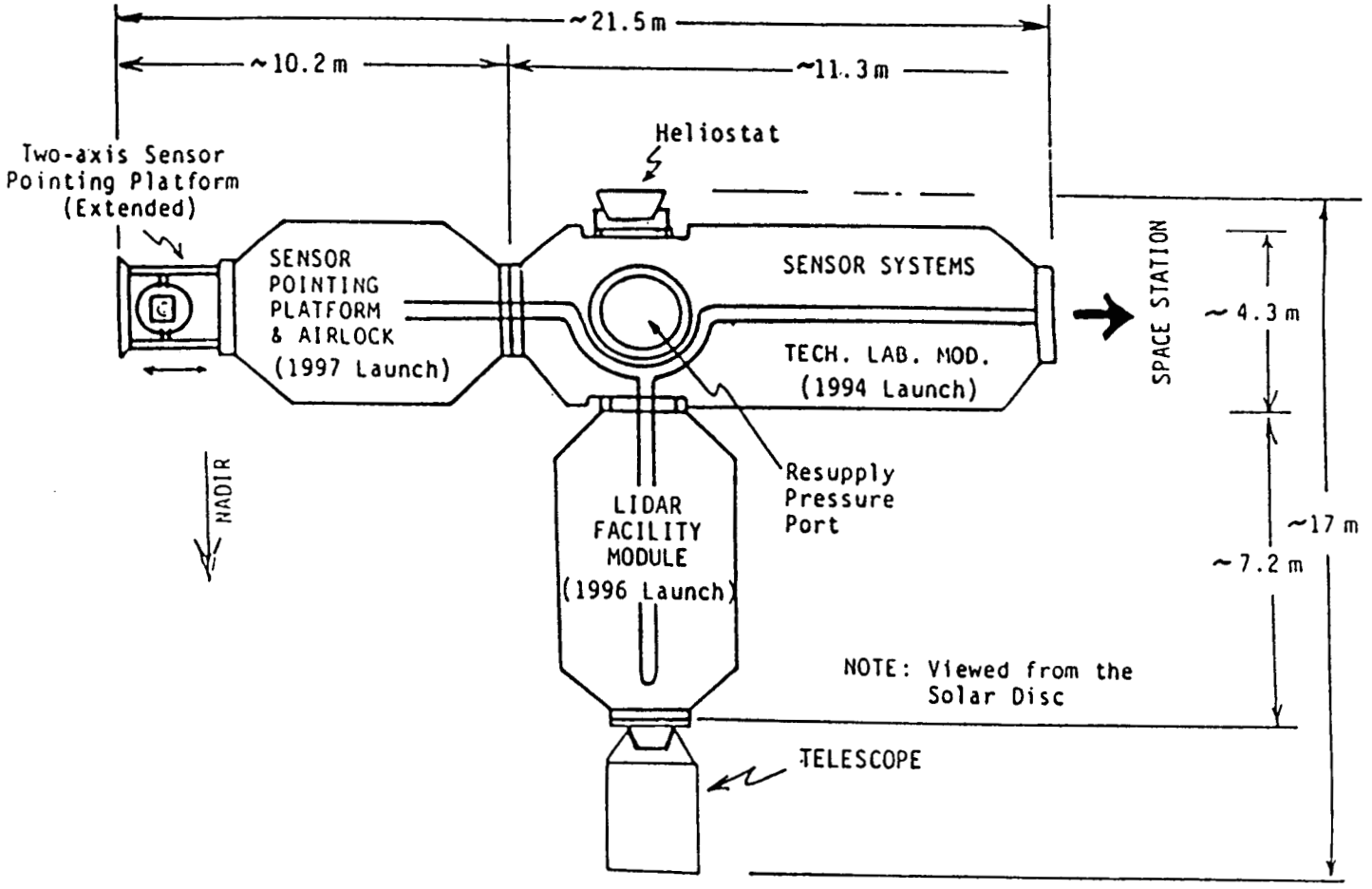

Figure 2 TDMX 2261

SSTL Growth Options

The IOC main module is shown with the Sensor Pointing Platform and Lidar Facility modules. The Sensor Pointing Platform module allows test and evaluation of Sensors and Sensor Systems with all desired viewing options in the space environment, when deployed, and the internal shirtsleeve laboratory when stowed. The Lidar Facility allows test and evaluation of active remote Sensors and Sensor Systems.

474/Art Newcomb, LaRC, X3761

EXPERIMENT TITLE:	Sensor Systems Technology Laboratory, TDMX 2261
PROPOSED FLIGHT DATE:	1994
OPERATIONAL DAYS REQUIRED:	90 initial; growth to 300/year
MASS:	12000 kg
VOLUME:	4.3 m Dia X 11.3 m L =164 m^3
INTERNALLY ATTACHED:	Yes
EXTERNALLY ATTACHED:	Yes
FORMATION FLYING:	No
ORIENTATION:	Solar, Earth and Space

EXTRA VEHICULAR ACTIVITY REQUIRED:

SET-UP	5 hrs/day	4 days	
OPERATIONS	1 hrs/day	6 days	90 day interval
SERVICING	4 hrs/day	3 days	90 day interval

INTRA-VEHICULAR ACTIVITY REQUIRED:

SET-UP	5 hrs/day	1 day	
OPERATIONS:	5 hrs/day	4 days	14 day interval
SERVICING	5 hrs/day	3 days	90 day interval

POWER REQUIRED:

5.5 kW ac

6 hrs/day for 90 days

DATA RATE:	20 megabits/second
DATA STORAGE:	20 gigabits

CO_2 DOPPLER LIDAR WIND MEASUREMENT

TDMX 2366

OBJECTIVE:

THE OBJECTIVE OF THIS EXPERIMENT IS TO DEVELOP DESIGN CRITERIA, INSTRUMENTATION, SIGNAL AND DATA PROCESSING ALGORITHMS FOR LIDAR SENSORS TO MEASURE VERTICALLY RESOLVED TWO DIMENSIONAL ATMOSPHERIC WINDS FROM SPACE PLATFORMS. THE TECHNOLOGY DEVELOPED AND DEMONSTRATED WILL PROVIDE THE MEANS FOR OPERATIONAL MEASUREMENTS OF WINDS FROM THE EARTH OBSERVATION SYSTEM (EOS). TESTS WILL BE WITH A HIGH EFFICIENCY EYE SAFE PULSED CO_2 LASER USING A LARC/OAST DEVELOPED CATAYTIC CONVERTER FOR LONG LIFE OPERATION. SIGNAL TO NOISE WILL BE EVALUATED AS A FUNCTION OF WAVELENGTH, GAS MIX INCLUDING RARE ISOTOPES, PULSE LENGTH AND ENERGY.

DESCRIPTION:

THE EXPERIMENT REQUIRES A LIDAR FACILITY ATTACHED TO THE SPACE STATION MANNED CORE TO PERMIT INTERACTIVE RESEARCH AND DEVELOPMENT FOR OPTIMIZING LIDAR SENSOR SYSTEMS HARDWARE AND SOFTWARE DESIGNS FOR REMOTE MEASUREMENTS OF ATMOSPHERIC PARAMETERS. THE LIDAR CONSISTS OF A 1.25MD TELESCOPE, A PULSED CO_2 LASER TRANSMITTER, AND A COHERENT HETERODYNE DETECTOR. WIND VELOCITY IS DERIVED FROM THE DOPPLER SHIFT IN THE RETURN SIGNAL. THE ATMOSPHERIC PARCEL BEING MEASURED MUST BE VIEWED FROM TWO OR MORE ANGLES IN ORDER TO RESOLVE TWO DIMENSIONAL WINDS, THEREFORE, THE

283/BOB HESS, LARC, X2818

CO_2 DOPPLER LIDAR WIND MEASUREMENT

TDMX 2366

DESCRIPTION (CONTINUED)

TELESCOPE MUST BE SCANNED OR POINTED AS THE SPACE STATION MOVES ALONG ITS ORBIT. THE CO_2 LASER OUTPUT PULSE WILL BE TRANSMITTED THROUGH THE SAME TELESCOPE THAT RECEIVES THE ATMOSPHERICALLY BACKSCATTERED SIGNAL. THE ALINEMENT OF THE LASER TRANSMITTER BEAM AND RECEIVER IS MAINTAINED AS THE SENSOR IS SCANNED BY A LAG ANGLE COMPENSATION SYSTEM. VERTICAL RESOLUTION IS OBTAINED BY TIME GATING THE RETURN SIGNAL. THE TELESCOPE AND ITS POINTING AND SCANNING PEDESTAL WILL BE MOUNTED OUTSIDE THE PRESSURIZED AREA, WITH THE LASER TRANSMITTER AND THE RECEIVER DETECTOR MODULES MOUNTED INTERNALLY FOR IMPROVED MONITORING AND SERVICEABILITY, AND FOR CONFIGURATION CHANGES. THE LASER TRANSMITTER FOR THIS EXPERIMENT CAN BE MODIFIED AND/OR CONTROLLED TO ALLOW PARAMETRIC INVESTIGATIONS OF LIDAR DESIGN CHARACTERISTICS INCLUDING LASER WAVELENGTH, GAS MIX INCLUDING RARE ISOTOPES, PULSE ENERGY, PULSE DURATION, AND REPETITION RATE. THE ELECTRONICS FOR SYSTEM CONTROL, SIGNAL AND DATA PROCESSING WILL BE PROGRAMMABLE WHERE POSSIBLE TO PERMIT MAXIMUM RESEARCH FLEXIBILITY.

283/BOB HESS, LARC, X2818

CO_2 DOPPLER LIDAR WIND MEASUREMENT

TDMX 2366

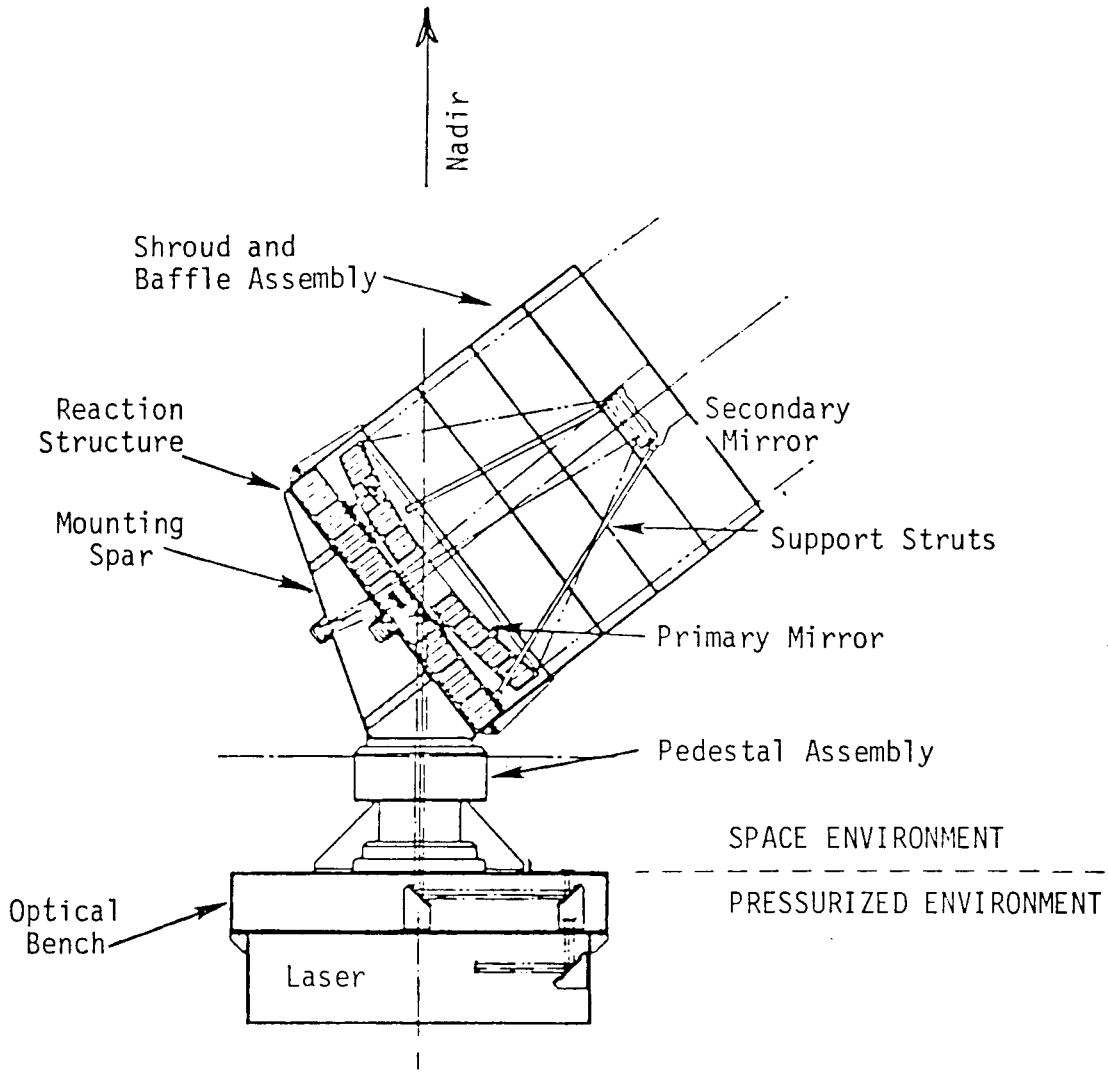

CO_2 DOPPLER LIDAR AND SCANNING TELESCOPE

283/Bob Hess, LaRC, X2818

EXPERIMENT TITLE: CO_2 Lidar Wind Measurements, TDMX 2366

PROPOSED FLIGHT DATE - 1993 YEAR

OPERATIONAL DAYS REQUIRED - 90

MASS - 500 KG

VOLUME:

STORED: W 1.5 x L 2 x H 2.5 = 7.5 M^3

DEPLOYED: W 1.5 x L 2 x H 2.5 = 7.5 M^3

INTERNALLY ATTACHED Yes (YES/NO)
EXTERNALLY ATTACHED Yes (YES/NO)
FORMATION FLYING No (YES/NO)

ORIENTATION (inertial, solar, earth, other) earth

EXTRA-VEHICULAR ACTIVITY REQUIRED:

SET-UP: 10 Hrs/Day 1 No. of days

OPERATIONS: _____ Hrs/Day _____ No. of days _____ Interval

SERVICING: 8 Hrs/Day 1 No. of days 30 Interval

INTRA-VEHICULAR ACTIVITY REQUIRED:

SET-UP: 12 Hrs/Day 2 No. of days

OPERATIONS: 2 Hrs/Day 1 No. of days 4 Interval

SERVICING: 4 Hrs/Day 1 No. of days 15 Interval

POWER REQUIRED:

3.4 KW (AC or DC (circle one)

7 Hrs/Day 90 No. of days

DATA RATE: 1 Megabits/second

DATA STORAGE: 1 Gigabits

283/Bob Hess, LaRC, X2818

ACOUSTIC CONTROL TECHNOLOGY
DEVELOPMENT EXPERIMENT

EXPERIMENT OBJECTIVE

THE EXPERIMENT OBJECTIVE IS TO DEVELOP THE METHODS AND TECHNOLOGY REQUIRED TO DESIGN AND OPERATE A SPACE STATION WITH ACCEPATABLE LEVELS OF VIBROACOUSTIC EXPOSURE. THE EXPERIMENT WILL DEVELOP A DATA BASE OF MEASUREMENTS TO BE USED TO CHARACTERIZE VIBROACOUSTIC EXPOSURE ON THE STATION, TO DETERMINE THE EFFECTS OF THIS EXPOSURE UPON MAN AND SYSTEM PERFORMANCE, AND TO COMPARE WITH MODEL PREDICTIONS. THIS WILL VALIDATE METHODS FOR PREDICTING THE LEVEL, FREQUENCY, AND TIME HISTORY OF EXPOSURE AT SPECIFIC LOCATIONS, ALLOW FOR THE DEVELOPMENT OF VIBROACOUSTIC EXPOSURE CRITERIA, AND IDENTIFY STRATEGIES FOR CONTROLLING EXPOSURE.

TDMX 2523 - D. A. McCURDY/D. G. STEPHENS

ACOUSTIC CONTROL TECHNOLOGY DEVELOPMENT EXPERIMENT

EXPERIMENT DESCRIPTION

OBJECTIVE AND SUBJECTIVE TESTS WILL BE CONDUCTED TO VALIDATE VIBROACOUSTIC PREDICTION MODELS AND HABITABILITY CRITERIA. NOISE AND VIBRATION MEASUREMENTS WILL BE MADE TO PROVIDE A DETAILED DESCRIPTION OF THE VIBROACOUSTIC ENVIRONMENT FOR COMPARISON WITH DESIGN CRITERIA AND MODEL PREDICTIONS. OTHER TESTS WILL ASSESS THE EFFECTS OF THIS ENVIRONMENT ON HEARING, SPEECH, TASK PERFORMANCE, ANNOYANCE, AND SLEEP. THE EXPERIMENT CONSISTS OF NINE TASKS: (1) SURVEY OF NOISE LEVELS AT DIFFERENT LOCATIONS; (2) SURVEY OF VIBRATION LEVELS AT DIFFERENT LOCATIONS; (3) MEASUREMENT OF INDIVIDUAL NOISE EXPOSURES OVER A PERIOD OF TIME; (4) MAKING OF HIGH QUALITY NOISE RECORDINGS; (5) MONITORING TO DETERMINE TIME HISTORY OF NOISE IN SPECIFIC LOCATIONS; (6) HEARING TESTS; (7) SPEECH/COMMUNICATION TESTS; (8) TASK PERFORMANCE TESTS; AND (9) ANNOYANCE AND SLEEP QUESTIONNAIRES. THE EXPERIMENT WILL REQUIRE CREW SUPPORT AND PARTICIPATION AND A VARIETY OF VIBROACOUSTIC MEASUREMENT EQUIPMENT.

TDMX 2523 - D. A. McCURDY/D. G. STEPHENS

ACOUSTIC CONTROL TECHNOLOGY DEVELOPMENT EXPERIMENT

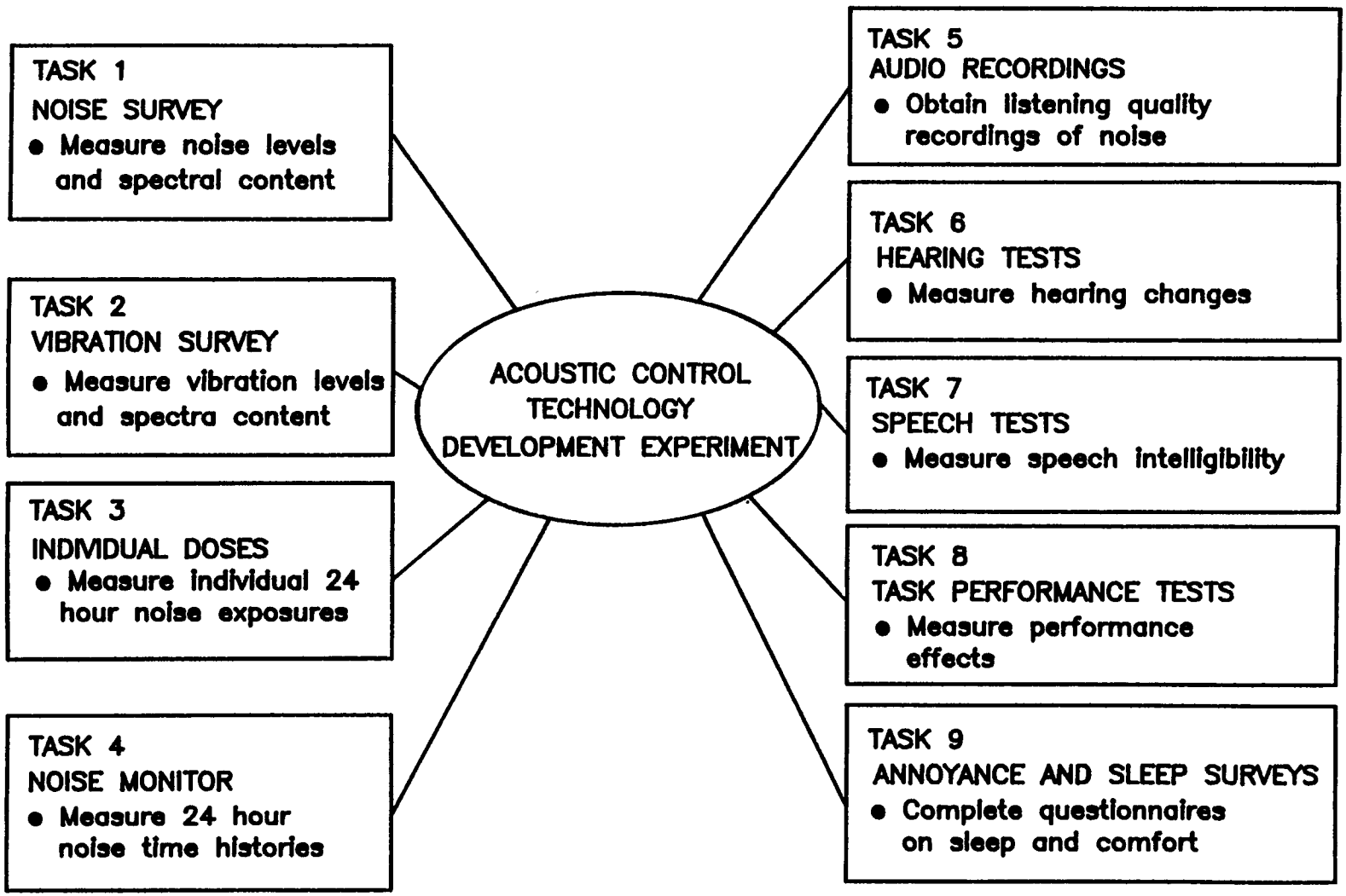

TDMX 2523 - D.A. McCurdy/ D.G. Stephens

EXPERIMENT TITLE: ACOUSTIC CONTROL TECHNOLOGY

PROPOSED FLIGHT DATE - 1992 YEAR

OPERATIONAL DAYS REQUIRED - 365

MASS - 42 KG

VOLUME:

STORED: W 0.6 x L 0.6 x H 0.5 = 0.2 M^3

DEPLOYED: W 0.6 x L 0.6 x H 0.5 = 0.2 M^3

INTERNALLY ATTACHED YES (YES/NO)
EXTERNALLY ATTACHED NO (YES/NO)
FORMATION FLYING NO (YES/NO)

ORIENTATION (inertial, solar, earth, other) NA

EXTRA-VEHICULAR ACTIVITY REQUIRED: NA

SET-UP: _____ Hrs/Day _____ No. of days

OPERATIONS: _____ Hrs/Day _____ No. of days _____ Interval

SERVICING: _____ Hrs/Day _____ No. of days _____ Interval

INTRA-VEHICULAR ACTIVITY REQUIRED:

SET-UP: 3 Hrs/Day 1 No. of days

OPERATIONS: 2 Hrs/Day 13 No. of days 7 Interval

SERVICING: 1 Hrs/Day 13 No. of days 7 Interval

POWER REQUIRED:

0.1 KW AC or DC (circle one)

24 Hrs/Day 13 No. of days

DATA RATE: NA Megabits/second

DATA STORAGE: NA Gigabits

TDMX 2523 - D. A. McCurdy/D. G. Stephens

JPL

ADVANCED ORBITING VLBI TECHNOLOGY ON THE SPACE STATION

JAMES F. JORDAN
JOHN C. MANKINS

OCTOBER 8, 9, & 10, 1985
IN-SPACE RESEARCH, TECHNOLOGY & ENGINEERING (RT&E) WORKSHOP

---

o EXPERIMENT OBJECTIVE:

- TECHNOLOGY: TO DEMONSTRATE/DEVELOP THE TECHNOLOGIES FOR SECOND-GENERATION ORBITING VERY LONG BASELINE INTERFEROMETRY (OVLBI) ON-BOARD THE SPACE STATION; TO SUPPORT IMPROVEMENTS IN THE ANGULAR RESOLUTION OF CELESTIAL RADIO MAPPING (OVER GROUND-BASED VLBI).

- SPACE STATION: TO SUPPORT DEVELOPMENT OF SPACE STATION CAPABILITY TO SERVICE, SUPPORT, AND PROVIDE TECHNOLOGY DEMONSTRATIONS FOR FREE-FLYING OVLBI STATIONS.

JPL

ADVANCED ORBITING VLBI TECHNOLOGY ON THE SPACE STATION

o EXPERIMENT DESCRIPTION

- THIS FLIGHT EXPERIMENT WOULD REQUIRE A COMPLETE VLBI RECEPTION SYSTEM TO BE FLOWN; INCLUDING A LARGE SPACE ANTENNA (30 METER) REFLECTOR/RECEIVER. COOLED RECEIVERS (40 DEG. KELVIN). WAVELENGTHS OF APPROX. 1.0-3.0 MILLIMETERS. 0.1-0.3 MILLIMETER SURFACE CONTROL CAPABILITIES. AND DATA RECORDING EQUIPMENT CAPABLE OF 200 MBPS RATES.

- AN ON-BOARD HYDROGEN MASER FREQUENCY STANDARD IS REQUIRED.

- THE EXPERIMENT WOULD INVOLVE THE ANALYSIS OF OVLBI DATA RECEPTION AND DATA HANDLING IN SPACE AND WOULD TEST THE OVERALL SYSTEM EFFICIENCY OF AN END-TO-END, SPACE-TO-GROUND, OVLBI DATA SYSTEM.

JPL

ADVANCED ORBITING VLBI TECHNOLOGY ON THE SPACE STATION

EXPERIMENT ILLUSTRATION

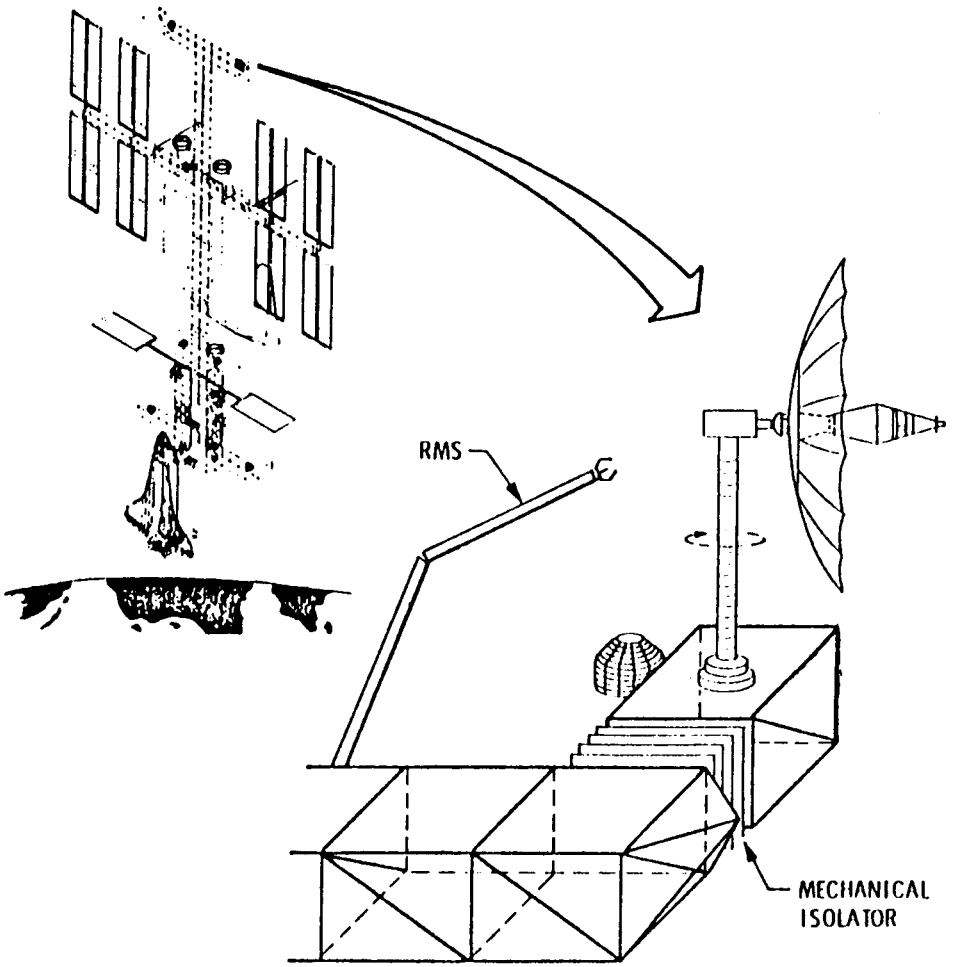

ACCOMMODATION REQUIREMENTS

EXPERIMENT TITLE: ADVANCED ORBITING VLBI TECHNOLOGY

PRINCIPAL INVSTIGATOR(S): James F. Jordan

ADDRESS: Jet Propulsion Laboratory; Pasadena, CA

PROPOSED FLIGHT DATE 1996 YEAR(S)

OPERATIONAL DAYS REQUIRED 100 (PER YEAR)

MASS 3000 KG

VOLUME:

STORED W 9.0 x L 4.0 x H 5.0 = 180.0 M3

DEPLOYED W 30.0 x L 30.0 x H 10.0 = 9000.0 M3

INTERNALLY ATTACHED x (YES/NO)
EXTERNALLY ATTACHED x (YES/NO)
FORMATION FLYING _____ (YES/NO)

ORIENTATION (inertial, solar, earth, other) other: celestial

EXTRA-VEHICULAR ACTIVITY REQUIRED:

SET-UP:	6.0	Hrs/Day	1	No. of days.		
OPERATIONS:		Hrs/Day		No. of days.		Interval
SERVICING:	6.0	Hrs/Day	1	No. of days.	120	Interval

INTRA-VEHICULAR ACTIVITY REQUIRED:

SET-UP:	3.0	Hrs/Day	1	No. of days.		
OPERATIONS:	6.0	Hrs/Day	100.0	No. of days.		Interval
SERVICING:	3.0	Hrs/Day	1	No. of days.	120	Interval

POWER REQUIRED:

1.0 KW AC or DC (circle one)

6.0 Hrs/Day 100 No. of days

DATA RATE: 200 Megabits/second

DATA STORAGE: 360 Gigabits

SATELLITE DOPPLER METEOROLOGICAL RADAR EXPERIMENT FOR SPACE STATION

TECHNOLOGY DEVELOPMENT OBJECTIVES

Develop and evaluate radar techniques for extensive meteorological measurements from space

Develop and evaluate techniques for the design and in-space assembly of a very large, highly-precise, phased array antenna

Demonstrate utility of space station as a laboratory for development of sophisticated remote sensing instruments suitable for subsequent free-flying applications

SATELLITE DOPPLER METEOROLOGICAL RADAR

OBJECTIVE -

DEVELOP ENABLING TECHNOLOGY REQUIRED FOR PUSHBROOM DOPPLER RADAR.

MEASUREMENT OF GLOBAL RAINFALL RATES AND OCEAN SURFACE WIND VECTORS.

DESCRIPTION -

MULTI-BEAM (PUSHBROOM), BI-STATIC RADAR WILL BE DEVELOPED FOR IN-ORBIT TESTING. VARIOUS DATA PROCESSING TECHNIQUES WILL BE EVALUATED FOR OBTAINING THE DESIRED OBJECTIVE OF 3-DIMENSIONAL MAPPING OF PRECIPITATION IN THE ATMOSPHERE AND 2-DIMENSIONAL MAPPING OF THE RADAR REFLECTIVITY OF THE EARTH'S SURFACE, INCLUDING THE USE OF DOPPLER PROCESSING FOR IMPROVED ACCURACY AND DYNAMIC RANGE (IMPROVED SIGNAL-TO-CLUTTER RATIO).

SATELLITE METEOROLOGICAL RADAR EXPERIMENT GEOMETRY

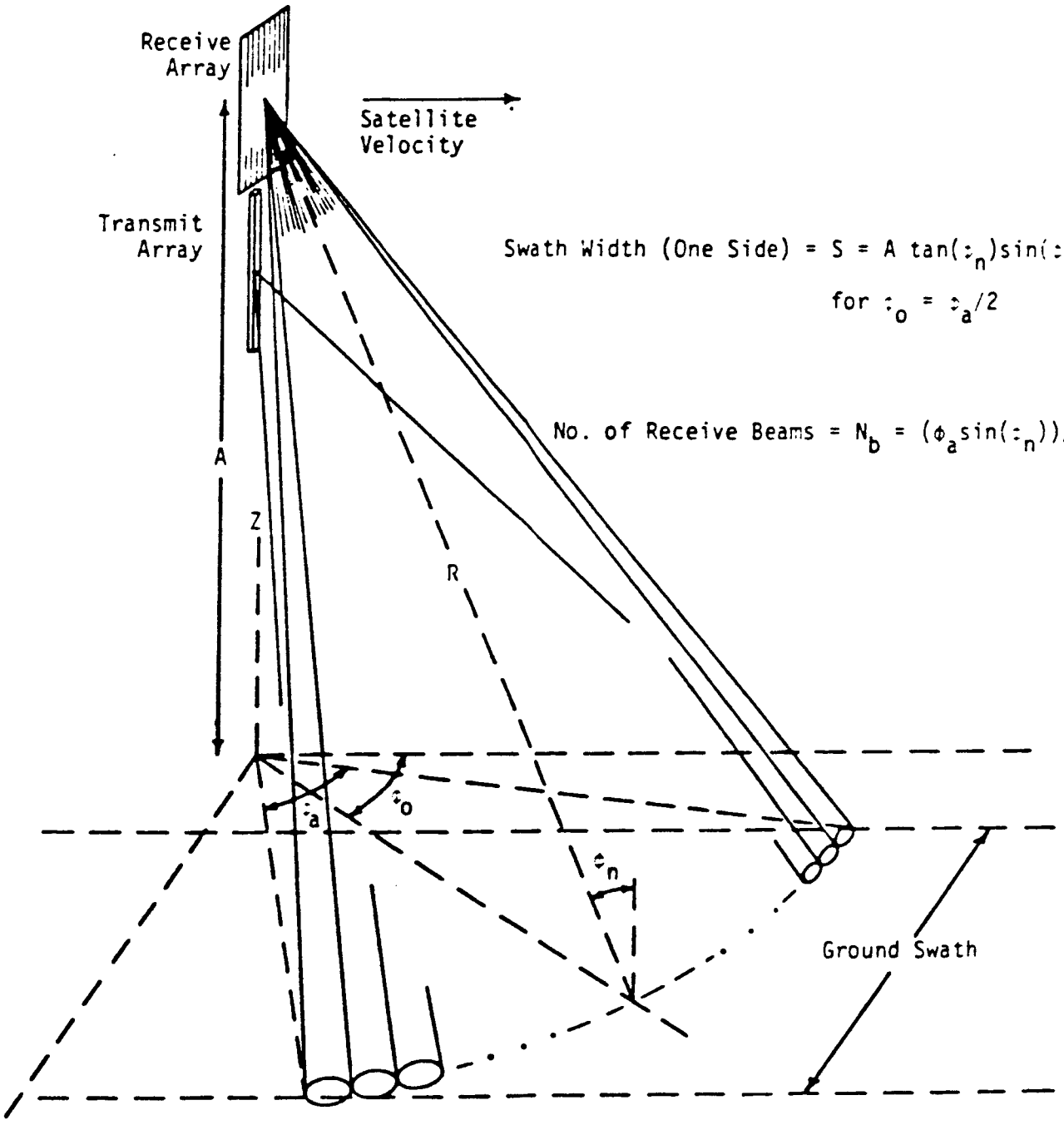

METEOROLOGICAL RADAR ANTENNA FOR SPACE STATION

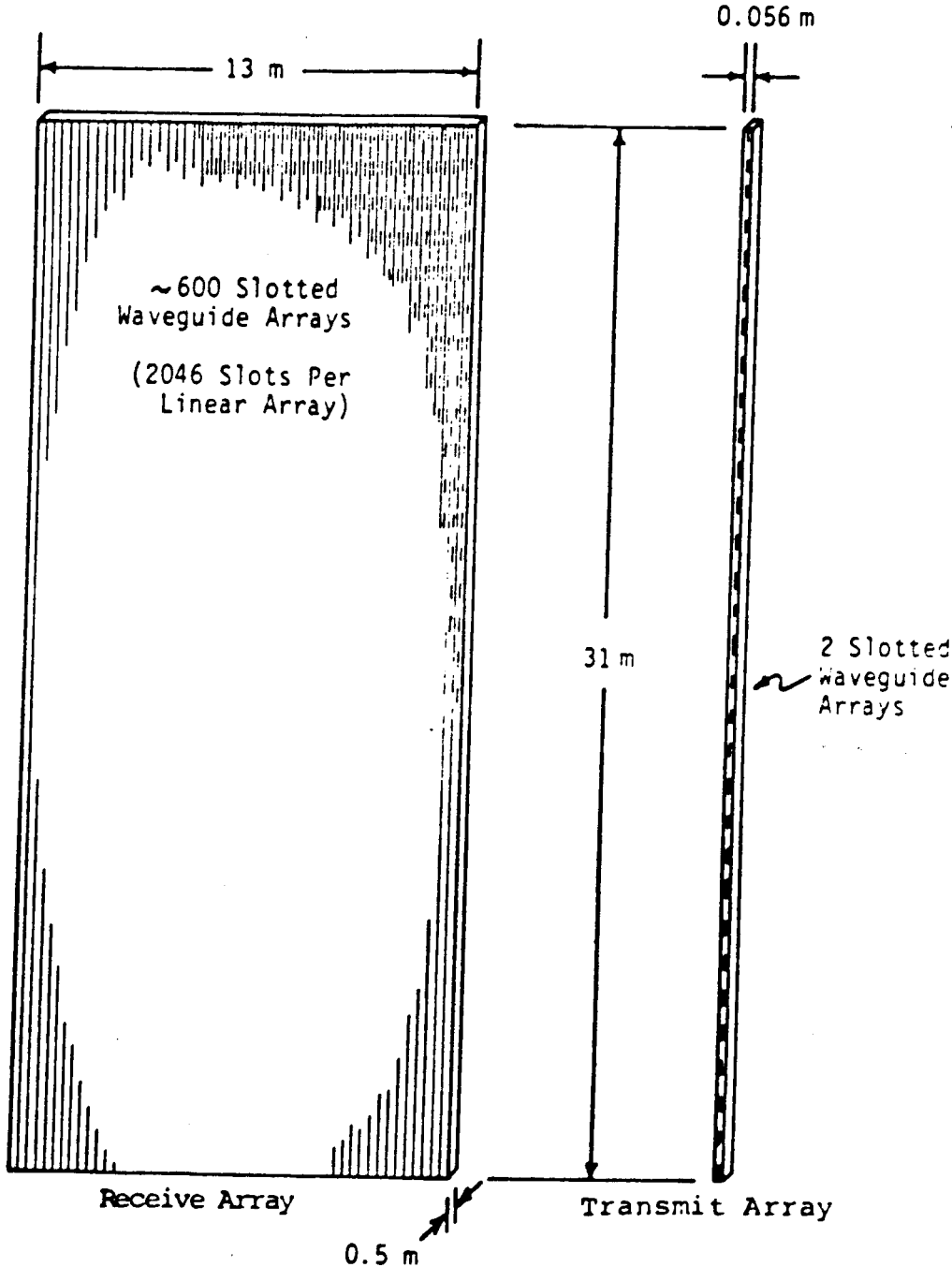

LOCATION OF RADAR ANTENNA ON SPACE STATION

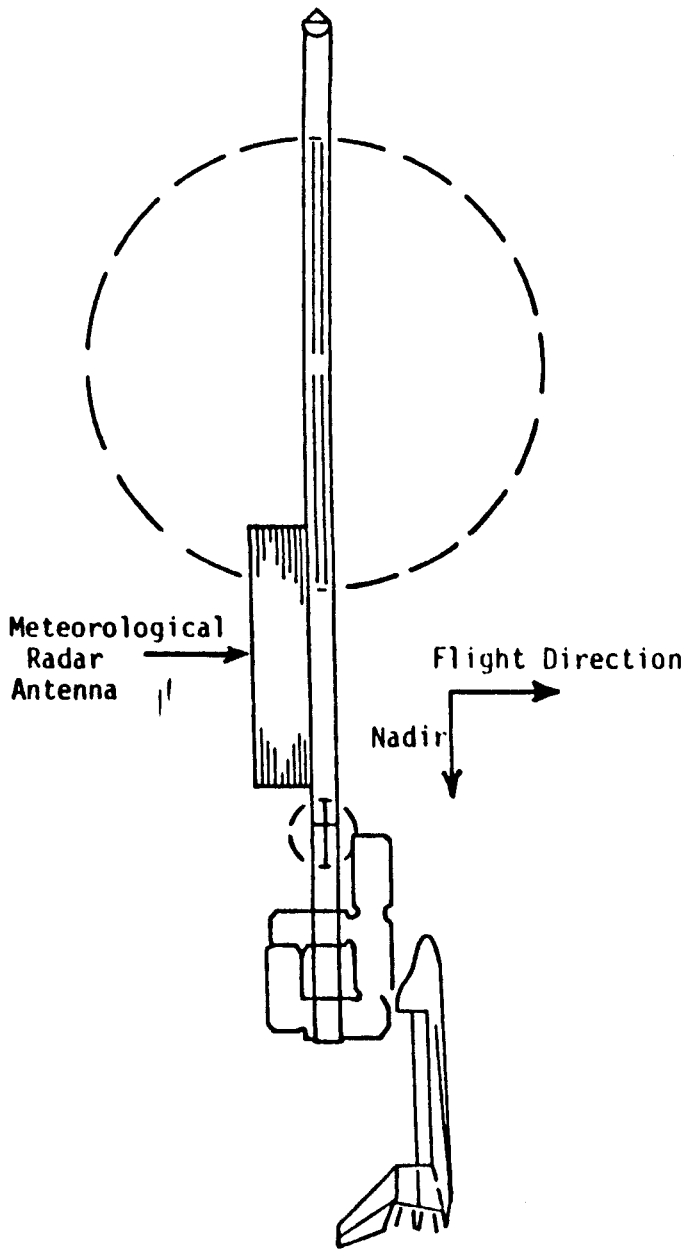

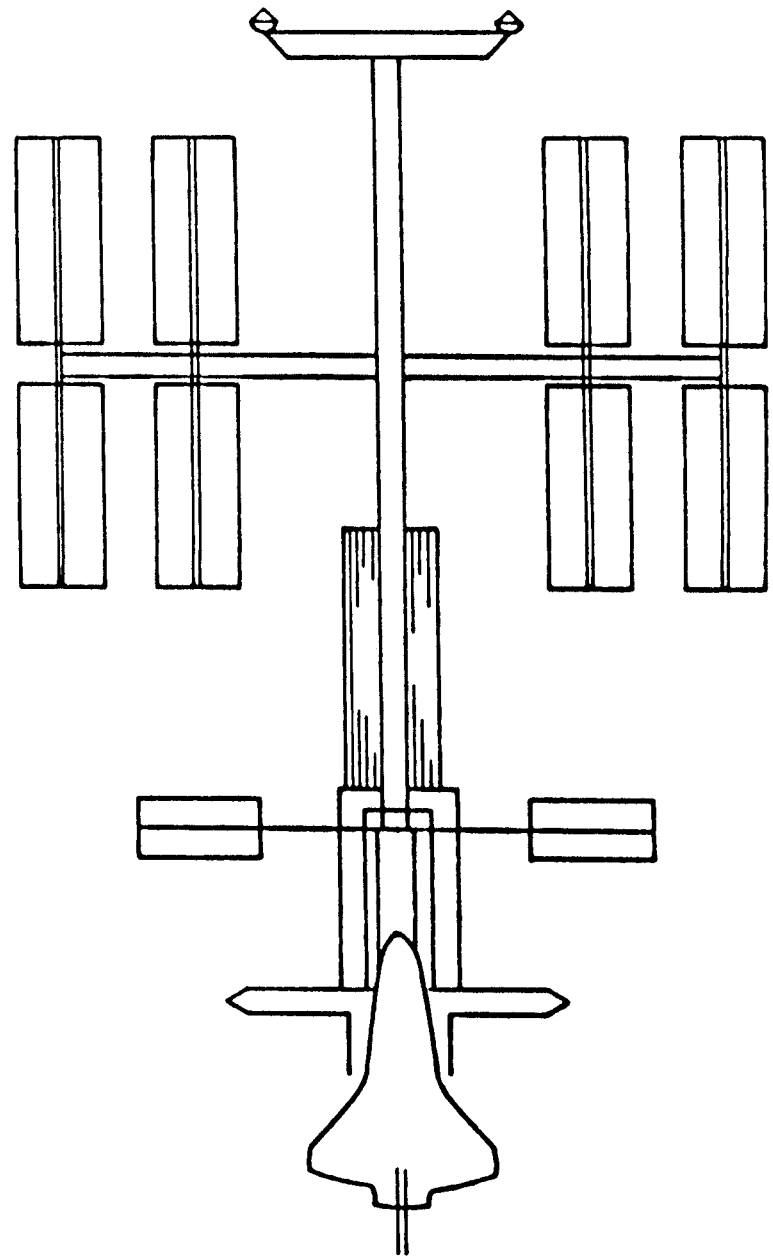

SATELLITE DOPPLER METEOROLOGICAL RADAR

PROPOSED FLIGHT DATE - 1998

OPERATIONAL DAYS REQUIRED - 60

MASS - 5255 KG

VOLUME: EXTERNALLY ATTACHED ANTENNA (INTERNAL EQUIP. = 1.0 M^3)

STORED:	W	4.1	x	L	4.3	x	H	12	=	212	M^3
DEPLOYED:	W	0.46	x	L	13	x	H	31	=	185	M^3

ORIENTATION: earth

EXTRA-VEHICULAR ACTIVITY REQUIRED:

SET-UP: 8 ManHrs/Day 2 No. of days

INTRA-VEHICULAR ACTIVITY REQUIRED:

SET-UP: 4 ManHrs/Day 1 No. of days

OPERATIONS: 2 ManHrs/Day 60 No. of days Var. Interval

POWER REQUIRED:

1.5 KW DC

8 Hrs/Day 60 No. of Days

DATA RATE: 1.2 Megabits/second

DATA STORAGE: 20 Gigabits

MICROWAVE REMOTE SENSING-PASSIVE

OBJECTIVE

THE OBJECTIVE IS THE VALIDATION OF SMART SENSOR TECHNOLOGY FOR PASSIVE MICROWAVE REMOTE MEASUREMENT OF VARIOUS PARAMETERS OF THE EARTH'S SURFACE. THE REMOTE SENSING OF THESE PARAMETERS REQUIRES THE MEASUREMENT OF RADIOMETRIC BRIGHTNESS TEMPERATURE AT MORE THAN ONE FREQUENCY AND, IN SOME CASES (I.E., SOIL MOISTURE), REQUIRES MEASUREMENTS AT RELATIVELY LOW FREQUENCIES (I.E., 1.4 GHZ).

THE OBJECTIVE OF THE INITIAL EXPERIMENT WILL BE TO VALIDATE THE TECHNOLOGY REQUIRED FOR AN OPERATIONAL SYSTEM TO MEASURE THE RADIOMETRIC BRIGHTNESS TEMP. AT 1.4 GHZ. THIS EXPERIMENT WILL EVALUATE AN ANTENNA OF REQUIRED APERTURE TO OBTAIN THE DESIRED SPATIAL RESOLUTION AT THE LOWEST FREQUENCY (LARGEST REQUIRED APERTURE). THE ANTENNA WILL HAVE MULTIPLE BEAMS IN ORDER TO OBTAIN THE DESIRED COVERAGE AND TEMPERATURE RESOLUTION. THE EXPERIMENT ALSO INCLUDES A COMPACT SET OF SPACE QUALIFIED, FEED MOUNTED RADIOMETERS, AS WELL AS DATA PROCESSING TECHNIQUES AND ALGORITHMS TO OPTIMIZE SYSTEM PERFORMANCE OVER A RANGE OF TARGET CHARACTERISTICS.

MIRCOWAVE REMOTE SENSING-PASSIVE

DESCRIPTION

THE EXPERIMENT CONSISTS OF A SPACE ERECTABLE, 118 METER DIAMETER ANTENNA WITH 3 SUBAPERTURES AND MICROWAVE REFLECTING SURFACE. THE ANTENNA HAS A 52 BEAM, LOW LOSS, MICROSTRIP FEED ASSEMBLY AND A SET OF COMPACT, FEED MOUNTED, RADIOMETER SUBASSEMBLIES. THE ANTENNA BEAMS WILL BE POINTED BY AN ANTENNA CONTROL TO THE EARTH NEAR NADIR FOR DATA TAKING AND, PERIODICALLY, IN THE ANTI-EARTH DIRECTION FOR CALIBRATION PURPOSES. AS PART OF THIS EXPERIMENT, THE SPACE STATION WOULD CARRY A PROGRAMMABLE, ADAPTIVE DATA PROCESSING AND DISPLAY SYSTEM TO ALLOW OPTIMIZATION OF SPATIAL AND TEMPERATURE RESOLUTION AS A FUNCTION OF THE EXPECTED AND OBSERVED EARTH SURFACE CHARACTERISTICS.

THE ANTENNA WILL BE DEPLOYED/ERECTED AND SPECIAL INSTRUMENTATION THEN EMPLOYED TO EVALUATE ANTENNA SHAPE AND REFLECTING SURFACE CHARACTERISTICS. AFTER THE MICROWAVE AND POINTING SYSTEMS HAVE BEEN ADJUSTED AND THE PERFORMANCE VERIFIED, EARTH TARGET AREAS WILL BE OBSERVED TO EVALUATE REMOTE SENSOR EFFECTIVENESS TO MEASURE THE DESIRED GEOPHYSICAL PARAMETER(S). A SPACE STATION MISSION SPECIALIST WILL BE INVOLVED IN REALTIME MONITORING OF ALL DATA, AND IN THE ADJUSTMENT/MODIFICATION OF THE SIGNAL AND DATA PROCESSING ALGORITHMS. THE DATA OBTAINED FROM THE SYSTEM OBSERVATIONS WILL BE PROCESSED AND DISPLAYED ONBOARD IN ADDITION TO STORED FOR TRANSMISSION TO EARTH .

TDMX 2264 - MICROWAVE REMOTE SENSING-PASSIVE

Experimenter: B. Kendall

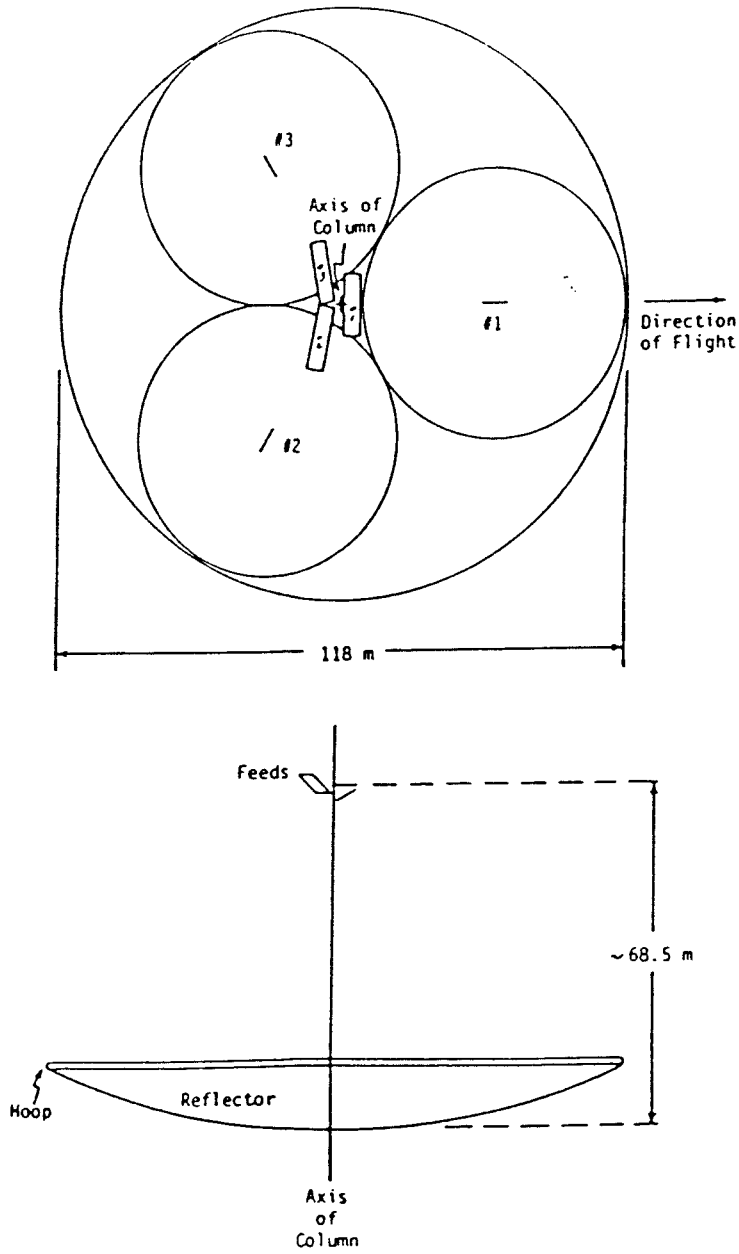

Three Sub-Aperture Antenna Configuration

EXPERIMENT TITLE: MICROWAVE REMOTE SENSING - PASSIVE

PROPOSED FLIGHT DATE - 1997 YEAR

OPERATIONAL DAYS REQUIRED - 300

MASS - 4414 KG

VOLUME:

STORED: W 4.57 (DIA) x L 14.63 x H --- = 300 M^3

DEPLOYED: W 118 (DIA) x L 70 x H --- = 765.00 M^3

INTERNALLY ATTACHED NO (YES/NO)
EXTERNALLY ATTACHED NO (YES/NO)
FORMATION FLYING YES (YES/NO)

ORIENTATION (inertial, solar, earth, other) EARTH

EXTRA-VEHICULAR ACTIVITY REQUIRED:

SET-UP: 4 Hrs/Day 1 No. of days

OPERATIONS: _____ Hrs/Day _____ No. of days _____ Interval

SERVICING: _____ Hrs/Day _____ No. of days _____ Interval

INTRA-VEHICULAR ACTIVITY REQUIRED:

SET-UP: 6 Hrs/Day 1 No. of days

OPERATIONS: 4 Hrs/Day 300 No. of days _____ Interval

SERVICING: 2 Hrs/Day 1 No. of days 30 Interval

POWER REQUIRED:

0.5 KW AC or DC (circle one)

24 Hrs/Day 300 No. of days

DATA RATE: .001 Megabits/second

DATA STORAGE: .3 Gigabits

MANNED OBSERVATION TECHNIQUES

D. L. AMSBURY, JOHNSON SPACE CENTER

OBJECTIVE:

TO USE MAN IN THE SPACE STATION ENVIRONMENT TO SUPPORT SCIENTIFIC OBSERVATION OF THE EARTH.

GOALS INCLUDE DEVELOPMENT OF OBSERVATIONS/COMMUNICATIONS TECHNIQUES; DEVELOPMENT OF ON-BOARD ANALYSIS TECHNIQUES; AND IN-ORBIT TESTS OF REMOTE-SENSING DEVICES.

DESCRIPTION:

OBSERVATION/COMMUNICATIONS TECHNIQUES - EXTEND PRESENT CAPABILITY TO VIEW THE EARTH FROM THE SHUTTLE, BY MEANS OF

1) AN OPTICAL-QUALITY, EARTH-ORIENTED WINDOW;
2) DIRECT COMMUNICATION WITH SCIENTISTS AND ENGINEERS ON THE GROUND DURING OBSERVATIONS;
3) A POINTABLE, INSTRUMENTED PLATFORM CONTROLLED BOTH MECHANICALLY AND VISUALLY FROM INSIDE THE SPACE STATION; AND
4) HIGH-DENSITY RECORDING SYSTEMS.

ONBOARD ANALYSIS - MANIPULATE DIGITAL DATA OBTAINED BY CHARGE-COUPLED IMAGING DEVICES AND SPECTROMETERS TO TEST HYPOTHESES AND DATA-COLLECTION TECHNIQUES BETWEEN OBSERVATIONS.

TEST REMOTE-SENSING DEVICES - COMMAND, CONTROL, AND TEST SYSTEMS AND PARTS OF SYSTEMS DESIGNED FOR OPERATIONAL, UNMANNED DEPLOYMENT, USING THE POINTABLE INSTRUMENT PLATFORM AND THE DATA-ANALYSIS CAPABILITY ONBOARD THE SPACE STATION IN DIRECT COMMUNICATION WITH SCIENTISTS AND ENGINEERS ON THE GROUND. THE PALLET COMMAND COULD BE SWITCHED TO GROUND CONTROL DURING OPERATION OF THE SPACE STATION IN THE MAN-TENDED MODE.

EXPERIMENT TITLE MANNED OBSERVATION TECHNIQUES (IN-CABIN)

PROPOSED FLIGHT DATE - _____ YEAR 1993

OPERATIONAL DAYS REQUIRED ALL

MASS - 10-60 KG

VOLUME: 2X 0.05 cu M

STORED: W _____ x L _____ x H _____ = _____ M^3

DEPLOYED: W _____ x L _____ x H _____ = _____ M^3

INTERNALLY ATTACHED BOTH (YES/NO) (IN OPTICAL WINDOW)
EXTERNALLY ATTACHED ~~NO~~ (YES/NO)
FORMATION FLYING ~~NO~~ (YES/NO)

ORIENTATION (inertial, solar, earth, other) EARTH

EXTRA-VEHICULAR ACTIVITY REQUIRED: NONE

SET-UP: _____ Hrs/Day _____ No. of days

OPERATIONS: _____ Hrs/Day _____ No. of days _____ Interval

SERVICING: _____ Hrs/Day _____ No. of days _____ Interval

INTRA-VEHICULAR ACTIVITY REQUIRED:

SET-UP: 0.25 Hrs/Day ALL No. of days

OPERATIONS: 2-6 Hrs/Day ALL No. of days _____ Interval

SERVICING: NONE Hrs/Day, _____ No. of days _____ Interval

POWER REQUIRED:

BATTERIES _____ KW AC or DC (circle one)

_____ Hrs/Day _____ No. of days

DATA RATE: N/A Megabits/second

DATA STORAGE: _____ Gigabits

EXPERIMENT TITLE MANNED OBSERVATION TECHNIQUES (PALLET)

PROPOSED FLIGHT DATE 1993 YEAR

OPERATIONAL DAYS REQUIRED TBD

MASS - TBD KG

VOLUME: 0.6 CU M

STORED: W _____ x L _____ x H _____ = _____ M^3

DEPLOYED: W 1M x L 2M x H 0.3 M = 0.6 M^3

INTERNALLY ATTACHED NO (YES/NO)
EXTERNALLY ATTACHED ~~YES~~ (YES/NO)
FORMATION FLYING ~~NO~~ (YES/NO)

ORIENTATION (inertial, solar, earth, other) EARTH

EXTRA-VEHICULAR ACTIVITY REQUIRED:

SET-UP: TBD Hrs/Day _____ No. of days

OPERATIONS: TBD Hrs/Day _____ No. of days _____ Interval

SERVICING: TBD Hrs/Day _____ No. of days _____ Interval

INTRA-VEHICULAR ACTIVITY REQUIRED:

SET-UP: TBD Hrs/Day _____ No. of days

OPERATIONS: 2-6 Hrs/Day TBD No. of days TBD Interval

SERVICING: TBD Hrs/Day _____ No. of days _____ Interval

POWER REQUIRED:

TBD KW AC or DC (circle one)

TBD Hrs/Day _____ No. of days

DATA RATE: TBD Megabits/second DEPENDS ON EXPERIMENTS ATTACHED TO PALLET

DATA STORAGE: TBD Gigabits

SPACE BASED RADAR (SBR)

OBJECTIVE: To perform radar clutter measurements over various earth terrain, such as: land/sea interfaces, seas, urban, mountains, forest, ice, mountain/plains interface, etc. To provide reliability data on the long term space exposure of Galium Arsenide (GaAs) transmit/receive modules and the effects on operational performance. This will impact signal processor and waveform generator designs for a space based radar. Measure surface flatness of the deployed SBR antenna lens. Propagation losses will be measured.

DESCRIPTION: This experiment consists of an 20 X 50 foot space-fed phased array lens antenna system, with associated radar components, to conduct the experiments described above. The space station will provide approximately 7KW of prime power, data recording and storage, and transmission of the data to ground stations. The data will be releasable to only AF approved contractors.

WHY SPACE STATION: There will be an 20 X 50 foot space-fed phased array lens antenna system built with 2000 to 3000 GaAs transmit/receive modules for a shuttle-attached experiment which will give short term space exposure results. It will be refurbished for the space station experiment. The space station will provide long term space exposure of these modules to evaluate degradation and reliability. Radar clutter and propagation data will be taken over a wider variety of terrains and weather conditions at different times of the year during the four seasons. Surface flatness will be measured at specified times during the year. By using the space station prime power, data recording and storage, and downlink transmission capabilities, these SBR experiments will be performed with a significant cost savings.

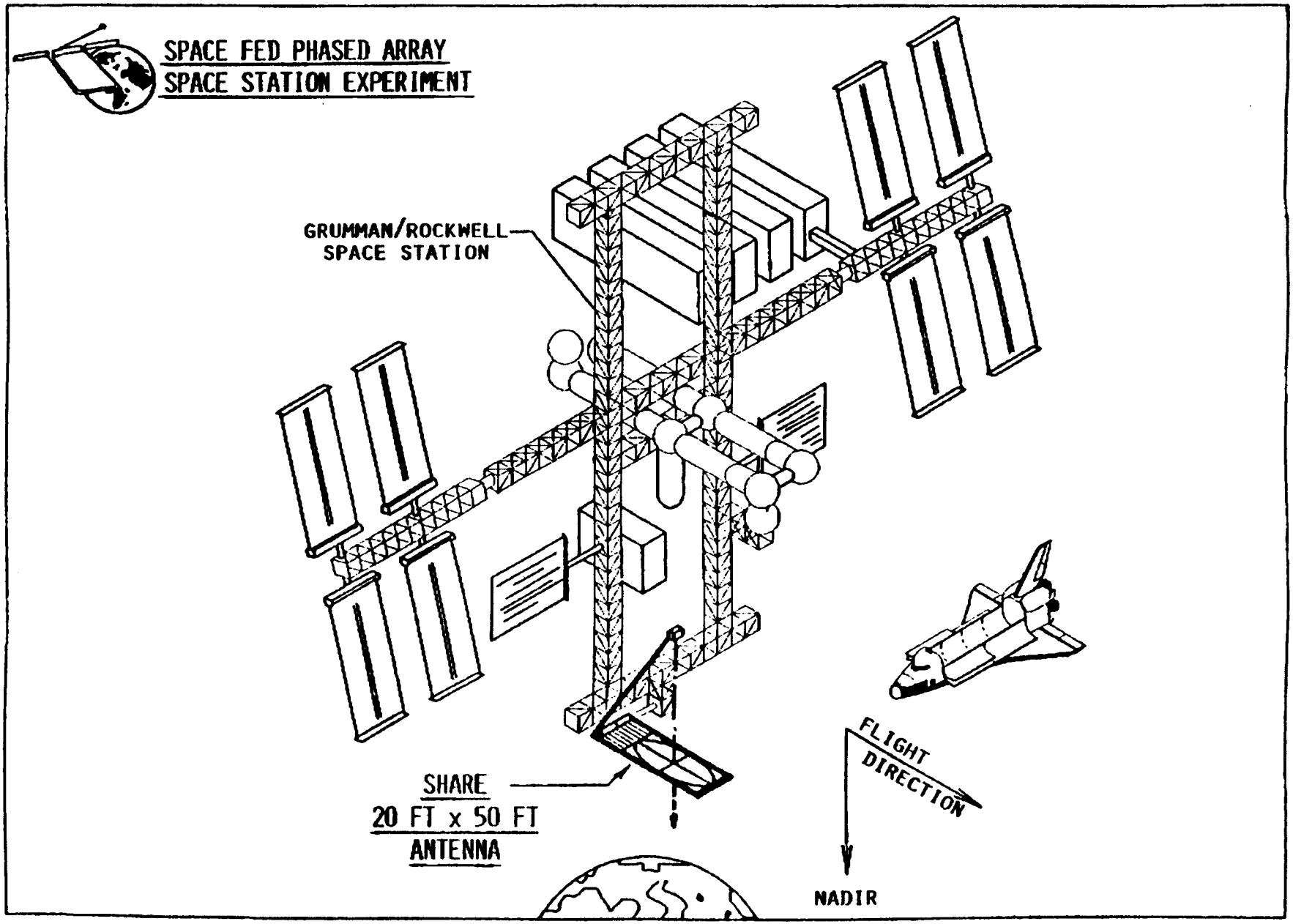

11/15 15:23 7307042 #04 OF 04

John C. Cleary, RADC/OCSA
315-330-3573

EXPERIMENT TITLE: Space Based Radar Experiment

EXPERIMENT OBJECTIVE: _____

EXPERIMENT DESCRIPTION: _____

ACCOMMODATION REQUIREMENTS:

PROPOSED FLIGHT DATE - 1992-1994 Year

OPERATIONAL DAYS REQUIRED - 50 days or more over 365 days

MASS - Initial Estimate 7000 KG

VOLUME:

STORED: W 2 M x L 4 M x H 1 M = 6 M^3

DEPLOYED: W 8 M x L 15 M x H 0.2 M = 24 M^3

INTERNALLY ATTACHED No (Yes/No)

EXTERNALLY ATTACHED Yes (Yes/No)

FORMATION FLYING No (Yes/No)

ORIENTATION (inertial, solar, earth, other) Earth

EXTRA-VEHICULAR ACTIVITY REQUIRED: _____

SET-UP TBD Hrs/Day _____ No. of days

OPERATIONS TBD Hrs/Day _____ No. of days _____ Internal

SERVICING TBD Hrs/Day _____ No. of days _____ Internal

INTRA-VEHICULAR ACTIVITY REQUIRED:

SET-UP TBD Hrs/Day _____ No. of days

OPERATIONS TBD Hrs/Day _____ No. of days _____ Internal

SERVICING TBD Hrs/Day _____ No. of days _____ Internal

POWER REQUIRED:

Approx. 7 KW AC or DC (circle one)

1 to 2 Hrs/Day 50 No. of days

DATA RATE TBD Megabits second

DATA STORAGE TBD Gigabits