NAS8-37136

March 1989

Appendix L
LRB Engine
Status Aerojet
TechSystems

Liquid Rocket Booster (LRB) for the Space Transportation System (STS) Systems Study

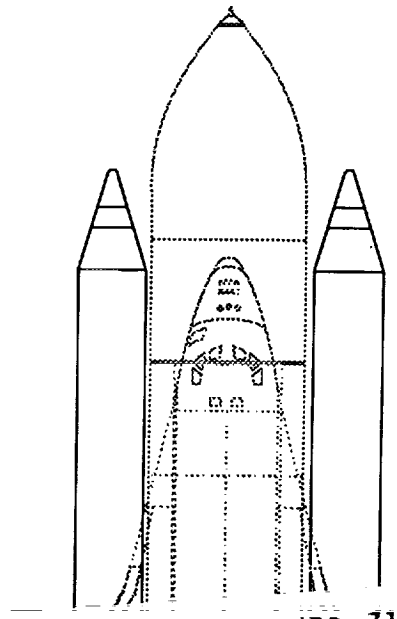

N90-71173

(NASA-CR-183798-APP-L) LIQUID ROCKET BOOSTER (LRB) FOR THE SPACE TRANSPORTATION SYSTEM (STS) SYSTEMS STUDY. APPENDIX L: LRB ENGINE STATUS AEROJET TECHSYSTEMS (Martin Marietta Corp.) 117 p

Unclas
G3/20 0251602

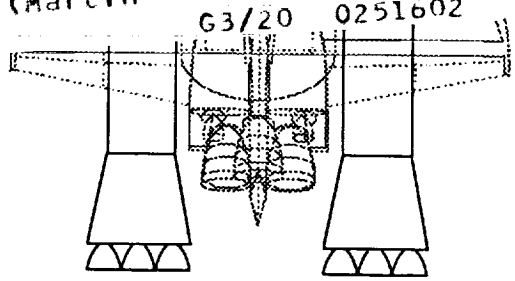

L-004/jer

MARTIN MARIETTA
MANNED SPACE SYSTEMS

LRB EngineStatus
Aerojet TechSystems

Appendix L

AEROJET TechSystems COMPANY

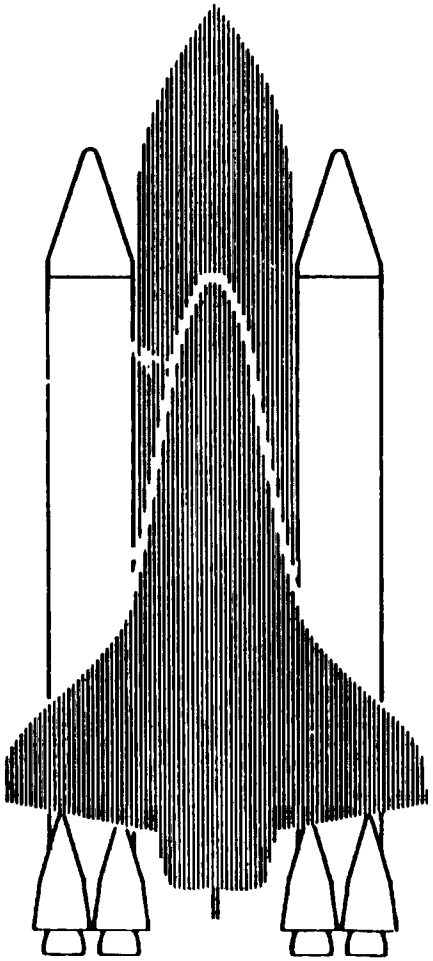

LRB

Engine Status

15 June 1988

AEROJET TechSystems COMPANY

Index

Pressure Fed Engines

Engine Configuration	Bill Hoffman
Recent Stability/Performance Progress	Jerry Pieper
Injector & Thrust Chamber Assembly	Jeff Muss
Non-Metallic Materials	Paul Marchol

Turbopump Fed Engines

Engine Configuration	Bill Hoffman
Turbopumps	Vic Viteri
Injector & Thrust Chamber Assembly	Jeff Muss
Heat Transfer	Felix Chen

Conclusions	Bill Hoffman
Recommendations	Bill Hoffman

AEROJET TechSystems COMPANY

LRB For STS
Replace Current SRB's

Purpose

- Improve Safety And Reliability
- Increase Payload Capability
  - 70,500 To 160 mi 28.5° (New Requirement)
  - ~ 50,000 To 160 mi 28.5° (Current STS)

Restraints

- Intact Abort With Engine Out At T-0
- No Changes To Orbiter
- No Major Changes To External Tank
- No Changes To Flame Trench

Concerns

- Wing Loads Due LRB Length And Diameter
- LRB/ET Interface Loads

AEROJET TechSystems COMPANY

LRB PROGRAM PLAN SUMMARY

PERIOD OF PERFORMANCE 05-NOVEMBER-1987 THROUGH 07-JULY-1988

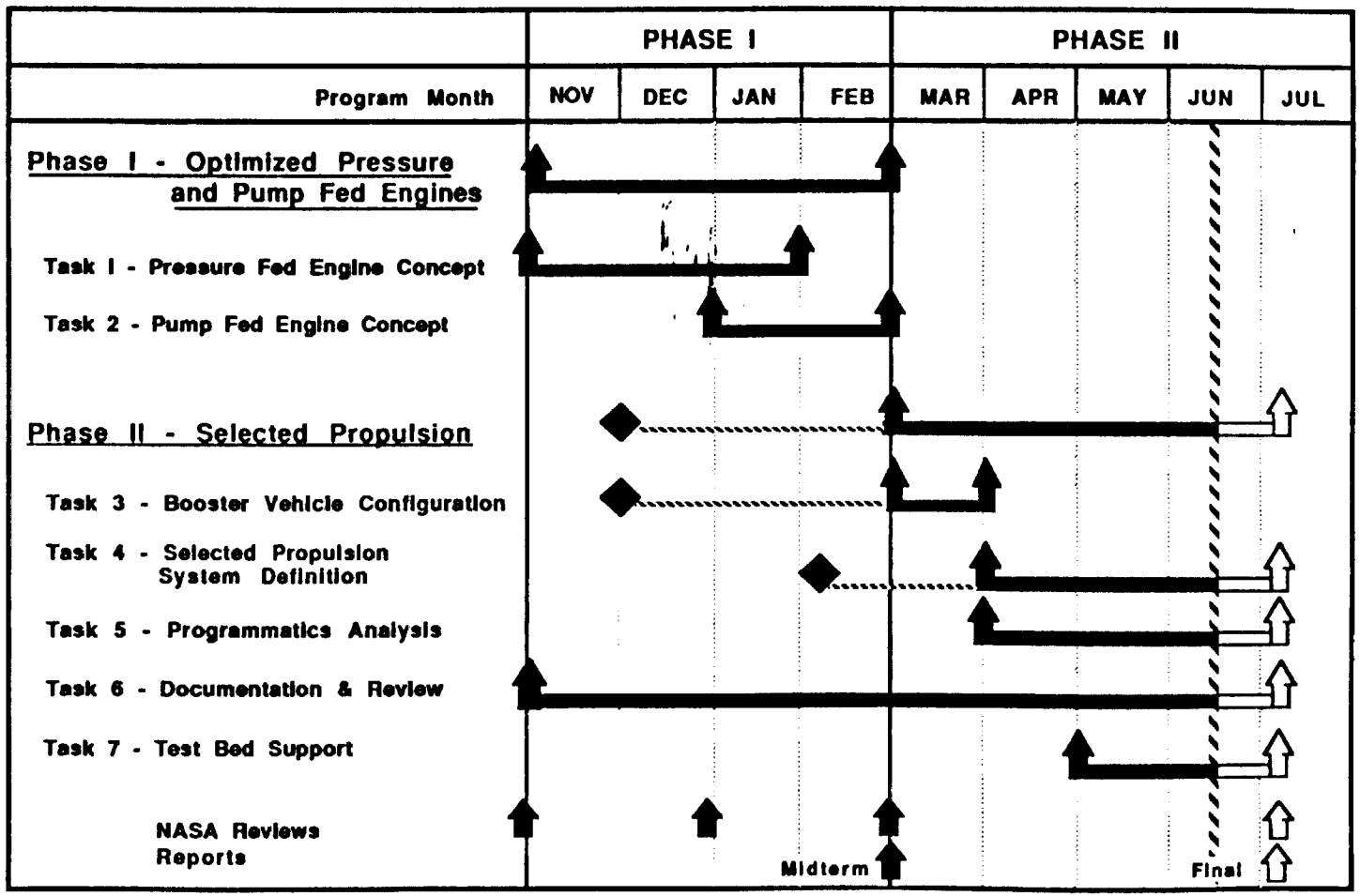

LEGEND:

- SLIP
- MILESTONE
- PROCUREMENT SCHED
- MAJOR MILESTONE
- PERCENT COMP.
- SLIP COMP.
- MILESTONE COMP.
- PROCUREMENT COMP.
- MAJOR M/S COMP.
- TIME NOW

Initial Date: 09/30/87	Rev # 3
Status # Status Date: 06/15/88	Rev Date: 05-11-88
Program Manager:	Date:
Scheduler: Karen E. Bailey	Date: 6-9-88

LRB Performance Configuration Baselines

4-11-88

	Pump-Fed	Pressure-Fed
Total LRB Sea Level Thrust (Two Boosters)	4,118,402 lbs	5,999,558 lbs
Thrust / Weight @ T-0 sec	1.267	1.554
→ Thrust/Engine (100% Throttle)	685,000 lbs	750,000 lbs
→ No. of Engines/Booster	4	4
→ Throttle Schedule	75% Constant	100% for 30 sec, then throttle back
→ Burn Time	131.5 seconds	119.8 seconds
Coast Time	2.4 seconds	2.4 seconds
Jettison Weight	244,000 lbs	481,568 lbs
LRB Engine-Out Capability	T-0 sec & Make Mission	T-0 sec & Intact Abort
→ Propellant	LOX/RP1	LOX/RP1
→ Sea Level (Vac) Isp	266.3 (322.3) sec @ NPL	270 (319.9) sec @ EPL
Useable Propellant Wgt/Booster	970,000 lbs	1,075,460 lbs
→ Mixture Ratio	2.6 :1	2.45 :1
→ Engine Exit Area	51.11 ft2	65.344 ft2
→ Engine Exit Diameter	8.067 feet	9.078 feet
Booster Outside Diameter	15.30 feet	16.20 feet
Booster Length	151.0 feet	163.0 feet
Max Dynamic Pressure	701 psf	706 psf
Lift-Off Weight	4,130,505 lbs	4,577,454 lbs
→ TYPE	EXPENDABLE	EXPENDABLE

AEROJET TechSystems COMPANY

Pressure Fed LRB
LO2/RP1

Booster Data One LRB

- Usable Propellant
  - LO2 782,084 lb
  - RP1 292,916 lb
- Glow 1,304,360 lb
- Inert wt 223,450 lb

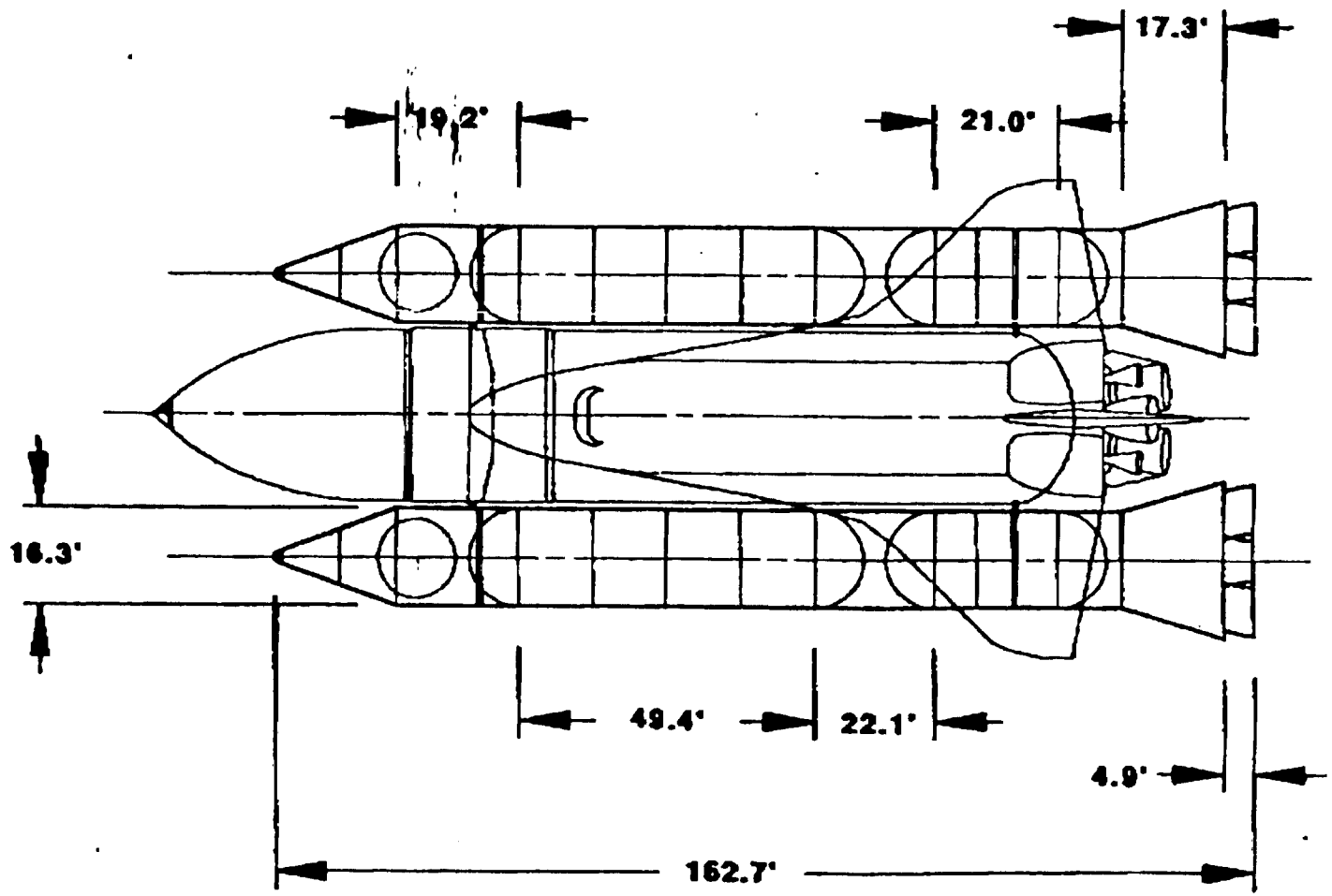

AEROJET TechSystems COMPANY

Pump Fed LRB
LO2/RP1

Booster Data One LRB

- Usable Propellant
  - LO2 701,302 lb
  - RP1 268,698 lb
- Glow 1,092,000 lb
- Inert wt 116,665 lb

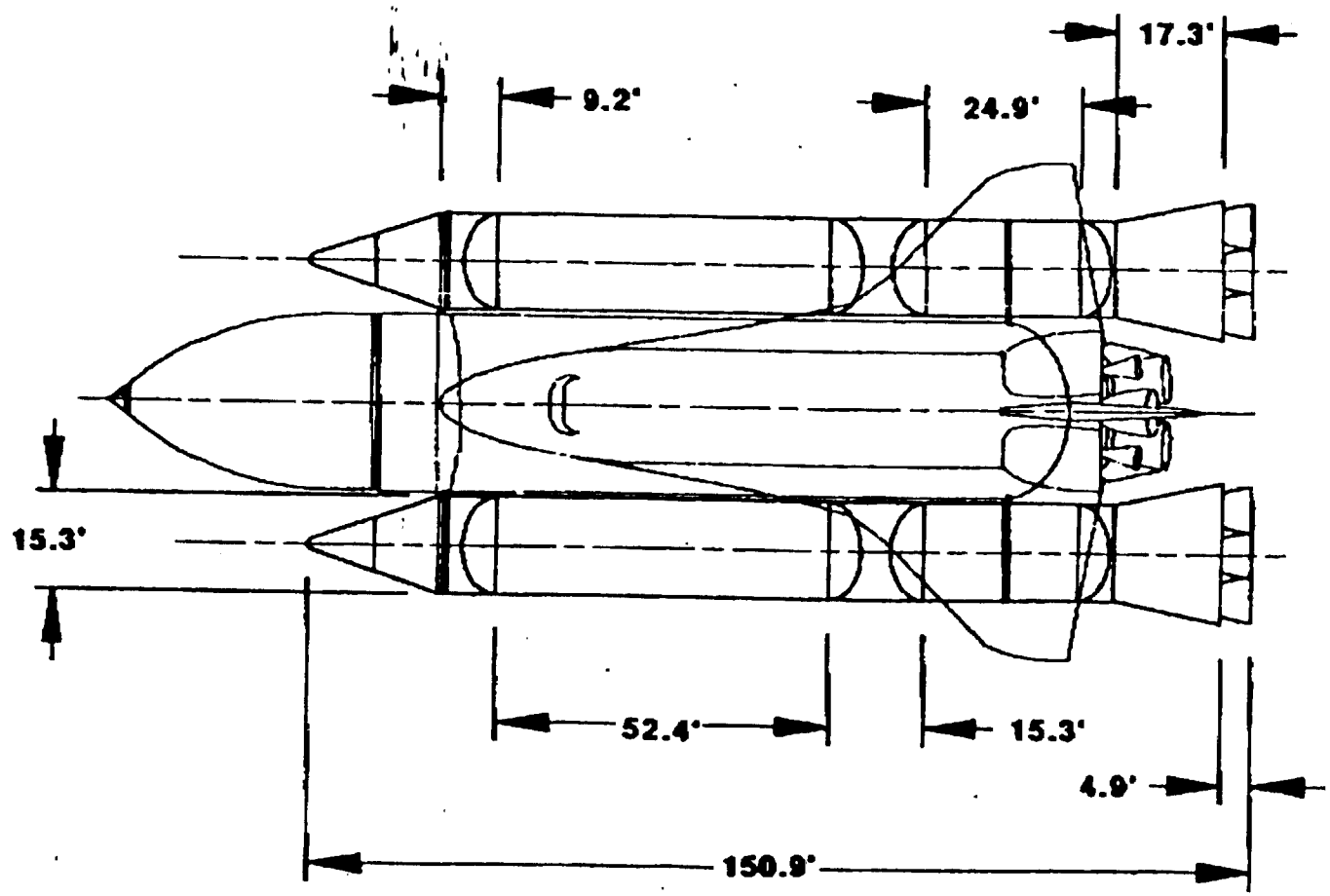

AEROJET TechSystems COMPANY

LRB Configuration Summary

	Pump Fed	Pressure Fed
Vehicle Dimensions		
Length (in)	1810.7	1952.0
Diameter (OD - in)	183.0	194
Engine Exit Area (in^2)	7359	9365
Propellant Tank Volumes (Ft^3)		
LO2	10,769	12,012
RP-1	5,796	6,328
Weight (lb)		
Structure	73,560	143,160
Propulsion System	33,410	69,010
Other Subsystems	9,695	11,280
Inert Weight	116,665	223,450
Usable Impulse Propellant		
LO2	701,302	782,084
RP1	268,698	292,916
Residuals Gases And Liquids	5,335	5,910
Glow	1,092,000	1,304,360

LRB 6/9 06

AEROJET TechSystems COMPANY

Pressure Fed LRB - Throttle Requirements

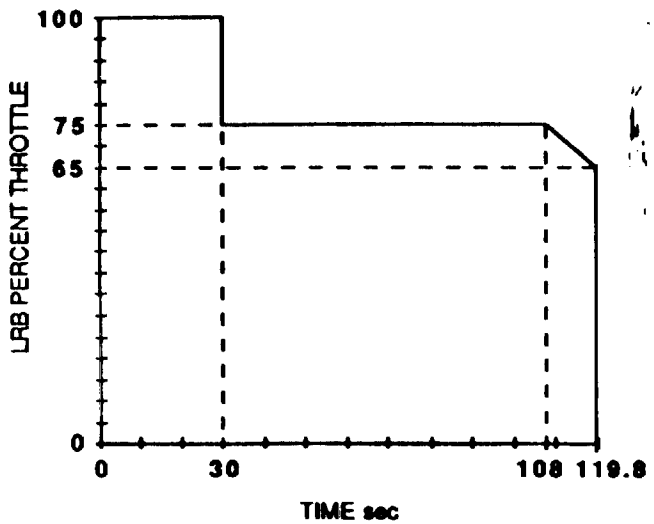

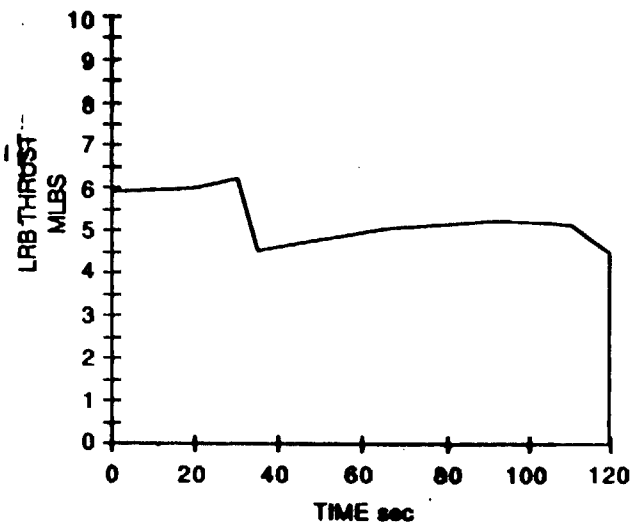

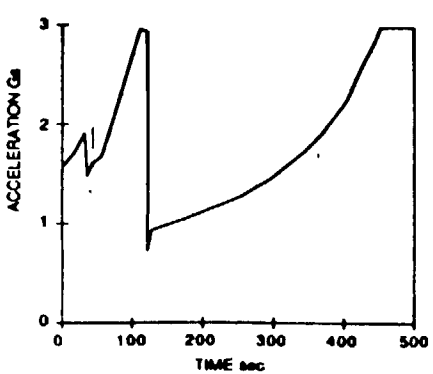

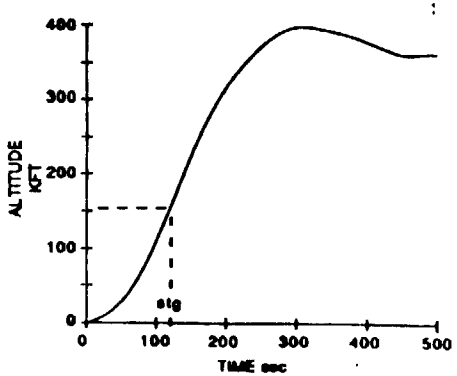

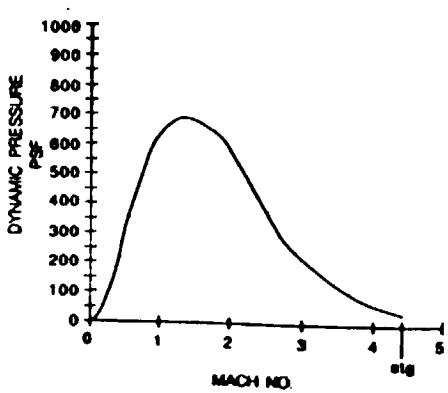

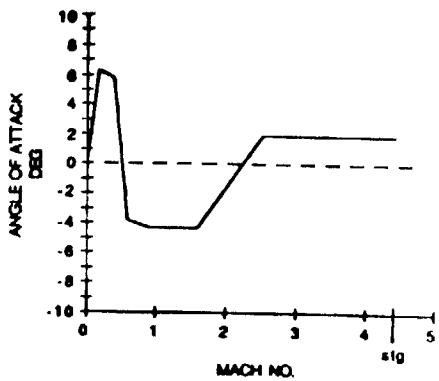

AEROJET TechSystems COMPANY

Pump Fed LRB - Throttle Requirements

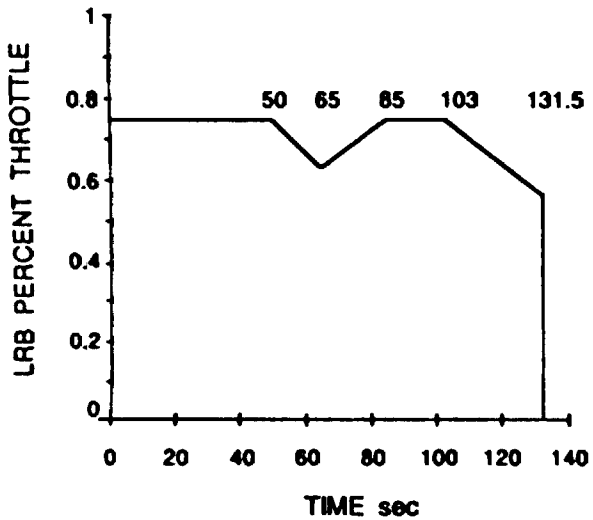

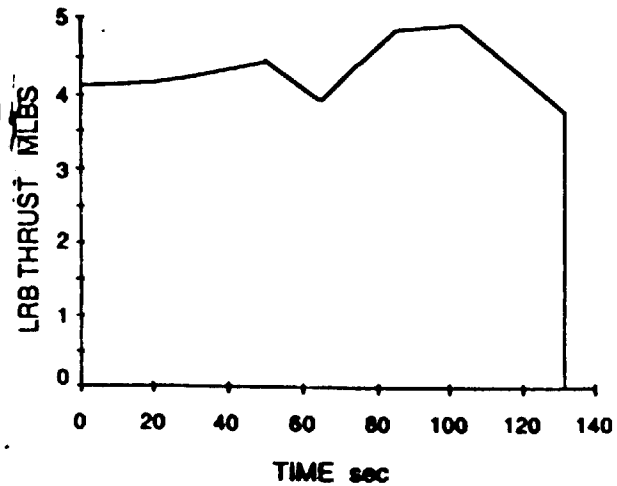

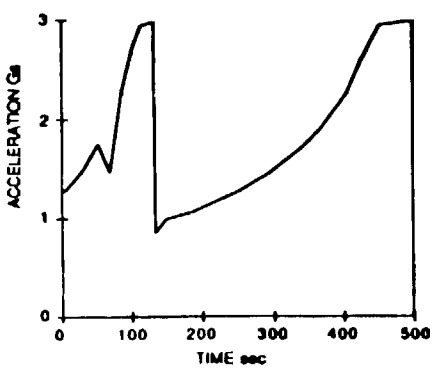

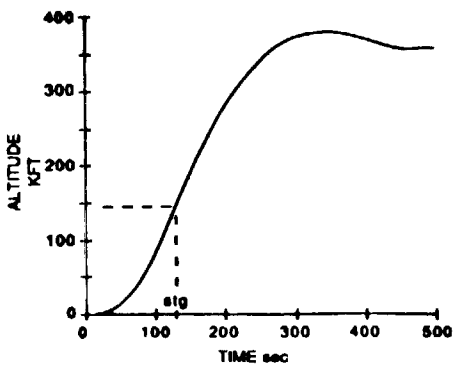

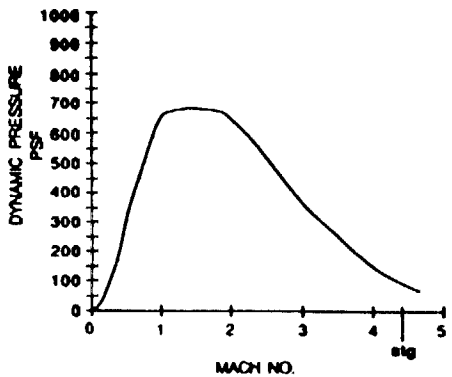

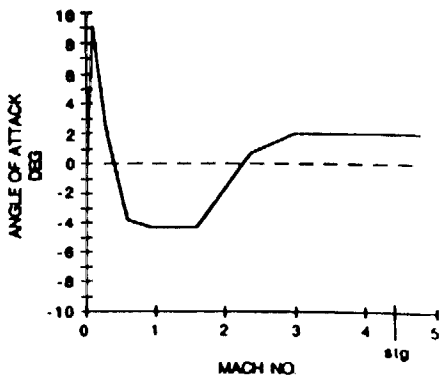

Pressure Fed Engine Design

We Basically Made One Pass Through The Design Process, Therefore, There Are Several Areas Where Todays Results Do Not Match Requirements, Both Within The Engine, And Between The Engine And Vehicle

AEROJET TechSystems COMPANY

LRB PRESSURE FED ENGINE
LO2/RP1

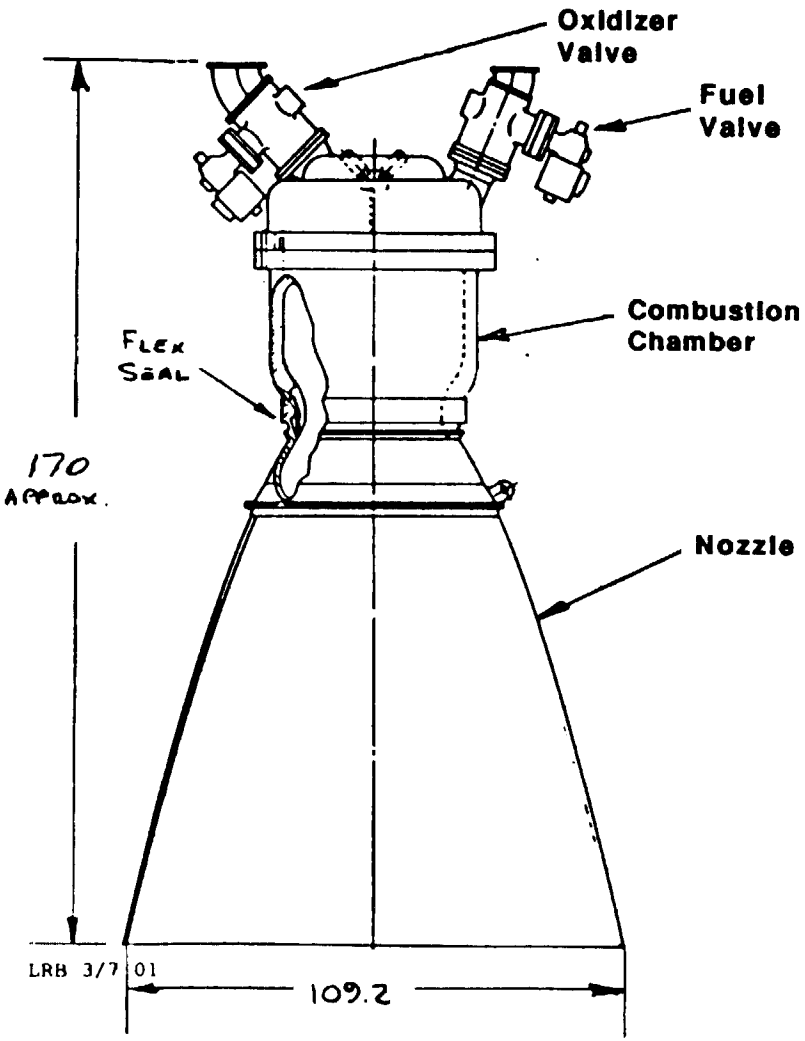

	NPL	FPL
Thrust, S.L. klbs	562	750
Thrust, Vac klbs	700	887
ISP, S.L. sec	257	271
ISP, Vac, sec	321	321
Mixture Ratio	2.7	2.7
Total Flow Rate, lb/sec	2185	2766
Chamber Pressure, Psia	630	800
Exit Pressure, Psia	5.5	6.9
Expansion Ratio	15.4	
Chamber Type	Ablative	
Nozzle Type	Ablative	
Weight, Dry, lbs	4500	
Propellants	LO2/RP1	
Gimbal Type	Flex Seal	
Gimbal Angle	±6°	

AEROJET TechSystems COMPANY

CHAMBER PRESSURE OPTIMIZATION PRESSURE FED LRB

NOTE: THIS DATA IS UNIQUE TO THE SPACE SHUTTLE ABORT, MAX Q, AND MAX G CONSTRAINTS. REF SHUTTLE GLOW IS 4,665,000 POUNDS FOR TWO STORABLE PROPELLANT LRB'S WITH LI-AI TANKS

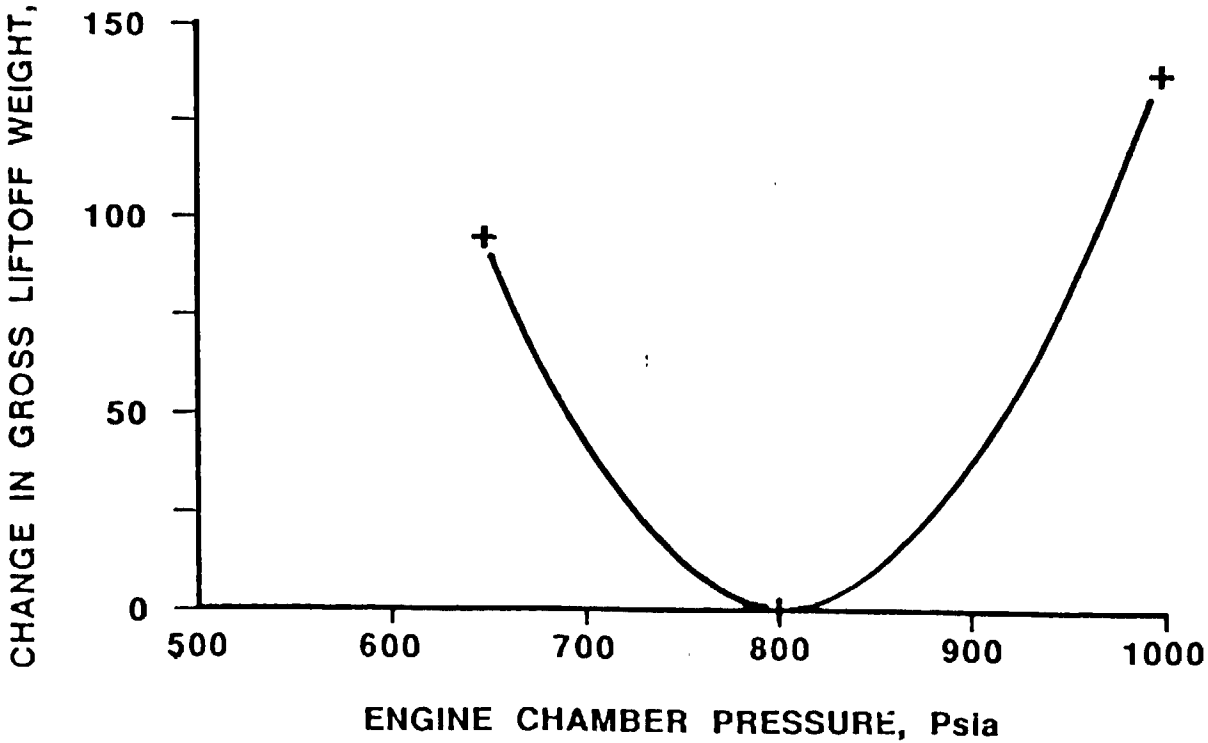

LRB 2/29

AEROJET TechSystems COMPANY

PRESSURE FED ENGINE SCHEMATIC
LO2/RP1

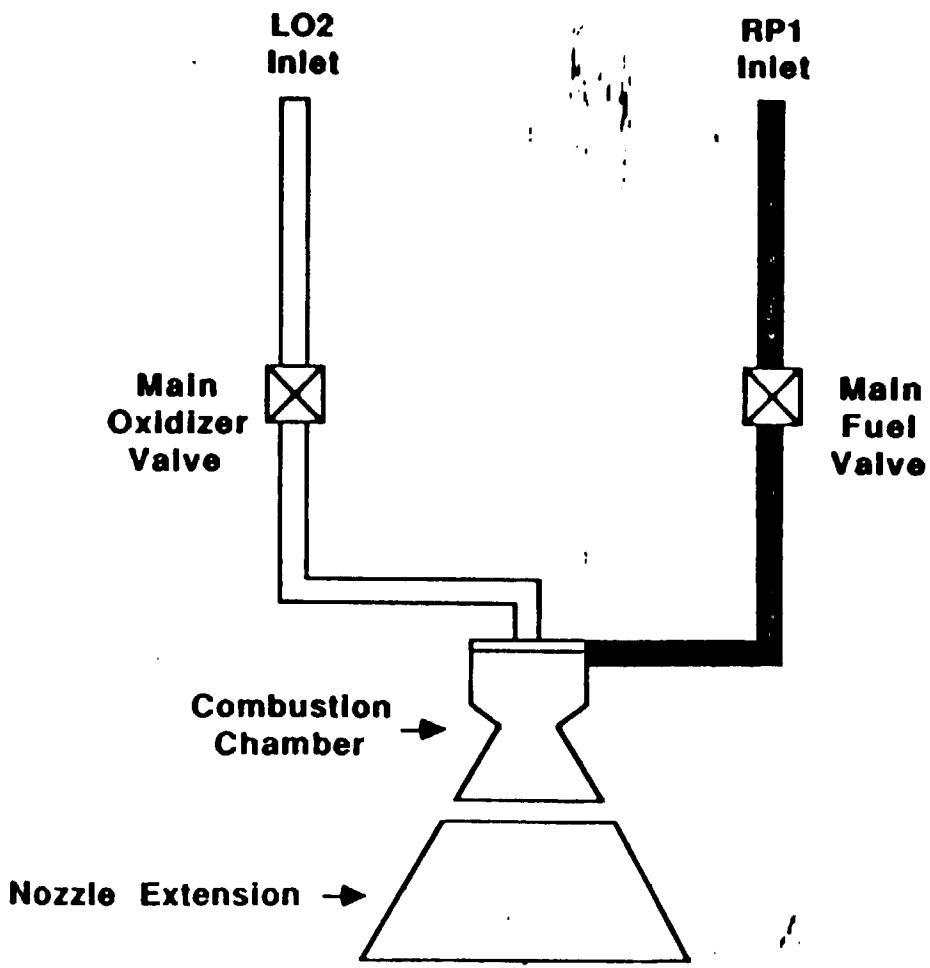

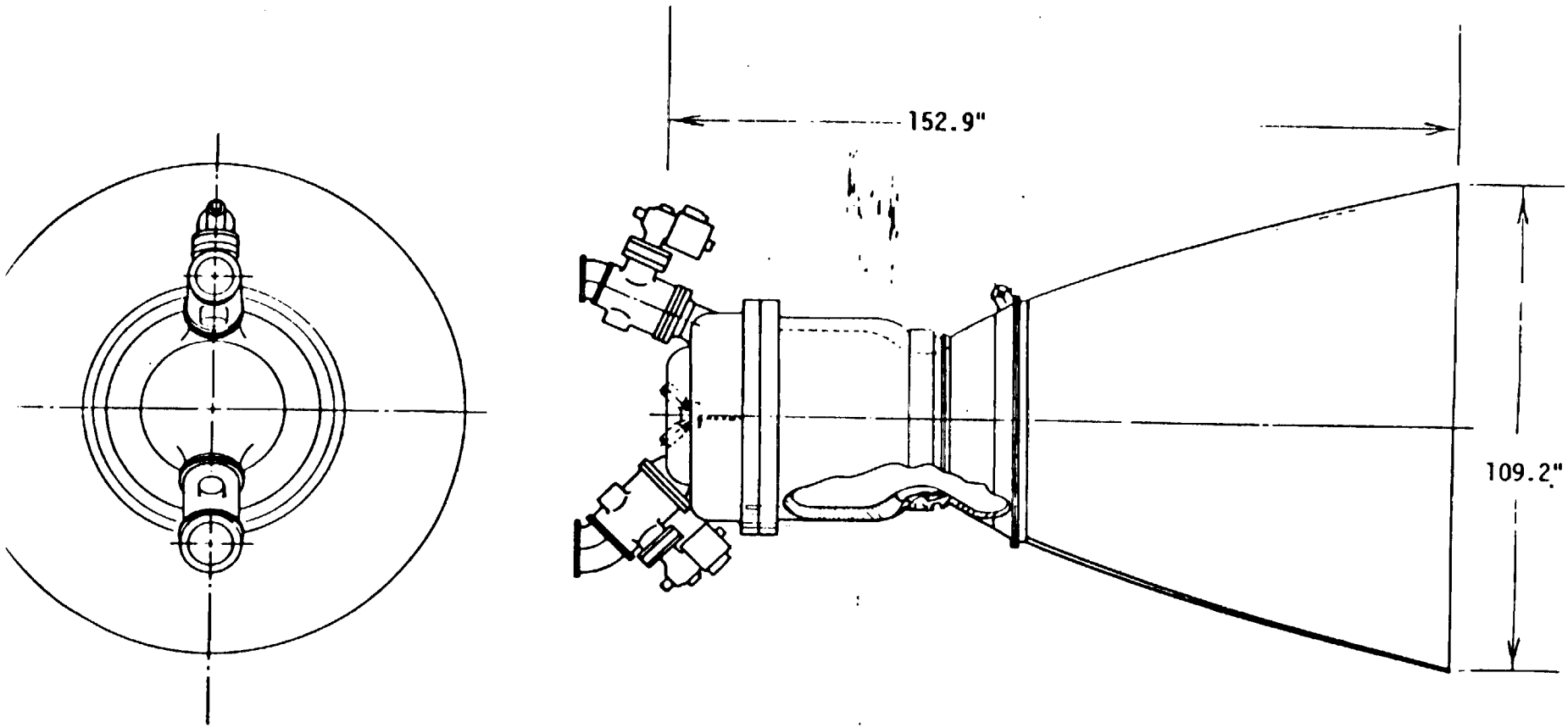

LRB For STS Pressure Fed (PF)
Rocket Engine Configuration
Of 5-27-88

AEROJET TechSystems COMPANY

Recent Stability/Performance Progress

Jerry Pieper
Chief Engineer LO2/Hydrocarbon Projects

The LRB Combustor Design Approach

How To Achieve High Performance And

Stable Combustion With Low Cost

Conventional Design Features

A 30 Minute Review Of LRB Combustor Design Considerations

- Combustion Stability Of Large Liquid Propellant Engines
- The Past And The Present
- Two Viable Approaches
- The O-F-O Triplet-The Right Choice For Large Thrust Lox/RP-1 Engines
- Low Cost Simple LRB Design Features

AEROJET TechSystems COMPANY

Large Chambers May Require More Acoustic Damping For Stable Combustion

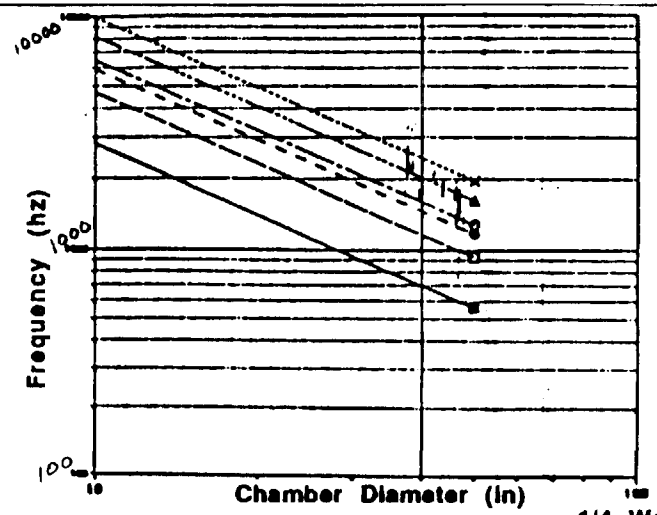

Resonant Frequencies Are Lowered

Legend
- 1T
- 2T
- 1R
- 3T
- 4T
- 5T

Baffle Height ≈ 2D Chamber

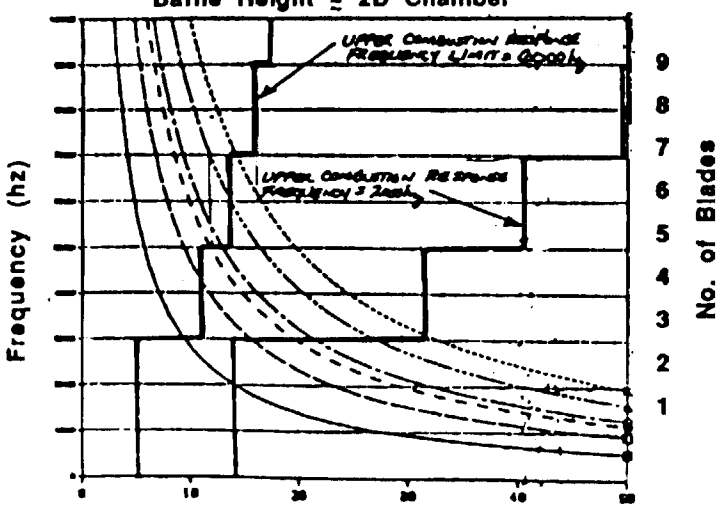

Baffle Requirements Increase

1/4 Wave Cavity Depth vs. Chamber Diameter
Vsonic = 4000 f/s. Vcavity = 2000 f/s

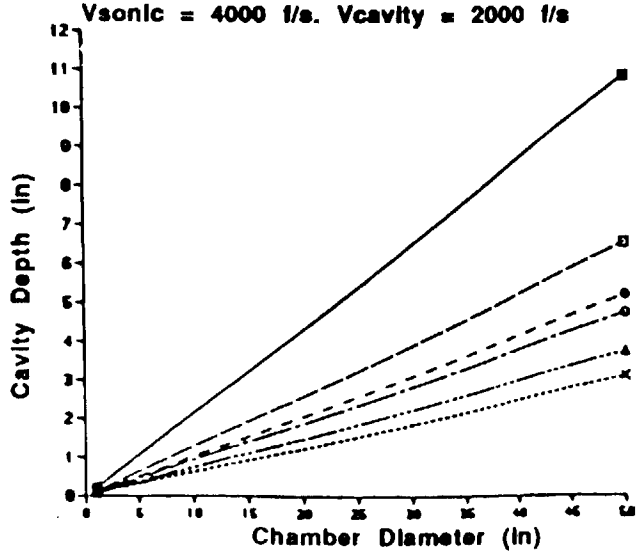

Legend
- 1T
- 2T
- 1R
- 3T
- 4T
- 5T

Acoustic Resonators Are Larger

LRB 6/13 03

AEROJET TechSystems COMPANY

Large Engines Require Multiple Mode Damping And Lower Combustion Response Frequency Sensitivity

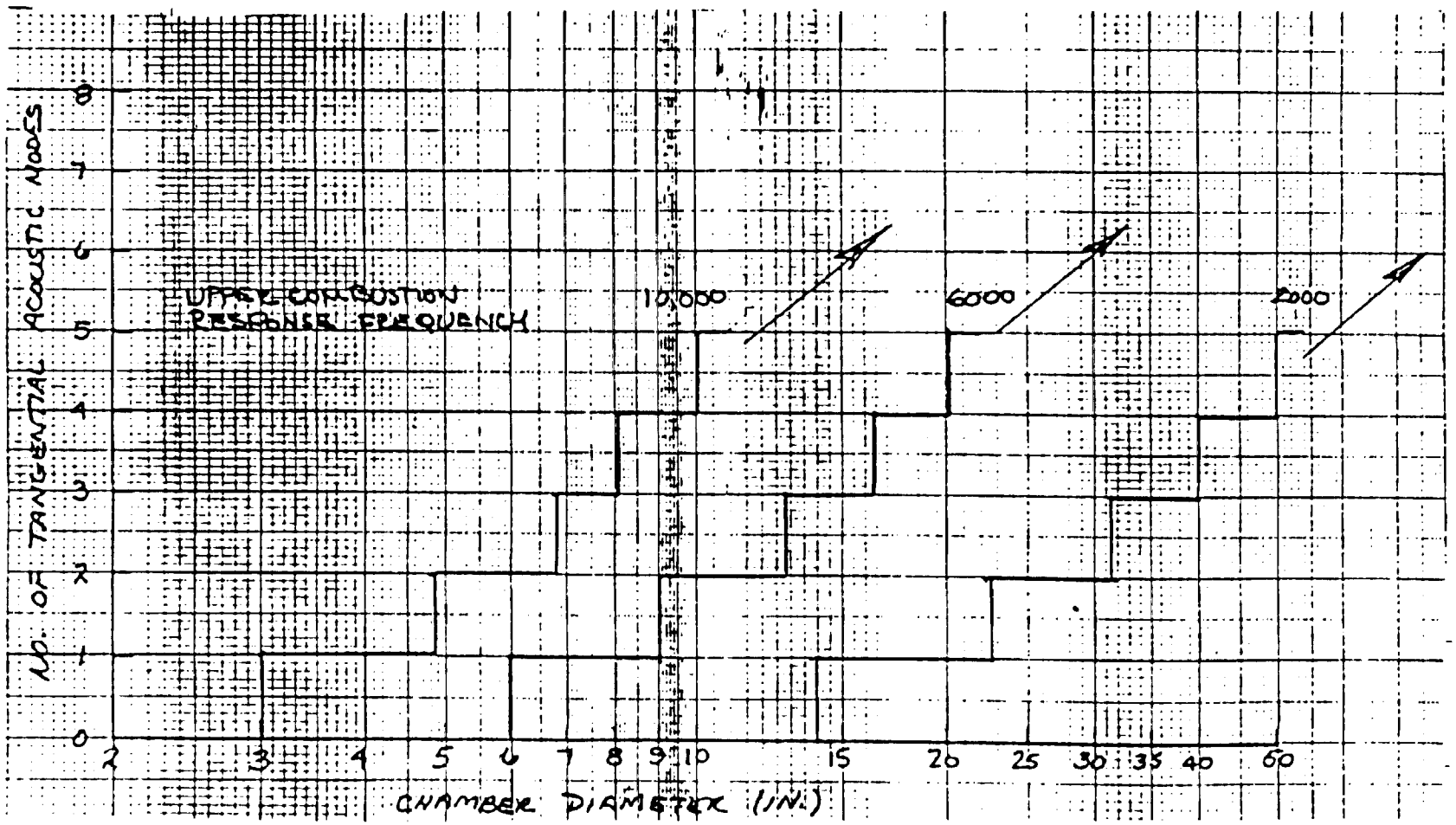

LRB 6/13 04

AEROJET TechSystems COMPANY

Fortunately There Are Upper Limits For Combustion Response In Practical Rocket Engines

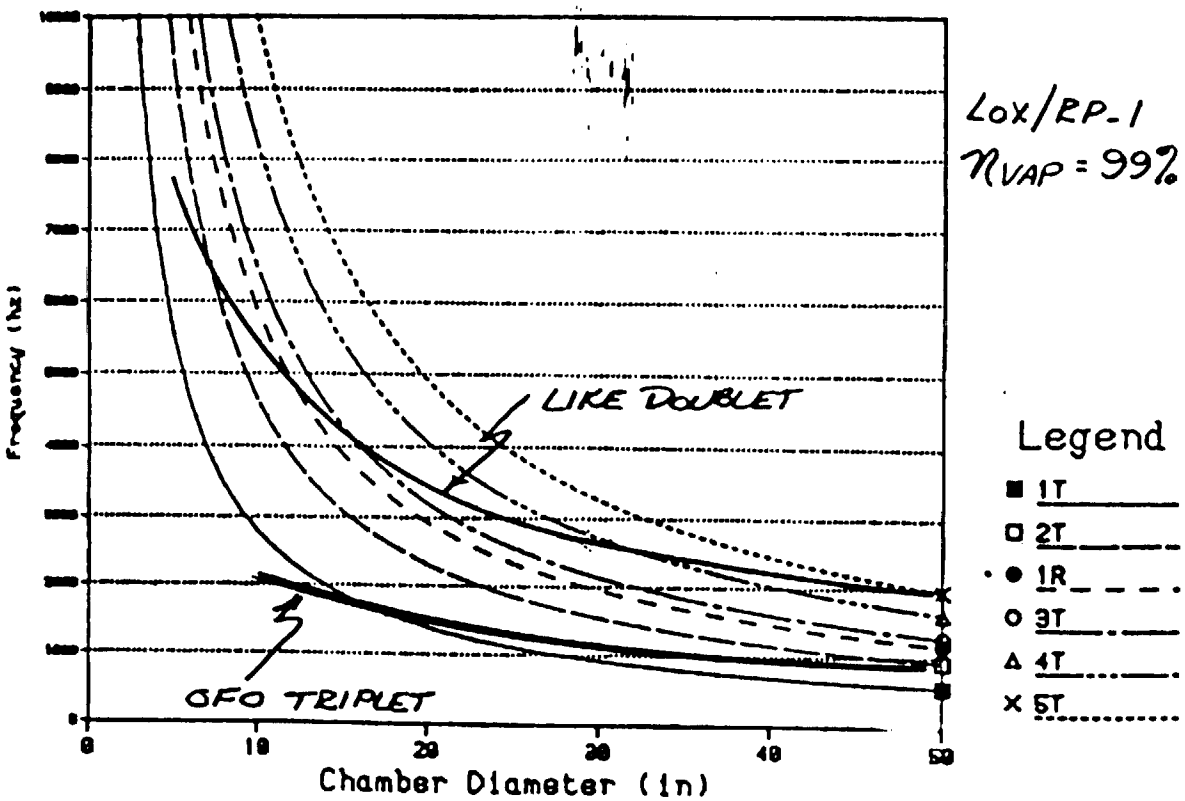

LRB 6/13 05

AEROJET TechSystems COMPANY

The LRB Is Well Within Flight Demonstrated Lox/RP-1 Engine Size

STS LRB
Chamber I.D. = 40 In.

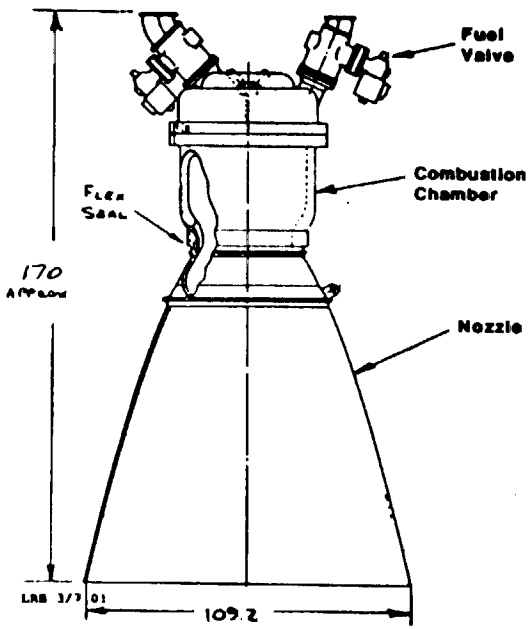

D_t = 29.2 In.
Pc = 780 psia
750,000 Lbf
Sea Level Thrust

Saturn V F - 1
Chamber I.D. = 40 In.

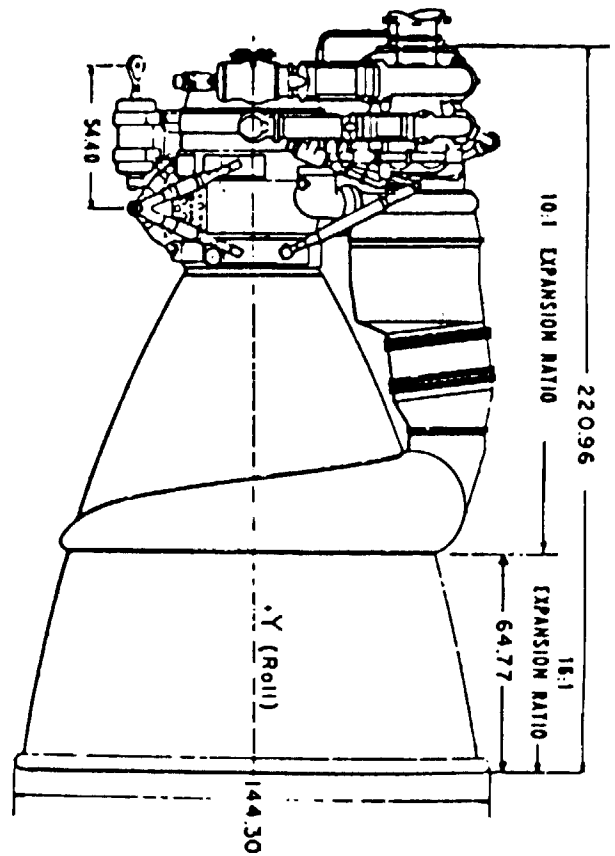

D_t = 35 In.
Pc = 1126 psia
1,522,000 Lbf
Sea Level Thrust

But Combustion Stability Was A Major Problem During The Development Of F-1

- Discovered Late In Development
- Injector Pattern Was A Spin-Off Of The Smaller Size H-1 Engine
- Solved Through Trial And Error Method At Full Scale

Derated Performance
And
Used A Short Multi-Bladed Baffle

How Can We Improve On The F-1 Experience?

The State Of The Art Was Improved

- Better Analysis Models
- Proven Subscale Verification Techniques
- Improved Injector Element Configurations
- Developed Acoustic Resonators

Analysis Models Are In Place

Analysis Type	Analysis Model (s)	Model Function
Steady State Combustion	Standardized Distributed Energy Release (SDER)	Calculates The Propellant Vaporization And Mixing Effects Within A Rocket Engine Thrust Chamber
Performance	Two-Dimensional Kinetic/ Boundary Layer Module (TDK/BLM)	Calculates The Specific Impulse Of A Thrust Chamber And Nozzle Including The Effects Of Kinetic Rate Limitations, Two Dimensional Flow, Boundary Layer, And Multiple Stream Tubes
Combustion	Combustion Response (CRP)	Defines The Combustion Response Factors And Burning Transfer Function For Axisymmetric And 2D Combustion Chambers
	High Frequency stability (HFS)	Calculates The Chamber Transfer Function For all Acoustic Modes Existing In Axisymmetric And 2D Chambers
	Multi-Dimensional Baffle (MDB)	Determines The Effect Of Baffles on The Chamber Transfer Function With Concentrated Or Distributed Combustion
	Low Frequency Stability (LFCS)	Predicts The Chug Stability Of Liquid And/Or Gaseous Propellant Rocket Engines
Thrust Chamber Compatibility And Cooling	Scale	Parametric Channel Design For Regeneratively Cooled Chambers
	Heat	Thermal And Hydraulic Analyzer For A Specified Regeneratively Cooled Channel Configuration
	Sinda	Detailed Two And Three-Dimensional Temperature Distribution Analyzer

AEROJET TechSystems COMPANY

Analysis Models Are Anchored With Reduced-Size Testing

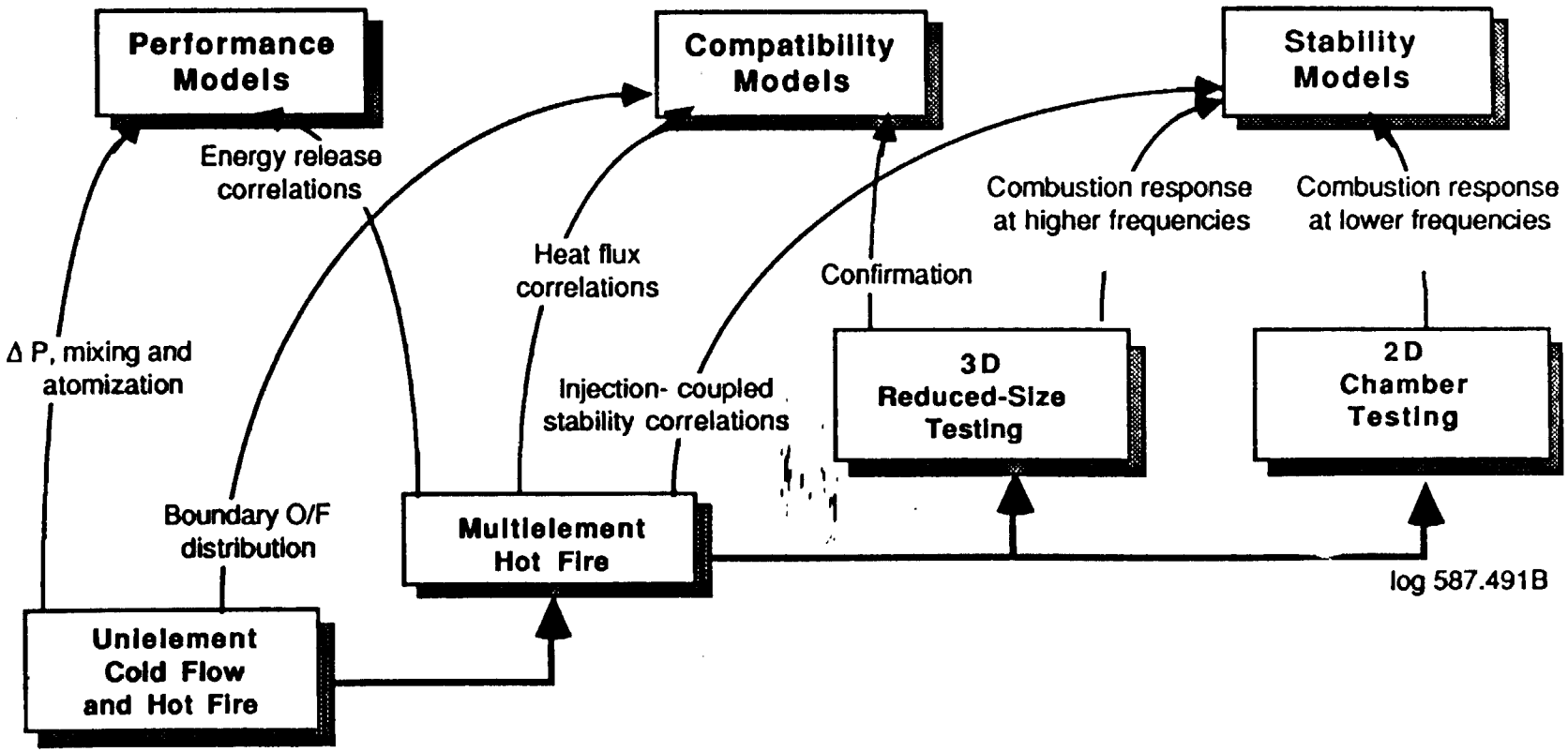

AEROJET TechSystems COMPANY

High Performance Can Be Obtained With Lox/RP-1

O-F-O Triplet

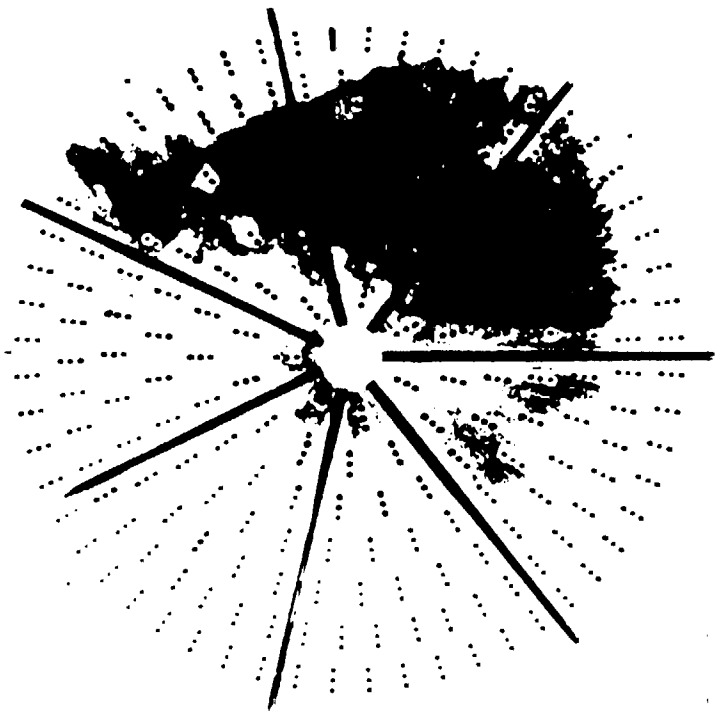

η ERE > 99%

D_f = .125 in.

F/E = 1525 Lbf/Element

Upper Combustion Response Frequency = 3300-5000 hz

Like Doublet

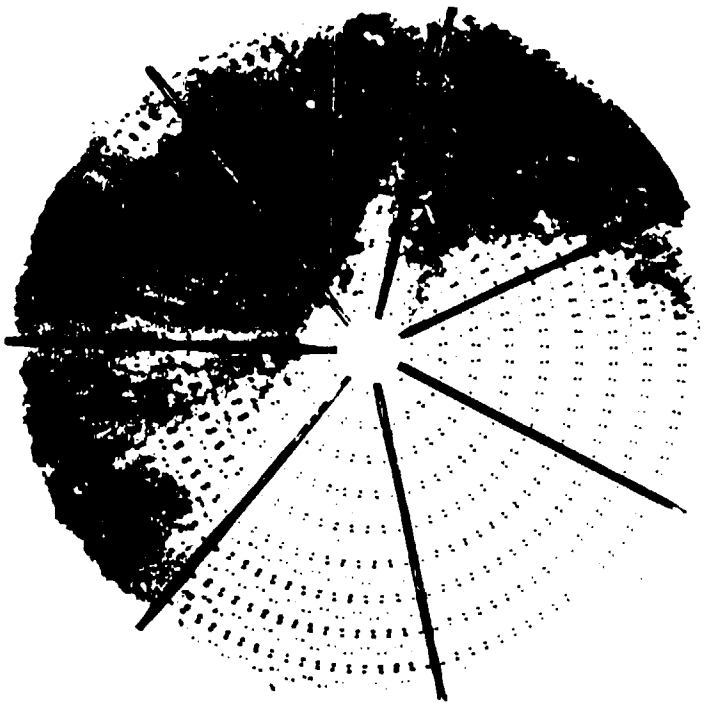

η ERE ~ 95%

D_f = .058 in.

F/E = 564 Lbf/Element

Upper Combustion Response Frequency = 5300-8000 hz

AEROJET TechSystems COMPANY

Two Approaches To Achieving High Performance And Stable Conditions In Large Engines

Cluster Many Small Chambers	Large Thrust-Per-Element Injector & Conventional Combustion Chamber
Use Small Conventional Orifices To Achieve Performance	Use O-F-O Triplet To Achieve Optimum Lox/RP-1 Performance
Requires Greater Acoustic Damping - More Surface Area For Cooling	Requires Less Acoustic Damping And Less Surface Area For Cooling
Higher Cost, Increased Fabrication Complexity	Lower Cost - Simplified Fabrication
Can Be Developed And Validated At Reduced Size Component Level	Can Be Developed And Validated At Reduced Size Component Level

The O-F-O Triplet Is the Best Element For Lox/RP-1

Large Size Equal Orifice Diameters

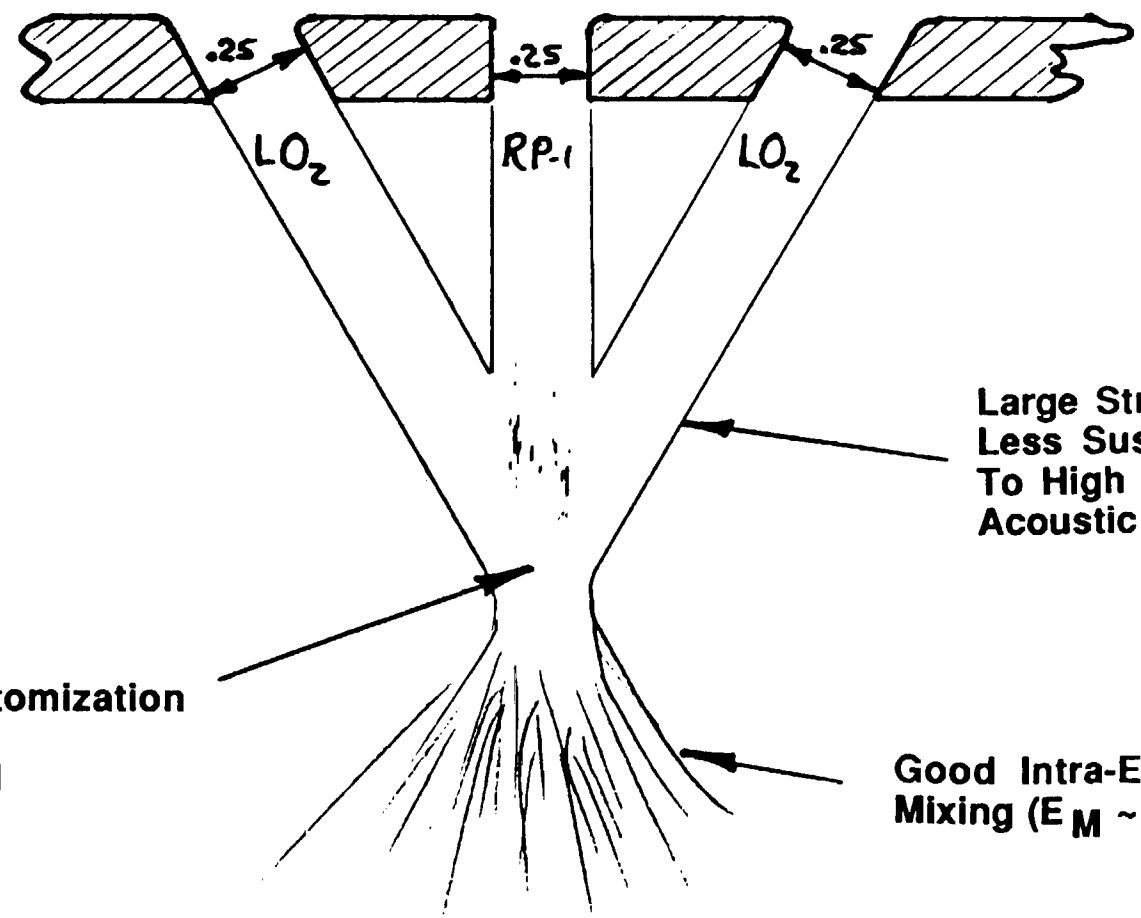

Large Streams Are Less Susceptible To High Frequency Acoustic Modes

Enhanced Atomization Of The Less Volatile RP-1 $\eta_{Vap} \approx 99\%$

Good Intra-Element Mixing ($E_M \sim .8$)

LRB 6/13 12

AEROJET TechSystems COMPANY

LRB Has Low Cost Conventional Design Features

Broad Band Helmltoltz Acoustic Cavity

3 Bladed Ablative Baffle

Low Cost Ablative Cooled Liner

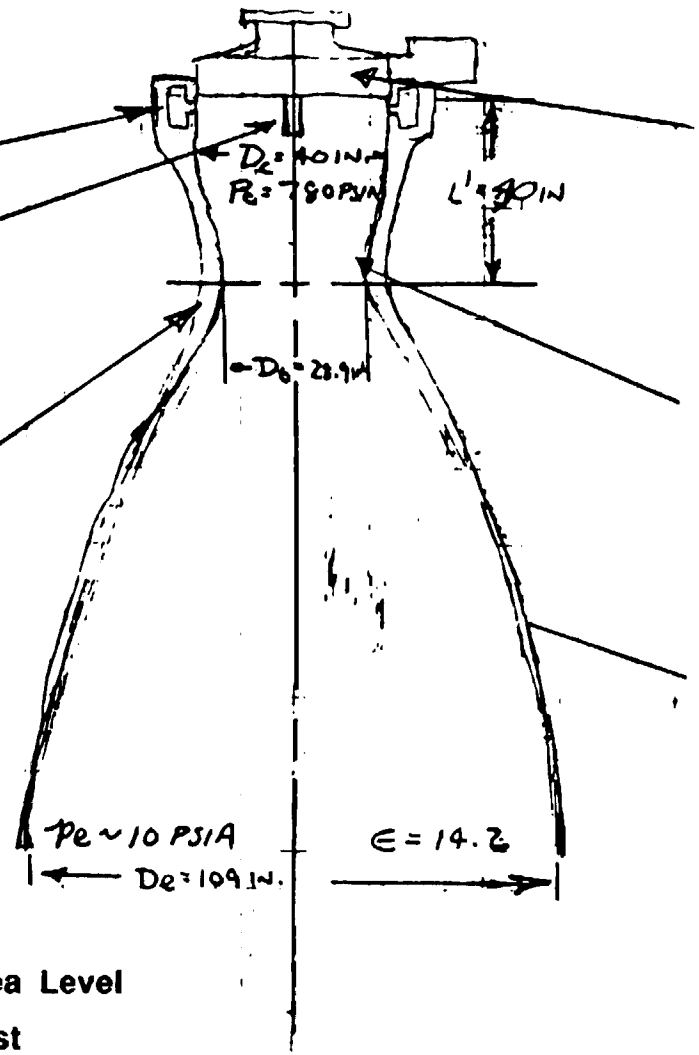

242 O-F-O Triplet Element Injector (1/4 in. Orifices)

Low Cost Contamination Insensitive Orifices

Compatible Edge Conditions Using 5% ffc (80 - .10 dia. Orifices)

High Performance Uncooled Contoured Nozzle

Thrust = 750,000 Lbf At Sea Level

Throttable To 75% Of Thrust

LRB 6/13 13

A Simple Low Cost LRB Engine Approach

- High Performance And Stable LRB Engines Can Can Be Developed
- A Very Large Thrust-Per-Element O-F-O Triplet Injector Is The Key
  - High Efficiency
  - Stable Combustion With Minimum Acoustic Damping
  - Low Cost Approach
- Conventional Ablative Cooled Thrust Chamber Provides
  - Proven Reliability And Low Cost
  - Simplified Development

AEROJET TechSystems COMPANY

Injector & Thrust Chamber Assembly

Jeff Muss
Engineer/Combustion Analysis

Pressure Fed LRB Design Specifications

	MPL @ 46 Km	FPL @ S.L.
Thrust (lbf)	577,200	750,000
Thrust, vac (lbf)	577,800	887,200
Isp (sec)		270.0
Isp, vac (sec)		319.9
Chamber Pressure (psia)	520	800
Supply Pressure (psia)		1000
O/F Mixture Ratio	2.67	2.67

AEROJET TechSystems COMPANY

Tank Pressure and Chamber Pressure Requirements Create Stability Problem for Pressure Fed LRB

	OX CIRCUIT	FUEL CIRCUIT
Supply Pressure (psid)	1000	966
Valve & Line ΔP (psid)	27	27
Manifold ΔP (psid)	50	50
Chamber Pressure (psia)	800	800
Injection ΔP (psid)	123	88.8
ΔP inj/Pc	0.15	0.11

Engine Must Be Throttled – up To 1191 psia To Be Chug Stable

AEROJET TechSystems COMPANY

High and Low Frequency Stability Were Traded for Pressure Fed LRB Design

	ENGINE 1	ENGINE 2	ENGINE 3
Ox Supply Pressure (psia)	1000	1000	1000
Chamber Pressure (psia)	800	780	660
Orifice Diameter (in)	0.25	0.053	0.20
ISP vac (sec)	320.0	321.0	318.8
ISP sl (sec)	270.0	271.0	270.5
Chug Stability Limit (psia)	1191	546	370
High Frequency Modes	1T	1T−5T,1R	1T−3T,1R
	240 elements	3000 elements	400 elements

AEROJET TechSystems COMPANY

Reducing the Chamber Pressure Results in the Best Configuration

- Chamber Pressure of 660 psia with 0.20 in. Orifices
- Provides Required Chug Stability
- Requires More High Frequency Modes to be Damped

AEROJET TechSystems COMPANY

Pressure Fed LRB Design Meets Most Requirements

	MPL @ 46 Km	FPL @ S.L.
Thrust (lbf)	577,200	750,000
Thrust, vac (lbf)	577,800	887,200
ISP (sec)	317.3	270.5
ISP, vac (sec)	317.3	318.8
Chamber Pressure (psia)	408	660
Ox Supply Pressure (psia)	>560	1000

Vacuum ISP Goal can Be Achieved by Extending Nozzle

AEROJET TechSystems COMPANY

CONTOUR FOR PRESSURE FED LRB

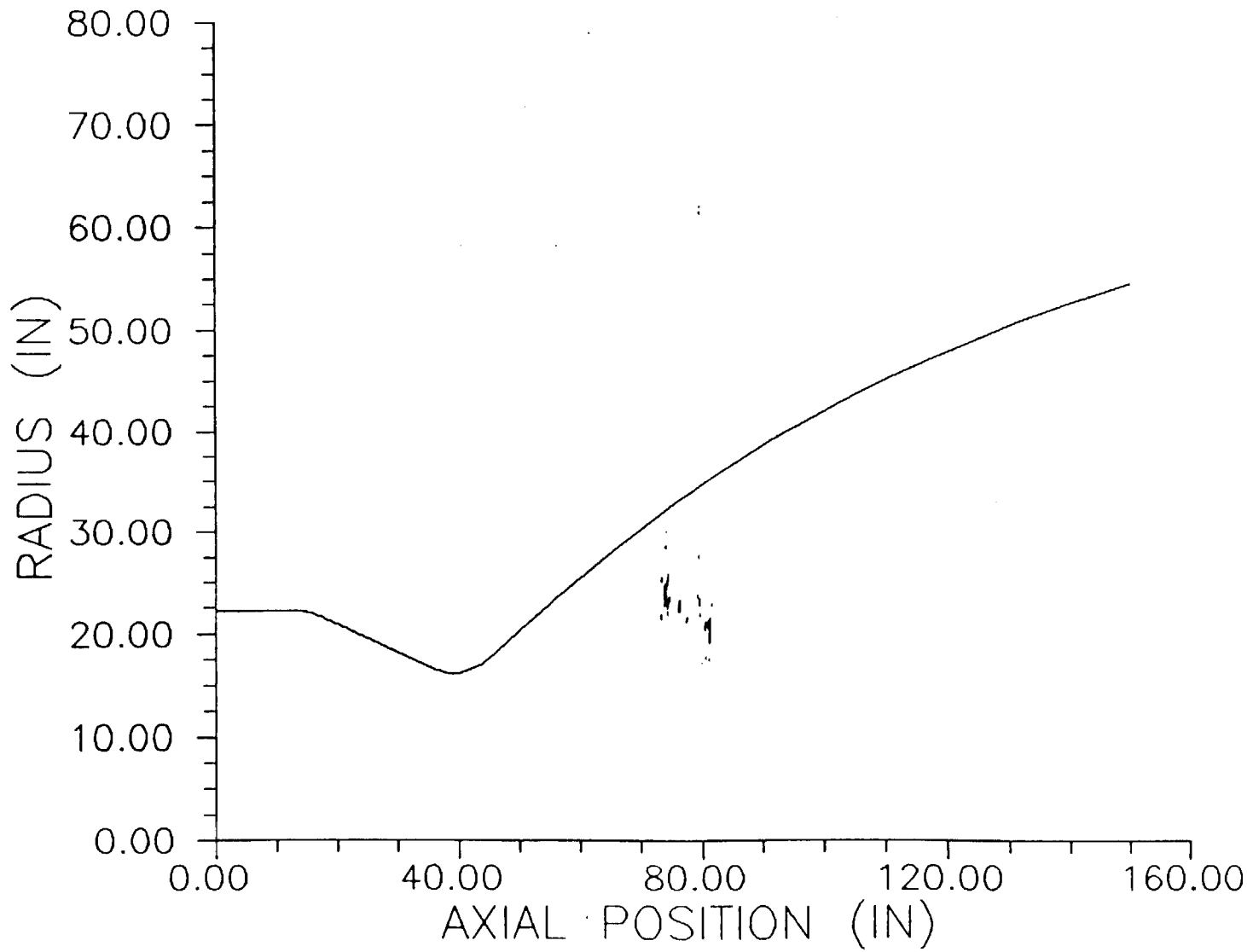

Pressure Fed Thrust Chamber Dimensions Are Consistent With Past Designs

Chamber Diameter	44.4 in
Throat Diameter	32.2 in
Exit Diameter	109 in
Contraction Ratio	1.90
Angle of Convergence	15 deg
Expansion Ratio	11.47
% Bell	76.7
Overall Length	168 in
Combustion Chamber Length	40 in
Nozzle Length	110 in

Pressure Fed Injector Design Provides High Performance, Low Cost and Good Compatability

Core Element Type	OFO Triplet
# of Elements	399
Ox Orifice Diameter	0.20 in
Fuel Orifice Diameter	0.20 in
OX Supply Pressure *	1000 psia
Fuel Supply Pressure	930 psia
OX Injection ΔP	252 psia
Fuel Injection ΔP	182 psia
5% FFC	150 Showerheads
FFC Orifice Diameter	0.075 in
Throat Wall Mixture Ratio	1.45

* All Pressures at FPL

Pressure Fed Design Exhibits High Overall Efficiencies

	Efficiency *
Overall Vacuum ISP	96.8
Kinetic	99.8
Divergence	98.8
Boundary Layer	99.9
Energy Release	98.2
Characteristic Velocity (C*)	98.2

* at FPL

Pressure Fed Design Is Predicted to Have Manageable Stability

- Adequate Chug Margin Exists at MPL (38 psi)
- High Frequency Damping is Required through 3T

AEROJET TechSystems COMPANY

CONTOUR FOR PRESSURE FED LRB COMBUSTION CHAMBER

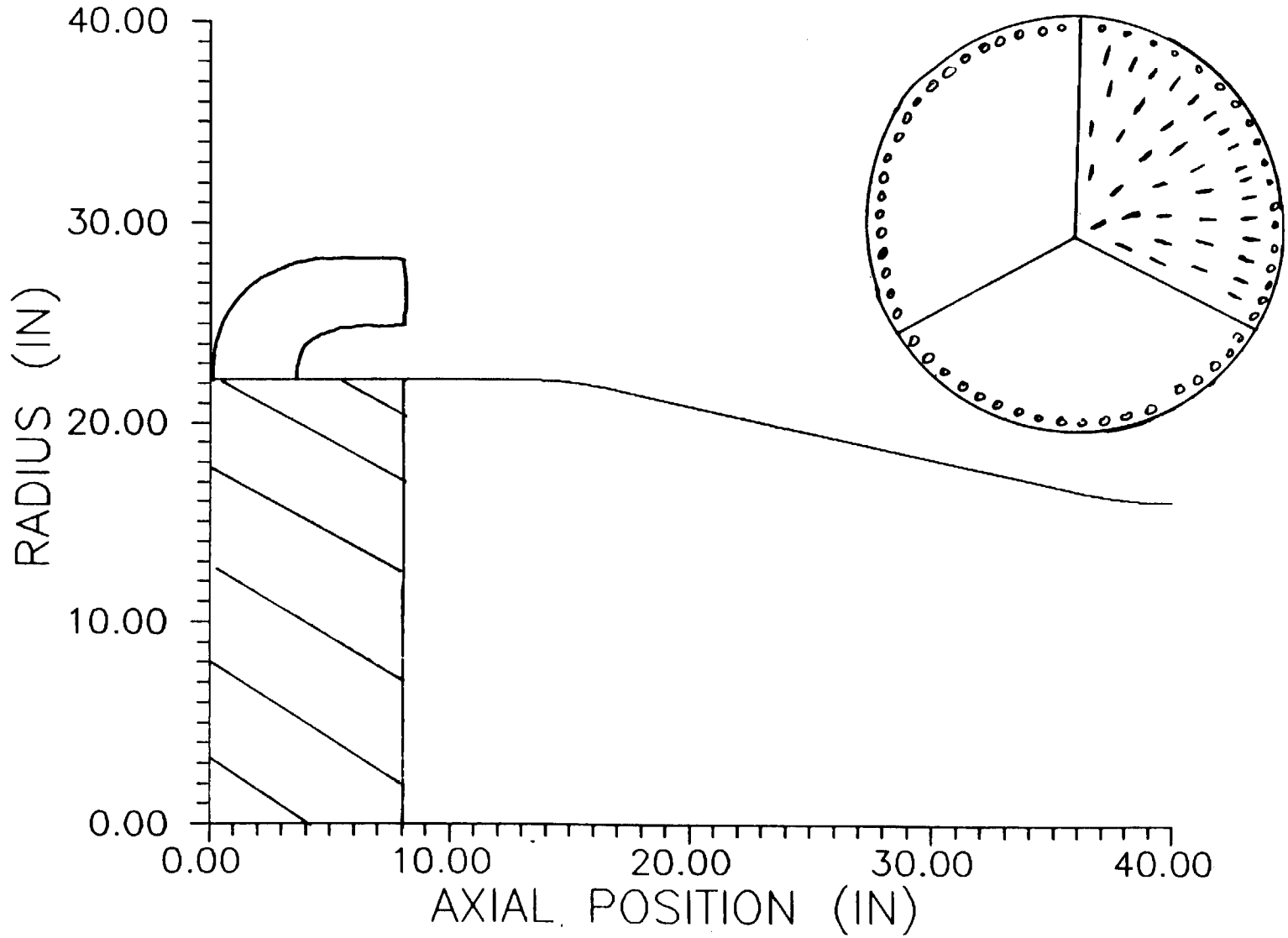

Pressure Fed LRB Will Require Stability Aids

Configuration A:

3 – Bladed Baffle 8" High + 3T/1R Helmholtz Resonator or 1/4 Wave Cavity (Depth 5.2"/3.8")

Configuration B:

5 – Bladed Baffle 4" High + 1T/1R Bituned Helmholtz Resonator or 1/4 Wave Cavity (Depth 8.7"/3.8")

Configuration C:

1T/2T/1R/3T Trituned Helmholtz Resonator or 1/4 Wave Cavity (Depth 8.7"/5.2"/3.8")

Configuration C is Best Choice

Increasing the Number of Engines/Booster Will Improve Stability and Performance

- Smaller chamber diameter reduces the number of modes which can be driven by an element design
- Smaller chamber diameter increases divergence efficiency for a fixed engine length
- Lower thrust/engine improves engine out capabilities

AEROJET TechSystems COMPANY

Non-Metallic Materials

Paul Marchol
Senior Engineer Specialist/Materials & Processes

MATERIAL TYPE/CONFIGURATION FOR LRB ARE MANY

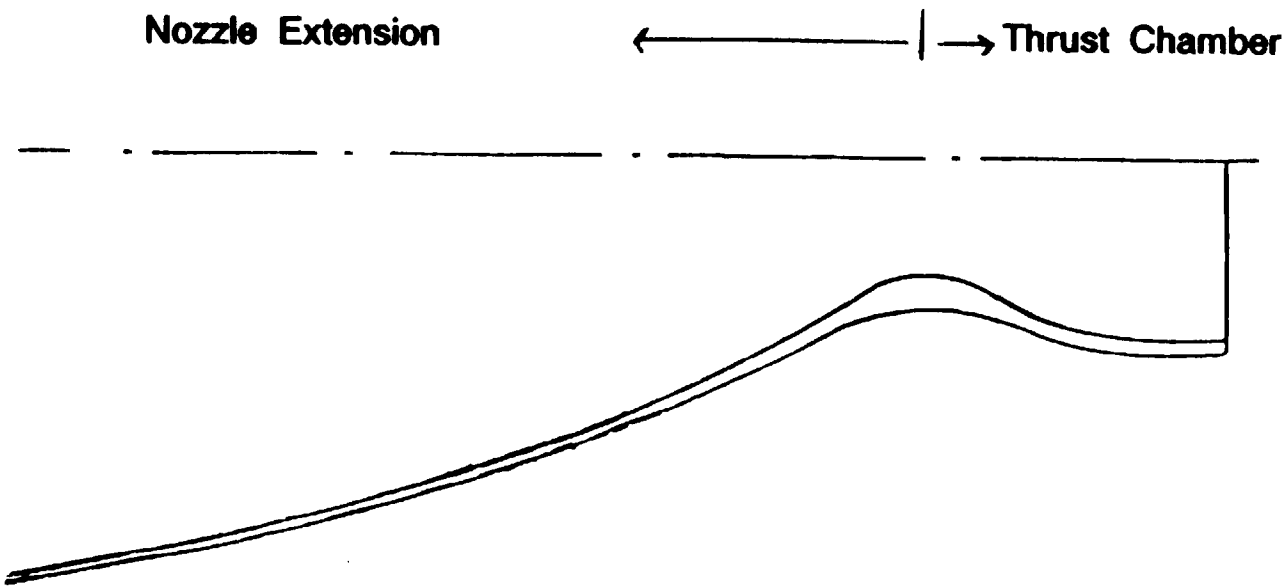

- o Free Standing Carbon-Carbon
- o Phenolic Composite Ablative Within Structural Shell
  - Silica
  - Metal
  - Carbon
  - Composite

- o Free Standing Carbon-Carbon
- o Carbon-Carbon/Phenolic Insulator/Structural Shell
- o Phenolic Composite Ablative Within Structural Shell
  - Silica
  - Metal
  - Carbon
  - Composite

CONCEPTUAL MATERIAL TRADE OFF: THRUST CHAMBER

CONCEPT	ADVANTAGES	DISADVANTAGE
o Free Standing Carbon-Carbon	o Very Light	o Very Expensive
	o Simple	o No Precedent As Freestand High Pressure Chamber
		o Attachment to Injector Issues
		o Radiation Heat Loss to Outside and Other Components
		o Long Fabrication Time
o Carbon-Carbon/Phenolic Insulator/Structural Shell	Light(?)	o Not as Good as Below
		o Heavy
		o Long Fabrication Time
o Phenolic Composite Ablative Within Structural Shell	o Proven	o Heavy
	o Low Cost	
	o Short Processing Time	

PHENOLIC COMPOSITE ABLATIVE WITHIN STRUCTURAL SHELL IS PREFERRED

Phenolic Composite Ablative Types:

- Silica Reinforcements = E.G., MX 2600
- Carbon Reinforcements = E.G., MX 4926

- Well Characterized Materials
  - o Thermally
  - o Mechanically
- Used Extensively in Solid and Liquid Rockets
  - Delta Transtage
  - Titan
  - M1
  - PBPS
  - C-4
  - SRAM II
  - PK

MATERIAL SELECTION CONCERNS

- Recession and Charring
- Mechanical
- Cost
- Fabrication Ease

RECESSION AND CHARRING CONCERNS

Comparison of LRB with Other System's Exhaust Species

SYSTEM	Pc,psia	H_2O	CO_2	OH	H_2	OTHER
LRB (LOX + RP1)	800	33	16	7	11	33
M1 (LOX + LH)	1000	66	0	4	25	5
Titan IV, Stg. 2 (NTO + A50)	800	39	5	3	8	45
PBPS (NTO + N_2H_4)	300	44	0	3	12	41
Delta (Transtage) (NTO + A50)	100	39	5	3	8	45

- H_2O, CO_2, OH, H_2 Chemically Reactive with Phenolic Composites and Carbonaceous Materials
- Last 4 Systems Use Phenolic Ablative Composites

RECESSION AND CHARRING CONCERNS (CONTINUED)

Comparison of Material Performance:

o Uncooled, No Fuel Film Barrier

$$\dot{S}_{\text{Silica Phenolic}} \simeq \dot{S}_{\text{Carbon-Carbon Graphite}} \simeq 1/4\ \dot{S}_{\text{Carbon Phenolic}}$$

Specific Example: $\dot{S}_{\text{Silica Phenolic}} \approx 7$ mils/sec @ 600 psia for NTO/A50

o Fuel Film Cooling and Barrier

- Keep Surface Temperature Below 3500°R
  - Silica Melts ≥ 3500°R
- Keep Oxidizing Species From Material

MATERIAL DEGRADATION ANTICIPATED FOR LRB

- Based on 1,000,000 LB Thrust LOX/LH_2 M1 Experience @ 5% Film Cooling

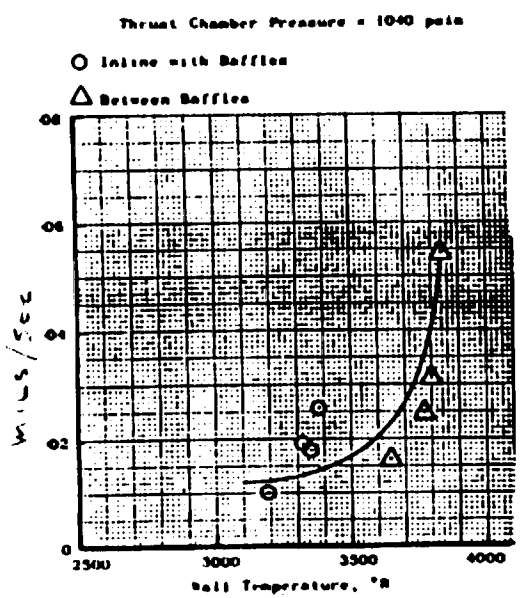

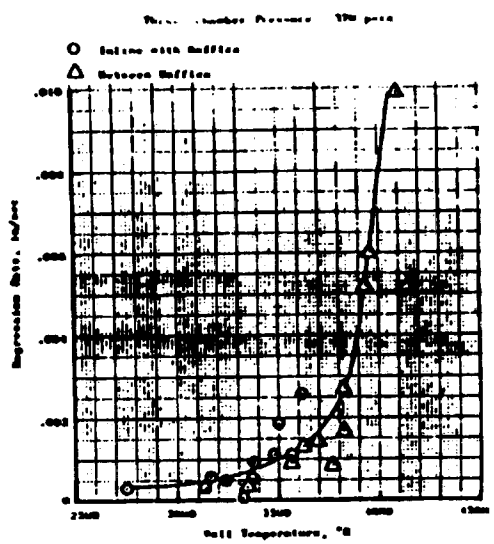

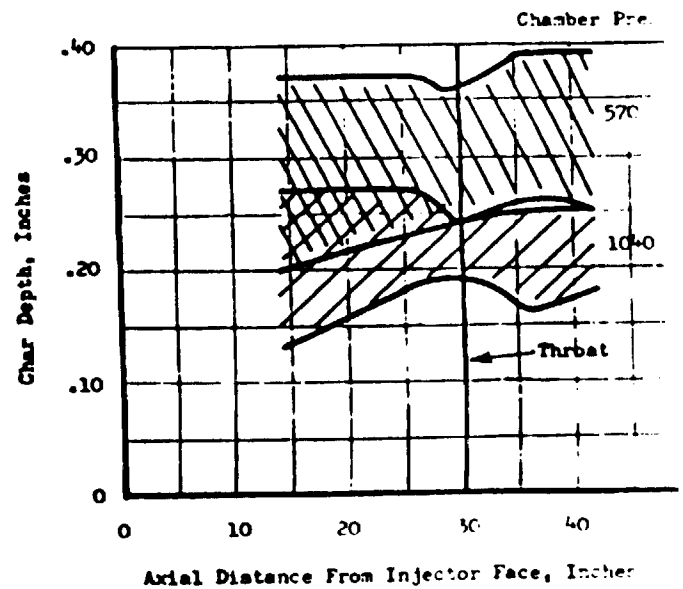

Degradation = Recession + Charring = (2 mils/sec * 160 sec) + 0.4 in = 0.72 in

STANDARD COMPOSITE PROPERTIES

Material System	Specific Gravity	Tensile Strength Ksi (Warp Direction)	Conductivity Btu/ft-hr-F
MX 2600 Silica Phenolic	1.72	12.0	0.22
MX 4926 Carbon Phenolic	1.40	18.0	0.57
Karbon 615 Carbon Phenolic	1.66	52.5	1.62
Carbon-Carbon	1.5	10.0	7
Steel	7.3	90 +	9
XA-S 15245C Graphite Epoxy	1.59	358.0	3.5

LRB THRUST CHAMBER/NOZZLE MATERIALS MUST BE COST COMPETITIVE

MATERIAL SYSTEM	COST ($/LBM)
Silica Phenolic	25
Carbon Phenolic	50
Carbon-Carbon	750-3,000
Steel	5
Graphite Epoxy	20-50

MATERIAL CONFIGURATIONS FOR LRB TO BE BASED ON PRECEDENCE

M1 Thrust Chamber (LOX, LH)
144 sec total duration @ 1000 psi

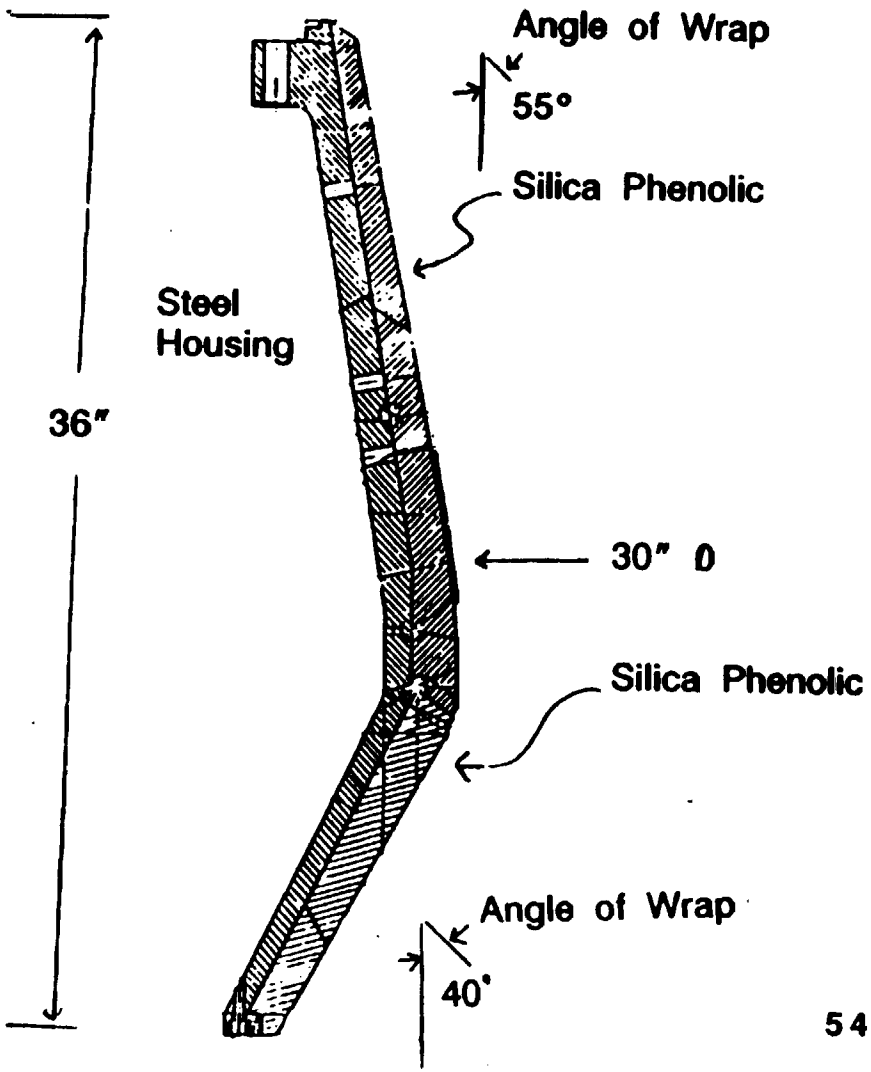

PBPS Thrust Chamber (NTO, N_2H_4)
375 sec total duration @ 300 psi

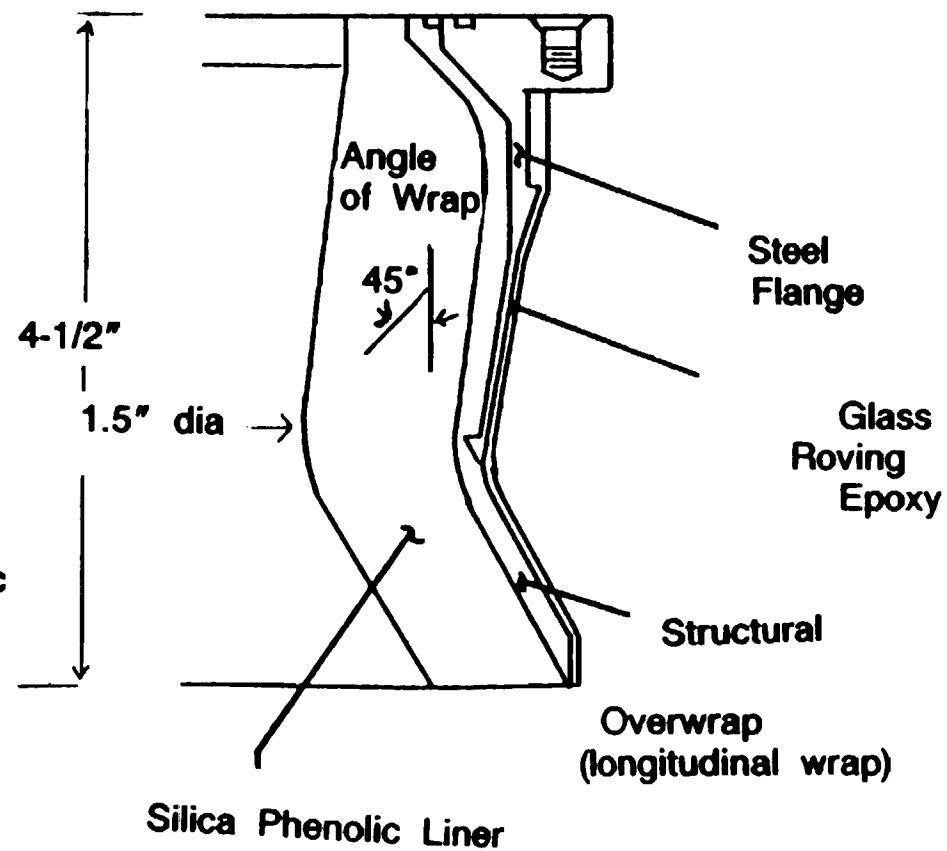

NOZZLE MATERIAL SELECTION AND TYPE SIMILAR TO THRUST CHAMBER MATERIALS

- Possibly low density
- Thinner

LRB CHAMBER/NOZZLE IS SIMPLE, COST-EFFECTIVE

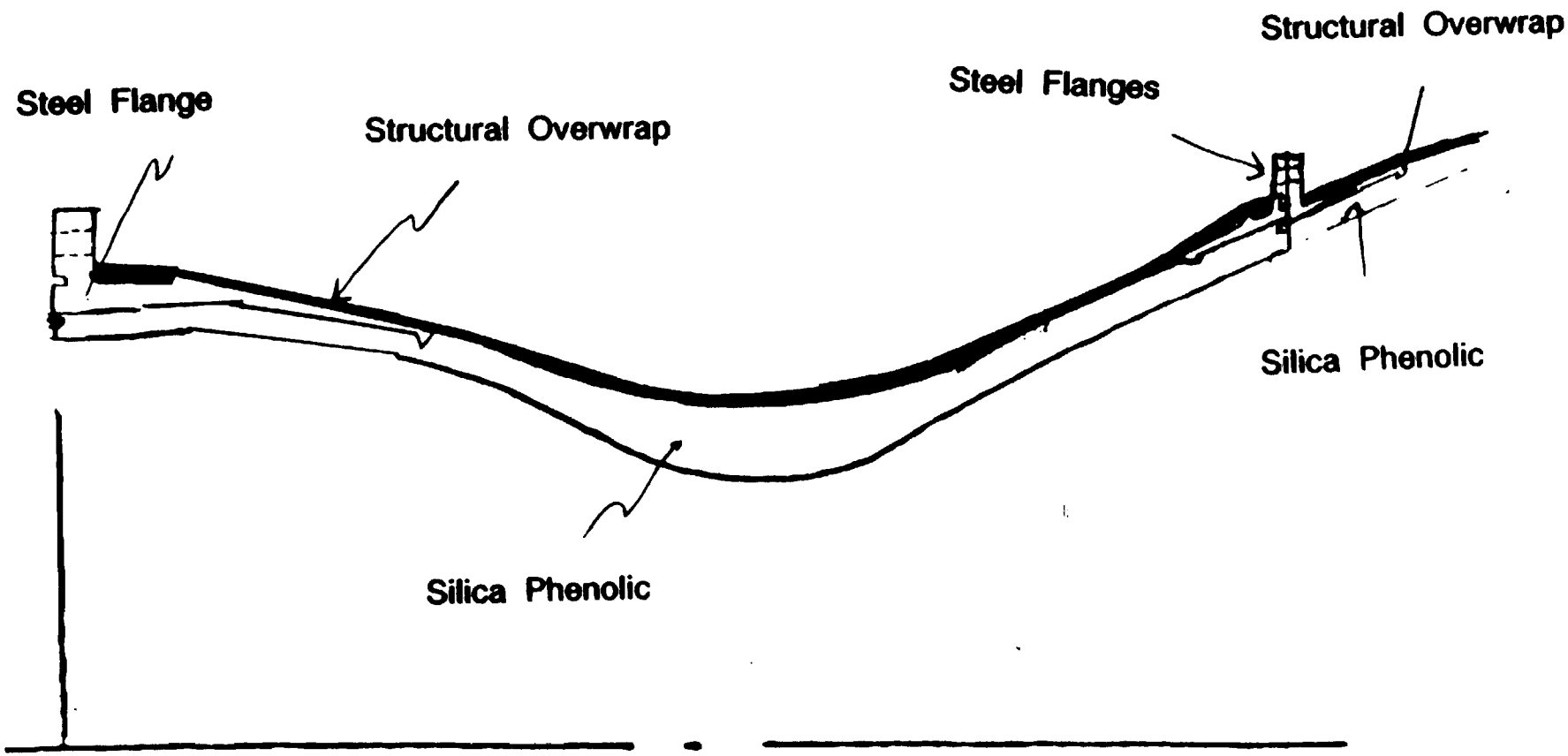

LRB THRUST CHAMBER/NOZZLE FABRICATION SEQUENCE IS SIMPLE

- Tape wrap silica phenolic over two piece male mandrel
- Debulk/cure/post cure
- Machine silica phenolic liner
- Install metal flanges forward and aft (with Epon 921 adhesive)
- Overwrap structural graphite epoxy
- Cure assembly
- Remove male mandrels

INNOVATIVE DOUBLE NOZZLE EXTENSION FABRICATION FOR LRB

New Process

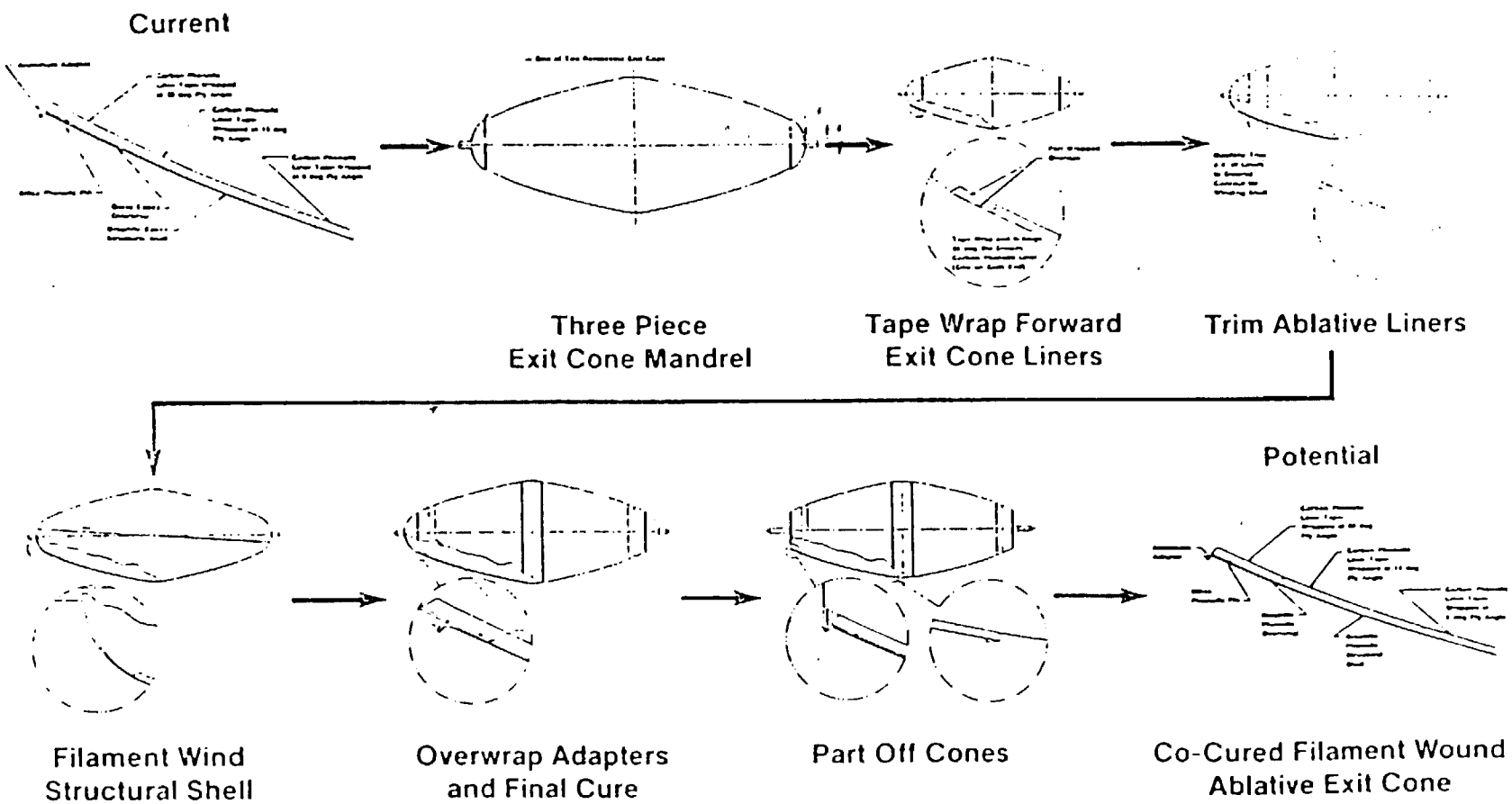

SILICA PHENOLICS TYPES AND ALTERNATIVES

Material Designation	Fiber	Resin	Comment
MX 2600	Silica	Phenolic	Baseline Silica Phenolic
MX 2600LD	Silica	Phenolic	Microballon Fillers for low density ($\rho = 1.17$ vs. 1.72)
MXSE-55	Silica	Elastomeric-Modified Phenolic	Higher strain-to-failure but greater recession rate
MXE-S646	Silica	Polydimethl-siloxane	More chemically resistant but weaker; cheaper
FM 5020	Silica	Phenolic	U.S. Polymeric comparable version of Fiberites MX 2600
FM 5504	Silica	Phenolic	Comparable to MX 2600LD
?	Ceramic	Phenolic	Potential greater performance; lower cost
FM 5755	Glass	Phenolic	Cheaper, stronger, but greater recession rate

Through-The-Thickness braiding machines use a matrix hollow shapes to net geometry. These net-shaped products can integrate attachment holes and flanges without severing fibers,

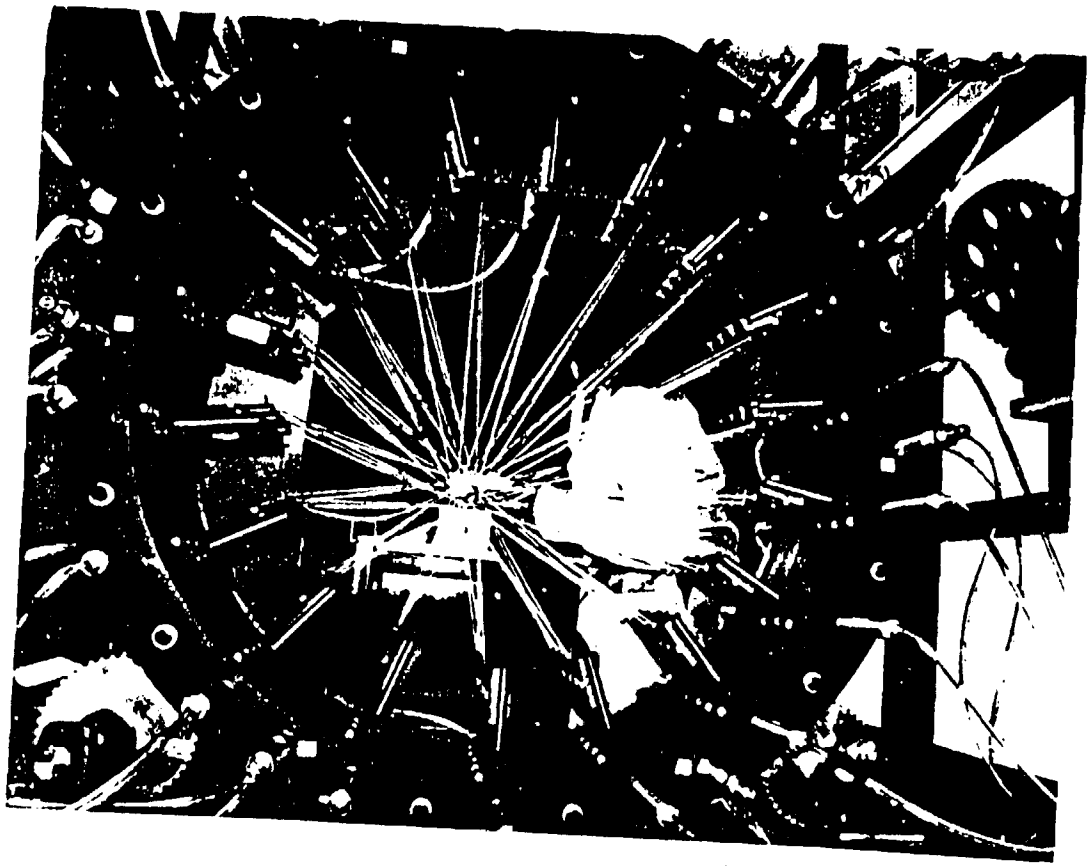

Subscale cylindrical braider with spools.

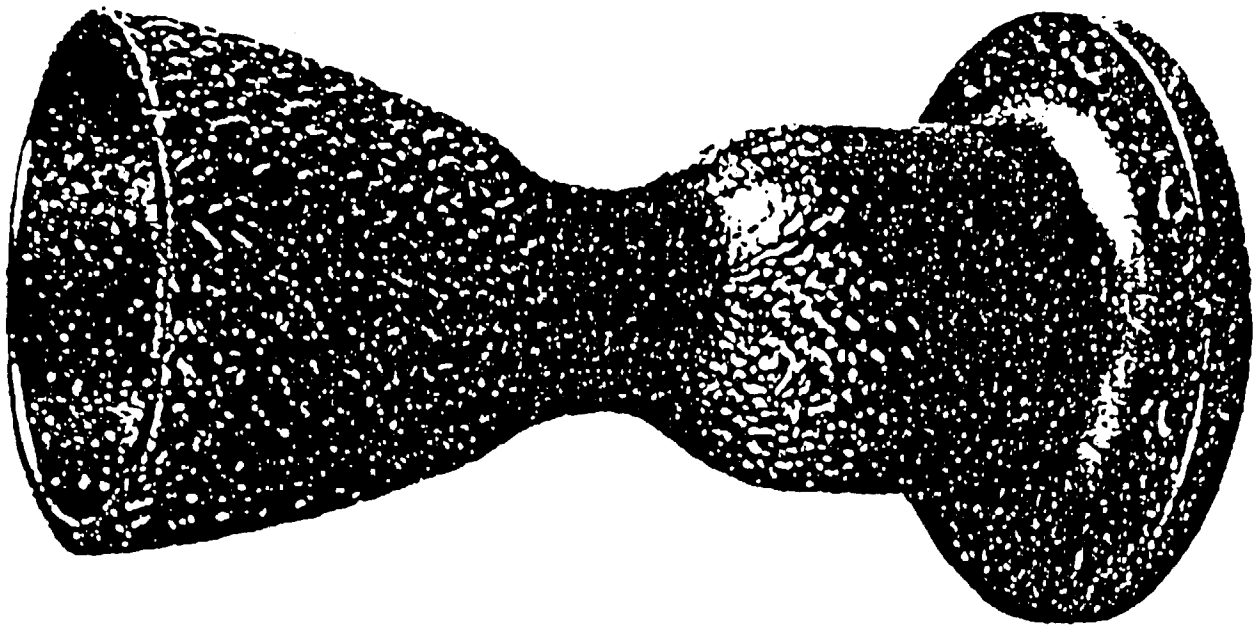

WEIGHT ESTIMATE FOR NOZZLE EXTENSION

Material System	Density S.G.	Average Thickness IN	Weight LBM
Silica Phenolic	1.7	0.75	1,000
LD Silica Phenolic	1.2	0.75	700
Carbon-Carbon	1.7	0.15	200

Silica Phenolic Nozzle Extension Much Heavier Than Carbon-Carbon but Order of Magnitude Cheaper

LRB CHAMBER/NOZZLE IS SIMPLE, COST-EFFECTIVE

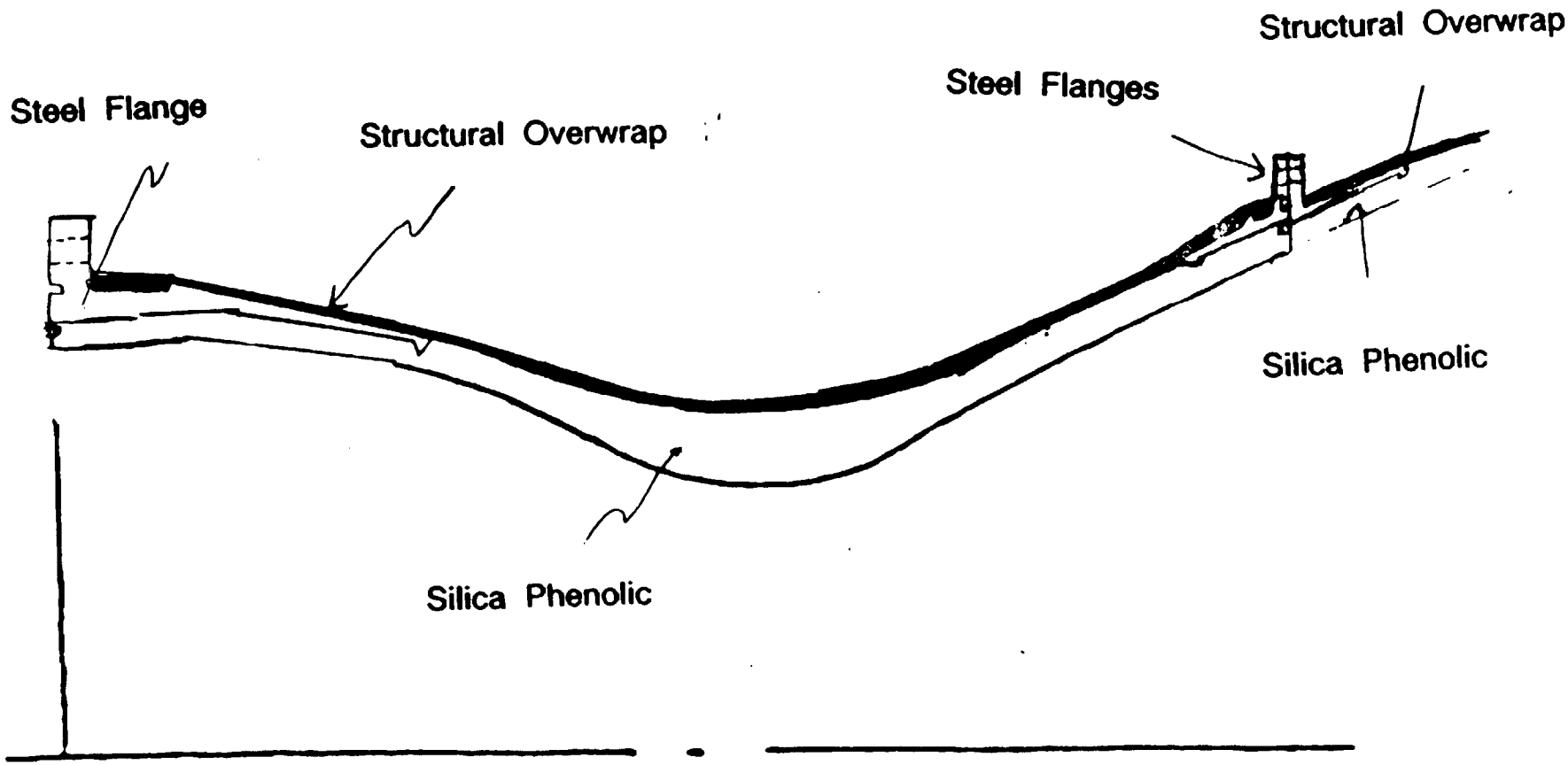

Aft-of-Throat TVC Proven

Aerojet Solid Rocket Program Has Demonstrated Thrust Vector Control By Flexing The Nozzle Aft Of The Throat

AEROJET TechSystems COMPANY

Flex Seal Size Is Within Current Industry Experience

SCALED DIMENSIONS	SPHER R	ANGLE
PK.S1	21.2	44.6°
PK.S2	22.3	35.9°
PK.S3	13.0	43.0°
DS.S1	14.8	56.0°
DS.S2	14.8	46.1°
DS.S3	12.2	49.3°
C4.S1	12.5	59.1°
C4.S2	10.0	59.1°
C4.S3	6.8	60.2°
SICBM.S1	----	----
SICBM.S2	9.7	42.7°
SICBM.S3	----	----
SHUTTLE.SRM	44.1	68.7°
TITAN SRM PROPOSAL	31.7	63.2°

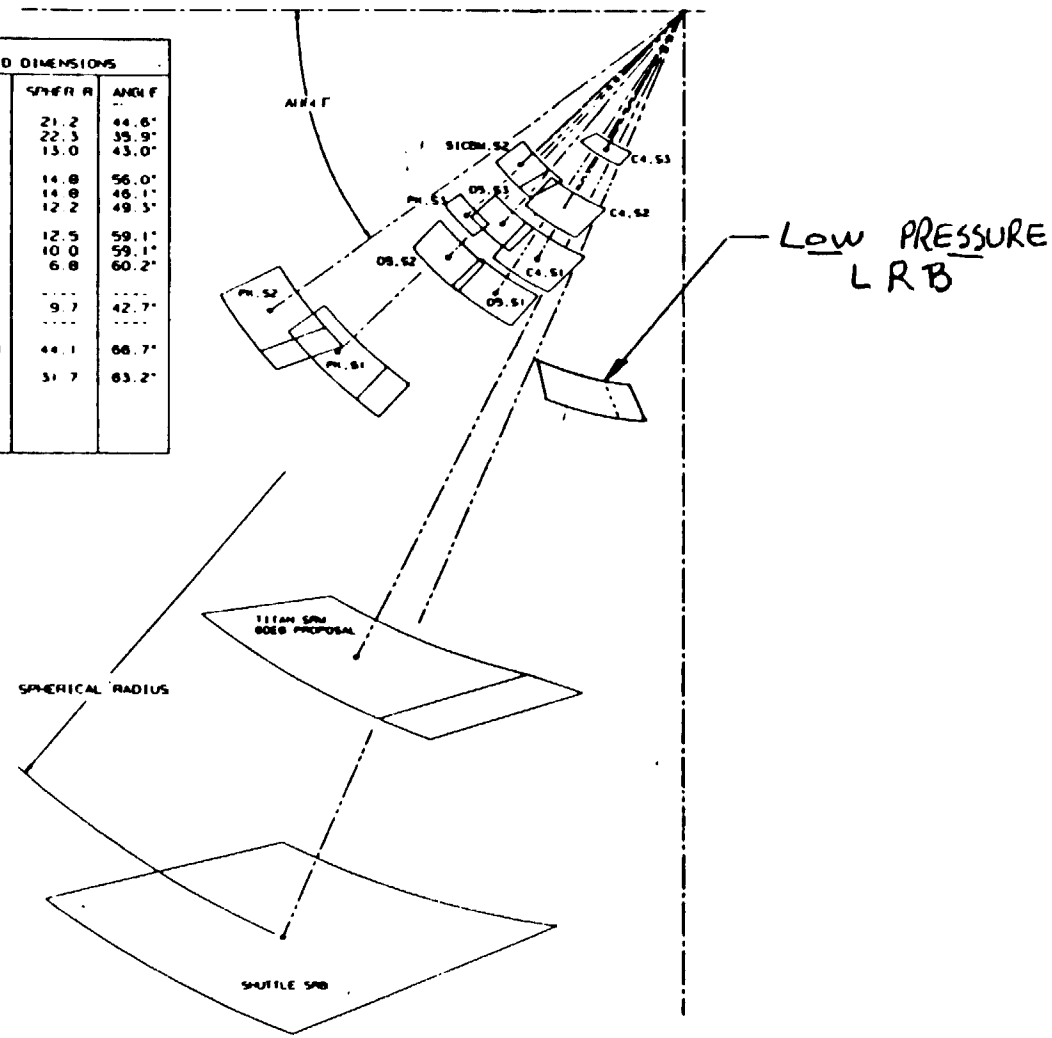

Preliminary Flex Seal Details

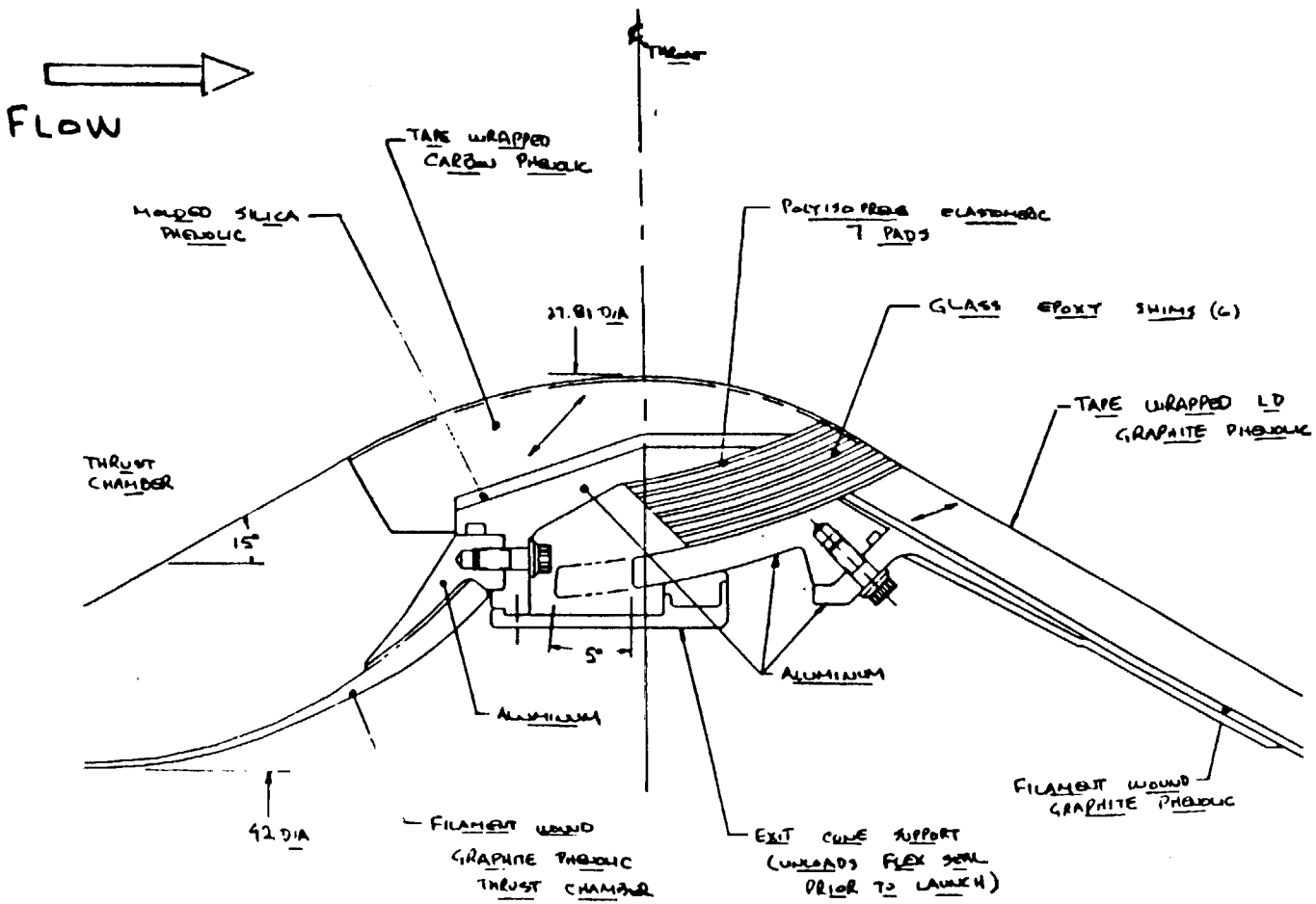

Pump Fed Engine Design

- For The LRB Pump Fed Engines, We Selected A Point Design In March 88 And Developed Our Concept Definition
- Within Our Company The Major Effort In Both Design And Philosophy Of New Pump Fed Booster Engines Is Focused On The STBE/STME Engines Which Continue To Change As The Vehicle Requirements Evolve
- Therefore, Many Differences Exist Between LRB And STBE/STME.

LRB PUMP FED ENGINE
LO2/RP-1

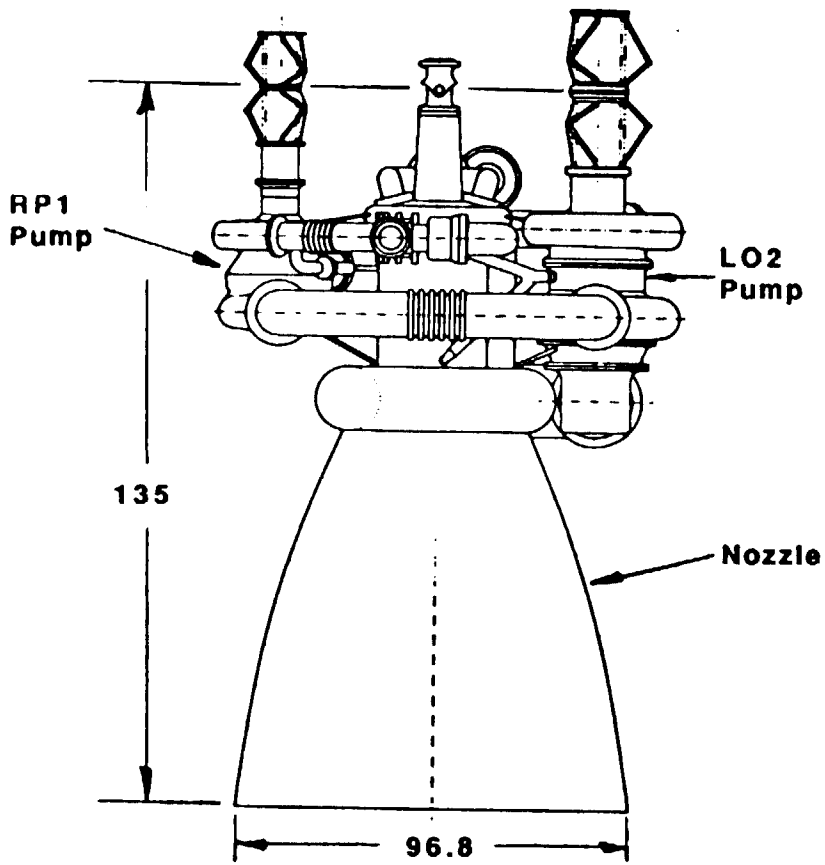

	NPL	EPL
Thrust, S.L. klbs	513	685
Thrust, Vac. kbs	623	788
ISP, S.L. sec	265	277
ISP, Vac, sec	322	318
Mixture Ratio	2.6	2.5
Total Flow Rate, lb/sec	1933	2473
Chamber Pressure, Psia	1033	1300
Exit Pressure, Psia	5.9	7.7
Expansion Ratio	21.2	
Nozzle Type	Carbon-Carbon	
Weight, Dry, lbs	6807	
Engine Cycle	Gas Gen	
Propellants	LO2/RP1	
Gimbal Type	Head End	
Gimbal Angle	±6°	

LRB 3/7 02a

AEROJET TechSystems COMPANY

PUMP FED ENGINE SCHEMATIC

LO2/RP1

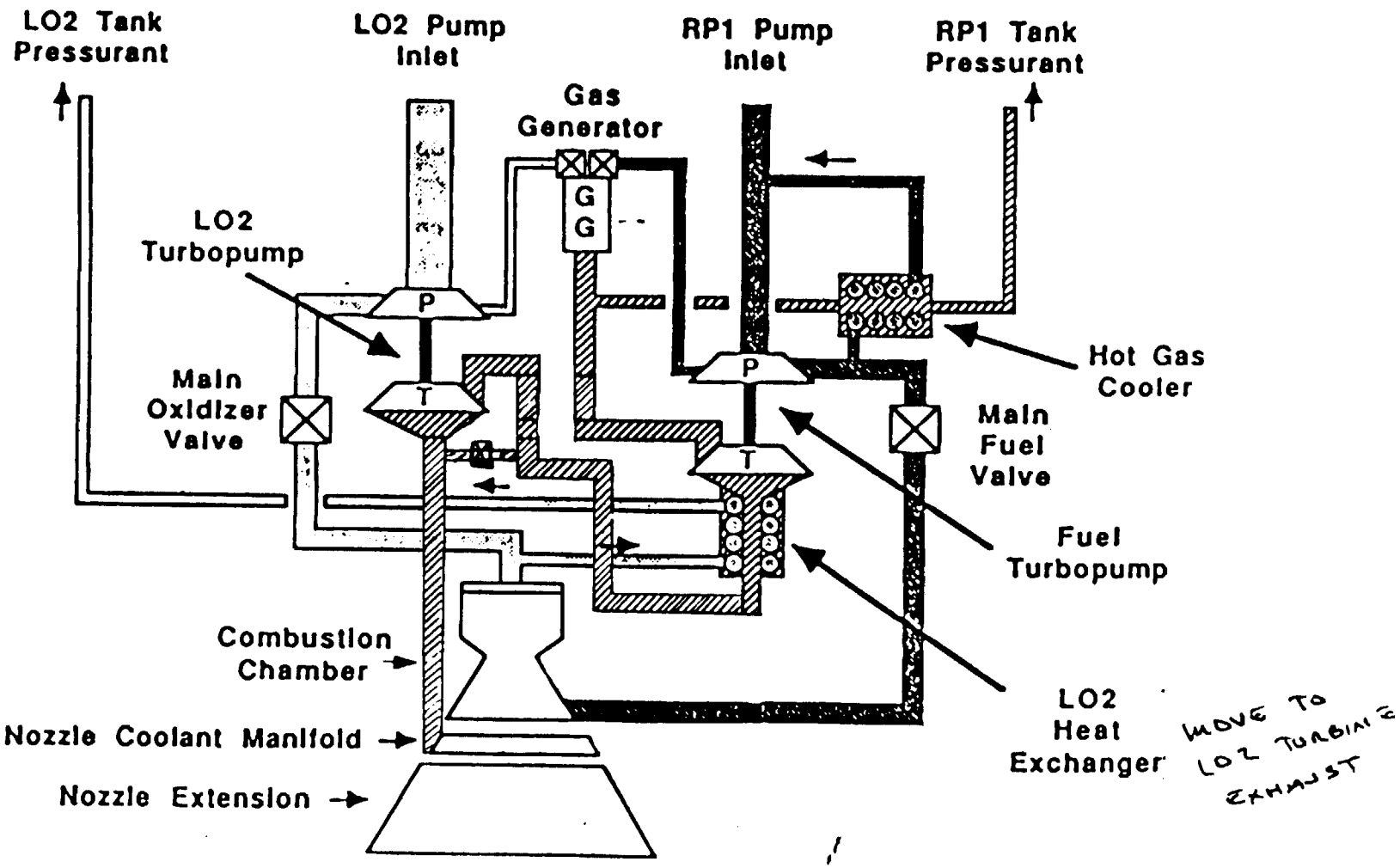

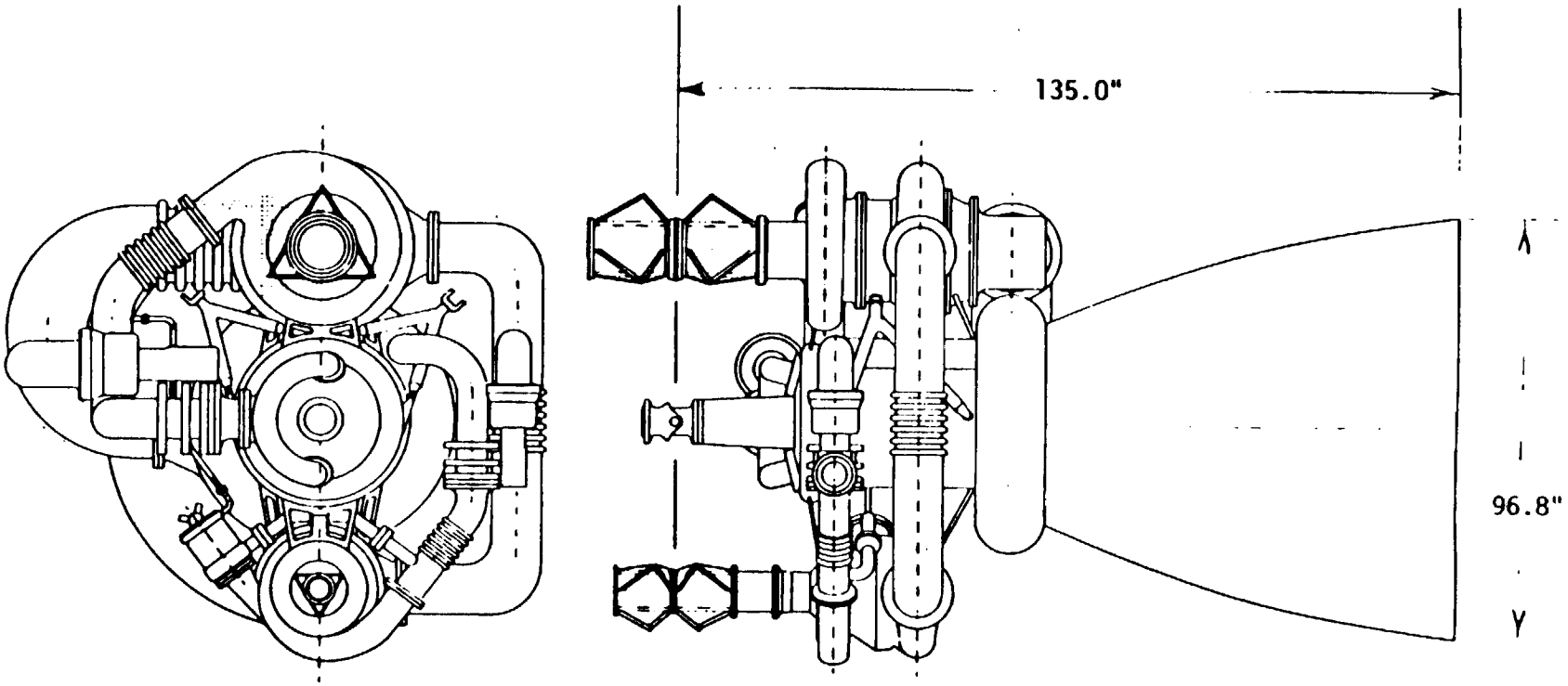

LRB For STS Turbopump
Fed (TF) Rocket Engine
Configuration Of 5-27-88

AEROJET TechSystems COMPANY

Turbopumps

Vic Viteri
Manager/Rotating Machinery Department
Design & Analysis

AEROJET TechSystems COMPANY

LRB TURBOPUMP

TOPICS

- REQUIREMENTS
- DESIGN OBJECTIVES
- DESIGN GUIDELINES
- PUMP AND TURBINE DESIGN PARAMETERS
- TURBOPUMP DESIGN FEATURES
- TURBOPUMP MATERIALS
- DESIGN PARAMETERS/GUIDELINE COMPARISON
- CONCLUSIONS

AEROJET TechSystems COMPANY

LRB TURBOPUMP ENGINE/MISSION REQUIREMENTS

	MPL	NPL	EPL
THRUST, S.L. KLBS	385	513	685
THRUST, VAC. KLBS	467	623	788
BURN DURATION – SEC		130	
PROPELLANTS		LOX/RP – 1	
ENGINE CYCLE		GAS GENERATOR	
ENGINE TYPE		EXPENDABLE	

AEROJET TechSystems COMPANY

LRB TURBOPUMP REQUIREMENTS

	MPL		NPL		EPL*	
	RP1	LOX	RP1	LOX	RP1	LOX
ENGINE FLOWRATE, LB/SEC	402	1049	536	1398	706	1767
PUMP INLET PRESSURE, PSIA	35	60	35	60	35	60
PUMP DISCHARGE PRESSURE, PSIA	1982	891	3178	1240	5022	1631
PROPELLANT TEMPERATURE, °R	528	163	528	163	528	163
PROPELLANT DENSITY, LB/FT^3	49.9	71.0	49.9	71.0	49.9	71.0

* TURBOPUMP DESIGN POINT

AEROJET TechSystems COMPANY

PUMP FED ENGINE SCHEMATIC

LO2/RP1

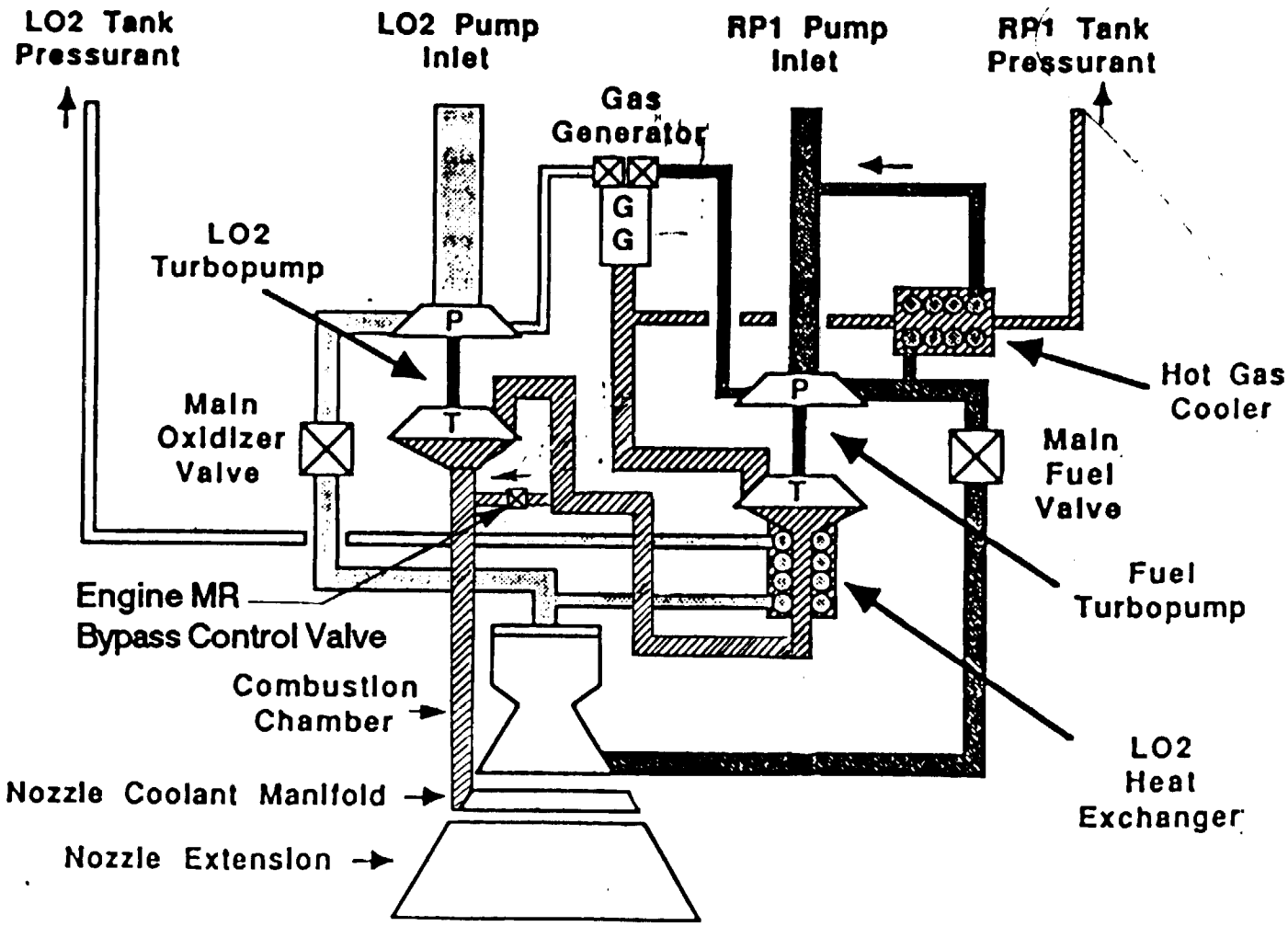

AEROJET TechSystems COMPANY

LRB TURBOPUMP DESIGN OBJECTIVES

- HIGH COMPONENT EFFICIENCIES
- SIMPLE SYSTEM (NO BOOST PUMPS) FOR HIGH RELIABILITIY
- CONSERVATIVE DESIGN PARAMETERS FOR HIGH RELIABILITY
- LOW COST DESIGN WITH EXTENSIVE USE OF CASTINGS

AEROJET TechSystems COMPANY

ATC DESIGN GUIDELINES FOR LRB

PARAMETER	GUIDELINE UPPER LIMIT
SUCTION SPECIFIC SPEED	35,000 (RP1)
	40,000 (LOX)
TURBINE BLADE STRESS INDEX, AxN^2 – IN^2 RPM^2	25×10^9
SHAFT STRESS, SHP x N^2 – HP RPM^2	26×10^{12}
BEARING SPEED, DN – mm RPM	1.5×10^6
INDUCER TIP SPEED – FT/SEC	500
IMPELLER TIP SPEED – FT/SEC	1000
TURBINE MEAN SPEED – FT/SEC	1500
TURBINE INLET TEMPERATURE – °R	2160

THESE GUIDELINES APPLY AT EPL CONDITIONS

AEROJET TechSystems COMPANY

LRB FUEL PUMP DESIGN PARAMETERS

NO. OF STAGES	1
FLOW RATE – GPM	6,353
SUCTION PRESSURE – PSIA	35
DISCHARGE PRESSURE – PSIA	5,022
SPEED – RPM	12,000
SPECIFIC SPEED – RPM, GPM, FT	728
INDUCER INLET DIA. – IN	7.5
IMPELLER DISCHARGE DIA. – IN	17.1
EFFICIENCY – %	76
SHAFT POWER – SHP	24,308
SUCTION SPECIFIC SPEED – RPM, GPM, FT	30,000

AEROJET TechSystems COMPANY

LRB FUEL TURBINE DESIGN PARAMETERS

NO. OF STAGES	2
INLET TEMPERATURE – °R	1,860
INLET PRESSURE – PSIA	1,235
EXIT PRESSURE – PSIA	229
EFFICIENCY – %	82
SHAFT POWER – SHP	27,000
WEIGHT FLOW – LB/SEC	117
MEAN BLADE VELOCITY – FT/SEC	1,072
MEAN ROTOR DIAMETER – IN	20.5

AEROJET TechSystems COMPANY

LRB FUEL TPA DESIGN FEATURES

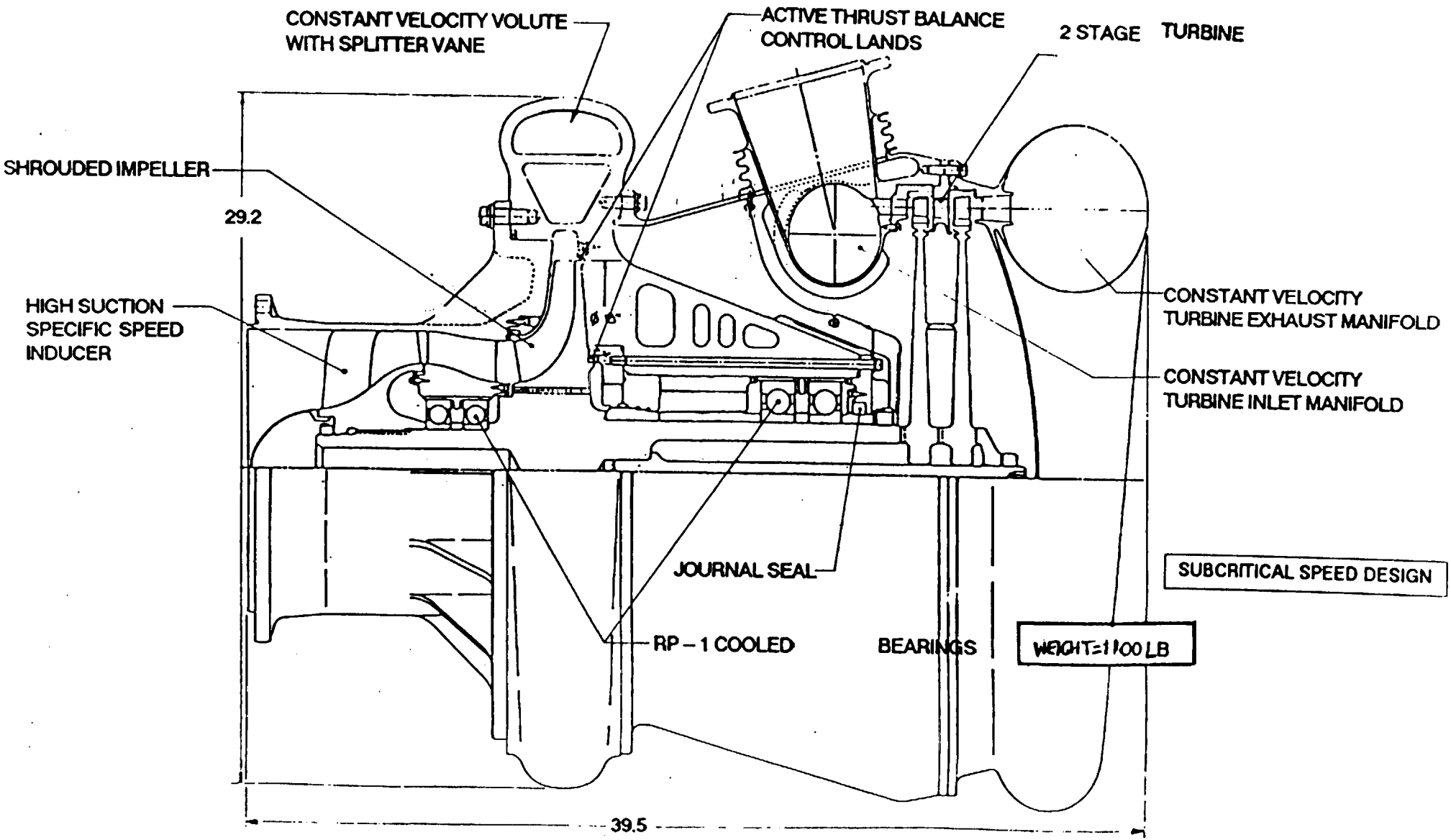

FIGURE 1

AEROJET TechSystems COMPANY

LRB FUEL TPA MATERIALS

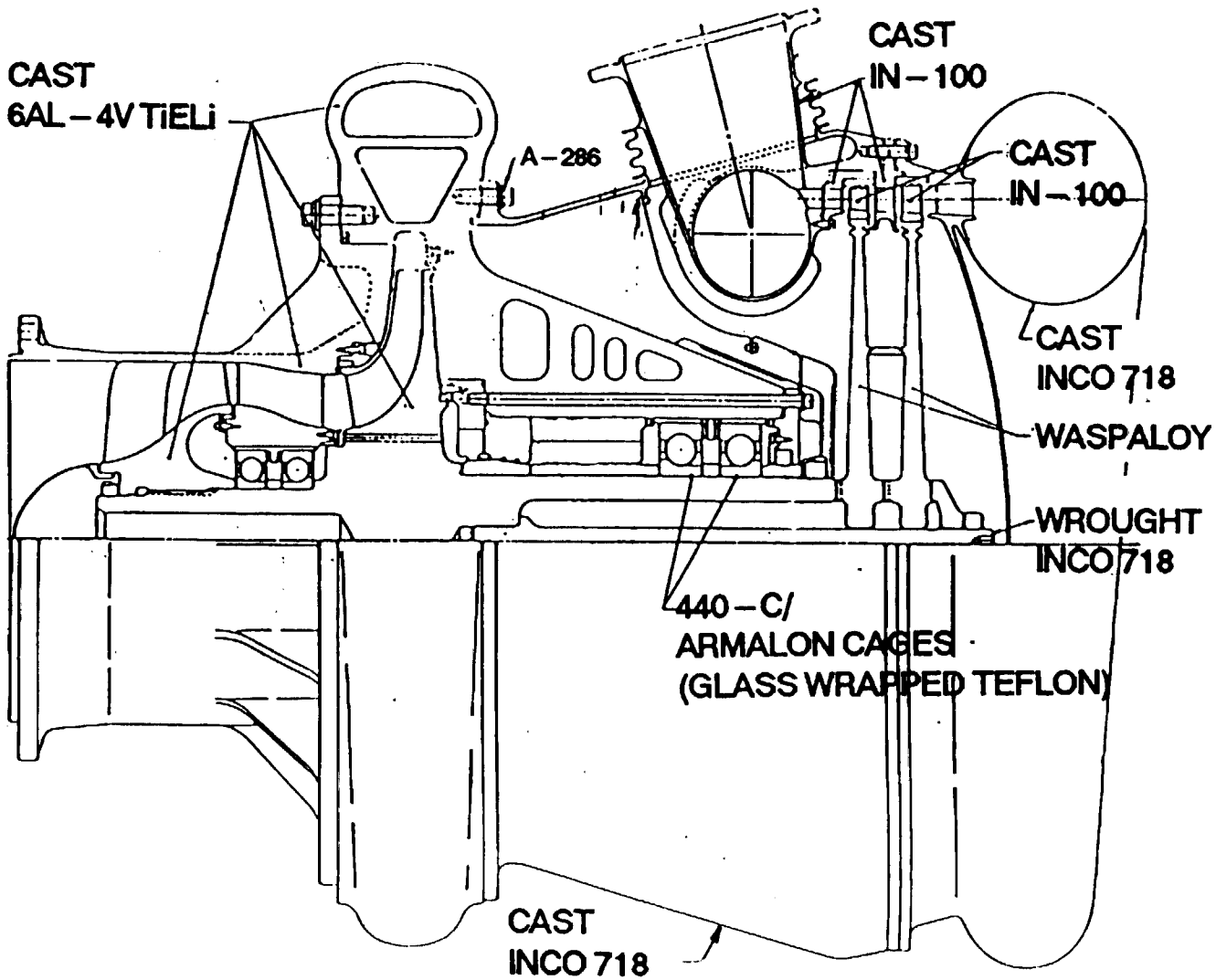

AEROJET TechSystems COMPANY

LRB OXIDIZER PUMP DESIGN PARAMETERS

NO. OF STAGES	1
FLOW RATE – GPM	11,173
SUCTION PRESSURE – PSIA	60
DISCHARGE PRESSURE – PSIA	1,560
SPEED – RPM	8,000
SPECIFIC SPEED – RPM, GPM, FT	2,000
INDUCER INLET DIA. – IN	10.3
IMPELLER DISCHARGE DIA. – IN	15.0
EFFICIENCY – %	83
SHAFT POWER – SHP	11,795
SUCTION SPECIFIC SPEED – RPM, GPM, FT	30,000

AEROJET TechSystems COMPANY

LRB OXIDIZER TURBINE DESIGN PARAMETERS

NO. OF STAGES	2
INLET TEMPERATURE – °R	1,503
INLET PRESSURE – PSIA	229
EXIT PRESSURE – PSIA	83
EFFICIENCY – %	82
SHAFT POWER – SHP	13,106
WEIGHT FLOW – LB/SEC	117
MEAN BLADE VELOCITY – FT/SEC	747
MEAN ROTOR DIAMETER – IN	21.4

AEROJET TechSystems COMPANY

LRB OXIDIZER TPA DESIGN FEATURES

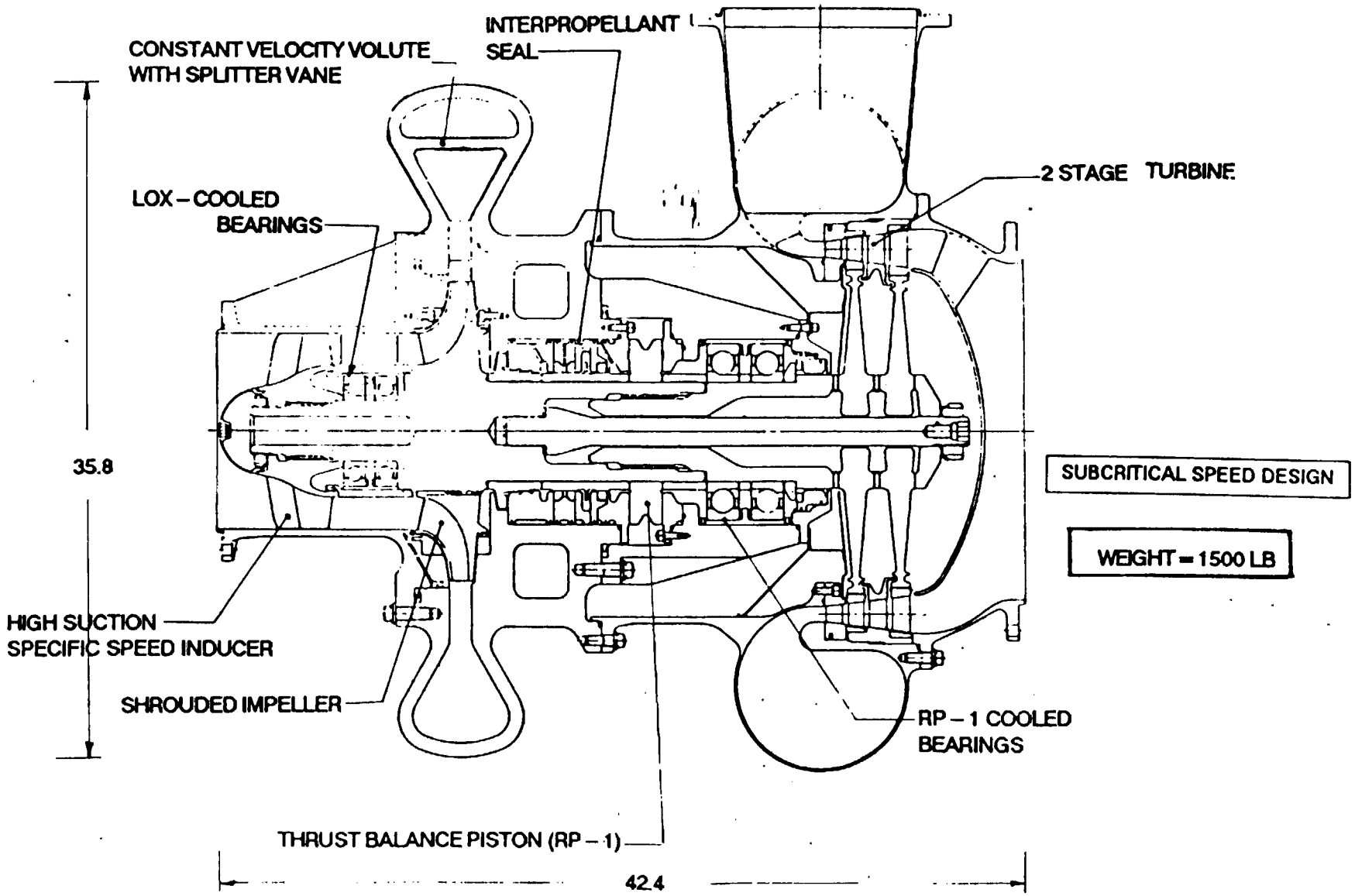

AEROJET TechSystems COMPANY

LRB OXIDIZER TPA MATERIALS

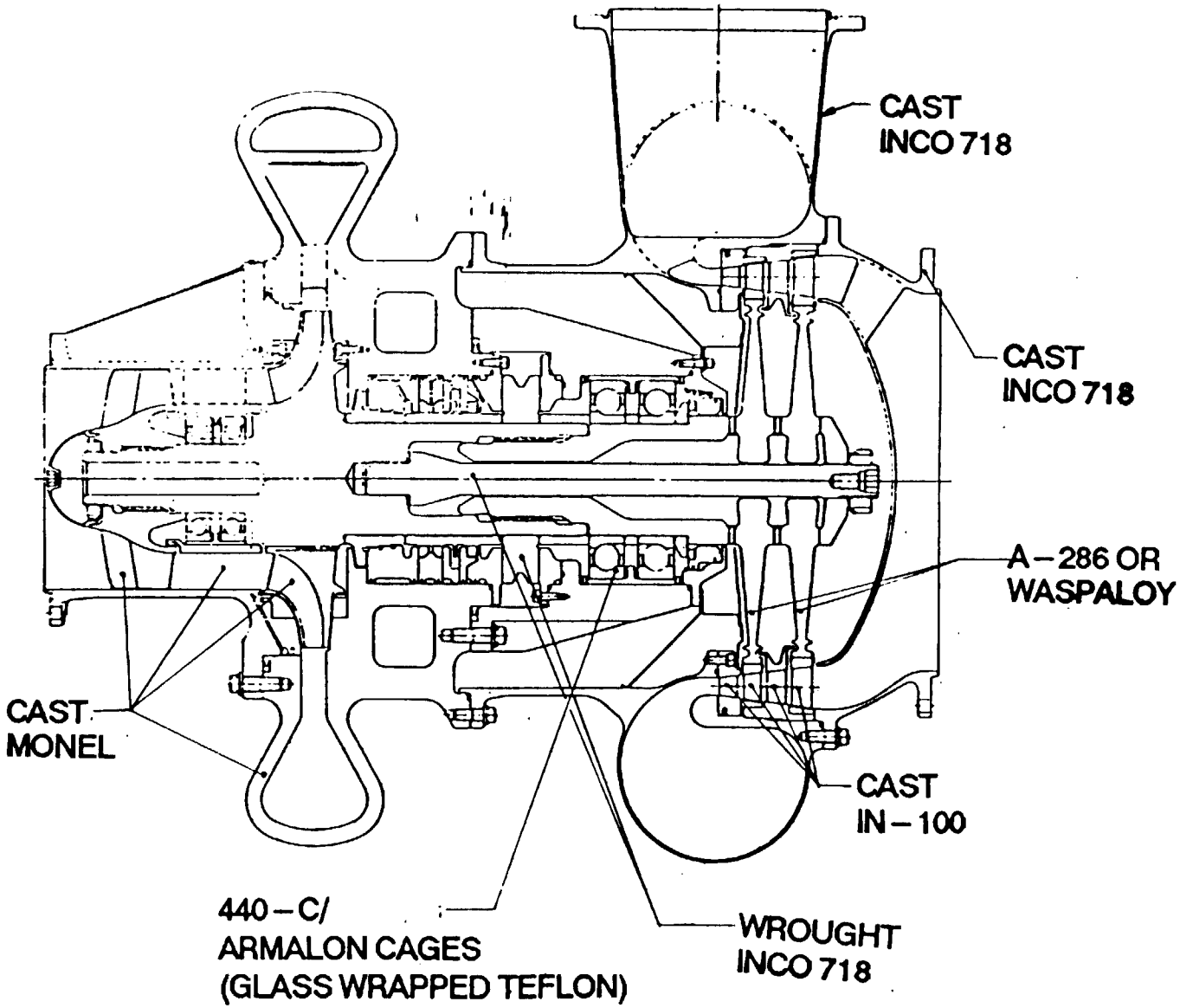

AEROJET TechSystems COMPANY

LRB TURBOPUMP CRITICAL SPEEDS

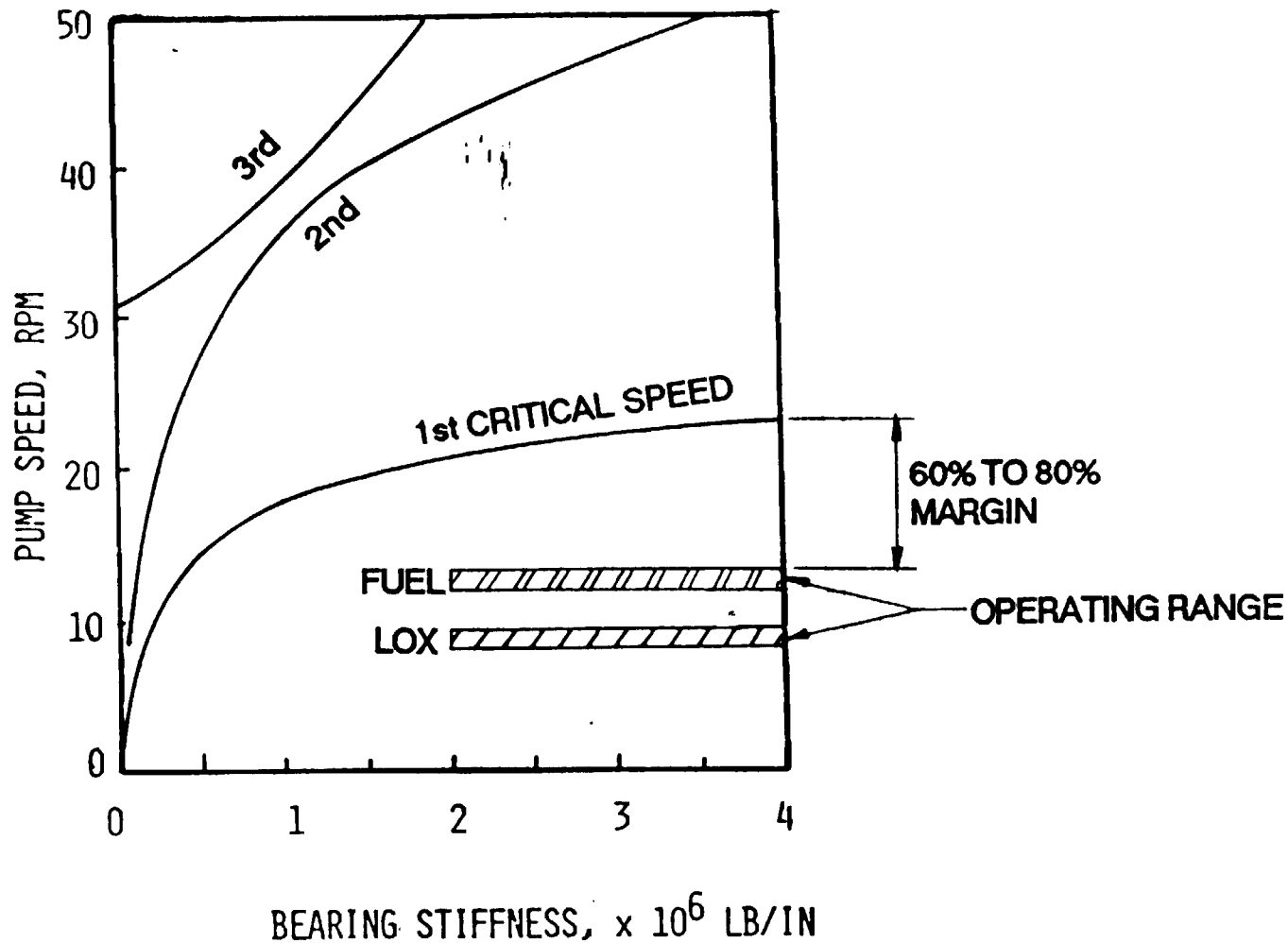

AEROJET TechSystems COMPANY

LRB TURBOPUMP DESIGN PARAMETER COMPARISON

PARAMETER	GUIDELINE	FUEL	OXID
SUCTION SPECIFIC SPEED	35,000	30,000	
SUCTION SPECIFIC SPEED	40,000		30,000
TURBINE BLADE STRESS INDEX – $A \times N^2$	25×10^9	5.7×10^9	9.0×10^9
SHAFT STRESS INDEX – $HP \times N^2$	26×10^{12}	3.9×10^{12}	0.84×10^{12}
BEARING SPEED – mm x RPM	1.5×10^6	1.3×10^6	0.9×10^6
INDUCER TIP SPEED – FT/SEC	500	390	360
IMPELLER TIP SPEED – FT/SEC	1,000	894	522
TURBINE MEAN BLADE SPEED – FT/SEC	1,500	1,070	750
TURBINE INLET TEMP – °R	2,160	1,860	1,500

AEROJET TechSystems COMPANY

LRB TURBOPUMP CONCLUSIONS

- DESIGN WELL WITHIN CURRENT STATE – OF – THE – ART
- DESIGN OBJECTIVES WERE MET INCLUDING:
  - HIGH RELIABILITY POTENTIAL
  - HIGH OVERALL TPA EFFICIENCIES
  - LOW COST DESIGN WITH EXTENSIVE USE OF CASTINGS

AEROJET TechSystems COMPANY

Injector & Thrust Chamber Assembly

Jeff Muss
Engineer/Combustion Analysis

AEROJET TechSystems COMPANY

Pump Fed LRB Design Requirements

	MPL @ 44 Km	NPL @ S.L.	EPL @ S.L
Thrust (lbf)	474,000	514,800	685,000
Thrust, vac (lbf)	474,000	623,000	793,200
ISP (sec)		266.3	
ISP vac (sec)		322.3	
TCA Mixture Ratio	2.80	2.80	2.80

AEROJET TechSystems COMPANY

Pump Fed LRB Engine Design Exceeds Performance Requirements

	MPL @ 44 Km	NPL @ S.L.	EPL @ S.L
Thrust (lbf)*	476,000	514,800	685,000
Thrust, vac (lbf)	476,000	623,000	793,200
Isp (sec)	321.6	267.3	279.7
Isp, vac (sec)	321.6	323.3	323.6
Pc (psia)	777	1070	1300

* ~ 10,000 Lbf recovered from GG dump

AEROJET TechSystems COMPANY

CONTOUR FOR PUMP FED LRB ENGINE

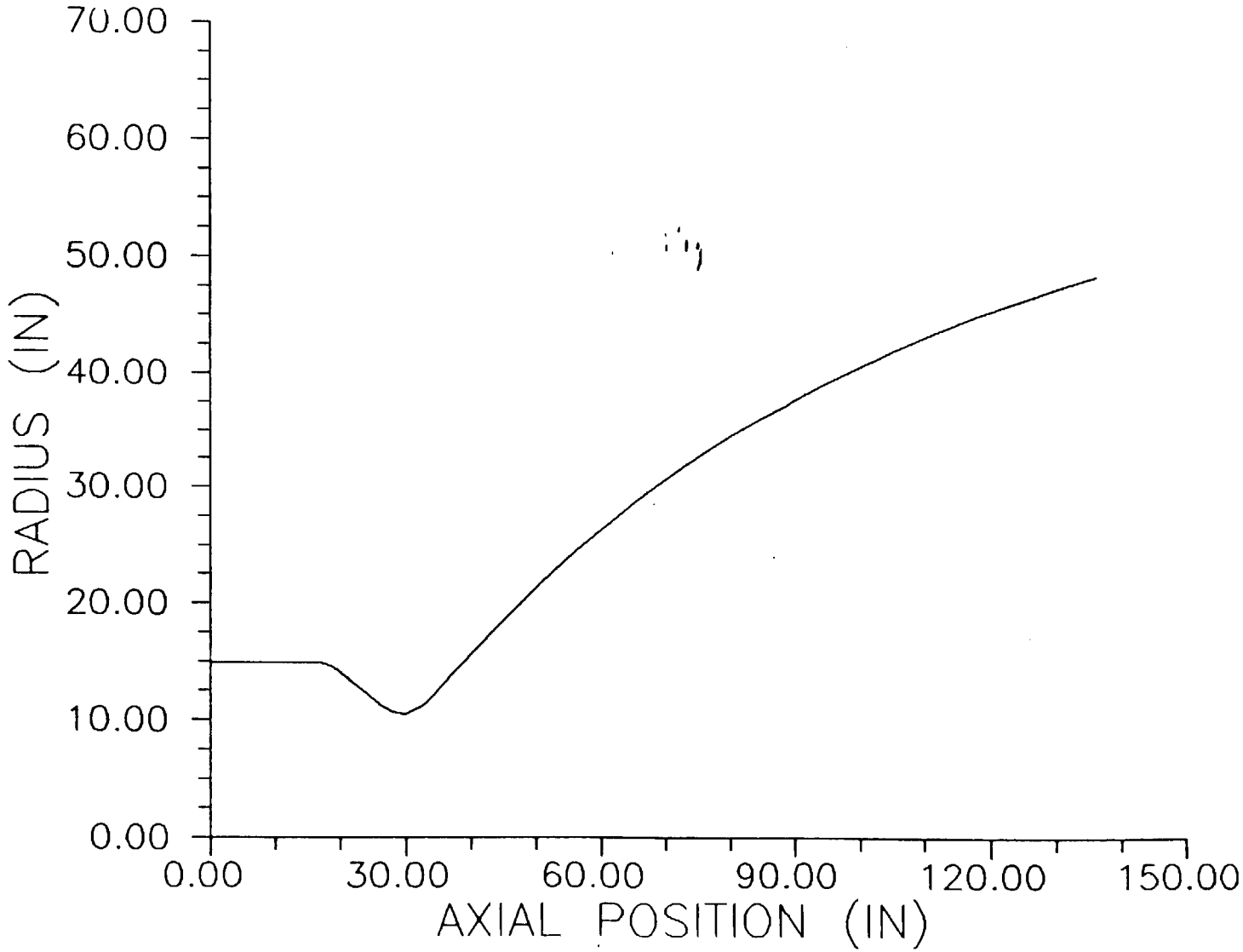

Pump Fed Thrust Chamber Dimensions Meet Envelope Constraints

Chamber Diameter	29.8 in
Throat Diameter	21.0 in
Exit Diameter	96.8 in
Contraction Ratio	2.00
Angle of Convergence	25 deg
Expansion Ratio	21.2
% Bell	75
Overall Length	154 in
Combustion Chamber Length	30 in
Nozzle Length	106 in

AEROJET TechSystems COMPANY

Pump Fed LRB Main Injector Design Provides High Preformance and Good Compatability with Low Cost

Core Element Type	OFO Triplet
# of Elements	225
Ox Orifice Diameter	0.20 in
Fuel Orifice Diameter	0.20 in
OX Injector Inlet Pressure *	1942 psia
Fuel Injector Inlet Pressure	1739 psia
OX Injection ΔP	384 psia
Fuel Injection ΔP	534 psia
FFC (5% of TCA fuel)	118 Showerheads
FFC Orifice Diameter	0.060 in
Throat Wall Mixture Ratio	1.67

* all Pressures at EPL

Pump Fed TCA Is High Performing

	Efficiency *
Overall Vacuum ISP	96.8
Kinetic	99.8
Divergence	99.4
Boundary Layer	99.9
Energy Release	97.6
Characteristic Velocity (C*)	97.8

* at EPL

Predicted Stability Characteristics of Pump Fed LRB is Good

- Chug Stability Margin at MPL is Adequate (22 psi)
- High Frequency Damping is required for 1T and 2T

CONTOUR FOR PUMP FED LRB COMBUSTION CHAMBER

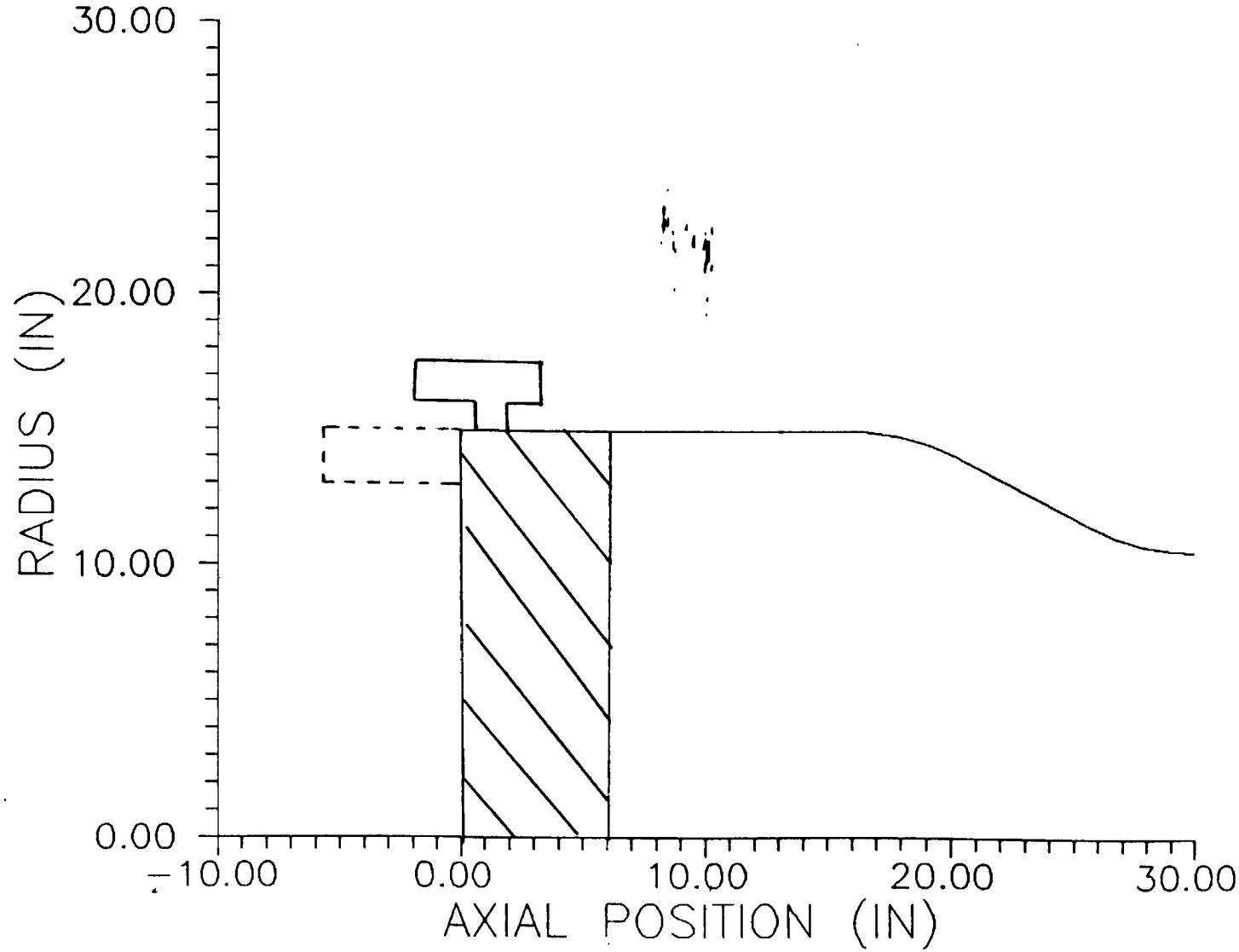

Pump Fed TCA Will Require Stability Aids

Configuration A:

3 – Bladed Baffle 6" High + 1R Helmholtz Resonator or 1/4 Wave Cavity (Depth 3.2")

Configuration B:

1T/2T Bituned Helmholtz Resonator or 1/4 Wave Cavity (Depth 6.6"/4.0")

AEROJET TechSystems COMPANY

Heat Transfer

Felix Chen
Manager/Heat Transfer Analysis

AEROJET TechSystems COMPANY

Chamber Cooling Study Consider Different Aspects Of Regenerative Cooling

- Results Of Lox/RP-1 Engine Trade Studies
  - Thrust: 1M lb_f
  - Four Different Coolants: RP-1
    Lox
    Hydrogen
    Water (Closed Circuit)
- Results Of Fuel Cooled LRB Pump Fed Engine Design
  - Thrust: 793Klb_f
  - Coolant: RP-1

AEROJET TechSystems COMPANY

Gas-Side Conditions Are Based On Historical Engine Test Data

- Baseline (Case A) - Generic Cg Correlation
  (Injector Independent, No Film Cooling Benefit)

$$hg = Cg\ DB\ De^{-1.8}\left(W_T F2D\ \frac{Te}{Tf}\right)^{0.8}$$

Cg = Dimensionless Acceleration Parameter, Function Of Axial Distance

- Alternative Design - Based On NASA-MSFC 40 K Lox/RP-1 Engine Test Data
  (X-Doublet Injector With Barrier Mixture Ratio)

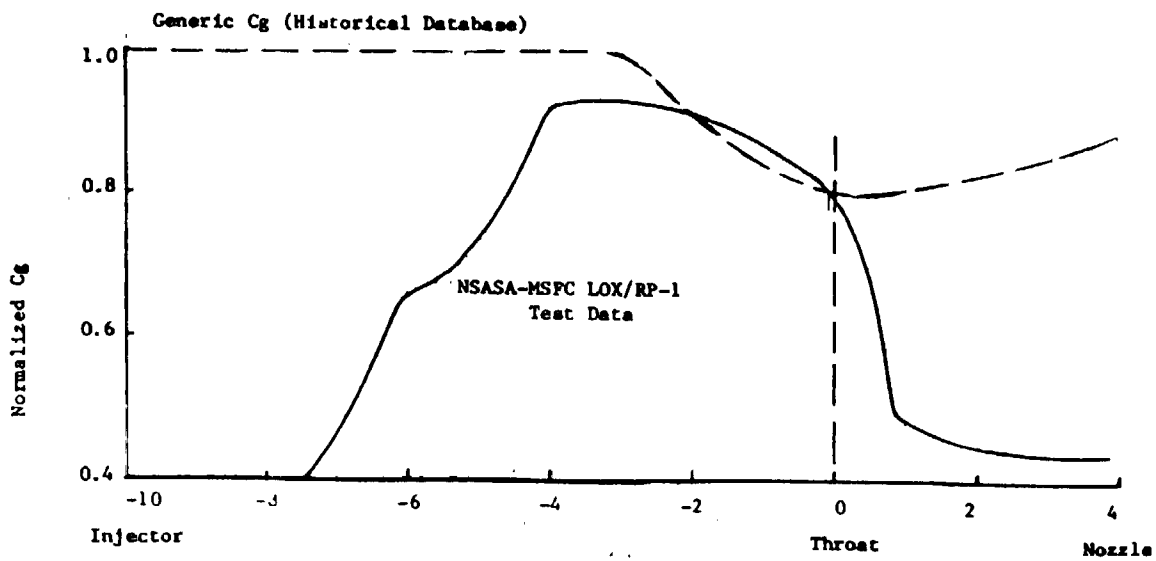

LRB 6/14 02

AEROJET TechSystems COMPANY

Design Criteria For Regenerative Cooling With RP-1

- Maximum Allowable Coolant-Side Wall Temperature Is 550°F
  - Coking Temperature Limit (Limiting Condition, Verified In Contract NAS 3-25070 With NASA Lewis)
- Maximum Gas-Side Temperature Of 1100°F For Zr-Cu
- Liner (Non-Limiting Condition For RP-1 Cooling)
- Outlet Coolant Pressure Is At Least 20% Higher Than Chamber Pressure

AEROJET TechSystems COMPANY

Analysis Tool Scaler Has Been Used For Several ATC Engines

- SCALER Computer Program Used In Regen-Cooling Chamber Design For Titan And OMS TCA
- Straddle-Milled Slot Channel (Constant Land Width) Used To Fully Utilize Fin Effects For Cooling And Minimize Coolant Pressure Drop

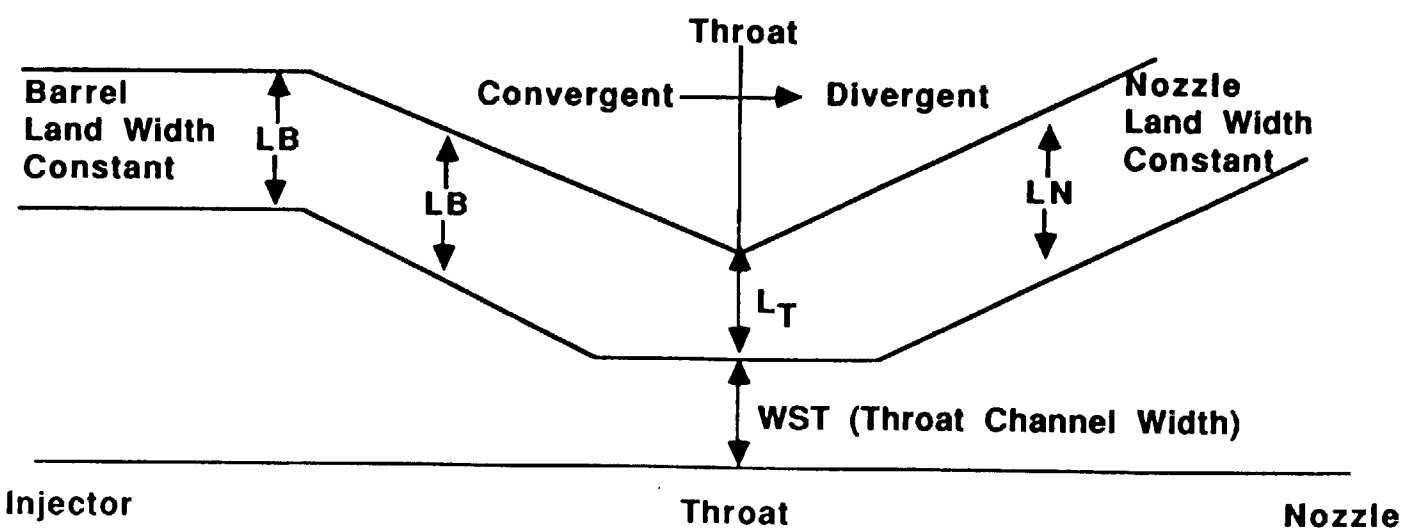

LRB 6/14 04

AEROJET TechSystems COMPANY

Milled Slot Regenerative Cooling Channel Chosen For Chamber Cooling

- Single Pass Counter Flow Coolant Channel
- Coolant Inlet Area Ratio - 5:1 In Nozzle
- Straddle-Milled Slot Channel
- Zr-Cu Liner With EFNi Closeout

AEROJET TechSystems COMPANY

Summary Of Chamber Cooling For Lox/RP-1 Engine

Lox/RP-1

F = 1M lb_f

Gas Generator Cycles

TCA MR = 2.8

Symbol	Coolant
RP	RP-1
RPO	Oxygen
RPH	Hydrogen (40 lbm)
RPW	Water (400 lbm)

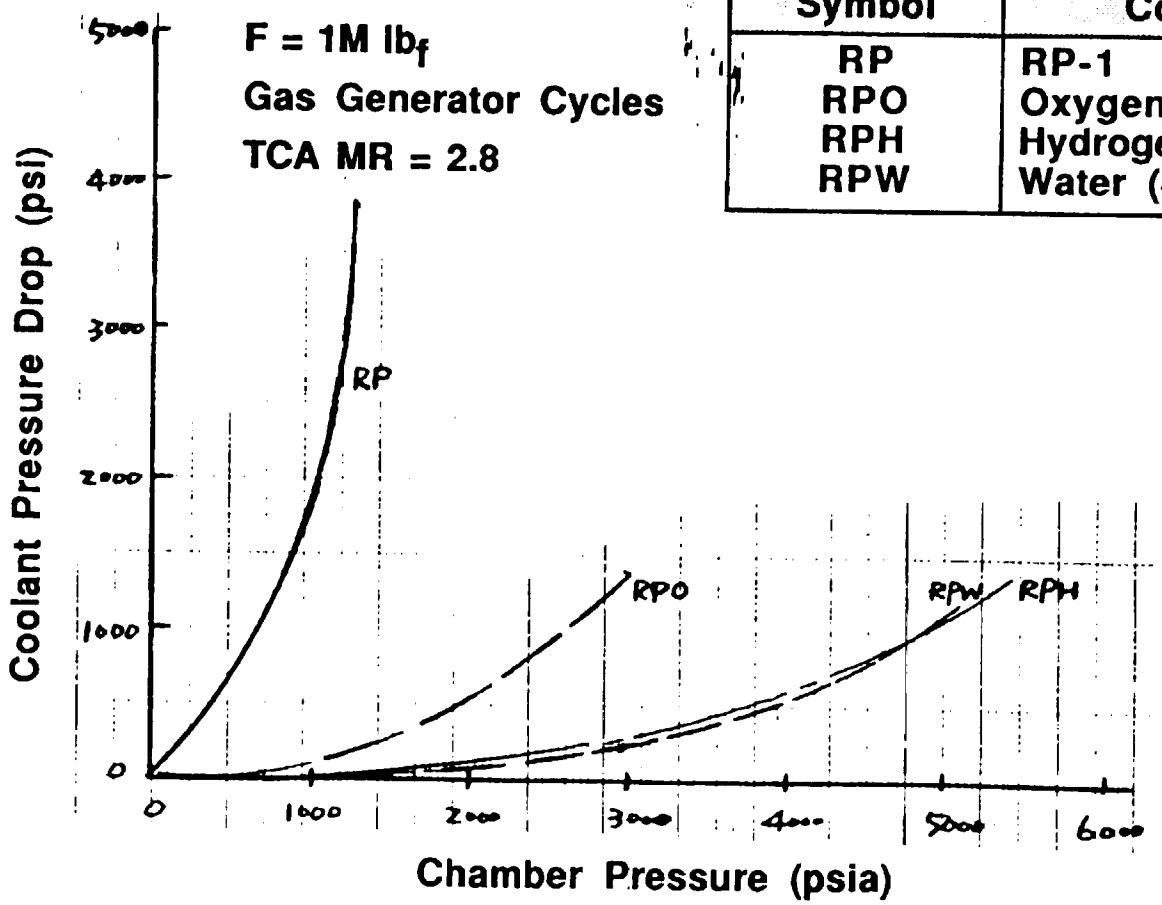

LRB 6/14 06

AEROJET TechSystems COMPANY

Conclusions Of Lox/RP-1 Chamber Cooling Trade Study

- Maximum Allowable Chamber Pressure With RP-1 Is 1300 psia Due To Coolant-Side Coking Temperature Limit
- Lox Is Good Coolant. Coolant Pressure Drop Is Only 1326 psi For A Chamber Pressure Of 3000 psia
- Both Hydrogen And Water Are Good Coolant For Chamber Cooling At High Chamber Pressure
- Maximum Gas-Side Wall Temperature For RP-1 Cooling Is Less Than 700°F

Operating Conditions For LRB Pump Fed Engine

Design Conditions At EPL

• Thrust	793,200 (lb_f)
• TCA MR	2.8
• Chamber Pressure	1300 (psia)
• Chamber Length	30.0 (in)
• Contraction Ratio	2.0
• Throat Diameter	21.02 (in)
• Coolant (RP-1) Inlet Temperature	530 (°R)
• Pump Discharge Pressure	5232 (psia)

Coolant Pressure Drop Vs. No Of Coolant Channels

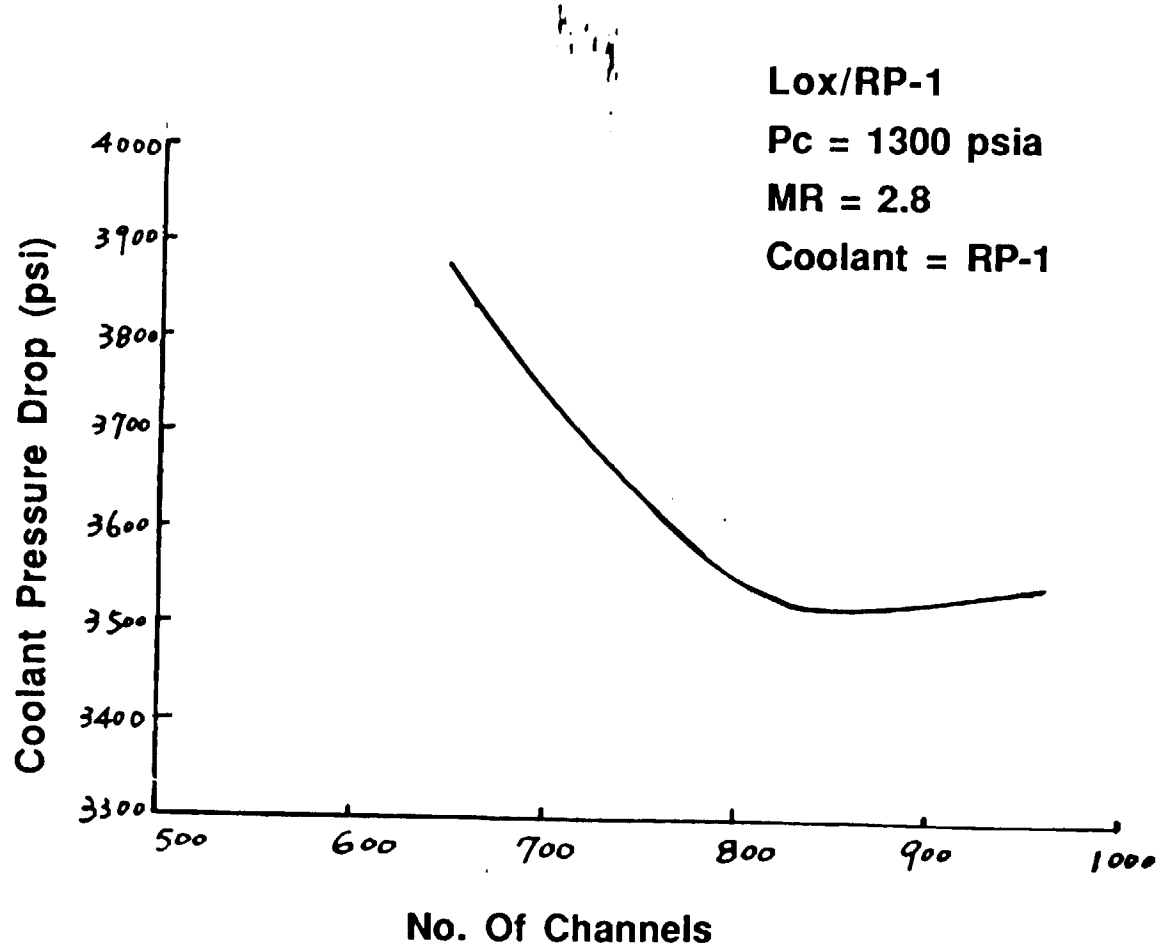

LRB 6/14 09

AEROJET TechSystems COMPANY

Recommended Coolant Channel Design For Baseline LRB Pump Fed Engine

	Barrel	Throat	Nozzle
No. Of Channels	828	828	828
Coolant Channel Width (in.)	0.053	0.05	0.119
Coolant Channel Depth (in.)	0.187	0.157	0.333
Land Width (in.)	0.06	0.03	0.06
Wall Thickness (in.)	0.03	0.03	0.078
Gas-Side Wall Temp. (°F)	626	653	605
Coolant-Side Wall Temp (°F)	550	550	550

AEROJET TechSystems COMPANY

Pump Fed Fuel-Cooled LRB Engine Is Feasible

	Case A (Generic Cg)		Case B (NASA-MSFC Database)
Pc (psia)	1300	1200	1300
P_{inlet} (psia)	5232	4830	5232
P_{outlet} (psia)	1707	1995	1931
ΔP(psi)	3525	2835	3301
q_{max} (Btu /in^2-S)	22	20	23.7
T_{wg} , max (°F)	660	651	672
T_b (°R)	187	184	187

Conclusions For Fuel-Cooled LRB Pump Fed Engine

- LRB Fuel-Cooled Pump Fed Engine Is Coolable
- Coolant-Side Wall Temperature Limit Of 550°F Can Be Achieved With Present Engine Design
- Maximum Gas-Side Wall Temperature Is Only 660°F
- Add Fuel Film Cooling Or Barrier Mixture Ratio Will Decrease Coolant Pressure Drop
- For Expendable Application, If Certain Amount of Coking Is Allowed, Other Low Cost Chamber Design Is Possible

Conclusions

- Pressure Fed Engines For LRB Applications Are Feasible
- Low Cost Pressure Fed Engines Are Attainable Using Ablative Materials And Large Thrust/Element Injectors
- Pump Fed Engine For LRB Are Within Existing Technology Limits
- Low Cost Pumps Fed Engines Are Attainable Using Inovative Fabrication Techniques

Recommendations

Pressure Fed Engines

1. Continue Design Iteration Process To Converge On A Set Of Realistic Requirements For Engines And Vehicles

2. Pursue Combustor Technology In The Areas Of:

   Injectors
   - Performance
   - Stability
   - Throttle Range

   Chambers
   - Ablative Techniques
   - Acoustic Cavity Incorporation
   - Flex Seal Gimballing

3. Define Thrust Reduction Techniques, Other Than Throttling, For The STS Application

Pump Fed Engines

1. Continue Design Iteration Process To Converge On A Set Of Realistic Requirements For Engines And Vehicles

2. Continue To Monitor STBE/STME Engine Evolution For Applicable Results

LRB 6/14 20