NAG 2-297

AIAA

December 1987

LIDS-P-1724

GUARANTEED PROPERTIES OF THE EXTENDED KALMAN FILTER

Daniel B. Grunberg
ALPHATECH, Inc.
111 Middlesex Turnpike
Burlington, Massachusetts 01803

Michael Athans
Laboratory for Information and Decision Systems
Massachusetts Institute of Technology
Cambridge, Massachusetts 02139

270866
37P.
JAN 88

ABSTRACT

We show that the extended Kalman filter (EKF) is guaranteed to be nondivergent under very general assumptions. Nondivergence as used here means that the magnitude of the estimation error of the EKF is no more than proportional to the size of the noises. We show that this is an important (and sufficient) property for closed-loop stability when an EKF is used as the estimator in a model-based controller. An important contribution of this paper is the connection of the state space and operator description of systems.

Research was conducted at the MIT Laboratory for Information and Decision Systems and was supported by the NASA Ames and Langley Research Centers under grant NASA NAG 2-297.

This paper has been submitted for publication to the Journal of Mathematics of Control, Signals, and Systems.

(NASA-CR-186414) GUARANTEED PROPERTIES OF THE EXTENDED KALMAN FILTER (Alphatech) 37 p

N90-71213

Unclas

00/33 0270866

TABLE OF CONTENTS

1. INTRODUCTION
2. BACKGROUND
3. MAIN RESULT
4. CONCLUSION
   APPENDIX A: PROOF OF MAIN RESULT

1. INTRODUCTION

The extended Kalman filter [J] was introduced as an engineering approximation to a very difficult theoretical problem: How does one estimate the state of a nonlinear system from measurements of the output variables in the presence of disturbances? While the equations describing the exact optimal nonlinear state estimate can be written down [J, H, C, FM, K], they involve the solution of a partial differential equation (PDE) in real-time. While it may be feasible to compute the steady-state solution to a PDE with current technology and use the result in an application, evolving the conditional probability distribution by a PDE in real-time is still computationally unrealistic for any but the most simple systems.

Because the optimal nonlinear state estimate was so difficult to calculate, approximations were introduced. One of these was the extended Kalman filter (EKF), so called because of its use of the Kalman filter [KB] force-fit on the nonlinear system, by linearizing about the current state estimate. Many successful applications of the EKF were described [AWB, SS, et al], even though there was little theoretical work explaining the reasons for its success. In this paper we show that the the success of the EKF was not due just to luck, but to some fundamental properties possessed by the EKF. In particular, we will show that the EKF is guaranteed to be nondivergent under very general assumptions. A nondivergent estimator [SA1] is one for which the size of the estimation error is no more than proportional to the size of the process noise and measurement noise. As first shown in [SA1], a nondivergent estimator can be used to create a model-based nonlinear control system without loss of stability when the estimated state is substituted for the actual state in a stabilizing state-feedback function.

The conditions which guarantee that the EKF will be nondivergent are roughly that the nonlinearities have bounded slope, the inputs enter additively, and the system is M-detectable. A system is M-detectable if a model-based estimator exists that is nondivergent for a full rank input matrix (not necessarily the output matrix). Note that the nondivergence we discuss here is not small-signal in any way; estimation errors will be shown to be stable for any size of disturbance.

The rest of the paper is organized as follows: Section 2 presents background material on the model to be used, operator notation, and basic definitions. Section 3

presents the main result concerning the nondivergence of the EKF and Section 4 presents the conclusion to the paper. The proof of the main result appears in the Appendix. For a more detailed discussion and additional properties of the EKF and other observers, see [G1].

NOTATION

$:=$	"is defined as"
I	The identity matrix or operator
0	The zero matrix or operator
R	The real numbers
R^n	space of ordered n-tuples of real numbers
R_+	The non-negative real numbers
∇g	The gradient matrix of the function $g: R^n \rightarrow R^m$
$\|x\|$	The Euclidean norm of the vector x, e.g $(x^T x)^{1/2}$
$\|A\|$, $\sigma_{max}[A]$	The maximum singular value of the matrix A
$\sigma_{min}[A]$	The minimum singular value of the matrix A
$\mathbb{L}^p$	signal space with elements of finite p-norm
$\mathbb{L}$	extended signal space
P_T	truncation operator
$\|\|x\|\|_p$	p-norm of signal $x(\cdot)$ as a member of L
$\|\|x\|\|_{p,\tau}$	truncated p-norm of signal $x(\cdot)$, $= \|\|P_\tau x\|\|_p$
$\|\|(x,y)\|\|$	see section 2.2
Φ	plant dynamics operator $= [S^{-1} - F]^{-1}$
$\Phi(t,\tau)$	state transition matrix for a linear time-varying system
$A>B$ $(A \geq B)$	the matrix A-B is positive (semi)-definite
A^T, x^T	the transpose of the matrix A or vector x
P	the plant operator
K	the compensator operator
T	the loop operator

2. BACKGROUND

We assume that our plant model is of the form

$$\dot{x}(t) = f(x(t)) + Bu(t) \; ; \; x(0) = 0 \tag{2.1a}$$

$$y(t) = Cx(t) \tag{2.1b}$$

where $x(t) \in R^n$ is the state, $u(t) \in R^m$ is the input, and $y(t) \in R^m$ is the output. B is an nxm matrix and C is an mxn matrix. We assume that the nonlinearity $f: R^n \rightarrow R^n$ is at least twice continuously differentiable, with f(0)=0, and that there exists M_f such that

$$|\nabla f(x)| \leq M_f \quad \text{for all } x \in R^n \tag{2.2a}$$

$$\left| \frac{\partial^2 f_i(x)}{\partial x_j \partial x_k} \right| \leq M_f \quad \text{for all } x \in R^n, \; 0 \leq i, j, k \leq n . \tag{2.2b}$$

In (2.1) the initial condition for the state is zero. In general this is how we will deal with differential equations from an input-output viewpoint. If the system is controllable, then clearly we can access all possible behavior of (2.1) by first traveling to a desired state, then starting our observation. When we use Lyapunov techniques, we will use a nonzero initial condition for the plant model.

The model (2.1) is more general than it might appear. Through changes of state variables and/or the addition of integrators, more general models can be transformed into the form (2.1). References [G1, HSM, KIR] have more information on this topic.

We now consider the I/O viewpoint for systems, in which a system is thought of as rule for mapping inputs into outputs. Here inputs and outputs are entire signals, i.e. trajectories, not just elements of R^n. We call a set of signals a signal space, and a rule for mapping one signal space into another an operator. Since we want to be able to make quantitative statements, we need a way of assigning sizes to these signals (elements of a signal space). One way to do this is by the use of norms.

Definition For $1 \leq p < \infty$, we define the p-norm of a signal $x: R_+ \to R^n$

$$||x||_p = [\int_0^\infty |x(t)|^p \, dt]^{1/2} \tag{2.3}$$

For $p=\infty$ we use

$$||x||_\infty = \sup_t |x(t)| \, . \tag{2.4}$$

These definitions of course are not finite for all functions $x: R_+ \to R^n$. We will restrict the signals on which we apply these norms as follows.

Definition $\mathbb{L}^n{}_p$ is the set of all signals $x: R_+ \to R^n$ for which $||x(t)||_p$ is finite, i.e.

$$\mathbb{L}^n{}_p = \{ x: R_+ \to R^n \mid ||x||_p < +\infty \} \tag{2.5}$$

In functional analysis, values of p are usually considered for the full range $[1,\infty]$. In this paper we will be concerned primarily with the cases for $p=2$ and $p=\infty$. Since we restricted the set $\mathbb{L}^n{}_p$, it is not quite large enough to deal with all of our system theory questions because it does not include any signals that "blow up" , or grow without bound. Without these types of signals, we cannot discuss unstable systems, and thus stability itself remains inaccessible. To be able to handle these growing signals, we must extend the set $\mathbb{L}^n{}_p$ by the following mechanism. For more details see [Z, S1, W1].

Definition The truncation operator P_τ is defined by its operation on an arbitrary signal $x: R_+ \to R^n$ as

$$(P_\tau x)(t): \begin{cases} x(t) & \text{if } t \leq \tau \\ 0 & \text{if } t > \tau \end{cases} \tag{2.6}$$

Definition The extended space $\mathbb{L}^n{}_{p,e}$ is the set of signals whose truncations lie in $\mathbb{L}^n{}_p$,
i.e

$$\mathbb{L}^n{}_{p,e} := \{ x: R_+ \to R^n \mid P_\tau x \in \mathbb{L}^n{}_p \ \forall \tau > 0 \} \tag{2.7}$$

We will frequently drop the superscript n, as the dimension of the underlying vector space is usually quite aparent. In addition, we will want exclude some signals with very bizarre nonphysical behavior. For example, consider

$$x(t) = \begin{cases} t^{-1/4} & t < 1 \\ t^{-2} & t \geq 1 \end{cases} \tag{2.8}$$

which goes to infinity at t=0 and in addition belongs to $\mathbb{L}_2$. We eliminate this type of non-physical signal by only considering the set $\mathbb{L}_{\infty,e}$ for the rest of this paper. For simplicity, we define the set $\mathbb{L} := \mathbb{L}_{\infty,e}$. We will not be concerning ourselves with the behavior of signals on sets of zero measure, as this does not affect smooth physical systems.

Remark: The above mathematics is just one possible way to utilize the concepts of extended spaces and so on. In fact, extensions to discrete time systems are quite easy [Z, S1]. We restrict ourselves here in order to give a more concrete flavor, reduce technical restrictions, and to tie results to the state-space domain.

The operator description of a nonlinear system is simply a mapping $P: \mathbb{L} \rightarrow \mathbb{L}$. For example, we write

$$y = Pu \; ; \quad u,y \in \mathbb{L} \tag{2.9}$$

to mean that the input u produces the output y. Remember that u and y are not points in R^n but are entire trajectories in R^n, i.e. elements of $\mathbb{L}$. The value of the response of the system P to the input u at time t is given by

$$y(t) = (Pu)(t) \, . \tag{2.10}$$

We will assume that P0=0 for all operators we will be considering. This does not cause any loss in generality, as the zero input response can be dealt with separately. We define the addition and composition of operators in the expected way:

$$(A+B)u := Au + Bu \tag{2.11}$$

$$ABu := A(Bu) \tag{2.12}$$

We are now able to extend the notion of size to signals in $\mathbb{L}$ and to operators:

Definition: The truncated $\mathbb{L}_p$ -norms of $x \in \mathbb{L}$ are

$$||x||_{p,\tau} := ||P_\tau x||_p = \left[\int_0^\tau |x(t)|^p \, dt \right]^{1/p} ; \quad p<\infty \tag{2.13a}$$

$$||x||_{\infty,\tau} := ||p_\tau x||_\infty = \sup_{0 \le t \le \tau} |x(t)| \tag{2.13b}$$

Definition: The $\mathbb{L}_p$ -norm, or gain, of an operator (system) is

$$||P||_p := \sup \frac{||P||_{p,\tau}}{||u||_{p,\tau}} \tag{2.14}$$

where the supremum is taken over all $u \in \mathbb{L}$ and all $\tau > 0$. If the type (i.e. p) is not specified, then results hold for all p-norms, consistently throughout a discussion. In words, the gain is the largest possible amplification in signal size that can be achieved over all possible inputs. Similarly, we have

Definition: The $\mathbb{L}_p$ -incremental gain of an operator is

$$||P||_{p,\Delta} := \sup \frac{||Pu_1 - Pu_2||_{p,\tau}}{||u_1 - u_2||_{p,\tau}} \tag{2.15}$$

where the supremum is taken over all $u_1, u_2 \in \mathbb{L}$, $u_1 \neq u_2$, and all $\tau > 0$.

Definition: An operator (system) is P is $\mathbb{L}_p$-*stable* if it has finite gain, i.e. $||P||_p < +\infty$.

Definition: An operator P is L_p-*incrementally* stable if it has finite incremental gain, i.e.

$$||P||_{p,\Delta} < +\infty.$$

Note that a system P is stable if and only if there exists a constant k such that

$$||Pu||_\tau \le k \, ||u||_\tau \; ; \quad \forall u \in \mathbb{L}, \tau \in R_+ \tag{2.16}$$

and tnat the smallest such k is the gain $||P||$ of the system.

Remark: We define stability here because there is no standard definition. Other

and not requiring the output to have zero norm when the input is zero. Note that in the time-invariant linear case the types of stability above are all equivalent to the standard one.

As we will occasionally have need to discuss the size of the vector $z=(x,y)$, with $z \in R^{n+m}$, $x \in R^n$, $y \in R^m$, or the signal $z=(x,y)$ with $z \in \mathbb{L}^{n+m}$, $x \in \mathbb{L}^m$, we clarify the issue by defining:

$$|(x,y)| := [\, |x|^2 + |y|^2 \,]^{1/2} \tag{2.17}$$

$$\|(x,y)\|_{2,\tau} := [\, \|x\|^2_{2,\tau} + \|y\|^2_{2,\tau} \,]^{1/2} \tag{2.18a}$$

$$\|(x,y)\|_{\infty,\tau} := \|x\|_{\infty,\tau} + \|y\|_{\infty,\tau} \tag{2.18b}$$

Technically, this last definition is not consistent with the definition of a signal given previously, in the sense that if $z=(x,y)$, we have

$$\|z\|_{2,\tau} = \|(x,y)\|_{2,\tau} \tag{2.19}$$

but only

$$\|z\|_{\infty,\tau} = \sup_{t \le \tau} |z(t)| \le \|(x,y)\|_{\infty,\tau} \tag{2.20}$$

with equality not guaranteed in general. To fix this we would have to redefine the norm of a vector in R^n just for the $\mathbb{L}_\infty$ case. This is not worth it because the definition given above is sufficient for our purposes, since

$$\|z\|_{\infty,\tau} \le \|(x,y)\|_{\infty,\tau} \le 2\, \|z\|_{\infty,\tau} \tag{2.21}$$

and we are here generally just concerned with the existence of bounds, not their exact value.

We make one more shorthand notational definition:

Definition: The closed-hall B_h is defined as the set

$$B_h := \{x \in R^n \mid |x| \le h\}. \tag{2.22}$$

To simplify equations, we will now define a special nonlinear operator Φ by the mapping from w to x given by

$$\dot{x}(t) = f(x(t)) + w \;\; ; \;\; x(0) = 0 \tag{2.23}$$

and shown in the block diagram of figure 2-1. If we let F be the nondynamical operator defined by

$$(Fx)(t) := f(x(t)) \tag{2.24}$$

and S be the integral operator, we can write

$$\Phi := [S^{-1} - F]^{-1} \tag{2.25}$$

We can now see the usefulness of Φ; our plant (2.1) can now be written in compact form

$$y = Pu \;\; ; \;\; P = C\Phi B \tag{2.26}$$

This operator representation of our plant will be very useful throughout the rest of the thesis. Note that for (2.26) to hold, neither B nor C need be linear.

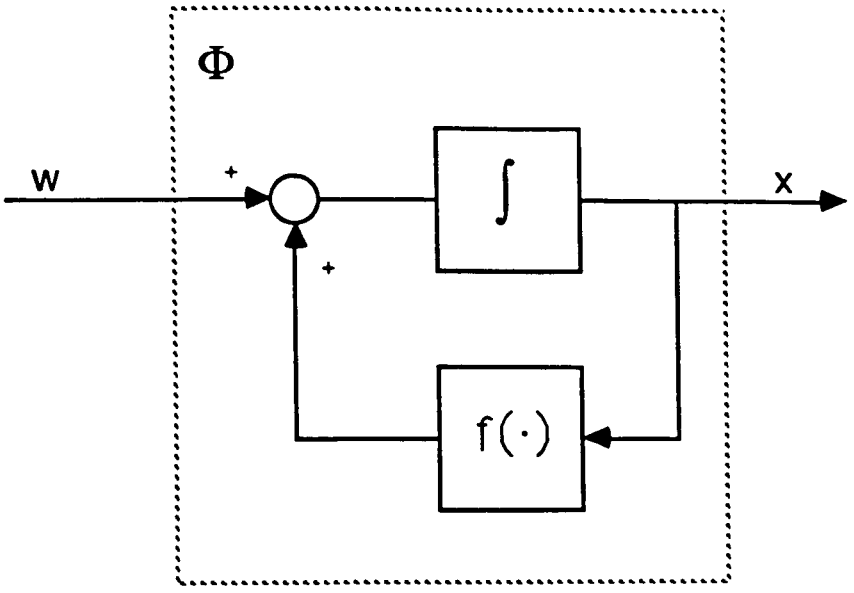

Figure 2-1: The Φ Operator

We now make some definitions based on [BJ] for observability and controllability.

Definition: We say that $[A(\cdot), C(\cdot)]$ is *uniformly observable* if, for the linear-time varying (LTV) system

$$\dot{\xi}(t) = A(t)\xi(t) \; ; \quad \xi(0) = \xi_0 \tag{2.27a}$$

$$y(t) = C(t)\xi(t) \; , \tag{2.27b}$$

there exist constants α,β,σ such that the observability grammian

$$W(t_0,t_1) := \int_{t_0}^{t_1} \Phi^T(s,t_1)C^T(s)C(s)\Phi(s,t_1)ds \tag{2.28}$$

is bounded uniformly

$$\beta I > W(t_0, t_0+\sigma) > \alpha I > 0 \tag{2.29}$$

for all $t_0 \in R_+$. Here Φ is the state transition matrix for the linear system (2.27a).

Similarly, we say that $[A(\cdot), B(\cdot)]$ is *uniformly controllable* if for the linear time-varying system

$$\dot{\xi}(t) = A(t)\xi(t) + B(t)u(t)\,; \quad \xi(0) = \xi_0 \tag{2.30}$$

there exist constants α, β, and σ such that the controllability grammian

$$C(t_0, t_1) := \int_{t_0}^{t_1} \Phi(t_1, s)B(s)B^T(s)\Phi^T(t_1,s)ds \tag{2.31}$$

is bounded uniformly

$$\beta I > C(t_0, t_0+\sigma) > \alpha I > 0 \tag{2.32}$$

for all $t_0 \in R_+$.

Remark: If we make the further assumption that $A(t) \leq M$ for some constant M, then the upper bounds in (2.29) and (2.32) are satisfied automatically. Recall that for constant linear systems, the crucial part of observability and controllability are the lower bounds, i.e. the positive definiteness of the grammians.

Definition: A nonlinear system [f,C] of the form

$$\dot{x}(t) = f(x(t)) + Bu(t) + Bw(t) \tag{2.33a}$$
$$y(t) = Cx(t) + d(t) \tag{2.33b}$$

is L-*observable* (for Linearization observable), if uniformly for every possible trajectory $x(\cdot) \in \mathbb{L}$, the linearized system $[\nabla f(x(\cdot)), C]$ is uniformly observable. Similarly, the nonlinear system [f, B] is L-*controllable* (for Linearization controllable) if $[\nabla f(x(\cdot)), B]$ is uniformly controllable, uniform across all trajectories $x(\cdot)$. The uniformity across trajectories here means that the bounds α,β in the definitions of uniform observability and controllability are the same for all $x(\cdot) \in \mathbb{L}$.

We would now like to relax the condition of observability to detectability, but first we must define what is meant by a "good" estimator. The terminology is due to [SA1, S1].

Definition: We say that $\hat{x} = F(y,u)$ is a nondivergent estimate of the state x of

$$\dot{x}(t) = f(x(t)) + Bu(t) + Bw(t) \tag{2.34a}$$

$$y(t) = Cx(t) + d(t) \tag{2.34b}$$

if the mapping $(w,d) \to e = x - \hat{x}$ is stable uniformly in u. Here F is the dynamical operator representing the estimator with inputs y and u, and w and d are disturbances that are considered deterministic (but of course unknown to the estimator). To be more precise, we say that the estimator is nondivergent with respect to a specific norm if the mapping $(w,d) \to e$ is stable with respect to that norm.

One reason that this definition is useful is that a nondivergent estimator can be used in a closed-loop configuration to stabilize a system. Consult Figure 2-2.

Theorem 3.1: (Separation Theorem [S1]). If $g(\cdot)$ is a stabilizing state-feedback function, i.e. if

$$\dot{x}(t) = f(x(t)) - Bg(x(t)) + Bw(t) \tag{2.35}$$

is stable $w \to x$, and

$$\sup_x |\nabla g(x)| < \infty \tag{2.36}$$

and if $\hat{x}=F(y,u)$ is any nondivergent estimate of x, then

$$\dot{x}(t) = f(x(t)) - Bg(\hat{x}(t)) + Bw(t) \tag{2.37}$$

is stable $(w,d) \to x$. Here we mean stability with respect to the same norm used for the stability of (2.35) and for the nondivergence of the state estimate $\hat{x}$.

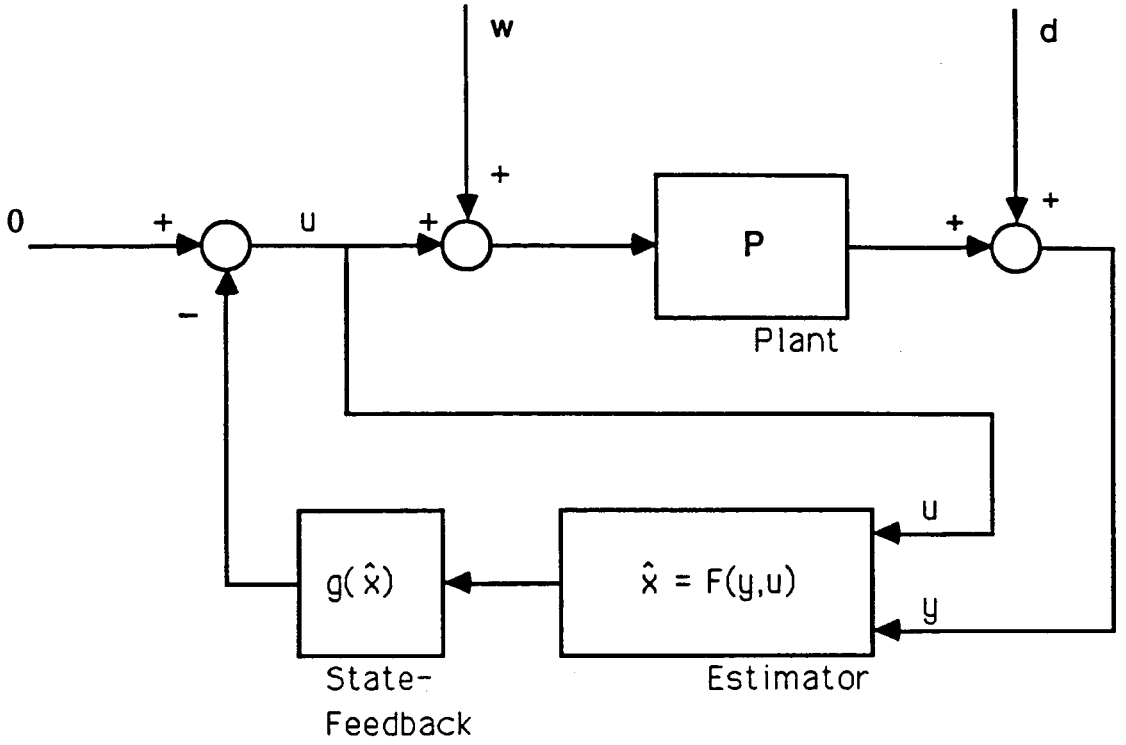

Figure 2-2: Separation of Estimation and Control

Proof: The closed-loop system is

$$\dot{x} = f(x) - Bg(\hat{x}) + Bw = f(x) - Bg(x) + B(g(x) - g(\hat{x}) + w). \tag{2.38}$$

Since g(x) stabilizes the system, there must exist a k_1 such that

$$||x||_\tau \le k_1 \; ||g(x)-g(\hat{x})+w||_\tau \le k_1 \; |\nabla g| \cdot \; ||x-\hat{x}||_\tau + k_1 ||w||_\tau \; ; \forall \tau \in R_+ \tag{2.39}$$

Since F is a nondivergent estimator, there must exist k_2 such that

$$||x-\hat{x}||_\tau \le k_2 ||(w,d)||_\tau \; ; \; \forall \tau \in R_+ \tag{2.40}$$

and so

$$||x||_\tau \le k_1 |\nabla g| \; k_2 ||(w,d)||_\tau + k_1 ||w||_\tau \; ; \; \forall \tau \in R_+ \, , \tag{2.41}$$

and so the system is closed-loop stable.

Remark 1: This theorem now allows us to design separately a stabilizing state-feedback function and a nondivergent estimator, with the knowledge that we can put them together and be guaranteed a closed-loop stable system. Note that the stability is not just from a single input, but from both "inputs" (w,d) simultaneously. This guarantees that there will be no unstable hidden modes in the closed-loop system, i.e. it rules out the analog of right-half plane pole-zero cancellations between the compensator and plant in linear systems. This is required (and sufficient) to allow a practical command following system to work.

Remark 2: In the linear case, the stochastic optimal control (Linear-Quadratic-Gaussian, or LQG) problem solution [KS] decouples into an optimal estimation problem and an optimal state-feedback control problem, sometimes refered to as the certaintly equivalence property. We do not mean to imply that the nonlinear stochastic optimal control problem [FR] has a similar property; only that we can stabilize nonlinear systems by this separation process.

Remark 3: In the literature, there exist many tests for stability of a closed-loop system [J, S1, W1, S2, and many others]. All of these are based on versions of the small-gain theorem and/or passivity theorems. The problem with any of these tests is that they require that either one or both of the compensator and plant must be open-loop stable. Since there are some linear systems which cannot be stabilized with a stable compensator, we would expect the same to be true for some nonlinear systems. Thus these tests would be useless in trying to determine the closed-loop stability of a proposed compensator for such a plant. The separation theorem above has no such restriction. It works equally well on open-loop unstable plants and compensators. Thus it could be viewed as a typed of stability test fundamentally different from pre-existing ones of the small-gain or passivity type.

Remark 4: If the condition (2.36) is not satisfied globally, we can still make a small-signal version of the conclusion. Equation (2.36) should hold (if g is smooth) in any bounded subset of R^n, and thus if we put the correct bounds on the size of the inputs w, r, and d, we can make sure that x, $\hat{x}$ remain in that bounded subset. This allows us to guarantee closed-loop stability for inputs with magnitudes below some

specific value.

Definition: A nonlinear system [f,C] of the form (2.33) is *M-detectable* (for Model-based detectable) if there exists a matrix functional $H(t,y(s), u(s), 0 \leq s < t)$, depending on the past of y and u, such that for any matrix B in our plant model (2.33), the state estimate given by

$$x(t) = f(\hat{x}) + Bu(t) + H(t,y(s),u(s), 0 \leq s < t)\ [y(t) - C\hat{x}(t)] \tag{2.42}$$

is nondivergent, uniformly for all matrices B, i.e. for all $B \in R^{n \times p}$ and for all p. In addition, the functional H must be bounded in time, and continuous, not necessarily uniformly, with respect to $y(\cdot)$. This means that given $\varepsilon, \tau > 0$, there exists a $\eta(\varepsilon,\tau)$ such that if

$$\|y_1 - y_2\|_{\infty,\tau} \leq \eta(\varepsilon,\tau) \tag{2.43}$$

then

$$|H(t,y_1(s),u(s), 0 \leq s \leq t)\ C - H(t,y_2(s),u(s), 0 \leq s \leq t)C| \leq \varepsilon\ ;\quad \forall\ 0 \leq t \leq \tau. \tag{2.44}$$

Remark: The matrix function $H(\cdot)$ in (2.42) can depend in any way on the past of u and y. Thus it includes the optimal infinite-dimensional observer [J, H, C, FM, K], as well as the extended Kalman filter, and a host of other approximate observers. Additionally, the observer (2.42) must be nondivergent independent of B. This is in keeping with the linear theory, where choice of B matrix does not influence observability. Thus M-detectability is one of the most fundamental definitions for detectability that one can make, since it is operational in nature: If the system is not M-detectable then we cannot find an estimator that will be nondivergent for all choices of the B matrix. In this sense it is analogous to detectability in linear system theory.

3. MAIN RESULT

The extended Kalman filter (EKF) was proposed as an engineering extension [J] to the popular Kalman filter for linear systems [KB]. The EKF as we will use it for the nonlinear system (2.1) is

$$\dot{x}(t) = f(\hat{x}(t)) + Bu(t) + H(t)[y(t)-C\hat{x}(t)] \;;\quad \hat{x}(0) = \hat{x}_0 \tag{3.1}$$

$$H(t) = \Sigma(t)C^T \tag{3.2}$$

$$\dot{\Sigma}(t) = \nabla f(\hat{x}(t))\,\Sigma(t) + \Sigma(t)\,\{\nabla f(\hat{x}(t))\}^T + \Xi - \Sigma(t)C^TC\Sigma(t) \tag{3.3}$$

$$\Sigma(t_0) = \Sigma_0 \;;\quad t_0 < 0. \tag{3.4}$$

The symmetric and at least positive semidefinite matrix Ξ is one of the design parameters of the EKF. We shall frequently refer to the square-root of Ξ, written $\Xi^{1/2}$, defined as the full-rank matrix Γ such that

$$\Gamma\Gamma^T = \Xi \tag{3.5}$$

The other parameters of the EKF are the initial time $t_0<0$ and the initial state for the covariance propogation equation (3.3). The results reported here will require a "start-up" period for the EKF if it is to be initialized with arbitrary Σ_0; that is, we must have $t_0<c$ for some $c<0$ and (3.1) starts at $t=0$. Obviously, we could start the EKF at $t_0=0$ if we selected an appropriate Σ_0. This is the procedure that would be used in practice. The standard EKF noise parameter Θ has been absorbed into Ξ here for simplicity, without loss of generality.

The rationale for the EKF was that if the noises were small enough, $x \approx \hat{x}$, and one would be justified in using the standard time-varying Kalman filter because (3.3) would then be a good approximation of the true error covariance. It turned out that the EKF was very good in practice and many applications were reported of the EKF and its variants, including [AWB, SS]. As we shall show, this was not just pure chance, but a consequence of certain guaranteed properties possessed by the EKF.

We now state our main result pertaining to the EKF:

Theorem 3.6: Let f obey the gradient restriction (2.2). Then if

$$\sigma_{min}\,[\,\Xi + \Sigma(t)C^TC\Sigma(t)\,] \geq \varepsilon > 0\ ;\ \ \forall t \in R_+, \tag{3.6}$$

and one of the following holds:

(a) [f,C] is M-detectable and [f, $\Xi^{1/2}$] is L-controllable.
(b) [f,C] is L-observable and [f, $\Xi^{1/2}$] is L-controllable.
(c) $\Sigma(t)$ is bounded in time, i.e. there exist $\alpha,\beta>0$ such that

$$\beta I \geq \Sigma(t) \geq \alpha I > 0\ ;\ \ \forall t \in R_+, \tag{3.7}$$

then the EKF (3.1-3.4) is a nondivergent estimator for the nonlinear system (2.1). Furthermore, (a) implies (c), and (b) implies (c).

Proof: See the Appendix. The Lemmas in the proof can be read for a sketch if the reader is not interested in the details.

Remark 1: This is a very useful theorem, as it says that if any nondivergent estimator exists, then the EKF will also work for control purposes. Note that this nondivergence is global, as it says nothing about the noises w,d being small. Note further that the condition (3.6) can be easily satisfied by picking Ξ positive definite, as can the condition for [f, $\Xi^{1/2}$] being L-controllable. When Ξ is positive semi-definite the conditions (3.6) and [f, $\Xi^{1/2}$] controllable are more difficult to check. It would seem that it should only require some form of stabilizability for [f, $\Xi^{1/2}$], where we would require the existence of a stabilizing state feedback function, but at this time this is not known.

Remark 2: One should be able to prove a stochastic version of this theorem, perhaps by using a norm $||x||$ that was related to the covariance of x(t). In addition, due to the connection of the EKF with the linear Kalman filter, one would also expect some result saying, in effect, that no other filter has a better local estimation error covariance.

Remark 3: If one were optimistic, one would be tempted to draw the conclusion that a dual result to this EKF nondivergence result could be made, that is, using some form of

the time-varying Linear-Quadratic regulator problem [KS], one could derive guaranteed stable state feedback functions for nonlinear systems without having to solve partial differential equations. Unfortunately, this cannot work, as the control matrix Riccati equation must be propagated backwards in time, and we do not know what our linearized trajectory will be at any time in the future. We are lucky in the filtering case, as the Kalman filter runs forward in time, and we do not need to know A(t) for any time in the future.

4. CONCLUSION

We have show that the EKF possesses a remarkable guaranteed property, namely that it is nondivergent under some very general assumptions. This property was shown to be useful in a nonlinear control context, as it allows us to build model-based feedback controllers for nonlinear systems, which are guaranteed to be closed-loop stable.

Future work in this area will include the extension of these results in three areas:

1. The condition requiring controllability through $\Xi^{1/2}$ should be able to be relaxed to something approximating requiring the existence of a stabilizing state-feedback controller for $[f, \Xi^{1/2}]$ (i.e. M-stabilizability).

2. Since the EKF is essentially a first order approximation, perhaps the iterated extended Kalman filter [G2] or other higher-order filters might prove nondivergent under functions $f(\cdot)$ with some polynomial behavior of degree higher than one.

3. It seems likely that the EKF should have some guaranteed stochastic properties, especially in the area of local optimality. Since no filter can be better for small noises (and thus small errors), we should be able to prove some optimal local properties. Then by the extension trick used in the proof of the main result here, we might be able to extend the optimality to a more global property.

APPENDIX A: Proof of Main Result

We will first require the following result connecting Lyapunov stability and small-signal L_p-stability, modified slightly from [VV, BS].

Lemma A.1: Let

$$\dot{x}(t) = f(x(t), t, 0) \;\; ; \quad x(0) = x_0 \tag{A.1}$$

be Lyapunov stable in the special sense that there exists a differentiable function $v(x,t)$ and positive constants $\alpha_1, \alpha_2, \alpha_3, \alpha_4$ such that for all $x \in B_h$, $t \geq 0$,

$$\alpha_1 |x|^2 \leq v(x,t) \leq \alpha_2 |x|^2 \tag{A.2}$$

$$\dot{v}(x,t) = \frac{dv(x,t)}{dt} \leq -\alpha_3 |x|^2 \tag{A.3}$$

$$\frac{\partial v(x,t)}{\partial x} \leq \alpha_4 |x| \, . \tag{A.4}$$

The derivative in (A.3) is a total derivative, along trajectories of (A.1).

Further suppose that there exists constants k_f, ϵ, δ such that

$$|f(x_1,t,u_1) - f(x_2,t,u_2)| \leq M_f |x_1 - x_2| + M_u |u_1, u_2| \;\; ; \quad x_1, x_2 \in B_\epsilon, \; u_1, u_2 \in B_\delta, \; t \geq 0. \tag{A.5}$$

Then the system $u \to x$ described by

$$\dot{x}(t) = f(x(t), t, u(t)) \; ; \quad x(0) = 0 \tag{A.6}$$

is small-signal L_p-stable for all $p \in [1, \infty]$, that is, there exist constants γ_p and c_∞ such that

$$\|x\|_{p,\tau} \leq \gamma_p \|u\|_{p,\tau} \;\; \forall p \in [1, \infty], \; \tau \geq 0 \tag{A.7}$$

if

$$\|u\|_\infty \leq c_\infty \, . \tag{A.8}$$

Furthermore, if (A.2-A.4) hold for all $x \in R^n$ and (A.5) holds for all M_f, M_u, then we can take $c_\infty = +\infty$.

Proof: See [BJ, KS].

(c) implies EKF nondivergent For linearized EKF system

$$\dot{\xi}(t) = \nabla f(x(t))\, \xi(t) \;+\; H(t)\,[-C\,\xi(t)\,] + p(t), \tag{A.9}$$

let

$$v(\xi,t) = \frac{1}{2}\, \xi^T \Sigma^{-1}(t) \xi \tag{A.10}$$

Then (A.10) and (3.7) imply

$$\frac{1}{2\beta}\, |\xi|^2 \le v(\xi,\tau) \le \frac{1}{2\alpha}\, |\xi|^2 \tag{A.11}$$

and along trajectories of (A.9) with p(t)=0:

$$\begin{aligned}
\dot{v}(\xi(t),t) \;&=\; -\;\frac{1}{2}\, \xi^T \Sigma^{-1}(t) \dot{\Sigma}(t) \Sigma^{-1}(t) \xi + \xi^T \Sigma^{-1}(t) \dot{\xi} \\
&= -\frac{1}{2}\, \xi^T \Sigma^{-1}(t) \dot{\Sigma}(t \Sigma^{-1}(t) \xi + \xi^T \Sigma^{-1}(t)\, \{\, \nabla f(t)) \xi - H(t) C \xi \,\} \\
&= -\frac{1}{2}\, \xi^T \Sigma^{-1}(t) \left\{ \dot{\Sigma}(t) - \nabla f(x(t))\, \Sigma(t) - \Sigma(t) \nabla f^T(x(t)) + 2\Sigma(t) C^T C \Sigma(t) \right\} \Sigma^{-1}(t)\, \xi \\
&= \;-\; \frac{1}{2}\, \xi^T\, \Sigma^{-1}(t)\, \{ \Xi + \Sigma(t) C^T C \Sigma(t) \}\, \Sigma^{-1}(t)\, \xi \\
&\le \;-\; \frac{1}{2}\, \varepsilon\, \frac{1}{\beta^2}\, |\xi|^2 .
\end{aligned} \tag{A.12}$$

Also, we have

$$\frac{\partial v(\xi,t)}{\partial x} \;\le\; \sigma_{max}\, [\Sigma^{-1}(t)]\, |\xi| \;\le\; \frac{1}{\alpha}\, |\xi| \tag{A.13}$$

Since (A.11-A.13) hold for all $\xi \in R^n$, we can apply Lemma A.1to conclude (A.9) is uniformly L_2 and L_∞-stable (with ξ_0=0) for all trajectories x. Let the associated gain be k.

Now, we would like to apply a result from [W1] that says that a system is incrementally stable if its linearization is uniformly stable, but we have a slightly different form here, so we must prove our result directly, following [DV].

We have

$$\dot{e} := \dot{\hat{x}} - \dot{x} = f(x) - f(\hat{x}) - H(t)Ce + Bw - H(t)d$$

$$= \nabla f(\hat{x}(t))\, e + g(\hat{x},e) - H(t)Ce - H(t)d + Bw \tag{A.14}$$

where

$$g(\hat{x},e) = f(\hat{x}+e) - f(\hat{x}) - \nabla f(\hat{x}(t))e\,. \tag{A.15}$$

Letting Φ be the state transition matrix for (A.9),

$$e(t) = \int_0^t \Phi(t,\tau)\ [-H(\tau)d(\tau) + Bw(\tau) + g(\hat{x}(\tau),e(\tau))]\, d\tau$$

$$= \xi(t) + \int_0^t \Phi(t,\tau)g(\hat{x}(\tau), e(\tau))d\tau\,. \tag{A.16}$$

where we assign

$$p(t) := -H(t)d(t) + B\,w(t). \tag{A.17}$$

Since (A.9) is L_∞-stable, we have [DV] that there exists an N such that

$$\int_0^t |\Phi(t,\tau)|d\tau < N \quad \forall t\,. \tag{A.18}$$

The derivative condition on f (2.2) implies [DV] that given an $\varepsilon>0$ there exists a $\delta_m(\varepsilon)$ so that

$$|\delta| \le \delta_m(\varepsilon) \;\Rightarrow\; |g(x,\delta)| \le \varepsilon\,|\delta| \tag{A.19}$$

Select $\varepsilon < 1/N$. Then if

$$\beta\,|C|\;\|d\|_\tau + |\beta|\;\|w\|_\tau \le \frac{1-\varepsilon N}{k}\;\delta_m(\varepsilon) \tag{A.20}$$

we have from (A.16)

$$|e(t)| \le |\xi(t)| + \varepsilon\, N\, |e(t)| \tag{A.21}$$

and

$$|e(t)| \le \frac{1}{1-\varepsilon N}\;|\xi(t)| \tag{A.22}$$

and

$$\begin{aligned} \|e\|_\tau &\le \frac{k}{1-N}\;\|-Hd + Bw\|_\tau \\ &\le \frac{k}{1-\varepsilon N}\;[\,\beta\,|C|\;\|d\|_\tau + |B|\;\|w\|_\tau] \\ &\le \delta_m(\varepsilon) \end{aligned} \tag{A.23}$$

(A.23) says that if d,w are small enough (A.20), we have L_p-stability from noises (d,w) to the estimation error e (A.23). In other words, we have proven that the EKF is small-noise nondivergent. We now extend this result to any size noises by the following trick.

Let $d,w \in \mathbb{L}$ and $\tau \in R_+$ be arbitrary. Let

$$r := \beta\,|C|\;\|d\|_{\infty,\tau} + |B|\;\|w\|_{\infty,\tau} \tag{A.24}$$

which is finite. Now pick an integer n large enough so that

$$r < n\,\frac{1-\varepsilon N}{k}\;\delta_m(\varepsilon)\,. \tag{A.25}$$

Let the EKF be given by the function

$$\hat{x} = F(y,u). \tag{A.26}$$

Clearly,

$$x = F(y-d,\ u+w) \tag{A.27}$$

because this is the zero-noise case.

Then

$$\begin{aligned}
\|e\|_{\infty,\tau} &= \|x-\hat{x}\|_{\infty,\tau} = \|F(y-d,\ u+w) - F(y,u)\|_{\infty,\tau} \\
&= \|F(y-\tfrac{n}{n}d,\ u+\tfrac{n}{n}w) - F(y-\tfrac{n-1}{n}d,\ u+\tfrac{n-1}{n}w) + F(y-\tfrac{n-1}{n}d,\ u+\tfrac{n-1}{n}w) \\
&\qquad \ldots - F(y-\tfrac{1}{n}d,\ u+\tfrac{1}{n}w) + F(y-\tfrac{1}{n}d,\ u+\tfrac{1}{n}w) \\
&\qquad - F(y,w)\ \|_{\infty,\tau} \\
&\le \|F(y-\tfrac{n}{n}d,\ u+\tfrac{n}{n}w) - F(y-\tfrac{n-1}{n}d,\ u+\tfrac{n-1}{n}w)\|_{\infty,\tau} \\
&\qquad + \ldots + \|F(y-\tfrac{1}{n}d,\ u+\tfrac{1}{n}w) - F(y,w)\|_{\infty,\tau} \\
&\le n \cdot \frac{1}{n} \cdot \frac{k}{1-\varepsilon N}\ [\ \beta|C|\ \|d\|_{\infty,\tau} + |B|\ \|w\|_{\infty,\tau}]
\end{aligned} \tag{A.28}$$

by (A.23), which we can apply because

$$\|\ \frac{1}{n}[\ \beta\ |C|\ \|d\|_{\infty,\tau} + |B|\ \|w\|_{\infty,\tau}\| \le \frac{1-\epsilon N}{k}\ \delta_m(\varepsilon)\ . \tag{A.29}$$

(A.28) shows that the EKF is nondivergent. Q.E.D.

(b) implies (c) We use the following result of Bucy & Joseph [BJ, Chapter V] for linear time varying systems.

Lemma A.2: For the time-varying linear system $[A(\cdot), B(\cdot), C(\cdot)]$ and the associated Kalman filter

$$\dot{\Sigma}(t) = A(t)\Sigma(t) + \Sigma(t)A^T(t) + \Xi - \Sigma(t)C(t)^TC(t)\Sigma(t), \tag{A.30}$$

(a) if $[A(\cdot), C(\cdot)]$ is uniformly observable, then for all $t > t_0+\sigma$, where σ is the interval of observability, and for all Σ_0

$$\Sigma(t) \leq [\, W^{-1}(t, t-\sigma) + C(t, t-\sigma)\,]. \tag{A.31}$$

(b) if $[A(\cdot), \Xi^{1/2}$ is uniformly controllable, then for all $t > t_0+\sigma$, where σ is the interval of observability, and for all Σ_0,

$$[\, C^{-1}(t, t-\sigma) + W(t, t-\sigma)\,]^{-1} \leq \Sigma(t) \tag{A.32}$$

Proof: See [BJ]. Q.E.D.

Now, since W and C are uniformly bounded by hypothesis across all time-varying systems (i.e. for all x) we obtain uniform bounds on $\Sigma(t)$, and thus by (c) of Theorem 3.1, the EKF is nondivergent for $t_0 < -\sigma$.

(a) implies (c) This is the hardest proof of the theorem; it is also the most significant result. We proceed by a series of lemmas. Readers not interested in the details can scan the lemmas for a sketch of the proof.

Lemma A.3: For all trajectories $z(\cdot) \in \mathbb{L}$ that can be achieved by

$$\dot{z}(t) = f(z(t)) + u(t) \;\; ; \quad z(0)=0, \tag{A.33}$$

where [f,C] is M-detectable, there exists a time-varying matrix $H^*(t)$ that makes

$$\dot{\xi}(t) = [\nabla f(z(t)) - H^*(t)\, C]\xi(t) + v(t) \tag{A.34}$$

L_∞-stable, uniformly for all $z(\cdot)$, i.e. there exists $k>0$ such that

$$||\xi||_{\infty,\tau} \leq k\, ||v||_{\infty,\tau} \tag{A.35}$$

for all v,ξ satisfying (A.34) and for all $\tau \in R_+$.

Proof: Since the system [f,C] is M-detectable, there must exist a nondivergent estimator with associated matrix-valued function $H(\cdot,\cdot,\cdot)$ and continuity function $\eta(\varepsilon,\tau)$. Since, by definition, this estimator must be nondivergent for all B matrices in the plant and the estimator with uniform gain k, we can select B=I. The estimator is given by

$$\dot{x}(t) = f(\hat{x}(t)) + u(t) + H(t, y(s),u(s), 0\leq s<) [y(t) - C\hat{x}(t)] \; ; \quad x(0)=0 \, . \tag{A.36}$$

For the proof of Lemma A.3, set d=0. Select an admissable pair u,z satisfying (A.33) and recall that the state is given by

$$\dot{x}(t) = f(x(t)) + u(t) + w(t) \; ; \; x(0)=0 \tag{A.37a}$$

$$y(t) = Cx(t). \tag{A.37b}$$

Let

$$g(\hat{x}(t),e(t)) \; := \; f(\hat{x}(t)+e(t)) - f(\hat{x}(t)) - \nabla f(\hat{x}(t))\, e(t) \tag{A.38}$$

as in (A.15), where $e=x-\hat{x}$ is the estimation error. The estimation error obeys

$$\dot{e}(t) = [\nabla f(\hat{x}(t)) - H(t,y(s),u(s), 0\leq s<t)]\, Ce(t) + g(\hat{x}(t),e(t)) + w(t) \tag{A.39}$$

Fix $\tau\in R_+$ and pick an arbitrary trajectory pair v,ξ for the linearized system

$$\dot{\xi}(t) = [\, \nabla f(\hat{x}(t)) - H(t,y(s),u(s), 0\leq s<t)\,]\, \xi(t) + v(t). \tag{A.40}$$

We now compute the gain for the linearized system (A.40). Pick

$$\varepsilon < \frac{1}{k} \tag{A.41}$$

and let

$$\gamma = \frac{\delta_m(\varepsilon)}{\|\xi\|_{\infty,\tau}} \tag{A.42}$$

where $\delta_m(\varepsilon)$ is the continuity function for $g(\cdot,\cdot)$ from (A.19). We now select w so that

$$e(t) = \gamma\,\xi(t). \tag{A.43}$$

The w we will need is thus determined by comparing (A.39) and (A.40) and setting

$$\gamma\, v(t) = g(\hat{x}(t), e(t)) + w(t). \tag{A.44}$$

Since

$$\|e\|_{\infty,\tau} \le \|\gamma\,\xi\|_{\infty,\tau} \le \delta_m(\varepsilon) \tag{A.45}$$

we have

$$\|\xi\|_{\infty,\tau} = \|\frac{1}{\gamma} e\|_{\infty,\tau} \le \frac{k}{\gamma}\|w\|_{\infty,\tau} \le \frac{k}{\gamma}[\|\gamma\, v - g(\hat{x}, e)\|_{\infty,\tau}]$$

$$\le k\,\|v\|_{\infty,\tau} + \frac{k}{\gamma}\,\varepsilon\,\|e\|_{\infty,\tau}$$

$$\le k\,\|v\|_{\infty,\tau} + k\varepsilon\,\|\xi\|_{\infty,\tau}\,. \tag{A.46}$$

Therefore

$$\|\xi\|_{\infty,\tau} \le \frac{k}{1-\varepsilon k}\,\|v\|_{\infty,\tau} \tag{A.47}$$

We now make use of the continuity of solutions of differential equatiosn with respect to parameter variations [CL, p.29] to obtain the desired final result. Let

$$H^*(t) := H(t, Cz(s), u(s), 0 \le s < t). \tag{A.48}$$

As we let $\varepsilon \to 0$, we have pointwise in time, $w \to 0$, and thus

$$x \to z \tag{A.49}$$
$$y = Cx \to Cz \tag{A.50}$$
$$H(t,y(s),u(s),\ 0 \le s < t) \to H^*(t) \tag{A.51}$$
$$\hat{x} \to x \tag{A.52}$$
$$\nabla f(\hat{x}(t)) \to \nabla f(z(t)) \tag{A.53}$$

with solutions of (A.40) satisfying (A.47) for all $\varepsilon > 0$. Therefore, solutions of the limit equation (A.34) must obey (A.35) for v and for all $\tau \varepsilon R_+$. Since the $z(\cdot)$ we originally picked was arbitrary, we are done. Q.E.D.

Lemma A.4: The time-varying system (A.34) is uniformly controllable, with arbitrary interval of controllability, σ, uniform across all trajectories z.

Proof: Let

$$A_F(t) = \nabla f(x(t)) - H^*(t)C \tag{A.54}$$

$$|A_F(t)| \le N \tag{A.55}$$

where N exists by the bounds on ∇f and H^*. Select a $x_1 \in R^n$, with $|x_1|=1$ and let $x:R_+ \to R^n$ be the trajectory from 0 to x_1 from $t = t_0$ to $t_0+\sigma$:

$$x(t) = x_1\ (t - t_0) / \sigma . \tag{A.56}$$

Then v(t) must be

$$\dot{x}(t) = x_1/\sigma = A_F(t)x(t) + v(t) \tag{A.57}$$

$$v(t) = [\ I - A_F(t)t\ ]\ x_1/\sigma \tag{A.58}$$

$$|v(t)| \le (1+N)\ |x_1| = 1+N \tag{A.59}$$

Now, we also have that

$$x_1^T x_1 = x_1^T x(t_0+\sigma) = \int^{t_0+\sigma} x_1^T \Phi(t_0+\sigma,\tau)v(\tau)d\tau, \tag{A.60}$$

t_o

and by the Schwartz inequality

$$x_1^T x_1 \leq \left[\int_{t_o}^{t_o+\sigma} |x_1^T \Phi(t_o+\sigma,\tau)|^2 d\tau \right]^{1/2} \left[\int_{t_o}^{t_o+\sigma} v(\tau) d\tau \right]^{1/2} \tag{A.61}$$

or, using the controllability grammian, C, we have

$$1 \leq x_1^T C(t_o, t_o+\sigma) x_1 \cdot (1+N) \tag{A.62}$$

and thus

$$C(t_o, t_o+\sigma) \geq \frac{1}{1+N} \tag{A.63}$$

and since N is independent of t_o, σ, and z, we conclude that the system (A.34) is uniformly controllable. Q.E.D.

Lemma A.5: A uniformly controllable time-varying system

$$\dot{\xi}(t) = A(t)\xi(t) + B(t)\, u(t) \tag{A.64}$$

is L_∞-stable if and only if it is exponentially stable, i.e. there exist λ,M such that

$$|\xi(t)| \leq M|\xi_o| e^{-\lambda(t-t_o)} \; ; \; \xi(t_o)=\xi_o, \; v=0 \, . \tag{A.65}$$

and

$$|\Phi(t, t_o)| \leq M e^{-\lambda(t-t_o)} \tag{A.66}$$

where Φ is the state transition matrix for (A.64). Furthermore, if the output is considered to be $y=C\xi$, the system will be exponentially stable if the additional constraint of uniform observability is imposed.

Proof: See [SA2]. For related material, see[AM] for the linear case, and [W2] for a treatment of the general nonlinear case. Q.E.D.

Lemma A.6: If $A(t) - H^*(t)C$ is exponentially stable, the covariance propagation equation for the linear filter

$$\dot{\xi}(t) = A(t)\,\xi(t) + u(t) + H^*(t)\;[\,y(t) - C\xi(t)\,] \tag{A.67}$$

driven by white noise with intensity Ξ, with unit intensity observation noise, is bounded as follows.

$$S(t) = [A(t)-H(t)C]S(t) + S(t)[A(t)-H(t)C]^T + \Xi + H(t)H^T(t). \tag{A.68}$$

implies

$$|S(t)| \le [S_0 + |\Xi|\,\frac{1}{2\lambda}]\,M^2;\;\; t \ge t_0\,, \tag{A.69}$$

and

$$|S(t)| \le [\,1 + |\Xi|\,\frac{1}{2\lambda}\,]\,M^2\;;\, t \ge t_0 + \frac{\max(0,\,\ln|S_0|)}{2\lambda}\;. \tag{A.70}$$

where λ, M are the constants of the exponential stability.

Proof: From standard linear theory [KS]:

$$S(t) = \Phi(t,\,t_0)S_0\Phi^T(t,\,t_0) + \int_{t_0}^{t} \Phi(t,\tau)\Xi\Phi^T(t,\tau)d\tau, \tag{A.71}$$

and we have

$$|S(t)| \le S_0M^2.e^{-2\lambda(t-t_0)} + |\Xi|\,M^2 \int_{t_0}^{t} e^{-2\lambda(t-\tau)}\,d\tau$$

$$\le S_0M^2\;\; e^{-2\lambda(t-t_0)} + |\Xi|\,M^2\frac{1}{2\lambda}\,[1 - e^{-2\lambda(t-t_0)}\;]$$

$$\le S_0N^2\;\; e^{-2\lambda(t-t_0)} + |\Xi|\;M^2\frac{1}{2\lambda}\;. \tag{A.72}$$

From this we easily obtain the desired bounds. Q.E.D.

Lemma A.7: The Kalman filter for the time-varying system in the last lemma has a lower covariance than that given by (A.68).

Proof: This is trivial as the Kalman filter has the lowest covariance at any time $t \geq t_0$ of any filter [KS, G3]. For a intuitive explanation, we have from (A.68)

$$\dot{S}(t)=A(t)S(t)+S(t)A^T(t)+\Xi+[H^*(t)-S(t)C^T][H^*(t)-S(t)C^T]^T-S(t)C^TCS(t). \tag{A.73}$$

The Kalman filter equation is

$$\Sigma(t) = A(t)\Sigma(t) + \Sigma(t)A^T(t) + \Xi - \Sigma(t)C^TC\Sigma(t). \tag{A.74}$$

and by comparing them, it is easy to see that

$$\Sigma(t) \leq S(t); \quad \forall t>t_0, \ \Sigma(t_0) = S(t_0) . \tag{A.75}$$

Q.E.D.

Lemma A.8: $\Sigma(t)$ in the EKF is uniformly bounded from above for $t \geq t_0+\sigma$, where σ depends on the initial condition $\Sigma(t_0)=\Sigma_0$. This is independent of u, w, and d.

Proof: From the last lemma, $\Sigma(t)$ is bounded by $S(t)$, which is bounded from above. Since the bounds on $S(t)$ are uniform for all trajectories x, and all u,w, and d, we have the desired result.

Q.E.D.

Lemma A.9: $\Sigma(t)$ in the EKF is bounded from below for $t \geq t_0+\sigma$ if the system $[f,\Xi^{1/2}]$ is L-controllable.

Proof: From the lemma A.2, we have

$$[C^{-1}(t_0,t_0+\sigma) + W(t_0,t_0+\sigma)]^{-1} \leq \Sigma(t) ; \quad t \geq t_0+\sigma . \tag{A.76}$$

As mentioned previously, W has an upper bound because $A(t)=\nabla f(x(t))$ is bounded. We shall compute that bound. Let

$$\dot{\xi}(t) = A(t)\xi(t)\ ;\quad \xi(t_o)=\xi_o \tag{A.77}$$

or

$$\xi(t) = \xi_o + \int_{t_o}^{t} A(\tau)\xi(\tau)dt\ . \tag{A.85}$$

Using the Bellman-Gronwall Inequality [DV], we get

$$|\xi(t)| \le |\xi_o| \exp\left\{ \int_{t_o}^{t} A(\tau)d\tau \right\},\quad t \ge t_o$$

$$\le |\xi_o|\, e^{-N(t-t_o)}\ . \tag{A.79}$$

where

$$|A(t)| = |\nabla f(x(t))| \le N. \tag{A.80}$$

Therefore

$$|\Phi(t, t_o)| \le e^{-N(t-t_o)}\ . \tag{A.81}$$

and

$$W(t_o, t_o+\sigma) = \int_{t_o}^{t_o+\sigma} \Phi^T(\tau, t_o+\sigma)C^TC\Phi(\tau, t_o+\sigma)d\tau$$

$$\le |C|^2 \int_{y_o}^{t_o+\sigma} e^{-2N(t_o+\sigma-\tau)}\, d\tau$$

$$\le \frac{1}{2N}\left[1 - e^{-2M\sigma}\right]$$

$$\le \frac{1}{2N}. \tag{A.89}$$

Therefore

$$\sigma_{min}[C^{-1}+W]^{-1} = \frac{1}{\sigma_{max}[C^{-1}+W]} \ge \frac{1}{|C^{-1}|+|W|} \ge \frac{1}{|C^{-1}| + \frac{1}{2N}}$$

$$= \frac{1}{\frac{1}{\sigma_{min}[C]} + \frac{1}{2N}} \geq \frac{2N}{2qN + 1}. \tag{A.83}$$

where q is the constant of L-controllability or the uniform constant of controllability for the linearized systems. Thus $\Sigma(t)$ is bounded from below for $t \geq t_0 + \sigma$, by (A.81) and (A.82). Q.E.D.

Lemma A.10: We now finally conclude that the EKF is nondivergent.

Proof: $\Sigma(t)$ is bounded from above and below, and we can use part (c) of the theorem.

Q.E.D.

Q.E.D (Main Result).

REFERENCES

[AM] B.D.O. Anderson and J.B. Moore, "New Results in Linear System Stability," *SIAM J. of Control,* Vol. 7, No. 3, Aug. 1969, pp. 398-414.

[AWB] M. Athans, R.P. Wishner, A. Bertolini, "Suboptimal State Estimation for Continuous Time Nonlinear Systems from Discrete Noisy Measurements," *IEEE Trans. Auto. Control,* Vol. AC-13, Oct. 1968.

[BJ] R.S. Bucy and P.D. Joseph, *Filtering for Stochastic Processes with Applications to Guidance,* John Wiley & Sons, New York, 1968.

[BS] M. Bodson and S.S. Sastry, "Small Signal I/O Stability of Nonlinear Control Systems: Application to the Robustness of a MRAC Scheme," Memorandum No. UCB/ERL M84/70, Electronics Research Laboratory, Univ. Cal., Berkeley, CA., Sept. 1984.

[C] H. Cox, "Estimation of State Variables Via Dynamic Programming," *Proc. Joint Automatic Control Conf.,* Stanford, CA, June 1964, pp. 376-381.

[CL] E.A. Coddington and N. Levinson, *Theory of Ordinary Differential Equations,* McGraw-Hill Book Co., Inc., New York, 1955.

[DV] C.A. Desoer and M. Vidyasagar, *Feedback Systems: Input-Output Properties,* Academic Press, NY, 1975.

[FM] W.H. Fleming and S.K. Mitter, Optimal Control and Nonlinear Filtering for Nondegenerate Diffusion Processes," *Stochastics,* Vol. 8, 1982, pp. 63-77.

[FR] W.H. Fleming and R.W. Rishel, *Deterministic and Stochastic Optimal Control,* Springer-Verlag, New York, 1975.

[G1] D.B. Grunberg, "A Methodology for Designing Robust Multivariable Nonlinear Control Systems," Ph.D. Thesis, Laboratory for Information and Decision Systems, M.I.T., LIDS-TH-1609, September 1986.

[G2] A. Gelb, *Applied Optimal Estimation,* M.I.T. Press, Cambridge, MA. 1974.

[G3] H.P. Geering, "Optimal Control Theory for Non-Scalar-Valued Performance Criteria," Ph.D. Thesis, M.I.T., 1971.

[H] O.B.Hijab, *Minimum Energy Estimation*, Ph.D. Thesis, University of California, Berkeley, 1980.

[HSM] L.R. Hunt, R. Su, and G. Meyer, "Global Transformations of Nonlinear Systems," *IEEE Trans. Auto. Control*, Vol. AC-28, No. 1, Jan. 1983, pp. 24-31.

[J] A.H. Jazwinski, *Stochastic Processes and Filtering Theory*, Academic Press, New York, NY, 1970.

[K] H.J. Kushner, "Nonlinear Filtering: The Exact Dynamical Equation Satisfied by the Conditional Mode," *IEEE Trans. Auto. Control,* Vol. AC-12, No. 3, June 1967, pp. 262-267.

[KB] R.E. Kalman and R. Bucy, "New Results in Linear Filtering and Prediction," *Journal of Basic Engineering (ASME),* Vol. 83D, 1961, pp. 95-108.

[KIR] A.J. Krener, A. Isidori, and W. Respondek, "Partial and Robust Linearization by Feedback," *Proc. of 22nd Conf. on Decision and Control,* San Antonio, TX, Dec. 1983, pp. 126-130.

[KS] H. Kwakernaak and R. Sivan, *Linear Optimal Control Systems,* Wiley-Interscience, New York, 1972.

[S1] M.G. Safonov, *Stability and Robustness of Multivariable Feedback Systems,* M.I.T. Press, Cambridge, MA. 1980.

[S2] I.W. Sandberg, "Some Results on the Theory of Physical Systems Governed by Nonlinear Functional Equations," *Bell System Technical Journal,* Vol. 44, 1965, pp. 871-898.

[SA1] M.G. Safonov and M. Athans, "Robustness and Computational Aspects of Nonlinear Stochastic Estimators and Regulators," *IEEE Trans. Auto. Control,* Vol. AC-23, Aug. 1978, pp. 717-726.

[SA2] L.M. Silverman and B.D.O. Anderson, "Controllability Observability and Stability of Linear Systems," *SIAM J. of Control,* Vol. 6, No. 1, 1968, pp. 121-130.

[SS] T.L. Song and J.L. Speyer, "A Stochastic Analysis of a Modified Gain EKF with Applications to Estimation with Bearings Only Measurements," *IEEE Trans. Auto. Control,* Vol. AC-30, No. 10, Oct. 1985.

[VV] M. Vidyasagar and A. Vannelli, "New Relationship Between Input-Output and Lyapunov Stability," *IEEE Trans. Auto. Control,* Vol. AC-27, No. 2, Apr. 1982, pp. 481-483.

[W1] J.C. Willems, *The Analysis of Feedback Systems,* M.I.T. Press, Cambridge, MA. 1971.

[W2] J.C. Willems, "The Generation of Lyapunov Functions for Input-Output Stable Systems," *SIAM J. Control,* Vol. 9, No. 1, Feb. 1971, pp. 105-134.

[Z] G. Zames, "On the Input-Output Stability of Time-Varying Nonlinear feedback Systems, Part I: Conditions Using Concepts of Loop Gain, Conicity, and Positivity," *IEE Trans. Auto. Control,* Vol. AC-11, No. 2, Apr. 1966, pp. 228-238.