GEORGIA TECH 1885-1985

DESIGNING TOMORROW TODAY

THE GEORGE W. WOODRUFF SCHOOL OF
MECHANICAL ENGINEERING

ME 4182

MECHANICAL DESIGN ENGINEERING
NASA/UNIVERSITY ADVANCED SPACE DESIGN PROJECT

CARGO INTERFACE FOR SPACE APPLICATIONS

December 1986

(NASA-CR-182834) CARGO INTERFACE FOR SPACE APPLICATIONS (Georgia Inst. of Tech.) 98 p N90-71223

Unclas
00/37 0279964

Thomas E. Bell
Michael J. Brazill
Freddy Close
Lee Dowden
Jack Weinstein
Shawn M. Wood

Georgia Institute of Technology
Atlanta, Georgia 30332-0405

An Equal Education and Employment Opportunity Institution

A Unit of the University System of Georgia

TABLE OF CONTENTS

I. Abstract

II. Problem Statement
- A. Purpose
- B. Complexity of the Problem
  - 1. Ship configuration
  - 2. Container shape
- C. Philosophy of Standardization
- D. Existing Interfaces

III. Design Objectives
- A. Performance Criteria
- B. Constraints

IV. Design Specifications
- A. General Description
- B. Detailed Description
  - 1. Interface operation
  - 2. Dimensions

V. Material Selection
- A. Overview
- B. Camlock Material Selection
- C. Ring Material Selection
- D. Hook and Pins Materials Selection

VI. Economic Analysis
- A. Design and Development Costs
- B. Manufacturing Costs

VII. Safety Considerations
- A. Camlock Failures
- B. Ring Failures

VIII. Conclusions

IX. Recommendations

X. Appendices
- A. Calculations Supporting Design Specifications
  - 1. Ring
  - 2. Hook
  - 3. Camlock
- B. Computer Usage
  - 1. Monte Carlo routine
  - 2. On-line data base search
  - 3. Patent search
  - 4. ASM MetalSelector software
  - 5. Computer Aided Design systems
    - a. Apollo Geo-Draw
    - b. CADAM
  - 6. Volkswriter word processing software

C. Composites
D. Brainstorming
1. Ship designs
2. Interface designs
3. Cargo container shapes

XI. Acknowledgements

XII. Bibliography

XIII. Weekly Progress Reports

XIV. Alternative Design

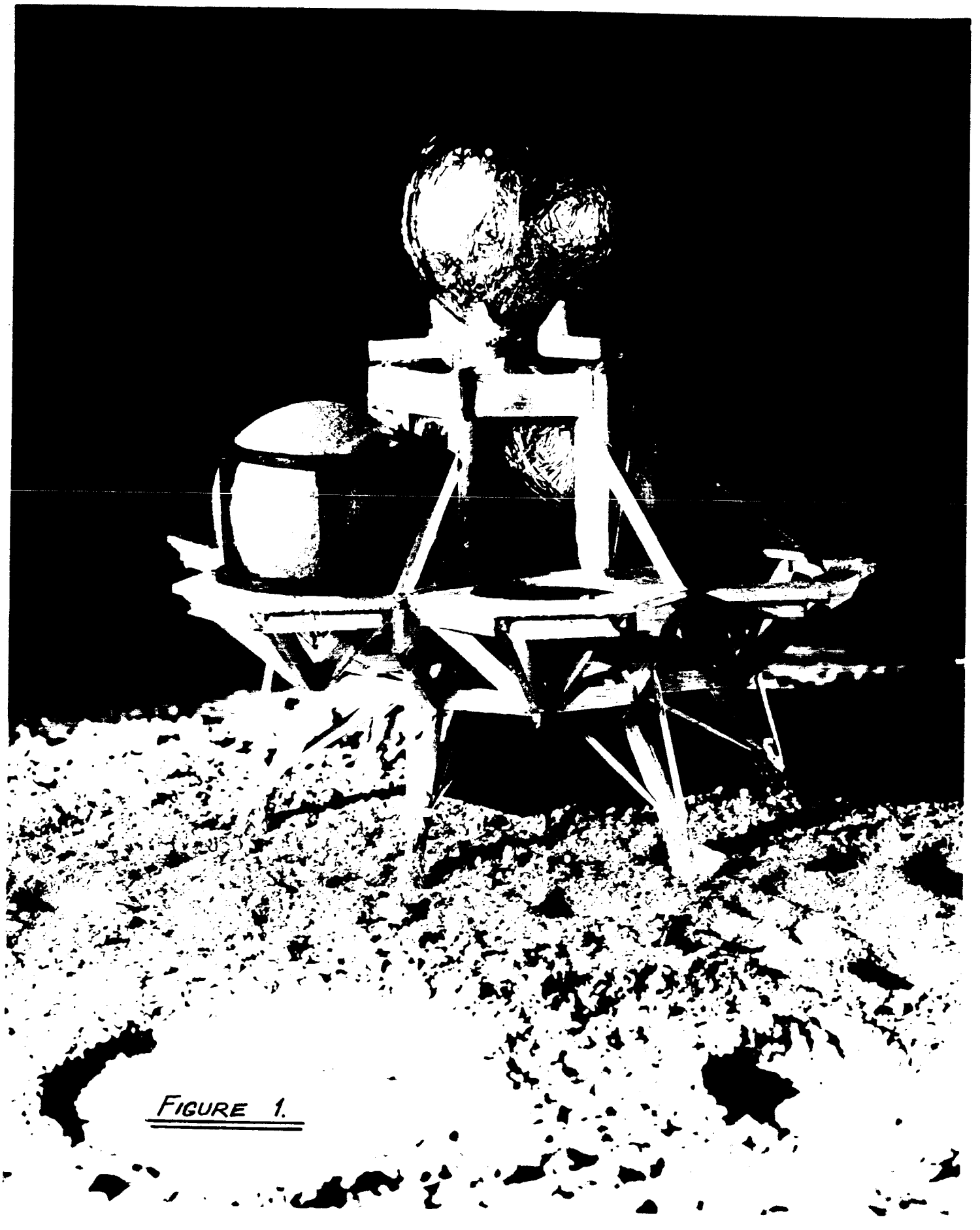

FIGURE 1.

ABSTRACT

As lunar activities are becoming a reality, plans must be made to live and work on the lunar surface. As a part of this plan, a way to handle cargo must be developed. In addition to developing a system to handle cargo, a standardization should be developed as well. The need for such a standardization can easily be seen by the use of standards in the air freight industries. In order to set up such a standard, our effort was directed towards developing an interface between cargo and a cargo ship. A ship configuration and container shape were proposed and an interface was developed accordingly.

As a solution to this problem, we have designed a self-aligning, remote locking interface to secure the cargo to the cargo ship. The interface is a pair of rings, one ring mounted on the cargo container and the other mounted on the ship. The rings incorporate: aligning pins with corresponding holes and DC motor driven camlock devices with corresponding lock/lift pins. The ship can hold up to six spherical or cylindrical shaped cargo containers which can be positioned or rotated to vary the ships overall center of gravity.

PROBLEM STATEMENT

Purpose. To develop and design a standard interface between cargo container, lunar cargo ship, and lunar lifting devices.

Complexity of the Problem. Since the interface is to be used between the cargo and a cargo ship, we had to know the ship configuration and the container shape before we could develop the interface. However, the ship and the container do not currently exist so our first step was to propose a ship configuration and a container shape.

Ship Configuration. Several factors had to be taken into consideration when developing the ship's configuration. The two most important were the ability to vary the center of gravity of the cargo container and limiting the weight of the ship.

The thrust of the ship's engines must be directed through the ship's center of gravity. To maximize the lifting force of the engines' thrust, the line of action of the thrust should optimally be normal to the lunar surface. In order to meet both of these criteria, the center of gravity should be on the ship's central axis.

However, once the ship is loaded with cargo, the center of gravity may no longer be on that central axis. So the ship must be designed in such a way that cargo can be shifted into different positions. By shifting the cargo around, the center of gravity can be brought back closer to the central axis.

The second major design factor for the ship is its weight. Take-offs and landings at either the earth's or the moon's surface requires energy. The energy is gotten by the burning of

fuel and the more weight being moved, the greater the amount of fuel needed. The most efficient fuel use is obtained by the greatest cargo weight to ship weight ratio. Therefore, the weight of the ship must be minimized while still allowing sufficient strength to support and carry the cargo.

Considering these two factors along with other less restrictive factors, a transport ship was developed. (See figure 1.) The ship can transport up to six cargo containers. The actual number of containers will affect the loading pattern. (See figure 2.) A framework design was used for the structure of the ship. Since aerodynamics is not a factor in space or the lunar surface, a solid sided ship was not necessary. The framework developed will support the following: up to six cargo containers, sufficient fuel for normal transport operations, engines and control systems, and landing and docking gear. In addition, the framework designed to support the cargo containers will allow for variable loading orientations of each of the containers. This flexibility was incorporated into the design to allow for varying the position of the container's center of gravity with respect to the ship.

Container Shape. Once the ship configuration and structure were developed, the cargo container shape had to be established so that it could be integrated with the ship. In addition, the container has to be able to withstand certain external stresses: thermal stress gradients along the container surface, stress concentrations due to lifting forces, and body stresses experienced in take-offs, landings, and dockings. Along with the external stresses, the container also has to

LOADING CONFIGURATIONS FOR VARIOUS NUMBERS OF CARGO CONTAINERS TO MAINTAIN A BALANCED LOAD

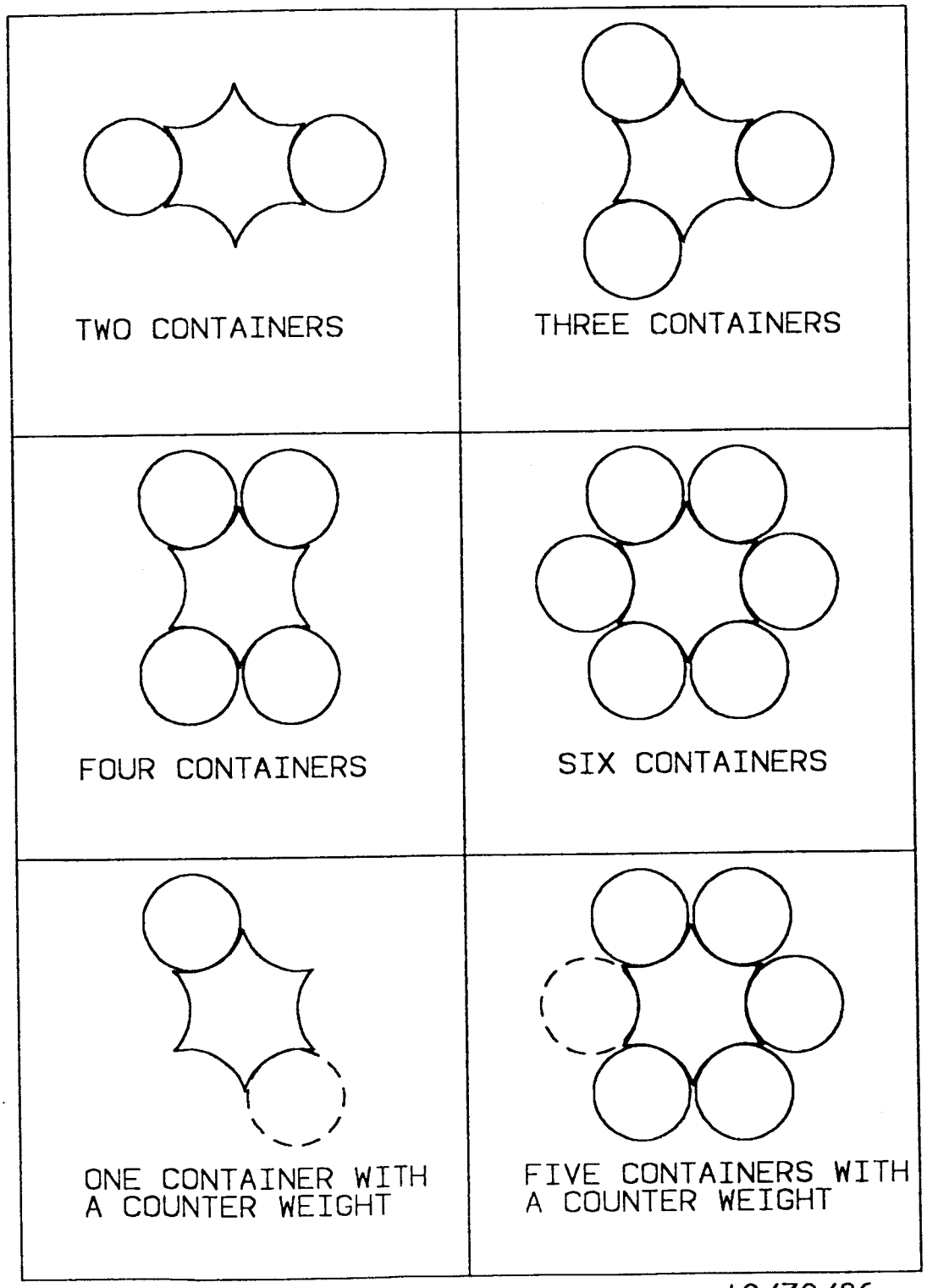

10/30/86

FIGURE 2

withstand internal stresses from the cargo loaded in it.

In order to satisfy these requirements a cylindrical shaped container was proposed. The container would actually be composed of a cylindrical body with hemispherical end caps. The length to diameter ratio was set at a magnitude of 2 giving the container an elongated shape. This would allow the container to fit the overall vertical scheme of the ship. In addition, the cylindrical shape can be rotated about its longitudal axis allowing for the balancing of the center of gravity of the ship. As a free standing body, the curved surfaces of the container enhance the distribution of the stresses caused by the thermal gradients as well as the internal and external forces.

The cylindrical shaped container is very flexible in that a variety of cargo can be loaded into it. Furthermore, the ability to rotate the cylinder with respect to the ship before locking it into place is a needed asset for balancing the load of the ship. Even with these advantages, the cylindrical container has one drawback. A cylinder is not the most efficient way to transport liquid oxygen.

A sphere has the greatest volume to surface area ratio. By limiting the surface area for a given volume, less surface area is available for the influx of heat. Since heat influxes cause boiling off of the liquid oxygen, a spherical shaped container will minimize the boil off problem; therefore, a sphere is the most efficient way to transport liquid oxygen.

In "Lunar Surface Return," a NASA document, several scenarios for the transportation of lunar liquid oxygen were described. In addition, the amount of liquid oxygen needed for

space station operations was estimated at one million pounds per year. The large amount of liquid oxygen production justifies the need for a spherical container. However, a cylindrical container is still required for transporting the variety of cargo needed on the lunar surface. Consequently, both containers were considered and incorporated into our design.

Philosophy of Standardization

Standards are encountered everyday within a persons daily activities. Traffic signs, a typewriter keyboard, a music cassette tape, and even clocks are common examples of standardization. In industry, bolt sizes, tire sizes and tractor-trailer fifth-wheels are examples of standards. As seen from these examples, standards are needed in many aspects of everyday life.

In recognizing the need for standardization, the transportation industry has developed several standards of its own. In the 1800's, as the nation grew, the need for regional railroad lines to connect and expand became apparent. In order for this to be possible, a standard gauge had to be established by the railroad industry.

Another good example of standardization is the land-sea transportation industry. By the 1950's several companies had independently established their own integrated cargo system. To accomplish this, a standardized container size was first established and then a system was designed around that particular size. Problems of standardization became obvious when each of these companies were operating a full container system

with different sized containers, different maximum weight containers, and different types of lifting and latching devices.

The lack of industry-wide standardization prevented the interchangeability of containers between companies and further complicated inland shipping by truck and rail. In 1965 the International Organization of Standardization (ISO) established certain size and strength standards for containers. Also, corner fittings and locking devices were specified. As with the railroads and the land-sea industry, standards are in place in the air freight industry as well. The air freight industry can be divided into military operations and civil operations. Both have their own standardized cargo and cargo handling systems. The military system relies heavily on and revolves around the 88" x 108" pallet. The restraint rails are set at 108" gauge and are not adjustable. The civil system relies more on intermodal containers and 88" x 108" or 96" x 108" civil pallets. The restraint rails on civil cargo-capable aircraft are adjustable and can handle different sized containers including the military pallet. This flexibility results from: (i) their responsibility in conjunction with the Civil Reserve Air Fleet, (ii) the need to transport containers of varying dimensions, and (iii) the need to transport containers between different transport aircraft within an individual airlines.

All areas of the transportation industry have seen the need for standardization. As we considered a cargo handling scheme for operations on the lunar surface, the need for stan-

dardization was a primary concern.

Existing Interfaces

The connection of two objects through the use of an interface is a relatively common concept and is usually taken for granted. Interfaces range from being very simple as with fasteners to very complicated as with the cargo locking system on the space shuttle. There are several interfaces in particular which perform some of the functions or display some of the characteristics which are desired in our design.

The land-sea industry established certain ISO standards for container size in the 1960's. Also a standard interface was set. This interface consists of ISO corner units placed on each of the eight corners of the 8'x 8'x 20' standard containers. These ISO corner units are a flexible type of interface and provide for easy locking, lifting, and stacking of the container. Easy locking is accomplished by placing four locking devices on the flatbed of a truck or railcar or in the cargo cells of ships. These locking devices are used throughout the land-sea transport industry. In order to lift the cargo a crane or forklift configuration aligns itself to the corner units, locks into them, and then lifts. Stacking of containers is also easily done with the use of stacking adapters placed in the corner fittings. The containers are designed to be stacked four high.

As with the land-sea transportation industry the air freight industry also interfaces cargo to a cargo carrier, namely an aircraft. In the air freight industry, cargo in the

form of pallets or intermodal containers is positioned and is then held in place by a cargo handling system. The containers are placed on rails as they enter the aircraft. Once in their final position, the containers are locked down from the floor of the aircraft. The container's size and shape as well as the cargo handling system are standardized throughout the air freight industry. The interface here is the mating together of the cargo handling system and the containers.

Another type of interface which is relevant to our design are the missile launchers on aircraft. These launchers remotely lock the missile into position and remotely release it when launched. This remote locking and releasing is accomplished through a fairly complicated mechanical setup. The ability to remote lock and release is desirable in an interface.

In researching existing interfaces a good starting point is to study certain interfaces which perform some of the functions or display some of the characteristics desired. The three interfaces mentioned here exhibit several qualities in which we would like to incorporate into our design.

DESIGN OBJECTIVES

Before we were able to design the interface we first had to decide on a ship configuration and a container shape. With this proposed, we recognized the need to have a standard interface. Next we researched existing interfaces, locking devices, and systems incorporating both of these. To be able to apply these concepts to our problem, performance criteria and constraints had to be established.

Performance Criteria

Due to the nature of the lunar environment, our cargo interface will have to perform differently than cargo interfaces used on earth. Visibility in space is very limited and hearing is nonexistent outside of communication transmissions. To compensate for these limitations, the interface should be self-aligning. Another problem encountered in the lunar environment is limited mobility. This is caused by the need to wear a spacesuit. Remotely operating the locking/releasing of the interface will compensate for this limitation. In addition to compensating for man's limitations in space, the interface must also be designed with man's safety in mind. Therefore, failure of the interface should not result in an unsafe situation.

Not only does the lunar environment affect man's performance, it also affects the performance of the interface. The temperature extremes (250 to -300 F) can reduce the interface's material strength resulting in fracture as well as caus-

ing the interface mechanism to jam due to thermal expansions or contractions. The accumulation of moon dust can also jam the mechanism. Furthermore, moon dust will increase the wear rate on mating surfaces. These environmental factors greatly influence the interface`s reliability. In order to maintain high reliability of the interface, a simple design is desired. This can be done by reducing the number of moving parts and mating surfaces.

Constraints

In addition to the performance criteria, certain constraints will also influence the design. To reduce costly fuel consumption, the weight of the interface along with the weight of the ship and the container must be minimized. However, the strength of the interface must be maintained. This strength is needed because the interface will experience several different stresses. These stresses are caused by the forces associated with take-offs, landings, and dockings; the cargo handling devices during lifting and moving operations; and gravitational forces exerted on the cargo when locked into the ship.

As mentioned before, thermal stresses will affect the operation of the interface. Furthermore, these stresses will also affect the alignment of the interface's mating surfaces. This must be taken into account when establishing tolerances. These tolerances should also be specified to help the visibility limitations associated with loading operations.

DESIGN SPECIFICATIONS

General description

The main thrust of the design was the development of an interface to connect cargo to a cargo ship on the lunar surface. The cargo to ship interface combines a ship component and a cargo component. The ship component consists of a flat horizontal ring supported from below. The ring contains six countersunk holes and three camlock devices. (See figure B-4). The cargo component consists of a flat horizontal ring with three vertical pins and six lock/lift pins. (See figure B-1). If the cargo is a cylinder, then six pairs of moment hooks are located near the top of the container. (See figure A-4).

The pins on the cargo component and the countersunk holes on the ship component are for alignment purposes. The pins slide into the holes until the flat ring of the cargo component meets the flat ring of the ship component. Once the pins are fully seated in the holes, they also resist any horizontal forces acting on the interface.

The camlock and the lock/lift pins are used to pull the cargo component into locked position on the ship component. The camlock rotates in the vertical plane to engage and lock down the lock/lift pin. Once the camlocks are in the fully locked position, they also resist any vertical force components acting on the interface. (See figure A5).

The moment hooks are used to resist any additional moment associated with the higher location of the center of gravity for the cylindrical container.

A lifting interface was conceptualized similar to the design of the cargo component ring of the interface. The lifting ring does not have the aligning pins that the cargo ring has; however, it does have the six lock/lift pins.

Detailed Description

Interface operation. Before the actual interface operation was specifies, several assumptions were made. Most of these assumptions involved the action of a theoretical lifting device. It was assumed the lifting device loads and unloads the cargo from the cargo ship in the vertical direction. The lifting device has the capabilities of preventing the cargo from spinning about its own vertical axis. It can also keep the cargo from swinging into the ship. The lifting device also has an end effector that connects to the cargo and has the capabilities of rotating the cargo 180 degrees about its vertical axis with an accuracy of 2 degrees in the horizontal plane. The lifting device also has to be capable of applying 4000 pounds of lifting force to the cargo.

The interface operation begins with the lifting device lowering the cargo vertically onto the ship component. The six holes in the ship component allow the cargo to be positioned in six different positions which are 60 degrees of rotation about from each other. Here we assume the operator of the lifting device would be able to either see the cargo

pin to ship hole relationship or have some kind of feedback indicating their relationship. The operator should also know the appropriate holes to set the cargo in so the cargo's center of gravity is closest to the center of the ship.

As the cargo approaches the ship component, the cargo is rotated until the cargo pins are approximately above the correct countersunk holes in the ship component. Then further lowering will cause the pins to engage the holes. The pins will slide into the holes as the operator continues lowering the cargo.

The pins in the holes will align the cargo as it is lowered. The cargo will be in proper position for locking once the flat ring of the cargo component comes to rest on the flat ring of the ship component.

When a cylindrical shaped cargo container is loaded on the cargo ship, the addition of the six pairs of moment hooks become apparent. As the cargo is lowered, the alignment pins start to engage the appropriate holes. At the same time, a pair of moment hooks engage a pair of bars mounted on the ship. With the cargo continuing to be lowered, the hooks slide over the bars. When the cargo is in its seated position, the bars are positioned in the hook slots. The hooks then resist any tipping moments.

Once the pins are completely lowered into the holes, the second function of the interface begins. Now that the cargo is properly seated, the lock/lift pins are directly above each camlock device. The camlock is initially in a stowage position below the surface of the ship component. A low

speed, high torque, reversible DC motor is used to drive each of the camlocks. The motors are remotely actuated causing the camlocks to rotate and engage the lock/lift pins. As each camlock continues to rotate, it draws the respective lock/lift pin into its slot which in turn draws the cargo closer to the ship. After rotating 180 degrees from its initial stowage position, the camlocks are in the fully locked position. Once fully locked, a signal is sent the ship's control system. If any of the camlocks do not fully lock, this signal will not be sent; consequently, the control system will prevent lift-off. Likewise, failure of any camlock to completely disengage during the unloading process will result in a signal being sent to alert the operator of the lifting device. Dimensions. Once the material of the various components was specified, calculations were done to determine maximum stresses. Once aware of these stresses, detailed dimensions of the interface were produced. These dimensions take into account tolerance and coefficient of expansion.

For the actual dimensions of the components, refer to the following drawings:

A-1 Pin and Ring Machining Details

A-2 Moment Hook Detail

A-3 Camlock Detail

B-1 Spherical Cargo Interface

B-2 Lock/Lift Pin Details

B-3 Alignment Pin Details

B-4 Ship Interface

B-5 Alignment Pin Receptacle Details

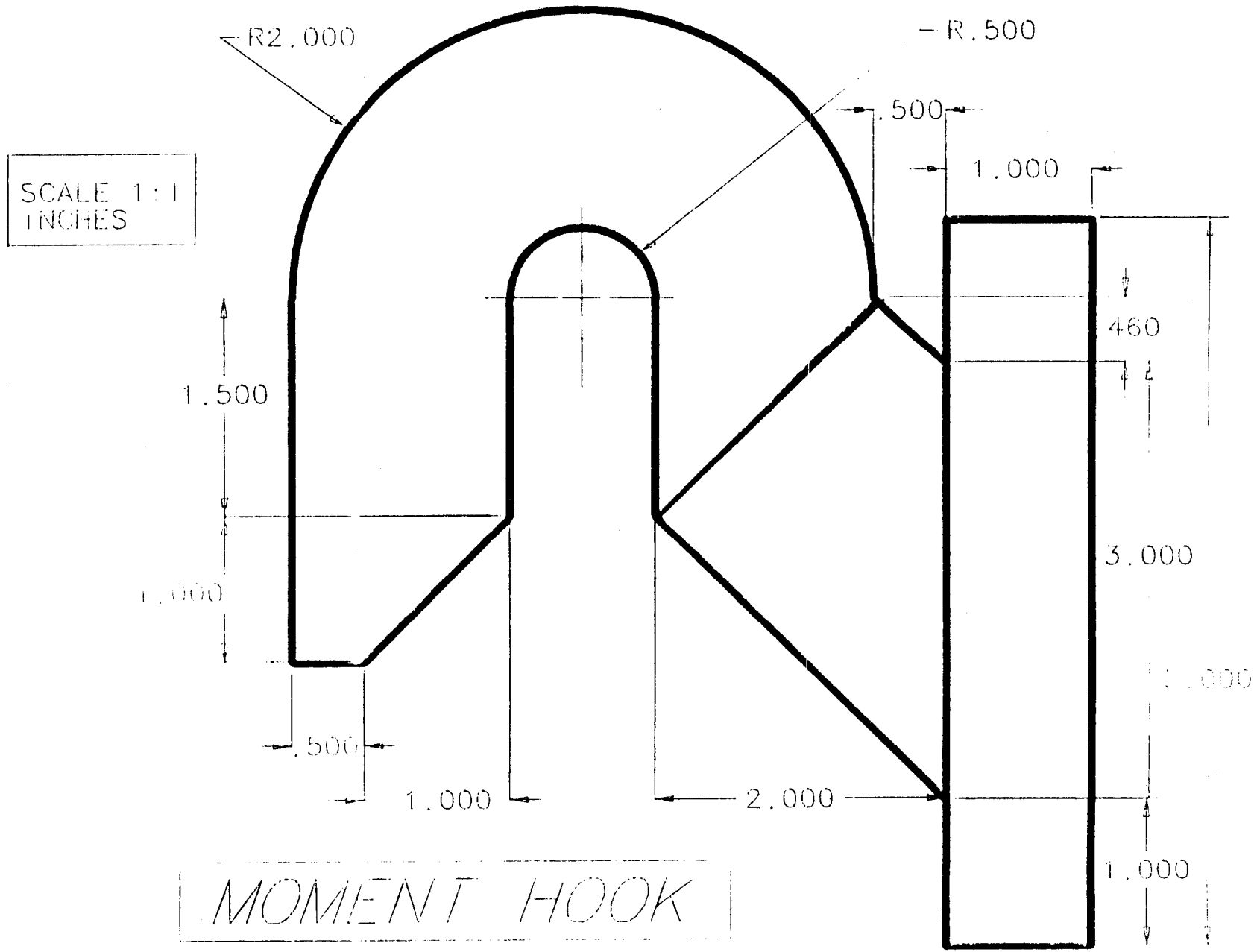
R2.000
R.500
SCALE 1:1
INCHES
.500
1.000
.460
1.500
3.000
1.000
.500
1.000
2.000
1.000
MOMENT HOOK

CAM PROFILE

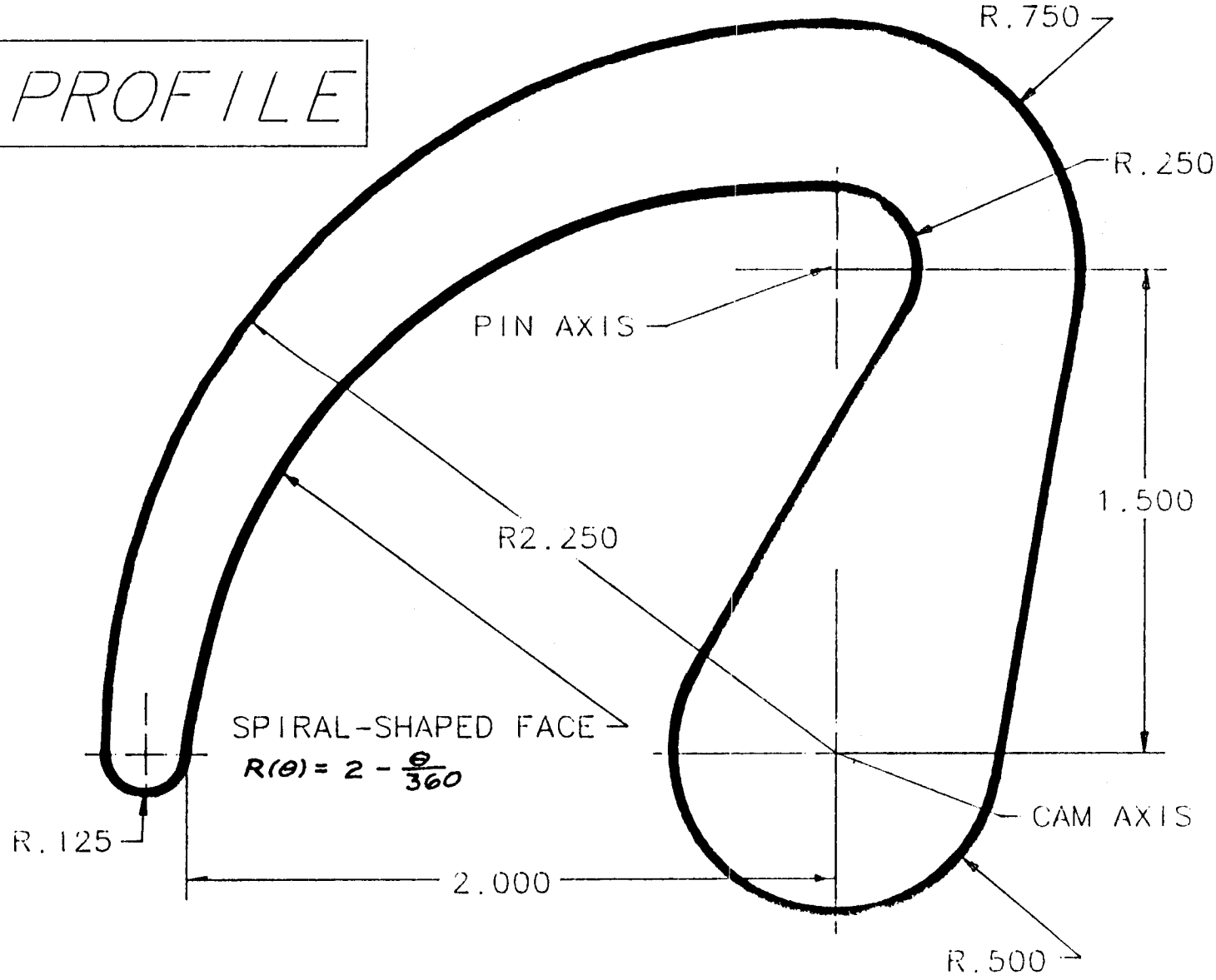

A-3

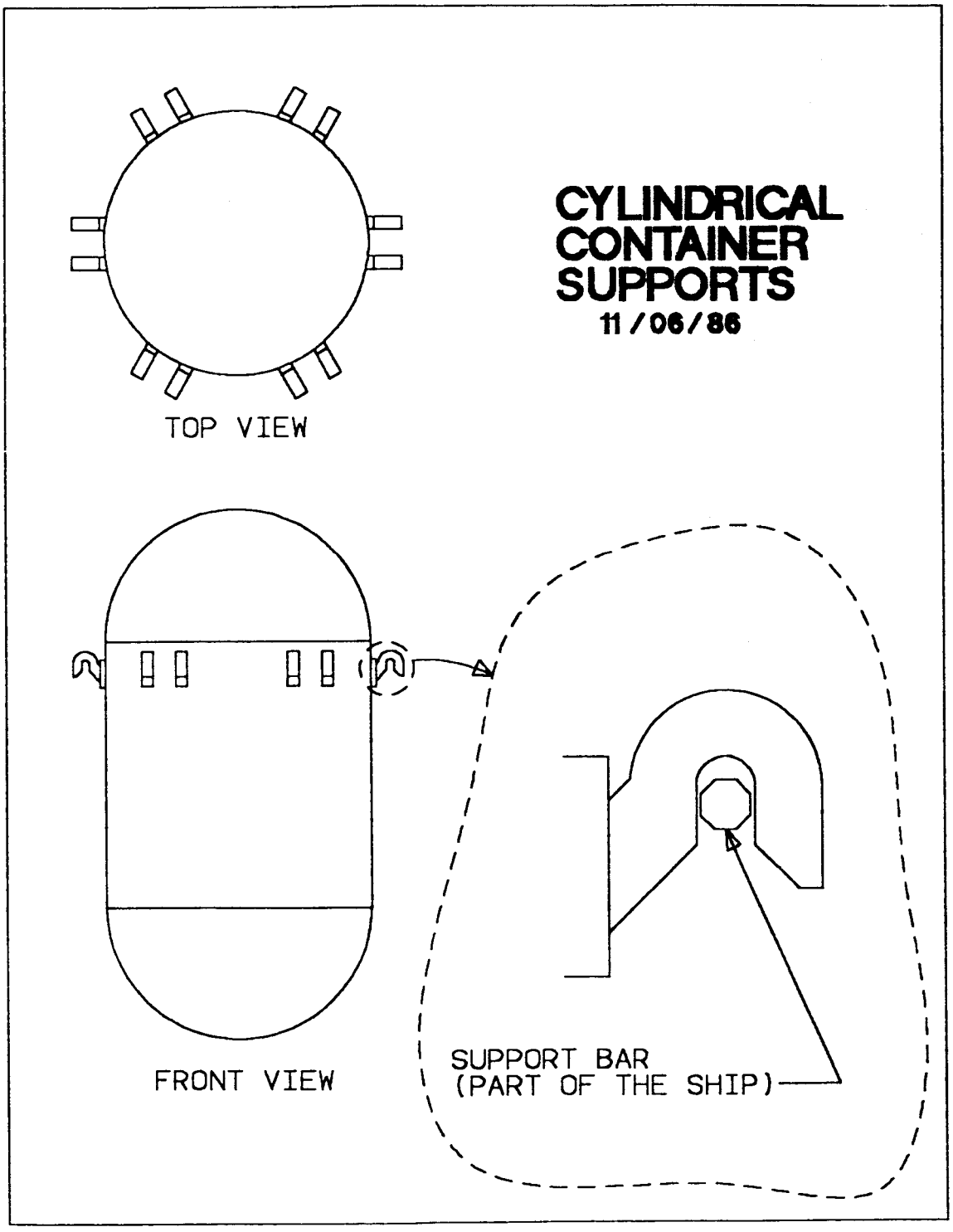
CYLINDRICAL
CONTAINER
SUPPORTS
11/06/86
TOP VIEW
FRONT VIEW
SUPPORT BAR
(PART OF THE SHIP)

A-4

A-5

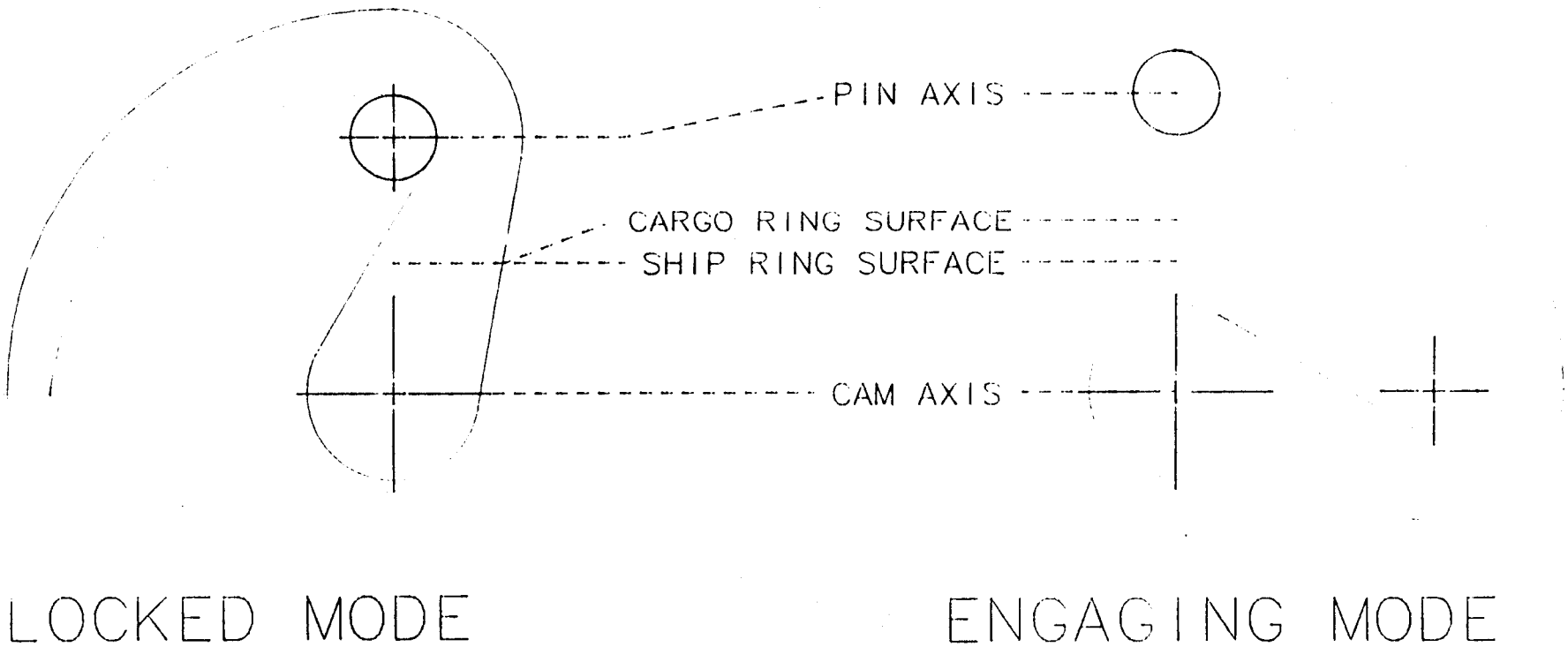

CAM ACTION

A-6

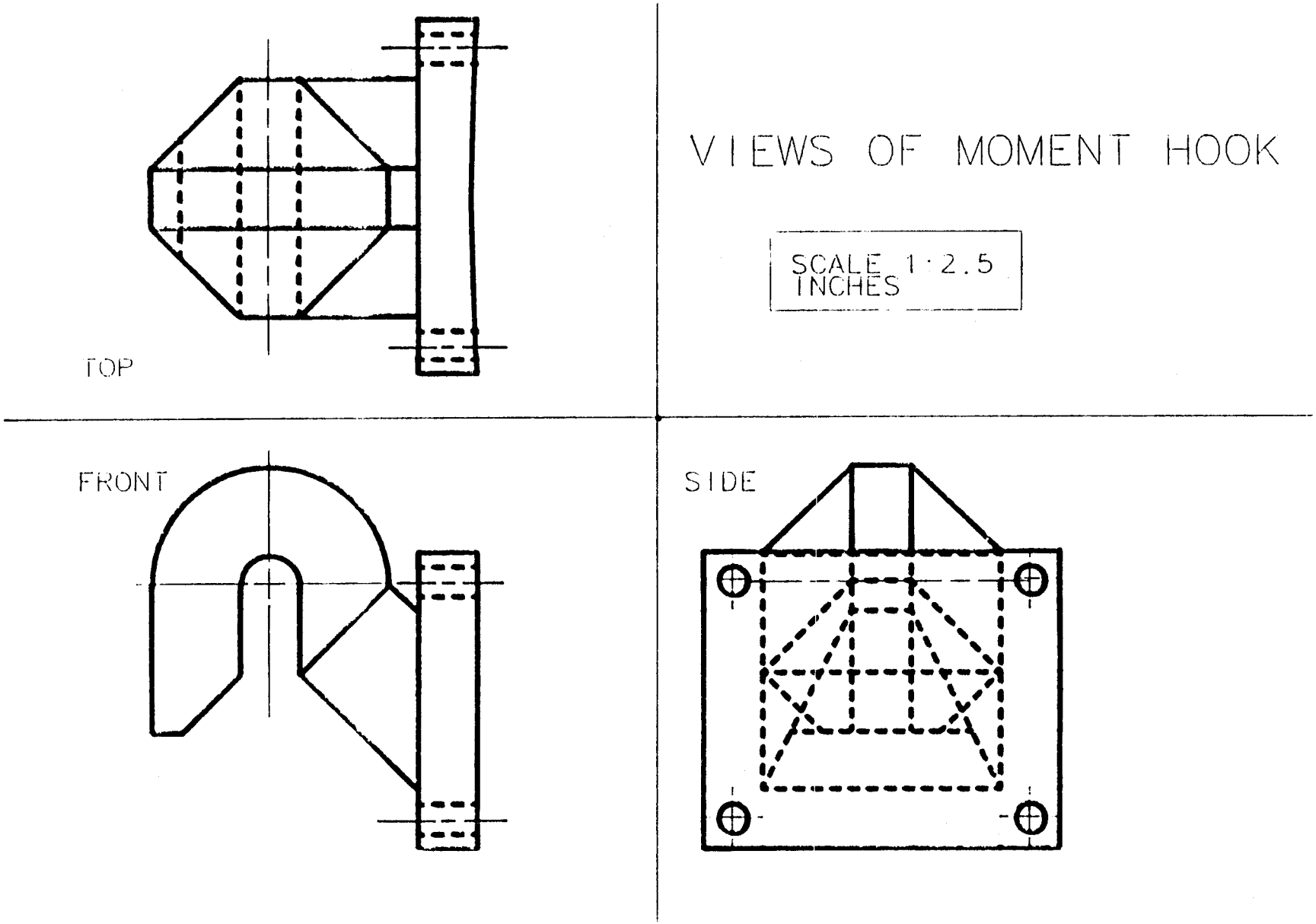

A-7

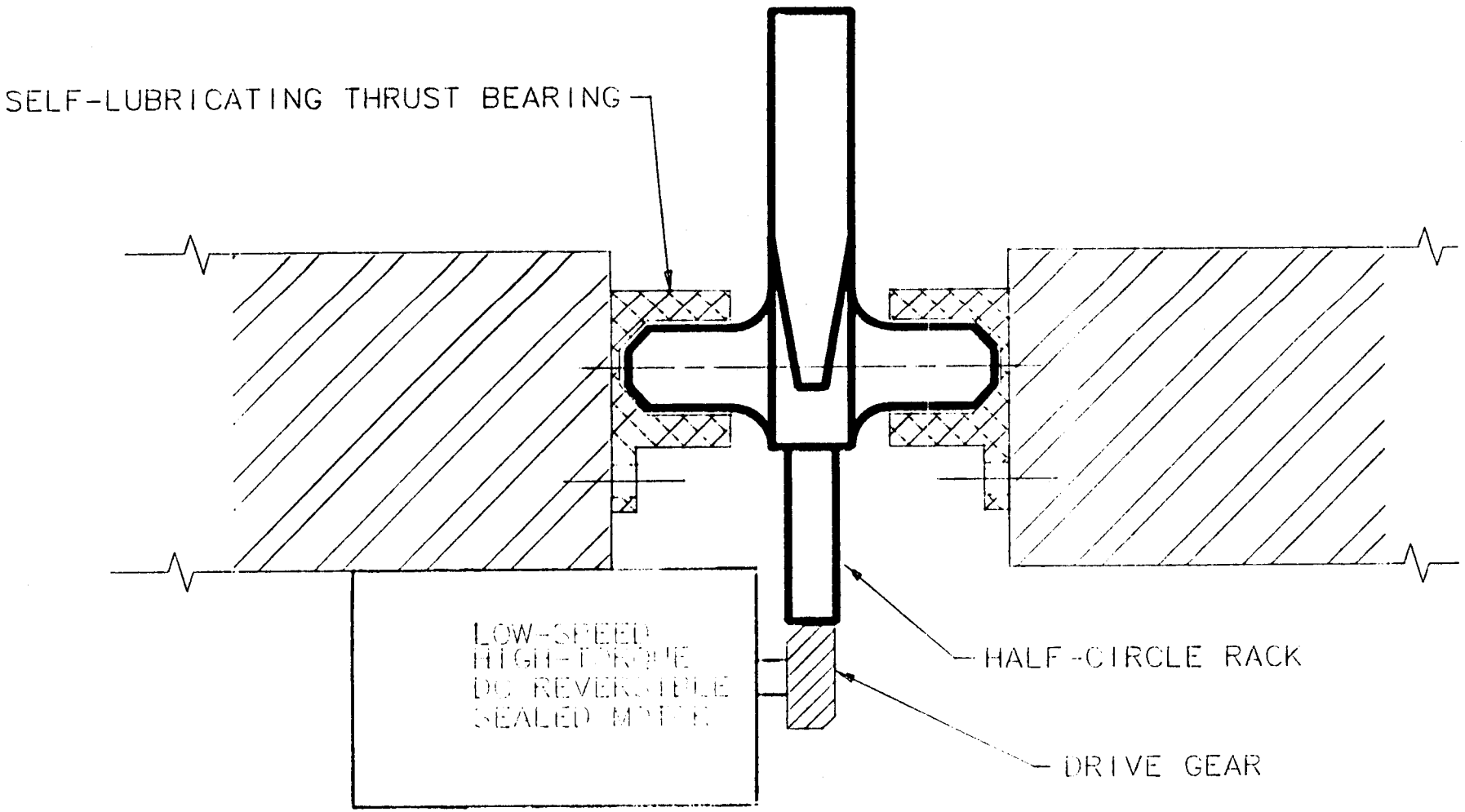

CAM DRIVE MECHANISM

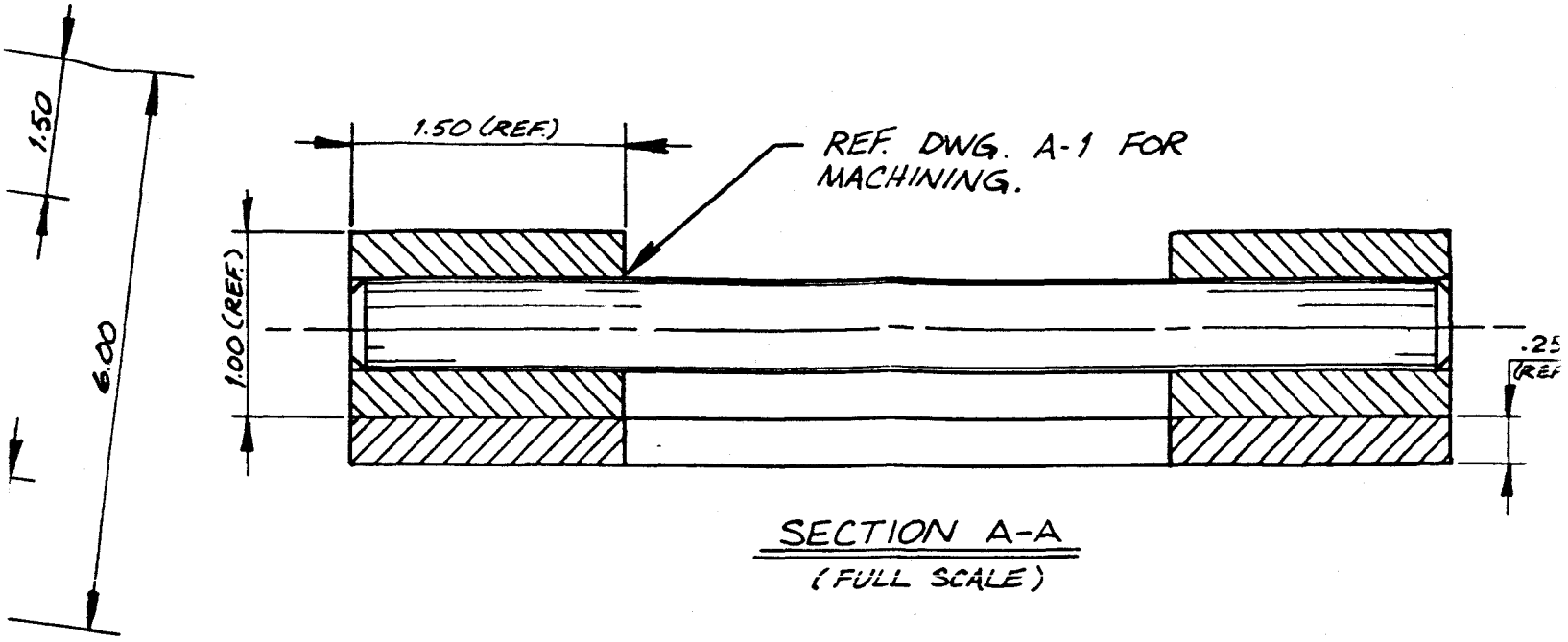

SECTION A-A
(FULL SCALE)

NOTES

1. REF. DWG. B-1 FOR LOCATIONS OF LOCK/LIFT PINS.
2. REF. DWG. A-1 FOR PIN & RING MACHINING DETAILS.
3. ALL DIMENSIONS IN INCHES.
4. RING MATERIAL: INVAR NICKEL STEEL

LOCK / LIFT PIN DETAILS		
SCALE: AS NOTED	APPROVED BY:	DRAWN BY T. BELL
DATE: 11/25/86		REVISED
		DRAWING NUMBER B-2

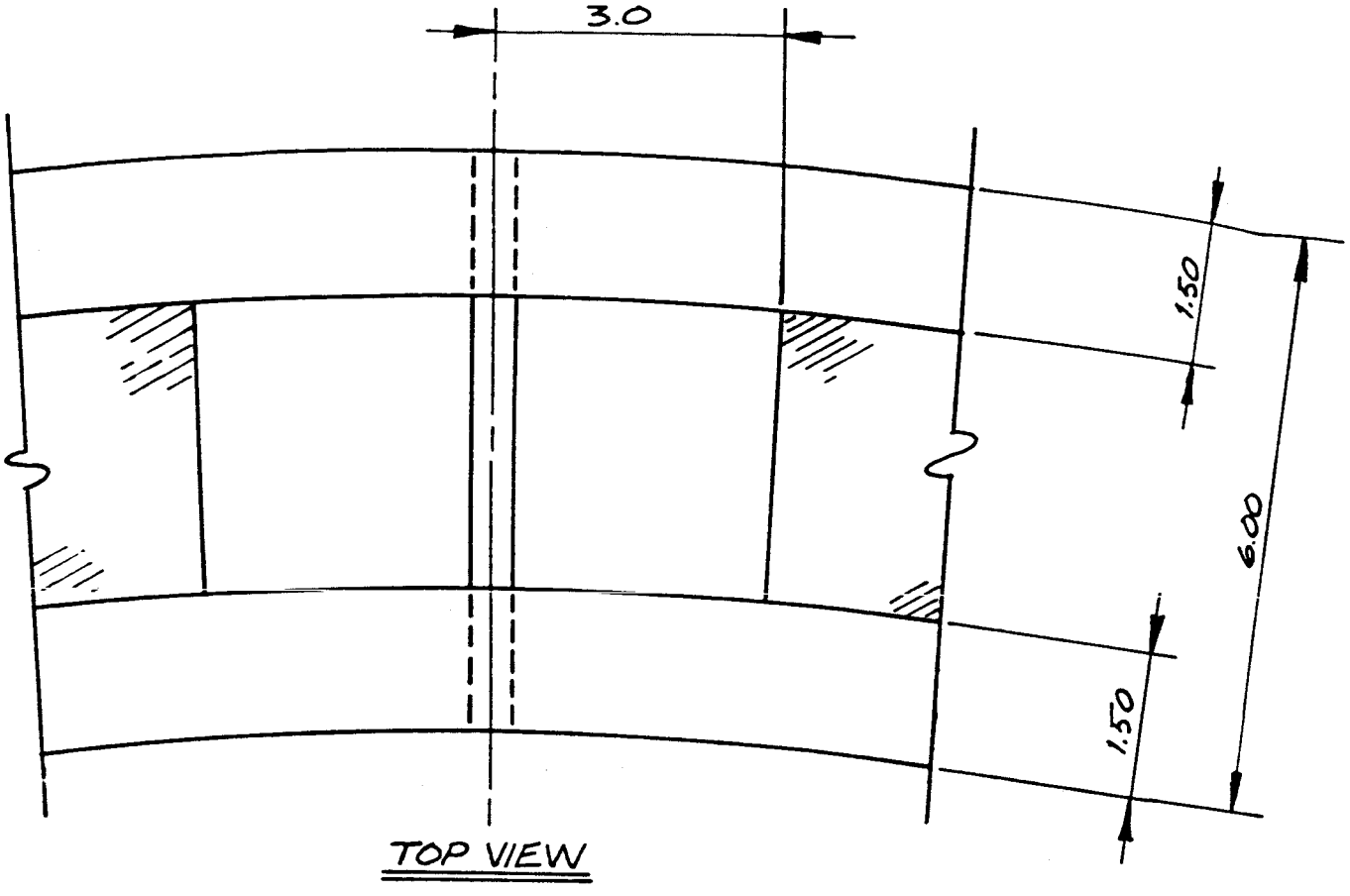
3.0
1.50
6.00
1.50
TOP VIEW

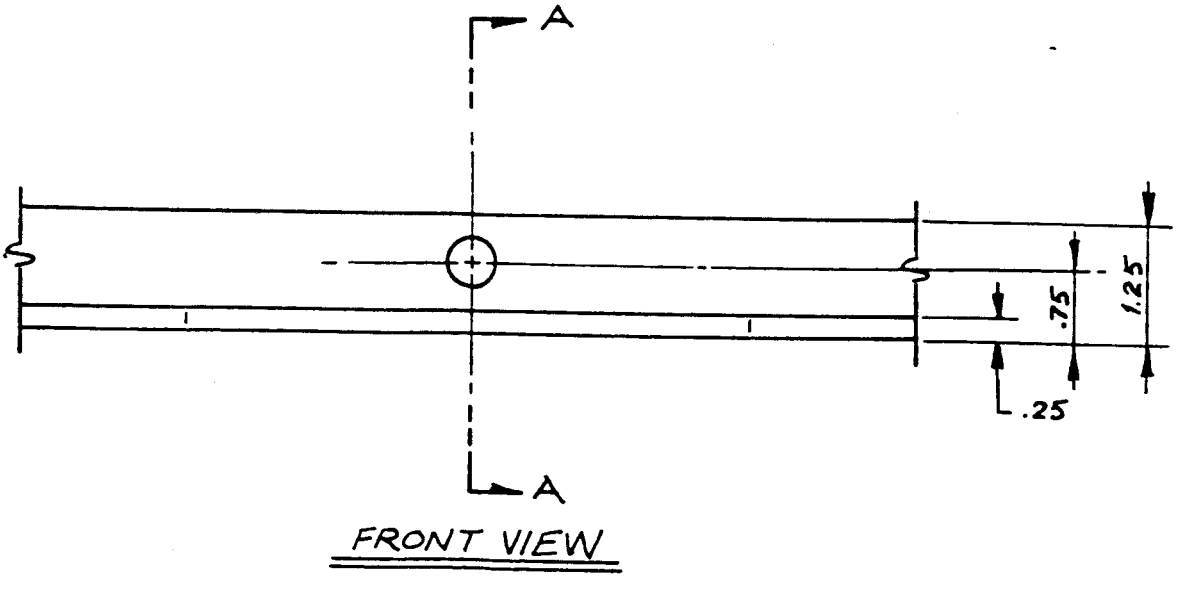
A
.75
1.25
.25
A
FRONT VIEW

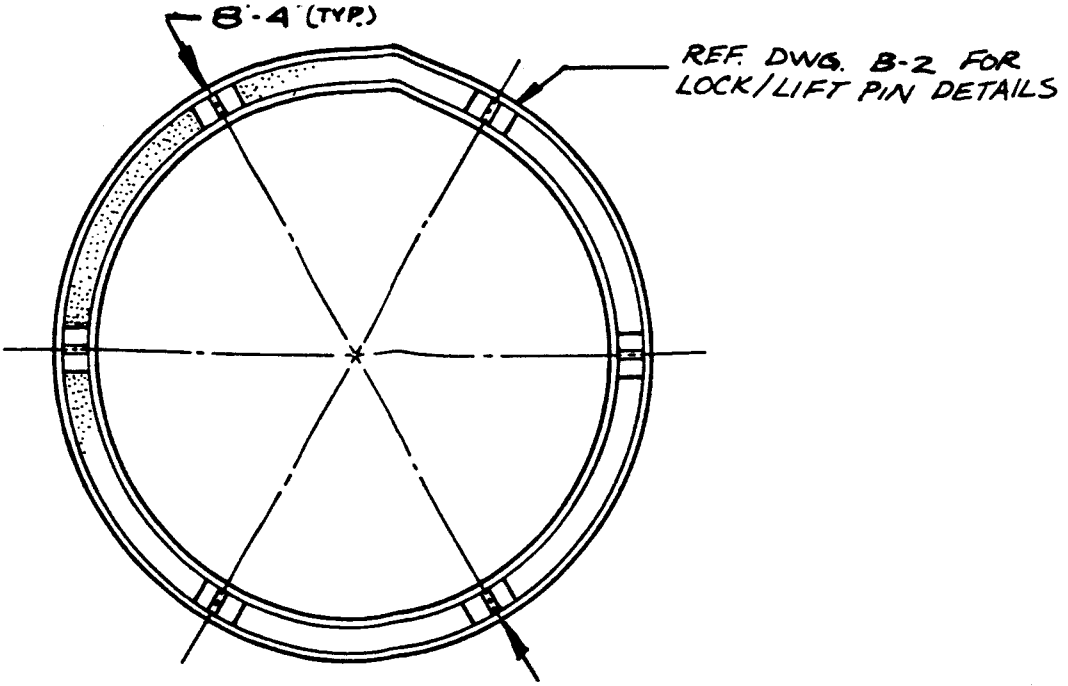

SECTION A-A

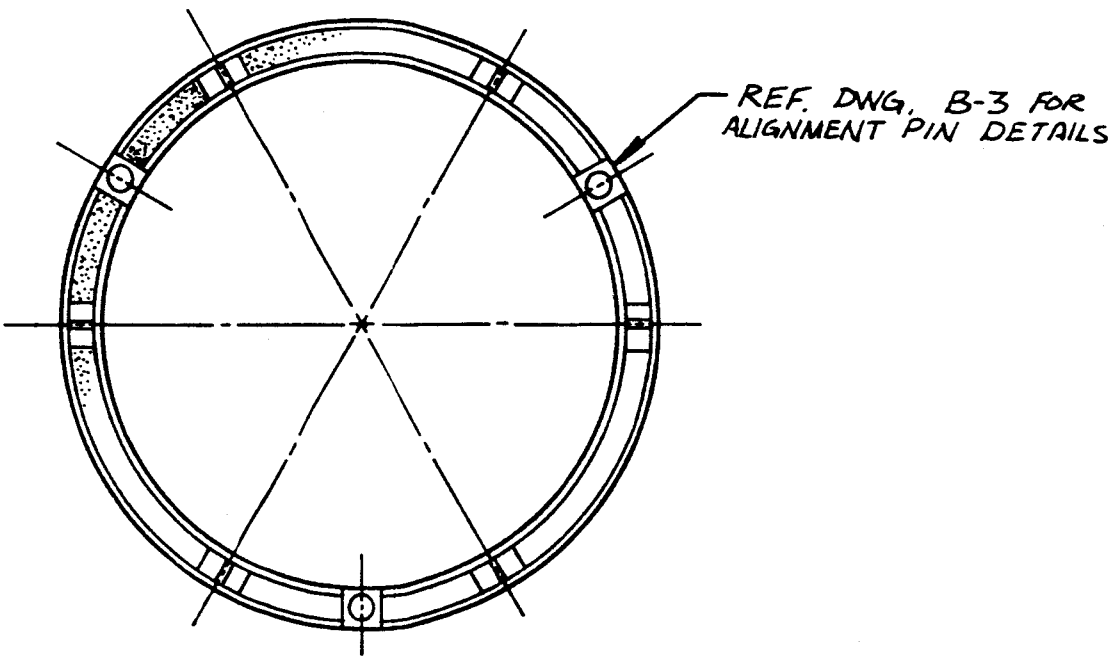

SECTION B-B

SPHERICAL CARGO INTERFACE		
SCALE: NONE	APPROVED BY:	DRAWN BY T.BELL
DATE: 11-24-86		REVISED
		DRAWING NUMBER B-1

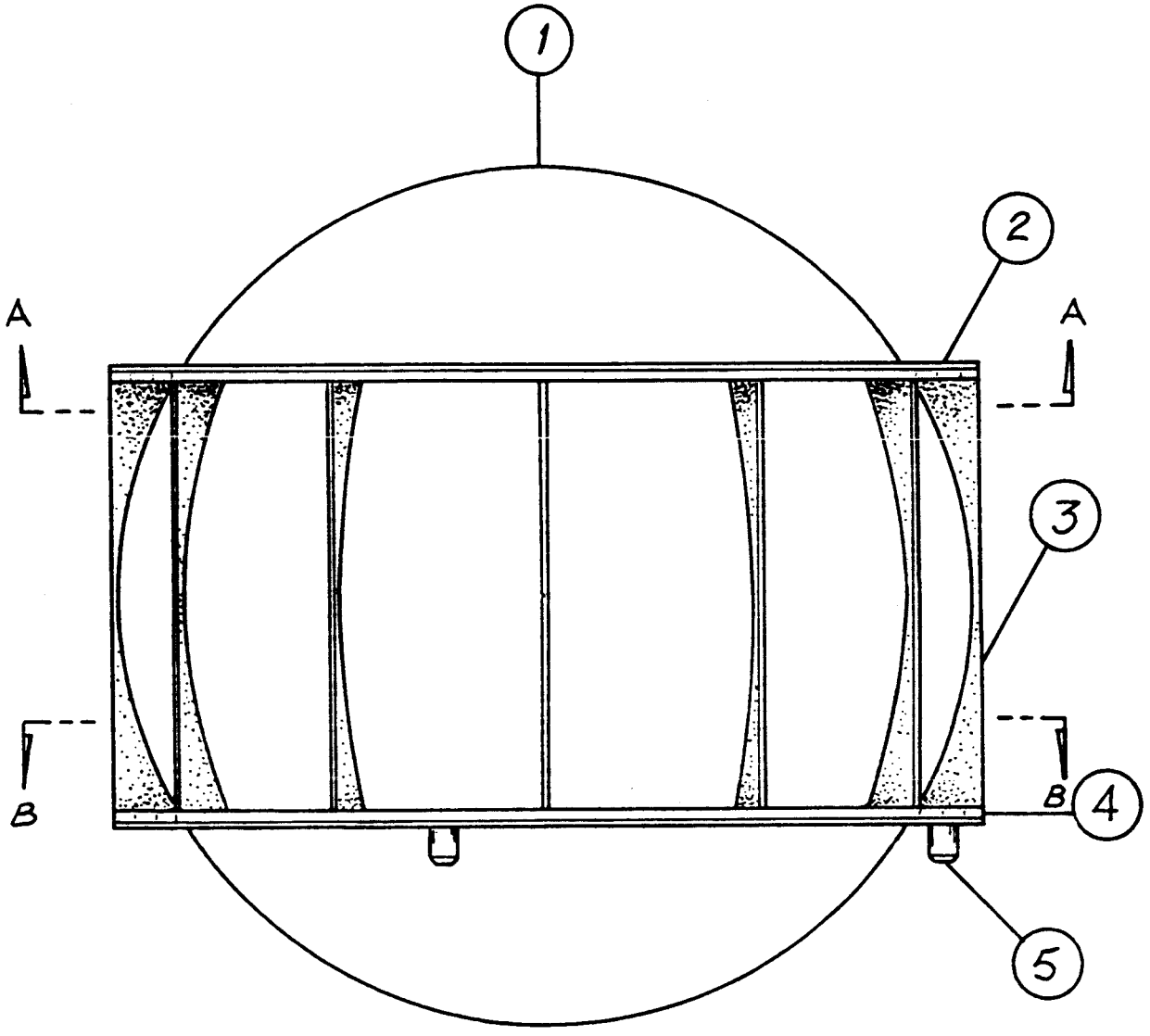

ASSEMBLY

No. 1 SPHERICAL CARGO CONTAINER

No. 2 LIFTING INTERFACE RING

No. 3 SUPPORT BRACE

No. 4 SHIP INTERFACE RING

No. 5 ALIGNMENT PIN

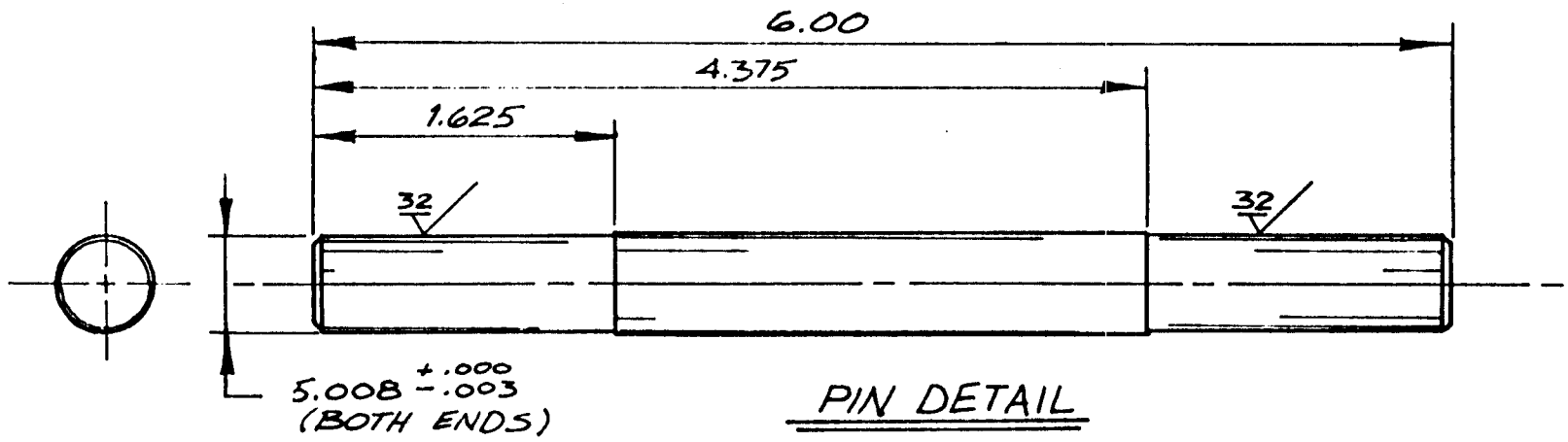

PIN DETAIL

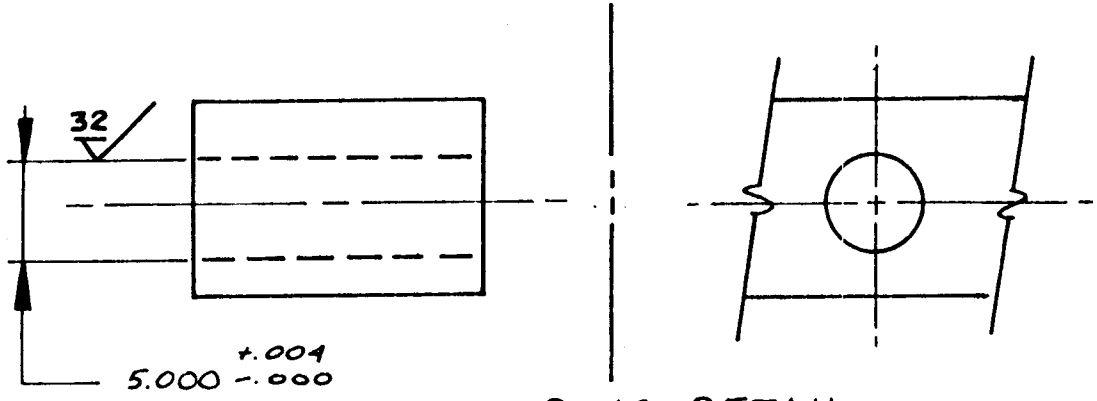

RING DETAIL

NOTES

1. REF. DWG. B2
2. ALL DIMENSIONS IN INCHES
3. ALL TOLERANCES ±.005 IN. U.O.S.
4. PIN MATERIAL: INCONEL 718

PIN & RING MACHINING DETAIL		
	SCALE FULL	DRAWN BY T. BELL REVISED
DATE 11-24-86	APPROVED BY	DRAWING NUMBER A-1

W.S. CRYSTALENE ® 8½x11

MADE IN U.S.A.

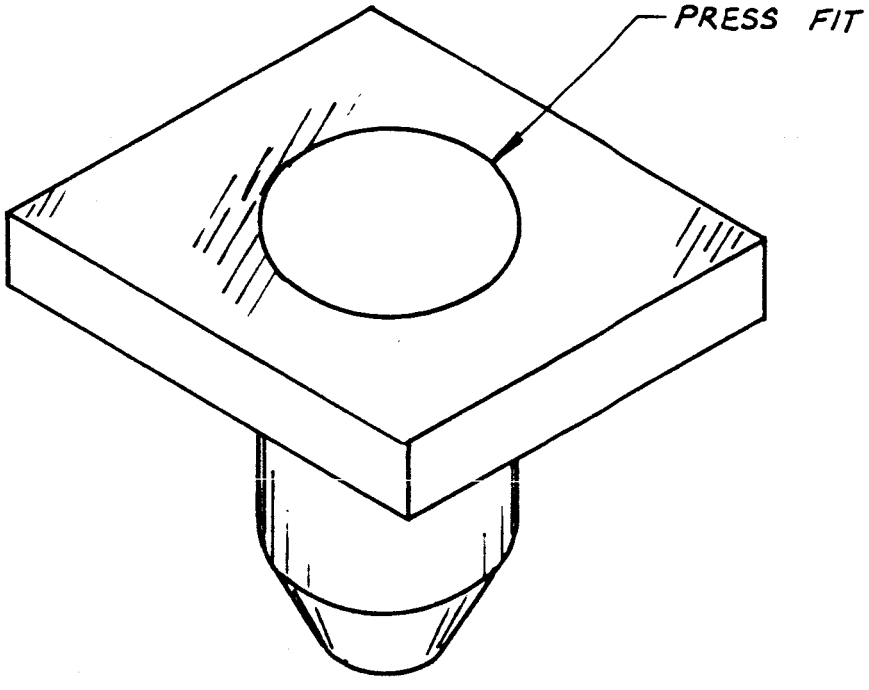

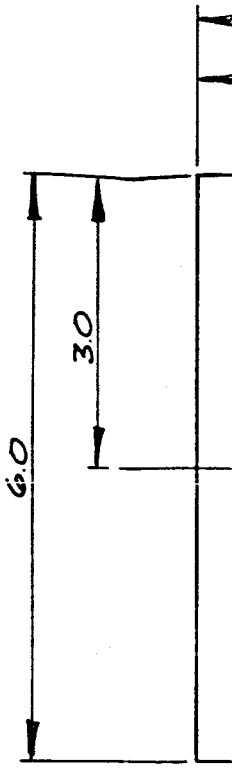

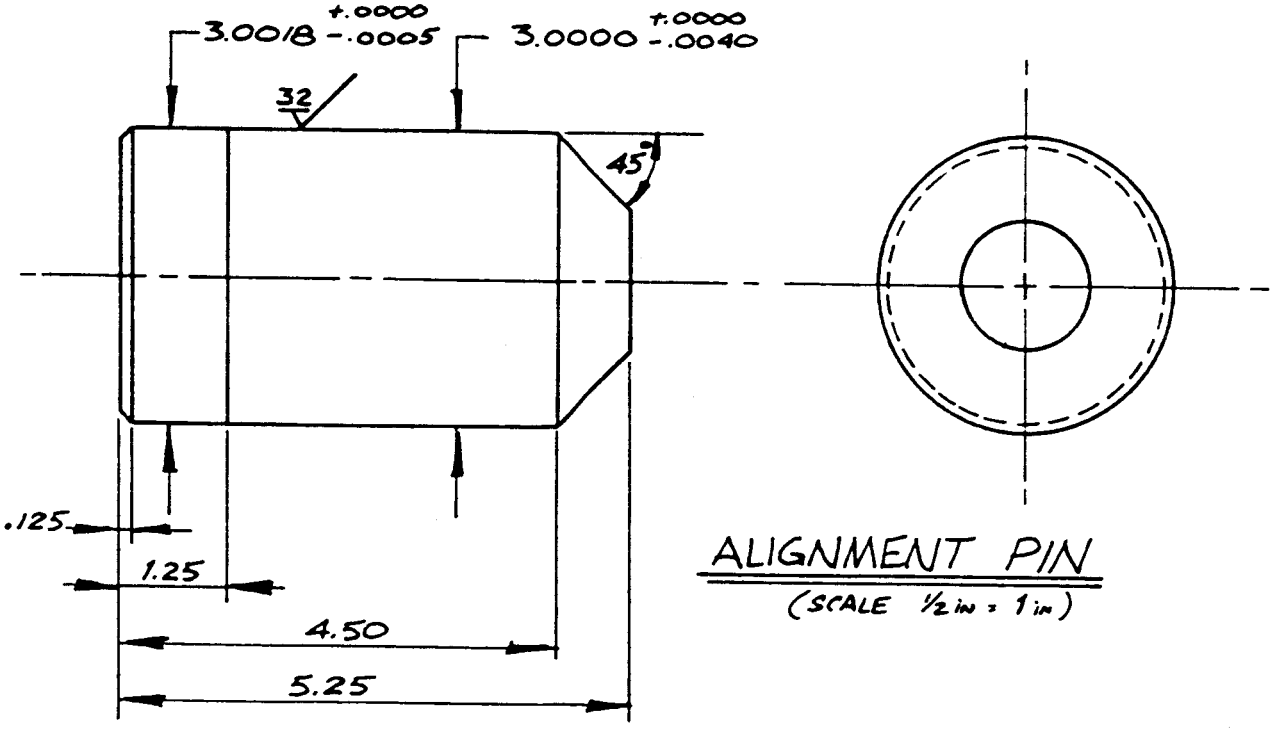

ALIGNMENT PIN

(SCALE ½ in = 1 in)

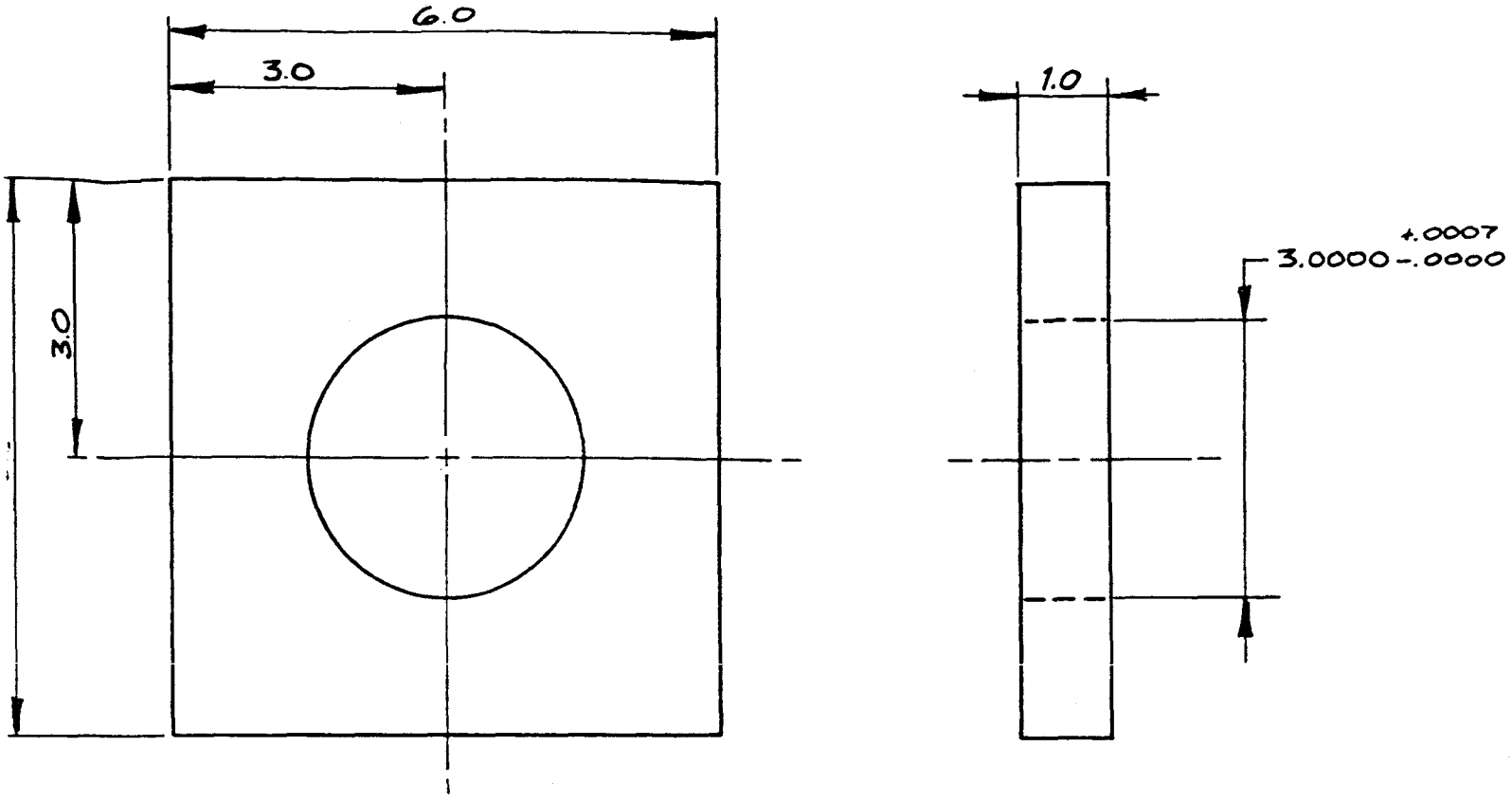

ALIGNMENT PIN SUPPORT
(SCALE ½ IN = 1.0 IN.)

NOTES

1. REF. DWG. B-1 FOR LOCATION.
2. ALL DIMENSIONS IN INCHES
3. ALL TOLERANCES ±.005 IN. U.O.S.
4. MATERIALS: PIN - INCONEL 718
   SUPPORT - INVAR NICKEL STEEL

ALIGNMENT PIN DETAILS		
SCALE: AS NOTED	APPROVED BY:	DRAWN BY T. BELL
DATE: 11-25-86		REVISED
		DRAWING NUMBER B-3

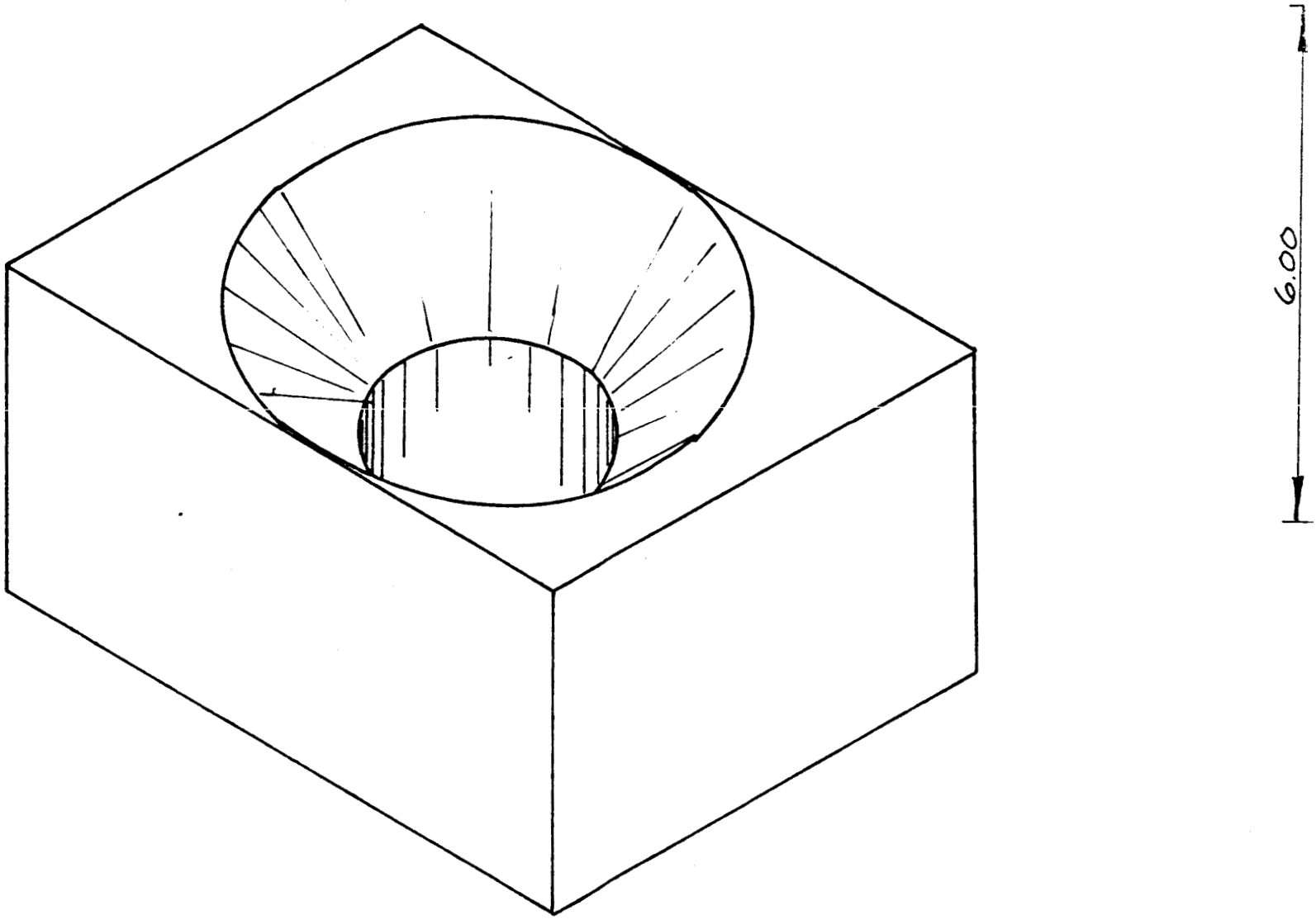

NOTES

1. REF. DWG. B-4 FOR ASSEMBL
2. MATERIAL : INVAR NICKEL STE
3. ALL DIMENSIONS IN INCHES.
4. ALL TOLERANCES ±.005 U.O.S.

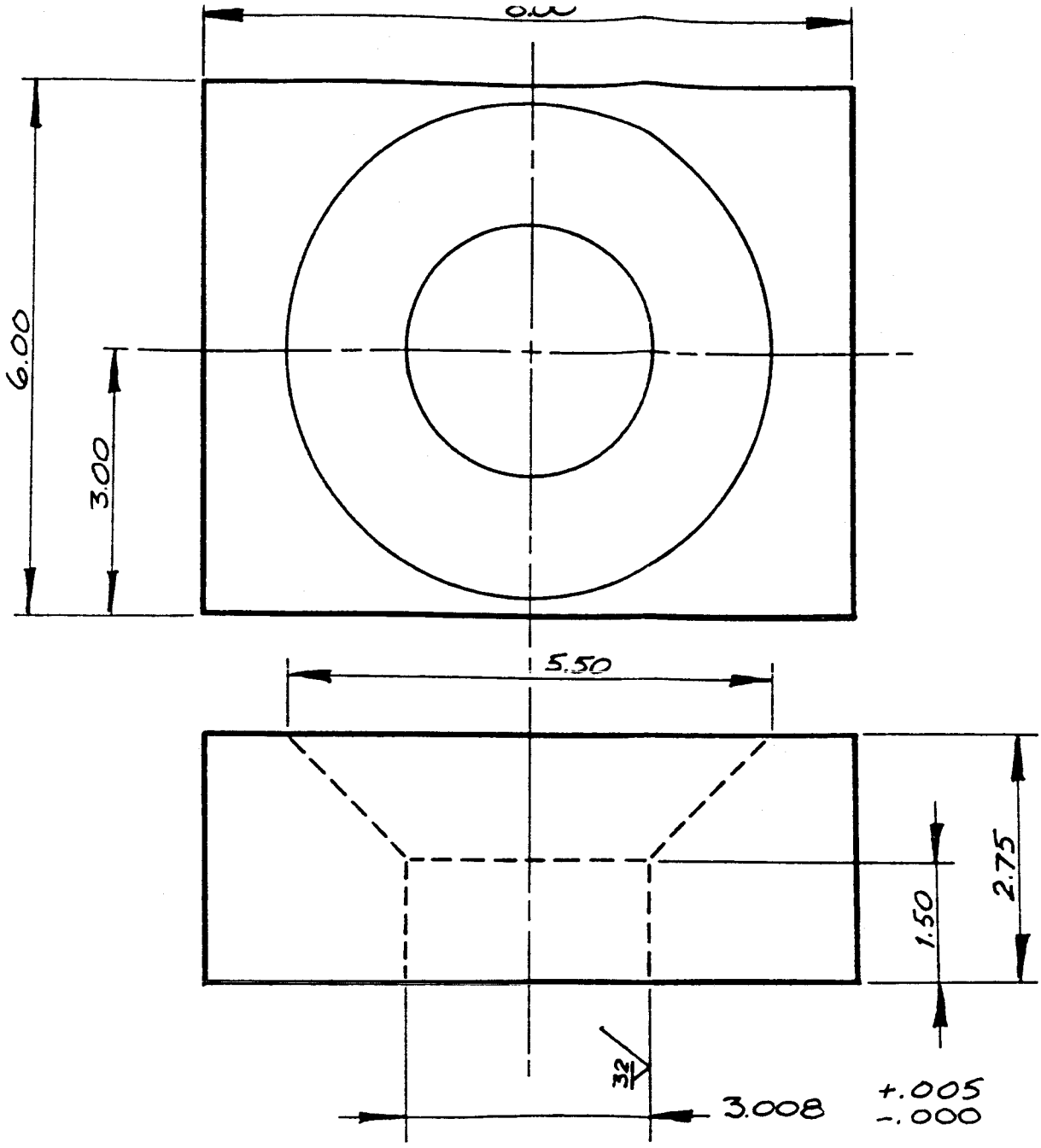

R ASSEMBLY.
NICKEL STEEL.
V INCHES.
.005 U.O.S.

ALIGNMENT PIN RECEPTACLE		
SCALE: 1/2 IN = 1 IN	APPROVED BY:	DRAWN BY T. BELL
DATE: 11-26-86		REVISED
		DRAWING NUMBER B-5

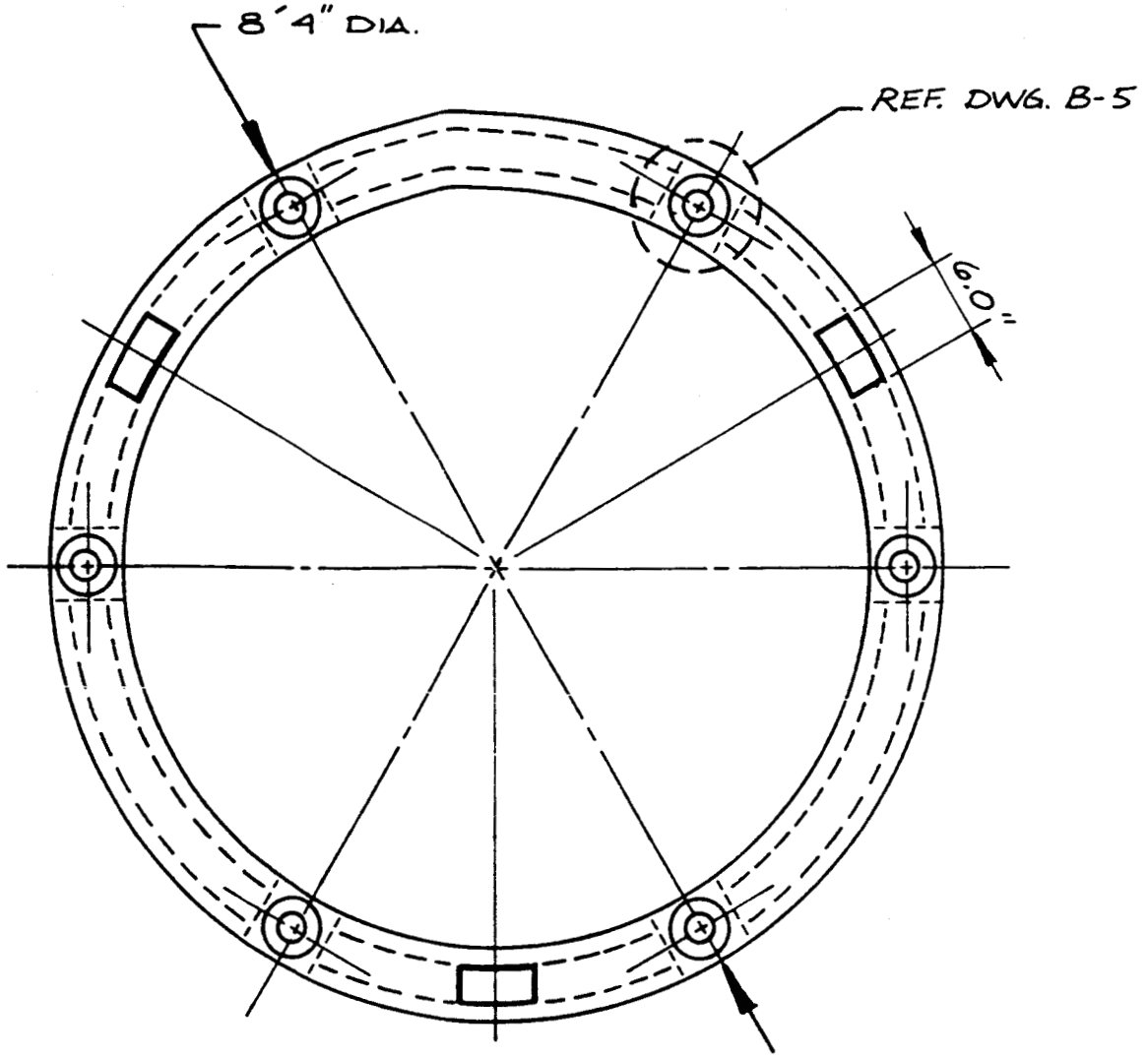

SECTION A-A

SHIP INTERFACE		
SCALE: NONE	APPROVED BY:	DRAWN BY T. BELL
DATE: 11-25-86		REVISED
		DRAWING NUMBER B-4

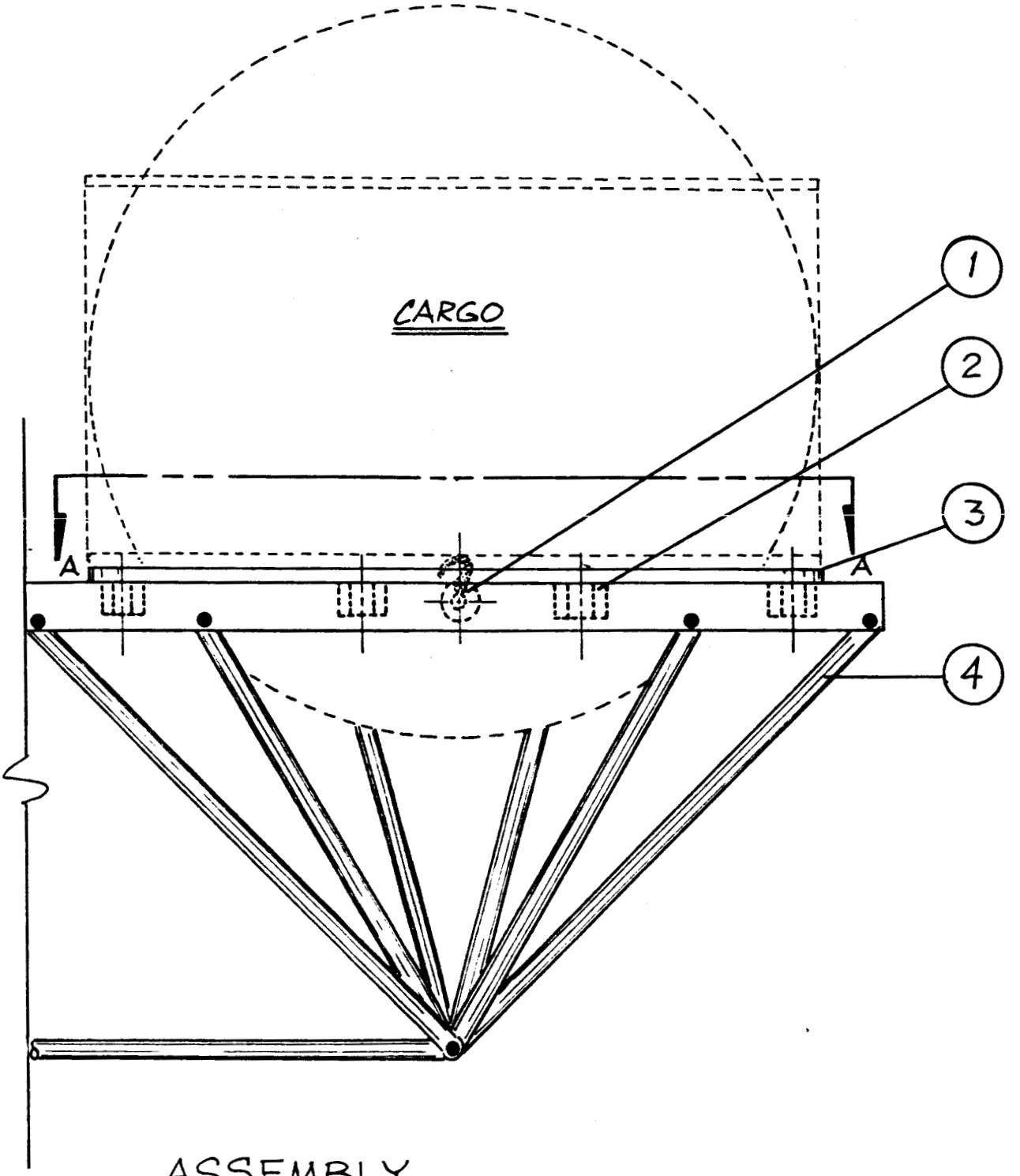

ASSEMBLY

No. 1 CAMLOCK
No. 2 ALIGNMENT PIN RECEPTACLE
No. 3 INTERFACE RING
No. 4 CONCEPTUAL SHIP BRACING

MATERIAL SELECTION

Overview

Material selection is of upmost importance in all mechanical design. Materials have to be capable of the designed operation within the environment for the proposed use. The moon environment poses a great challenge to material properties. The vacuum like atmosphere, the extreme low temperatures, the abrasive lunar dust, and the ultra-violet radiation from the sun are just a partial list describing the moon's harsh environment. In order to make decisions as to the best material, a perfect material was proposed. This material would have the following qualities:

1. very low thermal expansion,
2. high resistance to brittle failure at low temperatures,
3. high resistance to ductile failure at high temperatures,
4. high resistance to abrasion,
5. high strength-to-weight ratio,
6. machineability.

These properties were important to all the mechanical parts of our interface. However, their relative order of importance depended on the part's function.

Although composites may be the best material choice, we did not feel that we had sufficient time to properly research this area. (See appendix) Therefore, we only considered metals for our material choice.

When trying to find a metal that resists ductile brittle transitions between -200 and 400 F, BCC and HCP metals should be avoided. Metals with these configurations experienced brittle and ductile behavior between these ranges. However, metals with FCC structure exhibit much more acceptable behavior in these ranges. Some FCC metals include aluminum, nickel, copper, bronzes, and brasses.

Another consideration was the avoidance of low-melting-point metals as they will tend to have yield strengths that fall sharply as temperatures increases. Also problems occur with creep at temperatures approximately one third of the melting point temperatures.

A check and comparison of the metals hardness was also a major consideration. The hardness should prevent any measurable wear of the part. On the other hand, a high hardness number causes increased machining difficulties.

The last factor to consider was the strength-to-weight ratio. this factor was computed for each metal considered. These calculations eliminated several materials from our selection since weight was a major considerations.

Camlock Material Selection

With the design of the camlock, material with the following properties were considered:

1. resistance to brittle failure at low temperatures,
2. resistance to ductile failure at high temperatures,
3. abrasion resistance,
4. high strength-to-weight ratio.

Age hardened Inconel 718 fit the design requirements very well. Its melting point of 2651 F means that creep will not be a problem until approximately 795 F which is well above service temperature. Because of its high nickel content (70%), brittle fracture should not occur. Several alloying element substitutions give 718 high strengths up to 1300 F. The Brinnel hardness of 393 is high enough to sufficiently prevent wear.

List of properties:

material:	Inconel 718, age hardened
melting point:	2651 F
Brinnel hardness:	393 (maximum)
strength-to-weight:	473 - 578 (kip/in)/(lb/in)

Ring Material Selection

The interface rings contain several dimensions that must be kept within close tolerances. These are location of the alignment pins and holes, and location of the lock/lift pins. If these dimensions vary between the ship and the cargo by an appreciable amount, the interface will bind rather than work smoothly.

One major factor controlling dimensions will be the amount of thermal expansion that occurs in the rings or in the ship. For this reason, the main criteria for selecting a ring material was a low thermal expansion coefficient.

A 36% nickel alloy steel (INVAR) provides excellent thermal expansion properties and still maintains fair machineability. The nickel content also prevents low temperature embrittlement in the service temperature range.

List of properties:

material:	INVAR
Young's modulus:	21 x 10 psi
yield stress:	25,000 psi (minimum)
Poisson's ratio:	0.29
thermal expansion coefficient:	1.5 x 10 / F

Hook Material Selection

In selecting a material for the moment hook on the cylindrical container, three factors had to be considered: hardness, strength, and thermal expansion.

Since the hooks will be sliding into place, the material should be highly wear resistant. This will also aid in wear due to the abrasiveness of the lunar dust.

In addition, the thermal expansion coefficient should be low so that under the extreme temperatures of the lunar day, the bar will still fit into the hook slot without jamming.

Finally, the material has to have a high yield strength so that it can withstand the moment forces without failing. Through stress calculations, we determined the yield strength had to be at least 80,000 psi.

As with the camlock, age hardened INCONEL 718 fit the desired criteria best. Therefore, we decided to make the hooks out of this material as well.

ECONOMIC ANALYSIS

An essential part of design engineering is an estimation of the costs involved. In our design we considered the design and development costs as well as manufacturing costs.

Design and Development Costs

Engineering man-hours represent the majority of the design and development costs. Many hours of research, conceptualization, and evaluation are spent in determining a solution to a design problem. Calculating the number of man-hours involved in the design and development of our cargo interface is difficult and only a rough estimation can be given. A good estimate of the total number of man-hours involved would be the time spent by our design group in designing and developing the cargo interface. This is a good estimation because it assumes that the increased time involved in the design and development process will be offset by the better research facilities available and the more experienced designers involved. The number of man-hours, the assumed hourly wage, and estimated cost for design and development is given by:

600 man hours X $30/hour = $18,000 to Design & Develop

This figure represents the cost for the design and development of the interface only. The design and development costs of a cargo ship, which would employ our interface, would be much higher.

Manufacturing Costs

Throughout the design and development process of the lunar cargo interface, manufacturing costs were taken into consideration. Subsequently, a cost effective design has been produced. In order to determine the manufacturing costs of our design we talked with an estimator at Withers machine works. A rough estimate was given for each part of the interface. Each component and its estimated costs is given below:

INTERFACE COMPONENT	COST
2 Invar Rings @ $2000 ea.	$4000
Machine 3 Holes a 6 slots per ring	6000
Pins for 2 Rings	1000
6 Cams	2000
6 Cam motors @ 500 ea.	3000
12 Hooks @ 100 ea.	1200
Total Cost to Manufacture Interface	$17,200

These figures represent the estimated cost of the materials used as well as the cost of manufacturing. As stated earlier these are rough estimates.

SAFETY CONSIDERATIONS

Camlock Failures

The three camlocks per container can fail several ways. Any one camlock can fail to operate causing engagement/disengagement problems. Also, a camlock could stick or bind during operation. A camlock can break during locking operations or from flight induced stresses. Finally, the drive motor can overheat and possibly burn. These failures are categorized and analyzed below:

Class	Type
I	Structural failure A. camlock and/or pin breakage B. bearing-mount breakage C. camlock gear breakage D. drive gear breakage
II	Mechanical failure A. camlock face wear resulting in insufficient locking B. bearing wear C. gear-tooth wear D. internal drive motor failure
III	Electrical failure A. loss of main power B. loss of control signal C. failure in safety system

Obviously, class I failures require that the ring containing the bad camlock not be used on any flights until the camlock is repaired. Failure during flight should not present a problem since the remaining two cams are designed to withstand the load for short durations. Failure of two camlocks on the same ring during flight will probably result in loss of cargo and possible damage to the craft. However, all camlocks act as independent systems; therefore, failure of two camlocks

on the same ring is unlikely. If the class I failure involves a camlock failing to completely engage or disengage during loading or unloading operations, the container in that ring must remain in place until the camlock can be repaired.

Class II failures are generally preceded by progressively worse ring fit or camlock operation. It is hoped that such problems could be noticed and corrected before catastrophic failure occurs.

Class III failures can cause operation problems but should not result in catastrophic losses.

Failures during loading and unloading operations (class I, II.c, II.d, and III) do not result in the possibility of injury since the camlocks do not act as supporting members. Failures during flight (class I.a and I.b) should not result in injury since the craft is unmanned while in flight.

The worst case scenario, however, yields a slight possibility of endangerment to personnel. If the craft loses a container during lift-off, it may tumble and crash into the colony. Designers of the rockets and control systems should try to design for such a situation so a suitable amount of craft control can be maintained after such a container loss. Control of the falling container is not possible.

In an effort to prevent in-flight container losses, all camlocks have safety switches that prevent lift-off if any camlock does fail to engage completely. Failure of this system should also prevent craft lift-off. This can be accomplished by using a fail-safe, closed-loop control system.

Ring Failures

The ring has a variety of components that can fail. Aligning pins, aligning holes and ring surfaces are all subject to structural failures. These failures are categorized as follows:

A. aligning pin breakage,

B. excessive plate warpage,

C. ring fracture.

First of all, the aligning pins main function is to alignment the container during the loading operation. However, in the event that one of the pins breaks, the loss is mainly ease of alignment. The two remaining pins are more than sufficient to control any horizontal forces on the interface. Care most be taken to clear any broken pin debris from the flat ring surfaces. Debris could keep the two flat surfaces from properly seating. This situation must be corrected before the cargo can be locked down.

The two ring surfaces will not mate if excessive warpage of either or both components occurs. Both surfaces were designed with enough tolerance to allow mating under expected thermal expansion warpage. However, in the event that warpage is excessive, the aligning pins can not fit the holes and the cargo loading must be postpones until the problem is corrected.

The ring structure was designed with a factor of safety of two. This was in anticipation of abuse. Loading, unloading, take-off and landing are rarely gentle processes. In the event that stresses occur high enough to fracture or break the ring device, the use should be immediately halted until repairs or

replacements can be made. If the breakage occurs in flight, the ship supports can hold the containers in most situations. Otherwise, loss of cargo becomes a concern.

Hook Failures

There are several ways the hook and bar assembly that hold the cylindrical container can fail. One or both the hooks could break, the bar could break, or the end of the hook could become chipped or deformed.

If one of the hooks break, the other hook should sufficiently carry the extra load. If both hooks break, the interface should be able to withstand the moment provided the angle of incline is not excessive. If the hook chips, then the fragment could fly off and damage another piece of equipment or even worse, injure someone. If the hook deforms, a problem might arise while loading the cargo. The hook would have to be fixed or replaced before loading could continue.

CONCLUSIONS

Our main objective in this design was to achieve a self aligning and remote locking interface system to be used in space. We feel that the ring and hemispherical cargo cap arrangement meet this criteria.

The cam lock device is remotely operated and is capable of holding the cargo snuggly in position during flight. We feel that this interface is safe, as well as user friendly, and with a good end effector has much potential as a standard space cargo interface.

RECOMMENDATIONS

This project had very few constraints as assigned. For this reason, most of your efforts have been in narrowing the scope and conceptualizing the possibilities. We recommend further investigation of ship configurations, and cargo construction. Such as designing an expendable lander, using our interface rings, or developing pallet shapes.

We also recommend further research in the areas that we were unable to address. Such as, end effector design for the lifting device, composite materials application, and microscopic welding. Further work in these areas would be necessary to support our designs.

APPENDIX A

Calculations supporting design specifications

CALCULATION OF TOLERANCES:

The first concern is to set the tolerances loose enough so that an interference fit does not occur. For our 3 in. O.D. pin, the "loose fit" tolerances are:

Hole	3.0030	Pin	2.9960
	3.0080		3.0000

The probability of three pins simultaneously fitting into three holes was investigated with the aid of a Monte Carlo subroutine computer program. (Ref. Appendix B1) It was assumed that the dimensions specified were approximately normally distributed, and a mean and a standard deviation could be calculated.

For a given tolerance, in the form: $\bar{X} \pm \Delta x$

The standard deviation is: $sx = ((\bar{X}+\Delta x)-(\bar{X}-\Delta x))/6 = \Delta x/3$

GEOMETRY

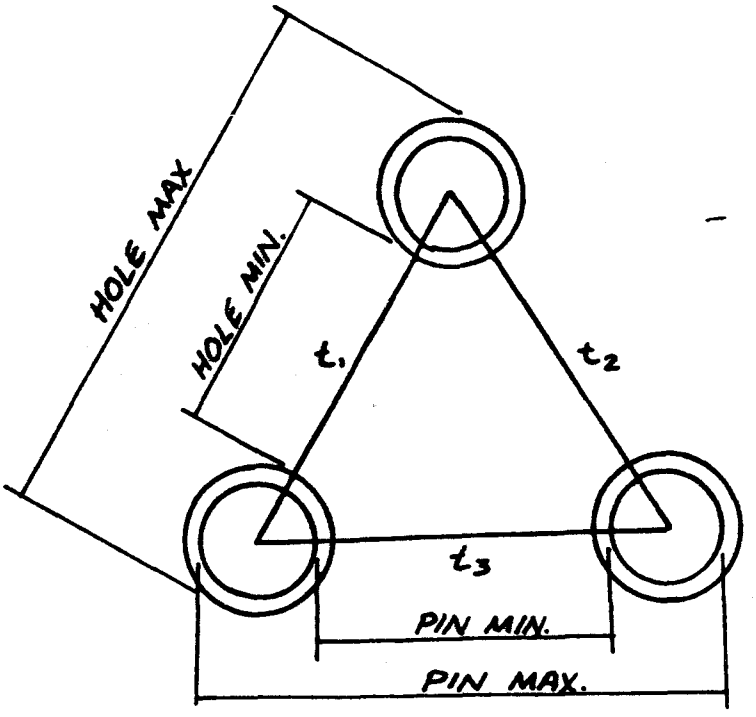

RANDOM VARIABLES:

(3) Distance between holes

(3) Distance between pins

(3) Diameter of holes

(3) Diameter of pins

---

(12) Total

CALCULATION OF DISTANCE BETWEEN HOLES, OR PINS.

Assuming that a hole center can be located with an accuracy of .005 in., the mean and standard deviation of the distance between centers can be calculated.

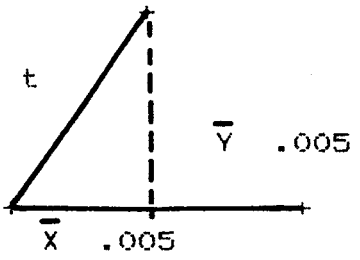

Mean:

$\bar{X}$ = 2.799 in.
$\bar{Y}$ = 5.598 in.

$$t = \sqrt{\bar{X}^2 + \bar{Y}^2} = 6.258 \text{ in.}$$

Standard deviation of t: $$st = \sqrt{\frac{\bar{X}^2 sx^2 + \bar{Y}^2 sy^2}{\bar{X}^2 + \bar{Y}^2}}$$

sx = sy = .005 / 3 = .001667 in.

st = .001667 in.

CALCULATION OF HOLE AND PIN DIAMETERS.

Hole tolerances: 3.0030
3.0080

Pin tolerances: 2.9960
3.0000

Mean: $\bar{d}$ = 3.0030 + 3.0080 / 2

$\bar{d}$ = 3.0055 in.

Mean: $\bar{D}$ = 2.9960 + 3.000 / 2

$\bar{D}$ = 2.998 in.

Standard deviation:

sd = .0025 / 3 = .00083 in.

Standard deviation:

sD = .0020 / 3 = .00067 in.

SUMMARY OF RANDOM VARIABLES:

t = (6.258 in., .00166 in.)

d = (3.055 in., .00083 in.)

D = (2.998 in., .00067 in.)

COMPUTER PROGRAM RESULTS:

The program calculated a random hole arrangement from the distances between holes and the diameter of holes. It then calculated 500 combinations of pin arrangements and tried to fit them, one at a time, in the holes. If no interference occured, it was considered a success. This process was repeated 500 times.

Results:	Number of trials - - -	250,000
	Number of successes -	249,771
	Number of failures - -	229
	% success - - - - - -	99.9%
	Average clearence - -	.00425 in.

PLATE BENDING

Another factor that will effect the tolerances of the hole - pin interface, is the maximum allowable bending or warpage. This can be caused by thermal stresses or physical damage to the cargo container. The thermal stresses, or bending moment can be calculated for the case of a hollow circular ring, fixed at the edge and at the middle.[3] The bracing built into the cargo, and the bracing built into the ship will simulate this condition.

Thermal stresses of this type will be the largest when a cold (-250 F) cargo ring comes in contact with a hot (+250 F) interface ring. The maximum bending moment is calculated below using the properties of Invar.

$$Mr = Mo = \frac{E \alpha T h^2}{12(1 - \nu)}$$

$E = 21 \times 10^6$ psi.

$\alpha = 1.5 \times 10^{-6}$ 1/°F

$T = 500$ F

$\nu = .29$

$Mr = Mo =$ <u>2888 in. lbf.</u>

This is a substantial bending moment, and must be carefully considered when designing the support for the cargo interface rings.

For our design purposes, we will assume that the bending moment will be contained, and that a maximum center deflection of the interface ring will not exceed .015 in. From this figure, we can calculate the effect of the bending on the hole - pin clearence.

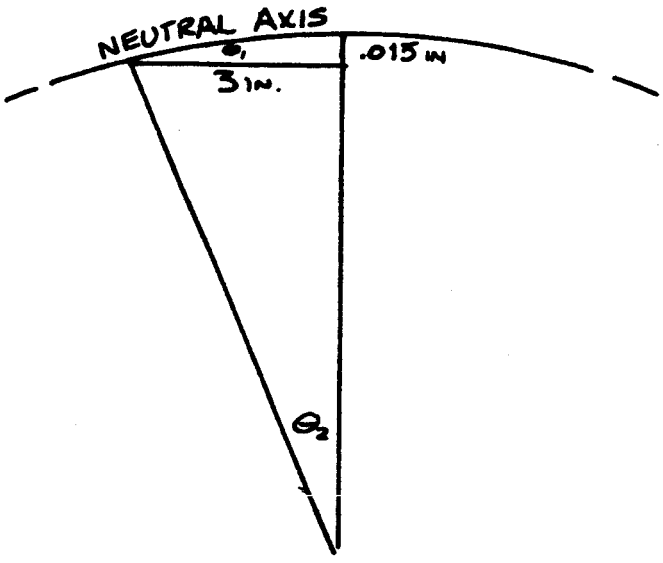

since $h \cong r\ \theta_2$

and $\theta 1 = \theta 2$

$o/h = \sin \theta 1$

$\theta 1 = \theta 2 = .286$ deg.

Since our pin O.D. will be 3 in., the angle at the edge of the hole will be 2/3 θ .

θ actual = .1906 deg.

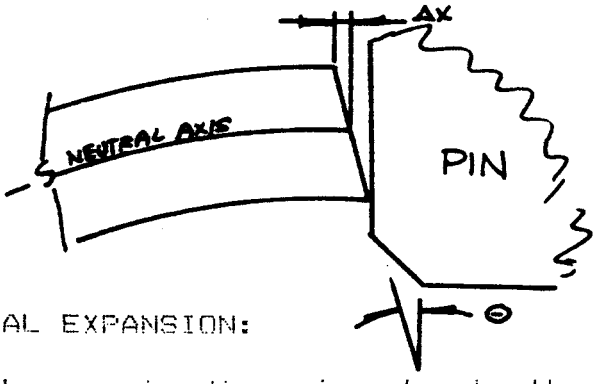

$X = .5 \sin .1906$

$= \underline{.0016 \text{ in.}}$

THERMAL EXPANSION:

Changes in dimension due to thermal expansion should be held to a minimum with a combination of rigid bracing and low expansion material selection. The expansion in the area of the hole can be looked at on an incremental level.

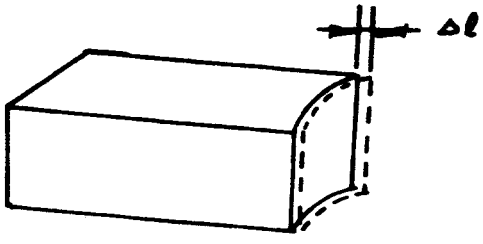

$\Delta l = l \alpha \Delta T$

Assuming tolerances are determined at room temp.

$\Delta l = \underline{.0011 \text{ in.}}$

DESIGN TOLERANCES

By superposition; thermal expansion, bending deflection, and machining tolerances may be added together to find the over-all tolerances required for a non-interference fit.

Initial hole requirements: 3.0030
3.0080

Additional factors:

Bending - - - - .0016 in. radius = .0032 in. dia.

Expansion - - - .0011 in. radius = .0022 in. dia.

Total = .0054 in. dia.

Final design tolerances:

HOLE		PIN	
	3.0080		2.9960
	3.0130		3.0000

Tightest fit - - - .0030 in. (including bending & expansion)

Loosest fit - - - .0170 in.

STRESS CALCULATIONS FOR RING

Required plate thickness to withstand point load of 1 pin. (2000 lbs.)

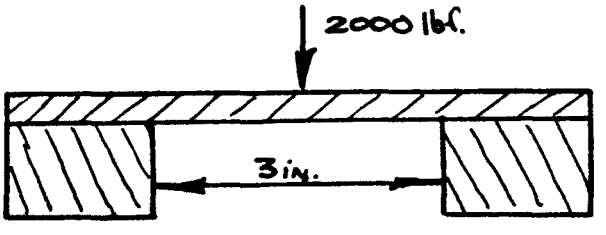

Maximum stress on plate = k P / t = (.308)(2000)/(.25)

= 9856 psi.

Factor of safety = 24,000 / 9856 = 2.43

SECTION MOMENT OF INERTIA

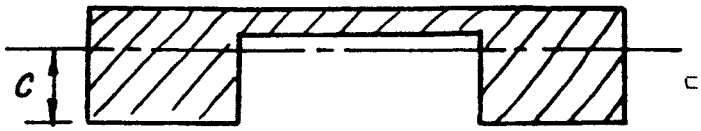

c = .7084 in.

I = .6488 in.

(ref. no. 14)

STRESS ON CROSS-SECTION BETWEEN BRACES

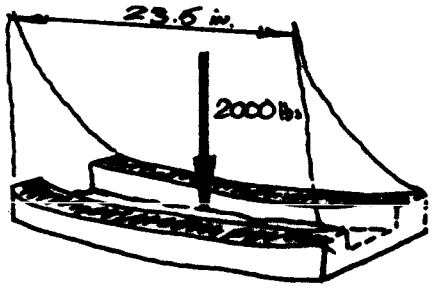

Moment max. = W l / 8 = (2000)(23.5) / 8 = 5875 in.lbs.

Stress max. = M c / I = (5875)(.7084)/ .6488 = 6414.6 psi.

Factor of safety = 24,000 / 6414.6 = 3.74

STRESS ON SECTION HOLDING LOCK/LIFT PIN

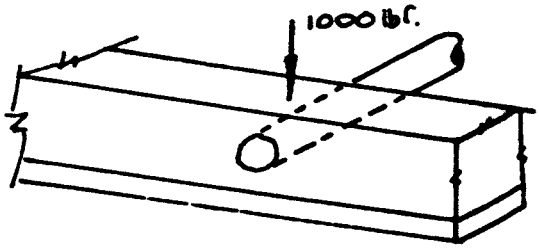

I/c = bh / 6 = (1.5)(1) / 6 = .25 in.

Moment = W l / 8 = (1000)(10)/ 8 = 1250 in. lbs.

Stress Max = M c / I = 1250 / .25 = 5000 psi.

Factor of safety = 24000 / 5000 = 4.8

2. <u>HOOK</u>

From the shear, moment, and axial load diagrams, one can see see that the design of the hook should be based on pts. C and D.

<u>Formulas</u> : $\sigma_{max} = My/I$; $\tau_{max} = VQ/Ib$: for straight section

$$\sigma_i = M(r_n - r_i)/(A\bar{y}r_i) + P/A$$

$$\sigma_i = -M(r_o - r_n)/(Ayr_o) + P/A$$

> taken from stress theory on curved beam sectons

$$\tau_{max} = VQ/Ib$$

Principle stresses: $\sigma_1, \sigma_2 = (\sigma_x+\sigma_y)/2 \pm \sqrt{(\sigma_x+\sigma_y)^2 + \tau_{xy}^2}$

Maximum shear: $\tau_1, \tau_2 = \pm \sqrt{(\sigma_x-\sigma_y)^2 + \tau_{xy}^2}$

For curved section : @ Pt. D on Hook

$A = 3.6$ in , $\bar{y} = .14$ in, $r_n = .95$ in
$M = 1450$ lbfin, $V = 0$, $\tau_{max} = 0$, $P = 1000$ lbf

$\sigma_i = 1450(.95-.5)/(3.6)(.14)(.5) + 1000/3.6 = 2867$ psi T

$\sigma_o = -1450(2.5-.95)/(3.6)(1.4)(2.5) + 1000/3.6 = 1506$ psi C

$\therefore \sigma_i = \sigma_{max} = 2867$ psi tension

For straight section : @ Pt. C on Hook

$V = 1000$ lbf, $Q = 1.74$ in , $I = .183$ in
$M = 500$ lbf, $b = 2.9$ in, $y = .9$ in

$\tau_{max} = VQ/Ib = (1000)(1.74)/(.183)(2.9) = 3278.7$ psi T

$\sigma_{max} = My/I = (-500)(.9)/(.183) = 2459$ psi C

$\sigma_1, \sigma_2 = 2459/2 + (2459/2) + 3278 = 4731, 2278$ psi

$\tau_{max} = + 3502$ psi

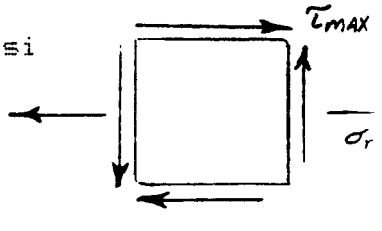

From points C and D one can see that the worst stresses are the following:

$\sigma_{max} = 4731$ psi
$\tau_{max} = 3502$ psi

SECTION 2-2

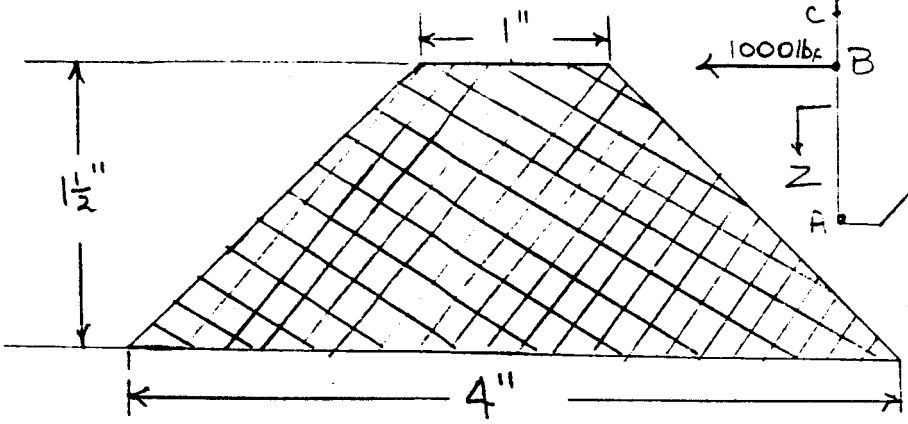

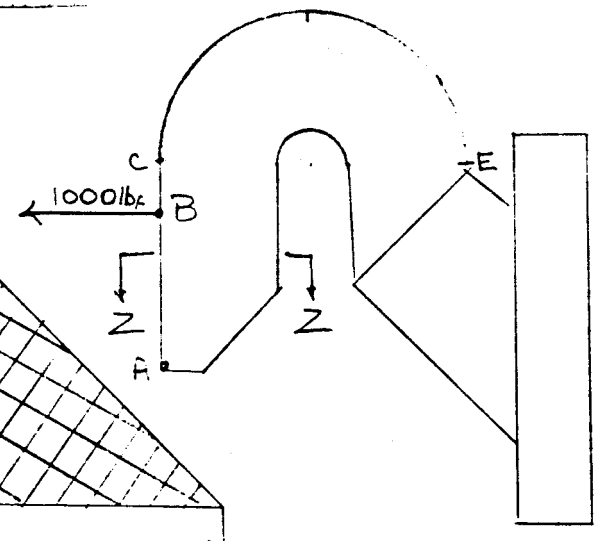

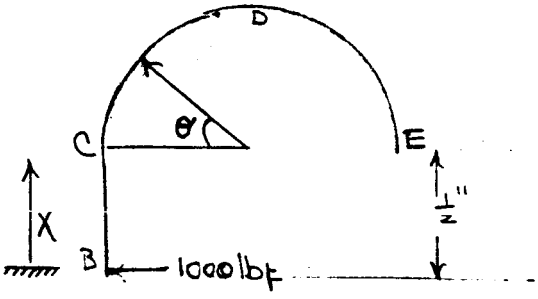

ASSUMPTION:
MAJOR STRESSES WILL BE BETWEEN POINTS A & E

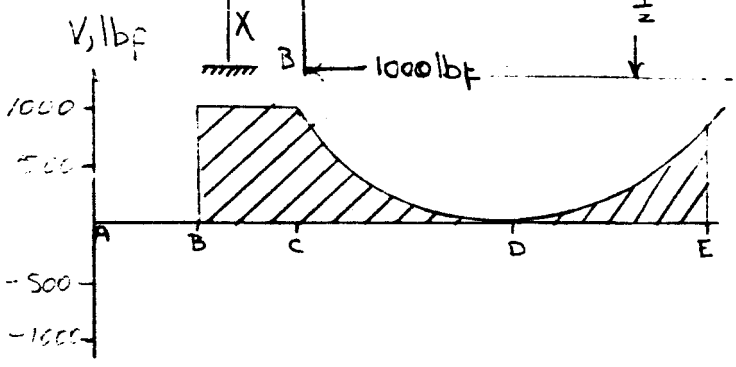

FROM A TO B:
$V=0; M=0; P=0$

FROM B TO C: $[0 \le X \le 6]$ INC

$V = 1000 \text{ lbf}$

$M = -1000(X)$

$P = 0$

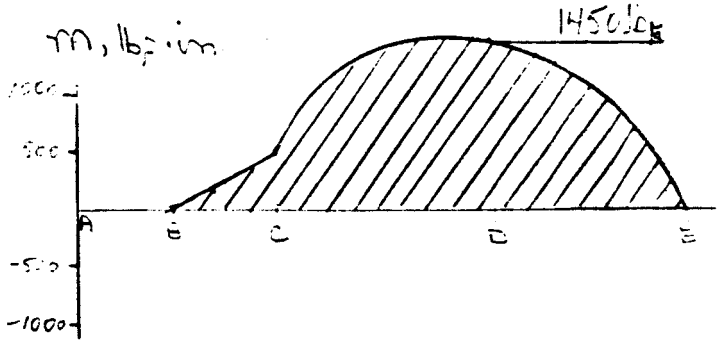

FROM C TO D: $0° \le \theta \le 90°$

$V = 1000 \cos\theta \text{ lbf}$

$M = -[(1000 \sin\theta)(.95) + 1000(.5)] \text{ lbf}$

$P = 1000 \sin\theta$

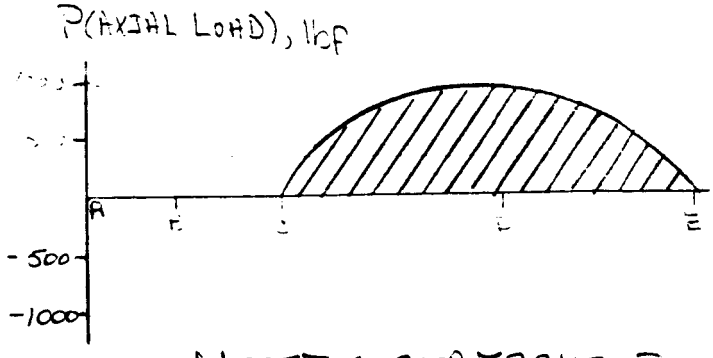

FROM D TO E: $90° \le \theta \le 1$

$V = 1000 \cos(180-\theta) \text{ lbf}$

$M = -[1000 \sin(180-\theta)(.95) + 1000(.5)]$

$P = 1000 \sin(180-\theta)$

NOTE: STRESSES BETWEEN POINTS C & E WERE CALULATED USING CURVED BEAM THEORY

2. HOOK cont.

Stress Analysis of Bar for Hooks

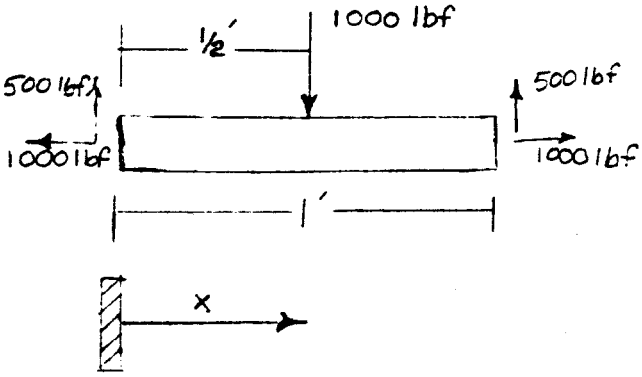

Cross Section

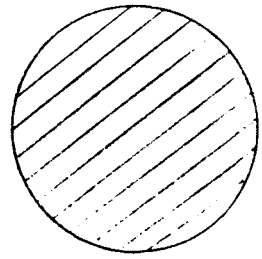

radius = .5"

area = .78 in^2

I = .0491 in^4

C = .5 in

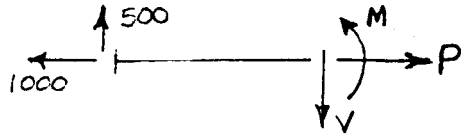

V = -500 lbf
P = 1000 lbf 0' < x < .5'

M = 500(x)

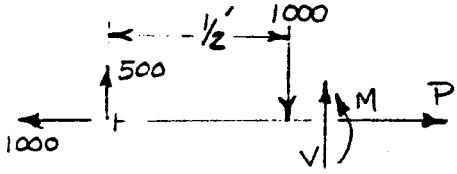

V = 500 lbf .5' < x < 1.0'
P = 1000 lbf

M = (1000)(6) - 500x

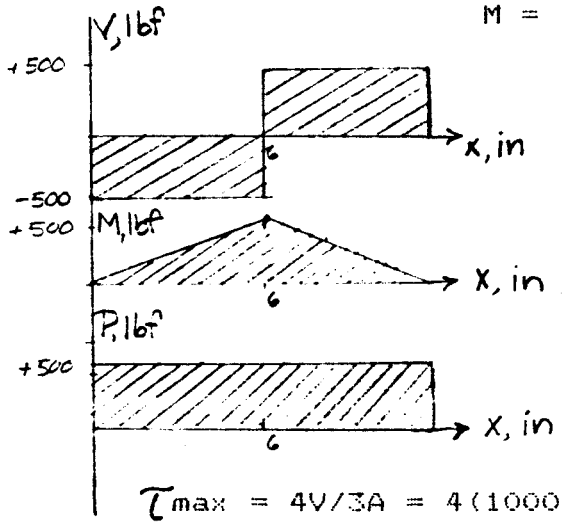

* note: Worst case is at the middle of the bar.

τ_{max} = 4V/3A = 4(1000)/3(6785) = 1700 psi

σ_o = Mc/I = (3000)(.5)/(.0491) = 30,550 psi .. max =

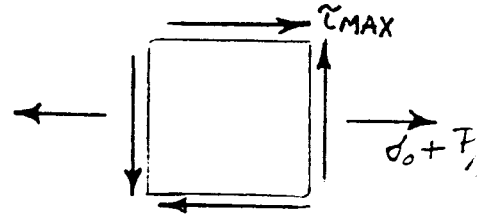

Mohr's Cirle

σ_1, σ_2 = 31825/2 + (3185/2) +(1700) = 32000, -90 psi

τ_{max} = + 16000 psi

P/A = 1000/.785 = 1275 psi
max= 31,875 psi

3. CAM FACE SHAPE DESIGN

VARIABLES

θ_T = ANGLE OF CAM ROTATION FROM ENGAGEMENT TO LOCKED POSITION
b_p = BACKSET OF PIN AXIS
b_c = BACKSET OF CAM AXIS
dd = DRAWDOWN (ALLOWANCE FOR DUST BUILDUP AND RING WARPAGE)
r_p = PIN RADIUS

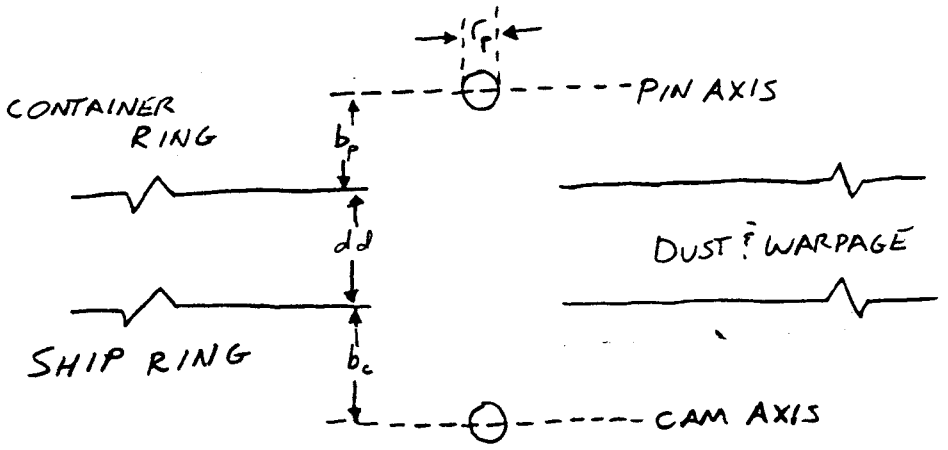

$r_{initial} = b_c + dd + b_p + r_p$ and $r_{final} = b_c + b_p + r_p$

$\theta_{initial} = 0$ and $\theta_{final} = \theta_T$

ASSUMING A LINEAR DRAWDOWN RATE, THE CAM FACE CAN BE PATTERNED AFTER A SIMPLE SPIRAL EQUATION, $r(\theta) = r_o + k\theta$.

for $r_{initial}$ & $\theta_{initial}$, $r(0) = r_{initial}$ so $b_c + dd + b_p + r_p = r_o + k(0)$

$r_o = b_c + dd + b_p + r_p$

for r_{final} & θ_{final}, $r(\theta_T) = r_{final}$ so $b_c + b_p + r_p = r_o + k\theta_T$

$\cancel{b_c} + \cancel{b_p} + \cancel{r_p} = \cancel{b_c} + dd + \cancel{b_p} + \cancel{r_p} + k\theta_T \rightarrow k = -\frac{dd}{\theta_T}$

finally, $r(\theta) = b_c + dd + b_p + r_p - \frac{dd}{\theta_T}\theta$

$$r(\theta) = b_c + b_p + r_p + dd\left(1 - \frac{\theta}{\theta_T}\right)$$

$$r(\theta) = b_c + b_p + r_p + dd\left(1 - \frac{\theta}{\theta_T}\right)$$

VALUES

θ_T WAS CHOSEN TO BE 90° TO PREVENT CAM INTERFERENCE WITH THE PIN AS IT COMES OUT OF STOWAGE POSITION.

b_p WAS CHOSEN TO BE 0.75" AFTER A STRESS ANALYSIS DETERMINED THAT THIS THICKNESS OF MATERIAL COULD WITHSTAND THE SHEAR STRESSES TRANSMITTED BY THE PIN.

b_c WAS CHOSEN TO BE 0.75" FOR THE SAME REASONS AS b_p

dd WAS SET AT 0.25" AS A REASONABLE ARBITRARY VALUE TO ALLOW FOR LUNAR DUST BUILDUP, RING MISALIGNMENT, AND RING WARPAGE.

r_p WAS CHOSEN TO BE 0.25" AFTER A STRESS ANALYSIS DETERMINED THAT THIS DIAMETER OF PIN SHOULD BE ABLE TO WITHSTAND THE BENDING MOMENT TRANSMITTED BY THE CAM FACE.

PLUGGING IN VALUES :

$$r(\theta) = 0.75 + 0.75 + 0.25 + 0.25\left(1 - \frac{\theta}{90}\right)$$

$$r(\theta) = 1.75 + 0.25\left(1 - \frac{\theta}{90}\right) = 1.75 + 0.25 - \frac{0.25}{90}\theta$$

$$r(\theta) = 2 - \frac{\theta}{360}$$

$$\boxed{r(\theta) = 2 - \frac{\theta}{360}}$$

for r in inches and θ in degrees

THIS IS THE FORMULA THAT WAS USED TO DESIGN THE PROPOSED CAM FACE SHAPE.

APPENDIX B

Computer Usage

```
C     THIS PROGRAM USES A MONTE CARLO ROUTINE TO EVALUATE THE
C     STATISTICS OF THE GEOMETRY OF LOCATING THREE PINS IN THREE
C     HOLES.  THE STATISTICS OF THE RANDOM VARIABLES APPEARING IN
C     LOCATING EQUATION DETERMINE THE TOLERENCES NEEDED FOR A
C     SUCCESSFUL DESIGN.
C
C     VARIABLES:
C
C     T(I)    ----  THE DISTANCE BETWEEN PIN CENTERS, OR HOLE CENTERS.
C     P(I)    ----  RANDOM PIN DIAMETER.
C     H(I)    ----  RANDOM HOLE DIAMETER.
C     P1      ----  MEAN PIN DIAMETER.
C     SP      ----  STANDARD DEVIATION OF PIN DIAMETER.
C     H1      ----  MEAN HOLE DIAMETER.
C     SH      ----  STANDARD DEVIATION OF HOLE DIAMETER.
C     T1      ----  MEAN DISTANCE BETWEEN HOLES.
C     ST      ----  STANDARD DEVIATION OF DISTANCE BETWEEN HOLES.
C     PMX(I)  ----  MAX. DISTANCE BETWEEN PIN EDGES.
C     PMN(I)  ----  MIN. DIATANCE BETWEEN PIN EDGES.
C     HMN(I)  ----  MIN. DISTANCE BETWEEN HOLE EDGES.
C     CLR     ----  CLEARANCE ON A RANDOM FIT.
C     YES     ----  NUMBER OF SUCCESSFUL GENERATED CONFIGURATIONS.
C     NO      ----  NUMBER OF FAILURE GENERATED CONFIGURATIONS.
C     AVE     ----  AVERAGE CLEARANCE ON FIT.
C
C
      PROGRAM MONTE(INPUT,OUTPUT)
      REAL H1,P1,T1,SH,SP,ST,CLR,AVE,RN
      REAL H(4),P(4),T(4),HMX(4),HMN(4),PMX(4),PMN(4)
      INTEGER I,J,K,YES,NO,N
      T1=6.258
      ST=.0016
      YES=0
      NO=0
      N=0
      AVE=0
      CLR=0
C
C     READ MEAN PIN SIZE, MEAN HOLE SIZE, PIN STANDARD DEVIATION,
C     AND HOLE STANDARD DEVIATION.
C
      READ*,P1,SP
      READ*,H1,SH
C
C     CALCULATE RANDOM HOLE CONFIGURATION.
C
      DO 10 I=1,500
      DO 15 J=1,3
      CALL RANNOR(RN)
      T(J)=RN*ST+T1
      IF(T(J).LT.0.0)THEN
      T(J)=1.E-50
      END IF
      CALL RANNOR(RN)
      H(J)=RN*SH+H1
      IF(H(J).LT.0.0)THEN
      H(J)=1.E-50
      END IF
   15 CONTINUE
      T(4)=T(1)
```

```
      H(4)=H(1)
      DO 17 J=1,3
      HMX(J)=T(J)+.5*H(J)+.5*H(J+1)
      HMN(J)=T(J)-.5*H(J)-.5*H(J+1)
   17 CONTINUE
C
C     EVALUATE 500 DIFFERENT RANDOM PIN CONFIGURATIONS
C     FOR EACH RANDOM HOLE CONFIGURATION.
C
      DO 20 K=1,500
      DO 25 J=1,3
      CALL RANNOR(RN)
      T(J)=RN*ST+T1
      IF(T(J).LT.0.0)THEN
      T(J)=1.E-50
      END IF
      CALL RANNOR(RN)
      P(J)=RN*SP+P1
      IF(P(J).LT.0.0)THEN
      P(J)=1.E-50
      END IF
   25 CONTINUE
      T(4)=T(1)
      P(4)=P(1)
      DO 27 J=1,3
      PMX(J)=T(J)+.5*P(J)+.5*P(J+1)
      PMN(J)=T(J)-.5*P(J)-.5*P(J+1)
   27 CONTINUE
C
C     EVALUATION
C
      DO 30 J=1,3
      IF(PMX(J).LT.HMX(J).AND.PMN(J).GT.HMN(J))THEN
      YES=YES+1
      CLR=CLR+(HMX(J)-PMX(J))/2+(PMN(J)-HMN(J))/2
      AVE=CLR/(YES*2)
      ELSE
      NO=NO+1
      END IF
   30 CONTINUE
      N=N+1
   20 CONTINUE
   10 CONTINUE
C
C     EVALUATE THE FINAL STATISTICS.
C
      PRINT*,'NUMBER OF TRIALS = ',N
      PRINT*,'  '
      PRINT*,'NUMBER OF SUCCESSES = ',YES
      PRINT*,'  '
      PRINT*,'NUMBER OF FAILURES = ',NO
      PRINT*,'  '
      PRINT*,'AVERAGE CLEARENCE = ',AVE
      END
C
C     SUBROUTINE RANNOR CALCULATES A RANDOM VARIABLE.
C
      SUBROUTINE RANNOR(RN)
      C=3.1415926536
      A=RANF(0)
```

```
B=RANF(4)
E=SQRT(-2.0*ALOG(A))
RN=(E*COS(2*C*B))
RETURN
END
```

B2. On-line Data Base

A useful tool in the research of a cargo interface was the on-line data base. The process consists of completing a search request form with several key words relevant to research subject listed. These words are then incorporated into a search command. Our initial search command read: (Connect $3 with device $1) or (latch $3 or interlock $3 with device $1). This command yielded over 1200 serial listings. Next, the command search: 1 and mechanical, was given in order to condense the list. This produced 60 items. Ten of the items were printed and examined. The subject was still too broad. The initial search command was then altered to : (Connect $3 adj device $1) or (latch $3 with device $1) or (interlock $3 adj device $1) and mechanical. This provided us with 7 listings. Two of the selection were relevant to design. The on-line data base proved to be a useful tool in researching a cargo interface, although we didn't utilize it to full capacity.

AB Bonding resins to enamel requires some form of mechanical attachment. Currently the dissolution of the outermost enamel layer is involved in etching with phosphoric acid. One of the authors (Smith, with L. Cartz) has previously demonstrated that polyacrylic acid solutions which contained residual sulfate ion produced a white crystalline deposit on the tooth surface which was shown to be calcium sulfate dihydrate (i.e., gypsum). These crystals were firmly bonded to the enamel and appeared to be nucleated in the surface. The purpose of the present investigation was to determine the potential value of this crystalline intrface as a mechanical interlocking device for bonding materials to the tooth for orthodontic and restorative applications. The crystals produced as good a bond strength as conventional acid etching. The crystals can be removed from the enamel with an ultrasonic or sickle-scaler followed by pumice prophylaxis. Many variations of the crystal growth principle may be visualized, including the development of fluoride-containing crystals. 6 refs.
LG EN.

2

AN EI 8004-029183.
AU Halpin-B-J. Johns-D-R. Manson-K.
TI HEAVY-CURRENT POINT-ON-WAVE SWITCHING DEVICE.
SO NZ Energy J v 52 n 6 Jun 25 1979 p 79-81.
MJ ELECTRONIC-CIRCUITS-SWITCHING.
CC A713.
CD NZEJDU.
AB A simple, robust device is described based on a mechanical latching principle triggered by a synchronous motor. The device is capable of making and carrying for three seconds currents up to 10kA. The switching point can be adjusted easily and is consistent to within plus or minus 1 degree electrical. 1 ref.
LG EN.

3

AN EI 8607-057222.
AU Hayashi-N. Kanehira-H.
IN Univ of Electro-Communications, Jpn.
TI DESIGN OF CURRENT-SHEET MAGNETIC BUBBLE ASSOCIATIVE-SEARCH DEVICES.
SO IEEE Transl J Magn Jpn v TJMJ-1 n 3 Jun 1985, Contrib from the 8th Annu Meet of the Magn Soc of Jpn, Hiroshima, Jpn, Nov 13-15 1984 p 285-286.
MJ DATA-STORAGE-MAGNETIC.
MN Bubbles.
ID ASSOCIATIVE-SEARCH-DEVICE. CURRENT-SHEET-MECHANISM. REPULSION-BETWEEN-BUBBLES.
XR DATA-STORAGE-DIGITAL: Associative. ELECTRONIC-CIRCUITS-COMPARATOR.
IS 0882-4959.
CC A713. A721.
CD ITJJER.
TR T (Theoretical).
PT JA (Journal Article).
AB Summary form only given. The authors describe an associative-search device with a current-sheet mechanism which uses the repulsive force between bubbles. This is a modification of the device proposed by S. Y. Lee et al. (1979). Composed of data, a tag, a latch, a comparator circuit, and a deflecting path, the device compares input bubbles with inquiry tag information. Bubbles not matching the bit contents of the tag are loaded into the latch, and repel subsequent bubbles onto the deflecting path, blocking the main path. In mechanical model experiments, the device operated satisfactorily in three basic operation modes. 2 refs.
LG EN.

IN Technical Univ of Nova Scotia, Dep of Mechanical Engineering, Halifax, NS, Can.
TI OCEAN WAVE ENERGY CONVERSION DEVICES POPULAR TODAY.
SO Trans Can Soc Mech Eng v 9 n 2 1985 p 105-113.
MJ WATER-WAVES.
MN Wave-Energy-Conversion.
IS 0315-8977.
CC A471. A615. A631.
CD TCMEAP.
TR A (Applications). G (General Review).
PT JA (Journal Article).
AB The paper examines several wave energy devices which are currently being investigated in the United Kingdom, Japan, Norway and the U.S.A. Each is briefly examined in respect to its operating principles, efficiency, advantages, weaknesses and state of development. The devices discussed are: (1) the Kaimei, the floating ship off the coast of Japan; (2) Salter's nodding duck with its gyroscopic reference frame; (3) the Lancaster flexible bag; (4) the SEA CLAM version of a flexible bag; (5) the NEL oscillating water column fixed rigidly to the ground; (6) the Vickers terminator and attenuator versions of the oscillating water column; (7) the Norwegian use of a 'harbor' with an oscillating water column used to increase the device's range of frequency response; (8) the latching buoy of Norway; and (9) the Bristol cylinder. Also presented are the studies at the Technical University of Nova Scotia of a two hinged floating raft, the DAM ATOLL of U.S.A. origin and a version of an oscillating water column device designed to increase its spectral response. (Author abstract). 25 refs.
LG EN.

5
AN EI 8412-139713.
AU Greenhow-Martin. Rosen-Jay-H. Reed-Mark.
IN MIT, Dep of Ocean Engineering, Cambridge, Mass, USA.
TI CONTROL STRATEGIES FOR THE CLAM WAVE ENERGY DEVICE.
SO Appl Ocean Res v 6 n 4 Oct 1984 p 197-206.
MJ WATER-WAVES.
MN Wave-Energy-Conversion.
IS 0141-1187.
CC A471. A615. A631.
CD AOCRDS.
AB The clam extracts energy by pumping air through a specially designed (Wells) turbine. Although operation of the Wells turbine does not require a rectified air flow, some additional control will be necessary to optimize the phase of the clam motion for good efficiencies. An examination of the equation of motion in the time domain suggests the possibility of phase control by mechanical, power take-off, or pneumatic latching. Latching can be shown to increase the efficiency of the device in the longer wavelengths of the wave spectrum, i.e. those of high incident wave power. Equivalently latching could be used to keep the device efficiency high while reducing its size, possibly resulting in cheaper power extraction. 29 refs.
LG EN.

6
AN EI 7903-019349.
AU Marzouk-H-M. Hosain-M-U. Nels-V-V.
IN Univ of Sask, Saskatoon.
TI BUILT-UP UTILITY POLES USING PRAIRIE TIMBER.
SO For Prod J v 28 n 11 Nov 1978 p 49-54.
MJ POLES.

TS 800 .F58

AB Sn-fusing or tin fusing is a method of joining copper electrical conductors which results in an excellent electrical and mechanical connection without the requirement of any type of terminal or other mechanical holding device. Bare and film insulated conductors can be joined. Sn-fusing requires that one of the conductors be coated with tin. Tin purifies the copper or its alloys at the joint's interface and results in a diffusion bond. The article discusses the steps involved and the intermetallics formed.
LG EN.

3
AN EI 8311-097306.
AU Akay-Adnan. Latcha-Michael.
IN Wayne State Univ, Mechanical Engineering Dep, Detroit, Mich, USA.
TI SOUND RADIATION FROM AN IMPACT-EXCITED CLAMPED CIRCULAR PLATE IN AN INFINITE BAFFLE.
SO J Acoust Soc Am v 74 n 2 Aug 1983 p 640-648.
MJ SHOCK-WAVES.
XR PLATES: Acoustic-Properties. ACOUSTIC-WAVES: Propagation.
IS 0001-4966.
CC A408. A751.
CD JASMAN.
AB Sound radiation from most mechanical systems results from impact forces of various kinds. In this paper, transient sound radiation from impact-excited circular plates is studied both analytically and experimentally.
LG EN.

4
AN EI 8308-062935.
AU Barkan-P. Liu-T. Rostami-A. Tabanfar-S.
IN Stanford Univ, Dep of Mechanical Engineering, Stanford, Calif, USA.
TI EFFECTS OF REDUCED FAULT DURATION UPON POWER SYSTEM COMPONENTS. A STUDY OF THE FEASIBILITY OF A GREATLY SIMPLIFIED ALTERNATIVE TO THE FAULT CURRENT LIMITER.
SO Electr Power Res Inst Rep EPRI EL 2772 Dec 1982 var pagings.
MJ ELECTRIC-SUBSTATIONS.
MN Overcurrent-Protection.
XR ELECTRIC-FAULT-CURRENTS.
CC A704. A706.
CD EPELD3.
AB A need exists for practical means to extend the fault current capacity of transmission substations. The current concept of a protective scheme based upon fault limitation after the first current loop is formulated. By means of surveys of utilities and workshops, information has been compiled on both the industry needs and on the characteristics of actual fault currents. Consensus has been obtained on criteria for an acceptable protective scheme. Manufacturers have been consulted to assess the probable behavior of existing substation apparatus when subjected to higher than rated faults whose duration is limited to a single current loop. A test program has evaluated the ability of diverse contact structures to handle currents in excess of rating. This report summarizes the information learned to date and considers a specific 69kv application of the concept. The present assessment suggests that 160% of rating will meet the needs and is attainable provided that appropriate back-up protection can be devised. It is shown that the likelihood of subjecting circuit breakers to instantaneous currents in execess of close and latch rating is rare. Tests have demonstrated the ability of circuit brakers with multiple finger contact structures to accomodate this duty without difficulty. Approximate, analytical methods have been devised to assist in the identification of systems which the proposed protection scheme can

STRUCTURAL-DESIGN.
CC A405. A408. A931.
CD FPJOAB.
AB The objectives of this paper are to discuss several designs developed to compensate for the limited lengths of jack pine poles and to describe the tests used to evaluate their strength and stiffness characteristics. Based on this investigation, two economical designs are suggested. The first design consists of splicing two jack pine poles with a steel connecting device. The second design is a frame consisting of several spliced logs.
LG EN.

7

AN EI 7709-066602.
AU Vasilevykh-L-A. Magaziner-V-A.
TI DEVICE FOR DAMPING OF VIBRATIONS IN WORKPIECES.
SO Russ Eng J v 55 n 11 1975 p 58-59.
MJ MACHINE-TOOLS.
MN Attachments.
XR VIBRATIONS: Absorption.
CC A603. A931.
CD RENJA3.
AB Vibration dampers are more efficient when fitted with a supplementary mechanical link through the damper to the cross-slide of the machine tool saddle; their use, however, presents more inconvenience caused by any change of diameter of the workpiece necessitating dimensional adjustment of the damper. In this connection a device was developed, and it was introduced in a number of factories, for damping vibrations in the workpieces, which represents an improvement of the known designs of lever-operated type of vibration dampers. The characteristic feature of the design is the presence of the inclined slot in the lever for the axle of a roller, and of two holes for fitting a dowel which connects the lever with the toolpost.
LG EN.

TI BATCH CONTROL IN DOSING AND WEIGHING.
SO Control Instrum v 17 n 11 Nov 1985 p 144-145.
MJ PROCESS-CONTROL.
MN Equipment.
ID BATCH-CONTROL. TIME-DOSINGS. CLOCK-GENERATOR. VOLUMETRIC-DOSINGS. METERING-PUMPS.
XR SCALES-AND-WEIGHING.
IS 0010-8022.
CC A723. A731. A732. A943.
CD CTLIAW.
TR A (Applications).
PT JA (Journal Article).
AB A popular application of a batch controller is in the dosing and weighing field. Mechanical as well as electromechanical scales can be connected and in a typical system up to eight differentiated analogue signals can be entered, including analogue measured values transmitted by temperature and/or moisture measuring devices. For time dosings a clock generator integrated into the batch controller transmits, say, 10 pulses per second. In the case of volumetric dosings, as for example with metering pumps, incoming pulses are counted. A microcomputer-based batch control system for state-of-the-art dosing and weighing is described.
LG EN.

2
AN EI 8611-108048.
AU Warner-Allan.
IN Joyal Products Inc, Linden, NJ, USA.
TI SN-FUSING.
SO Coil Winding Int v 9 n 1 Apr-May 1985 p 6-7, 10-12, 14-15.
MJ ELECTRIC-CONDUCTORS-WIRE.
MN Bonding.
ID TIN-FUSING. SN-FUSING. COPPER-TIN-INTERMETALLICS.
XR COPPER-AND-ALLOYS: Bonding. TIN-AND-ALLOYS: Applications. INTERMETALLICS.
CC A531. A538. A544. A546. A704.
CD COWIDL.
TR A (Applications). E (Economic/Cost Data/Market Survey). G (General

AN EI 8307-055681.
AU Anon.
TI THE PRESENT STATUS AND DEVELOPMENT OF LARGE MINE HOISTS IN CHINA.
SO Coal Sci Technol (Peking) n 12 Dec 1982 p 15-19.
MJ MINE-HOISTS.
XR COAL-MINES-AND-MINING.
CC A502. A503. A693.
CD CSTPDL.
AB For single-rope wound hoists, development has been in these areas: improving the drum structure, parallel rope grooves for multiple-layer winding, development of a radial-tooth-type rope-adjusting clutch, adoption of keyless connection, development of an epicyclic reducer, improvement of disc brakes, development of high-performance disc brake shoes, power-pack for the secondary brake and use of a mechanical micro-drive. For multi-rope hoists, development has been in these areas: improvement of the guide wheel and development of low-speed, directly-connected suspension dc motors and control devices for determining the position of the hoisting containers. In Chinese with English abstract.
LG CH.

6
AN EI 8302-015031.
AU Harris-Richard-E.
IN Appl Color Syst, Princeton, NJ, USA.
TI ADDING 'COMPUTER POWER' TO COLOR SHOP OPERATIONS.
SO Am Dyest Rep v 71 n 9 Sep 1982 p 25, 70.
MJ TEXTILES.
MN Printing.
XR TEXTILE-FINISHING: Computer-Applications.
IS 0002-8266.
CC A723. A745. A802. A819.
CD ADREAI.
AB An automated production dispensing system is described that was developed for textile printing plants and is used in conjunction with a color computer. The system consists of electro-mechanical fluid handling devices under the command of a controller which is bus-connected to the color computer. The advantages of the automated system over manual dispensing are specified including increased production throughput, waste reduction and human error reduction. The implementation of such systems makes it possible to transfer laboratory precision into production operations and to provide new levels of efficiency in textile printing.
LG EN.

7
AN EI 8210-087428.
AU Buettner-Peter. Siebert-Hans-Ebernard. Rijanto-Hendro.
TI ENTWICKLUNGSMOEGLICHKEITEN IM NETZSCHUTZ DURCH DEN EINSATZ VOM MIKROPROZESSOREN. (Development Possibilities in Power-system Protection by the Use of Microprocessors).
SO Wiss Ber AEG Telefunken v 55 n 1-2 1982 p 67-72.
MJ ELECTRIC-POWER-SYSTEMS.
MN Protection.
XR COMPUTERS-MICROPROCESSOR: Applications.
IS 0043-6801.
CC A706. A723.
CD WBATB3.
AB In addition to conventional mechanical protective relays, digital protective concepts are increasingly employed. Progress in semiconductor technology has made possible the design of efficient computer structures which not only influence the individual protective devices but also allow interconnecting the protective

permits standardizing and combining the secondary technology from which completely novel concepts follow. Remote controlled protection is described which was tested in the laboratory and in an Austrian Kaprun power generating station. 2 refs. In German.
LG EN.

8
AN EI 8208-072184.
AU Kuzushima-Yoshiaki. Nojiri-Hideo. Imai-Hideaki. Kosugi-Takashi. Yoshida-Noriyoshi.
IN NEC, Jpn.
TI MODEL B7 EQUIPMENT FOR TRANSMISSION EQUIPMENT.
SO NEC Res Dev v 62 Jul 1981 p 24-30.
MJ RADIO-TRANSMISSION.
MN Equipment.
XR RADIO-EQUIPMENT: Modular-Construction. INTEGRATED-CIRCUITS: Large-Scale-Integration.
IS 0547-051X.
CC A713. A714. A716.
CD NECRAU.
AB A new mechanical design for installing transmission equipment is described. In line with the recent progress in pertinent technology, NEC is now improving its equipment with several new products designed to meet the growing needs for communication services which are easily expandable, economically constructed, easily installed, etc. The new equipment has adopted mechanically-standardized plug-in units and functional blocks using newly developed transmission devices, ICs and LSIs, thus ensuring highly reliable connections based on the dispersive direct connection of station cables in a bay frame (connecting cables direct to separate moduracks). The equipment is earthquake-proof.
LG EN.

9
AN EI 8203-022280.
AU Eissler-W. Jentner-W. Warnecke-H-J.
IN Fraunhofer-Ges, Stuttgart, Ger.
TI AUTOMATED INSPECTION OF FERRITE PERMANENT MAGNETS FOR MECHANICAL DAMAGES.
SO Proc of the Int Conf on Autom Insp and Prod Control, 5th and IPA, Arbeitstag, 12th, (Inst fuer Produktionstech und Autom), Stuttgart, Ger, Jun 24-26, 1980 Publ by IFS (Publ), Kempston, Bedford, Engl, 1980 p 153-164.
MJ MAGNETS.
MN Inspection.
ID AUTOMATED-INSPECTION.
XR FERRITES: Defects. SENSORS: Applications.
CC A704. A708. A732. A913.
AB A device for the automated inspection of ferrite permanent magnets for mechanical defects (break outs, peeling offs, chinks) is described. Up to now these magnets have been visually checked for defects. Basically the test device comprises a geometrical arrangement of sensors, consisting of electrically connected inductive transducers. With a clock cycle of 1 piece/s the test piece can thus be checked automatically for profile errors as a result of mechanical damage. Break outs and peeling offs up to an extend of maximal 2 multiplied by 2 multiplied by 0,5 mm can be recognized. The electronic signal processing connects the different sensor signals and takes the necessary decision for correct and faulty pieces in order to control the marking and elimination devices. The device has proven its reliability under laboratory conditions. 2 refs.
LG EN.

AU Nardone-Daniel-V.
IN AMP Inc, Harrisburg, Pa.
TI CONNECTOR FOR PIEZOELECTRIC TONE GENERATORS.
SO Annu Connector Symp Proc 13th, Philadelphia, Pa, Oct 8-9 1980. Publ by Electron Connector Study Group Inc, Fort Washington, Pa, 1980 p 341-346.
MJ PIEZOELECTRIC-TRANSDUCERS.
XR ELECTRIC-CONNECTORS. ACOUSTIC-GENERATORS.
IS 0145-0085.
CC A704. A714. A752.
CD ACPRD9.
AB Described is a device for connecting a circular piezoelectric transducer disk to a printed circuit board. The part is designed for easy, quick assembly. Holding a vibrating transducer disk without inducing a great amount of damping or adversely restricting its motion is very difficult. This disk grasping method provides a clear, consistent, and relatively loud sound output. Also, it is compatible with the trend toward denser printed circuit board componentry since electronic parts, including integrated circuit packages, can be nested inside the connector. The paper explains how the connector development process addressed the electrical, mechanical, acoustical, and economic requirements associated with making a reliable connector. Included are material fatigue design criteria and a presentation of the sound output analysis.
LG EN.

B3. Patent Search.

Another tool in the research of our cargo interface was the patent search. This operates in much same way as the on-line data base search. Several related subjects are given and a search is performed. These produced approximately 20 relevant patents. One in particular (the design of a missile launcher) was very informative to the research.

Lee Don

Reset st on
Menu Mode-cm 280/186

Clsf selected: 280/186
Number of patents: 84
1. 4,282,621 XR - RELEASABLE LOCKING DEVICE
2. 2,997,136 XR -
3. 2,711,605 OR -
4. 2,652,552 XR -
5. 2,392,053 OR -
6. 1,266,068 OR -
7. 1,257,734 OR -
8. 1,257,727 OR -
9. 1,256,396 OR -
10. 1,232,092 OR -

If some of these classification numbers are especially relevant you can come back and get the remainder of the patent numbers in those classes.

Classification Mode-cm 280/511
Clsf selected: 280/511
Number of patents: 191
1. 4,613,149 XR - ** TITLE NOT YET AVAILABLE **
2. 4,610,457 XR - ** TITLE NOT YET AVAILABLE **
3. 4,607,858 XR - ** TITLE NOT YET AVAILABLE **
4. 4,596,406 OR - QUICK CHANGE BALL HITCH APPARATUS
5. 4,576,395 OR - TRAILER HITCH MOUNTED TOOL SUPPORT
6. 4,570,966 XR - RETRACTABLE TRAILER HITCH BALL
7. 4,568,098 XR - TRAILER HITCH
8. 4,548,418 XR - TRAILER SUPPORT STAND
9. 4,546,994 XR - UNIVERSAL TRAILER HITCH
10. 4,527,305 XR - ROUND HAY TRANSPORTER

Classification Mode-cm 105/355
Clsf selected: 105/355
Number of patents: 66
1. 4,413,563 XR - METHOD OF AUTOMATICALLY OPERATING A SEMI-CONTINUOUS PASSENGER TRANSPORT SYSTEM USING PASSIVE VEHICLES, AND MEANS FOR IMPLEMENTING SAME
2. 3,877,334 OR - PNEUMATICALLY CONTROLLED RAILROAD BOX CAR DOOR LATCHING DEVICE
3. 3,342,376 XR -
4. 2,430,652 XR -
5. 1,881,503 XR -
6. 1,880,367 XR -
7. 1,804,443 OR -
8. 1,779,780 XR -
9. 1,776,559 OR -
10. 1,768,224 OR -

Classification Mode-cm 403/216.4
Invalid clsf syntax: 403/216.4
Classification Mode-cm 216.4
Invalid clsf syntax: 216.4

> Invalid classification number

Classification Mode-cm 206/405
Clsf selected: 206/405
Number of patents: 30
1. 4,433,762 XR - MAGAZINE ASSEMBLY FOR COIL NAILS
2. 4,320,834 XR - REEL CONTAINER
3. 4,271,953 XR - DISK PACK HANDLE MECHANISM
4. 4,252,487 XR - SINGLE DISK CARTRIDGE
5. 4,184,54[illegible] XR - TAPE CASSETTE CASE
6. 4,064,376 XR - VIDEO DISC PACKAGE HAVING A CENTER POST
7. 4,[illegible] OR - [illegible] CONTAINER

10. 3,882,333 XR - LOCKING REEL CONTAINER

Classification Mode-cm 206/404

Clsf selected: 206/404

Number of patents: 21

1. 4,577,756 XR - PROTECTIVE CANISTER FOR COMPUTER DISCS
2. 4,480,936 XR - TWO-PIECE TAPE/RIBBON CARTRIDGE
3. 4,407,412 OR - PLASTICS SPOOL CONTAINER FOR MAGNETIC TAPES
4. 4,320,834 OR - REEL CONTAINER
5. 4,109,789 OR - SELF-CONTAINED LATCH CONSTRUCTIONS FOR INTERLOCKING CONTAINERS IN STACKED RELATION
6. 4,030,602 OR - DEVICE FOR SEPARABLY COUPLING SECTION OF CASSETTES FOR MOTION PICTURE FILM OR THE LIKE
7. 3,865,238 OR - TAPE PROTECTING COVER DEVICE
8. 3,806,950 XR - BANDAGE SHOCK ABSORBERS FOR SAFETY HELMETS
9. 3,744,828 XR - LID LATCH
10. 3,734,340 XR - CONTAINERS AND LINERS FOR USE IN COMPACTING SYSTEMS OR THE LIKE

Classification Mode-cm 206/831

Clsf selected: 206/831

Number of patents: 121

1. 4,591,054 XR - COMBINATION PURSE-COUPON ORGANIZER DEVICE, METHODS OF CONSTRUCTING AND UTILIZING SAME
2. 4,417,609 XR - COMBINATION COUPON CARRIER AND BAG STIFFENER
3. 4,403,689 XR - ARTICLE CARRIER
4. 4,359,358 XR - IN-STORE COUPON AND METHODS
5. 4,345,393 XR - PEELABLE ON-PACKAGE COUPON AND METHOD FOR MAKING SAME
6. 4,324,823 XR - SELECTIVE TAMPER RESISTANCE FOR ON-PACKAGE PEELABLE PREMIUMS
7. 4,313,235 XR - LABEL AND LABELLED ARTICLE
8. 4,308,679 XR - LAMINATED CONTAINER STRUCTURE INCORPORATING A PEELABLE PANEL SECTION HAVING A HEAT TRANSFERABLE IMAGE
9. 4,305,367 XR - TAMPER RESISTANT MEANS FOR ON-PACKAGE PEELABLE PREMIUM
10. 4,281,762 XR - IN-STORE COUPON AND METHODS

Classification Mode-cm 102/384

Clsf selected: 102/384

Number of patents: 117

1. 4,595,157 XR - CONTROL SYSTEM PARTICULARLY FOR WINGLESS GUIDED AMMUNITION
2. 4,568,040 XR - TERMINAL GUIDANCE METHOD AND A GUIDED MISSILE OPERATING ACCORDING TO THIS METHOD
3. 4,492,166 OR - SUBMUNITION HAVING TERMINAL TRAJECTORY CORRECTION
4. 4,417,520 XR - SEQUENTIAL TIME DISCRIMINATION SYSTEM FOR SUB-DELIVERY SYSTEMS
5. 4,336,770 OR - OVERFLYING MUNITIONS DEVICE AND SYSTEM
6. 4,290,364 OR - GUIDED BOMB FOR USE IN LOW LEVEL FLYING
7. 4,264,043 OR - STABILIZER FOR AEROSPACE VEHICLES
8. 4,228,737 OR - GLIDE BOMB
9. 4,143,836 XR - METHOD AND DEVICE FOR SPREAD BOMBING
10. 4,027,834 XR - MISSILE NOZZLE CONFIGURATION

Classification Mode-cm 89/1.54

Clsf selected: 89/1.54

Number of patents: 57

1. 4,616,793 XR - ** TITLE NOT YET AVAILABLE **
2. 4,600,171 XR - ** TITLE NOT YET AVAILABLE **
3. 4,552,327 XR - HYDRAULIC EJECTOR
4. 4,543,873 XR - METHOD AND SYSTEM FOR STORE RACK CARRIAGE
5. 4,520,975 XR - AIR-BAG EJECTION SYSTEM FOR STORE DEPLOYMENT
6. 4,496,159 XR - AERIAL GUNNERY TARGET DEPLOYMENT SYSTEM
7. 4,440,365 XR - LAUNCH MECHANISM
8. 4,417,709 XR - SPREADING DEVICE
9. 4,283,988 XR - TAIL CARRIAGE OF STORES
10. 4,168,123 XR - AIRCRAFT WEAPON SYSTEMS

Classification Mode-cm 89/1.55

CARRYING OUT THE METHOD

3. 4,307,650 OR - WEAPONS SYSTEM FOR THE BALLISTIC AND GUIDED ATTACK OF MULTIPLE TARGETS, ESPECIALLY BY AN AIRCRAFT
4. 4,246,472 XR - CONTROLLED STORE SEPARATION SYSTEM
5. 4,215,621 OR - TARGET MARKER PLACEMENT FOR DIVE-TOSS DELIVERIES WITH WINGS NONLEVEL
6. 4,187,761 XR - VARIABLE FORCE CONTROL SYSTEM FOR WEAPON EJECTION MECHANISMS
7. 4,187,760 OR - INFLIGHT, STORES, FORCES AND MOMENTS MEASURING DEVICE
8. 4,172,407 OR - SUBMUNITION DISPENSER SYSTEM
9. 4,086,841 OR - HELICAL PATH MUNITIONS DELIVERY
10. 3,995,144 XR - BANKED BOMBING SYSTEM

Classification Mode-cm 89/1.59
Clsf selected: 89/1.59
Number of patents: 94

1. 4,605,517 XR - ** TITLE NOT YET AVAILABLE **
2. 4,600,171 XR - ** TITLE NOT YET AVAILABLE **
3. 4,589,615 XR - STORE LOAD AND EJECTOR DEVICE FOR AIRCRAFT
4. 4,573,353 OR - BOX DISTRIBUTOR FOR SEQUENTIALLY DISCHARGING OBJECTS FROM AIRCRAFT AND LANDCRAFT MEANS
5. 4,543,873 OR - METHOD AND SYSTEM FOR STORE RACK CARRIAGE
6. 4,441,674 XR - CONSTRAINED STORE EJECTOR
7. 4,318,328 XR - REMOVABLE EXTERNAL PAYLOAD CARRIER FOR AIRCRAFT
8. 4,313,582 XR - DEVICE WITH INDEPENDENT HOOKS AND AUTOMATIC LOCKING MECHANISM FOR HOOKING UP LOADS UNDER AIRCRAFT
9. 4,256,012 XR - MISSILE LAUNCHER FOR AIRCRAFT
10. 4,171,664 OR - MINE SIMULATOR PLANTING RACK AND RELEASE MECHANISM

B4. ASM Metal Selector Software

As an additional aid to our metal selection the ASM Metal Selector software was used. This software package is an IBM-PC compatible and is produced by the American Society for Metals. The Metal Selector program contains a database providing information about hundreds of common alloys. Each alloy is listed with its most important mechanical properties, processing and service characteristics, and equivalent specifications so that an individual can search for the alloy best suited for his needs.

MetalSelector

American Society for Metals

Metals Park, OH 44073

Copyright 1985

B5. Computer Aided Design systems

The Apollo Geo-Draw and CADAM systems were very helpful in the representation of our design. The hook assemblies and the camlock systems were completely drawn on the Apollo. The CADAM system was used to produce very polished drawings of the cargo configuration. Both of these systems were big time savers, in that they produce high quality drawings with less effort spent. Also, The availability of the Apollo Geo-Draw and CADAM systems provided us with CAD experience.

B6. Volkswriter

Volkswriter is the word processing software we used in writing the design report. It proved very user friendly.

APPENDIX C

Composites

C.COMPOSITES USAGE :

A potential way to reduce the weight of our designed cargo interface would be to construct the rings out of a composite material. Graphite/epoxy composites have very attractive properties such as low density, high stiffness, and a low coefficient of thermal expansion (CTE). High modulus fibers, namely, Hercules HMS and Celanese GY-70, actually have negative CTE's and are capable of providing multidirectional laminates with near-zero thermal expansion in a given direction.

In designing the ring, it was kept in mind that the material used might very well be composites. The dimensions stated must be kept the same, however the construction can easily be modified to utilize 16 ply sheets.

We decided to design this project using known low expansion metals for two main reasons. First, we do not have the expertise to analyse the stresses that would develop in a multi-directional composite sheet. Secondly, to date there is a problem using composites in applications with excessive thermal cycling. This is mostly due to crack formation as a

result of large differences in CTE between the epoxy resins and the fibers. We suggest, however, that composites be further investgated and researched for this application.

APPENDIX D

Brainstorming

IS WHEEL
O SHIP

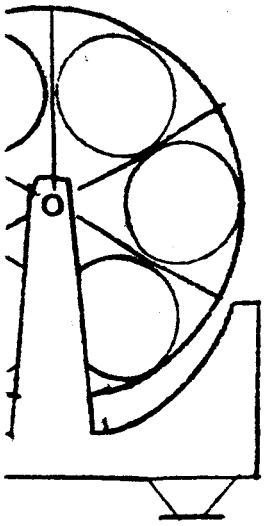

RONT

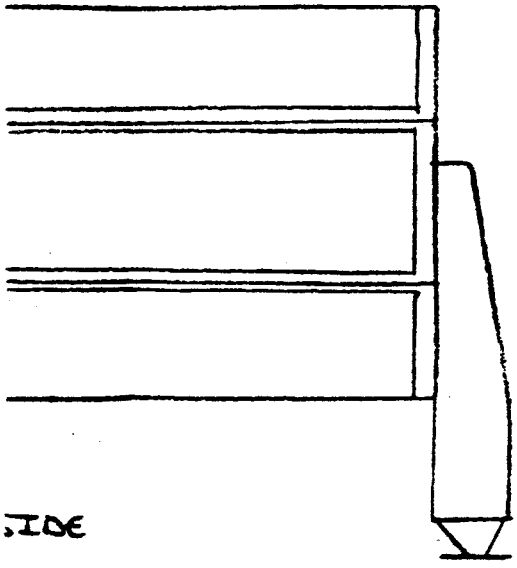

IDE

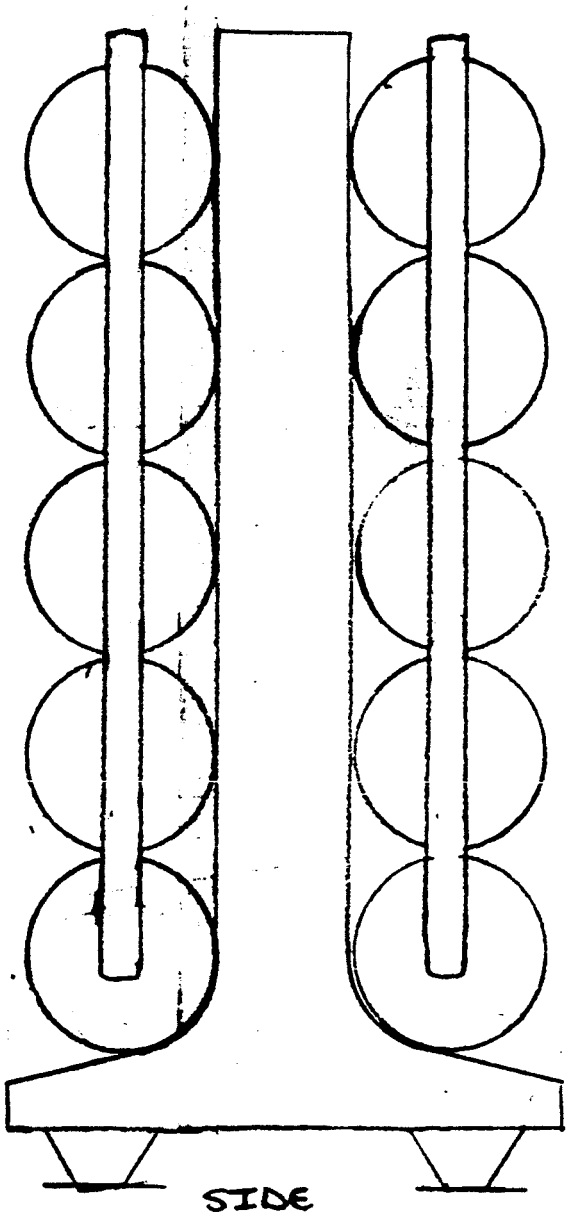

SIDE

COKE MACHINE
CARGO SHIP

BRAINSTORMING EXAMPLES
SHIP CONFIGURATIONS

SCALE:	APPROVED BY:	DRAWN BY
DATE:		REVISED
		DRAWING NUMBER

FERRIS WHEEL
CARGO SHIP

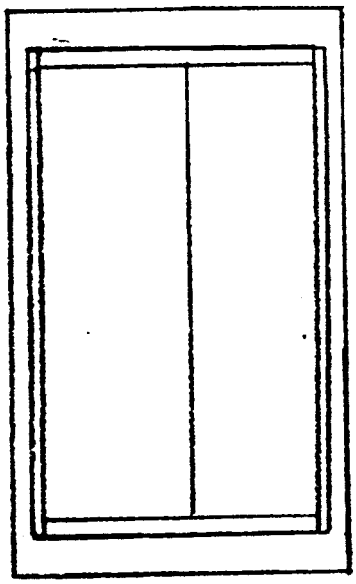

TOP

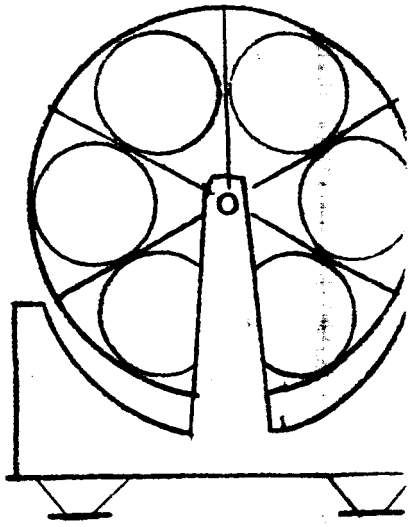

FRONT

HORIZONTAL
CARGO SHIP

FRONT

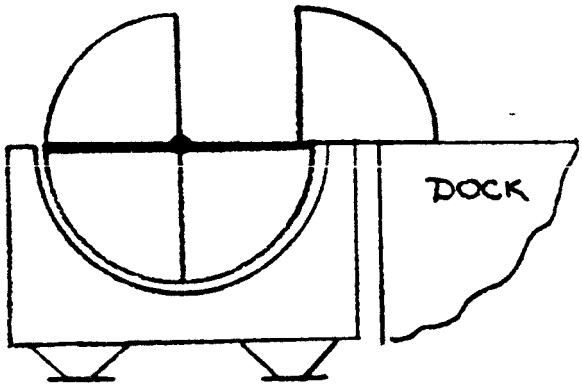

SIDE

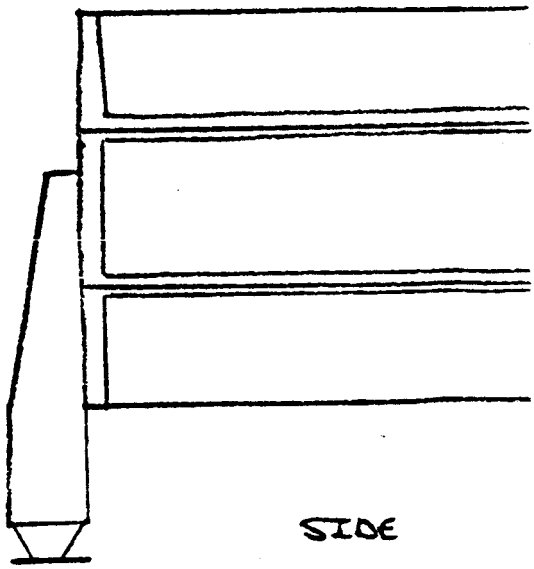

SIDE

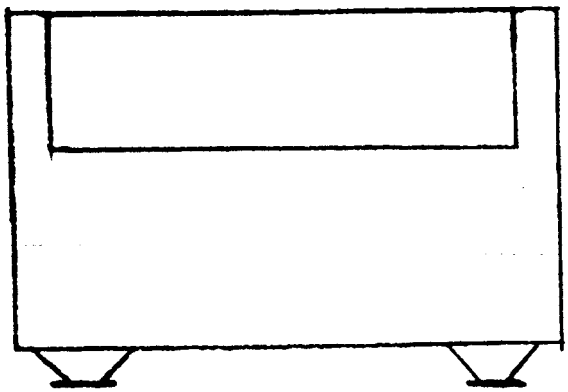

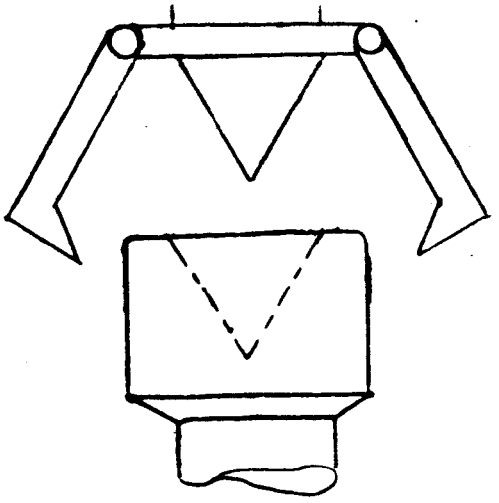

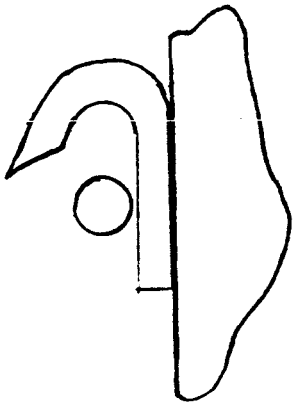

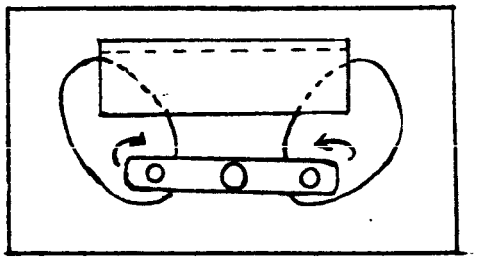

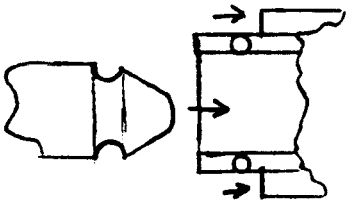

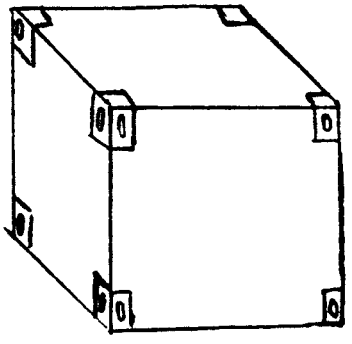

EXAMPLES OF INTERFACES

(BRAINSTORMING)

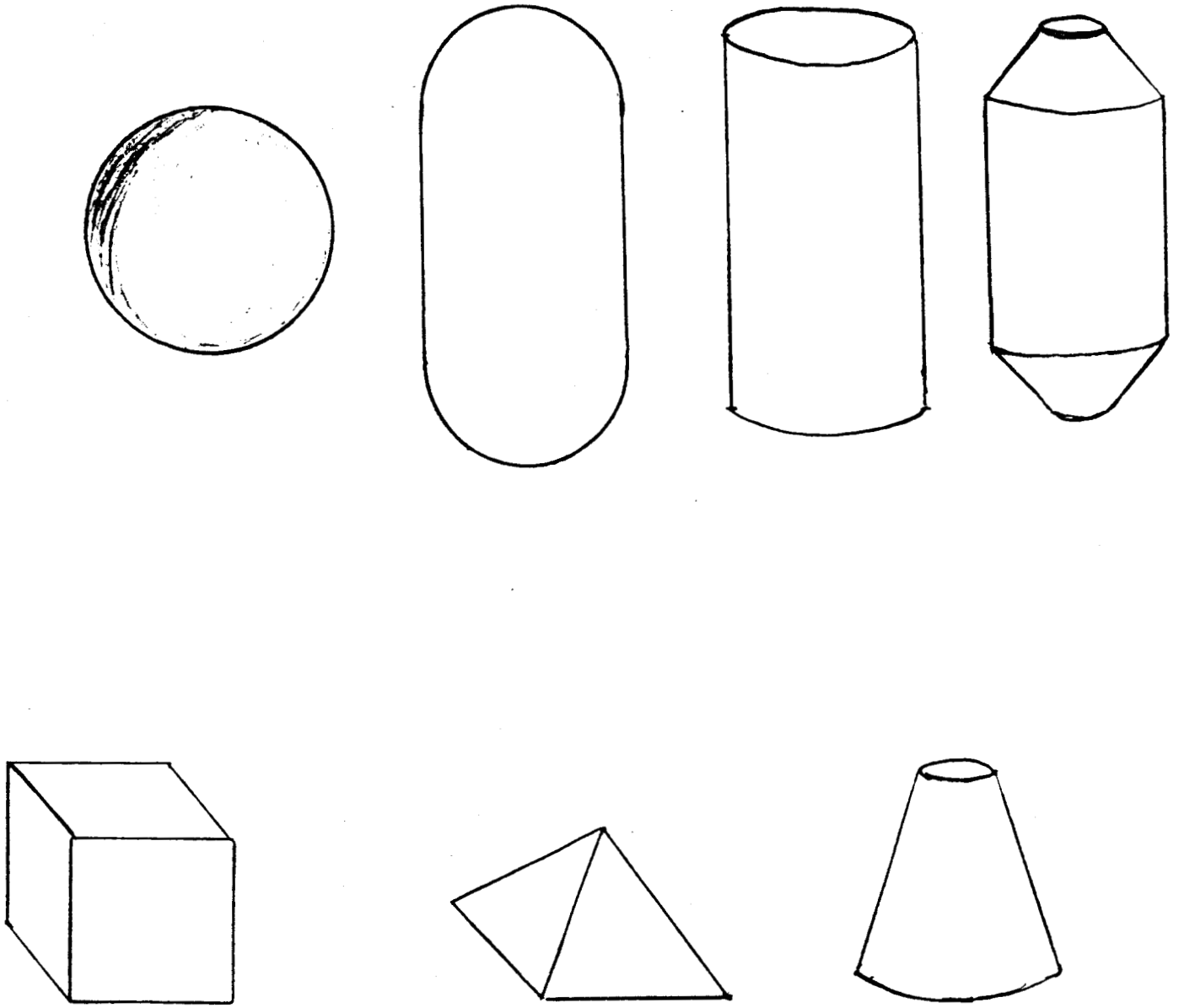

BRAINSTORMING

CARGO SHAPES

PROGRESS REPORT #1
ME 4192
CARGO INTERFACE GROUP
October 9, 1986

This week's progress:

1. The design group was formed and a group leader chosen. The members are as follows:

   Bell, Tommy E.
   Brazill, Jeff
   Close, Freddy
   Dowden, Lee
   Weinstein, Jack (group leader)
   Wood, Shawn

2. The problem statement was defined as: Develop a cargo interface to enable handling of materials (i.e. cargo, equipment, samples) between the lunar surface and the lower lunar orbit as well as on the lunar surface. In addition, the interface should be designed with consideration for: storage on the lunar surface, securing and shipping between the moon's and the earth's orbits, handling while in the earth's orbit, and take-off from and re-entry into the earth's atmosphere.

3. The following constraints influencing our design were recognized:

   A. limited visibility in space and on the lunar surface
   B. absence of sound in space and on the lunar surface
   C. NASA specifications concerning astronauts' safety
   D. manual operation due to system failure
   E. human factors in a space environment
   F. significant thermal changes during short time frames
   G. radiation effects
   H. physical dimensions compatible with existing systems (i.e. those used on the space shuttle)

Objectives for the coming week:

* Begin research concentrating in the following areas:

   A. existing cargo handling systems
   B. existing connecting or interfacing devices
   C. the lunar environment

PROGRESS REPORT #2
ME 6182
CARGO INTERFACE GROUP
October 9,1986

This week's progress:

1. Research was started in the following areas:

   I. Cargo Handling Systems
      A. Military containers
         1. standards
         2. performance criteria
      B. Industry standards for air and air/surface (intermodal) general purpose containers
      C. Container handling systems vendors
         1. military
         2. commercial
      D. Seaport shipping
         1. ship loading and unloading
         2. ship/truck container interface

   II. Connecting Devices
      A. Quick disconnect
      B. Agricultural three-point hitch
      C. Railway hitches
      D. Ball joints

   III. Lunar Environment
      A. Temperatures
      B. Radiation intensity
      C. Terrain

Objectives for the coming week:

* Continue research in the areas outlined above as well as any new areas that might arise.

* Incorporate into our performance objectives the points raised by Vince Cassisi. These included the ability to vary the center of gravity of the loaded cargo ship and the ability to withstand torsional effects without damaging the cargo.

PROGRESS REPORT #3
ME 4182
CARGO INTERFACE GROUP
October 16, 1986

This week's progress:

The group met several times during the week to discuss some of our more immediate concerns.

1. The need for continued research was mentioned, and several new subjects for research were indicated. We plan to look further into actual payload sizes and expected craft dynamics.

2. After having talked to Vince Cassisi at NASA, we began gearing our thinking along the lines he mentioned (i.e. center of gravity, torsional effects, etc.) and realized that an overall static and dynamic analysis will be needed to help determine the feasibility of a given container configuration.

3. We also discussed the fact that our system needs to be flexible with respect to several possible cargo handling systems. Ideally, our interface will work with forklift, crane, elevator, or other lifting and moving devices.

4. Plans are being made for an early brainstorming session to create a collection of schemes to choose from.

Objectives for the coming week:

* Continue research concentrating on the new subjects of interest.

* Hold a brainstorming session to develop various ideas for the ship configuration, the container shape, the interface, and the overall handling schemes.

* Obtain a copy of ASME Manual MS-4 and review it to determine the report format requirements.

PROGRESS REPORT #4
ME 4192
CARGO INTERFACE GROUP
October 23, 1986

This week's progress:

1. Research was continued.
   A. Data on the lunar surface was obtained from NASA document #79N76652.
   B. Information about Martin Marietta's interface that joins the fuel tanks to the space shuttle was located.
   C. Information on lunar and space station modules was located.

2. Brainstorming sessions were held.
   A. Designs for cargo containers, cargo ships and interfaces were conceptualized.
   B. These designs were then evaluated.
      1. some designs were eliminated from any further consideration.
      2. additional designs were conceptualized.

3. A copy of ASME Manual MS-4 was obtained.
   A. The report format was reviewed.
   B. Tentative layouts were discussed.

Objectives for the coming week:

* Use keywords to enhance our ongoing research.

* Prepare a mid-term presentation.

PROGRESS REPORT #5
ME 4182
CARGO INTERFACE GROUP
October 30, 1986

This week's progress:

1. Redefined our problem statement to: Develop and design a standard interface between cargo container, lunar cargo ship, and lunar lifting devices.

2. Continued research in areas of latching devices, hook-ups, and interfaces. Key words used in the search were:

joint	connection	coupling
junction	union	hitch
link	hook-up	interface
fasteners	clip	latch

3. Pictures of relevant commercial interfaces and applicable latches found in research were combined into a reference book to organize research.

4. Further development was done on the configuration of the containers on the cargo ship. A hexagonal ship, holding six containers was decided upon as the most favorable configuration.

5. Prepared the mid-term presentation.

Objectives for the coming week:

* More research on latch/interfaces. In particular, investigate the interface between bombs and the airplane wing.

* Brainstorm the possibilities of the actual interface, given the ship configuration that has been decided upon.

* Decide on an interface and begin specific designing.

PROGRESS REPORT #6
ME 4182
CARGO INTERFACE GROUP
November 6, 1986

This week's progress:

1. Ongoing research was continued.
   A. A patent search was done through the library on locking devices, bomb release mechanisms, vehicle hitches, and container latching systems.
   B. Microfilm of the vendor catalogs were studied, specifically ones dealing with bomb release mechanisms and self-aligning self-locking power attachments for heavy equipment.
   C. NASA documents in the design lab were studied.

2. More brainstorming sessions were held.
   A. Designs for the interface between known ship and cargo configuration were discussed.
   B. A particular solution appears quite positive at this point but requires further evaluation.

Objectives for the coming week:

* Compare tentative design with parameters and constraints.

* Be aware of alternative solutions during evaluation of the tentative design.

* Work on the format and layout of the final presentation and report.

* Start construction of a working model of our overall design.

PROGRESS REPORT #7
ME 4182
CARGO INTERFACE GROUP
November 13,1986

This week's progress:

1. Built model of proposed lunar lander/cargo transport vehicle. This model was used to help visualize and analyze our proposed cargo interface.

2. Built model of proposed end effector to be used on the lunar crane and on the lunar orbit crane.

3. Developed the locking mechanism that will lock the cargo to the landing vehicle. We have decided upon a camlock that will pull the cargo into final position and hold it there during flight.

4. Investigated scenarios involving NASA's proposed methods of obtaining and transporting lunar liquid oxygen. From this, along with the conversation with NASA on November 12, we have decided to scale our ship to accommodate lunar habitat modules. This scale along with relative mass data will determine the maximum volume of lunar liquid oxygen that can be transported.

5. Investigated densities of various cargoes that could be transported to the moon's surface.

Objectives for the coming week:

* Complete the rough draft of the final report.

* Design and draw the locking system and the various cargo interfaces (i.e. ship to cargo interface, and crane to cargo interface).

PROGRESS REPORT #6
ME 4182
CARGO INTERFACE GROUP
November 19, 1986

This week's progress:

1. Through evaluation of our parameters, the ship, container, and interface have been modified. We feel these modifications better meet our design and performance objectives.

2. We have done analyses on the new design and are preparing the results. So far, the initial results positively favor our new design.

3. To reflect our new design, we have modified our model.

4. An online data base search at the library has not yielded useful results given the keywords we submitted.

5. The rough draft of our report has been started and the work is progressing on schedule.

Objectives for the upcoming week:

* Complete the project and prepare a presentation.

ACKNOWLEDGEMENTS

1. Dr. Jon Colton - George W. Woodruff School of Mechanical Engineering.

2. Mr. David Bell - David Bell Photography

3. Mr. Jim Brazell - George W. Woodruff School of Mechanical Engineering.

4. Mr. Bobby Knight- Withers Machine Works.

5. Mr. Bryce McLauren - George W. Woodruff School of Mechanical Engineering.

6. Mr. Gary Von MacMurray - George W. Woodruff School of Mechanical Engineering.

BIBLIOGRAPHY

1. The Aluminum Data Book: Aluminum Alloys and Mill Products, Reynolds Metals Company, Richmond, Virginia, 1959.

2. ASME Manual MS-4: An ASME Paper, ASME Board on Communications, New York, October 1984.

3. Bending Stresses Due to Temperature in Hollow Circular Plates, Newman, M. and Forray, M., Journal of the Aerospace Sciences, vol 27, no 10, p 793, October, 1960.

4. Cargo Containers: Their Stowage, Handling and Movement, Tabak, Herman D., Cornell Maritime Press, Inc., Cambridge, Maryland, 1970.

5. Composites for Extreme Environments, Adsit, N. R., editor, ASTM Special Technical Publication 768, Philadelphia, Pennsylvania, 1982.

6. Conference Proceedings of the Eleventh International Forum for Air Cargo P-116, Society of Automotive Engineers, Inc., Warrendale, Pennsylvania, December 1982.

7. Design Criteria and Environments for LEM, NASA document N79-76652, section 4.3, page 20, NASA Scientific and Technical Information Facility, revised August 15, 1963.

8. Engineering Materials I: An Introduction to Their Properties and Applications, Ashby, Michael F. and Jones, David R. H., Pergamon Press, A. Wheaton and Co. Ltd., Exeter, 1980.

9. Engineering Materials and Their Applications, Third Edition, Flinn, Richard A. and Trojan, Paul K., Houghton Mifflin Co., Boston, 1986.

10. Engineering Properties of Nickel and Nickel Alloys, Everhart, John L., P.E., Plenum Press, New York, 1971.

11. Environmental Effects on Advanced Composite Materials, Christian, J. L., Witzell, W. E. and Stein, B. A., ASTM Special Technical Publication 602, Philadelphia, Pennsylvania, 1976.

12. Lunar Surface Return, NASA document #84-00637 thru 84-00822, Lyndon B. Johnson Space Center, March 1984.

13. Manufacturing Processes for Engineering Materials, Kalpakjian, Serope, Addison-Wesley Publishing Company, Reading, Massachusetts, 1984.

14. Mark's Standard Handbook for Mechanical Engineers, Eighth Edition, Baumeister, Theodore, editor-in-chief, McGraw-Hill Inc., New York, 1979.

15. Mechanical Analysis and Design, Burr, Arthur H., Elsevier North Holland Inc., New York, 1981.

16. Mechanical Engineering Design, Fourth Edition, Shigley, Joseph Edward and Mitchell, Larry D., McGraw-Hill Inc., New York, 1983.

17. Nickel Alloy Steels, Second Edition, The International Nickel Company, Inc., New York, New York, 1949.

18. Probabilistic Mechanical Design, Haugen, Edward B., Wiley-Interscience Publication, John Wiley & Sons, New York, 1980.

19. Space Vehicle Concepts, Tucker, Michael, Meredith, Oliver and Brothers, Bobby, Marshall Space Flight Center, Arizona, 1985.

ALTERNATIVE DESIGN

As an alternative to our design, an interface which utilizes hooks and pins only is a consideration. The ship configuration and the cylindrical shaped containers are similar to the ones proposed for our interface. The difference being the location of the attachment points on the ship and the containers. The containers will have six pairs of hooks at 60 degree intervals on the upper and lower portions. The ship will be altered in such a way as to allow a pair of hooks to engage at the top and two pairs of hooks to engage at the bottom.

Lifting will be accomplished by connecting to the unused hooks located on the upper part of the container. The major drawback to this design is the interface's incompatibility with spherical containers.