10 Meter Lunar Drill

(NASA-CR-182478) A 10 METER LUNAR DRILL (Georgia Inst. of Tech.) 86 p N90-71232

Unclas
00/37 0280001

Group Number One

Mark Baker
Shawn Blum
Keith Green
Young Park
Mark Westphal

ME 4182 A

Mr. J. W. Brazell

March 11, 1986

MARCH 11, 1986

ME 4182 A
GROUP #1
10 METER DRILL

ABSTRACT

This report discusses an elegant solution to the problem of drilling holes in the lunar surface and obtaining a core sample for scientific and geological study. The hole will be 5.5 inches in diameter and Ten meters in length. A rotary precussive system will be employed to produce the holes because of the low generation of heat along the drill bit, eliminating the need for lubrication.

MARCH 11, 1986

ME 4182 A
GROUP #1
10 METER DRILL

PROBLEM STATEMENT

ASSIGNMENT: The problem is to design a 10-meter lunar drill, capable of taking a core sample.

BACKGROUND: Core drilling provides a geological sample of underground rock formations. By analizing the core sample, the best sites for construction or mining can be determined. Although core drilling has been commonly practiced with little difficulty on earth for numerous years, the lunar environment presents problems that conventional core drills cannot handle.

PERFORMANCE OBJECTIVES: Aside from the obvious necessity of designing a drill to overcome the environmental constraints of the moon, the proposed drill must be:

1) able to drill up to ten meters deep.
2) able to take core samples.
3) capable of drilling at an angle up to 30 degrees.
4) self-operating once placed in the desired drilling location.
5) reliable and maintainable, using tried and proven technology.
6) as light as possible to reduce transportation cost.
7) as compact as possible to make transportation easier.

CONSTRAINTS: Three aspects of the lunar environment, presenting design problems not encountered on earth, are discussed below.

MARCH 11, 1986

ME 4182 A
GROUP #1
10 METER DRILL

1) The temperature on the moon varies between -173 degrees Celius (-279 Fahrenheit) at night to 127 degrees Celius (261 Fahrenheit). Since it would be virtually impossible to design a drill that is operable at both temperature extremes (particularly the extreme cold), the time to do the drilling needs to be specified and the extremes taken into consideration.

2) The lunar gravity is about one-sixth that on earth. Consequently, an anchoring for the drill is another important consideration. The drilling rig must be anchored firmly to prevent the equal and opposite reaction of the drill's downward force from lifting the rig.

3) Since the moon has no atmosphere, there is no atmospheric pressure--a vacuum. This presents problems lubricating, cooling, and removing cuttings because no liquids can be used for these purposes as done on earth. For lubricating, a solid lubricant or a coating must be considered. For cooling, heat generation due to friction should be kept to a minimum and a deep-space radiator considered as an alternative to condution. To remove cuttings, an augering system will need to be devised.

MARCH 11, 1986

ME 4182 A
GROUP #1
10 METER DRILL

TABLE OF CONTENTS

Engineering Constraints of the Moon	2
Materials	3
Operation of the Drill	5
Structure	9
Description of Leg Operation	11
Anchoring System	12
Core Barrel	14
Robotic Arm Assembly	16
Bit Design	17
Power Requirements	21
Cooling System	24
Cost Analysis	29
Conclusions	30

Appendix:	A	Calculations
	B	Drawings
	C	Alternative Designs
	D	Progress Reports

LIST OF DRAWINGS IN APPENDIX B

B1.A	Overall View of Drill
B1.B	Close-Up View of Drill
B1.C	Top View of Drill
B1.D	Down-Drive Mechanism
B1.D	Up-Drive Mechanism
B1.E	Alternative Structure I
B1.F	Alternative Drive Mechanism
B1.G	Alternative Pivoting Method I
B1.H	Alternative Structure II
B1.I	Alternative Structure III
B1.J	Alternative Pivoting Method II
B2.1	Leg Assembly, External View
B2.2	Leg Assembly, Cut-Away View
B3.1	Drill Bit Design
B4.1	Expanding Drill Anchor
B4.2	Reed "SK" Core Barrell
B4.3	Core Barrell Design
B4.4	Drill Shaft
B4.5	Power to Core Barrell from Shaft
B4.6	Power Transmission
B5.1	Radiator Panel
B5.2	Cooling System

MARCH 11, 1986

ME 4182 A
GROUP #1
10 METER DRILL

DETAILED DESCRIPTION

OF THE

10 METER LUNAR DRILL

ENGINNERING CONSTRAINTS OF THE MOON

The moon is a nearly spherical shaped planet with a radius of 1080 miles. It has a very low mean density of 3.34 grams per cubic centermeter and has little or no core. Because of these conditions the moon has a gravity 1/6 of the earth and has no atmosphere. With no atmosphere all radiation from the sun reaches the moon. The temperature varies from 127 degress celsius in the day to -173 degress in the night or shade. The temperature of the rock, below the surface, is relatively constant at -43 degress celsius. The moon has thousands of minor quakes each year plus a continual bombardment of microsropic to large meteriods.

The components of lunar rock are as follows:

Component	Percent
Silicon Dioxide (SiO_2)	40
Iron Oxide (FeO)	19
Titanium Dioxide (TiO_2)	11
Aluminum Oxide (Al_2O_3)	10
Calcium Oxide (CaO)	10
Magnesium Oxide (MgO)	8.5

These components are divided into the following rock catagories:

1. Basalt - A fine grained vesicular crystalline, igneous rock.
2. Anorthosite - Course grained cyystalline igneous rock.
3. Breccia - Composed of angular particles of surface material formed by meteriod impact and subsequently compacted into a coherent rock by shock compression during cratering.
4. Regolith - A mixture of crystalline fragments and glass particles formed by repeated fragmentation of the surface material by meteroite impact. This is the top layer of fine soil.

MATERIALS

The material for the lunar drill's structure was chosen under the following criteria and assumptions.

Constraints in order of importance:

1. The material must have a high strength/weight ratio. Since the cost of transportation to the moon is the major cost of the drill this constraint was taken to be most important.
2. The material must be able to withstand the corrosion

from the radiation of open space. A protective layer of a "paint" could be used to help this.

3. The material must be relatively easy to produce and manufacture in the shapes desired. The material should be also easy to repair (such as welding) in case of breakdown or failure.
4. The cost of research and production of the material should be kept as low as possible.

The assumptions are as follows:

1. That all raw material and finished products are defect free. This could be determined by non-destructive methods such as x-rays.
2. That all welds and joints will be defect free.
3. That the drill is assembled and used in the correct manner.

The material chosen for the structure and covering is aluminum 7075-T6. This aluminum is alloyed with 5.5% of zinc, 2.5% of magnesuim, 1.5% of copper and 0.3% of chromium. This aluminum alloy is solution heat treated and then artificially aged. These conditions and processes make an aluminum alloy that is exceptionally strong for its weight. The 7075-T6 properties are summerized in the table below.

Density	2.8 gram/cu cm
Melting Temperature	638 C
Specific Heat (at 100 C)	.23 cal/g

Thermal Conductivity (at 25 C)	.29 cal/sq cm/cm/C/sec
Yield Strength	73,000 psi
Elongation	11 %
Shear Strength	48,000 psi
Fatigue limit	23,000 psi
Hardness (Bhn)	150

Aluminum 7075-T6 also has good resistance to corrosion. If this alloy is then anodized or coated with some protectant this metal then becomes even more resistant to corrosion. 7075-T6 has very good creep resistant properties and keeps most of its strength at temperatures approaching 300 C. Aluminum, in general, is quite easy to produce and to repair.

Material alternatives that were considered are in the alternative section of this report.

OPERATION OF DRILL

LEVELING

To drill a vertical hole, the drilling rig must be level, compensating for the irregularities of the lunar surface. To accomplish this, two of the telescopic tripod legs would extend the appropriate amount until the drilling rig is level. The

"appropriate amount" would be indicated by conventional bubble levels viewed by electronic eyes. Once the rig is leveled, all three legs would extend simultaneously at the same rate, stopping as soon as one of the legs is fully extended. To drill at an angle (up to 30 degrees), this same procedure would be followed, and then one leg would retract until the rig reaches the desired drilling angle.

ANCHORING

Once the drilling rig is level and the telescopic legs extended (and before tilting the rig to drill at an angle), anchoring rods (housed in each lower leg) would automatically drill into the lunar surface. After these anchors are fully extended, expanding bolts would be torqued down through each anchoring rod, wedging the three anchors securely in place. When drilling is complete, the reverse procedure is automatically followed so the drill can be easily transported to the next drilling site.

TEMPERATURE

The temperatures of the motors would be monitored by electronic thermometers mounted on their sides. If the temperature of a motor were to become critical, everything would automatically shut down for cooling. Once cool, drilling would resume. The temperature of the drill bit and shaft would require an indirect measurement since they rotate and would taggle the necessary wires.

FEED RATE

By knowing the feed rate it would be possible to use a computer program to approximate the temperature of the drill bit and shaft. To determine a suitable program would require detailed modeling and experimentation, which we have neither the time nor resources to do. However, the premise of such a computer program would be that the slower the feed rate, the hotter the bit and shaft. The reason being that a slow feed rate implies that less energy is dissipated to break rock while more energy is dissipated in the form of heat. If the program computed that the bit or shaft were too hot, drilling would be temporarily suspended for cooling. This should not occur very often since drilling is stopped after every five feet to remove the core sample, which inherently allows time for cooling. To determine the feed rate, the aluminum drill shaft would have thin, inlaid bands of steel every 1/2" . A magnetic sensor along with a microprocessor would be able to count and compare the number of bands that go up and down. By multiplying two times their difference (number down - number up) by the striking rate (strokes per minute), the feed rate is found in inches per minute.

STRIKING RATE

Strokes per unit time is defined as the striking rate. In this case, it is simply the number of times per unit time that the down-thrusting wheels engage/disengage.

IMPACT SPEED

The downward velocity of the drill bit at the time of impact is defined as the impact speed. It is a function the down-thrusting wheels' angular velocity and the distance the shaft descends. Thus there are two ways to increase the impact speed (and thus the momentum), either increase the angular velocity or the distance descended. The angular velocity (rpm's) of the down-thrusting wheels would be automatically adjusted depending on the feed rate. A slow feed rate indicates a harder material requiring a greater impact speed, whereas a fast feed rate indicates a softer material needing less impact speed. By using only as much power as necessary for varied lunar surface conditions, energy would be conserved.

MONITORING

As described, the proposed drill is automatic. The drill would automatically level; anchor; tilt up to 30 degrees; temporiarily suspend drilling to prevent overheating of the bit, shaft, or motor; and vary the down-thrusting wheels' angular velocity for maximum effectiveness. In addition to monitoring itself, the drill would report its conditions to an astronaut's control panel. From this panel, the astronaut would be able to monitor the drilling procedure, input the desired drilling angle, and override the automatic controls if necessary.

STRUCTURE

The design of the structure of the lunar drill followed through four basic design levels. These were constraints, assumptions, finished designed and alternatives.

Besides the constraints caused by the lunar environment the constraints are as follows:

1. The lunar drill must be able to dig or core up to ten meters. The coring would be for research purposes such as to examine the composition of the undisturbed lunar rock beneath the surface.The digging would be for lunar construction such as holes for blasting

2. The drill should be as close to fully automated as possible. Astronauts are very limited in their movement capablities and their time. The drill should be able to operate on its own once placed and aimed in the right direction.

3. The drill must be able to dig up to thirty degrees from the normal. This is for getting core specimens in different orientations and for various constuction purposes.

4. The drill should be as light as possible. Due to the fact that transportation to the moon from the earth is the major cost of the drill, the drill should be as "bare" as possible, to minimize the weight.

The only assumption made is that the drill could be partially assembled on the moon for ease of transportation to and around the moon. The drill would come in three seperate parts; legs, main structure and drill/drill bit.

The design of the drill is illustrated in figure B1a-B1d. The drill is a tripod of three telescoping legs. The legs can be adjusted by by turning a knob to extend or retract them. These adjustments could aim the drill on any angle (up to thirty degress) in any direction.

The drill is a rotary-percussion type. Four wheels drive the drill. On the downward thrust, the two lower wheels (constantly spinning) engage the drill. The wheels, along with gravity, force the drill down. Just before impact, the wheels disengage so they receive none of the impact force and can keep spinning. On the upward motion, the upper wheels engage and forces the drill up and rotates it. The drill is brought to a height of five feet before the "down" wheels engage and start the cycle once more.

The motors are protected from the dust of drilling with a

cover. The cover can open in three pieces to fully expose the "inners" of the drill for ease of maintenance.

The system to replace the core bit once it is full of core is a robotic arm and winch system.After the drill is stopped the winch pulls the core out up through a hollow drill. The robotic arm then places the core in a protective bin and puts a new core "holder" down the drill. In this way the drill remains down the hole at all times.

Alternatives that were considered are discussed in the alternative section of this report.

DESPRIPTION OF LEG OPERATION

The tripod legs feature a telescopic design for ease of leveling and for compactness. The legs also house the anchoring system. Drawings of a leg can be found in Appendix B.2.

As mentioned in the section called Operation of Drill, the design of the leg allows fully automatic leveling, anchoring, and tilting of the rig for angled holes. The overall procedure for all this is also explained in Operaion of Drill.

The operational procedure of the leg itself, refering to Appendix B.2. is listed below.

1) Shaft 1 is torqued clockwise to extend the leg (all legs).
2) Shaft 2 is engaged and torqued clockwise to drill the anchor into the ground (all legs).

3) (For angled drilling only) Shaft 1 is engaged and torqued counterclockwise to retract the leg (one leg only).

4) Shaft 3 is engaged and torqued clockwise to extend the expanding bolt (3 legs).

5) Reverse this procedure when drilling is complete.

There are several advantages to this self-contained, telescopic leg:

1) Compact design
2) Automatic leveling
3) Automatic anchoring
4) Automatic tilting
5) One motor and gear box per leg does everything
6) Rigid construction

DRILL STRUCTURE ANCHORING SYSTEM

With the induced impact forces that the drilling structure will recieve from the drill shaft and since it will be capable of drilling up to a thirty degree inclination of the drill shaft, it is necessary to equip the system with an anchoring system. The anchoring system must be as simplistic as possible and it should be full-

automated.

The anchoring system for the drilling structure is a drill on each leg that will drill into the lunar surface. Once the bit has drilled into the surface, a second shaft will engage causeing the expansion of the drill. Expansion will be removed when it becomes time to remove the anchoring system. When the expansion forces are removed the drill will return to its normal size and then may be removed.

Several types of anchoring systems wre looked into but the system chosen showed the largest factor of safety. Most systems have a section of the anchoring system that expands which is satisfactory if one knows the type of material that one is anchoring into but when dealing with the lunar environment the type of material is not satisfactorily known at the time of drilling so much more durable system was needed. The expansion drill anchoring system (see fig B 4.1) was chosen because the entire bolt will separate causeing a hole force distributed throughout the entire hole. If part of the material gives way, the anchor will still be constrained because there will still be a section of the anchor in contact with the soil thus there will always be an anchoring force in the hole

The expanding drill anchoring system also shows a reduction in the equipment neede to anchor the drilling rig to the lunar surface. In most systems a hole must first be drilled then the anchor must be set into the hole. The expanding drill system does both in one shot, this will

reduce the weight of the system and at the same time provide a much simpler system.

Once the drilling rig is set on the drilling site, the outer shaft will be activated (see leg assembly drawings) this will cause the anchor to drill itself into the moon's surface. Once the anchor will expand until the necessary hole forces are achieved. This will occur in all three legs at the same time so all of the legs are constrained to the lunar surface.

CORE BARREL

The lunar drill will be responsible for removing the core samples at every five feet drilled. The core barrel will be resposibe for the core removal and also for the removal of the cuttings produced by the drill bit.

The core barrel used for this drill will be very similar to the Reed SK core barrel (see fig B4.2) with some modifications. Which will be described in the following sections.

SIZE- The core size will be two inches in diameter and of a length of five feet and a hole size of 5.5 inches.

The standard SK core barrel has a core diameter of 4 15/16 inches and a hole size of 7 1/8 inches along with a length of twenty-five feet.

INNER BARREL- The core barrel will be in the hole at all times with impact forces and rotational forces acting on the barrel at all times. The inner part of the core barrel will be allowed to rotate so that the inner barrel will actualy remain stationary when the shaft is in rotary motion. This will keep the core sample untarnished as possible.

OUTER BARREL- The outer core barrel will have a double threaded auger attached to it with a helix angle of 15 degrees. this will auger the cuttings to the top of the core barrel where they will remain until the core sample is removed and the cuttings will then be allowed to fall to the surface once the core barrel is removed by the robotic arm. To protect the drill shaft from the increased friction induced by having the cuttings sitting on top of the core barrel and exposed to the drill shaft, it is proposed to have a plastic layer on the outside of the auger that will extend five feet above the core barrel. This will not allow direct contact of the cuttings to the drill shaft. There will also be five key locks on the core barrel evenly spaced about the circumfrence. These key locks will allow

rotary motion to the core barrel so that it can auger up the cuttings and at the same timenot allow the transmission of the vertical motion sent to the saft. The key slot will be designed in such a way that the impact loading will be transfered to the barrel so that it may cut part of the hole which will be required if the core barrel is to remain in the holeand to be pulled out from the top of the shaft once the five foot section is ready to be removed. (see fig B4.3 ; B4.4 ; B4.5)

On the drilling rig there will be a total of seven core barrels on a semi-circular rack. This will allow the removal of the core barrels to a lunar base where the astronaut will the remove the cores and refurbash the core barrels for furture use.

ROBOTIC ARM ASSEMBLY

There will be a robotic arm assembly on the drill rig that will be resonsible for the removal of the core barrel after the end of every five foot increment. The arm will ride along a shaft that is parallel to the drill shaft and it will extend 12 meters up in a vertical direction. The

arm will be capable of traveling up and down the shaft and also of accomplishing rotary motion. There will be a bell type tupe at the end of the arm to hold the core barrel tightly so that it may be moved when the base is at a thirty degree angle with respect to the surface.

The arm will take a core barrel from a semi-circular rack. It will then insert the core barrel into the shaft and lower it by way of a winch to the bottom of the hole. At the end of the five foot cutting session, the core barrel will be removed from the shaft by the arm. The arm will then insert the barrel into its appropriate place and take the next barrel. When the core barrel is being removed, it will be necessary for the saft to rotate backwards so that the core barrel will be released from the keey locks that provide the impact loading to the barrel.

BIT DESIGN

The drill bit should have the following chracteristics and functions. Since the hostile lunar environment prevents use of any fluid type of coolants or lubricants, the bit material should endure high temperatures. In addition, the bit should be able to carry the cuttings away from the

bottom of the hole without help of the pressurized fluid. Furthermore, the bit shape should be designed to give the best cutting effect in both percussive and rotary motions within the allowable strength of the bit material. All these considerations are explained in more detail in the following sections.

1. BIT MATERIAL SELECTION

All the possible mechanical failure modes of the bit and relative material characteristics of a wide range of bit materials are carefully reviewed. Among them, the most significant failure mode at the bit in lunar drilling is wear. Since no coolants or lubricants are used, the tip will experience a high temperature. Therefore the bit material should have invariantly high degree of hardness and toughness at high temperatures.

2. ALTERNATIVE BIT MATERIAL

For the bit material diamond, steel, ceramics, and carbides are considered. Even though some of the ceramic materials show high melting points and hardness, they are too brittle to be used for percussive drilling operations. Also, their low thermal conductivities will cause the heat to build up in the drill bit . Being in the category of ceramic materials , the diamond faces almost the same problems as the ceramics. With help of the coolant, diamonds can be superior to other materials as a tool for

low cutting pressure rotary drilling where the chip section is small. But, in rotary -percussive dry drilling, the diamond fails completely since its strength and heat transfer rates are too low. The low heat transfer rate will cause very high temperatures at the drill bit, which in turn will distort the diamond embedded matrix. Furthermore, the diamond itself might be glazened. High speed carbon steel has high toughness, but its hardness is much lower than that of carbides. It is proven by experiment that under the same test conditions, high speed steels exhibhit a wear that is about five to six times higher than that of cemented carbides.

3. SELECTED MATERIAL

Carbides show the most favorable characteristics for rotary percussive dry drilling. Carbides have much higher hardness than high speed steel along with high melting points. They also display many metallic properties such as high thermal conductivity and high toughness. The carbides' high hardness and toughness at high temperatures makes them an ideal material for our proposed lunar drilling. High haroness solves the problem of impact rupture and fatigue failure. Among the carbides, tungsten carbides with titanium have exceptionally favorable combinations of hardness and metallic characteristics. The slight ability to deform plastically is improved by adopting the cemented carbide with cobalt as the bonding agent. This wc-tic-co

composition cemented carbide offers improved toughness. The tantalium in mutual bond with the above tugsten carbide confers much improved properties at high bit tip temperatures, especially where considerable shock is involved (p.18). From the graph b3.1 at 12% cobalt content, the rupture strength is at maximum. To improve the high temperature characteristics, the optimum content is adopted which is 5%.(fig. b3.2). thus the composition of our selected carbide is wc-tic-tac-co with 12% co, 5% tic, and 10% tac. Percent content of tac of over 20% will decrease the transverse-rupture strength too much and an increase in tic content will improve the t-r-s up to 25% but the hardness will be decreased considerably.

3.1 PROPERTIES OF THE SELECTED MATERIAL

HARDNESS 89.5 RA

TRANSVERSE RUPTURE STRENGTH 248400-269800 PSI

150000 PSI AT 1000C

200000 PSI AT 800C

4. BIT SHAPE DESIGN

The bit is designed to give the effective cutting and stress endurance during operation. The sharper the cutter tip angle is,the higher the cutting rate which is achieved. However, sharper edge will be under higher stress concentration. Thus, in deciding the bit angle these two factors should be compromised. Also, the bit should be

designed to remove the cutting effectively. Since no pressurized fluid is allowed to clean away the cuttings, the auger system is adopted. In order to collect the cutting effectively to the auger entrance, the bit is designed to have a helical shape (fig. b3.3). as the bit rotates, it constantly pushes the cuttings toward the auger entrance located in the inner side of the drill. After a calculation with the help of the computer, the angle is determined (see Appendix 3-1 for calculations). the bit angle is 100 degrees and the helical angle is 40 degrees. Each angle is symmetrical so that it has uniform stress distributions for the percussive motion. Also the number of bits should be large enough to allow the chip size to be small enough to fit through the auger. A bit number of 10 is decided upon for the drill.

POWER REQUIREMENTS

DC motors was chosen to power the system because they are suited for automatic processes. DC motors give automated machinery controllable adjustable speeds, and high starting torques. They can also be programmed to control a machine's operation and regulate their production feedback. Their biggest advantage is control. Adjustable motor motor

speeds over an infinite range; constant horsepower or constant torque; safe, economical braking; preset speeds; rapid acceleration and deceleration.

HORSEPOWER CALCULATION (DOWN STROKE)

M = MASS OF SHAFT

G = GRAVITY ON MOON

N = RPM

FN= NORMAL FORCE ON SHAFT

FG= FORCE OF SHAFT ON MOON

T = TORQUE

W = WORK

HP= HORSEPOWER

E = EFFICIENCY OF MOTOR

QPRO = HEAT PRODUCTION IN MOTOR

	UNITS
M = 39.5	LBM
G = 5.4	FT/S
N = 300	RPM
FN= 3000	LBF
E = 70%	

FG = 39.5LBM * 5.4FT/S = 213.3 LBF

T = D/2*FG = 80 LBF*FT

W = 2(PI)NT = 150773 LBF*FT/MIN

1 HORSEPOWER = 33000 LBF*FT/MIN

HP = 150773/33000 = 4.6HP

HEAT PRODUCTION IN MOTOR

1 HORSEPOWER = 746 WATTS

4.6HP = 3432 WATTS

QPRO = 3432*.30 = 1030 WATTS

* ASSUMING A SAFTEY FACTOR OF 3 THE HEAT PRODUCED IS 3090 WATTS

CALCULATING COEFFICIENT OF FRICTION

F = UN

F = FG (WEIGHT OF SHAFT IN LBF)

N = FN (NORMAL FORCE)

U = COEFFICIENT OF FRICTION

U = FG/FN = 213.3/3000

U = .071

* WITH A SAFTEY FACTOR OF THREE U = .213

CALCULATION OF HORSEPOWER (UP STROKE)

Noted the torque, work, and horsepower is the same for the up stroke. the heat produced will also be the same. The only change is in the coefficient of friction.

F = UN

F = FG = 213.3 LBF

N = FN = 5000 LBF

U = FG/FN = 213.3/5000

U = .043

* WITH A FACTOR OF SAFTEY OF THREE U = .129

COOLING SYSTEM

A basically two types of radiating coolant systems were

looked at. One consist of a liquid used as the coolant and the other a gas being used as the coolant. It was decided that the gas coolant system would be the most efficient for dissipating the heat produced by the system. The major reason behind this decision was the extra weight of the liquid coolant system which was approximately four times that of the gas coolant system. Another reason was that the liquid coolant system more than fit the need of our heat dissipation problem. the liquid coolant system dissipated 150 times more heat than the gas system. Also, because the heat rejection rate is too great for our needs, the fluid circulating through the pipes would probably freeze. The liquid coolant system is also much more complicated, for it requires evaporation and condensation of the fluid. The gas coolant system is less complicated, for all that's needed is a pump to controll the velocity of the circulating gas.

The gas used in the coolant system was hydrogen even though the emissivity is not as high as other gases. Under our conditions of operation hydrogen seems to be the most reliable. Nitrogen was considered, but this gas tends to combine with other substances to make it unsafe to use. The hydrogen gas is pumped across the armature and rotor of the motors where most of the heat is generated.

In deciding the size of the radiating panels and pipes the heat generated from the system must be known. Once this is known the size of the pipes and panels can be calculated by trial and error. It should be noted that the heat transfer

process includes conduction coupled with radiation. In fact most of the heat lost is due to conduction of the hot gas passing through the cold pipes.

HC = UNIT THERMAL CONVECTIVE CONDUCTANCE

HR = RADIATION UNIT THERMAL CONDUCTANCE

O = STEFAN-BOLTZMAN CONSTANT

E = EMISSIVITY OF MATERIAL

K = THERMAL CONDUCTIVITY

D = DIAMETER OF PIPE

V = VELOCITY OF GAS

P = DENSITY OF GAS

U = DYNAMIC VISCOSITY OF GAS

RED= REYNOLDS NUMBER

PR = PRANDTL NUMBER

T1 = INLET TEMPERATURE TO RADIATOR

T2 = OUTLET TEMPERATURE FROM RADIATOR

QC = HEAT LOSS DUE TO CONDUCTION

QR = HEAT LOSS DUE TO RADIATION

Q = SUM OF HEAT LOSS FROM CONDUCTION AND RADIATION

K = TEMPERATURE IN KELVIN

W = WATTS

M = METERS

N = NEWTONS

KG = KILOGRAMS

J = JOULES

S = SECONDS

Noted it was assumed that the temperature(T1) was 394 degrees kelvin(121C) at the inlet of the radiator and 23 degrees kelvin (-250C) at the exit of the radiator.

*THE VALUES OF HYDROGEN WAS TAKEN AT 200 DEGREES KELVIN(T1+T2/2)

	UNITS
U = 6.813 * 10**6	N*S/M**2
K = .1282	W/M*K
CP= 1340	J/KG*K
P = .12270	KG/M**3
PR= .719	1/K*M**3
V = .6096(2FT/S)	M/S
D = .0254(1INCH)	M

HEAT RADIATION FROM PIPE ASSUMING TURBULENT FLOW

RED = PVD/U = 278.9

HC = K/D(.023RED**.8)(PR**.33) = 9.4 W/M**2*K

QC = HC(PI)D(T1-T2) = 278.8 W/M

HR = OE(T1**2 + T2**2)(T1+T2) = 3.315 W/M**2*K

QR = HR(PI)D(T1-T2) = 98 W/M

Q = QC + QR = 376.8 W/M

WITH A TOTAL PIPE LENGHT OF 15M THE HEAT LOST IS

Q = (376.8 W/M) * (15M) = 5653 WATTS FROM PIPE ALONE

HEAT FROM ALUMINUM PANELS

QR = OEA(T1**2-T2**2) = 1933 WATTS

A = AREA = 1M*2M = 2M**2

The total heat radiated by a the radiator with the pipes running through it is

QTOT = 5653W + 1933W = 7586 WATTS

WITH TWO RADIATORS IN PARALLEL

QTOT = 2 * 7586 WATTS = 15172 WATTS

The total heat produced by the system assuming a safety factor of three is

QREJ = 10208 WATTS

COST ANALYSIS

Since it costs roughly 15,000 dollars per pound to transport something to the moon, the costs of materials and labor for constructing the drill are insignificant in comparison to the transportation cost. Therefore, the cost analysis actually becomes a weight analysis, and a summary of approximate component weights is listed below.

Amount	Component	Weight (lbs)	Transportation Cost ($)
1	drill shaft	1,270	19,050,000
1	structure	400	6,000,000
7	core barrels	20	2,100,000
1	up-drive motor	80	1,200,000
1	down-drive motor	70	1,050,000
3	leg motors	20	900,000
1	robotic arm	25	375,000
		2,045	30,675,000

CONCLUSIONS

In the design of 10m lunar drill, many problems come from the hostile environment of the moon. Therefore, the design was concentrated on adjusting to the extreme lunar environment.

1. Because it is highly efficient, suitable for drilling a wide range of materials and can operate without coolant, a rotary-percussive drilling technique is chosen for lunar drilling.

2. The ratio of vertical and angular velocity can be controlled by varying the angle of contact between the drill stem and the driveng wheel. This is especially good for increasing drilling efficiency because the rotary-percussive method might be less efficient than pure rotary in a very loose or soft materials.

3. Titanium is used for the drill stem and structures bwecause it is light and exceptionally tough.

4. To preserve a better core sample, a core barrel is used. The removal of core sample and, usinggs are done

automatically. Robot arm.

5. To avoid the complication of sealing the drill stem, one continuous drill stem is used.

6. A DC synchronous moter is used for the driveng system. The motor is cooled by radiation to the space by a radiating fin.

7. A hydraulic pump provides the power for the connection and disconnection of the driving wheel to the drill stem. Power than magnetic system, an alternative system. System gives more

LUBRICATION

For the conditions of the lunar surface a solid lubricant was the best choice for lubrication for a variety of reasons. First of all they are stable at extreme temperatures and in chemically reactive environments. They can be used in places where ther's a lot of dust and dirt.

Between graphite and molybdenum disulfide, molybdenum was chosen because of its good properties. Graphite depends on an absorbed film of moisture (condensed on the surface of the material) for its lubricating action. If an absorbed film od moisture is not present, graphite acts as an abrasive which made it inapplicable on the moon. Molybdenum disulfide does not depend on any type of moisture film and oxidizes at a temperature of 800F or 426C which is way above our needs.

The molybdenum disulfide is applied in two manners. The first is air-cured resin-bonded solid lubricants. For this procedure the lubricating pigment is molybdenum in powdered form. The resin is the binder and serves only as a means of improving adhesion of the powder to the surface to be lubricated. The resin and molybdenum are mixed together then applied to the sur surface where it is air cured. The other is heat-cured resin bonded solid lubricants. The mixture contains 90% molybdenum and 10% resin. The binding will usually require a bake temperature of one hour at 300-400F.

APPENDIX A

CALCULATIONS

SUMMARY OF LUNAR SOIL PROPERTY VALUES

PROPERTY OR CHARACTERISTIC	PROBABLE VALUE	
	THIS REVIEW	JPL ESTIMATE*
SOIL AND SURFACE PROFILE	Fragmental layer of variable thickness. Max. slopes of 33 – 35° (crater sides)	Max. slopes of 34 – 35°
COMPOSITION	Similar to terrestrial iron-rich basalt	–
PARTICLE SIZES	Size Range: boulders to 2μ; bulky particles; varying angularity	2μ – 60μ (fine friction) 50% < 10μ Distribution curves available for 1 mm – 10 m, Surveyor sites
DENSITY		
UPPER FEW MILLIMETERS	0.6 – 1.2 gm/cm³	0.7 – 1.2 gm/cm³
BELOW TOP FEW MILLIMETERS	1.0 – 2.0 gm/cm³	1.5 gm/cm³
COMPRESSIBILITY	Relatively incompressible below top few millimeters (under spacecraft and SMSS loadings)	–
STRENGTH PARAMETERS		
COHESION	0.02 – 0.5 psi	0.07 – 0.26 psi (0.048 – 0.180 N/cm²)
ANGLE OF INTERNAL FRICTION	33 – 37°	37 – 39°
BEARING CAPACITY	Increases with depth and breadth of loaded area. A few psi near surface. See text.	Variable with depth Static (average) – 5 psi Upper few mm – 0.15 psi 2 cm depth – 2.7 psi 5 cm depth – 8.2 psi
DYNAMIC PROPERTIES		
EFFECTIVE SPRING CONSTANT (MODULUS)	7000 psi	–
PERMEABILITY	$1 \times 10^{-8} - 7 \times 10^{-8}$ cm² (Reasonable, but assumptions needed for determination)	$1 \times 10^{-8} - 7 \times 10^{-8}$ cm²

DRILL SHAFT DYNAMIC ANALYSIS

$$\text{mass} = \rho L \tfrac{\pi}{4}(D_o^2 - D_i^2)$$

$$= \frac{.16}{32.2}\,\frac{\pi}{4}(5.5^2 - 3.25^2)(513.5) = 39.5 \text{ lbm}$$

$$\omega = 300 \text{ rpm} \times \frac{2\pi}{60} = 31.4 \text{ rad/sec}$$

$$r = 4.5'' = 0.375' \qquad V = 141.3 \text{ in/sec} = 11.8 \text{ ft/sec}$$

Down

$0 \text{ in/sec} \rightarrow 141.3 \text{ in/sec}$ Normal force = 3000 lbf

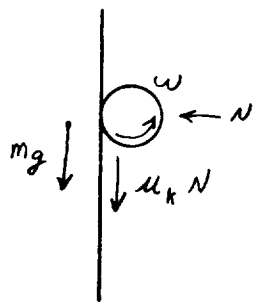

$$F = ma = m\left(\frac{V_f - V_i}{t - 0}\right)$$

$$1)\quad \mu_k N + mg = m\,V/t$$

$$\tau = I\alpha = I\left(\frac{\omega_f - \omega_i}{t - 0}\right) \qquad \omega_f = \omega = V/r \qquad \omega_i = \omega_o$$

resultant torque $= \mu_k N r + mgr$

$$1^*)\quad V = \frac{t}{m}(\mu_k N + mg)$$

$$2)\quad \mu_k N + mg = \left(\tfrac{1}{2} m r^2\right)\left(\frac{\omega_o - V/r}{t}\right)$$

Combine 1^* & 2

$$\mu_k N r + mgr = \left(\tfrac{1}{2} m r^2\right)\left(\frac{\omega_o \frac{t}{mr}(\mu_k N + mg)}{t}\right)$$

$$\frac{2}{mr^2}(\mu_k N r + mgr) = \frac{\omega_o}{t} - \frac{\mu_k N + mg}{mr}$$

$$\frac{2(\mu_k N r + mgr)}{mr^2} + \frac{\mu_k N + mg}{mr} = \frac{\omega_o}{t}$$

$$t = \frac{\omega_o m r}{3(\mu_k N + mg)} = \frac{(31.4)(39.5)(.375)}{3[(.15)(3000) + 39.5(5.4)]} = \underline{.23 \text{ sec}}$$

assume Linear Acceleration

$$a = \frac{\Delta V}{\Delta t} = \frac{141}{.23} = 614.3 \ in/sec^2$$

$\Rightarrow$ Dist = 16.3 inches

25.8 − 16.3 = 9.5 inches

$$D = V t \Rightarrow T = \frac{9.5}{141.3} = \underline{0.07 \ sec}$$

UP Stroke

* Assume no upward vel after impact - ie. All energy transferred to hole or lost to friction

Normal force = 5000 lbf

BY similar method

$$t = \frac{\omega_0 \ m r}{3 [\mu_K N - mg]}$$

$$t = \frac{(31.4)(39.5)(.375)}{3[(.15)(5000) - 39.5(5.4)]}$$

$$\underline{t = 0.29 \ sec}$$

acceleration

$$a = \frac{141.3 \ in/sec}{.29 \ sec} = 487.2 \ in/sec^2$$

Dist = 20.5 inches

Divide into X, Y planes

$$(20.5 + 141.3\,t)\sin\theta = 18''$$

# of rotations/up stroke

$$(20.5 + 141.3\,t)\cos\theta = 5.5\,(1.1)\,\pi$$

$$\tan\theta = \frac{18}{5.5(1.1)\pi} \Rightarrow \theta = 43.5^\circ$$

$$t = \left[\frac{18}{\sin\theta} - 20.5\right] / 141.3 = \underline{0.04 \text{ sec}}$$

Deceleration time at End of up stroke V_{up} to 0.

Because wheel is at an angle

$$t = \frac{\omega_0 m r \sin\theta}{3[\mu_k N + mg]}$$

$$t = \frac{31.4\,(39.5)(.375)\sin(43.5^\circ)}{3[(.15)(3000) + 39.5(5.4)]}$$

$$\underline{t = .16 \text{ sec}}$$

$$a = \frac{97.3}{.16} = 608.1 \text{ in/sec}^2$$

$$\text{Dist} = \tfrac{1}{2}at^2 = 7.8 \text{ in}$$

	time	Dist	acceleration
Down Acceleration	0.23 sec	-16.3 "	614.3 in/sec²
Down Travel	0.07 sec	-9.5"	0
up stroke Acceleration	0.29 sec	14.1"	487.2 in/sec
up stroke travel	0.04 sec	3.9"	0
up stroke Deceleration	0.16 sec	7.8"	608.1 in/sec²
misc time	0.11 sec	—	— —

time for one cycle = 0.90 sec

rate = 1.1 Blows /sec

= 4000 Blows / hour

max. Acceleration of Bar = 614.3 in/sec²

= 9.5 Lunar g's

NATIONAL 42 381 50 SHEETS 5 SQUARE 42 382 100 SHEETS 5 SQUARE 42 389 200 SHEETS 5 SQUARE

IMPACT Force

$F \Delta t = \Delta m V$ conservation of momentum

$m = 39.5$ lbm

$\Delta t = 1/100$ sec

$V_1 = 141.3$ in/sec $= 11.8$ ft/sec

$F (1/20) = 39.5 (11.8)$

$F = 100 (39.5) (11.8)$

$F = 46{,}600$ lbf

42-381 50 SHEETS 5 SQUARE
42-382 100 SHEETS 5 SQUARE
42-389 200 SHEETS 5 SQUARE
NATIONAL

MARCH 11, 1986

ME 4182 A
GROUP #1
10 METER DRILL

CALCULATIONS FOR THE BIT SIZING:

1. HORIZONTAL STRESS (SIGMAX)

TORSION

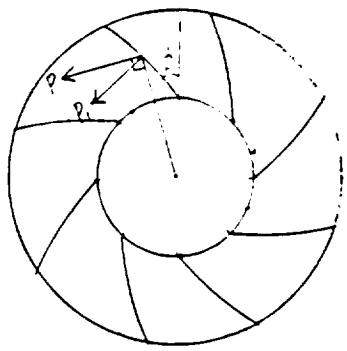

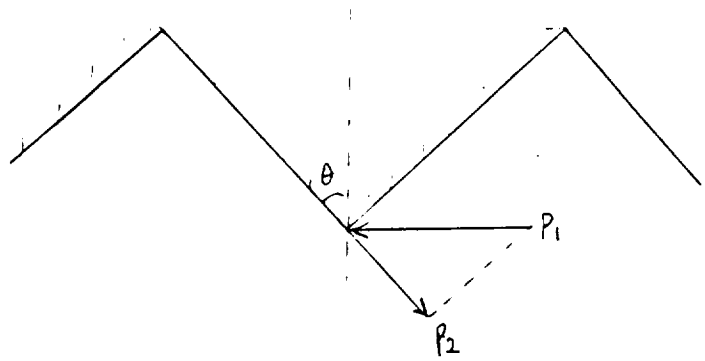

P = REQUIRED RADIAL FORCE

P2 = FORCE EXERTED BY THE ROCK

N = NUMBER OF THE TEETH

A = AREA OF THE SIDE OF THE BIT

P1=P/COS(PI)

P2=P1/COS(TH)

F=P*N = P2*N/(COS(TH)*COS(PI))

= T*A*N/(COS(TH)*COS(PI))

SIGMAX= T/(COS(TH)*COS(PI))

MARCH 11, 1986

ME 4150 A
GROUP #1
10 METER DRILL

1 VERTICAL COMPONENT

DOWNWARD FORCE

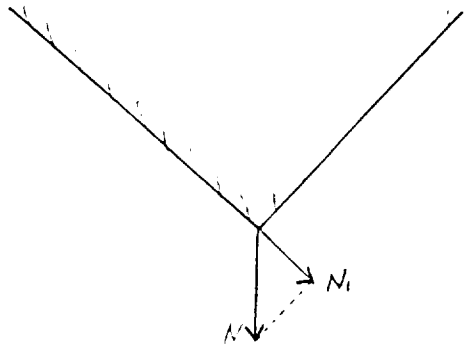

= N1(SIN TH)

SIGMAY = T(SIN(TH))

TMAX = SQR((SIGMAX-SIGMAY)**2/4)

MAXSIG = (SIGMAX-SIGMAY)/2+TMAX

Fig B3.1

(right) Transverse rupture stress of typical WC/Co grades; variation with cobalt content.

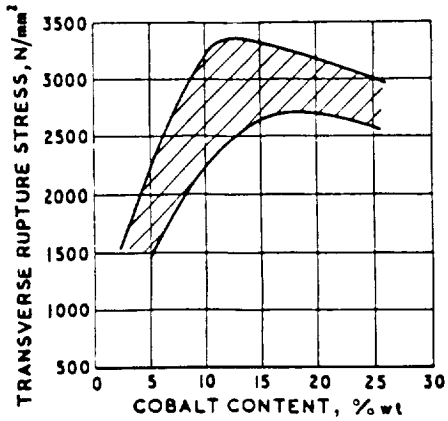

Fig B3.2

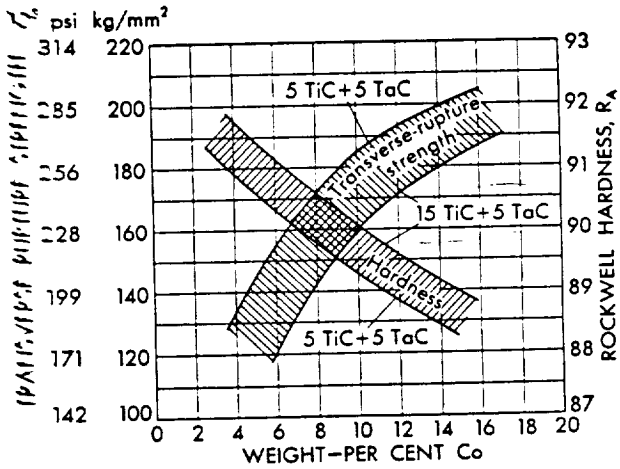

Transverse-Rupture Strength and Rockwell-A Hardness of WC-TiC-TaC(NbC) Compositions as a Function of TiC-TaC(NbC) and Co Contents.

Table XLII

Comparison of TaC-Free with TaC-Containing WC-TiC-Co Materials

Composition, %				Hardness, R_A	Transverse-rupture strength, psi
TiC	TaC-NbC	WC	Co		
40.5	0	53	6.5	92.5	113,600–127,800
38	5	50.5	6.5	91.5	134,900–149,100
20.5	0	72	7.5	91.5	163,300–177,500
18	5	69.5	7.5	91	184,600–198,800
15	0	76.5	8.5	90	184,600–205,900
13	4	74.5	8.5	90.5	220,100–234,300
7.5	0	83.5	9	89	213,000–227,200
5	5	81	9	89.5	248,400–269,800
7	0	86.5	6.5	91	184,600–198,800
4	6	83.5	6.5	91	213,000–241,400

MARCH 11, 1986

ME 4182 A
GROUP #1
10 METER DRILL

FORTRAN PROGRAM TO OPTIMIZE THE BIT DESIGN!

BY COMPARING THE FORCE REQUIREMENT FOR VARIOUS BIT ANGLE, WE
CAN SELECT THE OPTIMUM BIT SHAPE. THIS PROGRAM HELPS TO PERFORM
SUCH A JOB.

AT OUR SELECTED ANGLES, PI=40 AND TH=50, THE FORCE REQUIREMENTS
ARE FSIDEWAY= 223327.9603461 LBF
FDOWNWARD= 287105.0324619 LBF

```
PROGRAM DRILL5(INPUT,OUTPUT,TAPE5=INPUT,TAPE6=OUTPUT)
INTEGER N
REAL A,PI,TH,FDOWN,FSIDE,RO,RI,T
READ*,PI,TH
RO=5.5
RI=3.5
N=10
T=2500
PI=PI*3.141592/180
TH=TH*3.141592/180
A=3.141592*(RO**2-RI**2)/(2*N)/COS(TH)
FSIDE=T*A*N/COS(TH)/COS(PI)
```

ME 4182 A MARCH 11, 1986
GROUP #1
10 METER DRILL

```
70    FDOWN=T*A*2*N/SIN(TH)

80    PRINT*,'SIDE WAY FORCE REQUIRED = ',FSIDE,'  LBF'

90    PRINT*,'DOWNWARD FORCE REQUIRED = ',FDOWN,'  LBF'

100   STOP

110   END
```

APPENDIX B

DRAWINGS

42 381 50 SHEETS 5 SQUARE
42 382 100 SHEETS 5 SQUARE
42 389 200 SHEETS 5 SQUARE

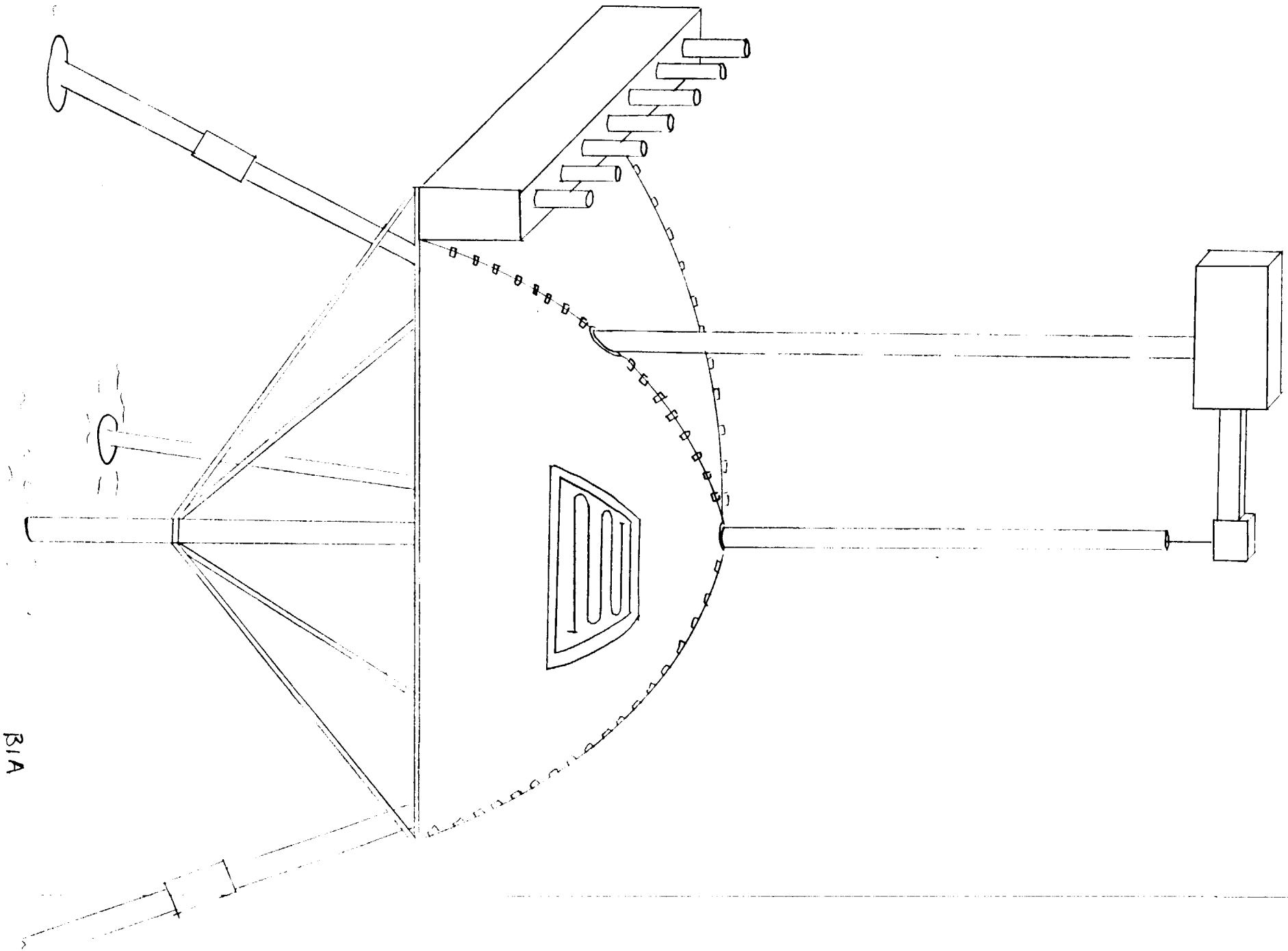

B1A

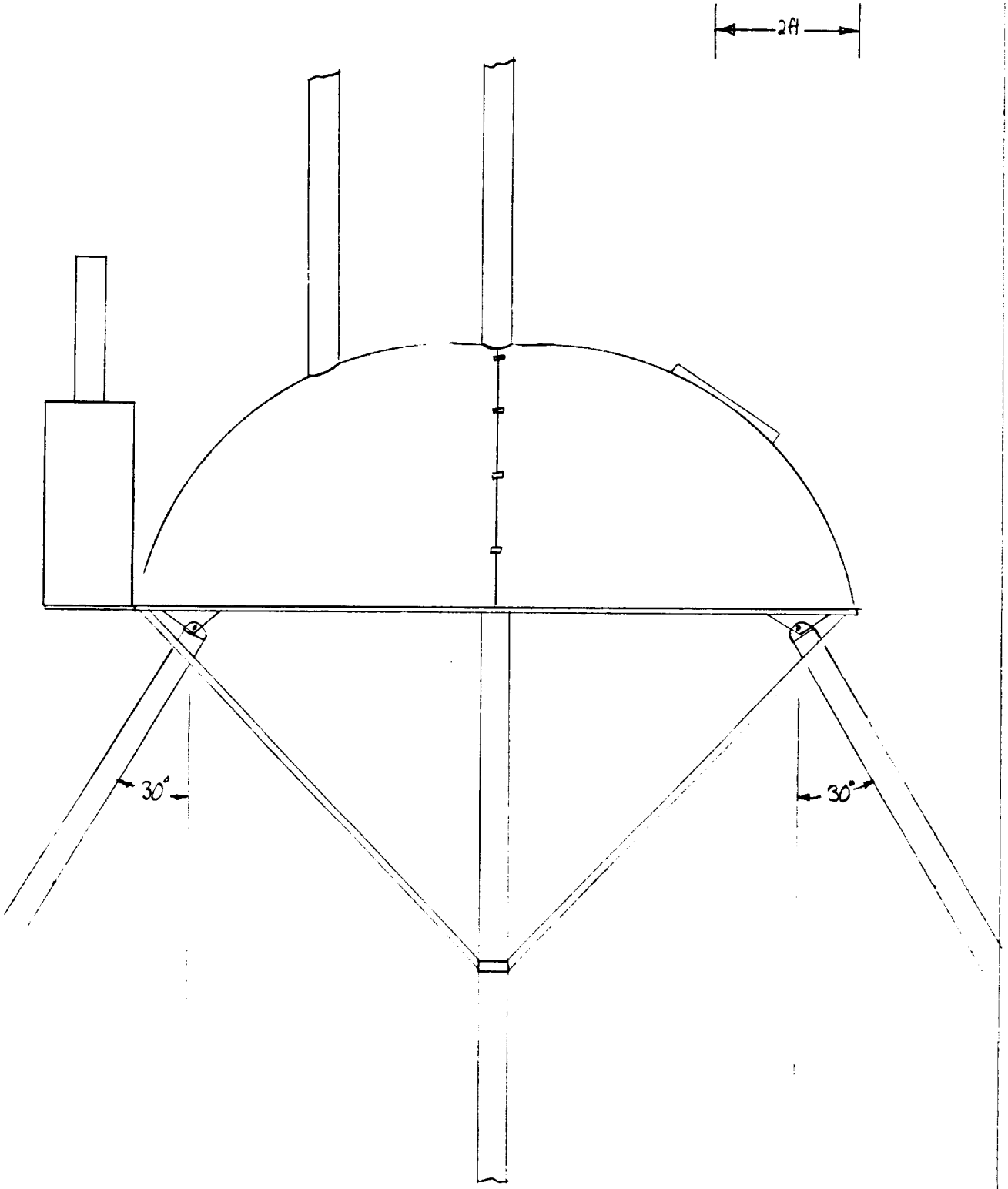

B1B

42 381 50 SHEETS 5 SQUARE
42 382 100 SHEETS 5 SQUARE
42 389 200 SHEETS 5 SQUARE
NATIONAL

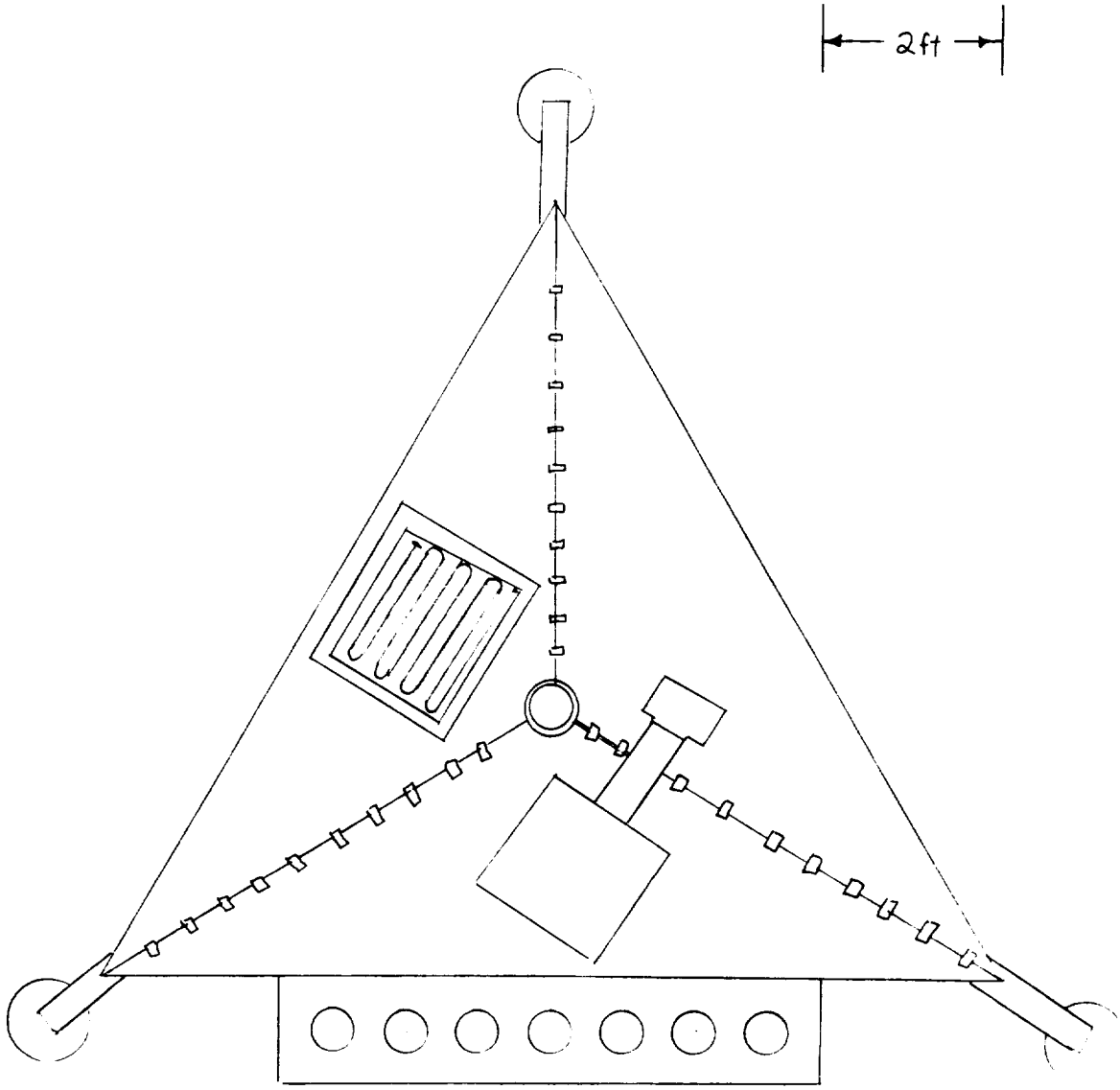

BIC

42 381 50 SHEETS 5 SQUARE
42 382 100 SHEETS 5 SQUARE
42 389 200 SHEETS 5 SQUARE

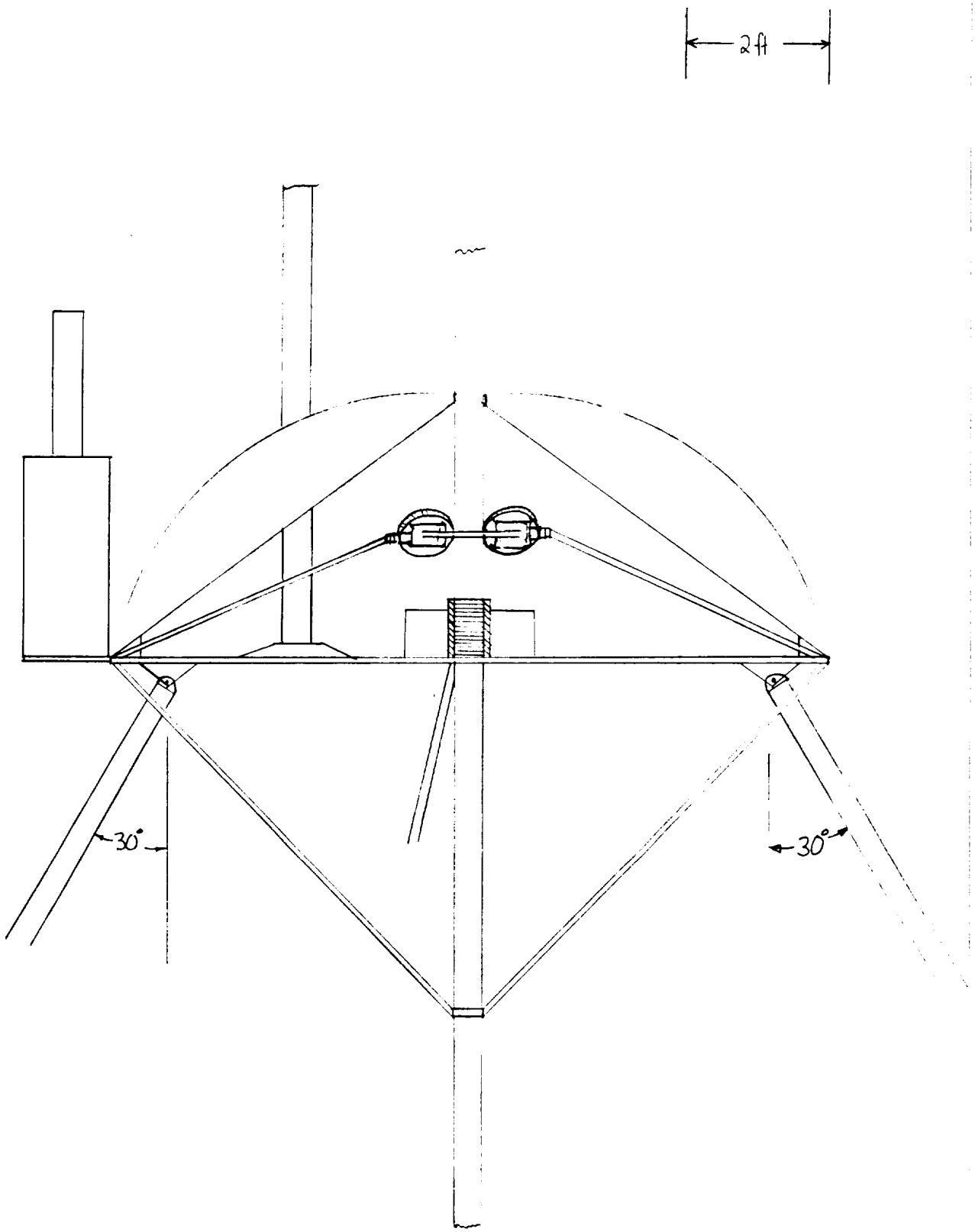

BID,

42 381 50 SHEETS 5 SQUARE
42 382 100 SHEETS 5 SQUARE
42 389 200 SHEETS 5 SQUARE
NATIONAL

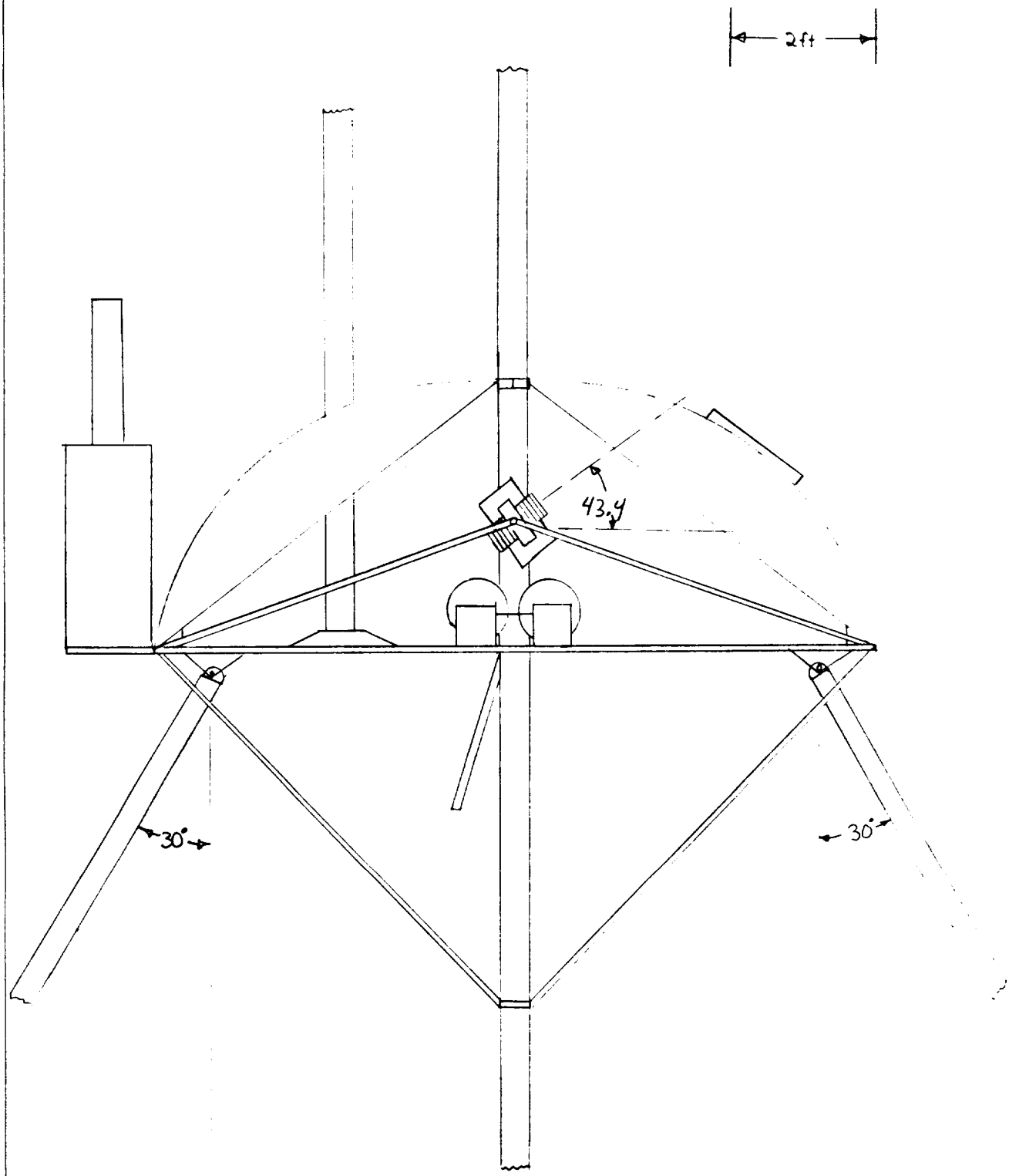

BID2

42-381 50 SHEETS 5 SQUARE
42-382 100 SHEETS 5 SQUARE
42-389 200 SHEETS 5 SQUARE
NATIONAL

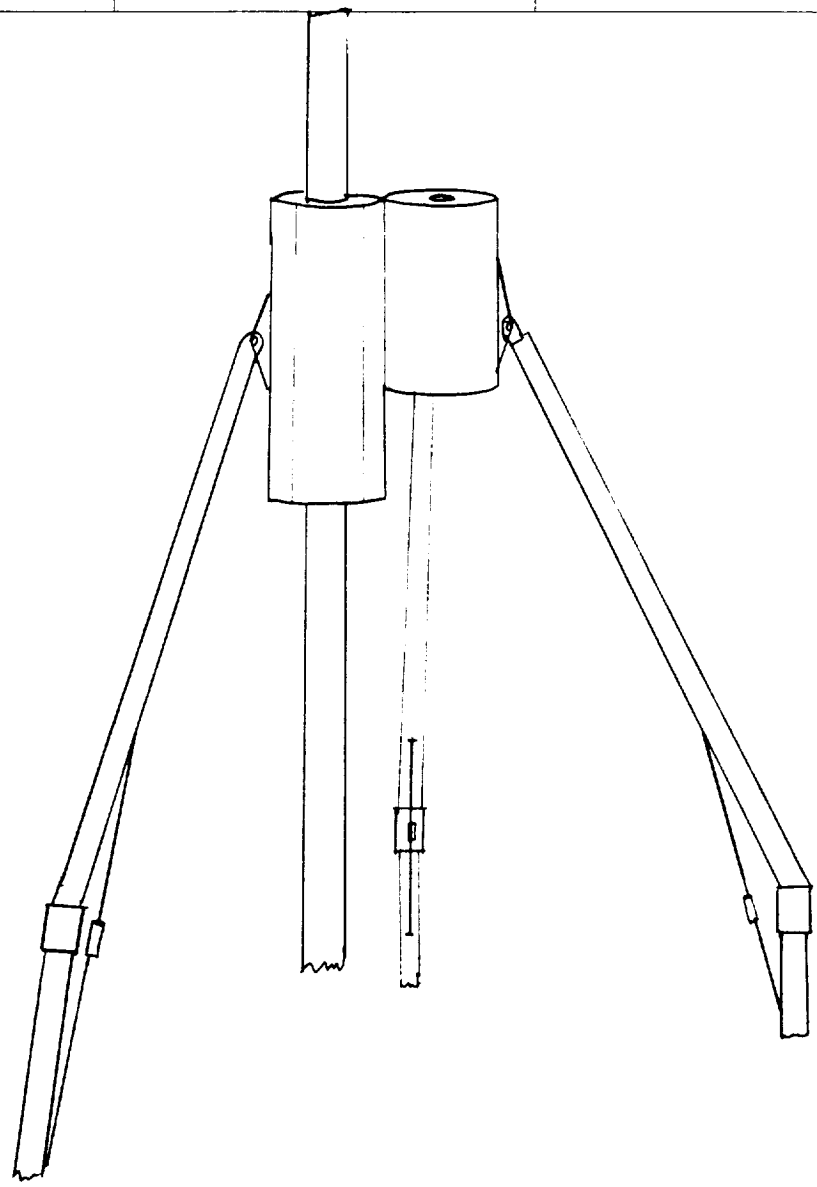

B1E

NATIONAL 42 381 50 SHEETS 5 SQUARE 42 382 100 SHEETS 5 SQUARE 42 389 200 SHEETS 5 SQUARE

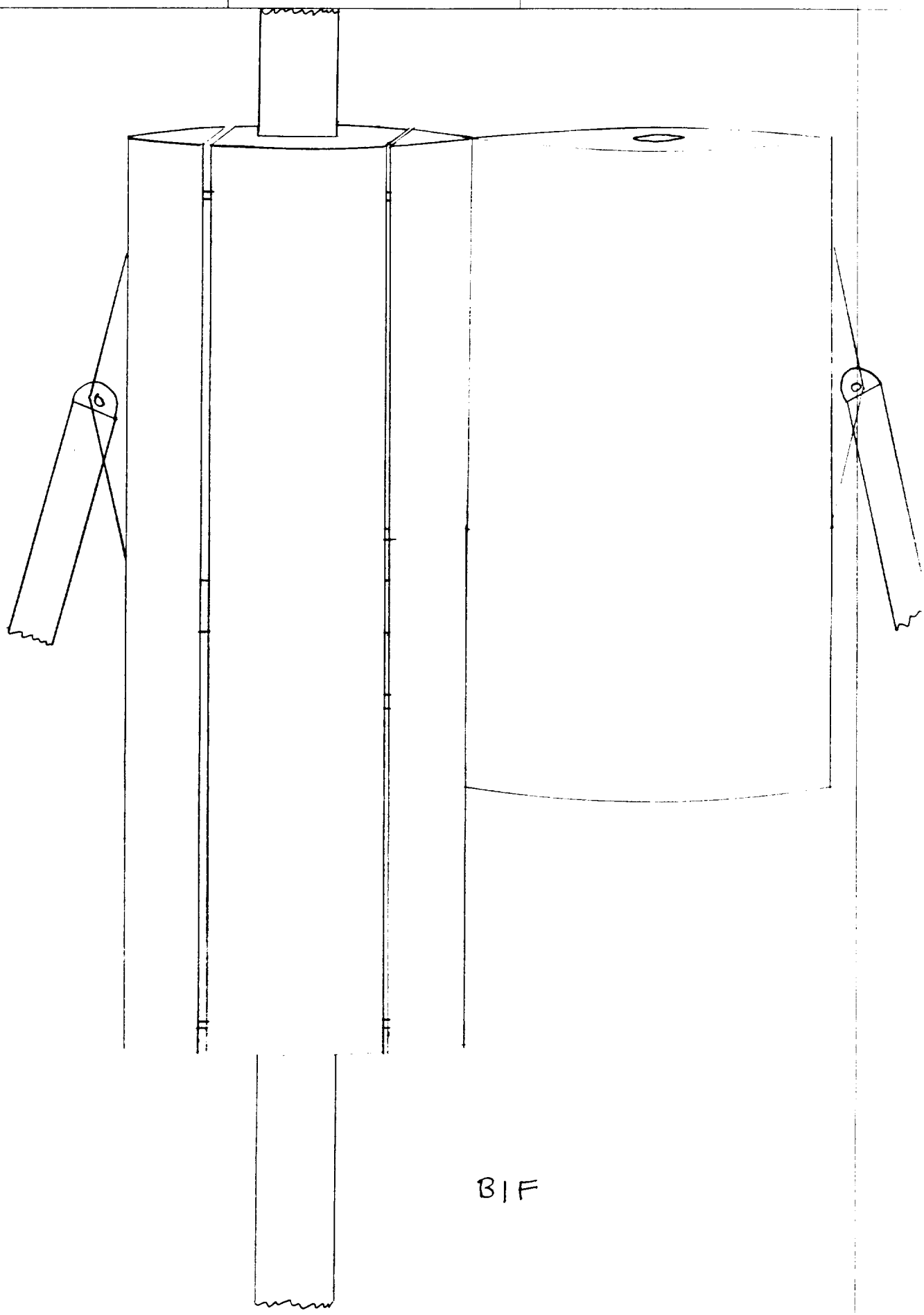

B|F

42 381 50 SHEETS 5 SQUARE
42 382 100 SHEETS 5 SQUARE
42 389 200 SHEETS 5 SQUARE
NATIONAL

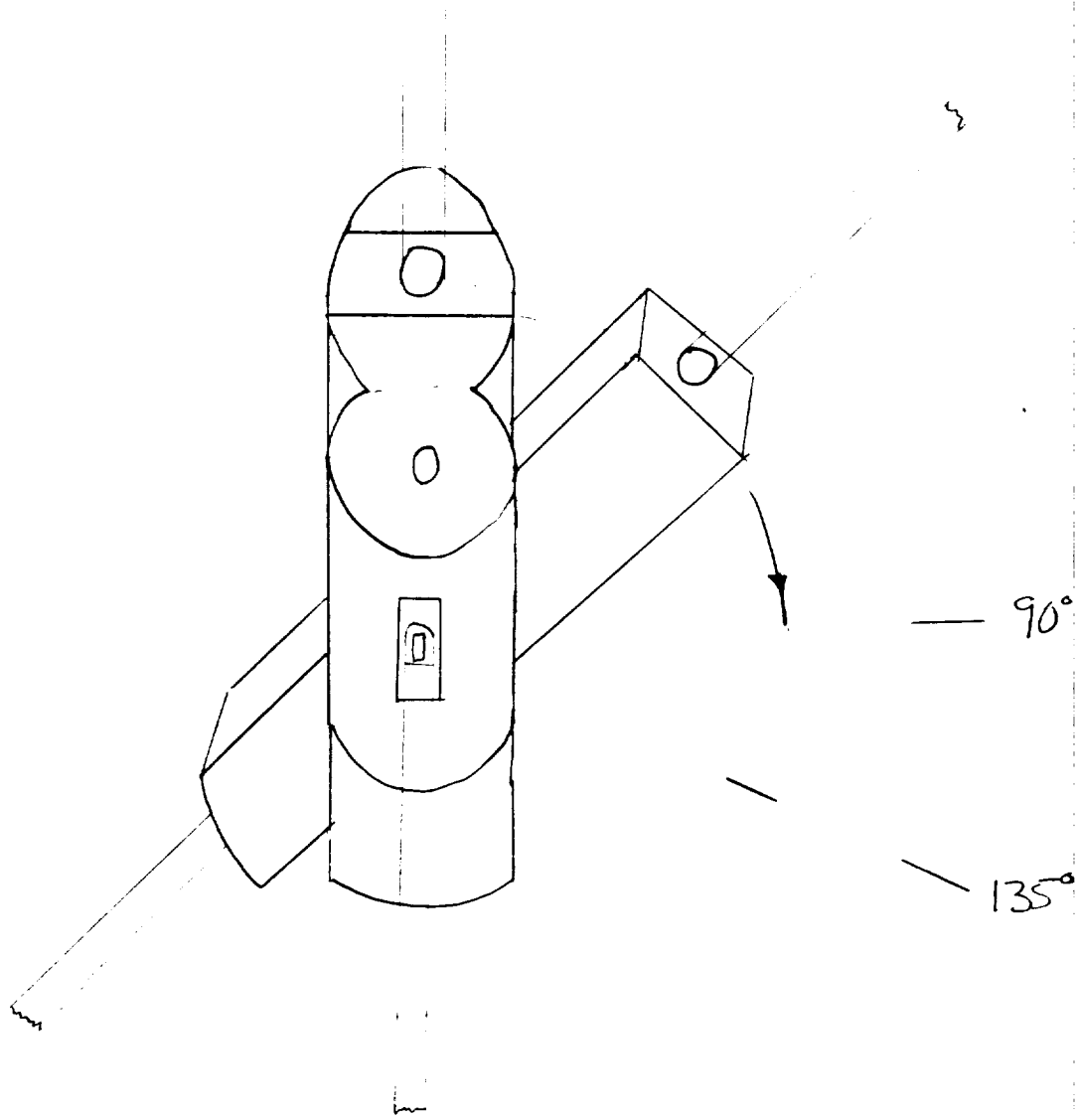

Could "aim" drill by adjusting "legs and feet"
or by rotating housing

BIG

42 381 50 SHEETS 5 SQUARE
42 382 100 SHEETS 5 SQUARE
42 389 200 SHEETS 5 SQUARE
NATIONAL

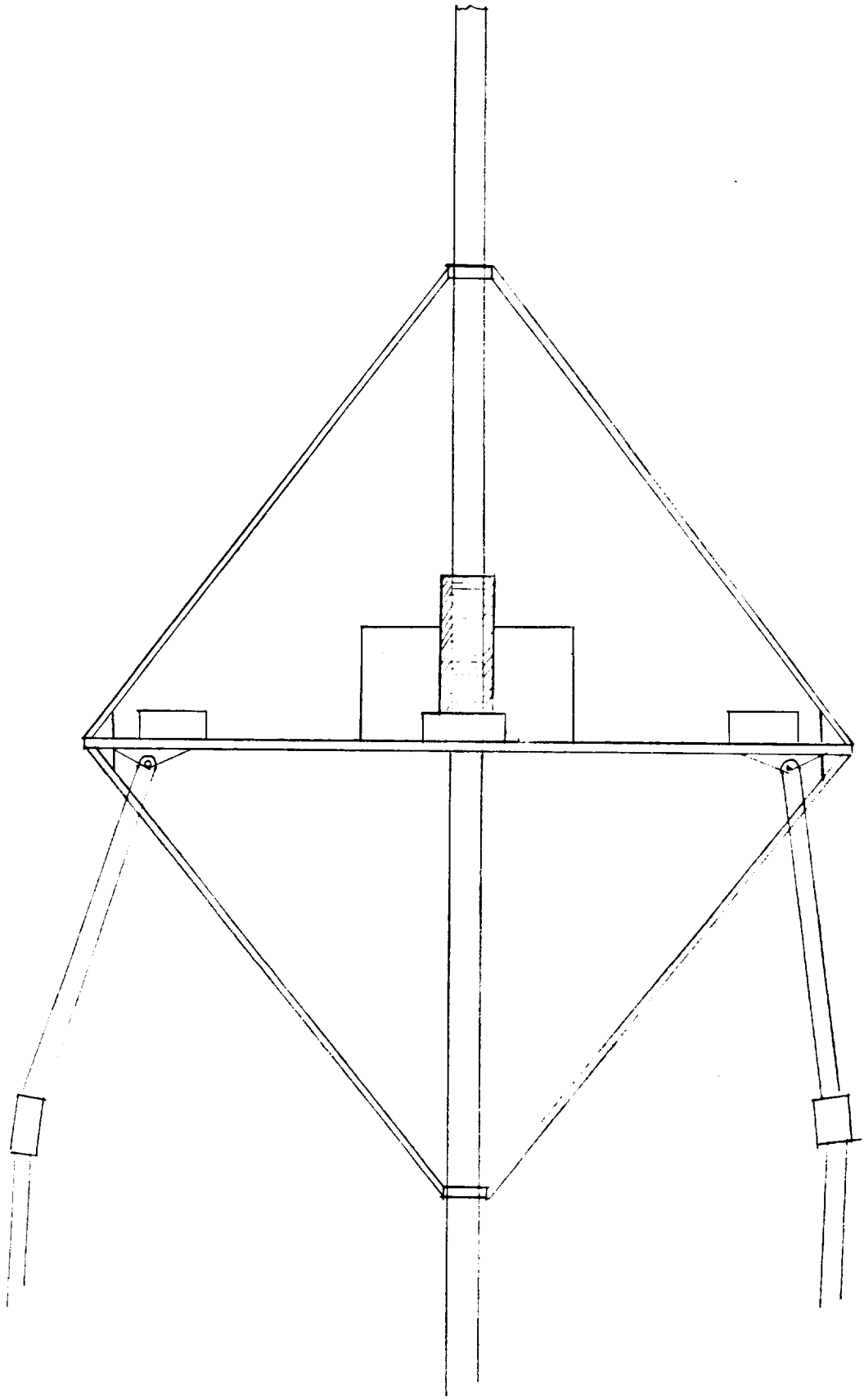

B1H

NATIONAL
42 381 50 SHEETS 5 SQUARE
42 382 100 SHEETS 5 SQUARE
42 389 200 SHEETS 5 SQUARE

NATIONAL 42 381 50 SHEETS 5 SQUARE
42 382 100 SHEETS 5 SQUARE
42 389 200 SHEETS 5 SQUARE

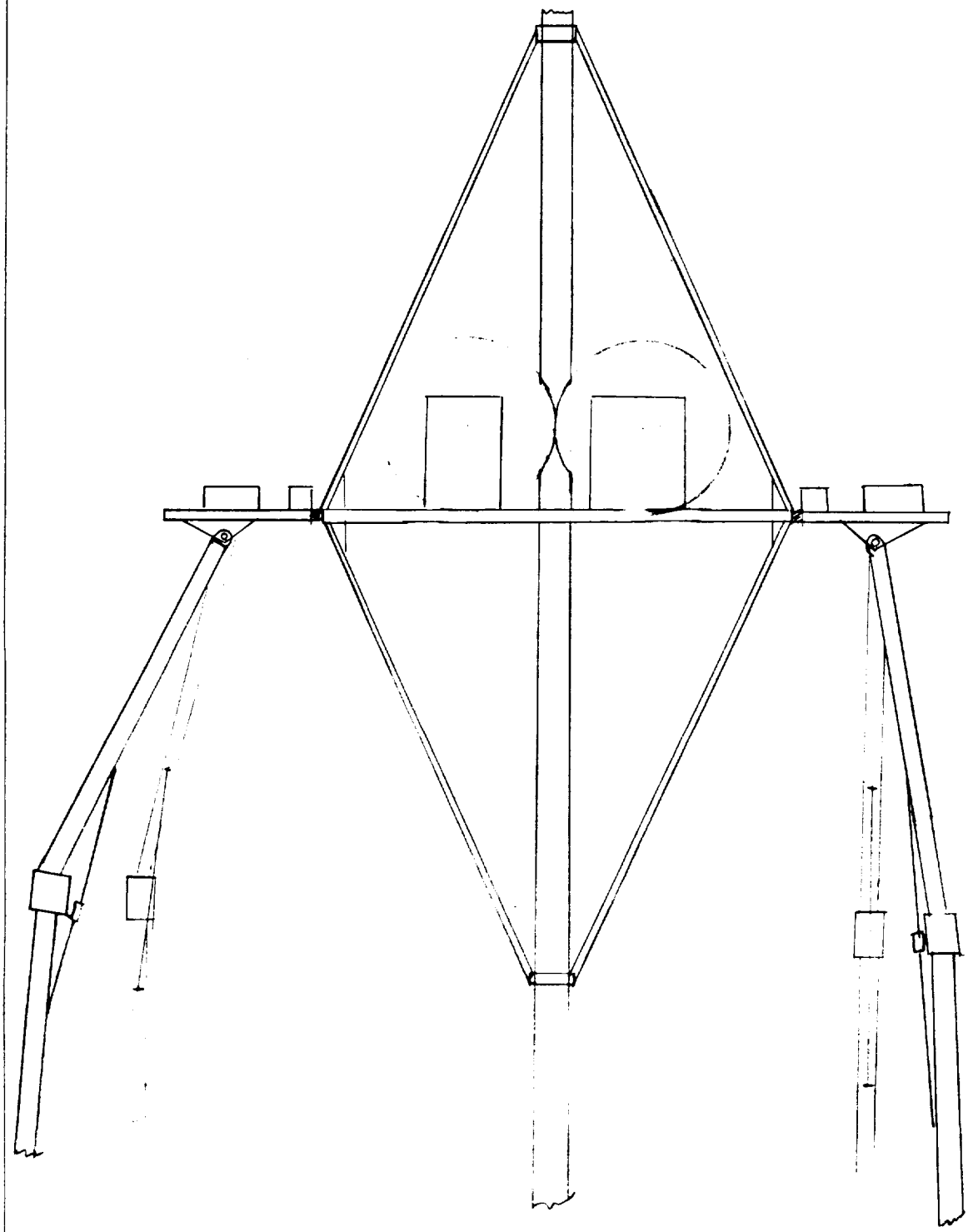

B1I

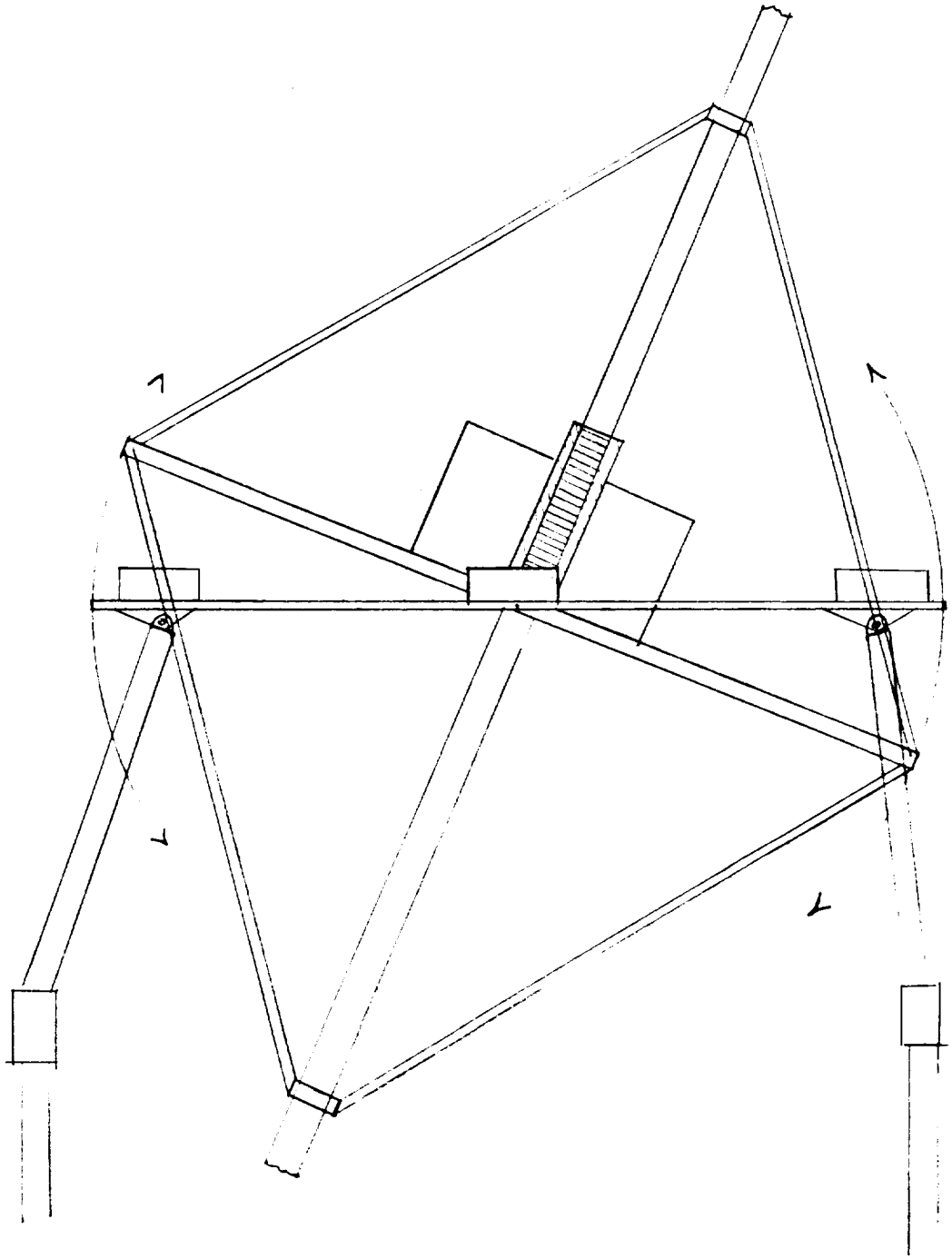

Could aim drill by rotating center
or by adjusting legs

BIJ

NATIONAL 42-381 50 SHEETS 5 SQUARE
42-382 100 SHEETS 5 SQUARE
42-389 200 SHEETS 5 SQUARE

Leg Assembly, External

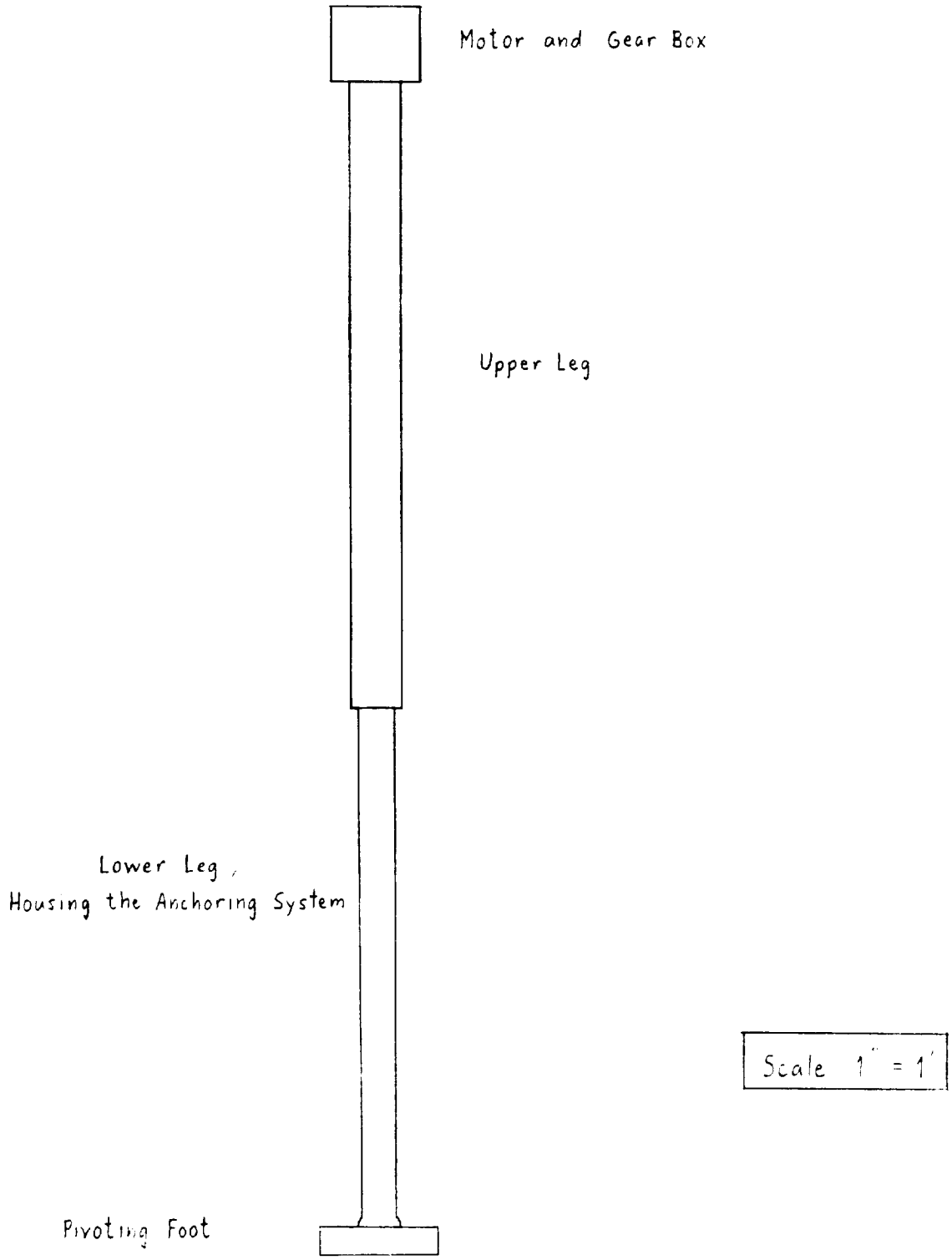

Figure B2.1

Leg Assembly, Cut-Away

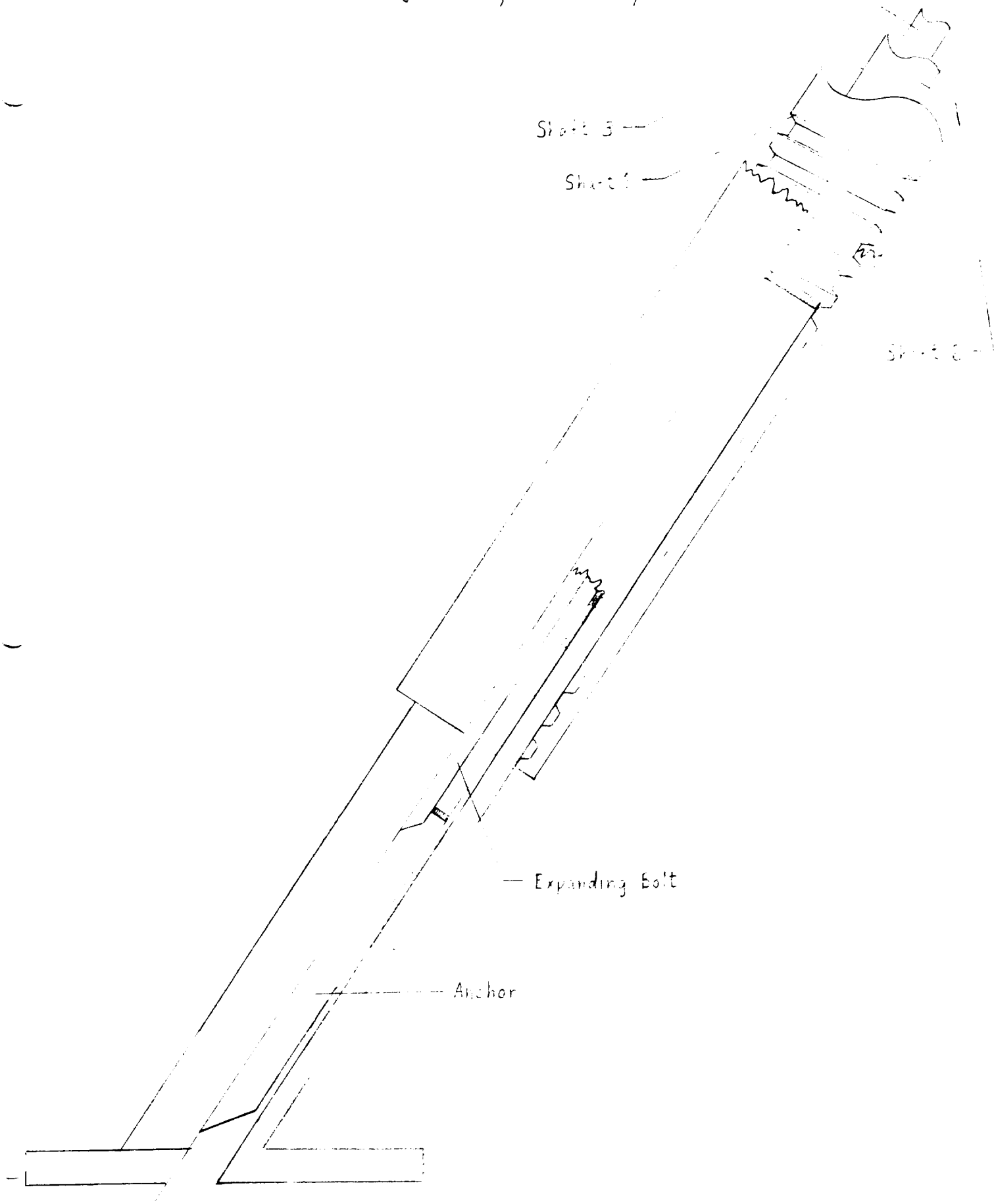

Figure B2.2

Figure B3.1 - The Drill Bit

NUMBER OF TEETH = 10

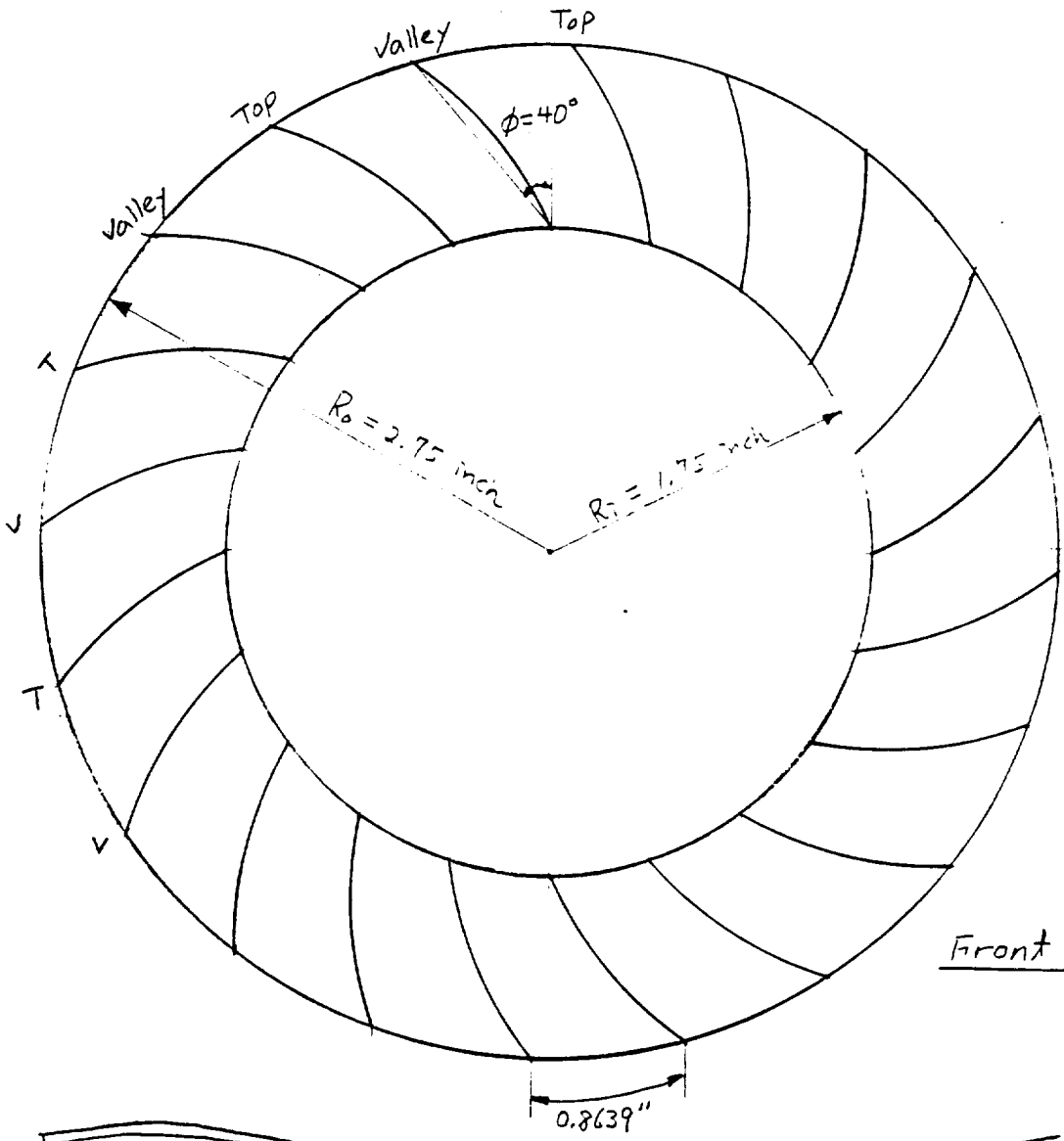

Front View

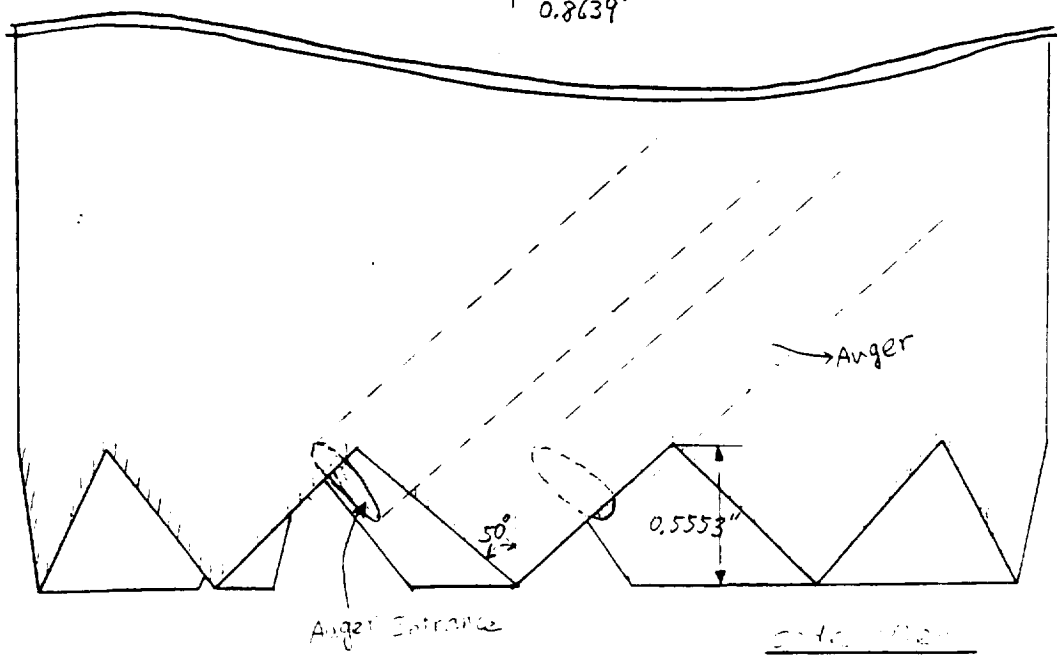

BIT, CORE BARREL, AUGER

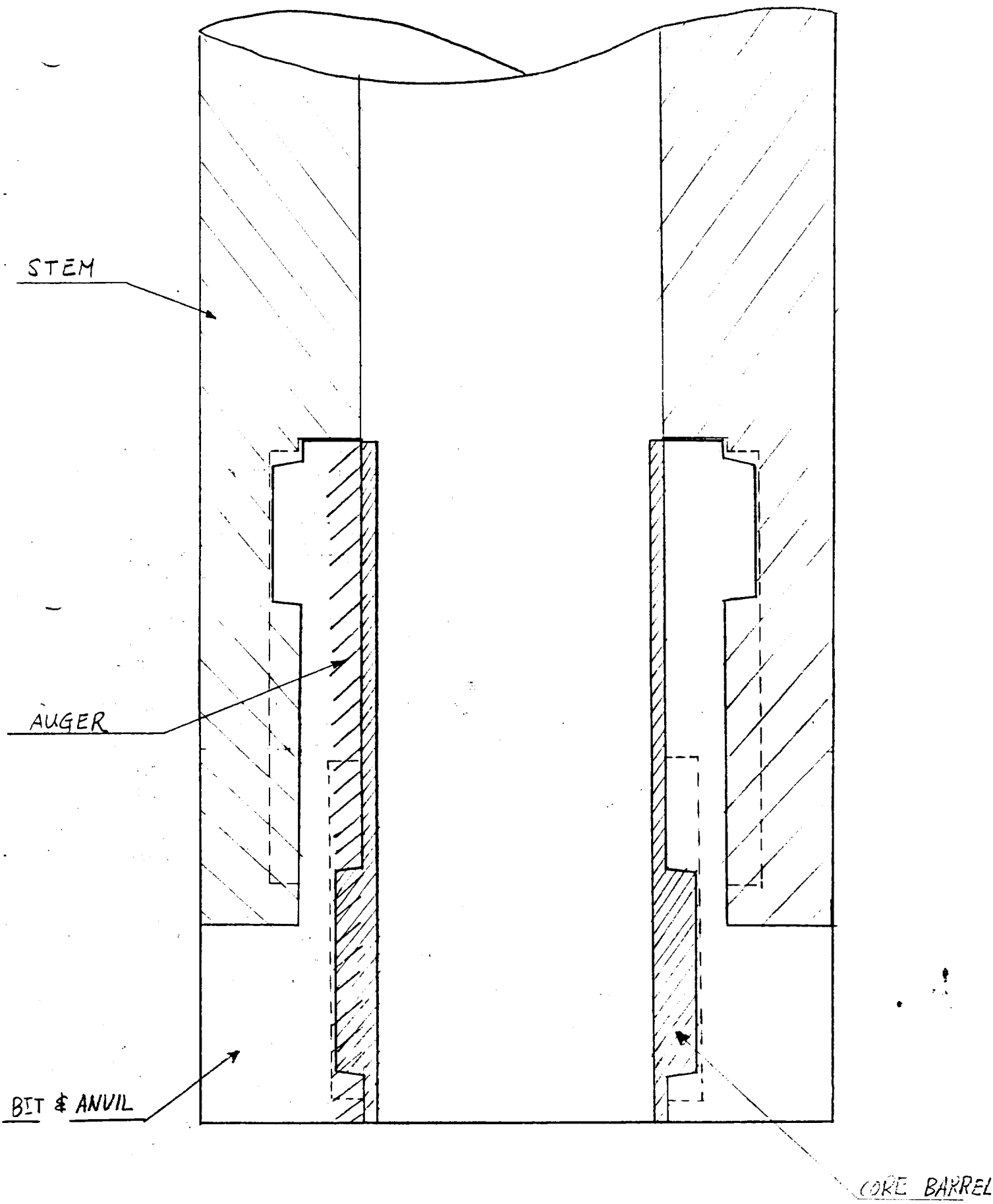

EXPANDING DRILL ANCHOR

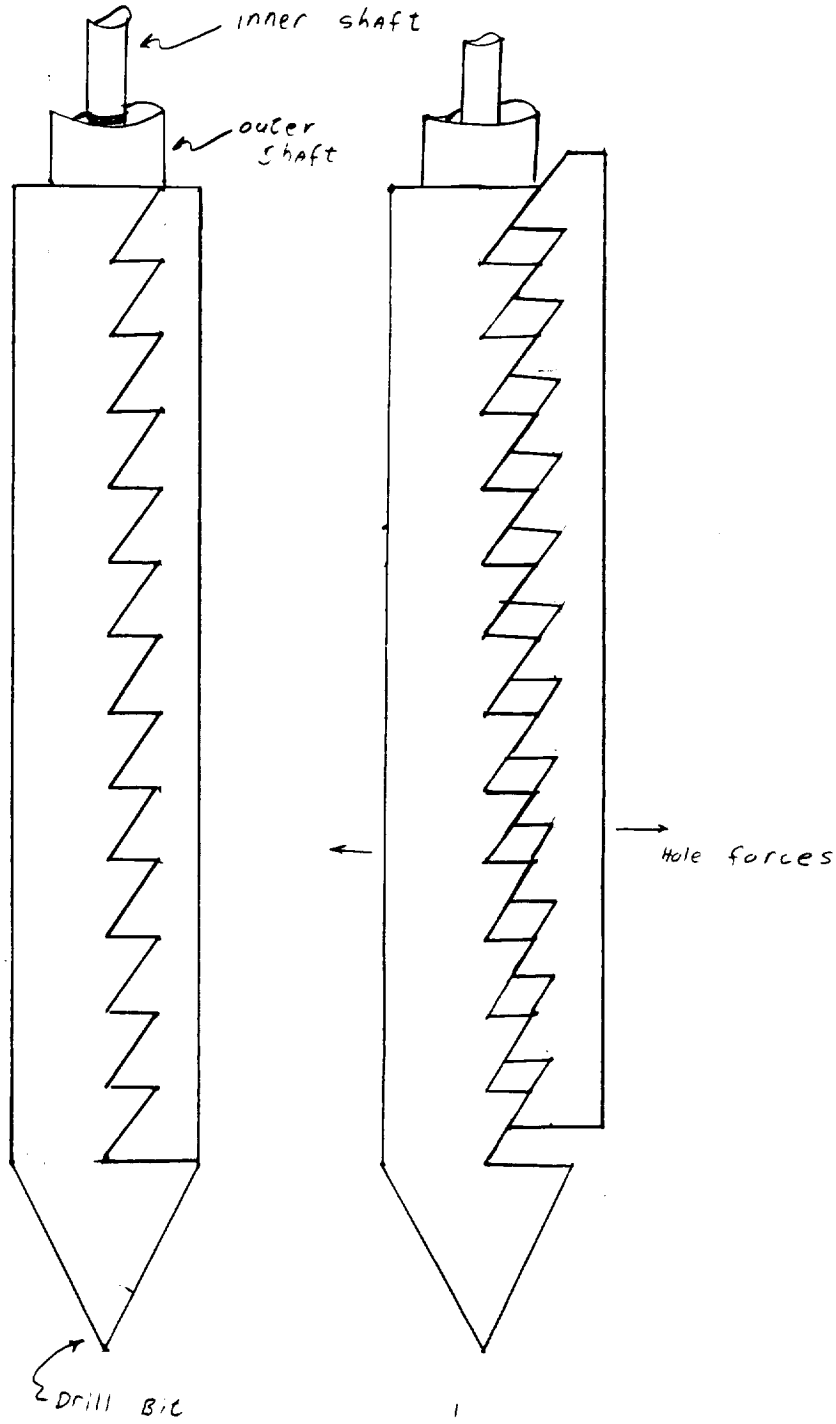

NATIONAL 42-381 50 SHEETS 5 SQUARE 42-382 100 SHEETS 5 SQUARE 42-389 200 SHEETS 5 SQUARE

REED "SK" AND "KK" CORE BARRELS

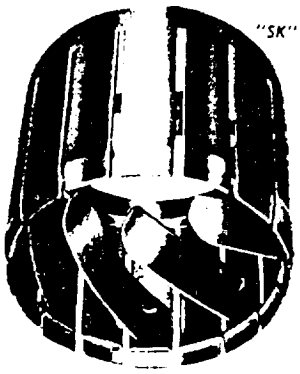

"SK" Core Catcher

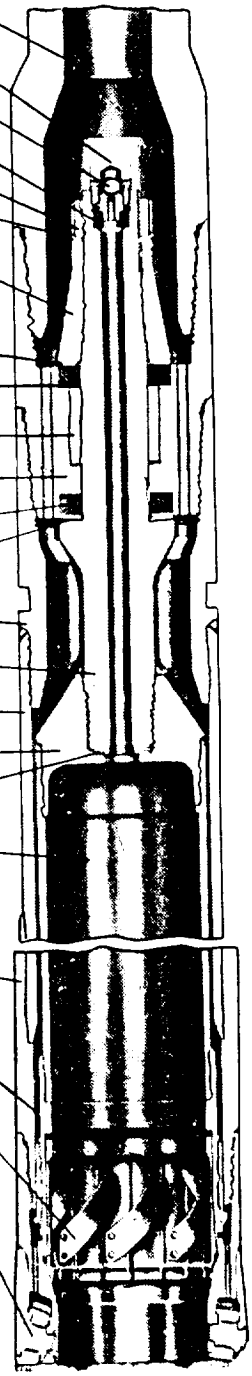

CORE - BARREL

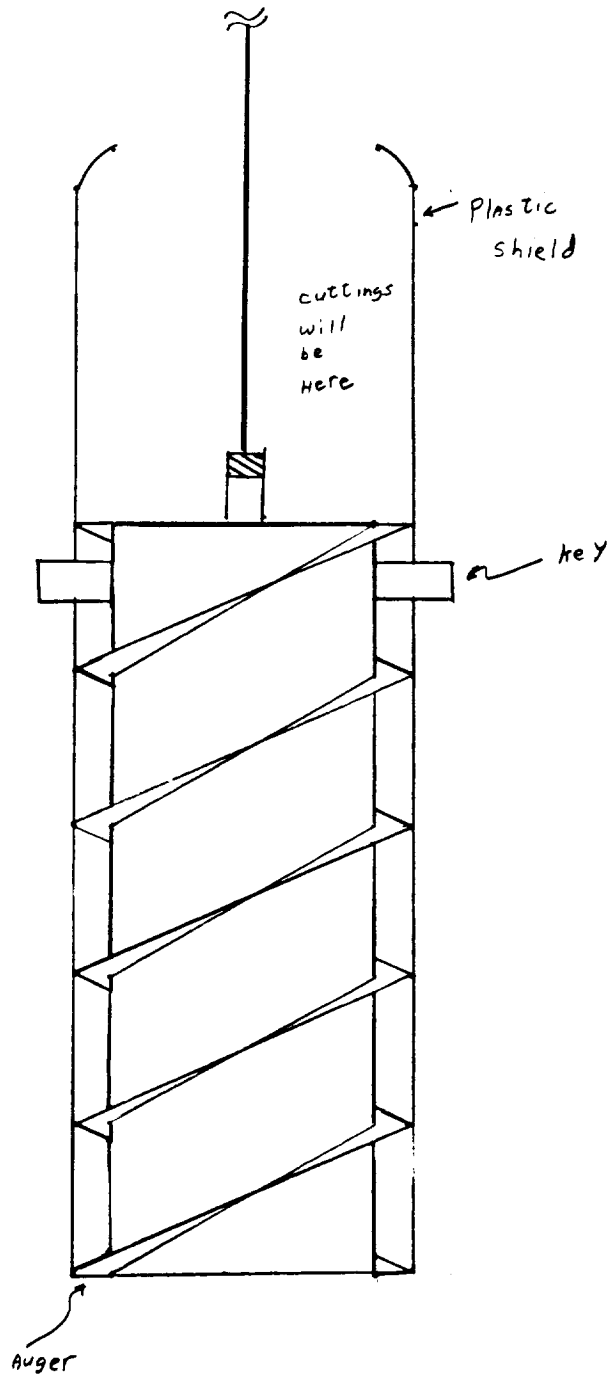

42 381 50 SHEETS 5 SQUARE
42 382 100 SHEETS 5 SQUARE
42 389 200 SHEETS 5 SQUARE
NATIONAL

DRILL SHAFT

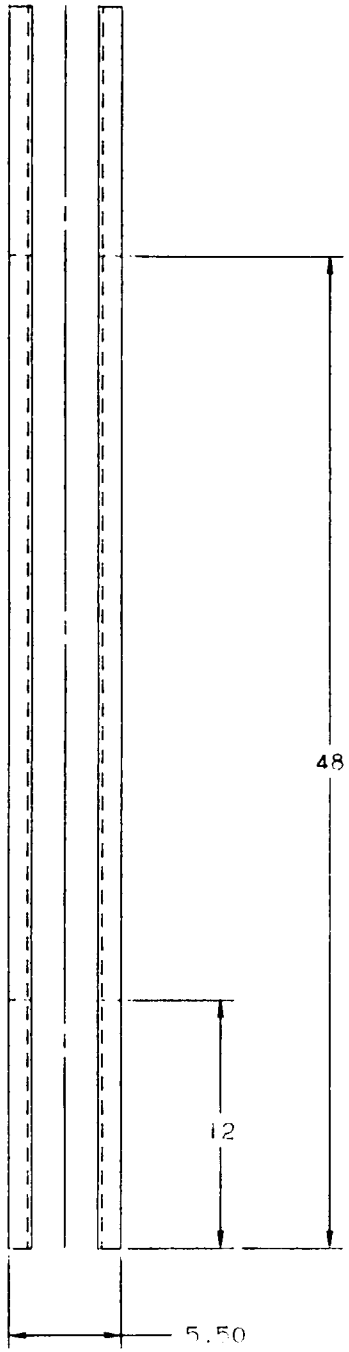

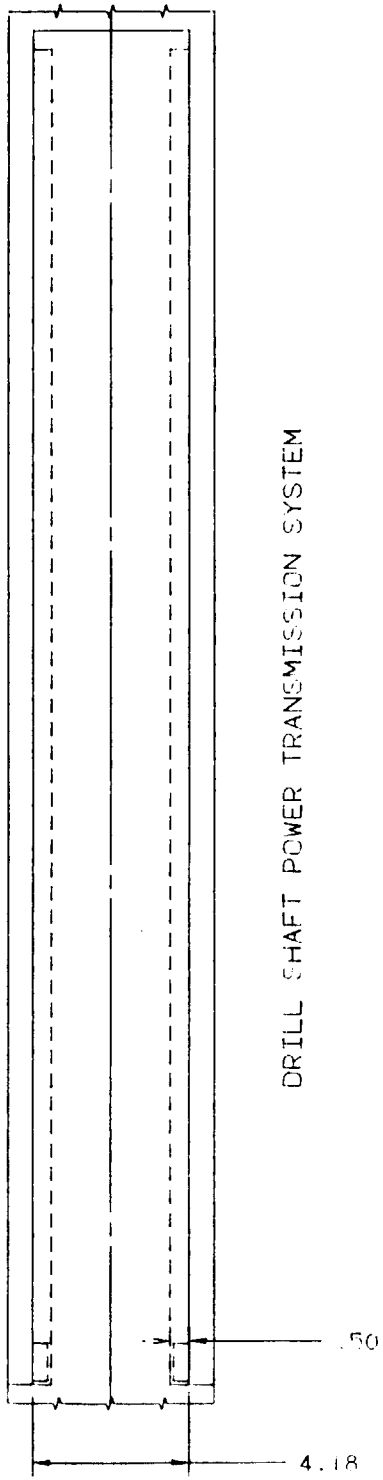

DRILL SHAFT POWER TRANSMISSION SYSTEM

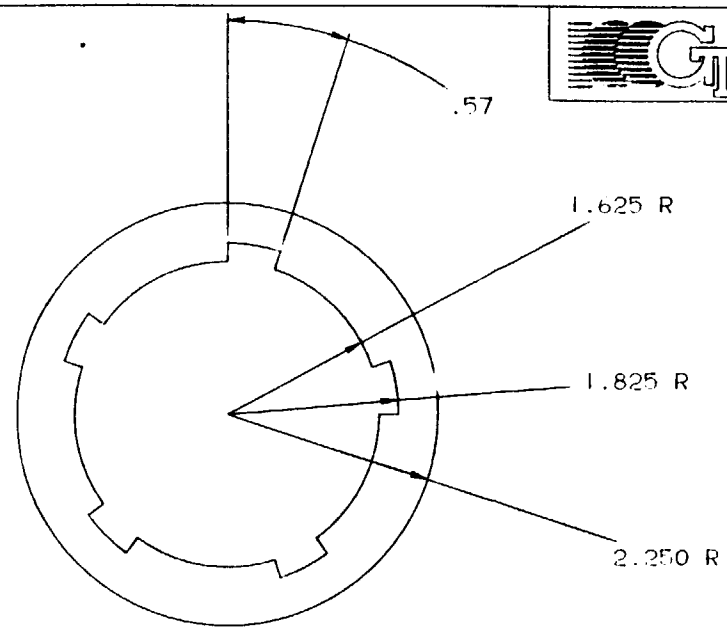

DRILL SHAFT TOP VIEW

POWER TRANSMISSION CROSS SECTION

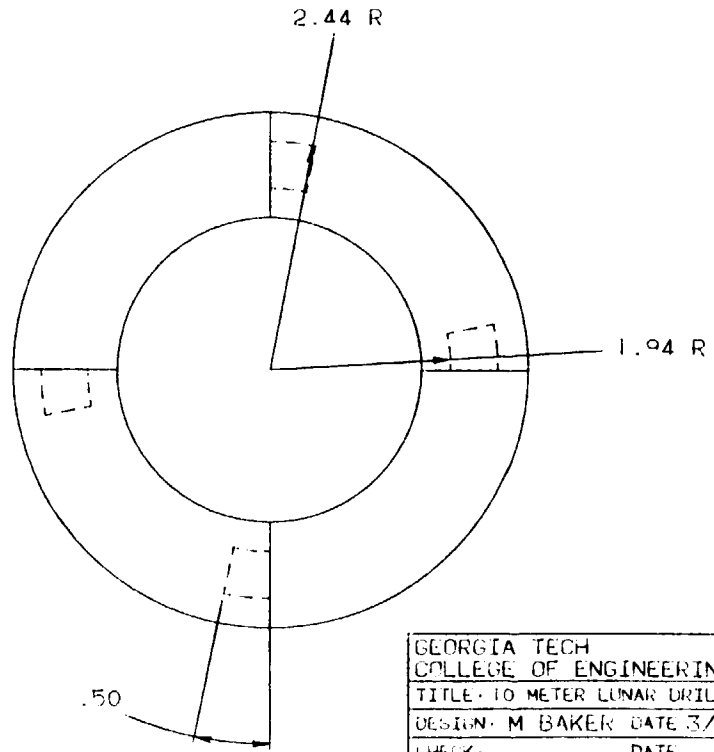

GEORGIA TECH COLLEGE OF ENGINEERING	
TITLE: 10 METER LUNAR DRILL	
DESIGN: M BAKER	DATE 3/4/86
CHECK:	DATE
DRWG NO. DRILL SHAFT	

POWER TRANSMISSION from DRILL SHAFT to CORE BARREL

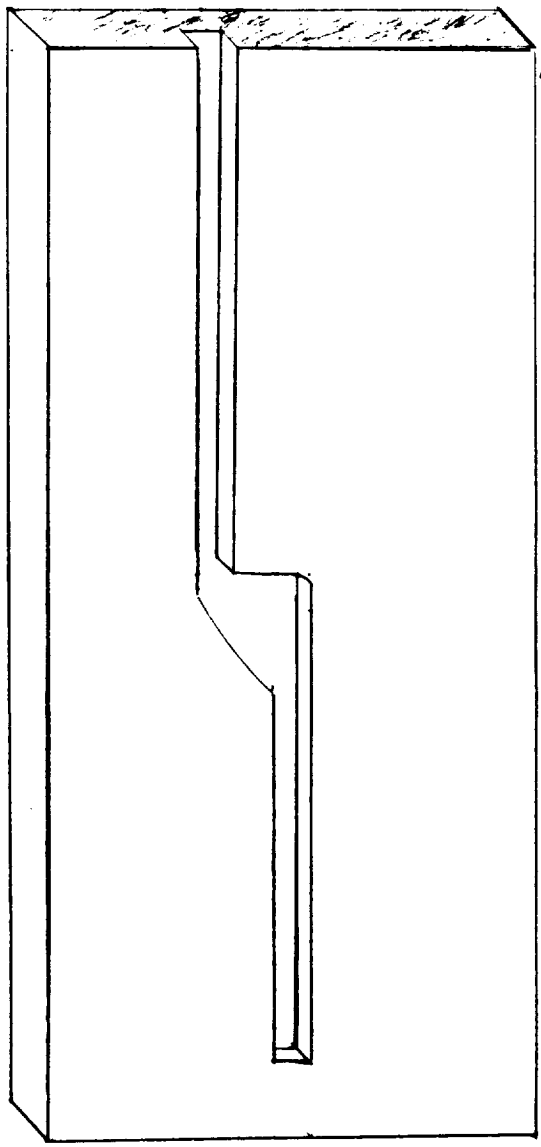

Drill shaft cross section

42-381 50 SHEETS 5 SQUARE
42-382 100 SHEETS 5 SQUARE
42-389 200 SHEETS 5 SQUARE
NATIONAL

Power transmission

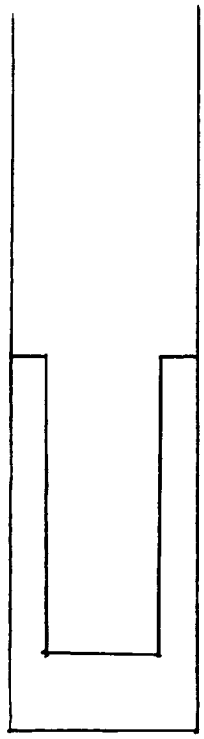

Drill shaft power transmission at impact

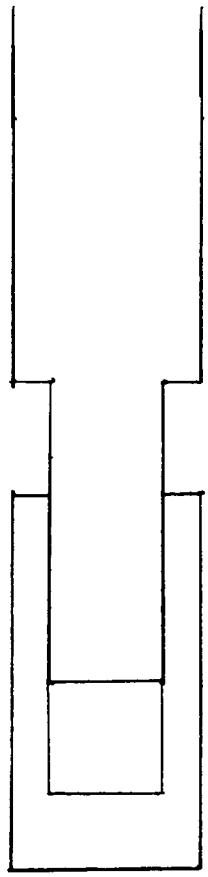

Drill shat power transmission before and after impact

- The upper shaft has both vertical and rotary motion
- The lower shaft has only rotary motion

42-381 50 SHEETS 5 SQUARE
42-382 100 SHEETS 5 SQUARE
42-389 200 SHEETS 5 SQUARE
NATIONAL

Radiator Panel

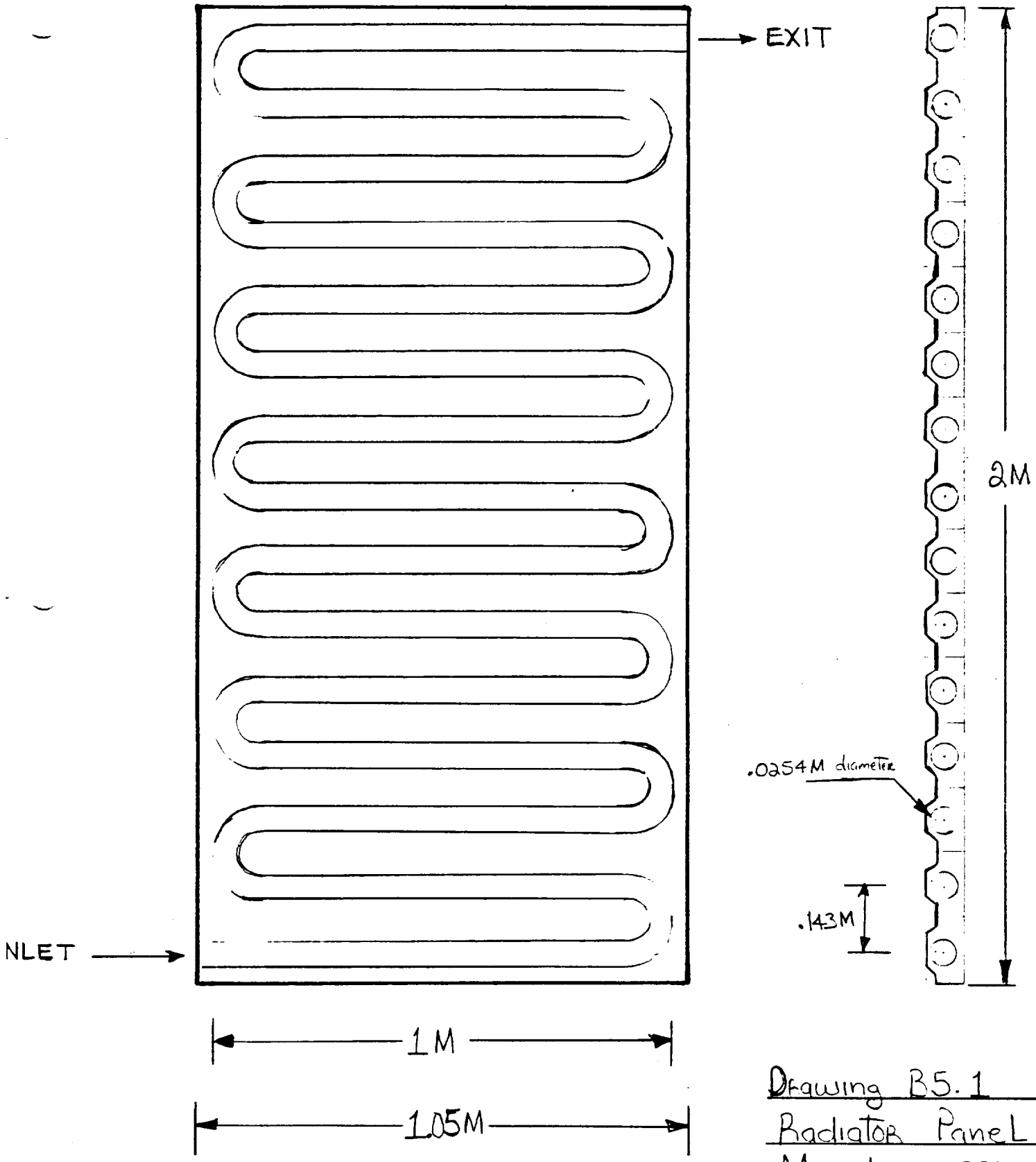

Drawing B5.1
Radiator Panel
March 10, 1986
Keith Green

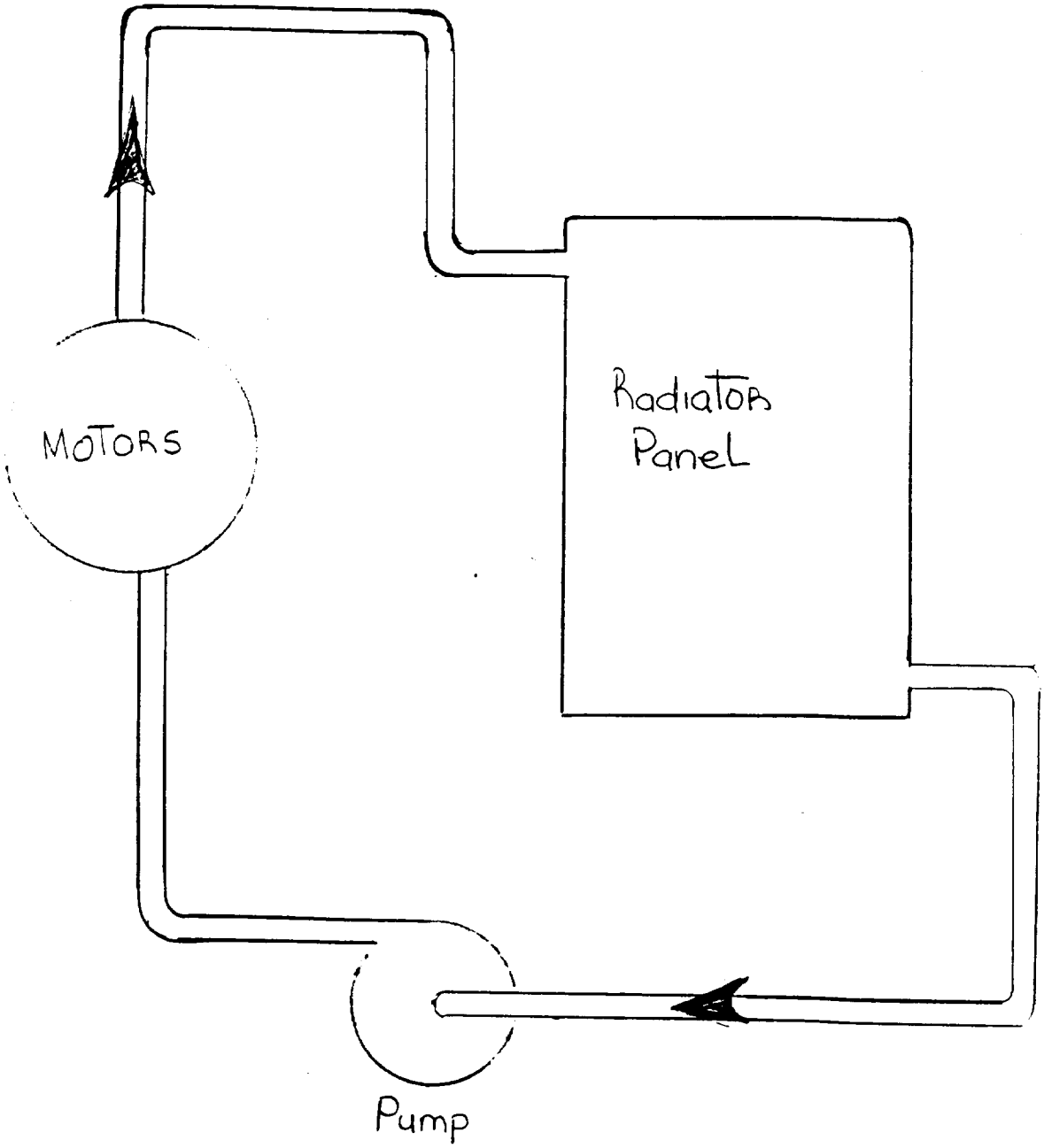

Drawing B5.2
Cooling System
March 10, 1986
Keith Green

APPENDIX C

ALTERNATIVE DESIGNS

MARCH 11, 1986

ME 4182 A
GROUP #1
10 METER DRILL

ALTERNATIVE MATERIALS

From general research and knowledge the list of possible materials was narrowed down to magnesium alloys, titanium alloys, beryllium alloys, and ceramics.

Magnesium, with a density of 1.80 g/cc cm and a ultimate tensile strength of 50,000 lb/in sq, has an excellent strength to weight ratio. Magnesium also has a relativly high melting point of 700 degress celsius. This material was not chosen mainly because it deforms and loses strength at temperatures below 225 C.

Titanium has excellent stength (ultimate tensile strength of 140,000 lb/sq in), a very high melting point of 1660 C and good corrosion resistance. Titanium was not chosen for the structure due to its strength to weight ratio but was chosen for the drill because of its other excellent properties.

Beryllium (density of 1.82 g/cc cm) has an excellent strength to weight ratio. Beryllium has a close packed hexoganal crystal system and is very brittle. For this reason it was not chosen.

Ceramics, with densities as low as .221 g/cc cm and strengths as high as 435,000 lb/in sq, have some of the best strength to weight ratios available. Ceramics retain their strength at temperature of 2000 degress celsius and have good

corrosion resistant properties. Ceramics were not chosen because they are difficult to produce in complex shapes, are very hard to repair once broken and are brittle.

ALTERNATIVE STRUCTURES

The first design considered of the lunar drill was the rotary type. This is the simplest way to drill because it requires little more than a motor with legs. The design, as illistrated in figure B1e -B1g, is divided into two parts; motor and guiding rig. The guiding rig is subdivided into three sections, a center housing, which can rotate, and two supporting end sections. The drill can be aimed by either adjusting the legs or rotating the center housing. Problems encountered with this design are, there was no way to exert a sizable downward force, heat generated by the drill, and difficulty with getting core samples out of the hole.

The next design considered incorporated a two wheel driving system. The two large wheels, as shown in figure B1h-B1j, would drive the drill up, change rotoring direction and force the drill down. The drill would have a helical threaded drill bit so that at the point of impact it would

turn. This would give us a rotary-percussion type of drill which is much cooler than rotary drills. The drill could be aimed once again by either adjusting the legs or by rotating the center of the structure. The core would be retrieved by bringing the drill out of the hole slowly with the wheels, rotating the center structure and "pushing", by motor a located in the drill, the core out of the drill. The drill would then be lowered slowly back into the hole and resume drilling. Problems with this design were that the motors would be subject to great amounts of torque and problems of taking the drill in and out of the hole without collasping the hole.

MARCH 11, 1986

ME 4182 A
GROUP #1
10 METER DRILL

APPENDIX D

PROGRESS REPORTS

January 27, 1986
ME 4182 A

PROGRESS REPORT

Week One: We had an organizational meeting and decided to research drilling on the earth and to study the lunar terrain for possible adaptation of a system on the lunar environment.

Week Two: We divided into the following areas of study: Lunar Environment, Structure Materials, Anchoring System, Dust Removal, Drill Bits and Drilling Methods, Power and System controls.

Progress report 3

as of Feburary 7, 1986

ME 4182a - Group I - The Design of a 10-Meter Lunar Drill

---

1. Decision is made on the anchoring system. Three auger type anchors that supports each leg will be used. After the anchor is drilled into the ground it separates radially giving enough tension to hold the structure. Its advantage is the simplicity in structure and operation steps.

2. Decisions are made on the type of drilling mechanism and the bit material. A modified version of rotary-percussive mechanism; which gives core sample is chosen: Our mechanism; which gives core sample is chosen: Our

   preferrence on the sole rotary mechanism is desserted due to the fact that no material is found to have appropriate combination of strength and thermal resistence for the bit. The research on the ceremic materials for drill bit showed that the ceremic materials have relatively low hardness and low heat conductivity. Thus even ceremic material is not appropriate for dry rotary drilling. Leaving the possibility of using rotary mechanism, only rotary-percussive mechanism is possible. For an effective drilling on soft material, the system should have the feature of rotary type drill as well as rotary-percussive. Also for the bit material a carbide is chosen.

3. For the drive system we have narrowed down to two types: electromagnetic driven and the pressurized gas driven. The sole use of electric motor seems to give many disadvantages, including short life expectancy.

4. We are currently working on the following areas :

   a. Decision on the drive system
   b. Design of the power transmission system
   c. Design of the bit shape
   d. Lubrication and sealings
   e. Motor specifications
   f. Research on sensoring systems
   g. Research on the heat and strength characteristics of carbides

PROGRESS REPORT #4

A ten meter lunar drill and its design

- A new driving system is choosen. It will consist of two "wheels" which will drive the drill up and down. In the drill bit, a helix configuration will turn the the drill as it is driven downwards. In this way we will still have a rotory-percussion system with as little machinery down the hole as possible.
- The base of the drill will be divided into three parts. The center piece will be able to rotate in able to drill at an angle into the lunar surface.
- The changed anchoring system will now consist of a small drill located inside each supporting leg. These drills will drive into the surface and then expand, holding the drill and providing a strong support.
- The coring system will take core samples every five feet. An auger system will take core bits and place them on top of the core. When the five foot mark is reached, the drill will pull out of the ground and deposit the core in a holding tray. The drill will then go back down the hole and continue drilling for another five feet.

PROGRESS REPORT # 5

February 24, 1986

ME 4182A - **Group I** - [redacted] 10-Meter Lunar Drill

- The function of the core barrel and auger system was looked into more carefully. It was decided that instead of placing the chips directly on top of the core itself, the chips would be placed on top of the inner barrel main section. The reason for this is that it would be more difficult to place and have an auger system working efficiently without disturbing the core sample. In other words the spacing between the core and auger system would present a major problem. The core barrel would have to be modified to allow approximately 4ft of chips to be stored on top of the inner barrel main section.

- An idea for rotating the drill shaft on the upstroke without rotating the inner barrel main section was conceived. This idea is very simple. Since for the percussive part of our drill we'll have a set of wheels to propel the shaft straight down and disengaging a second or two before impact, we'll also have for the rotary part a set of wheels placed at an angle which will rotate and at the same time raise the drill shaft. While the drill is rotating this will provide the cutting action of the drill for a good second.

ME 4182
10 METER LUNAR DRILL
GROUP 1
MARCH 3, 1986

We have been working on the mechanism to engage and disengage the wheels from the drive shaft. The possiblity of using a hydrolic system is being looked into now. This system seems to provide sufficient normal force and at a speed that is needed for this application.

The wheels will spin at 200 rpm and have a diameter of nine inches. There will be two motors, one driving each wheel through a gear box.

Dust removal will be taken care of through the core removal since the weight of the cuttings will not prove to interfer with the drill operation. The core will be removed from the top of the shaft by the use of an automatited winch and robotic arm assembly. There will be a total of 7 core barrels and the cores will be romoved by the astronauts at there lunar base. The core barrels will then be refurbashed and put back into use.

We are now working on the writting of the report and the drawings that will be required.

BIBLIOGRAPHY

1. CEMENTED CARBIDE, BY SCHWARZKOPF AND KIEFFER
   PUBLISHER NEW YORK. THE MACMILLAN COMPANY, 1960
   CHAPTER 10,11,14

2. METAL CUTTING, BY E.M.TRENT
   PUBLISHER BUTTERWORTHS, 1984
   CHAPTER 7

3. ENGINEERING DESIGN, BY DIETER
   PUBLISHER MCGRAW HILL, 1983
   CHAPTER 6

4. WORLD DIRECTORY AND HANDBOOK OF HARD MATERIALS
   BY KENNETH J. A. BROOKS
   PUBLISHER@D AN ENGINEER'S DIGEST PUBLICATION, 1975

5. "DEVELOPMENT OF LUNAR ROCK DRILL AND SURFACE SAMPLING SYSTEM"
   IEEE TRANSACTION ON AEROSPACE, VOL. AS-2
   APR. 1964, P388-395

6. "ROTARY-PERCUSSIVE SYSTEM FAVORED FOR MOON DRILLING"
   TECHNOLOGY WEEK, VOL. 18, JUNE 20 1966
   P33,35,36

7. "SOIL SAMPLING ON THE LUNAR SURFACE WITH THE AUTOMATIC LUNAR
   STATION LUNA 20", COSMIC RESEARCH, VOL. 11, NO.3
   NOV,1973 P406-409

8. MECHANICAL ENGINEERING DESIGN
   BY JOSEPH E. SHIGLEY AND LARRY D. MITCHELL
   PUBLISHER@D MCGRAW HILL, 1983
   CHAPTER 2

9. Moon Rocks and Minerals, Alfred A Gvinson,
   Pergamon Press, 1971, NYC

10. The force of The Moon, Ralph B Buldwin
    The University of Chicago Press, 1953

11. The Nature of The Lunar Surface, Wimont N. Hess
    John Hopkins Press, Baltimore ,1965

12. Geology Of The Moon, Thome, A Mulch
    1972, Princton University Press, Princeton

13. Handbook Of Space Technology Status and Prodjects
Thomas Hord, CRC Press, 1985

14. Materials In Space Technology. Richard Thompson
Alfred James Kennedy, George Newnos limited, 1963 london

15. The Materials Background To Space Technology, Alfred Kennedy
George Newnos Limited, 1963 london

16. Physics Metallurgy of Engineering Materials
E.R. Petty, George Allen And unwin LTD london 1968

17. Metals Handbook, Properties and Selection 8th Edition
Tay or Lyman American Society for Metals, 1968
Metals Park, Ohio

18. Mechanical Properties of Lunar Soil Density, Porosity
rohesium and angle of internal friction. O.K.
Mitchell and W.N. Huston, Proceedings of the Apollo
11 Lunar Science Confrenece, Vol # pp 2025 to
2044 , 1970

19. Jounal of Geophysics Reacsearch; Soil Mechanical Properties
at The Apollo 14 Site, June K Mitchell, Lesile G Bromwell,
Volune 77, number 29, 1972

20. Rock Bolting A Practical Handbook, R. Schach, K. Oarshol A.M.
Heltzen Norwegian Institute of Rock Blasting Techniques
1979 Pregamon Press

21. Anchoring In Rock & Soil Dr. Ing. Leos Hobst,
Ing. Josef Zatic CSC Elsevier Science Publishing Company
Amsterdam Oxford newsYork 1983

22. Physics Parts 1&2 David Halliday, Robert Resnick,
Johnson Willey & Sons Inc NewYork 1978