(NASA-CR-186826) USER'S MANUAL FOR KSTAB: A COMPUTER PROGRAM TO ANALYZE THE DYNAMIC STABILITY CHARACTERISTICS OF CONVENTIONALLY CONFIGURED SUBSONIC AIRPLANES (Kohlman Aviation Corp.) 88 p

N90-71270

Unclas

00/61 0293169

USER'S MANUAL

FOR

KSTAB

A Computer Program
to Analyze the Dynamic
Stability Characteristics of
Conventionally Configured
Subsonic Airplanes

Prepared for

National Aeronautics and Space Administration
Langley Research Center
Hampton, Virginia 23665

by

Kohlman Aviation Corporation
2721 W. 6th Street
Lawrence, Kansas 66044

Contract No. NAS1-16695

February 1982

USER'S MANUAL

FOR

KSTAB

A Computer Program
to Analyze the Dynamic
Stability Characteristics of
Conventionally Configured
Subsonic Airplanes

Prepared for

National Aeronautics and Space Administration
Langley Research Center
Hampton, Virginia 23665

by

Kohlman Aviation Corporation
2721 W. 6th Street
Lawrence, Kansas 66044

Contract No. NAS1-16695

February 1982

TABLE OF CONTENTS

SECTION		PAGE
1.	INTRODUCTION	1.1
2.	PROGRAM CAPABILITIES	2.1
	2.1 ADDRESSABLE CONFIGURATIONS	2.1
	2.2 CONFIGURATION DATA	2.1
	2.2.1 Static Stability Derivatives	2.1
	2.2.2 Dynamic Stability Derivatives	2.2
	2.2.3 High-Lift Devices and Control Characteristics	2.5
	2.2.4 Longitudinal Trim	2.6
	2.2.5 Ground Effects	2.7
	2.2.6 Power Effects	2.7
	2.2.6.1 Propeller Effects	2.7
	2.2.6.2 Jet Effects	2.7
	2.2.7 Inertia Data	2.8
	2.2.8 V_{MC} Data	2.8
	2.2.9 Rotation Speed	2.9
	2.2.10 Stability Characteristics	2.9
	2.2.10.1 Dynamic Stability	2.9
	2.2.10.2 Transfer Functions	2.11
	2.2.10.3 Frequency Response	2.12
	2.3 KNOWN PROGRAM LIMITATIONS	2.12
3.	DEFINITION OF INPUTS	3.1
	3.1 INPUT METHOD	3.1
	3.2 NAMELIST INPUT	3.1
	3.3 INPUT ERRORS	3.2
4.	DEFINITION OF OUTPUT	4.1
	4.1 INPUT DATA OUTPUT	4.1
	4.2 STATIC AND DYNAMIC STABILITY DERIVATIVES	4.1
	4.3 TRIM DATA	4.2
	4.4 POWER EFFECTS DATA	4.2
	4.5 CONTROL DERIVATIVES	4.2
	4.6 V_{MC} DATA	4.2
	4.7 ROTATION SPEED	4.2
	4.8 INERTIA DATA	4.2
	4.9 DYNAMIC STABILITY CHARACTERISTICS	4.3

TABLE OF CONTENTS (continued)

SECTION		PAGE
	4.9.1 Dynamic Stability Data	4.3
	4.9.2 Transfer Function Data	4.4
	4.9.3 Frequency Response Data	4.8
5.	CONFIGURATION MODELING	5.1
	5.1 BODY	5.1
	5.2 WING AND TAIL SURFACES	5.1
	5.3 NACELLE	5.4
	5.4 ROTATION SPEED	5.5
6.	REFERENCES	6.1

1. INTRODUCTION

In the preliminary design phase, rapid and economic estimations of aerodynamic stability and control characteristics are frequently needed. The program described in this manual provides a systematic summary of methods for estimating stability and control characteristics in preliminary design applications, specifically tailored to general aviation airplanes. The version of the program described here is the December 1981 version as implemented on the Kansas University Honeywell 66-60 computer. It is written in Fortran IV.

The program has been developed on a modular basis because it simplifies program modification or expansion. The main modules are indicated in Figure 1.1.

Potential users are referred to Section 2 for an overview of program capabilities. Particular attention should be given to the description of the operational limitations of the program.

Section 3 should be consulted next for information on the required input data. This section provides a detailed description of the procedures to input data into the program. It also defines the input parameters, both in words and in figures. The user is urged to consult the figures to avoid any ambiguity in the definitions. The user should also refer to Section 5 where the geometric modelling techniques are described. Section 3 represents a major change to the previous (October 1978) documentation.

Section 4 provides the details of the program output and definitions of the output parameters.

Section 5 furnishes the user with the proper techniques to model a particular design so that the input is compatible with the computer program.

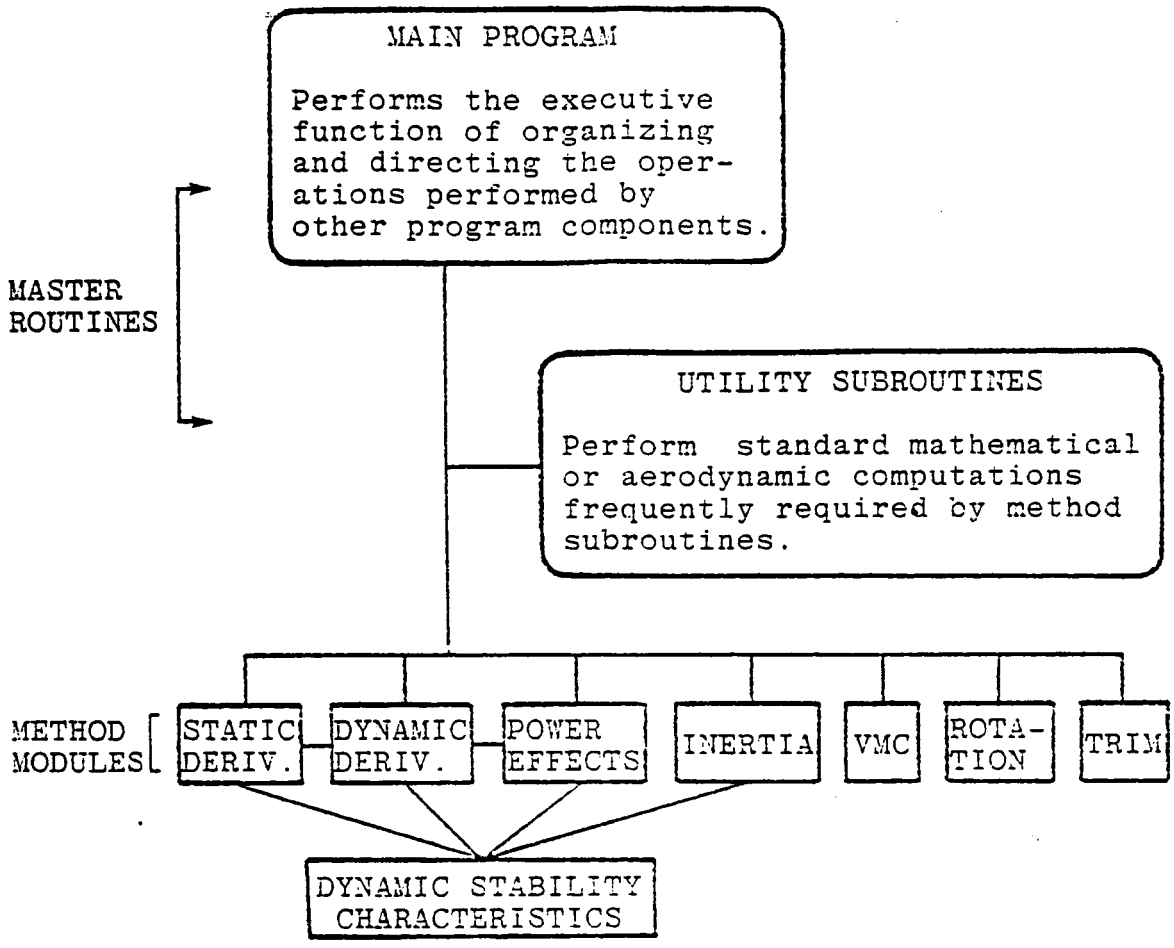

Figure 1.1 Modular Program Build-up

It should be noted that this manual is intended for the user who wishes to utilize this program to analyze a given aircraft configuration from a stability standpoint. Therefore, it concentrates on the input and output functions of the program. The reader who is interested in the methods used in the modules and their implementation in the program is referred to Reference 2. This reference provides a full description of the computational methods used in this program.

SECTION 2

PROGRAM CAPABILITIES

This section has been prepared to aid the user in determining the applicability of the program described in this manual to his particular requirements. For specific questions regarding method applicability and limitations, the user is referred to Reference 2.

2.1. Addressable Configurations

Generally the program will accept inputs for the traditional body-wing-tail configurations. This includes control effectiveness for traditional control devices like elevator, rudder and aileron. It should be noted that the program is specifically tailored to subsonic general aviation aircraft. The user is referred to Section 5, which discusses methods to model his specific configuration to conform with the data input for this program. Table 2.1 summarizes the configurations and parameters that are accommodated by the program.

2.2. Configuration Data

2.2.1. Static Stability Derivatives

The longitudinal and lateral-directional stability derivatives are computed in nondimensional derivative form, in the stability-axis system. The drag coefficient may either be input or be computed internally. The program outputs the derivatives as a function of component build-up (see Table 2.2).

TABLE 2.1: ADDRESSABLE CONFIGURATIONS

CONFIGURATION	REMARKS
BODY	Data pertaining to the actual aircraft fuselage can be input. For some data an equivalent body of revolution has to be modelled.
WING, HORIZONTAL TAIL	Straight tapered planforms are treated. The effects of sweep, taper, incidence and linear twist are included. The lateral-directional data include the effect of dihedral.
BODY-WING, BODY-HORIZONTAL	The influence of the body on the wing and horizontal tail and vice versa are included. Wing positions from low- to high-wing are possible. The horizontal tail position can vary from low mounted tail, on the fuselage, to T-tail.
WING-BODY-TAIL	The effect of downwash on the horizontal tail is included. Only a single vertical tail can be configured.
POWER	The effect of the propeller flow-disturbance is included in the program for single- as well as multi-engine aircraft. Effects include direct as well as indirect effects on the flowfield around the wing and horizontal tail. The effect of jet engines (single- or multi-engine), direct as well as indirect, are accounted for. Only single and twin engine configurations are addressed.

2.2.2 Dynamic Stability Derivatives

The longitudinal and lateral directional stability characteristics are computed in the nondimensional derivative form, in the stability axis system. The program outputs the derivatives as a function of component build-up (see Table 2.3).

TABLE 2.2

OUTPUT AS FUNCTION OF CONFIGURATION, STATIC CHARACTERISTICS

CONFIGURATION	C_{D_α}	C_{L_α}	C_{M_α}	$\frac{dC_M}{dC_L}$	C_{y_β}	C_{n_β}	C_{ℓ_β}	$\bar{q}/\bar{q}_h$	ϵ_h	$\frac{d\epsilon}{d\alpha}$
BODY					●	●				
WING		●			●	●				
HORIZONTAL TAIL		●					●		○	●
VERTICAL TAIL					●	●	●			
WING-BODY		●					●		○	○
WING-BODY HORIZONTAL-VERTICAL TAIL	●	●	●	●	●	●	●	●	●	●
PROPELLER EFFECTS		●	●	○	●	●	●	○	○	○
JET EFFECTS			○							
FLAP EFFECTS		○	○						○	○

NOTE: ○ COMPUTED BUT NOT OUTPUT
● COMPUTED AND OUTPUT

TABLE 2.3

OUTPUT AS FUNCTION OF CONFIGURATION, DYNAMIC DERIVATIVES

CONFIGURATION	C_{L_U}	C_{M_U}	C_{L_q}	C_{M_q}	$C_{L_{\dot{\alpha}}}$	$C_{M_{\dot{\alpha}}}$	C_{y_p}	C_{ℓ_p}	C_{n_p}	C_{y_r}	C_{n_r}	C_{ℓ_r}
BODY												
WING			●	●					●			●
HORIZONTAL TAIL			●	●				●				
VERTICAL TAIL								●	●			●
WING-BODY								●				
WING-BODY HORIZONTAL-VERTICAL TAIL	●	●	●	●	●	●	●	●	●	●	●	●
PROPELLER EFFECTS												
JET EFFECTS												
FLAP EFFECTS									○			○

NOTE: ○ COMPUTED BUT NOT OUTPUT

● COMPUTED AND OUTPUT

2.2.3. High-Lift Devices and Control Characteristics

The program does not compute the effect of high-lift devices as Lift, Drag or Moment coefficient. Incremental values as a function of flap deflection have to be input. The effect of flap deflection on the stability derivatives is computed as indicated in Tables 2.3 and 2.4. The output of the program for these derivatives is indicated in Table 2.5.

TABLE 2.5

OUTPUT FOR CONTROL CHARACTERISTICS

CONTROL	DERIVATIVE OUTPUT	NOTES
Aileron	$C_{\ell_{\delta_A}}$, $C_{n_{\delta_A}}$, $C_{Y_{\delta_A}}$	May be positioned anywhere on the trailing edge of the wing.
Rudder	$C_{\ell_{\delta_R}}$, $C_{n_{\delta_R}}$, $C_{Y_{\delta_R}}$	May be positioned anywhere on the trailing edge of the vertical tail. The effect of "Effective Aspect Ratio" of the vertical tail is taken into account.
Elevator	$C_{L_{\delta_E}}$, $C_{M_{\delta_E}}$, $C_{D_{\delta_E}}$	May be positioned anywhere on the trailing edge of the horizontal tail.
All Moving Tail Plane	$C_{L_{i_H}}$, $C_{M_{i_H}}$, $C_{D_{i_H}}$	
Hinge Moments	C_{H_α}, C_{H_δ}, τ_E	For a conventional flap type control. Includes effect of gap, aerodynamic balance, horn balance, bevel angle.

Control devices that are accommodated by the program are the conventional trailing edge flap-type controls as used for elevator, rudder, and ailerons. These devices can be positioned anywhere on the horizontal or vertical tail or the wing. Roll control is assumed to be exercised by ailerons positioned on the wing. Pitch control can be either with an elevator or with an all moving tail plane. Yaw control is with a conventional rudder on the vertical tail.

Hinge-moment characteristics are computed for a trailing edge hinged flap-type control. The effects of gap, aerodynamic balance (including horn-balance) and bevel angle are included. The user has the option of inputting experimental data for the hinge moments to increase the accuracy of the stick-free stability data.

2.2.4. Longitudinal Trim

Trim data will be calculated. The program will manipulate the computed stability and control characteristics to achieve pitching moment equilibrium (i.e. $C_M = 0$). The trim data can be computed for two modes. One mode treats configurations with an elevator as the trim device. Elevator deflections as required for moment equilibrium will be computed together with total airplane lift, angle of attack and horizontal tail-lift. The other mode treats the configuration with an all flying tail as the trim-device. In this case angle of incidence of the horizontal tail, required for pitching moment equilibrium, is computed and output along with total airplane lift-coefficient, angle of attack, and horizontal tail lift-coefficient.

2.2.5. Ground Effect

The effect of ground proximity on the lift of the airplane is computed as a function of height above the ground. This effect is only taken into account in the computations for the rotation speed (see Section 2.2.9).

2.2.6. Power Effects

2.2.6.1. Propeller Effects

The effects of a thrust-producing propeller positioned forward of the wing are taken into account for single- as well as multi-engine designs. The effects included are the following:

- Direct effects of thrust on forces acting on the aircraft, i.e. $dC_{T_{prop}}$ and $dC_{N_{prop}}$.
- Effect of propeller slipstream over the wing: increase in dynamic pressure over the wing and change in wing angle of attack.
- Change in dynamic pressure at the horizontal tail.
- Change in downwash at the horizontal tail.

Tables 2.3 and 2.4 indicate the variables for which the effects of propeller thrust are computed.

2.2.6.2. Jet Effects

The effects of a thrust producing jet-engine positioned anywhere on the fuselage or on the wing, for single as well as twin-engine designs are taken into account. The effects included are the following:

- Direct effect of thrust on the forces acting on the aircraft, i.e.: $dC_{T_{jet}}$ and $dC_{N_{jet}}$.
- Indirect effects of jet thrust as indicated by Tables 2.3 and 2.4.

2.2.7. Inertia Data

The user has the option of either inputting the inertia characteristics of the design under consideration or having the inertia characteristics computed internally. In the latter case, data have to be input for center of gravity location, component weight and location. The program will compute the inertia characteristics for the case under consideration, i.e. for a given weight and loading (fuel and passengers). The inertias are computed in the Body Axis System.

2.2.8. V_{MC} Data

The program has the option of computing the speed for minimum control with one engine out, V_{MC}. The computation method as used by the program utilizes stability and control derivatives as computed by the program in a three degree of freedom analysis. Output includes the speed for minimum control V_{MC}, rudder angle (which is the maximum possible angle as input by the user), aileron deflection angle, bank angle (which is either input by the user or set at 5° bank into the operating engine) and side-slip angle. The program assumes steady-state horizontal flight.

2.2.9. Rotation Speed

The program has the option, at the user's discretion, of computing rotation speed. The rotation speed is defined as the speed at which the aircraft should rotate such that after lift-off the aircraft will read 35 feet at a speed equivalent to 120% of the stall speed in the takeoff configuration. For this option the user must input the rotation rate of the aircraft during the lift-off phase. Outputs are the following quantities:

- Rotation speed
- Lift-off speed
- Rotation distance, defined as the distance traveled from the moment the nose wheel leaves the ground till the aircraft lifts off (main wheels leave the ground).
- Air-distance, defined as the distance traveled from the start of constant climb-angle till a height of 35 feet is reached.

2.2.10. Stability Characteristics

Depending on the Control Number values as input by the user, the program will output the following Stability Characteristics.

2.2.10.1 Dynamic Stability

A. Computes dimensional derivatives

B. Computes coefficients of the characteristic equations

C. Computes the roots of the characteristic equations

D. Prints the characteristic equations in factored form and states the root configurations

E. Longitudinal case computes:

1. ($\omega_{n_{SP}}$) Short period undamped natural frequency
2. (ω_{np}) Phugoid undamped natural frequency
3. (ζ_{SP}) Short period damping ratio
4. (ζ_P) Phugoid damping ratio
5. (T 1/2 P or T_{2P}) Time to half or double the amplitude of the phugoid mode
6. Short period characteristics
   a. (n/α) Load factor / angle of attack
   b. (ω_n^2 / n/α) Short period undamped natural frequency squared / load factor / angle of attack

F. Lateral directional case computes:

1. (ω_{n_D}) Dutch roll undamped natural frequency
2. (ζ_D) Dutch roll damping ratio
3. (T_S) Spiral time constant
4. (T_R) Roll time constant
5. (T_{2_S}) Time to double the amplitude in the spiral mode
6. ($\zeta_D \omega_{n_D}$) Dutch roll damping ratio X Dutch roll undamped natural frequency
7. ($|\phi/\beta|_D$) Oscillatory bank angle to sideslip ratio
8. ($\omega_{n_D}^2 |\phi/\beta|_D$) Dutch roll undamped natural frequency X oscillatory bank angle to sideslip ratio

G. The sensitivity analysis varies any selected input variable of array "DERV" (See Table 4.1) and computes for each incremental value:

1. Real and imaginary parts of roots of the characteristic equations
2. Damping ratios and undamped natural frequencies
3. Inverted time constants

2.2.10.2 Transfer Functions

A. Computes dimensional derivatives

B. For longitudinal case computes:

1. Coefficients of the characteristic equation
2. Numerator coefficients of $U(S)/\delta_E(S)$, $\alpha(S)/\delta_E(S)$, and $\theta(S)/\delta_E(S)$ transfer functions
3. General standard format parameters:
   a. Gain
   b. Numerator time constants, damping ratios, and undamped natural frequencies

C. For lateral directional case computes:

1. Coefficients of the characteristic equation
2. Numerator coefficients of:
   a. $\beta(S)/\delta_A(S)$, $\phi(S)/\delta_A(S)$, and $\psi(S)/\delta_A(S)$ transfer functions
   b. $\beta(S)/\delta_R(S)$, $\phi(S)/\delta_R(S)$, and $\psi(S)/\delta_R(S)$ transfer functions
3. General standard format parameters for both aileron and rudder forcing functions

a. Gain

b. Numerator time constants, damping ratios, and undamped natural frequencies

c. Denominator damping ratio, undamped natural frequency, and time constants

2.2.10.3 Frequency Response

A. Computes dimensional derivatives

B. For longitudinal case computes:

1. For $U(S)/\delta_E(S)$, $\alpha(S)/\delta_E(S)$, and $\theta S/\delta_E(S)$ transfer functions

a. Magnitude (decibels) as a function of frequency

b. Phase angle (degrees) as a function of frequency

C. For lateral directional case computes:

1. For $\beta(S)/\delta_A(S)$, $\phi(S)/\delta_A(S)$, and $\psi(S)/\delta_A(S)$ transfer functions

a. Magnitude (decibels) as a function of frequency

b. Phase angle (degrees) as a function of frequency

2. For $\beta(S)/\delta_R(S)$, $\phi(S)/\delta_R(S)$, and $\psi(S)/\delta_R(S)$ transfer functions

a. Magnitude (decibels) as a function of frequency

b. Phase angle (degrees) as a function of frequency

2.3 Known Program Limitations

This program was developed to aid in the preliminary analysis of stability and control characteristics of general aviation aircraft. Additional experience has shown that for certain configurations, limi-

tations exist within the program. In general the program was developed to handle only conventional designs. It is not set up to handle canards or swept-forward wings. In addition, the following input guidelines should be observed:

1) Aspect ratios of wing and tail surfaces should not be greater than 10.0.

2) Quarter chord sweep angles for the wing and tail surfaces must be positive.

3) The ratio between the fuselage length ahead of the wing and the root chord should be checked by the equation $R = LNO/10(CROOT)$, where $.15 \leq R \leq .95$. The variables LNO and CROOT are defined in Table 3.2.

SECTION 3

DEFINITION OF INPUTS

3.1 Input Method

The input deck consists of one plain-language identification line followed by three Fortran namelists. All variables in the program are identified in Tables 3.1 and 3.2. Users should refer back to Section 2 as well as study Table 3.1 to determine the type(s) of analysis to specify via the control parameters of namelist INCTL. Once this has been determined, the required variables may be specified by referring to Table 3.2, Figures 3.1 through 3.26, and Section 5 of this manual. Table 3.2 identifies all variables alphabetically and notes whether they belong to namelist INATOI (for variable names beginning with letters A through I), or to namelist INKTOZ (for variable names beginning with letters K through Z). After perusing Table 3.2, it should be evident that only certain variables are required for different user-specified options. When multiple cases are to be run, Tables 3.3, 3.4, and 3.5 should be checked to insure that appropriate variables for the new options elected for each case are included in the new input file.

3.2 Namelist Input

Fortran namelist methods are used exclusively in this computer program. Table 3.6 summarizes some of the more fundamental rules pertaining to their use. Table 3.7 follows with an example deck set up for multiple case (4 cases) investigation. As illustrated, each case begins with a plain-language identification line followed by the appearance of namelists INCTL, INATOI, and INKTOZ, each of which contains at least one variable. (See Note 2 of Table 3.7.) Each data set is terminated

when the $END of namelist INKTOZ is detected. Note that while the first case of Table 3.7 reflects a large number of input variables, the second, third, and fourth cases are rather brief. Figure 3.1 is included to show how the identification line may be formatted to generate a desired echo.

3.3 Input Errors

One major disadvantage of using namelists is that the variable names must be spelled correctly. Here, misspelled variables will usually result in program termination without an indication of exactly which variable is misspelled. Hence, great care should be taken when creating the input file. Common misspellings involve confusion between zero and the letter O as well as between one and the letter I. In this manual, zeros in variable names are indicated as Ø. Another source of program termination involves the erroneous use of a semi-colon instead of a comma to separate variables.

Table 3.1: CONTROL VARIABLES

(Namelist INCTL)

Variable:	Set at:	Function:
L1	0	Computes stability derivatives (part I of program) and stability characteristics (part III of program). Requires KINERT = 0 or 1.
	1	Computes only stability derivatives (part I of program).
L2	0	No sensitivity analysis.
	1	Part III of the program performs sensitivity analyses on non-dimensional aircraft parameters as given in Table 4.1 (elements 1-29, 46-60). The analyses are controlled by input variables L3SA, NANLYS, and NSENSI. Analysis is conducted from a minimum of .5 to a maximum of 1.5 the basic derivative value and is incremented by (.05)* (basic derivative value). Requires L1 = L5 = L6 = 0, L4 = 1, and KINERT = 0 or 1.
L3	1	Longitudinal analysis only.
	2	Lateral-directional analysis only.
	3	Longitudinal and lateral-directional analyses.
L4	0	Does not output dynamic stability characteristics. L2 = 0 is inferred.
	1	Outputs dynamic stability characteristics. L1 = 0 is required.
L5	0	Does not output transfer function results.
	1	Outputs transfer function results. Requires L1 = L2 = 0.
L6	0	Does not output frequency response results.
	1	Outputs frequency response results. Requires L1 = L2 = 0.
L10	0	Program only reads and echos input parameters after certain basic geometric parameters are computed.
	1	Allows execution of the program.

Table 3.1 (continued)

Variable:	Set at:	Function:
L12	0	Does not compute minimum control speed (part II of the program).
	1	Computes minimum control speed. Flight condition must be takeoff where the variable TAS should be input close to the anticipated VMC. Requires L3 = 3.
L13	0	Does not compute rotation speed (part II of the program).
	1	Computes rotation speed. Flight condition must be takeoff.
L14	3	Computes only the inertia characteristics of the vehicle. Any other value of L14 will allow the program to execute normally.
KCONT	10	Horizontal stabilizer is fixed and the aircraft is flown and trimmed with elevator.
	12	An all-moveable horizontal tail is indicated where the aircraft is flown and trimmed with a stabilator.
KFIFR	0	Computes stability characteristics for pitch controls fixed.
	1	Computes stability characteristics for pitch controls free.
KINERT	0	Aircraft inertia characteristics are input via variables INERTX, INERTY, INERTZ, and IXZ.
	1	Aircraft inertia characteristics are computed from input data.
	2	No aircraft inertia characteristics input or computed. Note that inertia characteristics are not required when L1 = 1.
KSURF	0	Elevator hinge moments C_{h_α}, $C_{h_{\dot{\delta}}}$, and $\partial\alpha/\partial\delta_e$ are computed.
	1	Hinge moment characteristics are input as variables CHA, CHD, and DADD.

Table 3.2: INPUT PARAMETERS

(Namelist INATOI)

Note: Namelist INATOI contains variables beginning with letters A through I.

Input Variable	Engineering Notation	Description	Refer to Figure
AFSA		Average fuselage cross sectional area in ft^2. Input used when L3 = 2 or 3.	
AINL	A_i	Jet engine inlet area in ft^2. Input used when NTYE = 7.	
ALCORA	$(C_A/C_W)_{avg}$	Average ratio of aileron chord to wing chord. Input used when L3 = 2 or 3. $(C_{A_i}/C_{W_i} + C_{A_o}/C_{W_o}) / 2.$	3.8
ALPHLO	α_{o_w}	Angle-of-attack of wing for zero lift (radians) for the configuration specified. i.e. include effect of deflected flaps.	
ALPOH	α_{o_h}	Angle-of-attack of horizontal tail (in radians) for zero lift where the tail is isolated from the downwash of the wing-body.	
ALPOWB	$\alpha_{o_{wb}}$	Angle-of-attack of the wing-body (in radians) for zero lift.	
ALT		Flight altitude in feet. If standard day conditions are desired, RHO and TEMP need not be input.	
AR	AR or A	Aspect ratio of the wing, b^2/S.	
ARH	AR_H or A_H	Aspect ratio of the horizontal tail.	

Table 3.2: INPUT PARAMETERS (continued)

(Namelist INATOI)

Input Variable	Engineering Notation	Description	Refer to Figure
ARV	AR_V or A_V	Aspect ratio of exposed vertical tail. Must coincide with variables SVT, DIMC4V, and SIMV.	
AXIS	L_{TT}	Length of wing tiptank in ft. If no tip tank, input 0. Input used if L14 = 3 or KINERT = 1.	
B	b_w or b	Do not input. Wingspan in ft. Computed based on AR, DIMC4, SW, and SIM. Echoed with input parameters.	3.5
BANK	ϕ	Bank angle in degrees. Defaults to -5 deg. if input as 0. Used when L12 = 1.	
BDØ3	$(b/D)_{.3}$	Ratio of propeller blade width to propeller diameter. Subscripts indicate relative radius at which the ratio is measured. Input used if ENP > 0 and NTYE ≠ 7. Default to .0693 if not input.	3.19
BDØ6	$(b/D)_{.6}$	Default to .0820 if not input.	3.19
BDØ9	$(b/D)_{.9}$	Default to .0682 if not input.	3.19
BENGOB	$\frac{Y_E/b_w}{2}$	Ratio of the lateral position of the thrust line to the wing semi-span.	3.5
BFIAPI	b_{f_i}	Distance from wing centerline to inboard flap station in ft. Input used when L3 = 2 or 3.	3.8

Table 3.2: INPUT PARAMETERS (continued)

(Namelist INATOI)

Input Variable	Engineering Notation	Description	Refer to Figure
BFOB	b_f/b_w	Ratio of flap span to wing span. Input when L3 = 2 or 3.	3.8
BFUEL	(b_{fuel_o}/b_w)	Ratio of outboard fuel tank span to wing span. Input used when L14 = 3 or KINERT = 1.	3.4
BFUELI	(b_{fuel_i}/b_w)	Ratio of the distance between inboard fuel tank span to the wing span. If input as 0.0 program defaults to value based on WC. Input used when L14 = 3 or KINERT = 1.	3.4
BHT	b_h	Do not input. Span of horizontal tail in ft. Computed based on ARH, DLMC4H, SHT, and SLMH. Echoed with input parameters.	3.5
BL	N_{bl}	Number of propeller blades per engine. Integer variable. Input used when ENP > 0 and NTYE ≠ 7.	
BLANG	$\beta_{.75}$	Propeller blade angle at the .75 radius station in degrees. Default value is 21.5 degrees. Used when ENP > 0 and NTYE ≠ 7.	3.19
BODANG	$\theta_{B_{ground}}$	Angle of the aircraft body axis with the ground in radians when the aircraft is at rest. Input used when L13 = 1.	
BVT	b_v	Do not input. Span of vertical tail in ft. Computed based on ARV, DLMC4V, SVT, and SLMV. Echoed with input parameters.	3.11
BXIS	D_{TT}	Diameter of wing tiptank in ft. If no tip tank, input zero. Used when L14 = 3 or KINERT = 1.	3.4

Table 3.2 INPUT PARAMETERS (continued)

(Namelist INATOI)

Input Variable	Engineering Notation	Description	Refer to Figure
CBARHT	$\bar{c}_h$	Do not input. Mean aerodynamic chord of horizontal tail in ft. Computed based on ARH, DIMC4H, SHT, and SIMH. Echoed with input parameters.	3.9
CBARVT	$\bar{c}_v$	Do not input. Mean aerodynamic chord of vertical tail in ft. Computed based on ARV, DIMC4V, SVT, and SIMV. Echoed with input parameters.	3.11
CBARW	$\bar{c}_w$	Do not input. Mean aerodynamic chord of wing in ft. Computed based on AR, DIMC4, SW, and SIM. Echoed with input parameters.	3.8
CBOCF	c_b/c_f	Ratio of chord of elevator balance to flap chord. Input used when KSURF = 0.	3.18
CD	C_D	Drag coefficient of complete aircraft. If not input, computed as $(C_{D_o} + C_L^2/\pi ARe)$.	
CDO	C_{D_o}	Drag coefficient of complete aircraft at zero lift. Not required if CD is input unless L12 or L13 = 1.	
CEOC	$(c_E/c_H)_{avg}$	Average ratio of elevator chord to horizontal tail chord. $(c_{E_i}/c_{H_i} + c_{E_o}/c_{H_o}) / 2$. CEOC = 1 for all movable horizontal tail with KCONT = 12.	3.9

Table 3.2: INPUT PARAMETERS (continued)

(Namelist INATOI)

Input Variable	Engineering Notation	Description	Refer to Figure
CFOC	$(c_f/c_w)_{avg}$	Average ratio of flap chord to wing chord. Input used when L3 = 2 or 3 or L13 = 1. $(c_{f_i}/c_{w_i} + c_{f_o}/c_{w_o}) / 2.$	3.13
CFOCV	$(c_r/c_v)_{avg}$	Average ratio of rudder chord to vertical tail chord. Input used when L3 = 2 or 3. $(c_{r_i}/c_{v_i} + c_{r_o}/c_{v_o}) / 2.$	3.11
CGLG	cg_{LG}	Radial distance of main landing gear center of gravity to the fuselage centerline in ft for the flight configuration being analyzed. (i.e., gear up or down). Used when L14 = 3 or KINERT = 1.	3.7
CGOC	$c_{gap}/\bar{c}_h$	Ratio of control surface gap to horizontal tail mean aerodynamic chord. Input 0. for all movable horizontal tail or if the gap is sealed. Input used when KSURF = 0.	3.18
CHA	C_{h_α}	Variation of hinge moment coefficient with angle-of-attack per radian. Input used when KSURF = 1. Input is ignored if KSURF = 0 and CHA is computed.	
CHD	$C_{h_{\delta_e}}$	Variation of hinge moment coefficient with elevator deflection per radian. Input used when KSURF = 1. Input is ignored if KSURF = 0 and CHD is computed.	

Table 3.2: INPUT PARAMETERS (continued)

(Namelist INATOI)

Input Variable	Engineering Notation	Description	Refer to Figure
CLAHP	$C_{\ell_{\alpha_h}}$	Sectional lift curve slope of horizontal tail per radian.	
CLAVP	$C_{\ell_{\alpha_v}}$	Sectional lift curve slope of vertical tail per radian.	
CLAWP	$C_{\ell_{\alpha_w}}$	Sectional lift curve slope of wing per radian.	
CLHMAX	$C_{L_{h_{max}}}$	Maximum positive lift coefficient of the horizontal tail for creating a nose down pitching moment. Input as a positive number.	
CLHMIN	$C_{L_{h_{min}}}$	Maximum negative lift coefficient of the horizontal tail for creating a nose up pitching moment. Input as a negative number.	
CLMXTO	$C_{L_{max_{to}}}$	Maximum lift coefficient in takeoff condition out of ground effect. Used only in rotation speed calculations and is not related to the input VSTALL, where the latter is used for minimum control speed calculations. CLMXTO is used when L13 = 1.	
CMACH2	$c_{m_{o_t}}$	Sectional pitching moment coefficient about the aerodynamic center of the horizontal tail at zero lift.	
CMACW2	$c_{m_{o_w}}$	Sectional pitching moment coefficient about the aerodynamic center of the wing at zero lift. If twist is present, calculate this input as $(c_{m_{o_{root}}} + c_{m_{o_{tip}}})/2$. where $c_{m_{o_{root}}}$ and $c_{m_{o_{tip}}}$ are the section pitching moment coefficients at zero lift, both defined parallel to the free stream.	

Table 3.2: INPUT PARAMETERS (continued)

(Namelist INATOI)

Input Variable	Engineering Notation	Description	Refer to Figure
CPOC	c'/c	Ratio of wing chord with the flaps extended to wing chord with the flaps retracted at an average flap location.	3.13
CRCLHT	$c_{r_{CL_h}}$	Do not input. Root chord of horizontal tail at the fuselage centerline in ft. Computed based on ARH, DIMC4H, SHT, and SIMH. Echoed with input parameters.	3.9
CRCLVT	$c_{r_{CL_v}}$	Do not input. Root chord of vertical tail in ft. Computed based on ARV, DIMC4V, SVT, and SIMV. Echoed with input parameters.	3.11
CRCLW	$c_{r_{CL_w}}$	Do not input. Root chord of wing at fuselage centerline in ft. Computed based on AR, DIMC4, SW, and SIM. Echoed with input parameters.	
CROOTW	c_{r_w}	Do not input. Root chord of wing at fuselage-wing junction in ft. Computed based on AR, DIMC4, SW, SIM, and cabin width WC. Echoed with input parameters.	
DADD	$\partial\alpha/\partial\delta$	Angle-of-attack effectiveness of a control surface. Input used when KSURF = 1. Input is ignored and DADD is computed if KSURF = 0.	
DBARN	$\bar{d}_{nac}$	Average nacelle diameter in ft, based on equivalent cross sectional area. Input if L14 = 3 or KINERT = 1 regardless of NTYE, or if L12 = 1 when NTYE = 7.	3.20

Table 3.2: INPUT PARAMETERS (continued)

(Namelist INATOI)

Input Variable	Engineering Notation	Description	Refer to Figure
DELTMA	$\delta_{E_{max}}$	Maximum positive elevator deflection in radians where down is taken as the positive direction. Used only to generate a message if this value is exceeded by the δ_E required for trim when KCONT = 10. Default value is .349. Used when KCONT = 10.	3.14
DELTMI	$\delta_{E_{min}}$	Maximum negative elevator devlection in radians where up is taken as the negative direction Input as a negative number. Used only to generate a message if this value is exceeded by the δ_E required for trim when KCONT = 10. Default value is -.349. Used when KCONT = 10.	3.14
DFLAP	δ_{flap}	Wing flap deflection in degrees. Used if L3 = 2 or 3 or L13 = 1.	3.13
DFNDM	$\delta F_N/\delta M$	Change in thrust in lb with Mach number. Used when NTYE = 7.	
DIHD	Γ_w	Geometric dihedral angle of the wing in degrees. Used when L3 = 2 or 3.	3.7
DIHDH	Γ_h	Geometric dihedral angle of the horizontal tail in degrees. Used when L3 = 2 or 3.	3.7
DLMC4	$\Lambda_{1/4\bar{c}}$	Quarter chord sweep angle of the wing in degrees.	3.8
DLMC4H	$\Lambda_{1/4\bar{c}_h}$	Quarter chord sweep angle of the horizontal tail in degrees.	3.9
DLMC4V	$\Lambda_{1/4\bar{c}_v}$	Quarter chord sweep angle of the vertical tail in degrees.	3.11

Table 3.2: INPUT PARAMETERS (continued)

(Namelist INATOI)

Input Variable	Engineering Notation	Description	Refer to Figure
DLMHHL	Λ_{h1}	Elevator hinge line sweep angle in degrees. Input zero if all movable tail (CEOC = 1 and KCONT = 12). Input used when KSURF = 0.	
DPROP	d_{prop}	Diameter of propeller in ft. Input if ENP > 0 and NTYE ≠ 7.	3.5
DTDTA	$(d\theta/dt)_A$	Aircraft rotational rate during rotation phase of takeoff in rad/sec. Default value is .087. Used when L13 = 1.	
DTDTR	$(d\theta/dt)_R$	Aircraft rotational rate with main gear still on the ground in rad/sec. Default value is .087. Used when L13 = 1.	
EETAØ	η_{o_E}	Outboard location of elevator as a fraction of horizontal tail half-span. Input 1.0 for all moving tail.	3.9
EETA1	η_{i_E}	Inboard location of elevator as a fraction of horizontal tail half-span. Input 0.0 for all moving tail.	3.9
ELCG	x_{cg}	Distance from nose to the aircraft center of gravity in ft.	3.3
ELCGH	x_{cg_h}	Distance from nose of aircraft to center of gravity of horizontal tail in ft. Used when L14 = 3 or KINERT = 1.	3.3
ELCGV	x_{cg_v}	Distance from nose of aircraft to center of gravity of vertical tail in ft. Used when L14 = 3 or KINERT = 1.	3.6
ELC4H	$\ell_{1/4c_r}$	Distance in ft from the aircraft nose to the horizontal tail root quarter chord.	

Table 3.2: INPUT PARAMETERS (continued)

(Namelist INATOI)

Input Variable	Engineering Notation	Description	Refer to Figure
ELC4V	$\ell_{1/4c_r}$	Distance in ft from the aircraft nose to the vertical tail root quarter chord where the vertical tail geometry is based on SVT, ARV, DLMC4V, and SLMV.	
ELC4W	$\ell_{1/4c_{r_{CL_w}}}$	Distance in ft from the aircraft nose to the wing quarter chord at the fuselage centerline.	3.4
ELF	ℓ_{fus}	Length in ft of the fuselage from nose to tail.	3.21
ELHT	ℓ'_h	Do not input. Distance in ft from the wing mean aerodynamic chord quarter chord to the mean aerodynamic chord quarter chord of the horizontal tail. Computed based on input geometry and echoed with input parameters.	3.24
ELINC		Do not input. Distance in ft between leading edge of vertical tail and leading edge of horizontal tail on the line of intersection of the horizontal and vertical tails, positive taken as rearward. Computed based on input geometry and echoed with input parameters. Used when L3 = 2 or 3.	
ELN	ℓ'_{nac}	Overall length in ft of the engine nacelle. Input used when L14 = 3 or KINERT = 1.	3.25
ELNAC	ℓ''_{nac}	Length in ft from the aircraft nose to the front end of the engine nacelle.	3.4
ELTIP	$x_{cg_{TT}}$	Distance in ft from the aircraft nose along the fuselage centerline to the center of gravity of the tip tank. Used when L14 = 3 or KINERT = 1.	3.3

Table 3.2: INPUT PARAMETERS (continued)

(Namelist INATOI)

Input Variable	Engineering Notation	Description	Refer to Figure
ELTH	ℓ_H	Do not input. Distance in ft from the aircraft center of gravity to the aerodynamic center of the horizontal tail. Computed based on vehicle geometry and ELCG. Echoed with input parameters.	3.24
ELWING	x_{cg_w}	Distance in ft from the aircraft nose to the center of gravity of the wing. Used only when L14 = 3 or KINERT = 1.	3.3
ENP	N_{eng}	Number of engines. Integer variable.	
ETAØA	η_{o_A}	Outboard position of aileron as a fraction of wing semi-span. Used when L3 = 2 or 3.	3.8
ETA1A	η_{i_A}	Inboard position of aileron as a fraction of wing semi-span. Used when L3 = 2 or 3.	3.8
ETAØV	η_{o_V}	Top position of rudder as a fraction of exposed vertical tail span. Used when L3 = 2 or 3.	3.11
ETA1V	η_{i_V}	Bottom position of rudder as a fraction of exposed vertical tail span. Used when L3 = 2 or 3.	3.11
EYEH	i_H	Horizontal tail angle of incidence in radians where the airplane is trimmed with elevator δ_e (KCONT = 10). If KCONT = 12, this input is not required, and the program will calculate the deflection i_H for trim with $\delta_e = 0$. Important: When multiple runs are made where KCONT is changed from 12 to 10, a correct value of EYEH must be input with KCONT = 10.	3.17

Table 3.2: INPUT PARAMETERS (continued)

(Namelist INATOI)

Input Variable	Engineering Notation	Description	Refer to Figure
EYEHMA	$i_{H_{max}}$	Maximum positive angle of incidence (i.e. leading edge up) of the horizontal tail in radians. Used only to generate a message if the i_H required for trim exceeds this value when KCONT = 12. Default = .349. Used when KCONT = 12.	3.17
EYEHMI	$i_{H_{min}}$	Maximum negative angle of incidence (i.e. leading edge down) of the horizontal tail in radians. Used only to generate a message if the i_H required for trim exceeds this value when KCONT = 12. Default = -.349. Used when KCONT = 12.	3.17
EYET	i_T	Thrust incidence angle in radians.	3.24
EYEW	i_w	Wing incidence angle measured relative to the x-body axis in radians.	
FUELD	ρ_{fuel}	Specific weight of fuel in lbs/gal. Default = 6.687. Used when L14 = 3 or KINERT = 1.	
FWOB	b_c	The width of the cabin in ft at the wing quarter chord point. Used when NTYE $\neq$ 7 and ENP = 1.	
H1	h_1	Height of the fuselage at the fuselage quarter length station as measured from the nose. (ft) Used when L3 = 2 or 3.	
H2	h_2	Height of the fuselage at the fuselage three quarter length station as measured from the nose. (ft). Used when L3 = 2 or 3.	

Table 3.2: INPUT PARAMETERS (continued)

(Namelist INATOI)

Input Variable	Engineering Notation	Description	Refer to Figure
HC	h_c	Cabin height in ft. Used when L3 = 2 or 3 or L14 = 3 or KINERT = 1.	
HEIGHT	h_{ground}	Height of aerodynamic center of wing above ground in ft when aircraft is at rest. Used when L13 = 1.	3.24
HPMSLS	$HP_{max_{SL}}$	Maximum horsepower per engine at sea level. Used when NTYE ≠ 7.	
INERTX	I_{XX}	Moment of inertia about the aircraft's X axis in sl-ft^2. Used when L1 = 0. Input together with INERTY, INERTZ, and IXZ if L14 ≠ 3 and KINERT ≠ 1. Computed when L14 = 3 or KINERT = 1.	
INERTY	I_{YY}	Moment of inertia about the aircraft's Y axis in sl-ft^2. Used when L1 = 0. Input together with INERTX, INERTZ, and IXZ if L14 ≠ 3 and KINERT ≠ 1. Computed when L14 = 3 or KINERT = 1.	
INERTZ	I_{ZZ}	Moment of inertia about the aircraft's Z axis in sl-ft^2. Used when L1 = 0. Input together with INERTX, INERTY, and IXZ if L14 ≠ 3 and KINERT ≠ 1. Computed when L14 = 3 or KINERT = 1.	
IXZ	I_{XZ}	Product of inertia in sl-ft^2. Used when L1 = 0. Input together with INERTX, INERTY, and INERTZ if L14 ≠ 3 and KINERT ≠ 1. Computed when L14 = 3 or KINERT = 1.	

***Note: INERTX, INERTY, INERTZ, and IXZ are floating point variables.

Table 3.2: INPUT PARAMETERS (continued)

(Namelist INKTOZ)

Note: Namelist INKTOZ contains variables beginning with letters K through Z.

Input Variable	Engineering Notation	Description	Refer to Figure
KNS		Control variable denoting the shape of the leading edge of the elevator. KNS = 0: stabilator. KNS = 1: rounded nose. KNS = 2: elliptic nose. KNS = 3: sharp nose. Input used when KSURF = 0.	3.26
LENG	ℓ_{eng}	Length of engine in ft. Floating point variable. Used when L14 = 3 or KINERT = 1.	3.20
LN	ℓ_{nac}	Length of engine nacelle in front of wing leading edge in ft. Floating point variable. Used when ENP > 0 and NTYE ≠ 7.	3.5
LNO	ℓ_{nose}	Do not input. Length of fuselage section in front of wing leading edge in ft. Floating point variable. Computed based on geometry and echoed with input parameters.	3.4
LN1	ℓ'_{nose}	Length in ft of fuselage nose section with elliptical planform. Use together with PHIN1 and PHIN2. Floating point variable.	3.21
LN1S		Length in ft of fuselage nose section with elliptical side projection. Use together with PHINS1. Floating point variable. Used when L3 = 2 or 3.	
LT	ℓ_{tail}	Length in ft of fuselage tail cone with elliptical planform. Use together with PHIC1 and PHIC2. Floating point variable.	3.21
L3SA		Control variable used to indicate whether NSENSI(I) is a longitudinal or lateral-directional derivative. (=1: longitudinal. =2: lateral directional) Used when L2 = 1.	

Table 3.2: INPUT PARAMETERS (continued)

(Namelist INKTOZ)

Input Variable	Engineering Notation	Description	Refer to Figure
LTS		Length in ft of fuselage tail section with elliptical side projection. Use together with PHICS1. Floating point variable. Used when L3 = 2 or 3.	
LV	ℓ_v	Do not input. Distance in ft from aircraft center of gravity to the quarter chord point of the vertical tail mean aerodynamic chord. Floating point variable. Computed based on vehicle geometry and ELCG, and echoed with input parameters.	3.24
MAXAIL	$\delta_{A_{max}}$	Average maximum aileron deflection in radians. Floating point variable. $(\delta_{A_{min_{right}}} + \delta_{A_{max_{right}}}) / 2.$ Default = .349. Used when L12 = 1.	3.15
MHMF	$\frac{M_{horn}}{M_{elevator}}$	Ratio of elevator aerodynamic horn moment to elevator flap moment. The moment is the distance from the hinge line to the centroid of the area multiplied by the area. Floating point variable. Input zero if no horn exists. Used when KSURF = 0.	3.10
MSSFL	$\dot{m}$	Mass flow rate through jet engine in sl/sec. Floating point number. Used when NTYE = 7.	

Table 3.2: INPUT PARAMETERS (continued)

(Namelist INKTOZ)

Input Variable	Engineering Notation	Description	Refer to Figure
NANLYS		Number of sensitivity analyses to be run. This variable is always initialized to zero for subsequent program executions and hence must be re-entered for each execution where L2 = 1.	
NSENSI		Array (max 20) of the non-dimensional stability derivatives for which sensitivity analyses are to be done. Input NANLYS values, all longitudinal or all lateral-directional per L3SA. A list of the stability derivatives with corresponding NSENSI(I) numbers is given in Table 4.1.	
NP	η_{prop}	Propeller efficiency. Floating point variable. Input if NTYE $\neq$ 7.	
NTYE		Control variable used to denote type of aircraft propulsor. NTYE = 0: No propulsor NTYE = any number except 0 or 7 denotes a propeller driven airplane. NTYE = 7: Turbojet or turbofan engine.	
OSWF	e	Airplane efficiency factor. If input value is 0, a value will be computed for the wing based on AR, SIM, and DIMC4. Since this computed wing value may be optimistic, input a value for the aircraft whenever possible.	
PAX	N_{pax}	Number of passengers excluding the pilot, assuming only pilot in the aircraft. Integer variable. Used when L14 = 3 or KINERT = 1.	

Table 3.2: INPUT PARAMETERS (continued)

(Namelist INKTOZ)

Input Variable	Engineering Notation	Description	Refer to Figure
PDPTE	ϕ''_{TE}	The included angle in degrees formed when straight lines are drawn connecting the 95% and 99% chord points on the upper and lower surfaces of the elevator. If a bevel angle as shown in Fig. 3.18 exists, input this value. Used when KSURF = 0.	3.23
PERPOW	$\%_{power}$	Percent power or thrust. If input as 0, the value required for level unaccelerated flight will be computed and used. Input as a decimal value ranging from 0. to 1. This input does not affect the results of minimum control speed when L12 = 1 or rotation speed when L13 = 1.	
PHIC1	ϕ_{c1}	Tail cone shape parameter. Use with LT.	3.23a
PHIC2	ϕ_{c2}	Tail cone shape parameter. Use with LT.	3.23a
PHICS1	ϕ_{c1_s}	Tail cone shape parameter. Use with LTS for side projection. Used when L3 = 2 or 3.	3.23a
PHIN1	ϕ_{n1}	Nose cone shape parameter. Use with LN1.	3.23a
PHIN2	ϕ_{n2}	Nose cone shape parameter. Use with LN1.	3.23a
PHINS1	ϕ_{n1_s}	Nose cone shape parameter. Use with LN1S for side projection. Used when L3 = 2 or 3.	3.23a
PHTERH	ϕ_{TE_h}	The included angle in degrees formed at the trailing edge by upper and lower surfaces of the elevator.	3.23

Table 3.2: INPUT PARAMETERS (continued)

(Namelist INKTOZ)

Input Variable	Engineering Notation	Description	Refer to Figure
PHTERV	ϕ_{TE_v}	The included angle in degrees formed at the trailing edge by the surfaces of the rudder. Used if L3 = 2 or 3.	3.16
PS	P_{seat}	Seat pitch in ft. Used when Ll4 = 3 or KINERT = 1.	3.12
RELP	$x_{cg_{eng}}/\ell_{fus}$	Relative longitudinal position of the engine from the aircraft nose in relation to the fuselage length. Used when Ll4 = 3 or KINERT = 1.	3.3
RELR	$x_{cg_{fus}}/\ell_{fus}$	Relative position of the fuselage center of gravity measured from the nose to the length of the fuselage. Default = .33. Used when Ll4 = 3 or KINERT = 1.	3.3
RHO	ρ	Density of air in sl/ft^3, Input not required for standard day conditions. For nonstandard atmospheric conditions, RHO must always be input for consecutive computer runs.	
RUDDRM	$\delta_{R_{max}}$	Maximum rudder deflection in radians. Used when L3 = 2 or 3, or when Ll2 = 1. When Ll2 = 1, RUDDRM defaults to .436 if not input.	3.16
R2I	$2r_i$	The depth of the fuselage in ft measured at the quarter chord of the vertical tail at the intersection of the fuselage and vertical tail quarter chord. Used when L3 = 2 or 3.	3.11
SAB	N_{sab}	Number of seats abreast. Integer variable. Used when Ll4 = 3 or KINERT = 1.	3.12
SAH		Do not input. Location of horizontal tail on vertical tail as a fraction of vertical tail span measured from the vertical tail root chord. i.e. low tail = 0.0 and T-tail = 1. Computed based on input geometry and echoed with input parameters. Used if L3 = 2 or 3.	

Table 3.2: INPUT PARAMETERS (continued)

(Namelist INKTOZ)

Input Variable	Engineering Notation	Description	Refer to Figure
SF	S_f	Wetted area of fuselage in ft^2. Used when L14 = 3 or KINERT = 1.	
SHT	S_h	Horizontal tail planform area in ft^2.	
SLM	λ_w	Wing taper ratio.	
SLMH	λ_h	Horizontal tail taper ratio.	
SLMV	λ_v	Vertical tail taper ratio.	
SN	$n_{rotation}$	Load factor due to rotation during takeoff. Default = 1.05. Used when L13 = 1.	
SO	S_o	Cross sectional area in ft^2 of the fuselage at the fuselage station X_o where the flow ceases to be potential. The distance X_o is a function of the distance X_1, the body station where dS_x/dX first reaches its maximum negative value. X_1 may often be obtained by inspection when the equivalent fuselage is modeled with straight lines. For cases that are doubtful, the fuselage cross sectional area distribution should be plotted. $X_o = \ell_b\ (.378 + .527\ (X_1/\ell_b))$ where ℓ_b is the fuselage length. Input used when L3 = 2 or 3.	
SVT	S_v	Exposed planform area of vertical tail in ft^2. Must agree with inputs ARV, DLMC4V, and SLMV.	

Table 3.2: INPUT PARAMETERS (continued)

(Namelist INKTOZ)

Input Variable	Engineering Notation	Description	Refer to Figure
SW	S_w	Wing planform (reference) area in ft^2.	
SWFSW	S_{w_f}/S_w	Ratio of flap-affected wing area to wing reference area. The flap-affected wing area is a function of flap span and does not include any increase in wing area due to flap extension. Do not input. Computed value is echoed.	
TAS	V_{TAS}	True airspeed in ft/sec.	
TCE	t_E	Thickness in ft of elevator at the hinge line. Input if KSURF = 0.	3.18
TCR	$(t/c)_R$	Wing root thickness ratio. Used if L14 = 3 or KINERT = 1.	
TCT	$(t/c)_T$	Wing tip thickness ratio. Used if L14 = 3 or KINERT = 1.	
TEMP	^oR	Atmospheric temperature in degrees Rankine. Input not required for standard day conditions. For nonstandard atmospheric conditions, TEMP must always be input for consecutive computer runs.	
THIN	T_{max}	Maximum jet engine thrust in lbs. Input if NTYE = 7.	
TOCH	$(t/c)_H$	Thickness ratio of horizontal tail.	
TOCV	$(t/c)_V$	Thickness ratio of vertical tail. Used when L3 = 2 or 3.	
TWIST	θ	Wing twist in degrees measured between the root and tip sections of the reference wing planform. Washout yields negative twist.	3.22

Table 3.2: INPUT PARAMETERS (continued)

(Namelist INKTOZ)

Input Variable	Engineering Notation	Description	Refer to Figure
TWISTH	θ_H	Horizontal tail twist in degrees measured between the root and tip sections of the tail planform. Washout yields negative twist. Input 0 for the untwisted tail.	3.22
UWPAX	W_{pax}	Weight of one passenger in lbs. Used when L14 = 3 or KINERT = 1.	
VMCG	V_{mc_g}	Minimum control speed in ft/sec for one engine out conditions with the nosewheel still on the ground. Used in rotation speed calculations where V_{rot} > VMCG will be required by the program. Used when L13 = 1.	
VSTALL	V_{stall}	Stall speed in ft/sec. Used only in minimum control speed calculations when L12 = 1. VSTALL is not related to the variable CLMXTO, which in turn is used in rotation speed calculations.	
WAS	W_{aisle}	Width of cabin aisle in ft. Used when L14 = 3 or KINERT = 1.	3.12
WB	W_{B_s}	Weight of fuselage structure in lbs. Used when L14 = 3 or KINERT = 1.	
WBT	W_B	Total fuselage weight in lbs. If input as 0, WBT will be computed as WCC + WFE + WB. Used when L14 = 3 or KINERT = 1.	
WC	W_C	Maximum width of cabin in ft.	
WCC	W_{CC}	Weight of cockpit controls. Input a value only if WBT = 0. Used when L14 = 3 or KINERT = 1. (lbs)	

Table 3.2: INPUT PARAMETERS (continued)

(Namelist INKTOZ)

Input Variable	Engineering Notation	Description	Refer to Figure
WEIGHT	W	Total aircraft weight in lbs. Always input unless L14 = 3 or KINERT = 1, where WEIGHT will be computed.	
WEP	W_e	Weight of one engine, propulsor, and nacelle system in lbs. Used when L14 = 3 or KINERT = 1.	
WFE	W_{FE}	Weight of fixed equipment, seats, etc. in lbs. Input zero if WBT $\neq$ 0. Used when L14 = 3 or KINERT = 1.	
WFTP	$W_{fuel_{tip\ tank}}$	Weight of fuel in lbs in one tip tank. Used when L14 = 3 or KINERT = 1.	
WFW	$W_{fuel_{wing}}$	Weight of fuel in lbs in the wing. Used when L14 = 3 or KINERT = 1.	
WHT	W_H	Weight of horizontal tail in lbs. Used when L14 = 3 or KINERT = 1.	
WLG	W_{LG}	Weight of landing gear in lbs. Used when L14 = 3 or KINERT = 1.	
WP	W_P	Weight in lbs of engine(s) + nacelle(s). Used when L14 = 3 or KINERT = 1.	
WS	W_{seat}	Weight of one seat in lbs. Used when L14 = 3 or KINERT = 1.	
WTIP	$W_{tiptank}$	Weight of one tip tank without fuel in lbs. Used when L14 = 3 or KINERT = 1.	

Table 3.2: INPUT PARAMETERS (continued)

(Namelist INKTOZ)

Input Variable	Engineering Notation	Description	Refer to Figure
WVT	W_V	Weight of the vertical tail in lbs. Used when L14 = 3 or KINERT = 1.	
WW	W_W	Weight of the wing in lbs without fuel or propulsion unit. Used when L14 = 3 or KINERT = 1.	
XJET	X_j	Distance along the X axis in ft between the aircraft center of gravity and the first fan of a jet engine. Forward taken as positive. Input if NTYE = 7.	3.6
XNAC	X_{nac}	Width of nacelle in ft immediately in front of the leading edge of the wing for propeller aircraft. For jet aircraft, the width of the air inlet immediately in front of the leading edge of the wing.	3.20
XPILOT	X_{pilot}	Distance in ft from aircraft nose to pilot's center of gravity. Used when L14 = 3 or KINERT = 1.	3.12
YCGHOR	Y_{cg_H}	Lateral position in ft of horizontal tail center of gravity. Default = $.2b_H$. Used when L14 = 3 or KINERT = 1.	3.3
YCGWNG	Y_{cg_W}	Lateral position in ft of wing center of gravity. Default = $.18b_W$. Used when L14 = 3 or KINERT = 1.	3.3
YCGTIP	$Y_{cg_{TT}}$	Lateral position in ft of tip tank. Used when L14 = 3 or KINERT = 1.	3.3
ZCGVER	Z_{cg_V}	Vertical position of the vertical tail center of gravity measured from the X body axis in ft. Positive if below the X axis. Used when L14 = 3 or KINERT = 1.	3.6

Table 3.2: INPUT PARAMETERS (continued)

(Namelist INKTOZ)

Input Variable	Engineering Notation	Description	Refer to Figure
ZCGWNG	Z_{cg_W}	Vertical distance in ft of the wing center of gravity to the X body axis. Positive if below the X axis. Used when L14 = 3 or KINERT = 1.	3.6
ZHHT	Z_{HT}	Vertical distance from the horizontal tail to the X body axis in ft. Positive if below the X axis.	3.24
ZT	Z_T	Vertical distance from the thrust line at the propeller or fan position to the X body axis in ft. Positive if below the X axis.	3.25
ZV	Z_V	Vertical distance from the aerodynamic center of the vertical tail to the X body axis. Positive if below the X axis. Used when L3 = 2 or 3.	3.24
ZW	Z_W	Vertical distance from the quarter chord of the wing mean aerodynamic chord to the X body axis in ft. Positive if below the X axis.	3.25

Table 3.3

Variables Which Have Been Deleted From The Input List

But Are Included In Table 3.2 And Are Echoed

B	BHT	BVT	CBARHT	CBARVT	CBARW	CRCLHT
CRCLVT	CRCLW	CROOTW	ELHT	ELINC	ELTH	FUELD
LNO	LV	SAH	SWFSW			

Table 3.4

Input Variables With Default Values If Not Input

BDØ3	BDØ6	BDØ9	BLANG	DELTMA	DELTMI	DTDTA
DTDTR	EYEHMA	EYEHMI	MAXAIL	OSWF	RELR	RHO
RUDDRM	SN	TEMP	YCGHOR	YCGWNG		

Table 3.5

Variables Required Under Certain Conditions

Unless default values are available as indicated in Table 3.4, the following variables are required for the conditions specified:

L1 = 0 and KINERT ≠ 1:	INERTX	INERTY	INERTZ	IXZ
L2 = 1:	L3SA	NANLYS	NSENSI	
L3 = 2 or 3:	AFSA	ALCORA	BFLAPI	BFOB
	CFOC	CFOCV	DFLAP	DIHD
	DIHDH	ETAØA	ETA1A	ETAØV
	ETA1V	H1	H2	LN1S
	LTS	PHICS1	PHINS1	PHTERV
	RUDDRM	R2I	SO	TOCV
	ZV			
L12 = 1: *	BANK	DBARN (if NTYE = 7)		
	MAXAIL	VSTALL	RUDDRM	
L13 = 1: *	BODANG	CFOC	CLMXTO	DFLAP
	DTDTA	DTDTR	HEIGHT	SN
	VMCG			
KSURF = 0:	CBOCF	CGOC	DLMHHL	KNS
	MHMF	PDPTE	TCE	
KSURF = 1:	CHA	CHD	DADD	
KCONT = 10:	DELTMA	DELTMI	EYEH	
KCONT = 12:	CEOC = 1	EYEHMA	EYEHMI	
NTYE ≠ 7:	BL	BLANG	DPROP	FWOB (w/ENP=1)
	HPMSLS	LN	NP	
NTYE = 7:	MSSFL	THIN	XJET	AINL
	DFNDM			

Table 3.5 (concluded)

Variables Required Under Certain Conditions

L14 = 3 or KINERT = 1:	AXIS	BFUEL	BFUELI	BXIS
	CGLG	DBARN	ELCGH	ELCGV
	ELN	ELTIP	ELWING	FUELD
	LENG	PAX	PS	RELP
	RELR	SAB	SF	UWPAX
	WAS	WB	WBT	WCC
	WEP	WFE	WFTP	WFW
	WHT	WLG	WP	WS
	WTIP	WVT	WW	XPILOT
	YCGHOR	YCGWNG	YCGTIP	ZCGVER
	ZCGWNG			

*Note: When L12 or L13 = 1, configuration-dependent variables such as ALPOWB, ALPHLO, CPOC, and DFLAP should be correctly specified. ALT should also be checked.

Table 3.6

Input Namelist Rules

Note: Namelist names are not to be confused with namelist variables. Only three namelist names are allowed in this program and must appear in order as INCTL, INATOI, and INATOZ. The namelist variables associated with each namelist name are those specified in Table 3.1 and 3.2. Only one variable in the input list is an array: NSENSI in namelist INKTOZ.

1. Namelist names cannot contain imbedded blanks and must be preceded by a $ which must be in column 2. The symbol may be different on different computers. It is a $ on a CDC or Honeywell, while it is a & on a Burroughs. No punctuation is allowed after the namelist name and atleast one blank space must separate it from the first namelist variable. An example line opening namelist INCTL is as follows

   $INCTL L1=0,..... (see Table 3.7)

2. Namelists must be terminated appropriately. Honeywell systems require $END, some CDC systems require only $, and Burroughs systems require &END.

3. Namelist variables may appear in any column except, usually, the first.

4. Each variable is specified as variable name=###, with decimal points included as appropriate. See Table 3.7.

5. Variables may appear in any order within their prescribed namelist.

6. All variables within a namelist need not be input.

7. Variables may be repeated within a namelist, where the last value specified is used. Hence,

   .....,PHTERV=14.61,SVT=52.26,PHTERV=12.1,.....

   is a valid entry where PHTERV=12.1 will be used.

8. Variable arrays may be entered as NSENSI=57,50,51, or NSENSI(1)= 57,50,51, where 57 is defaulted to the first location in the first example, while it is specified to be in location (1) in the second example. 50 and 51 are placed in the second and third array locations in both examples.

Table 3.7

SAMPLE INPUT DECK SET-UP FOR MULTIPLE CASES

column 1 must be blank for namelist title

namelist title begins in column 2 with appropriate character

```
TWIN TURBO WITH ELEV FIXED, INERTIAS AND HINGE MOMENTS INPUT.
$INCTL L1 = 0, L2=0,L3=3,L4=1,L5=1,L6=1,L10=1,L12=0,L13=0,L14=0,
  KCONT=10,KSURF=1,KFIFR=0,KINERT=0,$END
$INATOI AFSA=19.4,ALCORA=.2,ALPHLO=-.0366,ALPOH=0.,ALPOWB=-.0366,
  ALT=10000.,AR=9.79,ARH=5.,ARV=1.1,BENGOB=.32,BFLAPI=2.22,BFOB=.59,
  BL=3,CDO=.0267,CEOC=.3,CFOC=.24,CFOCV=.34,CHA=-.0005,CHD=-.0055,
  CLAHP=5.73,CLAVP=6.3,CLAWP=6.3,CLHMAX=.8,CLHMIN=-.8,CMACH2=0.,
  CMACW2=-.093,CPOC=1.,DADD=.6,DELTMA=.24,DELTMI=-.35,DFLAP=0.,
  DIHD=6.,DIHDH=0.,DLMC4=0.,DLMC4H=17.,DLMC4V=37.15,DPROP=8.21,
  EETAØ=1.,EETA1=.05,ELCG=15.24,ELC4H=38.589,ELC4V=29.179,ELC4W=
  14.65,ELF=39.5,ELNAC=3.67,ENP=2,ETAØA=1.,ETA1A=.6,ETAØV=.93,
  EYEH=0.,EYET=-.03,EYEW=.06,FWOB=5.08,H1=5.7,H2=5.1,HC=4.38,
  HMPSLS=850.,INERTX=27280.,INERTY=20721.,INERTZ=45385.,IXZ=3069.7,
  $END
$INKTOZ KNS=2,LN=9.3,LN1=10.41,LN1S=10.41,LT=17.9,LTS=17.9,NP=.81,
  NTYE=6,OSWF=.66,PERPOW=0.,PHIC1=.71,PHIC2=.9,PHICS1=.71,PHIN1=.68,
  PHIN2=.89,PHINS1=.68,PHTERH=11.25,PHTERV=14.61,RUDDRM=0.,R2I=2.33,
  SHT=67.99,SLM=.42,SLMH=.5,SLMV=.64,SO=26.6,SVT=52.26,SW=303.,
  TAS=314.,TOCH=.1,TOCV=.14,TWIST=-4.55,TWISTH=0.,WC=5.17,
  WEIGHT=12500.,XNAC=2.,ZHHT=-9.5,ZT=.17,ZV=-5.43,ZW=.55,$END
TWIN TURBO SENSITIVITY ANALYSIS FOR CNR, CLB, CNB
$INCTL L2=1,L5=0,L6=0,$END
$INATOI AFSA=19.4,$END
$INKTOZ L3SA=2,NANLYS=3,NSENSI=57,50,51,$END
TWIN TURBO WITH ELEV FIXED, INERTIAS INPUT, AND HINGE MOM CALC.
$INCTL L2=0,KSURF=0,$END
$INATOI CBOCF=.35,CGOC=.004,DLMHHL=0.,$END
$INKTOZ KNS=2,MHMF=.03,PDPTE=11.25,TLE=.3,$END
TWIN TURBO CALCULATION FOR VMC AND ROTATION SPEED.
$INCTL L12=1,L13=1,KSURF=1,$END
$INATOI ALPHLO=-.0834,ALPOWB=-.0834,BANK=-5.,BODANG=.02,CDO=.034,
  CFOC=.24,CLMXTO=1.84,CHA=-.0005,CHD=-.0055,DADD=.6,DFLAP=15.,
  HEIGHT=4.74,$END
$INKTOZ TAS=152.,MAXAIL=.36,VSTALL=146.,VMCG=101.3,$END
```

Notes: 1. Four full cases are input here. The first case shows a complete input for the particular case. Cases 2, 3, and 4 only change required variables.

2. In case 2, no changes are required in $INATOI, but the namelist title with a dummy (unchanged) variable appears.

3. In case 4, KSURF is changed back to 1 (by choice) from 0 in case 3, so CHA, CHD, and DADD are input.

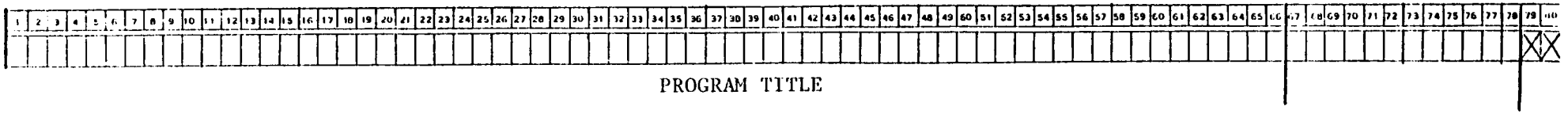

Title in 13A6 Format. 78 characters allowed. During echo, header reflects this title with 11A6 (66 characters) on the first line and 2A6 (the last 12 characters) on the second line.

Figure 3.1 The First Line of Each Data Set Is A Plain-Language Identification Line.

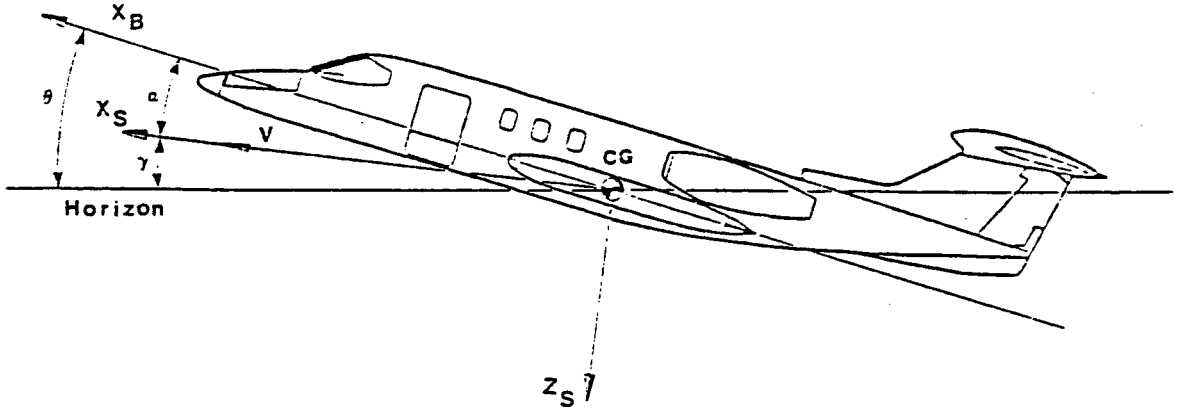

Figure 3.1 Axis Definitions

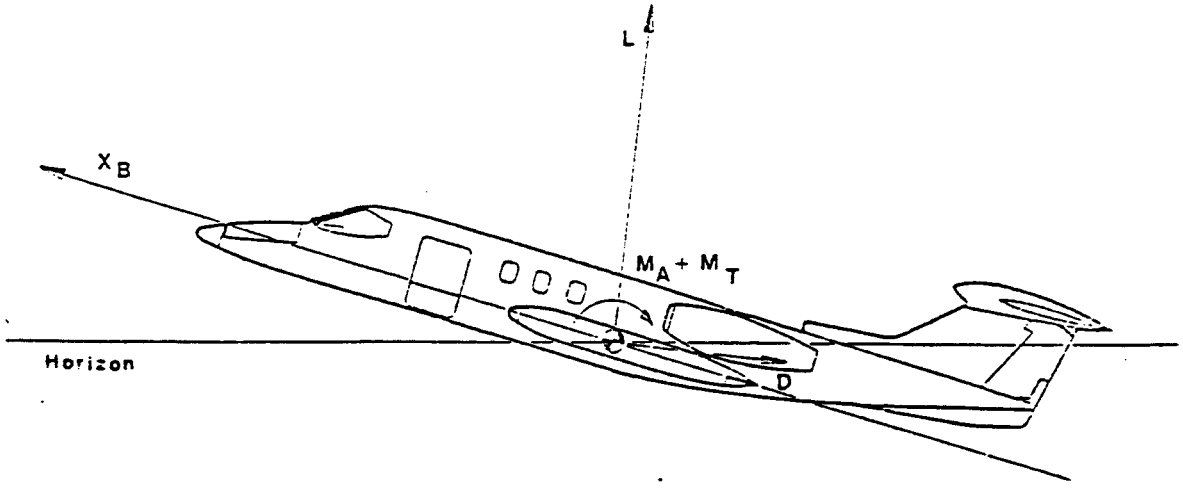

Figure 3.2 Force and Moment Definitions

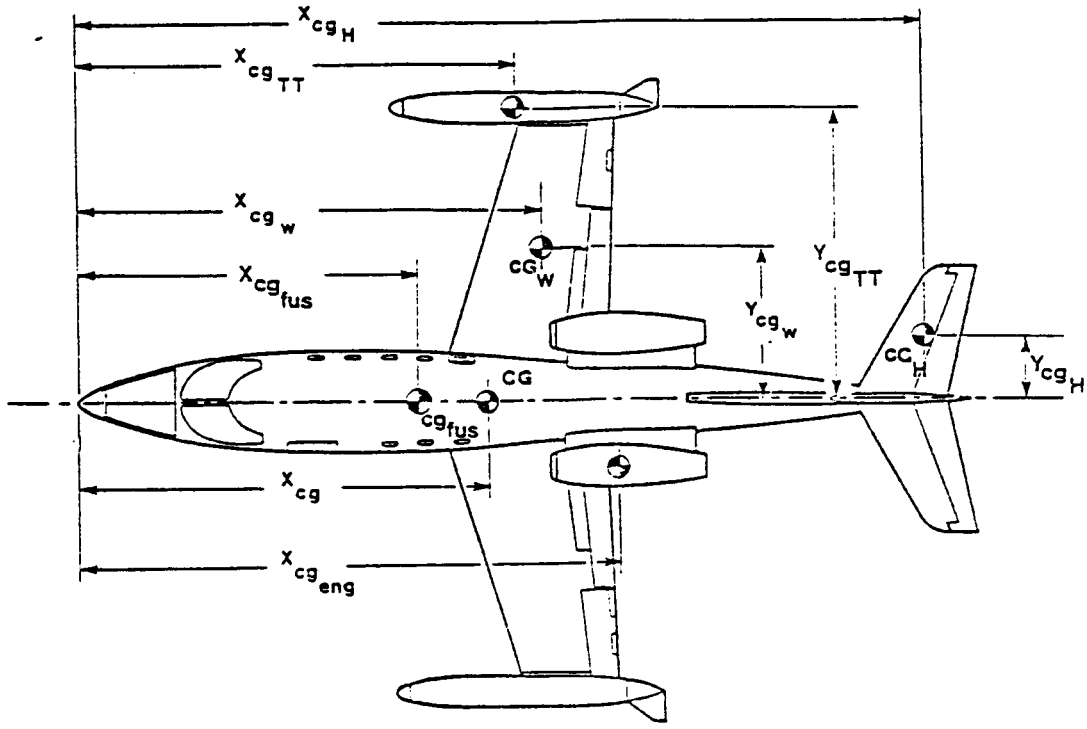

Figure 3.3 Center of Gravity Positions

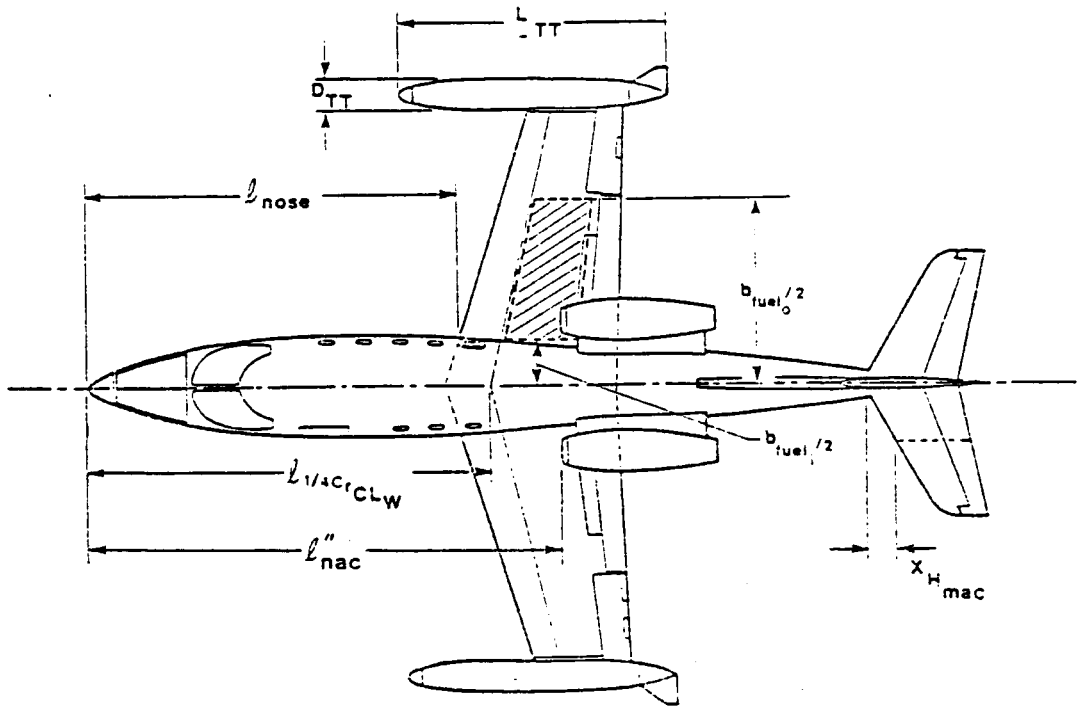

Figure 3.4 Geometry Definitions

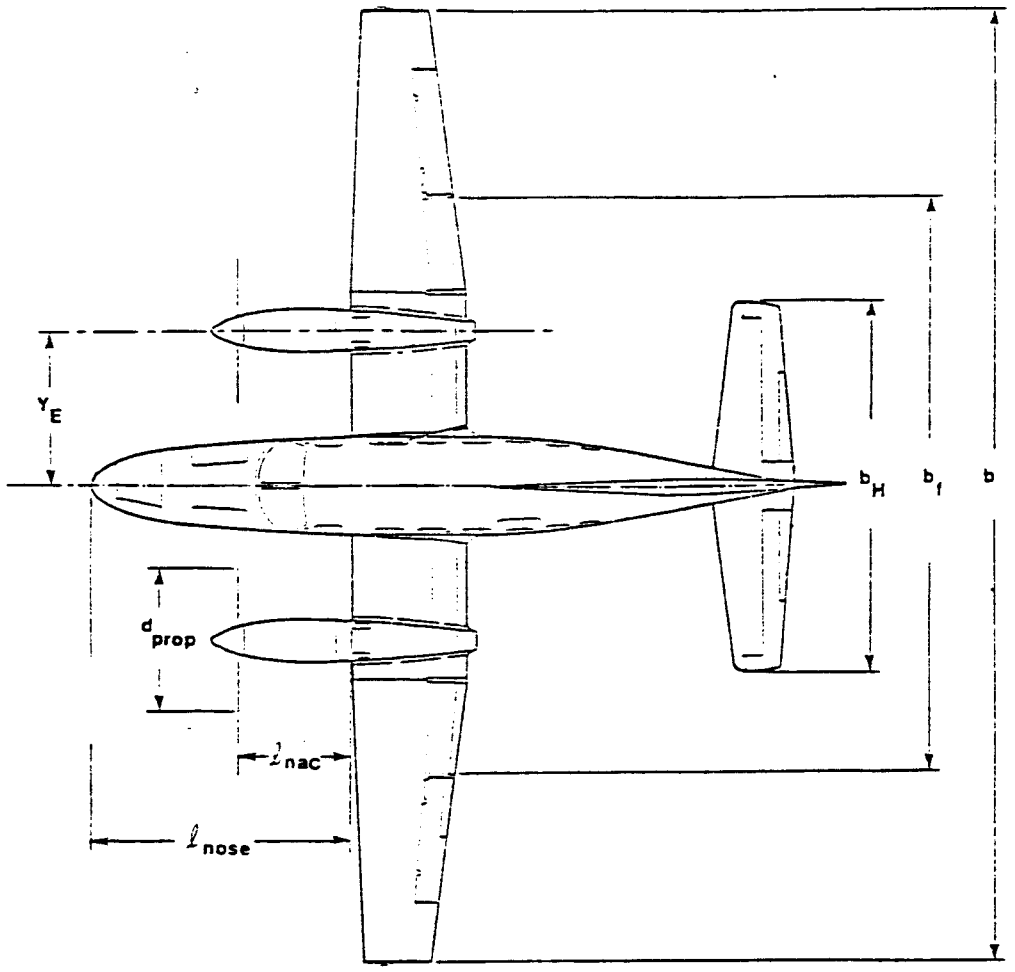

Figure 3.5 Geometry Definitions

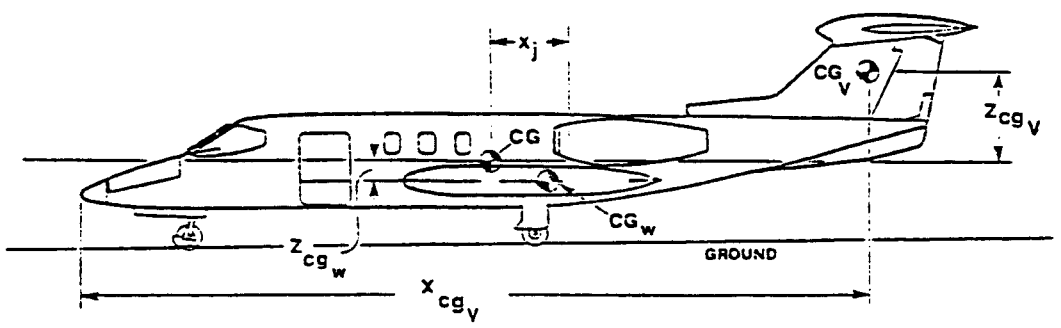

Figure 3.6 Geometry Definitions

(Dimensions positive as shown)

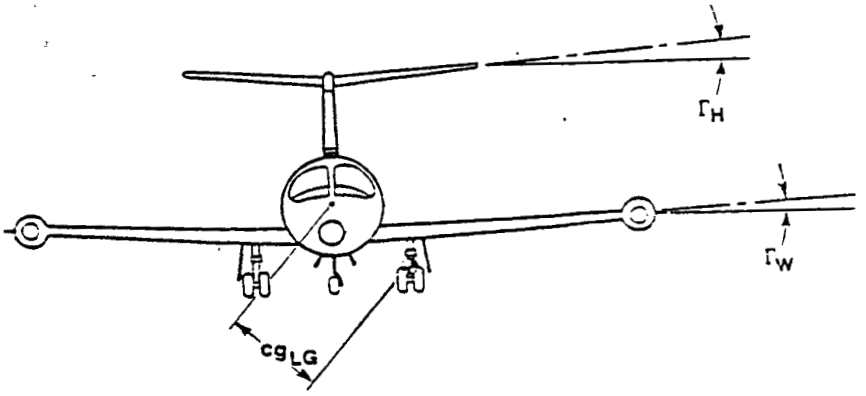

Figure 3.7 Dihedral Definitions

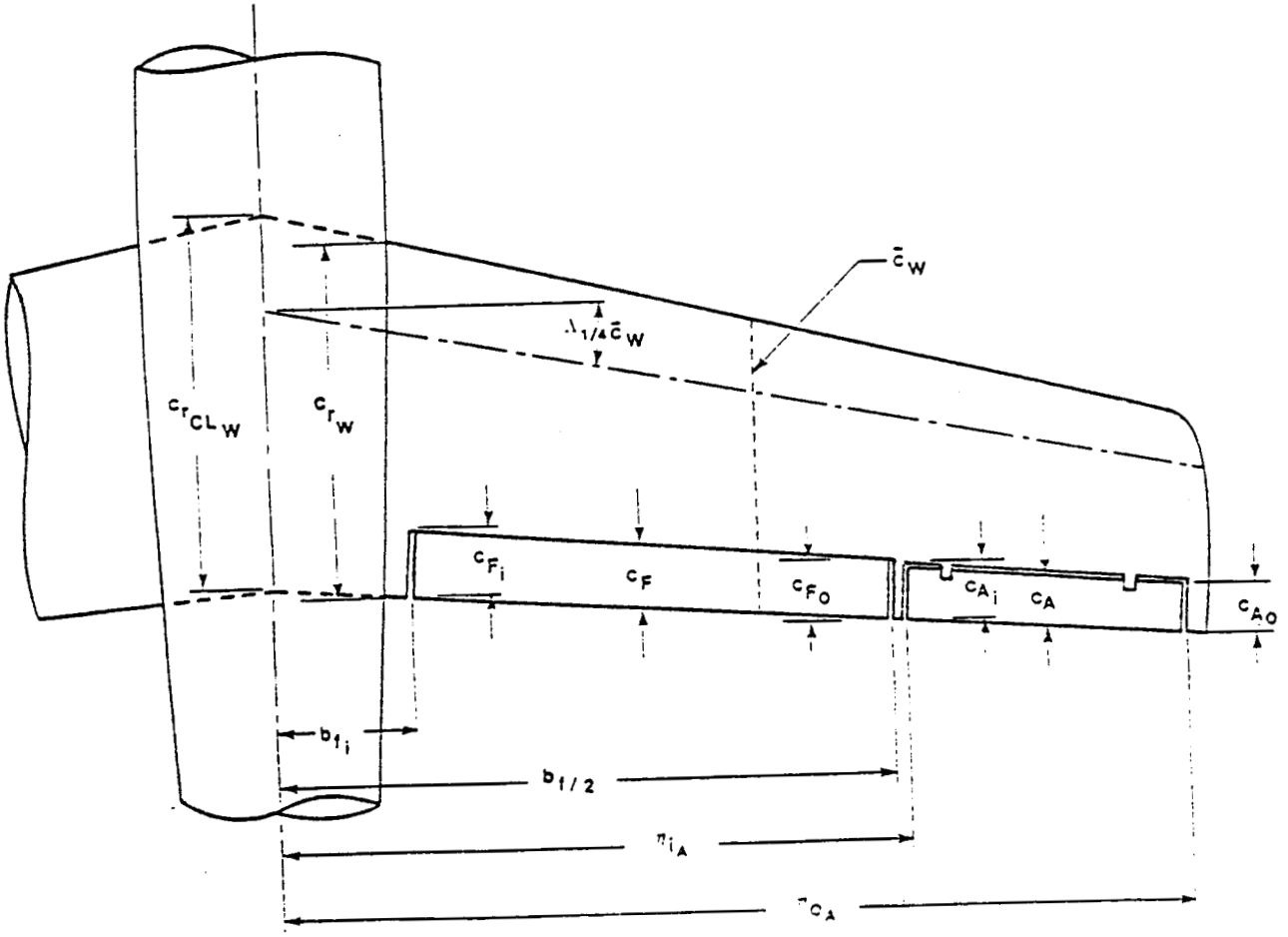

Figure 3.8 Wing Geometry Definitions

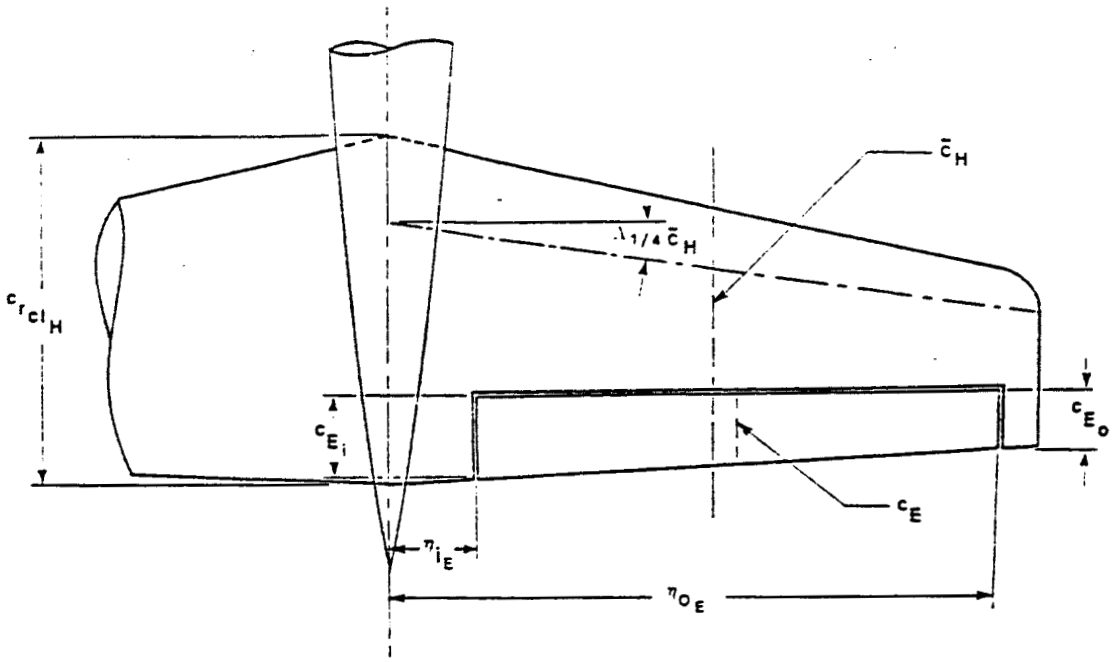

Figure 3.9 Horizontal Tail Geometry Definitions

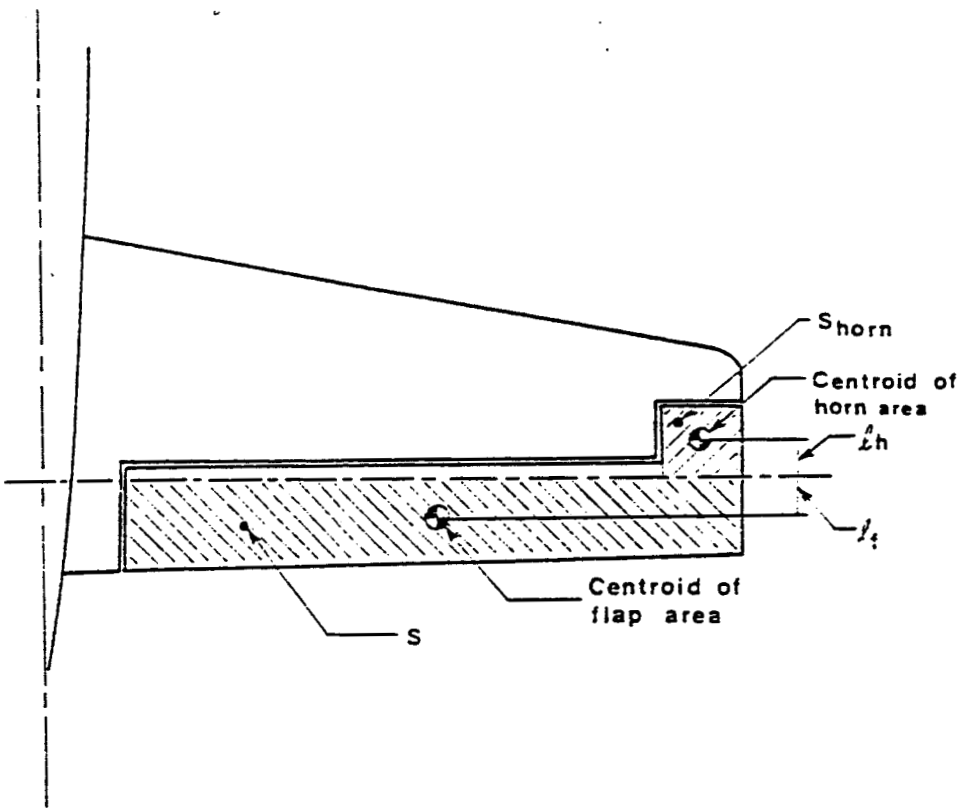

Figure 3.10 Elevator Horn Balance Definitions

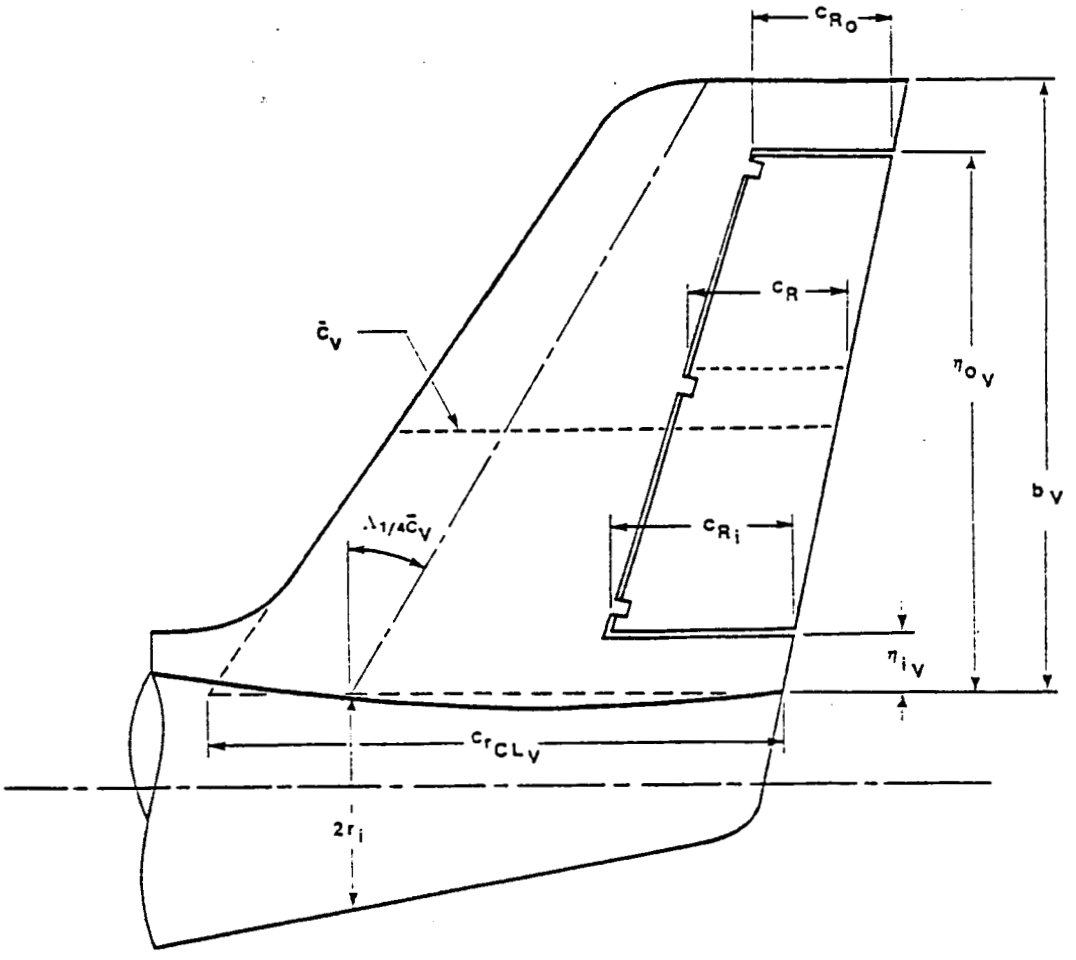

Figure 3.11 Vertical Tail Geometry Definitions

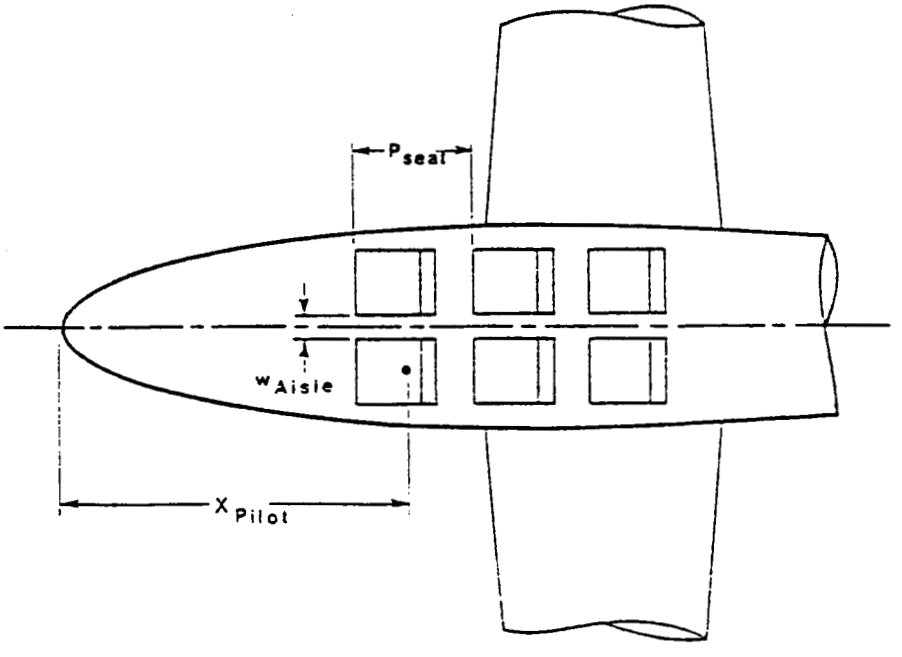

Figure 3.12 Cabin Seating Arrangement

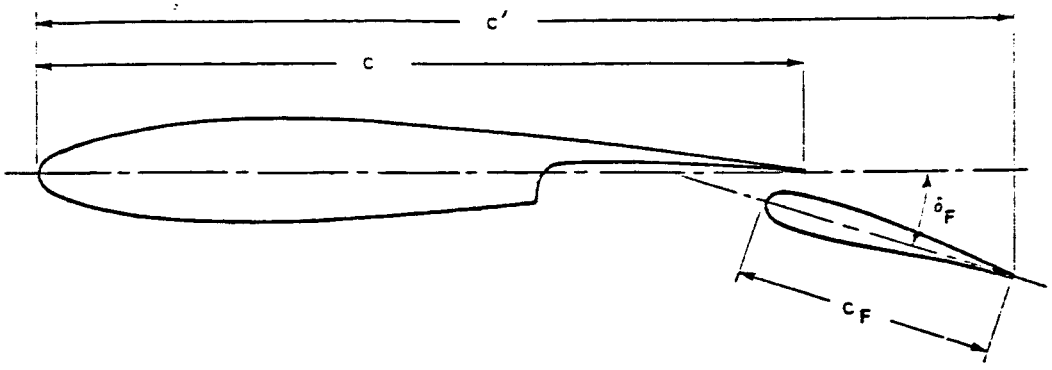

Figure 3.13 Flap Geometry

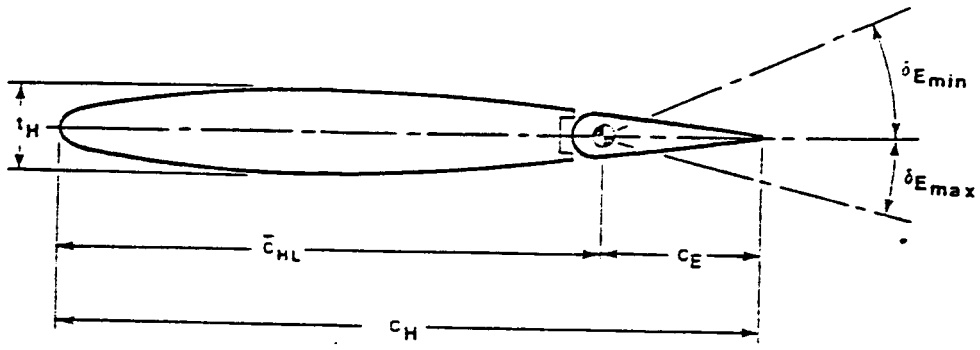

Figure 3.14 Elevator Geometry

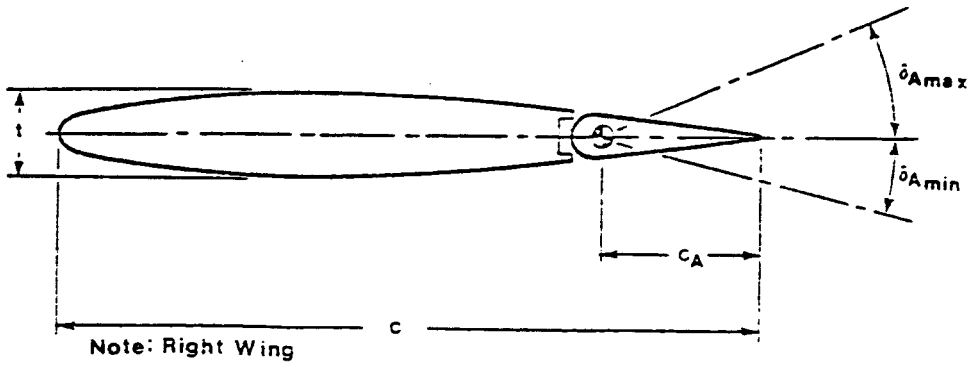

Figure 3.15 Aileron Geometry

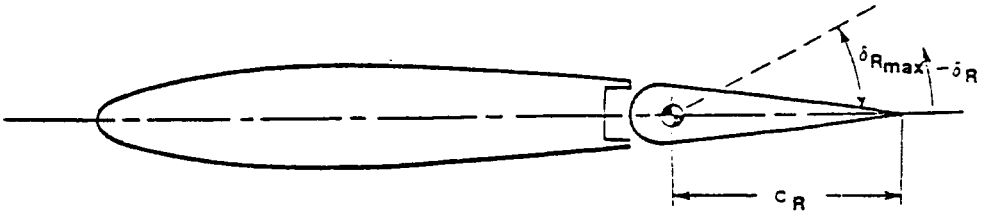

Figure 3.16 Rudder Geometry

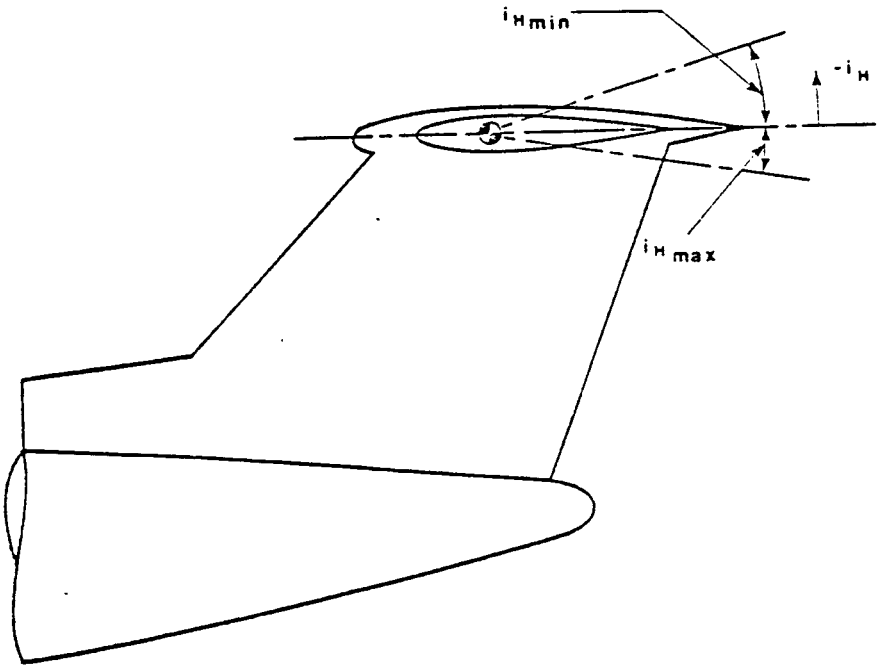

Figure 3.17 Horizontal Tail Incidence Angle

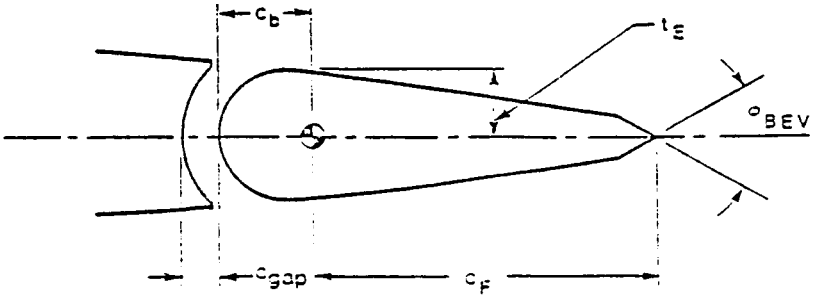

Figure 3.18 Elevator Geometry Definitions

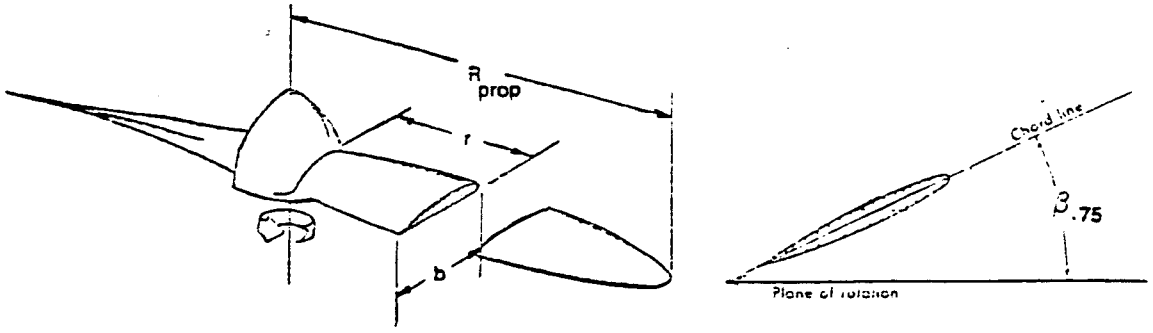

Figure 3.19 Propeller Geometry

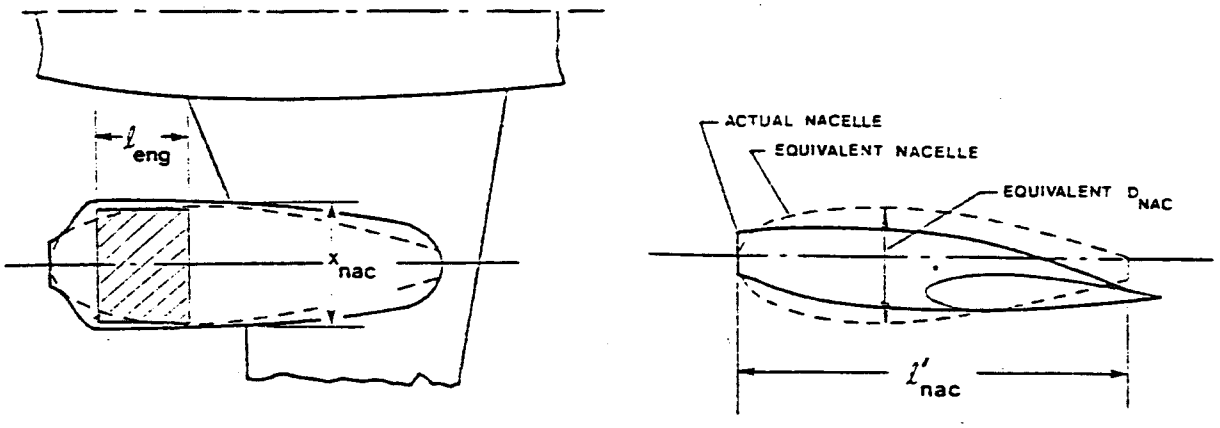

Figure 3.20 Nacelle Geometry

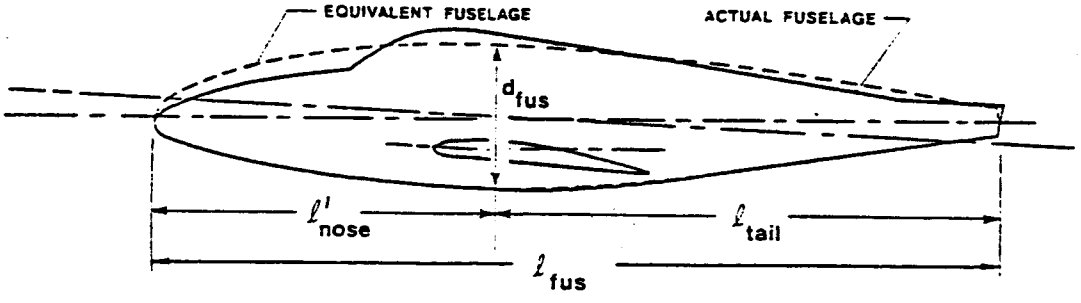

Figure 3.21 Fuselage Geometry

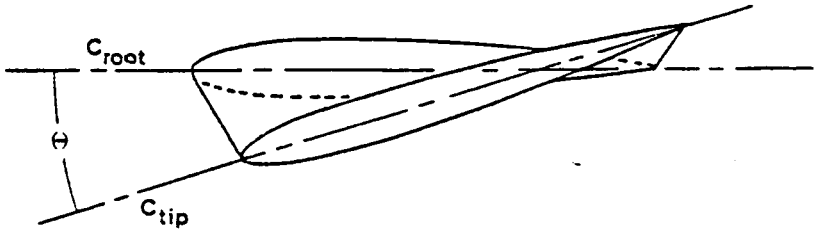

Figure 3.22 Twist Angle Definition

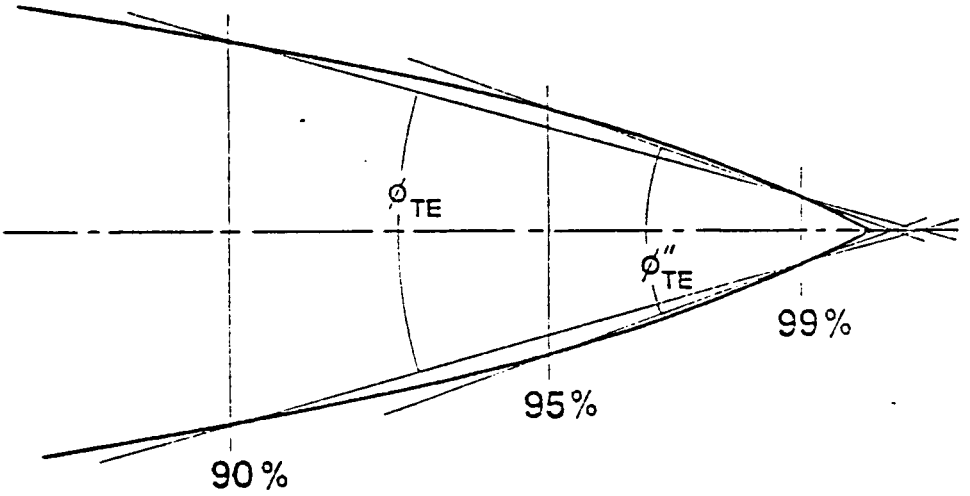

Figure 3.23 Trailing-edge Angle Definitions

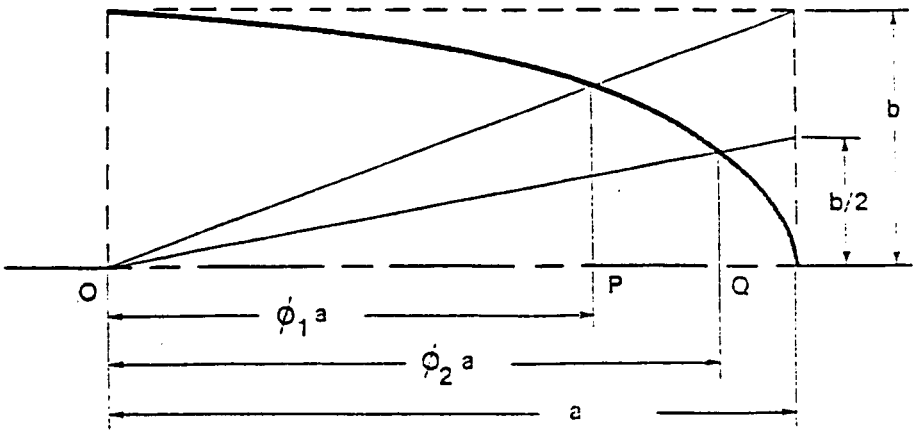

Figure 3.23a Ellips Parameter Definitions

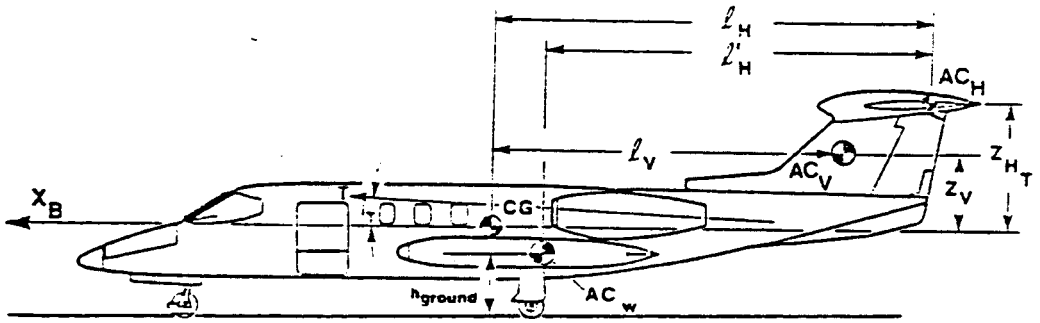

Figure 3.24 Geometry Definitions

Dimensions positive as shown
(Except for Z_{H_T} and Z_V)

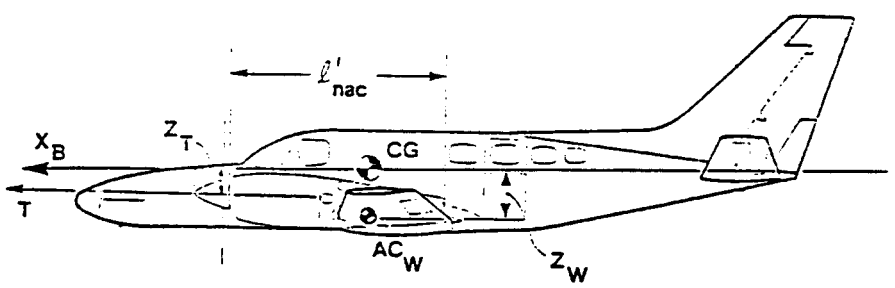

Figure 3.25 Geometry Definitions

Dimensions positive as shown

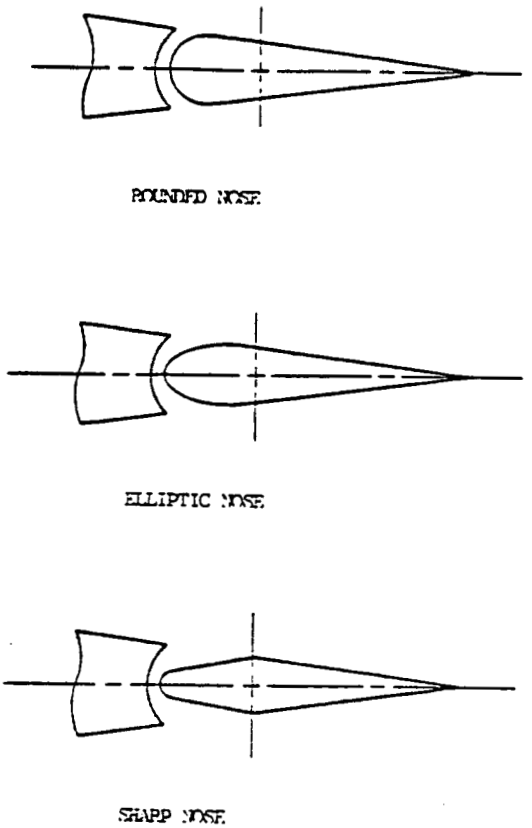

Figure 3.26 Elevator Nose Shapes

SECTION 4

DEFINITION OF OUTPUT

This section describes the output as printed by the computer program. Examples of output are given in Section 6.

4.1 Input Data Output

After printing a heading, the program prints a listing of the corresponding data as input by the user. The explanation of the variables is as given in Tables 3.1 and 3.2.

4.2 Static and Dynamic Stability Derivatives

A definition of the derivatives as output by the program is presented in Table 4.1. This table is in ascending order of array DERV.

Whenever output is available for airplane components, this will be printed. The following computer variable postscripts have been used to denote the aircraft component:

- -B: Body contribution
- -H: Horizontal tail contribution
- -V: Vertical tail contribution
- -W: Wing contribution
- -WB: Wing-Body contribution
- -P: Power effect

Generally the output of the derivatives is self-explanatory.

4.3 Trim Data

The program will print out tailplane deflections and horizontal tail lift coefficient required for pitching moment equilibrium, both with and without power. See Table 4.1 for an explanation of the computer variable names.

4.4 Power Effects Data

The effect of power on the derivatives, as discussed in Section 2.2.6 is printed. An explanation of the variable names is provided in Table 4.1.

4.5 Control Derivatives

Hinge moment data are output with a note whether they were computed or input. Control derivatives for aileron, rudder, elevator or all moving tail are output in a self-explanatory form.

4.6 V_{MC} Data

The output for the Minimum Speed for Control with one engine out is self-explanatory.

4.7 Rotation Speed

The output for the Rotation Speed computations is self-explanatory.

4.8 Inertia Data

The output for the Inertia Data is self-explanatory.

4.9 Dynamic Stability Characteristics

The output data for this section may be divided into four main sections. Which section is actually output depends on the setting of the Control Variables.

4.9.1 Dynamic Stability Data

Output in this section is:

- The non-dimensional derivatives as computed by the program, along with the dimensional derivatives.
- Small perturbation mode data appear in self-explanatory form.
- Sensitivity analysis appears in tabular form. When, for the longitudinal sensitivity analysis, one of the complex pairs breaks down into two real roots, the output lists: n, ω, REAL ROOT =, $\omega_{n_{SP}}$, ζ_{SP}, REAL ROOT =. As for the lateral directional sensitivity analysis, when the two real roots come together and split off into a complex pair, the output lists: n, ω, n, ω, ω_n, ζ, ω_n, ζ.

Following is a list of computer variables and the explanation, as used for this part of the output.

Computer Variable	Explanation
EN	(n) real part of an oscillatory root
OM	(ω) imaginary part of an oscillatory root
OMN SP	(ω_nSP) short period undamped natural frequency
ZT SP	(ζ_{SP}) phugoid damping ratio
OMND	(ω_{n_D}) dutch roll undamped natural frequency
ZTD	(ζ_D) dutch roll damping ratio

4.9.2 Transfer Function Data

The results appear in self-explanatory form. The standard format for Longitudinal transfer functions is given in Figure 4.1. The standard format for lateral directional aileron and rudder transfer functions are given in Figures 4.2 and 4.3, respectively.

Figure 4.1 Standard Format for Longitudinal Transfer Functions

General Standard Format

$$\frac{u(s)}{\delta_E(s)} = \frac{K_{u_{\delta_E}}(T_{u_1}s + 1)(T_{u_2}s + 1)}{\left(\frac{s^2}{\omega_{n_{SP}}^2} + \frac{2\zeta_{SP}s}{\omega_{n_{SP}}} + 1\right)\left(\frac{s^2}{\omega_{n_P}^2} + \frac{2\zeta_P s}{\omega_{n_P}} + 1\right)} \qquad a)$$

$$\frac{\alpha(s)}{\delta_E(s)} = \frac{K_{\alpha_{\delta_E}}(T_\alpha s + 1)\left(\frac{s^2}{\omega_{n_\alpha}^2} + \frac{2\zeta_\alpha s}{\omega_{n_\alpha}} + 1\right)}{\left(\frac{s^2}{\omega_{n_{SP}}^2} + \frac{2\zeta_{SP}s}{\omega_{n_{SP}}} + 1\right)\left(\frac{s^2}{\omega_{n_P}^2} + \frac{2\zeta_P s}{\omega_{n_P}} + 1\right)} \qquad b)$$

Figure 4.1 Standard Format for Longitudinal Transfer Functions

General Standard Format (continued)

$$\frac{\theta(s)}{\delta_E(s)} = \frac{K_{\theta_{\delta_E}} (T_{\theta_1} s + 1)(T_{\theta_2} s + 1)}{\left(\frac{s^2}{\omega_{n_{SP}}^2} + \frac{2\zeta_{SP} s}{\omega_{n_{SP}}} + 1\right)\left(\frac{s^2}{\omega_{n_P}^2} + \frac{2\zeta_P s}{\omega_{n_P}} + 1\right)} \qquad \text{c)}$$

Figure 4.2 Standard Format for Lateral-Directional Aileron Transfer Functions

General Standard Format

$$\frac{\beta(s)}{\delta_A(s)} = K_{\beta_{\delta_A}} \frac{(T_{\beta_{A_1}} s + 1)(T_{\beta_{A_2}} s + 1)}{(T_S s + 1)(T_R s + 1)\left(\frac{s^2}{\omega_{n_D}^2} + \frac{2\zeta_D}{\omega_{n_D}} + 1\right)} \qquad \text{a)}$$

$$\frac{\phi(s)}{\delta_A(s)} = K_{\phi_{\delta_A}} \frac{\left(\frac{s^2}{\omega_{n_{\phi_A}}^2} + \frac{2\zeta_{\phi_A}}{\omega_{n_{\phi_A}}} s + 1\right)}{(T_S s + 1)(T_R s + 1)\left(\frac{s^2}{\omega_{n_D}^2} + \frac{2\zeta_D}{\omega_{n_D}} s + 1\right)} \qquad \text{b)}$$

$$\frac{\psi(s)}{\delta_A(s)} = K_{\psi_{\delta_A}} \frac{(T_{\psi_A} s + 1)\left(\frac{s^2}{\omega_{n_{\psi_A}}^2} + \frac{2\zeta_{\psi_A}}{\omega_{n_{\psi_A}}} s + 1\right)}{s(T_S + 1)(T_R s - 1)\left(\frac{s^2}{\omega_{n_D}^2} + \frac{2\zeta_D}{\omega_{n_D}} s + 1\right)} \qquad \text{c)}$$

Figure 4.3 Standard Format for Lateral-Directional Rudder Transfer Functions

General Standard Format

$$\frac{\beta(s)}{\delta_R(s)} = K_{\beta_{\delta_R}} \frac{(T_{\beta_{R_1}} s + 1)(T_{\beta_{R_2}} s + 1)(T_{\beta_{R_3}} s + 1)}{(T_S s + 1)(T_R s + 1)\left(\frac{s^2}{\omega_{n_D}^2} - \frac{2\zeta_D}{\omega_{n_D}} s + 1\right)} \qquad \text{a)}$$

$$\frac{\phi(s)}{\delta_R(s)} = K_{\phi_{\delta_R}} \frac{(T_{\phi_{R_1}} s + 1)(T_{\phi_{R_2}} s + 1)}{(T_S s + 1)(T_R s + 1)\left(\frac{s^2}{\omega_{n_D}^2} + \frac{2\zeta_D}{\omega_{n_D}} s + 1\right)} \qquad \text{b)}$$

$$\frac{\psi(s)}{\delta_R(s)} = K_{\psi_{\delta_R}} \frac{(T_{\psi_R} s + 1)\left(\frac{s^2}{\omega_{n_{\psi_R}}^2} - \frac{2\zeta_{\psi_R}}{\omega_{n_{\psi_R}}} s + 1\right)}{s(T_S s + 1)(T_R s + 1)\left(\frac{s^2}{\omega_{n_D}^2} + \frac{2\zeta_D}{\omega_{n_D}} s + 1\right)} \qquad \text{c)}$$

These standard format transfer functions are presented assuming X_{δ_E} and Y_{δ_A} both equal zero.

Following is a list of computer output variables as used for this part of the program.

Computer Variable	Explanation
KUDE	$K_{U_{\delta_E}}$
TU1	T_{U_1}
TU2	T_{U_2}
OMN	ω_n
ZT	ζ
KALPHADE	$K_{\alpha_{\delta_E}}$
TALPHA	T_α
OMN ALPHA	ω_{n_α}
ZETA ALPHA	ζ_α
KTHETADE	$K_{\theta_{\delta_E}}$
TTHETA1	T_{θ_1}
TTHETA2	T_{θ_2}
K BETA DELTA-A	$K_{\beta_{\delta_A}}$
T BETA A1	$T_{\beta_{A_1}}$
T BETA A2	$T_{\beta_{A_2}}$
TS	T_S
TR	T_R

Computer Variable	Explanation (cont'd)
OMND	ω_{n_D}
ZETAD	ζ_D
K PHI DELTA-A	$K\phi_{\delta_A}$
OMN PHI A	$\omega_{n_{\phi_A}}$
ZETA PHI A	ζ_{ϕ_A}
K PSI DELTA-A	$K_{\psi_{\delta_A}}$
T PSI A	T_{ψ_A}
OMN PHI A	$\omega_{n_{\phi_A}}$
ZETA PSI A	ζ_{ψ_A}
K BETA DELTA-R	$K_{\beta_{\delta_R}}$
T BETA R1	$T_{\beta_{R_1}}$
T BETA R2	$T_{\beta_{R_2}}$
T BETA R3	$T_{\beta_{R_3}}$
K PHI DELTA-R	$K_{\phi_{\delta_R}}$
T PHI R1	$T_{\phi_{R_1}}$
T PHI R2	$T_{\phi_{R_2}}$
K PSI DELTA-R	$K_{\psi_{\delta_R}}$
T PSI R	T_{ψ_R}
OMN PSI R	$\omega_{n_{\psi_R}}$

Computer Variable	Explanation (concluded)
ZETA PSI R	ζ_{ψ_R}
ALPHA	α
THETA	θ
BETA	β
PHI	ϕ
PSI	ψ

RESTRICTIONS

If the values of the coefficients are non-standard, then they are outputted as zeros in the standard format transfer function section. For example, the $\beta(s)/\delta_R(s)$ transfer function in standard format has three time constants in the numerator. If two of these time constants become an oscillatory pair, then the output will indicate zeros for the two time constants. This <u>does not</u> mean the time constants are equal to infinity. It means that they no longer exist but have combined to form a quadratic with a damping ratio and undamped natural frequency. This same reasoning applies to a quadratic which has degenerated into two real roots. This is indicated by zeros for ω_n and ζ. This means that ζ and ω_n no longer exist and that the roots are now time constants.

4.9.3 Frequency Response Data

The output is in tabular form and self-explanatory.

RESTRICTIONS

The magnitude and phase angle are determined at the break frequency ($\omega = a$), $\omega = .5a$, and $\omega = 2a$ for each lead and lag first order

in the transfer function. For second order factors the magnitude and phase angle are determined at the break frequency $\omega = \omega_n$ and also at $.6\ \omega_n$, $.7\ \omega_n$, $.8\ \omega_n$, $.9\ \omega_n$, $1.2\ \omega_n$, $1.4\ \omega_n$, $1.6\ \omega_n$, and $1.8\ \omega_n$. The smallest break frequency and its associated frequencies investigated relative to it are listed first, with their corresponding frequency response. The second smallest break frequency is listed next and so on.

Table 4.1 Symbols, Output Parameters

Comp. Symbol	Engineering Symbol	Definition	Dimension	Array Derv.
SW	S	Wing Area	Ft^2	1
WEIGHT	W	Weight	Lbs	2
B	b	Wing span	Ft	3
CBARW	$\bar{c}$	Mean aerodynamic chord	Ft	4
TAS	U_1	Airspeed	$Ft\text{-}Sec^{-1}$	5
		Density	$Slugs\text{-}Ft^{-3}$	6
THETA	θ_1	Initial Theta	Rad	7
IYY	I_{yy}	Moment of inertia about y-axis	$Slug\text{-}Ft^2$	8
IXX	I_{xxB}	Moment of inertia about x-axis computed in a body-fixed reference system	$Slug\text{-}Ft^2$	
IZZ	I_{zzB}	Moment of inertia about z-axis computed in a body-fixed reference system	$Slug\text{-}Ft^2$	
IXZ	I_{xzB}	Product of inertia computed in a body-fixed reference system	$Slug\text{-}Ft^2$	
ALPHA	α_1	Steady state angle of attack	Rad.	
CL	C_{L_1}	Steady state lift coefficient		9
CD	C_{D_1}	Steady state drag coefficient		10
CTPRIM	$C_{T_{x_1}}$	Steady state thrust coefficient		11
CM	C_{M_I}	Steady state pitching moment coefficient		12
CMCLFI	$(dC_M/dC_L)_{fixed}$	Static margin, controls fixed		
CMCLFR	$(dC_M/dC_L)_{free}$	Static margin, controls free		
CMT	$C_{M_{T_1}}$	Steady state thrust-moment coefficient		13
CLU	$C_{L_u} = \frac{\partial C_L}{\partial(\frac{u}{u_1})}$	Variation of lift coefficient with speed		14

Table 4.1 (cont'd)

Comp. Symbol	Engineering Symbol	Definition	Dimension	Array Derv.
CDU	$C_{D_u} = \frac{\partial C_D}{\partial (\frac{u}{u_1})}$	Variation of drag coefficient with speed (i.e. speed damping)		15
CMU	$C_{M_u} = \frac{\partial C_M}{\partial (\frac{u}{u_1})}$	Variation of pitching moment coefficient with speed		16
CTXU	$C_{T_{X_u}} = \frac{\partial C_{T_X}}{\partial (\frac{u}{u_1})}$	Variation of X-thrust coefficient with speed		17
CMTU	$C_{M_{T_u}} = \frac{\partial C_{M_T}}{\partial (\frac{u}{u_1})}$	Variation of thrust pitching moment coefficient with speed		18
CDQ	$C_{D_q} = \frac{\partial C_D}{\partial (\frac{q\bar{c}}{2u_1})}$	Variation of drag coefficient with pitch rate	Rad^{-1}	
CLQ	$C_{L_q} = \frac{\partial C_L}{\partial (\frac{q\bar{c}}{2u_1})}$	Variation of lift coefficient with pitch rate	Rad^{-1}	19
CMQ	$C_{M_q} = \frac{\partial C_M}{\partial (\frac{q\bar{c}}{2u_1})}$	Variation of pitching moment coefficient with pitch rate	Rad^{-1}	20
CLALPH	$C_{L_\alpha} = \frac{\partial C_L}{\partial \alpha}$	Airplane lift curve slope	Rad^{-1}	21
CDA	$C_{D_\alpha} = \frac{\partial C_D}{\partial \alpha}$	Variation of drag coefficient with angle of attack	Rad^{-1}	22
CMAFIX	$C_{M_{\alpha_{fixed}}} = (\frac{\partial C_M}{\partial \alpha})_{fixed}$	Variation of pitchimg moment with angle of attack, control fixed	Rad^{-1}	23
CMAFRE	$C_{M_{\alpha_{free}}} = (\frac{\partial C_M}{\partial \alpha})_{free}$	Variation of pitching moment with angle of attack, controls free	Rad^{-1}	23

Table 4.1 (cont'd)

Comp. Symbol	Engineering Symbol	Definition	Dimension	Array Derv.
CMALPHA	$C_{M_\alpha} = \frac{\partial C_M}{\partial \alpha}$	Variation of pitching moment with angle of attack (i.e., static longitudinal stability)	Rad^{-1}	23
	$C_{M_{T_\alpha}} = \frac{\partial C_{M_T}}{\partial \alpha}$	Variation of thrust pitching moment coefficient with angle of attack	Rad^{-1}	24
CDAD	$C_{D_\alpha} = \frac{\partial C_D}{\partial \alpha}$	Variation of drag coefficient with angle of attack	Rad^{-1}	
CLAD	$C_{L_{\dot{\alpha}}} = \frac{\partial C_L}{\partial (\frac{\dot{\alpha}\bar{c}}{2u_1})}$	Variation of lift coefficient with rate of change of angle of attack	Rad^{-1}	25
CMAD	$C_{M_{\dot{\alpha}}} = \frac{\partial C_M}{\partial (\frac{\dot{\alpha}\bar{c}}{2u_1})}$	Variation of pitching moment coefficient with rate of change of angle of attack	Rad^{-1}	26
CLDE	$C_{L_{\delta_E}} = \frac{\partial C_L}{\partial \delta_E}$	Variation of lift coefficient with elevator angle	Rad^{-1}	27
CDDE	$C_{D_{\delta_E}} = \frac{\partial C_D}{\partial \delta_E}$	Variation of drag coefficient with elevator angle	Rad^{-1}	28
CMDE	$C_{M_{\delta_E}} = \frac{\partial C_M}{\partial \delta_E}$	Variation of pitching moment coefficient with elevator angle (i.e., longitudinal control power)	Rad^{-1}	29
CLIH	$C_{L_{i_H}} = \frac{\partial C_L}{\partial i_H}$	Variation of lift coefficient with tailplane angle of incidence	Rad^{-1}	
CDIH	$C_{D_{i_H}} = \frac{\partial C_D}{\partial i_H}$	Variation of drag coefficient with tailplane angle of incidence	Rad^{-1}	
CMIH	$C_{M_{i_H}} = \frac{\partial C_M}{\partial i_H}$	Variation of pitching moment coefficient with tailplane angle of incidence	Rad^{-1}	

Table 4.1 (cont'd)

Comp. Symbol	Engineering Symbol	Definition	Dimension	Array Derv.
CLHT	C_{L_H}	Horizontal tail lift coefficient		
DEPSHT	E_H	Downwash at horizontal tail	Rad	
DE	δ_E	Elevator deflection	Deg	
EYEH	i_H	Horizontal tailplane angle of incidence	Deg	
DCALP	$\Delta C_{L_\alpha} = \frac{\Delta \partial C_L}{\partial \alpha}$	Change in lift curve slope with power	Rad^{-1}	
DCLWF	$\Delta C_{L_{WF}}$	Change in lift coefficient for wing-fuselage combination with power		
DCMALP	$\Delta C_{M_\alpha} = \frac{\Delta \partial C_M}{\partial \alpha}$	Change in pitching moment coefficient for wing-fuselage combination with power	Rad^{-1}	
DCMTOT	ΔC_M	Change in airplane pitching moment coefficient with power		
DEHP	ΔE_p	Change in downwash at horizontal tail with power	Rad	
MU	M_u	Dimensional variation of pitching moment with speed	$Ft^{-1}Sec^{-1}$	30
MA	M_α	Dimensional variation of pitching moment with angle of attack	Sec^{-2}	31
MAD	$M_{\dot{\alpha}}$	Dimensional variation of pitching moment with rate of change of angle of attack	Sec^{-1}	32
MQ	M_q	Dimensional variation of pitching moment with pitch rate	Sec^{-1}	33
MTU	M_{T_u}	Dimensional variation of thrust pitching moment with speed	$Ft^{-1}Sec^{-1}$	34
MTA	M_{T_α}	Dimensional variation of thrust pitching moment with angle of attack	Sec^{-2}	35
ZU	Z_u	Dimensional variation of Z-stability force with speed	Sec^{-1}	36

Table 4.1 (cont'd)

Comp. Symbol	Engineering Symbol	Definition	Dimension	Array Derv.
ZA	Z_α	Dimensional variation of Z-stability force with angle of attack	Ft Sec^{-2}	37
ZAD	$Z_{\dot{\alpha}}$	Dimensional variation of Z-stability force with rate of change of angle of attack	Ft Sec^{-1}	38
ZQ	Z_q	Dimensional variation of Z-stability force with pitch rate	Ft Sec^{-1}	39
XA	X_α	Dimensional variation of X-stability force with angle of attack	Ft Sec^{-2}	40
XU	X_u	Dimensional variation of X-stability force with speed	Sec^{-1}	41
XTU	X_{T_u}	Dimensional variation of X-stability thrust force with speed	Sec^{-1}	42
ZDE	Z_{δ_E}	Dimensional variation of Z-stability force with elevator angle	Ft Sec^{-2}	43
XDE	X_{δ_E}	Dimensional variation of X-stability force with elevator angle	Ft Sec^{-2}	44
MDE	M_{δ_E}	Dimensional variation of pitching moment with elevator angle	Sec^{-2}	45
IXX	I_{xx_s}	Moment of inertia about the x-axis computed in the stability axes system	Slug Ft^2	46
IZZ	I_{zz_s}	Moment of inertia about the z-axis computed in the stability axes system	Slug Ft^2	47
IXZ	I_{xz_s}	Product of inertia computed in the stability axes system	Slug Ft^2	48
CYB	$C_{y_\beta} = \frac{\partial C_y}{\partial \beta}$	Variation of side force coefficient with sideslip angle	Rad^{-1}	49
CLB	$C_{\ell_\beta} = \frac{\partial C_\ell}{\partial \beta}$	Variation of rolling moment coefficient with sideslip angle	Rad^{-1}	50

Table 4.1 (cont'd)

Comp. Symbol	Engineering Symbol	Definition	Dimension	Array Derv.
CNB	$C_{n_\beta} = \frac{\partial C_n}{\partial \beta}$	Variation of yawing moment coefficient with sideslip angle	Rad^{-1}	51
CYP	$C_{y_p} = \frac{\partial C_y}{\partial (\frac{pb}{2u_1})}$	Variation of side-force coefficient with roll rate	Rad^{-1}	52
CLP	$C_{\ell_p} = \frac{\partial C_\ell}{\partial (\frac{pb}{2u_1})}$	Variation of rolling moment coefficient with roll rate	Rad^{-1}	53
CNP	$C_{n_p} = \frac{\partial C_n}{\partial (\frac{pb}{2u_1})}$	Variation of yawing moment coefficient with roll rate	Rad^{-1}	54
CYR	$C_{y_r} = \frac{\partial C_y}{\partial (\frac{rb}{2U_1})}$	Variation of side force coefficient with yaw rate	Rad^{-1}	55
CLR	$C_{\ell_r} = \frac{\partial C_\ell}{\partial (\frac{rb}{2U_1})}$	Variation of rolling moment coefficient with yaw rate	Rad^{-1}	56
CNR	$C_{n_r} = \frac{\partial C_n}{\partial (\frac{rb}{2U_1})}$	Variation of yawing moment coefficient with yaw rate	Rad^{-1}	57
CYDA	$C_{y_{\delta_A}} = \frac{\partial C_y}{\partial \delta_A}$	Variation of side force coefficient with aileron angle	Rad^{-1}	58
CYDR	$C_{y_{\delta_R}} = \frac{\partial C_y}{\partial \delta_R}$	Variation of side force coefficient with rudder angle	Rad^{-1}	58
CLDA	$C_{\ell_{\delta_A}} = \frac{\partial C_\ell}{\partial \delta_A}$	Variation of rolling moment coefficient with aileron angle	Rad^{-1}	59
CLDR	$C_{\ell_{\delta_R}} = \frac{\partial C_\ell}{\partial \delta_R}$	Variation of rolling moment coefficient with rudder angle	Rad^{-1}	59

Table 4.1 (cont'd)

Comp. Symbol	Engineering Symbol	Definition	Dimension	Array Derv.
CNDA	$C_{n_{\delta_A}} = \frac{\partial C_n}{\partial \delta_A}$	Variation of yawing moment coefficient with aileron angle	Rad^{-1}	60
CNDR	$C_{n_{\delta_R}} = \frac{\partial C_n}{\partial \delta_R}$	Variation of yawing moment coefficient with rudder angle	Rad^{-1}	60
YB	Y_β	Dimensional variation of Y-stability force with side-slip angle	$Ft\ Sec^{-2}$	61
LB	L_β	Dimensional variation of rolling moment about X-stability axis with sideslip angle	Sec^{-2}	62
NB	N_β	Dimensional variation of yawing moment about Z-stability axis with sideslip angle	Sec^{-2}	63
YP	Y_p	Dimensional variation of Y-stability force with roll rate	$Ft\ Sec^{-1}$	64
LP	L_p	Dimensional variation of rolling moment about X-stability axis with roll rate	Sec^{-1}	65
NP	N_p	Dimensional variation of yawing moment about Z-stability axis with roll rate	Sec^{-1}	66
YR	Y_r	Dimensional variation of Y-stability force with yaw rate	$Ft\ Sec^{-1}$	67
LR	L_r	Dimensional variation of rolling moment about X-stability axis with yaw rate	Sec^{-1}	68
NR	N_r	Dimensional variation of yawing moment about Z-stability axis with yaw rate	Sec^{-1}	69
YD	Y_{δ_A}	Dimensional variation of Y-stability force with aileron angle	$Ft\ Sec^{-2}$	70

Table 4.1 (cont'd)

Comp. Symbol	Engineering Symbol	Definition	Dimension	Array Derv.
LD	L_{δ_A}	Dimensional variation of rolling moment about X-stability axis with aileron angle	Sec^{-2}	71
LD	L_{δ_R}	Dimensional variation of rolling moment about X-stability axis with rudder angle	Sec^{-2}	71
ND	N_{δ_A}	Dimensional variation of yawing moment about Z-stability axis with aileron angle	Sec^{-2}	72
ND	N_{δ_R}	Dimensional variation of yawing moment about Z-stability axis with rudder	Sec^{-2}	72
XBARFI	$\bar{x}_{ac_{fixed}}$	Relative location of total airplane aerodynamic center, controls fixed		
XBARFR	$\bar{x}_{ac_{free}}$	Relative location of total airplane aerodynamic center, controls free		

SECTION 5

CONFIGURATION MODELING

Engineering judgment and design experience are required to properly model a configuration and interpret the results. The computer program methods can only represent a simplified aircraft configuration. It is the user's task to model the actual configuration under consideration with a program compatible configuration. This section will discuss several techniques to accomplish this.

5.1 Body

The fuselage should be modeled into an equivalent fuselage consisting of:

- Ellipsoid nose section.
- Cylindrical center section.
- Ellipsoid tail section.

Figure 5.1 shows an example of an equivalent fuselage. (In this case the cylindrical center section is reduced to zero length.) The equivalent fuselage should have the same length and maximum diameter as the actual fuselage. All dimensions indicated in Table 3.3 that refer to the equivalent fuselage should be measured on this equivalent fuselage. Other fuselage dimensions should be measured on the actual fuselage.

5.2 Wing and Tail Surfaces

If a wing (or horizontal or vertical tail) of complex planform is to be input in the program, an equivalent surface should be modeled for which the following holds true:

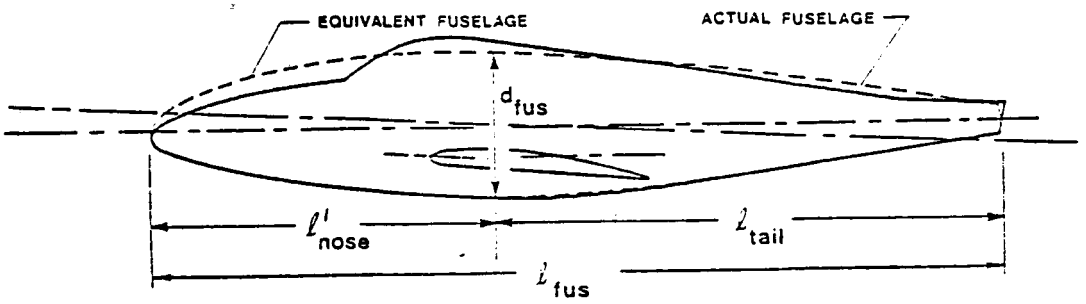

Figure 5.1 Equivalent Fuselage Representation

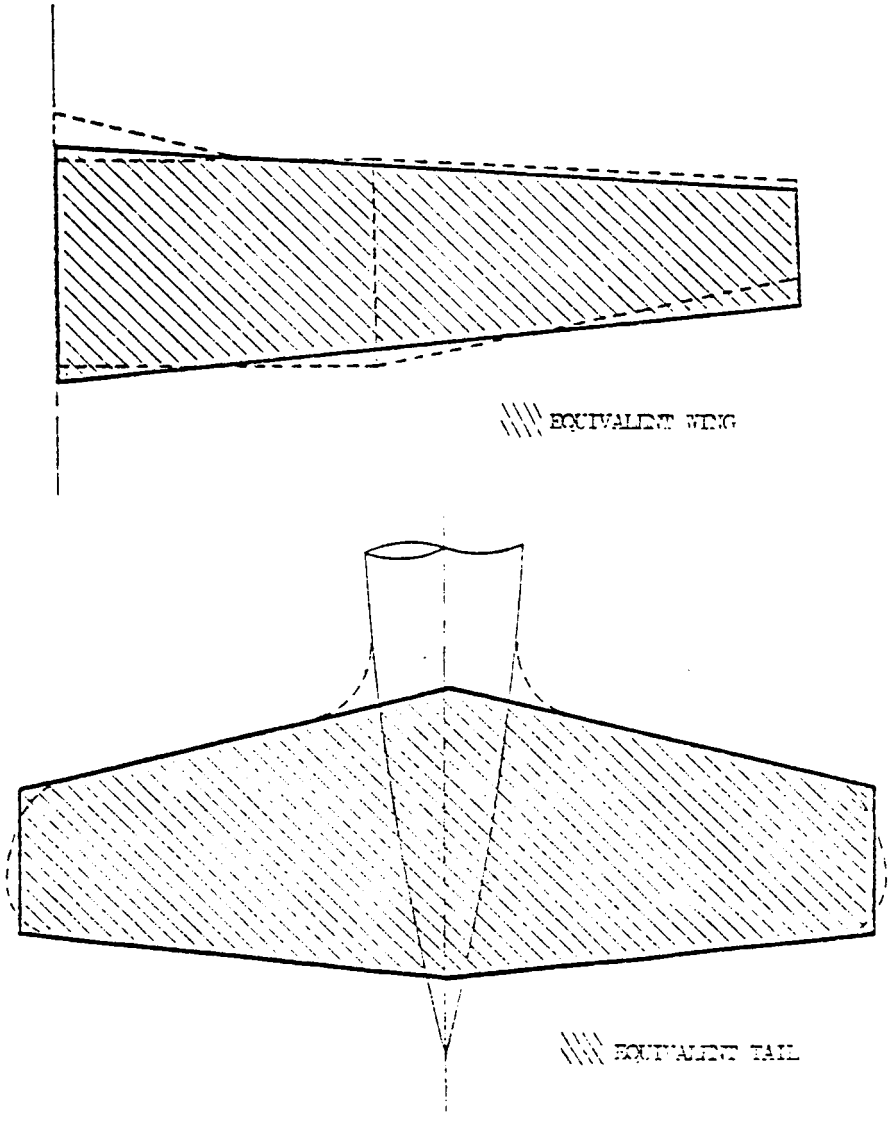

Figure 5.2 Equivalent Wing and Tail Surfaces

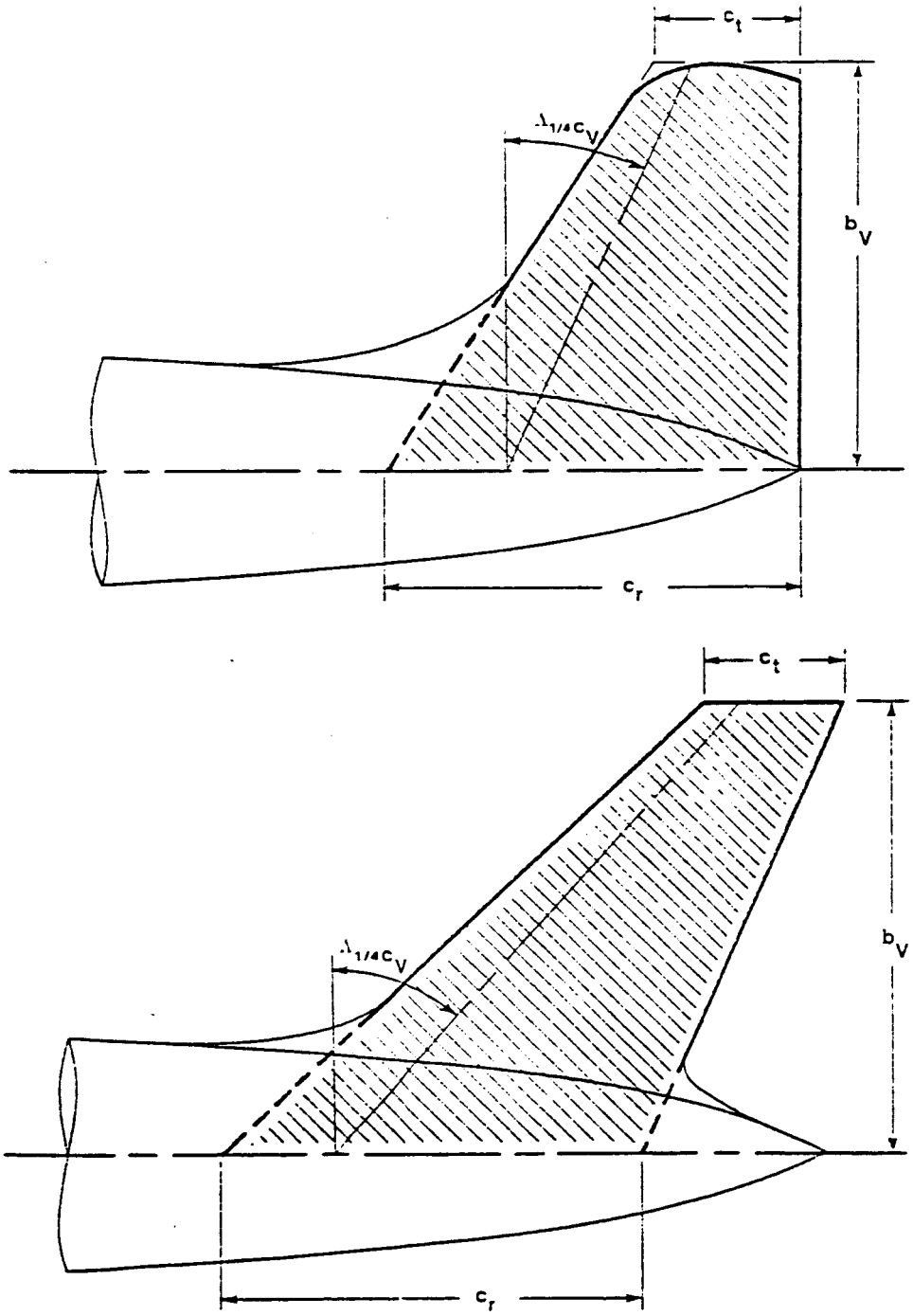

Figure 5.2 (Continued)

$S_E = S_A$ (Exposed surface area)

$\lambda_E = \lambda_A$ (Taper ratio)

$\Lambda_{1/4\bar{c}_E} = \Lambda_{1/4\bar{c}_A}$ (Quarter chord sweep angle)

$\bar{c}_E = \bar{c}_A$ (Mean aerodynamic chord)

where: E refers to the equivalent surface and

A refers to the actual surface.

Possible definitions of wing, or tail areas are shown in Figure 5.2.

5.3 Nacelle

To define an equivalent nacelle shape for the nacelle of a propeller-driven airplane, the same rules apply as for the fuselage. An example of an equivalent nacelle is given in Figure 5.3.

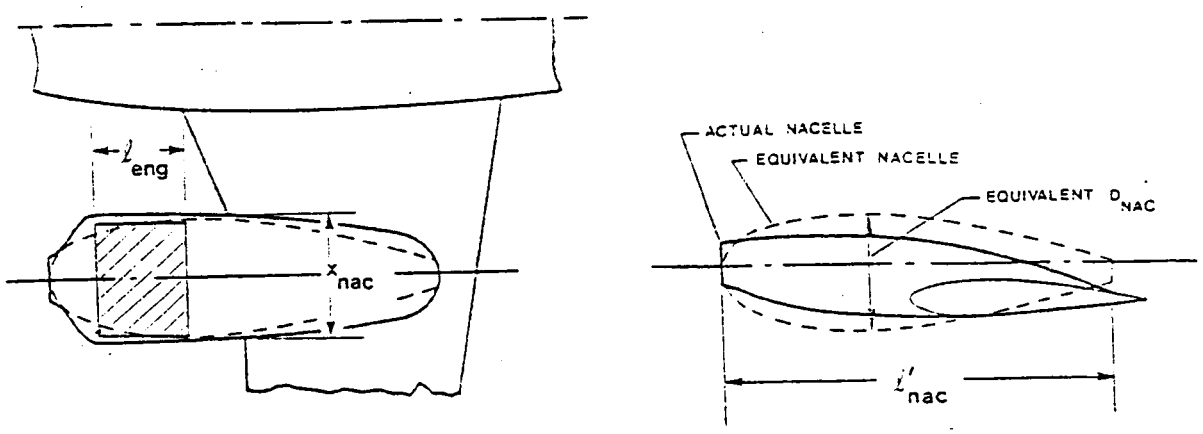

Figure 5.3 Equivalent Nacelles

5.4 Rotation Speed

Important parameters in the computation of rotation speed are the rotation rate on the ground, $(d\theta/dt)_R$, and in the air, $(d\theta/dt)_A$. These rates are dependent on pitch inertia, horizontal tail power, center of gravity location, and pilot technique. No routine is available to predict the rotation rates as a function of these variables. They may be selected as input values or allowed to default to average values determined empirically.

SECTION 6

REFERENCES

1. Galloway, T. L.; Waters, M. H. — Computer Aided Parametric Analysis for General Aviation Aircraft. SAE Paper 730332, April 1973.

2. Anon. — Documentation Report for KSTAB, A Computer Program to Analyze the Dynamic Stability Characteristics of Conventionally Configured Subsonic Airplanes, Kohlman Aviation Corporation, Lawrence, Kansas 66044, February 1982.

3. Postai, M. — A Computer Program for Determining Open and Closed Loop Dynamic Stability Characteristics of Airplanes and Control Systems. University of Kansas, Lawrence, Kansas, 66045, May 1973.