GEORGIA TECH 1885-1985

DESIGNING TOMORROW TODAY

THE GEORGE W. WOODRUFF SCHOOL OF
MECHANICAL ENGINEERING

ME 4182

MECHANICAL ENGINEERING DESIGN
NASA/USRA ADVANCED MISSIONS SPACE DESIGN PROGRAM

(NASA-CR-182849) LUNAR LIFTING DEVICE NASA/USRA Advanced Missions Space Design Program (Georgia Inst. of Tech.) 80 p

N90-71344

Unclas
00/37 0279987

LUNAR LIFTING DEVICE

December 1986

Andree M. Chaisson
Russell Hanson
Jeff Herrin
Jim Jardine
Geza Martin
John Nicklos
Tim Roller

Georgia Institute of Technology
Atlanta, Georgia 30332-0405

An Equal Education and Employment Opportunity Institution

A Unit of the University System of Georgia

S

TABLE OF CONTENTS

ABSTRACT----------PAGE 1

PROBLEM STATEMENT----------PAGE 2

DETAILED DESCRIPTION----------PAGE 5

COST ANALYSIS----------PAGE 15

HAZARD ANALYSIS----------PAGE 17

CONCLUSIONS----------PAGE 22

RECOMMENDATIONS----------PAGE 23

ACKNOWLEDGMENTS----------PAGE 24

REFERENCES----------PAGE 25

APPENDICES----------PAGE 26

ABSTRACT

Our goal was to design a device that would transport cargo on the lunar surface from point A to point B. The final design was not unlike that of a crane used for construction purposes here on Earth. With certain modifications in the design, the lunar crane design met all prescribed design criteria, the most important of which was overall mass of the object. As general configuration was being decided upon, the simplicity of design of the gin-pole lifting mechanism persuaded the design group into following a similar design.

PROBLEM STATEMENT

The basic problem is to design a large capacity lifting device for use on the lunar surface. In so doing, certain categories must be taken into consideration: background, performance objectives, and constraints.

Background:

Man has set outerspace exploration as one of his goals--a goal that could well be reached within the next few decades. By placing a manned self-sufficient environmental habitat on the surface of the moon, man will be taking one step toward the achievement of this goal. Some of the functions of this lunar colony will be to maintain an observational telescope, continue moon research, and manufacture fuel for the exploration of outerspace.

In order to build these environmental habitats, it will be necessary to handle cargo shipments, move materials, lift materials to heights, and lift heavy materials. Later, after the habitat is built, the colony will need aid in mining and construction operations. The aforesaid requirements necessitate a lifting device.

The most versatile earth-type lifting device is the crane. In order for this mechanism to perform required functions for the lunar colony, it must be redesigned to meet performance objectives and operate within constraints.

Performance Objectives:

In order to perform its many functions, the crane was designed with certain objectives. To lift a maximum of 4000 lunar pounds. This weight limit should allow the crane to lift portions of the habitat, oxygen tanks, or even moon rocks. The crane was designed to have a

working range of 120 degrees from extreme right to extreme left, maximizing swing. For a maximum lift of 40 feet, the crane was designed to work from a boom angle of 10 degrees above horizontal to 80 degrees above horizontal.

- -A maximum lift of 4000 lunar pounds and 40 feet.
- -A working range of 120° from side to side and 10° to 80° above horizontal.
- -A long service life with the ability to endure extreme environmental conditions.
- -Free from excessive requirements in order to minimize cost.
- -Remote controlled.
- -Safeguards against possible overloading and and power or device failures.
- -Interchangeable parts.
- -Quick mounting procedure.

Constraints:

Several design constraints became evident before the design process even began. Lunar environmental conditions, cost of transportation to the moon's surface, and many human factors were considered.

The environmental conditions for which operation will take place were researched, and several important design constraints were discovered by analyzing the resulting data. It was found that on the moon the following were prevalent:

- -the gravity is approximately one-sixth that of the Earth.
- -the lunar surface is speckled with craters ranging in size from about 5 kilometers in diameter to 0.5 meters.

-one lunar day is equivalent to 28 Earth days, 14 days of night and 14 days of sunlight.

-there exists two extremes in surface temperature, from very cold to very hot. There is a 400 F temperature difference from going from the shade to the daylight.

-the sunlight that strikes the lunar surface can become very intense at times and the shaded regions due to hills create patches of complete darkness.

-there exists a 1 inch to 3 inch layer of dust that lies on its surface.

-the lunar dust can become very corrosive to certain metals, acting similar to sandpaper.

-there is a very small chance that contact with meteorites may occur.

It was discovered that transportation costs to get the crane to the lunar surface was going the be our biggest constraint. NASA charges approximately $15,000 per pound to transport items to the moon; therefore, mass was to be kept at an extreme minimum.

The role of the human on the lunar surface is an important consideration. Since man would be exposed to the lunar environment while operating the lifting device, safety of the operator has to be the first and foremost priority in the design process. For details on human factors, refer to the Hazards Analysis section.

DETAILED DESCRIPTION

Base design:

The base component is the interface between the boom pivot and "Skitter". There will be three points,probably lockable pin connections, that attach the crane to "Skitter". A pyramid one foot in height will be placed on the underlying triangle. A support bar and prop will be added to form a mount for the boom pivot, and all compression loads of the boom will be transferred into the pyramid between the top and support bar.

There will be two supports for the manipulating winches. These winches will be three meters away from the pivot in a vertical plane such that an angle of 120 degrees is included between the winches. Two compression members will hold each of these winches into place. One point of attachment to the pyramid will be the top, and the other will be on one corner of the underlying triangle. The winches will be constrained to lie in the vertical plane by two cables which attach to the back corner of the underlying triangle and to one end of each winch.

Additional peripherals will be mounted on the base. All control circuitry processors and the power source will be attached to sides of the underlying triangle.

Boom Design:

The simplest design for a boom utilizes triangular arrangement of tension and compression members. The boom length to accommodate the required amount of lift is 9.6 meters. Three 2.0 inch outer-diameter tubes will run the entire length of the boom in an equilateral triangle configuration. Rings of cross members will then

be added to form a ladder of triangles the entire length of the boom. The triangular ladder will taper on the upper half until a 25% side exists at the very top. The ladder design then incorporates tension cross members on two faces and alternating direction cross members on the third face. All cross-members will use one inch outer diameter tubes. The top of the boom will form a pyramid of two inch tubes with an eyelet on the apex to allow for multi-cable attachments and the load lifting winch.

Along each face there will be a structural tension cable that lies over two compression members. These members push the cable away from the face to a distance just over the height of the triangular ladder. This will effectively load the cables to carry any bending moments that could develop in the boom. There will be six such compression members, two on each face. They will form a ring around the triangular ladder and be located one-third of the way up the boom. The ring is so located as to increase maneuverability of the boom. The lower the ring of compression members, the better the maneuverability, but when the ring approaches the actual bottom, the compressive loads in the members will drastically increase. There will be three structural tension cables going from the ring upward and two cables on each face from the ring down to the bottom of the boom.

Manipulating cables will be attached to the very tip of the boom. This will minimize the possibility of couples developing when the load is moved; thus, there will be little or no rotation of the boom axially.

Actual stresses in the boom will be determined on the APOLLO

computer utilizing SUPERTAB. A working model of our boom is in the computer, but the system is not operating and no strength iterations have been done. In lieu of having stress calculations, approximate worst cases have been outlined in the appendix and approximate wall thicknesses for the tubes have been calculated.

Pivot Joint:

The crane design requires an attachment joint connecting the boom to the base. This joint must be capable of rotation in two planes while restricting rotation in the third plane.

The rotational criteria imposed on this joint is 70 degrees rotation in the x-y plane and 120 degrees rotation in the x-z plane, while restricting the rotation in the y-z- plane to 0 degrees. One of the two designs that meets this rotational criteria is a modified ball and socket, a simple pivot system with a high reliability rate. In order to reduce the couples which would cause rotation in the y-z plane, manipulation cables were attached to the same point to which the lifting cable was attached. All forces would then act through a single point.

The modifications on the ball and socket are as follows:

1. Ball--Take a five inch diameter ball and machine a groove one inch wide by one inch deep around its circumference to the attachment point so that it appears as the figure.

2. Socket--Take a five inch diameter socket add two dowels one inch in diameter and one inch in length to the socket. Mount them along the same centerline axially so they appear as in the figure.

These two parts should mount together and form a smooth operating pivot.

The only disadvantage to the modified ball and socket is its need to be lubricated and sealed from dust. These problems are easily solved by using Molybdenum Disulphide as a lubricant and by using a flexible dust boot to seal the ball socket.

The other solution to our pivoting joint problem was to use a spring or flexible solid member. The calculations for this joint are included in the appendix.

Lubrication:

Due to lunar conditions, a dry lubricant is necessary because of the following inherent properties:

- good adhesion
- great temperature range
- low flammability
- low complexity

The dry lubricant, Molybdenum Disulphide, has the best properties, therefore it was chosen over others, such as graphite or PTFE. Graphite was not considered due to its poor performance in a vacuum. PTFE was eliminated due to its poor load carrying capabilities and high wear rate. Basically, Molybdenum Disulphide is the superior choice due to the following characteristics:

- low friction--0.03 to 0.2 depending on the load
- maximum PV probably about 100,000 psi
- excellent adhesion
- excellent temperature range-- -200°C to 350°C in air
- excellent performance in a vacuum-- temperature limit in a vacuum is 1000°C
- high load carrying capacity

Molybdenum Disulphide has also been extensively used in spacecraft, especially the Apollo Lunar Module.

Cables:

The lunar lifting device consist of 245 feet of cabling used in three different capacities: lifting, manipulation, and support. Each area will have cables made of Kevlar 29 and purchased directly from a Vender (DuPont is suggested). Kevlar 29 was chosen because of the following performance characteristics:

-high tensile strength--Kevlar 29 is two times stronger than "E" glass, five times stronger than steel, and ten times stronger than aluminum.

-wide temperature range--Kevlar 29 performs with excellent stability and minimal creep from -320° F to 400° F where the lunar surface temperature varies from -250° F to 250° F.

-low creep--The loading of Kevlar at 50% of break strength for one year or 100,000 hours of service results only in a 0.06% creep, without the dangers of stress corrosion or cracking as in metals.

-low expansion coefficient--There is almost no expansion or shrinkage over the accepted temperature of Kevlar 29.

-lower weight--Kevlar is one-fifth the density of steel, four-sevenths that of "E" glass, and one-half that of aluminum.

-low snap-back--This is an inherent safety feature protecting against possible rupture of release.

-chemically inert--Only a few strong acids such as Hydrochloric (37%), Nitric (70%), and Sulfuric (70%) affect Kevlar and since the probability of these in the lunar environment is quite low it presents no problem. The Kevlar fibers are also

affected by ultraviolet radiation, but the problem is easily corrected with a pigment or screener (Tedlar or Mylar).

Comparatively, Kevlar 29 is superior to any metal including the titanium alloys in strength to weight ratios, applicable temperature ranges, and expansion. Kevlar also offers better trade-offs between stiffness/strength/weight than the composites. Kevlar is ideally suited for use as a cable or rope with its properties and is being presently used in deep sea applications. Cables up to 4000 feet (1220 meters) are being presently used. Also, Kevlar ropes running over sheaves and in tension of a guy or stay with cyclic loading of 65% of break strength is beyond that of the steels. (Refer to Table for data comparison of materials.)

The lifting cable is 5/16 inches in diameter; the manipulation cables are 9/16 inches in diameter. The support cables are 1/4 inches in diameter. The use of Kevlar 29 has allowed the use of smaller diameter, lighter rope with increased payloads and easier handling in cabling systems.

Winches:

We decided to use winches for our linear actuators. We used 2 winches as manipulators for the boom movement. We used a hoist for the lifting device. We attached the lifting hoist to the end of the boom. The manipulating winches are to be attached to the platform. Trusses have been built to handle the stresses in the mounts. Existing winches were utilized. We chose the Ramsey DC electric worm gear winch model number DC-24-8B. We did make many substitutions of materials to reduce the overall weight, but the basic design was unchanged.

We also increased gear reductions to reduce the power requirements of each winch. Our winches are only activated one at a time. This reduced the maximum power required by our implement. We chose to mount the lifting hoist at the end of the boom to reduce the amount of force in our boom and to reduce the amount of cable needed for lifting.

For an explanation of the standard specifications and the modifications made please see the appendix. All the winches are to be suspended in tension between their mounting points and the load.

Power Supply:

The crane requires 1.6 kilowatts of power under maximum loading. We plan to use a Nuclear-Fueled Generator to supply the power. The MHW Nuclear-Fueled Generator has been used in at least three previous flights into space. The LES 8/9 used the MHW on a Communications Satellite. The Voyager 1 and 2 both used the MHW as power sources.

The MHW power supply on these flights had a 400 watt end of flight rating. Because the MHW can be increased in power by 80 watt increments by changing the length of the housing and in the configuration, we have opted for increasing the end of flight power to 800 watts, the maximum power available. We will need two of these Generators so the combined weight of our power supply will be 170 pounds. The Table showing the performance characteristics of the MHW power supply is listed in the Appendix.

Controls:

The first step in the analysis of the dynamic system was to derive the mathematical model. Because in designing all control systems there must be a compromise between simplicity and accuracy of

results, our control system is no different.

First, a simplified model was drawn in order to get a general feeling for the solution. Next, a block diagram was constructed to show the interrelationships between the various components (see appendix).

A proportional plus derivative plus integral controller was placed before the two motor/winch assemblies (MW1 and MW2) which move the boom; while a proportional controller was placed before the motor/ winch assembly (MW3) performing lift of load. Finally, the transfer function of the entire block diagram was found.

Industrial automatic controllers are based on their control action. The controller usually consists of a measuring element and an amplifier. The measuring element on MW1 and MW2 converts the output variable, velocity and displacement of winch intake, into another suitable variable, an electric signal, which can be used for comparing the output to the reference input signal. The amplifier then amplifies the power of the actuating error signal which feeds back into the motor/winch assembly. In this manner, while the crane is moving from left to right, the measuring element will sense the velocity and displacement of MW1, so that MW2 lets out suitable cable to counter. On MW3, the measuring element keeps track of the velocity of the line feed so that the load is not lifted or lowered too quickly.

Lastly, a PID controller was placed at the beginning of the block diagram to control the entire system. All PID controllers were chosen to give optimum control. If any redundant control cannot be harmful.

The crane will be controlled by the operator through voice activation. The receiving unit on the base of the crane will be triggered by a set code pattern which will proceed every command; this follows the same principle as the children's game "Simon Sez." For instance, to trigger the reception mode of the crane, the operator will simply say, "Simon Sez, crane on." To raise the boom two feet, the operator will say,"Simon Sez, boom raise two feet."

Of course, there will be a manual override control unit which will be with the operator at all times. This will be a radio remote control unit which will operate on UHF frequencies and will send signals to the same receiving unit as mentioned above. In case of emergency the crane may be turned on or off, or any boom motion may be induced or halted. The unit will have eight large buttons with eight indicator lights above each button. These lights will be shielded from any glare that may obstruct vision. The buttons will turn the crane on and off, will control the motion of the boom right, left, up, and down, and will raise and lower the load.

The receiving unit and remote control unit must use digital logic, solid state circuitry, and the same power source as the crane. Each must be well insulated. Whether using voice activation mode or the manual unit, the operator should be within line of sight of the crane. The operator will not be able to override the set crane constraints. If the possibility of tip-over does arise, a siren type whine will be sent out over all general radio signals so that workers in the area know of eminent danger.

Materials:

The boom and the base of the lifting device are made out of two

and three inch diameter tubes, respectively. The cross members are made of one inch outer diameter tubes. The tubes are a Boron reinforced AS-4 epoxy composite with 5 plies.

These will be produced using Boron/Epoxy prepreg with a layer thickness = .05". The layup will be a 5 layer setup as follows.

layer 5	-45°	.05
layer 4	+45°	.05
layer 3	0°	.05
layer 2	+45°	.05
layer 1	-45°	.05

The composite can take 290,000 psi in compression and with the 45' oriented layers the tension and shear maximums are within the design requirements. Our lifting device will be almost all compression so we are safe, (see composite analysis).

During the lay-up procedure holes will be drilled with tungsten carbide drill bits in the spots where the truss tubes are attached. Huck makes an all titanium fastener for composite structures which are optimal for our purposes. These fasteners are 2/3 the weight of steel without giving up strength. To cure it will be heated to = 350°F and a pressure = 50 psi for 2 hours, then cool.

COST ANALYSIS:

A) Design and Development: The design of the lifting implement has been directed toward minimizing mass of the implement. This will help to lower the final cost of construction and most importantly to cost of shipment.

Many parts of this design can be constructed from any of several present day manufactures. There are no parts that require extensive research to build. Some parts need further optimization for use in the lunar environment. Control circuitry, flexural pivots, and matrix epoxies are some of the areas and a generous estimation for their completion is $2070. This estimate includes 69 man hours of research.

24 hours composite, 40 hours controls, 5 hour pivot.

Testing and evaluation will probably be covered with a 25% limit. If there are not many redesigns and cost overruns this value holds good validity.

* Materials costs:

  - $220/lb for boron-reinforced epoxy composite
  - $4.21/lb for Kevlar fibers
  - $4.21/lb * 9.76 lb = $41.09

  *Winch costs: average cost for 3 unmodified winches

  winches =700 * 3= $2100

After modifications:

AC motors, processor controllable circuitry, radio receivers, and "whatnot"
new cost of 2,500/ unit
Total cost $7500

* Fuel cell costs:

  Estimated cost of $10,000+/unit

2 units will be used to meet our power requirements
Total power supply cost = 20,000+

* Pivot cost:

Use of either coil-spring or ball joint pivots will entail a maximum cost of $150

*Control Circuitry\;

This package is rather complex and conservative estimate for components would be $4000.

Total cost prior to shipment =
($2020 + $66,404.80 + $41.09 + $7500 + $20,000 + $150 + $4000)+ .25(Total)
Total = $125,206.25

Shipment cost = $15,000/lb * 568.90 lb,
= $8,658,706

Delivered cost = $8,658,706

Operating Instructions:

Voice Activation Mode:

Trigger code phrase must be used before any motion command.

Trigger code phrase is: Simon Sez.

To turn crane on: (code) crane on

Motion Commands: TRIGGER CODE PHRASE MUST PROCEED THESE

To raise or lower boom vertically

(code) boom raise (amount in feet or degrees)

(code) boom lower (amount in feet or degrees)

To move boom to the right or left (horizontal) from center

(code) boom right (amount in feet or degrees)

(code) boom left (amount in feet or degrees)

To raise or lower the load

(code) load raise (amount in feet)

(code) load lower (amount in feet)

To turn crane off: (code) crane off

Manual Remote Control Unit

Indicator lights illuminate when a mode is on.

To turn crane on: Press "on" (the light will illuminate)

To move boom: Press...

"BRAISE" for vertical lift

"BLOWER" for vertical lowering

"BRIGHT" for horizontal right

"BLEFT" for horizontal left

To move load: Press...

"LRAISE" for lift

"LLOWER" for lowering

To turn crane off: Press "off" (the light will go out)

THE CRANE WILL NOT OBEY ANY COMMAND THAT TAKES IT PAST ITS LIMITS

Attachment Procedure:

The crane is to be used injunction with "Skitter". The points to be used for attachment have been supplied by "Skitter's" project members as pt.1(.875,-.505,.375), pt.2(-.875, -.505, 1.375), and pt.3(0, 1.01, 1.375) relative to a defined origin at the center of the hexagonal base.

The attachment procedure will consist of "skitter" walking under the lifting device, which will be on some kind of support or "rack". "Skitter" will then raise to engage the lifter and lift it from its rack. Before the lifter is completely removed from the rack, it will be joined to "Skitter" at the above stated points with a pin assembly.

Safety Factors:

In order to protect our operator, several safety features have been incorporated in the design of the lunar lifting device.

To prevent accidental tip-over of the mechanism, safety tethers that prevent the boom from wandering outside the working area have been strategically located.

Along with the fluid lamps that are to be mounted on the lunar walker, our design has included the use of flashing emergency lights that will operate while the device is in action.

Safety labels will be used liberally and placed in key areas. Caution will be advised for those working near the base of the boom, near cables and winches, and near the walker's platform as well as its legs.

Failure Mode and Consequences:

No design is excluded from possible failure, but measures can be taken to prevent or lessen the effects of certain foreseeable problems. There are inherent problems with cranes on Earth; the possibility of turnover, the result of lifting in excess of recommended payload, operator error, the vulnerability to high winds, etc.

To prevent possible turnover, safety tethers have been installed. These tethers will prevent the boom from moving outside its designated "safe working area." Of course, these safety tethers are secondary safety measures. The controls of the mechanism are sophisticated enough to prevent the tethers from even approaching becoming taut.

The controls of the design will also prevent the operator from attempting to lift a heavier than recommended payload. If this is attempted, warning lights will flash and the lift winch will be made inoperable until the payload is adjusted. The use of controls will also minimize the amount of human error involved in operation of the mechanism. Fixed acceleration and deceleration rates will be entered into the main controls processor and will prohibit the operator from "slinging" the cargo.

Misuse:

There are five types of major misuses that may occur. They are the following:

1. Picking up objects of large mass at distances outside working field. result: pulls "Skitter" and crane over; possible damage to lifting winch and shock to entire structure.

2. Picking up objects too large for crane inside working field result: warping of structure, possible cable snapping, winch damage--any of all three.

3. Demolition ball operation result: possible crane tip over, shock loading to entire structure.

4. Using boom for lifting without lifting winch result: could damage boom structure or tip over crane.

5. Cyclic side to side motion that adds vertically to swing amplitude result: could eventually store enough kinetic energy to destroy the crane.

Use:

The following are uses for the crane:

1. The crane will operate through its entire range of motion at a very slow speed. The maximum velocity in an outward motion will be governed by angular boom descent. The micro-processor control will keep track of the two manipulating winches and keep the cable output rate low, thus maintaining a safe boom lowering rate.

2. Angular velocity of the crane will again be slow. Because internal effects of the load are so great a slow and controlled operation is a must.

Human Factors:

When designing the lunar lifting device, we took into

consideration several human factors. One factor considered was the ease of operation. Since our astronaut operators will be wearing bulky spacesuits their mobility will be limited. Therefore, we have designed a remote control system that will give the operator total control of the lifting device. The primary mode of operation is voice activated; the back-up system is designed with large buttons. It will use lights as indicators and alarms in case of emergency.

Another problem we foresee is the field of vision. The field of vision is not only limited by the helmet, but also by the visual distortion created by his face-shield. Also, there is the problem of the pitch black darkness on the lunar surface; therefore, we have several flood lights mounted to the base to light up the working area. The ease of operation will also reduce the amount of stress experienced by the astronaut and allow him to work for a longer period of time.

The human factor should also be considered at the point of interface between the crane cable and cargo packing. This area is under research between the lunar lifting device group and the cargo interface group.

CONCLUSIONS:

After the amount of brainstorming, researching, designing, researching, re-designing, revisions, modifications, building, re-building, drawing, plotting, and "Word Processing", our group has concluded that the presented information represents the best possible design under the given time constraints. Further research in the areas mentioned in the Recommendations section of the paper would probably yield a more suitable design, but under the limitations of today's technology, our design represents a combined effort of seven senior-type mechanical engineering students who believe that their design is the best Lunar Crane design possible.

RECOMMENDATIONS

If research on this project is to be continued, it would be recommended that:

- much attention be given to the area of material selection. Since technology in ceramics and fiber development changes so quickly, only time prohibits the development of a better material.

- research be continued in looking for a better "pivot." Since the complete maneuverability of the lifting depends upon the pivot, new ideas and engineering designs would greatly enhance the original design.

- a complete finite element analysis be conducted on the entire structure. If the analysis is performed early enough, modifications may be made to insure a safe design.

- possible alternatives in winch design, or if possible removal, should be undertaken. Standard winches are too heavy and too bulky.

- development of power sources be continued. Just as materials change, so does the selection for alternative energy sources. Perhaps if nuclear sources are perfected, they might be used because of their smaller size and efficiency.

October 1, 1988

TO: J. W. Brazell, Professor

FROM: Group 4, Lunar Lifter
Group Leader: Russell Hanson
Andree Chaisson
Jeff Herrin
Jimmy Jardine
Geza Martiny
John Nicklos
Tim Roller

SUBJECT: Week One: Data Collection

At the end of the first group meeting on September 24, the initial areas of data collection were divided among the group members.

Library research was conducted for collecting data on the moon's environment (temperture variations, light variations, and radiation), on existing earth cranes, on the space shuttle's payload dimensions and maximum cargo weight, and crane standards.

After research was started, another group meeting was held on September 29 to discuss initial findings and problems. This discussion ended with the following questions needing to be answered:

1) Maximum lifting capacity of the crane?

2) Height of crane above moon's surface on platform?

3) Radius of curvature for effective operating area around crane?

4) How high for total lift?

5) Mobility of the crane?

6) How do European standards compare to American standards and which are best?

7) How is the crane to be transported from orbit to the moon's surface?

8) Should the boom be telescoping of fixed?

RH:tr

enc.

Oct. 8, 1986

To: J. W. Brazell

From: Group 4 - Lunar Lifting Device
Andre Chaisson
Russell Hanson - group leader
Jeff Herrin
Jimmy Jardine
Geza Martini
John Nicklos
Tim Roller

Subject: Week 2 - Data Collection and Problem Statement

The second group meeting ended with a detailed problem statement. Constraints that should be fulfilled were discussed and listed.

All group members continued data collection. Patents, crane standards, past lifting designs, and cable hoisting devices are still being researched.

The need to establish a time schedule for the project was discussed. It was decided that this is needed to help distribute the work load and to prepare for possible obstacles.

A phone linkup with NASA engineers in Houston, Texas to discuss design criteria was requested. Areas for discussion present lunar and space trusses, designs, truss joints, and material selection and specification.

jaj

Oct. 15, 1986

To: J. W. Brazell

From: Group 4 - Lunar Lifting Device

Andre Chaisson AC
Russell Hanson - group leader RH
Jeff Herrin
Jimmy Jardine JJ
Geza Martini GM
John Nicklos JN
Tim Roller TR

Subject: Week 3 - Brainstorming Continues

Group members continued data collection. Areas under research are historical lifting mechanisms, SAE standards, patent searches, and crane handbooks.

Monday, Oct. 13, group members used techniques learned in the creativity lecture to conceptualize several designs. The brainstorming session lasted several hours with members contributing many ideas and sketches (enclosed). As suggested by the guest lecturer, no ideas were dismissed and a few were expanded on during the session.

As a group, some questions arose about the compatibility of our ideas with the 3-legged platform during its "cart-wheeling" mode of transportation.

JAJ

Oct. 22, 1986

To: J.W. Brazell

From: Group 4 - Lunar Lifting Device

Andrée Chaisson
Russell Hanson - group leader
Jimmy Jardine
Jeff Herrin
John Nicklos
Tim Roller
Geza Martini

Subject: Week 4-Brainstorming

On Monday October 20, the group met to continue brainstorming of the ideas for lunar cranes. Members narrowed down on the options for cranes. Several ideas were discussed with detailed sketches being presented. The basic design utilized a Jim Pole construction. Three cable wenches could be used to kinematically control boom travel. To maximize reliability the boom may have as few telescoping sections as possible. The design will also minimize the number of bearings. Group members felt the tripod walker should be used in the squat position. This allows cables to be hooked to the feet of the walker legs thus minimizing stresses in the cables.

Group discovered needs to research several materials such as Kevlar, Boron, Graphite, and Titanium. Also, there was interest in the possible use of these materials in the construction of the cables.

ITEMS OF CONCERN

1. KNOWNS - 50 foot boom length
   - 3 or 4 winches
   - base has 12 foot legs

2. WEIGHT OF CABLE

3. ELECTRONIC DUST CONTROL

4. COMPONENT SPECIFICATIONS OF WINCHES

J.N.

October 28, 1986

TO: J. W. Brazell

FROM: Group 4 - Lunar Lifting Device

Russel Hanson - group leader

Andre Chaisson

Jeff Herrin

Jimmy Jardine

Geza Martiny

John Nicklos

Tim Roller

SUBJECT: Week 5 - Data Collection and Preparation for Mid-Term Presentation

On Monday, October 27, 1986 our group met to discuss properties of existing winches and their applicability to a lunar crane. Weight to pull ratios for various winches were plotted and evaluated as suggested.

Possible cable materials were also discussed. Strength to weight comparisons, cross sectional areas, and environmental durability were considered. Graphs were planned for additional information as needed.

Two more probable boom constructions were visualized and discussed along with previously evaluated constructions. Weights for various materials versus strengths were investigated as well as their feasibility in the lunar environment.

Many group members became familiar with various CAD systems. Both the Hewlett/Packard and Integraph systems were utilized to prepare graphs and transparencies for the group presentation and meeting.

Research in the vendor microfilm library produced the following information: Bendix Flexural Pivot (microfilm # 8226-1392 and phone # 315-797-2500), Acme Power Screws (microfilm # K117-3518), and DuPont (microfilm # 8489-2244 and phone # 1-800-4-KEVLAR).

gim

DATE: NOV. 5, 1986

TO: J. W. Brazell

FROM: Group 4 - Lunar Lifting Device

Russell Hanson - group leader RH

Andre Chasison AC

Jeff Herrin JH

Jimmy Jardine JJ

Geza Martiny GM

John Nicklos JN

Tim Roller TM

SUBJECT: Week 6 - Assignment of Geometric criteria to lifter

On Monday Nov. 3, 1986 our group met in the conference room of the French building to discuss the research on the Bendix flex-joint,

A phone call was made to Duponte in reference to the use of Kevlar 29 and Kevlar 49 in the lunar environment. Duponte is sending the information via UPS.

Topics of our literature search were discussed. Composite materials and mechanical linear actuators were the subjects we decided on.

We also began geometric stress analysis on our conceptual design. The efforts at this point were focused on boom stress requirements and tip over points.

Some possible alternatives to the Bendix flex joint were also visualized and discussed.

jdh

DATE: NOV. 12, 1986

TO: J. W. Brazell

FROM: Group 4 - **Lunar Lifting Device**

Russell Hanson - group leader

Andre e' Chaisson

Jeff Herrin

Jimmy Jardine

Geza Martiny

John Nicklos

Tim Roller

SUBJECT: Week 7 - Assignment of report topics to group members

On Monday Nov. 10, 1986 our group met in the apollo lab on the first floor of the French building for our progress meeting.

We made a thorough search of the vendor catalogues in search of suitable ball-joint or a swivel joint for mounting the boom to the platform. None were found. We discussed designing our own, but are seeking an alternative.

The sections of the final report were assigned to group members and should be finished by Friday.

More information on composite materials was found. This new information revealed a more favorable material for the boom structure. Boron has a much greater compressive limit than any other found.

Physical dimensions on the boom were cemented.

Visualized and discussed a powerscrew design that would allow the use of long actuating lengths.

We decided that a donut assembly is needed to help control the load and to add maneuverability during the placement of the load.

jdh

DATE: NOV. 19, 1986

TO: J. W. Brazell

FROM: Group 4 - Lunar Lifting Device

Russell Hanson - group leader

Andre e' Chaisson

Jeff Herrin

Jimmy Jardine

Geza Martiny

John Nicklos

Tim Roller

SUBJECT: Week 8 - Model construction

Our group met on November 19,17,16,13 and 12 this week to work on the model and the final report.

Thursday a scale model of the boom was built. With a few modifications we made a crude working model of our crane. The model revealed some limitations that need to be considered. We are presently addressing these limitations.

Further searches of the Vendor catalogues didn't reveal any new information about a possible attachment joint for our boom. We have decided that a coil spring attachment is a viable solution.

The information requested from Dupote on Kevlar 29 and 49 was received and reviewed.

A complete boom design is on the Apollo system. The final model is about 80% completed.

The Finite Analysis of the boom was discussed with Brice. Progress is being made but is rather slow at this time.

The results of the data search were received. There are 59 abstracts listed. Several look very promising.

The final report is progressing and is being completed as decisions are made and data becomes available.

jdh

DRAFT

[illegible] winch

[illegible] cable

[illegible]

[illegible] cable

[illegible] .2165 in²

[illegible] .06891

[illegible] .2625

[illegible] .525 [illegible] choose [illegible] cable

4000 lb [illegible] pull [illegible] by constraints [illegible] of safety

[illegible] 6000 lb [illegible] pull winch

6000 lb / [illegible] psi = .05412 in²

[illegible] = .01733 in²

[illegible] .1313 in

[illegible] .2625 in

[illegible] cable [illegible]

[illegible] .103 lb

.3088 in³ / .00858 [illegible]

.02798 lb/in³

weight of cables

① [illegible]:

80 ft of 9/16 cable = 960 in × .2485 in² (Ross sect area)

= 238.6 in³

238.6 in³ × .02798 lb/in³ = $\boxed{6.675 \text{ lb}}$

② lifting [illegible]:

40 ft of 5/16 cable = 480 in × .07670 in²

= 36.82 in³

36.82 in³ × .02798 lb/in³ = $\boxed{1.03 \text{ lb}}$

③ boom tension cables:

6 cables × 116.25" = 697.5"

3 cables × 3650" = 795"

Total = 697.5 + 795 = 1492.5" = 125 ft

use 1/4" cable = .04909 in²

volume = 73.26 in³ × .02798 lb/in³ = $\boxed{2.05 \text{ lb}}$

Total weight of cables = 9.76 lb

weight of boom:

① 3 - 2" tubes 1/4 wall running the length of boom

3 x 31.5 ft x 1/ft = 1134 in of 2" tube

~~Area of~~ cross sectional area
= $\pi(1^2 - (.75)^2)$ = 1.374 in²

∴ volume of 2" tubes = 1134 × 1.374 = 1558.1 in³

weight = 1558.1 in³ × .073 lb/in³ = 113.74 lb
where .073 lb/in³ = density of composite.

② Total length of 1" OD cross members =
~~2035.4 in~~ 2141.7

Cross sectional area of 1" members =
= $\pi(.5^2 - .45^2)$ = .1492 in²

~~volume of all cross~~ Sum volume of cross members
= 2141.7 in × .1492 in² = ~~303.7 in³~~ 319.5 in³

∴ weight = ~~303.7~~ 319.5 in³ × .073 lb/in³ = ~~22.17~~ lb 23.3 lb

③ ~~③ Total weight of boom~~ =
Total weight of boom = 113.74 + 23.3 + 2.05 (tension cables)
= 139.1 lb.

[illegible]

[illegible] 18.0

[illegible]

[illegible]

9.70

16.2

[illegible]

~~weight of base~~

[illegible] BASE:

[illegible] 2 OD TUBE, 1/4 wall [illegible] composite

20.403 m = 803.27 in

Area of 3" [illegible] = $\pi(1.5^2 - 1.25^2)$

= 2.160 in²

Volume = ~~1735.06 in³~~ 803.27" × 2.16 in² = 1735.06

weight = 1735.06 in³ × .0273 lb/in³ = $\boxed{164.8 \text{ lb}}$

2 cables, 5/8 in = 3.361 m (132.3")

volume = .3068 in² × 132.3 in = 40.60 in³

weight = 40.60 in³ × .02798 lb/in³ = 1.14 lb

So total weight of base = 165.94 lb

Center of mass of boom calc:

1) divide the boom into 2 halves

a) bottom half is completely symmetric
∴ CM_{BOT} at 2.4 m up boom

b) top half almost triangular
∴ CM_{TOP} at 1/3 height = 1/3 of 4.8
total height of 1/3 4.8 = 5.4 m from
bottom of boom

c) mass % bottom = 1 unit = 32.7 m of material

mass % top = .79 unit = 25.96 m of material

d) $CM_{BOOM} = \frac{1 \times 2.4 + (.79 \times 5.4)}{1.79} = 3.73$ m from bottom

Center of mass for base is very close to front of base since most of the tubing is at the front
∴ CM_{BASE} ≈ .15 m back from front.

These calculations will be used for load vs boom angle curve.

total weight of package:

301.84 lb for	composite
9.76	Kevlar 29
10.00	pivot
67.30	winches
10.00	controls
+ 170.00	power supply
568.9 lb	

Winch Calculations

3. DC-24-8B Ramsey DC Electric
Worm Gear Winches

Weight of unmodified Winch = 80 lbs
Weight consits of 21.1 lbs of 9/32 steel Cable
Weight consits of 80% Steel = 47.12 lbs
Weight consits of 5.89 lbs of Copper wind...
Weight consits of 5.89 lbs of other.

Rated line pull = 6000 lbf
Gear Reduction = 38:1
Line Speed = 4-17 ft/min
Power Required = 24 Volts and 140 Amps at full load

Cost = $750.00

Manipulator Requirements

16,000 lbf Line pull
Power Available = 1.5 KW
Winch only holds 10 ft of cable

Power Available 1.5 KW ÷ 24V = 62.5 Amps
62.5 ÷ 140 = .4464 % Available

Gr/(1-.4464) = 68.5 Gr

Gear Ratio for Load of 16000 lbs

$$16000 \times \frac{68.5}{6000} = GR_2 = 183.1$$

New Line speed = .83 ft/min

By using Aluminum with 40% Boron filler we can reduce the weight of the steel because of the smaller density and the increased strength.

Before weight reduction, we must first increase the steel content to handle the increased load.

$$\frac{47.12}{6000} = \frac{\text{Steel content}}{16000}$$

$$w = 125.65$$

Al Boron fiber is twice as strong as Steel by Volume

$$\frac{125.65 \text{ lb}}{2} = 62.8 \text{ lbs}$$

$$\frac{62.8 \times \text{density of Al Boron } (.0804)}{\text{density of steel } (.283)} = 17.8 \text{ lbs Al B}$$

By using Al windings instead of Copper we can reduce the weight of the windings.

$$\frac{5.89 \text{ lbs } (.092) \text{ density of Al}}{\text{density of Cu } (.304)} = 1.78 \text{ lbs}$$

The total weight of the winch is

$$w = 17.8 + 1.78 + 5.89 = 25.53 \text{ lbs}$$ for the manipulator winch

The Lifting Hoist

Available Power = 1.5 KW
Winch holds 40 ft of Cable

Required Line pull = 6000 lbf

62.5 Amps available : The gear reduction is increased to reduce the required Amperage at full load.

$$\frac{62.5}{140} = .4464 \qquad \frac{38}{(1-.4464)} = 68.65$$

69:1 Gear reduction.

The same weight reductions using Al Be vs Steel and Al windings vs Cu windings and subtracting the weight of the cable the weight reduces from 80 to 16.3 lbs.

	1.78 lbs
	5.89 lbs
	8.30 lbs
Total Weight	16.3 lbs

The cable wts. are included in another set of calculations.

Maximum Load on Boom

The maximum load on the boom occurs at $\Theta = 56.5°$ with a 4000 lb load. This load generates the maximum torque on the boom. The manipulator cables conteract this torque and add to the compressive force already created.

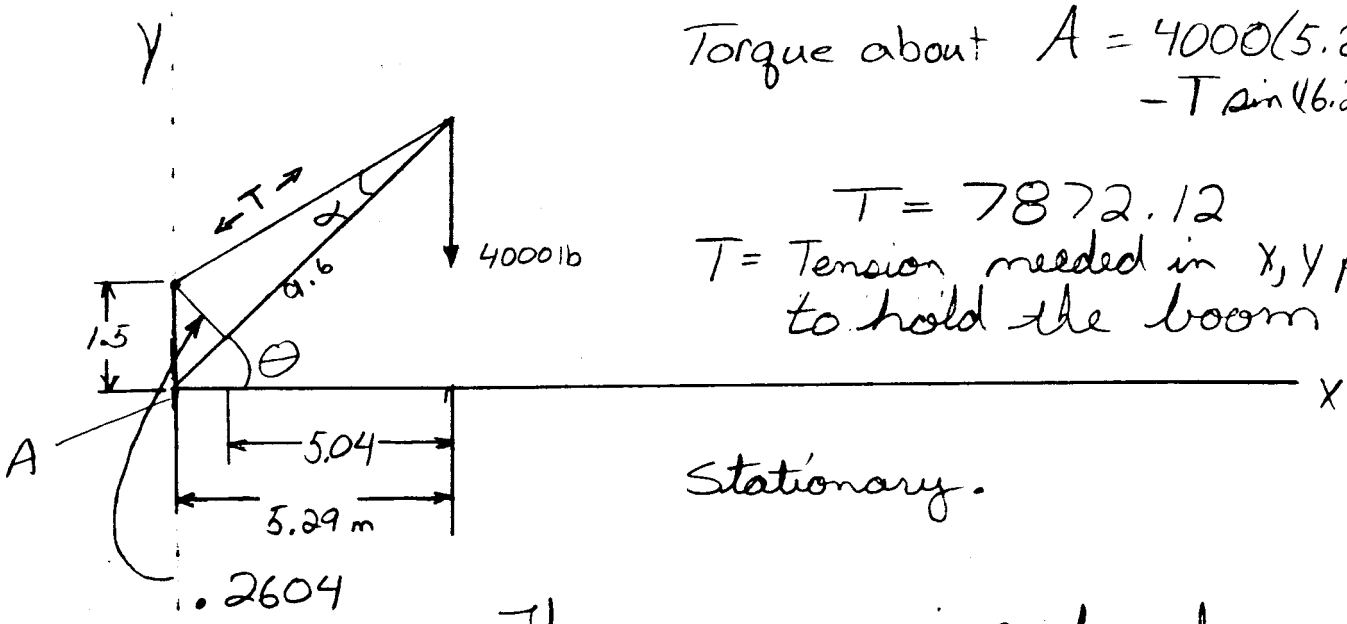

Torque about $A = 4000(5.29) - T\sin(16.26)$

$T = 7872.12$

T = Tension needed in X, Y plan to hold the boom

Stationary.

The compressive load on the boom:

$$T * \cos(16.26) + (4000)(\sin(56.5)) = F_{comp}$$

$$F_{compressive} = 10892.8 \text{ lbs/in}^2$$

LENGTH OF MEMBERS USED IN BOOM DESIGN

		qty	ind. length	total
1. vertical members		3	9.6 m	28.8 m
2. horizontal members		12	.75 m	9.0 m
(not including base or top)		~~3~~	~~.68 m~~	~~2.0 m~~
	1	3	.62 m	1.9 m
	2	3	.59 m	1.8 m
	3	3	.52 m	1.7 m
	4	3	.46 m	1.4 m
	5	3	.36 m	1.1 m
	6	3	.32 m	.96 m
3. cross-brace members		15	1.1	16.2 m
	1	3	1.0	3.0 m
	2	3	.97	2.9 m
	3	3	.92	2.8 m
	4	3	.89	2.7 m
	5	3	.83	2.5 m
	6	3	.76	2.3 m
4. pyramid tip		3	.2	.6 m
			Total	79.9 m
5 Ring of ~~tension~~ tension members		cable	compression	
		3	.9	2.7 m

42 381 50 SHEETS 5 SQUARE
42 382 100 SHEETS 5 SQUARE
42 389 200 SHEETS 5 SQUARE
NATIONAL

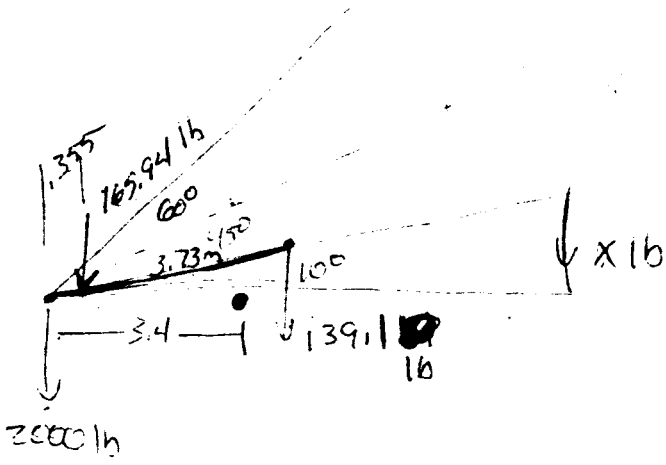

10° boomangle

$$\Sigma M_{TIP\ PT} = (2000\ lb)(3.4\ m) + (165.94\ lb)(3.04\ m) - (139.1\ lb)(3.73\cos 10 - 3.4)(.27\ m) - (x\ lb)(9.6\times\cos 10° - 3.4)(6.05\ m) = 0$$

$$x = \frac{(6800 + 504.5 - .376)}{6.05} = \frac{7267}{6.05} = \boxed{1201.1\ lb}$$

20° boom angle

$$\Sigma M_{TIP\ PT} = (2000\ lb)(3.4\ m) + (165.94\ lb)(3.04) - (139.1\ lb)(3.73\cos 20° - 3.4) - (x)(9.6\cos 20° - 3.4) = 0$$

$$x = \frac{(6800) + 504.5 - 14.6}{5.62} = \boxed{1297.1\ lb}$$

30° boom angle

$$x = \frac{6800 + 504.5 - 139.1(3.73\cos 30 - 3.4)}{(9.6\cos 30 - 3.4)} = \frac{7328.1}{4.914}$$

$$x = \boxed{1491.3\ lb}$$

40°

$$x = \frac{7304.5 - 139.1(3.73\cos 40° - 3.4)}{(9.6\cos 40 - 3.4)} = \frac{7380.0}{3.954} = \boxed{1866.5\ lb}$$

50°

$$x = \frac{7443.9}{2.771} = \boxed{2686.4\ lb}$$

60°

$$x = \frac{7518.0}{1.4} = 5370\ lb$$

70°

$$x = \frac{7600.0}{.117} = 64957.3\ lb$$

$$4000\ lb(9.6\cos y - 3.4) = 7304.5 - 139.1(3.73\cos y - 3.4)$$

$y_1 = 55°$, $8425.3 \neq 7479.8$

Analysis [illegible]

(1)

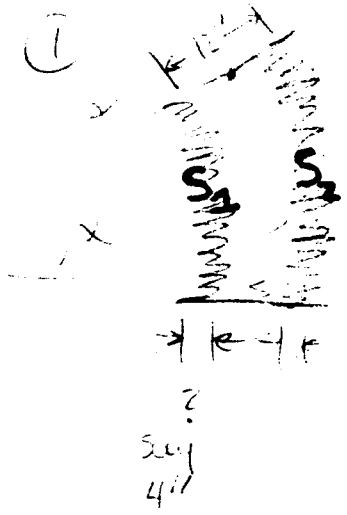

- [illegible] no real coil comp.
- [illegible] side flexure
- [illegible] length of both = 1 ft = 12 in.
- $F = ky$:

$F_1 = -k_1 y_1$, $F_2 = +k_1 y_2$

y_1 is negative because S_1 has to absorb all of compressive load plus additional load of stretching other spring.

net [illegible] length of S_1 = (6α)

net increase in length of S_2 = (6α)

Now $k_1 = k_2$ so $F_1 = -F_2$ & the system is [illegible]

(2)

- coil compression due to load
- simple side flexure

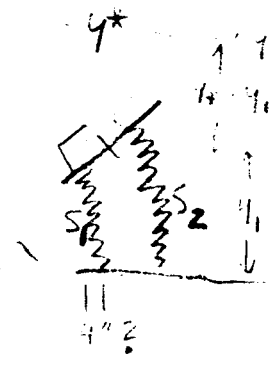

$F_1 = (y^* - y_1 + 6\alpha)k_1$, $F_2 = (y^* - y_1 - 6\alpha)k_1$

[illegible] $F_1 + F_2$

TSF = [illegible] $(2(y^* - y_1) + 0)$

so $\alpha = 30°$

[illegible] complete flexure [illegible]

[illegible]

loads [illegible]

[illegible]

[illegible] the [illegible]

analysis was simple. [illegible] 60° [illegible]

[illegible] with no flexure in the vertical

[illegible] boom 4. Mount the springs at 45°

to horizontal. This means the coils must

flex 35° up and 60° over to side in worst

case. This is also one position as heavy

loads. 4000 lb load

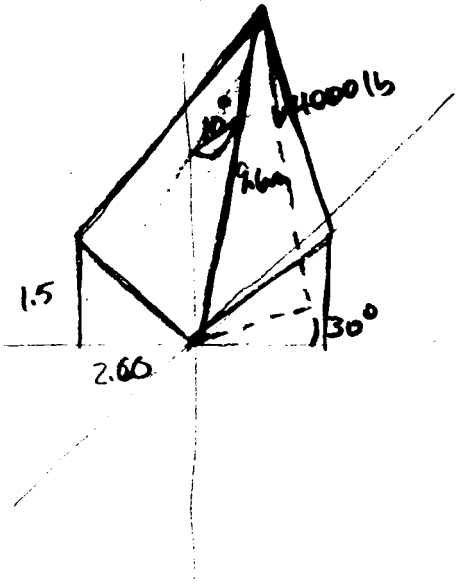

Composite Analysis

I. Define Lay-Up

- Given a Boron/epoxy composite with strength in direction of orthotropy, given by the values in "Primer ON Composite Materials: Analysis" pg 108-109.

- We will use a symmetric lay up so that no "coupling" is experienced.

- Assume only extensional strains (ie. ~~Ten~~ Tension, Tension)

  and maximum shear occure at $\pm 45^{\circ}$

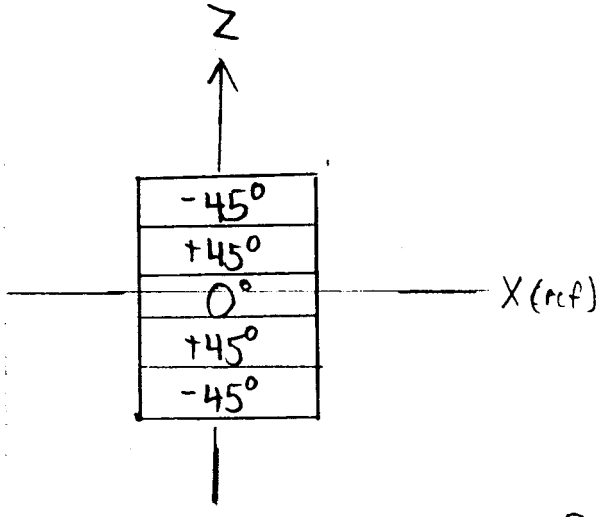

t - ply thickness

$t = .05''$ per ply

$t_{TOT} = .25''$

This is a 5-ply set-up. 1 ply in the unidirectional direction and two other symm pairs of +45 and -45.

Now we must define:

$$[Q_{ij}] \Rightarrow [\bar{Q}_{ij}]^{+45} \text{ and } [\bar{Q}_{ij}]^{-45}$$

Assume Boron / 5500 Epoxy

Note: The mechanical properties contribution fro the matrix is very small. Thus for engineering purposes we can calculate mechanical properties using any matrix we have values for, and assume these values will be close to another.

$E_{11} = 29.6 \times 10^6$ psi $\qquad G_{12} = .84 \times 10^6$ psi

$E_{12} = 2.68 \times 10^6$ psi

$\nu_{12} = .23 \qquad \nu_{21} = \nu_{12} \frac{E_2}{E_1} = .0208$

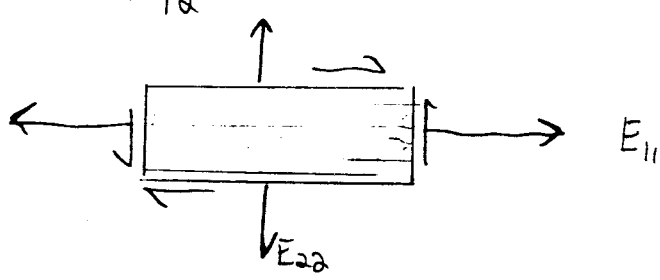

$$Q_{11} = \frac{E_{11}}{1 - \nu_{12}\nu_{21}} \qquad Q_{22} = \frac{E_2}{1 - \nu_{12}\nu_{21}}$$

$$Q_{12} = Q_{21} = \frac{\nu_{12} E_2}{1 - \nu_{12}\nu_{21}} \qquad Q_{44} = G_{12}$$

By Hookes Law we know:

$$\begin{bmatrix} \sigma_{11} \\ \sigma_{22} \\ \tau_{12} \end{bmatrix} = \begin{bmatrix} Q_{11} & Q_{12} & Q_{14} \\ Q_{12} & Q_{22} & Q_{24} \\ Q_{14} & Q_{24} & Q_{44} \end{bmatrix} \begin{bmatrix} \varepsilon_{11} \\ \varepsilon_{22} \\ \gamma_{12} \end{bmatrix}$$

Assuming Plane stress only (lamina analysis) our constants Q_{14} and Q_{24} go to zero, leaving:

$$\begin{bmatrix} Q_{11} & Q_{12} & 0 \\ Q_{12} & Q_{22} & 0 \\ 0 & 0 & Q_{44} \end{bmatrix}$$

For a 0° ply:

$$Q_{11} = 2.974 \times 10^7 \text{ psi}$$

$$Q_{22} = 2.69 \times 10^6 \text{ psi}$$

$$Q_{12} = 6.18 \times 10^5 \text{ psi}$$

$$Q_{44} = 8.40 \times 10^5 \text{ psi}$$

Now we must determine the elastic constants if the direction of orthotropy is not coincident with the reference frame. In our case we have one at $+45^\circ$ and -45°. $[Q_{ij}] \Rightarrow [\bar{Q}_{ij}]$

These can be calculated by:

$$\bar{Q}_{11} = Q_{11}\cos^4\theta + 2(Q_{12} + 2Q_{44})\sin^2\theta\cos\theta + Q_{22}\sin^4\theta$$

$$\bar{Q}_{12} = (Q_{11} + Q_{22} - 4Q_{44})\sin^2\theta\cos^2\theta + Q_{22}\cos^4\theta$$

$$\bar{Q}_{22} = Q_{11}\sin^4\theta + 2(Q_{12} + 2Q_{44})\sin^2\theta\cos^2\theta + Q_{22}\cos^4\theta$$

$$\bar{Q}_{14} = (Q_{11} - Q_{12} - 2Q_{44})\sin\theta\cos^3\theta + (Q_{12} - Q_{22} + 2Q_{44})\sin^3\theta\cos$$

$$\bar{Q}_{24} = (Q_{11} - Q_{12} - 2Q_{44})\sin^3\theta\cos\theta + (Q_{12} - Q_{22} + 2Q_{44})\sin\theta\cos$$

$$\bar{Q}_{44} = (Q_{11} + Q_{22} - 2Q_{12} - 2Q_{44})\sin^2\theta\cos^2\theta + Q_{44}(\sin^4\theta + \cos^4$$

These equations yield these results:

$\theta = +45^\circ$ $\qquad\qquad$ $\theta = -45^\circ$

$\bar{Q}_{11} = 9.68 \times 10^6$ psi $\quad = \quad \bar{Q}_{11}$

$\bar{Q}_{22} = 9.68 \times 10^6$ psi $\quad = \quad \bar{Q}_{22}$

$\bar{Q}_{12} = 8.00 \times 10^6$ psi $\quad = \quad \bar{Q}_{12}$

* $\bar{Q}_{14} = 7.43 \times 10^6$ psi $\quad = \quad -\bar{Q}_{14}$

* $\bar{Q}_{24} = 7.43 \times 10^6$ psi $\quad = \quad -\bar{Q}_{24}$

$\bar{Q}_{44} = 8.20 \times 10^6$ psi $\quad = \quad Q_{44}$

* Only in these cases do $\bar{Q}$ change for a $+45^\circ$ and -45°. (ie. the opposite)

These values make up the plane stress stiffness constant matrix for the direction of orthotropy.

$$\begin{bmatrix} \bar{Q}_{11} & \bar{Q}_{12} & \bar{Q}_{14} \\ \bar{Q}_{12} & \bar{Q}_{22} & \bar{Q}_{24} \\ \bar{Q}_{14} & \bar{Q}_{24} & \bar{Q}_{44} \end{bmatrix}$$

Now Take a Free body of one section of pipe (size dx)

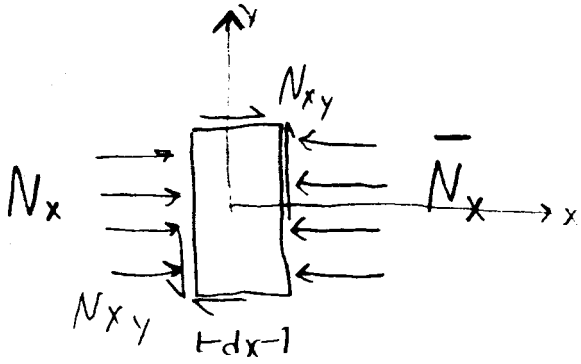

Set internal stresses equal to applied stresses

$$\begin{bmatrix} N_{xx} \\ N_{yy} \\ N_{xy} \end{bmatrix} = \begin{bmatrix} \bar{N}_{xx} \\ \bar{N}_{yy} \\ N_{xy} \end{bmatrix}$$

* From mechanics:

Symmetric composite has no extension - bending coupling. Therefore there is no coupling elastic constant matrix $[B_{ij}]$ (in below eq.). No coupling also implies NO displacement in the z-direction, and $M_{ij} = 0$.

This equation (taken from "Primer on Composite Materials; analysis) relates normal and moment stresses on the laminate.

$$\begin{Bmatrix} \bar{N}_{xx} \\ \bar{N}_{yy} \\ \bar{N}_{xy} \end{Bmatrix} = A_{ij} \begin{Bmatrix} \varepsilon^{o}_{xx} \\ \varepsilon^{o}_{yy} \\ \varepsilon^{o}_{xy} \end{Bmatrix} + \cancel{B_{ij}} \begin{Bmatrix} k_{xy} \\ k_{yy} \\ k_{xy} \end{Bmatrix} \rightarrow 0$$

A_{ij} - represents an extensional elastic constant matrix.

- We can calculate the matrix using the following

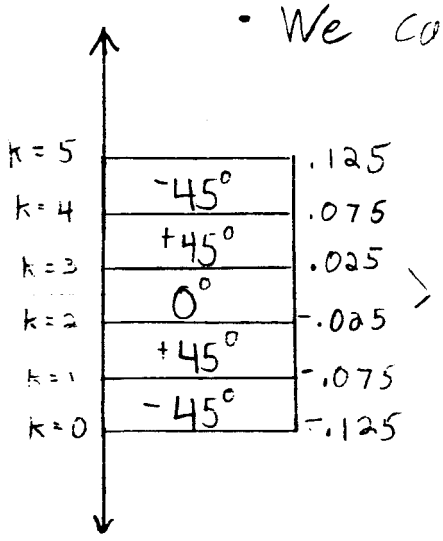

$t = .05''$

$t = .05$ alwa

$$A_{ij} = \sum_{k=1}^{N} \left[\bar{Q}_{ij}\right]^{k} \left(h_k - h_{k-1}\right)$$

$$A_{11} = \left[\bar{Q}_{11}\right]^{-45}\left[(-.075)-(-.125)\right] + \left[\bar{Q}_{11}\right]^{+45}\left[.05\right] + \left[\bar{Q}_{11}\right]^{0^\circ}\left[.05\right]$$

$$+ \left[\bar{Q}_{11}\right]^{+45}(.05) + \left[\bar{Q}_{11}\right]^{-45}(.05)$$

$$= \left[9.68\times10^{6}\right](.05) + \left[9.68\times10^{6}\right](.05) + \left[2.974\times10^{7}\right](.05)$$

$$+ \left[9.68\times10^{6}\right](.05) + \left[9.68\times10^{6}\right](.05)$$

$$= 3.42\times10^{6}\ psi$$

$$A_{12} = \left(\left[2\bar{Q}_{12}^{-45}\right] + \left[2\bar{Q}_{12}^{+45}\right]\right)(.05) + \left[\bar{Q}_{12}\right]^{0^\circ}(.05)$$

$$= 1.6\times10^{6}\ psi$$

By Similiar Calculations as above

$A_{14} = 0 \Rightarrow$ * Special case $\bar{Q}_{14}^{-45^\circ} = -Q_{14}^{+45^\circ}$ cancel eachother

$A_{12} = 1.6 \times 10^6$ psi

$A_{22} = [\bar{Q}_{22}]^{-45}(.05)4 + [Q_{22}]^{0^\circ}(.05$

$= 2.01 \times 10^6$ psi

$A_{24} = 0$ *

$A_{14} = 0$ *

$A_{44} = [\bar{Q}_{44}]^{-45}(.05)4 + [\bar{Q}_{44}]^{0^\circ}(.05 = 1.68 \times 10^6$ psi

$$A_{ij} = \begin{bmatrix} 3.42 \times 10^6 & 1.6 \times 10^6 & 0 \\ 1.6 \times 10^6 & 2.01 \times 10^6 & 0 \\ 0 & 0 & 1.6 \times 10^6 \end{bmatrix}$$

By manipulating our equation we end up with this result.

$$\begin{bmatrix} \varepsilon_{xx} \\ \varepsilon_{yy} \\ \gamma_{xy} \end{bmatrix} = [A_{ij}]^{-1} \begin{bmatrix} \bar{N}_{xx} \\ \bar{N}_{yy} \\ \bar{N}_{xy} \end{bmatrix}$$

From this we c find the state - strain for the "laminate".

With the State-of-Strain for the laminate, we can find the State of Stress for each lamina:

$$\begin{bmatrix} \sigma_{xx} \\ \sigma_{yy} \\ \sigma_{xy} \end{bmatrix}^k = \left[\bar{Q}_{ij}\right]^k \begin{bmatrix} \varepsilon_{xx} \\ \cancel{\varepsilon_{yy}} \\ \cancel{\gamma_{xy}} \end{bmatrix}^{\circ} \qquad \text{Hooke's Law}$$

By Substitution

$$\begin{bmatrix} \sigma_{xx} \\ \sigma_{yy} \\ \sigma_{xy} \end{bmatrix}^k = \left[\bar{Q}_{ij}\right]^k \left[A_{ij}\right]^{-1} \begin{bmatrix} \bar{N}_{xx} \\ \cancel{\bar{N}_{yy}} \\ \cancel{\bar{N}_{xy}} \end{bmatrix}^{\circ}$$

$$\therefore \quad \sigma_{xx}^k = \left[Q_{11}\right]^k \left[A_{11}\right]^{-1} \left[N_x\right]$$

$$\sigma_{yy} = \left[\bar{Q}_{12}\right]^k \left[A_{12}\right]^{-1} \left[N_x\right]$$

$$\sigma_{xy} = \left[\bar{Q}_{14}\right]^k \left[A_{14}\right]^{-1} \left[N_x\right]$$

Now we must find A^{-1}.

$$A^{-1} = \begin{bmatrix} 4.7\times10^{-7} & -3.7\times10^{-7} & 0 \\ -3.7\times10^{-7} & 7.9\times10^{-7} & 0 \\ 0 & 0 & 6.3\times10^{-7} \end{bmatrix}$$

$OD = 2''$

$I.D. = 1.75''$

$$N_x = \frac{8000}{\pi\left(2.0^2 - 1.75^2\right)} = 2.7 \times 10^3$$

We are now in position to calculate $\sigma_{xx}, \sigma_{yy}, \sigma_{xy}$ for each ply.

$$\sigma_{xx}^{-45} = \left[\bar{Q}_{11}\right]^{-45}\left[a_{11}\right]\left[N_x\right]$$

$$= (9.86 \times 10^6)(4.7 \times 10^{-7})(-2.7 \times 10^3) = -1.25 \times 10^4 \text{ psi}$$

$$\sigma_{xx}^{+45} = -1.25 \times 10^4 \text{ psi}$$

$$\sigma_{xx}^{0^\circ} = \left[Q_{11}\right]^{0^\circ}\left[a_{11}\right]\left[N_x\right]$$

$$= (2.974 \times 10^7)(4.7 \times 10^{-7})(-2.7 \times 10^3) = -3.7 \times 10^4 \text{ psi}$$

$$\sigma_{yy}^{-45} = \left[\bar{Q}_{11}\right]^{-45}\left[a_{21}\right]\left[N_x\right]$$

$$= (9.60 \times 10^6)(-3.7 \times 10^{-7})(-2.7 \times 10^3) = 9.6 \times 10^3 \text{ psi}$$

$$\sigma_{yy}^{+45} = 9.6 \times 10^3 \text{ psi}$$

$$\sigma_{yy}^{0^\circ} = \underbrace{\left[\bar{Q}_{11}\right]^{0^\circ}}_{2.974 \times 10^6}(a_{21})(N_x) = 2.9 \times 10^3 \text{ psi}$$

$$\sigma_{xy}^{-45} = 0 \qquad \sigma_{xy}^{+45} = 0 \qquad \sigma_{xy}^{0^\circ} = 0$$

Now we have the State-of-Stress in each lamina composite with respect to x, y. coordinate axis system.

Now we need the State-of-Stress of each composite lamina with respect to its directions of orthotropy 1, 2 by a Mohr's circle analysis.

For each lamina (k) we know $\sigma_{xx}, \sigma_{yy}, \sigma_{xy}$

@ +45°

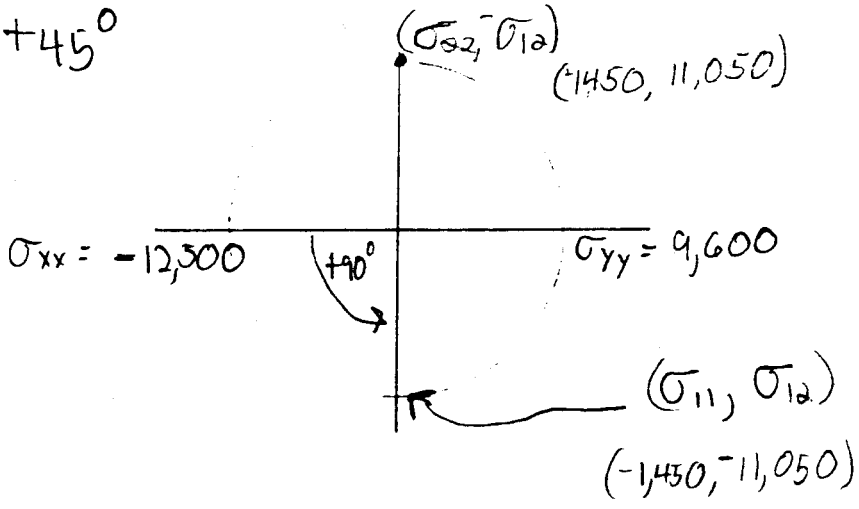

$$\text{center} = \frac{\sigma_{xx} + \sigma_{yy}}{2}$$

For the orthotropy directions 1,2, the <u>maximum allowable stresses</u> for an Boron/epoxy composite are as follows.

<u>Compression</u>	<u>Tension</u>
$\sigma_{11} = -290{,}000$ psi	$\sigma_{11} = 190{,}000$ psi
$\sigma_{22} = -19{,}000$ psi	$\sigma_{22} = 20{,}000$ psi

<u>Shear</u>

$\sigma_{12} = 18{,}000$ psi

* Maximum allowable st

@ $+45^\circ$

$\sigma_{11} = -1{,}450$ psi $<$ $-290{,}000$ psi Allowable in Compression

$\sigma_{22} = 1{,}450$ psi $<$ $20{,}000$ psi Allowable in Tension

$\sigma_{12} = 11{,}050$ psi $<$ $18{,}000$ psi Allowable in Shear

@ -45°

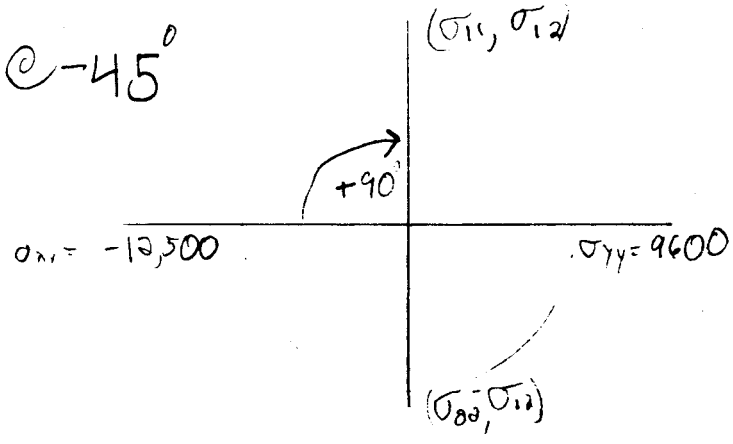

$\sigma_{11} = 1450$ psi $<$ $190{,}000$ psi Allowable in Tension

$\sigma_{22} = -1450$ psi $<$ $-19{,}000$ psi Allowable in compression

$\sigma_{12} = 11{,}050$ psi $<$ $18{,}000$ psi Allowable in Shear

@ 0°

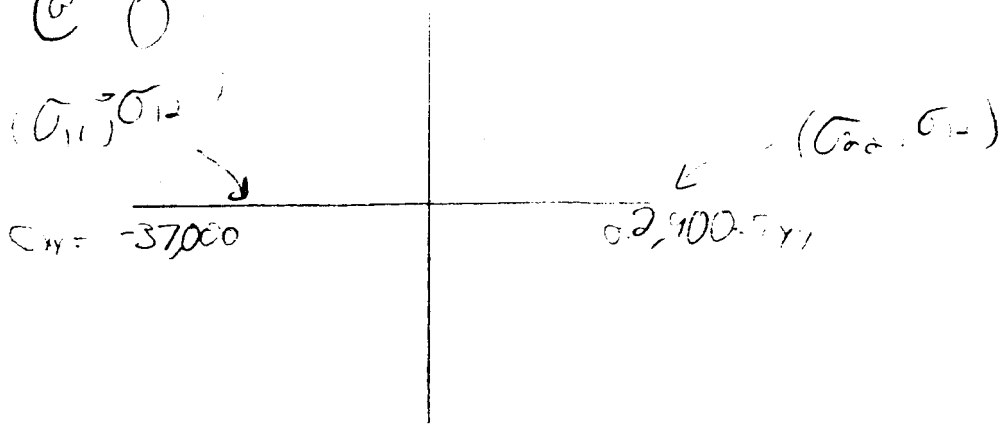

$\sigma_{11} = -37{,}000\,psi < -290{,}000\,psi$ Allowable Str in Compression

$\sigma_{22} = 2{,}900 < 20{,}000\,psi$ Allowable Str in Tension

$\sigma_{12} = 0 < 18{,}000\,psi$ Allowable in shear

- All of the stresses in the lamina are within the safe range and therefore the laminate will not fail.

This analysis is done with a Boron/3300 Epoxy composite. The changes in mechanical properties of the composite, if a different matrix is used, are negligable. Therefore we can assume these figures to be valid. Further research is needed on an epoxy that will not crack or fail in the lunar environment.

Cost Analysis Calculations

Kevlar: \$17 / linear square yard (@0.060 in ply thns)

$$\frac{\$17}{(36\,in)^2(.060\,in)} = \$0.2186/in^3\left(\frac{in^3}{0.052\,lb}\right) = \$\frac{4.21}{lb}$$

boron: \$6 / linear square yard (@ .060 in ply thns)

$$\frac{\$6}{(36\,in^2)(.060\,in)} = \$0.0772/in^3\left(\frac{in^3}{0.095\,lb}\right) = \$\frac{0.82}{lb}$$

aluminum:

\$550 / 1/2 in x 4 ft x 12 ft plate

$$\frac{\$550}{(1/2)(4)(12)(12)(12)} = \$0.1592/in^3\left(\frac{in^3}{0.0975\,lb}\right) = \$1.63/lb$$

steel: \$200 / 1/2 in x 4 ft x 12 ft plate

$$\frac{\$200}{(1/2)(4)(12)(12)(12)} = \$0.0579/in^3\left(\frac{in^3}{0.284\,lb}\right) = \$0.21/lb$$

titanium: \$20 linear 1/2 foot squared. (@ 0.050 thns

$$\frac{\$20}{(6)^2(.050)\,in^3} = \$11.1111/in^3\left(\frac{in^3}{.1628\,lb}\right) = \$68.24/lb$$

ARMATURE CONTROLLED DC MOTOR + WINCH ASSEMBLY

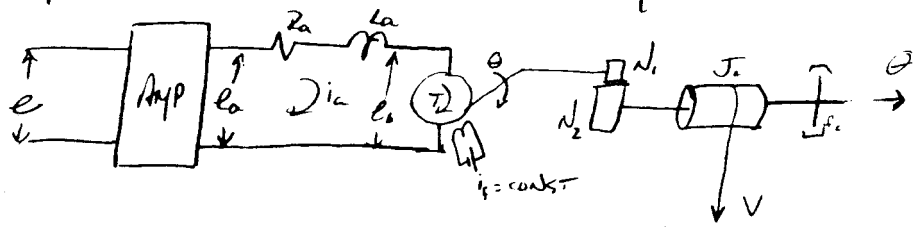

AMP : $E_a(s) = K_p E(s)$

DC MOTOR

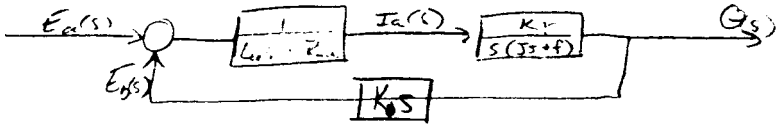

FIELD CURRENT : $\psi = K_f i_f$

TORQUE : $T = K_f i_f K_1 K_a$

FIELD CURRENT = CONST $\Longrightarrow$ FLUX CONST

$\therefore \quad T = K_T i_a$

INDUCED VOLTAGE : $e_b = K_b \dfrac{d\theta}{dt}$

ARMATURE VOLTAGE : $e_a = L_a \dfrac{di_a}{dt} + R_a i_a + e_b$

TORQUE : $T = J \dfrac{d^2\theta}{dt} + f \dfrac{d\theta}{dt}$

INITIAL CONDITIONS = 0

$$K_b s\, \theta(s) = E_b(s)$$

$$(L_a s + R_a) I_a(s) + E_b(s) = E_a(s)$$

$$(Js^2 + fs)\theta(s) = T(s) = K_T I_a(s)$$

BACK EMF ACTS AS PROPORTIONAL CONTROLLER

$$\frac{\theta(s)}{E_a(s)} = \frac{K_T}{s[L_a J s^2 + (L_a f + R_a J)s + R_a f + K_T K_b]}$$

$L_a << 1$; $\theta_1(s) = \dfrac{V_b r}{Js^2}$

$$\frac{\theta(s)}{E_a(s)} = \frac{K_m}{s(T_m s + 1)}$$

$$\boxed{\frac{V(s)}{E_a(s)} = \frac{Js\, K_m}{br(T_m s + 1)}}$$

$$K_m = \frac{K_T}{\left(R_a f + \frac{K_T K_b}{R_a J}\right)}$$

$$T_m = \frac{J}{(R_a f + K_T K_b)}$$

$$\boxed{\begin{aligned} J &= J_m + n^2 J_L \\ f &= \cancel{f_m} + n^2 f_L \end{aligned}}$$

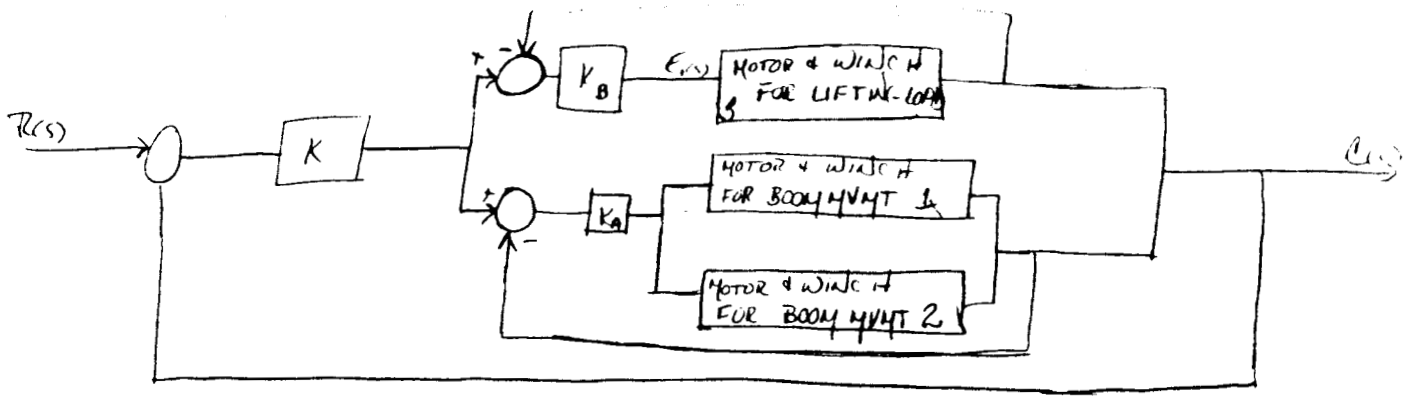

$$G_i = \frac{J_i s K_{m_i} K}{b_i T_i (T_{m_i} s +}$$

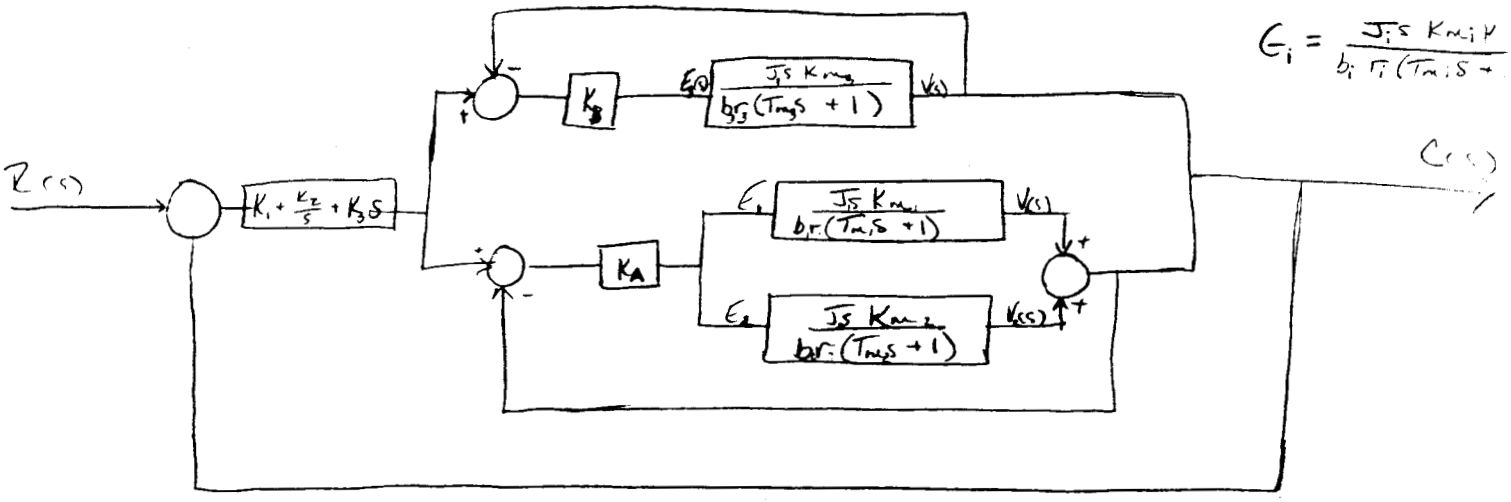

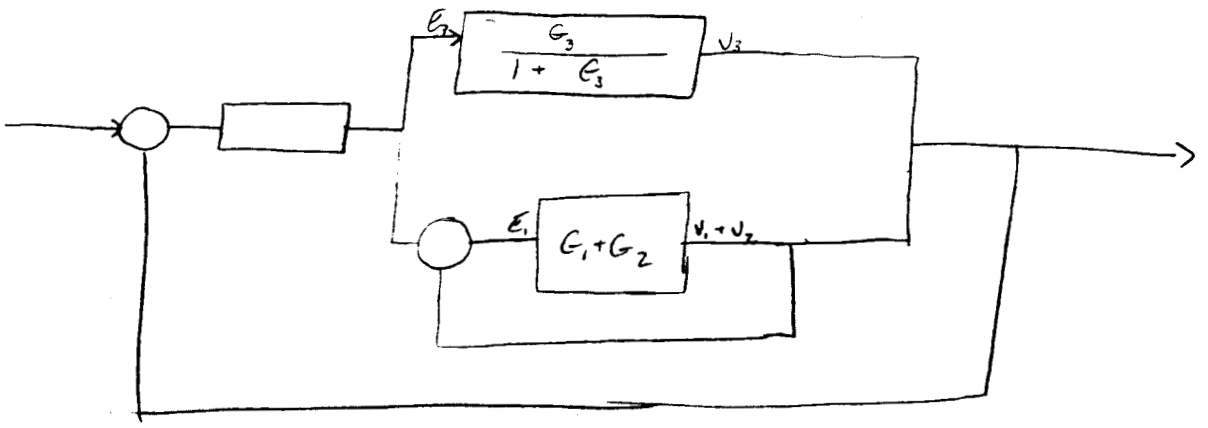

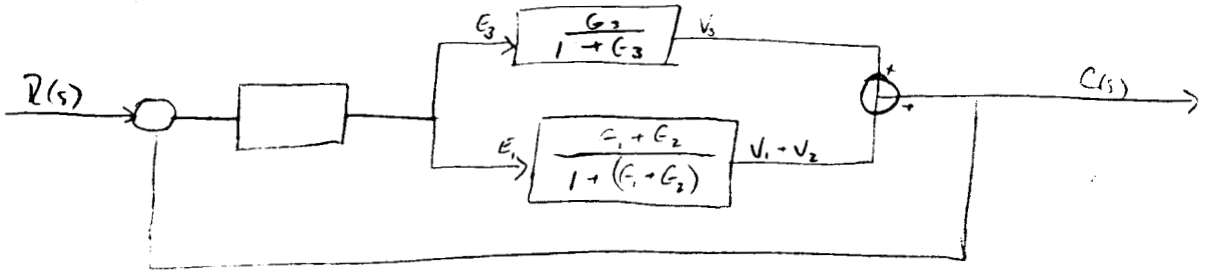

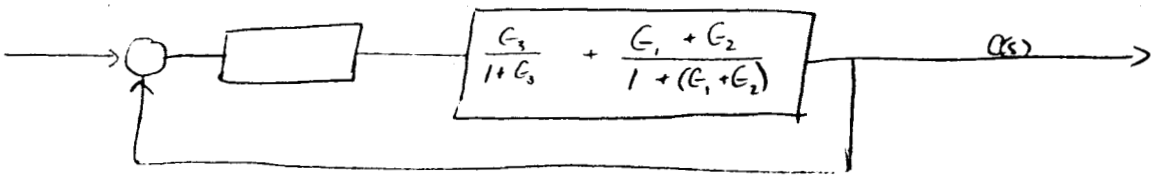

$$K = K_1 + \frac{K_2}{s} + K_3 s$$

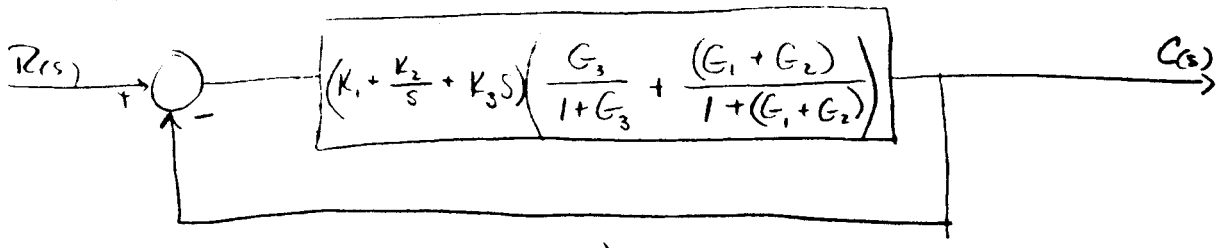

$$\frac{C(s)}{R(s)} = \frac{K\left(\frac{G_3}{1+G_3} + \frac{(G_1+G_2)}{1+(G_1+G_2)}\right)}{1 + K\left(\frac{G_3}{1+G_3} + \frac{(G_1+G_2)}{1+(G_1+G_2)}\right)} = \frac{K\left(\frac{G_3 + G_3(G_1+G_2) + (1+G_3)(G_1+G_2)}{(1+G_3)(1+(G_1+G_2))}\right)}{1 + K\left(\frac{G_3 + G_3(G_1+G_2) + (1+G_3)(G_1+G_2)}{(1+G_3)(1+(G_1+G_2))}\right)}$$

$$\frac{C}{R} = \frac{K\left(G_3 + G_3(G_1+G_2) + (1+G_3)(G_1+G_2)\right)}{(1+G_3)(1+(G_1+G_2)) + K\left(G_3 + G_3(G_1+G_2) + (1+G_3)(G_1+G_2)\right)}$$

$$\frac{C}{R} = \frac{K(G_3 + G_3G_1 + G_3G_2 + G_1 + G_2 + G_3G_1 + G_2G_3)}{K(G_3 + G_3G_1 + G_3G_2 + G_1 + G_2 + G_3G_1 + G_2G_3) + G_1 + G_2 + G_3 + G_1G_3 + G_2G_3 + 1}$$

$$\frac{C}{R} = \frac{K(G_1 + G_2 + G_3 + 2G_3G_1 + 2G_2G_3)}{K(G_1 + G_2 + G_3 + 2G_3G_1 + 2G_2G_3) + G_1 + G_2 + G_3 + G_1G_3 + G_2G_3 + 1}$$

LOAD FORCE vs. BOOM ANGLE

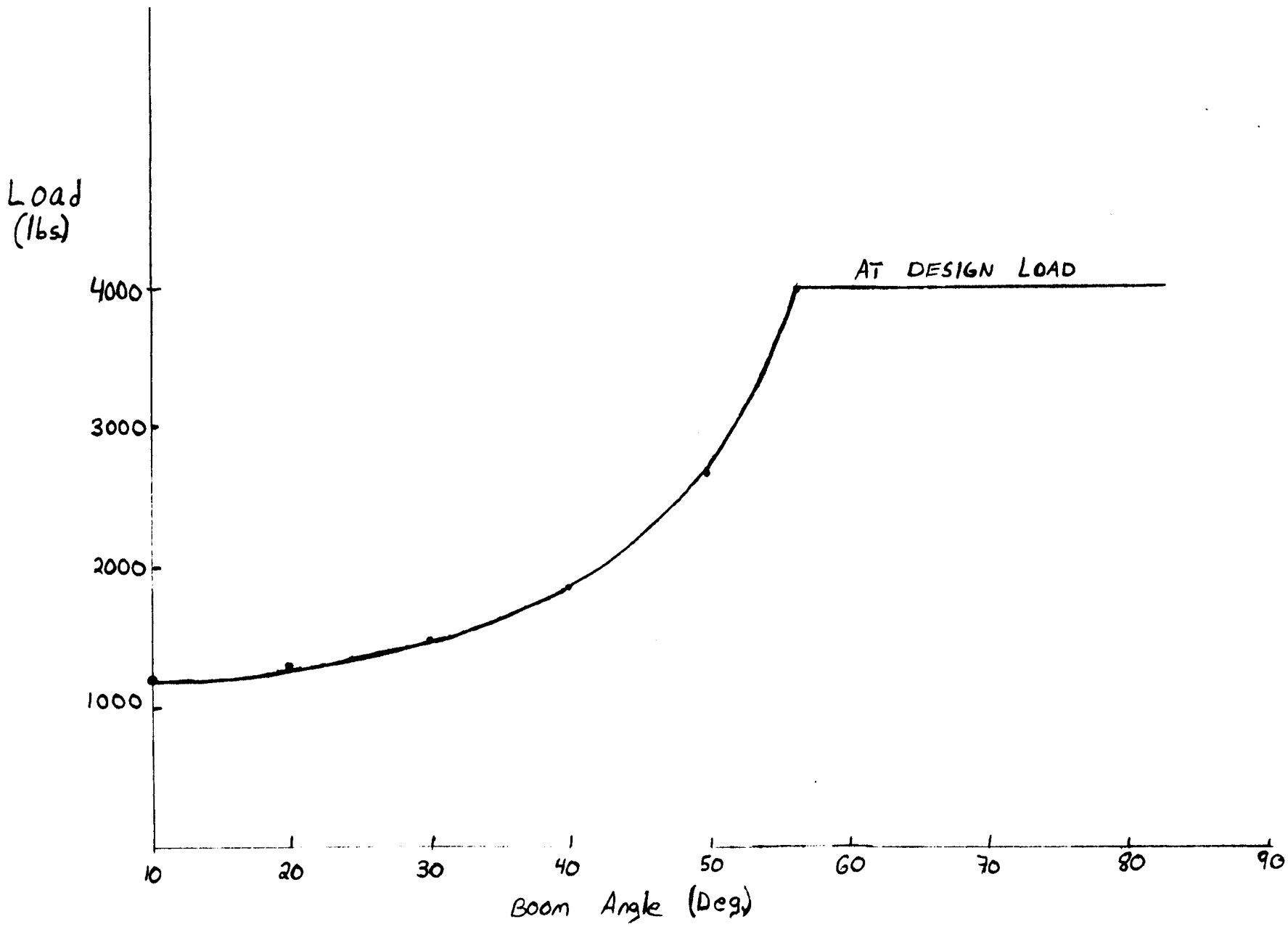

SDRC I-DEAS 3.1: Pre/Post Processing
DATABASE: BOOM STRESS ANALYSIS
VIEW: No stored VIEW
Task: Model Preparation

24-NOV-86 16. 18. 47
UNITS = SI
DISPLAY: No stored OPTION

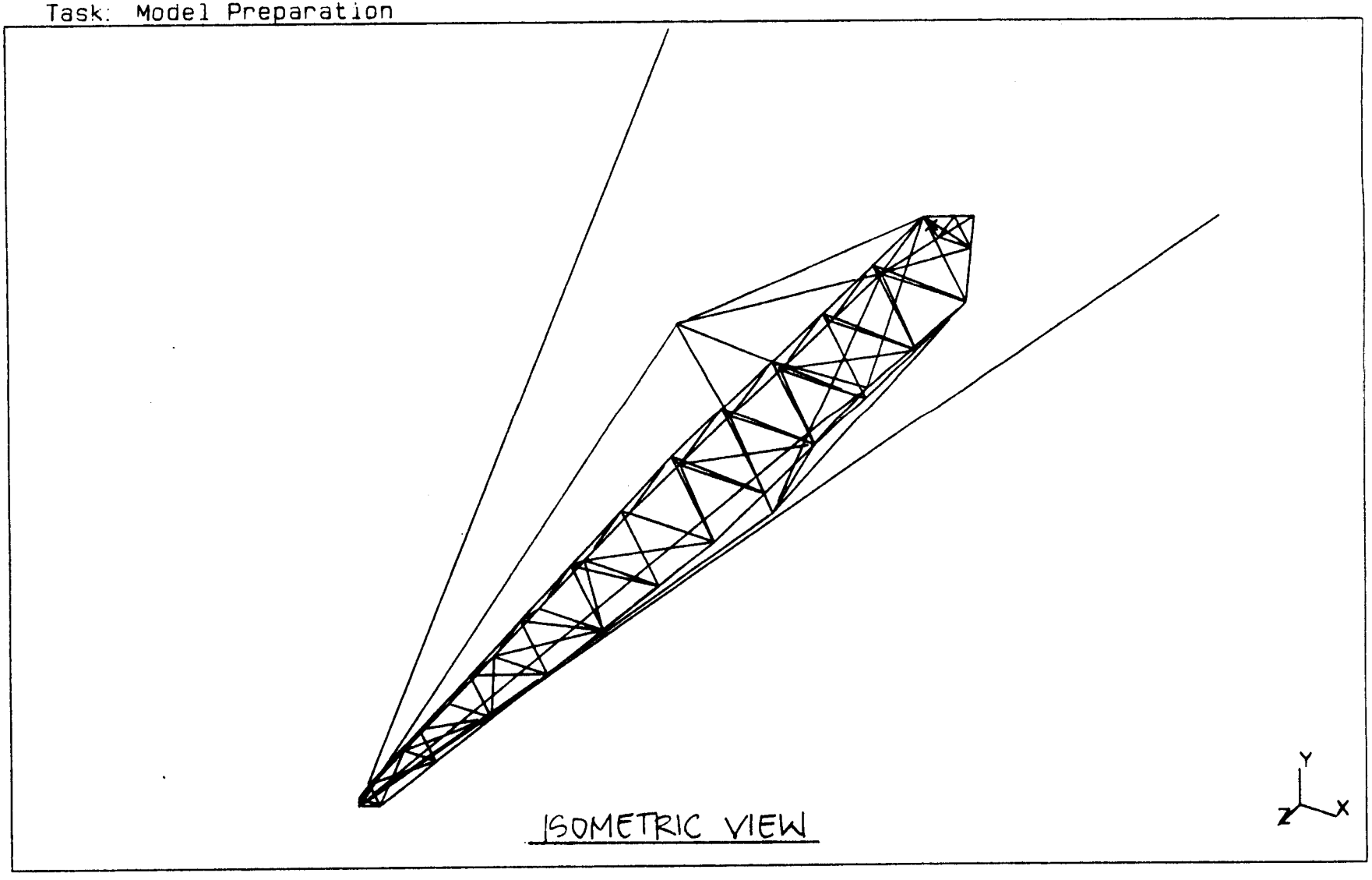

SDRC I-DEAS 3.1: Pre/Post Processing 24-NOV-86 16:34:52
DATABASE: BOOM STRESS ANALYSIS UNITS = SI
VIEW: No stored VIEW DISPLAY: No stored OPTION
Task: Model Checking

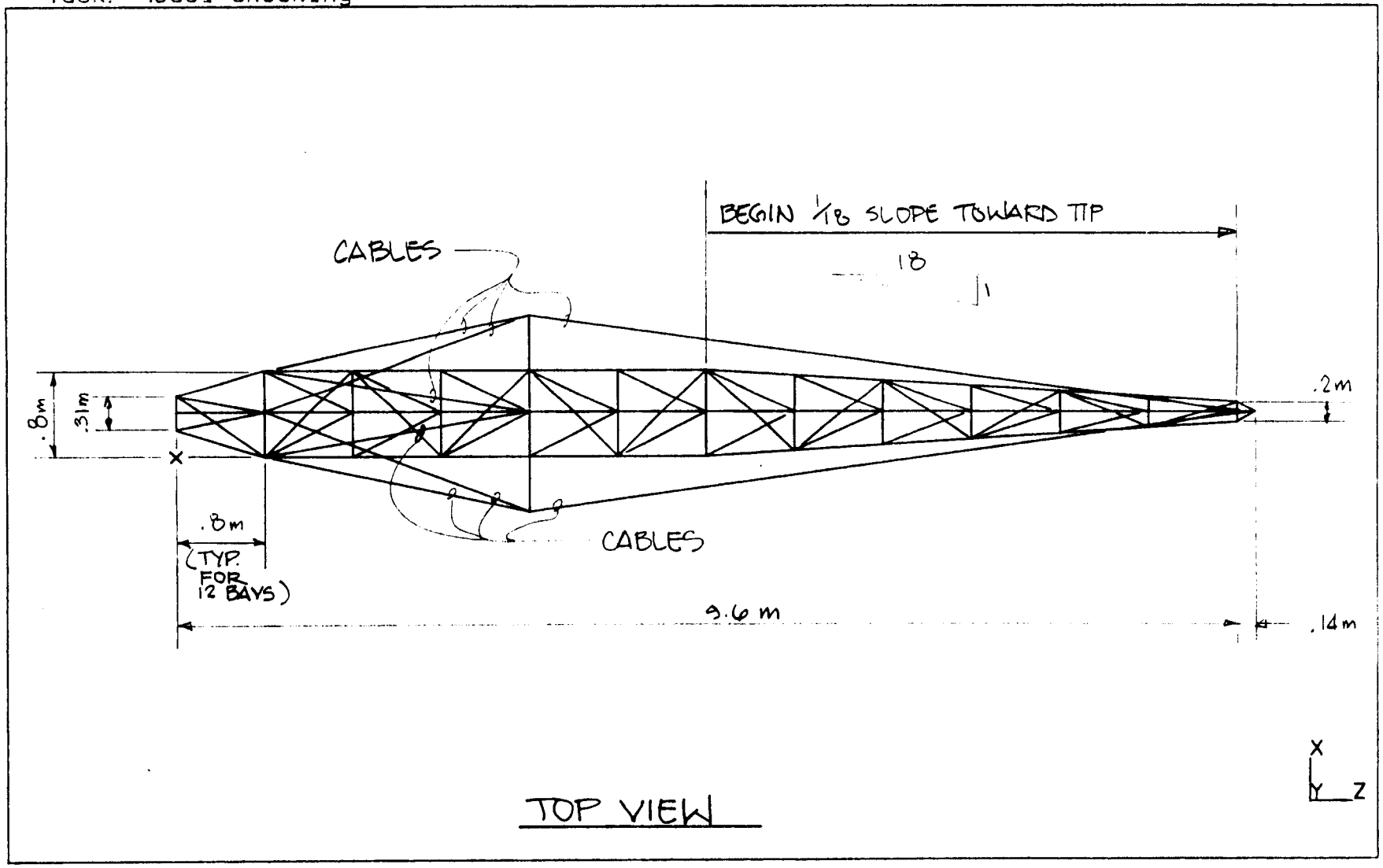

SDRC I-DEAS 3.1: Pre/Post Processing
DATABASE: BOOM STRESS ANALYSIS
VIEW: No stored VIEW
Task: Model Checking

24-NOV-86 16:26:36
UNITS = SI
DISPLAY: No stored OPTION

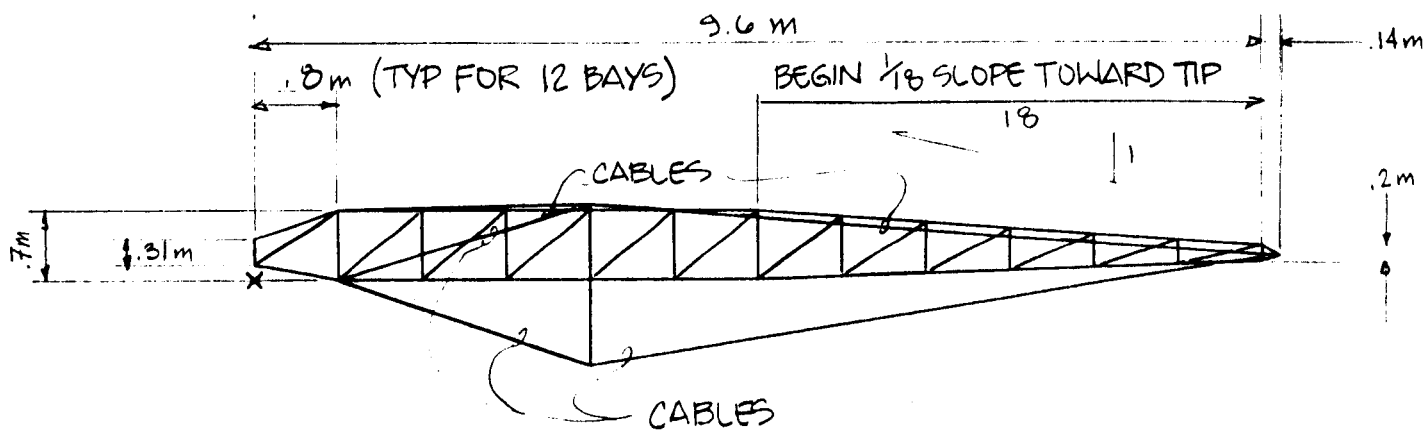

SIDE VIEW

SDRC I-DEAS 3.1: Pre/Post Processing 24-NOV-86 19.26.53

DATABASE. UNITS = SI

VIEW. No stored VIEW DISPLAY. No stored OPTION

Task: Model Preparation

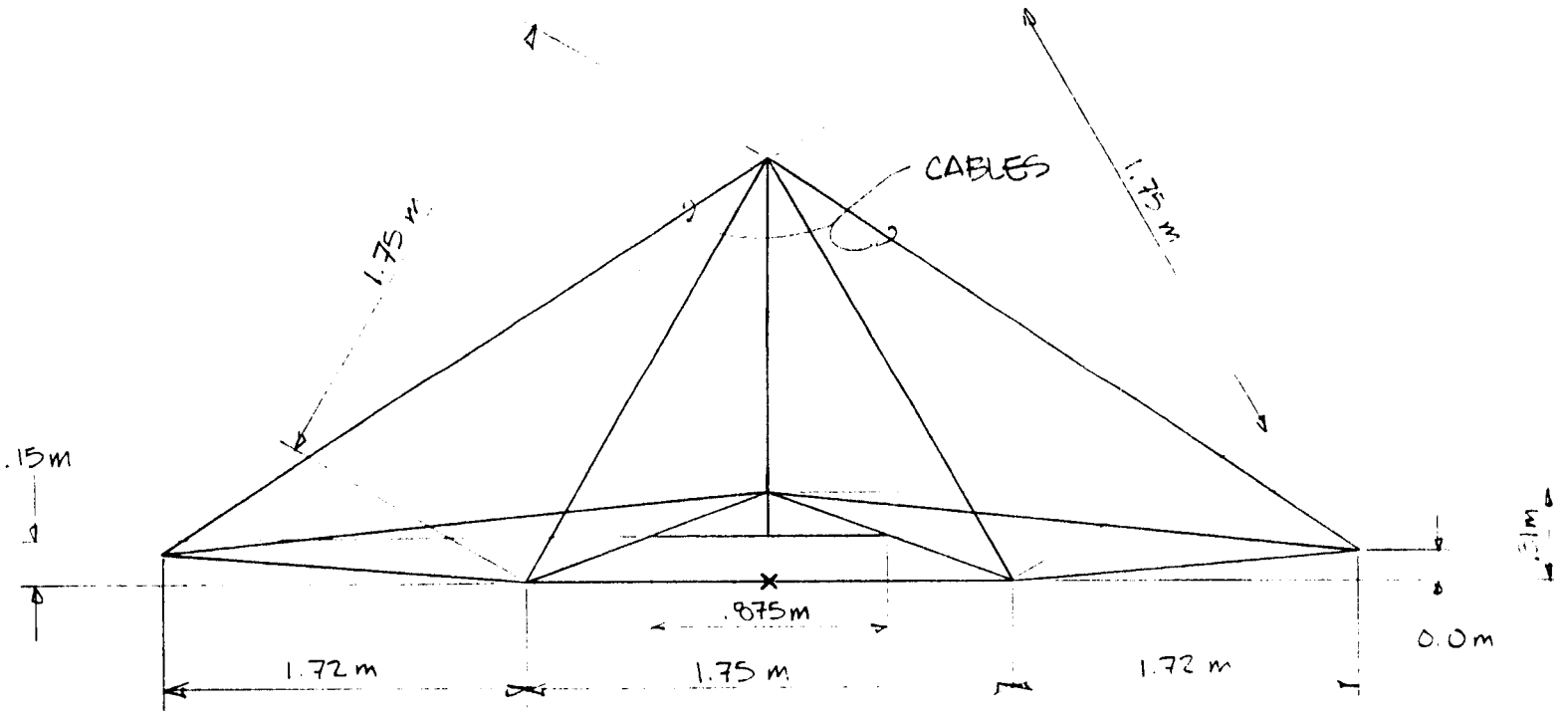

TOP VIEW OF BASE

SDRC I-DEAS 3.1: Pre/Post Processing 24-NOV-86 17:09:22

DATABASE: UNITS = SI

VIEW: No stored VIEW DISPLAY: No stored OPTION

Task: Model Preparation

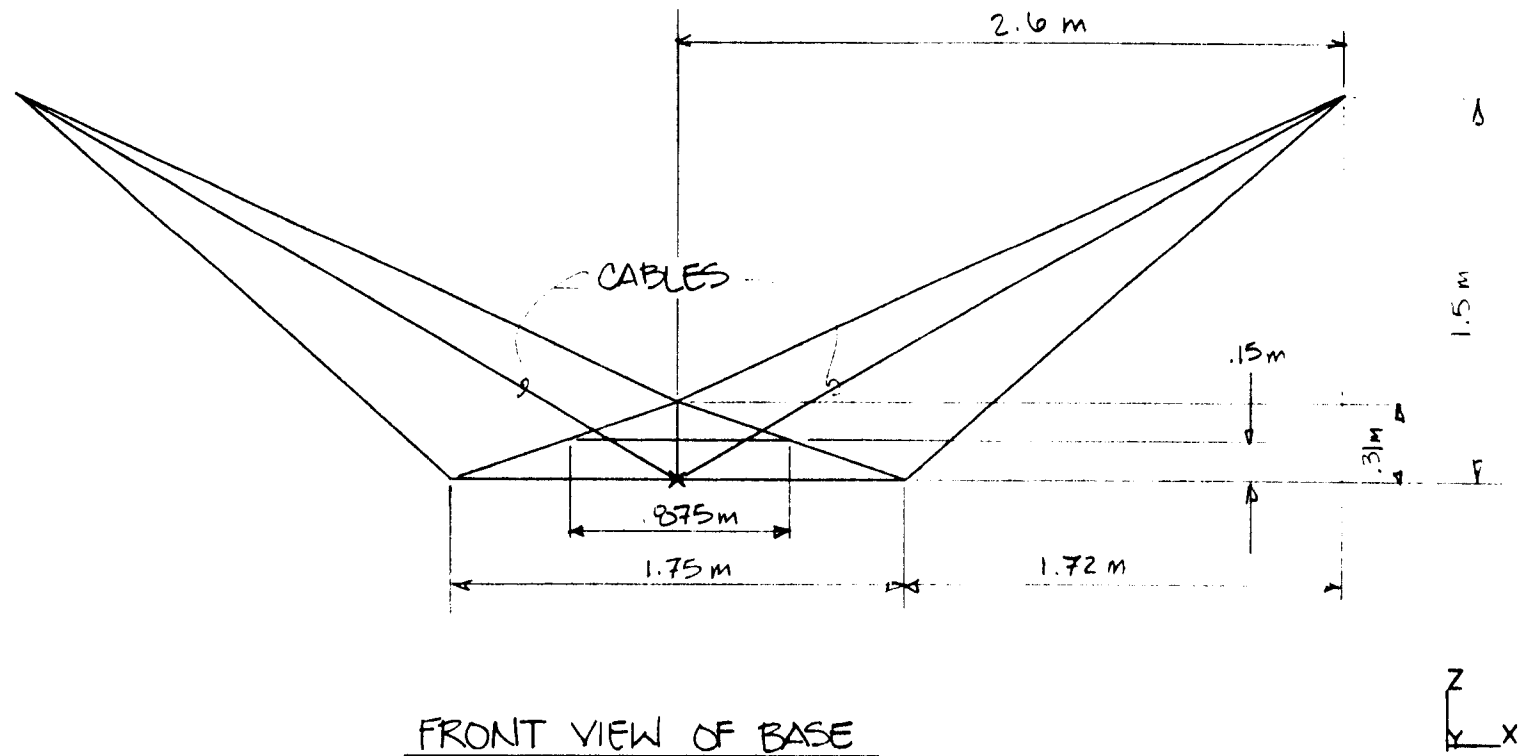

FRONT VIEW OF BASE

- Working area of crane relative to SKITTER

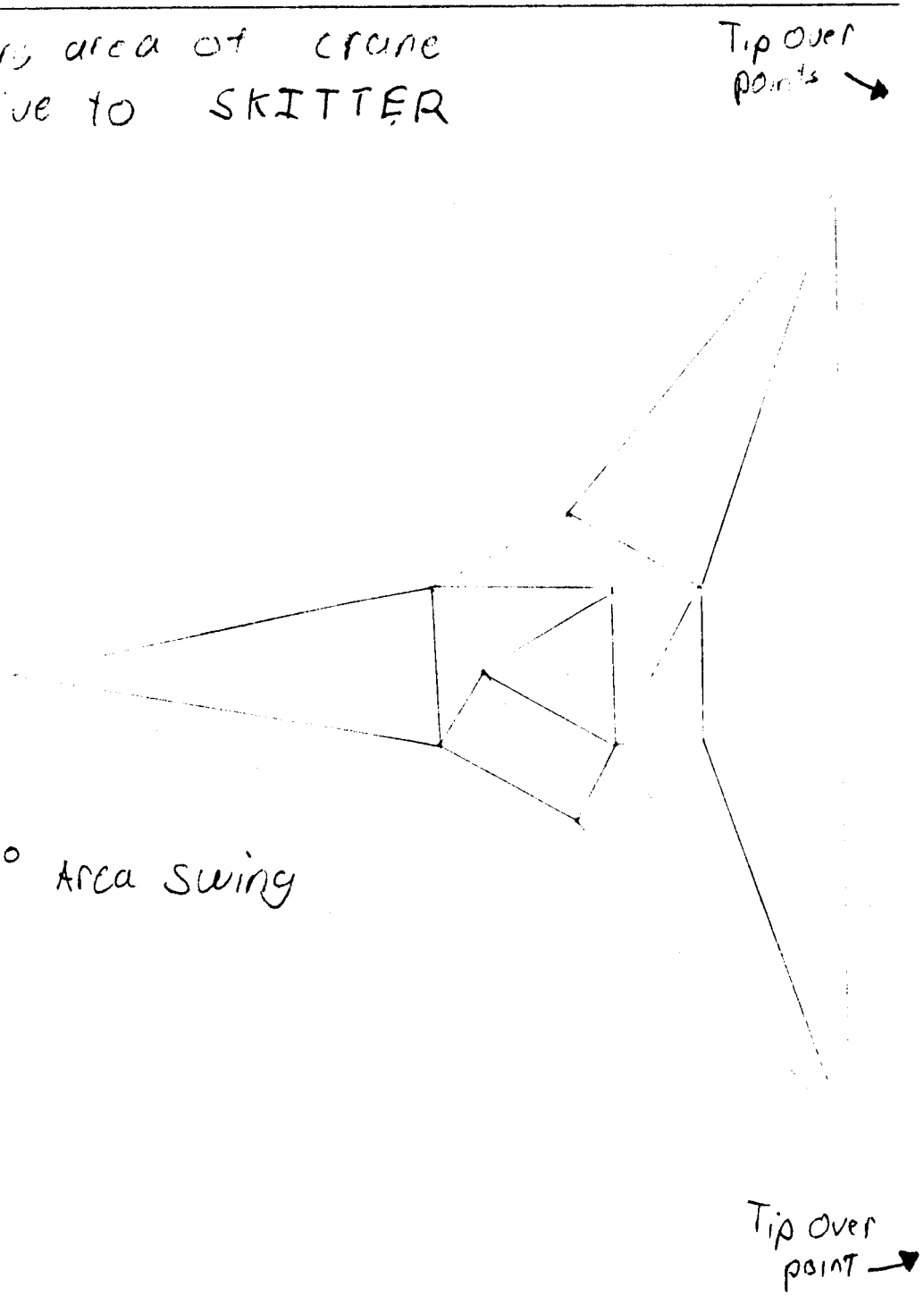

- 120° Area swing

NOTE: MALE PLUG TO BE PLACED IN REAR OF EACH TRUSS SECTION ONLY THEN JOINED TO FORWARD SECTION OF FOLLOWING TRUSS SECTION

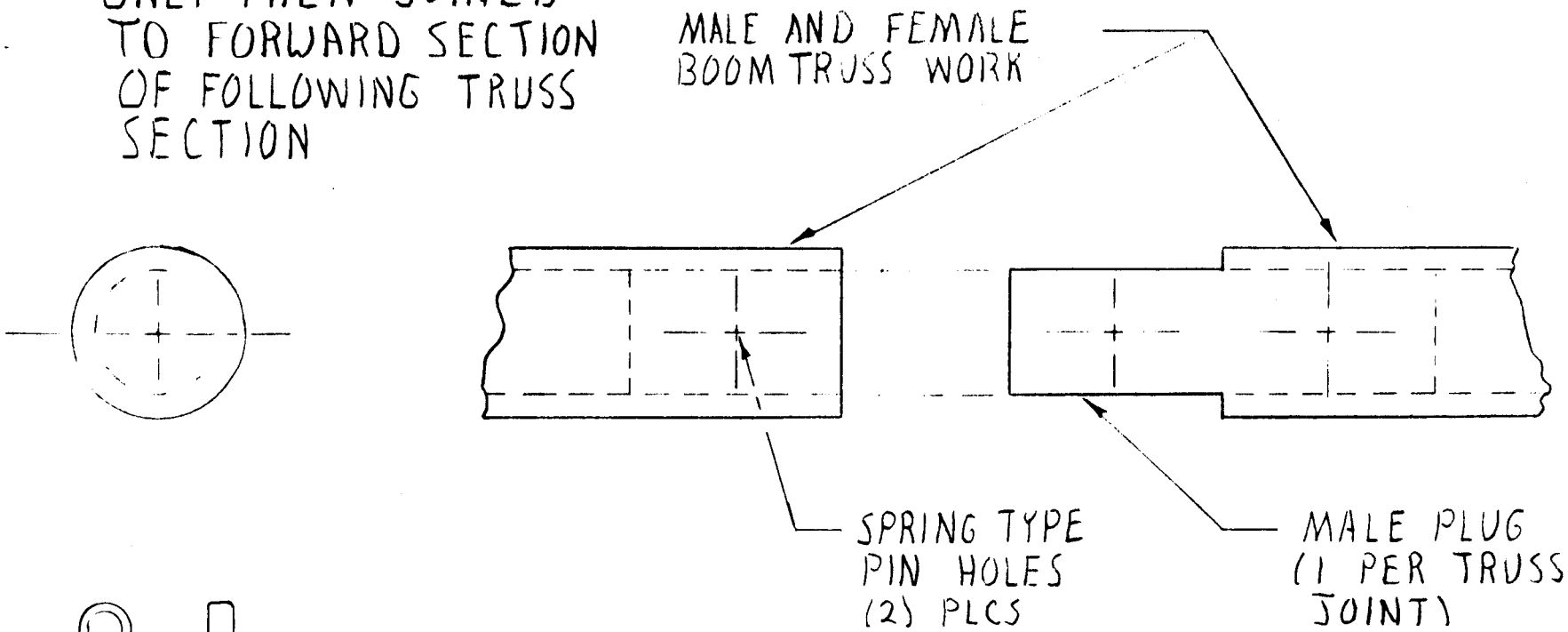

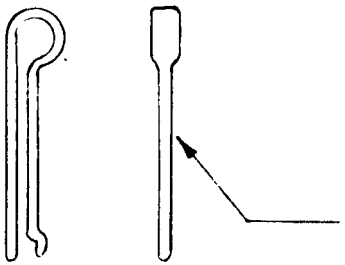

TRUSS JOINTS.		
SCALE: 1/2 INCH	APPROVED BY:	DRAWN BY MARTINY
DATE: 11/26/86		REVISED
		DRAWING NUMBER

8½ X 11 PRINTED ON NO. 1000H CLEARPRINT

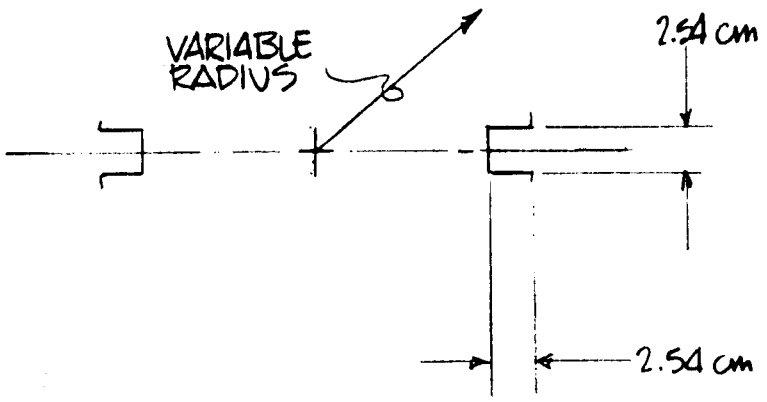

DOWEL DESIGN

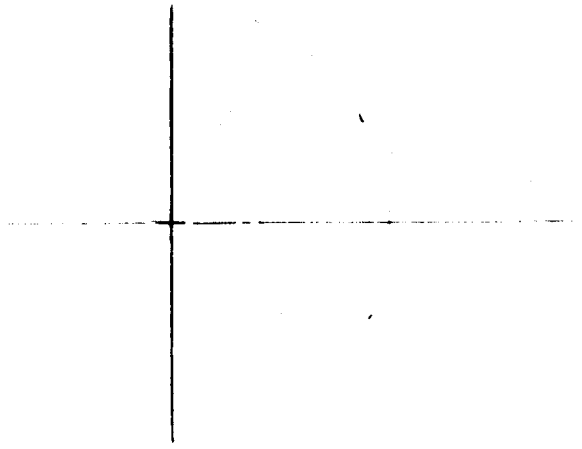

SOCKET DESIGN

BALL & SOCKET DESIGN – DOWEL & SOCKET DESIGN

SCALE:	APPROVED BY:	DRAWN BY JAJ
DATE:		REVISED
		DRAWING NUMBER

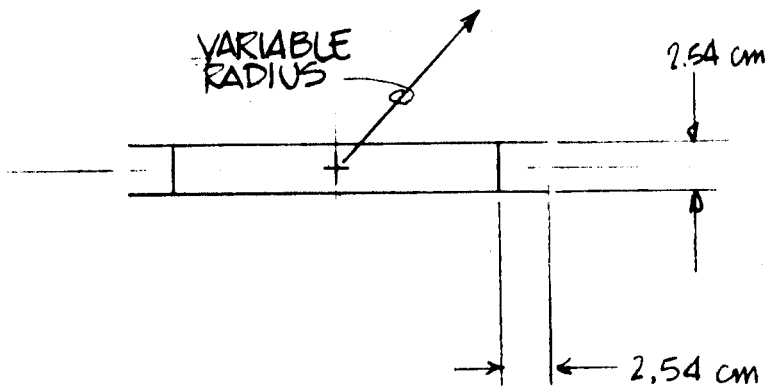

IDEAL BALL DESIGN

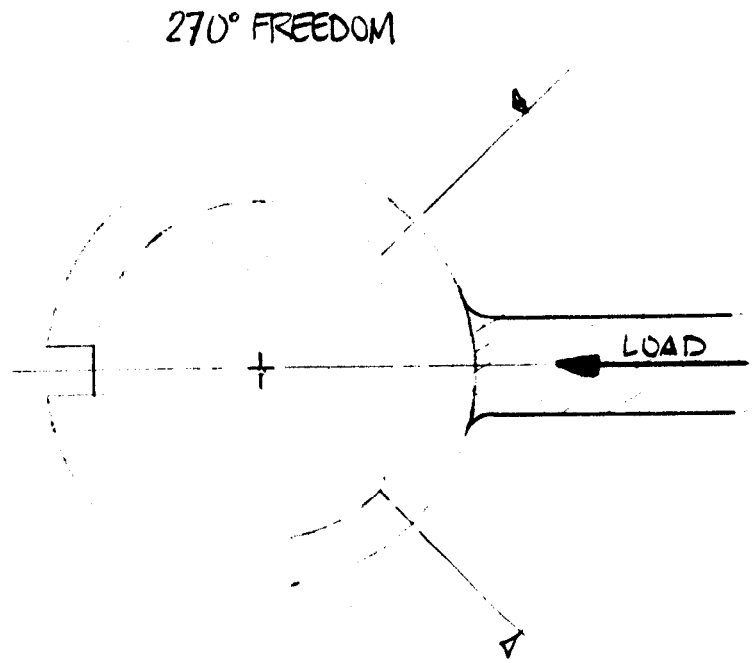

BALL & SOCKET DESIGN – BALL DESIGN		
SCALE:	APPROVED BY:	DRAWN BY JAJ
DATE:		REVISED
		DRAWING NUMBER

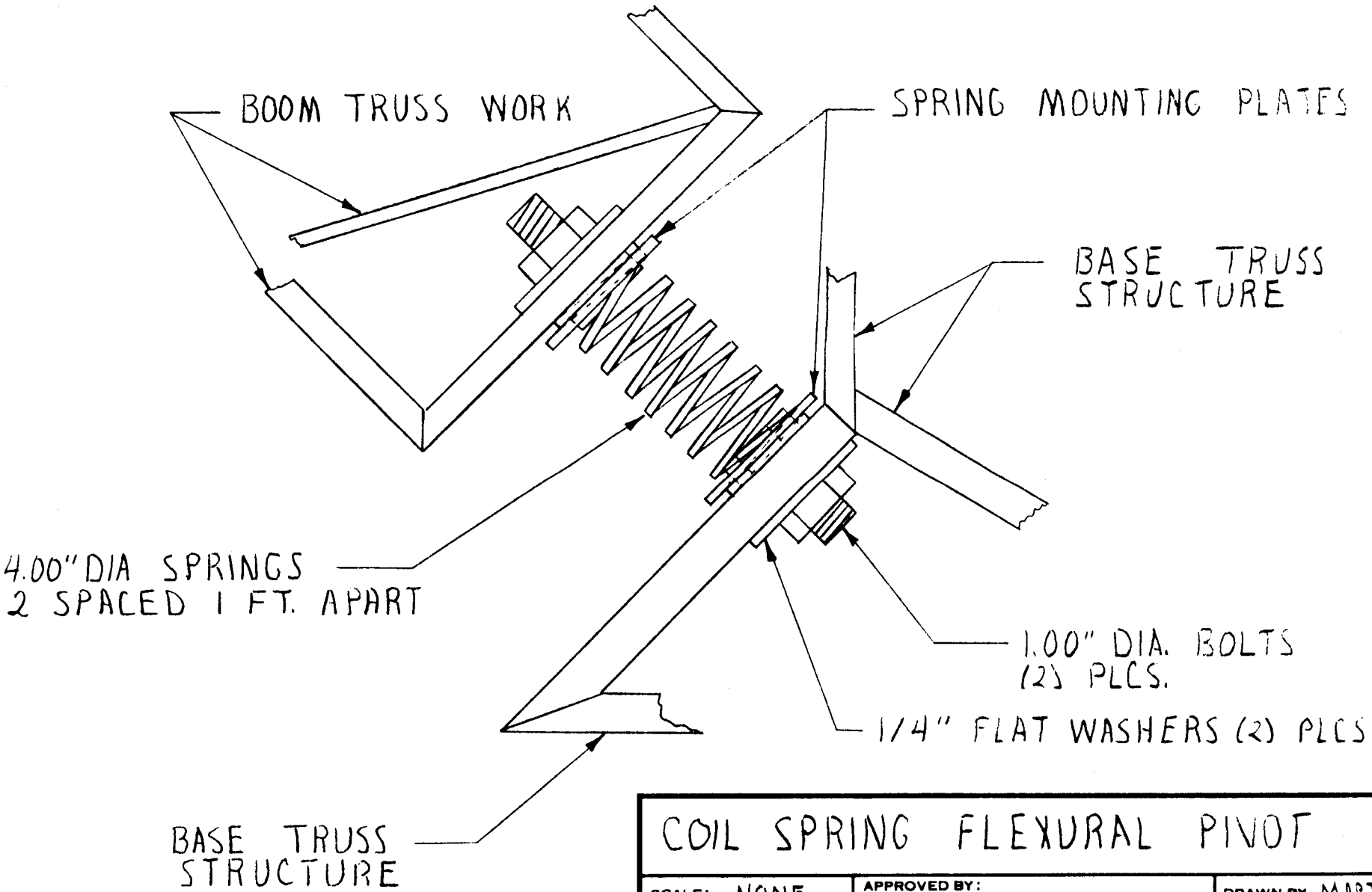

NOTE: DUST COVER NOT SHOWN

COIL SPRING FLEXURAL PIVOT		
SCALE: NONE	APPROVED BY:	DRAWN BY MARTINY
DATE: 11/26/86		REVISED ~
SIDE VIEW		
		DRAWING NUMBER

8½ X 11 PRINTED ON NO. 1000H CLEARPRINT

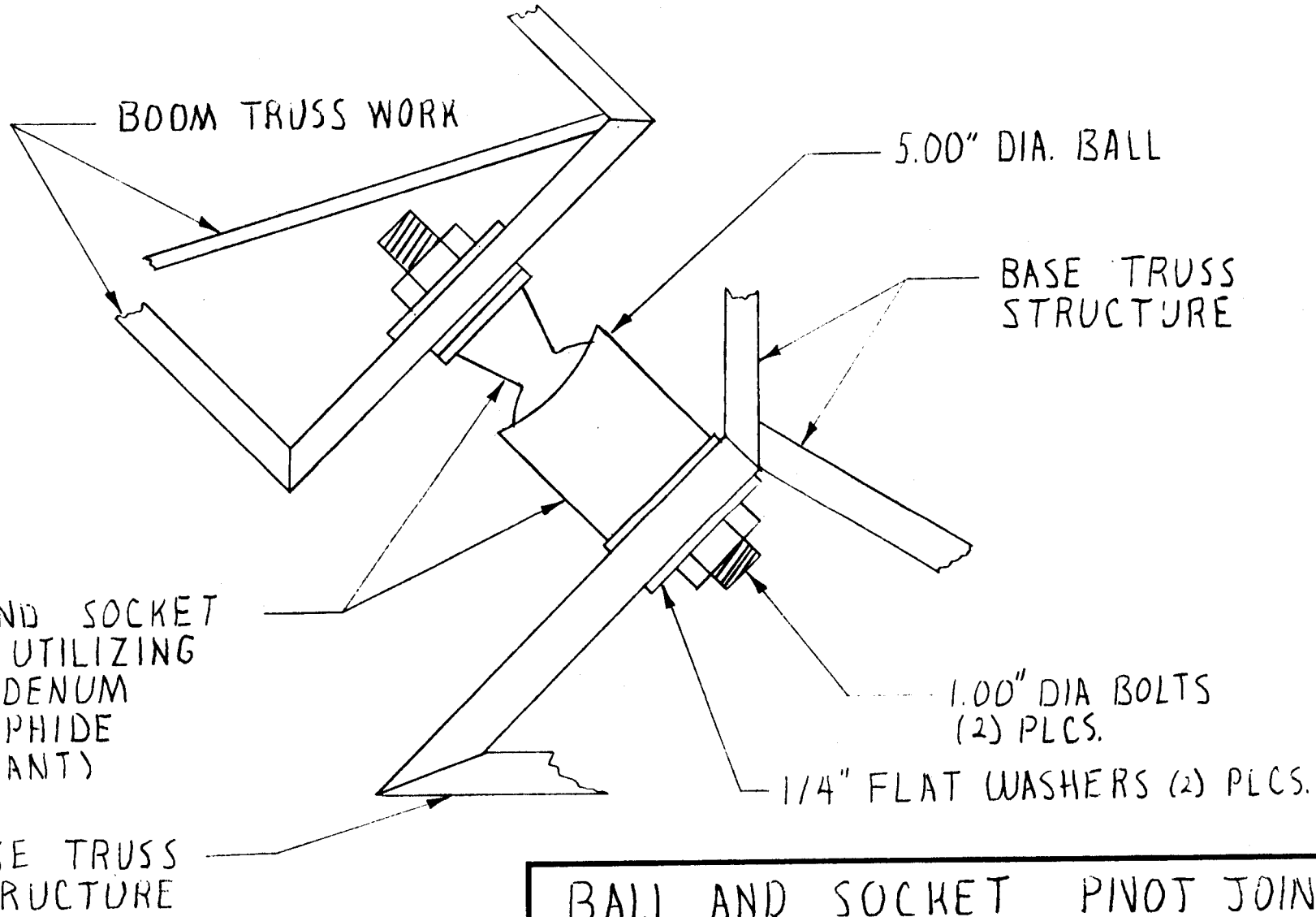

NOTE: DUST COVER NOT SHOWN

BALL AND SOCKET PIVOT JOINT		
SCALE: NONE	APPROVED BY:	DRAWN BY MARTINY
DATE: 11/26/86		REVISED
SIDE VIEW		
		DRAWING NUMBER

LINE PULL TO WEIGHT COMPARISION
FOR RAMSES DC ELECTRIC WORM GEAR WINCHES
WITH FORTY FEET OF PULL

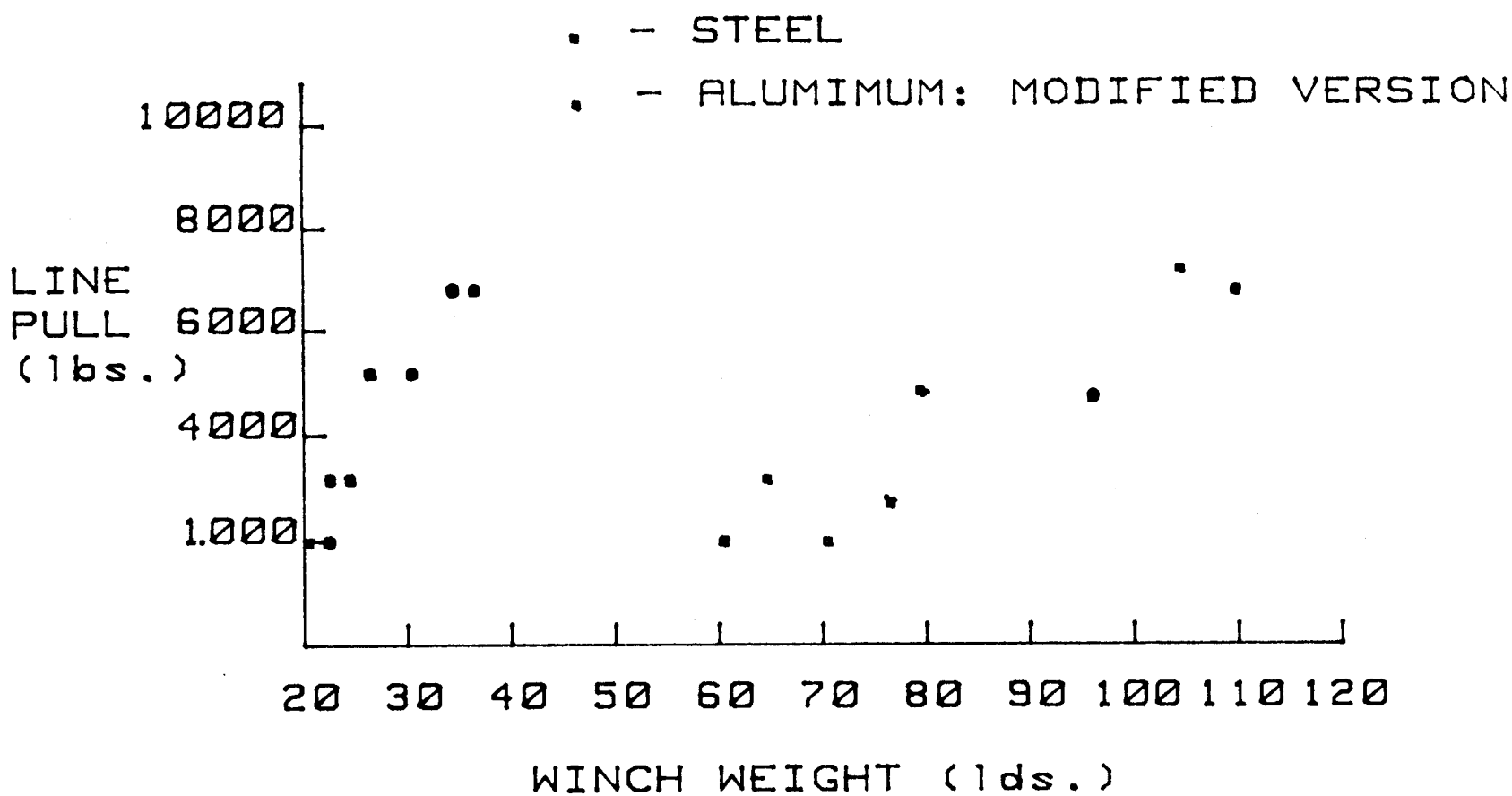

ACKNOWLEDGMENTS

The Crane Group would like to thank the following people for their contributions:

-Wallace A. Hanson, MME, Elevator Entrepreneur

-Harry L. Wheeler, BME at Grumman Aerospace Corp.

-Paul Allen, Senior ME at Georgia Tech

-Gary McMurry, BME at Georgia Tech

-Brice MacLaren, BME at Georgia Tech

REFERENCES

Hsieh, Yuan-Yu. Elementary Theory of Structures. Prentice-Hall, Inc.:New Jersey, 1982.

Landsdown, A.R. Lubrication--A Practical Guide to Lubricant Selection.
N.Y.: Pergamon Press. 1982.

Askeland, Donald R. The Science and Engineering of Materials. California:Wadsworth, Inc. 1984.

Federation Europeanne De La Manutention, Section 1. Rules for the Design of Hoisting Appliances. France: 1962,

Greiner, H.G. Crane Handbook. Illinois: Whiting Corp. 1955.

West, Richard A. Electric Traction for Cranes. London: Sir Isaac Pitman & Sons, LTD. 1946.

Ogata, Katsuhiko. Modern Control Engineering. N.J.: Prentice-Hall, Inc. 1970.

Kevlar Brochures. received Nov. 12, 1986, DuPont, U.S.A., 1986

Wheeler, Harry S., Manufacturing Engineer, correspondence: Nov. 24, 1986. Grumman Aerospace Corp. PIT66.

Argrist, Stanley W. Direct Energy Conversion. Boston: Allyn and Becon, Inc. 1982.

Ashton, J.E., Halpin, J.C., Petit, P.H. Primer on Composite Materials: Analysis. Conn: Tehnomic Publishing Co. 1969.

Atherton, William Hi, m.sc., Hoisting Machinery , 1940 London: The Technical Press Ltd.

Lucas, John W. editor, Thermal Characteristics of the Moon, 1972, MIT The Alpine Press Inc., The MIT press Cambridge, Mass.

Nunally, S. W. Managing Construction Equipment, 1977, Prentice-Halll, Inc., Englewood Cliffs, New Jersey.

Cranes Annual 1974-1976