NASA
NAS 13-290
NASA-CR
325906

CHEMICAL
RESEARCH
DEVELOPMENT &
ENGINEERING CENTER

AMCCOM TEST REPORT

SAFETY CHARACTERIZATION TESTING OF SELECTED EXPLOSIVES, PROPELLANT, AND PYROTECHNICS

by

F. L. McIntyre

PROJECT COORDINATOR
Robert A. Brack

January 12, 1987

(NASA-CR-187761) SAFETY CHARACTERIZATION TESTING OF SELECTED EXPLOSIVES, PROPELLANT, AND PYROTECHNICS (Sverdrup Technology) 41 p

N91-70275

Unclas
00/28 0325906

NASA NATIONAL SPACE TECHNOLOGY LABORATORIES
SVERDRUP TECHNOLOGY INCORPORATED
Engineering Sciences Department
NSTL, MS 39529

Contract No. NAS 13-290

US ARMY ARMAMENT MUNITIONS AND CHEMICAL COMMAND
Physical Protection Directorate
Aberdeen Proving Ground, Maryland 21010-5423

Approved for public release, distribution unlimited.

UNCLASSIFIED
SECURITY CLASSIFICATION OF THIS PAGE

REPORT DOCUMENTATION PAGE

1a. REPORT SECURITY CLASSIFICATION	1b. RESTRICTIVE MARKINGS
2a. SECURITY CLASSIFICATION AUTHORITY	3. DISTRIBUTION/AVAILABILITY OF REPORT Distribution limited to US. Government agencies only because of test and evaluation. Other requests (Cont'd on Back)
2b. DECLASSIFICATION/DOWNGRADING SCHEDULE	
4. PERFORMING ORGANIZATION REPORT NUMBER(S)	5. MONITORING ORGANIZATION REPORT NUMBER(S)
6a. NAME OF PERFORMING ORGANIZATION Sverdrup Technology, Inc. — 6b. OFFICE SYMBOL (If applicable)	7a. NAME OF MONITORING ORGANIZATION
6c. ADDRESS (City, State, and ZIP Code) Technical Services Laboratory National Space Technology Laboratories NSTL, MS 39529	7b. ADDRESS (City, State, and ZIP Code)
8a. NAME OF FUNDING/SPONSORING ORGANIZATION U.S. Army AMCCOM — 8b. OFFICE SYMBOL (If applicable)	9. PROCUREMENT INSTRUMENT IDENTIFICATION NUMBER
8c. ADDRESS (City, State, and ZIP Code) AMCCOM Resident Operations Office National Space Technology Laboratories NSTL, MS 39529	10. SOURCE OF FUNDING NUMBERS PROGRAM ELEMENT NO. / PROJECT NO. / TASK NO. / WORK UNIT ACCESSION NO

11. TITLE (Include Security Classification)
Safety Characterization Testing of Selected Explosives, Propellant and Pyrotechnics

12. PERSONAL AUTHOR(S)
F.L. McIntyre

13a. TYPE OF REPORT	13b. TIME COVERED	14. DATE OF REPORT (Year, Month, Day)	15. PAGE COUNT
Final Report	FROM Feb 86 TO Dec 86	January 12, 1987	44

16. SUPPLEMENTARY NOTATION

17. COSATI CODES		
FIELD	GROUP	SUB-GROUP

18. SUBJECT TERMS (Continue on reverse if necessary and identify by block number)
AGM P158A Propellent
Rapid Deflagrating Material
CH-6
RDX
Tetryl
(Continued on Back)

19. ABSTRACT (Continue on reverse if necessary and identify by block number)

A total of 8 materials were tested in accordance with MIL-STD-1751. The specific tests included: Small Scale Gap Test, Impact Sensitivity, Impact Vulnerability, Differential Thermal Analysis, Hot Wire Ignition Test, Electrical Spark Sensitivity, Friction Sensitivity, and Cook-off Temperature. The materials were found to be insensitive to friction, electrical sparks and impact vulnerability. The explosive materials were sensitive to the small-scale gap test and the pyrotechnic materials were sensitive to the hot wire ignition test. The Zirconium/Potassium Perchlorate/Vitron mixture was found to be sensitive to electrical spark ignition, 0.0000008 joules. Tetryl testing was also found to be sensitive electrical spark ignition, 0.0784 joules.

20. DISTRIBUTION/AVAILABILITY OF ABSTRACT ☐ UNCLASSIFIED/UNLIMITED ☐ SAME AS RPT ☐ DTIC USERS	21. ABSTRACT SECURITY CLASSIFICATION
22a. NAME OF RESPONSIBLE INDIVIDUAL	22b. TELEPHONE (Include Area Code) — 22c. OFFICE SYMBOL

DD FORM 1473, 84 MAR — 83 APR edition may be used until exhausted. All other editions are obsolete.

SECURITY CLASSIFICATION OF THIS PAGE
UNCLASSIFIED

3. Distribution/Availability of Report (Cont'd)

for this document should be referred to Commander, U.S. Army AMCCOM: CREDC:DRSMC-CLJ-IR, Aberdeen Proving Grounds, Maryland 21010

18. Subject Terms (Continued)

Boron/Potassium Nitrate/Laminac MIL P-46994A
Zirconium/Potassium
Chlorate/Viton
Boron/Potassium Nitrate Type 2C Ignition Granules

ORIGINAL PAGE IS
OF POOR QUALITY

PREFACE

This work was performed by NASA National Space Technology Laboratories (NSTL) under the direction of the AMCCOM Resident Operations Office (AROO) by Sverdrup Technology, Inc. as NASA's technical contractor. Experimental work was completed in September 1986.

Reproduction of this document in whole or part is prohibited except with permission of the Commander, US Army AMCCOM CRDC: ATTN: DSRMC-CLJ-IR, Aberdeen Proving Ground, Edgewood, Maryland 21010. However, the Defense Documentation Center is authorized to reproduce the document for United States Government purposes.

The use of trade names in this report does not constitute an official endorsement or approval of the use of such commercial hardware or software. This report may not be cited for purposes of advertisement.

The information in this document has not been cleared for release to the general public.

BLANK

SUMMARY

A total of eight materials were tested in accordance with MIL-STD 1751[1]. The specific test were: Small Scale Gap test; Impact Sensitivity; Impact Vulnerability; Differential Thermal Analysis; Hot Wire Ignition; Electrostatic Sensitivity; Friction Sensitivity; and Cook-off Temperature. Results from these test would be utilized by cognizant DoD safety authority for the interim qualification of these materials.

The materials tested were: AGM P-158A propellant, Rapid Deflagrating Material, CH-6 explosive, RDX explosive, Tetryl explosive, Boron/-Potassium Nitrate (B/KNO_3), Boron/Potassium Nitrate/Laminac (B/KNO_3/Laminac), and Zirconium/Potassium Perchlorate/Viton ($Zr/KClO_4$/Viton).

The results from the small scale gap tests indicate that the Rapid Deflagrating Material, B/KNO_3, B/KNO_3/Laminac, and Tetryl did not have any measurable indentation of the witness block using a 4.0 DBg attenuator. The $Zr/KClO_4$/Viton, CH-6, and RDX all had indications of an explosion with and indentation greater than 0.002 mil in the witness plate.

The Hot wire ignition test results showed that Tetryl, RDX, and CH-6 explosives did not ignite, have any visible effect, nor was there any damage to the witness plate. The Rapid Deflagrating Material, B/KNO_3, B/KNO_3/Laminac, and $Zr/KClO_4$/Viton each had audible reports, visible reactions, but no measurable damage to the witness plate. This would indicate the pyrotechnic mixtures are susceptible to hot wire ignition.

There were no reactions for any of the materials in 20 trials in the Impact Vulnerability tests.

There were no reactions in 25 trials at 20 mj, using 0.002 μfd capacitor at 4,500 vdc for any of the sample materials except $Zr/KClO_4$/-Viton and Tetryl whose minimum igniton level values were 0.0000008 and 0.00784 joules, respectively.

The Cook-off temperature 5 second values were 464, 393, 250, 245, 230, 491, 473, and 395 °C, for AGM P-158A propellant, Rapid Deflagrating Material, CH-6, RDX, Tetryl, B/KNO_3, B/KNO_3/Laminac, and $Zr/KClO_4$/Viton, respectively.

The Differential Thermal Analysis values were 533, 374, 228, 277, 207, 546, 579, and 491 °C, for AGM P-158A propellant, Rapid Deflagrating Material, CH-6, RDX, Tetryl, B/KNO_3, B/KNO_3/Laminac, and $Zr/KClO_4$/Viton, respectively.

Impact sensitivity values at the 3.75 inch drop height were 0/10, 3/10, 1/10, 2/10, 1/10, 0/10, 0/10, and 0/10 for AGM P-158A propellant, Rapid Deflagrating Material, CH-6, RDX, Tetryl, B/KNO_3, B/KNO_3/Laminac, and $Zr/KClO_4$/Viton, respectively. Impact sensitivity values at the 10 inch drop height were 2/10, 3/10, 4/10, 4/10, 6/10, 3/10, 2/10, and 0/10 for AGM P-158A propellant, Rapid Deflagrating Material, CH-6, RDX, Tetryl, B/KNO_3, B/KNO_3/Laminac, and $Zr/KClO_4$/Viton, respectively.

PRECEDING PAGE BLANK NOT FILMED

PAGE 4 INTENTIONALLY BLANK

Only two materials that reacted to the friction stimulus of the Tri-services Roto-friction device. These materials were Hivalite and B/KNO_3. The measured friction sensitivity values were (E) 16.65 and 671.09 ft-lb for Rapid Deflagrating Material and B/KNO_3, respectively. The average rate of heating (q) were 3.75 and 26.06 ft-lb/sec for Rapid Deflagrating Material and $BKNO_3$, respectively. The product of the energy value (E) and the average heating rate (q) is used to determine the ease of initiation from friction sensitivity. The (Eq) values were 62 and 16817 ft-lb^2/sec for Rapid Deflagrating Material and $BKNO_3$, respectively.

CONTENTS

		Page
1.0	INTRODUCTION	9
	1.1 Background	9
	1.2 Objective	9
2.0	EXPERIMENTAL METHODS	9
	2.1 Materials	9
	2.2 Test Methods	9
	1. Differential Thermal Analysis	9
	2. Explosion Temperature	10
	3. Heat of Combustion	10
	4. Heat of Reaction	10
	5. Propagation Index	10
	6. Impact Sensitivity	10
	7. Electrical Spark Sensitivity	10
	8. Roto-friction Test Apparatus	11
	9. Hot Wire Ignition Test	12
	10. Small Scale Gap Test	12
	11. Impact Vulnerability Test	13
3.0	RESULTS	14
	3.1 Discussion	14
	1. Differential Thermal Analysis	14
	2. Explosion Temperature	14
	3. Heat of Combustion	14
	4. Heat of Reaction	14
	5. Propagation Index	14
	6. Impact Sensitivity	14
	7. Electrical Spark Sensitivity	15
	8. Roto-friction Test Apparatus	15
	9. Hot Wire Ignition Test	15
	10. Small Scale Gap Test	15
	11. Impact Vulnerability Test	16
4.0	CONCLUSIONS	16
5.0	REFERENCES	16
	APPENDIX A - Tables and Figures	19

BLANK

SAFETY CHARACTERIZATION TESTING OF SELECTED EXPLOSIVES, PROPELLANTS AND PYROTECHNICS

1.0 INTRODUCTION

1.1 Background

Qualification tests are required for primary, booster and main charge explosives. The qualification tests and test methods are outlined in MIL-STD-1751[1]. These tests, include mandatory testing for qualification and tests designed to provide background information on explosives intended for Air Force use. This standard is applicable to new or modified explosives intended for Air Force utilization. It is necessary that the explosives qualifying under this document for specific applications contain in their procurement specifications, sufficient tests, referenced to or described herin. This action will enhance the quality control standards governing physical and chemical properties of the explosive, which this document is designed to measure. When such tests are not included, the requirements of the MIL-STD-1751[1], at the discretion of the procuring activity, may be invoked, to demonstrate that the explosive as procured qualifies.

1.2 Objective

The objective of this study was to conduct tests as outlined in MIL-STD-1751[1] and provide data for qualification of the selected materials for Air Force utilization.

2.0 EXPERIMENTAL METHODS

2.1 Materials

A total of eight materials were supplied for test. These materials were: AGM P-158A supplied by Hercules Incorporated, McGregor, TX; Rapid Deflagrating Material 300520, Batch II, provided by Teledyne Mc Cormick Selph, Hollister, CA; Tetryl MIL-T-339, CH-6 MIL-R-21763, RDX MIL-R-398, Boron/Potassium Nitrate/Laminac (B/KNO_3/Laminac) MIL-P-46994A, Boron/Potassium Nitrate (B/KNO_3) Type 2C Ignition Granules [B/KNO_3 - 18+/-1%;82+/-2%], and Zirconium/Potassium Perchlorate/Viton ($Zr/KClO_4$/Viton - 53%/42%/5%) were provided by Rockwell International Corporation, Missile Systems Division, Duluth, GA. Pyrotechnic Specialties, Incorporated pressed the small scale gap test brass sleeves and the impact vulnerability test aluminum sleeves for Rockwell International Corporation. Teledyne Mc Cormick Selph provided the brass and aluminum sleeves filled with the Rapid Deflagrating Material for the small scale gap and impact vulnerability tests.

2.2 Test Methods

1. Differential Thermal Analysis (Decomposition Temperature)-- Decomposition temperature is the determination of the ignition or decomposition temperature and other physical and chemical reaction which may occur in the sample when the material is heated at a controlled rate. The test measures the temperature difference between the sample and a

PAGE 8 INTENTIONALLY BLANK

PRECEDING PAGE BLANK NOT FILMED

thermally inert reference material as both are heated at constant rate. Typical Differential Thermal anaysis test apparatus is shown in Figure 1.

2. Explosion Temperature (Henkin-McGill Ignition Temperature Test) (Cook-off Test)--This test measures the temperature at which the sample will react when the sample is submerged in a molten metal bath for one to five second intervals. A 20-mg sample is placed into a copper blasting cap shell and emersed into a bath containing molten Woods metal at a known constant temperature. A number of trials using the Bruceton Analysis technique (up down method) to obtain the temperature at which the sample reacts within one to five seconds. The explosion temperature test set up is shown in Figure 2.

3. Heat of Combustion--Heat of Combustion determines the heat evolved in the complete oxidation of a substance under standard conditions of pressure and temperature. The test is conducted using a one gram sample material in a bomb calorimeter device with five atmospheres of oxygen. The results are reported as calories/gram. The heat of combustion and heat of reaction test apparatus is given in Figure 3.

4. Heat of Reaction--The heat of reaction is conducted in a similar manner as the heat of combustion test. A one gram sample is placed in the bomb calorimeter device and the test is conducted without the five atmospheres of oxygen. The results are reported as calories/gram.

5. Propagation Index--The propagation index is defined as the ease at which a material will ignite and continue to propagate throughout the total column length. The propagation index is the ratio of the heat of reaction to ignition temperature. The higher the ratio the easier the material will react.

6. Impact Sensitivity-- This test determines the sensitivity of a given sample material to an impacting (falling weight) upon the sample material under confinement. MIL-STD-1751[1] called for the use of the ERL Type 12 Impact device. The BoE Impact apparatus was used for this study. This id the impact device required for Transport Tests define in the DOD Explosives Hazard Classification Procedures, U. S. Army Technical Bulletin 700-2[2]. The BoE impact device is shown in Figure 4.

The 10 mg sample is placed between two parallel surfaces and inserted into the sample holder. The sample holder is placed into the base of the device. The 8 pound weight is raised to one of two predetermined drop heights of either 3-3/4 or 10 inches and a series of 10 trials are conducted at both drop heights for a total of 20 trials. The results are recorded as either an explosion, flame, and noise; decomposition, smoke, and no noise; or no reaction.

7. Electrical Spark Sensitivity--The electrical spark test determines the sensitivity of the sample material to the minimum amount of energy in an electrical spark discharge that will ignite the test specimen. The electrical spark discharge test device is shown in Figure 5. This energy is expressed in joules. The energy is determined by the following equation:

$$E = C * V^2 / 2$$

where C = capacitance in microfarads, and V = volts DC.

Approximately 20 milligrams of material is placed in the sample holder of the grounded anode. The electrode is charged with voltage through a series capacitor. A 0.002 μfd capacitor and 4,500 vdc which equates to 20 mj was used for all trials. A total of 20 trials and only 25 trials are to be conducted on each material.

The qualification criterion for a sample material will be to have passed the electrostatic sensitivity test and to be acceptable if there are no reactions in 25 consecutive trials at the 20 mj level.

8. Roto-Friction Test Apparatus[3,4]--This test determines the absolute value in foot-pounds of the frictional energy required to ingnite the sample material. The Tri-services friction apparatus is shown in Figure 6.

The device provides frictional energy by spinning a rod on the sample held in a low-thermal conductive sample holder. The energy is calculated from the torque load, deflection of the sample holder in degrees, the rpm of the spinning rod, the dead weight load and the time to fire.

Dead load weights of 5, 15, and 25 pounds are placed on the friction rod to produce the desired force, A 20-mg sample is placed in the sample holder and the sample holder is placed in the torque arm arrangement. A torque load of 4, 8, or 12 ounces is attached to the torque arm. The sample is subjected to rpm values of 1,200, 2,500 and 4,800. A timer and the motor are started simultaneously and then allowed to run for a maximum of 30 seconds. In the event there is a no reaction of the sample in less than 30 seconds the motor and timer are stopped. The results of either a reaction or a no reaction are recorded. A total of 27 trials are performed on each sample, one trial for each of the three dead load weights, one trial each for each of the three rpm values and one trial each for each of the torque load weights.

The energy to decompose the sample will be noted by a flash or a fire, a puff of smoke and/or an audible report. The energy is calculated in foot-pounds by the following equation:

$$E = \quad * W * T * t * \text{ft-lb}/30$$

Where W = the angular velocity in rpm of the rotating friction rod; t = time of the reaction in seconds; T = the torque on the rod in foot-pounds.

The value "q" is the rate of energy applied and is determined by dividing the energy value "E" by the time to fire, as shown in the folowing equation:

$$q = E/t$$

Both the "E" and "q" values are important definitive quantities that are required to evaluate the friction sensitivity of the sample material. The product of these two values determine the degree of relative sensitivity of the sample. For tests under 10 seconds this value will be relative constant for each sample material. "Eq" is determined by:

$$Eq = E * q$$

The smaller the "Eq" product the more sensitive the sample material will be to friction.

9. Hot Wire Ignition Test-- A representative sample of the candidate material will be subjected to the hot wire igniton test as detailed. Figures 7 and 8 show the hot wire ignition arrangement.

The sample material particle size shall be compared to the diameter of the ignition wire. Therefore only explosives passing through a 325 mesh screen will be used. The sample material will dried to a constant weight at 55 °C (131 °F) before being loaded. Bridge 40 plug assemblies with 0.0508 mm (2 mil) diameter tungsten wire flush with the plug surface. Attach the spacer to the bridge plug assembly. Twenty bridged plug subassemblies each shall be loaded with the dry sample material by pressing the sample material flush (+/- 0.010 inch) with the spacer at pressures of 4,000 and 15,000 lb/in^2, respectively. Each loaded unit will be tested with an ohmmeter prior to firing to determine that the tungsten bridgewire is intact. The test unit shall then be placed sample material side down on an aluminum witness plate and fired. The firing circuit shall provide 12 volts at 45 ampere hours capacity. The total firing circuit resistance shall not exceed 0.4 ohm. Testing shall continue until all samples are tested.

The qualification criteria for the candidate mixture shall be reported to have passed the hot wire ignition test if none of the 40 samples show any evidence of reaction in the form of visible, audible, or measurable external damage to the test material, the test unit, or the witness plate. The tungsten wire shall, however, have been burned out as determined by an ohmmeter.

10. Small Scale Gap Test-- A representative sample of the candidate booster explosive shall be subjected to the standardized small scale gap test. The test apparatus consists, essentially, of an explosive donor, an attenuating spacer, the acceptor and a steel dent block. Figures 9, 10, 11 and 12 show the small scale gap test assemblies and test setup.

The donor assemblies consist of seven increments of RDX, Type B. Class B, JAN Spec. R-398 explosives filled in a brass cylinders 2.54 cm (1.0 inch) in outside diameter by 3.81 cm (1.5 inch) long, containing a centrally-located hole a 0.508 cm (0.2 inch) in diameter diameter. The input face of the donor and the output face of the acceptor are held flat within a maximum of 0.0508 mm (2 mils) 0.0254 mm (1 mil) is preferable. RDX which is pressed in 7 increments at a pressure of 16,000 +/- 1,000 psi. Twenty five donors will be prepared for each sample material to be tested. Five donors will be selected at random, assembled in the

test fixture and fired against the block by initiation of the MK 70 Mod O detonator by an appropriate ignition circuit. To be acceptable for use in the sensitivity test, the average depth of dent produced in the block by five representative donors must be between 1.524 and 1.651 mm (60 to 65 mils) and the standard deviation must not exceed 0.1016 mm (4.0 mils). Each witness block will only be used once. The accpetor assemblies are the exact same as the donor assemblies and they will be loaded with the sample material in eight equal increments at 16,000 +/- 1,000 psi. The acceptor assemblies will be adjusted in weight so that the entire column height of the brass sleeve is filled after pressing. The attenuator is made from Lucite, 2.54 cm (1.0 inch) in diameter with smooth, flat parallel faces. A 4.0 Decibang attenuator was used for all tests.

The qualification criteria for the candidate material shall be reported to have passed the Small Scale Gap Test if there are no explosions in 20 and only 20 trials. A reaction causing a dent of 0.0508 mm (0.002 inch)or more shall be considered an explosion.

11. Impact Vulnerability Test--Impact vulnerability tests for this requirement shall be performed using the arrangement in Figure 13 and the following experimental conditions.

The specimen used for each trial shall consist of one cylindrical pellet 2.223 cm (0.875 inch) in diameter and 2.54 cm (1.00 inch) long, loaded directly into an aluminum tube 2.54 cm OD by 2.210 cm ID (1.00 inch OD by 0.870 inch ID) at a pressure of 16,000 +/- 1,000 lbs/in^2. A driving plate used in the impact vulnerability tests shall be AISI E6150 steel, heat treated to a hardness of 28 - 31 Rockwell C. The driving plate shall have a diameter of 5.08cm (2.00 inches) and a thickness of 1.905 cm (0.750 inch). A propulsion charge shall be sufficient to propel the driving plate at a velocity of 121.92 meter/second (400 ft/sec). As shown in Figure 13 an explosive column 5.08 cm (2.00 inch) in diameter by 20.32 cm (8 inches) long, low bulk density nitroguanidine loaded at 0.685 g/cm^3, 70.5 grams 5.08 cm (2 inch) increment should give the desired result, but the velocity shall be measured in a preliminary experiment. The plate velocity shall be determined by electronic time interval measurement system which will provide an accuarcy of at least 2% over the measured interval. The propulsion charge shall be adjusted until five consecutive shots give velocities within the specified range. The propulsion charge density which gives this result shall be used in the test of the 20 charges of each candidate material.

The qualification criteria for the candidate material shall have passed the impact vulnerability test if there are no explosions in 20 of only 20 trials. for the purposes of this specification, any reaction which caused detectable damage to the witness plate shall be considered an explosion.

3.0 RESULTS

3.1. Test Results

Appendix A contains the figures and tables of data.

3.2 Discussion

1. Differential Thermal Analysis tests were conducted in lieu of the Vacuum Stability test as outlined in MIL-STD-1751[1]. The results achieved on all of the sample materials are shown in Table 1. The decompositon temperatures were 533, 374, 228, 277, 207, 546, 579, and 491 °C, for AGM P-158A propellant, Rapid Deflagrating Material, CH-6, RDX, Tetryl, B/KNO_3, B/KNO_3/Laminac, and $Zr/KClO_4$/Viton, respectively.

2. Explosion (Cook-off) temperature tests were conducted in accordance with procedures as outlined in paragraph 5.3.10 of MIL-STD-1751[1]. The results are given for the 5 and 10 second ignition temperatures in Table 2. The explosion (cook-off) temperature 5 second values were 464, 393, 250, 245, 230, 491, 473, and 395 °C, for AGM P-158A propellant, Rapid Deflagrating Material, CH-6, RDX, Tetryl, B/KNO_3, B/KNO_3/Laminac, and $Zr/KClO_4$/Viton, respectively. The 10 second temperature values were 454, 381, 236, 226, 204, 469, 456, and, 378 °C, for AGM P-158A propellant, Rapid Deflagrating Material, CH-6, RDX, Tetryl, B/KNO_3, B/KNO_3/Laminac, and $Zr/KClO_4$/Viton, respectively. There is a difference in the temperature values for B/KNO_3 versus the B/KNO_3/-Laminac. In the B/KNO_3/Laminac mixture, the Laminac acts as a fuel and the ignition temperature is lower than the boron. This accounts for the lower ignition temperature.

3. Heat of Combustion and Heat of Reaction tests were conducted on the Rapid Deflagrating Material, B/KNO_3, B/KNO_3/Laminac, and the $Zr/KClO_4$/Viton mixtures. These tests were added to the program at the request of the Eglin AFB Project Office. The heat of combustion and heat of reaction values are given in Table 3. The heat of combustion values were 1696, 2721, 2001, and 998 cal/g for $Zr/KClO_4$/Viton, B/KNO_3/-Laminac, B/KNO_3, and Rapid Deflagrating Material, respectively. The heat of reaction values were 1647, 2354, 1967, and 989 cal/g for $Zr/KClO_4$/Viton, B/KNO_3/Laminac, B/KNO_3, and Rapid Deflagrating Material, respectively.

4. Propagation Index[5] values are given in Table 1. along with the decomposition temperature. The propagation index is a ratio between the heat of reaction and the decomposition temperature which can be used to determine the ease of initiation. The propagation index values were 3.4, 4.3, 3.4, and 2.6 cal/g-°C for B/KNO_3, B/KNO_3/Laminac, $Zr/KClO_4$/ Viton and Rapid Deflagrating Material, respectively.

5. Impact sensitivity results are given in Table 4. Impact sensitivity values at the 3.75 inch drop height were 0/10, 3/10, 1/10, 2/10, 1/10, 0/10, 0/10, and 0/10 for AGM P-158A propellant, Rapid Deflagrating Material, CH-6, RDX, Tetryl, B/KNO_3, B/KNO_3/Laminac, and $Zr/KClO_4$/Viton, respectively. Impact sensitivity values at the 10 inch drop height were 2/10, 3/10, 4/10, 4/10, 6/10, 3/10, 2/10, and 0/10 for AGM P-158A propellant, Rapid Deflagrating Material, CH-6, RDX, Tetryl,

B/KNO_3, B/KNO_3/Laminac, and $Zr/KClO_4$/Viton, respectively.

The values obtained using the BoE device for CH-6 and RDX were different than those previously reported using the ERL Type 12 Tool. These materials test more sensitive using the BoE device versus the ERL Type 12 Tool. This is due to the differences in sample weights being tested. The ERL Type 12 Tool uses 35 mg and the BoE device uses 10 mg samples. A study[6] conducted by this test organization indicated that increasing the sample size decreases the sensitivity of a given material. Still the results obtained on the BoE device are in agreement of the ERL Type 12 Tool value of the 50% explosive reactions at 24 cm where the BoE device shows 60% explosive reaction at 25.4 cm. Any noticable difference in sensitivity would be caused by the difference in the sample weight.

6. Electrical Spark Sensitivity test results are given in Table 5. There were no reactions in 25 trials at 20 mj, using 0.002 μfd capacitor at 4,500 vdc for any of the sample materials except $Zr/KClO_4$/-Viton and Tetryl whose minimum ignition level values were 0.0000008 and 0.00784 joules, respectively.

7. Roto-friction results are given in Tables 6 through 13. Only Rapid Deflagrating Material, and Boron/Potassium Nitrate had any reactions to the roto-friction stimulus. The energy values (E) were 16.65, and 671.09 ft-lb for Rapid Deflagrating Material and B/KNO_3, respectively. The average rate of heating (q) were 3.75, and 25.06 ft-lb/sec for Rapid Deflagrating Material and B/KNO_3, respectively. The product of the energy value (E) and the average rate of heating (q) is used to determine the ranking of the degree of friction sensitivity. The Eq values were 62 and 16817 ft-lb^2/sec for Rapid Deflagrating Material and B/KNO_3, respectively. The results would indicate that Rapid Deflagrating Material was friction sensitive.

8. Hot Wire Ignition Test results are given in Table 14. The Hot wire ignition test results showed that Tetryl, RDX, and CH-6 explosives did not ignite, have any visible effect, nor was there any damage to the witness plate. The Rapid Deflagrating Material, B/KNO_3, B/KNO_3/laminac, and $Zr/KClO_4$/Viton each had audible reports, visible reactions, but no measurable damage to the witness plate. This would indicate the pyrotechnic mixtures are susceptible to hot wire ignition.

9. Small Scale Gap Test results are given in Table 15. The results from the small scale gap tests indicate that the B/KNO_3, B/KNO_3/Laminac, and Tetryl did not have any measurable indentation of the witness block using a 4.0 DBg attenuator. The $Zr/KClO_4$/Viton, CH-6, and RDX all had indications of an explosion. The reported values for RDX and Tetryl in Method 3 Small Scale Gap Test MIL-STD-1751[1] were 4.35 and 4.4 Decibang respectively. The results obtained on these two control samples were 10 reaction equal to or greater than 0.002 inch indentation for the RDX. The indentation values for the RDX varied from 0.001 to 0.007 inch. All 20 trials for the Tetryl were equal to or less 0.001 inch indentation. The results of the RDX control sample would therefore indicate that the obtained values were in agreement. The 4.4 Decibang value was not obtained on the Tetryl. The indentation values obtained on the $Zr/KClO_4$/Viton ranged from 0.001 to 0.006 inch using a

4.0 decibang attenuator. The $Zr/KClO_4$/Viton pyrotechnic mixture reacted. The CH-6 explosive had 7 reactions in 20 trials. The indentation values varied from 0.003 to 0.006 inch using a 4.0 decibang attenuator.

10. Impact Vulnerability results are given in Table 16. There were no reactions for any of the materials in 20 trials and only 20 trials in the Impact Vulnerability tests.

4.0 CONCLUSIONS

As the results of the qualification tests as outlined in MIL-STD-1751[1], the following conclusions can be made.

1. Rapid Deflagrating Material is sensitive to impact at the 3 - 3/4 inch drop height, Tri-services friction apparatus, and the hot-wire ignition test.

2. Boron/Potassium Nitrate, Type 2C Ignition Granules, was sensitive to the Tri-services friction apparatus, and the hot-wire ignition test.

3. Boron/Potassium Nirate/Laminac, MIL-P-46994A was sensitive to the hot-wire ignition test.

4. Zirconium/Potassium Perchlorate/Viton was sensitive to electrical spark discharge ignition - 0.0000008 joules, small scale gap test using a 4.0 Dbg attenuator, and hot-wire ignition.

5. RDX explosive was sensitive to impact at the 3-3/4 inch drop height, and small scale gap test using a 4.0 DBg attenuator.

6. CH-6 explosive was sensitive to impact at 3-3/4 inch drop height, and small scale gap test using a 4.0 DBg attenuator.

7. Tetryl was sensitive to electrical spark discharge ignition - 0.00784 joules.

8. AGM P-158A propellant was insensitive to all of the sensitivity tests conducted.

5.0 REFERENCES

1. MILITARY STANDARD Safety and Performance Tests for Qualification of Explosives, MIL-STD-1751 (USAF), 20 Aug 82.

2. DoD Explosives Hazard Classification Procedures, TB700-2. September 1982.

3. Amour, Carl, and Smith, Lloyd A., The Invention of A New Type of Friction Sensitivity Apparatus, RDTR No. 60, 11 June 1965, U.S. Naval Ammunition Depot, Crane IN (AD617-382)

4. Johnson, D. M., Frictional Characteristics of Pyrotechnic Compositons. pp 385 - 403, Eighth International Pyrotechnics Seminar, Steamboat Springs, Colorado July 1982.

5. McLain, J. H., Pyrotechnics from the Viewpoint of Solid State Chemistry, The Franklin Insititute Press, Philadelphia, Penna., 1980.

6. Koger, Douglas M., and King, Paul V. Sr., Final Report Picatinny Impact Sensitivity Testing, GE-MTSD-R-044, July 31, 1970.

BLANK

APPENDIX A
TABLES AND FIGURES

PAGE 18 INTENTIONALLY BLANK

PRECEDING PAGE BLANK NOT FILMED

BLANK

Table 1.Differential Thermal Analysis Test Results

Test Material	Decomposition Temperature (°)	Propagation Index (Cal/g-°C)
AGM P-158A Propellant	533	n/a
Rapid Deflagrating Material	374	2.6
CH-6 Explosive	228	n/a
RDX Explosive	227	n/a
Tetryl	207	n/a
B/KNO_3	579	3.4
B/KNO_3 /Laminac	546	4.3
$Zr/KClO_4$ /Viton	491	3.4

n/a = Heat of Reaction tests were no conducted on these samples.

Table 2. Explosion (Cook-off) Temperature Test Results

Test Material	5 Second Temperature (°C)	10 Second Temperature (°)
AGM P-158A Propellant	464	454
Rapid Deflagrating Material	394[1]	381[1]
CH-6 Explosive	250	236
RDX Explosive	245[2]	226[2]
Tetryl	230[3]	204[3]
B/KNO_3	491	469
B/KNO_3 /Laminac	473	456
$Zr/KClO_4$ /Viton	396	378

[1] = Comparison value from manufacturer's Material Safety Data Sheet. Where the reported auto ignition temperature was 400 °C.
[2] = Comparison value from AMCP 706-177 for Cyclonite (RDX). The 5 and 10 second temperature values were 260 and 240 °C, respectively.
[3] = Comparison value from AMCP 706-177 for Tetryl. The reported 5 and 10 second values were 257 and 238 °C, respectively.

PRECEDING PAGE BLANK NOT FILMED

PAGE 20 INTENTIONALLY BLANK

Table 3. Heats of Combustion and Reaction Test Results

Test Material	Heat of Combustion (cal/g)	Heat of Reaction (cal/g)
Rapid Deflagrating Material	998	989
B/KNO_3	2001	1967
B/KNO_3 /Laminac	2721	2354
$Zr/KClO_4$ /Viton	1696	1647

Table 4. BoE Impact Sensitivity Test Data.

Test Material	3-3/4 inch Drop Height			10 inch Drop Height		
	E	D	N	E	D	N
AGM P-158A Propellant	0	0	10	2	0	8
Rapid Deflagrating Material	3	0	7	3	0	7
CH-6 Explosive	0	1	9	2	4	4
CH-6 Explosive*	0	1	9	8	0	2
RDX Explosive	1	1	8	1	3	6
RDX Explosive **	1	0	9	6	4	0
Tetryl	1	0	9	5	1	4
B/KNO_3	0	0	10	0	3	7
B/KNO_3 /Laminac	0	0	10	2	0	8
$Zr/KClO_4$ /Viton	0	0	10	0	0	10

E = Explosion, flame, noise; D = Decomposition, smoke, no noise;
N = No reaction, no smoke, no noise.
* = a different batch was tested
** = a different batch was tested

Table 5. Electrical Spark Sensitivity Test Results
0.002 μfd capacitor, 4,500 vdc, 20 mj
energy level.

Test Material	Number Trials	Type Reaction
AGM P-158A Propellant	25	No reaction
Rapid Deflagrating Material	25	No reaction
CH-6 Explosive	25	No reaction
RDX Explosive	25	No reaction
Tetryl	25	0.00784 joules*
B/KNO_3	25	No reaction
B/KNO_3/Laminac	25	No reaction
$Zr/KClO_4$/Viton	25	0.0000008*

* = Material reacted at this energy level. The reported value for Tetryl as reported in MIL-STD-1751[1] was 0.007 joules of energy. The actual voltage level for the $Zr/KClO_4$/Viton was 27.5 vdc 0.002 μfd capacitor. The $Zr/KClO_4$/Viton mixture is EXTREMELY SENSITIVE to electrical spark sensitivity test.

Table 6. Tri-Services Roto-Friction Test Results for AGM P-158A Propellant

MASS		RPM		
	Torque Load: 12	1260	2500	4800
5	E=ft-lb	309.25	613.59	1178.10
	q=ft-lb/sec	10.31	20.45	39.27
	Eq	3188	%12550	46264
15	E=ft-lb	309.25	613.59	1178.10
	q=ft-lb/sec	10.31	20.45	39.27
	Eq	3188	%12550	46264
25	E=ft-lb	309.25	613.59	1178.10
	q=ft-lb/sec	10.31	20.45	39.27
	Eq	3188	%12550	46264
	Torque Load: 8	1260	2500	4800
5	E=ft-lb	206.17	409.06	785.40
	q=ft-lb/sec	6.87	13.64	26.18
	Eq	1417	5578	20562
15	E=ft-lb	206.17	409.06	785.40
	q=ft-lb/sec	6.87	13.64	26.18
	Eq	1417	5578	20562
25	E=ft-lb	206.17	409.06	785.40
	q=ft-lb/sec	6.87	13.64	26.18
	Eq	1417	5578	20562
	Torque Load: 4	1260	2500	4800
5	E=ft-lb	103.08	204.53	392.70
	q=ft-lb/sec	3.44	6.82	13.09
	Eq	354	1394	5140
15	E=ft-lb	103.08	204.53	392.70
	q=ft-lb/sec	3.44	6.82	13.09
	Eq	354	1394	5140
25	E=ft-lb	103.08	204.53	751.78
	q=ft-lb/sec	3.44	6.82	25.06
	Eq	354	1394	18839

Table 7. Tri-Services Roto-Friction Test Results for Rapid Deflagrating Material.

MASS		RPM		
	Torque Load: 12	1260	2500	4800
5	E=ft-lb	309.25	613.59	1178.10
	q=ft-lb/sec	10.31	20.45	39.27
	Eq	3188	%12550	46264
15	E=ft-lb	309.25	613.59	1178.10
	q=ft-lb/sec	10.31	20.45	39.27
	Eq	3188	%12550	46264
25	E=ft-lb	309.25	613.59	1178.10
	q=ft-lb/sec	10.31	20.45	39.27
	Eq	3188	%12550	46264
	Torque Load: 8	1260	2500	4800
5	E=ft-lb	206.17	409.06	785.40
	q=ft-lb/sec	6.87	13.64	26.18
	Eq	1417	5578	20562
15	E=ft-lb	350.48F	409.06	785.40
	q=ft-lb/sec	6.87F	13.64	26.18
	Eq	2409	5578	20562
25	E=ft-lb	206.17	783.11	785.40
	q=ft-lb/sec	6.87	26.10	26.18
	Eq	1417	%20442	20562
	Torque Load: 4	1260	2500	4800
5	E=ft-lb	103.08	204.53	392.70
	q=ft-lb/sec	3.44	6.82	13.09
	Eq	354	1394	5140
15	E=ft-lb	128.22	204.53	392.70
	q=ft-lb/sec	4.27	6.82	13.09
	Eq	548	1394	5140
25	E=ft-lb	16.65F	204.53	392.70
	q=ft-lb/sec	3.75F	6.82	13.09
	Eq	62	1394	5140

Table 8. Tri-Services Roto-Friction Test Results for CH-6 Explosive.

MASS			RPM		
	Torque Load:	12	1260	2500	4800
5	E=ft-lb		309.25	613.59	1178.10
	q=ft-lb/sec		10.31	20.45	39.27
	Eq		3188	%12550	46264
15	E=ft-lb		309.25	613.59	1178.10
	q=ft-lb/sec		10.31	20.45	39.27
	Eq		3188	%12550	46264
25	E=ft-lb		309.25	613.59	1178.10
	q=ft-lb/sec		10.31	20.45	39.27
	Eq		3188	%12550	46264
	Torque Load:	8	1260	2500	4800
5	E=ft-lb		206.17	409.06	785.40
	q=ft-lb/sec		6.87	13.64	26.18
	Eq		1417	5578	20562
15	E=ft-lb		206.17	409.06	785.40
	q=ft-lb/sec		6.87	13.64	26.18
	Eq		1417	5578	20562
25	E=ft-lb		206.17	409.06	785.40
	q=ft-lb/sec		6.87	13.64	26.18
	Eq		1417	5578	20562
	Torque Load:	4	1260	2500	4800
5	E=ft-lb		103.08	204.53	392.70
	q=ft-lb/sec		3.44	6.82	13.09
	Eq		354	1394	5140
15	E=ft-lb		103.08	214.51	392.70
	q=ft-lb/sec		3.44	7.15	13.09
	Eq		354	1534	5140
25	E=ft-lb		103.08	391.55	751.78
	q=ft-lb/sec		3.44	13.05	25.06
	Eq		354	5110	18839

Table 9. Tri-Services Roto-Friction Test Results for RDX Explosive.

MASS		RPM		
	Torque Load: 12	1260	2500	4800
5	E=ft-lb	309.25	613.59	1178.10
	q=ft-lb/sec	10.31	20.45	39.27
	Eq	3188	%12550	46264
15	E=ft-lb	309.25	613.59	1178.10
	q=ft-lb/sec	10.31	20.45	39.27
	Eq	3188	%12550	46264
25	E=ft-lb	309.25	613.59	1178.10
	q=ft-lb/sec	10.31	20.45	39.27
	Eq	3188	%12550	46264
	Torque Load: 8	1260	2500	4800
5	E=ft-lb	206.17	409.06	785.40
	q=ft-lb/sec	6.87	13.64	26.18
	Eq	1417	5578	20562
15	E=ft-lb	206.17	409.06	785.40
	q=ft-lb/sec	6.87	13.64	26.18
	Eq	1417	5578	20562
25	E=ft-lb	206.17	409.06	785.40
	q=ft-lb/sec	6.87	13.64	26.18
	Eq	1417	5578	20562
	Torque Load: 8	1260	2500	4800
5	E=ft-lb	206.17	409.06	785.40
	q=ft-lb/sec	6.87	13.64	26.18
	Eq	1417	5578	20562
15	E=ft-lb	206.17	409.06	785.40
	q=ft-lb/sec	6.87	13.64	26.18
	Eq	1417	5578	20562
25	E=ft-lb	206.17	409.06	857.21
	q=ft-lb/sec	6.87	13.64	28.57
	Eq	1417	5578	24494

Table 10. Tri-Services Roto-Friction Test Results for Tetryl.

MASS		RPM		
	Torque Load: 12	1260	2500	4800
5	E=ft-lb	309.25	613.59	1178.10
	q=ft-lb/sec	10.31	20.45	39.27
	Eq	3188	%12550	46264
15	E=ft-lb	309.25	613.59	1178.10
	q=ft-lb/sec	10.31	20.45	39.27
	Eq	3188	%12550	46264
25	E=ft-lb	309.25	613.59	1303.78
	q=ft-lb/sec	10.31	20.45	43.46
	Eq	3188	%12550	56661
	Torque Load: 8	1260	2500	4800
5	E=ft-lb	206.17	409.06	785.40
	q=ft-lb/sec	6.87	13.64	26.18
	Eq	1417	5578	20562
15	E=ft-lb	206.17	409.06	797.37
	q=ft-lb/sec	6.87	13.64	26.58
	Eq	1417	5578	21193
25	E=ft-lb	206.17	409.06	785.40
	q=ft-lb/sec	6.87	13.64	26.18
	Eq	1417	5578	20562
	Torque Load: 4	1260	2500	4800
5	E=ft-lb	103.08	204.53	392.70
	q=ft-lb/sec	3.44	6.82	13.09
	Eq	354	1394	5140
15	E=ft-lb	103.08	204.53	392.70
	q=ft-lb/sec	3.44	6.82	13.09
	Eq	354	1394	5140
25	E=ft-lb	107.80	226.35	512.39
	q=ft-lb/sec	3.59	7.54	17.08
	Eq	387	1708	8752

Table 11. Tri-Services Roto-Friction Test Results for B/KNO3 Pyrotechnic Mixture.

MASS			RPM		
	Torque Load:	12	1260	2500	4800
5	E=ft-lb		309.25	613.59	1178.10
	q=ft-lb/sec		10.31	20.45	39.27
	Eq		3188	%12550	46264
15	E=ft-lb		309.25	613.59	1214.00
	q=ft-lb/sec		10.31	20.45	40.47
	Eq		3188	%12550	49127
25	E=ft-lb		592.03	1174.66	1303.78
	q=ft-lb/sec		19.73	39.16	43.46
	Eq		%11683	%45994	56661
	Torque Load:	8	1260	2500	4800
5	E=ft-lb		206.17	409.06	785.40
	q=ft-lb/sec		6.87	13.64	26.18
	Eq		1417	5578	20562
15	E=ft-lb		206.17	409.06	869.18
	q=ft-lb/sec		6.87	13.64	28.97
	Eq		1417	5578	25183
25	E=ft-lb		319.28	783.11	869.18
	q=ft-lb/sec		10.64	26.10	28.97
	Eq		3398	%20442	25183
	Torque Load:	4	1260	2500	4800
5	E=ft-lb		103.08	391.55	428.61
	q=ft-lb/sec		3.44	13.05	14.29
	Eq		354	5110	6123
15	E=ft-lb		103.08	210.76	751.78
	q=ft-lb/sec		3.44	7.03	25.06
	Eq		354	1481	18839
25	E=ft-lb		106.23	391.55	671.09F
	q=ft-lb/sec		3.54	13.05	25.06F
	Eq		376	5110	16817

Table 12. Tri-Services Roto-Friction Test Results for B/KNO_3/Laminac Pyrotechnic Mixture.

MASS		RPM		
	Torque Load: 12	1260	2500	4800
5	E=ft-lb	309.25	1174.66	1178.10
	q=ft-lb/sec	10.31	39.16	39.27
	Eq	3188	%45994	46264
15	E=ft-lb	309.25	641.65	2255.35
	q=ft-lb/sec	10.31	21.39	75.18
	Eq	3188	%13724	%169553
25	E=ft-lb	592.03	1174.66	2039.90
	q=ft-lb/sec	19.73	39.16	68.00
	Eq	%11683	%45994	%138706
	Torque Load: 8	1260	2500	4800
5	E=ft-lb	206.17	409.06	785.40
	q=ft-lb/sec	6.87	13.64	26.18
	Eq	1417	5578	20562
15	E=ft-lb	206.17	409.06	1503.56
	q=ft-lb/sec	6.87	13.64	50.12
	Eq	1417	5578	75357
25	E=ft-lb	394.69	546.21	1503.56
	q=ft-lb/sec	13.16	18.21	50.12
	Eq	5193	9945	75357
	Torque Load: 4	1260	2500	4800
5	E=ft-lb	103.08	204.53	392.70
	q=ft-lb/sec	3.44	6.82	13.09
	Eq	354	1394	5140
15	E=ft-lb	103.08	391.55	751.78
	q=ft-lb/sec	3.44	13.05	25.06
	Eq	354	5110	18839
25	E=ft-lb	197.34	241.94	751.78
	q=ft-lb/sec	6.58	8.06	25.06
	Eq	1298	1951	18839

Table 13. Tri-Services Roto-Friction Test Results for $Zr/KClO_4$/Viton Pyrotechnic Mixture.

MASS		RPM		
	Torque Load: 12	1260	2500	4800
5	E=ft-lb	313.96	613.59	1178.10
	q=ft-lb/sec	10.47	20.45	39.27
	Eq	3286	%12550	46264
15	E=ft-lb	309.25	613.59	1178.10
	q=ft-lb/sec	10.31	20.45	39.27
	Eq	3188	%12550	46264
25	E=ft-lb	309.25	613.59	1242.73
	q=ft-lb/sec	10.31	20.45	41.42
	Eq	3188	%12550	51479
	Torque Load: 8	1260	2500	4800
5	E=ft-lb	206.17	409.06	785.40
	q=ft-lb/sec	6.87	13.64	26.18
	Eq	1417	5578	20562
15	E=ft-lb	206.17	409.06	797.37
	q=ft-lb/sec	6.87	13.64	26.58
	Eq	1417	5578	21193
25	E=ft-lb	216.85	409.06	785.40
	q=ft-lb/sec	7.23	13.64	26.18
	Eq	1567	5578	20562
	Torque Load: 4	1260	2500	4800
5	E=ft-lb	103.08	204.53	392.70
	q=ft-lb/sec	3.44	6.82	13.09
	Eq	354	1394	5140
15	E=ft-lb	106.23	233.83	434.59
	q=ft-lb/sec	3.54	7.79	14.49
	Eq	376	1823	6296
25	E=ft-lb	197.34	391.55	775.72
	q=ft-lb/sec	6.58	13.05	25.86
	Eq	1298	5110	20058

Table 14. Hot Wire Ignition Test Results.

Test Material	Number of Trials	Type Reaction
Rapid Deflagrating Material	40	Reaction(1)
CH-6 Explosive	40	No reaction(2)
RDX Explosive	40	No reaction(2)
Tetryl	40	No reaction(2)
B/KNO_3	40	Reaction(1)
B/KNO_3 /Laminac	40	Reaction(1)
$Zr/KClO_4$ /Viton	40	Reaction(1)

(1) = Visible reaction with audible report, residue, no indentation, and wire burned.
(2) = wire burned material did not ignite.

Table 15. Small Scale Gap Test Result, Using a 4.0 DBg Attenuator.

Test Material	Number of Trials	Type Reaction
Rapid Deflagrating Material	20	No explosions
CH-6 Explosive	20	6 explosions
RDX Explosive	20	10 explosions
Tetryl	20	No explosions
B/KNO_3	20	No explosions
B/KNO_3 /Laminac	20	No explosions
$Zr/KClO_4$ /Viton	20	18 explosions

Table 16. Impact Vulnerability Test Results.

Test Material	Number of Trials	Type Reaction
Rapid Deflagrating Material	20	No reaction
CH-6 Explosive	20	No reaction
RDX Explosive	20	No reaction
Tetryl	20	No reaction
B/KNO_3	20	No reaction
B/KNO_3 /Laminac	20	No reaction
$Zr/KClO_4$ /Viton	20	No reaction

ORIGINAL PAGE IS
OF POOR QUALITY

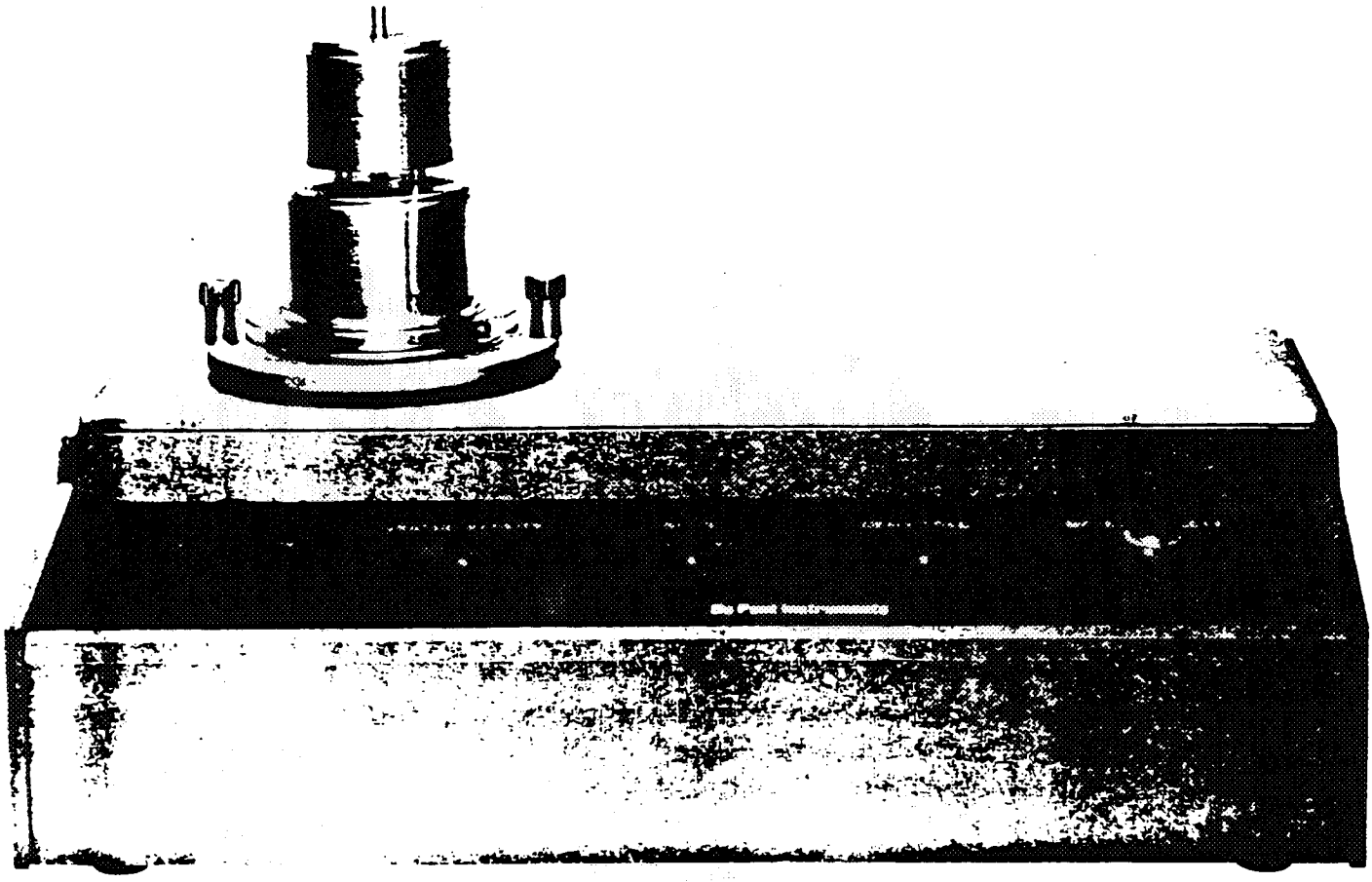

Figure 1. Differential Thermal Analysis Test Device.

ORIGINAL PAGE IS
OF POOR QUALITY

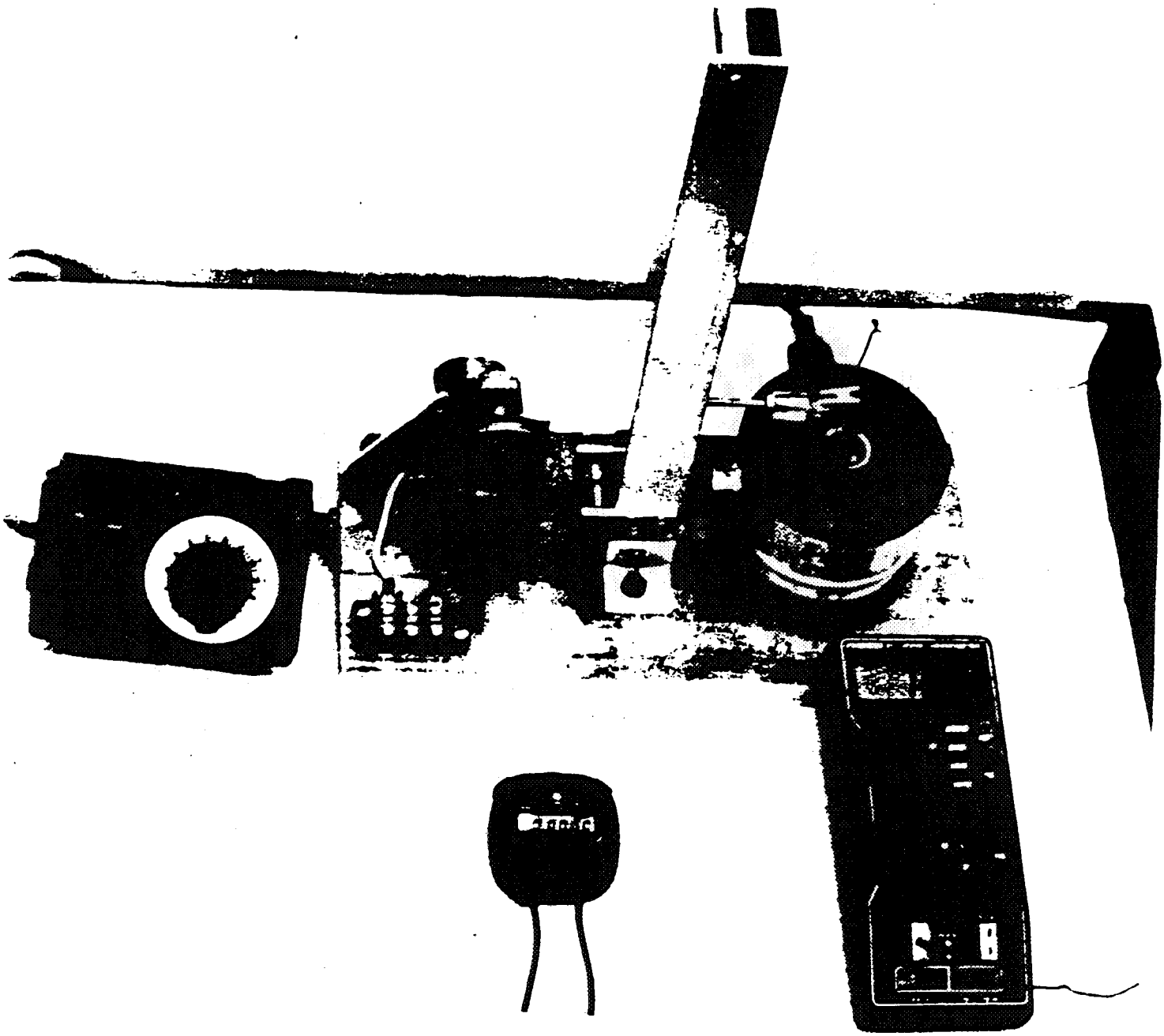

Figure 2. Explosion Temperature Test Apparatus

ORIGINAL PAGE IS
OF POOR QUALITY

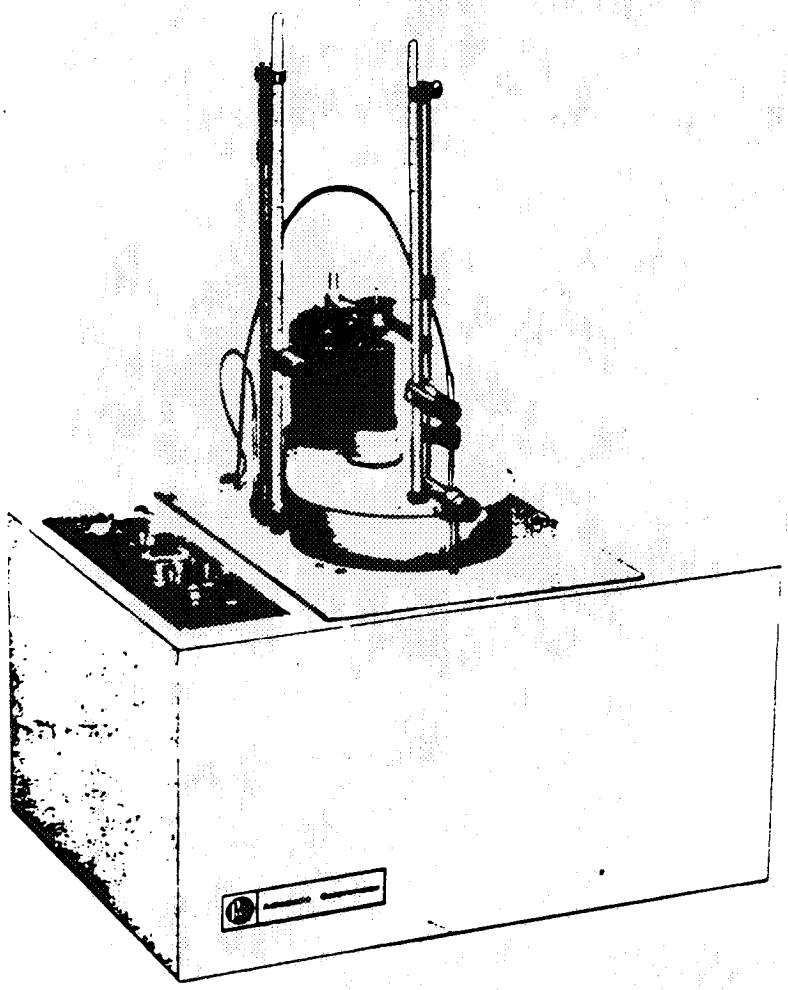

Figure 3. Heat of Combustion Heat of Reaction Test Device.

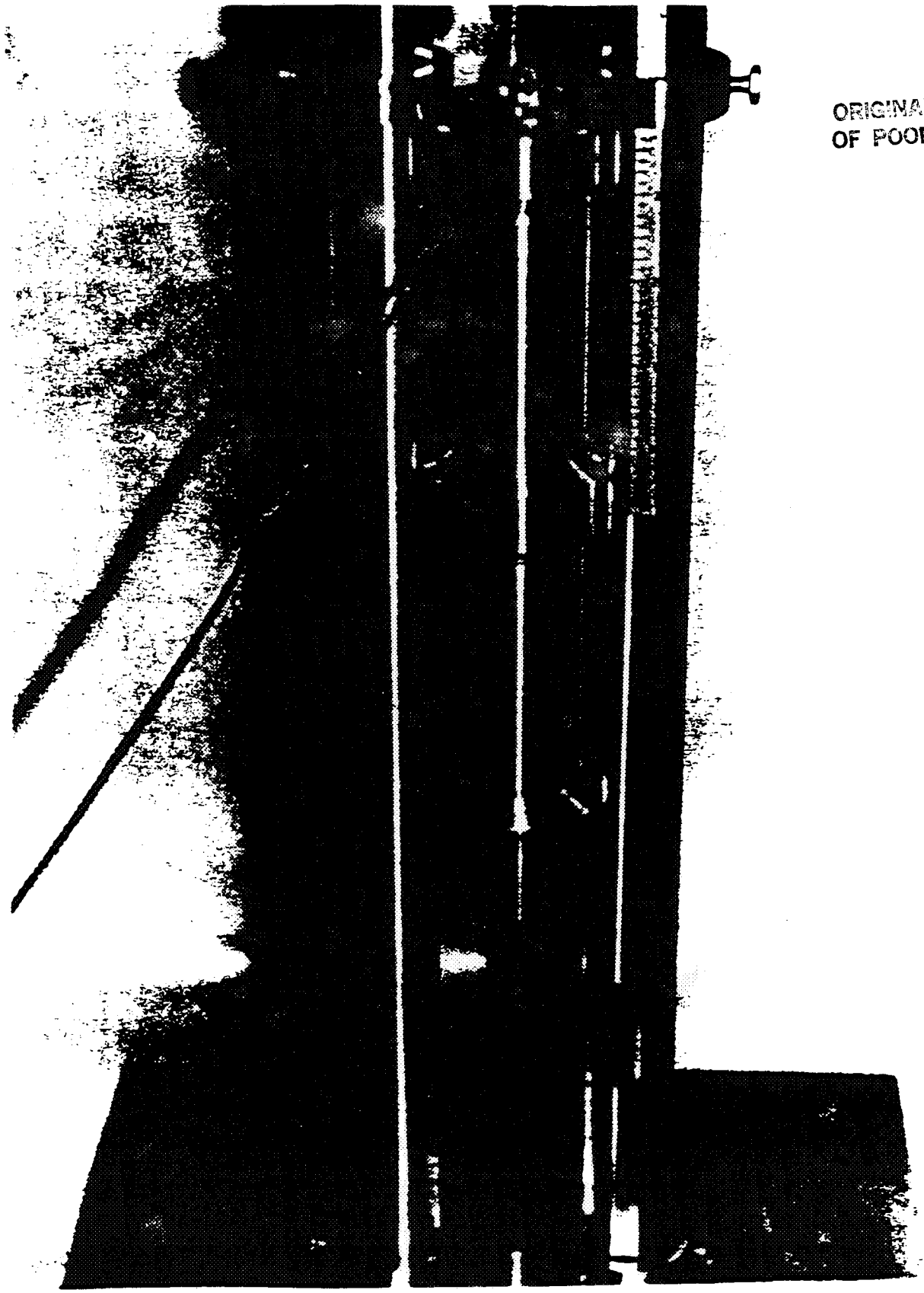

ORIGINAL PAGE IS
OF POOR QUALITY

Figure 4. BoE Impact Apparatus

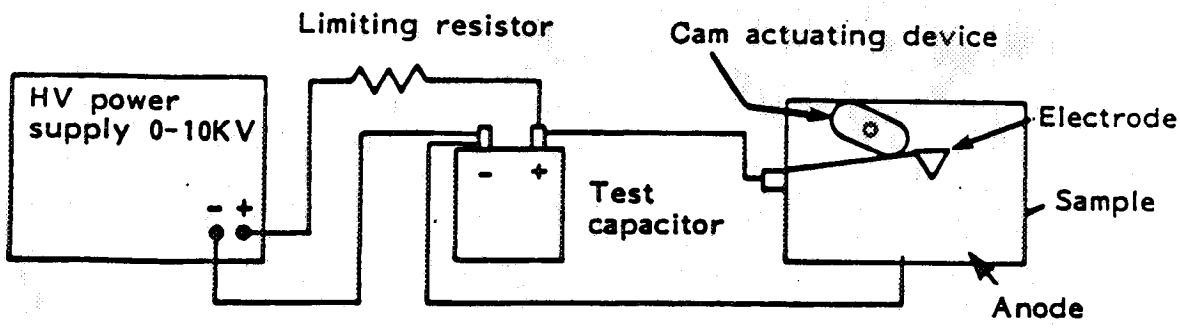

Figure 5. Electrical Spark Discharge Test Arrangement.

ORIGINAL PAGE IS
OF POOR QUALITY

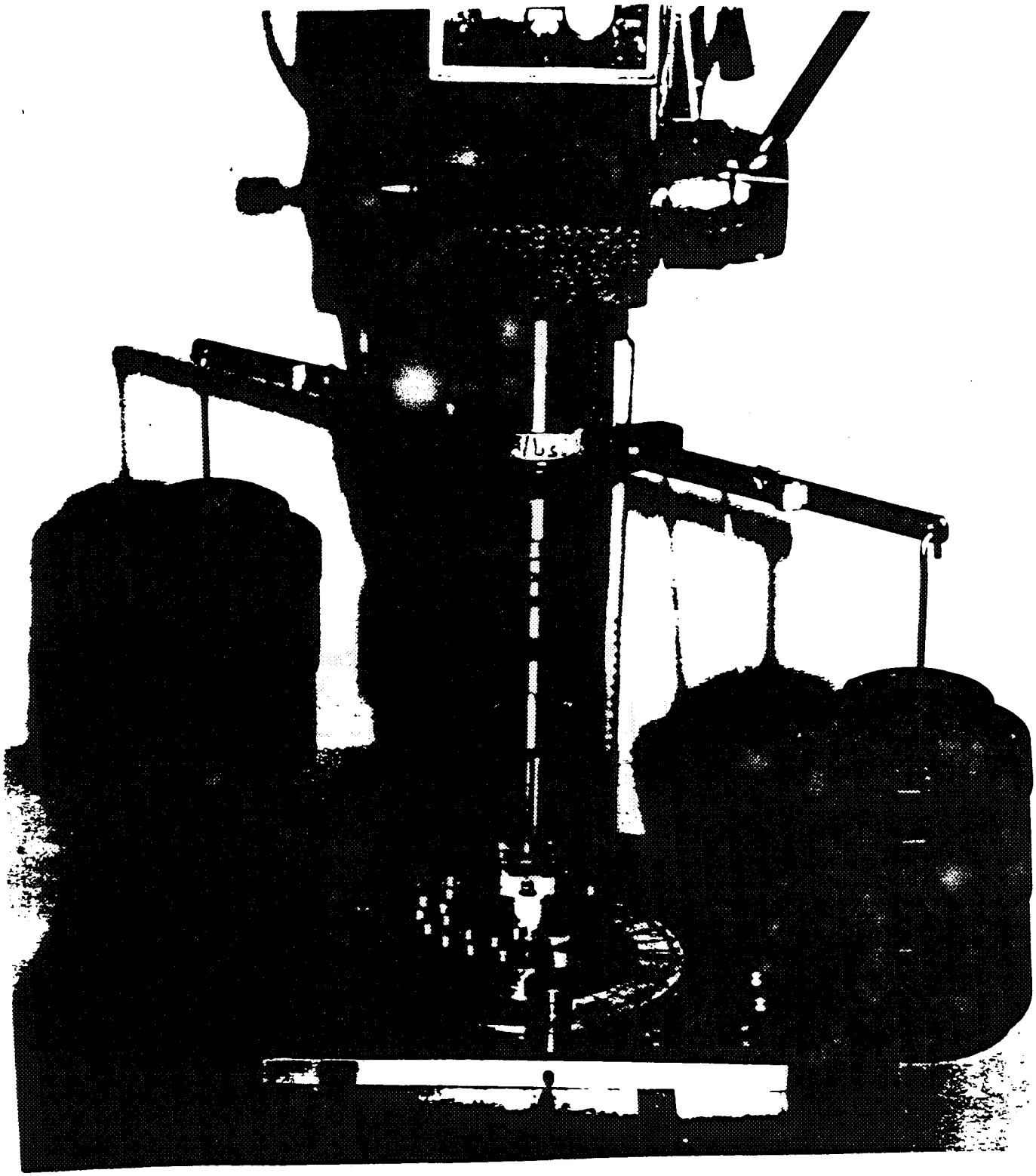

Figure 6. Tri-services Roto-friction Device

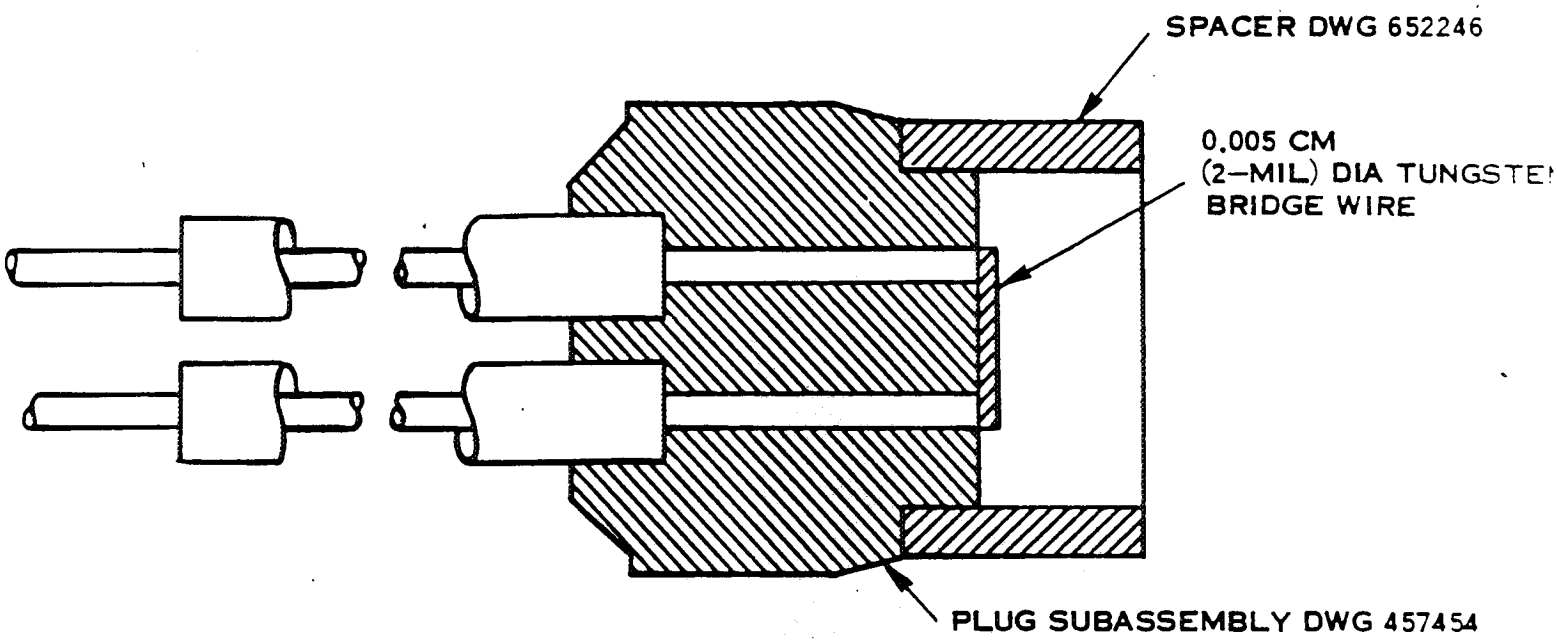

Figure 7. Hot-wire Ignition Arrangement

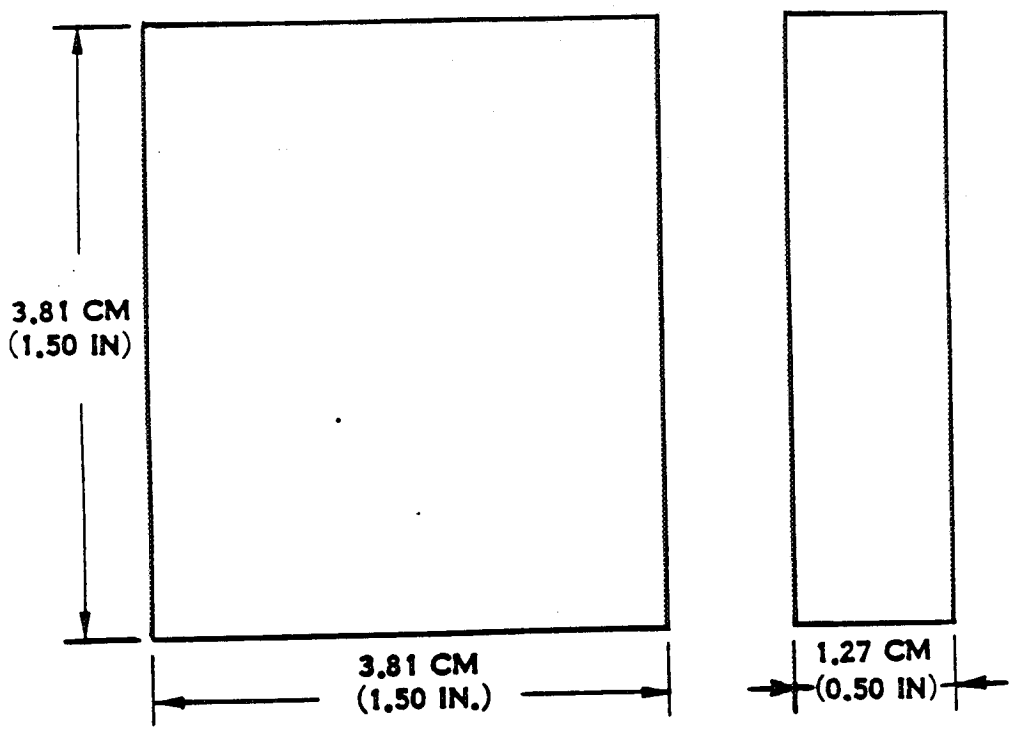

Figure 8. Hot-wire Aluminum Dent Block

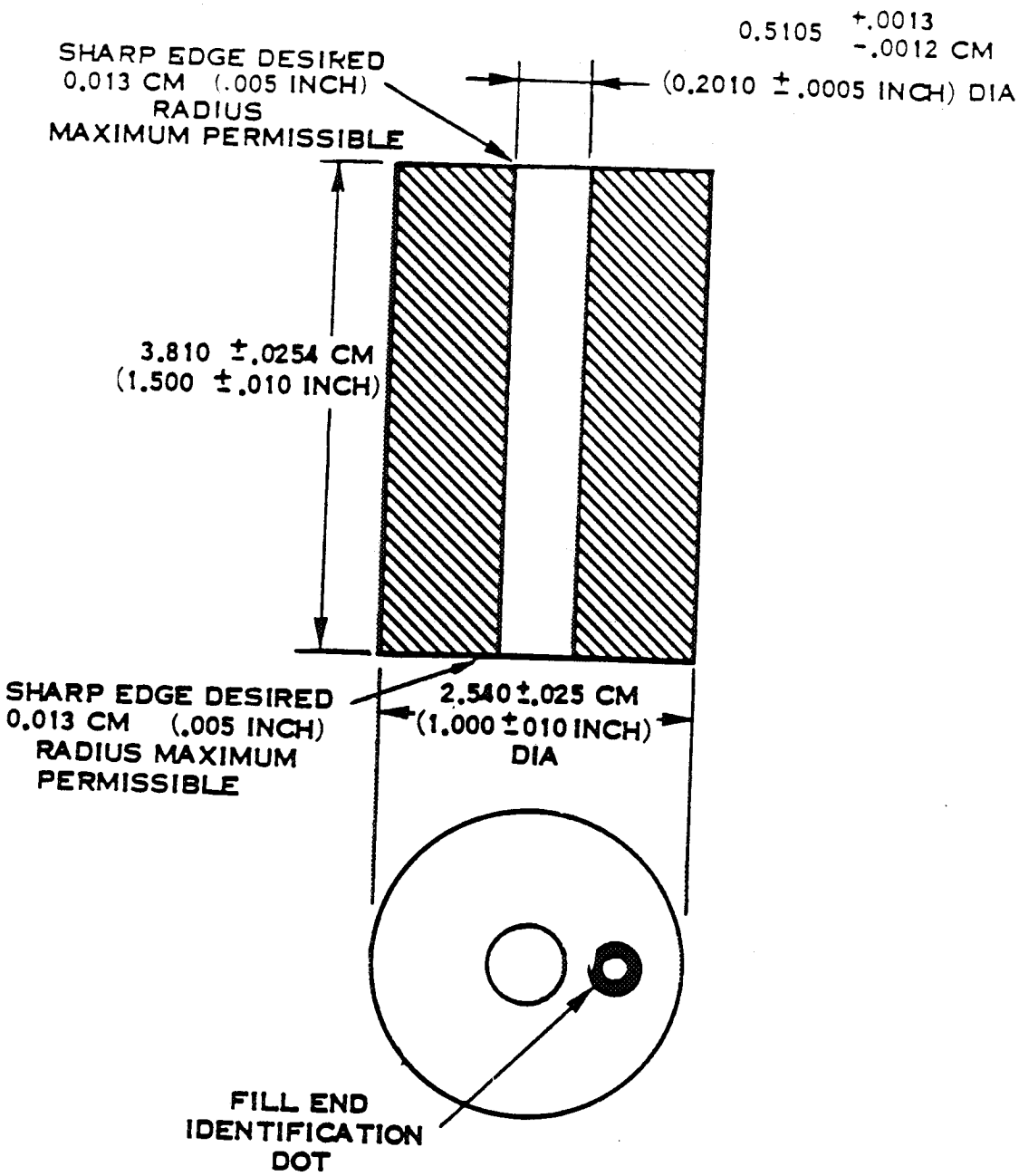

Figure 9. Small Scale Gap Test Body BUWEPS DWG 262915

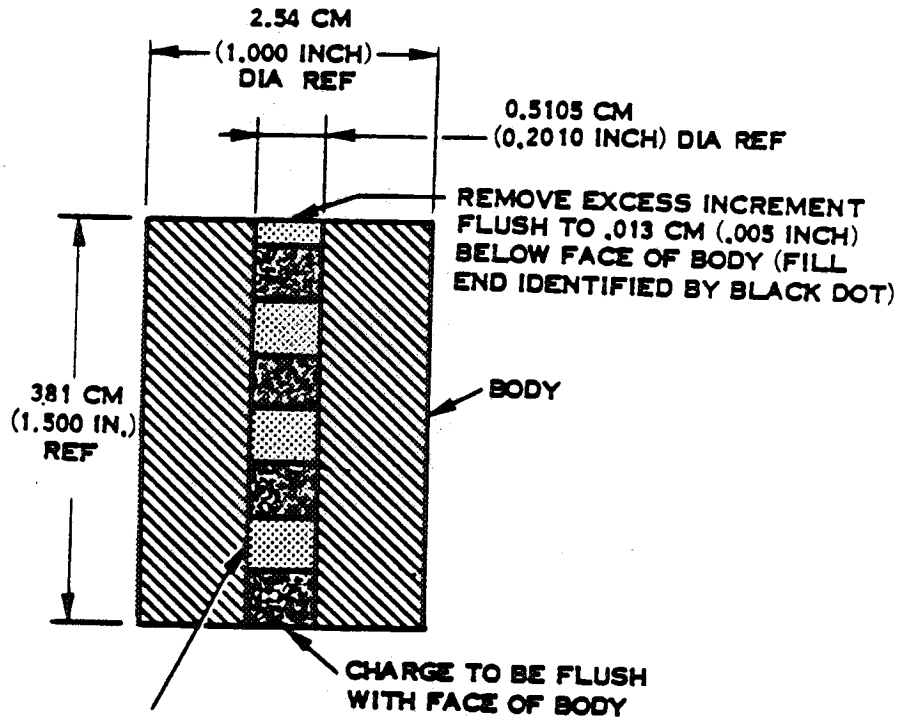

EACH INCREMENT TO BE LOADED AT A PRESSURE OF 110,316.11 ±6895. kPa (16,000 ±1,000 PSI). MOISTURE CONTENT AT TIME OF LOADING MUST NOT EXCEED 0.3%. A MINIMUM OF 4 HOURS DRYING TIME AT 50° C (122° F) UNDER 724 MM (28.5 INCH) MERCURY VACUUM JUST PRIOR TO LOADING

Figure 10 Small Scale Gap Test Donor Assemblies

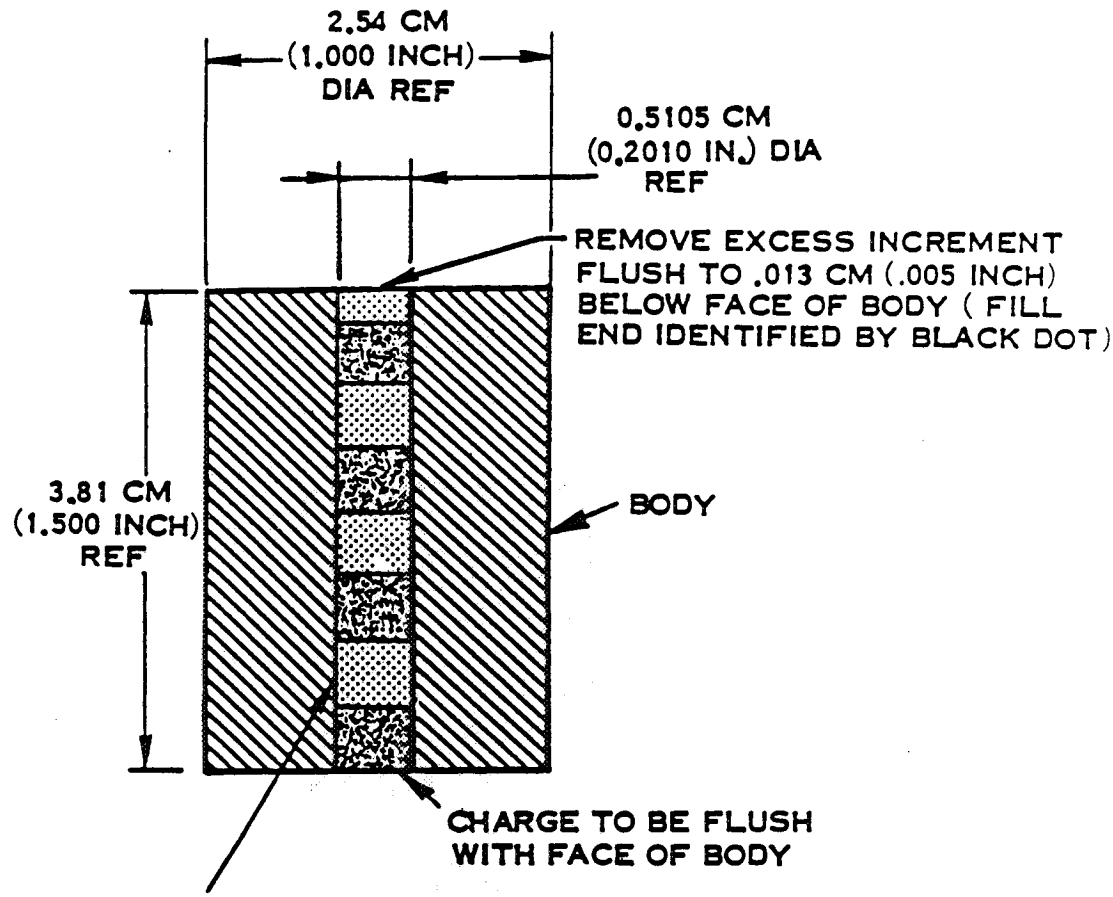

EACH INCREMENT TO BE LOADED AT A PRESSURE OF 110,316.11 ±6895. kPa (16,000 ±1,000 PSI). MOISTURE CONTENT AT TIME OF LOADING MUST NOT EXCEED 0.3% A MINIMUM OF 4 HOURS DRYING TIME AT 50° C (122° F) UNDER 724 MM (28.5 INCH) MERCURY VACUUM JUST PRIOR TO LOADING

Figure 11. Small Scale Gap Test Acceptor Assemblies

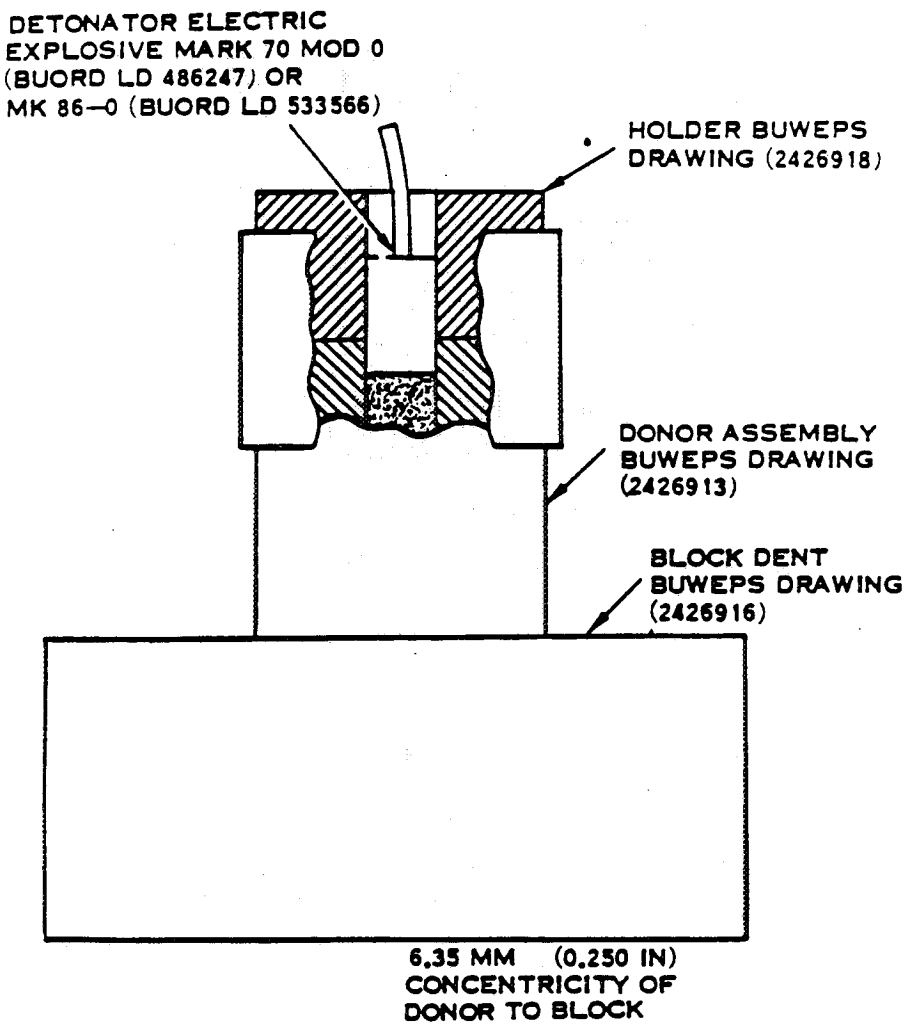

Figure 12. Small Scale Gap Test Arrangment for Testing Donors.

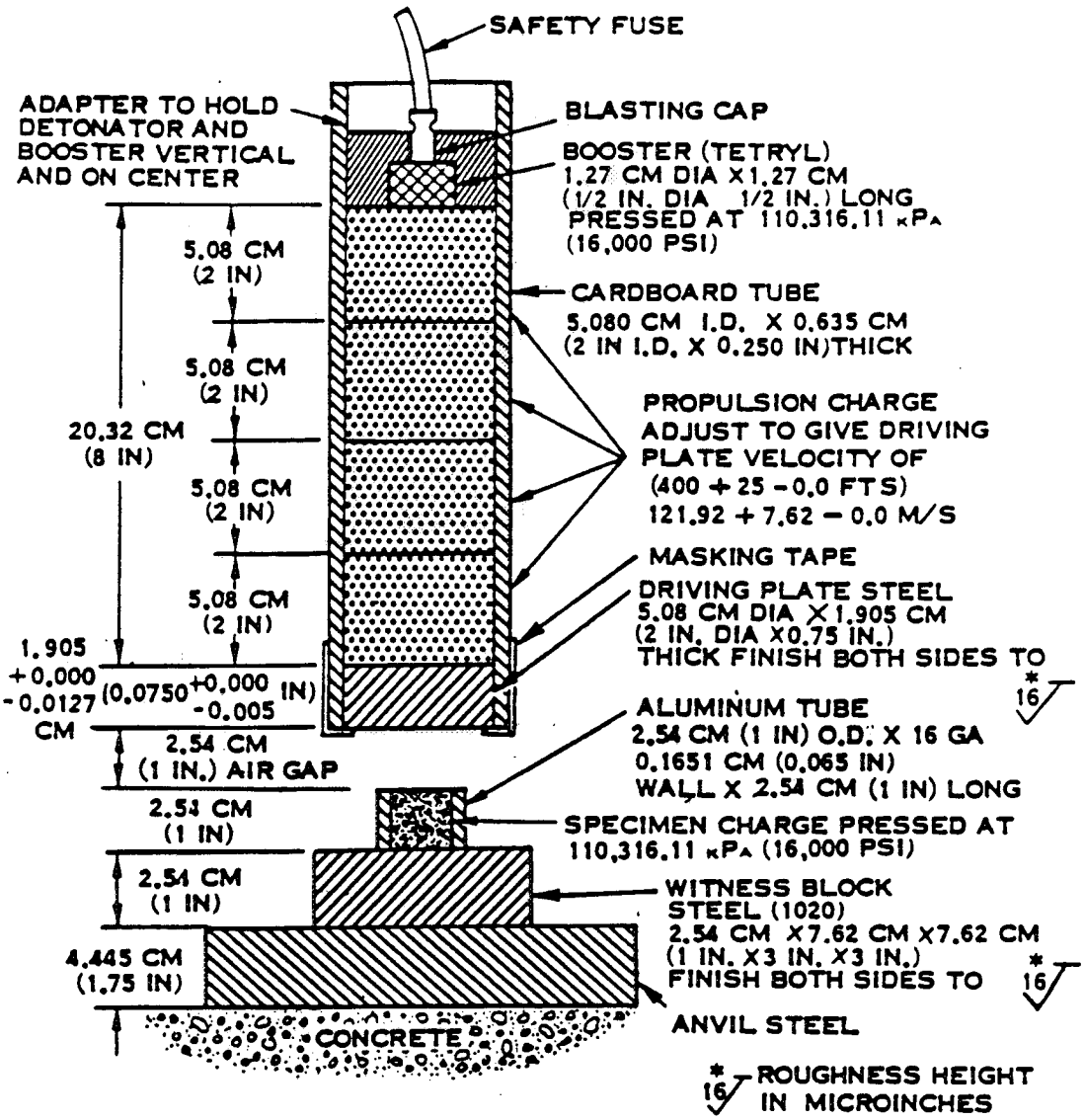

Figure 13. Impact Vulnerability Test Arrangement.