CR-184150

NAS8-37666

VOLUME II

October 1990

Appendix E
Flight Systems Trade Studies Summary

Propellant Tank Pressurization System Technology Program

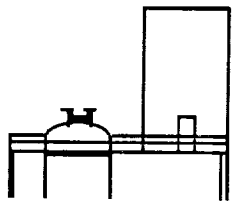

(NASA-CR-184150) PROPELLANT TANK PRESSURIZATION SYSTEM TECHNOLOGY PROGRAM. VOLUME 2, APPENDIX E: FLIGHT SYSTEMS TRADE STUDIES SUMMARY (Martin Marietta Corp.) 136 p

N91-71038

Unclas

00/20 0008274

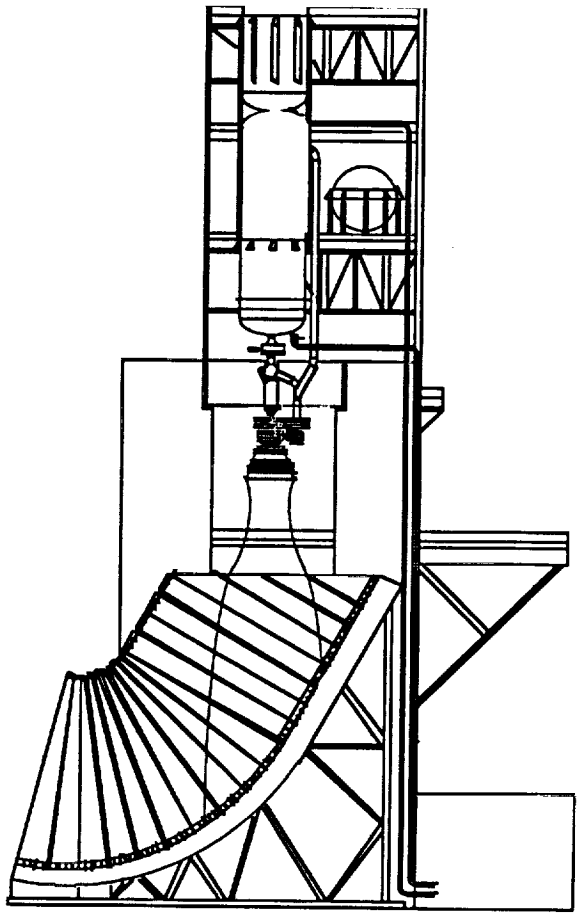

MARTIN MARIETTA

MANNED SPACE SYSTEMS

J-vertcover/jer 5

Interoffice Memo

MARTIN MARIETTA

MMMSS-3011-89-107

Date: October 19, 1989

To: PTPSTP Distribution

From: R. J. Cronin

Subject: PTPSTP, Flight System Trade Studies

The selected flight propellant tank pressurization system candidates were traded using standard Martin Marietta study methodology[1]. This methodology is derived from Kepner Tregoe decision analysis methodology. The trade study process is shown in Figure 1. A discussion of the trade candidate ranking criteria is shown in Figure 2. The differences between MUST criteria and WANT criteria are shown. The MUST criteria used in this trade study are presented in Figure 3. Twelve candidate systems were analyzed using the MUST criteria resulting in 6 basic systems being carried forward for WANT criteria analyses. The results of MUST criteria screening are presented in Figure 4. Detailed analyses of the MUST screening process was presented in memo MMMSS-3011-89-106 dated September 7, 1989. The WANT criteria used for these trade studies are presented in Figure 5 and explained in the WANT criteria dictionary, Figures 6A and 6B.

The 6 basic systems that survived the MUST screening were expanded to 9 candidates for the WANT criteria trades. These are shown in Appendix II, Part B. These 9 candidates were analyzed per the trade methodology. All of these candidate systems were sized and designed to satisfy the basic pressurization system requirements as shown in Figures 7A and 7B. The criteria scores and resulting weighted scores are shown in Figure 8.

As shown in Figure 8 system 2A which is a stored gas system using steam both as a helium bottle expulsion source and main pressurant heat source is the leading trade candidate. Because of the serious technology problems with this system (steam properties/conditioning and water/ice management), this system may not be a feasible candidate. It is therefore recommended that a version of system 2, which may be similar to system 3 (stored gas with gas generators/heat exchangers), and a version of system 4b, which may approach system 4a (stored gas with catalyst beds and remote O2/H2 storage), be the systems carried forward into the system optimization and downselect phase of the PTPSTP trade studies.

Appendix I of this memo presents the results and scoring rationale for each of the 9 trade candidates shown on Figure 8.

Appendix II presents methodology used to evaluate some of the scoring criteria, summary data for each criteria, system schematics for each trade candidate and vehicle installation/packaging sketches for each candidate.

R.J. Cronin
PTPSTP Systems Engineering

Approved:

J. Cool,
Manager, Pressurization Systems

Attachments

[1] Engineering Practices, Section SY-1, Systems Engineering Manual, Section 4.5, June 1987

PTPSTP Trade Study Process

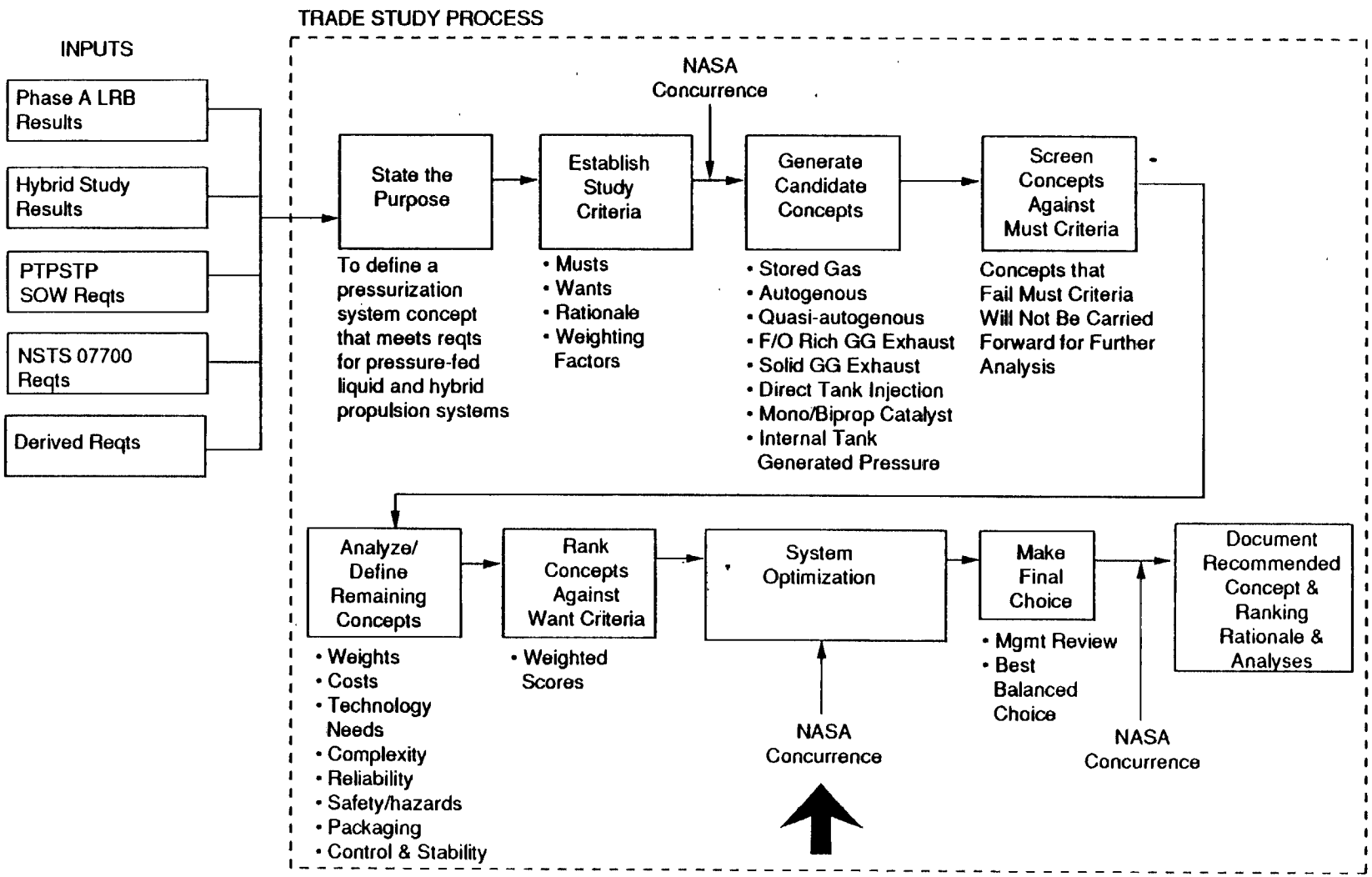

Figure 1

S-020/jer

MARTIN MARIETTA
MANNED SPACE SYSTEMS

Trade Study Ranking Criteria

- Criteria Are Classified into Two Categories - Musts and Wants
- Must Criteria Are Mandatory to Fulfill the Purpose of the Trade
- Must Criteria Serve as a Screen to Eliminate Alternatives
- Must Criteria Should Be Measurable & Quantifiable and Represent a Go/No Go Gate
- Alternatives that Fail Musts Will Not Be Carried Forward for Further Review
- Criteria that Are Desirable but Not Mandatory Are Considered Wants
- Want Criteria Provide a Selection Profile for Remaining Alternatives and Help Distinguish between Abilities of Alternatives
- Want Criteria Are the Only Ones Weighted and Used for Scoring
- Alternatives Are Scored Against Each Want Criteria Using a Numbering System from 0-10, with the Alternative that Best Satisfies the Criteria Receiving a 10, Others Are Scored Relative to the Alternative that Scored a 10
- Total Weighted Scores Are Used to Represent a Clear Comparison of the Performance of the Alternatives

Figure 2

Must Criteria

Must Criteria	Rationale for Selection
• System shall not be less than fail-safe (except for primary structure, TPS, and pressure vessels) during all mission phases	• NSTS 07700 Requirement
• Structural/functional integrity shall be verifiable by test	• Implied by NSTS 07700 Requirement
• System shall be capable of pressurizing LO2 and RP-1 propellants	• PTPSTP SOW Requirement
• System shall be capable of delivering pressurant between 600 and 1350 psia	• PTPSTP SOW Requirement
• System shall meet capability for engine shut-down upon command	• LRB Phase A Requirement
• System shall be capable of integration into large pressure-fed liquid and hybrid propulsion systems	• PTPSTP SOW Requirement
• System shall be designed to have no residual hazards (except primary structure, TPS, & pressure vessels)	• Implied by NSTS 07700 Reqts to Establish Greater System Safety

Figure 3

PTPSTP Must Criteria Screening

	Candidate Concept	Must Criteria							
		Fail-Safe	Verifiable By Test	LO2 & RP-1 Compatible	600-1350 psia	Engine Shut-Down	Booster Integration	Residual Hazards	
1	Stored Gas - Ambient	No Go	Go	Go	Go	Go	No Go	No Go	
2	Stored Gas - Steam System	Go	Go	Go	Go	Go	Go	Go	√
3	Stored Gas - H/X & GG	Go	Go	Go	Go	Go	Go	Go	√
4	Stored Gas - Catalyst	Go	Go	Go	Go	Go	Go	Go	√
5	Stored Gas - Fuel Rich GG	Go	Go	Go	Go	Go	Go	Go	√
6	Stored Gas - Oxid Rich GG	No Go	No Go	No Go	Go	Go	Go	No Go	
7	Stored Gas - Mono Propellant Catalyst	Go	Go	Go	Go	Go	Go	Go	√
8	Fuel & Oxid Rich Liquid GG Exhaust into Tanks	No Go	No Go	No Go	Go	Go	Go	No Go	
9	Fuel & Oxid Rich Solid GG Exhaust into Tanks	No Go	No Go	No Go	Go	No Go	Go	No Go	
10	Autogenous LO2 & Quasi Autogenous RP-1	Go	Go	Go	Go	Go	Go	Go	√
11	GG Vaporization Cycle	No Go	No Go	No Go	Go	Go	Go	No Go	
12	Direct Tank Injection	No Go	No Go	No Go	Go	Go	Go	No Go	

Figure 4

Want Criteria

Want Criteria	Weighting Factor	Rationale for Selection/Weighting Factor
• Safety	20	Safety and reliability identified in SOW as criteria for selecting both future launch vehicles as well as pressurization system - rated most important criteria
• Reliability	20	
• System Packaging	10	Packaging, weight, and supportability identified as criteria for ranking capability to integrate pressurization system into a launch vehicle - not as important as safety and reliability, supportability less important than others
• Weight	5	
• Supportability	5	
• System Performance	10	Complexity identified as criteria in SOW; performance along with complexity provides criteria for ranking system ability to perform its function - together rated less important than safety or reliability
• Operational Complexity	5	
• Technology Needs	5	Technology needs identified in SOW as ranking criteria for developing a viable flight system- rated least important
• Development Risk	5	Development risk and cost identified in SOW as criteria for ranking cost and risk of developing flight hardware - together rated as equal with safety or reliability
• Development Cost	15	
	100	

Figure 5

Want Criteria Dictionary

Criteria	Definition	Scoring Basis
System Performance	Evaluation of the pressurization system functional integrity	Based on margin of system to regulate within the required operating pressure; to provide control stability by limiting supply line and ullage pressure oscillation frequency and bandwidth and to exhibit pressure oscillation damping characteristics; and to adjust to varying flowrate demands shall also consider control system complexity and required in flight phasing/sequencing operations
Operational Complexity	Evaluation of overall system complexity	Based on total number of complex components and prelaunch phasing/sequencing operations
Safety	Evaluation of relative safety of system	Based on hazard analyses, identification of hazards and their effects and control methods
Reliability	Evaluation of relative reliability of system	Based on FMEAs, identification of failure modes and critical items
Technology Needs	Evaluation of what technology advancements are required	Based on technology needs identified and cost leverage and schedules to demonstrate technology acquisition
Development Risk	Evaluation of risk required to achieve the system required	Based on subjective assessment of ability to develop the system and the ability to produce and manufacture the hardware
Development Cost	Evaluation of cost to achieve the required system development	Based on projected cost numbers to develop and produce the flight hardware

Figure 6A

Want Criteria Dictionary (Cont'd)

Criteria	Definition	Scoring Basis
Weight	Evaluation of the overall weight of the pressurization system	Based on total system weight including inert, gross liftoff, commodities expended and residuals at engine cutoff
System Packaging	Evaluation of the ability of the system to be packaged into a launch vehicle	Based on concept size and ease of integration into the booster, number and type of interfaces and complexity of load paths will be considered
Supportability	Evaluation of logistics and maintainability of the system	Based on relative comparison of supportability activities including launch site activities; includes number of system/ component checkouts, servicing requirements, and number of LRUs

Figure 6B

Pressurization System Flight Article Requirements

- Satisfy STS Level I & II Requirements per NSTS 07700
- Propellants: LO2/RP-1
- Tank Pressure: 600 - 1350 psia
- Propellant Flow Rate: L02* 1665 - 7990 lbm/sec
  RP-1 1665 - 3330 lbm/sec
- Boost Time: ~120 - 150 sec
- LRB Engine Out Capability
- Throttlable Over Pressure and Flowrate Rate Ranges and Throttle Schedule
- Reliability Per NSTS-07700
- Safety Per NSTS-07700
- Package in Acceptable Volume (Goal is to fit LRB)
- Consistent With LRB Pressure-Fed Vehicle Data

* Includes LRB and Hybrid Requirements

Figure 7A

LRB PRESSURE-FED DATA

PROPELLANTS	Fuel-RP-1 - Density = 50.5 lbm/ft^3	
	Oxidizer-LO2 - Density = 71.1 lbm/ft^3	
ENGINES	4-750,000 lb Thrust (SL) Engines Throttleable	
	Isp 270.5 (SL) 318.0 (Vac)	
	Mixture Ratio 2.67	
	Propellant Flow Rate - 11,090.5 lbm/sec	
MASS FLOW RATE (BOOSTER)	LO2	8068.5 lbm/sec
	RP-1	3022.0 lbm/sec
VOLUMETRIC FLOW RATE	LO2	113.5 ft^3/sec
	RP-1	59.8 ft^3/sec

PROPELLANT TANKS

Material - Weldalite™ 049 (Aluminum Lithium)
Oxidizer Tank - 12012 ft^3
Fuel Tank - 6326 ft^3
Ullage Volume - 5% by Volume
1" SOFI on Oxidizer Tank Only
Ullage Temp. Limit (Max)
LO2 800°R
RP-1 800°R

THROTTLE SCHEDULE

Burn Duration - 120 sec.
100% Throttle for 30 sec.
75% Throttle for 30 to 120 sec.
(must have capability to throttle 3 engines to 100% for 30 to 120 sec to complete mission with a single engine failure)
± 5% band width on propellant tank pressure set point

Figure 7B

PTPSTP
System Trade Studies Scoring Matrix

No.	Scoring Criteria	Wt.	Cand 2 St.Gas Steam		Cand 2A St.Gas Steam		Cand 3 St.Gas GG/HEX		Cand 4 St.Gas Catalyst		Cand 4A St.Gas Catalyst Alt.		Cand 4B St.Gas Catalyst Alt.		Cand 5 St.Gas FR.GG		Cand 7 St.Gas MP Catalyst		Cand 10 Aut.LO2 Q. Aut RP-1	
			SC	WT SC	SC	WT SC	SC	WT SC	SC	WT SC	SC	WT SC	SC	WT SC	SC	WT SC	SC	WT SC	SC	WT SC
1	Safety	20	8	160	8	160	9	180	5	100	5	100	5	100	7	140	4	80	7	140
2	Reliability	20	7	140	10	200	8	160	6	120	5	100	4	80	2	40	6	120	1	20
3	System Packaging	10	9	90	10	100	9	90	3	30	6	60	7	70	8	80	6	60	6	60
4	Weight	5	6	30	10	50	6	30	4	20	7	35	8	40	7	35	5	25	3	15
5	Supportability	5	8	40	6	30	10	50	1	5	1	5	1	5	5	25	3	15	2	10
6	System Performance (Control Complexity)	10	8	80	10	100	9	90	9	90	9	90	7	70	6	60	9	90	8	80
7	Operational Complexity (Ground Ops)	5	10	50	10	50	10	50	5	25	6	30	6	30	9	45	6	30	9	45
8	Technology Needs	5	6	30	6	30	9	45	8	40	8	40	4	20	6	30	5	25	10	50
9	Development Risk	5	7	35	6	30	10	50	8	40	8	40	5	25	6	30	5	25	8	40
10	Cost-LCC	15	4	60	10	150	3	45	1	15	7	105	8	120	3	45	1	15	1	15
	Total	100																		
	Weighted Score			715		900		790		485		605		560		530		485		475
	Rank			3		1		2		6			4			5			6	
	Rank - Less 2A			2				1		5			3			4			5	

Figure 8

PTPSTP TRADE STUDIES

CANDIDATE SCORING AND RATIONALE

CANDIDATE - 2 - STORED GAS, STEAM

SCORING CRITERIA	WT	SCORE	WEIGHTED SCORE
1. SAFETY	20	8	166
2. RELIABILITY	20	7	140
3. SYSTEM PACKAGING	10	9	90
4. WEIGHT	5	6	30
5. SUPPORTABILITY	5	8	40
6. SYSTEM PERFORMANCE (CONTROL COMPLEXITY)	10	8	80
7. OPERATIONAL COMPLEXITY (GROUND OPS)	5	10	50
8. TECHNOLOGY NEEDS	5	6	30
9. DEVELOPMENT RISK	5	7	35
10. COST-LCC	15	4	60
TOTAL	100		
WEIGHTED SCORE			715

PTPSTP

CANDIDATE -2 - STORED GAS, STEAM

1. SAFETY - This system resembles 2a in its degree of basic safety, except that is slightly deficient in its ability to tolerate momentary control transients, its increased potential for danger due to high heat sources and interface incompatibilities. It appears to be less sensitive than 2a with regard to electrical malfunctions, weld flaws and generic hazards common to pressurized systems. This system is essentially a safe system.

2. RELIABILITY - The following summarizes the rationale used to score and rank Candidate 2:

Candidate #	Score	Discriminators
2	7	• Moderate Complexity, Requires a Good Bit of Controls • System Peculiar Failure Modes Associated With
Preliminary Critical Failure Mode Count 70		Gas Generator - Burnthrough - Flame Out
Number of Critical Components 42		Heat Exchanger - Leakage • Some Critical Failure Modes in Engine Area due to Pressurization Components • Dual GG's and HX's Required • Approximately 360 ft of Pressurized Line

3. SYSTEM PACKAGING - There is no impact on overall tank size. There is a slight impact on complexity due to additional requirement for steam. One additional 4 ft bottle was added in the fwd skirt. Additional valving and lines are needed for steam pressurization of the He tank.

4. WEIGHT - System 2 scored at about midpoint in the weight criteria compared to the other systems. Total system weight was 68,600 lbs. The large He tank, gas generators/heat exchangers, fluids, and propellants were the major-weight contributors. Propellant weights needed to operate the pressurization system were adjusted in system weight to reflect their contribution to vehicle total impulse.

5. SUPPORTABILITY - Supportability analysis shows that Candidate #2 ranks second overall. The factors inherent in this design are used to generate estimated requirements in each Logistic Support Category. Favorable estimated LRUs, estimated spares and GSE/TSE totals contributed to this overall score. This design ranked lower in required checkout/test, calibration and supplies/consumables requirements categories lowering the weighted score. The overall requirements totals are very favorable. Improved commonality/interchangability of components could possible improve this design to a level to compete with Candidate #3. There is no planned maintenance for this design.

6. SYSTEM PERFORMANCE (Control Complexity) - Fuel and LOX tank pressure is active using the A valves. (See valve schedule included with schematics.)
Heat addition to He tank: Passive
Primary HX:

Active bang-bang sequenced through the gas generator control valves.

Gas Generator:

Gas Generator is flow controlled.

The gas generator O/F is passive, except for extremes of valve failure. The gas generator will be run fuel rich. If the temperature is out of range high the assumption is that a fuel valve has failed closed (there are two valves in series so a double failure is required for an oxidizer valve to fail open) and another oxidizer valve will be closed. By using a sequential scheme to operate the valves, we can determine which valve is bad and remove it from our active control. Obviously low temperature is handled just the opposite.

7. OPERATIONAL COMPLESITY (Ground Ops) - System 2 scored high in the criteria of ground operations complexity. Only the large amount of gases and fluids to be loaded, hence more processing time, detracted from its ground operations rating.

8. TECHNOLOGY NEEDS - Technology needs for system 2 include management of water/ice in the system and high performance heat exchanger performance as moderate risk technology needs, and the moderate risk needs common to all candidate systems. The moderate risk technology issues are stratification and mixing in the large He dewar, pressure vessel fabrication methods and materials and high pressure line bellows. The system has a moderate score in this criteria.

9. DEVELOPMENT RISK - The development risk associated with the above technology needs is considered fairly low.

10. COST -LCC - This system is scored low in this trade due to the combination of high cost systems. Included in this system are both a gas generator and heat exchanger set, and a very large high pressure tank. DDT&E and production estimates are $12.2M and $1,113.7M.

PTPSTP

CANDIDATE - 2A - STORED GAS, STEAM (ALTERNATE)

SCORING CRITERIA	WT	SCORE	WEIGHTED SCORE
1. SAFETY	20	8	168
2. RELIABILITY	20	10	200
3. SYSTEM PACKAGING	10	10	100
4. WEIGHT	5	10	50
5. SUPPORTABILITY	5	6	30
6. SYSTEM PERFORMANCE (CONTROL COMPLEXITY)	10	10	100
7. OPERATIONAL COMPLEXITY (GROUND OPS)	5	10	50
8. TECHNOLOGY NEEDS	5	6	30
9. DEVELOPMENT RISK	5	6	30
10. COST-LCC	15	10	150
TOTAL	100		
WEIGHTED SCORE			900

PTPSTP

CANDIDATE - 2A - STORED GAS, STEAM (ALTERNATE)

1. SAFETY - This is also essentially a very safe system. Its minor deficiencies include somewhat greater sensitivities to electrical malfunction and hazards associated with pressurized systems than the reference configuration. These sensitivities are partially compensated for by its reduced sensitivity to hazards involved in the generation of heat and potential interchanging of components.

2. RELIABILITY - The following summarizes the rationale used to score and rank candidate 2A.

Candidate #	Score	Discriminators
2a	10	• Least complex system due to the Absence of Gas Generators, Heat Exchangers, Catalyst Beds, and Turbopumps
Preliminary Critical Failure Mode Count 59		• System Peculiar Failure Modes Associated With Mixing Chamber - Leakage
Number of Critical Components 39		• Redundancy Provided for Many Components
		• No Critical Failure Modes in Engine Area due to Pressurization System Components
		• Non Use of Fuels for Pressurization System
		• Approximately 200 ft. of Pressurized Line-Shortest of All Candidates

3. SYSTEM PACKAGING - There is no impact on overall tank size. There is a slight impact on complexity due to additional requirement for steam. An additional 4 ft bottle and a 7.5 ft bottle were added in fwd skirt area. Replacement of G.G./HX assembly by mixing chamber simplifies the concept and external plumbing. Questions about water vapor in fuel, control of ice in cryogenic tank, and possible increase in steam requirement could affect continued consideration.

4. WEIGHT - System 2A scored highest in the weight criteria with a total system weight of 43,900 lb. The large He tank and fluids were the major weight contributors.

5. SUPPORTABILITY - Supportability analysis shows that Candidate #2A ranks third overall. The factors inherent in this design are used to generate estimated requirements in each Logistic support Category. Favorable estimated LRUs, estimated spares, supplies/consumables and GSE/TSE totals contributed to this overall score. This design had unfavorable scores in required checkout/test and calibration requirements categories lowering the weighted score. The overall requirements totals are very favorable and reflect system complexity. Commonality/Interchangability of components probably cannot be improved on as this design has the overall lowest spares requirements. There is no planned maintenance for this design.

6. SYSTEM PERFORMANCE (Control Complexity) - Fuel and LOX tank pressure is active using the A valves.
Heat addition to tank: Passive.
Primary HX: The B valve will be used to control the temperature to the tanks.

7. OPERATIONAL COMPLEXITY (Ground Ops) - System 2A scored high in ground operations complexity and is similar to system 2. The lack of gas generators and heat exchangers in the system improved its score relative to system 2.

8. TECHNOLOGY NEEDS - Technology needs for system 2A are the management of large amounts of water/ice in the system (high risk technology) and the common moderate to low risk issues. The system has a moderate score in this criteria.

9. DEVELOPMENT RISK - The development risk associated with the above technology needs is considered moderate.

10. COST-LCC - This system received the highest ranking. The primary discriminator for this system is that there is no gas generator/heat exchanger combination or catalyst bed required. The mixing chamber unique to this design is estimated low. This system also has the least number of valves (12 vs highest of 32). DDT&E costs are the lowest because of the elimination of the HX and GG and Catalyst Bed development. DDT&E and Production estimates are $7.9M and $496.6M.

PTPSTP

CANDIDATE - 3- STORED GAS, GG/HX

SCORING CRITERIA	WT	SCORE	WEIGHTED SCORE
1. SAFETY	20	9	180
2. RELIABILITY	20	8	160
3. SYSTEM PACKAGING	10	9	90
4. WEIGHT	5	6	30
5. SUPPORTABILITY	5	10	50
6. SYSTEM PERFORMANCE (CONTROL COMPLEXITY)	10	9	90
7. OPERATIONAL COMPLEXITY (GROUND OPS)	5	10	50
8. TECHNOLOGY NEEDS	5	9	45
9. DEVELOPMENT RISK	5	10	50
10. COST-LCC	15	3	45
TOTAL	100		
WEIGHTED SCORE			790

PTPSTP

CANDIDATE - 3 STORED GAS, GG/HX

1. SAFETY - This system consists of reasonably conventional components and subsystems. New safety effort to insure safe design and operation would be minimal because the system takes advantage of existing safe practices and design features. The highest score of 9 is assigned to this system due to its intrinsic safety in dealing with hazards associated with fire, toxic and explosive fluids, and potential system malfunctions. The only area in which it scores lower than any of its counterparts is the potential for interchanging components, which can be easily avoided by design. This configuration is a very safe system. Optimization of this system by elimination of the few design problems identified could raise its score.

2. RELIABILITY - The following summarizes the rationale used to score and rank candidate 3:

Candidate #	Score	Discriminators
3	8	• Least Number of Items in Pressurization System of All Candidates
Preliminary Critical Failure Mode Count 60		• System Peculiar Failure Modes Associated With Gas Generator - Burnthrough - Flame Out Heat Exchanger - Leakage
Number of Critical Components 35		• Some Critical Failure Modes in Engine Area Due to Pressurization System Components
		• Redundancy Provided for Many Components
		• Requires Dual GG's and HX'S
		• Approximately 560 ft. of Pressurized Line.

3. SYSTEM PACKAGING - This candidate is considered the baseline configuration for the LRB Study. This concept utilizes the fewest number of tanks (LO2, RP-1, and He). Using current technology, this system has small diameter external lines and a simplified control system. Drawbacks are the size of G.G./HX with required redundancy.

4. WEIGHT -System 3 scored slightly below midpoint in the weight criteria with a total system weight of 72,500 lb. The large He tank, gas generators/heat exchangers, fluids and propellants were the major weight contributors. Propellant weights needed to operate the pressurization system were adjusted in system weight to reflect their contribution to vehicle total impulse.

5. SUPPORTABILITY - Supportability analysis shows that Candidate #3 is the best design considering all ranking criteria. This system design ranks first in every category except estimated spares. System complexity contributes greatly to this overall score as this design is the simplest and contains the fewest components and estimated LRUs. The overall requirements totals are very favorable and rank far below all other candidates. There is no planned maintenance for this design.

6. SYSTEM PERFORMANCE - (Control Complexity) - Control Problems: Add a bypass valve around primary heat exchange to provide controllability to the He tank pressurization.
Fuel and LOX tank pressure: Active using the A valves.
Primary HX; Active gas generator control.
Gas Generator:

Gas Generator is flow controlled.

The gas generator O/F is passive, except for extremes of valve failure. The gas generator will be run fuel rich. If the temperature is out of range high, the assumption is that a fuel valve has failed closed (there are two valves in series so a double failure is required for an oxidizer valve to fail open) and another oxidizer valve will be closed. By using a sequential sceme to operate the valves, we can determine which valve is bad and remove it from our active control Obviously low temperature is handled just the opposite.

Heat Additional to tank: Active using a HX bypass.

7. OPERATIONAL COMPLEXITY (Ground Ops) - System 3 scores almost as well as systems 2 & 2A in ground operations complexity. The large amounts of gases and fluids to be loaded and the use of gas generators and heat exchangers detracted from its score. These elements increased processing time lowering the score.

8. TECHNOLOGY NEEDS - Technology needs for system 3 are performance of high performance heat exchangers (moderate technical risk) and the common moderate to low risk issues. The system has a high score in this criteria.

9. DEVELOPMENT RISK - The development risk associated with the above technology needs is considered very low.

10. COST-LCC - This system is scored low in this trade due to the combination of high cost systems. Included in this system are both a gas generator and heat exchanger set, and a very large high pressure tank. Additionally there is a smaller heat exchanger inside the pressurant tank. DDT&E and Production estimates are $12.9M and $1,175.3M.

PTPSTP

CANDIDATE - 4- STORED GAS, CATALYST

SCORING CRITERIA	WT	SCORE	WEIGHTED SCORE
1. SAFETY	20	5	100
2. RELIABILITY	20	6	120
3. SYSTEM PACKAGING	10	3	30
4 WEIGHT	5	4	20
5. SUPPORTABILITY	5	1	5
6. SYSTEM PERFORMANCE (CONTROL COMPLEXITY)	10	9	90
7. OPERATIONAL COMPLEXITY (GROUND OPS)	5	5	25
8. TECHNOLOGY NEEDS	5	8	40
9. DEVELOPMENT RISK	5	8	40
10. COST-LCC	15	1	15
TOTAL	100		
WEIGHTED SCORE			485

PTPSTP

CANDIDATE - 4 - STORED GAS, CATALYST

1. SAFETY - The principle problems with this design are its large number of tanks and valves, which increases hazards associated with weld failures or instrumentation problems. These in turn pose hazards of fire and explosion and the potential danger due to physical change (boiling of cryogens). This system is considered the most hazardous in terms of the potential for explosion. Additional safety engineering effort would be required to resolve these concerns.

2. RELIABILITY - System 4 was considered slightly more reliable than system 4A and hence scores higher in this criteria. Smaller number of components and pre-mixed O2/H2/He contributed to the higher reliability score.

3. SYSTEM PACKAGING - He requirement of two 15 ft dia. tanks increases the overall vehicle length by 16.5 feet.

4. WEIGHT - System 4 scored near the bottom of all system candidates in the weight criteria. Total system weight was 101,500 lb. the major weight contributors were the large He tanks (2), small tanks, heat exchangers, the added length of the vehicle forward skirt and fluids.

5. SUPPORTABILITY - System 4 was considered to be similar to system 4A in supportability issues. It scores very low for the same reasons.

6. SYSTEM PERFORMANCE - (Control Complexity) - Assumed configuration for candidate 4: There is an ambient temperature He source with H2 and O2 mixed in. This source is run through a catalyst chamber to produce the pressurization heat source, and another catalytic chamber for the primary heat addition.

Control Problems: none

Fuel and LOX tank pressure: Active using the A valves.

Primary HX: Active using the mixed gas flow to control temperature.

Heat addition to tank: Active using the flow through the catalyst for the energy source.

7. OPERATIONAL COMPLEXITY (Ground Ops) - System 4 scores low for ground operations complexity because of large number of components, large amounts of fluids and gases needed, large tank loading, tridyne mixture sampling and increased facility modifications necessary.

8. TECHNOLOGY NEEDS - Technology needs for system 4 are main catalyst bed performance and the common moderate to low risk issues (moderate technical risk). The system scores fairly high in their criteria.

9. DEVELOPMENT RISK - The development risk associated with the above technology needs is considered low.

10. COST-LCC - The system has similar DDT&E and production costs as system 4A, but has the additional cost impact of having to increase the vehicle length by 16.5 feet to accommodate an additional 15' diameter He tank. These additional cost impacts cause this system to score very low.

PTPSTP

CANDIDATE - 4a- STORED GAS, CATALYST (ALTERNATE)

SCORING CRITERIA	WT	SCORE	WEIGHTED SCORE
1. SAFETY	20	5	100
2. RELIABILITY	20	5	100
3. SYSTEM PACKAGING	10	6	60
4. WEIGHT	5	7	35
5. SUPPORTABILITY	5	1	5
6. SYSTEM PERFORMANCE (CONTROL COMPLEXITY)	10	9	90
7. OPERATIONAL COMPLEXITY (GROUND OPS)	5	6	30
8. TECHNOLOGY NEEDS	5	8	40
9. DEVELOPMENT RISK	5	8	40
10. COST-LCC	15	7	105
TOTAL	100		
WEIGHTED SCORE			605

PTPSTP

CANDIDATE - 4A - STORED GAS (ALTERNATE)

1. SAFETY - This candidate has a relatively low score primarily due to the large number of tanks and components, which make the system sensitive to electrical malfunction and the hazard of leaks. Also, since oxygen and hydrogen are stored in separate tanks, leakage from these tanks would be especially hazardous. The lack of rotating components or toxic substances, however, partially mitigates the adverse effects of these factors. This system scores the same as system 4.

2. RELIABILITY - The following summarizes the rationale used to rank and score candidate 4A.

Candidate #	Score	Discriminators
4a	5	• Most Complex system (Large # of Components) - Very Complicated Control System
Preliminary Critical Failure Mode Count 107		• System Peculiar Failure Modes Associated With Heat Exchanger - Leakage Catalysts - Insufficient Output
Number of Critical Components 77		• Multiple Catalyst Beds/HX Required
		• Above Average Number of Pressure Vessels
		• Possibility of Getting Hydrogen into Oxidizer Tank
		• Possibility of Getting Oxygen into RP-1 fuel Tank
		• Approximately 360 ft. of Pressurized Line
		• No Critical Failure Modes in Engine Area due to Pressurization System Components
		• Redundancy Provided for many Components

3. SYSTEM PACKAGING - There is no impact on overall vehicle size. Configuration impacts are due to large number of additional bottles and control systems. Relocation of the He dewar requires structural reevaluation of the LRB. Additional piping and valving are required to manifold bottles together which increases complexity. Size of components and required redundancy will cause packaging impact.

4. WEIGHT - System 4A scored near the top of all the system candidates in the weight criteria. Total system weight was 61,800 lb. The major weight contributors were the large He tank, small tanks, heat exchangers, and fluids.

5. SUPPORTABILITY - Supportability analysis shows that Candidate #4A ranks at the bottom. The factors inherent in this design ar not compatible with those judged to be logistically supportable. This system ranks at the bottom of all scoring categories considered in this study. Every category consistently scored lower due to system complexity, total components, estimated spares and required procedures. Numerous subsystems contributed to its overall low score and to this design being judged as unfavorable from a supportability standpoint. There is no planned maintenance for this design.

6. SYSTEM PERFORMANCE (Control Complexity) - Control complexity of this system is similar to system 4b, following, less the depletion catalyst control. This system scores between systems 4 and 4b.

7. OPERATIONAL COMPLEXITY (Ground Ops) - Ground operations for system 4A suffers from large number of components large amounts of fluids and gases needed, many tanks on the vehicle and increased facility modifications needed. It was one of the lowest scoring systems.

8. TECHNOLOGY NEEDS - Technology needs for system 4A are the same as system 4. The system has a fairly high score.

9. DEVELOPMENT RISK - The development risk associated with the above technology needs is considered low similar to system 4.

10. COST-LCC - This system scored third in this trade. One of the major contributors to this relatively low cost system is the elimination of the HX and GG. The catalyst bed recurring costs are less than 10% of the HX/GG combination. While a small heat exchanger is still required, the associated cost is relatively low. Estimated catalyst bed development costs are in line with that of the HX/GG combination. DDT&E and Production estimates are $12.1M and $799.5M.

PTPSTP

CANDIDATE - 4b- STORED GAS, CATALYST (ALTERNATE)

SCORING CRITERIA	WT	SCORE	WEIGHTED SCORE
1. SAFETY	20	5	100
2. RELIABILITY	20	4	80
3. SYSTEM PACKAGING	10	7	70
4. WEIGHT	5	8	40
5. SUPPORTABILITY	5	1	5
6. SYSTEM PERFORMANCE (CONTROL COMPLEXITY)	10	7	70
7. OPERATIONAL COMPLEXITY (GROUND OPS)	5	6	30
8. TECHNOLOGY NEEDS	5	4	20
9. DEVELOPMENT RISK	5	5	25
10. COST-LCC	15	8	120
TOTAL	100		
WEIGHTED SCORE			560

PTPSTP

CANDIDATE-4B-STORED GAS, CATALYST (ALTERNATE)

1. SAFETY - This system poses even more severe hazards related to electrical malfunction and unintended valve operation. It is somewhat less hazardous than candidate 4 as regards pressure system explosion, but is the most hazardous in terms of software errors. This system would require appreciable safety effort to insure safe design and operation of the system.

2. RELIABILITY - The following summarizes the rationale used to rank and score candidate 4b:

Candidate #	Score	Discriminators
4b	4	• Very Complex System (Large # of Components) - Very Complicated Control System (Similar to Candidate #4a)
Preliminary Critical Failure Mode Count 127		• System Peculiar Failure Modes Associated With Heat Exchanger - Leakage Catalysts - Insufficient Output
Number of Critical Components 87		• Multiple Catalyst Beds/HX Required • Above Average Number of Pressure Vessels • Possibility of Getting Hydrogen into Oxidizer Tank • Possibility of Getting Oxygen into RP-1 Fuel Tank • No Critical Failure Modes in Engine Area due to Pressurization System Components (Similar to Candidate #4a) • Redundancy Provided for many Components

3. SYSTEM PACKAGING - This system is similar to concept #4a. This system appears to be more controllable. There is increased complexity in external and internal piping.

4. WEIGHT - System 4B scored near the top of the system candidates and slightly better than system 4A because of the lower number of small tanks. Total system weight was

52,500 lb, with major weight contributors being the large He tank, heat exchangers and fluids.

5. SUPPORTABILITY - Supportability Analysis shows that Candidate #4b ranks at the bottom. The factors inherent in this design are not compatible with those judged to be logistically supportable. This system ranks at the bottom of all scoring categories considered in this study. Every category consistently scored lower due to system complexity, total components, estimated spares, and required procedures. Numerous subsystems contributed to its overall low score and to this design being judged as favorable from a supportability standpoint. There is no planned maintenance for this design.

6. SYSTEM PERFORMANCE (Control Complexity) - The system uses hydrogen and oxygen in a catalyst bed for the energy source.
Control Problems: There needs to be a temperature sensor in the He tank catalyst to control He dilution.

Fuel and LOX tank pressure; Active using the A valves.

He dewar catalyst control: The temperature control is accomplished using He dilution.

Primary HX: Active using the hydrogen and oxygen flow for total heat. O/F control will be open loop with monitor.

Heat addition to tank: Active using the hydrogen and oxygen flow for total heat. Passive O/F control. Passive He flow for dilution.

7. OPERATIONAL COMPLEXITY (Ground Ops) - System 4b suffers from all the ground operations complexity of system 4A except worse due to the higher number of components. It was only better in the number of tanks on the vehicle. This system was one of the lowest scoring systems in this criteria.

8. TECHNOLOGY NEEDS - Technology needs for system 4B include those of systems 4/4A plus finishing catalyst bed performance (high technical risk) and response of instrumentation and condition monitors (low technical risk). The system scores fairly low in this criteria because of these additional technology needs.

9. DEVELOPMENT RISK - The development risk associated with the above technology needs is considered moderate.

10. COST-LCC - This system scored second in this trade. One of the major contributors to this relatively low cost system is the elimination of the HX and GG. The catalyst bed recurring costs are less than 10% of the HX/GG combination. While a small heat exchanger is still required, the associated cost is relatively low. This candidate is separated from Candidate 4a by the quantity of tanks required. 12 (3000 psi) tanks are required for system 4a - whereas only 3 (1500 psi) tanks are required for 4b. Estimated catalyst bed development costs are in line with that of the HX/GG combination. DDT&E and production estimates are $12.0M and $669.2M.

PTPSTP

CANDIDATE - 5- STORED GAS, FUEL RICH GG

SCORING CRITERIA	WT	SCORE	WEIGHTED SCORE
1. SAFETY	20	7	140
2. RELIABILITY	20	2	40
3. SYSTEM PACKAGING	10	8	80
4. WEIGHT	5	7	35
5. SUPPORTABILITY	5	5	25
6. SYSTEM PERFORMANCE (CONTROL COMPLEXITY)	10	6	60
7. OPERATIONAL COMPLEXITY (GROUND OPS)	5	9	45
8. TECHNOLOGY NEEDS	5	6	30
9. DEVELOPMENT RISK	5	6	30
10. COST-LCC	15	3	45
TOTAL	100		
WEIGHTED SCORE			530

PTPSTP

CANDIDATE - 5 - STORED GAS, FUEL RICH GG

1. SAFETY - This system represents a midpoint between the upper and lower safety scores. On the one hand, it is a relatively simple system, with conventional components. On the other, the potential for pumping oxygen rich exhaust gas into a pressurization line contaminated with fuel, and possibly into a tank, represents an engineering challenge to design a system with enough safety features and sufficient reliability that this risk is acceptably small. The other deficiencies of this system are primarily associated with the turbopump.

2. RELIABILITY - The following summarizes the rationale used to score and rank candidate 5:

Candidate #	Score	Discriminators
5	2	• Complex System, Less Complex Control System than Candidate #10
Preliminary Critical Failure Mode Count 183		• System Peculiar Failure Modes Associated With Gas Generator - Burnthrough - Flame Out
Number of Critical Components 57		Turbopump - Pump Explosion - 50 Critical Failure Modes Associated with Turbopump Heat Exchanger - Leakage
		• Three Pressurization Lines for Two Pressure Vessels - Needs More Pressure Control
		• Critical Failure Modes in Engine Area due to Pressurization System Components
		• Multiple GG/HX/Turbopumps Required
		• Approximately 405 ft of Pressurized Line

3. SYSTEM PACKAGING - There is no impact to overall vehicle size. The system has a minimum number of tanks. Use of turbopumps to feed G.G./HX complicates this system and packaging. An overcrowded aft skirt makes for system piping and control complications.

4. WEIGHT - System 5 scored slightly above midpoint in the weight criteria with a total system weight of 66,300 lb. The large He tank, gas generators/heat exchangers, fluids and propellants were the major weight contributors.

5. SUPPORTABILITY - Supportability analysis shows that candidate #5 ranks fourth overall. The factors inherent in this design are used to generate estimated requirements in each Logistic Support Category. Favorable estimated LRUs, checkout/test calibration and GSE/TSE totals contributed to this overall score. This design had unfavorable scores in estimated spares and consumables requirements categories lowering the weighted score. The overall requirements totals are not very favorable and reflect system complexity. Commonality/interchangability of components probably can be improved on and contribute to a higher overall score. There is no planned maintenance for this design.

6. SYSTEM PERFORMANCE (Control Complexity) - Assume the pumps are pressure regulated back to their inputs and that there are throttle valves into the gas generator.

Assume the pumps are pressure regulated back to their inputs and that there are throttle valves into the gas generator.

Control Problems: To start the bootstrap turbopump either an exhaust overboard is needed to generate the delta P across the turbine at zero speed, or a motor starter. A primary heat exchanger bypass of the gas generator products will be used to control He tank pressure.

Fuel and LOX tank pressure: Active using the A valves.

Primary HX: Active using flow to the gas generator. The temperature will be controlled by means of the O/F trim.

Turbo-pump Speed Control: Active. The turbine uses waste heat from the HX for the energy source. The turbine bypass valve is used for control.

Heat addition to tank: Active. The bypass valve around the primary heat exchanger will be used to control the heat into the dewar.

7. OPERATIONAL COMPLEXITY (Ground Ops) - System 5 scores well in ground operations complexity due to low ground processing requirements in all areas except the use of turbopumps which have high processing requirements. It was one of the better systems in this criteria.

8. TECHNOLOGY NEEDS - Technology needs for system 5 are high performance heat exchanger performance and controls stability/dynamics/response (moderate risk) and the common moderate to low risk issues. This system also has the additional low risk issues of control of duel turbine drives and instrumentation/condition monitors response. This system has a moderate score in this criteria.

9. DEVELOPMENT RISK - The development risk associated with the above technology needs is considered moderate.

10. COST-LCC - This system scored near the bottom of the list. One of the major cost contributors to this system is the large high pressure tank in combination with gas generators, heat exchangers, and turbopumps. Even using optimistic turbopump estimates, this system scores low. The turbopump development in addition to the other components makes this the highest cost development program. DDT&E and Production estimates are $15.8M and $1,160.5M.

PTPSTP

CANDIDATE - 7- STORED GAS, MONOPROPELLANT CATALYST

SCORING CRITERIA	WT	SCORE	WEIGHTED SCORE
1. SAFETY	20	4	80
2. RELIABILITY	20	6	120
3. SYSTEM PACKAGING	10	6	60
4. WEIGHT	5	5	25
5. SUPPORTABILITY	5	3	15
6. SYSTEM PERFORMANCE (CONTROL COMPLEXITY)	10	6	60
7. OPERATIONAL COMPLEXITY (GROUND OPS)	5	6	30
8. TECHNOLOGY NEEDS	5	5	25
9. DEVELOPMENT RISK	5	5	25
10. COST-LCC	15	1	15
TOTAL	100		
WEIGHTED SCORE			485

PTPSTP

CANDIDATE - 7 STORED GAS, MONOPROPELLANT CATALYST

1. SAFETY - This system poses the most hazards, associated primarily with the use of hydrazine and the consequent potential for ignition, fire and explosion due to leaks. This is the lowest ranking system with respect to system leaks and personnel hazards such as respiratory system damage, skin irritation and toxic gas production. It would require the most safety engineering effort of all the candidates to insure that the system could be operated safely. It does not represent the most challenging safety engineering effort possible, however, since hydrazine, for all its hazards, is a propellant with a long history of use and reliability, and a sufficiently large body of experience in the design of systems using hyhdrazine exists that a technological breakthrough or extensive system testing would not be expected to be required..

2. RELIABILITY - The following summarizes the rationale used to score and rank Candidate 7:

Candidate #	Score	Discriminators
7	6	• Very Complex Mechanically - Requires Sophisticated Control System
Preliminary Critical Failure Mode Count 85		• System Peculiar Failure Modes Associated With Heat Exchanger - Leakage Catalyst - Insufficient Output
Number of Critical Components 63		• Above Average Number of Pressure Vessels
		• Use of Hydrazine
		• Three Pressurization Lines for Two Pressure Vessels - Needs More Pressure Control
		• No Critical Failure Modes in Engine Area due to Pressurization System Components
		• Redundancy Provided to Ensure Flow To Catalyst
		• Non Use of Fuels for Pressurization System
		• Approximately 485 ft. of Pressurized Line
		• Multiple GG's and HX's Required

3. SYSTEM PACKAGING - There is no overall vehicle size impact. additional requirements for N2H4 bottles and ground supply increases system complexity. The 8 ft diameter bottle in the nosecone leaves little room for separation system motors.

4. WEIGHT - System 7 scored somewhat below midpoint in the weight criteria with a total system weight of 77,500 lb. The major weight contributors were the large He tank, heat exchangers, and fluids.

5. SUPPORTABILITY - Supportability analysis shows that Candidate #7 is ranks near the bottom of all categories. The inherent factors contributing to this are low scores in all categories except GSE/TSE and Supplies/consumables. System complexity and number of components is the major factor in an unfavorable ranking. There is no planned maintenance for this design.

6. SYSTEM PERFORMANCE (Control Complexity) - Control Problems: Add a check valve between the primary heat exchanger outlets to prevent monopropellant from getting into the oxidizer tank.

Fuel tank pressure: Active using total N2H4

LOX tank pressure: Active using valve A.

Primary HX: Passive. The temperature will result from whatever the flow is needed for fuel tank pressurization.

Heat addition to tank: Active. The hydrazine flow through control valve. This choice requires a hot control valve. A better choice would be using a separate catalyst bed for the tank heat addition and a cold valve upstream of the bed. The liquid valve would also be smaller.

N2H4 Tank Pressurization: Passive.

7. OPERATIONAL COMPLEXITY (Ground Ops) - System 7 suffers in this category because of large number of components, large amounts of gases, fluids needed, large facility modifications required, complexity and large numbers of tanks on the vehicle. This system also suffered in operations safety because of the use of hydrazine (N2H4) requiring SCAPE operations. The system scored low in this criteria.

8. TECHNOLOGY NEEDS - System 7 has technology needs similar to System 5 less control of turbine drives. It also has the issue of large hydrazine (N_2H_4) decomposition catalyst bed performance (moderate technical risk). This system has a moderate score in this criteria.

9. DEVELOPMENT RISK - The development risk associated with the above technology needs is considered moderate.

10. COST-LCC - This system is the highest cost system: it scored at the bottom of the list. One of the major cost contributors to this system is the large catalyst system costs. This catalyst is different than the ones considered in 4a and 4b. In addition to the catalyst costs there are also 6 (5' diameter) tanks required. This system also has the highest quantity of valves. DDT&E and Production estimates are $12.2M and $1,589.6M.

PTPSTP

CANDIDATE - 10- STORED GAS, MONOPROPELLANT CATALYST

SCORING CRITERIA	WT	SCORE	WEIGHTED SCORE
1. SAFETY	20	7	140
2. RELIABILITY	20	1	20
3. SYSTEM PACKAGING	10	6	60
4. WEIGHT	5	3	15
5. SUPPORTABILITY	5	2	10
6. SYSTEM PERFORMANCE (CONTROL COMPLEXITY)	10	8	80
7. OPERATIONAL COMPLEXITY (GROUND OPS)	5	9	45
8. TECHNOLOGY NEEDS	5	10	50
9. DEVELOPMENT RISK	5	8	40
10. COST-LCC	15	1	15
TOTAL	100		
WEIGHTED SCORE			475

PTPSTP

CANDIDATE - 10 - AUTOGENOUS LO2, QUASI - AUTOGENOUS RP-1

1. SAFETY - This system is relatively safe with regard to electrical problems and undetected tank weld flaws, but the potential for fire posed by the use of hydrogen (and its potential for leaks) and the dangers associated with turbopump failure detract from the system's inherent safety. Extra safety engineering effort would be required to improve the safety of the final system design.

2. RELIABILITY - The following summarizes the rationale used to score and rank Candidate 10:

Candidate #	Score	Discriminators
10	1	• Very Complex System
Preliminary Critical Failure Mode Count 191		• System Peculiar Failure Modes Associated With Gas Generator - Burnthrough - Flame Out Turbopump - Pump Explosion 50 Criticall Failure Modes Associated With Turbopump
Number of Critical Components 54		• Complicated Heat Exchanger - Three Separate Instead of Two
		• LH2 Bottle - Second Fuel on LRB which Reacts with LO2
		• Critical Failure Modes in Engine Area due to Pressurization System
		• Multiple GG/HX/Turbopumps Required
		• Approximately 420 ft of Pressurized Line

3. SYSTEM PACKAGING - There is a minor impact on overall vehicle size. Use of turbo pumps complicates the aft skirt area. The large 10 in. diameter pressurization line is considered a minus. Large valves and associated hardware restrict hardware placement. An additional LH2 bottle impacts the structure and ground support.

4. WEIGHT - System 10 scored the lowest of all candidate systems with a total system weight of 142,700 lb. The major contributors to weight were increased vehicle size, gas generators/heat exchangers, lines and valves, and large required propellant quantities. Propellant weights needed to operate the pressurization system were adjusted in system weight to reflect their contribution to vehicle total impulse.

5. SUPPORTABILITY - Supportability analysis shows that Candidate 10 ranks fifth. The scoring factors inherent in this design that contribute favorably are checkout/test, calibration, and GSE/TSE requirements. Total requirements ranks this design as favorable for future considerations. Unfavorable rankings in estimated LRUs, spares and supplies/consumables illustrates the complexity and lack of standardization/commonality which may be improved upon. There is no planned maintenance for this design.

6. SYSTEM PERFORMANCE (Control Complexity) - Control Problems: Turbo-pumps are to be pressure regulated back to their inlets.

Fuel tank pressure: Active using valve A.

LOX tank pressure: Active using valve A.

Primary HX: Active. The use of the gas generator flow.

Gas generator temperature: Active. Use of the O/F to the gas generator.

Liquid Hydrogen Tank Pressure: Passive.

Turbo-pump Speed: Active. Use the bypass valve to control speed. The speed set point will be changed when the flow goes from full flow to three quarters.

7. OPERATIONAL COMPLEXITY (Ground Ops) - Ground operations complexity for system 10 is similar to system 5 but with slight differences in the areas of amount of gases/fluids needed, facility modifications, and complexity. This system scored high in this criteria.

8. TECHNOLOGY NEEDS - Technology needs for system 10 are similar to system 5 excluding He dewar stratification/mixing and instrumentation/condition monitors response. This system scores high in this criteria.

9. DEVELOPMENT RISK - The development risk associated with the above technology needs is considered low.

10. COST-LCC - This system also scored at the bottom of the list. One of the major cost contributors to this system is the large heat exchanger system costs. This HX is by far the largest one of any of the candidates: It is also the most expensive single system. Additionally, this system uses relatively large turbo pumps. In comparison to the Candidate 5 turbopumps these are 10 times heavier. DDT&E and Production estimates are $10.9M and $1,442.3M.

A. METHODOLOGY - SUMMARY DATA

- SAFETY
- RELIABILITY
- SYSTEM PACKAGING
- WEIGHT
- SUPPORTABILITY
- SYSTEM PERFORMANCE - CONTROL COMPLEXITY
- TECHNOLOGY NEEDS/DEVELOPMENT RISK
- COST

B. SYSTEM SKETCHS

C. SYSTEM PACKAGING SKETCHS

PTPSTP TRADE STUDIES
SAFETY DATA SUMMARY

PTPSTP TRADE STUDY CANDIDATES / HAZARDS IDENTIFIED FROM REFERENCED SOURCES, WEIGHED SCORES	CRITERIA ASSIGNED WEIGHT	2 - Stored Gas - Steam	2a - Stored Gas - Steam	3 (Reference) - Stored Gas - HX and GG	4 - Stored Gas - Catalyst	4b - Stored Gas - Catalyst Alternate	5 - Stored Gas - Fuel Rich Gas Generator	7 - Stored Gas - Mono Propellant Catalyst	10 - Autogenous LO2, Quasi Autogenous RP-1	4a - Stored Gas - Catalyst Alternate
LRB-P-P-001 Electrical malfunction in facilities instrumentation	6	42	24	60	24	6	60	24	60	6
LRB-P-P-003 Momentary opening of valves due to collapse of magnetic fields stored in wiring inductance during separation	4	31.2	40	35.6	24.4	4	22	17.6	22	26.4
LRB-P-P-004 Non-interchangeable components which have connections which can be physically interchanged	2	9.2	20	2	16.4	16.4	2	5.6	12.8	16.4
LRB-P-P-005 Undetected critical flaw in a tank weld	8	70.4	51.2	75.2	8	60.8	75.2	41.6	80	27.2
Cryogenics and Propellants (Fuel and Oxidizer in Presence of Pressure and Ignition Source)	6	60	60	60	6	6	60	6	30	6
Fire and Explosion Sources	3	30	30	30	3	3	30	3	3	27
Chemical Change (Exothermic/Endothermic)	3	30	30	30	3	3	30	3	30	3
High Heat Source	4	14.4	40	14.4	40	40	40	24.4	4	40
Toxic Substances, Exposure, Toxic Fluids	5	50	50	50	50	50	50	5	50	50
Pressure Systems, Blast/Fragmentation	7	65.1	45.5	70	55.3	70	55.3	36.4	65.1	11.9
Explosive Fluids	7	70	70	70	7	23.1	70	62.3	70	23.1
Incompatible Materials Reaction	4	40	40	40	40	40	40	4	20	40
Interfacing Systems/Component Reactions	5	5	50	35	35	20	27.5	35	35	50
Unintended Operations Caused/Prevented by Software	6	47.4	47.4	60	34.8	6	47	27	47	27
Disintegration of Rotating Components	7	70	70	70	70	70	7	70	7	70
Change in Physical or Chemical Properties	5	5	5	5	50	5	5	5	5	5
System Leaks	7	56	56	70	7	7	70	7	35	7
Respiratory System Damage	3	21	21	30	21	21	30	3	30	30
Skin Irritation or Damage	2	2	2	20	2	2	20	2	20	20
Toxic Gas Production	6	60	60	60	60	60	60	6	60	60
TOTAL OF COLUMNS, WEIGHED SCORE	100	778.7	812.1	887.2	508.6	498.6	816.	387.9	686.3	546
ADJUSTED (INTEGER) WEIGHED SCORE		8	8	9	5	5	8	4	7	5

PTPSTP Trade Study - Reliability Summary

Candidate	Preliminary Critical Failure Mode Count	Number of Critical Components	Score
2a. Stored Gas - Steam (Alternate)	59	39	10
3. Stored Gas - Hx and GG	60	35	8
2. Stored Gas - Steam	70	42	7
7. Stored Gas - Mono Prop Catalyst	85	63	6
4. Stored Gas - Catalyst			6
4a. Stored Gas - Catalyst (Alternate)	107	77	5
4b. Stored Gas - Catalyst (Alternate)	127	87	4
5. Stored Gas - Fuel Rich GG	183	57	2
10. Autogenous LO2, Quasi RP-1	191	54	1

PTPSTP Trade Study - System Packaging Data Summary

Candidate #	Veh Size Score	No. of Tanks Score	Grnd Support Score	No. of Components (Complexity Score)	Ext. Lines Score	Packaging Weighted	Trade Scores
2	10	8	6	6	6	72	9
2a	10	7	4	10	8	81	10
3	10	10	10	6	2	74	9
4	1	2	2	4	4	27	3
4a	10	2	4	4	4	48	6
4b	10	6	4	4	3	54	7
5	10	10	10	2	4	68	8
7	10	4	2	4	4	49	6
10	10	8	4	2	2	51	6
Weighting	20%	20%	15%	25%	20%	100%	

PTPSTP TRADE STUDIES
WEIGHT DATA SUMMARY

RANKING	CANDIDATE NO.	WT-LBS	SCORE
1	2a	43,888	10
2	4b	52,475	8
3	4a	61,810	7
4	5	66,337	7
5	2	68,571	6
6	3	72,533	6
7	7	77,467	5
8	4	101,538	4
9	10	142,682	3

PTPSTP TRADE STUDIES
CANDIDATE WEIGHT BREAKDOWN
CANDIDATE 2

MAIN HELIUM TANK	16,003
HELIUM	14,995
H2O STEAM TANK	448
H2O	950
HEX/GG (2 REDUNDANT)	22,007
LINES	2,133
VALVES	1,172
NET WT IMPACT GG PROPELLANTS	5,265
VEHICLE WT. DELTA FOR GG PROPELLANTS	3,510
MISCELLANEOUS	2,088
TOTAL WEIGHT-LBS	68,571

PTPSTP TRADE STUDIES
CANDIDATE WEIGHT BREAKDOWN
CANDIDATE 2A

MAIN HELIUM TANK	14,941
HELIUM	14,350
H2O STEAM TANK	3,320
H2O	7,031
MIXING CHAMBER	2,260
LINES	357
VALVES	557
MISCELLANEOUS	1,072
TOTAL WEIGHT-LBS	43,888

PTPSTP TRADE STUDIES
CANDIDATE WEIGHT BREAKDOWN
CANDIDATE 3

MAIN HELIUM TANK	16,683
HELIUM	14,995
SML HEX	760
LINES	5,838
VALVES	1,153
HX/GG	22,007
NET WT IMPACT GG PROPELLANTS	5,265
VEHICLE WT. DELTA FOR GG PROPELLANTS	3,510
MISCELLANEOUS	2,322
TOTAL WEIGHT-LBS	72,533

PTPSTP TRADE STUDIES
CANDIDATE WEIGHT BREAKDOWN
CANDIDATE 4

MAIN HELIUM TANK	44,740
HELIUM	15,075
SML TANKS	10,116
O2, H2	45
CATALYST BEDS (2 REDUNDANT)	2,350
HEX (2 REDUNDANT)	14,350
LINES	806
VALVES	941
VEHICLE WT. DELTA FOR HE STORAGE	9,000
MISCELLANEOUS	4,115
TOTAL WEIGHT-LBS	101,538

PTPSTP TRADE STUDIES
CANDIDATE WEIGHT BREAKDOWN
CANDIDATE 4A

MAIN HELIUM TANK	14,627
HELIUM	14,437
SMALL TANKS	10,115
GO2, GH2	2,223
MAIN CATALYST BED (2 REDUNDANT)	2,350
HEX (2 REDUNDANT)	14,350
LINES	725
VALVES	833
MISCELLANEOUS	2,150
TOTAL WEIGHT-LBS	61,810

PTPSTP TRADE STUDIES
CANDIDATE WEIGHT BREAKDOWN
CANDIDATE 4b

MAIN HELIUM TANK	14,627
HELIUM	14,145
GO2, GH2 TANKS	1,732
GO2, GH2	1,442
SML. HE TANK	448
CATALYST BED (2 REDUNDANT)	2,350
HEX (2 REDUNDANT)	14,350
LINES	769
VALVES	855
MISCELLANEOUS	1,757
TOTAL WEIGHT-LBS	52,475

PTPSTP TRADE STUDIES
CANDIDATE WEIGHT BREAKDOWN
CANDIDATE 5

MAIN HELIUM TANK	11,986
HELIUM	10,780
HEX/GG (2 REDUNDANT)	22,007
HEX	760
TURBOPUMPS (2 REDUNDANT)	172
LINES	3,524
VALVES	1,991
NET WT IMPACT GG PROPELLANTS	11,895
VEHICLE WT DELTA FOR GG PROPELLANTS	1,200
MISCELLANEOUS	2,022
TOTAL WEIGHT-LBS	66,337

PTPSTP TRADE STUDIES
CANDIDATE WEIGHT BREAKDOWN
CANDIDATE 7

MAIN HELIUM TANK	11,711
HELIUM	10,882
SML. HE TANK	2,325
CATALYST BED (2 REDUNDANT)	2,560
HEX (2 REDUNDANT)	14,350
N2H4 TANKS	2,766
N2H4	24,250
LINES	2,948
VALVES	2,899
MISCELLANEOUS	2,016
TOTAL WEIGHT-LBS	77,467

PTPSTP TRADE STUDIES
CANDIDATE WEIGHT BREAKDOWN
CANDIDATE 10

MAIN HELIUM TANK	192
HELIUM	251
LH2 TANK	354
LH2	1,990
HEX/GG (2 REDUNDANT)	16,882
TURBOPUMPS (2 REDUNDANT)	1,580
LINES	6,043
VALVES	6,924
NET WT IMPACT GG PROPELLANTS	98,572
VEHICLE WT DELTA FOR GG PROPELLANTS	7,900
MISCELLANEOUS	1,994
TOTAL WEIGHT-LBS	142,682

PTPSTP MAINTAINABILITY / SUPPORTABILITY ANALYSIS

TRADE STUDY SCORING GROUNDRULES & ASSUMPTIONS

The Preliminary Maintenance Analysis Will Evaluate Each System Candidate On The Logistics Supportability Factors Inherent In Each Preliminary Design. Requirements Will Be Estimated Based On The Initial Candidates Design And Will Be Finalized As Each Packaging Concept Is Baselined. The Maintenance Plan Will Be To Remove / Replace Individual Projected LRUs At The Organizational Level (Launch Site). The Maintenance Plan Will Be Optimized During Tradeoffs As The System Design Reaches Maturity.

SCORING CATAGORIES

Components	Total Number Of Components Contained In The System
Estimated LRUs	Estimated Items That Can Be Removed / ReplacedAtThe Optimum Level Of Maintenance.
Potential Spares	LRUs Estimated To Be Spared To Support TheProposed System Design At The Launch Site.
Checkout / Test Requirements	Estimated Number Of Items Requiring Checkout/Testing At The Launch Site.
Calibration Requirements	Estimated Number ItemRequiring Calibration Procedures At The Launch Site.
Planned Maintenance	Estimated Number Of Items That Will Require Planned Maintenance Actions To Maintain System At Operational Levels.
GSE / TSE Requirements	LRUs Estimated To Require Special GSE / TSE For Completition Of Required Checkout / Test / Calibration Procedures.
Projected Supplies/ Consumables	Number Of LRUs Estimated To Require Supplies / Consumables For Completition Of Maintenance Actions.

ORIGINAL PAGE IS OF POOR QUALITY

PTPSTP MAINTAINABILITY / SUPPORTABILITY ANALYSIS

- FUTURE MAINTENANCE / SUPPORT CONSIDERATIONS
  - Accessibility / Packaging Considerations
  - Limited-Life Items
  - Vehicle Packaging, Handling & Transportation
  - Maintenance Facility Size / Requirements
  - Manpower Requirements (Maintenance)
  - Maintenance Training

PTPSTP Trade Studies
Supportability Summary Data

RATIONAL FOR CANDIDATE RANKINGS

Each Candidate was divided into 5 subsystems; LO2 Feed, Fuel Feed, Pressure System, Vent/Relief System and Fill/Drain System. Each Candidate Design's Supportability Requirements were assessed and totaled for each subsystem and a total composite score was generated. Weghted scores on a scale of 10-1 were assigned for each category based on its rank by in relation to all other candidates. The results are show in the following weighted candidate ranking. A ranking based on the three catagories judged as having the most impact was developed to illustrate any variances from the the weighted totals and highlight any critical areas for future support considerations.

WEIGHTED TOTALS

Rank		Raw Score	Trade Score	REQ	Est. LRUs	Est. Spares	Checkout / Test	Calibration	Planned Maintenance	Ground Support Equipment	Supplies / Consumables
1	#3	64	10	10	10	6	9	10	0	10	9
2	#2	48	8	8	6	10	6	6	0	7	5
3	#2A	39	6	6	8	8	3	2	0	7	5
4	#5	35	5	4	4	4	9	8	0	4	2
5	#7	16	3	1	1	1	1	1	0	2	9
6	#10	15	2	2	2	1	3	4	0	1	2
7	#4	9	1	1	1	1	1	1	0	2	2
8	#4B	8	1	1	1	2	1	1	0	1	1

CANDIDATE RANKING BY CRITICAL CATAGORIES

REQUIREMENT TOTALS										
Rank		Score	Qty	Est. LRUs	Est. Spares	Checkout / Test	Calibration	Planned Maintenance	Ground Support Equipment	Supplies / Consumables
1	#3	239	N/A	101	57	31	20	0	10	20
2	#2	253	N/A	114	45	36	25	0	11	22
3	#2A	256	N/A	107	51	38	27	0	11	22
4	#5	272	N/A	121	62	31	22	0	12	24
5	#10	355	N/A	164	85	38	26	0	16	26
6	#4B	386	N/A	198	65	49	33	0	16	25
7	#7	404	N/A	222	75	43	31	0	13	20
8	#4	474	N/A	279	89	41	28	0	13	24

LRU TOTALS										
Rank		Score	Qty	Est. LRUs	Est. Spares	Checkout / Test	Calibration	Planned Maintenance	Ground Support Equipment	Supplies / Consumables
1	#3	239	N/A	101	57	31	20	0	10	20
2	#2A	256	N/A	107	51	38	27	0	11	22
3	#2	253	N/A	114	45	36	25	0	11	22
4	#5	272	N/A	121	62	31	22	0	12	24
5	#10	355	N/A	164	85	38	26	0	16	26
6	#4B	386	N/A	198	65	49	33	0	16	25
7	#7	404	N/A	222	75	43	31	0	13	20
8	#4	474	N/A	279	89	41	28	0	13	24

SPARES TOTALS										
Rank		Score	Qty	Est. LRUs	Est. Spares	Checkout / Test	Calibration	Planned Maintenance	Ground Support Equipment	Supplies / Consumables
1	#2	253	N/A	114	45	36	25	0	11	22
2	#2A	256	N/A	107	51	38	27	0	11	22
3	#3	239	N/A	101	57	31	20	0	10	20
4	#5	272	N/A	121	62	31	22	0	12	24
5	#4B	386	N/A	198	65	49	33	0	16	25
6	#7	404	N/A	222	75	43	31	0	13	20
7	#10	355	N/A	164	85	38	26	0	16	26
8	#4	474	N/A	279	89	41	28	0	13	24

PTPSTP Trade Studies - Flight Pressurization System-Control Rationale

Evaluation Criteria	Alt. Alternative Concepts									Explanation
	#2	#2a	#3	#4	#4a	#4b	#5	#7	#10	
Active Loops Required	4	3	5	5	4	5	6	4	5	
Active Loop Score	8	10	6	6	8	4	4	8	6	3 Active Loops =10; Drops 2 pts for each extra Active Loop
Start-Up Unique	10	10	10	10	10	10	0	10	10	No Special Start-Up Equipment Required=10; Design Start-Up Equipment=0
Control Simplicity	7,a	10	9	9	9	7,b	7	9,d	7	Simple System=10; Additional Control Loops=9; Some Control Difficulty=7; Extreme Difficulty=0
Instr. Simplicity	7,a	10	9	10	10	4,c	7	9	7	Easy, St. Fwd.=10; St.Fwd., but Complex=9; Diffcult Meas.-7; Very Difficult, Location Dependent=4
Sensor Sets Required	10	10	8	10	10	13	8	10	10	
Sensors Score	8	8	10	8	8	5	10	8	8	8 Sets=10; Drop 1pt for each Additional Set

a - Gas Generator: High Frequency, High Temperature Measurement
b - Transient Response of Catalyst, Difficult to Determine a Transfer Function
c - Instrumentation thru Tank Wall, Determining Hot Spot Locations Difficult
d - Only a Check is Needed

Performance/Control Complexity Summary

	Candidate System									
Evaluation Criteria	2	2A	3	4	4A	4B	5	7	10	Weighting (%)
Active Loop Score	8	10	6	6	8	4	4	8	6	10
Startup Unique	10	10	10	10	10	10	0	10	10	20
Control Simplicity	7	10	9	9	9	7	7	9	7	40
Instrumentation Simplicity	7	10	9	10	10	4	7	9	7	20
Sensors Score	8	8	10	8	8	5	10	8	8	10
Score	8	10	9	9	9	7	6	9	8	

PTPSTP Trade Studies - Operational Complexity Ground Operations Scoring

Candidate		2		2a		3		4a		4b		5		7		10	
	Wt	Sc	Wtd	Sc	Wtd	Sc	Wtd	Sc	Wtd	Sc	Wtd	Sc	Wtd	Sc	Wtd	Sc	Wtd
Number of Components	10	8	83	7	74	10	100	4	37	2	20	8	78	5	52	8	83
Amount of Gases/Fluids	10	5	45	5	48	5	45	5	48	5	48	6	61	1	10	10	100
Facility Mods Based on Access Points	25	7	175	8	200	10	250	1	25	2	50	10	250	4	100	6	150
Type-Based on # Catalyst, Heat Exchangers, Turbo Pump, Mix Chambers, & Gas Generators. (and Complex)	20	8	167	10	200	4	75	9	187	8	150	1	20	8	153	2	37
Safety	15	10	150	10	150	10	150	10	150	10	150	10	150	4	60	10	150
Number Tanks	5	9	46	6	31	10	50	1	5	8	39	10	50	5	24	9	46
Est. Ops. Complexity	15	9	137	8	117	9	130	3	50	2	30	7	110	6	90	10	150
Total	100		803		820		801		502		486		719		490		716

Final Ranking		Score
2a	820	10
2	803	10
3	801	10
5	719	9
10	716	9
4a	502	6
7	490	6
4b	486	6

GROUND OPERATIONS COMPLEXITY

Rationale		C/O	Tanking	Total
2-Minimal Checkout 2 Tanks May Require Checkout Helium Pressurization Operations Known Steam Tank Ops	Tanks Other Com.	9 7.5	7	23.5
2a-More Checkout 6 Tanks Require Checkout Helium Pressurization Operations Known More Steam Tank Ops Required	Tanks Other Com.	7 8	7	22
3-Minimal Checkout Helium Pressurization Operations Known 1 Helium Tank Requires Checkout Secondary Heat Exchanger Not Checked Out	Tanks Other Com.	10 6	7	23
4a-Maximum Tank Checkout 13 Tanks Require Checkout Helium Pressurization Operations Known Umbilical Hookups at 2 Levels May Be Required (Depending On Concept Design)	Tanks Other Com.	4 6	7	17
4b-More Tank Checkout 8 Tanks Require Checkout? Helium Pressurization Operations Known Umbilical Hookups at 2 Levels May be Required? (Depending On Concept Design)	Tanks Other Com.	5 3.5	7	15.5
5-More Checkout Helium Pressurization Operations Known 1 Helium Tank Requires Checkout Secondary Heat Exchanger Not Checked Out Turbo Pumps Add Complexity	Tanks Other Com.	10 3.5	8	21.5
7-More Checkout 2 Helium Tanks Require Checkout Helium Pressurization Operations Known Secondary Heat Exchanger Not Checked Out 6 N2M4 Tanks Require Checkout N2H4 Operations Known N2H4 is SCAPE Operation (Other Operations Must Cease During Loading) N2H4 Loading Can Be Performed Early Since Storable	Tanks Other Com.	9 6	5	20
10-More Checkout Helium Pressurization Operations Known 1 Helium Tank Requires Checkout Turbo Pumps Add Complexity	Tanks Other Com.	10 4.5	10	24.5

16EB89

PTPSTP Trade Studies - Technology Needs/Development Risks

Technology Needs	Technical Risk 10-High, 1-Low, 0-None	Development Risk 10-High, 1-Low, 0-None	Candidate								
			2	2a	3	4	4a	4b	5	7	10
Management of Water/Ice in System (Sml)	5	5	5/5								
Management of Water/Ice in System (Lg)	10	10		10/10							
High Performance Heat Exchanger Performance	3	2	3/2		3/2				3/2	3/2	3/2
Main Catalyst Bed Performance	5	5				5/5	5/5	5/5			
Supplemental Catalyst Bed Performance (Finishing Catalyst)	8	6						8/6			
Large N2H4 Decomposition Catalyst Bed Performance	5	5								5/5	
Control Stability/Dynamics/Response	3	5							3/5	3/5	3/5
Control of Dual Turbine Drives	1	2							1/2		1/2
He Dewars - Stratification/Mixing	5	5	5/5	5/5	5/5	5/5	5/5	5/5	5/5	5/5	
Pressure Vessel Fabrication Methods/Materials	2	2	2/2	2/2	2/2	2/2	2/2	2/2	2/2	2/2	2/2
High Pressure Line Bellows	1	1	1/1	1/1	1/1	1/1	1/1	1/1	1/1	1/1	1/1
Monitors/Instrumentation Response	2	1						2/1	2/1	2/1	
Candidate Score/Tech Needs/Dev. Risk		Tech Need Score	6	6	9	8	8	4	6	5	10
		Develop Risk Score	16/15	18/18	11/10	13/13	13/13	23/20	17/18	21/21	10/12
			7	6	10	8	8	5	6	5	8

CONCEPT NO.	.5	1.0	1.5	2.0	2.6	3.0	4.0	4.5	5.0	6.0	9.0	10.0	TOTAL	
#2	4			2	4	6				4			20	
#2a	4	4		2		2							12	
#3				2	4	2			2	4			14	
#4			8			12							20	
#4a		16	8	2		6							32	
#4b	12	8	8	2		2							32	
#5	2			4		14				4			24	
#7		4				12			8	8			32	
10	4					2	4	4	4	4	4	2	28	
VALVE WEIGHT lbs.														
LOW TEMP (A1)	1	3	8	15	30	50	70	85	100	125	550	800		
HIGH TEMP	3	7.5	20	35	70	115	160	200	235	300	1300	1850		

CONCEPT VALVE COUNT
SCOTT WEAR 9/27/89

MARTIN MARIETTA
MANNED SPACE SYSTEMS

PTPS TP Trade Studies: Cost Data Summary

- Estimates In 1987 Year Dollars
- 244 Booster Production Quantity At 90% Learning
- DDT&E Excludes Test Hardware, Facilities, & Tooling
- Aerojet Supplied Turbo-pump, Heat Exchanger, Gas Generator, and System 7 Catalyst Bed Estimates
- Atomic Energy Of Canada Supplied Catalyst Bed Estimates (Except For System 7)
- Tank Estimates Established From Weight Based Parametrics
- Valves, Sensors, And Lines Were Estimated Discretely (Mostly Vendor Quotes)

Average Unit Cost/ LRB
($M)

	Option 3	Option 2	Option 2A	Option 4A	Option 4B	Option 5	Option 7	Option 10
tanks	$1.51	$1.56	$1.78	$2.16	$1.63	$1.51	$1.89	$0.32
GG/Hx	$2.61	$2.48	-	$0.38	$0.38	$2.50	$1.21	$3.71
Cat Beds	-	-	-	$0.18	$0.20	-	$2.41	-
Pumps	-	-	-	-	-	$0.05	-	$0.47
Valves	$0.38	$0.41	$0.20	$0.44	$0.42	$0.50	$0.88	$1.13
Sensors	$0.03	$0.03	$0.04	$0.09	$0.09	$0.09	$0.04	$0.03
Lines	$0.28	$0.09	$0.02	$0.03	$0.03	$0.10	$0.09	$0.25
TOTAL	$4.82	$4.56	$2.04	$3.28	$2.74	$4.76	$6.51	$5.91

Program Life Cycle Cost
($M)

	Option 3	Option 2	Option 2A	Option 4A	Option 4B	Option 5	Option 7	Option 10
Production LCC	$1,175.3	$1,113.7	$496.6	$799.5	$669.2	$1,160.5	$1,589.6	$1,442.3
DDT&E	$12.9	$12.2	$7.9	$12.1	$12.0	$15.8	$12.2	$10.9
TOTAL LCC	$1,188.2	$1,126.0	$504.5	$811.6	$681.2	$1,176.3	$1,601.7	$1,453.2
SCORE	3	4	10	7	8	3	1	1

10=Best

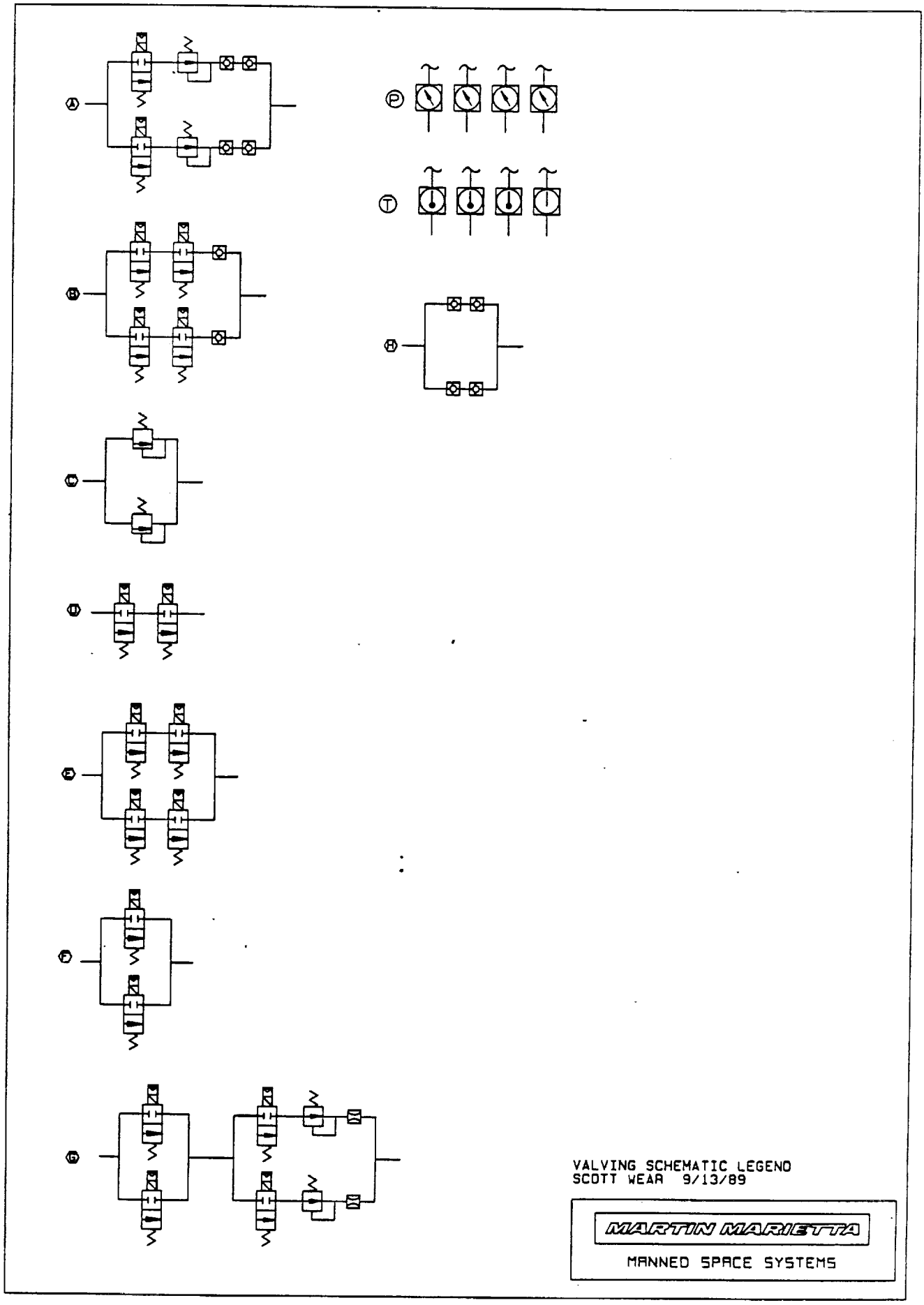
VALVING SCHEMATIC LEGEND
SCOTT WEAR 9/13/89
MARTIN MARIETTA
MANNED SPACE SYSTEMS

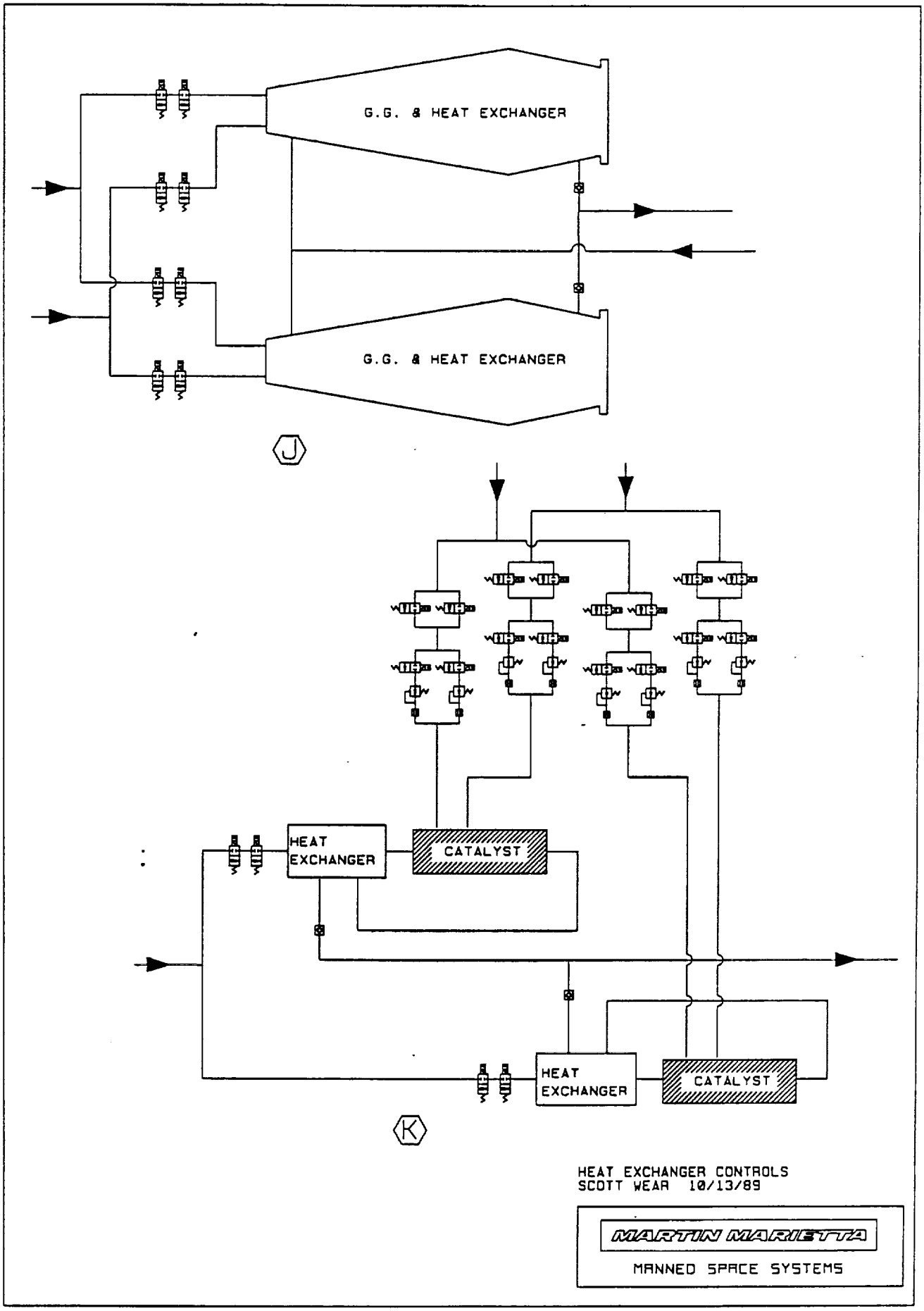
G.G. & HEAT EXCHANGER
G.G. & HEAT EXCHANGER
J
HEAT EXCHANGER
CATALYST
HEAT EXCHANGER
CATALYST
K
HEAT EXCHANGER CONTROLS
SCOTT WEAR 10/13/89
MARTIN MARIETTA
MANNED SPACE SYSTEMS

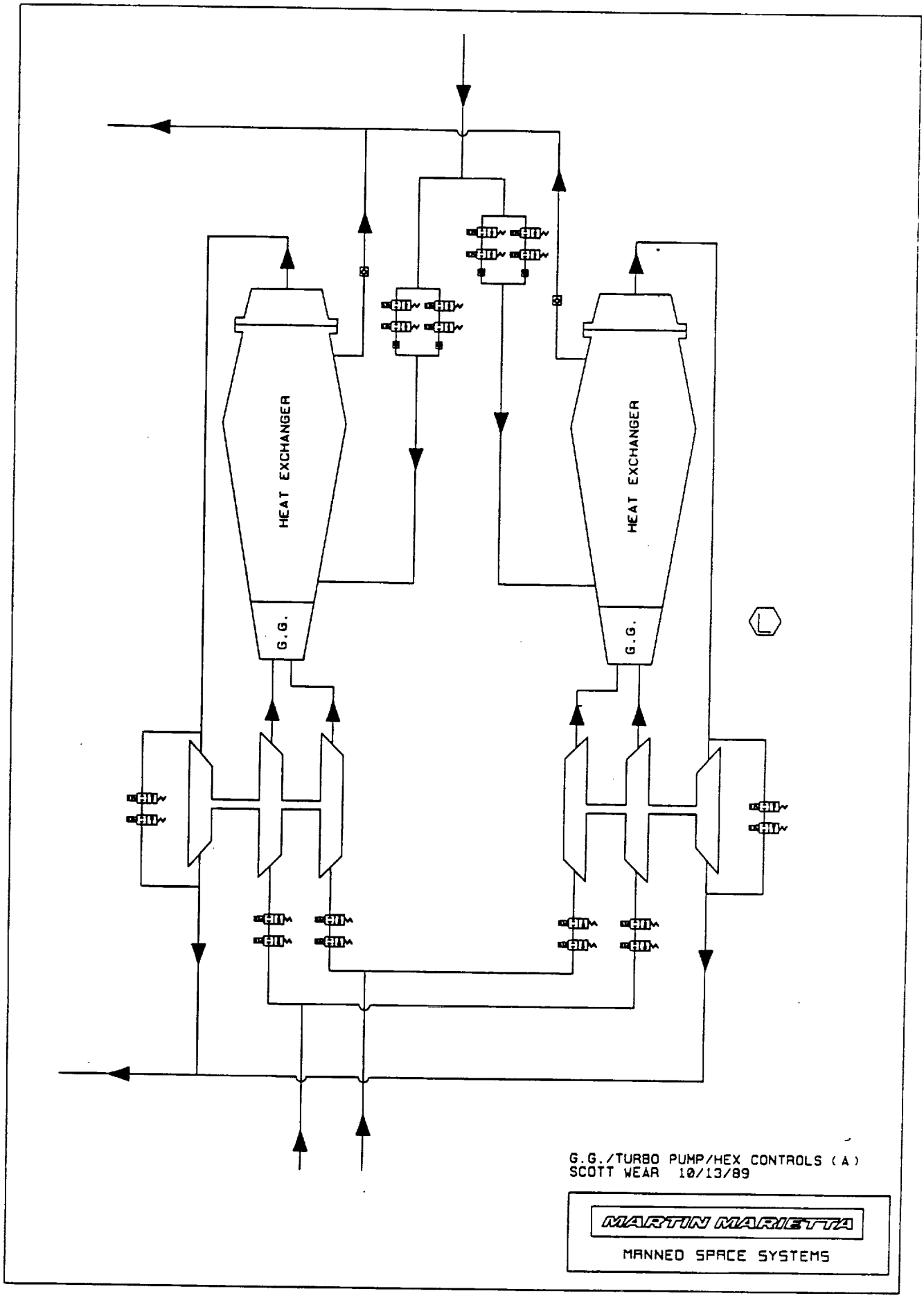
HEAT EXCHANGER
HEAT EXCHANGER
G.G.
G.G.
G.G./TURBO PUMP/HEX CONTROLS (A)
SCOTT WEAR 10/13/89
MARTIN MARIETTA
MANNED SPACE SYSTEMS

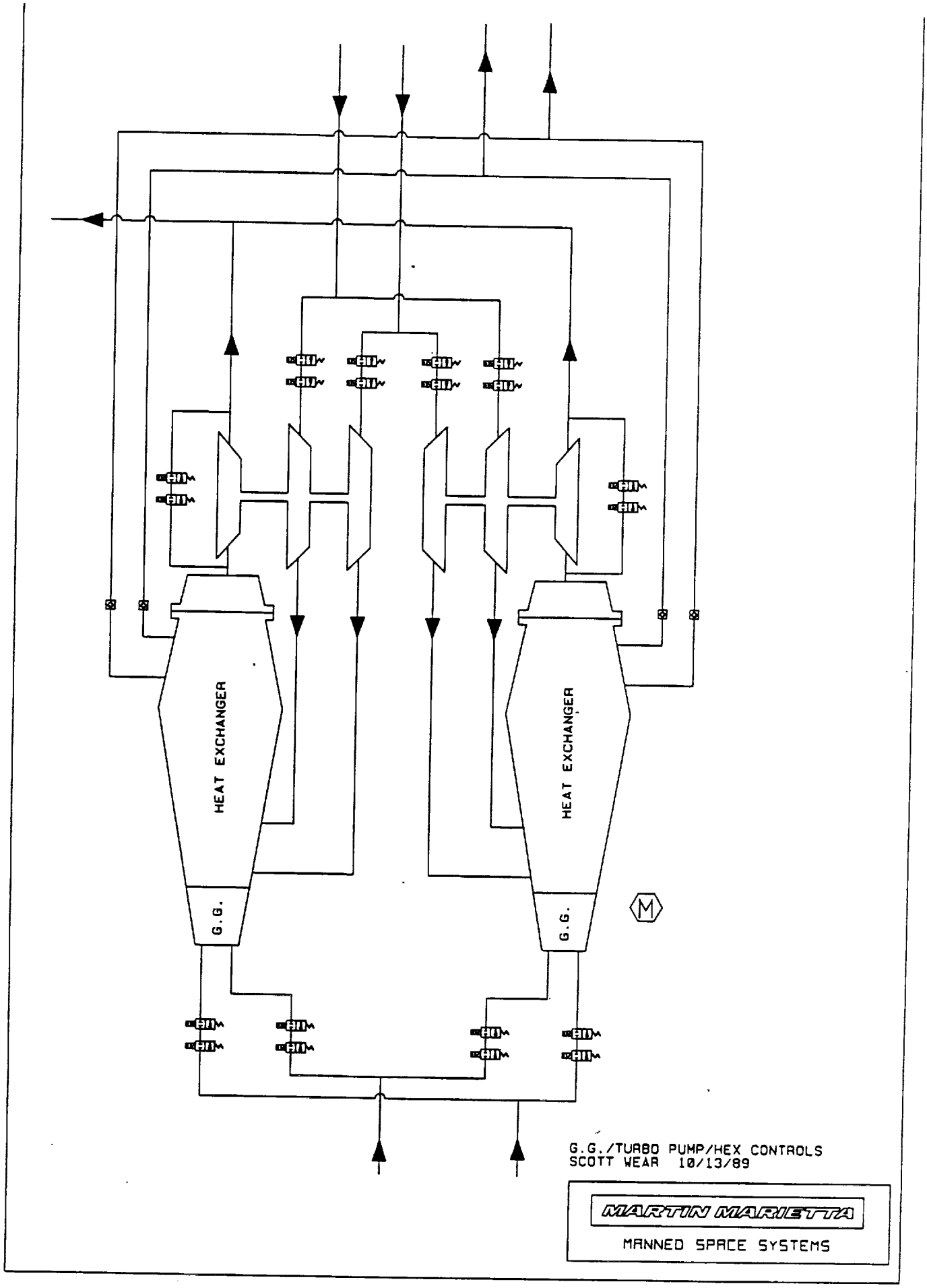
HEAT EXCHANGER
HEAT EXCHANGER
G.G.
G.G.
G.G./TURBO PUMP/HEX CONTROLS
SCOTT WEAR 10/13/89
MARTIN MARIETTA
MANNED SPACE SYSTEMS

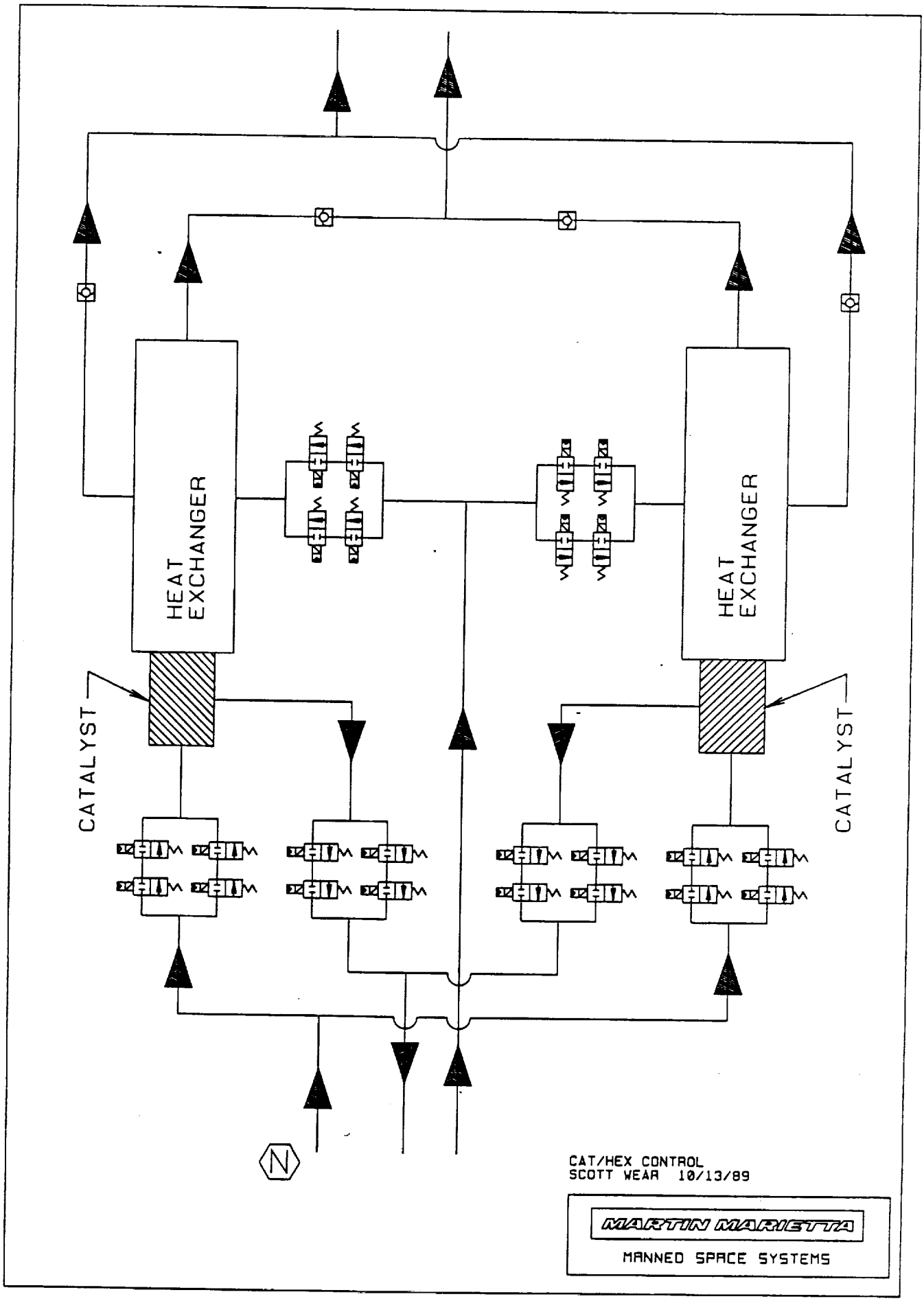
HEAT EXCHANGER
HEAT EXCHANGER
CATALYST
CATALYST
N
CAT/HEX CONTROL
SCOTT WEAR 10/13/89
MARTIN MARIETTA
MANNED SPACE SYSTEMS

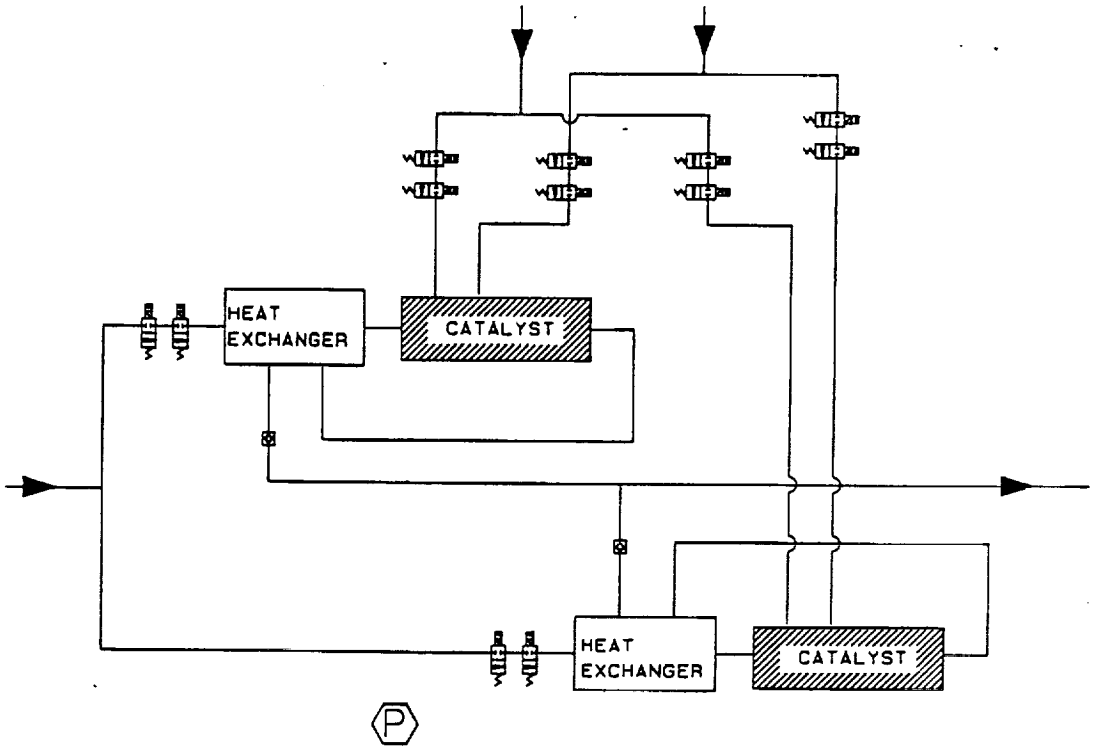

HEAT EXCHANGER CONTROLS
SCOTT WEAR 10/13/89

MARTIN MARIETTA
MANNED SPACE SYSTEMS

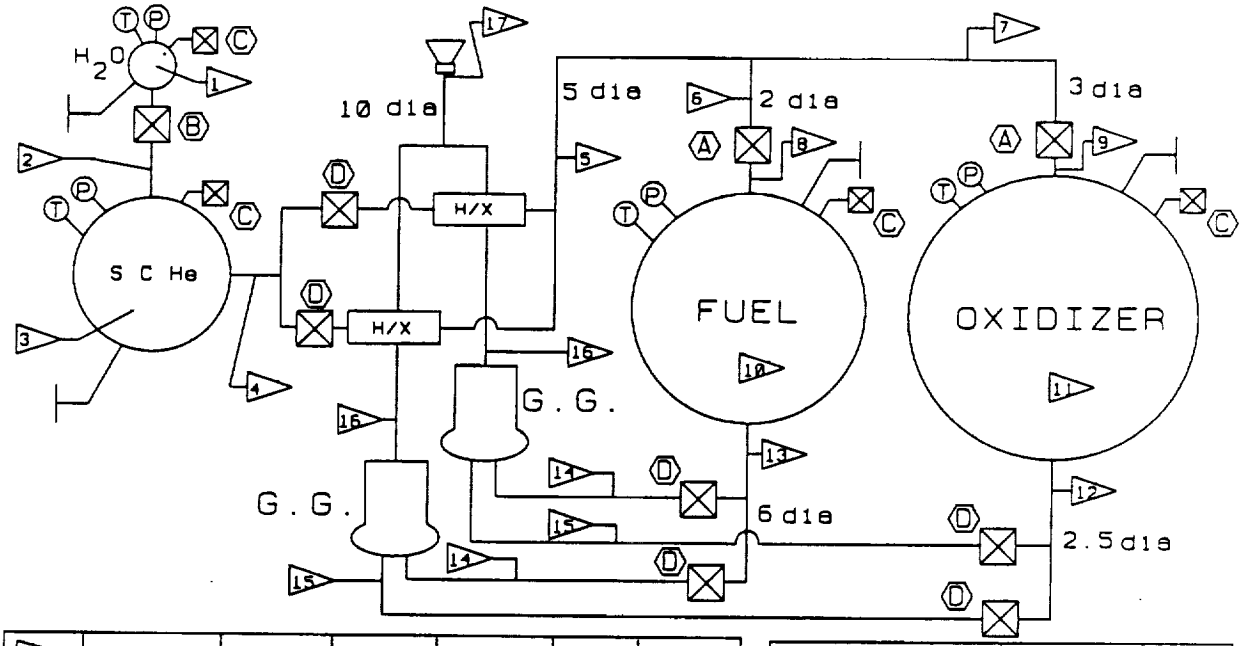

XX	ẇ lb/sec	P psia	T °R	M lbs.	M_n	
1		3000	1160	950		
2						
3		3000	60	14995		
4	125		200 max			
5	125		900			
6	40					
7	85					
8						
9						
10		1350	800			
11		1350	800			
12						
13						
14	277					
15	83					
16		650	1600			
17	360	500	900			
18						
19						
20						

COMPONENT	size ϕ in.	QTY
2 WAY VALVE	.5	4
	2	2
	2.5	4
	3	6
	6	4
	TOTAL	20
PRESSURE RELIEF VALVE	TOTAL	8
CHECK VALVE	TOTAL	10
PRESSURE REGULATOR	TOTAL	4
TEMPERATURE TRANSDUCER	TOTAL	16
PRESSURE TRANSDUCER	TOTAL	16

STORED GAS - STEAM
CANDIDATE #2 SHEET 4
SCOTT WEAR 10/10/89

MARTIN MARIETTA
MANNED SPACE SYSTEMS

PRELIMINARY

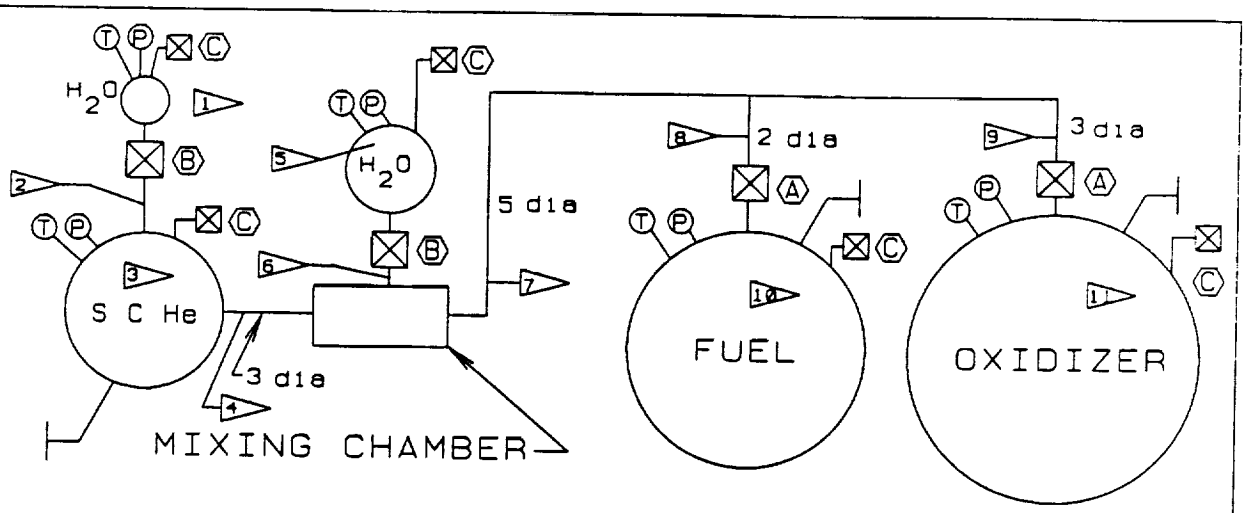

XX	ẇ lb/sec	P psia	T °R	M lbs.	M_n	
1		3000	1160	950		
2						
3		3000	40	14350		
4	118					
5		3000	1160	225		
6	30					
7	148					
8	47					
9	101					
10		1350	800			
11		1350	800			
12						
13						
14						
15						
16						
17						
18						
19						
20						

COMPONENT	size ϕ in.	QTY
2 WAY VALVE	.5	4
	1	4
	2	2
	3	2
	TOTAL	12
PRESSURE RELIEF VALVE	TOTAL	10
CHECK VALVE	TOTAL	12
PRESSURE REGULATOR	TOTAL	4
TEMPERATURE TRANSDUCER	TOTAL	20
PRESSURE TRANSDUCER	TOTAL	20

STORED GAS - STEAM
CANDIDATE #2a SHEET 4
SCOTT WEAR 10/4/89

MARTIN MARIETTA
MANNED SPACE SYSTEMS

PRELIMINARY

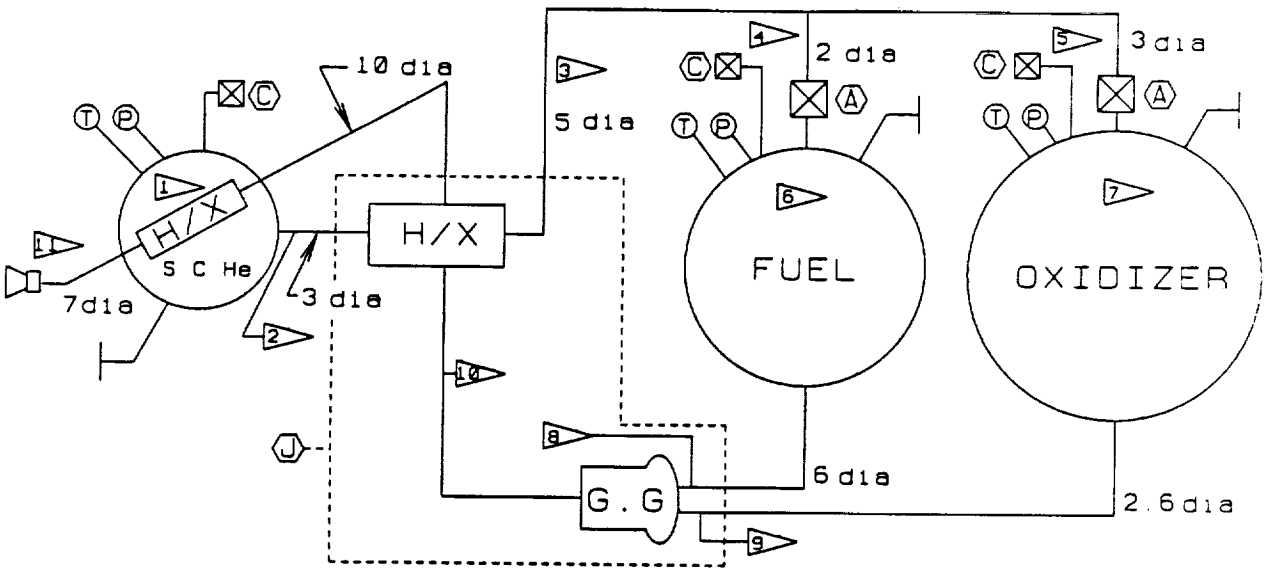

XX	ẇ lb/sec	P psia	T °R	M lbs.	M_n	
1		3000	40	14995		
2	125	3000	40			
3	125		900	14995		
4	40	1350	800			
5	85	1350	800			
6	40.	1350	800			
7	85	1350	800			
8	277					
9	83					
10			1600			
11	360	400	400			
12						
13						
14						
15						
16						
17						
18						
19						
20						

COMPONENT	size ϕ in.	QTY
2 WAY VALVE	2	2
	2.5	4
	3	2
	5	2
	6	4
	TOTAL	14
PRESSURE RELIEF VALVE	TOTAL	6
CHECK VALVE	TOTAL	8
PRESSURE REGULATOR	TOTAL	4
TEMPERATURE TRANSDUCER	TOTAL	12
PRESSURE TRANSDUCER	TOTAL	12

STORED GAS - H/X AND G.G.
CANDIDATE #3 SHEET 4
SCOTT WEAR 10/5/89

MARTIN MARIETTA
MANNED SPACE SYSTEMS

PRELIMINARY

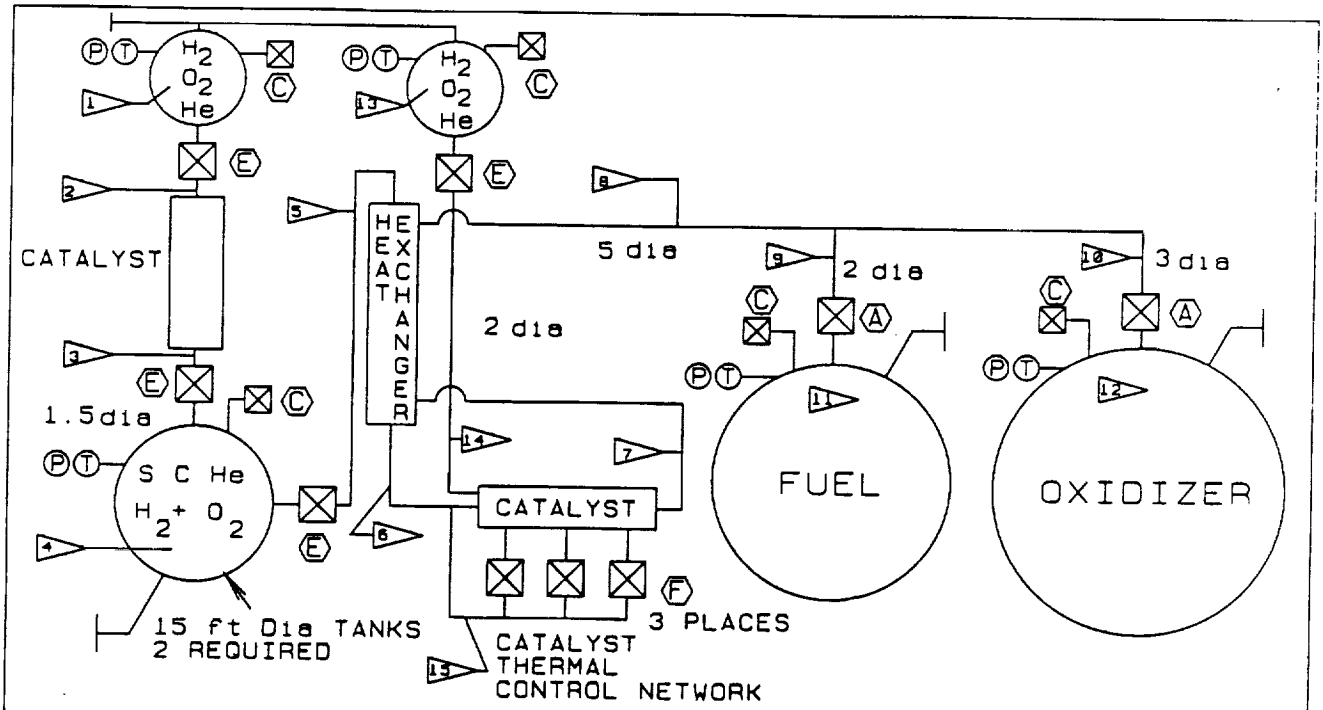

XX	ẇ lb/sec	P psia	T °R	M lbs.	M_n	
1		4000	530	*709.5		
2						
3						
4		3000	250	13700		
5						
6						
7						
8	125		850			
9	40	1350	800			
10	85	1350	800			
11	40	1350	800			
12	85	1350	800			
13		4000	530	*709.5		
14						
15						
16						
17						
18						
19						
20						

* - 687 lb He , 20 lb O2 , 2.5 lb H2

COMPONENT	size ϕ in.	QTY
2 WAY VALVE	1.5 3	8 12
	TOTAL	20
PRESSURE RELIEF VALVE	TOTAL	10
CHECK VALVE	TOTAL	8
PRESSURE REGULATOR	TOTAL	4
TEMPERATURE TRANSDUCER	TOTAL	20
PRESSURE TRANSDUCER	TOTAL	20
FLOW CONTROL ORIFICE	TOTAL	8

STORED GAS - CATALYST
CANDIDATE #4 SHEET 2
SCOTT WEAR 10/12/89

MARTIN MARIETTA
MANNED SPACE SYSTEMS

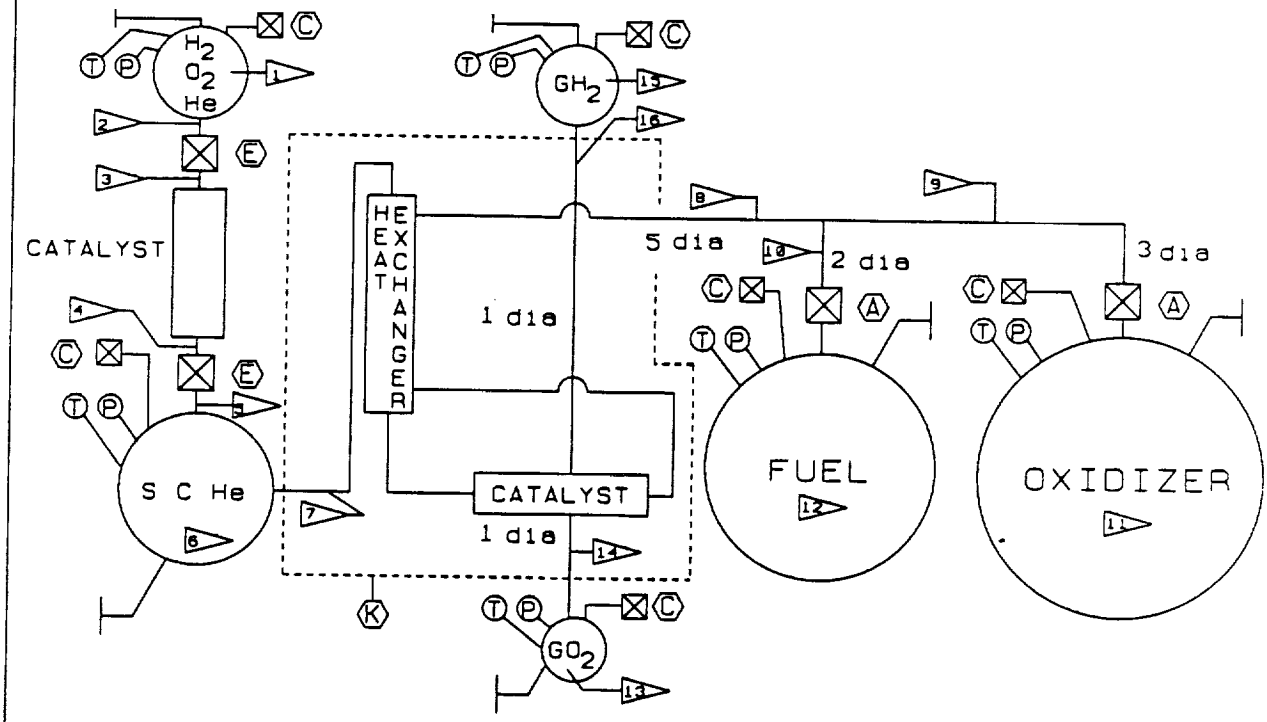

XX	ẇ lb/sec	P psia	T °R	M lbs.	M_n	
1		4000	530	687		
2						
3						
4						
5						
6		3000	30	13750		
7						
8	125	1350	850			
9	85	1350	800			
10	40	1350	800			
11		1350	800			
12		1350	800			
13		4000	530	2000		
14						
15		4000	530	2000		
16						
17						
18						
19						
20						

COMPONENT	size ϕ in.	QTY
2 WAY VALVE	1.0	16
	1.5	8
	2	2
	3	6
	TOTAL	32
PRESSURE RELIEF VALVE	TOTAL	12
CHECK VALVE	TOTAL	8
PRESSURE REGULATOR	TOTAL	12
TEMPERATURE TRANSDUCER	TOTAL	24
PRESSURE TRANSDUCER	TOTAL	24
FLOW CONTROL ORIFICE	TOTAL	8

STORED GAS - CATALYST ALTERNATE
CANDIDATE #4a SHEET 4
SCOTT WEAR 10/9/89

MARTIN MARIETTA
MANNED SPACE SYSTEMS

PRELIMINARY

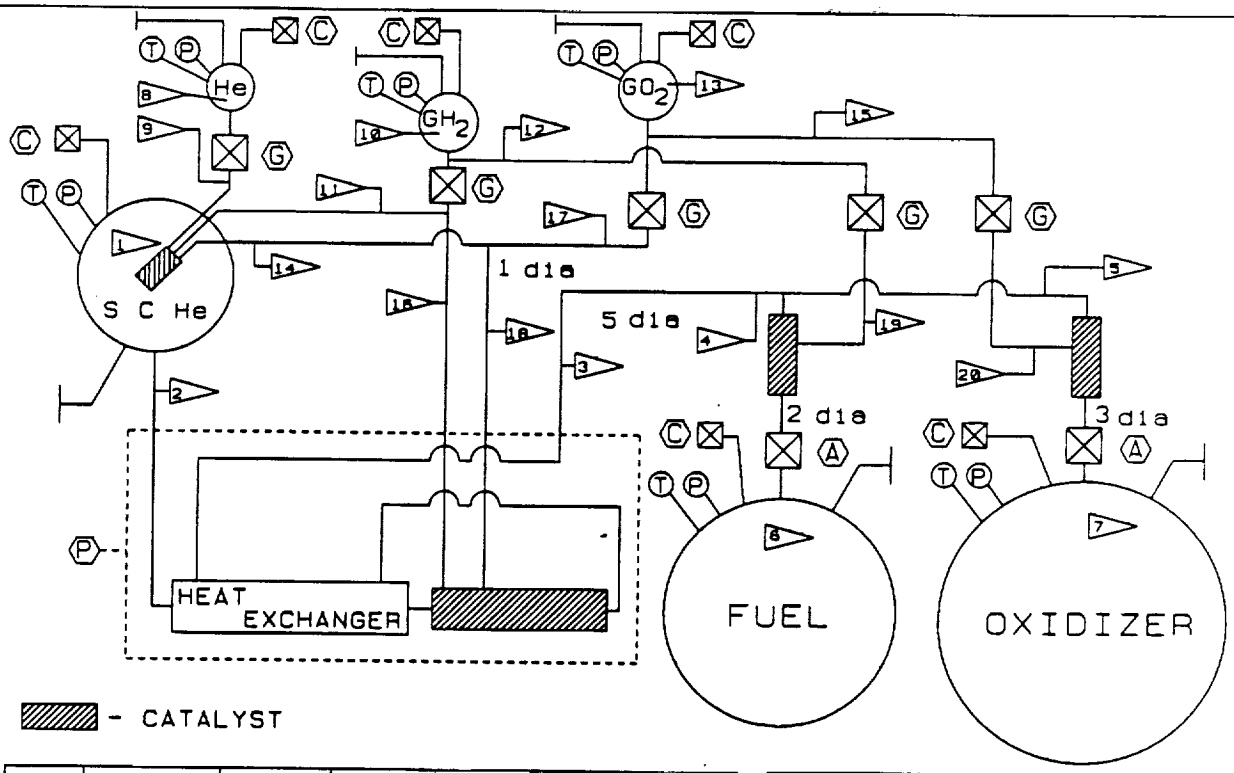

XX	ẇ lb/sec	P psia	T °R	M lbs.	M_n	
1						
2						
3						
4						
5						
6						
7						
8						
9						
10						
11						
12						
13						
14						
15						
16						
17						
18						
19						
20						

COMPONENT	size ϕ in.	QTY
2 WAY VALVE	.5	12
	1	8
	1.5	8
	2	2
	3	2
	TOTAL	32
PRESSURE RELIEF VALVE	TOTAL	12
CHECK VALVE	TOTAL	8
PRESSURE REGULATOR	TOTAL	14
TEMPERATURE TRANSDUCER	TOTAL	24
PRESSURE TRANSDUCER	TOTAL	24
FLOW CONTROL ORIFICE	TOTAL	10

STORED GAS - CATALYST ALTERNATE
CANDIDATE #4b SHEET 3
SCOTT WEAR 10/11/89

MARTIN MARIETTA
MANNED SPACE SYSTEMS

PRELIMINARY

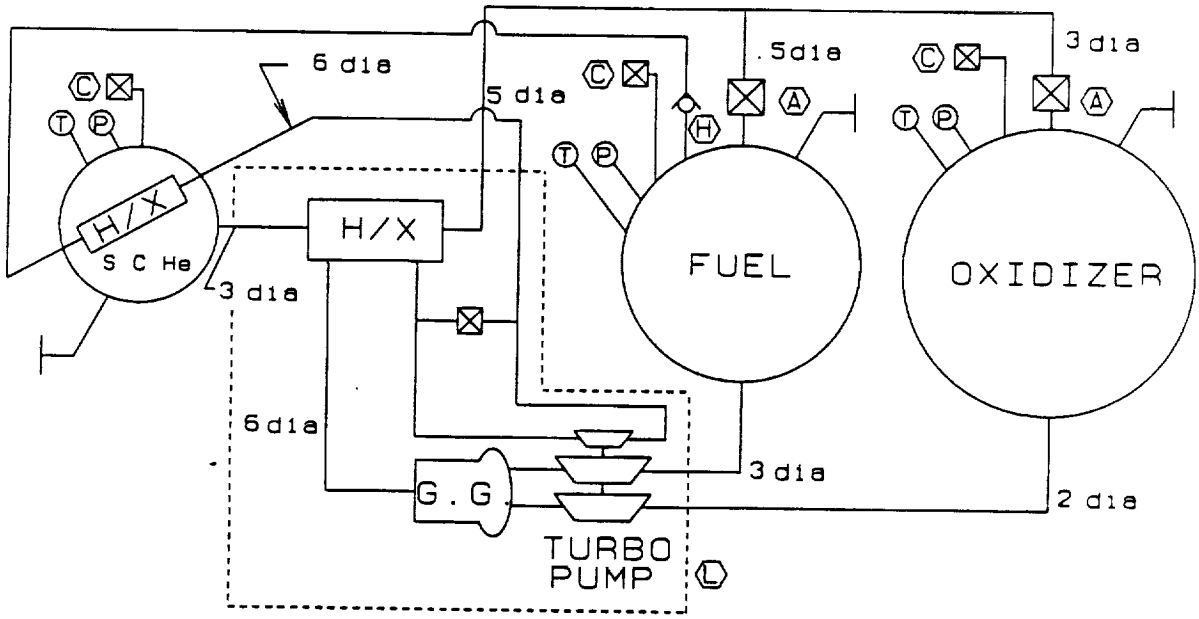

NO.	$\dot{w}$ lb/sec	P psig	T °R	M lbs.	M_n	

COMPONENT	size ϕ in.	QTY
2 WAY VALVE	.5	2
	2	2
	3	2
	6	2
	TBD	20
	TOTAL	28
PRESSURE RELIEF VALVE	TOTAL	6
CHECK VALVE	TOTAL	12
PRESSURE REGULATOR	TOTAL	4
TEMPERATURE TRANSDUCER	TOTAL	12
PRESSURE TRANSDUCER	TOTAL	12

STORED GAS - FUEL RICH G.G.
CANDIDATE #5 SHEET 4
SCOTT WEAR 9/19/89

MARTIN MARIETTA
MANNED SPACE SYSTEMS

PRELIMINARY

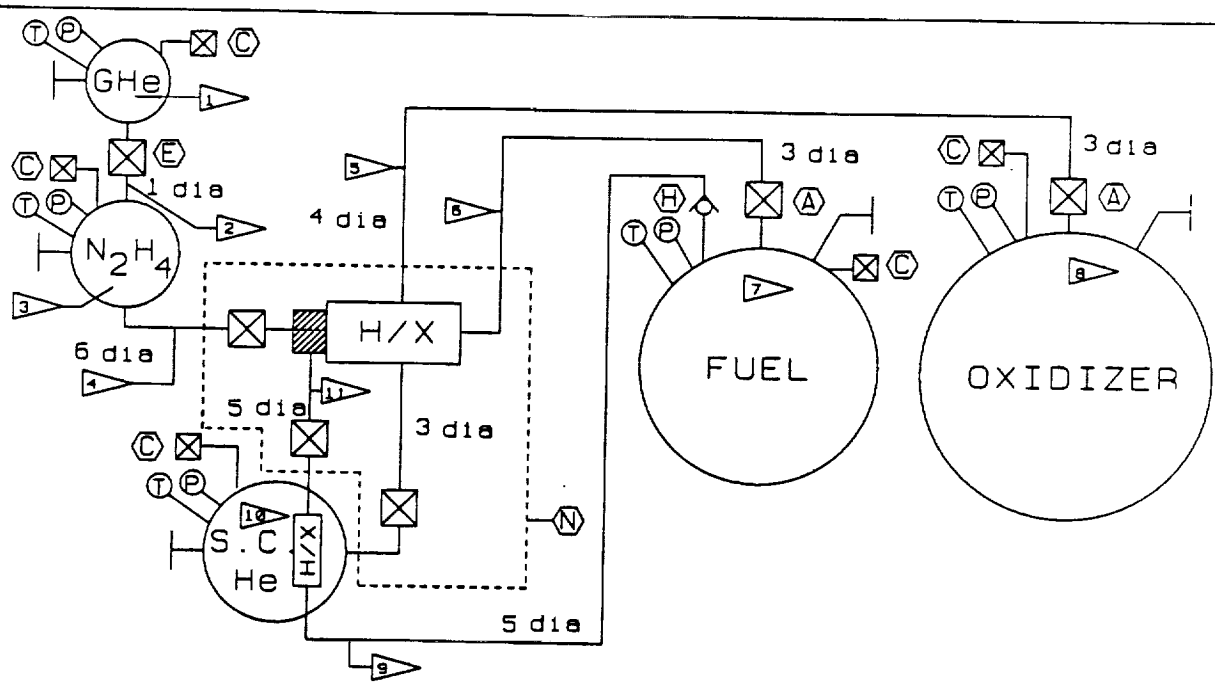

XX	ẇ lb/sec	P psia	T °R	M lbs.	M_n	
1		3000	530	332		
2						
3		1500	530	24250		
4						
5						
6						
7	**	1350	800			
8	85	1350	800			
9			900			
10		3000	40			
11			1900			
12						
13						
14						
15						
16						
17						
18						
19						
20						

** - 200 lb/sec total pressurant

COMPONENT	size ϕ in.	QTY
2 WAY VALVE	1	4
	3	12
	5	8
	6	8
	TOTAL	32
PRESSURE RELIEF VALVE	TOTAL	10
CHECK VALVE	TOTAL	12
PRESSURE REGULATOR	TOTAL	4
TEMPERATURE TRANSDUCER	TOTAL	20
PRESSURE TRANSDUCER	TOTAL	20

STORED GAS - MONO PROPELLANT CATALYST
CANDIDATE #7 SHEET 4
SCOTT WEAR 10/10/89

MARTIN MARIETTA
MANNED SPACE SYSTEMS

PRELIMINARY

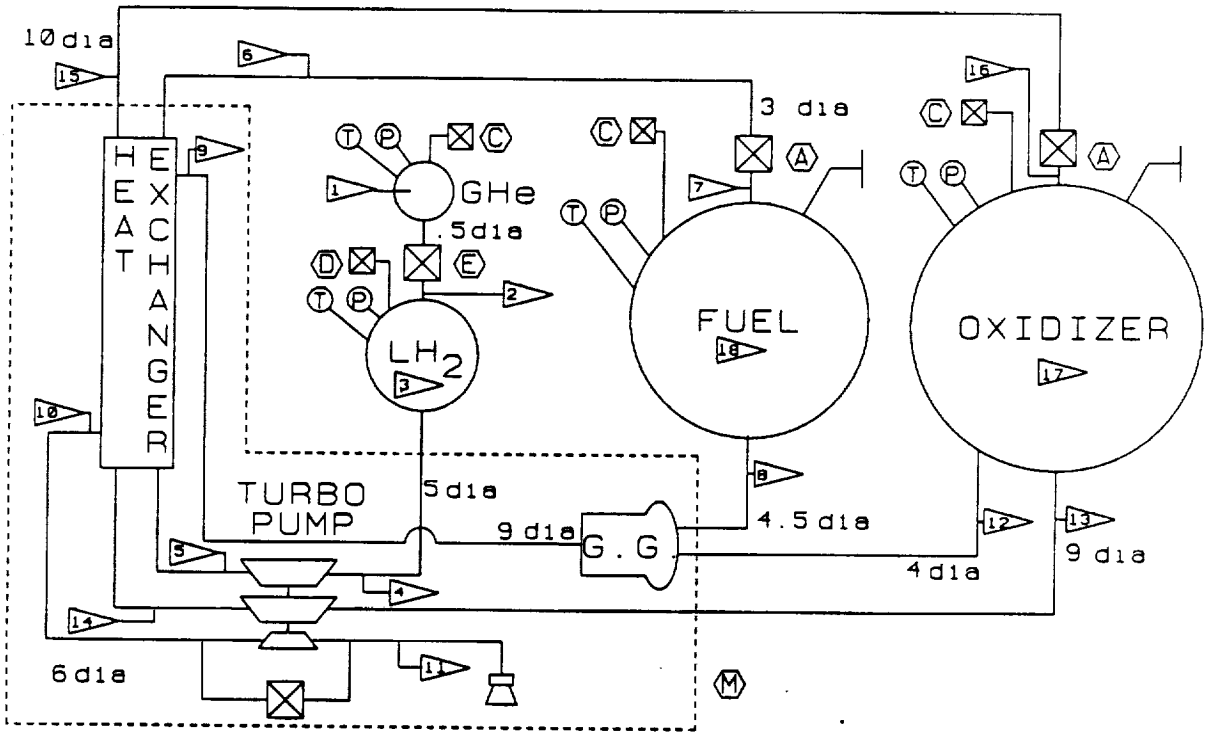

XX	ẇ lb/sec	P psia	T °R	M lbs.	M_n	
1		500	530	251		
2						
3		100	37	1990		
4						
5		1500				
6			900			
7	200					
8	150					
9	300	1500	2800			
10						
11						
12	150					
13	936					
14		1500				
15	936					
16	936	1350	800			
17		1350	800			
18		1350	800			
19						
20						

COMPONENT	size ϕ in.	QTY
2 WAY VALVE	.5	4
	3	2
	3	2
	4	4
	4.5	4
	5	4
	5	4
	5	4
	5	4
	TOTAL	28
PRESSURE RELIEF VALVE	TOTAL	6
CHECK VALVE	TOTAL	8
PRESSURE REGULATOR	TOTAL	4
TEMPERATURE TRANSDUCER	TOTAL	12
PRESSURE TRANSDUCER	TOTAL	12

AUTOGENOUS LO2 - QUASI AUTOGENOUS RP-1
CANDIDATE #10 SHEET 4
SCOTT WEAR 10/10/89

MARTIN MARIETTA
MANNED SPACE SYSTEMS

PRELIMINARY

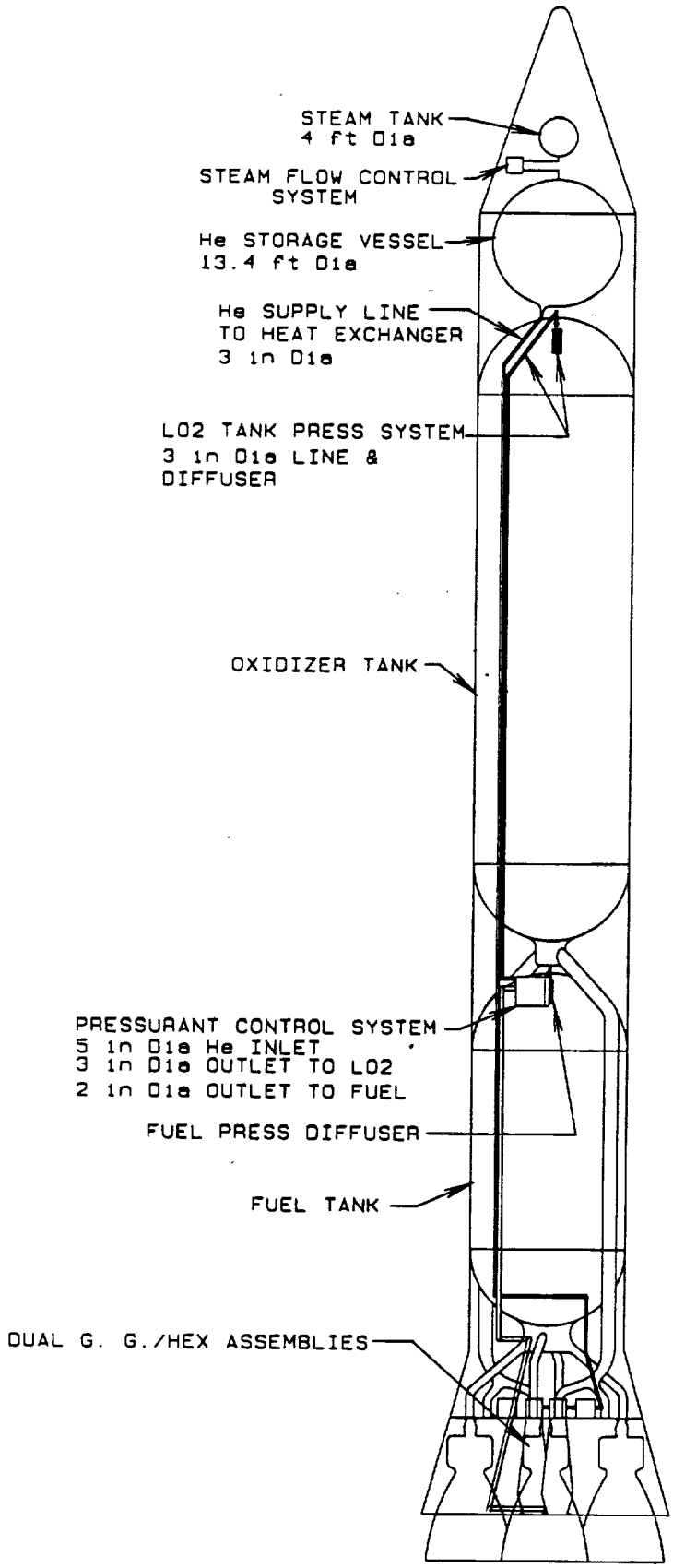

STORED GAS - STEAM
CANDIDATE #2 SHEET 1
SCOTT WEAR 9/22/89

MARTIN MARIETTA

MANNED SPACE SYSTEMS

SUBSYSTEM	DESCRIPTION
LO2 FEED	DUAL EXTERNAL FEEDLINES 17 in ID FWD FLEX SECTION APPROX 130 in LENGTH (INCO 718) MID STRAIGHT SECTIONS APPROX 470 in LENGTH (AL 2219) AFT FLEX SECTIONS 12.5 in ID APPROX 350 in LENGTH (INCO 718) FWD FLEX SECT INCORPORATES 3 INTERNAL GIMBAL JOINTS AFT FLEX SECT CONTAINS 3 GIMBAL JOINTS IN EACH OF THE FOUR ENGINE INLET LINES . TOTAL OF 18 GIMBAL FLEX JOINTS (6-17 in ID . 12-12.5 in ID) 4 CONTROL VALVES LOCATED AT ENGINE INLETS
FUEL FEED	INDIVIDUAL 9 in ID ENGINE FEEDLINES EACH CONSISTING OF 3 INTERNALLY GIMBALLED FLEX JOINTS AND ASSOCIATED TUBING APPROX TOTAL LENGTH 150 in EACH 4 CONTROL PREVALVES LOCATED AT ENGINE INLETS
PRESS SYSTEM	SPECIFIC VALVING/CONTROLS/COMPONENT SIZING TBD APPROXIMATE LINE SIZING AS FOLLOWS 30 ft X 10 in ID 200 ft X 3 in ID 25 ft X 6 in ID 85 ft X 5 in ID 20 ft X 2 in ID 25 ft X 2.6 in ID 25 ft X .5 in ID
VENT / RELIEF SYSTEM	CONSIST OF DUAL ACTUATED (COMMANDED AND PRESSURE SENSING) VALVE AND OVER-BOARD DUCTING
FILL/DRAIN SYSTEM	

STORED GAS - STEAM
CANDIDATE #2 SHEET 2
SCOTT WEAR 9/22/89

MARTIN MARIETTA
MANNED SPACE SYSTEMS

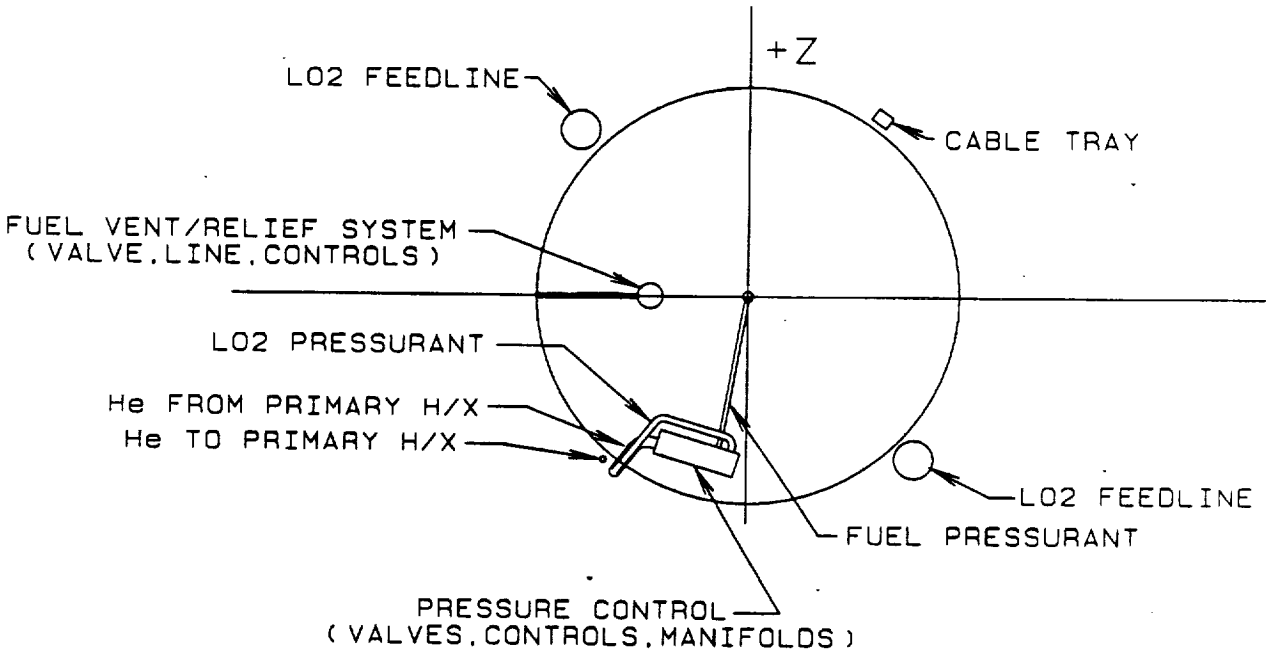

SECTION A-A

STORED GAS - STEAM
CANDIDATE #2 SHEET 3
SCOTT WEAR 9/7/89

MARTIN MARIETTA
MANNED SPACE SYSTEMS

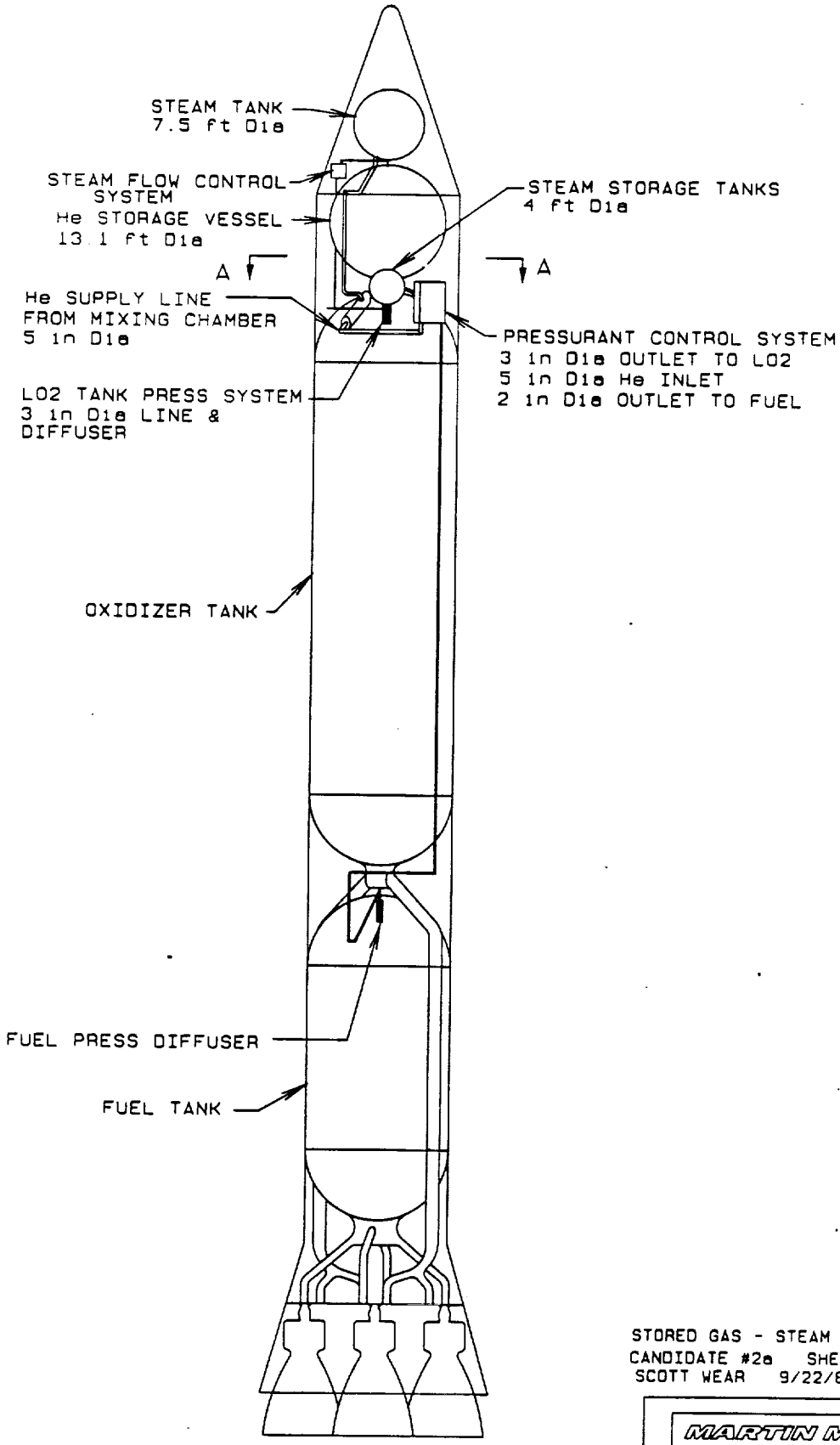

STORED GAS - STEAM
CANDIDATE #2a SHEET 1
SCOTT WEAR 9/22/89

MARTIN MARIETTA
MANNED SPACE SYSTEMS

SUBSYSTEM	DESCRIPTION
LO2 FEED	DUAL EXTERNAL FEEDLINES 17 in ID FWD FLEX SECTION APPROX 130 in LENGTH (INCO 718) MID STRAIGHT SECTIONS APPROX 470 in LENGTH (AL 2219) AFT FLEX SECTIONS 12.5 in ID APPROX 350 in LENGTH (INCO 718) FWD FLEX SECT INCORPORATES 3 INTERNAL GIMBAL JOINTS AFT FLEX SECT CONTAINS 3 GIMBAL JOINTS IN EACH OF THE FOUR ENGINE INLET LINES TOTAL OF 18 GIMBAL FLEX JOINTS (6-17 in ID . 12-12.5 in ID) 4 CONTROL VALVES LOCATED AT ENGINE INLETS
FUEL FEED	INDIVIDUAL 9 in ID ENGINE FEEDLINES EACH CONSISTING OF 3 INTERNALLY GIMBALLED FLEX JOINTS AND ASSOCIATED TUBING APPROX TOTAL LENGTH 150 in EACH 4 CONTROL PREVALVES LOCATED AT ENGINE INLETS
PRESS SYSTEM	SPECIFIC VALVING/CONTROLS/COMPONENT SIZING TBD APPROXIMATE LINE SIZING AS FOLLOWS 25 ft X .5 in ID 25 ft X 3 in ID 50ft X 5 in ID 100 ft X 2 in ID
VENT / RELIEF SYSTEM	CONSIST OF DUAL ACTUATED (COMMANDED AND PRESSURE SENSING) VALVE AND OVER-BOARD DUCTING
FILL/DRAIN SYSTEM	

STORED GAS - STEAM
CANDIDATE #2a SHEET 2
SCOTT WEAR 9/22/89

MARTIN MARIETTA
MANNED SPACE SYSTEMS

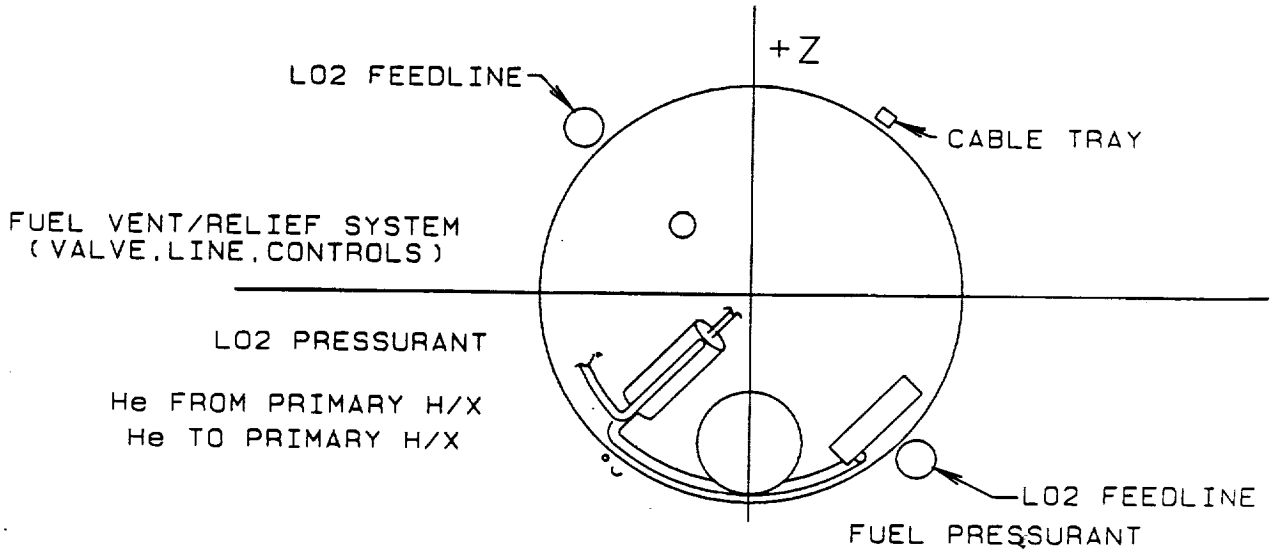

SECTION A-A

STORED GAS - STEAM
CANDIDATE #2a SHEET 3
SCOTT WEAR 9/22/89

MARTIN MARIETTA
MANNED SPACE SYSTEMS

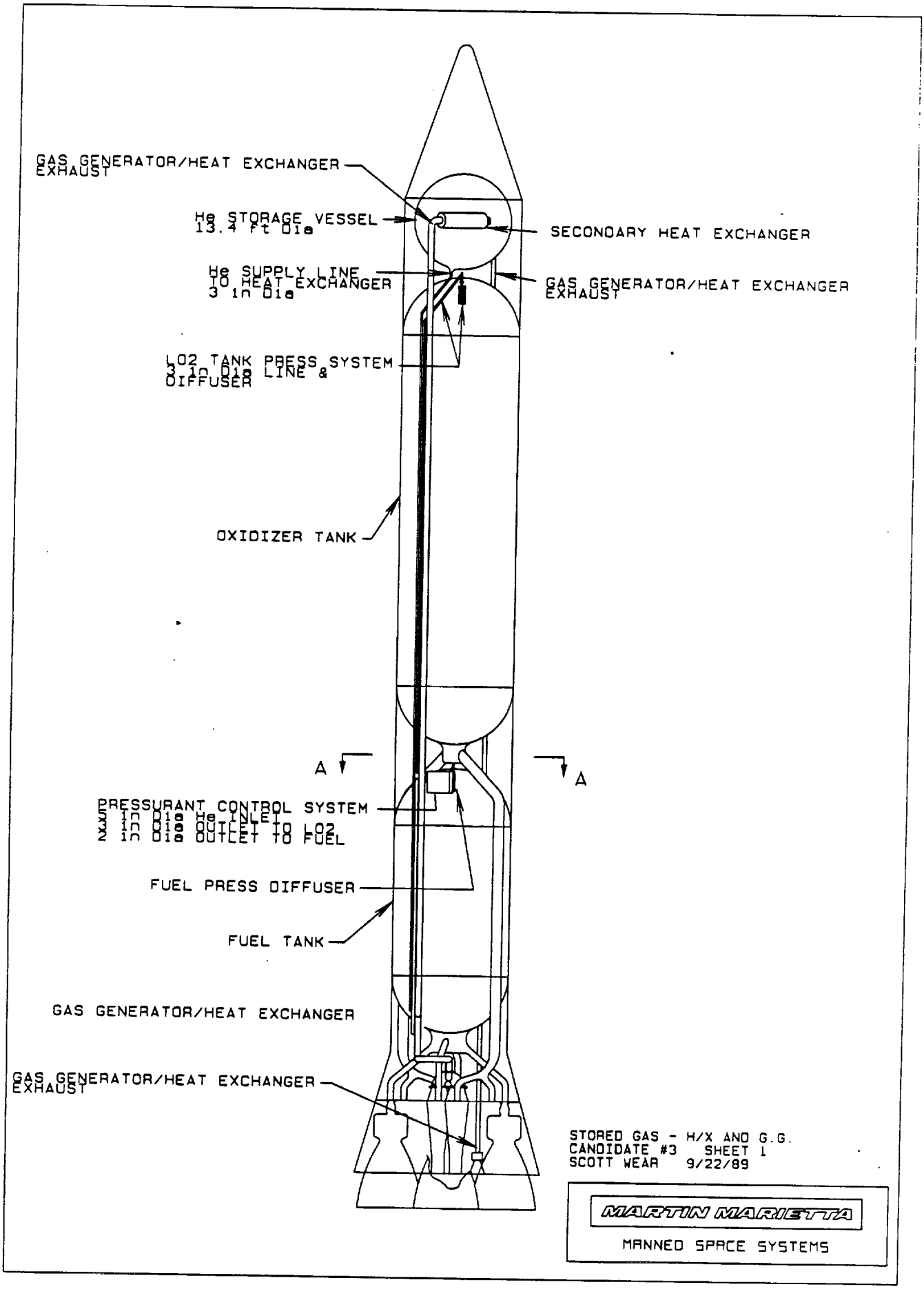
GAS GENERATOR/HEAT EXCHANGER EXHAUST
He STORAGE VESSEL 13.4 ft Dia
SECONDARY HEAT EXCHANGER
He SUPPLY LINE TO HEAT EXCHANGER 3 in Dia
GAS GENERATOR/HEAT EXCHANGER EXHAUST
LO2 TANK PRESS SYSTEM 3 in Dia LINE & DIFFUSER
OXIDIZER TANK
A
A
PRESSURANT CONTROL SYSTEM
5 in Dia He INLET
3 in Dia OUTLET TO LO2
2 in Dia OUTLET TO FUEL
FUEL PRESS DIFFUSER
FUEL TANK
GAS GENERATOR/HEAT EXCHANGER
GAS GENERATOR/HEAT EXCHANGER EXHAUST
STORED GAS - H/X AND G.G.
CANDIDATE #3 SHEET 1
SCOTT WEAR 9/22/89
MARTIN MARIETTA
MANNED SPACE SYSTEMS

SUBSYSTEM	DESCRIPTION
LO2 FEED	DUAL EXTERNAL FEEDLINES 17 in ID FWD FLEX SECTION APPROX 130 in LENGTH (INCO 718) MID STRAIGHT SECTIONS APPROX 470 in LENGTH (AL 2219) AFT FLEX SECTIONS 12.5 in ID APPROX 350 in LENGTH (INCO 718) FWD FLEX SECT INCORPORATES 3 INTERNAL GIMBAL JOINTS AFT FLEX SECT CONTAINS 3 GIMBAL JOINTS IN EACH OF THE FOUR ENGINE INLET LINES . TOTAL OF 18 GIMBAL FLEX JOINTS (6-17 in ID , 12-12.5 in ID) 4 CONTROL VALVES LOCATED AT ENGINE INLETS
FUEL FEED	INDIVIDUAL 9 in ID ENGINE FEEDLINES EACH CONSISTING OF 3 INTERNALLY GIMBALLED FLEX JOINTS AND ASSOCIATED TUBING APPROX TOTAL LENGTH 150 in EACH 4 CONTROL PREVALVES LOCATED AT ENGINE INLETS
PRESS SYSTEM	SPECIFIC VALVING/CONTROLS/COMPONENT SIZING TBD APPROXIMATE LINE SIZING AS FOLLOWS 145 ft X 10 in ID 135 ft X 7 in ID 205ft X 3 in ID 25 ft X 6 in ID 50 ft X 5 in ID 20 ft X 2 in ID 25 ft X 2.6 in ID
VENT / RELIEF SYSTEM	CONSIST OF DUAL ACTUATED (COMMANDED AND PRESSURE SENSING) VALVE AND OVER-BOARD DUCTING
FILL/DRAIN SYSTEM	

STORED GAS - H/X AND G.G.
CANDIDATE #3 SHEET 2
SCOTT WEAR 9/22/89

MARTIN MARIETTA
MANNED SPACE SYSTEMS

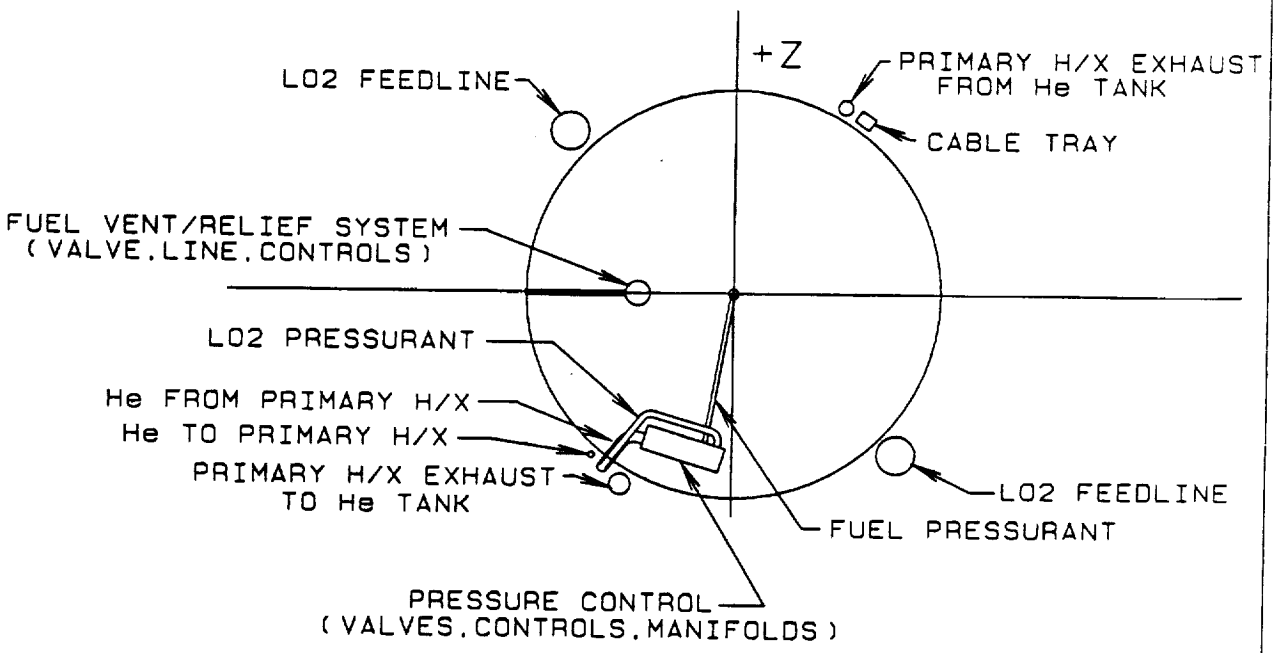

SECTION A-A

STORED GAS - H/X AND G.G.
CANDIDATE #3 SHEET 3
SCOTT WEAR 9/7/89

MARTIN MARIETTA
MANNED SPACE SYSTEMS

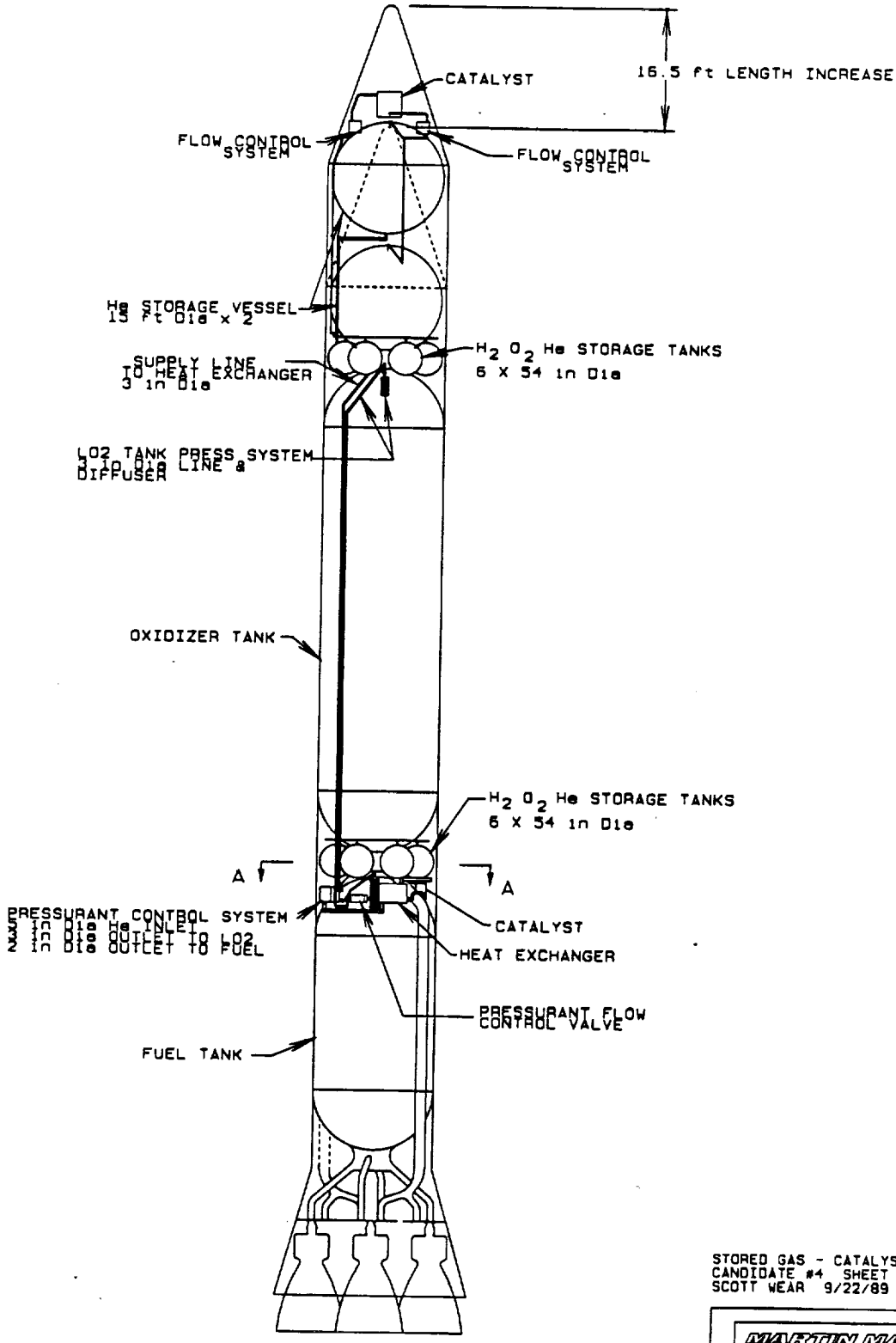

STORED GAS - CATALYST
CANDIDATE #4 SHEET 1
SCOTT WEAR 9/22/89

MARTIN MARIETTA
MANNED SPACE SYSTEMS

SUBSYSTEM	DESCRIPTION
LO2 FEED	DUAL EXTERNAL FEEDLINES 17 in ID FWD FLEX SECTION APPROX 130 in LENGTH (INCO 718) MID STRAIGHT SECTIONS APPROX 470 in LENGTH (AL 2219) AFT FLEX SECTIONS 12.5 in ID APPROX 350 in LENGTH (INCO 718) FWD FLEX SECT INCORPORATES 3 INTERNAL GIMBAL JOINTS AFT FLEX SECT CONTAINS 3 GIMBAL JOINTS IN EACH OF THE FOUR ENGINE INLET LINES TOTAL OF 18 GIMBAL FLEX JOINTS (6-17 in ID , 12-12.5 in ID) 4 CONTROL VALVES LOCATED AT ENGINE INLETS
FUEL FEED	INDIVIDUAL 9 in ID ENGINE FEEDLINES EACH CONSISTING OF 3 INTERNALLY GIMBALLED FLEX JOINTS AND ASSOCIATED TUBING APPROX TOTAL LENGTH 150 in EACH 4 CONTROL PREVALVES LOCATED AT ENGINE INLETS
PRESS SYSTEM	SPECIFIC VALVING/CONTROLS/COMPONENT SIZING TBD APPROXIMATE LINE SIZING AS FOLLOWS TBD ft X 1.5 in ID TBD ft X 3 in ID TBD ft X 5 in ID TBD ft X 2 in ID
VENT / RELIEF SYSTEM	CONSIST OF DUAL ACTUATED (COMMANDED AND PRESSURE SENSING) VALVE AND OVER-BOARD DUCTING
FILL/DRAIN SYSTEM	

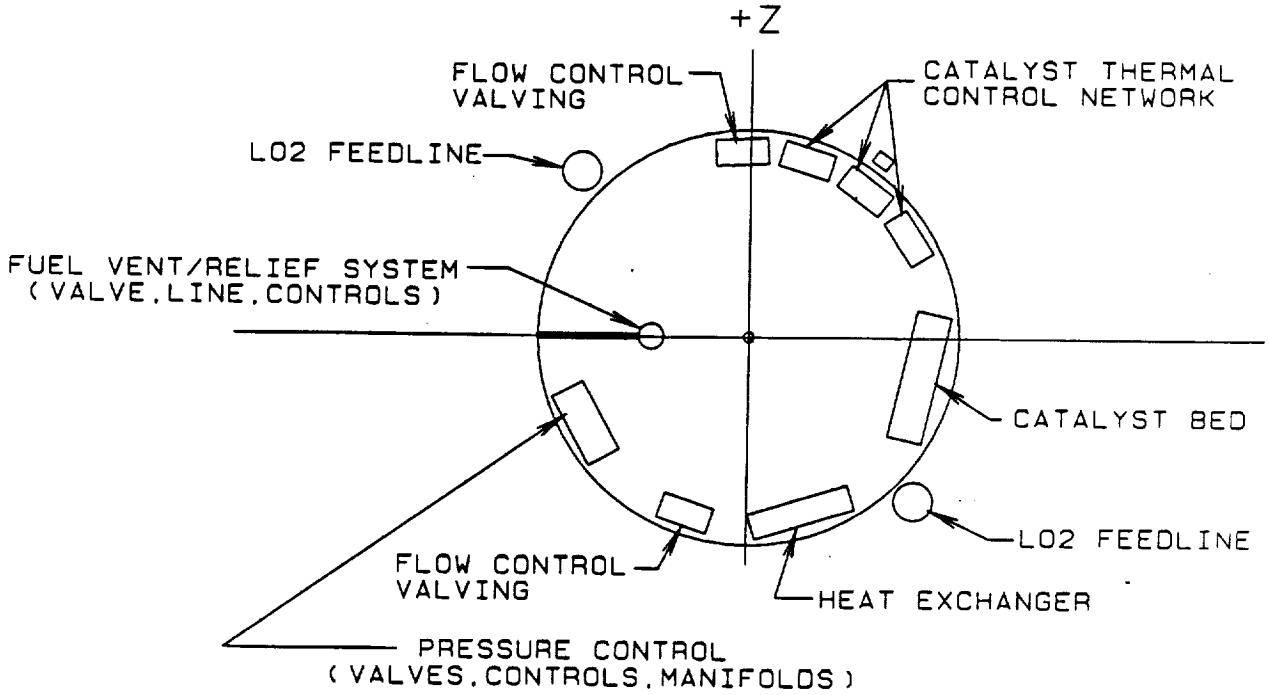

SECTION A-A

STORED GAS -CATALYST
CANDIDATE #4 SHEET 3
SCOTT WEAR 10/12/89

MARTIN MARIETTA
MANNED SPACE SYSTEMS

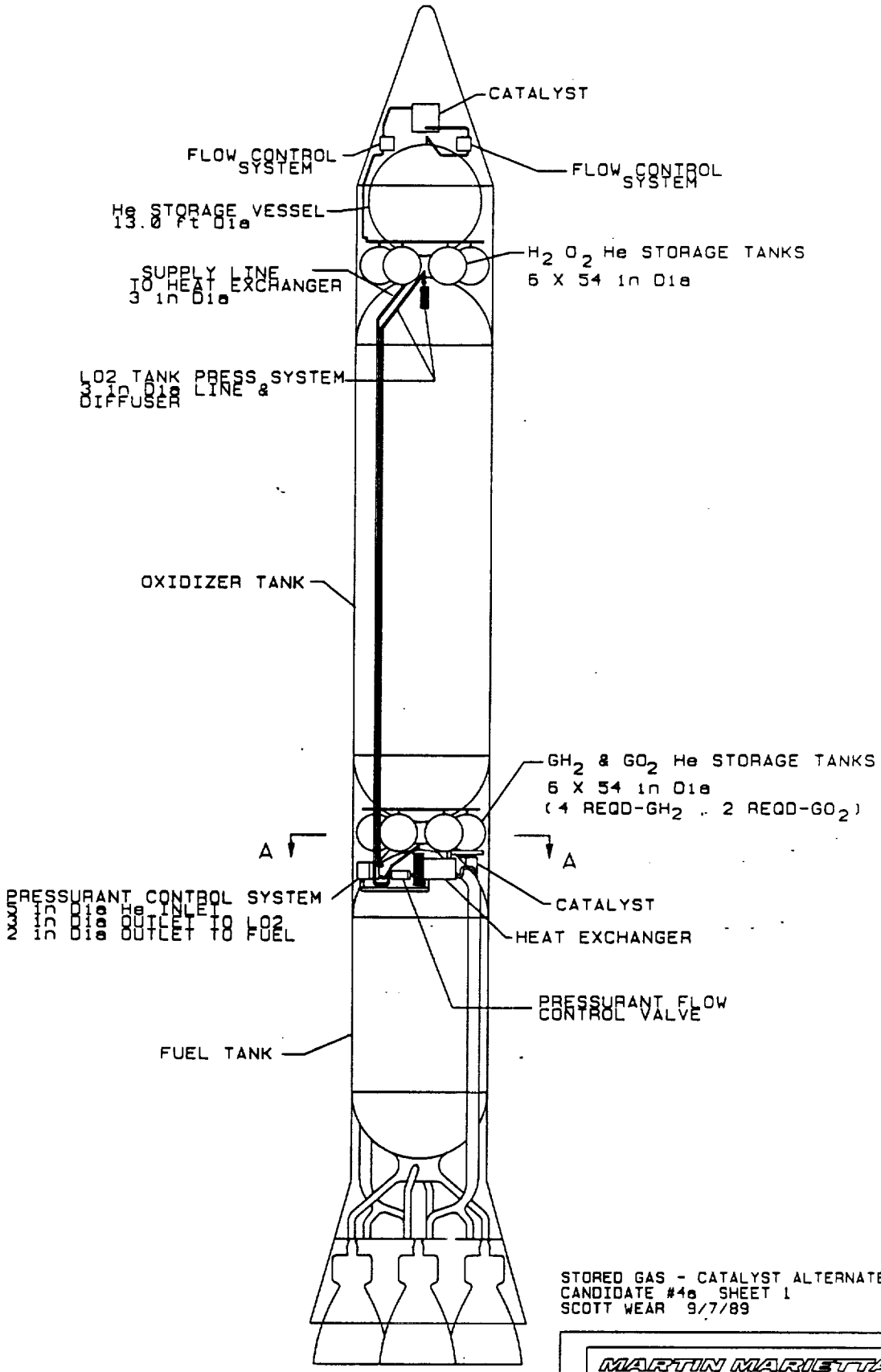

STORED GAS - CATALYST ALTERNATE
CANDIDATE #4a SHEET 1
SCOTT WEAR 9/7/89

MARTIN MARIETTA

MANNED SPACE SYSTEMS

SUBSYSTEM	DESCRIPTION
LO2 FEED	DUAL EXTERNAL FEEDLINES 17 in ID FWD FLEX SECTION APPROX 130 in LENGTH (INCO 718) MID STRAIGHT SECTIONS APPROX 470 in LENGTH (AL 2219) AFT FLEX SECTIONS 12.5 in ID APPROX 350 in LENGTH (INCO 718) FWD FLEX SECT INCORPORATES 3 INTERNAL GIMBAL JOINTS AFT FLEX SECT CONTAINS 3 GIMBAL JOINTS IN EACH OF THE FOUR ENGINE INLET LINES TOTAL OF 18 GIMBAL FLEX JOINTS (6-17 in ID . 12-12.5 in ID) 4 CONTROL VALVES LOCATED AT ENGINE INLETS
FUEL FEED	INDIVIDUAL 9 in ID ENGINE FEEDLINES EACH CONSISTING OF 3 INTERNALLY GIMBALLED FLEX JOINTS AND ASSOCIATED TUBING APPROX TOTAL LENGTH 150 in EACH 4 CONTROL PREVALVES LOCATED AT ENGINE INLETS
PRESS SYSTEM	SPECIFIC VALVING/CONTROLS/COMPONENT SIZING TBD APPROXIMATE LINE SIZING AS FOLLOWS 150 ft X 1 IN Dia 175 ft X 3 in Dia 15 ft X 5 in Dia 20 ft X 2 in Dia
VENT / RELIEF SYSTEM	CONSIST OF DUAL ACTUATED (COMMANDED AND PRESSURE SENSING) VALVE AND OVER-BOARD DUCTING
FILL/DRAIN SYSTEM	

STORED GAS - CATALYST ALTERNATE
CANDIDATE #4a SHEET 2
SCOTT WEAR 9/11/89

MARTIN MARIETTA
MANNED SPACE SYSTEMS

C2

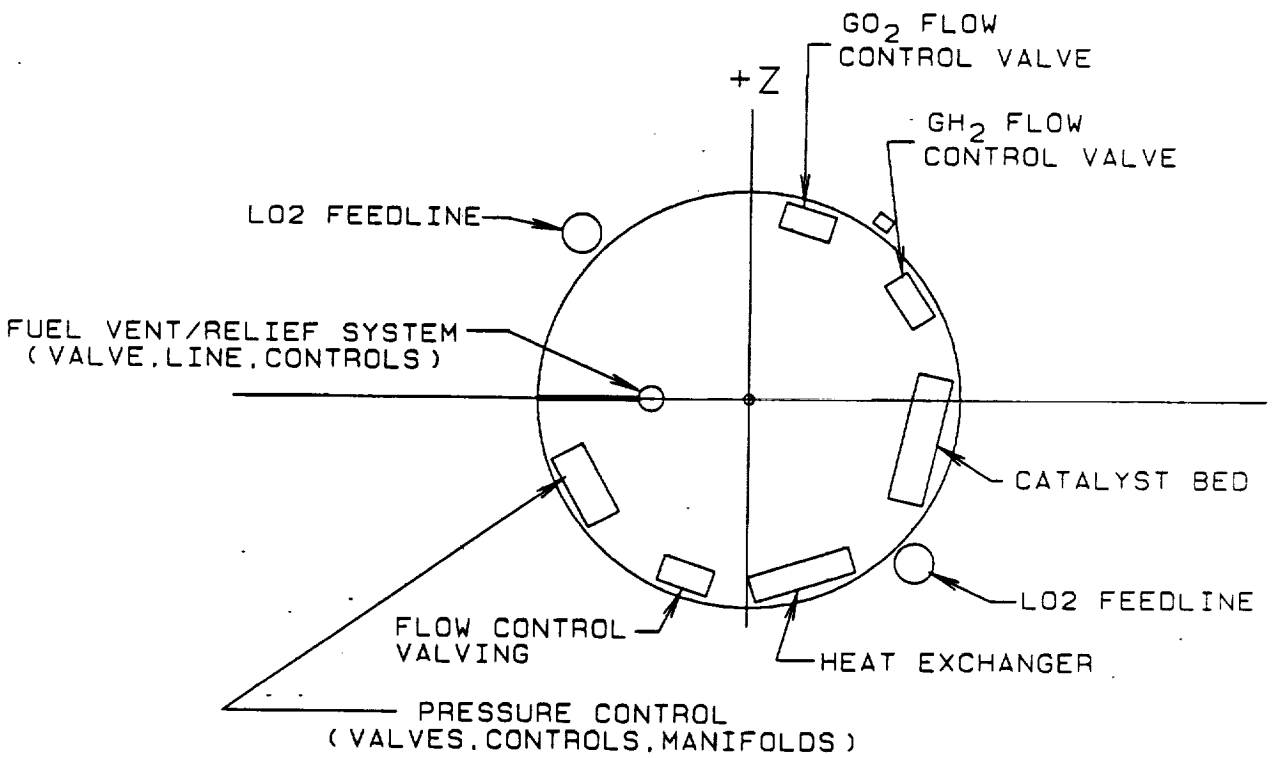

SECTION A-A

STORED GAS -CATALYST ALTERNATE
CANDIDATE #4a SHEET 3
SCOTT WEAR 9/25/89

MARTIN MARIETTA
MANNED SPACE SYSTEMS

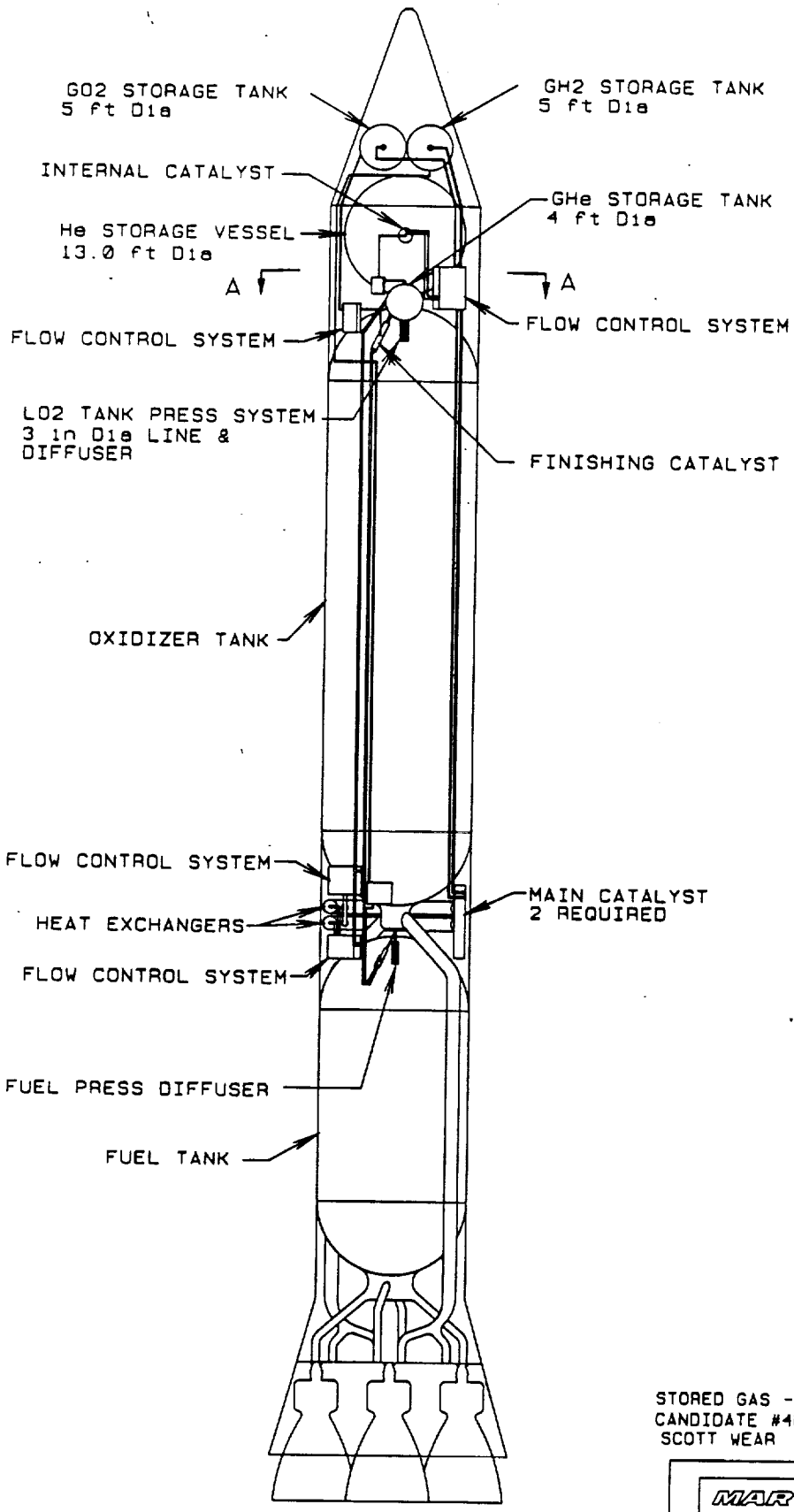

STORED GAS - CATALYST ALTERNATE (b)
CANDIDATE #4b SHEET 1
SCOTT WEAR 9/25/89

MARTIN MARIETTA
MANNED SPACE SYSTEMS

SUBSYSTEM	DESCRIPTION
LO2 FEED	DUAL EXTERNAL FEEDLINES 17 in ID FWD FLEX SECTION APPROX 130 in LENGTH (INCO 718) MID STRAIGHT SECTIONS APPROX 470 in LENGTH (AL 2219) AFT FLEX SECTIONS 12.5 in ID APPROX 350 in LENGTH (INCO 718) FWD FLEX SECT INCORPORATES 3 INTERNAL GIMBAL JOINTS AFT FLEX SECT CONTAINS 3 GIMBAL JOINTS IN EACH OF THE FOUR ENGINE INLET LINES . TOTAL OF 18 GIMBAL FLEX JOINTS (6-17 in ID . 12-12.5 in ID) 4 CONTROL VALVES LOCATED AT ENGINE INLETS
FUEL FEED	INDIVIDUAL 9 in ID ENGINE FEEDLINES. EACH CONSISTING OF 3 INTERNALLY GIMBALLED FLEX JOINTS AND ASSOCIATED TUBING APPROX TOTAL LENGTH 150 in EACH 4 CONTROL PREVALVES LOCATED AT ENGINE INLETS
PRESS SYSTEM	SPECIFIC VALVING/CONTROLS/COMPONENT SIZING TBD APPROXIMATE LINE SIZING AS FOLLOWS 150 ft X 0.5 in Dia 200 ft X 1 in Dia 150 ft X 1.5 in Dia 25 ft X 2 in Dia 200 ft X 3 in Dia 25 ft X 5 in Dia
VENT / RELIEF SYSTEM	CONSIST OF DUAL ACTUATED (COMMANDED AND PRESSURE SENSING) VALVE AND OVER-BOARD DUCTING
FILL/DRAIN SYSTEM	

STORED GAS - CATALYST ALTERNATE (b)
CANDIDATE #4a SHEET 2
SCOTT WEAR 10/13/89

MARTIN MARIETTA
MANNED SPACE SYSTEMS

SUBSYSTEM	DESCRIPTION
LO2 FEED	DUAL EXTERNAL FEEDLINES 17 in ID FWD FLEX SECTION APPROX 130 in LENGTH (INCO 718) MID STRAIGHT SECTIONS APPROX 470 in LENGTH (AL 2219) AFT FLEX SECTIONS 12.5 in ID APPROX 350 in LENGTH (INCO 718) FWD FLEX SECT INCORPORATES 3 INTERNAL GIMBAL JOINTS AFT FLEX SECT CONTAINS 3 GIMBAL JOINTS IN EACH OF THE FOUR ENGINE INLET LINES TOTAL OF 18 GIMBAL FLEX JOINTS (6-17 in ID . 12-12.5 in ID) 4 CONTROL VALVES LOCATED AT ENGINE INLETS
FUEL FEED	INDIVIDUAL 9 · in ID ENGINE FEEDLINES EACH CONSISTING OF 3 INTERNALLY GIMBALLED FLEX JOINTS AND ASSOCIATED TUBING APPROX TOTAL LENGTH 150 in EACH 4 CONTROL PREVALVES LOCATED AT ENGINE INLETS
PRESS SYSTEM	SPECIFIC VALVING/CONTROLS/COMPONENT SIZING TBD APPROXIMATE LINE SIZING AS FOLLOWS 150 ft X 0.5 in Dia 200 ft X 1 in Dia 150 ft X 1.5 in Dia 25 ft X 2 in Dia 200 ft X 3 in Dia 25 ft X 5 in Dia
VENT / RELIEF SYSTEM	CONSIST OF DUAL ACTUATED (COMMANDED AND PRESSURE SENSING) VALVE AND OVER-BOARD DUCTING
FILL/DRAIN SYSTEM	

STORED GAS - CATALYST ALTERNATE (b)
CANDIDATE #4a SHEET 2
SCOTT WEAR 10/13/89

MARTIN MARIETTA
MANNED SPACE SYSTEMS

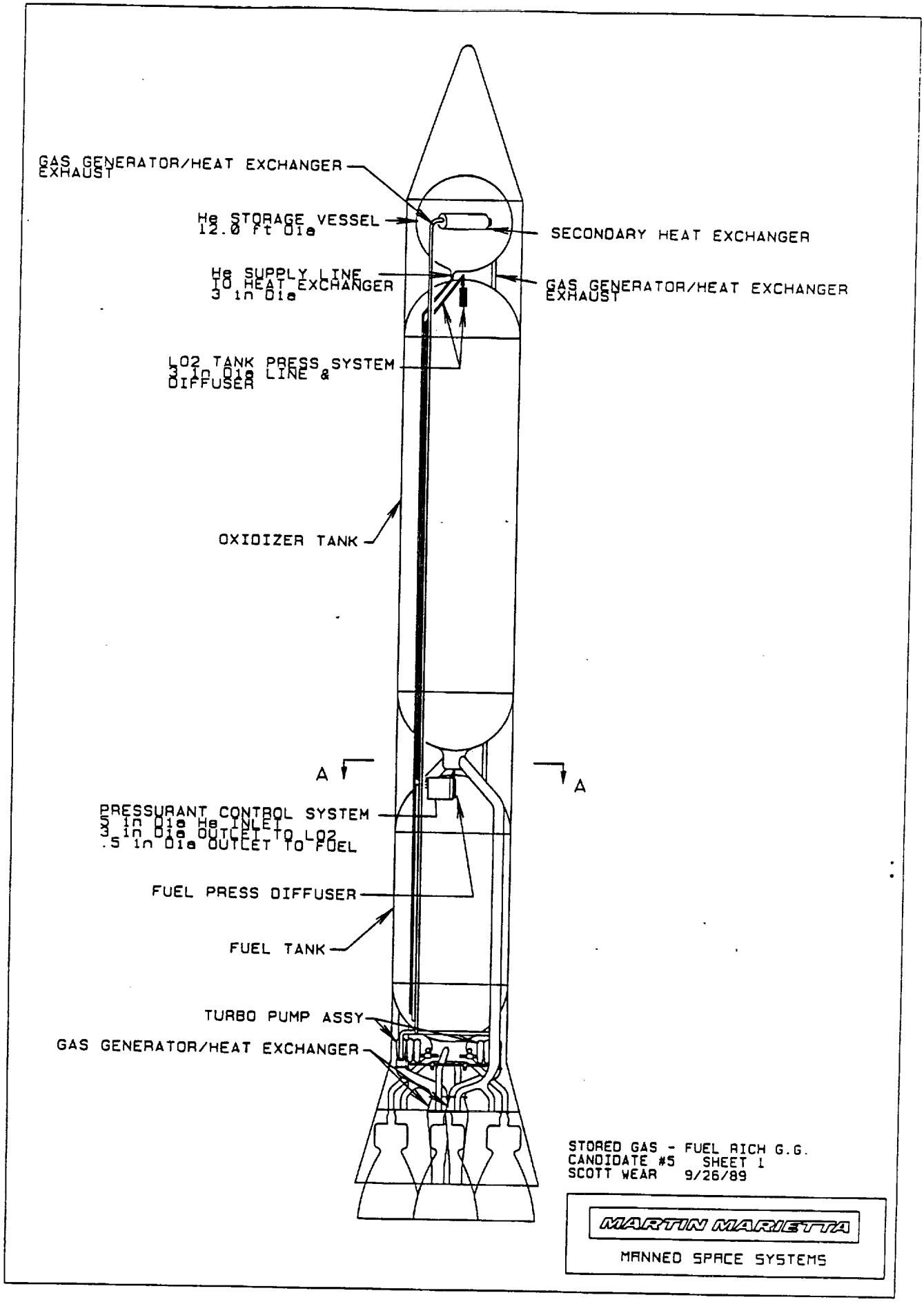
GAS GENERATOR/HEAT EXCHANGER EXHAUST
He STORAGE VESSEL 12.0 ft Dia
SECONDARY HEAT EXCHANGER
He SUPPLY LINE TO HEAT EXCHANGER 3 in Dia
GAS GENERATOR/HEAT EXCHANGER EXHAUST
LO2 TANK PRESS SYSTEM 3 in Dia LINE & DIFFUSER
OXIDIZER TANK
A
A
PRESSURANT CONTROL SYSTEM 5 in Dia He INLET 3 in Dia OUTLET TO LO2 .5 in Dia OUTLET TO FUEL
FUEL PRESS DIFFUSER
FUEL TANK
TURBO PUMP ASSY
GAS GENERATOR/HEAT EXCHANGER
STORED GAS - FUEL RICH G.G.
CANDIDATE #5 SHEET 1
SCOTT WEAR 9/26/89
MARTIN MARIETTA
MANNED SPACE SYSTEMS

SUBSYSTEM	DESCRIPTION
LO2 FEED	DUAL EXTERNAL FEEDLINES 17 in ID FWD FLEX SECTION APPROX 130 in LENGTH (INCO 718) MID STRAIGHT SECTIONS APPROX 470 in LENGTH (AL 2219) AFT FLEX SECTIONS 12.5 in ID APPROX 350 in LENGTH (INCO 718) FWD FLEX SECT INCORPORATES 3 INTERNAL GIMBAL JOINTS AFT FLEX SECT CONTAINS 3 GIMBAL JOINTS IN EACH OF THE FOUR ENGINE INLET LINES TOTAL OF 18 GIMBAL FLEX JOINTS (6-17 in ID . 12-12.5 in ID) 4 CONTROL VALVES LOCATED AT ENGINE INLETS
FUEL FEED	INDIVIDUAL 9 in ID ENGINE FEEDLINES EACH CONSISTING OF 3 INTERNALLY GIMBALLED FLEX JOINTS AND ASSOCIATED TUBING APPROX TOTAL LENGTH 150 in EACH 4 CONTROL PREVALVES LOCATED AT ENGINE INLETS
PRESS SYSTEM	SPECIFIC VALVING/CONTROLS/COMPONENT SIZING TBD APPROXIMATE LINE SIZING AS FOLLOWS 20 FT X .5 IN Dia 25 ft X 2 in Dia 100 ft X 3 in Dia 125 ft X 6 in Dia 135 ft X 5 in Dia
VENT / RELIEF SYSTEM	CONSIST OF DUAL ACTUATED (COMMANDED AND PRESSURE SENSING) VALVE AND OVER-BOARD DUCTING
FILL/DRAIN SYSTEM	

STORED GAS - FUEL RICH G.G.
CANDIDATE #5 SHEET 2
SCOTT WEAR 9/26/89

MARTIN MARIETTA
MANNED SPACE SYSTEMS

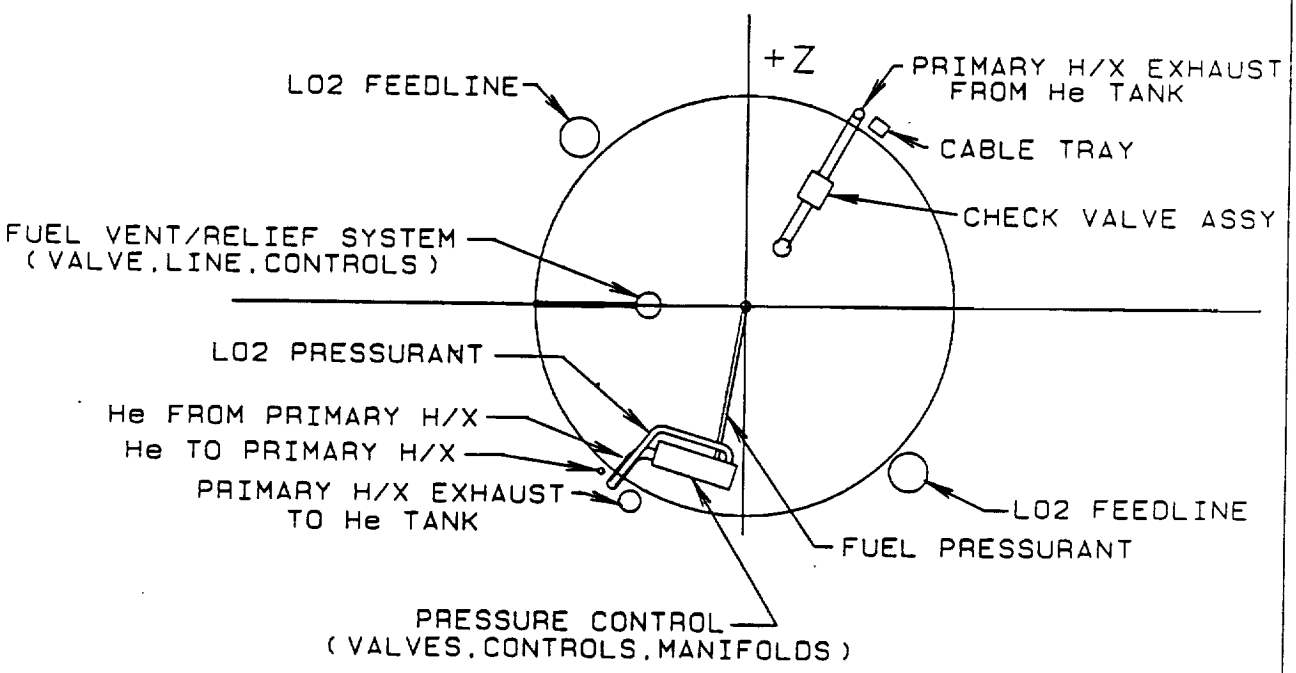

SECTION A-A

STORED GAS - FUEL RICH G.G.
CANDIDATE #5 SHEET 3
SCOTT WEAR 9/26/89

MARTIN MARIETTA
MANNED SPACE SYSTEMS

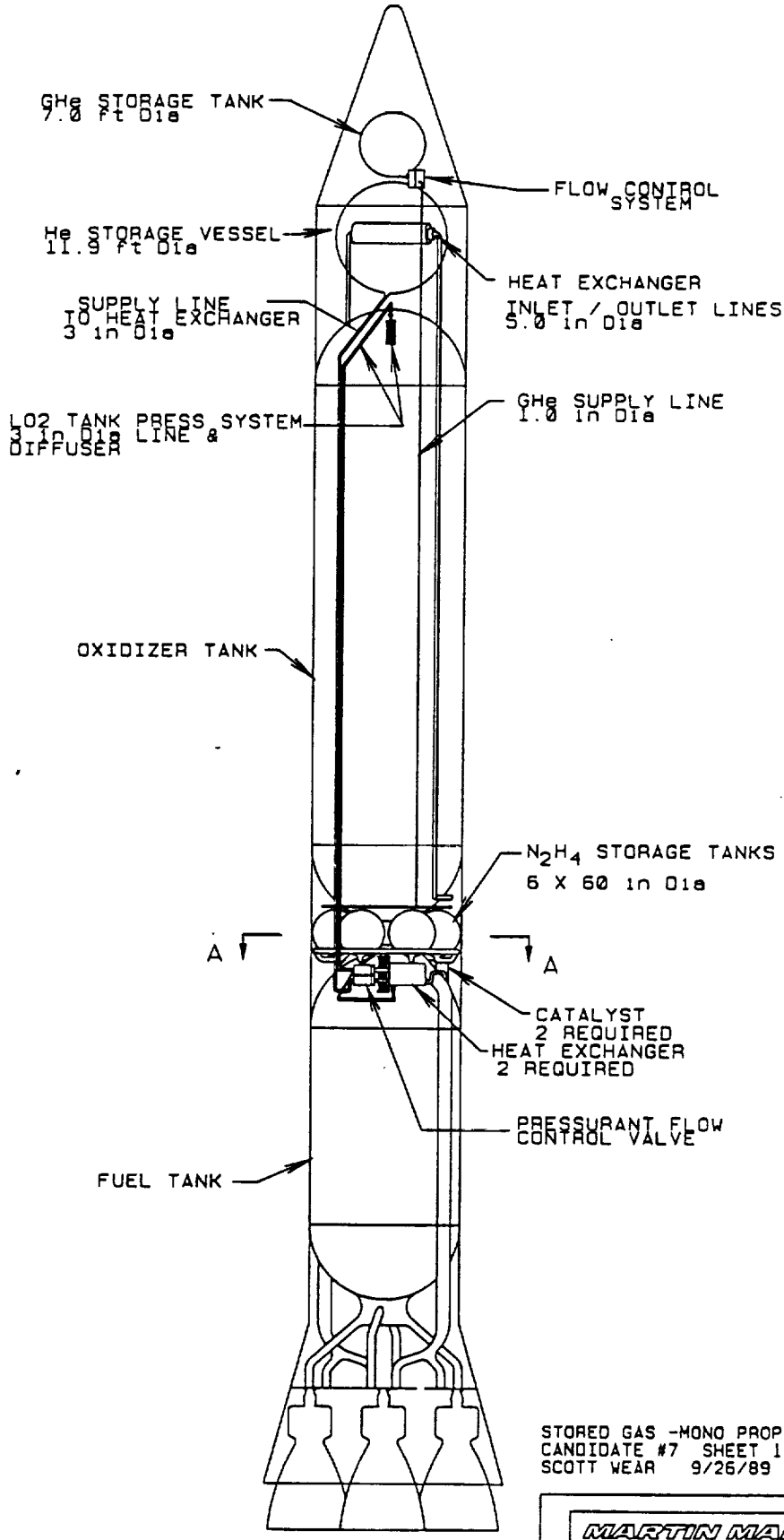

STORED GAS -MONO PROPELLANT CATALYST
CANDIDATE #7 SHEET 1
SCOTT WEAR 9/26/89

MARTIN MARIETTA

MANNED SPACE SYSTEMS

SUBSYSTEM	DESCRIPTION
LO2 FEED	DUAL EXTERNAL FEEDLINES 17 in ID FWD FLEX SECTION APPROX 130 in LENGTH (INCO 718) MID STRAIGHT SECTIONS APPROX 470 in LENGTH (AL 2219) AFT FLEX SECTIONS 12.5 in ID APPROX 350 in LENGTH (INCO 718) FWD FLEX SECT INCORPORATES 3 INTERNAL GIMBAL JOINTS AFT FLEX SECT CONTAINS 3 GIMBAL JOINTS IN EACH OF THE FOUR ENGINE INLET LINES TOTAL OF 18 GIMBAL FLEX JOINTS (6-17 in ID , 12-12.5 in ID) 4 CONTROL VALVES LOCATED AT ENGINE INLETS
FUEL FEED	INDIVIDUAL 9 in ID ENGINE FEEDLINES EACH CONSISTING OF 3 INTERNALLY GIMBALLED FLEX JOINTS AND ASSOCIATED TUBING APPROX TOTAL LENGTH 150 in EACH 4 CONTROL PREVALVES LOCATED AT ENGINE INLETS
PRESS SYSTEM	SPECIFIC VALVING/CONTROLS/COMPONENT SIZING TBD APPROXIMATE LINE SIZING AS FOLLOWS 120 ft X 1 IN Dia 100 ft X 3 in Dia 80 ft X 4 in Dia 50 ft X 6 in Dia 135 ft X 5 in Dia
VENT / RELIEF SYSTEM	CONSIST OF DUAL ACTUATED (COMMANDED AND PRESSURE SENSING) VALVE AND OVER-BOARD DUCTING
FILL/DRAIN SYSTEM	

STORED GAS - MONO PROPELLANT CATALYST
CANDIDATE #7 SHEET 2
SCOTT WEAR 9/11/89

MARTIN MARIETTA
MANNED SPACE SYSTEMS

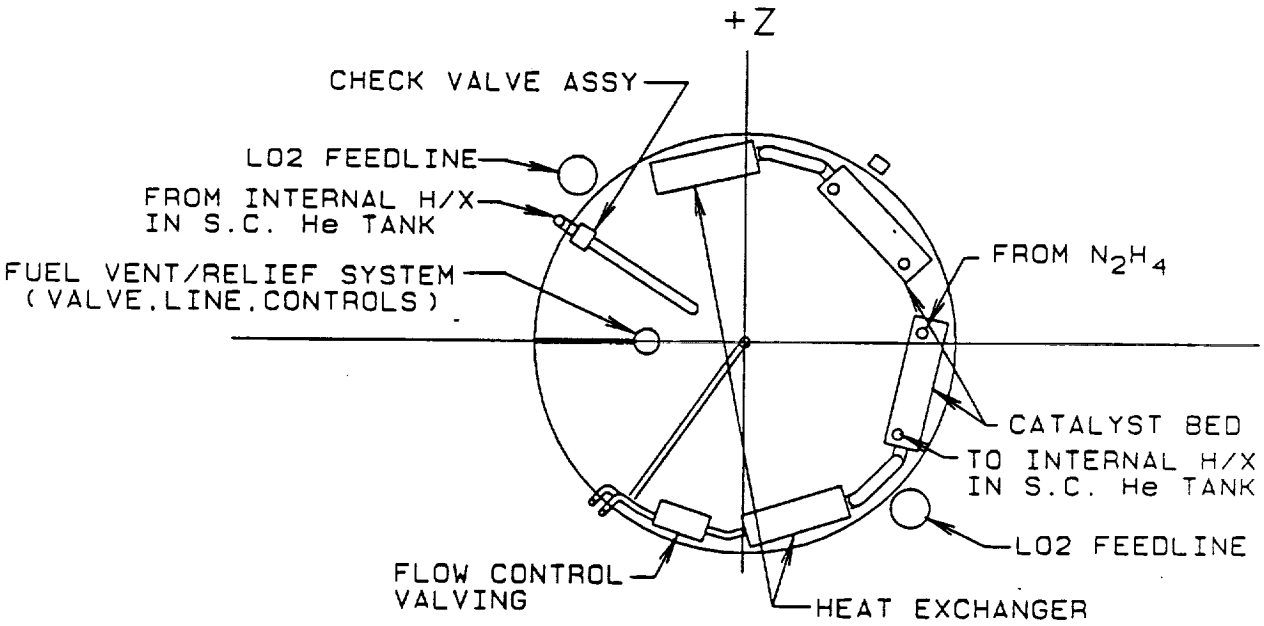

SECTION A-A

STORED GAS - MONO PROPELLANT CATALYST
CANDIDATE #7 SHEET 3
SCOTT WEAR 9/26/89

MARTIN MARIETTA
MANNED SPACE SYSTEMS

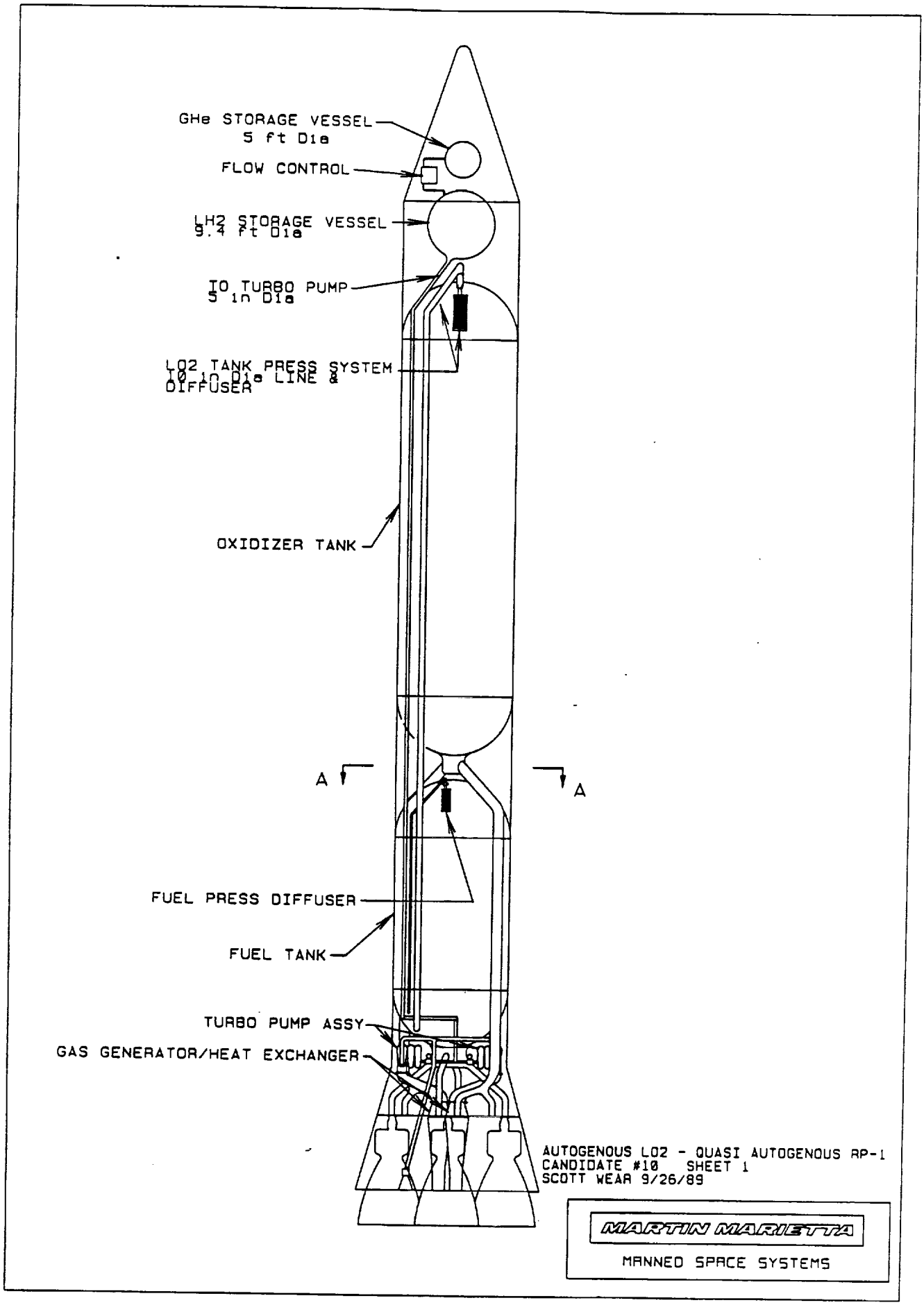
GHe STORAGE VESSEL
5 ft Dia
FLOW CONTROL
LH2 STORAGE VESSEL
9.4 ft Dia
IO TURBO PUMP
5 in Dia
LO2 TANK PRESS SYSTEM
10 in Dia LINE &
DIFFUSER
OXIDIZER TANK
A
A
FUEL PRESS DIFFUSER
FUEL TANK
TURBO PUMP ASSY
GAS GENERATOR/HEAT EXCHANGER
AUTOGENOUS LO2 - QUASI AUTOGENOUS RP-1
CANDIDATE #10 SHEET 1
SCOTT WEAR 9/26/89
MARTIN MARIETTA
MANNED SPACE SYSTEMS

SUBSYSTEM	DESCRIPTION
LO2 FEED	DUAL EXTERNAL FEEDLINES 17 in ID FWD FLEX SECTION APPROX 130 in LENGTH (INCO 718) MID STRAIGHT SECTIONS APPROX 470 in LENGTH (AL 2219) AFT FLEX SECTIONS 12.5 in ID APPROX 350 in LENGTH (INCO 718) FWD FLEX SECT INCORPORATES 3 INTERNAL GIMBAL JOINTS AFT FLEX SECT CONTAINS 3 GIMBAL JOINTS IN EACH OF THE FOUR ENGINE INLET LINES . TOTAL OF 18 GIMBAL FLEX JOINTS (6-17 in ID . 12-12.5 in ID) 4 CONTROL VALVES LOCATED AT ENGINE INLETS
FUEL FEED	INDIVIDUAL 9 in ID ENGINE FEEDLINES EACH CONSISTING OF 3 INTERNALLY GIMBALLED FLEX JOINTS AND ASSOCIATED TUBING APPROX TOTAL LENGTH 150 in EACH 4 CONTROL PREVALVES LOCATED AT ENGINE INLETS
PRESS SYSTEM	SPECIFIC VALVING/CONTROLS/COMPONENT SIZING TBD APPROXIMATE LINE SIZING AS FOLLOWS 25 ft X .5 IN Dia 75 ft X 3 in Dia 25 ft X 4 in Dia 20 ft X 4.5 in Dia 20 ft X 4.5 in Dia 150 ft X 5 in Dia 20 ft X 6 in Dia 15 ft X 9 in Dia 120 ft X 10 in Dia
VENT / RELIEF SYSTEM	CONSIST OF DUAL ACTUATED (COMMANDED AND PRESSURE SENSING) VALVE AND OVER-BOARD DUCTING
FILL/DRAIN SYSTEM	

AUTOGENOUS LO2 - QUASI AUTOGENOUS RP-1
CANDIDATE #10 SHEET 2
SCOTT WEAR 9/11/89

MARTIN MARIETTA
MANNED SPACE SYSTEMS

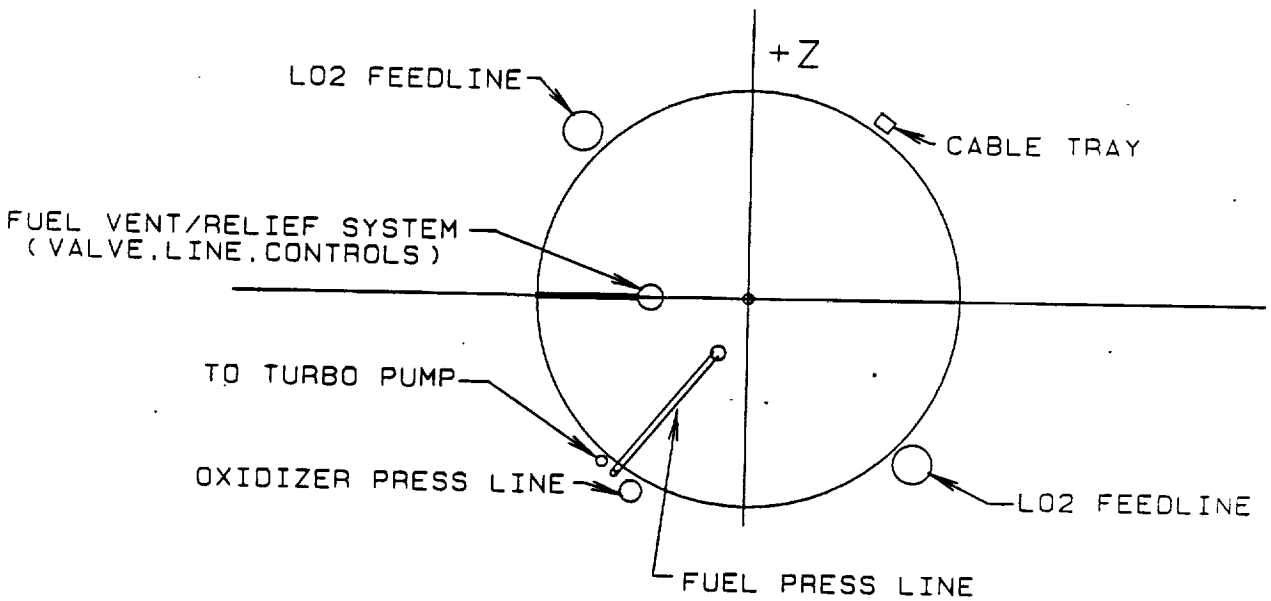

SECTION A-A

AUTOGENOUS LO2 - QUASI AUTOGENOUS RP-1
CANDIDATE #10 SHEET 3
SCOTT WEAR 9/26/89

MARTIN MARIETTA
MANNED SPACE SYSTEMS

Interoffice Memo

MARTIN MARIETTA

MMMSS-3011-89-108

Date: November 7, 1989

To: J. Cool/3010

cc: PTPSTP Distribution

From: R.J. Cronin/3018

Subject: PTPSTP Trade Candidates - Coarse Screen

Reference: MMMSS-3011-89-106 dated September 7, 1989

This memo is being reissued to present additional information developed to accomplish the PTPSTP trade candidates coarse screen.

The coarse screen of candidate flight propellant tank pressurization systems has been completed to close out WBS element 1.1.1.2.3. Six of the twelve candidate systems passed the GO/NO GO must criteria used to coarse screen the systems. The six remaining candidates will be evaluated further in the detailed systems trade studies. The must criteria that were used to coarse screen the twelve systems are presented in Figure 1, and the coarse screen results are summarized in Figure 2. The detailed rationale used in the screening of each system is presented in Appendix A attached. Additional rationale has been added to the screening results for the rejected systems. These added rejection rationale are in addition to failure of the basic must screening criteria

The system candidates that will be evaluated in detailed trades are:

Candidate	2/2a	-	Stored Gas - Steam System
	3	-	Stored Gas - HEX & GG
	4/4a	-	Stored Gas - Catalyst
	5	-	Stored Gas - Fuel Rich GG
	7	-	Stored Gas - Mono-Propellant Catalyst
	10	-	Autogenous LO2 & Quasi-Autogenous RP-1

R.J. Cronin

R.J. Cronin
PTPSTP Systems Engineering

Approved:

J. Cool

J. Cool
PTPSTP Program Manager

Attachments

BC:eb

1389EB

Must Criteria

Must Criteria	Rationale for Selection
• System shall not be less than fail-safe (except for primary structure, TPS, and pressure vessels) during all mission phases	• NSTS 07700 Requirement
• Structural/functional integrity shall be verifiable by test	• Implied by NSTS 07700 Requirement
• System shall be capable of pressurizing LO2 and RP-1 propellants	• PTPSTP SOW Requirement
• System shall be capable of delivering pressurant between 600 and 1350 psia	• PTPSTP SOW Requirement
• System shall meet capability for engine shut-down upon command	• LRB Phase A Requirement
• System shall be capable of integration into large pressure-fed liquid and hybrid propulsion systems	• PTPSTP SOW Requirement
• System shall be designed to have no residual hazards (except primary structure, TPS, & pressure vessels)	• Implied by NSTS 07700 Reqts to Establish Greater System Safety

Figure 1

PTPSTP Must Criteria Screening

	Candidate Concept	Must Criteria							
		Fail-Safe	Verifiable By Test	LO2 & RP-1 Compatible	600-1350 psia	Engine Shut-Down	Booster Integration	Residual Hazards	
1	Stored Gas - Ambient	No Go	Go	Go	Go	Go	No Go	No Go	
2	Stored Gas - Steam System	Go	Go	Go	Go	Go	Go	Go	√
3	Stored Gas - H/X & GG	Go	Go	Go	Go	Go	Go	Go	√
4	Stored Gas - Catalyst	Go	Go	Go	Go	Go	Go	Go	√
5	Stored Gas - Fuel Rich GG	Go	Go	Go	Go	Go	Go	Go	√
6	Stored Gas - Oxid Rich GG	No Go	No Go	No Go	Go	Go	Go	No Go	
7	Stored Gas - Mono Propellant Catalyst	Go	Go	Go	Go	Go	Go	Go	√
8	Fuel & Oxid Rich Liquid GG Exhaust into Tanks	No Go	No Go	No Go	Go	Go	Go	No Go	
9	Fuel & Oxid Rich Solid GG Exhaust into Tanks	No Go	No Go	No Go	Go	No Go	Go	No Go	
10	Autogenous LO2 & Quasi Autogenous RP-1	Go	Go	Go	Go	Go	Go	Go	√
11	GG Vaporization Cycle	No Go	No Go	No Go	Go	Go	Go	No Go	
12	Direct Tank Injection	No Go	No Go	No Go	Go	Go	Go	No Go	

Figure 2

APPENDIX A

Candidate 1 Stored Gas - Ambient

Must Criteria 1 & 7, Fail-Safe - Residual Hazards

Note - In the following discussions of safety considerations, it is recognized that, with very few exceptions, any given degree of safety can be achieved if safety is the only prime consideration and cost, weight, development time and complexity are at best secondary criteria. Therefore, where a system is found to be unsafe due to lack of fault tolerance or residual hazards, the implication is not that the system cannot be made safe, but that the effort to do so would require research, experimentation, development of new technology or lead time which would be so extensive as to eliminate the system from reasonable consideration as a near-term candidate for development. In addition, although heat exchangers often involve critical (single failure point) components, it is assumed that heat exchangers can be made sufficiently reliable that they do not represent a valid safety concern.

Stored Gas - Ambient (rejected). The essential safety consideration of this concept is the exceptionally high (25,000 psi) storage pressure required of the helium pressurant. Containment of helium is difficult at even modest pressures; containment at the high pressures envisioned by this trade would be proportionately greater. Discussion with several representatives of high pressure pneumatic equipment suppliers indicates that valves, regulators, piping, connectors, gauges and seals in the sizes required are not readily available. The limited body of knowledge of problems with the system proposed would make hazard analysis and prevention extremely difficult. Any leak of gas at 25,000 psi would be extremely hazardous to workers. For these reasons, this candidate fails both the fail safe and residual hazard screens.

Must Criteria 2 - Verifiable by Test

All components upstream of the pressure regulators would be designed for internal pressures of ~ 25,000 psia. Pressure vessel and plumbing would have to be proof tested at ~ 27,500 psia. Valves and pressure regulators would have to be tested for function at ~ 25,000 psia and proof tested at ~ 27,500 psia. Valve seals and expansion joints would require improved technology in the sizes needed at these pressure levels. High pressure pumps and compressors are needed. GO - With great difficulty.

Must Criteria 3 - LO2 & RP-1 Compatible

Pressurants are compatible with LO2 and RP-1. GO

Must Criteria 4 - 600 - 1350 psia

System can accommodate tank pressures from 600 - 1350 psia. GO

Must Criteria 5 - Engine Shut-down

System can accommodate engine shut-down and system throttling on demand. GO

Must Criteria 6 - Booster Integration

System cannot be realistically integrated into pressure-fed or hybrid booster. Pressurant storage tank would be ~ 16 ft diameter for STS LRB size boosters. Just pressurant tank per booster would weigh ~ 135,000 lbs at a cost of ~ 31,400 lbs of payload.
NO GO - 45 % payload penalty. Integration not realistic due to 16' dia pressurant tank.

Comments

This candidate offers simplicity but presents serious weight, performance and integration problems. Also it presents a technical risk because of the need for a new generation of control components due to the 25,000 psia operating pressure. The candidate was eliminated from further study because it failed the failsafe and residual hazard screens and vehicle integration. Because of the above problems, it compares very unfavorably with the selected trade candidates.

Candidate 2/2a Stored Gas - Steam System

Must Criteria 1 & 7, Fail-Safe - Residual Hazards

Stored Gas - Steam (accepted) Obvious problems with this system are the difficulty of refrigeration and insulation of the supercritical helium container and the deposition of water ice in the oxidizer tank. However, these problems appear to be amenable to solution. The simplicity of the system suggests that safety concerns would be minimal. The candidate therefore passes both screens.

Must Criteria 2 - Verifiable by Test

The system would require source of 3000 psia saturated steam. Steam test system would be expensive. Extensive instrumentation would be needed to locate and measure ice formation in system. GO - Expensive verification test.

Must Criteria 2a - Same as Candidate 2

Must Criteria 3 - LO2 & RP-1 Compatible

Pressurants are compatible with LO2 and RP-1. GO

Must Criteria 4 - 600 - 1350 psia

System can accommodate tank pressures from 600 - 1350 psia. GO

Must Criteria 5 - Engine Shut-down

System can accommodate engine shut-down and system throttling on demand. GO

Must Criteria 6 - Booster Integration

System can be integrated into pressure-fed or hybrid booster. Steam bottle would be 4 ft in diameter. Steam is loaded at launch site. Steam bottle would require insulation and possibly supplemental heat to maintain steam quality. Modest launch facility impact. GO - No major integration problem. Modest packaging problems.

2a Must Criteria 6 - Booster Integration

Somewhat more difficult than Candidate 2 because of two steam vessels. Mixing chamber and gas generator/HEX would probably trade integration-wise. GO - Modest packaging problems.

Comments -

Candidate 3 - Stored Gas - Heat Exchangers and Gas Generator

Must Criteria 1 & 7, Fail-Safe - Residual Hazards

Stored Gas - Heat Exchanger and Gas Generator (accepted). This system does not appear to pose any residual hazards, and can be made fail safe without any new technology. It therefore passes both screens.

Must Criteria 2 - Verifiable by Test

All components can be verified by test. He expulsion from the pressurant vessel can be verified by test. Gas generator performance and control can be tested and verified. Fairly high number of tests needed because of the number of system components. GO - No major verification problems.

Must Criteria 3 - LO2 & RP-1 Compatible

Pressurants are compatible with LO2 and RP-1. GO

Must Criteria 4 - 600 - 1350 psia

System can accommodate tank pressures from 600 - 1350 psia. GO

Must Criteria 5 - Engine Shut-down

System can accommodate engine shut-down and system throttling on demand. GO

Must Criteria 6 - Booster Integration

System can be integrated into pressure-fed or hybrid booster. Packaging complexities are due to gas generator exhaust and pressurant lines running up/down vehicle depending on component locations. GO - Modest system packaging problems.

Comments -

Candidate 4/4a - Stored Gas - Catalyst

Must Criteria 1 & 7, Fail-Safe - Residual Hazards

4. Stored Gas - Catalyst (accepted). Safety concerns with this system are essentially the same as those of System #2, with the additional concerns associated with the catalyst beds. The large body of knowledge with industrial uses of catalysts suggests that the catalyst beds do not represent a major safety concern. This candidate therefore passed both screens.

4a. Stored Gas - Catalyst Alternate (accepted). Safety concerns for this system are essentially the same as for #4. This candidate therefore passes both screens.

Must Criteria 2 - Verifiable by Test

4. All components can be verified by test. Pressurant expulsion from the storage vessel can be tested and verified. Catalyst performance can be verified. GO - No major verification problems.

4a - Same as candidate 4

Must Criteria 3 - LO2 & RP-1 Compatible

Pressurants are compatible with LO2 and RP-1. GO

Must Criteria 4 - 600 - 1350 psia

System can accommodate tank pressures from 600 - 1350 psia. GO

Must Criteria 5 - Engine Shut-down

System can accommodate engine shut-down and system throttling on demand. GO

Must Criteria 6 - Booster Integration

4. System can be integrated into pressure-fed or hybrid booster. There will be packaging problems due to expected size of the main catalyst bed. This catalyst bed may have to be broken up into multiple smaller beds to fit in available volumes. Packaging complexities are also caused by multiple pressurant lines running up/down vehicle. GO - Significant system packaging problems.

4a. System can be integrated into a pressure-fed or hybrid booster. There will be packaging problems due to the expected size of the main catalyst bed and the multiple (2-3) catalyst reactant bottles. Multiple pressurant and reactant lines will also cause packaging complexities. GO - Serious system packaging problems.

Comments -

Candidate 5 - Stored Gas - Fuel-Rich Gas Generator

Must Criteria 1 & 7, Fail-Safe - Residual Hazards

Stored Gas - Fuel Rich Gas Generator (accepted). Off-nominal operation of the gas generator, especially during startup or shutdown, could result in injection of heated oxidizer into the fuel tank, which could cause an explosion. However, such systems have been designed on a smaller scale with sufficient reliability that startup and shutdown transients, as well as credible failure, can be tolerated without unacceptable risk. In the absence of any evidence, that similar techniques could not be applied to this system, therefore, this option passes both screens.

Must Criteria 2 - Verifiable by Test

All components can be verified for structural integrity and function by test, and He expulsion from the pressurant vessel can be verified. GO - Verification of system is feasible.

Must Criteria 3 - LO2 & RP-1 Compatible

Failure could cause oxidizer rich pressurant to be introduced into the fuel tank. Control of failure effects could prevent this condition. GO - Properly controlled system compatible with RP-1.

Must Criteria 4 - 600 - 1350 psia

System can accommodate tank pressures from 600 - 1350 psia. GO

Must Criteria 5 - Engine Shut-down

System can accommodate engine shut-down and system throttling on demand. GO

Must Criteria 6 - Booster Integration

System can be integrated into a pressure-fed or hybrid booster. Packaging complexities would result from gas generator and turbine exhaust lines plus pressurant and gg exhaust lines running up/down the vehicle. GO - Modest system packaging problems.

Comments -

Candidate 6 - Stored Gas - Oxidized-Rich Gas Generator

Must Criteria 1 & 7, Fail-Safe - Residual Hazards

Stored Gas - Oxidizer Rich Gas Generator (rejected). Off-nominal operation of the gas generator, especially during startup or shutdown, could result in injection of heated fuel into the oxidizer tank which could cause an explosion. There does not appear to be any reliable method to protect against this hazard. Therefore, this system fails the fail safe screen. Since the possibility of off-nominal operation would always be present in such a system, it fails the residual hazard screen also.

Must Criteria 2 - Verifiable by Test

All components can be verified for structural integrity and function by test. He expulsion from the pressurant vessel can be verified. Heat exchanger and turbine testing with oxidizer-rich flows would be difficult because a single point failure in the gas generator mixture ratio control could contaminate the oxidizer tank with fuel-rich pressurant, the system function cannot be verified by test and the oxidizer tank structural integrity in such a failure cannot be verified. NO GO - No verification of system failure effects.

Must Criteria 3 - LO2 & RP-1 Compatible

Failure could cause fuel rich pressurant to be introduced into the oxidizer tank. Failure-caused contamination in the system would violate contamination, JSC SE-5-0073, and cleanliness , MSFC-SPEC-164A, specifications. NO GO - Incompatible with LO2

Must Criteria 4 - 600 - 1350 psia

System can accommodate tank pressures from 600 - 1350 psia. GO

Must Criteria 5 - Engine Shut-down

System can accommodate engine shut-down and system throttling on demand. GO

Must Criteria 6 - Booster Integration

Same as Candidate 5. GO - Modest system packaging problems.

Comments

In addition to the safety issues and LO2 compatibility which were used to screen this candidate out, the candidate has further disadvantages such as needing turbopumps, more complex controls and pressurizing the LO2 tank with a high molecular weight, 30, gas. The additional LO2 tank residual pressurant weight is approximately 92,300 lb. This system offers no advantages over stored gas systems selected for further trades.

Candidate 7 - Stored Gas - Monopropellant Catalyst

Must Criteria 1 & 7, Fail-Safe - Residual Hazards

Stored Gas - Monopropellant Catalyst (accepted). The widespread use of hydrazine suggests that hazards posed by this fuel can be adequately guarded against in spite of its chemical activity and toxicity. No unusual hazards appear to be generated by injection of combustion products into the fuel tank. Catalyst hazards do not appear to be greater than those of systems #4 and #4a. This system therefore passes both screens.

Must Criteria 2 - Verifiable by Test

All components can be verified by test. System functions such as pressurant expulsion, catalyst bed performance and hydrazine decomposition can be verified. Fairly high number of tests needed because of the variety of components and system functions, i.e., one catalyst bed, three storage bottles, etc. GO - No major verification problems.

Must Criteria 3 - LO2 & RP-1 Compatible

Pressurants are compatible with LO2 and RP-1. GO

Must Criteria 4 - 600 - 1350 psia

System can accommodate tank pressures from 600 - 1350 psia. GO

Must Criteria 5 - Engine Shut-down

System can accommodate engine shut-down and system throttling on demand. GO

Must Criteria 6 - Booster Integration

System can be integrated into pressure-fed or hybrid booster. Modest packaging problems due to monopropellant storage and decomposition system. Ground support needed for monopropellant loading. GO - No major integration problems. Some extra ground support needed.

Comments

Large amounts of hydrazine needed would pose significant ground support, safety, and potential environmental problems. The hydrazine requirements would amount to 22,500 lb per booster.

Candidate 8 - Stored Gas - Gas Generator Exhaust into Tanks

Must Criteria 1 & 7, Fail-Safe - Residual Hazards

Stored Gas - Gas Generator Exhaust into Tanks (rejected). This system suffers from the hazards of system 6. It therefore fails the fail safe and residual hazard screens.

Must Criteria 2 - Verifiable by Test

All components can be verified by test. He expulsion from the storage vessel can be verified. Overall system function cannot be verified by test because a single point failure of either gas generator mixture ratio control could cause contamination of a propellant tank by off-nominal mixture ratio propellant, especially the introduction of fuel rich gas into the oxidized tanks. Structural integrity of the propellant tanks cannot be verified by test for such a failure. NO GO - No verification of failure effects.

Must Criteria 3 - LO2 and RP-1 Compatible

Failures can cause off-nominal mixture ratio pressurant to be introduced into fuel or oxidized tanks. NO GO - Incompatible with RP-1 and LO2. Incompatible with LO2 contamination and cleanliness specifications per system 6.

Must Criteria 4 - 600 - 1350 psia

System can accommodate tank pressures from 600 - 1350 psia. GO

Must Criteria 5 - Engine Shut-down

System can accommodate engine shut-down and system throttling on demand. GO

Must Criteria 6 - Booster Integration

The system can be integrated into a pressure-fed or hybrid booster. Packaging complexities exist because of the number of components (i.e., dual gas generators, turbopump, etc.) and the number of pressurant and gas generator exhaust lines running up/down the vehicle. GO - Significant system packaging problems.

Comments

This system offers no advantages over any other stored gas systems and suffers the same disadvantages as system 6.

Candidate 9 - Fuel/Oxidizer Rich Solid Gas Generator

Must Criteria 1 & 7, Fail-Safe - Residual Hazards

Fuel/Oxidizer Rich Solid Gas Generators (rejected). The system as shown fails the fail safe screen because there is no way to shut down the gas generators once activated. Since the possibility of the need for shutdown would always be present in such a system, it fails the residual hazard screen also.

Must Criteria 2 - Verifiable by Test

Some components can be verified by test. System functions can be verified except for gas generator failures. The solid gas generators cannot be verified by test as each is unique and cannot be tested for failure. NO GO - Solid gas generators cannot be verified.

Must Criteria 3 - LO2 & RP-1 Compatible

Pressurants are theoretically compatible with LO2 and RP-1, but any unburned particles of solid propellant that reached the propellant tanks would be incompatible with LO2 or RP-1 - NOGO.

Must Criteria 4 - 600 - 1350 psia

System can accommodate tank pressures from 600 - 1350 psia. GO

Must Criteria 5 - Engine Shutdown

The solid gas generators cannot be shut down once started preventing total system shutdown when engine shutdown is called for prior to scheduled shutdown. NO GO.

Must Criteria 6 - Booster Integration

The system can be integrated into a pressure-fed or hybrid booster. The system is simple with a small number of components and pressurant lines. GO - No integration problems.

Comments

There appears to be no apparent advantages to the system other than simplicity. Performance would be degraded because of the requirement of 145,000 lb of solid propellant per booster. The weight and performance penalty plus failure of four must criteria caused this system to be eliminated.

Candidate 10 - Autogenous LO2 - Quasi-Autogenous RP-1

Must Criteria 1 & 7, Fail-Safe - Residual Hazards

Autogenous LO2 - Quasi Autogenous RP-1 (accepted). This system does not appear to pose any residual hazards and can be made fail safe without any new technology. It therefore passes both screens.

Must Criteria 2 - Verifiable by Test

All components can be verified by test. System functions can be verified. GO - No verification problems.

Must Criteria 3 - LO2 & RP-1 Compatible

Pressurants are compatible with LO2 and RP-1. GO

Must Criteria 4 - 600 - 1350 psia

System can accommodate tank pressures from 600 - 1350 psia. GO

Must Criteria 5 - Engine Shut-down

System can accommodate engine shut-down and system throttling on demand. GO

Must Criteria 6 - Booster Integration

The system can be integrated into a pressure-fed or hybrid booster. Minor packaging complexities result from pressurant lines running up/down the vehicle. GO - No major integration problems.

Comments -

Candidate 11 - Gas Generator Vaporization Cycle

Must Criteria 1 & 7. Fail-Safe - Residual Hazards

Gas Generator Vaporization Cycle (rejected). Off-nominal operation of the gas generators could inject hot fuel vapor into the oxidizer tank or hot oxidizer into the fuel tank. Either case would be catastrophic. There does not appear to be an effective method of preventing this hazard, especially during startup or shutdown. Therefore, this system fails the fail safe screen. Since the possibility of off-nominal operation would always be present in such a system, it fails the residual hazard screen also.

Must Criteria 2 - Verifiable by Test

Components can be verified by test. System function cannot be verified because failures such as off-nominal mixture ratio injection into the tanks or jet impingement on the tank walls and their resulting effects cannot be accurately simulated. Also the variability of the failures eliminates any prefailure verification of structural integrity. NO GO - No verification of system failure effects.

Must Criteria 3 - LO2 & RP-1 Compatible

Off-nominal mixture ratio pressurant can be introduced into the tanks (LO2 or RP-1). NO GO - Incompatible with LO2 and RP-1.

Must Criteria 4 - 600 - 1350 psia

System can accommodate tank pressures from 600 - 1350 psia. GO

Must Criteria 5 - Engine Shut-down

System can accommodate engine shut-down and system throttling on demand. GO

Must Criteria 6 - Booster Integration

The system can be integrated into a pressure-fed or hybrid booster, ground operations complications would be caused by gas generator propellant vessel loading and loading of NH3 into the fuel tank. GO - Significant ground operations integration problems.

Comments

Though this system seems to have the advantages of relative simplicity and small hardware size, i.e., 3', 3.8' and 3.7' bottles, it still relys on high molecular weight pressurant, 17+ & 32+, and hence must carry pressurant or residual weight of 82,000 lb per booster. This, coupled with its failure of safety, compatibility and test screens, caused its elimination from further study.

Candidate 12 - Direct Tank Injection

Must Criteria 1 & 7, Fail-Safe - Residual Hazards

Direct Tank Injection (rejected). The system as shown does not show how hazards such as fuel slosh, combustion instability, condensation in the oxidizer tank and localized tank interior heating could be adequately guarded against. Also it is doubtful what a "supplemental fuel with desirable combustion and pressurant properties" might be. An extensive body of knowledge which might demonstrate resolution of these hazards does not appear to exist. For this reason this system fails both the fail safe and residual hazard screens.

Must Criteria 2 - Verifiable by Test

The various fuel, oxidizer, and He bottles can be verified by test. The direct tank injection and combustion process cannot be verified by any test that would predict the inherent failure modes in this system. Absolute control of the combustion zone, necessary for successful operation, does not appear possible, hence verification by test cannot be attained. NO GO - Verification not possible.

Must Criteria 3 - LO2 & RP-1 Compatible

Anomalies such as combustion instability or slosh could cause incompatible combustion zones in both the LO2 or RP-1 tanks - NO GO.

Must Criteria 4 - 600 - 1350 psia

System can accommodate tank pressures from 600 - 1350 psia. GO

Must Criteria 5 - Engine Shut-down

System can accommodate engine shut-down and system throttling on demand. GO

Must Criteria 6 - Booster Integration

The system can be integrated into a pressure-fed or hybrid booster. Ground operations complexities are caused by loading requirements for the specified hypergolic fuel and oxidizer. GO - Some ground operations problems.

Comments

Control of combustion zone in the tanks is critical. This system would be easier to accomplish for the fuel tank than the LO2 tank, but is still not considered practical enough to pass the fail safe and residual hazard screens. The simplicity of this system is offset by relatively high molecular weight of resulting pressurants and hence high residual weight requirements.