7N #64168

JSC-19413
Revision O

Shuttle Flight Data and In-Flight Anomaly List

STS-1 through STS-36, STS-38, and STS-41

(NASA-TM-105470) SHUTTLE FLIGHT DATA AND IN-FLIGHT ANOMALY LIST (STS-1 THROUGH STS-36, STS-38, AND STS-41) (NASA) 338 p

N92-70460

Unclas
Z9/16 0064168

Revision O
February 1991

LIBRARY COPY
MAR 2 1 1991
LANGLEY RESEARCH CENTER
LIBRARY NASA
HAMPTON, VIRGINIA

NASA
National Aeronautics and
Space Administration

Lyndon B. Johnson Space Center
Houston, Texas

JSC 19413
Revision 0

SHUTTLE

FLIGHT DATA

AND

IN-FLIGHT ANOMALY LIST

(STS-1 through STS-36,
STS-38 and STS-41)

Prepared by:

Flight Evaluation Office
Orbiter and GFE Projects Office

Approved by:

David W. Camp
Manager, Flight Data and Evaluation Office

NATIONAL AERONAUTICS AND SPACE ADMINISTRATION
LYNDON B. JOHNSON SPACE CENTER
HOUSTON, TEXAS 77058

February 1991

TABLE OF CONTENTS

Section	Page
SHUTTLE FLIGHT DATA	1-1
LAUNCH AND LANDING DATES AND TIMES	1-2
CREW MEMBERS	1-6
ALPHABETICAL LISTING OF FLIGHT EXPERIENCED ASTRONAUTS	1-10
SUMMARY OF CARGO AND SATELLITE WEIGHTS	1-16
CARGO SUMMARY	1-19
ASCENT AND ORBIT INSERTION	1-57
ENTRY AERODYNAMICS	1-61
LANDING DECELERATION	1-64
CALCULATED BRAKE ENERGIES/PRESSURES AND BRAKE PART/SERIAL NUMBERS	1-67
LANDING AND FERRY	1-72
ORBITER MASS PROPERTIES	1-77
AUXILIARY POWER UNITS	1-81
APU SERIAL NUMBER/PART NUMBER MATRIX	1-84
FUEL CELLS	1-87
FUEL CELLS NUMBER/PART NUMBER USAGE MATRIX	1-91
ORBITER TIRES	1-94
ORBITAL MANEUVERING SYSTEM:	
MAXIMUM BURN DATA SUMMARY	1-98
PROPELLANT USAGE SUMMARY	1-103
REACTION CONTROL SYSTEM VERNIER THRUSTERS	1-106
OMS/RCS PODS AND FLIGHT ASSIGNMENTS	1-107
EXTRAVEHICULAR ACTIVITY SUMMARY	1-108
REMOTE MANIPULATOR SYSTEM	1-112
ORBITER THERMAL PROTECTION SYSTEM:	
ENTRY TEMPERATURES	1-116
MAXIMUM ENTRY TEMPERATURE RISE	1-120

PAGE ii INTENTIONALLY BLANK

PRECEDING PAGE BLANK NOT FILMED

TABLE OF CONTENTS (Continued)

Section	Page
DEBRIS IMPACT DAMAGE	1-123
SIGNIFICANT PROBLEMS	1-126
WINDOW DATA	1-130
ACTIVE THERMAL CONTROL SUBSYSTEM: ASCENT, ENTRY & POSTLANDING EVENTS AND PERFORMANCE DATA	1-134
FLASH EVAPORATOR SUBSYSTEM AND RADIATOR PERFORMANCE DATA	1-137
ATMOSPHERIC REVITALIZATION SUBSYSTEM	1-140
SUPPLY WATER AND WASTE MANAGEMENT SUBSYSTEMS	1-143
AFT FUSELAGE GAS SAMPLE ANALYSIS	1-146
KSC FACILITIES AND PROCESSING DATES	1-154
SOLID ROCKETS BOOSTERS	1-159
EXTERNAL TANK	1-164
MAIN ENGINE POSITION 1	1-168
MAIN ENGINE POSITION 2	1-175
MAIN ENGINE POSITION 3	1-182
MAIN ENGINE SERIAL NUMBER/MAIN PROPULSION SYSTEM ENGINE LOCATION	1-189
EVENTS ALTERING MISSION DURATION OR CAUSING SIGNIFICANT IMPACT TO SHUTTLE FLIGHT OPERATIONS	1-192
SPECIFICATIONS FOR AVIONICS INCLUDING DPS, GNC, AND COMMUNICATIONS AND TRACKING	1-203
COMPONENT - SERIAL NUMBER LOCATION MATRIX	1-205
DATA PROCESSING SUBSYSTEM	1-206
GUIDANCE, NAVIGATION, AND CONTROL (GNC) SUBSYSTEM	1-211
COMMUNICATIONS AND TRACKING SUBSYSTEM	1-221
DISPLAYS AND CONTROLS SUBSYSTEM	1-227
ELECTRICAL POWER DISTRIBUTION AND CONTROL (EPDC)	1-235

TABLE OF CONTENTS (Concluded)

Section	Page
MODULAR AUXILIARY DATA SUBSYSTEM	1-240
OPERATIONAL INSTRUMENTATION	1-242
ORBITER PROPULSION SYSTEMS	
RCS FORWARD THRUSTERS	1-244
LEFT-HAND POD RCS THRUSTERS	1-247
RIGHT-HAND POD RCS THRUSTERS	1-250
QUAD CHECK VALVE FLIGHT HISTROY	1-223
OMRSD FILE IX REQUIREMENTS HISTORY	1-225
DATA SOURCES	1-226
SHUTTLE INFLIGHT ANOMALY LIST	2-1
ORBITER SYSTEMS WORK UNIT CODE INDEX	2-2
INFLIGHT ANOMALY LIST	2-3
MSFC FLIGHT PROBLEMS	2-27
ORBITER ATTITUDE TIMELINES	3-1
INDEX	4-1

SHUTTLE FLIGHT DATA

This section of the report is a listing of Shuttle data gathered during the mission evaluation process and is presented chronologically.

Changes to the report for this revision include an update of all relevant sections to include STS-1 through STS-36, STS-38, and STS-41 data.

With the loss of the Orbiter OV-099, there are now three Orbiters in the National Space Transportation System (NSTS) operational fleet. The Orbiters are referred to in this document by their respective end item designation; e.g. OV-102, OV-103, or OV-104. These Orbiters have also been christened with names of historical vessels of exploration and these are included herein for reference:

OV-099	Challenger
OV-102	Columbia
OV-103	Discovery
OV-104	Atlantis

Significant contributions were made by organizations at JSC, KSC, MSFC, Lockheed Engineering and Sciences Company, and Rockwell International Corporation as noted in listing of data sources.

This report will be updated and published periodically, usually on a quarterly basis. Where refinements to previously published data are available, such data refinements will be included. Comments concerning accuracy, format, contents, deletions or additions are solicited and should be provided to D. W. Camp, JSC/VF, telephone FTS 525-3317.

SHUTTLE FLIGHT HISTORIES
LAUNCH AND LANDING DATES AND TIMES

Miss. Seq. No.	STS-No.	Orb. OV-Flt.	Launch Site	Launch Date*	Launch Time, G.m.t., day:hr:min:sec*	Landing Site*	Landing Date	Landing Time, G.m.t., MGTD, day:hr:min:sec	Flight Duration, lift-off to MGTD, day:hr:min:sec*	Orbital Data		
										Alt** nmi.	Incl., deg	Land. Rev.
1	1	102 1	KSC	4/10/81spd 4/12/81a	101:23:50:00s 102:12:00:03.9a	EAFB	4/14/81	104:18:20:36	2:06:20:32	145	40.3	37
2	2	102 2	KSC	10/09/81s 11/04/81rspd 11/12/81a	316:12:20:00s 316:15:00:00rspd 316:15:09:59.8a	EAFB	11/14/81	318:21:23:13	5:04:00s 2:06:13:13a	137	38.0	84s 37a
3	3	102 3	KSC	3/22/82a	081:15:00:00s 081:16:00:00a	EAFBs WSNMa	3/30/82	89:16:04:45	7:03:25s 8:00:04:45a	128	38.0	116s 130a
4	4	102 4	KSC	6/27/82a	178:15:00:00s	EAFB	7/04/82	185:16:09:40	7:01:09:40	172	28.45	113
5	5	102 5	KSC	11/11/82a	315:12:19:00a	EAFB	11/16/82	320:14:33:26	5:02:14:26	160	28.45	82
6	6	099 1	KSC	1/20/83spd 4/04/83a	094:18:30:00a	EAFB	4/09/83	99:18:53:42	5:00:23:42	155	28.45	81
7	7	099 2	KSC	6/09/83ss 6/18/83a	169:11:33:00a	KSCs EAFBa	6/24/83	175:13:56:59	5:23:20s 6:02:23:59a	170	28.45	96s 98a
8	8	099 3	KSC	8/04/83ss 8/20/83rspd 8/20/83a	242:06:15:00s 242:06:32:00a (darkness)	EAFB	9/06/83	248:07:40:43 (darkness)	6:01:08:43	166	28.45	98
9	9	102 6	KSC	9/30/83spd 11/28/83a	332:16:00:00a	EAFB	12/08/83	342:23:47:24	9:11:00 s 10:07:47:24a	135	57.0	146s 167a
10	41B (11)	099 4	KSC	1/29/84spd 2/03/84a	034:13:00:00a	KSC	2/11/84	042:12:15:55	7:23:15:55	176	28.45	128

*s = scheduled; rs = rescheduled; a = actual; pd = pad delay occurring after vehicle is on the launch pad; ss = launch date schedule slip resulted from ground processing delays caused by unplanned additional work.
** = Highest apogee on orbit Note: Numbers in parentheses in STS No. column refer to flight planning numbers.

SHUTTLE FLIGHT HISTORIES
LAUNCH AND LANDING DATES AND TIMES

Miss. Seq. No.	STS-No.	Orb. OV-Flt.	Launch Site	Launch Date*	Launch Time, G.m.t., day:hr:min:sec*	Landing Site*	Landing Date	Landing Time, G.m.t., MGTD, day:hr:min:sec	Flight Duration, lift-off to MGTD, day:hr:min:sec*	Orbital Data Alt** nmi.	Orbital Data Incl., deg	Orbital Data Land. Rev.
11	41C (13)	099 5	KSC	4/04/84spd 4/06/84a	097:13:58:00a	KSCs EAFBa	4/13/84	104:13:38:07	6:00:00s 6:23:40:07a	272	28.45	92s 108a
12	41D (14)	103 1	KSC	6/25/84spd 6/26/84rspd 8/29/84rspd 8/30/84a	243:12:35:00s 243:12:41:50a	EAFB	9/05/84	249:13:37:54	6:00:56:04	179	28.45	97
13	41G (17)	099 6	KSC	10/1/84ss 10/5/84a	279:11:03:00	KSC	10/13/84	287:16:26:33	8:05:23:33	190	57.0	133
14	51A (19)	103 2	KSC	11/7/84spd 11/8/84a	313:12:15:00	KSC	11/16/84	321:11:59:56	7:23:44:56	195	28.45	127
15	51C (20)	103 3	KSC	1/23/85spd 1/24/85a	024:19:50:00	KSC	1/27/85	027:21:23:23	3:01:33:23a	N/A	28.45	49
16	51D (23)	103 4	KSC	4/12/85	102:13:04:00s 102:13:59:05a	KSC	4/19/85	109:13:54:28	5:00:11:00s 6:23:55:23a	251	28.45	79s 110a
17	51B (24)	099 7	KSC	4/29/85	119:16:00:00s 119:16:02:18a	EAFB	5/6/85	126:16:11:04	6:20:58:00s 7:00:08:46a	193	57.0	109s 111a
18	51G (25)	103 5	KSC	6/17/85	168:11:33:00a	EAFB	6/24/85	175:13:11:52	7:01:38:52	209	28.45	112
19	51F (26)	099 8	KSC	7/12/85spd 7/29/85a	210:19:23:00s 210:21:00:00a	EAFB	8/06/85	218:19:45:26	7:22:45:26	173	49.5	110s 127a
20	51I (27)	103 6	KSC	8/24/85spd 8/25/85rspd 8/27/85a	239:10:55:00s 239:10:58:01a	EAFB	9/03/85	246:13:15:43	7:02:17:42	242	28.45	127s 112a

*s = scheduled; rs = rescheduled; a = actual; pd = pad delay occurring after vehicle is on the launch pad; ss = launch date schedule slip resulted from ground processing delays caused by unplanned additional work.
** = Highest apogee on orbit Note: Numbers in parentheses in STS No. column refer to flight planning numbers.
N/A = Not Available

SHUTTLE FLIGHT HISTORIES
LAUNCH AND LANDING DATES AND TIMES

Miss. Seq. No.	STS-No.	Orb. OV-Flt.	Launch Site	Launch Date*	Launch Time, G.m.t., day:hr:min:sec*	Landing Site*	Landing Date	Landing Time, G.m.t., MGTD, day:hr:min:sec	Flight Duration, lift-off to MGTD, day:hr:min:sec*	Orbital Data		
										Alt** nmi.	Incl., deg	Land. Rev.
21	51J (28)	104 1	KSC	10/3/85	276:15:15:30	EAFB	10/7/85	280:17:00:08	4:01:44:38	278	28.5	64
22	61A (30)	099 9	KSC	10/30/85	303:17:00:00	EAFB	11/6/85	310:17:44:51	7:00:44:51	180	57.0	112
23	61B (31)	104 2	KSC	11/26/85	331:00:29:00 (Darkness)	EAFB	12/3/85	337:21:33:49	6:21:04:49	209	28.45	109
24	61C (32)	102 7	KSC	12/18/85spd 12/19/85spd 1/6/86spd 1/7/86spd 1/9/86spd 1/10/86spd 1/12/86a	012:11:55:00	KSCs EAFBa	1/17/86s 1/18/86a	018:13:58:51 (predawn)	6:02:03:51	185	28.45	98
25	51L (33)	099 10	KSC	1/23/86spd 1/24/86spd 1/25/86spd 1/27/86spd 1/28/86spd 1/28/86a	028:14:38:00s 028:16:38:00a	N/A	N/A	N/A	N/A	N/A	N/A	N/A
26	26	103 7	KSC	9/29/88a	273:15:13:59s 273:15:37:00a	EAFB	10/3/88	277:16:37:11	4:01:00:11	178	28.5	64
27	27	104 3	KSC	12/1/88rspd 12/2/88a	336: (classified)s 337:14:30:34a	EAFB	12/6/88	341:23:36:09	4:09:05:35	N/A DOD	57.0	N/A DOD
28	29	103 8	KSC	3/13/89a	072:13:11:00s 072:14:57:00a	EAFB	3/18/89	077:14:35:51	4:23:38:52	163	28.45	80
29	30	104 4	KSC	4/28/89rspd 5/04/89a	118:18:24:00s 124:18:46:59a	EAFB	5/8/89	128:19:43:27	4:00:56:28	161	28.85	65

s = scheduled; rs = rescheduled; a = actual; pd = pad delay occurring after vehicle is on the launch pad.
** = Highest apogee on orbit Note: Numbers in parentheses in STS No. column refer to flight planning numbers.
N/A = Not Available

SHUTTLE FLIGHT HISTORIES
LAUNCH AND LANDING DATES AND TIMES

Miss. Seq. No.	STS-No.	Orb. OV-Flt.	Launch Site	Launch Date*	Launch Time, G.m.t., day:hr:min:sec*	Landing Site*	Landing Date	Landing Time, G.m.t., MGTD, day:hr:min:sec	Flight Duration, lift-off to MGTD, day:hr:min:sec*	Orbital Data		
										Alt** nmi.	Incl., deg	Land. Rev.
30	28	102 8	KSC	8/8/89a	220(Classified)s 220:12:37:00a	EAFB	8/13/89	225:13:37:09	5:01:00:09	N/A DOD	57.00	N/A DOD
31	34	104 5	KSC	10/18/89a	291:16:53:40a	EAFB	10/23/89	296:16:33:04	4:23:39:24	177	34.30	80
32	33	103 9	KSC	11/22/89a	327(Classified)s 327:00:23:30a	EAFB	11/27/89	332:00:30:19	5:00:06:49	N/A DOD	28.45	N/A DOD
33	32	102 9	KSC	12/18/89pd 1/8/90pd 1/9/90a	009:12:35:00a	EAFB	1/20/90	020:09:35:37	10:21:00:37	178	28.50	172
34	36	104 6	KSC	2/22/90pd 2/28/90a	059:07:50:22a	EAFB	3/4/90	063:18:08:45	4:10:18:23	N/A DOD	62.00	N/A DOD
35	31	103 10	KSC	4/10/90pd 4/24/90a	114:12:33:00s 114:12:33:51a	EAFB	4/29/90	119:13:49:56	5:01:16:05	330	28.45	80
36	41	103 11	KSC	10/7/90[a]	279:11:35:00[s] 279:11:45:43[pd] 279:11:45:53[pd] 279:11:47:15[a]	EAFB	10/10/90	283:13:57:18	4:02:10:03	160	28.45	66
37	38	104 7	KSC	11/15/90[a]	320(classified)[s] 320:23:48:15.006[a]	EAFB	11/20/90	324:21:42:42	4:21:54:27	N/A DOD	28.5	N/A DOD
38	35	102 10	KSC	12/2/90[a]	336:06:28:00[s] 336:06:49:00.02[a]	EAFB	12/11/90	345:05:54:08	8:23:05:07	190	28.45	144

s = scheduled; rs = rescheduled; a = actual; pd = pad delay occurring after vehicle is on the launch pad.
** = Highest apogee on orbit
N/A = Not Available

SHUTTLE FLIGHT HISTORIES
CREW MEMBERS

Miss Seq No.	STS-No.	Orb OV-	Commander, No. Flts.	Pilot, No. Flts.	Mission Specialist, No. Flts.	Mission Specialist, No. Flts.	Mission Specialist, No. Flts.	Payload Specialist, No. Flts.	Payload Specialist, No. Flts.	Operational Crew-Person Hours, h:m:s, Mission/Cumulative
1	1	102	John W. Young USN Ret. 1	Robert L. Crippen USN Capt. 1						108:41:04* 108:41:04*
2	2	102	Joe Henry Engle USAF Col. 1	Richard H. Truly USN Capt. 1						108:26:26* 217:07:30*
3	3	102	Jack R. Lousma USMC Col. 1	C. Gordon Fullerton USAF Col. 1						384:09:30* 610:17:00*
4	4	102	Thomas K. Mattingly USN Capt. 1	Henry W. Hartsfield, Jr. USAF Ret. 1						338:19:20* 939:36:20*
5	5	102	Vance D. Brand Civ. 1	Robert F. Overmyer USMC Col. 1	William B. Lenoir Civ. PhD 1	Joseph P. Allen Civ. PhD 1				488:57:44 1,428:34:04
6	6	099	Paul J. Weitz USN Ret. 1	Karol J. Bobko USAF Col. 1	F. Story Musgrave Civ. MD 1	Donald H. Peterson USAF Ret. 1				481:34:48 1,910:08:52
7	7	099	Robert L. Crippen USN Capt. 2	Frederick H. Hauck USN Capt. 1	John M. Fabian USAF Col. 1	Sally K. Ride Civ. MD 1	Norman E. Thagard Civ. MD 1			731:59:55 2,642:08:47
8	8	099	Richard H. Truly USN Capt. 2	Daniel C. Brandenstein USN Cdr. 1	Guion S. Bluford, USAF Lt.Col 1	Dale A. Gardner USN Lt. Cdr 1	William E. Thornton Civ. MD 1			725:43:35 3,367:52:22
9	9	102	John W. Young USN Ret. 2	Brewster H. Shaw, Jr. USAF, Major 1	Owen K. Garriott Civ. PhD 1	Robert A. Parker Civ. PhD 1		Byron K. Lichtenberg Civ. PhD 1	Ulf Merbold Civ. MD 1	1,486:44:24 4,854:36:46
10	41B	099	Vance D. Brand Civ. 2	Robert L. Gibson USN Lt.Cdr 1	Bruce McCandless USN Capt 1	Ronald E. McNair Civ. 1	Robert L. Stewart USA Lt. Col 1			956:19:35 5,810:56:21
11	41C	099	Robert L. Crippen USN Capt. 3	Francis R. (Dick) Scobee USAF Ret. 1	Terry J. Hart Civ. 1	James D. Van Hoften Civ. PhD 1	George D. Nelson Civ. PhD 1			838:20:35 6,649:16:56

Note:
*DDT & E Program

Source: STS Mission Reports published by JSC/VF

SHTTLE FLIGHT HISTORIES
CREW MEMBERS

Miss Seq No.	STS-No.	Orb OV-	Commander, No. Flts.	Pilot, No. Flts.	Mission Specialist, No. Flts.	Mission Specialist, No. Flts.	Mission Specialist, No. Flts.	Payload Specialist, No. Flts.	Payload Specialist, No. Flts.	Operational Crew-Person Hours, h:m:s, Mission/Cumulative
12	41D	103	Henry W. Hartsfield, Jr. USAF Ret. 2	Michael L. Coats USN Cdr. 1	Judith A. Resnik Civ. PhD 1	Steven A. Hawley Civ. PhD 1	Richard M. Mullane USAF Lt.Col 1	Charles Walker Civ. 1		869:36:24 7,518:53:20
13	41G	099	Robert L. Crippen USN Capt. 4	Jon A. McBride USN Cdr. 1	Kathryn D. Sullivan Civ. PhD 1	Sally K. Ride Civ. PhD 2	David C. Leestma USN Lt.Cdr. 1	Marc Garneau Canada Civ. PhD 1	Paul D. Scully-Power Civ. 1	1,381:44:51 8,900:38:11
14	51A	103	Frederick H. Hauck USN Capt. 2	David M. Walker USN Cdr. 1	Joseph P. Allen Civ. PhD 2	Anna L. Fisher Civ. MD 1	Dale A. Gardner USN Cdr. 2			958:44:40 9,859:22:51
15	51C	103	Thomas K. Mattingly USN Capt. 2	Loren J. Shiver USAF Lt. Col 1	Ellison S. Onizuka USAF Maj. 1	James F. Buchli USMC Lt.Col 1		Gary E. Payton USAF Maj. 1		367:46:55 10,227:09:46
16	51D	103	Karol J. Bobko USAF Col. 2	Donald E. Williams USN Cdr. 1	M. Rhea Seddon Civ. MD 1	Jeffery A. Hoffman Civ. PhD 1	S. David Griggs Civ. 1	Charles D. Walker Civ. 2	E. J. "Jake" Garn U.S. Senator 1	1,175:27:41 11,402:37:27
17	51B	099	Robert F. Overmyer USMC Col. 2	Frederick D. Gregory USAF Col. 1	Don Leslie Lind Civ. PhD 1	Norman E. Thagard Civ. MD 2	William E. Thornton Civ. MD 2	Taylor G. Wang Civ. PhD 1	Lodewijk van den Berg Civ. PhD 1	1,177:01:22 12,579:38:49
18	51G	103	Daniel C. Brandenstein USN Capt. 2	John O. Creighton USN Cdr. 1	Shannon W. Lucid Civ. PhD 1	John M. Fabian USAF Col. 2	Steven R. Nagel USAF Lt. Col. 1	Patrick Baudry France Lt. Col. FAF 1	Sultan Salman Al-Saud Saudi Arabia Civ. 1	1,187:32:04 13,767:10:53
19	51F	099	C. Gordon Fullerton USAF Col. 2	Roy D. Bridges, Jr. USAF Col. 1	F. Story Musgrave Civ. MD 2	Anthony W. England Civ. PhD 1	Karl G. Henize Civ. PhD 1	Loren W. Acton Civ. PhD 1	John-David F. Bartoe Civ. PhD 1	1,335:18:02 15,102:28:55
20	51I	103	Joe Henry Engle USAF Col. 2	Richard O. Covey USAF Lt. Col 1	James D. A. van Hoften Civ. PhD 2	John M. Lounge Civ. 1	William F. Fisher Civ. MD 1			851:28:30 15,953:57:25

Source: STS Mission Reports published by JSC/VF

SHUTTLE FLIGHT HISTORIES
CREW MEMBERS

Miss Seq No.	STS-No.	Orb OV-	Commander, No. Flts.	Pilot, No. Flts.	Mission Specialist, No. Flts.	Mission Specialist, No. Flts.	Mission Specialist, No. Flts.	Payload Specialist, No. Flts.	Payload Specialist, No. Flts.	Payload Specialist, No. Flts.	Operational Crew-Person Hours, h:m:s, Mission/Cumulative
21	51J	104	Karol J. Bobko USAF Col. 3	Ronald J. Grabe USAF Lt. Col 1	David C. Hilmers USMC Maj. 1	Robert L. Stewart USA Col. 2		William A. Pailes USAF Maj. 1			488:53:10 16,442:40:35
22	61A	099	Henry W. Hartsfield, Jr. USAF Ret. 3	Steven R. Nagel USAF Lt. Col 3	James F. Buchli USMC Col. 2	Guion S. Bluford, Jr. USAF Col. 2	Bonnie J. Dunbar Civ. PhD 1	Reinhard Furrer Civ. PhD Germany 1	Ernest Messerschmid Civ. PhD Netherlands 1	Wubbo J. Ockels Civ. PhD Netherlands 1	1,349:58:48 17,792:39:23
23	61B	104	Brewster H. Shaw, Jr. USAF Lt. Col. 2	Bryan O. O'Connor USMC Col. 1	Mary L. Cleave Civ. PhD 1	Sherwood C. Spring USA Lt. Col 1	Jerry L. Ross USAF Maj. 1	Rodolfo Neri Vela Mexico Civ. PhD 1	Charles D. Walker Civ. 3		1,155:33:43 18,948:13:06
24	61C	102	Robert L. Gibson USN Cdr. 2	Charles F. Bolden, Jr. USMC Lt.Col. 1	Franklin R. Chang-Diaz Civ. PhD 1	Steven A. Hawley Civ. PhD 2	George D. Nelson Civ. PhD 2	Robert J. Cenker Civ. 1	Bill Nelson US Congress 1		1,022:26:57 19,970:40:03
25	51L	099	Francis R. (Dick) Scobee USAF Ret. 2	Michael J. Smith USN Cdr. 1	Ellison S. Onizuka USAF Lt.Col 2	Ronald E. McNair Civ. PhD 2	Judith A. Resnik Civ. PhD 2	Gregory B. Jarvis Civ. 1	Sharon Christa McAuliffe Civ. 1		N/A 19,970:40:03
26	26	103	Frederick H. Hauck USN Capt. 3	Richard O. Covey USAF Col. 2	David C. Hilmers USMC Lt.Col 2	John M. Lounge Civ. 2	George D. Nelson Civ. PhD 3				485:00:55 20,455:40:58
27	27	104	Robert L. Gibson USN Cdr. 3	Guy S. Gardner USAF Lt. Col 1	Richard M. Mullane USAF Maj. 2	Jerry L. Ross USAF Maj. 2	William M. Shepherd USN Cdr. 1				525:28:05 20,981:09:03
28	29	103	Michael L. Coats USN Capt. 2	John E. Blaha USAF Col. 1	James F. Buchli USMC Col. 3	Robert C. Springer USMC Col. 1	James P. Bagian Civ. MD 1				598:14:20 21,579:23:23
29	30	104	David M. Walker USN Capt. 2	Ronald J. Grabe USAF Col. 2	Norman E. Thagard Civ. MD 3	Mary L. Cleave Civ. PhD 2	Mark C. Lee USAF Maj. 1				484:47:35 22,064:10:58

N/A = Not Applicable

Source: STS Mission Reports published by JSC/VF

SHUTTLE FLIGHT HISTORIES
CREW MEMBERS

Miss Seq No.	STS-No.	Orb OV-	Commander, No. Flts.	Pilot, No. Flts.	Mission Specialist, No. Flts.	Mission Specialist, No. Flts.	Mission Specialist, No. Flts.	Payload Specialist, No. Flts.	Payload Specialist, No. Flts.	Payload Specialist, No. Flts.	Operational Crew-Person Hours, h:m:s, Mission/Cumulative
30	28	102	Brewster H. Shaw USAF Col. 3	Richard N. Richards USN Cdr. 1	James C. Adamson USA Lt.Col. 1	David C. Leestma USN Cdr. 2	Mark N. Brown USAF Lt.Col 1				605:00:45 22,669:11:43
31	34	104	Donald E. Williams USN Capt. 2	Michael J. McCulley USN Cdr. 1	Shannon W. Lucid Civ. PhD. 2	Franklin R. Chang-Diaz Civ. PhD. 2	Ellen S. Baker Civ. 1				598:17:00 23,267:28:43
32	33	103	Frederick Gregory USAF Col. 2	John E. Blaha USAF Col. 2	Manley L. Carter USN Cdr. 1	Story Musgrave Civ. MD,PhD 3	Kathryn Thornton Civ. PhD. 1				600:34:05 23,868:02:48
33	32	102	Daniel C. Brandenstein USN Capt. 3	James D. Wetherbee USN Cdr. 1	Bonnie J. Dunbar Civ. PhD. 2	Marsha S. Ivins Civ. 1	G. David Low Civ. 1				1305:03:05 25,173:05:53
34	36	104	John D. Creighton USN Capt. 2	John H. Casper USAF Col. 1	David C. Hilmers USMC Lt.Col 3	Richard M. Mullane USAF Col. 3	Pierre J. Thuot USN Lt.Cdr. 1				531:31:55 25,704:37:48
35	31	103	Loren J. Shriver USAF Col. 2	Charles F. Bolden USMC Col. 2	Bruce McCandless USN Capt. 2	Steven A. Hawley Civ. 3	Kathryn D. Sullivan Civ. 2				606:20:25 26,310:58:13
36	41	103	Richard N. Richards USN Capt. 2	Robert D. Cabana USMC Lt.Col. 1	William M. Shepherd USN Capt. 2	Bruce E. Melnick USCG Cmdr. 1	Thomas D. Akers USAF Major 1				530:50:15 26,841:48:28
37	38	104	Richard O. Covey USN Capt. 3	Frank L. Culbertson USN Capt. 1	Charles D. Gemar USA Capt. 1	Robert C. Springer USMC Col. 2	Carl J. Meade USAF Major 1				539:32:15 27,381:20:43
38	35	102	Vance D. Brand Civ. 3	Guy S. Gardner USAF Col. 2	Jeffrey A. Hoffman Civ. PhD. 2	John M. Lounge Civ. 3	Robert A. Parker Civ. 2	Samuel T. Durrance Civ. PhD. 1	Ronald A. Parise Civ. PhD. 1		1505:35:49 28,886:56:32

Source: STS Mission Reports published by JSC/VF

ALPHABETICAL LISTING OF FLIGHT EXPERIENCED ASTRONAUTS

Name	Service	1st Flight/ Position		2nd Flight/ Position		3rd Flight/ Position		4th Flight/ Position		Total Flight Time h:m:s
1. Acton, Loren W., PhD	Civ.	51-F	PS							190:45:26
2. Adamson, James C. Lt. Col.	USA	28	MS							121:00:09
3. Akers, Thomas D.	USAF	38	MS							98:10:03
4. Allen, Joseph P., PhD	Civ.	5	MS	51-A	MS					313:59:22
5. Al-Saud, Salman	Civ.	51-G	PS							169:38:52
6. Bagian, James P., MD	Civ.	29	MS							119:38:52
7. Baker, Ellen S., MD	Civ.	34	MS							119:39:24
8. Bartoe, John-David F., PhD	Civ.	51-F	PS							190:45:26
9. Baudry, Patrick, Lt. Col.	FAF	51-G	PS							169:38:52
10. Blaha, John E., Col.	USAF	29	Plt.	33	Plt.					239:45:41
11. Bluford, Guion S., Col.	USAF	8	MS	61-A	MS					313:53:34
12. Bobko, Karol J., Col.	USAF	6	Plt.	51-D	Cdr.	51-J	Cdr.			386:03:43
13. Bolden, Charles F., Col.	USMC	61-C	Plt.	31	Plt.					267:19:56
14. Brand, Vance D.	Civ.	5	Cdr.	41-B	Cdr.	35	Cdr.			528:35:28
15. Brandenstein, Daniel C., Capt.	USN	8	Plt.	51-G	Cdr.	32	Cdr.			575:48:12
16. Bridges, Roy D., Col.	USAF	51-F	Plt.							190:45:26
17. Brown, Mark F., Lt. Col.	USAF	28	MS							121:00:09
18. Buchli, James F., Col.	USMC	51-C	MS	61-A	MS	29	MS			361:57:06
19. Cabana, Robert D. Lt. Col.	USMC	41	Plt.							98:10:03
20. Casper, John H., Col.	USAF	36	Plt.							106:18:23
21. Carter, Manley, Cdr.	USN	33	MS							120:06:49
22. Cenker, Robert J.	Civ.	61-C	PS							146:03:51
23. Chang-Diaz, Franklin R., PhD	Civ.	61-C	MS	34	MS					265:43:15

Source: STS Mission Reports published by VF.

ALPHABETICAL LISTING OF FLIGHT EXPERIENCED ASTRONAUTS

Name	Service	1st Flight/ Position		2nd Flight/ Position		3rd Flight/ Position		4th Flight/ Position		Total Flight Time h:m:s
24. Cleave, Mary L., PhD	Civ.	61-B	MS	30	MS					262:02:20
25. Coats, Michael L., Capt.	USN	41-D	Plt.	29	Cdr.					264:34:56
26. Covey, Richard O., Col.	USAF	51-I	Plt.	26	Plt.	38	Cdr.			375:12:24
27. Creighton, John O., Capt.	USN	51-G	Plt.	36	Cdr.					275:57:15
28. Crippen, Robert L., Capt.	USN	1	Plt.	7	Cdr.	41-C	Cdr.	41-G	Cdr.	565:48:11
29. Culbertson, Frank L. Capt.	USN	38	Plt.							107:54:51
30. Dunbar, Bonnie J., PhD	Civ.	61-A	MS	32	MS					429:45:28
31. Durrance, Samuel T., PhD	Civ.	35	PS							215:05:07
32. England, Anthony W., PhD	Civ.	51-F	MS							190:45:26
33. Engle, Joe H., Col.	USAF	2	Cdr.	51-I	Cdr.					244:30:55
34. Fabian, John M., Col.	USAF	7	MS	51-G	MS					316:02:51
35. Fisher, Anna L., MD	Civ.	51-A	MS							191:44:56
36. Fisher, William F., MD	Civ.	51-I	MS							170:17:42
37. Fullerton, C. Gordon, Col.	USAF	3	Flt.	51-F	Cdr.					382:50:11
38. Furrer, Reinhard, PhD	Civ.	61-A	PS							168:44:51
39. Gardner, Dale A., Capt.	USN	8	MS	51-A	MS					336:53:39
40. Gardner, Guy S., Col.	USAF	27	Plt.	38	Plt.					320:10:44
41. Garn, E. J. "Jake"	Civ.	51-D	PS							167:55:23
42. Garneau, Marc, PhD	Civ.	41-G	PS							197:23:33
43. Garriott, Owen K., PhD	Civ.	9	MS							247:47:24
44. Gemar, Charles D. Capt.	USA	38	MS							107:54:31
45. Gibson, Robert L., Capt.	USN	41-B	Plt.	61-C	Cdr.	27	Cdr.			442:25:23
46. Grabe, Ronald J., Col.	USAF	51-J	Plt.	30	Plt.					194:42:09

Source: STS Mission Reports published by VF

ALPHABETICAL LISTING OF FLIGHT EXPERIENCED ASTRONAUTS

Name	Service	1st Flight/ Position		2nd Flight/ Position		3rd Flight/ Position		4th Flight/ Position		Total Flight Time h:m:s
47. Gregory, Frederick D., Col.	USAF	51-B	Plt.	33	Cdr.					288:13:35
48. Griggs, S. David	Civ.	51-D	MS							167:55:23
49. Hart, Terry J.	Civ.	41-C	MS							167:40:07
50. Hartsfield, Henry W.	USAF Ret	4	Plt.	41-D	Cdr.	61-A	Cdr.			482:50:35
51. Hauck, Frederick H., Capt.	USN	7	Plt.	51-A	Cdr.	26	Cdr.			435:09:06
52. Hawley, Steven A., PhD	Civ.	41-D	MS	61-C	MS	31	MS			412:16:00
53. Henize, Karl G., PhD	Civ.	51-F	MS							190:45:26
54. Hilmers, David C., Lt. Col.	USMC	51-J	MS	26	MS	36	MS			301:03:11
55. Hoffman, Jeffery A., PhD	Civ.	51-D	MS	35	MS					383:00:30
56. Ivins, Marsha S.	Civ.	32	MS							261:00:37
57. Jarvis, Gregory B.	Civ.	51-L	PS							N/A
58. Lee, Mark C. Major	USAF	30	MS							96:57:31
59. Leestma, David C., Cdr.	USN	41-G	MS	28	MS					318:23:42
60. Lenoir, William B., PhD	Civ.	5	MS							122:14:26
61. Lichtenberg, Bryon K., PhD	Civ.	9	PS							247:47:24
62. Lind, Don Leslie, PhD	Civ.	51-B	MS							168:08:46
63. Lounge, John M.	Civ.	51-I	MS	26	MS	35	MS			482:23:00
64. Lousma, Jack R., Col.	USMC	3	Cdr.							192:04:45
65. Low, G. David	Civ.	32	MS							261:00:37
66. Lucid, Shannon W., PhD	Civ.	51-G	MS	34	MS					289:18:16
67. Mattingly, Thomas K., Capt.	USN	4	Cdr.	51-C	Cdr.					242:43:03
68. McAuliffe, S. Christa	Civ.	51-L	PS							N/A
69. McBride, Jon A., Cdr.	USN	41-G	Plt.							197:23:33

Source: STS Mission Reports published by VF.

ALPHABETICAL LISTING OF FLIGHT EXPERIENCED ASTRONAUTS

Name	Service	1st Flight/ Position		2nd Flight/ Position		3rd Flight/ Position		4th Flight/ Position		Total Flight Time h:m:s
70. McCandless, Bruce, Capt.	USN	41-B	MS	31	MS					312:32:00
71. McCulley, Michael, Cdr.	USN	34	Plt.							119:39:24
72. McNair, Ronald E., PhD	Civ.	41-B	MS	51-L	MS					191:15:55
73. Meade, Carl J., Lt. Col.	USAF	38	MS							107:54:31
74. Melnick, Bruce E., Cmdr	USCG	41	MS							98:10:03
75. Merbold, Ulf, PhD	Civ.	9	PS							247:47:24
76. Messerschmid, Ernest, PhD	Civ.	61-A	PS							168:44:51
77. Mullane, Richard M., Col.	USAF	41-D	MS	27	MS	36	MS			356:20:04
78. Musgrave, F. Story, MD, PhD.	Civ.	6	MS	51-F	MS	33	MS			431:15:57
79. Nagel, Steven R., Col.	USAF	51-G	MS	61-A	Plt.					338:23:43
80. Nelson, Bill	Civ.	61-C	PS							146:03:51
81. Nelson, George D., PhD	Civ.	41-C	MS	61-C	MS	26	MS			410:44:09
82. Neri Vela, Rodolpho, PhD	Civ.	61-B	PS							165:04:49
83. O'Connor, Bryan O., Col.	USMC	61-B	Plt.							165:04:49
84. Ockels, Wubbo J., PhD	Civ.	61-A	PS							168:44:51
85. Onizuka, Ellison S., Lt. Col.	USAF	51-C	MS	51-L	MS					73:33:23
86. Overmyer, Robert F., Col.	USMC	5	Plt.	51-B	Cdr.					290:23:12
87. Pailes, William A., Maj.	USAF	51-J	PS							97:44:38
88. Parise, Ronald A., PhD	Civ.	35	MS							215:05:07
89. Parker, Robert A., PhD	Civ.	9	MS	35	MS					462:52:31
90. Payton, Gary E., Maj.	USAF	51-C	PS							73:33:23
91. Peterson, Donald H.	USAF Ret	6	MS							120:23:42
92. Resnik, Judith A., PhD	Civ.	41-D	MS	51-L	MS					144:56:04

Source: STS Mission Reports published by VF.

ALPHABETICAL LISTING OF FLIGHT EXPERIENCED ASTRONAUTS

Name	Service	1st Flight/ Position		2nd Flight/ Position		3rd Flight/ Position		4th Flight/ Position		Total Flight Time h:m:s
93. Richards, Richard N., Capt.	USN	28	Plt.	41	Cdr.					219:10:12
94. Ride, Sally K., PhD	Civ.	7	MS	41-G	MS					343:47:32
95. Ross, Jerry L., Lt. Col.	USAF	61-B	MS	27	MS					270:10:26
96. Scobee, Francis R. (Dick)	USAF Ret	41-C	Plt.	51-L	Cdr.					167:40:07
97. Scully-Power, Paul D.	Civ.	41-G	PS							197:23:33
98. Seddon, M. Rhea, MD	Civ.	51-D	MS							167:55:23
99. Shaw, Brewster H., Col.	USAF	9	Plt.	61-B	Cdr.	28	Cdr.			533:52:22
100. Shepherd, William M., Capt.	USN	27	MS	38	MS					203:15:40
101. Shriver, Loren J., Col.	USAF	51-C	Plt.	31	Cdr.					194:49:28
102. Smith, Michael J., Cdr.	USN	51-L	Plt.							N/A
103. Spring, Sherwood C., Lt. Col.	USA	61-B	MS							165:04:49
104. Springer, Robert C., Col.	USMC	29	MS	38	MS					227:33:23
104. Stewart, Robert L., Col.	USA	41-B	MS	51-J	MS					289:00:33
105. Sullivan, Kathryn D., PhD	Civ.	41-G	MS	31	MS					318:39:38
106. Thagard, Norman E., MD	Civ.	7	MS	51-B	MS	30	MS			411:30:16
107. Thornton, Kathryn	Civ.	33	MS							120:06:49
108. Thornton, William E., MD	Civ.	8	MS	51-B	MS					313:17:29
109. Thuot, Pierre J., Lt. Cdr.	USN	36	MS							106:18:23
110. Truly, Richard H., RADM.	USN Ret.	2	Plt.	8	Cdr.					199:21:56
111. van den Berg, Lodewijk, PhD	Civ.	51-B	PS							168:08:46
112. van Hoften, James D., PhD	Civ.	41-C	MS	51-I	MS					377:57:49
113. Walker, Charles D.	Civ.	41-D	PS	51-D	PS	61-B	PS			477:56:16
114. Walker, David M., Capt.	USN	51-A	Plt.	30	Cdr.					288:42:27
115. Wang, Taylor G., PhD	Civ.	51-B	PS							168:08:46

Source: STS Mission Reports published by VF.

ALPHABETICAL LISTING OF FLIGHT EXPERIENCED ASTRONAUTS

Name	Service	1st Flight/ Position		2nd Flight/ Position		3rd Flight/ Position	4th Flight/ Position	Total Flight Time h:m:s
116. Weitz, Paul J.	USN Ret.	6	Cdr.					120:23:42
117. Wetherbee, James, Cdr.	USN	32	Plt.					261:00:37
118. Williams, Donald E., Capt.	USN	51-D	Plt.	34	Cdr.			287:34:47
119. Young, John W.	USN Ret.	1	Cdr.	9	Cdr.			302:07:56

Source: STS Mission Reports published by VF.

SUMMARY OF CARGO AND SATELLITE WEIGHTS

Miss. Seq. No.	STS-No.	Orb. OV-	Cargo Weight at Liftoff, lb	Deployed to Space/ Weight, lb	Design Flt Inst/ Weight, lb	Retrieved Satellite Weight, lb	Retrieved/ Re-deployed Satellite, lb	RMS Deployed/ Retrieved Satellite		Self Deployed Satellite		Retrieved Satellite		Remarks
								Satellite	Weight, lb	Satellite	Weight, lb	Satellite	Weight, lb	
1	1	102	10,823	0	9,290	0	0							
2	2	102	18,778	0	11,084	0	0							
3	3	102	22,710	0	11,048	0	0	PDP (d&r)	344					
4	4	102	24,492	0	9,900	0	0	IECM (d&r)	816					
5	5	102	32,080	14,585	0	0	0			SBS-C	7,211			
6	6	099	46,971	37,546	0	0	0			ANIK-C TDRS-A	7,374 37,546			
7	7	099	37,124	14,949	0	0	0	SPAS (d&r)	3,173	ANIK-C	7,374			
8	8	099	30,076	7,445	0	0	0			PALAPA B-1 INSAT	7,575 7,445			
9	9	102	33,264	0	0	0	0							Spacelab Mission
10	41B	099	33,868	14,863	0	0	0			WESTAR VI PALAPA B-2 IRT	7,307 7,556 210			IRT failed to inflate. WESTAR VI and PALAPA B-2 failed to achieve orbit.
11	41C	099	38,266	21,396	0	0	5,000	LDEF (d)	21,396			SMM (r&d)	5,000	SMM launched 2-14-80 on ELV, failed to function 10 months later.
12	41D	103	47,516	30,080	0	0	0			SBS SYNCOM IV-2	7,383 15,190			SYNCOM IV-2 failed to activate after deployment.
13	41G	099	23,465	4,949	0	0		ERBS (d)	4,949	TELSTAR	7,507			

Legend: d = deployed
r = retrieved

SUMMARY OF CARGO AND SATELLITE WEIGHTS

Miss. Seq. No.	STS-No.	Orb. OV-	Cargo Weight at Liftoff, lb	Deployed to Space/ Weight, lb	Design Flt Inst/ Weight, lb	Retrieved Satellite Weight, lb	Retrieved/ Re-deployed Satellite, lb	RMS Deployed/ Retrieved Satellite		Self Deployed Satellite		Retrieved Satellite		Remarks
								Satellite	Weight, lb	Satellite	Weight, lb	Satellite	Weight, lb	
14	51A	103	45,306	22,764	0	2,311	0			ANIK D-2	7,574	WESTAR VI	1,089	WESTAR and PALAPA B-2 launched on STS 41-B.
										SYNCOM IV-1	15,190	PALAPA B-2	1,222	
15	51C	103		Department of Defense Mission - Data Not Available										
16	51D	103	35,824	22,576	0	0	0			SYNCOM IV-3	15,190			
										ANIK C-1	7,386			
17	51B	099	31,407	105	0	0	0			GAS, NUSAT	105			Spacelab Mission
18	51G	103	44,477	22,832	0	0	0	SPARTAN-1 (d&r)	2,217	TELSTAR 3-D	7,546			
										ARABSAT-A	7,695			
										MORELOS-A	7,591			
19	51F	099	34,400	0	0	0	0	PDP (d&r)	628					Spacelab Mission
20	51I	103	43,988	30,546	0	0	15,190			ASC-1	7,677	LEASAT-3 (r&d)	15,190	LESAT 3 was originally launched on STS 41-D as SYNCOM IV-2.
										AUSSAT-1	7,643			
										SYNCOM IV-4	15,226			
21	51J	104				DOD Mission - Data Not Available								
22	61A	099	31,861	150	0	0	0			GAS-GLOMR	150			SPACELAB Mission
23	61B	104	48,041	27,577	0	0	0			MORELOS-B	7,583			
										AUSSAT-2	7,634			
										SATCOM KU2	12,360			
24	61C	102	32,462	12,351	0	0	0			SATCOM KU1	12,351			
25	51L	099	52,308		Data Not Applicable									
26	26	103	46,478	37,514	0	0	0			TDRS-C/IUS	37,514			
27	27	104		Department of Defense Mission - Data not available										

Legend: d = deployed
r = retrieved

SUMMARY OF CARGO AND SATELLITE WEIGHTS

Miss. Seq. No.	STS-No.	Orb. OV-	Cargo Weight at Liftoff, lb	Deployed to Space/ Weight, lb	Design Flt Inst/ Weight, lb	Retrieved Satellite Weight, lb	Retrieved/ Re-deployed Satellite, lb	RMS Deployed/ Retrieved Satellite		Self Deployed Satellite		Retrieved Satellite		Remarks
								Satellite	Weight, lb	Satellite	Weight, lb	Satellite	Weight, lb	
28	29	103	38,097	37,546	0	0	0			TDRS/IUS	37,546			
29	30	104	45,930	45,799	0	0	0			MAGELLAN/ IUS	45,799			
30	28	102		DATA NOT AVAILABLE - DOD MISSION										
31	34	104	48,643	38,323	0	0	0			GALILEO/ IUS	38,323			
32	33	103		DATA NOT AVAILABLE - DOD MISSION						IUS				
33	32	102	26,488	15,316	0	21,393	0			SYNCOM IV-5	15,316	LDEF	21,393	
34	36	104		DATA NOT AVAILABLE - DOD MISSION										
35	31	103	28,673	23,905	0	0	0	HUBBLE SPACE TELESCOPE (d)	23,905	0				
36	41	103	44,107	38,603	0	0	0	0	0	Ulysses/ IUS/PAM-S	38,603			
37	38	104			Data Not Available - Department of Defense Mission									
38	35	102	29,806	0	0	0	0	0	0	0	0			
Total			1,055,421	522,020	40,322	23,704	20,190	3 (d) 4 (d&r)	57,428	33	471,670	5	43,894	

Legend: d = deployed
r = retrieved

CARGO SUMMARY		MISSION SEQUENCE: 1	STS-1	ORBITER OV-102
CARGO WEIGHT AT LIFT-OFF, LB	DEPLOYED P/L WEIGHT, LB	RETURNED CARGO WEIGHT, LB		
10,823	-0-	10,823		

DEPLOYABLE PAYLOADS:

None

GAS (Getaway Special):

None

ATTACHED PLB PAYLOADS:

1. Passive Sample Array
2. DFI (Development Flight Instrumentation) Pallet, 9,290 lb.
3. ACIP (Aerodynamic Coefficient Identification Package)

CREW COMPARTMENT PAYLOAD:

None

SPECIAL PAYLOAD MISSION KITS:

None

Note: RMS NOT FLOWN

CARGO SUMMARY		MISSION SEQUENCE: 2	STS-2	ORBITER OV-102
CARGO WEIGHT AT LIFT-OFF, LB	DEPLOYED P/L WEIGHT, LB	RETURNED CARGO WEIGHT, LB		
18,778	-0-	18,778		

DEPLOYABLE PAYLOADS:

None

ATTACHED PLB PAYLOADS:

1. OFT (Orbital Flight Test) Pallet:
   a. MAPS (Measurement of Air Pollution from Satellite)
   b. SMIRR (Shuttle Multispectral Infrared Radiometer)
   c. SIR (Shuttle Imaging Radar)
   d. FILE (Features Identification and Location Experiment)
   e. OCE (Ocean Color Experiment)
2. DFI (Development Flight Instrumentation) Pallet 11,084 lb
3. ACIP (Aerodynamic Coefficient Identification Package)
4. IECM (Induced Environment Contamination Monitor)
5. OSTA-1 (Office of Space and Terrestial Application) 5,395 lb

GAS (Getaway Special):

None

CREW COMPARTMENT PAYLOAD:

None

SPECIAL PAYLOAD MISSION KITS:

1. RMS (Remote Manipulator System) S/N 201

CARGO SUMMARY		MISSION SEQUENCE: 3	STS-3	ORBITER OV-102
CARGO WEIGHT AT LIFT-OFF, LB	DEPLOYED P/L WEIGHT, LB	RETURNED CARGO WEIGHT, LB		
22,710	344	22,710		

DEPLOYABLE PAYLOADS:

Plasma Diagnostic Package
(See attached payloads section)

ATTACHED PLB PAYLOADS:

1. OSS (Office of Space Science)-1 Pallet
   a. Plant Lignification Experiment
   b. Plasma Diagnostic Package*
   c. Vehicle Charging and Potential
   d. Space Shuttle Induced Atmosphere
   e. Thermal Canister
   f. Solar Flare X-ray Polarimeter
   g. Solar Ultraviolet and Spectral Irradiance Monitor
   h. Contamination Monitor Package
   i. Foil Microabrasion Package
2. DFI (Development Flight Instrumentation) Pallet, 11,048 lb
3. ACIP (Aerodynamic Coefficient Identification Package)

*RMS deployed/berthed

GAS (Getaway Special):

Verification Canister

CREW COMPARTMENT PAYLOAD:

1. MLR (Monodisperse Latex Reactor)
2. HBT (Heflex Bioengineering Test)

SPECIAL PAYLOAD MISSION KITS:

1. RMS (Remote Manipulator System) S/N 201

CARGO SUMMARY		MISSION SEQUENCE: 4	STS-4	ORBITER OV-102
CARGO WEIGHT AT LIFT-OFF, LB	DEPLOYED P/L WEIGHT, LB	RETURNED CARGO WEIGHT, LB		
24,492	816	24,492		

DEPLOYABLE PAYLOADS:

IECM (Induced Environment Contamination Monitor) deployed/reberthed by RMS.

ATTACHED PLB PAYLOADS:

DFI (Development Flight Instrumentation) Pallet, 9,900 lb

DEPARTMENT OF DEFENSE:

DOD 82-1

GAS (Getaway Special):

1. Utah State University
   a. Drosophilia Melanogaster (fruit fly) Growth Experiment
   b. Antemia (Brine Shrimp) Growth Experiment
   c. Surface Tension Experiments
   d. Composite Curing Experiment
   e. Thermal Conductivity Experiment
   f. Microgravity Soldering Experiment
   g. Root growth of Lemna Minor L. (Duckweed) in Microgravity
   h. Homogeneous Alloy Experiment
   i. Algal Microgravity Bioassay Experiment

CREW COMPARTMENT PAYLOAD:

1. MLR (Monodisperse Latex Reactor)

2. CFES (Continuous Flow Electrophoresis System)

3. SSIP (Shuttle Student Involvement Program)
   S404: Effect of Prolonged Space Travel on Levels of Trivalent Chromium in the Body.
   S405: Effect of Diet, Exercise and Zero Gravity on Lipoprotein Profiles.

4. VPCF (Vapor Phase Compression Freezer)

SPECIAL PAYLOAD MISSION KITS:

RMS (Remote Manipulator System) S/N 201

CARGO SUMMARY		MISSION SEQUENCE: 5	STS-5	ORBITER OV-102
CARGO WEIGHT AT LIFT-OFF, LB	DEPLOYED P/L WEIGHT, LB	RETURNED CARGO WEIGHT, LB		
32,080	14,585	17,495		

DEPLOYABLE PAYLOADS:

1. SBS-C/PAM-D (Satellite Business Systems/Payload Assist Module)
   Deployed Wt = 7,211 lb

2. ANIK-C/PAM-D - TELESAT Canada, Ltd/Payload Module Assist
   Deployed Wt = 7,374 lb

GAS (Getaway Special):

G-026: ERNO/Stability Of Metallic Dispersions. (JSC PIP 14021)

ATTACHED PLB PAYLOADS:

DFI (Development Flight Instrumentation)

a. EIOM (Effects Of Interaction Of Oxygen with Materials)

b. ISAL (Investigation Of STS Atmospheric Luminosities)

CREW COMPARTMENT PAYLOAD:

SSIP (Shuttle Student Involvement Program)

a. SE81-5 - Crystal Formation In Zero Gravity
b. SE81-9 - Convection In Zero Gravity
c. SE81-2 - Growth Of Porifera

SPECIAL PAYLOAD MISSION KITS:

Mission Specialist Seats (2)

Note: RMS NOT FLOWN

CARGO SUMMARY		MISSION SEQUENCE: 6	STS-6	ORBITER OV-099
CARGO WEIGHT AT LIFT-OFF, LB	DEPLOYED P/L WEIGHT, LB	RETURNED CARGO WEIGHT, LB		
46,971	37,546	9,425		

DEPLOYABLE PAYLOADS:

TDRS-A/IUS (Tracking and Data Relay Satellite/ Inertial Upper Stage)

Deployed Wt = 37,546 lb

ATTACHED PLB PAYLOADS:

CBSA (Cargo Bay Stowage Assembly)

GAS (Getaway Special):

1. G-005: Asahi Shimban, Japan
2. G-049: U. S. Air Force Academy
3. G-381: Park Seed Company

CREW COMPARTMENT PAYLOAD:

1. CFES (Continuous Flow Electrophoresis System)
2. MLR (Monodisperse Latex Reactor)
3. RME (Radiation Monitoring Experiment)
4. NOSL (Night/Day Optical Survey Of Lightning)

SPECIAL PAYLOAD MISSION KITS:

1. Mini-MADS (Modular Auxiliary Data System)
2. EMU (Extravehicular Mobility Unit)

Note: RMS NOT FLOWN

CARGO SUMMARY		MISSION SEQUENCE: 7	STS-7	ORBITER OV-099
CARGO WEIGHT AT LIFT-OFF, LB	DEPLOYED P/L WEIGHT, LB	RETURNED CARGO WEIGHT, LB		
37,124	14,949	22,175		

DEPLOYABLE PAYLOADS:

1. ANIK-C/PAM-D: TELESAT Canada Satellite

   Deployed Wt = 7,374 lb

2. PALAPA-B1/PAM-D: Indonesian Satellite

   Deployed Wt = 7,575 lb

3. SPAS (Shuttle Pallet Satellite)-01 Unberthing/Berthing Tests

GAS (Getaway Special):

1. G-033: California Institute of Tech. - Plant Gravireception and Liquid Dispersion
2. G-088: Edsyn, Inc. - Soldering of Material
3. G-002: Kayser Threde, W. Germany - Youth Fair Experiment
4. G-009: Purdue University - Geotropism Fluid Dynamics and Nuclear Particle Velocity
5. G-305: U. S. Air Force and National Research Labs - Ultraviolet Spectrometer
6. G-012: RCA, Camden, NJ, Schools - Ant Colony
7. G-345: Goddard Space Flight Center and National Research Labs - Payload Bay Environment

ATTACHED PLB PAYLOADS:

1. OSTA (Office of Space and Terrestial Applications)-2
2. CBSA (Cargo Bay Stowage Assembly)

CREW COMPARTMENT PAYLOAD:

1. CFES (Continuous Flow Electrophoresis System)
2. MLR (Monodisperse Latex Reactor)
3. SSIP (Shuttle Student Involvement Program)

SPECIAL PAYLOAD MISSION KITS:

1. RMS (Remote Manipulator System) S/N 201
2. TAGS (Text and Graphics System)
3. Mini-MADS (Modular Auxiliary Data System)

CARGO SUMMARY		MISSION SEQUENCE: 8	STS-8	ORBITER OV-099
CARGO WEIGHT AT LIFT-OFF, LB	DEPLOYED P/L WEIGHT, LB	RETURNED CARGO WEIGHT, LB		
30,076	7,445	22,631		

DEPLOYABLE PAYLOADS:

1. INSAT/PAM-D: Indian National Satellite

   Deployed Wt = 7,445 lb

2. PFTA (Payload Flight Test Article) Unberthing/Berthing Tests

ATTACHED PLB PAYLOADS:

1. DFI (Development Flight Instrumentation) Pallet
   a. Oxygen Interaction and Heat Pipe Experiment
   b. Postal Covers (2 boxes)
2. CBSA (Cargo Bay Stowage Assembly)
3. SPAS (Shuttle Pallet Satellite)-01 Umbilical Disconnect

GAS (Getaway Special):

1. U. S. Postal Service - 8 cans of philatelic covers
2. G-475: Asahi Shimban - Artificial Snow Crystal Experiment
3. G-348: Office of Space Science - Atomic Oxygen Erosion
4. G-347: Navy Research Lab - Ultraviolet Photo Film Test
5. G-346: Goddard Space Flight Center - Cosmic Ray Upset Experiment

CREW COMPARTMENT PAYLOADS:

1. CFES (Continuous Flow Electrophoresis System)
2. ICAT (Incubator-Cell Attachment Test)
3. ISAL (Investigation of STS Atmospheric Luminosities)
4. AEM (Animal Enclosure Module) - Evaluation of AEM using rats
5. RME (Radiation Monitoring Equipment)
6. SSIP (Shuttle Student Involvement Program) - Biofeedback

SPECIAL PAYLOAD MISSION KITS:

1. RMS (Remote Manipulator System) S/N 201
2. MADS (Modular Auxiliary Data Systems) II
3. COMSEC (Communication Security)
4. TAGS (Text and Graphics System)

CARGO SUMMARY		MISSION SEQUENCE: 9	STS-9	ORBITER OV-102
CARGO WEIGHT AT LIFT-OFF, LB	DEPLOYED P/L WEIGHT, LB	RETURNED CARGO WEIGHT, LB		
33,264	-0-	33,264		

DEPLOYABLE PAYLOAD:

None

GAS (Getaway Special):

None

ATTACHED PLB PAYLOADS:

1. Spacelab-1:
   a. Spacelab Long Module
   b. Spacelab Pallet
   c. Tunnel
   d. Tunnel Extension
   e. Tunnel Adapter

2. Experiments (73)
   a. Astronomy and Physics (6)
   b. Atmospheric Physics (4)
   c. Earth Observations (2)
   d. Life Sciences (16)
   e. Materials Sciences (39)
   f. Space Plasma Physics (5)
   g. Technology (1)

CREW COMPARTMENT PAYLOAD:

None

SPECIAL PAYLOAD MISSION KITS:

1. Cryogenic sets 4 and 5.
2. Spacelab utility kit
3. TAGS (Text and Graphics System)
4. Galley

Note: RMS NOT FLOWN

CARGO SUMMARY		MISSION SEQUENCE: 10	STS 41-B	ORBITER OV-099
CARGO WEIGHT AT LIFT-OFF, LB	DEPLOYED P/L WEIGHT, LB	RETURNED CARGO WEIGHT, LB		
33,868	14,863	19,005		

DEPLOYABLE PAYLOADS:

1. WESTAR VI/PAM-D - Western Union Communications Satellite/Payload Assist Module
   Deployed Wt = 7,307 lb
2. PALAPA-B/PAM-D - Indonesian Communications Satellite/Payload Assist Module
   Deployed Wt = 7,556 lb
3. SPAS (Shuttle Pallet Satellite)-01 - Not deployed due to RMS anomaly
4. IRT (Integrated Rendezvous Target) - Failed to inflate due to internal failure
   Deployed Wt = 210 lb

ATTACHED PLB PAYLOADS:

1. MFR (Manipulator Foot Restraint)
2. SESA (Special Equipment Stowage Assembly)
3. Cinema 360 - High Quality Motion Picture Camera

GAS (Getaway Special):

1. G-004: Utah State University/Aberdeen University
2. G-008: Utah State University/University of Utah/ Brighton High School
3. G-051: General Telephone Labs
4. G-309: U. S. Air Force
5. G-349: Goddard Space Flight Center (re: flight STS-8)

CREW COMPARTMENT PAYLOADS:

1. ACES (Acoustic Containerless Experiment System)
2. IEF (Isoelectric Focusing)
3. Cinema 360 Camera
4. Student Experiment SE81-10 - Effects of Zero g on Arthritis
5. MLR (Monodisperse Latex Reactor)
6. RME (Radiation Monitoring Equipment)

SPECIAL PAYLOAD MISSION KITS:

1. RMS (Remote Manipulator System) S/N 201
2. MMU (Manned Maneuvering Unit) - 2
3. Mini-MADS (Modular Auxiliary Data System)
4. Galley

CARGO SUMMARY		MISSION SEQUENCE: 11	STS 41-C	ORBITER OV-099
CARGO WEIGHT AT LIFT-OFF, LB	DEPLOYED P/L WEIGHT, LB	RETURNED CARGO WEIGHT, LB		
38,266	21,396	16,870		

DEPLOYABLE PAYLOADS:

1. LDEF (Long Duration Exposure Facility) - Office of Aeronautics and Space Technology

   Deployed Wt = 21,396 lb

2. SMM (Solar Maximum Mission) Spacecraft - Rendezvous/Retrieve/Repair/Deploy

GAS (Getaway Special):

None

ATTACHED PLB PAYLOADS:

1. SMRM (Solar Maximum Repair Mission) - Flight Support System
2. Cinema 360 - High quality motion picture camara
3. CBSA (Cargo Bay Stowage Assembly) - bay 2, starboard side

CREW COMPARTMENT PAYLOADS:

1. RME (Radiation Monitoring Equipment)
2. IMAX Camera - Canadian Commercial Company color film camera using 70mm x 280mm film
3. SSIP (Shuttle Student Involvement Program) - Comparison of honeycomb structure of bees in low g and bees in 1 g

SPECIAL PAYLOAD MISSION KITS:

1. MMU (Manned Maneuver Units) - 2
2. EMU (Extravehicular Mobility Units) - 3
3. RMS (Remote Manipulator System) S/N 302
4. MFR (Manipulator Foot Restraint)
5. Galley

CARGO SUMMARY		MISSION SEQUENCE: 12	STS 41-D	ORBITER OV-103
CARGO WEIGHT AT LIFT-OFF, LB	DEPLOYED P/L WEIGHT, LB	RETURNED CARGO WEIGHT, LB		
47,516	30,080	17,530		

DEPLOYABLE PAYLOADS:

1. SBS/PAM-D (Satellite Business System/Payload Assist Module)
   Deployed Wt = 7,383 lb
2. SYNCOM IV-2 (Leased to DOD for UHF and SHF communications, also called LEASAT)
   Deployed Wt = 15,190 lb
3. TELSTAR/PAM-D (American Telephone & Telegraph/ Payload Assist Module)
   Deployed Wt = 7,507 lb

GAS (Getaway Special):

None

ATTACHED PLB PAYLOADS:

OAST-1 (Office of Application and Space Technology)
a. SAE (Solar Array Experiment)
b. DAE (Dynamic Augmentation Experiment)
c. SCCF (Solar Cell Calibration Facility)

CREW COMPARTMENT PAYLOADS:

1. CFES III (Continuous Flow Electrophoresis System)
2. IMAX Camera - IMAX System Corporation (Canadian Company) 70mm x 280mm film.
3. RME (Radiation Monitoring Equipment) USAF Space Div.
4. Clouds - USAF Nikon F 3/T with 105mm lens
5. SSIP - (Shuttle Student Involvement Package) grow single crystal of Indium, Shawn Murphy, Hiram, Ohio; Rockwell International, Sponsor.

SPECIAL PAYLOAD MISSION KITS:

1. RMS (Remote Manipulator System) S/N 301
2. MADS (Modular Auxiliary Data System)

CARGO SUMMARY		MISSION SEQUENCE: 13	STS 41-G	ORBITER OV-099
CARGO WEIGHT AT LIFT-OFF, LB	DEPLOYED P/L WEIGHT, LB	RETURNED CARGO WEIGHT, LB		
23,465	4,949	18,516		

DEPLOYABLE PAYLOADS:

1. ERBS (Earth Radiation Budget Satellite)
   Deployed Wt = 4,949 lb.

ATTACHED PLB PAYLOADS:

1. OSTA-3 (Office of Space and Terrestial Applications)
   a. SIR-B (Shuttle Imaging Radar)
   b. FILE (Feature Identification and Location Exp.)
   c. MAPS (Measurement of Air Pollution from Satellite)
2. LFC (Large Format Camera)
   ORS (Orbital Refueling System)

CREW COMPARTMENT PAYLOADS:

1. APE (Auroral Photography Experiment)
2. CANEX (Canadian Experiments)
   a. VISET
   b. ACOMEX
   c. OGLOW (Orbital Glow & Atmospheric Emissions)
   d. SPEAM (Sun Photometer Earth Atmosphere Measurement)
   e. SASSE (Space Adaptation Syndrone Studies Exp.)
3. IMAX Camera
4. RME (Radiation Monitoring Experiment)
5. TLD (Thermoluminescent Dosimeter)

GAS (Getaway Special):

1. G007: Alabama Space and Rocket Center
   Solidification of lead-antimony; and aluminum-copper student experiment.
2. G032: ASAHI National Broadcasting Corp., Japan
   Surface tension and viscosity; and materials experiment.
3. G306: Air Force and U. S. Naval Research Laboratory
   Low Energy Heavy Ions Search in the Inner Magnetosphere.
4. G469: Goddard Space Flight Center
   Cosmic Ray Upset Experiment (CRUX)
5. G038: Marshall-McShane
   Vapor Deposition of Metals and Non-Metals.
6. G074: McDonnell Douglas Company
   Study Proposed Propellant Acquisition System.
7. G013: Kayser Threde, West Germany
   Verify Transport Mechanism in Halogen Lamps Performance in Extended Micro-g.
8. G518: Utah State University
   Study Solar Flux Separation, Capillary Waves on Water Surface, and Thermo-Capillary Flow in Liquid Columns.

SPECIAL PAYLOAD MISSION KITS:

1. RMS (Remote Manipulator System) S/N 302
2. Galley
3. MMU (Manned Maneuvering Unit) 2
4. EMU (Extravehicular Mobility Unit) 3
5. PSA (Provisions Stowage Assembly)

CARGO SUMMARY		MISSION SEQUENCE: 14		STS 51-A	ORBITER OV-103
CARGO WEIGHT AT LIFT-OFF, LB	DEPLOYED P/L WEIGHT, LB	RETRIEVED P/L WEIGHT, LB	RETURN CARGO WEIGHT, LB		
45,306	22,764	2,311	24,853		

DEPLOYABLE PAYLOADS:

1. TELESAT-H (ANIK)-D2/PAM-D - Canadian 24 channel communications satellite. PAM D is a payload assist module built by McDonnell Douglas.
   Deployed weight: 7,574 lb

2. SYNCOM IV-1 - Synchronous Communication Satellite, also called LEASAT, leased to U. S. Navy.
   Deployed weight: 15,190 lb

RETRIEVED PAYLOADS:

1. PALAPA-B2 - Deployed during mission STS 41-B, failed to achieve proper transfer orbit due to PAM-D failure.
   Retrieved weight: 1,222 lb

2. WESTAR-VI - Deployed during mission STS 41-B, failed to achieve proper transfer orbit due to PAM-D failure.
   Retrieved weight: 1,089 lb

CREW COMPARTMENT PAYLOADS:

1. DMOS (Diffusive Mixing of Organic Solutions) 3M Corp.

2. RME (Radiation Monitoring Experiment)

GAS (Getaway Special):

None

SPECIAL PAYLOAD MISSION KITS:

1. RMS (Remote Manipulator System) S/N 301

2. MMU (Manned Maneuvering Unit) (2)

3. EMU (Extravehicular Mobility Unit)(3)

4. PSA (Provisions Stowage Assembly) (2)

5. Satellite Retrieval Hardware:
   a. Modified Spacelab pallet (2)
   b. MFR (Manipulator Foot Restraint) (2)
   c. Stinger Adapter (2)
   d. Satellite Adapter Trunnion (2)
   e. Berthing A Frame (2)

CARGO SUMMARY		MISSION SEQUENCE: 15	STS 51-C	ORBITER OV-103
CARGO WEIGHT AT LIFT-OFF, LB	DEPLOYED P/L WEIGHT, LB	RETURNED CARGO WEIGHT, LB		

DEPLOYABLE PAYLOADS:

Data not available, DOD Classified Mission.

GAS (Getaway Special):

Data not available
DOD Classified Mission

ATTACHED PLB PAYLOAD:

Data not available, DOD Classified Mission

CREW COMPARTMENT PAYLOAD:

Data not available, DOD Classified Mission

SPECIAL PAYLOAD MISSION KIT:

RMS (Remote Manipulator System) S/N 301

Other data not available, DOD Classified Mission

CARGO SUMMARY		MISSION SEQUENCE: 16	STS 51-D	ORBITER OV-103
CARGO WEIGHT AT LIFT-OFF, LB	DEPLOYED P/L WEIGHT, LB	RETURNED CARGO WEIGHT, LB		
35,824	22,576	13,248		

DEPLOYABLE PAYLOADS:

SYNCOM IV-3 Synchronous Communication Satellite, built by Hughes, third in a series of 4, leased to the Navy.

Failed to activate after nominal deploy from Orbiter.
Deploy wt: 15,190 lb

TELESAT-I (ANIK C-1)/PAM D - Canadian communication satellite.

Placed in three year storage orbit.
Deployed wt: 7,386 lb

ATTACHED PLB PAYLOAD:

None

GAS (Getaway Special):

1. G-035 - Asahi National Broadcasting Corporation, Japan
   a. Surface tension and viscosity
   b. Alloy, lead oxide and carbon fiber
2. G-471 - Goddard Space Flight Center, Thermal Engineering Branch. Capillary Pump Loop (CPU) Priming Experiment

CREW COMPARTMENT PAYLOADS:

1. CFES-III (Continuous Flow Electrophoresis System)
2. AFE (American Flight Echocardiograph)
3. PPE (Phase Partitioning Experiment)
4. SSIP (Shuttle Student Involvement Package) (2)
   a. Corn Statolith
   b. Brain Cell

SPECIAL PAYLOAD MISSION KITS:

1. RMS (Remote Manipulator System) S/N 301
2. PSA (Provision Stowage Assembly)
3. MADS III (Modular Auxiliary Data System)

CARGO SUMMARY		MISSION SEQUENCE: 17	STS 51-B	ORBITER OV-099
CARGO WEIGHT AT LIFT-OFF, LB	DEPLOYED P/L WEIGHT, LB	RETURNED CARGO WEIGHT, LB		
31,407	105	31,302		

DEPLOYABLE PAYLOADS:

Refer to GAS section.

ATTACHED PLB PAYLOADS: Spacelab 3

Materials Processing in Space:
1. Solution Growth of Crystals in Zero Gravity
2. Mercuric Iodide Crystal Growth, Vapor Crystal Growth System (VCGS)
3. Mercury Iodide Crystal Growth (MICG)

Technology:
1. Dynamics of Rotating and Oscillating Free Drops (DROP)

Environmental Observations:
1. Geophysical Fluid Flow Cell Experiment (GFFC)
2. Atmospheric Trace Molecule Spectroscopy (ATMOS)
3. Very Wide Field Galactic Camera (VWFGC)
4. Aurora Observation

Astro Physics:
1. Studies of the Ionization States of Solar and Galactic Cosmic Ray Heavy Nuclei (ION)

Life Sciences:
1. Research Animal Holding Facility (RAHF)
2. Urine Monitoring Investigation (UMI)
3. Autogenic Feedback Training (AFT)

GAS (Getaway Special):

G-010 NUSAT, Northern Utah Satellite.
Weber State College, Utah,
Utah State University, and New Mexico State University.
First successful payload ejection from a GAS canister.
Deployment Wt = 105 lbs.

G-303 GLOMR, Global Low Orbiting Message Relay Satellite.
Defense Systems Inc., McLean, Va.
Failed to eject from GAS canister.

CREW COMPARTMENT PAYLOAD:

UMS: Urine Monitoring System

SPECIAL PAYLOAD MISSION KITS:

1. Airlock
2. Long Transfer Tunnel
3. Galley
4. MPESS - Mission Peculiar Equipment Support Structure, carried ATMOS & ION

Note: RMS not flown.

CARGO SUMMARY		MISSION SEQUENCE: 18	STS 51-G	ORBITER OV-103
CARGO WEIGHT AT LIFT-OFF, LB	DEPLOYED P/L WEIGHT, LB	RETURNED CARGO WEIGHT, LB		
44,477	22,832	21,645		

DEPLOYABLE PAYLOADS:

1. TELSTAR-3D/PAM-D: Hughes 376 Comm Satellite with McDac Payload Assist Module Booster. Owned by AT&T Co. Wt. = 7,546.0 lb

2. ARABSAT-A/PAM-D: Aerospatiale Comm Satellite with McDac Payload Assist Module Booster. Owned by Saudi Arabian Communications Organization. Wt. = 7,695.0 lb

3. MORELOS-A/PAM-D: Hughes 376 Comm Satellite with McDac Payload Assist Module Booster. Owned by Mexican Communications and Transportation Agency Wt. = 7,591.0 lb

4. SPARTAN-1: Shuttle Pointed Autonomous Research Tool for Astronomy.

   SFSS: Spartan Flight Support Structure
   REM: Release/Engage Mechanism
   SEC: Scientific Experiment Carrier

   The SEC was released and retrieved using REM and RMS (Remote Manipulator System)

   Deployed & retrieved Wt = 2,217.0 lb

ATTACHED PLB PAYLOADS:

None

GAS (Getaway Special):

G-007: Alabama Space & Rocket Center/Marshall Amateur Radio Club -
1. Solidification of Metals
2. Crystal Growth
3. Radish Seed Root Study
4. Radio Transmission Experiment

G-025: ERNO - Dynamic Behavior of Liquid Propellants in low-g.

G-027: DFVLR of West Germany - Slipcasting in micro-g.

G-028: DFVLR of West Germany - Manganese - Bismuth production in micro-g.

G-034: Dickshire Coors, Texas High School Students -
12 Biological/physical science experiments
1 Microprocessor controller

G-314: USAF and USNRL - SURE (Space Ultraviolet Radiation Environment)

CREW COMPARTMENT PAYLOADS:

ADSF (Automated Directional Solidification Furnace)
FEE (French Echocardiograph Experiment)
FPE (French Postural Experiment)
HPTE (High Precision Tracking Experiment)

SPECIAL PAYLOAD MISSION KIT:

RMS (Remote Manipulator System) S/N 301
Galley

CARGO SUMMARY		MISSION SEQUENCE: 19	STS 51-F	ORBITER OV-099
CARGO WEIGHT AT LIFT-OFF, LB	DEPLOYED P/L WEIGHT, LB	RETURNED CARGO WEIGHT, LB		
34,400		34,400		

DEPLOYABLE PAYLOAD:

Ejectable Plasma Diagnostic Package, Exp No. 3, second flight of PDP (STS-3 first flight). First flight as a free flyer to sample plasma away from the Shuttle.

Deployed/Retrieved Wt = 628.0 lb.

GAS (Getaway Special):

None

ATTACHED PLB PAYLOADS: Spacelab 2

0 Plasma Physics
- ° Deployable/Retrievable Plasma Diagnostic Package (PDP) (Exp 3)
- ° Plasma Depletion Experiments for Ionospheric and Radio Astronomical Studies (Exp 4)
- ° Vehicle Charging and Potential (VCAP) (Exp 14)

0 Astrophysical Research
- ° Small Helium Cooled Infrared Telescope (IRT) (Exp 5)
- ° Hard X-ray Imaging of Clusters of Galaxies and Other Extended X-ray Sources (XRT) (Exp 7)
- ° Elemental Composition and Energy Spectra of Cosmic Ray Nuclei (CRNE) (Exp 6)

0 Solar Astronomy
- ° Solar Magnetic and Velocity Field Measurement System (SOUP) (Exp 8)
- ° Coronal Helium Abundance Spacelab Experiment (CHASE) (Exp 9)
- ° High Resolution Telescope and Spectrograph (HRTS) (Exp 10)
- ° Solar Ultraviolet Spectral Irradiance Monitor (SUSIM) (Exp 11)

0 Technology
- ° Properties of Superfluid Helium Zero-g (SFHe) (Exp 13)

CREW COMPARTMENT PAYLOADS:

0 Life Sciences
- ° Vitamin D Metabolites and Bone Demineralization (Exp 1)
- ° The Interaction of Oxygen and Gravity Induced Lignification (Exp 2)
- ° Shuttle Amateur Radio Experiment (SAREX)
- ° Dispenser Technology Experiment Dispensing Carbonated Beverages In Micro-g
- ° Protein Crystal Growth

SPECIAL PAYLOAD MISSION KITS:

1. Remote Manipulator System (RMS) S/N 302
2. Galley

CARGO SUMMARY		MISSION SEQUENCE: 20	STS 51-I	ORBITER OV-103
CARGO WEIGHT AT LIFT-OFF, LB	DEPLOYED P/L WEIGHT, LB	RETURNED CARGO WEIGHT, LB		
43,988	30,546	13,452		

DEPLOYABLE PAYLOAD:

ASC-1/PAM-D - American Satellite Company, first of two satellites built by RCA and owned by a partnership between Fairchild Industries and Continental Telecon Inc. PAM-D Payload Assist Module built by McDonnell Douglas. "D" indicates used for lightweight satellites, less than 2,250 lbs.

Deployed Wt. = 7,677 lb

AUSSAT-1/PAM-D - Australian Communications Satellite, owned by AUSSAT Proprietary Ltd., built by Hughes Communications International, Model HS376

Deployed Wt. = 7,643 lb

SYNCOM IV-4 - Synchronous Community Satellite. Last in a series of 4 satellites built by Hughes Communication Services and leased to the U. S. Navy. Referred to as LEASAT when deployed. Failed to function after reaching correct geosynchronous orbit.

Deployed Wt. = 15,226 lb

ATTACHED PLB PAYLOADS:

None.

GAS (Getaway Special):

None.

CREW COMPARTMENT PAYLOAD:

PVTOS - Physical Vapor Transport Organic Solid Experiment, 3M Corporation.

SPECIAL PAYLOAD MISSION KITS:

1. RMS (Remote Manipulator System) S/N 301
2. Galley
3. LEASAT-3 Salvage Equipment
   LEASAT-3 was successfully retrieved, repaired and redeployed.

Retrieved and redeployed weight = 15,190 lb

CARGO SUMMARY		MISSION SEQUENCE: 21	STS 51-J	ORBITER OV-104
CARGO WEIGHT AT LIFT-OFF, LB	DEPLOYED P/L WEIGHT, LB	RETURNED CARGO WEIGHT, LB		

DEPLOYABLE PAYLOADS:

Data not available, DOD Classified Mission.

ATTACHED PLB PAYLOADS:

Data not available, DOD Classified Mission

GAS (Getaway Special):

Data not available
DOD Classified Mission

CREW COMPARTMENT PAYLOADS:

Data not available - DOD Classified Mission

SPECIAL PAYLOAD MISSION KIT:

Data not available - DOD Classified Mission

CARGO SUMMARY		MISSION SEQUENCE: 22	STS 61-A	ORBITER OV-099
CARGO WEIGHT AT LIFT-OFF, LB	DEPLOYED P/L WEIGHT, LB	RETURNED CARGO WEIGHT, LB		
31,861	150	31,711		

DEPLOYABLE PAYLOADS:

GLOMR - Global Low Orbiting Message Relay Satellite. Built by Defense System, Inc., for DARPA. First launch attempt was on STS 51-B which failed. Deployed from GAS canister.

Deployed Wt = 150 lb

ATTACHED PLB PAYLOADS:

Spacelab D-1 - First completed Spacelab mission under German Mission Management. Joint control by BMFT (Federal Ministry of Research and Technology) and DFVLR (Deutsche Forschungs-und Versuchanstalt Fur Luft-und Raumfahrt).

Experiment Facilities:

1. WL-Werkstoff Labor; experiments relating to metallurgy, crystal growth, glasses/ceramics, and fluid physics. Experiment facilities include:
   - Mirror Heating Facility
   - Isothermal Heating Facility
   - Gradient Heating Facility
   - High Temperature Thermostat
   - Fluid Physics Module
   - Cryostat
2. PK-Progresskammer; experiment relating to Bubble Transport Boundary Layer, and Transparent Media. Experiment facilities include:
   - Holographic Interferometric Apparatus
   - Marangoni Convention Boat
   - Interdiffusion in Salt Melt
3. MD-MEDEA: A material science double rack. Experiment facilities include:
   - Gradient Heating Facility
   - Mono-ellipsoid Mirror Heating Facility
   - High Precision Thermostat Facility
4. BW-Biowissenschaften: Experiments relating to Life Sciences. Experiments include:
   - Biological (1)
   - Medical (2)
   - Botanical (3)
5. VS-Vestibular Sled: Experiments in Life Science regarding visio-vestibular coordination system and sensory preception process. Experiment facilities include:
   - Mechanically accelerated sled
   - Instrumented helmet
6. BR-Biorack: Multi-purpose facility for biological research in cell development physiology, cell fertilization and radio-biology. Facilities include:
   - 2 Incubators
   - Cooler freeze
   - Glove box
7. NX-NAVEX: Navigation Experiment; located in payload bay attached to USS (unique support structure).
8. ME-MEA Materials Experiment Assembly; mounted on USS containing three materials, processing experiments.

GAS (Getaway Special)

None

SPECIAL PAYLOAD MISSION KITS:

1. Airlock
2. Long Transfer Tunnel
3. Galley
4. USS - Unique Support Structure
5. RMS S/N 302.

CARGO SUMMARY		MISSION SEQUENCE: 23	STS 61-B	ORBITER OV-104
CARGO WEIGHT AT LIFT-OFF, LB	DEPLOYED P/L WEIGHT, LB	RETURNED CARGO WEIGHT, LB		
48,041	27,577	20,464		

DEPLOYABLE PAYLOADS:

1. MORELOS-B/PAM D: Hughes 376 Comm Satellite with McDAC Payload Assist Module booster. Owned by Mexican Communications and Transportation Agency.
   Deployed Wt = 7,583 lb

2. AUSSAT-2/PAM D: Hughes 376 Comm Satellite with McDAC Payload Assist Module booster. Owned by AUSSAT Proprietary Ltd.
   Deployed Wt = 7,634 lb

3. SATCOM KU-2/PAM-D2: RCA built/owned 16 channel Ku-band communications satellite. First of four satellites. McDAC Payload Assist Module D2 is an uprated version of the PAM-D used for heavier payloads.
   Deployed Wt = 12,360 lb

ATTACHED PLB PAYLOADS:

1. EASE: Experiment Assembly of Structures in Extravehicular Activity (EASE) is a study of EVA dynamics and human factors in construction of structures in space. An inverted tetrahedron consisting of six 12-feet beams was constructed by EV-1 and EV-2.

2. ACCESS: Assembly Concept for Construction of Erectable Space Structures (ACCESS) is a validation of ground based timelines based on simulations. A 45-feet truss was assembled/disassembled by the two EV crew members.

3. ICBC: IMAX Cargo Bay Camera, joint effort between the Canadian IMAX Corp. and NASA, consists of a 70mm film camera in pressurized container used to document EASE/ACCESS operations.

GAS (Getaway Special)

G-479 Telesat-Canada
a. Primary surface mirror production
b. Metallic crystal production

CREW COMPARTMENT PAYLOADS:

1. CFES: Continuous Flow Electrophoresis System. Owned by McDonnell Douglas, separates biological samples using electrophoretic process. Third flight of this equipment.

2. DMOS: Diffusive Mixing of Organic Solutions. Sponsored by 3M corporation, used to study organic crystal growth/kinetics, test molecular orbital model, and produce new materials for electro-optical applications.

3. MPSE: Morelos Payload Specialist Experiments, includes experiments in transportation of nutrients inside bean plants, innoculation of group bacteria viruses, germination of three seed types, and medical experiments testing internal equilibrium and volume change of the leg due to fluid shifts in zero-g.

4. OEX: Orbiter Experiments, an onboard experimental digital autopilot software package designed to provide precise stationkeeping capabilities between space vehicles.

SPECIAL PAYLOAD MISSION KITS:

1. Food Warmers (2), galley not flown.
2. RMS S/N 301
3. PSA (Provision Stowage Assembly)

CARGO SUMMARY

CARGO WEIGHT AT LIFT-OFF, LB	DEPLOYED P/L WEIGHT, LB	RETURNED CARGO WEIGHT, LB
32,462	12,351	20,111

DEPLOYABLE PAYLOAD:

SATCOM KU-1/PAM D-2: RCA built/owned 16 channel Ku-Band communications satellite. Second of four satellites. McDAC Payload Assist Module D2 is an updated version PAM-D which is used for heavier payloads.

Deployment Wt. = 12,351.0 lb

ATTACHED PLB PAYLOADS:

1. MSL-2 (Materials Science Laboratory) consisting of MSL Carrier; MPE (Mission Peculiar Equipment), and 3 experiments.
   a. 3AAL (3-Axis Acoustic Levitator)
   b. ADSF (Automated Directional Solidification Furnace)
   c. SEECM (Shuttle Environmental Effects of Coated Mirrors).
2. HITCHHIKER G-1: A Goddard Space Flight Center (GSFC) managed program consisting of 3 experiments:
   a. PACS (Particle Analysis Camera for Shuttle).
   b. CPL (Capillary Pump Loop).
   c. SEECM (Shuttle Environment Effects of Coated Mirrors).
3. IR-IE (Infared - Imaging Experiment consisting of a RCA IR TV camera mounted in Orbiter CCTV pan/tilt unit.

GAS (Getaway Special):

1. G-464: UVX (Ultraviolet Experiment), referred to as UCB (Univ. of Calif. at Berkley) contains a Bowyer UV spectrometer. GSFC experiment.
2. G-463: UVX, referred to as JHU (John Hopkins Univerisity) contains a Feldman Spectrophotometer. GSFC experiment.

MISSION SEQUENCE: 24	STS 61-C	ORBITER OV-102

Gas (Getaway Special) (continued):

3. G-462: UVX, referred to as GAP (GSFC Avionics Package) contains Telemetry System, Tape Recorder and Battery. GSFC experiment.
4. G-007: Alabama Space and Rocket Center/Marshall Amateur club. Contains 3 student experiments and 1 radio transmission experiment.
5. G-446: HPLC (High Performance Liquid Chromatography) analytical columns. All Tech Assoc. Inc.
6. G-494: PHOTONS (Photometric Thermospheric Oxygen Nightglow Study). Canada Centre for Space Science, National Research Council of Canada.
7. Not numbered: EMP (Environmental Monitoring Package) measures the environment for GSFC.
8. G-481: Unprimed, prepared linen and painted canvas reactions to space travel. Vertical Horizons.
9. G-062: 4 part experiment from Pennsylvania State University/ General Electric.
10. G-449: JULIE (Joint Utilization of Laser Integrated Experiments). four part experiment from St. Mary's Hospital, Milwaukee, WI.
11. G-332: 2 part experiment from Booker T. Washington Senior High School and High School for Engineering, Houston, TX.
12. G-310: USAF Academy experiment.

Note: Above 12 listed GAS canisters mounted on Gas Bridge carrier.

13. G-470: Experience from GSFC and U.S. Dept of Agriculture.

CREW COMPARTMENT PAYLOADS:

1. IBSE (Initial Blood Storage Experiment) package in 4 middeck lockers.
2. CHAMP (Comet Halley Active Monitoring Program) uses cameras, spectroscopic grating and filters to observe comet through aft flight deck overhead window.
3. HPCG (Handheld Protein Crystal Growth) experiment.
4. SSIP (Shuttle Student Involvement Program)
   a. SE83-4, Production of Paper Fiber in Space.
   b. SE83-6, Argon Injection as an Alternative to Honeycombing.
   c. SE82-19, Measurement of Auxin Levels and Starch Grains in Plant Roots.

SPECIAL PAYLOAD MISSION KITS:

1. GAS Bridge Carrier
2. Galley

Note: RMS not flown

CARGO SUMMARY		
CARGO WEIGHT AT LIFT-OFF, LB	DEPLOYED P/L WEIGHT, LB	RETURNED CARGO WEIGHT, LB
52,308	N/A	N/A

DEPLOYABLE PAYLOADS:

1. TDRS-B/IUS: Tracking and Data Relay Satellite/Inertial Upper Stage.
   Deployment Weight = 37,636 lb
   (IUS = 32,636, TDRS-B = 5000 lb)
   Non-deployable Weight = 5,603 lb
2. SPARTAN-203/Halley: Shuttle pointed Autonomous Research Tool for Astronomy/ Halley's Comet Experiment Deployable/ retrieval packages using RMS.
   a. SPARTAN experiment package:
      1) 2 UV Spectrometers from University of Colorado.
      2) 2 Nikon F-3 Cameras.
      3) Optic Bench
   b. Halley's Comet Experiment; measure Halley's Comet composition/activity.

Gas (Getaway Special):

None

MISSION SEQUENCE: 25	STS 51-L	ORBITER OV-099

CREW COMPARTMENT PAYLOADS:

1. Fluid Dynamics Experiment (FDE)
   Hughes Aircraft Company Experiment composed of six experiments:
   a. Fluid position and ullage.
   b. Fluid motion due to spin.
   c. Fluid self-inertia.
   d. Fluid motion due to payload deployment.
   e. Energy dissipation due to fluid motion.
   f. Fluid transfer.
2. Comet Halley Active Monitoring Program (CHAMP), second flight. Phase Partitioning Experiment (PPE) dissolves two polymer solutions in water to observe their separation.
   Teacher in Space: Six experiments including hydrophonics, magnetism, Newton's laws, effervescence, chromatography, and simple machines.
   Shuttle Student Involvement Packages:
   SE82-4 "The effects of weightlessness on grain formation and strength in metals"
   From: L. Bruce - St. Louis, MO
   Sponsor: McDonnell Douglas
   SE82-5 "Utilizing a semi-permeable membrane to direct crystal growth in zero gravity"
   From: S. Cavou - Marlboro, NY
   Sponsor: Union College
   SE83-9 "Chicken embryo development in space"
   From: J. Vellinger - Lafayette, IN
   Sponsor: Kentucky Fried Chicken Corporation

SPECIAL PAYLOAD MISSION KITS:

1. RMS (Remote Manipulator System)
2. Galley
3. MADS

CARGO SUMMARY		
CARGO WEIGHT AT LIFT-OFF, LB	DEPLOYED P/L WEIGHT, LB	RETURNED CARGO WEIGHT, LB
46,478	37,514	8,964

DEPLOYABLE PAYLOADS:

1. TDRS-C/IUS: Tracking and Data Relay Satellite/Inertial Upper Stage.

Deployable Weight = 37,514 lb

(IUS = 32,877 lb,
TDRS-C = 4,637 lb,
Non-deployable Weight = 5,592 lb)

ATTACHED PLB PAYLOADS:
OASIS-1: Orbiter Experiment Autonomous Supporting Instrumentation System measures and records payload bay environmental data.

MISSION SEQUENCE: 26	STS-26	ORBITER OV-103

GAS (Getaway Special):

None

CREW COMPARTMENT PAYLOADS:

1. PVTOS - Physical Vapor Transport of Organic Solids, 3M Corporation - Second flight.
2. ADSF - Automated Directional Solidification Furnace, MSFC, third flight, test material solidification in zero g.
3. IRCFE - Infrared Communication Flight Experiment, JSC, first flight. Test infrared transmitting crew headsets.
4. PCG - Protein Crystal Growth, MSFC, flown four previous flights in less complicated configurations to examine growth of protein crystals in zero g.
5. IEF - Isoelectric Focusing, MSFC, second flight, test isoelectric transport through a permeable membrane in zero g.
6. PPE - Phase Partitioning Experiment, MSFC, second flight, photograph fluid phase partitioning phenomena in zero g.
7. ARC - Aggregation of Red Blood Cells, MSFC and Australia, investigate aggregation characteristics of human red blood cells in zero g.
8. MLE - Mesoscale Lightning Experiment, MSFC, first flight, photograph atmospheric lightning activity from orbit.
9. ELRAD - Earth Limb Radiance Experiment, JSC, first flight, photograph earth limb radiance pre-sunrise/post-sunset.
10. Student Experiment SE82-4 -"Effects of weightlessness on Ti grain formation and strength". From L. Bruce, St. Louis, Mo., sponsor: McDonnell-Douglas.
11. Student Experiment SE82-5 - "Utilizing a semi-permeable membrane to direct crystal growth in zero gravity". From S. Cavou, Marlboro, N. Y., sponsor: Union College.

SPECIAL PAYLOAD MISSION KITS:

1. Galley
2. MADS

CARGO SUMMARY		MISSION SEQUENCE: 27	STS-27	ORBITER OV-104
CARGO WEIGHT AT LIFT-OFF, LB	DEPLOYED P/L WEIGHT, LB	RETURNED CARGO WEIGHT, LB		

DEPLOYABLE PAYLOAD:

Data not available, DOD Classified Mission.

ATTACHED PLB PAYLOAD:

Data not available, DOD Classified Mission

GAS (Getaway Special):

Data not available - DOD Classified Mission

CREW COMPARTMENT PAYLOAD:

Data not available - DOD Classified Mission

SPECIAL PAYLOAD MISSION KIT:

Data not available - DOD Classified Mission

CARGO SUMMARY		MISSION SEQUENCE: 28	STS-29	ORBITER OV-103
CARGO WEIGHT AT LIFT-OFF, LB	DEPLOYED P/L WEIGHT, LB	RETURNED CARGO WEIGHT, LB		
38,097	37,546	551		

DEPLOYABLE PAYLOAD: Tracking and Data Relay Satellite /Inertial Upper Stage (TDRS/IUS) one of four identical communication satellites providing support for STS and other customers. TDRS weight = 4,950 lb. Total TDRS/IUS weight = 37,546 lb.

ATTACHED PLB PAYLOAD:

1. Space Station Heat Pipe Advanced Radiator Element (SHARE)
2. Orbiter Experiments Autonomous Supporting Instrumentation System (OASIS-1)

GAS (Getaway Special):

1. Chicken Embryo Development (CHIX) in Space
2. Effects of Weightlessness of Bones (SSIP-82-08) total weight = 58 lb

CREW COMPARTMENT PAYLOAD:

1. Protein Crystal Growth (PCG-111-1)
   Total weight = 90.7 lb
2. Chromosome and Plant Cell Division in Space (CHOMEX)
   Total weight = 89.0 lb
3. IMAX Camera
   Total weight = 313 lb
4. Air Force Maui Optical Site Calibration Test (AMOS)
   Total weight = 0 lb.

SPECIAL PAYLOAD MISSION KITS:

CARGO SUMMARY		MISSION SEQUENCE: 29	STS-30	ORBITER OV-104
CARGO WEIGHT AT LIFT-OFF, LB	DEPLOYED P/L WEIGHT, LB	RETURNED CARGO WEIGHT, LB		
45,930	45,799	131		

DEPLOYABLE PAYLOAD: MAGELLAN/IUS

Unmanned, three-axis attitude-controlled exploration spacecraft containing systems required to achieve orbit of Venus and map its surface. Magellan weight = 7,383 lb IUS weight = 38,416 lb. Deployed: 125:01:01:01 G.m.t., SRM 1 - 125:02:01:23 G.m.t., SRM 2 - 125:02:06:28 G.m.t.

ATTACHED PLB PAYLOAD:

None

GAS (Getaway Special):

None

CREW COMPARTMENT PAYLOAD:

1. Fluids Experience Apparatus (FEA)
   FEA weight = 69 lb,
   Total weight = 116 lb
2. Mesoscale Lightning Experiment (MLE),
   Total weight = 15 lb
3. Air Force Maui Optical Sight Calibration Test (AMOS) 0 lb
   Total weight = 0 lb

SPECIAL PAYLOAD MISSION KITS:

None

CARGO SUMMARY		MISSION SEQUENCE: 30	STS-28	ORBITER OV-102
CARGO WEIGHT AT LIFT-OFF, LB	DEPLOYED P/L WEIGHT, LB	RETURNED CARGO WEIGHT, LB		

DEPLOYABLE PAYLOAD:

Data not available - DOD Classified Mission

ATTACHED PLB PAYLOAD:

Data not available - DOD Classified Mission

GAS (Getaway Special):

Data not available
DOD Classified Mission

CREW COMPARTMENT PAYLOAD:

Data not available -
DOD Classified Mission

SPECIAL PAYLOAD MISSION KITS:

Data not available -
DOD Classified Mission

CARGO SUMMARY		MISSION SEQUENCE: 31	STS-34	ORBITER OV-104
CARGO WEIGHT AT LIFT-OFF, LB	DEPLOYED P/L WEIGHT, LB	RETURNED CARGO WEIGHT, LB		
48,643	38,323	10,320		

*DEPLOYABLE PAYLOAD:

1. GALILEO/IUS, an unmanned spin-stabilized exploration spacecraft comprising a Jupiter orbiter and a Jupiter atmospheric entry probe mated to the IUS.

ATTACHED PLB PAYLOAD:

1. Shuttle Solar Backscatter Ultraviolet (SSBUV)

*GAS (Getaway Special):

1. Zero Gravity Growth of Ice Crystals

*CREW COMPARTMENT PAYLOAD:

1. Polymer Morphology
2. Growth Hormone Concentration and Distribution in Plants
3. Sensor Technology Experiment
4. IMAX Camera
5. Mesoscale Lightning Experiment
6. Air Force Maui Optical Site Calibration Test

SPECIAL PAYLOAD MISSION KITS:

* Detailed experiment description in STS-34 Payload Information Document (PID)

CARGO SUMMARY		MISSION SEQUENCE: 32	STS-33	ORBITER OV-103
CARGO WEIGHT AT LIFT-OFF, LB	DEPLOYED P/L WEIGHT, LB	RETURNED CARGO WEIGHT, LB		

DEPLOYABLE PAYLOAD:

Data not available - DOD Classified Mission

ATTACHED PLB PAYLOAD:

Data not available - DOD Classified Mission

GAS (Getaway Special):

Data not available
DOD Classified Mission

CREW COMPARTMENT PAYLOAD:

Data not available -
DOD Classified Mission

SPECIAL PAYLOAD MISSION KITS:

Data not available -
DOD Classified Mission

CARGO SUMMARY		MISSION SEQUENCE: 33	STS-32	ORBITER OV-102
CARGO WEIGHT AT LIFT-OFF, LB	DEPLOYED P/L WEIGHT, LB	RETURNED CARGO WEIGHT, LB		
26, 488	15,316	21,393		

DEPLOYABLE PAYLOAD:

SYNCOM IV-5, a geostationary communications satellite also known as LEASAT; leased to U.S. Navy.

Deployed weight: 15,316 lb.

ATTACHED PLB PAYLOAD:

NONE

RETURNED CARGO:

LDEF, a non-powered space vehicle containing experiments. LDEF deployed on STS-41C.

Retrieved weight: 21,393 lb.

GAS (Getaway Special):

NONE

CREW COMPARTMENT PAYLOAD:

1. American Flight Echocardiograph (AFE)
2. Air Force Maui Optical Site Calibration Test (AMOS)
3. Characterization of Neurospora Circadian Rhythms (CNCR)
4. Fluids Experiment Apparatus
5. IMAX Camera
6. Latitude/Longitude Locator (L3)
7. Mesoscale Lightning Experiment (MLE)
8. Protein Crystal Growth (PCG)

SPECIAL PAYLOAD MISSION KITS:

1. Remote Manipulator System (RMS)
2. Galley
3. MADS

CARGO SUMMARY		MISSION SEQUENCE: 34	STS-36	ORBITER OV-104
CARGO WEIGHT AT LIFT-OFF, LB	DEPLOYED P/L WEIGHT, LB	RETURNED CARGO WEIGHT, LB		

DEPLOYABLE PAYLOAD:

Data not available - DOD Classified Mission

ATTACHED PLB PAYLOAD:

Data not available - DOD Classified Mission

GAS (Getaway Special):

Data not available
DOD Classified Mission

CREW COMPARTMENT PAYLOAD:

Data not available -
DOD Classified Mission

SPECIAL PAYLOAD MISSION KITS:

Data not available -
DOD Classified Mission

CARGO SUMMARY		MISSION SEQUENCE: 35	STS-31	ORBITER OV-103
CARGO WEIGHT AT LIFT-OFF, LB	DEPLOYED P/L WEIGHT, LB	RETURNED CARGO WEIGHT, LB		
28,673	23,905	4,768		

DEPLOYABLE PAYLOAD:

Hubble Space Telescope (HST), a large aperture optical telescope

ATTACHED PLB PAYLOAD:

1. IMAX Cargo Bay Camera (ICBC)
2. Ascent Particle Monitor (APM)

GAS (Getaway Special):

NONE

CREW COMPARTMENT PAYLOAD:

1. Air Force Maui Optical Site Calibration Test (AMOS)
2. IMAX Camera
3. Investigation into Polymer Membrane Processing (IPMP)
4. Protein Crystal Growth (PCG)
5. Radiation Monitoring Experiment (RME)
6. Investigation of Arc and Ion Behavior in Microgravity (Student Experiment 82-16)

SPECIAL PAYLOAD MISSION KITS:

1. RMS
2. Galley
3. HST EVA Tools

CARGO SUMMARY		MISSION SEQUENCE: 36	STS-41	ORBITER OV-103
CARGO WEIGHT AT LIFT-OFF, LB	DEPLOYED P/L WEIGHT, LB	RETURNED CARGO WEIGHT, LB		
44,107	38,603	5,504		

DEPLOYABLE PAYLOAD:
Ulysses/IUS/PAM-S - Deployable weight = 38,603 lb

ATTACHED PLB PAYLOAD:
SSBUV - Shuttle Solar Backscatter Ultraviolet Spectrometer
ISAC - Intelsat Solar Array Coupon (Attached to RMS arm)

GAS (Getaway Special):

None

CREW COMPARTMENT PAYLOAD:
CHROMEX -Chromosome and Plant Cell Division in Space Environment
SSCE - Solid Surface Combustion Experiment
VCS - Voice Command System Experiment
PSE - Physiological Systems Experiment
RME - Radiation Monitoring Experiment
IPMP - Investigation into Polymer Membrane Processing
AMOS - Air Force Maui Optical Site Calibration Test

SPECIAL PAYLOAD MISSION KITS:
1. Remote Manipulator System (RMS)
2. Galley
3. Radioisotope Generator (RTG) Cooling System

CARGO SUMMARY		MISSION SEQUENCE: 37	STS-38	ORBITER OV-104
CARGO WEIGHT AT LIFT-OFF, LB	DEPLOYED P/L WEIGHT, LB	RETURNED CARGO WEIGHT, LB		

DEPLOYABLE PAYLOAD:

Data not available - DOD Classified Mission

ATTACHED PLB PAYLOAD:

Data not available - DOD Classified Mission

GAS (Getaway Special):

Data not available
DOD Classified Mission

CREW COMPARTMENT PAYLOAD:

Data not available -
DOD Classified Mission

SPECIAL PAYLOAD MISSION KITS:

Data not available -
DOD Classified Mission

CARGO SUMMARY		MISSION SEQUENCE: 38	STS-35	ORBITER OV-102
CARGO WEIGHT AT LIFT-OFF, LB	DEPLOYED P/L WEIGHT, LB	RETURNED CARGO WEIGHT, LB		
29,806	0	29,806		

DEPLOYABLE PAYLOAD:
None

ATTACHED PLB PAYLOAD:
ASTRO-1 - Three ultraviolet telescopes attached to an Instrument Pointing System (IPS):
1. Wisconsin UV Photopolarimeter Experiment (WUPPE)
2. UV Imaging Telescope (UIT)
3. Hopkins UV Telescope (HUT)

BBXRT - Broad Band X-Ray Telescope. Attached to its own two-axis pointing system (TAPS)

GAS (Getaway Special):
None

CREW COMPARTMENT PAYLOAD:
SAREX - Shuttle Amateur Radio Experiment
AMOS - Air Force Maui Optical Site Calibration Test

SPECIAL PAYLOAD MISSION KITS:
1. Galley
2. Aerodynamic Coefficient Identification Package (ACIP)

SHUTTLE FLIGHT HISTORIES
ASCENT AND ORBIT INSERTION

Miss Seq. No.	STS-No.	Orb. OV-	Shuttle Lift-off Weight, lb	Max Q, psf, @ M =	Calculated Wind Load Data, L-3.5 Hr. Winds: Top Load Indicator Code/Description/ Location	Load* Value Percent	SRB Sep MET, sec/ Vel.,fps/ Alt., ft	MECO MET, sec/ Vel.,fps/ Alt., ft	ET Sep MET,sec/ Vel.,fps/ Alt.,ft	OMS-1 Burn: T_{ig} MET, h:m:s	OMS-1 Burn: Burn Duration, sec.	OMS-1 Burn: Apogee/ Perigee Alt., nmi	OMS-2 Burn: T_{ig} MET, h:m:s	OMS-2 Burn: Burn Duration, sec.	OMS-2 Burn: Apogee/ Perigee Alt., nmi.
1	1	102	4,457,111	617 1.06	PBD WEB Payload Bay Door Shear Hinge Fitting Web	80.7	131.7	514.0	532.1	00.10.34	86.3		00:44:02	74.8	
2	2	102	4,470,308	640 1.09	FWD FFOIN Foward External Tank Attach Fitting Load	90.0	130.0	513.8	537.2	00:10:33.9	77.0		00:41:41.7	69.2	
3	3	102	4,468,755	651 1.04	OMSL-6 Left OMS Pod Frame X = 232.7	91.8	127.9	513.4	531.5	00:10:34.4	85.2		00:40:50.4	88	
4	4	102	4,481,935	721 1.74	ET 4-11 Midpoint Lefthand Vertical Strut (P4)	97.4	130.0 156,024	512.7 25,677	530.4 354,800	00:10:32.6	88	130.0 34.0	00:37:40.6	104	130.0 130.0
5	5	102	4,487,268	738 1.70	VT-6-R Vertical Tail Root Rib	96.6	129.08 155,206	510.68 25,672 361,206	528.77 366,193	00:10:30.8	137.8	160.2 51.8	00:44:40.8	117.6	160.0 160.0
6	6	099	4,487,255	688 1.47	WINGRA17 Right Wing Spar Web X = 1249, Y = 130	104.6	129.42 25,672 151,453	499.40 361,122	517.55 366,139	00:10:19.6	139.8	154.2 50.6	00:43:37.6	119.1	154.6 154.0
7	7	099	4,482,241	701 1.56	WINGRA17 Right Wing Spar Web X = 1249, Y =130	90.8	126.2 4,319 149,357	500.1 25,595 361,420	518.2 25,668 366,506	00:10:20.2	139.5	160.2 51.9	00:44:30.2	120	160.4 160.2
8	8	099	4,492,074	701 1.53	WINGRA17 Right Wing Spar Web X = 1249, Y = 130	106.9	124.34 4,235 152,110	521.62 25,593 360,803	539.66 25,669 365,878	00:10:41.7	138.8	160.0 51.5	00:44:51.7	116.5	160.5 160.2
9	9	102	4,503,361	676 1.52	WINGLA22 Left Wing Spar Web X = 1191, Y =130	93.7	126.24 4,289 161,689	509.18 25,647 372,249	527.32 25,723 378,580	00:10:29.3	68.5	135.0 44.6	00:40:37.3	101.6	134.9 134.4
10	41B	099	4,498,443	676 1.55	WLE8R Left Wing Leading Edge	94.8	127.92 4,330 152,605	521.42 25,589 361.029	539.57 25,667 366,061	00:10:41.6	150.0	165.1 51.1	00:45:24.6	124.8	165.0 165.0
11	41C	099	4,508,234	635 1.03	WINGLA17 Left Wing Spar Web	94.8	125.57 4,137 169,426	510.76 25,942 360,986	528.9 26,013 370,118	Not Performed – Direct Insertion			00:42:54	95.1	251.6 115.4

*STS-1 thru STS-4 based on a systems dispersion of 99 percent, all other flights based on a systems dispersion of 90 percent.

Source: JSC/VF Orbiter Mass Properties Summary, STS-1 and subsequent missions. Rockwell International, Postflight Summary, STS-1 and subsequent missions.

SHUTTLE FLIGHT HISTORIES
ASCENT AND ORBIT INSERTION

Miss Seq. No.	STS-No.	Orb. OV-	Shuttle Lift-off Weight, lb	Max Q, psf, @ M =	Calculated Wind Load Data, L-3.5 Hr. Winds: Top Load Indicator Code/Description/ Location	Load* Value Percent	SRB Sep MET, sec/ Vel.,fps/ Alt., ft	MECO MET, sec/ Vel.,fps/ Alt., ft	ET Sep MET,sec/ Vel.,fps/ Alt.,ft	OMS-1 Burn: T_{ig} MET, h:m:s	OMS-1 Burn: Burn Duration, sec.	OMS-1 Burn: Apogee/ Perigee Alt., nmi	OMS-2 Burn: T_{ig} MET, h:m:s	OMS-2 Burn: Burn Duration, sec.	OMS-2 Burn: Apogee/ Perigee Alt., nmi.
12	41D	103	4,517,534	611 1.26	F2L Left Wing Carry-through Structure X = 1365, Y = 82	96.1	124.5 3,990 162,535	515.19 25,595 360,945	533.00 25,666 365,877	00:10:36.9	159.4	160.8 50.9	00:44:52.2	126.3	160.8 160.8
13	41G	099	4,493,317	716 1.42	OMS PT6R Left OMS Pod Point 6	85.0	124.12 4,157 157,374	530.34 25,644 372,883	548.41 25,719 378,859	00:10:50.4	130.6	190.5 53.4	00:60:30:4	144.6	191.7 190.4
14	51A	103	4,519,901	651 1.10	WINGRA20 Right Wing Spar Web X = 1365, Y = 240	91.1	125.72 4,095 156,242	513.16 25,593 361,491	531.29 25,669 366,591	00:10:33.3	150.7	160.2 51.7	00:44:43	114.8	160.1 150.4
15	51C	103	Data not available - Department of Defense Mission												
16	51D	103	4,505,245	666 1.25	WINGLA20 Left Wing Spar Web X = 1365, Y = 240	98.3	126.84 4,077 153,102	531.96 25,938 360,594	550.00 26,014 369,603	Not Performed - Direct Insertion			00:43:15	143.0	248.6 160.4
17	51B	099	4,512,009	700 1.31	WINGLA15 Left Wing Spar Web X = 1307, Y = 136	87.2	125.88 4,195 156,700	514.96 25,647 372,561	533.05 25,723 378,806	00:10:35	132.2	190.6 53.6	00:46:15	147.5	190.6 190.4
18	51G	103	4,516,613	648 1.24	WINGLA20 Left Wing Spar Web X = 1365, Y = 240	88.7	124.68 3,973 164,000	515.77 25,842 360,915	533.93 25,914 368,228	Not Performed - Direct Insertion			00:40:29	179.4	192.1 190.5
19	51F	099	4,515,554	762 1.63	ROWINDOW Right Overhead Window	91.3	125.24 4,284 157,308	581.24 25,690 372,077	599.29 25,756 381,932	Abort to orbit - 00:11:41	106.4	142.6 2.96	00:33:00	121.8	142.9 108.7
20	51I	103	4,512,130	735 1.61	WINGLA8 Left Wing Spar Web X = 1365, Y = 334	101.5	121.00 4,235 154,479	507.59 25,839 361,481	525.77 25,912 368,863	Not Performed - Direct Insertion			00:40:28	183.2	190.3 189.7
21	51J	104				Data Not Available - Department of Defense									
22	61A	099	4,508,496	665 1.25	LWINGMX Left Wing Root Bending Moment	85.7	125.08 4,190 162,256	514.96 25,646 372,707	533.05 25,721 379,121	00:10:35	121.4	178.0 52.4	00:44:40	132.7	177.7 175.8

*STS-1 thru STS-4 based on a systems dispersion of 99 percent, all other flights based on a systems dispersion of 90 percent.

Source: JSC/VF Orbiter Mass Properties Properties Summary, STS-1 and subsequent missions. Rockwell International Postflight Summary, STS-1 subsequent missions

FLIGHT HISTORIES
ASCENT AND ORBIT INSERTION

Miss Seq. No.	STS-No.	Orb. OV-	Shuttle Lift-off Weight, lb	Max Q, psf, @ M =	Calculated Wind Load Data, L-3.5 Hr. Winds: Top Load Indicator Code/Description/ Location	Load* Value Percent	SRB Sep MET, sec/ Vel.,fps/ Alt., ft	MECO MET, sec/ Vel.,fps/ Alt., ft	ET Sep MET,sec/ Vel.,fps/ Alt.,ft	OMS-1 Burn: T_{ig} MET, h:m:s	OMS-1 Burn: Burn Duration, sec.	OMS-1 Burn: Apogee/ Perigee Alt., nmi	OMS-2 Burn: T_{ig} MET, h:m:s	OMS-2 Burn: Burn Duration, sec.	OMS-2 Burn: Apogee/ Perigee Alt., nmi.
23	61B	104	4,514,530	723 1.16	LWINGMX Left Wing Root Bending Moment	89.1	123.56 4,274 146,782	511.29 25,643 360,661	529.45 25,915 367,881	Not Performed - Direct Insertion			00:40:25	180.4	191.2 190.6
24	61C	102	4,509,360	696 1.13	WINGLA14 Left Wing Upper Spar Cap X = 1307, Y = 131	92.1	127.23 4,442 152,555	501.64 25,594 360,985	519.77 25,670 366,043	00:10:22	164.03	175.1 53.9	00:46:06	136.38	176.5 175.1
25	51L	099	4,526,583	720 1.35	ET 3-42 External Tank Barrel Panel θ = 43°, X = 1859	83.2	N/A	N/A	N/A	N/A	N/A	N/A	N/A	N/A	N/A
26	26	103	4,522,411	707 1.16	WLE-14R WLE-14L	102** 102.7	124.80 4127 151,816	513.43 25,871 360,878	530.50 25,869 367,122	None	N/A	N/A	00:39:56	141.6	178 162
27	27	104			L-2, WRA 18 Upper Spar Cap Mid Right X = 1307	Data not available - Department of Defense Mission									
28	29	103	4,524,261	710 1.44	L-2 AFT OMS Frame inner cap X = 1360	98	124.5 4200 154,800	510.8 25,827 361,300	528.0 25,868 367,500	None	N/A	N/A	00:39:58	141.6	166.6 162.5
29	30	104	4,527,426	676 1.07	L-2 WING LA18 Upper Spar Cap Mid Left X=1307	97	125.26 4190 155,000	509.37 25,664 360,962	526.67 25,677 365,579	00:10:29	147	160.5 50.7	00:44:27	126	166.3 160.0
30	28	102	DOD	679.0 1.12	LP-2.0 AFT OMS F OMS Frame Inner Cap X=1360	93.2	DOD	DOD	DOD	DOD	DOD	DOD	DOD	DOD	DOD
31	34	104	4,524,224	687.9 1.63	LP-2.0 Aft OMS F OMS Frame Inner Cap X=1360	89.8	124.98 5,277.04 156,990	511.88 25,780.63 365,780	530.08 25,868.83 371,779	NONE	N/A	N/A	00:39:55:00	140	168.46 161.35

* STS-1 through STS-4 based on systems dispersion of 99 percent, all other flights based on systems dispersion of 90 percent.

**Comparison of launch-day wind load conditions with an existing stress analysis that has comparable wind loads showed positive margins of safety for the wings, and as a result, the launch countdown was resumed.

Source: JSC/VF Orbiter Mass Properties Summary, STS-1 and subsequent missions. Rockwell International Postflight Summary, STS-1 and subsequent missions.

SHUTTLE FLIGHT HISTORIES
ASCENT AND ORBIT INSERTION

Miss Seq. No.	STS-No.	Orb. OV-	Shuttle Lift-off Weight, lb	Max Q, psf, @ M =	Calculated Wind Load Data, L-3.5 Hr. Winds		SRB Sep MET, sec/ Vel.,fps/ Alt., ft	MECO MET, sec/ Vel.,fps/ Alt., ft	ET Sep MET,sec/ Vel.,fps/ Alt.,ft	OMS-1 Burn			OMS-2 Burn		
					Top Load Indicator Code/Description/ Location	Load* Value Percent				T_{ig} MET, h:m:s	Burn Duration, sec.	Apogee/ Perigee Alt., nmi	T_{ig} MET, h:m:s	Burn Duration, sec.	Apogee/ Perigee Alt., nmi.
32	33	103	DOD	729.3 1.5	LP-2.0 AFT OMS F OMS Frame Inner Cap X=1360	96.1	DOD	DOD	DOD	DOD	DOD	DOD	DOD	DOD	DOD
33	32	102	4,519,487	641.1 1.05	L-2.0 AFT OMS F OMS Frame Inner Cap X=1360	91.3	125.00 5,281.42 157,254	511.00 25,750.66 361,119	530.00 25,911.68 368,882	NONE	N/A	N/A	00:40:25:50	119.7	178.00 173.00
34	36	104	DOD	743.9 1.49	L-2.0 AFT OMS F OMS Frame Inner Cap X=1360	94.0	DOD	DOD	DOD	DOD	DOD	DOD	DOD	DOD	DOD
35	31	103	4,514,665	656.3 1.08	L-2.0 Aft OMS F OMS Frame Inner Cap X=1360	92.7	125.00 5,324.21 155,453	510.00 26,016.36 360,068	528.00 26,134.83 372,084	NONE	N/A	N/A	00:42:36:00	305	333.00 327.00
36	41	103	4,544,024	665.0 1.1	L-2.0 AFT OMS F OMS Inner Frame Cap	88.0	126.16 4,113.0 156,553	510.39 25,868.2	528.37	NONE	N/A	N/A	00:39:53.4	143.77	160.2 159.4
37	38	104			DOD MISSION - DATA NOT AVAILABLE										
38	35	102	4,600,228	696.0 N/A	L-2.0 WING LA 20 Left Wing Spar Shear X = 1362, y = 235	92.0	125.68 4200.0 152,000	511.6	529.67	NONE	N/A	N/A	00:40:24.7	179.2	190.2 187.7

Source: JSC/VF Orbiter Mass Properties Summary, STS-1 and subsequent missions. Rockwell International Postflight Summary, STS-1 and subsequent missions.

SHUTTLE FLIGHT HISTORIES
ENTRY AERODYNAMICS

Miss Seq. No.	STS-No.	Orb. OV-	Entry Interface			Cross Range, nmi.	Max. Load Factor g	Max. Dyn. Press., psf	First Roll Rev. Vel., fps.	Term. Area Energy Mgmt.				Approach & Landing			
			Velocity, fps	Flt. Pth. Angle, deg	Range, nmi.					I/F Range, nmi.	Load Factor, g	Max.Dyn. Press., psf	I/F Alt ft.	Glide Slope, deg	Velocity, Keas Max.	Over thld	At MGTD
1	1	102	25,731	-1.19	4,372	228	1.60	217	18,310	58.9	1.70	286	10,000	20	315	250	183
2	2	102	25,726	-1.17	4,474	63	1.61	215	20,297	59.7	1.93	280	5,000	19	276	206	197
3	3	102	25,659	-1.13	4,136	276	1.62	220	17,784	59.1	1.54	295	10,000	19	302	232	220
4	4	102	25,797	-1.28	3,817	581	1.77	241	11,461	59.4	1.46	278	10,000	19	295	215	204
5	5	102	25,758	-1.24	4,036	580	1.59	219	11,397	59.8	1.59	280	10,000	19	298	216	198
6	6	099	25,755	-1.24	4,045	378	1.53	207	15,808	59.9	1.41	257	10,000	19	293	213	190
7	7	099	25,771	-1.25	4,040	738	1.59	220	7,143	59.6	1.65	305	9,834	19	295	232	202
8	8	099	25,649	-1.12	4,037	519	1.54	223	12,900	58.9	1.56	281	5,000	19	309	226	195
9	9	102	25,696	-1.18	4,349	69	1.60	232	21,581	59.9	1.52	280	10,000	17	295	203	185
10	41B	099	25,752	-1.20	4,137	524	1.57	220	12,957	59.4	1.59	289	10,000	19	292	218	196
11	41C	099	25,998	-1.52	4,089	381	1.54	216	16,208	59.4	1.43	293	10,000	19	313	234	213
12	41D	103	25,776	-1.26	4,112	474	1.54	206	14,072	60.0	1.42	265	10,000	19	299	227	200
13	41G	099	25,684	-1.12	4,308	614	1.54	241	11,927	60.2	1.40	285	10,000	19	296	216	208
14	51A	103	25,869	-1.35	4,141	486	1.56	225	14,063	60.5	1.46	285	10,000	19	299	217	186
15	51C	103	25,855	-1.32	4,144	380	1.54	211.8	16,118	60.1	1.50	281	10,000	19	293	223	185

Source: JSC/DM5 Flight Design and Dynamics Division, Descent Post-flight summaries

SHUTTLE FLIGHT HISTORIES
ENTRY AERODYNAMICS

Miss. Seq. No.	STS- No.	Orb. OV-	Entry Interface			Cross Range, nmi.	Max. Load Factor g	Max. Dyn. Press., psf	First Roll Rev. Vel., fps	Term. Area Energy Mgmt.				Approach & Landing			
			Velocity, fps	Flt. Pth. Angle, deg	Range, nmi.					I/F Range, nmi.	Load Factor, g	Max.Dyn. Press., psf	I/F Alt ft.	Glide Slope, deg	Velocity, Keas Max.	Over thld	At MGTD
16	51D	103	25,955	-1.45	4,064	518	1.59	211.1	13,573	60.9	1.40	294	10,000	19	301	215	200
17	51B	099	25,857	-1.26	4,264	274	1.57	241.6	18,500	59.1	1.50	282	10,000	19	300	219	204
18	51G	103	25,850	-1.34	4,050	694	1.58	217.7	8,680	59.3	1.60	218	5,000	19	301	N/A	198
19	51F	099	25,813	-1.19	4,221	603	1.58	235.6	11,537	59.7	1.54	290	10,000	19	306	244	199
20	51I	103	25,829	-1.31	4,004	692	1.58	215.3	8,626	59.7	1.56	274	10,000	19	307	204	191
21	51J	104	Data not Available - TBS														
22	61A	099	25,830	-1.19	4,345	69	1.55	241	22,257	59.8	1.3	319	10,000	19	303	231	203
23	61B	104	25,882	-1.35	4,106	533	1.54	232	13,172	59.1	1.4	286	10,000	19	293	224	189
24	61C	102	25,815	-1.31	4,154	661	1.56	224	9,480	59.2	1.42	292	10,000	19	311	233	217
25	51L	099	N/A	N/A	N/A	N/A	N/A	N/A	N/A	N/A	N/A	N/A	N/A	N/A	N/A	N/A	N/A
26	26	103	25,790	-1.25	4,117	383	1.56	203	15,774	60.0	1.3	288	10,000	19	297	219	187
27	27	104	25,121	-1.50	4,220	520	1.61	206	14,564.6	60.2	1.4	294	10,000	19	297	211	194
28	29	103	25,787	-1.23	4,163	384	1.54	207	15,852	60.1	1.6	287	10,000	19	307	218	205
29	30	104	25,788	-1.22	4,155	350	1.56	207	16,452	60.08	1.50	287	9,957	19	295	206	196

Source: JSC/DM5 Flight Design and Dynamics Division, Descent Post-flight summaries

SHUTTLE FLIGHT HISTORIES
ENTRY AERODYNAMICS

Miss. Seq. No.	STS-No.	Orb. OV-	Entry Interface			Cross Range, nmi.	Max. Load Factor g	Max. Dyn. Press., psf	First Roll Rev. Vel., fps	Term. Area Energy Mgmt.				Approach & Landing			
			Velocity, fps	Flt. Pth. Angle, deg	Range, nmi.					I/F Range, nmi.	Load Factor, g	Max.Dyn. Press., psf	I/F Alt ft.	Glide Slope, deg	Velocity, Keas Max.	Over thld	At MGTD
30	28	102	25,803	-1.11	4,332	186	1.54	213	19,494	58.8	1.6	295	10,000	19	299	224	155
31	34	104	25,784	-1.19	4,156	496	1.54	219	13,653	60.1	1.7	286	10,000	19	305	220	195
32	33	103	25,998	-1.48	4,068	226	1.52	215	16,988	60.2	1.5	301	10,000	19	300	211	199
33	32	102	25,823	-1.25	4,317	372	1.62	253	16,293	58.8	1.7	295	10,000	17	300	230	207
34	36	104	25,713	-1.18	4,338	255	1.57	204	18,520	59.5	1.9	325	5,000	19	298	218	199
35	31	103	26,120	-1.61	4,121	420	1.60	205	15,905	60.2	1.54	279	10,000	19	299	194	177
36	41	103	25,762	-1.20	4,147	492	N/A	212.7	13,639	60.0	1.67	291	9,777	19	306	224	192
37	38	104	25,729	-1.16	4,146	3	1.57	207	20,816	60.3	1.42	273	9,819	19	301	218	199
38	35	102	25,858	-1.32	4,266	426	1.58	245.8	15,406	59.15	1.59	279	8,052	17	300	217	201

Source: JSC/DM5 Flight Design and Dynamics Division, Descent Post-flight summaries

SHUTTLE FLIGHT HISTORIES
LANDING DECELERATION

Miss. Seq. No.	STS- No.	Orb. OV-	Velocities/Rates					Distance from Threshold, ft.				Total Rollout, ft.	Rollout time, sec.	Runway Data
			MGTD, kgs*	Sink rates, fps	NGTD, kgs*	Pitch, rate deg/sec	Brake init., kgs*	MGTD	NGTD	Brake init.	Stop			
1	1	102	190.3	0.8	152.9	4.8	104.7	6,053	9,152	12,025	15,046	8,993	60	Edwards 23 Lakebed
2	2	102	185.9	1.0	135.0	4.4	109.5	780	4,429	5,780	8,491	7,711	50	Edwards 23 Lakebed
3	3	102	232.5	5.7	177.4	7.2	149.0	1,092	6,261	8,159	14,829	13,737	84	White Sands 17 Lakebed
4	4	102	195.7	2.0	161.2	3.2	133.2	948	4,988	7,839	10,826	9,878	64	Edwards 22 Concrete
5	5	102	201.0	1.0	175.9	4.0	167.0	1,637	4,675	5,286	11,190	9,553	63	Edwards 22 Concrete
6	6	099	180.0	2.0	147.0	3.4	136.0	2,026	4,972	5,072	9,206	7,180	49	Edwards 22 Concrete
7	7	099	200.0	2.5	154.4	4.4	124.5	2,726	6,843	7,040	13,176	10,450	75	Edwards 15 Lakebed
8	8	099	196.0	1.6	174.6	3.7	154.3	2,793	5,515	7,403	12,164	9,371	50	Edwards 22 Concrete
9	9	102	204.0	2.5	144.6	8.5	126.0	1,649	5,897	6,749	10,105	8,456	53	Edwards 17L Lakebed
10	41B	099	198.2	<2.0	159.5	2.4	135.9	1,922	5,703	7,448	12,737	10,815	67	KSC 15 Concrete
11	41C	099	220.0	2.0	138.0	4.0	110.0	1,912	7,167	8,538	10,628	8,716	48	Edwards 17L Lakebed
12	41D	103	216.3	<2.0	166.0	4.8	106.5	2,510	6,713	10,018	12,785	10,275	60	Edwards 17L Lakebed
13	41G	099	209.4	1.8**	161.0	2.6	113.0	959	5,505	8,986	11,592	10,633	59	KSC 33 Concrete
14	51A	103	193.7	2.0**	157.8	4.0	141.6	2,718	6,370	7,550	12,179	9,461	58	KSC 15 Concrete

*kgs = knots, ground speed

Source: JSC/ES6 Mechanical Systems and Design Branch
Inhouse Mission Reports

SHUTTLE FLIGHT HISTORIES
LANDING DECELERATION

Miss. Seq. No.	STS-No.	Orb. OV-	Velocities/Rates					Distance from Threshold, ft.				Total Rollout, ft.	Rollout time, sec.	Runway Data
			MGTD, kgs*	Sink rates, fps	NGTD, kgs*	Pitch, rate deg/sec	Brake init., kgs*	MGTD	NGTD	Brake init.	Stop			
15	51C	103	179.1	0.7**	142.7	3.4	116.7	2,753	5,752	7,677	10,105	7,352	50	KSC 15 Concrete
16	51D	103	209.0	2.8**	180.0	5.1	156.0	1,639	4,303	6,667	12,069	10,430	63	KSC 33 Concrete
17	51B	099	206.5	<1.0	153.0	6.1	106.0	1,576	5,528	7,589	9,893	8,317	59	Edwards 17L Lakebed
18	51G	103	202.3	5.0	159.6	6.9	154.2	1,117	4,990	5,248	8,550	7,433	42	Edwards 23 Lakebed
19	51F	099	204.3	4.0	171.8	6.1	126.2	3,713	6,412	9,059	12,282	8,569	55	Edwards 23 Lakebed
20	51I	103	175.0	<2.0	142.0	4.8	114.0	2,101	4,384	5,571	8,201	6,100	47	Edwards 23 Lakebed
21	51J	104	187.0	3.0	154.8	4.8	117.2	2,476	4,873	7,421	10,532	8,056	65	Edwards 23 Lakebed
22	61A	099	209.9	1.0	173.8	6.7	110.9	1,829	4,767	7,923	10,133	8,304	49	Edwards 17L Lakebed
23	61B	104	201.3	1.0	165.7	3.1	126.4	2,386	5,909	9,321	13,145	10,759	78	Edwards 22 Concrete
24	61C	102	217.0	2.0	162.9	2.7	138.4	1,525	5,987	7,831	11,727	10,202	59	Edwards 22 Concrete
25	51L	099	N/A	N/A	N/A	N/A	N/A	N/A	N/A	N/A	N/A	N/A	N/A	N/A
26	26	103	195	1.0	154	4.0	134	2569	5671	6750	10020	7451	50	Edwards 17L Lakebed
27	27	104	204	1.0	168	3.8	134	1469	4423	5908	8592	7123	43	Edwards 17L Lakebed
28	29	103	204	2.9	163	1.7	130	1195	5027	7550	10534	9339	53	Edwards 22 Concrete

*kgs = knots, ground speed
**Based on LaRC analysis of KSC spin-up measurements

Source: JSC/ES6 Mechanical Systems and Design Branch
Inhouse Mission Reports

SHUTTLE FLIGHT HISTORIES
LANDING DECELERATION

Miss. Seq. No.	STS-No.	Orb. OV-	Velocities/Rates					Distance from Threshold, ft.				Total Rollout, ft.	Rollout time, sec.	Runway Data
			MGTD, kgs*	Sink rates, fps	NGTD, kgs*	Pitch, rate, deg/sec	Brake init., kgs*	MGTD	NGTD	Brake init.	Stop			
29	30	104	204	2.4	164	2.0	138	1314	5088	6028	11609	10295	64	Edwards 22 Concrete
30	28	102	158	1.0	128	7.6	82	5311	7393	9776	11326	6015	46	Edwards 17L Lakebed
31	34	104	204.7	1.0	157.9	3.4	77.6	1871	5355	10063	11548	9677	60	Edwards 23 Lakebed
32	33	103	191.6	3.0	159.4	2.9	148	740	2670	4856	8504	7764	46	Edwards 04 Concrete
33	32	102	209.3	1.0	161.5	2.2	141.3	1870	6611	8096	12601	10731	62	Edwards 22 Concrete
34	36	104	187.8	1.0	143.2	3.8	97.0	1622	4862	6405	9522	7900	53	Edwards 23 Lakebed
35	31	103	180.1	3.0	144.4	2.9	118.6	1291	4564	6718	10165	8874	61	Edwards 22 Concrete
36	41	103	194.6	1.0	155.5	2.3	135.7	2637	6328	7713	10913	8276	49.2	Edwards 22 Concrete
37	38	104	196.5	1.0	162.9	2.6	130.5	1480	4579	6966	10512	9032	56.5	KSC 33 Concrete
38	35	102	207.9	1.0	169.5	3.4	134.5	1748	5489	8465	12195	10447	57.7	Edwards 22 Concrete

*kgs = knots, ground speed

Source: JSC/ES6 Mechanical Systems and Design Branch
Inhouse Mission Reports

SHUTTLE FLIGHT HISTORIES
CALCULATED BRAKE ENERGIES/PRESSURES AND BRAKE PART/SERIAL NUMBERS

Miss. Seq. No.	STS-No.	Orb. OV-	Gross Brake Energies, Million ft-lb and Serial Numbers									Maximum Pressures, psia				Remarks
			Left Hand				Right Hand				Total	Left Hand		Right Hand		
			Outboard		Inboard		Inboard		Outboard			Outbd	Inbd	Inbd	Outbd	
			Energy	*PN/SN	Energy	*PN/SN	Energy	*PN/SN	Energy	*PN/SN						
1	1	102	12.39	04SN22 Note 1	14.23	04SN24 Note 1	20.85	04SN21 Note 1	4.02	04SN23 Note 1 Minor damage	51.49	896	864	1,480	624	
2	2	102	12.82	04SN22 Note 1	18.27	04SN24 Note 1	13.62	04SN09 Note 1	9.71	04SN23 Note 1	54.42	832	960	824	776	No brake damage; longer wheel drive lug inserts installed**.
3	3	102	12.30	04SN22 Note 1 Minor damage	19.90	04SN24 Note 1 Minor damage	27.80	04SN09 Note 1 Damage	21.10	04SN23 Note 1 Damage	81.10	976	1,080	936	984	
4	4	102	22.80	04SN33 Note 1	28.40	04SN08 Note 1 Damage	29.10	04SN07 Note 1 Damage	23.70	04SN06 Note 1	104.00	1,160	1,304	1,232	1,232	
5	5	102	37.40	04SN33 Note 1 Damage	42.60	04SN31 Note 1 Damage	32.40	04SN32 Note 1 Minor damage	29.80	04SN06 Note 1 Minor damage	142.20	1,720	1,728	1,632	1,632	Broken stator on LHIB, brake locked up last 60 feet of rollout.
6	6	099	34.90	18SN17 Note 2	32.30	18SN18 Note 2	16.20	18SN14 Note 2 Damage	13.80	18SN16 Note 2	97.20	1,648	1,664	1,176	1,096	Demo hard braking. 118° saddle fitting installed.**
7	7	099	2.88	17SN38 Note 1 Minor damage	1.96	17SN36 Note 1 Minor damage	13.64	17SN35 Note 1 Damage	8.26	17SN37 Note 1 Minor damage	26.74	840	768	776	704	Broken rotors on RHIB. Rotor and stator drive clips installed, and rivet material grade change.**
8	8	099	36.60	17SN24 Note 1 Damage	34.00	17SN22 Note 1 Damage	29.60	17SN21 Note 1 Damage	25.70	17SN34 Note 1 Damage	125.90	1,432	1,368	1,184	1,160	

*Part Number/Serial Number
Note 1: MC621-0051-00XX S/N 971530000XX
Note 2: MC621-0051-00XX S/N 039530000XX

**Including subsequent flights.

Source: JSC/ES6 Mechanical Systems and Design Branch
Inhouse Mission Reports

SHUTTLE FLIGHT HISTORIES
CALCULATED BRAKE ENERGIES/PRESSURES AND BRAKE PART/SERIAL NUMBERS

Miss. Seq. No.	STS-No.	Orb. OV-	Gross Brake Energies, Million ft-lb and Serial Numbers								Total	Maximum Pressures, psia				Remarks
			Left Hand				Right Hand					Left Hand		Right Hand		
			Outboard		Inboard		Inboard		Outboard			Outbd	Inbd	Inbd	Outbd	
			Energy	*PN/SN	Energy	*PN/SN	Energy	*PN/SN	Energy	*PN/SN						
9	9	102	13.75	17SN06 Note 1	18.24	17SN33 Note 1	14.08	17SN31 Note 1	11.87	17SN32 Note 1 Minor damage	57.94	720	824	792	768	
10	41B	099	27.57	17SN16 Note 1	22.39	17SN14 Note 1	27.19	17SN18 Note 1	19.12	17SN08 Note 1 Minor damage	96.27	888	768	856	752	
11	41C	099	16.27	17SN35 Note 2 Damage	14.02	17SN23 Note 2 Damage	17.18	17SN09 Note 2 Damage	13.73	17SN07 Note 2 Damage	61.20	984	904	864	768	
12	41D	103	11.03	19SN40 Note 1	12.57	17SN41 Note 1 Minor damage	7.71	17SN42 Note1 Minor damage	5.55	17SN39 Note 1 Minor damage	36.86	824	864	832	752	New drive lug inserts and 360° saddle installed on outboard brakes, Ref. MCR10853. RH MLG strut partially deflated, GN_2 leak at Schrader valve.
13	41G	099	20.65	22SN37 Note 1	16.14	22SN38 Note 1 Damage	22.80	22SN36 Note 1 Damage	21.67	22SN08 Note 1 Damage	81.26	1400	1270	1747	1466	360° saddle installed on all brakes. RH brakes fully instrumented.
14	51A	103	22.88	22SN43 Note 1 Minor damage	24.21	19SN40 Note 1 Minor damage	32.38	22SN46 Note 1 Minor damage	30.34	22SN45 Note 1 Damage	109.81	728	776	968	920	
15	51C	103	23.48	20SN14 Note 1	24.26	20SN16 Note 1 Damage	22.19	20SN17 Note 1	20.79	20SN18 Note 1	90.72	1240	1280	1128	1056	Redesigned rotor drive clips installed.**

*Part Number/Serial Number
Note 1: MC621-0051-00XX S/N 971530000XX
Note 2: MC621-0051-00XX S/N 039530000XX
** Including subsequent flights.

Source: JSC/ES6 Mechanical Systems and Design Branch Inhouse Mission Reports

SHUTTLE FLIGHT HISTORIES
CALCULATED BRAKE ENERGIES/PRESSURES AND BRAKE PART/SERIAL NUMBERS

Miss. Seq. No.	STS-No.	Orb. OV-	Gross Brake Energies, Million ft-lb and Serial Numbers									Maximum Pressures, psia				Remarks
			Left Hand				Right Hand				Total	Left Hand		Right Hand		
			Outboard		Inboard		Inboard		Outboard			Outbd	Inbd	Inbd	Outbd	
			Energy	*PN/SN	Energy	*PN/SN	Energy	*PN/SN	Energy	*PN/SN						
16	51D	103	20.28	20SN39 Note 1	20.60	20SN41 Note 1 Minor damage	41.01	20SN44 Note 1 Damage	41.13	20SN42 Note 1 Damage	123.02	800	856	968	1048	Broken stator on RH, brakes locked up at end of rollout; RHIB last 113ft and RHOB last 5 ft.
17	51B	099	16.28	20SN35 Note 1 Damage	14.35	20SN22 Note 1 Damage	15.01	20SN24 Note 1	11.04	20SN34 Note 1	56.68	1090	1090	1090	1060	Broken rotors on LH brakes; RH brakes fully instrumented.
18	51G	103	22.21	20SN08 Note 1	23.17	20SN36 Note 1	12.86	20SN38 Note 1	11.63	20SN37 Note 1 Minor damage	69.87	1472	1592	944	960	
19	51F	099	26.45	20SN40 Note 1	22.20	20SN43 Note 1 Minor damage	21.15	20SN46 Note 1	14.67	20SN45 Note 1	84.47	1407	1272	1080	983	RH brakes fully instrumented.
20	51I	103	8.72	20SN14 Note 1	8.65	20SN16 Note 1	10.58	20SN18 Note 1 Minor damage	9.06	20SN17 Note 1 Minor damage	37.01	928	904	912	968	
21	51J	104	8.81	20SN09 Note 1 Minor damage	10.67	20SN07 Note 1 Minor damage	10.56	20SN06 Note 1	10.46	20SN23 Note 1 Minor damage	40.50	944	792	864	960	
22	61A	099	13.72	20SN39 Note 1	9.85	20SN44 Note 1	14.30	20SN41 Note 1	9.39	20SN42 Note 1	47.26	867	780	973	1002	No brake damage. RH brakes fully instrumented. Brake pedal bungee used.
23	61B	104	22.18	20SN35 Note 1	28.53	20SN34 Note 1	26.59	20SN22 Note 1	26.81	20SN24 Note 1	104.11	768	1016	904	1016	No brake damage.

*Part Number/Serial Number
Note 1: MC621-0051-00XX S/N 971530000XX
Note 2: MC621-0051-00XX S/N 039530000XX
** Including subsequent flights.

Source: JSC/ES6 Mechanical Systems and Design Branch
Inhouse Mission Reports

SHUTTLE FLIGHT HISTORIES
CALCULATED BRAKE ENERGIES/PRESSURES AND BRAKE PART/SERIAL NUMBERS

Miss. Seq. No.	STS-No.	Orb. OV-	Gross Brake Energies, Million ft-lb and Serial Numbers								Total	Maximum Pressures, psia				Remarks
			Left Hand				Right Hand					Left Hand		Right Hand		
			Outboard		Inboard		Inboard		Outboard			Outbd	Inbd	Inbd	Outbd	
			Energy	*PN/SN	Energy	*PN/SN	Energy	*PN/SN	Energy	*PN/SN						
24	61C	102	24.06	20SN32 Note 1	29.47	20SN31 Note 1 Minor damage	33.92	20SN21 Note 1 Damage	32.07	20SN33 Note 1 Damage	119.52	1032	1136	1176	1224	RHIB No. 3 stator had major cracks in beryllium due to over temperature. Brake pedal bungee used.**
25	51L	099	N/A	20SN43 Note 1	N/A	20SN40 Note 1	N/A	20SN46 Note 1	N/A	20SN45 Note 1	N/A	N/A	N/A	N/A	N/A	
26	26	103	16.49	30SN24 Note 1	14.89	30SN22 Note 1	17.55	30SN35 Note 1	19.36	30SN34 Note 1	68.29	1093	850	1070	1053	No brake damage. RH brakes fully instrumented. Modifications:** thick stator brake, stiffened axle, 6 brake orifices and A/S circuitry.
27	27	104	14.69	30SN06 Note 1	15.28	30SN07 Note 1	18.19	30SN21 Note 1	17.55	30SN44 Note 1	65.71	824	816	992	864	No brake damage.
28	29	103	23.49	30SN22 Note 1	22.09	30SN24 Note 1	28.72	30SN35 Note 1	29.49	30SN34 Note 1 Minor damage	103.79	976	855	1190	1097	Cracked rotor on RHOB. RH brakes fully instrumented.
29	30	104	22.30	30SN08 Note 1	24.18	30SN16 Note 1	28.78	30SN39 Note 1	26.41	30SN42 Note 1	101.67	672	680	1008	928	No brake damage.
30	28	102	8.84	30SN09 Note 1	8.06	30SN17 Note 1	7.84	30SN14 Note 1	9.06	30SN18 Note 1	33.80	752	680	664	792	No brake damage.
31	34	104	7.15	30SN06 Note 1 Minor damage	7.40	30SN07 Note 1	7.16	30SN21 Note 1	6.70	30SN44 Note 1 Minor damage	28.41	720	736	672	768	
32	33	103	33.44	30SN08 Note 1 Damage	30.96	30SN16 Note 1 Damage	34.47	30SN35 Note 1	34.29	30SN34 Note 1	133.16	1200	1116	1097	1060	Rotor cracking and beryllium carbide found on LH brakes. RH brakes fully instrumented.

*Part Number/Serial Number
Note 1: MC621-0051-00XX S/N 971530000XX
Note 2: MC621-0051-00XX S/N 039530000XX
**Including subsequent flights.

Source: JSC/ES6 Mechanical Systems and Design Branch Inhouse Mission Reports

SHUTTLE FLIGHT HISTORIES
CALCULATED BRAKE ENERGIES/PRESSURES AND BRAKE PART/SERIAL NUMBERS

Miss. Seq. No.	STS-No.	Orb. OV-	Gross Brake Energies, Million ft-lb and Serial Numbers									Maximum Pressures, psia				Remarks
			Left Hand				Right Hand				Total	Left Hand		Right Hand		
			Outboard		Inboard		Inboard		Outboard			Outbd	Inbd	Inbd	Outbd	
			Energy	*PN/SN	Energy	*PN/SN	Energy	*PN/SN	Energy	*PN/SN						
33	32	102	39.42	30SN22 Note 1	36.84	30SN24 Note 1 Damage	26.44	30SN39 Note 1	31.28	30SN42 Note 1	133.99	1184	1088	856	968	Beryllium carbide found on all LHIB brakes rotors
34	36	104	6.41	30SN37 Note 1	7.49	30SN38 Note 1	8.43	30SN41 Note 1	6.68	30SN49 Note 1	29.00	632	680	664	640	No brake damage.
35	31	103	15.80	01SN29 Note 3	20.16	01SN26 Note 3	22.86	01SN24 Note 3	26.07	01SN25 Note 3	84.89	793	833	1031	952	No brake damage. Brakes fully instrumented. First carbon brake flight.
36	41	103	30.27	01SN29 Note 3	28.21	01SN26 Note 3	26.98	01SN24 Note 3	28.67	01SN25 Note 3	114.13	1189	1242	1480	1388	No brake damage. Brakes fully instrumented. Second carbon brake flight. (DTO 519)
37	38	104	23.32	30SN06 Note 1	22.24	30SN07 Note 1	30.18	30SN44 Note 1	29.48	30SN21 Note 1	105.22	760	736	1008	984	No brake damage.
38	35	102	34.11	30SN09 Note 1	32.71	30SN18 Note 1	31.42	30SN14 Note 1	34.49	30SN17 Note 1	132.73	1240	1120	1272	1376	

* Part Number/Serial Number
Note 1: MC621-0051-00XX S/N 971530000XX
Note 2: MC621-0051-00XX S/N 039530000XX
Note 3: MC621-0075-00XX S/N 971530000XX
** Including subsequent flights

Source: JSC/ES6 Mechanical Systems and Design Branch In-house Mission Reports

SHUTTLE FLIGHT HISTORIES
LANDING AND FERRY

Miss. Seq. No.	STS-No.	Orb. OV-	Planned/ Actual Landing Site	Landing Times, G.m.t. Main Gear Nose Gear Wheels Stop	Runway Data Nomen.	Runway Data Type	Winds True Dir., Deg. Speed, kts.	Ferry Flight Data Prep. Time, d:h:m	Ferry Flight Data Actual Departure Date/Time	Ferry Flight Data Actual Landing Date/Time	Ferry Flight Data Stops Over Night	Ferry Flight Data Stops Fuel	Remarks
1	1	102	EAFB	104:18:20:36 104:18:20:47 104:18:21:36	23	Dry lake bed	0° at 0 kts (Calm)	12:22:54	04/27/81 10:16 pdt	04/28/81 11:00 edt	1		
2	2	102	EAFB	318:21:23:13 318:21:23:26 318:21:24:03	23	Dry lake bed	220° at 8 kts	10:01:04	11/24/81 14:28 pst	11/25/81 13:19 est	1		
3	3	102	EAFB/ WSSH,NM.	89:16:04:45 89:16:05:00 89:16:06:09	17	Gyp-sum lake bed	220° at 13 kts	06:21:54	04/06/82 07:00 mst	04/06/82 16:00 est		1	EAFB lakebed wet, resulted in landing at WSSH, NM.
4	4	102	EAFB	185:16:09:40 185:16:09:53 185:16:10:44	22	Con-crete	240° at 12 kts	09:22:36	07:14:82 07:46 pdt	07/15/82 10:30 edt	1		
5	5	102	EAFB	320:14:33:26 320:14:33:34 320:14:34:29	22	Con-crete	12° at 2 kts	05:00:56	11/21/82 07:30 pst	11/22/82 12:16 est	1		
6	6	099	EAFB	99:18:53:42 99:18:53:54 99:18:54:31	22	Con-crete	210° at 18 kts	04:19:06	04/14/83 06:00 pst	04/16/83 12:45 est	2		
7	7	099	KSC/ EAFB	175:13:56:59 175:13:57:19 175:13:58:14	15	Dry lake bed	190° at 7 kts	05:03:32	06/28/83 10:30 pdt	06/29/83 10:20 edt	1		Poor visibility at KSC resulted in landing at EAFB.
8	8	099	EAFB	248:07:40:43 248:07:40:50 248:07:41:33	22	Con-crete	210° at 6 kts	04:05:41	09/09/83 06:22 pdt	09/09/83 19:00 edt		1	First night landing.
9	9	102	EAFB	342:23:47:24 342:23:47:38 342:23:48:17	17L	Dry lake bed	10° at 3 kts	05:17:07	12/14/83 08:55 pst	12/15/83 14:53 est	1	2	
10	41B	099	KSC	042:12:15:55 042:12:16:06 042:12:16:59	15	Con-crete	10° at 3 kts	N/A	N/A	N/A	N/A	N/A	Wind shift caused change from RW 33 to 15.
11	41C	099	KSC EAFB	104:13:38:07 104:13:38:23 104:13:38:55	17L	Dry lake bed	0° at 0 kts (Calm)	04:00:08	04/14/84 05:47 pst	04/18/84 10:08 est	1		Storms at KSC resulted in landing at EAFB.

Source: JSC/ZS8, NOAA Spaceflight Meteorology Group and JSC/ES6, Mechanical Systems and Design Branch, Inhouse Mission Reports

SHUTTLE FLIGHT HISTORIES
LANDING AND FERRY

Miss. Seq. No.	STS-No.	Orb. OV-	Planned/ Actual Landing Site	Landing Times, G.m.t. Main Gear Nose Gear Wheels Stop	Runway Data Nomen.	Runway Data Type	Winds True Dir., Deg. Speed, kts.	Ferry Flight Data Prep. Time, d:h:m	Ferry Flight Data Actual Departure Date/Time	Ferry Flight Data Actual Landing Date/Time	Stops Over Night	Stops Fuel	Remarks
12	41D	103	EAFB	249:13:37:54 249:13:38:08 249:13:38:54	17L	Dry lake bed	220° at 4 kts	03:23:58	09/09/84 06:35 pst	09/10/84 11:45 est		1	Stopped O/N at Altus AFB, OK for refueling and to wait for weather to clear at KSC.
13	41G	099	KSC	287:16:26:38 287:16:26:47 287:16:27:32	33	Con-crete	320° at 8 kts	N/A	N/A	N/A	N/A	N/A	
14	51A	103	KSC	321:11:59:56 321:12:00:09 321:12:00:54	15	Con-crete	330° at 5 kts	N/A	N/A	N/A	N/A	N/A	
15	51C	103	KSC	027:21:23:23 027:21:23:35 027:21:24:13	15	Con-crete	160° at 8 kts	N/A	N/A	N/A	N/A	N/A	
16	51D	103	KSC	109:13:54:28 109:13:54:36 109:13:55:31	33	Con-crete	90° at 9 kts	N/A	N/A	N/A	N/A	N/A	
17	51B	099	EAFB	126:16:11:04 126:16:11:16 126:16:12:03	17L	Dry lake bed	210° at 5 kts	04:03:08	05/10/85 12:20 pdt	05/11/85 11:05 edt	1		Stopped at Kelly AFB, TX
18	51G	103	EAFB	175:13:11:52 175:13:12:05 175:13:12:34	23	Dry lake bed	160° at 11 kts	03:23:58	6/28/85 06:10 pdt	6/28/85 16:52 edt		1	Fuel stop at Bergstrom AFB, TX
19	51F	099	EAFB	218:19:45:26 218:19:45:35 218:19:46:21	23	Dry lake bed	220° at 10 kts	03:14:05	8/10/85 06:50 pdt	8/11/85 12:40 edt	1	2	Fuel stops at Davis-Monthan, AZ and Eglin AFB, FL, overnight stop at Kelly AFB, TX.
20	51I	103	EAFB	246:13:15:43 246:13:15:51 246:13:16:30	30	Dry lake bed	240° at 18 kts	04:00:14	9/7/85 06:30 pdt	9/8/85 11:30 edt	1		Overnight stop at Kelly AFB, TX
21	51J	104	EAFB	280:17:00:08 280:17:00:15 280:17:01:13	23	Dry lake bed	270° at 12 kts	03:20:55	10/11/85 06:55 pdt	10/11/85 18:10 edt		1	Fuel stop at Kelly AFB, TX

Source: JSC/ZS8, NOAA Spaceflight Meteorology Group and JSC/ES6, Mechanical Systems and Design Branch, Inhouse Mission Reports

SHUTTLE FLIGHT HISTORIES
LANDING AND FERRY

Miss. Seq. No.	STS-No.	Orb. OV-	Planned/ Actual Landing Site	Landing Times, G.m.t. Main Gear Nose Gear Wheels Stop	Runway Data Nomen.	Runway Data Type	Winds True Dir., Deg. Speed, kts	Ferry Flight Data Prep. Time, d:h:m	Ferry Flight Data Actual Departure Date/Time	Ferry Flight Data Actual Landing Date/Time	Ferry Flight Data Stops Over Night	Ferry Flight Data Stops Fuel	Remarks
22	61A	099	EAFB	310:17:44:51 310:17:44:59 310:17:45:40	17L	Dry lake bed	170° at 1 kt	03:20:34	11/10/85 06:50 pst	11/11/85 13:35 est	1	2	Fuel stops at Davis-Monthan, AZ and Tyndall AFB, FL. Overnight stop at Kelly AFB, TX.
23	61B	104	EAFB	337:21:33:49 337:21:34:00 337:21:35:07	22	Con-crete	10° at 5 kts	03:16:55	12/07/85 06:30 pst	12/07/85 17:15 est		1	Fuel stop at Kelly AFB, TX.
24	61C	102	KSC/ EAFB	018:13:58:51 018:13:59:07 018:13:59:50	22	Con-crete	260° at 1 kt	03:01:05	1/22/86 07:05 pst	1/23/86 14:20 est	1	2	Fuel stop at Davis-Monthan, AZ and Eglin AFB, FL. Overnight stop at Kelly AFB, TX
25	51L	099	N/A	N/A	N/A	N/A	N/A	N/A	N/A	N/A	N/A	N/A	
26	26	103	EAFB	277:16:37:11 277:16:37:18 277:16:37:57	17L	Dry lake-bed	10° at 2 kts	04:08:06	10/08/88 7:43 pst	10/08/88 19:03 est	N/A	1	Fuel stop at Kelly AFB, TX
27	27	104	EAFB	341:23:36:11 341:23:36:18 341:23:36:52	17L	Dry lake-bed	110° at 2 kts	04:22:49	12/11/88 15:24 pst	12/13/88 18:37 est	2	N/A	Fuel stop at Davis-Monthan, AZ and Kelly AFB, TX
28	29	103	EAFB	077:14:35:48 077:14:36:00 077:14:36:41	22	Con-crete	220° at 6 kts	05:04:25	3/23/89 11:00 pst	3/24/89 12:05 est	1	1	Fuel stop at Kelly AFB, TX
29	30	104	EAFB	128:19:43:26 128:19:43:38 128:19:44:30	22	Con-crete	280° at 8 kts with gusts to 16 kts Crosswinds DTO0805 completed	05:01:49	05/13/89 14:32 pdt	05/15/89 20:09 edt	2	3	Ft Biggs, El Paso, Tx, for overnight DFW Dallas, TX - Fuel Warner Robins AFB, Macon, GA - Fuel

Source: JSC/ZS8, NOAA Spaceflight Meteorology Group and JSC/ES6, Mechanical Systems and Design Branch, Inhouse Mission Reports

SHUTTLE FLIGHT HISTORIES
LANDING AND FERRY

Miss. Seq. No.	STS-No.	Orb. OV-	Planned/ Actual Landing Site	Landing Times, G.m.t. Main Gear Nose Gear Wheels Stop	Runway Data Nomen.	Runway Data Type	Winds True Dir., Deg. Speed, kts	Ferry Flight Data Prep. Time, d:h:m	Ferry Flight Data Actual Departure Date/Time	Ferry Flight Data Actual Landing Date/Time	Ferry Flight Data Stops Over Night	Ferry Flight Data Stops Fuel	Remarks
30	28	102	EAFB	225:13:37:06 225:13:37:14 225:13:37:52	17L	Dry lake bed	160° at 6 kts	07:00:23	08/20/89 06:37 pdt	08/21/89 07:00 edt	1	1	Fuel stop at Kelly AFB, TX. Overnight at Warner Robbins AFB, GA.
31	34	104	EAFB	296:16:33:00 296:16:33:11 296:16:34:01	23	Dry lake bed	170° at 4 kts	04:21:30	10/29/89 07:05 pdt	10/30/89 17:05 est	1	1	Ft Biggs, El Paso, TX., for overnight Columbus AFB, Miss., for fuel.
32	33	103	EAFB	332:00:30:16 332:00:30:26 332:00:31:02	04	Con-crete	70° at 8 kts, gusts to 19 kts	06:09:53	12/03/89 06:37 pst	12/04/89 10:20 est	1	1	Fuel stop at Kelly AFB, TX. Overnight at Eglin AFB, FL.
33	32	102	EAFB	020:09:35:36 020:09:35:51 020:09:36:38	22	Con-crete	300° at 4 kts, gusts to 5 kts	04:21:55	01/25/90 07:30 pst	01/26/90 15:29 est	1	1	Overnight and fuel stop at Kelly AFB, TX.
34	36	104	EAFB	063:18:08:44 063:18:08:55 063:18:09:37	23	Dry lake-bed	260° at 16 kts, gusts to 18 kts	07:08:53	03/11/90 08:53 pst	03/13/90 12:50 est	2	1	Overnight (2) and fuel stop at Columbus AFB, GA Weather delay
35	31	103	EAFB	119:13:49:57 119:13:50:09 119:13:50:58	22	Con-crete	180° at 7 kts, gusts to 10 kts	07:07:44	05/05/90 07:44 pst	05/07/90 11:22 edt	2	2	Shepherd AFB, TX., and Warner Rollins AFB, GA - Overnight and fuel.
36	41	103	EAFB	283:13:57:18.8 283:13:57:31.2 283:13:58:08.0	22	Con-crete	279° at 3 kts.	05:00:57	10/15/90 6:45 a.m. p.d.t.	10/16/90 3:59 p.m. e.d.t.	1	2	Fuel - Shepard AFB and Kelly AFB TX., RON at Eglin AFB, FL.

Source: JSC/ZS8, NOAA Spaceflight Meteorology Group and JSC/ES6, Mechanical Systems and Design Branch, Inhouse Mission Reports

SHUTTLE FLIGHT HISTORIES
LANDING AND FERRY

Miss. Seq. No.	STS-No.	Orb. OV-	Planned/ Actual Landing Site	Landing Times, G.m.t. Main Gear Nose Gear Wheels Stop	Runway Data Nomen.	Runway Data Type	Winds True Dir., Deg. Speed, kts	Ferry Flight Data Prep. Time, d:h:m	Ferry Flight Data Actual Departure Date/Time	Ferry Flight Data Actual Landing Date/Time	Ferry Flight Data Stops Over Night	Ferry Flight Data Stops Fuel	Remarks
37	38	104	EAFB/ KSC	324:21:42:42.2 324:21:42:52.2 324:21:43:38.5	33	Con-crete	20° at 5 kts, gusts to 7 kts	N/A	N/A	11/20/90 4:45 p.m. e.s.t.	N/A	N/A	STS-38 landed at KSC. No ferry flight required.
38	35	102	EAFB	345:05:54:08.5 345:05:54:20.3 345:05:55:06.2	22	Con-crete	14° at 1 kt gusts to 2 kts	07:14:54	12/18/90 7:00 a.m. p.s.t.	12/20/90 1:01 p.m. e.s.t.	2	3	Refuel at Biggs AFB and Kelly AFB; RON Kelly AFB. Refuel and RON at Barksdale AFB, LA

Source: JSC/ZS8, NOAA Spaceflight Meteorology Group and JSC/ES6, Mechanical Systems and Design Branch, Inhouse Mission Reports

SHUTTLE FLIGHT HISTORIES
ORBITER MASS PROPERTIES

Miss. Seq. No.	STS-No.	Orb. OV-	Lift-off Weight, lb			Pre-Deorbit burn Weight, lb			Entry Interface Weight, lb			Mach 3 Weight, lb			Landing Weight, lb			Ferry Weight, lb		
			CG X	Y	Z	CG X	Y	Z	CG X	Y	Z	CG X	Y	Z	CG X	Y	Z	CG X	Y	Z
1	1	102	219,440.7			202,769.9			196,868.7			195,942.7			195,472.7			197,023		
			1125.2	0.2	379.7	1108.4	0.1	376.1	1099.0	0.2	373.1	1096.8	0.2	372.4	1098.1	0.2	369.6	1120.0	0.3	371.5
2	2	102	230,938.9			215,530.2			206,842.5			204,355.5			204,262.5			206,455.0		
			1120.6	0.1	379.8	1106.1	0.3	377.1	1100.5	0.2	373.8	1096.5	0.2	372.3	1098.1	0.2	369.8	1116.1	0.1	372.8
3	3	102	235,556.1			214,949.6			208,790.2			207,349.2			207,072.9			211,200		
			1119.2	-0.4	379.4	1106.3	-0.5	376.1	1097.9	-0.5	373.3	1095.4	-0.4	372.4	1096.9	-0.4	369.8	1117.6	-0.3	373.5
4	4	102	241,772.0			218,163.6			211,184.0			209,140.5			208,946.8			214,526		
			1122.2	-0.3	381.8	1106.6	-0.5	377.7	1096.2	-0.5	374.5	1092.9	-0.5	373.3	1094.4	-0.5	370.7	1112.2	-0.3	374.2
5	5	102	247,112.9			209,890.1			203,775.9			202,642.7			202,480.3			205,727		
			1116.3	1.1	379.6	1105.0	-1.0	374.5	1096.6	1.0	371.6	1094.8	1.0	371.0	1096.3	1.0	368.3	1118.4	1.0	371.9
6	6	099	256,928.1			197,427.8			191,384.2			190,627.2			190,330.2			191,966		
			1127.8	0.5	382.9	1111.2	0.3	374.5	1101.2	0.3	371.5	1099.6	0.3	370.9	1101.2	0.4	368.0	1130.5	0.4	371.8
7	7	099	249,362.7			211,737.0			204,983.4			204,340.4			204,043.4			204,576		
			1123.6	-0.2	381.0	1102.0	-0.6	376.2	1091.3	-0.6	373.1	1089.8	-0.6	372.5	1091.2	-0.6	369.8	1118.5	-0.6	373.4
8	8	099	242,912.3			212,911.0			205,243.4			204,141.4			203,945.4			205,874		
			1124.5	-0.2	382.0	1098.3	-0.1	376.7	1092.5	-0.1	373.8	1090.3	-0.1	373.0	1091.9	-0.1	370.4	1118.8	-0.2	374.0
9	9	102	247,807.3			227,648.0			221,143.4			220,288.4			220,027.4			219,910		
			1109.7	-0.1	379.0	1096.9	-0.0	376.6	1087.3	-0.1	373.7	1085.8	-0.1	373.2	1087.1	-0.1	370.7	1114.3	0.0	374.1
10	10	099	250,482.7			209,746.1			202,966.5			201,528.5			201,238.5			N/A - KSC Landing		
			1124.5	0.3	381.5	1101.4	1.2	375.8	1090.7	1.3	372.6	1087.9	1.3	371.5	1089.3	1.3	368.8			

Source: JSC/VF Orbiter Mass Properties Summary, STS-1 and subsequent missions.

SHUTTLE FLIGHT HISTORIES
ORBITER MASS PROPERTIES

Miss. Seq. No.	STS-No.	Orb. OV-	Lift-off Weight, lb			Pre-Deorbit burn Weight, lb			Entry Interface Weight, lb			Mach 3 Weight, lb			Landing Weight, lb			Ferry Weight, lb		
			CG X	Y	Z	CG X	Y	Z	CG X	Y	Z	CG X	Y	Z	CG X	Y	Z	CG X	Y	Z
11	41C	099	254.554.7			208,206.4			198,072.8			197,169.8			196,975.8			198,830		
			1113.4	0.2	383.4	1117.3	-0.1	376.5	1101.8	-0.1	371.6	1100.0	-0.1	371.0	1101.6	-0.1	368.2	1130.1	-0.1	372.0
12	41D	103	263,477.4			211,075.1			203,382.5			202,316.5			201,674.5			202,366		
			1118.0	0.0	382.8	1100.1	-0.1	376.6	1093.4	-0.2	373.5	1090.8	-0.1	372.5	1091.7	-0.2	369.6	1121.4	-0.2	373.4
13	41G	099	242,790.8			209,799.7			203,651.1			202,829.1			202,266.1			N/A KSC Landing		
			1119.0	-0.1	381.7	1093.5	-0.2	374.6	1085.4	-0.2	371.9	1083.7	-0.2	371.3	1084.8	-0.1	368.4			
14	51A	103	263,324.6			215,715.3			209,163.7			207,982.7			207,505.7			N/A KSC Landing		
			1120.9	-0.1	382.6	1090.2	-0.2	375.2	1083.4	-0.2	372.5	1081.4	-0.2	371.8	1082.6	-0.1	369.1			
15	51C	103	NA/DOD			NA/DOD			NA/DOD			NA/DOD			NA/DOD			N/A KSC Landing		
16	51D	103	250,891.6			209,102.8			199,742.2			198,167.2			198,014.2			N/A KSC Landing		
			1126.5	-0.1	381.7	1110.6	-0.2	377.0	1095.8	-0.1	372.5	1092.7	-0.1	371.3	1094.3	-0.1	368.6			
17	51B	099	247,291.3			226,859.0			214,787.4			213,795.4			213,499.4			213,363		
			1114.2	-0.2	381.4	1096.7	-0.3	378.0	1085.7	-0.3	373.4	1084.1	-0.3	372.8	1084.1	-0.3	372.8	1115.1	-0.2	373.6
18	51G	103	256,421.9			213,105.0			205,624.4			204,321.4			204,169.4			204,387		
			1109.6	0.2	379.6	1091.5	-0.2	375.2	1084.3	0.0	372.2	1082.1	0.0	371.4	1083.7	0.0	368.8	1114.1	0.0	372.7
19	51F	099	252,628.9			225,398.0			218,227.4			216,894.4			216,735.4			217,564.3		
			1111.6	-0.4	381.8	1091.1	-0.5	376.3	1082.3	-0.6	373.4	1079.8	-0.6	372.5	1081.3	-0.6	370.0	1109.3	-0.5	373.5
20	51I	103	262,309.7			207,794.8			197,824.4			196,856.4			196,674.4			197,259.3		
			1121.3	0.5	382.5	1110.0	0.2	376.7	1094.4	0.2	371.9	1092.4	0.3	371.2	1094.2	0.3	368.5	1124.8	0.3	372.5

NA/DOD = Not Available/Department of Defense Mission

Source: JSC/VF Orbiter Mass Properties Summary, STS-1 and subsequent missions.

SHUTTLE FLIGHT HISTORIES
ORBITER MASS PROPERTIES

Miss. Seq. No.	STS-No.	Orb. OV-	Lift-off Weight, lb				Pre-Deorbit burn Weight, lb				Entry Interface Weight, lb				Mach 3 Weight, lb				Landing Weight, lb				Ferry Weight, lb			
			CG	X	Y	Z	CG	X	Y	Z	CG	X	Y	Z	CG	X	Y	Z	CG	X	Y	Z	CG	X	Y	Z
21	51J	104	NA/DOD				NA/DOD				NA/DOD				NA/DOD				NA/DOD				191,623			
22	61A	099	243,762.5				223,317.8				215,255.4				214,325.4				214,171.4				214,138.3			
			1109.0	-0.1	380.4		1091.8	-0.4	377.1		1085.5	-0.4	374.2		1083.8	-0.4	373.6		1085.2	-0.4	371.1		1116.3	-0.3	374.8	
23	61B	104	261,610.1				213,335.8				[illegible]				205,880.4				205,732.4				205,682.3			
			1110.3	-0.0	379.3		1096.9	-0.1	375.3		1085.[illegible]	[illegible]	[illegible]	372.0	1084.4	-0.1	371.5		1085.9	-0.1	368.9		1117.8	-0.1	372.8	
24	61C	102	256,003.0				221,485.8				211,194.4				210,325.4				210,161.4				210,430			
			1110.3	0.4	380.3		1096.1	0.4	375.7		1085.2	0.4	371.4		1083.6	0.4	370.9		1085.1	0.4	368.3		1115.0	0.5	372.1	
25	51L	099	268,829.6				N/A				N/A				N/A				N/A				N/A			
			1119.1	-0.2	384.0																					
26	26	103	254,606.5				202,676.3				194,985.3				194,347.3				194,184.3				193,936			
			1118.4	0.3	380.6		1104.7	0.1	374.6		1097.9	0.2	371.4		1096.6	0.2	371.0		1098.3	0.2	368.2		1131.9	-0.1	372.1	
27	27	104	NA/DOD				NA/DOD				NA/DOD				NA/DOD				190,956				191,337.7			
																			1095.1	-0.9	366.8		1127.1	-0.9	370.8	
28	29	103	256,357.6				202,517.6				195,531.6				194,939.6				194,789.6				194,710			
			1116.4	0.6	380.8		1104.1	0.5	374.6		1095.1	0.5	371.4		1093.7	0.5	370.9		1095.3	0.5	368.1		1127.9	0.3	372.2	
29	30	104	261,118.9				201,074.6				193,349.6				192,557.6				192,459.6				193,031			
			1123.4	0.5	382.6		1106.8	0.4	374.5		1098.7	0.4	371.1		1097.3	0.4	370.6		1099.1	0.4	367.8		1132.1	0.2	371.9	

NA/DOD = Not Available/Department of Defense Mission

Source: JSC/VF Orbiter Mass Properties Summary, STS-1 and subsequent.

SHUTTLE FLIGHT HISTORIES
ORBITER MASS PROPERTIES

Miss. Seq. No.	STS-No.	Orb. OV-	Lift-off Weight, lb			Pre-Deorbit burn Weight, lb			Entry Interface Weight, lb			Mach 3 Weight, lb			Landing Weight, lb			Ferry Weight, lb		
			CG X	Y	Z	CG X	Y	Z	CG X	Y	Z	CG X	Y	Z	CG X	Y	Z	CG X	Y	Z
30	28	102	NA/DOD			NA/DOD			NA/DOD			NA/DOD			200,214.2			200509.7		
															1089.4	-0.1	367.0	1120.5	-0.2	370.8
31	34	104	257,569.2			204,439.2			196,784.2			196,112.2			195,954.2			195,804		
			1114.2	0.4	380.8	1101.8	0.2	375.0	1094.5	0.3	371.7	1093.1	0.2	371.2	1094.7	0.3	368.5	1127.0	0.1	372.4
32	33	103	NA/DOD			NA/DOD			NA/DOD			NA/DOD			194,282.2			195242,7		
															1094.8	0.1	371.8	1124.7	0.1	371.8
33	32	102	255,994.0			241,970.2			229,892.2			228,523.2			228,335.2			227,868.7		
			1131.3	-0.9	381.4	1096.3	-0.9	378.6	1080.8	-0.9	373.8	1078.2	-0.9	372.9	1079.6	-0.9	370.5	1108.8	-0.8	373.8
34	36	104	NA/DOD			NA/DOD			NA/DOD			NA/DOD			187,200.2			187944.7		
															1096.4	0.2	366.9	1128.9	0.1	370.8
35	31	103	249,109.2			202,753.2			190,566.2			189,309.2			189,118.2			189,691.7		
			1114.8	-0.5	384.2	1107.2	-1.0	376.4	1090.0	-1.0	370.5	1087.9	-1.0	369.7	1089.7	-1.0	366.6	1124.5	-1.0	370.8
36	41	103	259,593.9			204,007.2			197,986.2			196,982.2			196,869.2			197,369.7		
			1115.2	-0.1	381.4	1100.4	-0.5	374.7	1090.4	-0.5	371.8	1089.4	-0.4	371.2	1091.2	-0.4	368.3	1123.5	-0.6	372.5
37	38	104	NA/DOD			NA/DOD			NA/DOD			NA/DOD			191,091.2			N/A KSC landing		
															1098.6	0.2	366.7			
38	35	102	256,447.6			235,528.2			225,968.2			224,841.2			224,693.2			223,824.7		
			1106.6	-0.5	378.1	1092.5	-0.5	375.3	1081.6	-0.5	371.5	1079.9	-0.5	370.9	1081.3	-0.5	368.5	1113.4	-0.4	371.9

NA/DOD = Not Available/Department of Defense Mission

Source: JSC/VF Orbiter Mass Properties Summary, STS-1 and subsequent.

SHUTTLE FLIGHT HISTORIES
AUXILIARY POWER UNITS

Miss. Seq. No.	STS-No.	Orb. OV-	APU-1 Part No. MC201-0001-					APU-2 Part No. MC201-0001-					APU-3 Part No. MC201-0001-					Notes
			Part Dash No.	S/N	Mission Run time, h:m:s	Cum. Run time, h:m:s[a]	Note	Part Dash No.	S/N	Mission Run time, h:m:s	Cum. Run time, h:m:s[a]	Note	Part Dash No.	S/N	Mission Run time, h:m:s	Cum. Run time, h:m:s[a]	Note	
1	1	102	0061	203	1:01:00	1:01:00		0071	207	1:23:00	1:23:00	1.	0061	208	1:23:00	1:23:00		1. Removed - Argon leak in G.G. heater core caused heater to fail.
2	2	102	0071	203	1:27:00	1:27:00	2.	0071	206	1:31:00	1:31:00		0071	208	1:44:00	1:44:00	2.	2. Removed for wax buildup in lube oil filter during prelaunch.
3	3	102	0071	204	1:35:49	1:35:49		0071	206	1:21:32	2:52:32		0071	208	1:25:15	3:09:15		3. Removed - High lube oil pressure due to wax buildup in filter.
4	4	102	0071	204	1:28:00	3:03:49		0071	206	1:45:00	4:37:32		0071	208	1:22:00	4:31:15	3.	4. Removed - Underspeed shutdown on-orbit - Valve contamination.
5	5	102	0071	204	1:27:00	4:30:49		0071	206	1:22:00	5:59:32		0071	205	1:40:00	1:40:00		
6	6	099	0121	303	1:37:00	1:37:00		0121	301	1:22:00	1:22:00		0121	302	1:17:00	1:17:00		5. Failed - cracked injector tube - stress corrosion.
7	7	099	0121	303	1:35:00	3:12:00		0121	301	1:13:00	2:35:00		0121	302	1:30:00	2:47:00	4.	
8	8	099	0121	303	1:31:00	4:43:00		0121	301	1:16:00	3:51:00		0131	203	1:24:00	1:24:00		6. Removed for failure investigation.
9	9	102	0071	204	1:21:46	5:52:35	5.	0071	206	1:10:41	7:10:13	5.	0071	205	1:15:15	2:55:15	6.	7. Removed for stem inspection, refer to STS-9 problem.
10	41B	099	0131	304	1:23:00	1:23:00	7.	0131	306	1:39:00	1:39:00	7.	0131	305	1:18:00	1:18:00	7.	
11	41C	099	0161	203	1:44:00	1:44:00		0161	301	1:16:00	1:16:00		0161	208	1:13:00	5:44:15		
12	41D	103	0161	303	1:25:31	1:25:31		0161	304	1:29:03	1:29:03		0161	305	1:48:13	1:48:13		
13	41G	099	0161	203	1:13:38	2:57:38		0161	301	1:29:48	2:45:48		0161	208	1:16:47	7:01:02		
14	51A	103	0161	303	1:23:21	2:48:52		0161	304	1:55:58	3:25:01		0161	305	1:23:18	3:11:31		
15	51C	103	0161	303	1:25:27	4:14:19		0161	304	1:30:52	4:55:53		0161	305	1:53:43	5:05:14		
16	51D	103	0161	303	1:19:02	5:33:21		0161	304	1:58:44	6:54:37		0161	305	1:19:03	6:24:17		

[a] Cumulative run time includes ground operating time for various tests.

Source: JSC/EP2 Systems Branch, In-house Mission Report

SHUTTLE FLIGHT HISTORIES
AUXILIARY POWER UNITS

Miss. Seq. No.	STS-No.	Orb. OV-	APU-1 Part No. MC201-0001-					APU-2 Part No. MC201-0001-					APU-3 Part No. MC201-0001-					Notes
			Part Dash No.	S/N	Mission Run time, h:m:s	Cum. Run time, h:m:s[a]	Note	Part Dash No.	S/N	Mission Run time, h:m:s	Cum. Run time, h:m:s[a]	Note	Part Dash No.	S/N	Mission Run time, h:m:s	Cum. Run time, h:m:s[a]	Note	
17	51B	099	0181	205	1:45:52	4:41:07	8.	0181	302	1:22:46	1:22:46	8.	0171	207	1:14:48	1:14:48	8.	8. Replace because of injector tube life factor.
18	51G	103	0161	303	1:45:49	7:19:10		0161	304	1:19:58	8:14:35		0161	305	1:28:39	7:52:56	9.	9. APU 3 had high load on shutdown.
19	51F	099	0181	205	0:06:31 0:44:25	5:32:03	10. 11.	0181	302	0:06:28 1:21:29	2:50:43	10.	0171	207	0:06:26 1:40:08	3:01:22	10.	10. Launch abort times.
20	51I	103	0161	303	1:15:26	8:34:36		0161	304	1:45:19	9:59:54		0161	305	1:09:04	10:02:00		11. APU 1 gear box and outlet pressure high during ascent restricted use.
21	51J	104	0161	306	1:47:48	3:26:48	12.	0201	307	1:20:37	1:20:37		0201	308	1:20:42	1:20:42		12. S/N 306 flew on STS 41B.
22	61A	099	0181	205	1:29:20	7:01:23		0181	302	1:50:06	4:40:49		0171	207	1:25:16	4:26:38		
23	61B	104	0161	306	1:13:38	4:40:26		0201	307	1:42:06	3:02:43		0201	308	1:17:21	2:38:03		
24	61C	102	0201	301	1:51:30	4:37:18		0201	203	1:17:46	4:15:24		0201	310	1:21:49	1:21:49		
25	51L	099	0181	205	0:06:13	7:07:36		0181	302	0:06:13	4:47:02		0171	207	0:06:13	4:32:51		
26	26	103	0211	305	1:41:00	14:10:04		0201	312	1:21:18	4:06:18		0201	310	1:17:06	7:47:06		
27	27	104	0201	307	1:45:27	8:33:44		0201	303	1:17:34	17:01:34		0211	207	1:23:34	7:25:20		
28	29	103	0211	305	1:48:50	15:58:54		0201	312	1:28:02	5:34:20		0201	310	1:22:50	9:09:56		
29	30	104	0201	307	0:06:07 1:23:45	10:03:36	13.	0201	303	0:06:06 1:16:34	18:24:14	13.	0211	207	0:06:05 1:44:49	9:16:14	13.	13. Launch scrub times.
30	28	102	0201	311	1:42:00	6:23:00		0221	308	1:16:48	5:59:50		0221	304	1:16:48	13:26:41		
31	34	104	0201	307	0:33:24	10:37:00	14.	0201	303	1:43:01	20:27:15		0211	207	1:26:11	10:42:25		14. 0:25:58 high speed run time

[a] Cumulative run time includes ground operating time for various tests.

Source: JSC/EP2 Systems Branch, In-house Mission Report

SHUTTLE FLIGHT HISTORIES
AUXILIARY POWER UNITS

Miss. Seq. No.	STS-No.	Orb. OV-	APU-1 Part No. MC201-0001-					APU-2 Part No. MC201-0001-					APU-3 Part No. MC201-0001-					Notes
			Part Dash No.	S/N	Mission Run time, h:m:s	Cum. Run time, h:m:s[a]	Note	Part Dash No.	S/N	Mission Run time, h:m:s	Cum. Run time, h:m:s[a]	Note	Part Dash No.	S/N	Mission Run time, h:m:s	Cum. Run time, h:m:s[a]	Note	
32	33	103	0211	305	2:02:02	18:00:56		0201	312	1:28:31	7:02:51		0201	310	1:20:59	10:30:55		
33	32	102	0201	311	1:26:57	7:49:57		0221	308	1:46:46	7:16:36		0221	304	1:20:40	14:47:21		
34	36	104	0201	307	1:04:01	11:41:01		0201	303	1:24:31	21:31:46		0211	207	1:36:08	12:18:33		
35	31	103	0311	305 203	0:05:12 1:53:57	18:06:08 11:14:58	15 16	0201	312	1:25:41	8:28:32	15	0201	310	1:20:03	11:50:58	15	15. APU's ran 0:05:12 during 4-10-90 launch scrub. 16. APU S/N 305 was removed following 4-10-90 launch scrub and was replaced with APU S/N 203. APU S/N 305 ran in high speed for 2 min. 30 sec. during launch scrub.
36	41	103	0311	203	1:39:17	12:54:15		0301	301	1:29:57	7:28:25		0301	304	1:20:41	16:07:47		
37	38	104	0251	305	1:35:55	20:23:59	17	0271	208	1:19:21	13:30:23		0201	311	1:22:44	9:20:13		17. APU S/N 305 0:00:38 during 11-23-90 entry scrub
38	35	102	0311	310	1:43:57	15:00:06		0221	308	1:23:15	13:14:13		0241	306	1:17:21	7:18:58		

[a] Cumulative run time includes ground operating time for various tests.

Source: JSC/EP2 Systems Branch, In-house Mission Report

SHUTTLE HISTORIES
APU SERIAL NUMBER/PART NUMBER MATRIX

Miss. Seq. No.	STS-No.	Orb. OV-	SERIAL NUMBERS													
			203	204	205	206	207	208	301	302	303	304	305	306	307	308
1	1	102	0061				0071	0061								
2	2	102	0071			0071		0071								
3	3	102		0071		0071		0071								
4	4	102		0071		0071		0071								
5	5	102		0071	0071	0071										
6	6	099							0121	0121	0121					
7	7	099							0121	0121	0121					
8	8	099	0131						0121		0121					
9	9	102		0071	0071	0071										
10	41B	099										0131	0131	0131		
11	41C	099	0161					0161	0161							
12	41D	103									0161	0161	0161			
13	41G	099	0161					0161	0161							
14	51A	103									0161	0161	0161			
15	51C	103									0161	0161	0161			

SHUTTLE HISTORIES
APU SERIAL NUMBER/PART NUMBER MATRIX

Miss. Seq. No.	STS-No.	Orb. OV-	SERIAL NUMBERS																	
			203	204	205	206	207	208	301	302	303	304	305	306	307	308	309	310	311	312
16	51D	103									0161	0161	0161							
17	51B	099			0181		0171			0181										
18	51G	103									0161	0161	0161							
19	51F	099			0181		0171			0181										
20	51I	103									0161	0161	0161							
21	51J	104												0161	0201	0201				
22	61A	099			0181		0171			0181										
23	61B	104												0161	0201	0201				
24	61C	102	0201						0201									0201		
25	51L	099			0181		0171			0181										
26	26	103											0211					0201		0201
27	27	104					0211				0201				0201					
28	29	103											0211					0201		0201
29	30	104					0211				0201				0201					

SHUTTLE HISTORIES
APU SERIAL NUMBER/PART NUMBER MATRIX

Miss. Seq. No.	STS-No.	Orb. OV-	SERIAL NUMBERS																	
			203	204	205	206	207	208	301	302	303	304	305	306	307	308	309	310	311	312
30	28	102										0221				0221			0201	
31	34	104					0211				0201				0201					
32	33	103											0211					0201		0201
33	32	102										0221				0221			0201	
34	36	104					0211				0201				0201					
35	31	103	0311															0201		0201
36	41	103	0311						0301			0301								
37	38	104						0271					0251						0201	
38	35	102												0241		0221		0311		

SHUTTLE FLIGHT HISTORIES
FUEL CELLS

Miss. Seq. No.	STS-No.	Orb. OV-	FC-1 MC464-0115-XXXX			FC-2 MC464-0115-XXXX			FC-3 MC464-0115-XXXX			Avg. Elect. Power, kW	Total Elect. Energy, kWh	Average Da.Elect. Energy, kWh	Remarks
			Mdl. Dash No.	S/N P760	Run Time Flight/Cum., hr:min [a]	Mdl. Dash No.	S/N P760	Run Time Flight/Cum., hr:min [a]	Mdl. Dash No.	S/N P760	Run Time Flight/Cum., hr:min [a]				
1	1	102	0003	106	145:50/ 214:05	0004	107	145:09/ 211:17	0004	108	144:58/ 208:00	15.8	857	379	
2	2	102	0008	101	11:26/ 110:42	0007	102	89:12/ 189:35	0007	103	88:53/ 104:25	15.2	813	365	FC1 failed, aspirator blockage caused cell flooding.
3	3	102	0005	106	224:59/ 459:08	0007	102	223:50/ 417:25	0007	103	224:12/ 403:43	15.0	2865	360	
4	4	102	0005	106	215:28/ 674:36	0007	102	214:32/ 631:49	0007	103	214:32/ 618:05	15.3	2567	367	
5	5	102	0008	101	136:13/ 253:49	0007	102	135:54/ 768:16	0007	103	135:32/ 754:04	15.4	1881	369	
6	6	099	0008	109	158:00/ 173:34	1004	107	156:42/ 385:42	0007	111	159:00/ 173:03	13.3	1599	320	
7	7	099	0008	109	156:51/ 330:43	1004	107	156:28/ 542:10	0007	111	157:07/ 330:10	13.2	1932	317	
8	8	099	0008	109	177:07/ 507:41	1004	107	176:17/ 718:27	0007	111	176:08/ 506:18	14.1	2053	339	
9	9	102	3001	104	284:28/ 298:24	3000	115	283:20/ 301:28	3000	116	283:13/ 295:48	17.5	4215	408	
10	41B	099	3001	114	217:35/ 255:17	3000	112	216:59/ 249:56	3000	113	216:34/ 241:57	14.7	2811	353	
11	41C	099	3001	114	178:13/ 433:30	3000	112	177:38/ 427:34	3000	113	177:11/ 419:08	13.7	2303	330	
12	41D	103	3001	101	180:14/ 230:04	3000	102	179:25/ 228:10	3000	103	179:00/ 226:55	15.5	2240	371	FC-1 performance monitor failed.

[a] The cumulative run time includes ground operating time for various tests.

Source: JSC/EP5 Power Branch Inhouse Mission Reports; RIC, F/C Operataing Time/Cycle Records

SHUTTLE FLIGHT HISTORIES
FUEL CELLS

Miss. Seq. No.	STS-No.	Orb. OV-	FC-1 MC464-0115-XXXX Mdl. Dash No.	FC-1 S/N P760	FC-1 Run Time Flight/Cum., hr:min [a]	FC-2 MC464-0115-XXXX Mdl. Dash No.	FC-2 S/N P760	FC-2 Run Time Flight/Cum., hr:min [a]	FC-3 MC464-0115-XXXX Mdl. Dash No.	FC-3 S/N P760	FC-3 Run Time Flight/Cum., hr:min [a]	Avg. Elect. Power, kW	Total Elect. Energy, kWh	Average Da.Elect. Energy, kWh	Remarks
13	41G	099	3001	114	214:42/ 648:12	3000	110	214:07/ 214:07	3000	113	213:42/ 632:50	14.6	2882	350	FC-2 S/N 110 replaced S/N 112, suspected coolant loop leakage.
14	51A	103	3001	101	240:25/ 470:29	3000	102	239:50/ 468:00	3000	103	239:24/ 466:19	14.0	2700	338	
15	51C	103	3001	101	86:48/ 557:17	3000	102	86:04/ 550:04	3000	103	85:34/ 551:53	Data not available Department of Defense Mission			
16	51D	103	3001	101	181:05/ 738:22	3000	102	180:11/ 734:15	3000	103	179:31/ 731:24	15.0	2515	359	FC2 S/N 102 replaced post flight with S/N 111 due to leak through O_2 purge port.
17	51B	099	3001	114	199:55/ 848:07	3000	110	198:53/ 413:00	3000	113	198:25/ 831:15	18.1	3046	435	
18	51G	103	3001	101	203:46/ 942:08	3000	108	203:09/ 203:09	3000	103	202:39/ 934:03	14.0	2369	335	
19	51F	099	3001	114	*14:20/ 862:27 223:47/ 1086:14	3000	112	*13:48/ 454:55 223:34/ 678:29	3000	113	*13:16/ 844:31 222:13/1066:44	17.0	3249	409	*Launch abort times. FC2 S/N 112 replaced S/N 110.
20	51I	103	3001	101	280:04/1222:12	3000	108	270:23/ 473:32	3000	103	278:24/1212:27	13.1	2233	315	
21	51J	104	3001	106	*12:47/ 12:47 129:31/ 142:18	3000	111	*11:10/11:10 128:06/139:16	3000	107	*0:05/06:48 127:52/134:40	Data not available Department of Defense Mission		*FRF	*FRF

[a] The cumulative run time includes ground operating time for various tests.

Source: JSC/EP5 Power Branch Inhouse Mission Reports, RIC, F/C Operating Time Cycle Records

SHUTTLE FLIGHT HISTORIES
FUEL CELLS

Miss. Seq. No.	STS-No.	Orb. OV-	FC-1 MC464-0115-XXXX Mdl. Dash No.	FC-1 S/N P760	FC-1 Run Time Flight/Cum. hr:min [a]	FC-2 MC464-0115-XXXX Mdl. Dash No.	FC-2 S/N P760	FC-2 Run Time Flight/Cum., hr:min [a]	FC-3 MC464-0115-XXXX Mdl. Dash No.	FC-3 S/N P760	FC-3 Run Time Flight/Cum., hr:min [a]	Avg. Elect. Power, kW	Total Elect. Energy, kWh	Average Da.Elect. Energy, kWh	Remarks
22	61A	099	3001	109	*205:58/205:58	3000	112	205:12/882:41	3000	102	204:47/952:39	17.9	3030	431	*Flew on STS-8 as 2 stack FC. Rebuilt as 3 stack. Condenser exit temperature instability during prelaunch replaced postflight.
23	61B	104	3001	106	192:23/ 334:41	3000	111	191:14/330:30	3000	107	190:46/325:26	14.1	2328	339	
24	61C	102	3001	104	*37:14/355:24 312:57/668:21	3000	115	*36:44/364:03 312:21/676:24	3000	116	*36:21/350:56 311:41/662:37	15.4	2249	370	*Launch abort times.
25	51L	099	3001	101	59:30/1281:42	3000	112	58:46/941:27	3000	102	58:12/1010:51	N/A	N/A	N/A	Flight times includes prelaunch runs for 2 launch attempts.
26	26	103	3001	104	142:53/1030:46	3020	122	141:37/348:45	3000	115	141:11/1043:44	13.6	1318	326	
27	27	104	3021	120	187:47/187:47	3020	118	186:18/193:16	3020	121	185:59/185:59	Data not available Department of Defense Mission			
28	29	103	3021	109	172:51/410:59	3020	122	170:40/519:25	3020	116	170:58/854:05	13.5	1613	323.7	
29	30	104	3021	120	139:00/347:59	3020	118	137:37/351:20	3020	121	137:03/342:41	14.1 (14.8)	1366 (296)	338.0	Flight times include prelaunch run for 1 launch attempt. Data in () are for unsuccessful launch attempt.
30	28	102	3021	117	159:59/173:51	3020	111	158:33/158:33	3020	113	158:11/158:11	14	1694	336.1	

[a] The cumulative run time includes ground operating time for various tests.

Source: JSC/EP5 Power Branch
Inhouse Mission Reports
RIC, F/C Operating Time/Cycle Records

SHUTTLE FLIGHT HISTORIES
FUEL CELLS

Miss. Seq. No.	STS-No.	Orb. OV-	FC-1 MC464-0115-XXXX			FC-2 MC464-0115-XXXX			FC-3 MC464-0115-XXXX			Avg. Elect. Power, kW	Total Elect. Energy, kWh	Average Da.Elect. Energy, kWh	Remarks
			Mdl. Dash No.	S/N P760	Run Time Flight/Cum. hr:min [a]	Mdl. Dash No.	S/N P760	Run Time Flight/Cum. hr:min [a]	Mdl. Dash No.	S/N P760	Run Time Flight/Cum. hr:min [a]				
31	34	104	3021	120	180:07/528:06	3020	118	178:42/530:02	3020	121	178:04/520:45	13.6	1621	325.6	
32	33	103	3021	109	164:11/575:10	3020	122	162:38/682:03	3020	116	162:10/1016:15	13.6	1643	328.3	
33	32	102	3021	117	333:03/506.54	3020	111	331:46/490:19	3020	113	331:06/439:17	13.7	3565	328.8	Fuel cell 1 flow-meter biased high
34	36	104	3021	120	313:27/841:33	3020	118	308.59/839:01	3020	121	312:17/833:02	13.8	1467	331.2	
35	31	103	3021	114	17:26/17:26* 173.17/190:43	3020	122	16:48/698:51* 173:20/872:11	3020	119	16:08/23:04* 173:11/195:15	14.4	1740	344.3	* Launch abort run times Fuel cell 2 high oxygen flow during purge
36	41	103	3021	114	143:51/334:34	3020	103	143:42/143:42	3020	119	143:19/339:34	15.3	1495	367.2	Fuel cell 1 hydrogen flowmeter indicated low constant flow rate of 0.17 lb/hr.
37	38	104	3201	120	162:25/1004:23	3020	118	161:35/1001.16	3020	115	160:46/160:46	13.3	1570	319.2	Fuel cell 3 oxygen flowmeter biased low. Hydrogen pump motor voltage high at launch.
38	35	102	3021	117	*13:20/520:14 *13:42/533:56 15:13/549:09 256:47/805:56	3020	111	*12:37/502:46 *13:00/515:46 *14:34/530:20 256:45/787:05	3020	113	*11:49/501:06 *12:18/513:24 *13:53/527:17 256:23/783:40	16.8	3606	403.2	*Launch attempt

[a] The cumulative run time includes ground operating time for various tests.

Source: JSC/EP5 Power Branch
Inhouse Mission Reports
RIC, F/C Operating Time Cycle Records

SHUTTLE HISTORIES
FUEL CELL SERIAL NUMBER/PART NUMBER USAGE MATRIX

Miss. Seq. No.	STS- No.	Orb. OV-	Serial Number																
			101	102	103	104	105	106	107	108	109	110	111	112	113	114	115	116	
1	1	102						0003	0004	0004									
2	2	102	0008	0007	0007														
3	3	102		0007	0007			0005											
4	4	102		0007	0007			0005											
5	5	102	0008	0007	0007														
6	6	099							1004		0008		0007						
7	7	099							1004		0008		0007						
8	8	099							1004		0008		0007						
9	9	102				3001											3000	3000	
10	41B	099												3000	3000	3001			
11	41C	099												3000	3000	3001			
12	41D	103	3001	3000	3000														
13	41G	099										3000			3000	3001			
14	51A	103	3001	3000	3000														
15	51C	103	3001	3000	3000														

SHUTTLE HISTORIES

FUEL CELL SERIAL NUMBER/PART NUMBER USAGE MATRIX

Miss. Seq. No.	STS-No.	Orb. OV-	Serial Number 101	102	103	104	105	106	107	108	109	110	111	112	113	114	115	116	117	118	119	120	121	122
16	51D	103	3001	3000	3000																			
17	51B	099										3000			3000	3001								
18	51G	103	3001		3000					3000														
19	51F	099												3000	3000	3001								
20	51I	103	3001		3000					3000														
21	51J	104						3001	3000				3000											
22	61A	099		3000							3001			3000										
23	61B	104						3001	3000				3000											
24	61C	102				3001											3000	3000						
25	51L	099	3001	3000										3000										
26	26	103				3001											3000			3020				
27	27	104																		3020		3021	3020	
28	29	103									3021							3020						3020
29	30	104																		3020		3021	3020	

C-2

SHUTTLE HISTORIES
FUEL CELL SERIAL NUMBER/PART NUMBER USAGE MATRIX

Miss. Seq. No.	STS- No.	Orb. OV-	Serial Number																					
			101	102	103	104	105	106	107	108	109	110	111	112	113	114	115	116	117	118	119	120	121	122
30	28	102											3020		3020				3021					
31	34	104																		3020		3021	3020	
32	33	103									3021							3020						3020
33	32	102											3020		3020				3021					
34	36	104																		3020		3021	3020	
35	31	103														3021					3020			3020
36	41	103			3020											3021					3020			
37	38	104															3020			3020		3021		
38	35	102											3020		3020				3021					

SHUTTLE FLIGHT HISTORIES
ORBITER TIRES

Miss. Seq. No.	STS-No.	Orb. OV-	Main Gear Tires MC194-0007-000*-03481				Nose Gear Tires MC 194-0007-0002-03481		Remarks
			Left Hand Outboard	Left Hand Inboard	Right Hand Inboard	Right Hand Outboard	Left Hand	Right Hand	
1	1	102	*=3 9338AK0836	*=3 9332AK0837	*=3 9332AK0837	*=3 9335AK0875	New 7007AK0805	New 7007AK1089	LHOB tire cut.
2	2	102	*=4 New 1082A00900	*=4 New 1079A00454	*=4 New 1082A00899	*=4 New 1075A00040	Used 1 7007AK0805	Used 1 7007AK1089	
3	3	102	*=4 Used 1 1082A00900	*=4 Used 1 1079A00454	*=4 Used 1 1082A00899	*=4 Used 1 1075A00040	New 7007AK0156	New 7007AK0804	
4	4	102	*=4 New 1079A00874	*=4 New 104200851	*=4 New 1349A01014	*=4 New 1083A00037	New 7007AK0795	New 7007AK0131	All MLG tires had wear and cuts typical of concrete landings.
5	5	102	*=4 Used 1 1079A00874	*=4 Used 1 1042A00851	*=4 Used 1 1348A00434	*=4 New 1350A00468	Used 1 7007AK0795	Used 1 7007AK0131	LH MLG tires had touchdown spot damage. LHIB tire was badly damaged.
6	6	099	*=4 New 1079A00455	*=4 New 1079A00453	*=4 New 1345A00997	*=4 New 1077A00427	New 7007AK0129	New 7007AK0508	All MLG tires had wear and cuts typical of concrete landings.
7	7	099	*=4 New 2301A00463	*=4 New 2208A00436	*=4 New 2222A00983	*=4 New 2334A00472	Used 1 7007AK0129	Used 1 7007AK0508	
8	8	099	*=4 New 2209A00465	*=4 New 2300A01059	*=4 New 2306A00472	*=4 New 2209A00464	New 7076AK0650	New 7076AK0651	
9	9	102	*=4 New 2211A00439	*=4 New 23022A00460	*=4 New 2333A00474	*=4 New 2290A00435	New 7006AK0035	New 7006AK1034	
10	41B	099	*=4 New 2187A00444	*=4 New 1348A00899	*=4 Used 1 2306A00472	*=4 Used 1 2209A00464	Used 1 7076AK0650	Used 1 7076AK0651	MLG tires scuffed due to rough runway surface at KSC.
11	41C	099	*=4 New 2222A00490	*=4 New 2187A01054	*=4 New 2211AA00440	*=4 New 2211A00442	New 1232A01068	New 1232A01067	

Source: Rockwell International, CVAS, Part Numbers/Serial Numbers.
KSC/LSOC Inhouse Reports

SHUTTLE FLIGHT HISTORIES
ORBITER TIRES

Miss. Seq. No.	STS-No.	Orb. OV-	Main Gear Tires MC194-0007-000*-03481				Nose Gear Tires MC 194-0007-0002-03481		Remarks
			Left Hand Outboard	Left Hand Inboard	Right Hand Inboard	Right Hand Outboard	Left Hand	Right Hand	
12	41D	103	*=4 New 1351A00424	*=4 Used 1 2333A00474	*=4 New 2197A00972	*=4 New 2301A00464	New 7006AK0410	New 7006AK0033	
13	41G	099	*=4 Used 1 2211A00440	*=4 Used 1 2211A00442	*=4 Used 2 2306A00472	*=4 Used 1 2187A00444	Used 1 1232A01068	Used 1 1232A01067	All MLG tires had touchdown spot damage.
14	51A	103	*=4 New 2208A00433	*=4 New 2188A01023	*=4 New 2211A00441	*=4 New 2196A00476	New 7010AK1729	New 7006AK0409	All MLG tires had touchdown spot damage.
15	51C	103	*=4 New 4073A00737	*=4 New 4058A00469	*=4 New 4069A00485	*=4 New 2187A00443	Used 1 7010AK1729	Used 1 7006AK0409	All MLG tires had touchdown spot damage.
16	51D	103	*=4 New 2188A00479	*=4 New 4065A00656	*=4 New 2197A00971	*=4 New 2197A00428	Used 2 7010AK1729	Used 2 7006AK0409	RHIB tire blew out. RHOB tire badly damaged.
17	51B	099	*=4 New 2208A01015	*=4 New 2210A00436	*=4 New 4159A00068	*=4 New 2196A00963	New 7006AK0835	New 7006AK0837	All MLG tires had wear and cuts typical of lakebed landings.
18	51G	103	*=4 New 4079A00446	*=4 New 4059A00796	*=4 New 4067A00705	*=4 New 4088A00999	New 7010AK0497	New 7006AK0834	Ruts 8 in. to 10 in. deep x 39 ft. long in runway for LH MLG tires.
19	51F	099	*=4 New 4069A00486	*=4 New 4076A01071	*=4 New 4067A00704	*=4 New 4065A00843	Used 1 7006AK0835	Used 1 7006AK0837	All MLG tires had wear and cuts typical of lakebed landings.
20	51I	103	*=4 New 4089A00669	*=4 New 4066A01101	*=4 New 4088A00678	*=4 New 4076A00754	New 7006AK0505	New 7006AK1408	All MLG tires had wear patterns typical of lakebed landings.
21	51J	104	*=4 New 4159A00069	*=4 New 4158A00665	*=4 New 4054A01123	*=4 New 4089A00116	New 7005AK0230	New 5151A00054	

Source: Rockwell International, CVAS, Part Numbers/Serial Numbers
KSC/LSOC Inhouse Reports.

SHUTTLE FLIGHT HISTORIES
ORBITER TIRES

Miss. Seq. No.	STS-No.	Orb. OV-	Main Gear Tires MC194-0007-000*-03481				Nose Gear Tires MC 194-0007-0002-03481		Remarks
			Left Hand Outboard	Left Hand Inboard	Right Hand Inboard	Right Hand Outboard	Left Hand	Right Hand	
22	61A	099	*=4 Used 1 2196A00963	*=4 Used 1 4067A00704	*=4 New 2188A00477	*=4 New 4051A00830	Used 1 7006AK1408	Used 1 7006AK0505	
23	61B	104	*=4 New 4089AK1105	*=4 New 4158A00800	*=4 New 4077A00760	*=4 New 4076A00756	New 5141A00559	New 5141A00703	
24	61C	102	*=4 Used 1 4158A00665	*=4 Used 1 4054A01123	*=4 New 4077A00847	*=4 New 4060A01044	Used 1 7005AK0230	Used 1 5151A00054	Scuff on RHOB tire.
25	51L	099	*=4 New 4059A00797	*=4 New 4087A00003	*=4 New 4069A01100	*=4 New 4158A00950	New 5141AK1288	New 5141A00983	
26	26	103	*=4 New 5169AU0526	*=4 New 5164AU0474	*=4 New 5170A00546	*=4 New 5158AU0661	New 5150A00553	New 5154A00055	
27	27	104	*=4 New 5142A00539	*=4 New 5136A00649	*=4 New 5165A00670	*=4 New 5135A00434	New 5149A01068	New 5149A01069	LHIB tire had leak of 1.4 psig/day at 70 °F.
28	29	103	*=4 New 5129A00527	*=4 New 5168A00539	*=4 New 5133A00666	*=4 New 5140A00551	Used 1 5150A00533	Used 1 5154A00551	Heavy wear on RHIB tire. All others had wear and cuts typical of concrete landings.
29	30	104	*=4 New 5121A00658	*=4 New 4051A00666	*=4 New 5155A00668	*=4 New 5161A00639	New 5154A00560	New 5150A00053	All tires had wear and cuts typical of crosswind landing on smooth concrete.
30	28	102	*=4 New 5141A00538	*=4 New 5168A00538	*=4 New 5163A00678	*=4 New 5150A00629	Used 1 5149A01068	Used 1 5149A01069	
31	34	104	*=4 New 5126A00531	*=4 New 5134A00659	*=4 New 5136A00648	*=4 New 5144A00531	Used 1 5154A00560	Used 1 5150A00053	All MLG tires had wear patterns typical of lakebed landings.

Source: Rockwell International, CVAS, Part Number/Serial Numbers.
KSC/LSOC Inhouse Reports.

SHUTTLE FLIGHT HISTORIES
ORBITER TIRES

Miss. Seq. No.	STS-No.	Orb. OV-	Main Gear Tires MC194-0007-000*-03481				Nose Gear Tires MC 194-0007-0002-03481		Remarks
			Left Hand Outboard	Left Hand Inboard	Right Hand Inboard	Right Hand Outboard	Left Hand	Right Hand	
32	33	103	*=4 New 9117N00561	*=4 New 9117N00049	*=4 New 5129A00526	*=4 New 9117N00555	New 5151A00455	New 5150A01093	RH MLG tires had wear and cuts typical of concrete landings.
33	32	102	*=4 New 5163A00680	*=4 New 5156A00532	*=4 New 9115N00268	*=4 New 5137A00434	New 5150A00552	New 7005AK0513	All MLG tires had wear and cuts typical of concrete landings.
34	36	104	*=4 New 5154A00463	*=4 New 9111N00345	*=4 New 9113N00347	*=4 New 9114N00348	New 5141A00981	New 5151A00456	All MLG tires had wear patterns typical of lakebed landings.
35	31	103	*=4 New 9115N00269	*=4 New 9116N00348	*=4 New 9114N00347	*=4 New 9116N00350	New 7005AK0772	New 7005AK0227	All MLG tires had wear and cuts typical of concrete landings.
36	41	103	*=4 New 9117N00562	*=4 New 9116N00349	*=4 New 9115N00349	*=4 New 9115N00267	New 51511A00926	New 5154A01022	Heavy wear on RHIB tire. All others had wear and cuts typical of concrete landings.
37	38	104	*=4 New 9210N00539	*=4 New 9212N00679	*=4 New 9219N00306	*=4 New 9214N00016	New 5141A00982	New 5141A00984	All MLG tires had wear and cuts typical of concrete landings
38	35	102	*=4 New 9217N00067	*=4 New 9209N00542	*=4 New 921000538	*=4 New 9209N00540	Used once 5150A00552	Used once 7005AK0513	All MLB tires had wear and cuts typical of concrete landings.

Source: Rockwell International, CVAS, Part Number/Serial Numbers.
KSC/LSOC Inhouse Reports.

SHUTTLE HISTORIES
ORBITAL MANUEVERING SYSTEM BURN DATA SUMMARY

Miss. Seq. No.	STS-No.	Orb. OV-	OMS Firing Nomenclature Engines Used Burn Time, sec Delta Velocity, ft/sec													Total Burn Time, sec LH/RH ΔV ft/sec.	Pod S/N LH/RH	OMS Eng S/N LH/RH
1	1	102	OMS-1	OMS-2	OMS-3	OMS-4									Deorb	346.0	LP02	102
			2	2	1-LH	1-RH									2	349.0	RP02	101
			86.0	75.0	30.0	33.0									155.0			
			164.5	136.7	25.7	29.4									297.6	653.9		
2	2	102	OMS-1	OMS-2	OMS-3A	OMS-3B	OMS-4								Deorb	353.1	LP02	102
			2	2	1-LH	1-LH	1-RH								2	355.8	RP02	101
			77.0	69.2	12.0	24.0	38.7								170.9			
			141.5	121.0	12.0	21.0	34.8								313.4	643.7		
3	3	102	OMS-1	OMS-2	OMS-3A	OMS-3B									Deorb	337.8	LP02	102
			2	2	1-LH	1-LH									2	320.4	RP02	101
			85.1	88.0	2.4	15.0									147.3			
			152.7	151.7	1.8	12.7									270.8	589.7		
4	4	102	OMS-1	OMS-2	OMS-3	OMS-4	OMS-5								Deorb	444.2	LP02	102
			2	2	2	2	1-LH								2	426.8	RP02	101
			88.1	103.9	32.0	31.6	17.4								171.2			
			143.7	177.1	54.4	54.8	15.0								308.8	753.8		
5	5	102	OMS-1	OMS-2	OMS-3	OMS-4A	OMS-4B	OMS-5							Deorb	430.5	LP02	102
			2	2	2	1-LH	1-LH	2							2	413.2	RP02	101
			137.2	116.2	9.0	1.6	15.7	9.0							141.8			
			221.3	191.3	15.5	1.4	13.5	16.2							268.9	728.1		
6	6	099	OMS-1	OMS-2	OMS-3	OMS-4									Deorb	441.0	LP99	106
			2	2	2	2									2	441.0	RP99	105
			135.3	116.8	21.1	22.6									145.2			
			218.0	185.2	40.0	42.5									291.9	777.6		
7	7	099	OMS-1	OMS-2	OMS-3	OMS-4	OMS-5	OMS-6							Deorb	450.4	LP99	106
			2	2	2	2	2	2							2	450.4	RP99	105
			139.5	117.7	5.3	5.2	3.4	13.3							166.1			
			227.0	193.6	10.0	9.4	6.3	23.3							310.2	779.8		
8	8	099	OMS-1	OMS-2	OMS-3	OMS-4	OMS-5								Deorb	495.1	LP99	106
			2	2	2	2	2								2	495.1	RP99	105
			138.7	115.4	6.3	37.5	46.6								150.6			
			227.0	196.8	11.0	66.7	83.5								278.5	863.5		

Source: JSC/DF6, Propulsion System Section, In-house Mission Reports.

SHUTTLE HISTORIES
ORBITAL MANUEVERING SYSTEM BURN DATA SUMMARY

Miss. Seq. No.	STS-No.	Orb. OV-	OMS Firing Nomenclature Engines Used Burn Time, sec Delta Velocity, ft/sec													Total Burn Time, sec LH/RH ΔV ft/sec.	Pod S/N LH/RH	OMS Eng S/N LH/RH
9	9	102	OMS-1 2 63.7 111.0	OMS-2 2 101.0 163.5											Deorb 2 156.0 267.0	320.7 320.7 541.5	LP02 RP02	102 101
10	41B	099	OMS-1 2 150.0 247.0	OMS-2 2 124.8 204.0	OMS-3 1-RH 12.9 11.0	OMS-4 1-LH 31.4 27.0	OMS-5 1-LH 41.8 36.5	OMS-6 1-LH 12.3 11.0							Deorb 2 168.1 316.0	528.4 455.8 852.5	LP99 RP99	106 105
11	41C	099	OMS-1 Dir. Insert. Not Perf.	OMS-2 2 95.1 148.6	NC-1 1-RH 14.3 11.4	NPC 1-LH 11.7 9.4	NH-1 1-RH 15.0 11.8	NSR 2 144.0 231.1	NH-2 1-RH 16.0 14.3	TI 1-LH 13.0 11.6	NC-3A 1-RH 8.6 7.9	TI-2 1-LH 6.2 6.2			Deorb 2 243.0 460.6	513.0 536.0 912.9	LP03 RP99	107 105
12	41D	103	OMS-1 2 153.4 237.3	OMS-2 2 126.3 196.5	OMS-3 1-LH 13.6 11.3	OMS-4 2 8.6 15.1	OMS-5 1-RH 12.2 11.0	OMS-6 2 20.6 37.3							Deorb 2 164.6 311.1	487.1 485.7 819.5	LP03 RP03	107 108
13	41G	099	OMS-1 2 130.9 224.9	OMS-2 2 143.3 247.2	OMS-3 2 50.6 90.5	OMS-4 2 51.3 91.7	OMS-5 2 19.3 35.0	OMS-6 2 16.1 29.0							Deorb 2 141.9 269.2	553.4 553.4 987.5	LP99 RP99	106 111
14	51A	103	OMS-1 2 150.7 235.9	OMS-2 2 114.8 177.3	NC-1 1-LH 11.2 8.9	CIRC-1 1-RH 16.2 12.7	A SEP 1-LH 13.6 11.0	S SEP 2 8.6 15.2	NSR 2 17.8 31.5	NH-1 2 12.7 22.6	NC-3-1 1-RH 13.4 12.0	TI-1 1-RH 10.7 9.6	NC-1-2 2 8.6 15.3	TI-2 1-LH 11.7 10.5	Deorb 2 183.4 333.1	533.1 536.9 895.6	LP03 RP03	107 108
15	51C	103	Data not available, Department of Defense Mission														LP03 RP03	107 108
16	51D	103	OMS-1 Direct Insert Not Perf.	OMS-2 2 142.6 228.1	SEP-1 1-RH 13.4 11.0	SEP-2 2 8.4 15.0	RETRO 2 8.4 15.0	NSR 1-LH 12.0 11.8	NC-3 1-LH 12.8 11.5	TI 1-LH 9.4 8.6	SEP-II 1-LH 21.8 21.8				Deorb 2 237.8 451.5	 453.2 410.6 774.3	LP03 RP03	107 108

Source: JSC/DF6, Propulsion System Section, In-house Mission Reports.

SHUTTLE HISTORIES
ORBITAL MANUEVERING SYSTEM BURN DATA SUMMARY

Miss. Seq. No.	STS-No.	Orb. OV-	OMS Firing Nomenclature Engines Used Burn Time, sec Delta Velocity, ft/sec													Total Burn Time, sec LH/RH ΔV ft/sec.	Pod S/N LH/RH	OMS Eng S/N LH/RH
17	51B	099	OMS-1 2 133.4 225.5	OMS-2 2 145.2 243.3											Deorb 2 265.4 470.4	544.0 544.0 939.2	LP99 RP04	106 113
18	51G	103	OMS-1 Dir Insert. Not Perf.	OMS-2 2 177.6 278.7	SEP-1 1-LH 13.4 11.0	SEP-2 1-LH 13.0 11.0	SEP-3 1-LH 12.6 11.0	OMS-6 1-RH 111.8 100.0							Deorb 2 150.4 279.3	367.0 439.8 691.0	LP04 RP03	110 108
19	51F	099	ATO 2 106.4	OMS-2 2 119.4 193.7	OMS-3 2 35.0 57.4	OMS-4 2 45.1 75.2	OMS-5 2 15.2 25.6	OMS-6 2 15.6 27.1	OMS-7 2 3.4 5.8						Deorb 2 171.1 301.8	511.2 511.2 686.6	LP99 RP04	106 113
20	51I	103	OMS-1 Dir Insert Not Perf.	OMS-2 2 183.2 279.3	OMS-3 1-LH 13.8 11.0	OMS-4 1-RH 13.2 11.0	OMS-5 2 10.6 15.0	OMS-6 1-RH 40.2 35.7	OMS-7 1-RH 9.6 8.7	OMS-8 2 26.4 47.6	OMS-9 1-RH 19.4 17.6	OMS-10 1-LH 15.0 13.7	OMS-11 1-RH 16.4 15.0		Deorb 2 251.6 476.2	500.6 570.6 930.8	LP04 RP03	110 108
21	51J	104					Data not available - Department of Defense Mission										LP03 (EI13) RP99 (EI21)	107 111
22	61A	099	OMS-1 2 121.2 195.7	OMS-2 2 131.6 221.5											Deorb 2 170.4 301.4	423.2 423.2 718.6	LP99 (EI11) RP03 (EI23)	106 108
23	61B	104	OMS-1 Dir Insert. Not Perf.	OMS-2 2 108.4 278.1	OMS-3 RH 13.8 11.0	OMS-4 RH 13.4 11.0	OMS-5 LH 16.0 14.1	OMS-6 RH 49.2 49.5							Deorb 2 169.0 314.0	365.4 425.8 677.7	LP03 (EI13) RP99 (EI21)	107 111

Source: JSC/EP4/Propulsion Branch,
In-house Mission Reports.

SHUTTLE HISTORIES
ORBITAL MANUEVERING SYSTEM BURN DATA SUMMARY

Miss. Seq. No.	STS-No.	Orb. OV-	OMS Firing Nomenclature Engines Used Burn Time, sec Delta Velocity, ft/sec													Total Burn Time, sec LH/RH ΔV ft/sec.	Pod S/N LH/RH	OMS Eng S/N LH/RH
24	61C	102	OMS-1 2 164.2 265.5	OMS-2 2 134.6 217.5	OMS-3 1-LH 16.4 14.1										Deorb 2 232.0 417.8	547.2 530.8 914.9	LP04 (EI14) RP04 (EI24)	110 113
25	51L	099	N/A	N/A	N/A										N/A	N/A	LP02 (ET12) RP02 (EI22)	112 102
26	26	103	OMS-1 Dir Insert. Not Perf.	OMS-2 2 141.6 223.0	OMS-3 2 16.8 30.9										Deorb 2 168.0 325.0	326.4 326.4 578.9	LP04 RP03	109 114
27	27	104			DOD MISSION - DATA NOT AVAILABLE												LP01 RP01	106 111
28	29	103		OMS-2 2 141.6 222.0	OMS-3 2 16.6 31.0										Deorb 2 161.4 313.0	319.6 319.6 566	LP04 RP03	109 114
29	30	104	OMS-1 2 141.8 226.8	OMS-2 2 125.6 197.4	OMS-3 2 16.4 31.0										Deorb 2 165.8 326.4	449.6 449.6 781.6	LP99 RP99	106 111
30	28	102		OMS-2 2 N/A	OMS-3 1-LH N/A	OMS-4 1-RH N/A	OMS-5 2 N/A								Deorb 2 N/A	N/A N/A	LP03 RP04	105 108
31	34	104		OMS-2 2 140.6 219.0	OMS-3 2 15.3 31.0										Deorb 2 168.0 321.1	323.9 571.1	LP01 RP03	106 114
32	33	103	OMS-1 2 N/A	OMS-2 2 N/A	OMS-3 2 N/A	OMS-4 2 N/A									Deorb 2	N/A N/A	LP04 RP01	109 111

Source: JSC/EP2, Propulsion Branch, In-house Mission Reports

SHUTTLE HISTORIES
ORBITAL MANUEVERING SYSTEM BURN DATA SUMMARY

Miss. Seq. No.	STS-No.	Orb. OV-	OMS Firing Nomenclature Engines Used Burn Time, sec Delta Velocity, ft/sec													Total Burn Time, sec LH/RH ΔV ft/sec.	Pod S/N LH/RH	OMS Eng S/N LH/RH
33	32	102	OMS-1 DIR. INS.	OMS-2 2 139.5 218.3	OMS-3 1-RH 8.5 6.7	OMS-4 1-LH 21.1 18.0	OMS-5 1-LH 20.9 17.6	OMS-6 1-LH 8.2 6.8	OMS-7 1-RH 10.9 9.2						Deorb 2 299.2 489.5	488.9 458.1 765.9	LP03 RP04	105 108
34	36	104	OMS-1 DIR. INS.	DOD MISSION - DATA NOT AVAILABLE													LP01 RP03	106 114
35	31	103	OMS-1 DIR. INS.	OMS-2 2 304.4 496.6											Deorb 2 290.5 573.5	594.9 594.9 1070.1	LP04 RP01	109 111
36	41	103	OMS-1 Direct insert.	OMS-2 2 143.6 222.6	OMS-3 1 33.3 31.0	OMS-4 1 44.1 41.0	DOD MISSION - DATA NOT AVAILALBLE								Deorbit 2 148.3 286.2	325.12 335.72 580.8	LP04 RP01	109 111
37	38	104	OMS-1 2 N/A N/A	OMS-2 2 N/A N/A	OMS-3 2 N/A N/A	OMS-4 2 N/A N/A									Deorbit 2 N/A N/A	N/A N/A N/A	LP01 RP03	105 114
38	35	102	OMS-1 Direct insert.	OMS-2 2 179.2 279.1											Deorbit 2 230.4 383.2	409.6 409.6 662.3	LP03 RP04	105 108

Source: JSC/EP2, Propulsion Branch, In-house Mission Reports

ORBITAL MANEUVERING SYSTEM - PROPELLANT USAGE SUMMARY

Miss. Seq. No.	STS-No.	Orb. OV-	Fuel, MMH												Oxidizer, N_2O_4											
			Loaded, lb			RCS Interconnect Usage, lb			Residuals, lb			OMS Usage, lb			Loaded, lb			RCS Interconnect Usage, lb			Residuals, lb			OMS Usage, lb		
			LH	RH	Total	LH	RH	Total	LH	RH	Total	LH	RH	Total	LH	RH	Total	LH	RH	Total	LH	RH	Total	LH	RH	Total
1	1	102	3197	3509	6706	274	279	553	372	798	1170	2551	2432	4983	5267	5781	11048	438	451	889	773	1369	2142	4056	3961	8017
2	2	102	3221	3466	6687	19	58	77	485	1010	1495	2717	2398	5115	5306	5711	11017	31	92	123	861	1435	2296	4414	4184	8598
3	3	102	3325	3325	6650	457	430	887	443	579	1022	2425	2316	4741	5477	5477	10954	731	687	1418	841	889	1730	3905	3901	7806
4	4	102	4232	4188	8420	268	415	683	716	668	1384	3248	3105	6353	6848	6764	13612	428	664	1092	977	933	1910	5443	5167	10610
5	5	102	3693	3737	7430	174	312	486	406	361	767	3113	3064	6177	6084	6168	12252	279	498	777	532	477	1009	5273	5193	10466
6	6	099	3660	3606	7266	0	93	93	377	359	736	3283	3154	6437	6042	5958	12000	0	150	150	613	504	1117	5429	5304	10733
7	7	099	3935	3935	7870	216	216	432	444	447	891	3275	3272	6547	6488	6488	12976	346	346	692	657	702	1359	5485	5440	10925
8	8	099	4125	4125	8250	0	0	0	575	575	1150	3550	3550	7100	6798	6798	13596	0	0	0	813	857	1670	5985	5941	11926
9	9	102	2976	2976	5952	347	347	694	343	323	666	2286	2306	4592	4901	4901	9802	554	554	1108	483	387	870	3864	3960	7824
10	41B	099	4712	4576	9288	575	254	829	294	1029	1323	3843	3293	7136	7743	7519	15262	920	405	1325	451	1570	2021	6372	5544	11916
11	41C	099	4712	4712	9424	598	440	1038	562	526	1088	3552	3746	7298	7743	7743	15486	957	703	1660	584	527	1111	6202	6513	12715
12	41D	103	4485	4485	8970	0	140	140	980	896	1876	3505	3449	6954	7370	7370	14740	0	223	223	1464	1253	2717	5906	5894	11800
13	41G	099	4712	4712	9424	214	217	421	560	529	1089	3938	3976	7914	7743	7743	15486	341	330	671	656	773	1429	6746	6640	13386
14	51A	103	4712	4712	9424	502	475	977	305	433	738	3905	3804	7709	7744	7744	15488	804	759	1563	493	510	1003	6447	6475	12922
15	51C	103	Department of Defense Mission - Data not available																							
16	51D	103	4010	4010	8020	0	319	319	730	798	1528	3280	2893	6173	6646	6646	13292	0	511	511	1144	1224	2368	5502	4911	10413
17	51B	099	4281	4281	8562	0	0	0	359	320	679	3922	3961	7883	7093	7093	14186	0	0	0	613	594	1207	6480	6499	12979

ORBITAL MANEUVERING SYSTEM - PROPELLANT USAGE SUMMARY

Miss. Seq. No.	STS-No.	Orb. OV-	Fuel, MMH												Oxidizer, N_2O_4											
			Loaded, lb			RCS Interconnect Usage, lb			Residuals, lb			OMS Usage, lb			Loaded, lb			RCS Interconnect Usage, lb			Residuals, lb			OMS Usage, lb		
			LH	RH	Total	LH	RH	Total	LH	RH	Total	LH	RH	Total	LH	RH	Total	LH	RH	Total	LH	RH	Total	LH	RH	Total
18	51G	103	3469	3542	7011	437	0	437	377	393	770	2655	3149	5804	5755	5755	11510	698	0	698	636	465	1101	4421	5290	9711
19	51F	099	4712	4712	9424	388	257	645	661	710	1371	3663	3745	7408	7744	7744	15488	620	411	1031	902	1039	1941	6222	6294	12519
20	51I	103	4655	4655	9310	576	142	718	465	436	901	3614	4077	7691	7592	7592	15184	921	228	1149	709	500	1209	5962	6864	12826
21	51J	104	Department of Defense Mission - Data not available																							
22	61A	099	3413	3462	6875	0	0	0	367	426	793	3046	3036	6082	5661	5661	11322	0	0	0	612	620	1232	5049	5041	10090
23	61B	104	3733	3782	7515	443	0	443	636	685	1321	2654	3097	5751	6232	6191	12423	708	0	708	1144	983	2127	4380	5208	9588
24	61C	102	4270	4226	8496	0	0	0	328	372	700	3942	3854	7796	7001	7001	14002	0	0	0	395	475	870	6606	6526	13132
25	51L	099	4041	4016	8057	N/A	N/A	N/A	N/A	N/A	N/A	N/A	N/A	N/A	6658	6699	13357	N/A	N/A	N/A	N/A	N/A	N/A	N/A	N/A	N/A
26	26	103	2616	2615	5231	0	0	0	*238	*246	476	2386	2369	4755	4334	4366	8700	0	0	0	*379	*467	846	3455	3899	7854
27	27	104	3487	3494	6981	0	0	0	347	247	594	3140	3247	6387	5798	5797	11595	0	0	0	469	498	967	5329	5299	10628
28	29	103	2652	2596	5248	0	0	0	210	246	456	2442	2350	4792	4358	4352	8710	0	0	0	355	455	810	4003	3897	7900
29	30	104	3527	3527	7054	0	0	0	272	243	515	3255	3284	6539	5845	5863	11708	0	0	0	395	431	826	5450	5432	10882
30	28	102	2645	2645	5290	N/A	DOD N/A	N/A	362	348	710	N/A	N/A	N/A	4425	4446	8871	N/A	N/A	N/A	645	701	1346	N/A	N/A	N/A
31	34	104	2569	2596	5165	0	0	0	308	235	543	2261	2361	4622	4480	4301	8781	0	0	0	513	524	1037	3967	3777	7744
32	33	103	4359	4348	8707	N/A	DOD N/A	N/A	416	304	720	N/A	N/A	N/A	7213	7167	14380	N/A	N/A	N/A	479	307	786	N/A	N/A	N/A

ORBITAL MANEUVERING SYSTEM - PROPELLANT USAGE SUMMARY

Miss. Seq. No.	STS-No.	Orb. OV-	Fuel, MMH												Oxidizer, N_2O_4											
			Loaded, lb			RCS Interconnect Usage, lb			Residuals, lb			OMS Usage, lb			Loaded, lb			RCS Interconnect Usage, lb			Residuals, lb			OMS Usage, lb		
			LH	RH	Total	LH	RH	Total	LH	RH	Total	LH	RH	Total	LH	RH	Total	LH	RH	Total	LH	RH	Total	LH	RH	Total
33	32	102	4718	4703	9421	408	633	1041	781	800	1581	3529	3270	6799	7726	7696	15422	653	1012	1665	1225	1187	2412	5848	5497	11345
34	36	104	2351	2288	4639	N/A	DOD N/A	N/A	373	291	664	N/A	DOD N/A	N/A	3913	3928	7841	N/A	DOD N/A	N/A	614	600	1214	N/A	DOD N/A	N/A
35	31	103	4661	4718	9379	102	119	221	229	236	465	4330	4563	8893	7756	7756	15512	163	191	354	371	338	709	7222	7227	14449
36	41	103	2699	2695	5394	0	0	0	343	286	629	2383	2437	4820	4484	4476	8960	0	0	0	643	522	1165	3924	4036	7960
37	38	104	2881	2880	5761	N/A	N/A	N/A	356	373	729	N/A	N/A	N/A	4740	4707	9447	N/A	N/A	N/A	479	542	1021	N/A	N/A	N/A
38	35	102	3507	3515	7022	343	368	711	338	305	643	3169	3210	6379	5798	5798	11596	565	605	1170	410	362	772	5388	5436	10824

*Preliminary values - will be updated after 1-g gage data available.

SHUTTLE HISTORIES
REACTION CONTROL SYSTEM VERNIER THRUSTERS
CONFIGURATION AND USAGE SUMMARY

Miss. Seq. No.	STS-No.	Orb. OV-	Fwd Vernier Thrusters		Left Vernier Thrusters		Right Vernier Thrusters		Total Burntime, sec.	Total Cycles	Average Burntime per cycle sec.	Average cycle per hour
			Burntime, sec.	Cycles	Burntime, sec.	Cycles	Burntime, sec.	Cycles				
1	1	102	1561.12	2603	2881.91	3767	2311.16	3828	6754.20	10198	0.6623	188
2	2	102	1997.52	4306	4102.16	5736	1770.48	5600	8870.16	15642	0.5671	288
3	3	102	8846.30	12990	10875.28	13859	10773.40	13462	30494.98	40311	0.7565	210
4	4	102	5697.92	9461	11607.12	12099	10925.08	11635	28230.12	33195	0.8505	196
5	5	102	3883.38	4797	6785.84	6508	7285.40	6061	17954.62	17366	1.0339	142
6	6	099	2865.40	4149	4137.12	4372	4626.92	4364	11629.44	128885	0.9026	107
7	7	099	4227.36	4849	6923.68	6532	6897.58	6662	18048.62	18043	1.0003	123
8	8	099	4008.56	3803	6115.76	5383	6341.04	4922	16465.36	14108	1.1671	97
9	9	102	10499.48	15223	17500.26	18781	17456.00	19860	45455.74	53864	0.8439	194
10	41B	099	5363.40	5198	8809.34	6209	9081.34	7041	23254.08	18448	1.2605	96
11	41C	099	3829.33	3865	6394.84	4705	6399.32	4737	16623.49	13307	1.2492	79
12	41D	103	4954.70	5464	7478.36	6664	8197.20	6518	20530.26	18646	1.1011	129
13	41G	099	7537.24	14363	12383.08	15856	13003.24	18491	32923.56	48710	0.6759	247
14	51A	103	4767.80	4421	8797.52	7176	7681.30	6676	21246.62	18273	1.1627	95

This section will not be updated, data are no longer available.

JSC/EP4, Propulsion Branch,
In-house Mission Reports

OMS/RCS PODS AND FLIGHT ASSIGNMENTS

STS	OV-FLT	LV01	LP01	LP03	LP04	RV01	RP01	RP03	RP04	FRC2	FRC9	FRC3	FRC4
1	102-1	1				1				1			
2	102-2	2				2				2			
3	102-3	3				3				3			
4	102-4	4				4				4			
5	102-5	5				5				5			
6	99-1		1				1				1		
7	99-2		2				2				2		
8	99-3		3				3				3		
9	102-6	6				6				6			
41B	99-4		4				4				4		
41C	99-5			1			5				5		
41D	103-1			2				1				1	
41G	99-6		5				6				6		
51A	103-2			3				2				2	
51C	103-3			4				3				3	
51D	103-4			5				4				4	
51B	99-7		6						1		7		
51G	103-5				1			5				5	
51F	99-8		7						2		8		
51I	103-6				2			6				6	
51J	104-1			6			7						1
61A	99-9		8					7			9		
61B	104-2			7			8						2
61C	102-7				3				3	7			
51L	99-10	7				7					10		
26	103-7				4			8				7	
27	104-3		9				9						3
29	103-8				5			9				8	
30	104-4		10				10						4
28	102-8			8					4	8			
34	104-5		11					10					5
33	103-9				6		11					9	
32	102-9			9					5	9			
36	104-6		12					11					6
31	103-10P				7		12					10	
35	102-10P			10					6	10			
38	104-07P		13					12					7
41	103-11P				8		13					11	

SHUTTLE HISTORIES
EXTRAVEHICULAR ACTIVITY (EVA) SUMMARY

Miss. Seq. No.	STS-No.	Orb. OV-	Date of EVA's	EXTRAVEHICULAR MOBILITY UNIT (EMU)									MANNED MANEUVERING UNIT (MMU)					
				EVA Crewman EV-1/EV-2	EMU S/N	PLSS S/N	DCM S/N	SOP S/N	HUT S/N	SCU	EVA-1 Time* h:m	EVA-2 Time* h:m	MMU Crewman	MMU S/N	Oper. Time, h:m	MMU Crewman	MMU S/N	Oper. Time, h:m
1	1	102	Not scheduled	Young Crippen	1002 1003	1003 1005	1004 1002	1003 1004	1009 1021	1004 1005			Not scheduled			Not scheduled		
2	2	102	Not scheduled	Engle Truly	1009 1010	1006 1005	1006 1005	1006 1004	1009 1021	1004 1005			Not scheduled			Not scheduled		
3	3	102	Not scheduled	Lousma Fullerton	1012 1013	1006 1005	1004 1005	1005 1004	1017 1021	1004 1005			Not scheduled			Not scheduled		
4	4	102	Not scheduled	Mattingly Hartsfield	1019 1016	1006 1005	1007 1002	1005 1004	1011 1021	1005 1004			Not scheduled			Not scheduled		
5	5	102	Scheduled but not accomplish-ed	Lenoir Allen	1023 1022	1006 1005	1005 1002	1003 1005	1020 1018	1005 1004			Not scheduled			Not scheduled		
6	6	099	4/7/83	Musgrave Peterson Backup unit	1026 1024 1025	1003 1005 1006	1006 1007 1005	1003 1007 1006	1024 1021 1009	1006 1007	3:54 3:54		Not scheduled			Not scheduled		
7	7	099	Not scheduled	Thagard Fabian	1028 1027	1005 1003	1007 1006	1007 1003	1021 1024	1007 1006			Not scheduled			Not scheduled		
8	8	099	Not scheduled	Gardner Truly	1031 1032	1005 1006	1007 1002	1007 1006	1021 1009	1006 1007			Not scheduled			Not scheduled		
9	9	102	Not scheduled	Young Garriott	1037 1036	1008 1007	1004 1005	1008 1005	1021 1024	1004 1005			Not scheduled			Not scheduled		
10	41B	099	2/7/84 (1) 2/9/84 (2)	McCandless Stewart Backup unit	1040 1038 1041	1008 1009 1007	1004 1009 1005	1003 1006 1010	1020 1016 1029	1009 1010	5:35 5:35	6:02 6:02	McCandless Stewart	3	2:31	McCandless Stewart McCandless	2 2 3	00:47 00:44 1:08

Source: JSC/EC, Internal reports.

Legend:
PLSS - portable life support system.
DCM - display and controls module.
SOP - secondary oxygen pack.
HUT - hard upper torso.
SCU - service and cooling umbilical.

*EVA time is defined as time at 0 psia.

SHUTTLE HISTORIES
EXTRAVEHICULAR ACTIVITY (EVA) SUMMARY

Miss. Seq. No.	STS-No.	Orb. OV-	Date of EVA's	EXTRAVEHICULAR MOBILITY UNIT (EMU)									MANNED MANEUVERING UNIT (MMU)					
				EVA Crewman EV-1/EV-2	EMU S/N	PLSS S/N	DCM S/N	SOP S/N	HUT S/N	SCU	EVA-1 Time* h:m	EVA-2 Time* h:m	MMU Crewman	MMU S/N	Oper. Time, h:m	MMU Crewman	MMU S/N	Oper. Time, h:m
11	41C	099	4/8/84 (1) 4/11/84 (2)	Nelson Van Hoften Backup unit	1043 1044 1045	1008 1009 1007	1004 1009 1005	1003 1006 1010	1009 1017 1019	1006 1007	2:59 2:59	7:07 7:07	Nelson	2	0:42	Van Hoften	3	0:28
12	41D	103	Not scheduled	Mullane Hawley	1046 1048	1006 1010	1008 1011	1005 1007	1028 1027	1006 1007			Not scheduled			Not scheduled		
13	41G	099	10/11/84	Leestma Sullivan Backup unit	1049 1050 1053	1003 1008 1005	1007 1004 1006	1003 1008 1011	1023 1029 1031	1009 1010	3:29 3:29		Not scheduled			Not scheduled		
14	51A	103	11/12/84 (1) 11/14/84 (2)	Allen Gardner Backup unit	1051 1052 1054	1009 1007 1006	1009 1005 1008	1009 1007 1005	1033 1030 1028	1006 1007	6:13 6:13	6:01 6:01	Allen	3	2:22	Gardner	2	1:40
15	51C	103	N/A	Buchli Shriver	1055 1056	1003 1008	1007 1004	1003 1008	1023 1017	1006 1007			Not scheduled			Not scheduled		
16	51D	103	Contingency EVA 4/16/85	Hoffman Griggs	1059 1060	1007 1010	1005 1010	1007 1006	1030 1036	1006 1007	3:10 3:10		Not scheduled			Not scheduled		
17	51B	099	Not scheduled	Thagard Gregory	1061 1057	1003 1006	1007 1006	1003 1011	1023 1031	1009 1010			Not scheduled			Not scheduled		
18	51G	103	Not scheduled	Fabian Nagel	1063 1062	1005 1009	1008 1009	1005 1009	1026 1035	1006 1007			Not scheduled			Not scheduled		
19	51F	099	Not scheduled	Musgrave England	1064 1065	1010 1007	1010 1011	1010 1007	1036 1030	1009 1010			Not scheduled			Not scheduled		

Source: JSC/EC, Internal reports.

Legend:
PLSS - portable life support system.
DCM - display and controls module.
SOP - secondary oxygen pack.
HUT - hard upper torso.
SCU - service and cooling umbilical.
*EVA time is defined as time at 0 psia.

SHUTTLE HISTORIES
EXTRAVEHICULAR ACTIVITY (EVA) SUMMARY

Miss. Seq. No.	STS-No.	Orb. OV-	Date of EVA's	EXTRAVEHICULAR MOBILITY UNIT (EMU)									MANNED MANEUVERING UNIT (MMU)					
				EVA Crewman EV-1/EV-2	EMU S/N	PLSS S/N	DCM S/N	SOP S/N	HUT S/N	SCU	EVA-1 Time* h:m	EVA-2 Time* h:m	MMU Crewman	MMU S/N	Oper. Time, h:m	MMU Crewman	MMU S/N	Oper. Time, h:m
20	51I	103	8/31/85 (1) 9/1/85 (2)	Van Hoften Fisher Backup unit	1067 1066 1068	1006 1003 1009	1006 1007 1009	1008 1003 1009	1019 1023 1017	1006 1007	7:20 7:20	4:31 4:31	Not scheduled			Not scheduled		
21	51J	104	N/A	Hilmers Stewart	1071 1072	1005 1008	1008 1004	1005 1006	1026 1016	1011 1013			Not scheduled			Not scheduled		
22	61A	099	Not scheduled	Buchli Dunbar	1074 1073	1010 1007	1010 1011	1010 1007	1036 1037	1009 1010			Not scheduled			Not scheduled		
23	61B	104	11/29/85 12/01/85	Ross Spring Backup unit	1077 1070 1079	1006 1011 1008	1006 1002 1004	1005 1009 1012	1035 1033 1039	1011 1013	5:34 5:34	6:46 6:46	Not scheduled			Not scheduled		
24	61C	102	Not scheduled	Nelson Chang-Diaz	1078 1081	1005 1010	1008 1010	1006 1007	1026 1036	1004 1005			Not scheduled			Not scheduled		
25	51L	099	Not scheduled	McNair Onizuka	1080 1075	1007 1012	1011 1009	1005 1012	1037 1019	1009 1010			Not scheduled			Not scheduled		
26	26	103	Not scheduled	Nelson Lounge	1091 1090	1005 1011	2004 2002	1014 1004	1034 1043	1006 1007			Not scheduled			Not scheduled		
27	27	104	Not scheduled	Ross Shepherd	1090 1092	1011 1013	2002 2005	1004 1007	1043 1046	1011 1013			Not scheduled			Not scheduled		
28	29	103	Not scheduled	Bagian Springer	1094 1090	1013 1011	2006 2002	1007 1004	1036 1043	1006 1007			Not scheduled			Not scheduled		
29	30	104	Not scheduled	Thagard Lee	1096 1095	1005 1003	2005 2004	1014 1015	1034 1047	1011 1013			Not scheduled			Not scheduled		
30	28	102	Not scheduled	Adamson Brown	1099 1098	1013 1011	2006 2002	1010 1011	1036 1046	1004 1005			Not scheduled			Not scheduled		

Source: JSC/EC, Internal reports.

Legend:
PLSS - portable life support system.
DCM - display and controls module.
SOP - secondary oxygen pack.
HUT - hard upper torso.
SCU - service and cooling umbilical.
*EVA time is defined as time at 0 psia.

SHUTTLE HISTORIES
EXTRAVEHICULAR ACTIVITY (EVA) SUMMARY

Miss. Seq. No.	STS-No.	Orb. OV-	Date of EVA's	EXTRAVEHICULAR MOBILITY UNIT (EMU)									MANNED MANEUVERING UNIT (MMU)					
				EVA Crewman EV-1/EV-2	EMU S/N	PLSS S/N	DCM S/N	SOP S/N	HUT S/N	SCU	EVA-1 Time* h:m	EVA-2 Time* h:m	MMU Crewman	MMU S/N h:m	Oper. Time,	MMU Crewman	MMU S/N	Oper. Time, h:m
31	34	104	Not scheduled	Chang-Diaz Baker	2001 2003	1003 1005	2004 2005	1003 1006	1035 1034	1011 1013			Not scheduled			Not scheduled		
32	33	103	Not scheduled	Carter Thornton	2006 2005	1013 1009	2006 2014	1011 1010	1046 1018	1006 1007			Not scheduled			Not scheduled		
33	32	102	Not scheduled	Low Dunbar	2003 2001	1005 1003	2005 2004	1006 1003	1034 1025	1004 1005			Not scheduled			Not scheduled		
34	36	104	Not scheduled	Hilmers Thuot	2007 2008	1014 1011	2007 2002	1011 1009	1036 1044	1011 1013			Not scheduled			Not scheduled		
35	31	103	Not scheduled	McCandless Sullivan	2010 2012 2011	1009 1003 1013	2014 2004	1010 1003 1013	1045 1038 1033	1006 1007			Not scheduled			Not scheduled		
36	41	103	Not scheduled	Melnick Akers	2013 2008	1005 1011	2005 2002	1014 1009	1043 1044	1006 1007			Not scheduled			Not scheduled		
37	38	104	Not scheduled	Springer Meade	2010 2011	1009 1013	2014 2006	1010 1013	1034 1033	1011 1013			Not scheduled			Not scheduled		
38	35	102	Not scheduled	Hoffman Lounge	2007 2009	1014 1006	2007 2003	1011 1006	1036 1039	1004 1005			Not scheduled			Not scheduled		

Legend:
- PLSS - portable life support system.
- DCM - display and controls module.
- SOP - secondary oxygen pack.
- HUT - hard upper torso.
- SCU - service and cooling umbilical.

*EVA time is defined as time at 0 psia.

Total EMU EVA hours at 0 psia

PLSS S/N	Time (hours:minutes)
1003	19:14
1005	3:54
1006	24:11
1007	15:24
1008	25:12
1009	33:57
1010	3:10
1011	12:20
Total	137:22

Total MMU Flight Time

MMU S/N	Flight Time h:m
2	3:53
3	6:29
Total	10:22

Source: JSC/EC, Internal reports.

SHUTTLE HISTORIES
REMOTE MANIPULATOR SYSTEM

Miss. Seq. No.	STS-No.	Orb. OV-	Major RMS LRU Serial Numbers						RMS Major Usage Matrix							Miscellaneous Activities	Mass Handled by RMS, lb	Contingency Usage/Remarks
									TV Surveys					Satellite				
			Arm	EE	MCIU	D&C PNL	THC	RHC	TPS	H_2O Dump	SAT PKM Burn	Other	MFR	Deploy/ Berth	Retrieve/ Repair			
1	1	102	RMS NOT FLOWN															
2	2	102	201	201	201	203	203	202								RMS Checkout		Shoulder yaw joint failed in backup mode.
3	3	102	201	201	201	203	203	202	X					PDP (d,b)			344	RMS wrist camera failed, unable to gapple IECM.
4	4	102	201	201	201	203	203	202						IECM (d,b)			816	End effector flags showed incorrect status due to broken wiring.
5	5	102	RMS NOT FLOWN															
6	6	099	RMS NOT FLOWN															
7	7	099	201	301	301	301	301	202						SPAS-01 (d,b)			3,173	
8	8	099	201	301	301	301	301	202						PFTA (d,b)			7,460	
9	9	102	RMS NOT FLOWN															
10	41B	099	201	301	301	301	301	202			X		X			Witness plate		Wrist/yaw joint failed unable to deploy SPAS.
11	41C	099	302	302	301	301	301	202		X			X	LDEF (d)	SMM R&R		21,396 5,000	
12	41D	103	301	201	303	302	302	301	X	X	X					Witness panel		Used to clear ice from supppy water dump nozzle.

SPAR-1 (KSC) FLight Hardware Allocation Reports

SHUTTLE HISTORIES
REMOTE MANIPULATOR SYSTEM

Miss. Seq. No.	STS-No.	Orb. OV-	Major RMS LRU Serial Numbers						RMS Major Usage Matrix							Miscellaneous Activities	Mass Handled by RMS, lb	Contingency Usage/Remarks
									TV Surveys					Satellite				
			Arm	EE	MCIU	D&C PNL	THC	RHC	TPS	H_2O Dump	SAT PKM Burn	Other	MFR	Deploy/ Berth	Retrieve/ Repair			
12	41D	103	301	201	303	302	302	301	X	X	X					Witness panel		Used to clear ice from supppy water dump nozzle.
13	41G	099	302	302	301	301	301	202	X	X				ERBS (d)		Witness panel	5,087	Used to latch SIR-B antenna.
14	51A	103	301	201	303	302	302	301		X	X		X		PALAPA-B2, WESTAR VI Retrieval		1,222 1,098	
15	51C	103	301	201	303	302	302	301	DOD MISSION - DATA NOT AVAILABLE									
16	51D	103	301	201	303	302	302	301	X	X	X							SYNCOM-3 "Flyswatter" operation. Confirm failed solar array deploy on ARABSAT.
17	51B	099	RMS NOT FLOWN															
18	51G	103	301	303	303	302	302	301	X	X	X			SPARTAN -1 (d,b)			2,152	
19	51F	099	302	304	301	301	301	202	X					PDP (d,b)			628	
20	51I	103	301	303	303	302	302	301		X			X		SYNCOM-3 repair		15,190	Used to open stuck AUSSAT-1 sunshield. Elbow joint primary mode failed.
21	51J	104	RMS NOT FLOWN															

SPAR-1 (KSC) FLight Hardware Allocation Reports

SHUTTLE HISTORIES
REMOTE MANIPULATOR SYSTEM

Miss. Seq. No.	STS-No.	Orb. OV-	Major RMS LRU Serial Numbers						RMS Major Usage Matrix							Miscellaneous Activities	Mass Handled by RMS, lb	Contingency Usage/Remarks
									TV Surveys					Satellite				
			Arm	EE	MCIU	D&C PNL	THC	RHC	TPS	H_2O Dump	SAT PKM Burn	Other	MFR	Deploy/ Berth	Retrieve/ Repair			
22	61A	099	302	304	301	301	301	202		X								
23	61B	104	301	303	302	303	303	303	X	X	X		X			Ease/Access Operations. Witness plate.		
24	61C	102	RMS NOT FLOWN															
25	51L	099	302	304	301 203*	301	301	202										
26	26	103	RMS NOT FLOWN															
27	27	104	201	302	302	303	303	302	DOD MISSION - DATA NOT AVAILABLE									
28	29	103	RMS NOT FLOWN															
29	30	104	RMS NOT FLOWN															
30	28	102	DOD MISSION - DATA NOT AVAILABLE															
31	34	104	RMS NOT FLOWN															
32	33	103	DOD MISSION - DATA NOT AVAILABLE															
33	32	102	201	302	303	203	203	301						LDEF	LDEF		21,393	

*MCIU 203 flown as spare.

SPAR-1 (KSC) Flight Hardware Allocation Reports

SHUTTLE HISTORIES
REMOTE MANIPULATOR SYSTEM

Miss. Seq. No.	STS-No.	Orb. OV-	Major RMS LRU Serial Numbers						RMS Major Usage Matrix							Miscellaneous Activities	Mass Handled by RMS, lb	Contingency Usage/Remarks
									TV Surveys					Satellite				
			Arm	EE	MCIU	D&C PNL	THC	RHC	TPS	H_2O Dump	SAT PKM Burn	Other	MFR	Deploy/ Berth	Retrieve/ Repair			
34	36	104	DOD MISSION - DATA NOT AVAILABLE															
35	31	103	301	303	201	302	202	303						HST			23,905	
36	41	103	301	303	201	302	202	303								ISAC Experiment	0	
37	38	104	DOD MISSION - DATA NOT AVAILABLE															
38	35	102	RMS WAS NOT FLOWN															

SPAR-1 (KSC) Flight Hardware Allocation Reports

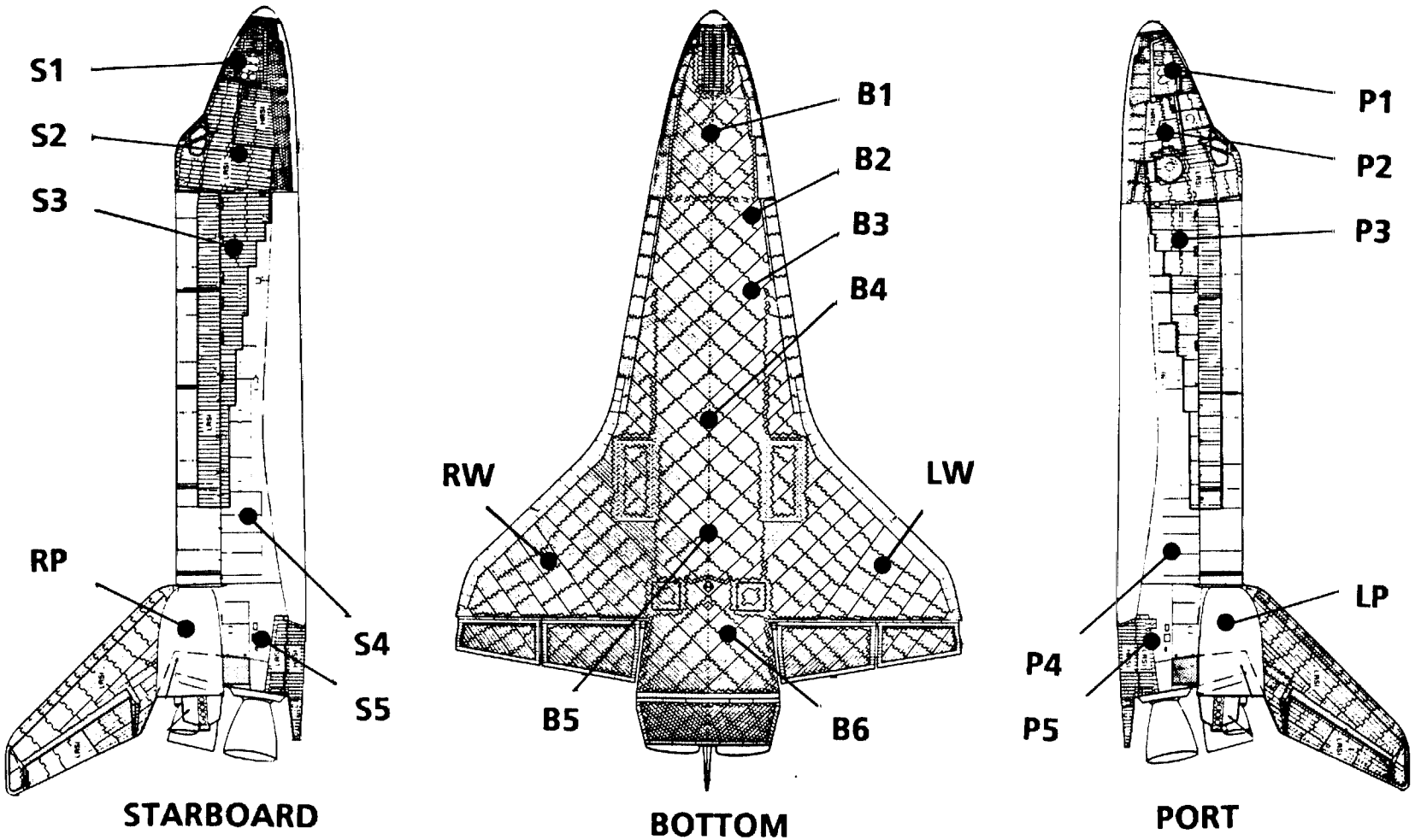

Thermal protection subsystem temperature sensor locations.

SHUTTLE HISTORIES
THERMAL PROTECTION SYSTEM - ENTRY TEMPERATURES

Miss. Seq. No.	STS- No.	Orb. OV-	ORBITER STRUCTURE MAXIMUM TEMPERATURES DURING ENTRY																			
			Lower surface						LWR Wing		Port Side					Starboard Side					OMS Pods	
			B1	B2	B3	B4	B5	B6	LW	RW	P1	P2	P3	P4	P5	S1	S2	S3	S4	S5	LP	RP
1	1	102#	153	190	177	196	217	191	135	153	158	111	194	101	88	167	N/A	N/A	80	99	221	233
2	2	102	133	185	177	164	182	164	138	117	177	138	199	80	93	175	N/A	N/A	112	120	239	260
3	3	102	143	180	173	167	191	175	138	136	157	120	189	83	98	159	N/A	N/A	86	100	220	228
4	4	102#	141	166	170	153	180	180	130	112	156	117	183	80	106	153	N/A	N/A	65	98	231	233
5	5	102	143	182	170	162	175	156	122	112	154	117	177	58	83	159	N/A	N/A	57	78	225	228
6	6	099	125	178	170	149	163	159	125	130	138	104	172	67	83	163	N/A	N/A	86	96	180	217
7	7	099#	127	183	180	169	180	180	120	112	180	138	203	75	104	138	N/A	N/A	49	78	239	212
8	8	099#	153	210	220	191	203	193	140	125	148	130	193	73	91	125	101	172	55	78	172	225
9	9*	102	148	206	200	189	206	196	161	153	162	N/A	207	94	112	197	N/A	N/A	148	138	267	281
10	41B	099	122	175	167	146	159	162	109	107	143	101	159	54	86	143	112	169	60	80	183	236
11	41C	099	127	190	180	148	161	165	112	103	143	117	172	47	78	120	99	158	47	73	59	180
12	41D	103#	133	204	198	170	200	202	130	122	178	109	91	52	62	146	88	86	39	57	70	60
13	41G*	099	127	185	177	153	167	167	143	124	143	112	188	73	91	167	140	193	88	101	189	211
14	51A	103	143	193	182	167	178	175	112	120	164	91	96	47	N/A	165	114	101	50	55	57	65
15	51C	103	117	161	151	128	153	156	110	109	159	104	94	47	N/A	181	122	94	58	58	65	76

N/A = No data

* - High inclination orbit entry
(Higher temperatures expected)

\# - High TPS roughness
(Higher temperatures expected)

Source: NASA - JSC - ES3

SHUTTLE HISTORIES
THERMAL PROTECTION SYSTEM - ENTRY TEMPERATURES

Miss. Seq. No.	STS-No.	Orb. OV-	ORBITER STRUCTURE MAXIMUM TEMPERATURES DURING ENTRY																		
			Lower surface						LWR Wing		Port Side					Starboard Side					OMS Pods	
			B1	B2	B3	B4	B5	B6	LW	RW	P1	P2	P3	P4	P5	S1	S2	S3	S4	S5	LP	RP
16	51D	103	138	183	171	149	170	178	111	107	170	117	88	46	N/A	130	97	87	49	65	65	60
17	51B*	099	125	185	175	161	156	154	114	117	162	112	178	62	70	156	125	183	62	73	153	62
18	51G	103	130	170	161	146	167	177	112	114	175	112	88	46	N/A	148	114	96	47	59	70	67
19	51F*	099	120	177	171	170	175	167	140	146	138	101	189	86	85	148	122	194	98	101	161	73
20	51I	103	130	169	159	143	162	175	107	112	164	101	80	40	N/A	136	98	86	39	57	65	60
21	51J	104	123	164	158	133	153	175	101	117	111	80	76	42	57	137	107	83	37	55	55	52
22	61A*	099	143	200	196	185	191	178	130	143	127	112	191	78	88	175	172	236	124	117	N/A	76
23	61B	104	125	159	159	143	170	207	101	125	117	83	73	41	60	154	138	112	57	68	60	60
24	61C	102	127	196	186	159	188	186	122	112	167	140	127	63	83	125	N/A	143	47	73	62	55
25	51L	099	N/A	N/A	N/A	N/A	N/A	N/A	N/A	N/A	N/A	N/A	N/A	N/A	N/A	N/A	N/A	N/A	N/A	N/A	N/A	N/A
26	26	103	124	167	149	122	164	169	114	114	151	96	83	52	60	175	104	78	42	55	57	70
27	27*	104	175	220	212	188	207	209	146	164	122	102	101	49	62	182	185	143	96	96	70	81
28	29	103	148	188	166	138	177	175	114	112	156	104	83	34	52	153	107	78	32	47	57	65
29	30	104	122	161	149	127	149	170	122	117	138	88	78	47	38	143	117	96	47	60	78	62
30	28	102#	125	183	196	186	225	206	138	125	137	112	89	55	78	167	N/A	112	62	76	83	83

N/A = No data

* - High inclination orbit entry
(Higher temperatures expected)

\# - High TPS roughness
(Higher temperatures expected)

Source: NASA - JSC - ES3

SHUTTLE HISTORIES
THERMAL PROTECTION SYSTEM - ENTRY TEMPERATURES

Miss. Seq. No.	STS- No.	Orb. OV-	ORBITER STRUCTURE MAXIMUM TEMPERATURES DURING ENTRY																			
			Lower surface						LWR Wing		Port Side					Starboard Side					OMS Pods	
			B1	B2	B3	B4	B5	B6	LW	RW	P1	P2	P3	P4	P5	S1	S2	S3	S4	S5	LP	RP
31	34	104	130	175	166	148	172	182	117	120	140	114	91	65	55	130	112	94	52	55	68	68
32	33	103	132	175	148	127	164	167	122	130	154	96	86	39	54	198	130	96	57	62	67	70
33	32	102	149	225	199	186	206	185	135	133	146	123	101	68	88	143	—	120	70	90	83	70
34	36	104	135	170	164	137	161	174	144	149	151	96	85	55	55	143	112	101	47	55	80	80
35	31	103	153	206	180	145	180	183	122	114	140	96	80	32	59	141	101	72	24	44	57	39
36	41	103	130	180	153	125	162	164	117	104	180	122	98	44	68	146	99	78	32	44	76	44
37	38	104	146	190	172	140	162	175	122	125	122	99	83	44	54	125	122	94	47	55	70	67
38	35	102	146	209	191	175	193	185	132	135	151	123	101	73	88	153	—	123	70	86	91	76

N/A = No data

* - High inclination orbit entry
(Higher temperatures expected)

\# - High TPS roughness
(Higher temperatures expected)

Source: NASA - JSC - ES3

SHUTTLE HISTORIES
THERMAL PROTECTION SYSTEM - ENTRY TEMPERATURES

Miss. Seq. No.	STS-No.	Orb. OV-	ORBITER STRUCTURE MAXIMUM TEMPERATURES RISE DURING ENTRY																			
			Lower surface						LWR Wing		Port Side					Starboard Side					OMS Pods	
			B1	B2	B3	B4	B5	B6	LW	RW	P1	P2	P3	P4	P5	S1	S2	S3	S4	S5	LP	RP
1	1	102#	116	163	174	178	196	165	118	124	113	106	204	95	74	105	N/A	N/A	64	80	213	211
2	2	102	114	164	174	157	170	144	125	121	112	99	196	71	69	125	N/A	N/A	75	93	228	239
3	3	102	106	148	159	148	167	141	119	112	115	96	196	69	75	104	N/A	N/A	60	71	211	209
4	4	102#	117	147	176	159	180	144	132	116	106	98	198	84	72	103	N/A	N/A	69	69	218	220
5	5	102	111	158	167	151	164	132	121	108	104	95	191	62	67	102	N/A	N/A	51	62	219	209
6	6	099	98	149	157	143	144	125	103	113	98	90	182	69	64	101	N/A	N/A	64	64	174	193
7	7	099#	114	175	190	170	172	147	130	132	104	96	190	54	62	120	N/A	N/A	66	70	202	229
8	8	099#	111	158	180	162	169	146	129	129	105	88	179	53	62	103	113	178	62	72	172	229
9	9*	102	114	177	190	160	172	146	124	111	112	N/A	209	60	65	114	N/A	N/A	55	63	243	229
10	41B	099	90	146	153	135	140	125	116	110	99	87	178	61	67	99	111	173	64	69	187	230
11	41C	099	93	150	156	135	137	125	119	115	99	91	183	66	67	101	116	175	66	69	40	196
12	41D	103#	111	174	188	166	190	172	136	142	126	83	87	44	41	122	110	90	46	51	46	44
13	41G*	099	95	151	158	145	148	131	127	110	111	98	197	77	73	104	124	179	67	67	190	191
14	51A	103	101	146	148	133	144	135	118	112	130	87	87	41	N/A	123	111	82	36	41	43	44
15	51C	103	111	137	147	127	142	135	112	111	119	78	80	39	N/A	124	114	82	31	34	38	47

N/A = Not Available

* - High Inclination Orbit Entry (Higher Temperatures Expected)

\# - High TPS Roughness (Higher Temperatures Expected)

Source: NASA - JSC - ES3

SHUTTLE HISTORIES
THERMAL PROTECTION SYSTEM - ENTRY TEMPERATURES

Miss. Seq. No.	STS-No.	Orb. OV-	ORBITER STRUCTURE MAXIMUM TEMPERATURES RISE DURING ENTRY																			
			Lower surface						LWR Wing		Port Side					Starboard Side					OMS Pods	
			B1	B2	B3	B4	B5	B6	LW	RW	P1	P2	P3	P4	P5	S1	S2	S3	S4	S5	LP	RP
16	51D	103	99	135	139	130	144	136	113	109	115	78	72	43	N/A	124	109	85	48	52	44	48
17	51B*	099	99	159	169	155	152	133	136	134	107	101	203	86	66	101	127	195	82	75	163	58
18	51G	103	108	151	165	140	154	146	124	121	118	83	84	37	N/A	119	108	80	38	45	54	43
19	51F*	099	109	166	177	164	159	141	124	130	114	100	208	80	71	106	127	195	82	83	166	55
20	51I	103	107	145	153	134	143	141	116	116	114	79	88	39	N/A	119	105	77	38	46	51	41
21	51J	104	104	143	154	137	147	149	118	132	92	82	85	49	46	82	101	85	39	41	41	54
22	61A*	099	96	155	165	159	160	139	135	122	110	100	197	82	74	105	120	179	66	73	N/A	44
23	61B	104	103	148	163	142	156	175	118	117	98	87	90	45	44	94	112	88	28	31	41	54
24	61C	102	85	151	162	143	162	147	121	118	104	90	188	65	65	114	N/A	91	64	65	43	54
25	51L	099	N/A	N/A	N/A	N/A	N/A	N/A	N/A	N/A	N/A	N/A	N/A	N/A	N/A	N/A	N/A	N/A	N/A	N/A	N/A	N/A
26	26	103	106	143	145	121	150	140	116	113	117	88	85	49	39	107	98	72	26	31	49	44
27	27*	104	95	145	142	131	150	154	122	122	96	83	80	21	28	91	107	78	16	28	56	62
28	29	103	111	149	145	122	153	141	113	111	116	85	82	30	33	111	106	72	24	33	41	41
29	30	104	98	141	143	121	135	139	116	111	91	82	85	44	38	86	106	82	36	36	49	51
30	28	102#	93	157	190	180	211	174	150	130	112	96	94	70	70	104	N/A	93	62	70	61	49

N/A = Not Available

* - High Inclination Orbit Entry (Higher Temperatures Expected)

\# - High TPS Roughness (Higher Temperatures Expected)

Source: NASA - JSC - ES3

SHUTTLE HISTORIES
THERMAL PROTECTION SYSTEM - ENTRY TEMPERATURES

Miss. Seq. No.	STS-No.	Orb. OV-	ORBITER STRUCTURE MAXIMUM TEMPERATURES RISE DURING ENTRY																			
			Lower surface						LWR Wing		Port Side					Starboard Side					OMS Pods	
			B1	B2	B3	B4	B5	B6	LW	RW	P1	P2	P3	P4	P5	S1	S2	S3	S4	S5	LP	RP
31	34	104	112	144	150	124	138	143	111	119	83	80	80	49	39	88	116	86	31	44	50	47
32	33	103	108	151	145	119	144	138	106	106	120	82	85	33	35	113	104	70	20	28	43	49
33	32	102	89	158	147	142	164	130	125	122	115	104	100	73	70	111	—	98	75	74	69	56
34	36	104	103	141	148	118	137	140	102	108	97	90	81	34	31	83	109	82	36	31	48	43
35	31	103	111	159	151	123	151	138	122	114	123	88	84	39	40	117	108	74	33	38	50	51
36	41	103	103	154	145	116	143	134	109	111	110	80	79	18	29	122	111	75	26	30	39	51
37	38	104	97	140	136	111	128	130	111	112	89	81	80	36	33	96	121	80	28	36	49	43
38	35	102	91	157	160	146	164	140	131	124	122	102	100	70	69	119	—	102	56	67	70	57

N/A = Not Available

* - High Inclination Orbit Entry
(Higher Temperatures Expected)

\# - High TPS Roughness
(Higher Temperatures Expected)

Source: NASA - JSC - ES3

DEBRIS IMPACT DAMAGE TO ORBITER THERMAL PROTECTION SYSTEM

Miss. Seq. No.	STS-No.	Orb. OV-	Location and size of debris hits													
			Lower surface		Upper surface		Right (STBD) side		Left (Port)		Right OMS		Left OMS		Overall	
			> 1"	Tot.	> 1"	Tot.	> 1"	Tot.	> 1"	Tot.	> 1"	Tot.	> 1"	Tot.	> 1"	Tot.
1	1	102 1	247 TILE REPLACED BECAUSE OF IN-FLIGHT DAMAGE													247
2	2	102 2	109 TILE REPLACED BECAUSE OF IN-FLIGHT DAMAGE													109
3	3	102 3	113 TILE REPLACED BECAUSE OF IN-FLIGHT DAMAGE													113
4	4	102 4	122 TILE REPLACED BECAUSE OF IN-FLIGHT DAMAGE													122
5	5	102 5	161 TILE REPLACED BECAUSE OF IN-FLIGHT DAMAGE													161
6	6	099 1	21	89	5	13	8	16	2	2	N/A	N/A	N/A	N/A	36	120
7	7	099 2	41	153	N/A	N/A	4	56	0	16	2	18	1	10	48	253
8	8	099 3	3	29	0	4	0	7	0	9	0	3	4	4	7	56
9	9	102 6	9	49	1	5	1	1	0	0	1	1	2	2	14	58
10	41B	099 4	11	19	11	25	2	5	5	7	0	2	5	5	34	63
11	41C	099 5	5	27	3	5	0	0	0	0	0	4	0	0	8	36
12	41D	103 1	10	44	2	5	6	14	0	0	10	40	3	8	31	111
13	41G	099 6	25	69	2	40	2	11	1	10	2	15	4	9	36	154
14	51A	103 2	14	66	1	8	0	1	0	0	4	9	1	3	20	87
15	51C	103 3	24	67	N/A	N/A	1	5	0	0	2	2	1	7	28	81

Legend: N/A = Not available

Source: KSC/RIC Launch Support Operations

DEBRIS IMPACT DAMAGE TO ORBITER THERMAL PROTECTION SYSTEM

Miss. Seq. No.	STS-No.	Orb. OV-	Location and size of debris hits													
			Lower surface		Upper surface		Right (STBD) side		Left (Port)		Right OMS		Left OMS		Overall	
			> 1"	Tot.	> 1"	Tot.	> 1"	Tot.	> 1"	Tot.	> 1"	Tot.	> 1"	Tot.	> 1"	Tot.
16	51D	1034	43	111	N/A	N/A	1	7	0	10	1	10	1	14	46	152
17	51B	0997	45	110	4	9	3	6	4	5	4	6	2	4	62	140
18	51G	1035	109	231	3	10	18	32	8	16	2	16	4	10	144	315
19	51F	0998	179	482	13	18	17	28	10	13	2	3	5	9	226	553
20	51I	1036	21	96	3	12	1	8	1	7	2	11	5	7	33	141
21	51J	1041	7	66	0	1	0	3	0	2	7	20	3	19	17	111
22	61A	0999	24	129	0	3	1	15	6	15	2	12	1	9	34	183
23	61B	1042	37	177	6	10	4	21	3	25	2	7	3	17	55	257
24	61C	1027	20	134	4	10	2	11	7	15	3	14	3	9	39	193
25	51L	09910	N/A	N/A	N/A	N/A	N/A	N/A	N/A	N/A	N/A	N/A	N/A	N/A	N/A	N/A
26	26	1037	47	342	0	5	0	5	0	9	2	23	6	27	55	411
27	27	1043	272	644	5	21	2	4	0	0	19	32	0	6	298	707
28	29	1038	18	100	1	5	2	13	0	6	2	8	0	0	23	132
29	30	1044	52	134	0	2	2	5	1	2	1	5	0	3	56	151

DEBRIS IMPACT DAMAGE TO ORBITER THERMAL PROTECTION SYSTEM

Miss. Seq. No.	STS-No.	Orb. OV-	Location and size of debris hits													
			Lower surface		Upper surface		Right (STBD) side		Left (Port)		Right OMS		Left OMS		Overall	
			> 1"	Tot.	> 1"	Tot.	> 1"	Tot.	> 1"	Tot.	> 1"	Tot.	> 1"	Tot.	> 1"	Tot.
30	28	102 8	13	60	0	0	2	5	3	1	1	7	1	1	20	76
31	34	104 5	17	51	0	1	0	0	1	1	0	0	0	0	18	53
32	33	103 9	21	107	0	7	0	0	0	0	0	1	0	3	21	118
33	32	102 9	13	111	1	4	0	0	0	4	1	1	0	0	15	120
34	36	104 6	17	61	0	18	1	1	0	0	0	0	1	1	19	81
35	31	103 10	11	33	1	2	0	8	0	5	0	0	0	0	12	48
36	41	103 11	13	64	0	1	1	7	1	3	0	0	1	1	16	76
37	38	104 7	7	70	0	6	0	3	0	0	0	0	1	2	8	81
38	35	102 10	15	132	1	2	0	5	0	5	0	2	1	1	17	47

Legend: N/A = Not available
[a]Gouge 6" x 18" x 1 1/2" deep

Source: KSC/RIC Launch Support Operations

SHUTTLE HISTORIES
ORBITER THERMAL PROTECTION SYSTEM SIGNIFICANT PROBLEMS

Miss. Seq. No.	STS-No.	Orb. OV-Flt.	PROBLEMS	Related Inflight Anomaly
1	1	102 1	o Overheating of structure caused by damage to TPS resulted in buckling of right main landing gear door.	STS 1-49
			o 1 tile and 3 tile segments missing on OMS pods.	STS 1-32
			o Loss of TPS resulted in skin panel overheating damage to OMS pod structure.	None
			o Overheating of FRSI caused extensive damage to aft outboard skin panels of OMS pod substructure.	STS 1-8
			o Windows contaminated by RTV outgassing during flight.	None
			o High incidence of debris impact damage.	
			o High incidence of charred filler bars.	
2	2	102 2	o Launch pad FRCS hypergolic spill caused extensive tile debonding, major effort required to rework prior to flight.	None
			o Wing leading edge structural subsystem oveheating caused flow through to interior of RCC panels.	None
			o FRSI overheating on right OMS pod, no structural damage.	None
			o High incidence of debris impact damage.	STS 2-19
			o High incidence of charred filler bars.	None
3	3	102 3	o 34 tiles missing on upper forward fuselage.	STS 3-16
			o 16 tiles missing on upper body flap.	
			o FRSI overheating on OMS pod.	
			o Debris impact damage on OMS pod leading edge caused tile damage and overheating damage to OMS pod sub-structure face sheet.	
			o High incidence of charred filler bars.	
			o Tiles slumped adjacent to nose cap lower edge.	None
4	4	102 4	o Hail damage to tiles while vehicle at pad, extensive repair required prior to launch.	STS 4-1
			o Debris damage to OMS pod lower leading edge tiles resulted in oveheating damage to face sheet of OMS pod substructure.	None
			o 1 tile missing on all upper fuselage (1307 bulkhead).	None
			o Tiles slumped adjacent to nose cap lower edge.	None
			o High incident of charred filler bars.	None
5	5	102 5	o Flow path caused severe overheating damage to substructure adjacent to nose cap lower edge.	None
			o 1 tile incidence of charred fillers bars.	
6	6	099 1	o Large areas of FI damage on leading edge of both OMS pods, no structural damage.	STS 6-5
7	7	099 2	o High incidence of debris impact damages.	STS 7-27
8	8	099 3	o None	

SHUTTLE HISTORIES
ORBITER THERMAL PROTECTION SYSTEM SIGNIFICANT PROBLEMS

Miss. Seq. No.	STS-No.	Orb. OV-Flt.	PROBLEMS	Related Inflight Anomaly
9	9	102 6	o Debris damage to tiles caused delamination to left OMS pod forward substructure.	STS 9-32
10	41B	099 4	o Debris damage to tiles caused delamination to left OMS pod forward substructure.	STS 41B-27
11	41C	099 5	o None.	
12	41D	103 1	o Slumped edges noted on many lower wing leading edge tiles adjacent to RCC. o On-Orbit ice formation on TPS adjacent to overboard water dump valve.	None STS 41D-14
13	41G	099 6	o 1 tile lost on lower right wing glove/chine area. o RTV (screed) degradation found on large areas of vehicle, major rework effort required. o Loss of FRSI closeout panel on right OMS pod caused delamination of skin panel substructure.	STS 41G-25 STS 41G-25A
14	51A	103 2	o None.	
15	51C	103 3	o None.	
16	51D	103 4	o Severe TPS damage on left outboard elevon caused carrier panel burn through and severe structural damage to elevon leading edge. o Damage thermal barrier interfered with external tank umbilical door closure during flight. o Protruding carrier panel adjacent to lower wing RCC.	STS 51D-14 STS 51D-2 None
17	51B	099 7	o Protruding FI blanket on right OMS pod caused overheating and delamination of OMS pod substructure.	STS 51B-6
18	51G	103 5	o High incidence of debris impact damages.	STS 51G-11
19	51F	099 7	o High incidence of debris impact damages.	STS 51F-15
20	51I	103 6	o None.	

SHUTTLE HISTORIES
ORBITER THERMAL PROTECTION SYSTEM SIGNIFICANT PROBLEMS

Miss. Seq. No.	STS-No.	Orb. OV-Flt.	PROBLEMS	Related Inflight Anomaly
21	51J	104 1	o Lost gap filler on left inboard elevon caused severe damage to 2 tile carrier panels. o 2 tile carrier panels.	STS 51J-7
22	61A	099 9	o High incidence of debris impact damages.	None
23	61B	104 2	o None.	None
24	61C	102 7	o Rain exposure during AA and mod ferry flight return caused extensive tile damage on vehicle leading edge areas. o Loss of diced segment on right payload bay door caused damage to face sheet of door substructure. o 1 tile missing on star tracker door. o High incidence of debris impact damages.	 None None None
25	51L	099 10	N/A	N/A
26	26	103 7	o Approximately 6" x 18" x 1 1/2" TPS damage on RT wing lower surface noted postflight. Possible debris during ascent.	STS-26R-13
27	27	104 3	o Postlanding tile examination revealed approximately 250-300 damaged areas greater than 1 inch. Most impact damage on right side bottom of wing and fuselage.	STS-27-07
28	29	103 8	o Number and severity of debris hits (132 total/23 greater than 1 inch) less than average of previous flights. Two long gouges aft of right main landing gear. Suspected cause - RH main landing gear. Suspected cause - RH main landing gear strain gage wiring and connector came loose and was found on runway.	STS-29-22
29	30	104 4	o Total of 151 hits with 56 greater than 1 inch. Heavy concentration of damage aft of left main landing gear due to shredded tire debris. Crosswind landing DTO.	
30	28	102	o None - Total of 76 hits, of which 20 hits were 1 inch or greater. Found missing tile corner (6"x4") from RH MLG door near end of runway. Tile condition overall was considered good.	None
31	34	104	o None - Total of 53 hits of which 18 hits were 1 inch or greater. Better than any previous flight. Tile condition good.	None
32	33	103	o None - Total of 118 hits, of which 21 hits were 1 inch or greater. Tile condition better than average.	None

SHUTTLE HISTORIES
ORBITER THERMAL PROTECTION SYSTEM SIGNIFICANT PROBLEMS

Miss. Seq. No.	STS-No.	Orb. OV-Flt.	PROBLEMS	Related Inflight Anomaly
33	32	102	o None - 11 significant hits. Tile condition was considered good.	None
34	36	104	o None - 19 significant hits. Tile condition was considered good.	None
35	31	103	o None - 11 significant hits. Tile condition was considered good.	None
36	41	103	o None - 16 significant hits. Tile condition was better than average.	None
37	38	104	o None - 8 significant hits. Tile condition was considered good.	None
38	35	102	o None - 17 significant hits. Tile condition was considered average.	None

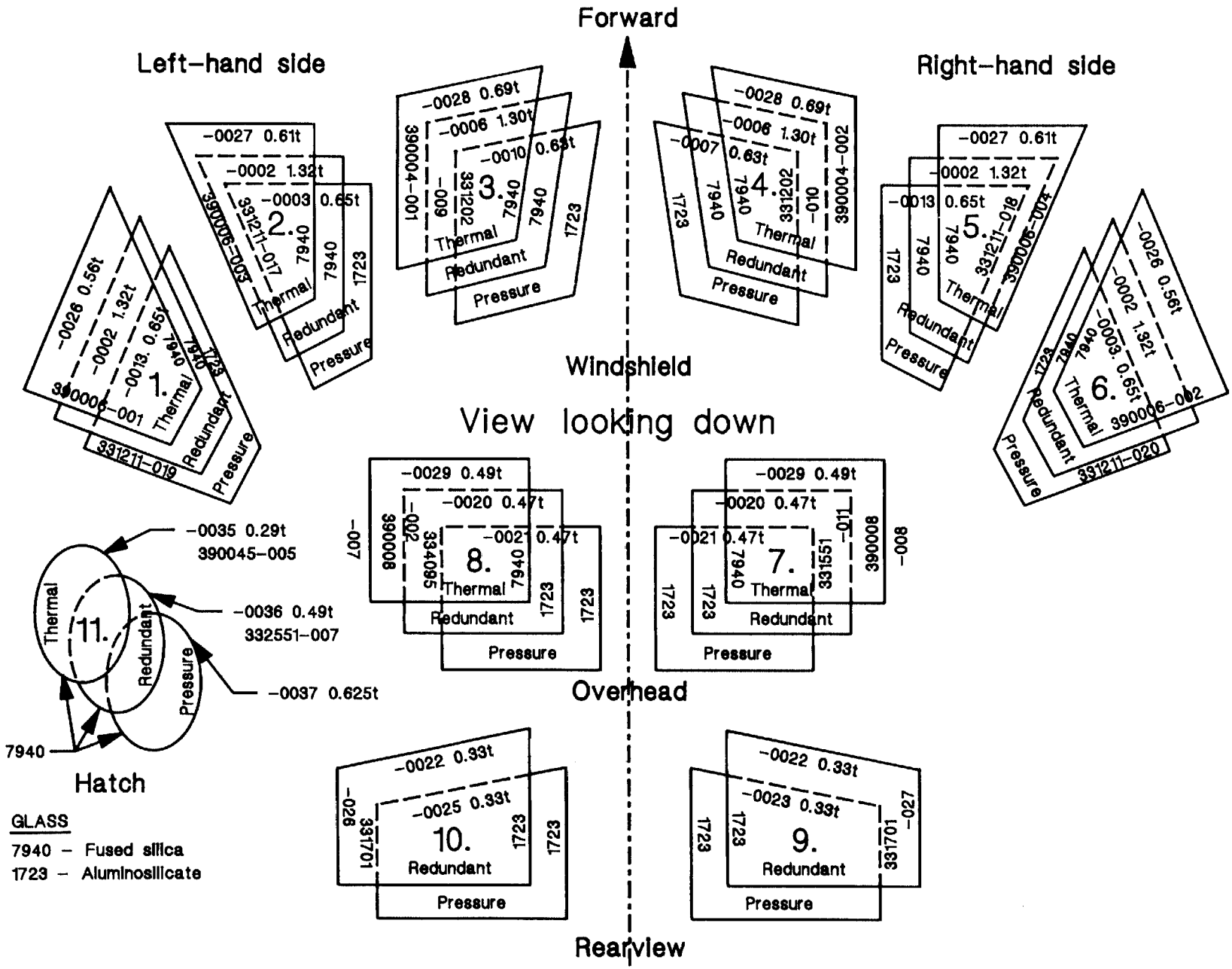

OV-103/OV-104 Window orientation.

C007685C.ART;1

WINDOW DATA

Mission Seq. No.	STS-No.	Orbiter Vehicle	Window	Anomaly	Disposition
1-4	STS-1 through STS-4	102	N/A	None	
5	STS-5	102	R. fwd. (#111) -0028	bruise	Window removed; currently being used for training at KSC.
5	STS-5	102	L. fwd. (#TBS) -0028	pit	Window retained; pit measured .05" x .06 x .0068" dp.
6	STS-6	099	N/A	None	
7	STS-7	099	R. mid. (#112) -0027	pit	Window removed; pit evaluated at JSC (.15" x .129" x .0171" dp.); orbital debris impact proposed.
8	STS-8	099	L. fwd. (#114) -0028	hazing	Window removed; in storage at JSC.
	STS-8	099	R. fwd. (#113) -0028	pits	Window removed; 2 pits measured .075"dia. x 0073" dp and .022"dia. x .0009" dp. At JSC.
9	STS-9	102	L. side (#116) -0026	pit	Window removed; pit measured .04" x .045" x .0035" dp. At JSC.
	STS-9	102	R. side (#TBS) -0026	pit	Window retained; pit measured .015" x .025" x .0014" dp.
10	41B	099	L. fwd. (#TBS) -0028	pit	Window retained, pit measured .0012" dp.
11	41C	099	R. fwd. (#TBS) -0028	pit	Window retained; pit measured .0385" x .0415" x .0048" dp.
	41C	099	L. side (#117) -0026	pit	Window retained; pit measured .025" dia. x .0009" dp.
12	41D	103	L. side (#106) -0026	pit	Window removed; pit measured .075" dia. x .008" dp. At JSC.
13	41G	099	L. side (#117) -0026	pit	Window removed; pit measured .055" x .05" x .007" dp.
	41G	099	R. fwd. (#104) -0028	pit	Window removed; pit measured .089" dia. x .0113" dp. At JSC.
14	51A	103	R. o.h. (#TBS) -0019	pit	Window retained; 2 pits measured .001" dp and .0018" dp.
15	51C	103	L. mid. (#104) -0027	pit	Window removed; pit measured .05" x .03" x .0088" dp. At JSC.
16	51D	103	N/A	None	
17	51B	099	L. fwd. (#TBS) -0028	pit	Window retained; pit measured .030" dia. x .0016" dp.
	51B	099	R. fwd. (#TBS) -0028	pit	Window retained; pit measured .055" x .040" x .0014" dp.
18	51G	103	R. mid. (#TBS) -0027	pit	Window retained; pit measured .04" x .025" x .0038" dp.
19	51F	099	R. mid. (#TBS) -0027	pit	Window retained; pit measured .04" dia. x .0014" dp.

WINDOW DATA

Mission Seq. No.	STS-No.	Orbiter Vehicle	Window	Anomaly	Disposition
20	51I	103	L. fwd -0028	pit	Window retained; pit measured .09" dia. x .0083" dp
21	51J	104	N/A	None	
22	61A	099	L. mid. (#114) -0027	pit	Window removed; pit measured .049" dia. x .0064" dp. At JSC.
	61A	099	R. fwd. -0028	pit	Window retained; pit measured .025" dia. x 0006" dp. Two impacts connected by fracture.
23	61B	104	L. side (#120) -0026	pit	Window removed; pit measured .025" x .015" x .0009" dp. At JSC.
	61B	104	L. mid. (#105) -0027	pit	Window retained; pit measured .025" dia. x 001" dp.
	61B	104	R. fwd. (#105) -0028	pit	Window removed, pit measured .097" x .043" x .0078" dp. At JSC.
24	61C	102	L. side (#102) -0026	pit	Window retained; pit measured .022" dia. x .0008" dp.
25	51L	099	N/A	None	
26	26	103	N/A	None	
27	27	104	N/A	None	
28	29	103	N/A	None	
29	30	104	R. side (#113) -0026	pit	Window removed; pit measured .1017" x .0919" x .0115" dp.
30	28	102	N/A	None	
31	34	104	N/A	None	
32	33	103	N/A	None	
33	32	102	N/A	None	
34	36	104	N/A	None	
35	31	103	R. side (103) -0026	None	Window removed; pit measured 0.06" X0.051" X0.01" deep
36	41	103	N/A	None	

WINDOW DATA

Mission Seq. No.	STS-No.	Orbiter Vehicle	Window	Anomaly	Disposition
37	38	104	R. fwd. (116) -0028	None	Window retained; pit measured 0.05" x 0.045" x 0.0087" deep
			L. fwd. (106) -0028	None	Window retained; pits measured 0.0253" dia. x 0.0052" deep 0.0444" dia. x 0.0065" deep 0.0390" dia x 0.0073" deep
			L. side (105) -0026	None	Window removed; pit measured 0.050" x 0.055" x 0.0039" deep
			R. side (124) -0026	None	Window removed; pits measured 0.0207" dia. x 0.0016" deep 0.0282" dia. x 0.0027" deep
38	35	102	L. side (112) -0026	STS-35-18	Window removed; pit measured 0.068" x 0.046" x 0.0109 deep

ACTIVE THERMAL CONTROL SUBSYSTEM
ASCENT, ENTRY AND POSTLANDING EVENTS AND PERFORMANCE DATA

Miss. Seq. No.	STS-No.	Orb. OV-	ASCENT EVENTS & PERFORMANCE DATA							ENTRY & POST-LANDING EVENTS AND PERFORMANCE DATA								
			FES Start, MET m:s	RAD. Flow Start, MET h:m	PLBD Open, MET h:m	Deploy RAD., MET h:m	H/L FES Inhibit, MET h:m	FES Start Out-Temp., °F.	MAX FES In Temp., °F.	Start RAD. Flow, + TD-M	RAD Flow Time, M	ABS Start, TD±M	Start GSE Cooling TD+M	Start PLB Purge, TD+M	Avg RAD. In Temp., °F.	Max FCA Out Temp., °F.	NH_3 Quan At Start, lb	NH_3 Quan At GSE Cooling, lb
1	1	102	2:16	1:10	1:52	1:56	2:10	94	115	+1	15	-9	15	20	103	64	102	72
2	2	102	2:19	1:17	2:15	2:21	2:25	97	120	-8	36	+9	27	35	98	71	98	80
3	3	102	2:13	1:31	2:38	2:42	2:43	97	117	-11	50	+8	35	39	103	74	98	80
4	4	102	2:16	0:57	2:01	PDOP	2:30	99	118	-10	>140	+12	30	36	97	68	99	85
5	5	102	2:21	1:15	1:34	PDOP	1:59	>100	117	-11	45	+16	28	38	100	66	98	87
6	6	099	2:13	1:14	1:45	NP	2:01	94	104	-11	61	+11	25	40	87	67	95	81
7	7	099	2:10	1:09	1:24	NP	1:51	95	106	-11	52	+12	DNA	DNA	92	68	95	65
8	8	099	2:10	1:10	1:28	2:30	1:40	95	106	-11	78	+14	20	35	89	64	96	91
9	9	102	2:15	1:05	1:29	1:38	1:41	91	108	-11	56	-10	21	34	94	82	98	71
10	41B	099	2:12	1:16	1:30	NP	1:40	88	101	-11	>140	+15	27	66	90	>69	96	86
11	41C	099		1:06	1:28	PDOP	1:40	88	101	-11	30	-8	DNA	DNA	85	54	100	86
12	41D	103		1:12	1:33	NP	1:46	55	99	-11	54	+12	34	DNA	86	>58	98	87
13	41G	099	2:10	1:08	1:18	NP	1:26	83	102	-11	>180	-7	32	54	88	>75	97	72

Legend:
PDOP = Performed during orbit period
NP = Not performed
DNA = Data not available
GSE = Ground support equipment
TD = Touchdown
PLBD = Payload bay doors
FES = Flash evaporator subsystem
ABS = Ammonia boiler subsystem
RAD = Radiator
N/A = Not applicable
H/L = High load
FCA = Flow control assembly

ACTIVE THERMAL CONTROL SUBSYSTEM
ASCENT, ENTRY AND POSTLANDING EVENTS AND PERFORMANCE DATA

			ASCENT EVENTS & PERFORMANCE DATA							ENTRY & POST-LANDING EVENTS AND PERFORMANCE DATA								
Miss. Seq. No.	STS-No.	Orb. OV-	FES Start, MET m:s	RAD. Flow Start, MET h:m	PLBD Open, MET h:m	Deploy RAD., MET h:m	H/L FES Inhibit, MET h:m	FES Start Out-Temp., °F.	MAX FES In Temp., °F.	Start RAD. Flow, + TD-M	RAD Flow Time, M	ABS Start, TD±M	Start GSE Cooling TD+M	Start PLB Purge, TD+M	Avg RAD. In Temp., °F.	Max FCA Out Temp., °F.	NH_3 Quan At Start, lb	NH_3 Quan At GSE Cooling, lb
14	51A	103	2:10	1:07	1:29	NP	1:50	83	103	-11	>156	+12	49	54	93	75	98	50
15	51C	103	DOD MISSION - DATA NOT AVAILABLE															
16	51D	103	2:08	1:09	1:35	NP	1:50	79	98	-11	107	+10	44	46	86	69	100	0
17	51B	099	2:08	1:15	1:25	1:49	1:36	93	107	-11	89	+12	30	48	94	71	102	87
18	51G	103	2:06	1:12	1:26	NP	1:41	73	100	-11	98	+9	50	61	90	67	100	50
19	51F	099	2:10	1:13	1:34	1:46	1:41	74	108	-11	82	+6	50	51	92	73	100	44
20	51I	103	2:03	1:19	1:34	PDOP	1:48	52	102	-11	71	+23	62	DNA	87	63	100	62
21	51J	104	DOD Mission - Data not available															
22	61A	099	2:07	1:11	1:25	PDOP	1:43	69	106	-11	74	+6	42	42	94	78	100	46
23	61B	104	2:09	1:09	1:33	PDOP	1:49	79	101	-11	87	+15	32	36	83	61	98	80
24	61C	102	2:11	1:14	1:30	NP	1:38	79	100	-11	74	+21	38	48	88	60	98	85
25	51L	099	N/A	N/A	N/A	N/A	N/A	N/A	N/A	N/A	N/A	N/A	N/A	N/A	N/A	N/A	N/A	N/A
26	26	103	2:35	1:24	1:30	NP	00:53	57	108	-11	79	+17	79	—	94	96	98	39

Legend:
PDOP = Performed during orbit period
NP = Not performed
DNA = Data not available
GSE = Ground support equipment
TD = Touchdown
PLBD = Payload bay doors
FES = Flash evaporator subsystem
ABS = Ammonia boiler subsystem
RAD = Radiator
N/A = Not applicable
H/L = High load
FCA = Flow control assembly

ACTIVE THERMAL CONTROL SUBSYSTEM
ASCENT, ENTRY AND POSTLANDING EVENTS AND PERFORMANCE DATA

Miss. Seq. No.	STS-No.	Orb. OV-	ASCENT EVENTS & PERFORMANCE DATA							ENTRY & POST-LANDING EVENTS AND PERFORMANCE DATA								
			FES Start, MET m:s	RAD. Flow Start, MET h:m	PLBD Open, MET h:m	Deploy RAD., MET h:m	H/L FES Inhibit, MET h:m	FES Start Out-Temp., °F.	MAX FES In Temp., °F.	Start RAD. Flow, + TD-M	RAD Flow Time, M	ABS Start, TD±M	Start GSE Cooling TD+M	Start PLB Purge, TD+M	Avg RAD. In Temp., °F.	Max FCA Out Temp., °F.	NH_3 Quan At Start, lb	NH_3 Quan At GSE Cooling, lb
27	27	104	DOD Mission — Data not available															
28	29	103	2:30	1:05	1:25	NP	1:46	86	107	-11	80	+21	+50	—	85	78	98	54
29	30	104	2:30	1:20	1:35	NP	1:55	87	105	-11	81	+20	+60	—	85	70	98	45
30	28	102	DOD Mission - Data not available															
31	34	104	2:20	1:24	1:34	NP	2:18	75	108	-12	92	+8	+44	—	80	86	99	58
32	33	103	DOD Mission - Data not available															
33	32	102	2:12	1:20	1:35	NP	1:55	76	106	-11	>150	13	37	—	90	88	98	71
34	36	104	DOD Mission - Data not available															
35	31	103	2:15	1:21	1:33	NP	1:49	85	89	-11	46	NP	35	—	89	76	97	97
36	41	103	2:24	1:18	1:40	NP	2:34	86	107	-13	>53	15	40	—	96	62	99	72
37	38	104	DOD Mission - Data not available															
38	35	102	2:15	1:16	1:29	NP	1:41	96	112	-11	>56	10	44	—	91	66	99	49

Legend:
PDOP = Performed during orbit period
NP = Not performed
DNA = Data not available
GSE = Ground support equipment
TD = Touchdown
PLBD = Payload bay doors
FES = Flash evaporator subsystem
ABS = Ammonia boiler subsystem
RAD = Radiator
N/A = Not applicable
H/L = High load
FCA = Flow control assembly

ACTIVE THERMAL CONTROL SUBSYSTEM
FLASH EVAPORATOR SUBSYSTEM AND RADIATOR PERFORMANCE DATA

Miss. Seq. No.	STS-No.	Orb. OV-	Flash Evaporator Subsystem Water Usage								Radiator Freon Temperature Extremes			
			Topping FES		Hi-load FES		Ascent	On-Orbit	De-Orbit	Flight Total	Radiator in Temp		Minimum Rad Out Temp.	
			A Valve lb	B Valve lb	A Valve lb	B Valve lb	lb	lb	lb	lb	Maximum °F.	Minimum °F.	FCL 1 °F.	FCL 2 °F.
1	1	102	186	0	449	0	152	149	334	635	117	82	-37	-30
2	2	102	155	104	419	26	176	134	394	704	122	78	-24	-45
3	3	102	310	52	647	25	198	507	329	1034	117	64	-75	-82
4	4	102	95	104	118	270	168	52	367	587	120	69	-50	-62
5	5	102	101	108	100	292	142	61	398	601	118	73	-55	-52
6	6	099	184	100	101	273	142	134	382	658	104	74	-22	-19
7	7	099	149	144	82	388	123	108	532	763	103	71	-77	-62
8	8	099	79	99	85	265	122	42	364	528	104	67	-80	-75
9	9	102	1489	84	201	190	117	1585	262	1164	109	84	-70	-75
10	41B	099	883	85	81	229	116	849	313	1278	100	67	-65	-55
11	41C	099	161	137	78	263	108	131	400	639	100	61	-52	-65
12	41D	103	1040	98	88	264	122	1007	361	1490	102	68	-40	-67
13	41G	099	446	571	70	182	98	894	277	1269	101	75	-42	-47
14	51A	103	1676	95	84	184	116	1644	279	2039	105	71	-75	-62

ACTIVE THERMAL CONTROL SUBSYSTEM
FLASH EVAPORATOR SUBSYSTEM AND RADIATOR PERFORMANCE DATA

Miss. Seq. No.	STS-No.	Orb. OV-	Flash Evaporator Subsystem Water Usage								Radiator Freon Temperature Extremes			
			Topping FES		Hi-load FES						Radiator in Temp		Minimum Rad Out Temp.	
			A Valve lb	B Valve lb	A Valve lb	B Valve lb	Ascent lb	On-Orbit lb	De-Orbit lb	Flight Total lb	Maximum °F. 1209	Minimum °F. 1409	FCL 1 °F. 1210	FCL 2 °F. 1410
15	51C	103	DOD MISSION - DATA NOT AVAILABLE											
16	51D	103	1654	98	90	265	124	1620	363	2107	103	68	-57	-55
17	51B	099	241	104	84	194	115	210	298	623	106	76	-67	-52
18	51G	103	914	94	78	181	107	884	275	1266	103	73	-47	-80
19	51F	099	58	97	88	184	122	24	281	427	106	76	-57	-57
20	51I	103	1354	83	88	168	121	1321	250	1692	106	72	-50	-60
21	51J	104	DOD MISSION - DATA NOT AVAILABLE											
22	61A	099	302	94	84	188	116	270	282	668	104	71	-41	-42
23	61B	104	588	93	84	170	115	557	263	935	100	65	-45	-47
24	61C	102	394	293	70	568	98	841	386	1325	103	71	-52	-47
25	51L	099	N/A	N/A	N/A	N/A	N/A	N/A	N/A	N/A	N/A	N/A	N/A	N/A
26	26	103	329	248	80	185	110	455	277	842	112	80	-50	-30
27	27	104	DOD MISSION - DATA NOT AVAILABLE											
28	29	103	710	42	92	192	206	704	226	1136	110	75	-48	-40
29	30	104	434	127	98	255	125	495	294	914	100	78	-57	-60

ACTIVE THERMAL CONTROL SUBSYSTEM
FLASH EVAPORATOR SUBSYSTEM AND RADIATOR PERFORMANCE DATA

Miss. Seq. No.	STS-No.	Orb. OV-	Flash Evaporator Subsystem Water Usage								Radiator Freon Temperature Extremes			
			Topping FES		Hi-load FES						Radiator in Temp		Minimum Rad Out Temp.	
			A Valve lb	B Valve lb	A Valve lb	B Valve lb	Ascent lb	On-Orbit lb	De-Orbit lb	Flight Total lb	Maximum °F.	Minimum °F.	FCL 1 °F.	FCL 2 °F.
30	28	102	DOD MISSION - DATA NOT AVAILABLE											
31	34	104	721	122	146	172	132	743	285	1160	116	72	-46	-37
32	33	103	DOD MISSION - DATA NOT AVAILABLE											
33	32	102	805	129	56	158	58	853	237	1148	108	68	-73	-68
34	36	104	DOD MISSION - DATA NOT AVAILABLE											
35	31	103	551	109	54	112	59	598	168	825	106	64	-55	-70
36	41	103	711	130	72	215	131	746	251	1128	107	78	-34	-42
37	38	104	DOD MISSION - DATA NOT AVAILABLE											
38	35	102	1963	149	67	252	101	1955	375	2431	114	68	-95	-83

ATMOSPHERIC REVITALIZATION SUBSYSTEM

Miss. Seq. No.	STS-No.	Orb. OV-	Cabin Temperature Peaks: Ascent: HX Air Out °F.	Ascent: Cabin Air °F.	On-Orbit: HX Air Out °F.	On-Orbit: Cabin Air Max. °F.	On-Orbit: Cabin Air Min. °F.	Entry: HX air Out °F.	Entry: Cabin Air °F.	Cabin Partial Pressure of CO_2 ($PPCO_2$): Crew Person Hours	$PPCO_2$ Max. mmHg	$PPCO_2$ Min. mmHg	LiOH Canisters Used	Cabin Reduced Pressure Operations: Duration of 10.2 Psia Operations: Start MET h:m	End MET h:m	Duration h:m	PPO_2 During Depress to 10.2: Max. psi	Min. psi	PPO_2 During 10.2 Operations: Max. psi	Min. psi
1	1	102	78.5	83.0	63.1	80.2	75.0	51.4	79.2	109	5.8	0.4	4							
2	2	102	79.8	83.5	69.0	82.5	70.0	71.0	81.4	108	5.4	0.5	4							
3	3	102	79.7	85.3	67.5	81.5	73.0	55.3	83.0	394	8.4	0.4	9							
4	4	102	82.6	81.0	62.2	82.0	68.0	52.2	78.5	338	4.3	0.5	9							
5	5	102	83.5	80.0	60.0	80.0	75.0	54.6	80.5	489	2.3	0.6	12							
6	6	099	77.4	80.5	61.0	78.0	72.0	58.8	75.0	482	1.5	0.6	12							
7	7	099	DNA	78.0	56.0	76.0	69.0	DNA	71.0	732	5.0	0.7	15	45:46	76:47	31:01	3.5	2.7	2.9	2.6
8	8	099	DNA	79.0	58.0	80.0	72.0	DNA	74.5	726	6.1	0.9	16							
9	9	102	DNA	81.0	64.0	83.0	68.0	DNA	86.0	1487	1.7	0.5	32							
10	41B	099	76.2	80.0	62.0	83.0	70.0	60.6	81.7	956	3.7	0.4	18	69:25	149:00	79:35	3.2	2.8	3.1	2.5
11	41C	099	75.0	80.5	58.0	79.0	68.0	50.6	78.0	838	4.8	0.5	16	25:42	141:27	115:45	3.4	2.7	3.0	2.6
12	41D	103	66.6	80.2	58.0	78.0	72.0	57.4	79.3	870	3.8	0.8	16	105:04	128:48	23:44	3.2	2.8	2.9	2.7
13	41G	099	74.0	74.0	74.0	91.0	73.0	62.0	79.1	1382	6.0	1.4	25	121:45	153:25	31:40	3.5	2.8	3.0	2.7
14	51A	103	75.0	80.3	56.0	85.0	73.0	71.0	85.6	975	2.8	0.8	19	72:43	162:45	90:02	3.4	2.7	3.0	2.5
15	51C	103								DOD MISSION - DATA NOT AVAILABLE										

Legend: DNA = Data not available
Hx = Heat exchanger

ATMOSPHERIC REVITALIZATION SUBSYSTEM

Miss. Seq. No.	STS-No.	Orb. OV-	Cabin Temperature Peaks: Ascent: HX Air Out °F.	Ascent: Cabin Air °F.	On-Orbit: HX Air Out °F.	On-Orbit: Cabin Air Max. °F.	On-Orbit: Cabin Air Min. °F.	Entry: HX air Out °F.	Entry: Cabin Air °F.	Cabin Partial Pressure of CO_2 ($PPCO_2$): Crew Person Hours	$PPCO_2$ Max. mmHg	$PPCO_2$ Min. mmHg	LiOH Canisters Used	Cabin Reduced Pressure Operations: Duration of 10.2 Psia Operations: Start MET h:m	End MET h:m	Duration h:m	PPO_2 During Depress to 10.2: Max. psi	PPO_2 During Depress to 10.2: Min. psi	PPO_2 During 10.2 Operations: Max. psi	PPO_2 During 10.2 Operations: Min. psi
16	51D	103	68.0	85.0	58.0	83.0	76.0	64.2	85.3	1170	11.0	0.6	23	76:00	126:40	50:40	3.5	2.8	2.9	2.6
17	51B	099	71.0	84.0	58.0	83.5	74.0	67.4	81.7	1176	5.5	1.0	31							
18	51G	103	64.2	87.8	64.0	89.0	80.0	65.0	88.0	1188	6.8	0.9	23							
19	51F	099	64.2	80.2	61.0	92.0	76.0	69.0	77.0	1335	6.5	1.2	23							
20	51I	103	65.8	84.6	53.0	82.0	72.0	63.0	84.0	851	5.3	0.7	17	72:06	140:30	68:24	3.8	2.6	3.4	2.6
21	51J	104	DOD MISSION - DATA NOT AVAILABLE																	
22	61A	099	70.0	84.4	59.0	80.0	73.0	64.0	81.0	1350	5.6	1.0	30							
23	61B	104	69.4	73.0	58.0	84.0	74.0	63.0	78.0	1156	3.0	0.8	23	48:14	123:06	74:52	3.7	2.7	3.0	2.7
24	61C	102	69.0	81.0	66.0	86.0	80.0	63.0	78.0	1022	7.3	1.0	22							
25	51L	099	N/A	N/A	N/A	N/A	N/A	N/A	N/A	N/A	N/A	N/A	N/A	N/A	N/A	N/A	N/A	N/A	N/A	N/A
26	26	103	61.0	72.0	76.0	89.0	72.0	73.4	73.8	48.5	3.7	0.7	10	N/A	N/A	N/A	N/A	N/A	N/A	N/A
27	27	104	DOD MISSION - DATA NOT AVAILABLE																	
28	29	103	58.0	81.0	53.0	82.0	71.0	64.0	78.0	598	6.5	1.0	13	N/A	N/A	N/A	N/A	N/A	N/A	N/A
29	30	104	59.0	72.0	63.0	84.0	72.0	63.0	76.0	485	3.2	.8	10	49:02	73:00	23:58	3.4	2.7	2.96	2.64

Legend: DNA = Data not available
Hx = Heat exchanger

ATMOSPHERIC REVITALIZATION SUBSYSTEM

Miss. Seq. No.	STS-No.	Orb. OV-	Cabin Temperature Peaks							Cabin Partial Pressure of CO_2 ($PPCO_2$)				Cabin Reduced Pressure Operations						
			Ascent		On-Orbit			Entry						Duration of 10.2 Psia Operations			PPO_2 During Depress to 10.2		PPO_2 During 10.2 Operations	
			HX Air Out °F.	Cabin Air °F.	HX Air Out °F.	Cabin Air Max. °F.	Cabin Air Min. °F.	HX air Out °F.	Cabin Air °F.	Crew Person Hours	$PPCO_2$ Max. mmHg	$PPCO_2$ Min. mmHg	LiOH Canisters Used	Start MET h:m	End MET h:m	Duration h:m	Max. psi	Min. psi	Max. psi	Min. psi
30	28	102	DOD MISSION - DATA NOT AVAILABLE																	
31	34	104	71.0	76.0	76.0	89.0	69.0	59.0	72.0	600	2.45	0.7	13							
32	33	103	DOD MISSION - DATA NOT AVAILABLE																	
33	32	102	59.0	70.0	67.0	84.0	70.0	64.0	76.0	1305	3.75	0.64	23							
34	33	103	DOD MISSION - DATA NOT AVAILABLE																	
35	31	103	69.0	75.0	61.0	86.0	71.0	69.0	75.0	620	7.60	0.89	12	0:04:40	3:04:50	3:00:10	0.93	0.88	7.6	0.88
36	41	103	61.0	71.0	45.0	87.0	46.0	50.0	67.0	494.5	3.3	0.6	11							
37	38	104	DOD MISSION - DATA NOT AVAILABLE																	
38	35	102	70.0	72.0	54.0	80.0	73.0	53.0	72.0	1505	8.0	1.3	30							

Legend: DNA = Data not available
Hx = Heat exchanger

SUPPLY WATER AND WASTE MANGEMENT SUBSYSTEMS

Miss. Seq. No.	STS-No.	Orb. OV-	Supply Water Management Subsystem									Waste Management Subsystem										Remarks
			Qty at Lift-off, lb	FC Prod lb	FES Use, lb	Crew Use, lb	Qty Dump-ed, lb	No. of Dumps	Qty at TD, lb	On-Orbit Qty		No. of Dumps	Total Waste Dumped lb	Dump 1		Dump 2		Dump 3		Dump 4		
										Max., lb	Min., lb			Qty, lb	Pres-sure, psia	Qty, lb	Pres-sure, psia	Qty, lb	Pres-sure, psia	Qty, lb	Pres-sure, psia	
1	1	102	876	704	635	27	261	2	657	901	724	2	26	12	14.7	14	14.7	N/A	N/A	N/A	N/A	
2	2	102	882	625	704	16	287	2	500	865	701	0	0	N/A	N/A	N/A	N/A	N/A	N/A	N/A	N/A	
3	3	102	728	2260	1034	68	1422	9	464	920	566	0	0	N/A	N/A	N/A	N/A	N/A	N/A	N/A	N/A	
4	4	102	562	2006	587	83	1537	13	361	638	354	1	82	82	14.7	N/A	N/A	N/A	N/A	N/A	N/A	
5	5	102	507	1471	601	127	943	8	307	628	396	0	0	N/A	N/A	N/A	N/A	N/A	N/A	N/A	N/A	
6	6	099	483	1254	658	120	676	7	283	604	369	0	0	N/A	N/A	N/A	N/A	N/A	N/A	N/A	N/A	
7	7	099	450	1555	763	192	878	7	172	618	352	1	87	87	14.7	N/A	N/A	N/A	N/A	N/A	N/A	
8	8	099	480	1660	528	181	1133	10	298	635	388	1	29	29	14.7	N/A	N/A	N/A	N/A	N/A	N/A	
9	9	102	459	3249	1964	282	1075	18	387	612	374	1	49	49	14.7	N/A	N/A	N/A	N/A	N/A	N/A	
10	41B	099	521	2258	1278	331	803	8	367	620	438	2	206	129	10.2	77	10.2	N/A	N/A	N/A	N/A	Ice formed on nozzle on both dumps.
11	41C	099	468	1833	639	310	1117	7	235	538	301	3	142	69	10.2	48	10.2	25	14.7	N/A	N/A	
12	41D	103	469	1740	1490	174	248	3	297	591	380	1	11	11	14.7	N/A	N/A	N/A	N/A	N/A	N/A	Ice formed on nozzle, RMS used to remove ice.
13	41G	099	526	2292	1269	395	791	9	363	628	416	4	276	55	14.7	73	14.7	66	14.7	82	14.7	
14	51A	103	509	2183	2039	249	0	0	404	616	425	4	122	38	14.7	26	10.2	29	10.2	29	10.2	

SUPPLY WATER AND WASTE MANGEMENT SUBSYSTEMS

Miss. Seq. No.	STS-No.	Orb. OV-	Supply Water Management Subsystem									Waste Management Subsystem										Remarks
			Qty at Lift-off, lb	FC Prod lb	FES Use, lb	Crew Use, lb	Qty Dump-ed, lb	No. of Dumps	Qty at TD, lb	On-Orbit Qty		No. of Dumps	Total Waste Dump-ed, lb	Dump 1		Dump 2		Dump 3		Dump 4		
										Max., lb	Min., lb			Qty, lb	Pres-sure, psia	Qty, lb	Pres-sure, psia	Qty, lb	Pres-sure, psia	Qty, lb	Pres-sure, psia	
15	51C	103	DEPARTMENT OF DEFENSE - DATA NOT AVAILABLE																			
16	51D	103	540	2128	2107	272	0	0	289	604	437	3	145	40	14.7	47	14.7	58	14.7	N/A	N/A	
17	58B	099	585	2474	623	238	1820	14	378	631	445	2	111	63	14.7	48	14.7	N/A	N/A	N/A	N/A	
18	51G	103	493	1969	1266	386	433	4	377	600	388	3	275	62	14.7	76	14.7	137	14.7	N/A	N/A	
19	51F	099	543	2629	427	315	2103	16	327	593	388	3	239	73	14.7	80	14.7	86	14.7	N/A	N/A	
20	51I	103	525	1783	1692	222	21	4	373	571	350	2	197	73	14.7	124	14.7	N/A	N/A	N/A	N/A	
21	51J	104	DEPARTMENT OF DEFENSE MISSION - DATA NOT AVAILABLE																			
22	61A	099	523	2444	668	290	1638	12	371	586	408	2	196	83	14.7	113	14.7	N/A	N/A	N/A	N/A	
23	61B	104	510	1807	935	230	746	11	406	604	420	3	189	50	14.7	63	10.2	76	14.7	N/A	N/A	
24	61C	102	475	1851	1325	240	433	4	328	617	408	2	201	112	14.7	89	14.7	N/A	N/A	N/A	N/A	
25	51L	099	N/A	N/A	N/A	N/A	N/A	N/A	N/A	N/A	N/A	N/A	N/A	N/A	N/A	N/A	N/A	N/A	N/A	N/A	N/A	
26	26	103	540	1028	842	161	183	3	382	611	446	1	32	32	14.7	N/A	N/A	N/A	N/A	N/A	N/A	
27	27	104	DEPARTMENT OF DEFENSE MISSION - DATA NOT AVAILABLE																			
28	29	103	551	1234	1036	63	284	3	402	594	437	1	60	60	14.7	N/A	N/A	N/A	N/A	N/A	N/A	
29	30	104	532	1050	914	53	223	3	393	588	439	1	25	25	10.2	N/A	N/A	N/A	N/A	N/A	N/A	

SUPPLY WATER AND WASTE MANGEMENT SUBSYSTEMS

Miss. Seq. No.	STS-No.	Orb. OV-	Supply Water Management Subsystem									Waste Management Subsystem										Remarks
			Qty at Lift-off, lb	FC Prod lb	FES Use, lb	Crew Use, lb	Qty Dump-ed, lb	No. of Dumps	Qty at TD, lb	On-Orbit Qty		No. of Dumps	Total Waste Dump-ed, lb	Dump 1		Dump 2		Dump 3		Dump 4		
										Max., lb	Min., lb			Qty, lb	Pres-sure, psia	Qty, lb	Pres-sure, psia	Qty, lb	Pres-sure, psia	Qty, lb	Pres-sure, psia	
30	28	102	DEPARTMENT OF DEFENSE MISSION - DATA NOT AVAILABLE																			
31	34	104	599	1269	1104	132	271	3	362	578	447	0	0	0	0	0	0	0	0	0	0	
32	33	103	DEPARTMENT OF DEFENSE MISSION - DATA NOT AVAILABLE																			
33	32	102	515	2753	1141	299	1511	14	317	601	377	2	143	39	0	104	0	0	0	0	0	
34	36	104	DEPARTMENT OF DEFENSE MISSION - DATA NOT AVAILABLE																			
35	31	103	532	1344	825	152	485	4	414	613	424	1	91	91	0	0	0	0	0	0	0	
36	41	103	579	1142	1128	105	64	1	424.4	622.1	431	1	37	37	14.7	0	0	0	0	0	0	
37	38	104	DEPARTMENT OF DEFENSE MISSION - DATA NOT AVAILABLE																			
38	35	102	535	2876	2431	596.8	0	0	383.2	618.8	437	0.4	316.5	47.7	14.7	46.9	14.7	97.4	14.7	93	14.7	Dump 4 to CWC Dump 5 to UAS (31.5 lb)

AFT FUSELAGE GAS SAMPLE ANALYSIS

Sample bottle serial no.	Time of sample, seconds	Constituents, percent: Pressure, torr	Argon	Air from Argon	He	CO	CH_4	CO_2	Oxygen from air: Expected	Oxygen from air: Measured	H_2	H_2[a]	N_2
						STS-1							
1014[b]	44	14,870[c]	–		0.2	<0.05	–	0.04		2.2	0.2		Balance
1027	74	44,800[c]	–		0.3	<0.02	–	0.02		1.1	0.2		Balance
1021	98	82,900[c]	–		0.3	<0.6	–	0.3		2.4	0.9		Balance
1034[b]	104	93,500[c]	–		0.2	<0.5	–	0.2		2.6	0.8		Balance
1026	114	116,200[c]	–		0.7	<2.0	–	0.6		3.8	4.6		Balance
1043	114	116,200[c]	–		0.5	<2.0	–	0.2		1.7	5.5		Balance
						STS-2[d]							
1010	74	95.7	0.13		0.5	0.05	0.01	<0.03		2.8	0.7		Balance
1020	104	8.3	0.11		0.5	0.5	0.15	0.17		4.3	5.8		Balance
1028[b]	114	1 atm	0.93		—	—	—	—		20.5	—		Balance
						STS-3							
1031[b]	46		0.93		—			—		—	—		Balance
1025	76		0.16		0.17			0.02		3.53	0.17		Balance
1038	105		0.29		0.16			0.13		6.45 air	0.50		Balance
1035	62		0.08		0.19			0.01		1.65	0.23		Balance
1018	76		0.16		0.18			0.02		3.64	0.83		Balance
1045	120		0.22		0.28			0.20		4.7 air	2.56		Balance
						STS-4							
1029	44	363.2	0.04	4.30	0.49	<0.02	<0.02	<0.02	0.90	0.90	0.04	0.04	Balance
1044	74	101	0.16	17.35	0.33	0.03	<0.02	<0.02	3.64	3.61	0.13	0.12	Balance
1041	101	11.9	0.22	23.50	0.48	0.26	0.06	0.26	4.92	4.87	0.69	0.57	Balance
1023	60	222.5	0.06	6.14	0.33	<0.02	<0.02	<0.02	1.29	1.26	0.40	0.40	Balance
1032	74	98.1	0.14	15.13	0.43	0.04	<0.02	<0.02	3.16	3.16	0.50	0.50	Balance
1037	114	3.7	0.19	20.35	0.51	0.23	0.08	0.04	4.27	4.27	2.55	2.43	Balance
						STS-5[e]							
1011	59	222	0.15	16.10	0.29	<0.01	<0.01	0.04	3.37	3.31	0.29	0.29	Balance
1012	74	103	0.16	16.98	0.36	0.88	0.06	0.16	3.56	3.44	0.77	0.66	Balance
1017	114	3.8	0.23	24.41	0.86	0.80	0.14	0.05	5.11	5.06	1.58	1.43	Balance
						Flight Readiness Firing							
1023	16		0.013		1.3			0.01		0.013		0.02	Balance
1039	25.3		0.013		1.14			0.01		0.024		0.03	Balance
1029	80		0.012		—			0.01		0.01		0.21	Balance
1032	16		0.013		0.94			0.01		0.030		0.67	Balance
1033	25.3		0.012		1.71			0.01		0.060		0.49	Balance
1037	80		0.012		—			0.01		0.05		0.24	Balance

[a]Corrected for pyrotechnic ingestion
[b]Sample bottles leaked between time sampled at KSC and sampling at JSC.
[c]Altitude in feet
[d]Pyrotechnic trigger device failure caused the loss of three samples.
[e]Flew one assembly only

AFT FUSELAGE GAS SAMPLE ANALYSIS

Sample bottle serial no.	Time of sample, seconds	Constituents, percent							Oxygen from air		H_2	H_2[a]	N_2
		Pressure, torr	Argon	Air from Argon	He	CO	CH_4	CO_2	Expected	Measured			
STS-6													
107	59	237	0.09	9.64	0.96	< 0.01	< 0.01	0.02	2.02	1.71	0.13	0.13	Balance
103	73	115	0.12	12.85	1.04	0.03	< 0.01	0.04	2.69	2.42	0.43	0.42	Balance
104	116	6.7	0.35	37.47	1.25	0.46	0.06	0.49	7.85	7.35	1.46	1.24	Balance
106	74	113	0.15	16.06	0.56	0.03	< 0.01	0.02	3.36	2.96	0.14	0.13	Balance
105	82	63	0.13	13.92	0.62	0.02	< 0.01	0.02	2.92	2.54	0.26	0.25	Balance
101	101	11.4	0.19	20.34	0.82	0.60	0.05	0.35	4.26	3.77	0.80	0.52	Balance
STS-7													
111	59	227.6	0.09	9.41	0.56	<0.01	<0.01	0.02	1.97	1.88	0.09	0.09	Balance
1102[b]	73	104.1	0.11	11.83	0.69	0.06	0.01	0.04	2.48	2.32	0.25	0.22	Balance
1113[a]	116	3.81	0.18	19.29	0.85	1.10	0.08	0.32	4.04	3.57	2.68	2.16	Balance
108	73	103.9	0.11	11.78	0.72	0.07	0.01	0.04	2.47	2.20	0.17	0.14	Balance
109[b]	81	57.5	0.11	11.77	0.69	3.22	0.20	0.29	2.47	2.30	1.77	0.29	Balance
110[b]	103	9.4	0.11	11.78	1.03	0.58	0.05	0.19	2.47	2.20	1.62	1.35	Balance
STS-8													
1117	59	772	0.93	99.8	0.19	<0.01	<0.01	<0.01	20.73	20.91	<0.01	<0.01	Balance
1119	73	73.4	0.12	13.01	0.58	0.08	<0.01	0.03	2.69	2.73	0.25	0.21	Balance
1114	116	3.24	0.12	12.85	0.65	1.12	0.06	0.60	2.69	1.99	4.63	4.10	Balance
1115	74	80.8	0.16	17.13	0.65	0.07	0.01	0.06	3.59	3.46	0.14	0.11	Balance
1118	82	46.5	0.15	16.06	0.71	0.36	0.03	0.02	3.36	3.28	0.29	0.12	Balance
1116	101	8.46	0.20	21.41	0.82	0.70	0.04	0.05	4.49	4.31	0.61	0.28	Balance
STS-9[c]													
1123	59	189	0.13	13.92	0.22	0.03	<0.01	0.04	2.92	2.64	0.04	0.03	Balance
1122	73	71	0.18	19.27	0.25	0.21	0.01	0.06	4.03	3.77	0.13	0.03	Balance
1121[b]	116	2.8	0.12	12.85	0.23	0.95	0.14	0.52	2.69	1.81	0.63	0.18	Balance
1125	74	77	0.15	16.06	0.23	0.13	0.04	0.06	3.36	2.98	0.08	0.02	Balance
1120	82	781	0.93	100.	0.15	<0.01	<0.01	0.05	20.95	20.95	0	0	Balance
1013	101	417	0.78	83.51	0.15	0.30	0.06	0.08	17.50	17.00	0.17	0.03	Balance
STS-41B													
1132	74	764	Bottle leaked through valve, not fully closed										Balance
1134	82	50	0.16	17.82	0.72	0.17	0.02	0.04	3.74	3.26	0.21	0.13	Balance
1135[b]	118	3.8	0.16	16.64	0.84	2.75	0.15	0.07	3.49	2.63	2.26	0.96	Balance
1127	60	217	0.16	16.80	0.48	0.03	<0.01	0.01	3.36	2.92	0.04	0.04	Balance
1136	75	92	0.13	14.21	0.58	0.12	0.01	0.01	2.98	2.54	0.09	0.03	Balance
1130	103	12	0.37	39.81	0.85	0.44	0.04	0.04	8.34	7.15	0.35	0.14	Balance

[a] Corrected for pyrotechnic ingestion
[b] Traces of Benzene and Toluene
[c] Ammonia = < 0.01 percent in all bottles

AFT FUSELAGE GAS SAMPLE ANALYSIS

Sample bottle serial no.	Time of sample, seconds	Constituents, percent							Oxygen from air		H_2	H_2[a]	N_2
		Pressure, torr	Argon	Air from Argon	He	CO	CH_4	CO_2	Expected	Measured			
STS-51D													
1171[c]	59	Atmos.	0.93	100.	Pyrotechnic valve was in the open position								Balance
1174	73	97.4	0.13	13.92	0.21	0.05	<0.01	0.03	2.92	2.63	0.02	<0.01	Balance
1163[c]	116	Atmos.	0.93	100.	Pyrotechnic valve was in the open position								Balance
1166	74	97.9	0.12	12.85	0.24	0.07	<0.01	0.02	2.69	2.51	0.03	<0.01	Balance
1173[c]	82	Atmos.	0.93	100.	Pyrotechnic valve was in the open position								Balance
1162	101	11.7	0.40	42.83	0.31	0.26	0.03	0.01	8.97	8.13	0.53	0.41	Balance
STS-51B													
1168[d]	60	769	0.94	100.	Leak at the thermocouple gauge								Balance
1183	73	101.9	0.09	9.56	0.34	0.09	<0.01	0.09	2.00	1.72	0.59	0.55	Balance
1172[b]	116	4.1	0.08	8.56	0.45	1.56	0.06	1.65	1.79	1.06	3.34	2.60	Balance
1169[d]	73	770	0.94	100	Leak at the thermocouple gauge								Balance
1175	81	56.5	0.13	13.92	0.33	0.14	0.01	0.12	2.92	2.59	0.20	0.13	Balance
1176[b]	103	8.4	0.17	18.20	0.55	0.63	0.05	0.60	3.81	3.34	1.36	1.06	Balance
STS-51G													
1180	74	83.8	0.11	11.27	0.31	0.10	<0.01	0.09	2.36	2.18	0.03	-0.02	Balance
1178	82	43.4	0.11	12.19	0.34	0.63	0.02	0.19	2.55	2.31	0.22	-0.08	Balance
1185[b]	101	6.7	0.22	23.92	0.54	1.42	0.13	1.01	5.01	4.66	1.01	0.43	Balance
1181	59	190	0.14	15.25	0.21	0.05	<0.01	0.05	3.19	2.90	0.02	0.00	Balance
1184	73	83.9	0.17	17.99	0.28	0.10	<0.01	0.10	3.77	3.39	0.04	-0.01	Balance
1179[b]	116	7.6	0.09	9.86	0.11	24.54	0.61	4.15	2.07	1.75	15.10	3.50	Balance
STS-51F													
1205	74	81.5	0.17	18.20	0.19	0.06	<0.01	0.07	3.81	3.43	0.18	0.15	Balance
1213	82	41.4	0.16	17.13	0.22	0.30	0.01	0.23	3.59	3.37	0.46	0.32	Balance
1214[b]	103	8.2	0.23	24.63	0.32	0.63	0.09	0.68	5.16	4.89	2.45	2.15	Balance
1207	60	203	0.12	12.85	0.14	0.06	<0.01	0.11	2.69	2.68	0.45	0.17	Balance
1204	73	88.8	0.16	17.13	0.16	0.60	0.01	0.32	3.59	3.38	0.70	0.42	Balance
1211[b]	116	3.31	0.09	9.64	0.26	1.62	0.22	1.66	2.02	1.45	4.46	3.69	Balance
STS-51I													
1208	59	175.3	0.13	13.92	0.16	0.02	<0.01	0.05	2.92	2.91	0.03	0.03	Balance
1203	73	66.5	0.09	9.64	0.22	0.01	<0.01	0.04	2.02	1.99	0.06	0.06	Balance
1164[b]	115	2.8	0.06	6.42	0.23	0.04	<0.01	0.05	1.34	0.80	1.77	1.75	Balance
1209	74	87.3	0.32	34.26	0.17	1.17	0.03	0.30	7.18	6.79	0.60	0.05	Balance
1170	82	36.0	0.16	17.13	0.24	0.07	<0.01	0.03	3.59	3.52	0.19	0.16	Balance
1215[b]	101	6.2	0.25	26.77	0.46	1.10	0.07	1.05	5.61	5.34	0.85	0.33	Balance

[a]Corrected for pyrotechnic ingestion
[b]Traces of Benzene and Toluene
[c]Pyrotechnic valve in open position
[d]Leak at thermocouple gauge

AFT FUSELAGE GAS SAMPLE ANALYSIS

Sample bottle serial no.	Time of sample, seconds	Constituents, percent											
		Pressure, torr	Argon	Air from Argon	He	CO	CH_4	CO_2	Oxygen from air		H_2	H_2[a]	N_2
									Expected	Measured			
STS-41C													
1131	59	235.0	0.53	56.75	0.22	0.01	<0.01	0.01	11.89	11.70	0.01	0.01	Balance
1129	73	72.2	0.11	11.78	0.49	0.13	0.01	0.02	2.47	2.17	0.12	0.06	Balance
1133	116	767	0.93	100	Valve failed to close				21	21	ND	ND	Balance
1124	74	80.2	0.12	12.84	0.51	0.06	0.01	0.02	2.69	2.30	0.10	0.07	Balance
1126[b]	82	45.2	0.79	84.58	0.18	0.13	0.01	0.03	17.72	17.45	0.03	<0.01	Balance
1128[b]	101	39.3	0.13	13.92	0.51	0.15	0.01	0.02	2.92	2.73	0.12	0.05	Balance
STS-41D													
1140	60	192.6	0.07	7.15	0.11	0.01	0.01	0.02	1.50	1.42	0.01	0.01	Balance
1137	74	86.1	0.06	6.01	0.12	0.01	0.01	0.02	1.26	1.22	0.02	0.02	Balance
1141	116	744.3	0.88	93.72	0.15	0.01	<0.01	0.04	19.72	18.21	<0.01	<0.01	Balance
1138[b]	74	85.8	0.10	10.85	0.13	0.01	0.01	0.02	2.27	1.88	0.02	0.02	Balance
1139[c]	82	774	0.93	99.40	0.36	<0.01	<0.01	0.04	20.60	19.31	<0.01	<0.01	Balance
1142	101	233.0	0.86	92.11	0.07	0.01	0.01	0.04	19.30	18.14	0.01	0.01	Balance
STS-41G													
1144[d]	59	776	0.90	96.23	3.77	<0.01	<0.01	0.04	20.15	20.15	<0.01	<0.01	Balance
1147[e]	73	767	0.93	100	<0.01	<0.01	<0.01	0.04	20.90	20.90	<0.01	<0.01	Balance
1148	116	2.8	0.08	8.48	0.68	2.16	0.13	0.08	1.78	1.54	0.45	-0.57	Balance
1145[d]	74	775	0.92	98.75	1.25	<0.01	<0.01	0.04	20.68	20.68	<0.01	<0.01	Balance
1149[d]	82	455	0.89	95.0	0.23	<0.01	<0.01	0.04	19.90	19.70	<0.01	<0.01	Balance
1146	101	7.5	0.18	19.43	1.36	0.70	0.07	0.03	4.07	5.38	0.21	-0.12	Balance
STS-51A													
	Data not available												
STS-51C													
1159	60	536.7	0.84	90.11	0.49	<0.01	<0.01	0.03	18.88	14.71	<0.01	<0.01	Balance
1165[b]	74	99.1	0.06	6.83	0.27	0.01	<0.01	0.04	1.43	1.53	0.02	0.02	Balance
1158	117	238.8	0.89	96.20	2.30	<0.01	<0.01	0.04	19.93	15.64	<0.01	<0.01	Balance
1157[b]	74	96.8	0.06	6.76	0.27	0.02	<0.01	0.02	1.41	1.73	0.02	0.02	Balance
1161[f]	82	207.3	0.83	88.56	0.67	0.03	<0.01	0.02	18.55	13.89	<0.01	<0.01	Balance
1160[b]	105	8.4	0.30	32.14	0.57	0.24	0.04	0.03	6.73	4.71	0.48	0.37	Balance

[a]Corrected for pyrotechnic ingestion
[b]Traces of Benzene and Toluene
[c]Broken thermocouple base pressure tested – leaked through thermocouple
[e]Valve did not close (room pressure)
[f]1,1,1 Trichlorethane and Xylene contaminate found. Approximate concentration = 0.01 percent.

AFT FUSELAGE GAS SAMPLE ANALYSIS

Sample bottle serial no.	Time of sample, seconds	Constituents, percent							Oxygen from air		H_2	H_2[a]	N_2
		Pressure, torr	Argon	Air from Argon	He	CO	CH_4	CO_2	Expected	Measured			
						STS 51-J							
1191	74	72	0.12	12.85	0.23	0.03	<0.01	0.08	2.69	2.52	0.08	0.06	Balance
1197	82	38.4	0.11	11.78	0.43	0.35	<0.01	0.21	2.47	2.43	0.31	0.10	Balance
1210	101	6.6	0.13	14.35	0.37	0.85	0.12	0.90	3.01	2.80	0.47	<0.01	Balance
1188	59	188	0.11	12.10	0.18	0.02	<0.01	0.03	2.53	2.50	0.03	0.03	Balance
1201	73	73.4	0.11	11.78	0.23	0.08	<0.01	0.11	2.47	2.25	0.10	0.05	Balance
		Spool valve open to atmosphere on following sample bottle											
1186[c]	116	768	0.93	100	<0.01	<0.01	<0.01	<0.01	20.95	20.95	<0.01	<0.01	Balance
						STS 61-A							
		Valve spool in the open position on the following sample bottle											
1199	59	770	0.93	100	<0.01	<0.01	<0.01	0.05	20.95	20.95	<0.01	<0.01	Balance
1212	73	89.5	0.07	7.49	0.38	0.06	<0.01	0.08	1.57	1.51	0.40	0.36	Balance
1219[b]	116	4.3	0.27	28.91	0.46	1.67	0.02	1.51	6.06	6.05	2.05	1.06	Balance
1206	74	88	0.09	9.64	0.39	0.04	<0.01	0.09	2.02	2.00	0.11	0.09	Balance
1216	81	284	0.74	79.23	0.18	0.18	<0.01	0.08	16.50	16.56	0.05	0.04	Balance
1200[b]	102	7.8	0.16	17.13	0.52	0.86	0.10	1.00	3.59	3.48	3.03	2.52	Balance
						STS 61-B							
1221	73	81.2	0.15	16.06	0.23	0.04	<0.01	0.06	3.36	3.25	0.04	0.02	Balance
1224	81	45.0	0.16	17.29	0.34	0.40	0.01	0.17	3.62	3.61	0.28	0.04	Balance
1232	102	8.5	0.21	22.48	0.68	0.63	0.03	0.65	4.71	4.56	0.46	0.09	Balance
1193	60	193.6	0.15	16.06	0.26	0.03	<0,01	0.05	3.36	3.15	0.02	0.02	Balance
1223	74	82.1	0.12	12.84	0.36	0.04	<0.01	0.06	2.69	2.50	0.12	0.10	Balance
1222[b]	116	3.95	0.34	36.40	1.14	1.01	0.05	1.28	7.63	7.11	1.35	0.75	Balance
						STS 61-C							
1235	73	91.8	0.20	21.41	0.41	0.03	<0.01	0.07	4.49	4.42	0.04	0.02	Balance
1229	81	52.9	0.20	21.41	0.50	0.29	<0.01	0.13	4.49	4.23	0.12	0.04	Balance
1228	102	12.3	0.32	34.26	0.50	0.27	0.03	0.40	7.18	7.04	0.22	0.06	Balance
1227	60	221.0	0.18	19.27	0.35	<0.01	<0.01	0.03	4.04	3.94	0.02	0.02	Balance
1231	74	91.4	0.19	20.34	0.39	0.04	<0.01	0.08	4.26	3.98	0.05	0.03	Balance
1234	116	12.2	0.58	62.10	0.84	0.38	0.06	0.79	13.01	12.80	0.31	0.08	Balance
						STS 51-L							
							NO	DATA					

[a]Corrected for pyrotechnic ingestion
[b]Traces of Benzene and Toluene
[c]Spool valve open to atmosphere

AFT FUSELAGE GAS SAMPLE ANALYSIS

Sample bottle serial no.	Time of sample, seconds	Constituents, percent: Pressure, torr	Argon	Air from Argon	He	CO	CH_4	CO_2	Oxygen from air: Expected	Oxygen from air: Measured	H_2	H_2[a]	N_2
						STS-26							
1202	59	209	0.11	11.78	0.65	0.04	<0.01	0.05	2.47	2.47	0.05	0.03	Balance
1239[d]	74	772	0.93	98.50	1.01	0.01	<0.01	0.05	20.64	21.30	0.02	0.02	Balance
1247	116	5.28	0.41	43.90	3.73	1.49	0.15	0.98	9.21	9.21	0.87	0.07	Balance
1248[b]	75	772		Spool failed to close completely - Air only									
1244[c]				Pyrotechnics did not ignite									
1236[c]				Pyrotechnics did not ignite									
						STS-27							
1265	75	84.9	0.17	18.2	0.69	0.12	0.01	0.03	3.81	3.80	0.09	0.03	Balance
1250[d]	59	771	0.88	94.2	0.60	0.04	<0.01	0.04	19.74	19.70	0.04	0.02	Balance
1262[b]	82	771	0.93	99.2	<0.01	0.41	0.01	0.07	20.78	20.78	0.13	<0.01	Balance
1266	74	83.2	0.16	17.1	0.92	0.10	0.01	0.03	3.59	3.56	0.09	0.04	Balance
1261	102	8.7	0.20	21.4	1.96	0.76	0.04	0.11	4.49	4.50	0.49	0.08	Balance
1264	116	3.3	0.18	19.3	1.99	1.50	0.07	0.36	3.47	3.40	0.95	0.14	Balance
						STS-29							
1278	59	519.3	0.61	65.31	0.51	0.02	<0.01	0.04	13.68	13.70	0.08	0.07	Balance
1268	75	100.3	0.12	12.85	0.77	0.04	0.01	0.03	2.69	2.95	0.11	0.09	Balance
1273	74	98.7	0.14	14.99	0.85	0.05	<0.01	0.08	3.14	3.12	0.23	0.20	Balance
1276	82	60.0	0.12	12.85	1.07	0.51	0.01	0.03	2.69	2.76	0.48	0.20	Balance
1272	102	10.5	0.13	13.97	1.17	0.89	0.03	0.13	2.93	2.98	1.11	0.63	Balance
1267	116	3.8	0.11	11.78	2.39	2.21	0.12	0.34	2.47	2.49	1.92	0.73	Balance
						STS-30							
1285	TBS	501.6	0.81	86.72	0.43	<0.01	<0.01	0.06	18.17	17.8	0.01	0.01	Balance
1284	TBS	201.6	0.23	24.63	0.40	0.02	<0.01	0.03	5.16	5.20	0.03	0.02	Balance
1286	TBS	87.7	0.51	54.60	0.64	0.11	0.02	0.08	11.44	11.73	0.14	0.08	Balance
1279	TBS	96.50	0.28	29.98	0.94	0.05	0.01	0.07	6.28	6.15	0.10	0.07	Balance
1281	TBS	8.7	0.26	27.84	1.70	0.82	0.03	0.40	5.83	5.86	0.62	0.18	Balance
1288	TBS	265.0	0.89	95.29	0.38	0.05	<0.01	0.07	19.96	19.28	0.07	0.04	Balance

[a]Corrected for pyrotechnic ingestion
[b]Spool failed to close completely
[c]Pyrotechnics did not ignite
[d]The helium and hydrogen levels indicate a small leak to atmospheric pressure between landing and analysis

AFT FUSELAGE GAS SAMPLE ANALYSIS

Sample bottle serial no.	Position	Constituents, percent							Oxygen from air		H_2	Corrected H_2	N_2
		Pressure, torr	Argon	Air from Argon	He	CO	CH_4	CO_2	Expected	Measured			
						STS-28							
1293	1 LEFT	733.5	0.91	97.43	0.60	0.06	<0.01	0.46	20.41	20.62	0.03	<0.01	N/A
1280	1 RIGHT	186.6	0.15	17.13	0.53	0.06	<0.01	0.05	3.35	3.41	0.08	0.05	N/A
1275	2 LEFT	37.1	0.19	20.34	0.68	1.11	0.03	0.12	4.26	4.32	0.80	0.37	N/A
1282	2 RIGHT	688.3	0.92	98.50	0.16	<0.01	<0.01	0.05	20.63	19.93	0.03	0.03	N/A
1283	3 LEFT	78.2	0.83	88.90	0.57	0.08	<0.01	0.08	18.62	18.87	0.10	0.06	N/A
1292	3 RIGHT	11.6	0.66	70.66	2.02	0.72	0.20	0.42	14.80	14.41	0.55	0.21	N/A
						STS-34							
289	1 LEFT	64.3	0.13	13.9	0.95	0.63	0.04	0.16	2.92	2.91	1.04	0.70	N/A
297	1 RIGHT	403.0	0.62	66.4	0.51	0.05	<0.01	0.06	13.91	13.92	0.04	0.01	N/A
296	2 LEFT	664.0	0.85	91.1	0.53	0.05	<0.01	0.07	19.06	19.04	0.04	0.01	N/A
301	2 RIGHT	82.0	0.15	16.1	1.26	0.15	<0.01	1.20	3.36	3.33	0.14	0.06	N/A
295	3 LEFT	8.4	0.32	34.3	1.49	0.77	0.04	1.02	7.18	7.10	0.51	0.09	N/A
291	3 RIGHT	363.0	0.93	99.5	0.53	0.05	0.01	0.08	20.86	20.90	<0.01	<0.01	N/A
						STS-33							
315	1 LEFT	777.0	0.89	97.4	0.7	0.04	<0.01	0.05	19.96	20.30	0.03	0.01	N/A
311	1 RIGHT	225.7	0.14	14.99	0.61	0.04	<0.01	0.05	3.14	3.13	0.12	0.10	N/A
314	2 LEFT	571.0	0.83	88.9	0.49	0.03	<0.01	0.05	18.60	18.60	0.04	0.02	N/A
312	2 RIGHT	132.2	0.34	36.4	1.34	0.08	<0.01	0.07	7.63	8.13	0.33	0.29	N/A
310	3 LEFT	785.9	0.87	93.15	0.69	0.04	<0.01	0.05	19.51	19.49	0.02	<0.01	N/A
300	3 RIGHT	3.61	0.22	24.4	3.26	3.30	0.10	1.94	4.49	4.49	4.59	2.81	N/A
						STS-32							
1322	1 RIGHT	197.3	0.14	15.0	0.69	0.06	<0.01	0.06	3.14	3.15	0.07	0.04	N/A
1304	2 RIGHT	75.0	0.14	15.00	1.60	0.10	<0.01	0.10	3.14	3.41	0.12	0.07	N/A
1313[a]	3 RIGHT	3.0	0.14	15.0	6.24	3.17	0.12	2.40	3.14	3.10	3.71	2.00	N/A
1309R	1 LEFT		Assembly failed to operate during ascent										N/A
1321	2 LEFT		Assembly failed to operate during ascent										N/A
1317	3 LEFT		Assembly failed to operate during ascent										N/A
						STS-36							
1329[b]	1 LEFT	778.0	0.93	99.10	0.84	<0.01	<0.01	0.04	20.90	20.90	0.02	0.02	N/A
1307[b]	1 RIGHT	778.0	0.93	99.40	0.34	<0.01	<0.01	0.04	20.90	20.90	0.07	0.07	N/A
1308[b]	2 LEFT	378.3	0.85	91.00	0.44	0.15	<0.01	0.07	19.10	19.10	0.15	0.08	N/A
1330[a,b]	2 RIGHT	144.4	0.51	54.60	0.64	0.07	<0.01	0.07	11.40	11.50	0.12	0.08	N/A
1323[b]	3 LEFT	159.7	0.84	89.90	0.83	0.07	0.01	0.08	18.80	18.60	0.15	0.11	N/A
1316[b]	3 RIGHT	186.4	0.88	94.20	0.60	0.06	<0.01	0.07	19.70	19.60	0.09	0.06	N/A

[a]Traces of Benzene and Toluene

AFT FUSELAGE GAS SAMPLE ANALYSIS

Sample bottle serial no.	Position	Constituents, percent							Oxygen from air		H_2	Corrected H_2	N_2
		Pressure, torr	Argon	Air from Argon	He	CO	CH_4	CO_2	Expected	Measured			
						STS-31							
1325	1 LEFT	368.3 mm	0.92	98.5	0.43	0.04	<0.01	0.05	20.64	20.60	0.17	0.15	N/A
1302	1 RIGHT	776.0	0.93	99.5	0.50	0.01	<0.01	0.04	20.86	20.86	0.01	0.01	N/A
1339	2 LEFT	776.0	0.93	99.5	0.48	<0.01	<0.01	0.04	20.86	20.86	0.02	0.02	N/A
1335	2 RIGHT	253.0 mm	0.65	69.6	0.56	0.03	<0.01	0.04	14.58	14.55	0.16	0.14	N/A
1319	3 LEFT	9.6 mm	0.17	18.2	1.41	0.80	0.03	0.71	3.81	3.80	3.34	2.91	N/A
1320	3 RIGHT	230.8 mm	0.92	98.5	0.29	0.05	<0.01	0.06	20.64	20.63	0.14	0.11	N/A
						STS-41							
1338	1 RIGHT	776.0	0.80	85.65	0.75	0.03	<0.01	0.04	17.94	17.45	0.06	0.04	N/A
1340	1 LEFT	101.9	0.22	23.55	1.05	0.12	0.01	0.07	4.93	4.95	0.93	0.87	N/A
1326	2 RIGHT	Atmosphere	Bad leak through spool										
1306	2 LEFT	70.6	0.32	34.26	1.09	0.11	0.01	0.08	7.18	7.19	1.37	1.31	N/A
1332	3 LEFT	Atmosphere	0.934	100.	Leak through spool								
1305	4 RIGHT	3.44	0.19	20.34	5.66	1.68	0.03	1.03	4.26	4.31	6.21	5.30	N/A
						STS-38							
1353	1 RIGHT	308.7	0.51	54.60	0.33	0.05	<0.01	0.03	11.40	11.50	0.03	0.00	N/A
1328	1 LEFT	783	0.92	98.50	1.33	0.10	<0.01	0.05	20.6	20.70	0.05	0.00	N/A
1334	2 RIGHT	132.8	0.52	55.69	0.96	0.11	<0.01	0.08	11.66	11.58	0.18	0.12	N/A
1324	2 LEFT	47.53	0.27	28.90	0.60	0.19	0.01	0.17	6.05	6.01	0.17	0.07	N/A
1337	3 LEFT	565.7	0.89	95.30	0.48	0.03	<0.01	0.05	19.96	19.56	0.04	0.02	N/A
1290	3 RIGHT	287.44	0.88	94.22	0.88	0.06	<0.01	1.07	19.74	19.74	0.08	0.05	N/A
						STS-35							
1349	1 RIGHT	199.4	0.20	21.41	0.52	0.04	<0.01	0.03	4.49	4.49	0.03	0.01	N/A
1345	1 LEFT	92.4	0.24	25.70	0.51	0.15	<0.01	0.07	5.38	5.36	0.11	0.03	N/A
1347	2 RIGHT	574.8	0.85	91.01	0.37	0.03	<0.01	0.05	19.07	19.06	0.03	0.01	N/A
1346	2 LEFT	111.2	0.71	76.02	0.34	0.13	<0.01	0.06	15.93	15.87	0.12	0.05	N/A
1352	3 LEFT	12.2	0.42	45.00	0.86	0.74	0.02	0.26	9.42	9.38	0.46	0.06	N/A
1350	3 RIGHT	28.4	0.82	87.80	0.67	0.32	0.01	0.17	18.39	18.37	0.32	0.15	N/A

[a] No. 2 right bottle was best
[b] Laboratory thinks bottles had a slow leak after landing

SHUTTLE FLIGHT HISTORIES
KSC FACILITIES AND PROCESSING DATES

Miss. Seq. No.	STS- No.	Orb. OV-	Moved to OPF Cal. Days in Proc. HB 1	Moved to OPF Cal. Days in Proc. HB 2	Moved to VAB Cal. Days in Proc. HB 1	Moved to VAB Cal. Days in Proc. HB 3	Stacked on MLP 1	Stacked on MLP 2	Stacked on MLP 3	Moved to PAD Cal. days in Proc. A	Moved to PAD Cal. days in Proc. B	Actual Launch Date	Remarks	Orb.on gnd pwr, hrs.
1	1	102	03/22/79 613			11/24/80 37	12/22/80			12/31/80 102		04/12/81		4,508
2	2	102	04/29/81 103			08/10/81 21	08/26/81			08/31/81 73		11/12/81		2,755
3	3	102	11/26/81 68			02/03/82 13	02/12/82			02/16/82 34		03/22/82		1,814
4	4	102	04/07/82 41			05/18/82 8	05/25/82			05/26/82 32		06/27/82		1,318
5	5	102	07/16/82 55			09/09/82 12	09/17/82			09/21/82 51		11/11/82		1,647
6	6	099		07/06/82 139		11/22/82 8		11/29/82		11/30/82 135		04/04/83		4,556
7	7	099	04/17/83 34			05/21/83 5	05/26/83			05/26/83 23		06/18/83		1,143
8	8	099	06/30/83 27			07/27/83 6		07/30/83		08/02/83 28		08/30/83		998
9	9	102		07/02/83 83		09/23/83 5	09/28/83			09/28/83 5			Recycled due to SRB nozzle problem.	3,116
				10/19/83 15		11/03/83 5	11/07/83			11/08/83 20		11/28/83		
10	41B	099	09/11/83 117			01/06/84 6		01/12/84		01/12/84 22		02/03/84		1,439
11	41C	099		02/11/84 32		03/14/84 4	03/18/84			03/18/84 19		04/06/84		1,001

SHUTTLE FLIGHT HISTORIES
KSC FACILITIES AND PROCESSING DATES

Miss. Seq. No.	STS-No.	Orb. OV-	Moved to OPF Cal. Days in Proc. HB 1	Moved to OPF Cal. Days in Proc. HB 2	Moved to VAB Cal. Days in Proc. HB 1	Moved to VAB Cal. Days in Proc. HB 3	Stacked on MLP 1	Stacked on MLP 2	Stacked on MLP	Moved to PAD Cal. days in Proc. A	Moved to PAD Cal. days in Proc. B	Actual Launch Date	Remarks	Orb.on gnd pwr, hrs.
12	41D	103		11/10/83 24	12/09/83a 32								aStored in VAB HB2 12/19/83 to 1/10/84	
			01/10/84 123			05/12/84 7		05/12/84		05/19/84 56			First launch attempts on 6/25 and 6/26 were aborted.	
			07/17/84			07/14/84 3							Orbiter moved back to VAB for destack.	2,330
			07/17/84 15			08/01/84 8		08/01/84		08/09/84 21		08/30/84	Orbiter destack and returned to OPF HB1 for re-manifesting of payloads.	
13	41G	099		04/18/84 143	09/08/84 5		09/08/84			09/13/84 18		10/05/84		1,440
14	51A	103		09/11/84 38		10/18/84 5		10/19/84		10/23/84 17		11/08/84		1,042
15	51C	103		11/16/84 36	12/21/84 15		12/21/84			01/05/85 19		01/24/85		999
16	51D	103		01/27/85 55		03/23/85 5	03/23/85			03/28/85 15		04/12/85	Remanifested 03/04/85 for Syncom/Telesat. LDEF retrieval mission was deleted. Manifest changes resulted from TDRSS-D problems.	990

SHUTTLE FLIGHT HISTORIES
KSC FACILITIES AND PROCESSING DATES

Miss. Seq. No.	STS-No.	Orb. OV-	Moved to OPF Cal. Days in Proc. HB 1	Moved to OPF Cal. Days in Proc. HB 2	Moved to VAB Cal. Days in Proc. HB 1	Moved to VAB Cal. Days in Proc. HB 3	Stacked on MLP 1	Stacked on MLP 2	Stacked on MLP 3	Moved to PAD Cal. days in Proc. A	Moved to PAD Cal. days in Proc. B	Actual Launch Date	Remarks	Orb.on gnd pwr, hrs.
17	51B	099	STS 51-E 10/12/84 120		STS 51-E 02/10/85 5			STS 51-E 02/10/85		STS 51-E 02/15/85 17		No launch	STS 51-E cancelled 03/03/85 due to problems with payload, TDRSS-D.	2,532
					03/05/85 9								Payloads removed from Orbiter on 03/04/85, Shuttle returned to VAB for destacking.	
			STS 51-B 03/14/85 27		STS 51-B 04/10/85 5			STS 51-B 04/10/85		STS 51-B 04/15/85 14		STS 51-B 04/29/85	Remanifested as STS 51-B, Spacelab 3 primary payload.	
18	51G	103		04/19/85 40	05/28/85 8		05/29/85			06/04/85 14		06/17/85		927
19	51F	099	05/11/85 45			06/24/85 6		06/24/85		06/29/85 31		07/29/85	First launch attempt on 07/12/85 was aborted.	1,482
20	51I	103		06/29/85 31	07/30/85 7		07/30/85			08/06/85 21		08/27/85	First and second launch attempts on 08/24/85 and 08/25/85 were scrubbed.	1,002
21	51J	104	04/13/85 27 07/30/85 12 See Remarks	05/28/85 51 See Remarks		08/12/85 18		08/12/85		08/30/85 34		10/03/85	Orbiter location during flow: 4/13 to 5/10 OPF HB1 5/10 to 5/28 VAB HB2 (storage) 5/28 to 7/18 OPF HB2 7/18 to 7/30 VAB HB2 (storage) 7/30 to 8/12 OPF HB1	2,590
22	61A	099	08/11/85 62		10/12/85 4		10/12/85			10/16/85 14		10/30/85		1,092

SHUTTLE FLIGHT HISTORIES
KSC FACILITIES AND PROCESSING DATES

Miss. Seq. No.	STS-No.	Orb. OV-	Moved to OPF Cal. Days in Proc. HB 1	Moved to OPF Cal. Days in Proc. HB 2	Moved to VAB Cal. Days in Proc. HB 1	Moved to VAB Cal. Days in Proc. HB 3	Stacked on MLP 1	Stacked on MLP 2	Stacked on MLP 3	Moved to PAD Cal. days in Proc. A	Moved to PAD Cal. days in Proc. B	Actual Launch Date	Remarks	Orb.on gnd pwr, hrs.
23	61B	104	10/12/85 27			11/08/85 4		11/08/85		11/12/85 14		11/26/85		854
24	61C	102		07/18/85 Note 1 09/26/85 109	11/22/85 12		11/22/85			12/02/85 41		01/12/86	1. Moved to VAB HB2 for storage from 09/08/85 to 09/26/85, 18 days.	2,155
25	51L	099	11/11/85 36			12/17/85 5		12/17/85			12/22/85 37	01/28/86		1,213
26	26	103	a9/8/85 aa9/8/87 aaa10/2/87 274		06/02/88 19			06/21/88 13			07/04/88 87	09/29/88	Successful launch on 09/29/88 at 273:15:37:00 G.m.t.	5,900
27	27	104		03/20/86 945		10/22/88 2	10/24/88 9				11/02/88 30	12/02/88	Successful launch on 12/2/88 at 337:14:30:37 G.m.t.	1,853
28	29	103	10/12/88 100		01/20/89 9			01/29/89 7			02/04/89 37	03/13/89	Successful launch on March 13, 1989, at 072:14:57:00 G.m.t.	2,204
29	30	104		12/14/88 87		03/11/89 2	03/13/89 9				03/22/89 43	05/04/89	Successful launch on May 4, 1989 at 124:18:46:59 G.m.t.	1,725
30	28	102		01/22/89 162	07/03/89 1			07/04/89 11			07/15/89 24	08/08/89	Successful launch on 8/8/89, at 220:12:37:00 G.m.t.	a
31	34	104		05/16/89 97	08/21/89 1		08/22/89 7				08/29/89 50	10/18/89	Successful launch on October 18, 1989 at 291:16:53:40 G.m.t.	a

aStorage after STS 51-L
aaFirst Power Up
aaaCut Off Start

SHUTTLE FLIGHT HISTORIES
KSC FACILITIES AND PROCESSING DATES

Miss. Seq. No.	STS-No.	Orb. OV-	Moved to OPF Cal. Days in Proc. HB 1	Moved to OPF Cal. Days in Proc. HB 2	Moved to VAB Cal. Days in Proc. HB 1	Moved to VAB Cal. Days in Proc. HB 3	Stacked on MLP 1	Stacked on MLP 2	Stacked on MLP 3	Moved to PAD Cal. days in Proc. A	Moved to PAD Cal. days in Proc. B	Actual Launch Date	Remarks	Orb.on gnd pwr, hrs.
32	33	103	07/11/89 86			10/05/89 1		10/06/89 21			10/27/89 26	11/22/89	Successful launch on 11/22/89, at 327:00:23:30 G.m.t.	a
33	32	102	08/20/89 88		11/16/89 1				11/17/89 11	11/28/89 42		01/09/90	Successful launch on January 9, 1990 at 009:12:35:00 G.m.t.	a
34	36	104	10/24/89 83		01/15/90 1		01/16/90 9			01/25/90 34		02/28/90	Successful launch on February 28, 1990 at 059:07:50:22 G.m.t.	a
35	31	103		12/05/89 90	03/05/90 1			03/06/90 10			03/16/90 40	04/24/90	Successful launch on April 24, 1990 at 114:12:33:51 G.m.t.	a
36	41	103	05/08/90 111			08/27/90 1		08/28/90 8			09/05/90 31	10/06/90	Successful launch on October 6, 1990, at 279:11:47:15 G.m.t. (7:47 a.m. c.d.t.)	a
37	38	104		03/14/90 87 08/14/90 60 (b)	06/09/90 1 10/13/90 1		10/14/90 9	06/10/90 8		06/18/90 52 10/23/90 23		11/15/90	Successful launch on Nov. 15, 1990, at 319:23:48:15 G.m.t. (6:48 p.m. e.s.t.)	a
38	35	102	01/27/90 79 (b)	06/15/90 48 (c)		04/16/90 1 08/02/90 7 10/09/90 5			04/17/90 5 08/09/90 7 10/14/90 50	04/22/90 51 08/16/90 41		12/02/90	Successful launch on Dec. 2, 1990, at 336:06:49:01 G.m.t. (1:49 a.m. e.s.t.)	a

[a] KSC no longer logs Orbiter ground power on time.
[b] Recycle due to hydrogen leaks.
[c] Recycle due to weather

SHUTTLE FLIGHT HISTORIES
SOLID ROCKET BOOSTERS

Miss. Seq. No.	STS-No.	Orb. OV-	SRB S/N	SRM Position Nomen.	Ignition Weight, lb	Separation Weight, lb	Usable Propellant, lb	Maximum Sea-level Thrust,*lb.	Burn Time, sec	Motor Type	Case Type	Recovery System Remarks
1	1	102	A07 A08	1ALH 1ARH	1,295,940 1,298,160	182,022 182,738	1,105,970 1,107,563	2,813,700 2,803,200	131.826 131.828	STD STD	STD STD	
2	2	102	A09 A10	2ALH 2ARH	1,296,747 1,296,782	181,590 181,814	1,107,967 1,107,951	2,831,300 2,812,200	130.047 130.046	STD STD	STD STD	
3	3	102	A11 A12	3ALH 3ARH	1,296,697 1,296,915	182,537 182,225	1,106,118 1,106,600	2,889,400 2,887,000	127.888 127.889	STD STD	STD STD	RH SRB lost one main chute resulting in impact velocity of 109 fps.
4	4	102	A13 A14	4ALH 4ARH	1,298,213 1,298,253	182,937 182,651	1,107,102 1,108,784	2,824,000 2,820,000	129.979 129.981	STD STD	STD STD	Both SRB's impacted water at extremely high velocities. Both SRB's were lost.
5	5	102	A15 A16	5ALH 5ARH	1,298,013 1,298,506	183,299 183,906	1,106,744 1,107,663	2,876,700 2,873,300	129.206 129.207	STD STD	STD STD	
6	6	099	A17 A18	L6ALH L6ARH	1,295,519 1,296,328	179,315 179,621	1,108,215 1,108,727	2,872,600 2,836,440	129.486 129.487	STD STD	LTWT LTWT	
7	7	099	A51 A52	L7ALH L7BRH	1,295,752 1,294,403	178,177 177,930	1,109,552 1,108,527	2,900,300 2,900,800	126.323 126.323	STD STD	LTWT LTWT	
8	8	099	A53 A54	8ALH 8BRH	1,297,016 1,297,509	179,183 179,050	1,110,544 1,111,248	3,102,600 3,091,100	124.410 125.408	HPM HPM	STD STD	
9	9	102	A55 A60	9ALH 9BRH	1,298,366 1,297,983	182,763 182,365	1,107,609 1,107,621	3,037,030 3,062,000	126.326 126.326	HPM HPM	STD STD	
10	41B	099	A57 A58	M10ALH M10BRH	1,295,569 1,296,187	180,675 180,729	1,107,385 1,107,483	3,054,700 3,074,600	128.010 128.010	HPM HPM	MWC MWC	Each SRB impacted water with one chute out, velocities at impact of 105 to 110 fps.

* At 60°F

Source: MSFC, Final Flight Evaluation Reports, STS-1 and subsequent missions, Section 2.0.

SHUTTLE FLIGHT HISTORIES
SOLID ROCKET BOOSTERS

Miss. Seq. No.	STS-No.	Orb. OV-	SRB S/N	SRM Position Nomen.	Ignition Weight, lb	Separation Weight, lb	Usable Propellant, lb	Maximum Sea-level Thrust,*lb.	Burn Time, sec	Motor Type	Case Type	Recovery System Remarks
11	41C	099	BI-012	M11ALH M11BRH	1,295,903 1,296,386	179,723 179,600	1,108,408 1,108,831	3,108,200 3,108,200	125.560 125.560	HPM HPM	MWC MWC	One main chute on RH SRB failed to inflate.
12	41D	103	BI-013	L13ALH L13BRH	1,296,101 1,298,244	178,516 180,878	1,110,396 1,110,178	3,096,400 3,082,600	124.590 124.590	HPM HPM	LWC LWC	
13	41G	099	A63 A64	L12ALH L12BRH	1,296,572 1,296,481	178,688 179,182	1,110,046 1,109,342	3,154,000 3,112,000	124.200 124.144	HPM HPM	LWC LWC	Small main chutes on both SRB's. 100 gallons water in LH fwd skirt after recovery.
14	51A	103	A65 A66	L14 ALH L14 BRH	1,299,609 1,299,831	181,984 181,506	1,109,692 1,110,640	3,092,000 3,110,000	125,769 125,769	HPM HPM	LWC LWC	Large main chutes on both SRBs.
15	51C	103	BI-015	L15ALH L15BRH	1,294,714 1,295,660	179,014 178,574	1,108,850 1,109,157	3,088,000 3,084,000	127.850 127.850	HPM HPM	LWC LWC	Small chutes on both SRBs.
16	51D	103	BI-018	L17ALH L17BRH	1,297,460 1,296,665	179,079 179,720	1,109,976 1,109,194	3,048,000 3,068,000	126.888 126.888	HPM HPM	LWC LWC	Large main chutes on both SRBs. Least amount of damage from water impact to date.
17	51B	099	BI-016	L16ALH L16BRH	1,296,246 1,296,969	179,890 179,979	1,108,525 1,109,242	3,094,000 3,077,000	127.403 127.403	HPM HPM	LWC LWC	
18	51G	103	BI-019	M18ALH M18BRH	1,297,968 1,298,704	182,237 182,379	1,108,553 1,109,897	3,054,000 3,066,000	124.723 124.723	HPM HPM	MWC MWC	One main chute on LH SRB did not inflate beyond first reefing stage drag area.
19	51F	099	BI-017	M19ALH M19BRH	1,300,211 1,300,031	182,568 182,521	1,109,705 1,109,573	3,102,000 3,090,000	125.100 125.100	HPM HPM	MWC MWC	Large main chutes, 136" dia., one RHSRB chute failed to deploy.
20	51I	103	BI-020	L20ALH L20BRH	1,297,697 1,298,536	180,146 180,136	1,109,602 1,110,451	3,172,000 3,158,000	121.114 121.114	HPM HPM	LWC LWC	Wrong drogue reefing line cutters on LH resulted in longest time from frustum sep to water impact.

*At 60°F.

Source: MSFC, Final Flight Evaluation Reports, STS-1 and subsequent mission, Section 2.0.

SHUTTLE FLIGHT HISTORIES
SOLID ROCKET BOOSTERS

Miss. Seq. No.	STS-No.	Orb. OV-	SRB S/N	SRM Position Nomen.	Ignition Weight, lb	Separation Weight, lb	Usable Propellant, lb	Maximum Sea-level Thrust,*lb.	Burn Time, sec	Motor Type	Case Type	Recovery System Remarks
21	51J	104	BI-021	L21ALH L21BRH	1,298,230 1,299,053	180,647 180,761	1,109,788 1,110,152	3,185,000 3,144,000	124.552 124.552	HP HP	LWC LWC	Less than normal chute damage.
22	61A	099	BI-022	L22ALH L22BRH	1,298,021 1,297,886	180,712 180,698	1,109,426 1,109,226	3,110,000 3,100,000	124.900 124.900	HP HP	LWC LWC	Damage to main chutes was light. Impact velocity estimated at 75 fps.
23	61B	104	BI-023	L23ALH L23BRH	1,296,606 1,296,018	180,172 180,584	1,108,582 1,107,516	3,129,000 3,146,000	123.600 123.600	HP HP	LWC LWC	Damage to main chutes was light. Recovery operations were not started until daylight the next day.
24	61C	102	BI-024	L24ALH L24BRH	1,295,611 1,295,702	180,243 180,300	1,107,463 1,107,565	3,058,000 3,037,000	128.397 128.397	HP HP	LWC LWC	
25	51L	099	BI-026	L25ALH L25BRH	1,297,828 1,297,849	N/A	N/A	N/A	N/A	HP HP	LWC LWC	
26	26	103	BI-029	360L001A 360L001B	1,301,513.3 1,301,427.9	188,342.7 188,407.1	1,106,197 1,106,045	3,060,000 3,060,000	124.806 124.846	RSRM RSRM	LWC Re-design	Ribbon Tbar in RH SRB Main Parachute #3 From Ribbon 131 to Ribbon 148. (IFA # STS-26-B-7)
27	27	104	BI-030	360L002A 360L002B	1,302,581.0 1,301,489.9	188,905.1 188,596.9	1,106,653 1,105,920	3,060,000 3,060,000	126.30 126.30	RSRM RSRM	LWC Re-design	IFA STS-27-B-2, Right SRB nose cap MSA-1 material/debris associated with damage to Orbiter tiles.
28	29	103	BI-031	360L003A 360L003B	1,300,253.6 1,300,916.8	189,207.4 189,029.6	1,104,157 1,104,804	3,040,000 3,050,000	126.04 126.08	RSRM RSRM	LWC Re-design	A parachute deployment bag lacing grommet was seen while observing film of main parachute deployment. (IFA STS-29-B-7)
29	30	104	BI-027	360Q004A 360H004B	1,300,246.9 1,300,880.5	187,239.9 188,167.9	1,106,021 1,105,784	3,080,000 3,070,000	125.12 125.16	RSRM RSRM	LWC Re-design	No. 2 left SRB main parachute (Ser. No. 8045) collapsed shortly after inflation. (IFA STS-30-B-1)

Source: MSFC, Final Flight Evaluation Reports, STS-1 and subsequent missions, Section 2.0.

SHUTTLE FLIGHT HISTORIES
SOLID ROCKET BOOSTERS

Miss. Seq. No.	STS-No.	Orb. OV-	SRB S/N	SRM Position Nomen.	Ignition Weight, lb	Separation Weight, lb	Usable Propellant, lb	Maximum Sea-level Thrust,*lb.	Burn Time, sec	Motor Type	Case Type	Recovery System Remarks
30	28	102	BI-028	360H005A 360H005B	1,301,088.4 1,300,644	187,739.4 187,872.8	1,106,380 1,105,771	3,090,000 3,080,000	124.28 124.32	RSRM RSRM	LWC Re-design	IFA STS-28-B-1 - During recovery operations, retrieval ship personnel reported that an aeroheat shield door was missing from one BSM (located in the lower right position of the BSM cluster) on the left SRB frustum.
31	34	104	BI-032	360L006A 360L006B	1,300,812.6 1,300,164.6	186,802.0 187,440.7	1,106,943 1,105,654	3,060,000 3,070,000	124.88 124.92	RSRM	LWC Re-design	IFA STS-34-B-3 - The reefing line cutter (located at gore 60) on the left SRB drogue parachute failed to actuate.
32	33	103	BI-034	360L007A 360L007B	1,299,924.3 1,299,918.9	187,836.8 188,802.9	1,105,634 1,105,629	3,030,000 3,050,000	126.75 126.79	RSRM	LWC Re-design	
33	32	102	BI-035	360L008A 360L008B	1,299,175.0 1,299,405.4	187,026.0 187,300.5	1,105,393 1,105,355	3,090,000 3,100,000	125.12 125.16	RSRM	LWC-Re-design	
34	36	104	BI-036	360L009A 360L009B	1,299,250.5 1,299,094.6	187,304.2 187,502.8	1,105,247 1,104,854	3,070,000 3,060,000	125.80 125.84	RSRM	LWC Re-design	IFA STS-36-B-4 - The second reefing line cutter on the left SRB drogue parachute did not fire. The left SRB main parachute 2 failed by having gore 80 torn from ribbon 17 through vent band (ribbon 304) and vent cap band (ribbon 315).
35	31	103	BI-037	360Q010A 360W010A	1,300,240.5 1,300,213.9	187,649.3 188,019.9	1,105,792 1,105,479	3,070,000 3,070,000	125.76 125.80	RSRM	LWC Re-design	
36	41	103	BI-040	360Q013A 360Q013B	1,301,371.5 1,301,388.0	188,361.8 188,407.8	1,106,358 1,106,404	3,060,000 3,060,000	124.12 124.16	RSRM	LWC Re-design	

Source: MSFC, Final Flight Evaluation Reports, STS-1 and subsequent missions, Section 2.0.

SHUTTLE FLIGHT HISTORIES
SOLID ROCKET BOOSTERS

Miss. Seq. No.	STS-No.	Orb. OV-	SRB S/N	SRM Position Nomen.	Ignition Weight, lb	Separation Weight, lb	Usable Propellant, lb	Maximum Sea-level Thrust,*lb.	Burn Time, sec	Motor Type	Case Type	Recovery System Remarks
37	38	104	BI-039	360W012A 360W012B	1,301,957.3 1,301,065.5	188,148.9 188,044.2	1,107,535 1,106,533	3,100,000 3,080,000	123.84 123.84	RSRM	LWC Re-design	
38	35	102	BI-038	360W011A 360W011B	1,300,088.1 1,300,123.8	187,519.8 187,616.7	1,106,120 1,106,020	3,050,000 3,060,000	125.76 125.76	RSRM	LWC Re-design	

Source: MSFC, Final Flight Evaluation Reports, STS-1 and subsequent missions, Section 2.0.

SHUTTLE FLIGHT HISTORIES
EXTERNAL TANK

Miss. Seq. No.	STS- No.	Orb. OV-	Ext. Tank Type	Ext. Tank Model No.	Liquid Oxygen Quantity, lb: Loaded Eng. Start Command	Liquid Oxygen Quantity, lb: At T-0	Liquid Oxygen Quantity, lb: At MECO	Liquid Oxygen Quantity, lb: Residual, Total Liquid	Liquid Hydrogen Quantity, lb: Loaded Eng. Start Command	Liquid Hydrogen Quantity, lb: At T-0	Liquid Hydrogen Quantity, lb: At MECO	Liquid Hydrogen Quantity, lb: Residual, Total Liquid	Entry Impact: Best Est. Traj., Lat./Long.	Entry Impact: Position From Prediction
1	1	102	Std. Wt.		1,356,020	1,346,260	18,335	16,879	227,348	225,528	5,914	5,222		
2	2	102	Std. Wt.		1,356,914	1,347,238	17,267	15,968	228,424	226,617	4,989	4,277		
3	3	102	Std. Wt.	SWT -3	1,352,359	1,342,796	12,254	10,791	228,741	226,747	4,988	4,248	31.2°S 94.4°E	150 nmi. Down Range
4	4	102	Std. Wt.	SWT -4	1,355,660	1,346,256	9,874	8,459	228,385	226,656	4,268	3,507	28.41°S 83.07°E	Down Range
5	5	102	Std. Wt.	SWT -5	1,356,698	1,347,091	7,200	5,739	227,980	226,301	3,980	3,210	28.30°S 82.44°E	170 nmi. Down Range
6	6	099	Lt. Wt.	LWT -1	1,359,741	1,350,244	10,534	9,283	229,077	227,358	3,824	3,145	28.34°S 82.99°E	150 nmi. Down Range
7	7	099	Std. Wt.	SWT -6	1,366,400	1,345,936	10,000	8,606	229,088	227,191	4,300	3,580	28.39°S 83.73°E	75 nmi. Down Range
8	8	099	Lt. Wt.	LWT -2	1,373,679	1,364,099	22,800	21,347	231,009	229,253	5,500	4,769	28.35°S 81.49°E	127 nmi. Up Range
9	9	102	Lt. Wt.	LWT -4	1,378,418	1,368,926	7,800	6,460	231,341	229,608	3,600	2,885	56.96°S 149.90°E	300 nmi. Down Range
10	41B	099	Lt. Wt.	LWT -3	1,378,612	1,365,168	14,000	12,607	231,168	229,458	5,200	4,480	28.29°S 80.63°E	120 nmi. Up Range

Source: MSFC, Final Flight Evaluation Reports, STS-1 and subsequent mission, Sections 3.0 and 6.0.

SHUTTLE FLIGHT HISTORIES
EXTERNAL TANK

Miss. Seq. No.	STS- No.	Orb. OV-	Ext. Tank		Liquid Oxygen Quantity, lb				Liquid Hydrogen Quantity, lb				Entry Impact	
			Type	Model No.	Loaded Eng. Start Command	At T-0	At MECO	Residual, Total Liquid	Loaded Eng. Start Command	At T-0	At MECO	Residual, Total Liquid	Best Est. Traj., Lat./Long.	Position From Prediction
11	41C	099	Lt. Wt.	LWT -5	1,378,350	1,368,776	5,000	3,596	231,692	229,956	4,280	3,552	18.94°N 149.91°W	22 nmi. Up Range
12	41D	103	Lt. Wt.	LWT -6	1,377,535	1,367,999	6,400	5,050	231,439	229,691	3,976	3,264	28.25°S 80.02°E	86 nmi. Up Range
13	41G	099	Lt. Wt.	LWT -8	1,378,090	1,368,487	10,300	9,014	231,121	229,379	4,100	3,400	57.06°S 150.04°E	70 nmi. Up Range
14	51A	103	Lt. Wt.	LWT -9	1,377,918	1,368,282	8,300	6,800	230,856	229,108	4,000	3,230	27.69°S 81.99°E	146 nmi. Down Range
15	51C	103	Lt. Wt.	LWT -7	1,378,474	1,368,669	6,000	4,568	231,455	229,652	4,600	3,879	28.10°S 78.30°E	90 nmi. Down Range
16	51D	103	Lt. Wt.	LWT -11	1,378,156	1,368,544	9,200	7,801	231,040	229,290	2,700	1,972	20.24°N 149.37°W	48 nmi. Down Range
17	51B	099	Lt. Wt.	LWT -10	1,378,626	1,369,045	10,760	9,341	231,520	229,772	3,500	2,772	57.09°S 150.83°E	153 nmi. Down Range
18	51G	103	Lt. Wt.	LWT -13	1,378,428	1,368,830	6,400	5,016	231,411	229,668	3,400	2,677	14.89°N 159.50°W	58 nmi. Down Range
19	51F	099	Lt. Wt.	LWT -12	1,378,020	1,368,475	4,259	3,111	231,666	229,924	2,430	1,868	48.90°S 159.00°E	40 nmi. Up Range

Source: MSFC, Final Flight Evaluation Reports, STS-1 and subsequent missions, Sections 3.0 and 6.0.

SHUTTLE FLIGHT HISTORIES
EXTERNAL TANK

Miss. Seq. No.	STS- No.	Orb. OV-	Ext. Tank		Liquid Oxygen Quantity, lb				Liquid Hydrogen Quantity, lb				Entry Impact	
			Type	Model No.	Loaded Eng. Start Command	At T-0	At MECO	Residual, Total Liquid	Loaded Eng. Start Command	At T-0	At MECO	Residual, Total Liquid	Best Est. Traj., Lat./Long.	Position From Prediction
20	51I	103	Lt. Wt.	LWT -14	1,377,882	1,368,249	6,800	5,401	231,295	229,532	3,600	2,855	11.5°N 157.6°W	50 nmi. Down Range
21	51J	104	Lt. Wt.	LWT -18	1,382,233	1,372,639	9,325	8,022	231,267	229,510	2,530	1,827	20.63°N 148.26°W	194 nmi. Down Range
22	61A	099	Lt. Wt.	LWT -17	1,382,740	1,373,141	13,000	11,512	232,030	230,302	4,500	3,776	56.97°S 147.96°E	50 nmi. Down Range
23	61B	104	Lt. Wt.	LWT -15	1,377,926	1,368,562	9,995	8,686	231,424	229,709	3,028	2,312	17.31°N 156.69°W	68 nmi. Down Range
24	61C	102	Lt. Wt.	LWT -23	1,381,446	1,371,963	17,693	16,310	231,760	230,052	5,170	4,435	28.3°S 81.3°E	10 nmi. Down Range
25	51L	099	Lt. Wt.	LWT -19	1,381,361	1,372,007	N/A	N/A	231,671	229,962	N/A	N/A	N/A	N/A
26	26	103	Lt. Wt.	LWT -21	1,387,981	1,372,690	8,435	7,114	231,993	230,146	4,155	3,433	12.578°N 164.037°W	17 nmi. Up Range
27	27	104	Lt. Wt.	LWT -16	1,387,161	1,370,430	7,248	6,052	231,779	229,855	4,184	3,477	2.855°S 123.479°W	DOD Classified
28	29	103	Lt. Wt.	LWT -29	1,388,645	1,373,305	10,063	8,695	231,944	230,080	4,542	3,807	13.26°N 162.65°W	83 nmi. Down Range
29	30	104	Lt. Wt.	LWT -22	1,381,861	1,372,358	9,767	8,419	231,745	229,996	3,497	3,437	28.85°S 86.89°E	137 nmi. Up Range

Source: MSFC, Final Flight Evaluation Reports, STS-1 and subsequent missions, Sections 3.0 and 6.0.

SHUTTLE FLIGHT HISTORIES
EXTERNAL TANK

Miss. Seq. No.	STS-No.	Orb. OV-	Ext. Tank		Liquid Oxygen Quantity, lb				Liquid Hydrogen Quantity, lb				Entry Impact	
			Type	Model No.	Loaded Eng. Start Command	At T-0	At MECO	Residual, Total Liquid	Loaded Eng. Start Command	At T-0	At MECO	Residual, Total Liquid	Best Est. Traj., Lat./Long.	Position From Prediction
30	28	102	LWT	LWT -24	1,382,851	1,373,393	7,629	6,195	231,820	230,082	3,703	2,971	38.643°S 149.651°W	Classified
31	34	104	LWT	LWT -20	1,381,656	1,372,219	7,383	6,009	231,784	230,044	4,084	3,345	3.4°N 147.6°W	Approximately 7 nautical miles from predicted impact print.
32	33	103	LWT ET-38	LWT -31	1,382,286	1,372,813	8,057	6,704	231,814	230,074	3,180	2,438	28.565°S 86.421°E	Classified
33	32	102	LWT	LWT -25	1,382,321	1,372,817	8,348	7,094	231,741	229,975	3,902	3,186	10.435°N 157.216°W	31 nmi. Uprange
34	36	104	LWT	LWT -26	1,381,385	1,311,898	8,252	6,974	231,657	229,925	4,277	3,560	61.464°S 145.114°E	
35	31	103	LT WT	LWT -27	1,378,556	1,369,038	8,616	7,260	231,568	229,825	4,091	3,352	19.946°N 150.007°W	85 nmi. uprange
36	41	103	LWT	LWT -32	1,380,562	1,371,917	7,322	6,028	231,659	229,900	3,710	2,923	12.52°N 164.127°W	52 nmi. uprange
37	38	104	LWT	LWT -33	1,381,562	1,372,056	7,861	6,421	231,689	229,902	4,007	3,253	28.52°S 84.91°W	Classified
38	35	102	LWT	LWT -28	1,381,403	1,371,917	10,725	9,336	231,664	229,900	3,669	2,923	15.09°N 159.01°W	63 nmi. uprange

Source: MSFC, Final Flight Evaluation Reports, STS-1 and subsequent missions, Sections 3.0 and 6.0.

SHUTTLE FLIGHT HISTORIES
MAIN ENGINE POSTION 1

Miss. Seq. No.	STS-No.	Orb. OV-	Main Engine Pos. 1 Comp. Eng	MCC	Nz1	LPOTP	HPOTP	LPFTP	HPFTP	PowHd	Cntlr	Main Engine Position 1 Performance Summary: Attained Max Throttle, percent/time, sec	Attained Max q Throttle, percent/time, sec	Re-attained Max Throttle, percent/time, sec	Attained 3g Throttle, percent/time, sec	Vacuum Thrust lb @ 150 sec	Vacuum Specific Impulse, sec	Remarks
1	1	102	2 0 0 7	2 0 0 9	2 0 0 7	2 0 0 6	0 0 0 7	2 0 0 6	9 0 0 6	2 0 0 7	F 6	100 4.20 *	65 55.00 *	100 73.00 *	65 513.00 *	470,574 *	454.38 *	
2	2	102	2 0 0 7	2 0 0 9	2 0 0 7	2 0 0 6	0 0 0 7	2 0 0 6	9 0 0 6	2 0 0 7	F 6	100 4.20 *	68 58.00 *	100 70.00 *	65 516.00 *	471,004	454.52	
3	3	102	2 0 0 7	2 0 0 9	2 0 0 7	2 0 0 6	0 0 0 7 R 1	2 0 0 6	9 0 0 6 R 1	2 0 0 7	F 6	100 4.20 *	68 42.00 *	100 62.00 *	65 514.00 *	471,192	454.49	
4	4	102	2 0 0 7	2 0 0 9	2 0 0 7	2 0 0 6	0 0 0 7 R 1	2 0 0 6	2 0 0 9	2 0 0 7	F 6	100 4.20 *	65 46.30 *	100 60.80 *	65 513.40 *	469,313 *	454.47 *	
5	5	102	2 0 0 7	0 0 0 9	2 0 0 7	2 0 0 7	9 0 0 9 R 3	2 0 0 6	2 0 0 9	2 0 0 7	F 6	100 4.25 *	85 42.90 *	100 62.30 *	65 511.25	470,183	452.51	
6	6	099	2 0 1 7	4 0 1	2 0 1 9	2 0 1 8	7 0 1 0	9 1 0 6	9 1 1 0	2 0 1 8	F 1 0	104 14.40 *	81 39.30 *	104 71.60 *	65 500.30 *	488,259	453.67	Replaced Eng. 2011

*Indicates revised or additional data provided by MSFC post-publication of referenced source.
Note: All engines times are referenced to Engine Start Command (ESC).

Source: MSFC, Final Flight Evaluation Reports, STS-1 and subsequent missions, Section 4.0 and 5.0

SHUTTLE FLIGHT HISTORIES
MAIN ENGINE POSTION 1

Miss. Seq. No.	STS-No.	Orb. OV-	Main Engine Pos. 1 Comp.									Main Engine Position 1 Performance Summary						Remarks
			Eng	MCC	Nz1	LPOTP	HPOTP	LPFTP	HPFTP	PowHd	Cntlr	Attained Max Throttle, percent/ time, sec	Attained Max q Throttle, percent/ time, sec	Re-attained Max Throttle, percent/ time, sec	Attained 3g Throttle, percent/ time, sec	Vacuum Thrust lb @ 150 sec	Vacuum Specific Impulse, sec	
7	7	099	2017	401	2018	221	901	906	2315	2018	F10	104 11.50	75 37.20 *	104 70.60	65 501.00	488,303	453.65	
8	8	099	2017	401	2018	221	901	906	2315	2018	F10	100 4.20 *	69 34.10 *	100 70.90 *	65 522.00 *	469,661	453.49	
9	9	102	2011	202	4002	9005	2018	2115	2017R1	2016	F11	104 10.50 *	78 37.40 *	104 68.80 *	65 510.20 *	490,340	453.34	
10	41B	099	2109	2018	4004	2018	2020	2117	5101R1	2109	F10	100 4.54 *	73 38.50 *	100 69.80 *	65 522.10 *	470,155	453.59	
11	41C	099	2109	2018	4004	2018	2020	2117	5101R1	2109	F10	104 10.77	67 36.01	104 67.69	65 511.27	488,511	453.85	
12	41D	103	2109	2018	4004	2018	2020	2117	2020R1	2109	F10	104 11.00	84 27.45 65 38.26	104 77.88	65 515.66	488,821	453.24	First 2-step main engine throttle. ME2109 replaced 2021, due to debonded shield.

*Indicates revised or additional data provided by MFSC post-publication of reference source.
Note: All engine times are reference to Engine Start Command (ESC).

Source: MSFC, Final Flight Evaluation Reports, STS-1 and subsequent missions. Section 4.0 and 5.0.

SHUTTLE FLIGHT HISTORIES
MAIN ENGINE POSTION 1

Miss. Seq. No.	STS-No.	Orb. OV-	Main Engine Pos. 1 Comp.									Main Engine Position 1 Performance Summary						Remarks
			Eng	MCC	Nzl	LPOTP	HPOTP	LPFTP	HPFTP	Powhd	Cntlr	Attained Max Throttle, percent/ time, sec	Attained Max q Throttle, percent/ time, sec	Re-attained Max Throttle, percent/ time, sec	Attained 3g Throttle, percent/ time, sec	Vacuum Thrust lb @ 150 sec	Vacuum Specific Impulse, sec	
13	41G	099	2023	4003	4003	2015	2019R1	2026	2515R1	4001	F24	100 4.32	92 25.51 65 36.03	100 68.83	65 531.17	467,340	453.67	ME2023 replaced ME2109.
14	51A	103	2109	2018	4004	2018	2020	2117	2020R1	2109	F10	100 4.24	89 22.11 67 36.95	104 77.19	65 513.77	488,000	453.39	
15	51C	103	2109	2018	4004	2018	2020	2117	4202	2109	F10	100 4.24	92 22.63 65 38.46	104 71.31	65 511.37	489,497	453.15	HPFTP 2020R1 replaced by 4202.
16	51D	103	2109	2018	4004	2018	2115	2117	4202	2109	F10	100 4.33	90 22.51 65 38.07	100 78.27	65 532.73	469,632	453.20	HPOTP 2020 replaced by 2115.
17	51B	099	2023	4003	4003	2015	2019R1	4002R1	2515R1	4001	F24	100 4.33	94 25.79 65 36.71	104 70.83	65 515.65	487,717	453.79	LPFTP 2026 replaced by 4002R1.
18	51G	103	2109	2018	4004	2018	2115	2117	2121	2109	F10	104 10.6	83 27.52 65 38.40	104 78.44	65 516.14	488,300	453.33	HPFTP 4202 replaced by 2121.

Source: MSFC, Final Flight Evaluation Reports, STS-1 and subsequent missions, Section 4.0 and 5.0.

SHUTTLE FLIGHT HISTORIES
MAIN ENGINE POSTION 1

Miss. Seq. No.	STS-No.	Orb. OV-	Main Engine Pos. 1 Comp.									Main Engine Position 1 Performance Summary						Remarks
			Eng	MCC	Nzl	LPOTP	HPOTP	LPFTP	HPFTP	Powhd	Cntlr	Attained Max Throttle, percent/ time, sec	Attained Max q Throttle, percent/ time, sec	Re-attained Max Throttle, percent/ time, sec	Attained 3g Throttle, percent/ time, sec	Vacuum Thrust lb @ 150 sec	Vacuum Specific Impulse, sec	
19	51F	099	2023	4003	4003	2015	2019R2	4002R1	2515R1	4001	F20	104 10.91	97 26.71 65 39.47	104 66.23	Premature Engine Cutoff	487,254	454.89	High HPFTP discharge temperature measurement caused shutdown at T+350 seconds. Controller F24 replaced by F20.
20	51I	103	2109	2018	2018	2018	2115	2117	2121R1	2019	F10	104 10.31	70 35.07 67 37.55	104 64.63	65 508.09	488,628	453.35	Nozzle 4004 replaced by 2018.
21	51J	104	2011	2020	4002	9005	2022R2	2115	5301	2016	F11	104 10.43	68 35.39 65 37.51	104 65.11	65 512.53	489,924	453.46	
22	61A	099	2023	4003	4003	2015	2019R2	4002R1	2515R1	4001	F20	100 4.32	89 25.85 65 35.77	104 70.09	65 515.63	487,481	453.82	
23	61B	104	2011	2020	4002	9005	2022R2	2115	2413R2	2016	F23	104 10.49	65 37.37	104 69.37	65 511.63	490,280	453.41	F11 replaced by F23. HPFTP 5301 replaced by 2413R2.

Source: MSFC, Final Flight Evaluation Reports, STS-1 and subsequent missions. Section 4.0 and 5.0.

SHUTTLE FLIGHT HISTORIES
MAIN ENGINE POSTION 1

Miss. Seq. No.	STS-No.	Orb. OV-	Main Engine Pos. 1 Comp.									Main Engine Position 1 Performance Summary						Remarks
			Eng	MCC	Nzl	LPOTP	HPOTP	LPFTP	HPFTP	Powhd	Cntlr	Attained Max Throttle, percent/ time, sec	Attained Max q Throttle, percent/ time, sec	Re-attained Max Throttle, percent/ time, sec	Attained 3g Throttle, percent/ time, sec	Vacuum Thrust lb @ 150 sec	Vacuum Specific Impulse, sec	
24	61C	102	2015	2015	2015	4101R1	2018R2	2116	4003R1	2015	F27	104 11.03	85 41.79 69 64.55	104 72.67	67 502.25	488,085	453.30	
25	51L	099	2023	4003	4003	2015	2019R2	4002R1	2515R1	4001	F20	104 10.64	94 26.16	104 58.16	N/A	N/A	N/A	
26	26	103	2019	4001	2025	2025R1	4106R1	2025R1	2026	2020	F4	104 10.20	102 24.12 65 34.04	104 65.4	65 512.24	487,550	453.27	
27	27	104	2027	2024	2024	2124	2124R2	4005	6102	4004	F23	104 10.12	96 26.28 65 34.76	104 64.20	65 513.68	489,036	454.50	
28	29	103	2031	4007	4016	4105	9209R1	2022R1	2125	2028	F21	104 10.40	66 34.28	104 63.84	65 508.92	489,571	453.72	
29	30	104	2027	2024	2024[a]	2124	6302R1[b]	4005	6102	4004	F23	104 12.64	65 36.64	104 62.24	65 514.20	488,299	454.54	[a]New nozzle/MCC seal [b]Changed since STS-27

Source: MSFC, Final Flight Evaluation Reports, STS-1 and subsequent missions, Section 4.0 and 5.0.

SHUTTLE FLIGHT HISTORIES
MAIN ENGINE POSTION 1

Miss. Seq. No.	STS-No.	Orb. OV-	Main Engine Pos. 1 Comp.									Main Engine Position 1 Performance Summary						Remarks
			Eng	MCC	Nzl	LPOTP	HPOTP	LPFTP	HPFTP	Powhd	Cntlr	Attained Max Throttle, percent/ time, sec	Attained Max q Throttle, percent/ time, sec	Re-attained Max Throttle, percent/ time, sec	Attained 3g Throttle, percent/ time, sec	Vacuum Thrust lb @ 150 sec	Vacuum Specific Impulse, sec	
30	28	102	2019	2023	4006	2025R1*	2126R4*	2025R1	2125*	2020	F4	104/ 10.08	65/ 33.60	104/ 65.60	457.28	487,331	453.06	
31	34	104	2027	2024	2024	2124	2225R1*	4005	4008*	4044	F23	104/ 10.24	65/ 34.08	104/ 64.96	459.20	489,178	454.49	
32	33	103	2011	4005	4016	2126	4205R1	8207	4012R1	2016	F24	104/ 10.48	65/ 40.32	104/ 55.92	457.80	489,493	452.01	
33	32	102	2024	2013	4006	2029	4107R1	2131	6007	2026	F5	104/ 10.36	65/ 34.20 102/ 24.28	104/ 65.08	65/ 511.96	487,131	452.88	
34	36	104	2019	2023	2024	2025R1	4406R3	2022R1	6008	2020	F4	104/ 10.30	98/ 27.44 75/ 35.12	104/ 59.44	65/ 509.68	487,223	453.05	

*Changed since last hot fire/STS-29
**Nozzle/MCC Inspection: New GIS/seal

Source: MSFC, Final Flight Evaluation Reports, STS-1 and subsequent missions, Section 4.0 and 5.0.

SHUTTLE FLIGHT HISTORIES
MAIN ENGINE POSTION 1

Miss. Seq. No.	STS-No.	Orb. OV-	Main Engine Pos. 1 Comp.									Main Engine Position 1 Performance Summary						Remarks
			Eng	MCC	Nzl	LPOTP	HPOTP	LPFTP	HPFTP	PowHd	Cntlr	Attained Max Throttle, percent/ time, sec	Attained Max q Throttle, percent/ time, sec	Re-attained Max Throttle, percent/ time, sec	Attained 3g Throttle, percent/ time, sec	Vacuum Thrust lb @ 150 sec	Vacuum Specific Impulse, sec	
35	31	103	2011	4005	4016	2126	2027R1	2030	5203R1	2016	F24	104/ 10.24	97/ 24.32 67/ 34.40	104/ 65.44	65/ 510.56	489,314	452.02	
36	41	103	2011	4005	4016	2126	2027R2	2030	S203R1	2016	F24	104/ 10.40	100/ 24.16 67/ 34.08	104/ 64.96	65/ 509.56	489,117	452.03	
37	38	104	2019	2023	2024	2025R1	2323R4	2022R1	6008	2020	F4	104/ 10.24	72/ 32.48	104/ 68.48	65/ 509.24	486,872	453.05	
38	35	102	2024	2013	4006	2106R1	4205R3	2131	4008	2026	F5	104/ 10.24	71/ 32.96	104 / 69.44	65/ 511.20	487938	452.85	

*Changed since last hot fire/STS-29
**Nozzle/MCC Inspection: New GIS/seal

Source: MSFC, Final Flight Evaluation Reports, STS-1 and subsequent missions, Section 4.0 and 5.0.

SHUTTLE FLIGHT HISTORIES
MAIN ENGINE POSITION 2

Miss. Seq. No.	STS-No.	Orb. OV-	Main Engine Pos. 2 Comp.									Main Engine Position 2 Performance Summary						Remarks
			Eng	MCC	Nz1	LPOTP	HPOTP	LPFTP	HPFTP	Powhd	Cntlr	Attained Max Throttle, percent/ time, sec	Attained Max q Throttle, percent/ time, sec	Re-attained Max Throttle, percent/ time, sec	Attained 3g Throttle, percent/ time, sec	Vacuum Thrust lb @ 150 sec	Vacuum Specific Impulse, sec	
1	1	102	2006	2006	2005	0008	2004	2007	0006	2006	F4	100 4.20 *	65 55.00 *	100 73.00 *	65 513.00 *	408,610 *	454.63 *	
2	2	102	2006	2006	2005	0008	2004	0007	0006	2006	F4	100 4.20 *	68 58.00 *	100 70.00 *	65 516.00 *	470,795	454.45	
3	3	102	2006	2004	2005	0008	2404	2007	03061R1	2006	F5	100 4.20 *	68 42.00 *	100 62.00 *	65 514.00 *	470,972	454.44	
4	4	102	2006	2006	2005	2009	2004	2007	03061R2	2006	F4	100 4.20 *	65 46.30 *	100 60.800	65 513.40	470,520 *	454.48	
5	5	102	2006	2006	2005	2009	2004	2007	03061R2	2006	F4	100 4.25 *	85 42.90 *	100 62.30 *	65 511.30 *	470,831	452.76	
6	6	099	2015	2014	2015	2113	2015	2211	2315	2015	F11	104 14.40 *	81 39.30 *	104 71.60 *	65 500.30 *	488,967	453.26	

*Indicates revised or additional data provided by MSFC post-publication of referenced source.
Note: All engines times are referenced to Engine Start Command (ESC).

Source: MSFC, Final Flight Evaluation Reports, STS-1 and subsequent missions, Section 4.0 and 5.0

SHUTTLE FLIGHT HISTORIES
MAIN ENGINE POSITION 2

Miss. Seq. No.	STS-No.	Orb. OV-	Main Engine Pos. 2 Comp.									Main Engine Position 2 Performance Summary						Remarks
			Eng	MCC	Nzl	LPOTP	HPOTP	LPFTP	HPFTP	Powhd	Cntlr	Attained Max Throttle, percent/ time, sec	Attained Max q Throttle, percent/ time, sec	Re-attained Max Throttle, percent/ time, sec	Attained 3g Throttle, percent/ time, sec	Vacuum Thrust lb @ 150 sec	Vacuum Specific Impulse, sec	
7	7	099	2015	2014	2015	2113	2015	2211	9211	2015	F11	104 11.50	75 37.20	104 70.60 *	65 501.00	488,668	453.68	
8	8	099	2015	2014	2015	2113	2015	2211	9211	2015	F11	100 4.20 *	69 34.10 *	100 70.90	65 522.00 *	470,728	453.41	
9	9	102	2018	4002	4001	2016	9211	4001R1	2213R1	2019	F4	100 10.50 *	78 37.40 *	104 68.80	65 510.20 *	487,804	453.46	
10	41B	099	2015	2014	2015	2113	2015	2211	9211	2015	F5	100 4.54 *	73 38.51 *	100 69.80 *	65 522.10 *	471,002	453.31	
11	41C	099	2020	4004	2020	0208	2021	2019	2018	2021	F5	104 10.91	67 36.11	104 67.69	65 511.35	488,495	453.33	
12	41D	103	2018	4002	4001	2020	9211	4001R1	2017R2	2019	F4	104 11.8	84 27.57 65 38.38	104 77.96	65 515.79	487,572	453.52	First 2-step main engine throttle.

*Indicates revised or additional data provided by MFSC post-publication of reference source.
Note: All engine times are reference to Engine Start Command (ESC).

Source: MSFC, Final Flight Evaluation Reports, STS-1 and subsequent missions. Section 4.0 and 5.0.

SHUTTLE FLIGHT HISTORIES
MAIN ENGINE POSITION 2

Miss. Seq. No.	STS-No.	Orb. OV-	Main Engine Pos. 2 Comp.									Main Engine Position 2 Performance Summary						Remarks
			Eng	MCC	Nzl	LPOTP	HPOTP	LPFTP	HPFTP	Powhd	Cntlr	Attained Max Throttle, percent/ time, sec	Attained Max q Throttle, percent/ time, sec	Re-attained Max Throttle, percent/ time, sec	Attained 3g Throttle, percent/ time, sec	Vacuum Thrust lb @ 150 sec	Vacuum Specific Impulse, sec	
13	41G	099	2020	4004	2020	0208	2021	2019	9311R1	2021	F5	100 4.36	92 25.63 65 36.15	100 69.15	65 531.29	468,816	453.23	HPFTP 9311R1 replaced 2018.
14	51A	103	2018	4002	4001	2020	9211	4001R1	2017R2	2019	F9	100 4.23	89 22.25 67 37.09	104 77.33	65 513.99	489,000	453.36	
15	51C	103	2018	4002	4001	2020	2018R1	4001R1	2017R2	2019	F9	100 4.24	92 22.73 65 38.57	104 71.45	65 511.51	489,208	453.29	HPOTP 9211 replaced by 2018R1.
16	51D	103	2018	4002	4001	2020	2018R1	4001R1	2017R2	2019	F22	100 4.52	90 22.61 65 38.21	100 78.41	65 532.83	469,405	453.45	Controller F9 replaced by F22.
17	51B	099	2020	4004	2020	0208	2021	2019	9311R1	2021	F5	100 4.52	94 25.89 65 36.85	104 70.93	65 515.79	488,270	453.40	
18	51G	103	2018	4002	4001	2020	2016R3	4001R1	4201	2019	F22	104 10.72	83 27.64 65 38.52	104 78.56	65 516.26	489,900	453.32	HPOTP 2018R1 replaced by 2016R3. HPFTP 2017R2 replaced by 4201.

Source: MSFC, Final Flight Evaluation Reports, STS-1 and subsequent missions, Section 4.0 and 5.0.

SHUTTLE FLIGHT HISTORIES
MAIN ENGINE POSITION 2

Miss. Seq. No.	STS-No.	Orb. OV-	Main Engine Pos. 2 Comp.									Main Engine Position 2 Performance Summary						Remarks
			Eng	MCC	Nz1	LPOTP	HPOTP	LPFTP	HPFTP	Powhd	Cntlr	Attained Max Throttle, percent/ time, sec	Attained Max q Throttle, percent/ time, sec	Re-attained Max Throttle, percent/ time, sec	Attained 3g Throttle, percent/ time, sec	Vacuum Thrust lb @ 150 sec	Vacuum Specific Impulse, sec	
19	51F	099	2020	4004	2020	0208	4003R1	2019	4202R1	2021	F27	104 11.01	97 26.85 65 39.57	104 66.37	91 583.27	488,159	453.40	Controller F27 replaced F26 after launch abort. HPOTP 2021 replaced by 4003R1. HPFTP 9311R1 replaced by 4202R1.
20	51I	103	2018	4002	4001	2020	2016R2	4001R1	4201	2019	F22	104 10.43	70 35.19 67 37.67	104 64.35	65* 508.21	489,224	453.52	HPOTP 2016R3 replaced by 2016R2.
21	51J	104	2019	2019	2017	2017	9211R2	2022	2120	2020	F19	104 10.55	68 35.51 65 37.63	104 65.23	65 512.65	489,420	453.38	
22	61A	099	2020	4004	4005	0208	4003R2	2019	4202R1	2021	F27	100 4.29	89 25.97 65 35.89	104 70.21	65 514.75	488,202	453.45	
23	61B	104	2019	2019	2017	2017	9211R2	2022	2120	2020	F19	104 10.59	65 37.47	104 69.47	65 511.77	489,651	453.40	

Source: MSFC, Final Flight Evaluation Reports, STS-1 and subsequent missions. Section 4.0 and 5.0.

SHUTTLE FLIGHT HISTORIES
MAIN ENGINE POSITION 2

Miss. Seq. No.	STS-No.	Orb. OV-	Main Engine Pos. 2 Comp.									Main Engine Position 2 Performance Summary						Remarks
			Eng	MCC	Nzl	LPOTP	HPOTP	LPFTP	HPFTP	Powhd	Cntlr	Attained Max Throttle, percent/ time, sec	Attained Max q Throttle, percent/ time, sec	Re-attained Max Throttle, percent/ time, sec	Attained 3g Throttle, percent/ time, sec	Vacuum Thrust lb @ 150 sec	Vacuum Specific Impulse, sec	
24	61C	102	2018	4002	4001	2020	2504	4001R1	4201	2019	F22	104 11.15	85 41.91 69 64.67	104 72.79	67 502.37	590,277	453.32	
25	51L	099	2020	4004	4005	0208	4003R2	2019	4202R1	2021	F28	104 10.76	94 26.28 65 41.80	104 58.28	N/A	N/A	N/A	
26	26	103	2022	2022	4002	2104R1	2025R1	2024R1	5203	2022	F5	104 10.32	102 24.24 65 34.16	104 65.52	65 512.40	488,590	452.96	
27	27	104	2030	2026	4013	2216	2122R1	2027	2323	2107	F16	104 10.24	96 26.40 65 34.88	104 64.32	65 513.80	488,238	454.64	
28	29	103	2022	2022	4002	2104R1	2222R1	2024	5203	2022	F5	104 10.52	66 35.00	104 63.96	65 509.08	488,380	452.96	
29	30	104	2030	2026	4013	2216	2223R1	2027	2323	2107	F19	104 12.64	65 36.76	104 62.36	65 514.28	488,022	454.67	

Source: MSFC, Final Flight Evaluation Reports, STS-1 and subsequent missions, Section 4.0 and 5.0.

SHUTTLE FLIGHT HISTORIES
MAIN ENGINE POSITION 2

Miss. Seq. No.	STS-No.	Orb. OV-	Main Engine Pos. 2 Comp.									Main Engine Position 2 Performance Summary						Remarks
			Eng	MCC	Nz1	LPOTP	HPOTP	LPFTP	HPFTP	PowHd	Cntlr	Attained Max Throttle, percent/ time, sec	Attained Max q Throttle, percent/ time, sec	Re-attained Max Throttle, percent/ time, sec	Attained 3g Throttle, percent/ time, sec	Vacuum Thrust lb @ 150 sec	Vacuum Specific Impulse, sec	
30	28	102	2022	2022	4002	2104R1	4406R1	2024	5203	2022	F15	104/ 10.24	65/ 33.76	104/ 65.76	457.40	487,742	453.00	
31	34	104	2030	2026	4013	2216	2321R1	2027	2323	2107	F17	104/ 10.40	65/ 34.24	104/ 65.12	459.36	488,247	453.66	
32	33	103	2031	2019	4017	2120	6402R1	2120R1	6102R1	2028	F27	104/ 10.60	65/ 40.84	104/ 56.04	457.96	489,478	453.55	
33	32	102	2022	2022	4002	2104R1	2305R1	2024	4010R2	2022	F15	104/ 10.44	65/ 34.28 102/ 24.36	104/ 65.16	65/ 512.04	488,775	452.93	
34	36	104	2030	2026	4013	2216	2324R5	2027	6003	2107	F17	104/ 10.44	98/ 27.56 75/ 35.24	104/ 59.56	65/ 509.76	488,126	454.74	

Source: MSFC, Final Flight Evaluation Reports, STS-1 and subsequent missions, Section 4.0 and 5.0.

SHUTTLE FLIGHT HISTORIES
MAIN ENGINE POSITION 2

Miss. Seq. No.	STS-No.	Orb. OV-	Main Engine Pos. 2 Comp.									Main Engine Position 2 Performance Summary						Remarks
			Eng	MCC	Nzl	LPOTP	HPOTP	LPFTP	HPFTP	Powhd	Cntlr	Attained Max Throttle, percent/ time, sec	Attained Max q Throttle, percent/ time, sec	Re-attained Max Throttle, percent/ time, sec	Attained 3g Throttle, percent/ time, sec	Vacuum Thrust lb @ 150 sec	Vacuum Specific Impulse, sec	
35	31	103	2031	2019	4017	2120	4008R1	2120R1	6102R1	2028	F27	104/ 10.40	97/ 24.48 67/ 34.56	104/ 65.60	65/ 510.72	489,599	453.56	
36	41	103	2031	2019	4017	2120	2521R1	2120R1	4010	2028	F27	104/ 10.52	100/ 24.28 67/ 34.20	104/ 65.08	65/ 509.72	489,355	453.56	
37	38	104	2022	4006	2023	2104R1	4107R3			2022	P7	104/ 10.36	72/ 32.60	104/ 68.60	65/ 509.40	489,242	450.95	
38	35	102	2012	2020	4002	4306	6003R3	4006	4007R3	2025	F16	104/ 10.36	71/ 33.24	104/ 69.56	65/ 511.32	489,032	452.55	

Source: MSFC, Final Flight Evaluation Reports, STS-1 and subsequent missions, Section 4.0 and 5.0.

SHUTTLE FLIGHT HISTORIES
MAIN ENGINE POSITION 3

Miss. Seq. No.	STS-No.	Orb. OV-	Main Engine Pos. 3 Comp.									Main Engine Position 3 Performance Summary						Remarks
			Eng	MCC	Nz1	LPOTP	HPOTP	LPFTP	HPFTP	Powhd	Cntlr	Attained Max Throttle, percent/ time, sec	Attained Max q Throttle, percent/ time, sec	Re-attained Max Throttle, percent/ time, sec	Attained 3g Throttle, percent/ time, sec	Vacuum Thrust lb @ 150 sec	Vacuum Specific Impulse, sec	
1	1	102	2005	2005	2006	2004	2005	0007	0009	2005	P7	100 4.20 *	65 55.00 *	100 73.00 *	65 513.00 *	471,411 *	454.14 *	
2	2	102	2005	2005	2006	2004	2005	0007	0009	2005	P7	100 4.20 *	68 58.00 *	100 70.00 *	65 516.00 *	472,029	454.17	
3	3	102	2005	2005	2006	2004	2105R1	0007	0009R1	2005	P7	100 4.20 *	68 42.00 *	100 62.00 *	65 514.00 *	472,816	454.15	
4	4	102	2005	2005	2006	2004	2005R1	0007	0009R1	2005	P7	100 4.20 *	65 46.30 *	100 60.80 *	65 513.40 *	471,911 *	454.17 *	
5	5	102	2005	2005	2006	2004	2005R1	0007	9006R2	2005	P7	100 4.25 *	85 42.90 *	100 62.30 *	65 511.30 *	471,786	452.09	
6	6	099	2012	2017	2016	2012	2016	2016	2213R1	2014	F12	104 14.40 *	81 39.30 *	104 71.60 *	65 500.30 *	488,819	453.76	

*Indicates revised or additional data provided by MSFC post-publication of referenced source.
Note: All engines times are referenced to Engine Start Command (ESC).

Source: MSFC, Final Flight Evaluation Reports, STS-1 and subsequent missions, Section 4.0 and 5.0

SHUTTLE FLIGHT HISTORIES
MAIN ENGINE POSITION 3

Miss. Seq. No.	STS-No.	Orb. OV-	Main Engine Pos. 3 Comp.									Main Engine Position 3 Performance Summary						Remarks
			Eng	MCC	Nzl	LPOTP	HPOTP	LPFTP	HPFTP	Powhd	Cntlr	Attained Max Throttle, percent/ time, sec	Attained Max q Throttle, percent/ time, sec	Re-attained Max Throttle, percent/ time, sec	Attained 3g Throttle, percent/ time, sec	Vacuum Thrust lb @ 150 sec	Vacuum Specific Impulse, sec	
7	7	099	2012	2017	2016	2012	2016	2216	2213R1	2014	F12	104 11.50	75 37.20	104 70.60 *	65 501.00	488,942	453.37	
8	8	099	2012	2017	2016	2012	2016	2016	2116R2	2014	F12	100 4.20 *	69 34.10 *	100 70.90 *	65 522.00 *	469,900	453.33	
9	9	102	2019	2019	2017	2017	2019	2118	9210	2020	F6	104 10.50 *	78 37.40 *	104 68.80 *	65 510.20 *	488,961	453.41	
10	41B	099	2012	2017	2016	2012	2016	2016	2116R2	2014	F12	100 4.54 *	73 38.50 *	100 69.80 *	65 522.10 *	469,828	453.26	
11	41C	099	2012	2017	2016	2012	2016	2016	2116R2	2014	F12	104 11.03	67 36.23	104 67.91	65 511.50	489,464	453.32	

*Indicates revised or additional data provided by MFSC post-publication of reference source.
Note: All engine times are reference to Engine Start Command (ESC).

Source: MSFC, Final Flight Evaluation Reports, STS-1 and subsequent missions. Section 4.0 and 5.0.

SHUTTLE FLIGHT HISTORIES
MAIN ENGINE POSITION 3

Miss. Seq. No.	STS-No.	Orb. OV-	Main Engine Pos. 3 Comp.									Main Engine Position 3 Performance Summary						Remarks
			Eng	MCC	Nzl	LPOTP	HPOTP	LPFTP	HPFTP	Powhd	Cntlr	Attained Max Throttle, percent/ time, sec	Attained Max q Throttle, percent/ time, sec	Re-attained Max Throttle, percent/ time, sec	Attained 3g Throttle, percent/ time, sec	Vacuum Thrust lb @ 150 sec	Vacuum Specific Impulse, sec	
12	41D	103	2021	2105	2021	2019	4001	9105R1	4001R1	2023	F16	104 11.24	84 27.70 65 38.51	104 78.12	65 515.92	487,516	453.55	First 2-step main engine throttle. ME2021 replaced ME2017 after abort.
13	41G	099	2021	2015	2021	2019	4001	2021R1	4001R1	2023	F16	100 4.32	92 25.75 65 36.27	100 69.07	65 531.41	468,167	453.43	ME2021 replaced ME2012.
14	51A	103	2012	2017	2016	2012	9110	9206	2118	2014	F12	100 4.28	89 22.35 67 37.23	104 77.43	65 514.01	489,000	453.35	ME2012 replaced ME2021.
15	51C	103	2012	2017	2016	2012	9110	9206	4003	2014	P7	100 4.20	92 22.87 65 38.67	104 71.55	65 511.61	489,840	453.22	HPFTP 2118 replaced by 4003. Controller F12 replaced by P7.
16	51D	103	2012	2017	2016	2012	9110	9206	4003	2014	P7	100 4.38	90 22.75 65 38.31	100 78.51	65 532.97	472,205	453.24	
17	51B	099	2021	2105	2021	2019	4001	2021R1	2216	2023	F6	100 4.38	94 26.01 65 36.97	104 71.09	65 515.87	487,038	453.68	Controller F16 replaced by F6, HPFTP 4001R1 replaced by 2216.

Source: MSFC, Final Flight Evaluation Reports, STS-1 and subsequent missions, Section 4.0 and 5.0.

SHUTTLE FLIGHT HISTORIES
MAIN ENGINE POSITION 3

Miss. Seq. No.	STS-No.	Orb. OV-	Main Engine Pos. 3 Comp.									Main Engine Position 3 Performance Summary						Remarks
			Eng	MCC	Nzl	LPOTP	HPOTP	LPFTP	HPFTP	Powhd	Cntlr	Attained Max Throttle, percent/ time, sec	Attained Max q Throttle, percent/ time, sec	Re-attained Max Throttle, percent/ time, sec	Attained 3g Throttle, percent/ time, sec	Vacuum Thrust lb @ 150 sec	Vacuum Specific Impulse, sec	
18	51G	103	2012	2017	2016	2012	9110	9206	4003	2014	P7	104 10.84	83 27.76 65 38.64	104 78.68	65 516.38	490,400	453.42	
19	51F	099	2021	2105	2021	2019	4001	2021R1	2216	2023	F6	104 11.15	97 26.95 65 39.71	104 66.47	91 583.41	486,783	453.70	
20	51I	103	2012	2017	2016	2012	2018R3	9206	4003R1	2014	P7	104 10.55	70 35.71 67 37.79	104 64.87	65 508.33	491,227	453.31	HPOTP 9110 replaced by 2018R3.
21	51J	104	2017	4001	2018	2211	4102R1	2020	2218R1	2018	F15	104 10.67	68 35.63 65 37.75	104 65.35	65 512.77	488,707	453.63	
22	61A	099	2021	2105	2021	2019	2020R3	2021R1	2216	2023	F6	100 4.26	89 26.07 65 36.03	104 70.31	65 515.89	486,916	453.66	

Source: MSFC, Final Flight Evaluation Reports, STS-1 and subsequent missions. Section 4.0 and 5.0.

SHUTTLE FLIGHT HISTORIES
MAIN ENGINE POSITION 3

Miss. Seq. No.	STS-No.	Orb. OV-	Main Engine Pos. 3 Comp.									Main Engine Position 3 Performance Summary						Remarks
			Eng	MCC	Nzl	LPOTP	HPOTP	LPFTP	HPFTP	PowHd	Cntlr	Attained Max Throttle, percent/ time, sec	Attained Max q Throttle, percent/ time, sec	Re-attained Max Throttle, percent/ time, sec	Attained 3g Throttle, percent/ time, sec	Vacuum Thrust lb @ time, sec	Vacuum Specific Impulse, sec	
23	61B	104	2017	4001	2018	2211	4102R1	2020	2218R1	2018	F21	104 10.33	65 37.61	104 69.61	65 511.87	489,297	453.75	F15 replaced by F21.
24	61C	102	2109	2018	4004	2018	2115	2117	2121R1	2109	F16	104 11.25	85 42.05 69 64.77	104 72.93	67 502.51	489,391	453.29	
25	51L	099	2021	2105	2021	2019	2020R3	2021R1	2216	2023	F6	104 10.88	94 26.40 65 41.92	104 58.40	N/A	N/A	N/A	
26	26	103	2028	2018	4012	2027R1	2121R1	2026R2	4007	4005	P7	104 10.42	102 24.34 65 34.26	104 65.62	104 512.50	488,013	453.27	
27	27	104	2029	4006	2023	2106R1	9109R1	2029	2122R2	2015	F18	104 10.36	96 26.52 65 35.00	104 64.44	104 513.92	489,719	453,22	MSFC IFA STS-27-E-3, HPOTP inner raceway cracked at bearing 3, and wire particle found. Crack 0.005 to 0.010 in.
28	29	103	2028	2018	4012	2027R1	4105R1	2026R2	4007	4005	P7	104 10.60	66 35.08	104 64.04	65 509.08	487,848	453.29	

Source: MSFC, Final Flight Evaluation Reports, STS-1 and subsequent missions, Section 4.0 and 5.0.

SHUTTLE FLIGHT HISTORIES
MAIN ENGINE POSITION 3

Miss. Seq. No.	STS-No.	Orb. OV-	Main Engine Pos. 3 Comp.									Main Engine Position 3 Performance Summary						Remarks
			Eng	MCC	Nzl	LPOTP	HPOTP	LPFTP	HPFTP	PowHd	Cntlr	Attained Max Throttle, percent/ time, sec	Attained Max q Throttle, percent/ time, sec	Re-attained Max Throttle, percent/ time, sec	Attained 3g Throttle, percent/ time, sec	Vacuum Thrust lb @ time, sec	Vacuum Specific Impulse, sec	
29	30	104	2029	406	223	2106R1	4302R1	2029	603	215	F22	104 12.64	65 36.84	104 62.44	65 514.40	490,509	453.21	
30	28	102	2028	218	412	2027R1	2324R2	2026R2	407	405	F21	104/ 10.32	65/ 33.84	104/ 65.84	457.52	488,743	453.24	
31	34	104	2029	406	223	2106R1	6003R1	2029	603	215	F22	104/ 10.52	65/ 34.36	104/ 65.24	459.48	489,660	453.24	
32	33	103	2107	402	419	4105	2422R1	2117R1	4011R1	214	F11	104/ 10.68	65/ 40.92	104/ 56.12	458.04	489,728	452.92	
33	32	102	2028	218	412	2027R1	2323R1	2026R2	2126	405	F21	104/ 10.60	65/ 34.44 102/ 24.52	104/ 65.32	65/ 512.16	488,361	453.27	

Source: MSFC, Final Flight Evaluation Reports, STS-1 and subsequent missions, Section 4.0 and 5.0

SHUTTLE FLIGHT HISTORIES
MAIN ENGINE POSITION 3

Miss. Seq. No.	STS-No.	Orb. OV-	Main Engine Pos. 3 Comp.									Main Engine Position 3 Performance Summary						Remarks
			Eng	MCC	Nzl	LPOTP	HPOTP	LPFTP	HPFTP	Powhd	Cntlr	Attained Max Throttle, percent/ time, sec	Attained Max q Throttle, percent/ time, sec	Re-attained Max Throttle, percent/ time, sec	Attained 3g Throttle, percent/ time, sec	Vacuum Thrust lb @ time, sec	Vacuum Specific Impulse, sec	
34	36	104	2027	2024	2027	4302	2225R3	4005	4010R2	4004	F23	104 10.56	98 27.68 75/ 35.36	104 59.68	65/ 509.92	487,175	454.42	
35	31	103	2107	4002	4019	4105	2226R1	4007	4011R1	2014	F25	104/ 10.48	97/ 24.56 67/ 34.64	104/ 65.68	65/ 510.60	489,733	452.92	
36	41	103	2107	4002	4019	2216	2305R1	4007	6003R1	2014	F25	104/ 10.60	100/ 24.36 67/ 34.28	104/ 65.16	65/ 509.80	490,220	452.89	
37	38	104	2027	2024	2027	4302	9309R1	4005	4109R1	4004	F23	104/ 10.44	72/ 32.68	104/ 68.68	65 509.48	487,512	454.39	
38	35	102	2028	2018	4012	2027R1	4502R1	2026R2	6009	4005	F21	104/ 10.52	71/ 33.24	104/ 69.72	65/ 511.44	487,814	453.28	

Source: MSFC, Final Flight Evaluation Reports, STS-1 and subsequent missions, Section 4.0 and 5.0

MAIN ENGINE SERIAL NUMBER/MAIN PROPULSION SYSTEM ENGINE LOCATION

Miss. Seq. No.	STS. No.	Orb. OV-	Serial Number																				
			2005	2006	2007	2011	2012	2015	2017	2018	2019	2020	2021	2022	2023	2024	2109	2028	2031	2029	2030	2027	2107
1	1	102	3	2	1																		
2	2	102	3	2	1																		
3	3	102	3	2	1																		
4	4	102	3	2	1																		
5	5	102	3	2	1																		
6	6	099					3	2	1														
7	7	099					3	2	1														
8	8	099					3	2	1														
9	9	102				1				2							3						
10	41B	099					3	2			1												
11	41C	099					3				1	2											
12	41D	103							3	2	1												
13	41G	099										2	3		1								
14	51A	103					3			2							1						
15	51C	103					3			2							1						

C-3

MAIN ENGINE SERIAL NUMBER/MAIN PROPULSION SYSTEM ENGINE LOCATION

Miss. Seq. No.	STS. No.	Orb. OV-	Serial Number																				
			2005	2006	2007	2011	2012	2015	2017	2018	2019	2020	2021	2022	2023	2024	2109	2028	2031	2029	2030	2027	2107
16	51D	103					3			2							1						
17	51B	099										2	3		1								
18	51G	103					3			2							1						
19	51F	099										2	3		1								
20	51I	103					3			2							1						
21	51J	104				1			3		2												
22	61A	099										2	3		1								
23	61B	104						2						1		3							
24	61C	102						1		2	3												
25	51L	099										2	3		1								
26	26	103												2			1	3					
27	27	104					3	2	1														
28	29	103												2				3	1				
29	30	104																		3	2	1	

MAIN ENGINE SERIAL NUMBER/MAIN PROPULSION SYSTEM ENGINE LOCATION

Miss. Seq. No.	STS. No.	Orb. OV-	Serial Number																				
			2005	2006	2007	2011	2012	2015	2017	2018	2019	2020	2021	2022	2023	2024	2109	2028	2031	2029	2030	2027	2107
30	28	102									1			2				3					
31	34	104																		3	2	1	
32	33	103				1													2				3
33	32	102												2		1		3					
34	36	104									1										2	3	
35	31	103				1													2				3
36	41	103				1													2				3
37	38	104									1			2								3	
38	35	102					2									1		3					

SHUTTLE FLIGHT HISTORIES
EVENTS ALTERING MISSION DURATION OR CAUSING SIGNIFICANT IMPACT TO SHUTTLE FLIGHT PROGRAM

Miss. Seq. No.	STS-No.	Orb. OV-	Miss. Changes*	Event	Impact	Remarks
1	1	102	PD	BFS (backup flight software) failed to synchronize with PASS (primary avionics software system).	Two-day launch slip required to analyze problem and reconfigure for launch. April 10, 1981, launch plan - April 12, 1981, actual launch date.	See problem STS 1-2
				SRB ignition caused overpressurization of Orbiter during lift-off.	Significant launch pad modifications were required.	Effectiveness of modifications has been verified on subsequent flights. See integration problem STS 1-6 and problem STS 1-58.
				TPS damage was experienced.	Design improvements were required to reduce problem impact.	This has been a recurring problem Design improvements implemented following subsequent flights have significantly reduced problem impact. See problems STS 1-9, 29, 32, 49, 2-19, 3-16, 4-01, 4-29, 6-05, 7-27, 8-27, 9-32, and 41B-27.
				WCS problems were encountered.	Design improvements are required.	This is a recurring problem. Design improvements have been implemented throughout ongoing flights. See problems STS 1-33, 3-14, 3-19, 3-47, 4-24, 6-40, 7-25, 41B-4, and 41C-9.
			PD	N_2O_4 spill in forward RCS module occurred during servicing for STS-2.	This required extensive cleaning of the forward RCS module and some component and tile replacement. Significant turnaround impact resulted.	
2	2	102	PD	Hold was required at T-31 seconds for APU oil system flush.	Eight-day launch slip (11/4/81 to 11/12/81) resulted. APU gear boxes were flushed and filters replaced to remove contaminants. APU periodic flush and gear box pressure maintenance was instituted.	See problem STS 2-1.
			PD	MDM OF3 failed during countdown due to contamination within a semiconductor die.	Liftoff delayed 2 hours 40 minutes. MDM was replaced with spare which also failed. MDM from OV-099 was then installed.	See problem STS 2-2.

*PD = Delay on Pad; D = Launch Delay; E = Mission Extended; and S = Mission Shortened

Source: JSC/VF Program Mission Reports, STS-1 and subsequent missions.
JSC/VF3 Flight Problem Closures, STS-1 and subsequent missions.

SHUTTLE FLIGHT HISTORIES
EVENTS ALTERING MISSION DURATION OR CAUSING SIGNIFICANT IMPACT TO SHUTTLE FLIGHT PROGRAM

Miss. Seq. No.	STS-No.	Orb. OV-	Miss. Changes*	Event	Impact	Remarks
2	2 (Continued)	102	D	Second launch countdown delayed for 10 minutes to review systems status.	None	
				APU 3 shutdown 2 minutes before other APU's due to lube oil overtemperature.	Extensive test and analysis resulted in water preload charge.	See problem STS 2-4. Problem repeated on STS-3, see STS 3-4.
			S	Fuel cell 1 failed.	Flight was ended at 2 days, 6 hours - planned for 5 day, 4 hours. Significant mission replanning was required. Fuel cell 1 was replaced and confidence runs were performed on remaining fuel cells.	See problem STS 2-8.
3	3	102	D	SSME GN_2 purge heater temperature sensor failed in GSE.	Launch delayed 1 hour.	
				APU 3 early shutdown during ascent was due to WSB (water spray boiler) freezing.	Extensive testing and analysis was required as well as WSB orifice replacement.	See problem STS 3-4.
				Port payload bay door latch problems were encountered.	Thermal conditioning was required to close door. Damaged parts were replaced and door rigging checked. Functional and structural margins were reverified.	See problem STS 3-9.
			E	Bad weather was encountered at White Sands landing site.	The mission was extended for one day.	
				Orbiter landed at White Sands.	Dust storm caused extensive contamination. Vehicle cleaning and maintenance caused significant turnaround impact.	
				Brake damage occurred at landing.	Design changes have been implemented and extensive analysis and tests have been conducted.	This has been a recurring problem. Damage is not a safety issue, but requires hardware replacement. See problems STS 3-43, 4-31, 5-22, 6-38, 7-24, 8-22, 41B-29, 41C-21.

*PD = Delay on Pad; D = Launch Delay; E = Mission Extended; and S = Mission Shortened

Source: JSC/VF Program Mission Reports, STS-1 and subsequent missions.
JSC/VF3 Flight Problem Closures, STS-1 and subsequent missions.

SHUTTLE FLIGHT HISTORIES
EVENTS ALTERING MISSION DURATION OR CAUSING SIGNIFICANT IMPACT TO SHUTTLE FLIGHT PROGRAM

Miss. Seq. No.	STS-No.	Orb. OV-	Miss. Changes*	Event	Impact	Remarks
4	4	102		Prelaunch rainstorms resulted in excessive moisture being absorbed by the tiles.	Tile bakeout on-orbit required considerable mission replanning. Tile waterproofing was improved and tile witness panel was implemented.	See problem STS 4-1.
				Both SRB's were lost after water impact.	Extensive recovery operations and problem analysis effort resulted.	
				Port payload bay door actuator stalled.	Thermal conditioning required to close doors had mission planning impact.	Cold-case closure will require thermal conditioning. See problem STS 4-13.
				Vernier thruster coating degradation was noted.	Vernier thruster replacement was required. Testing and improvement of thrust nozzle coating was initiated.	See problem STS 4-33.
5	5	102	S	EMU (extravehicular maneuvering unit) failed.	EVA was cancelled. Extensive analysis and tests were conducted.	Problems were corrected and EMU's were successfully flown on subsequent flights. See problems STS 5-12 and 5-14.
				OMS nozzle cracks were found postflight.	Intensified inspection procedures will be used until design changes can be implemented.	See problem STS 5-23.
6	6	099	PD	SSME 1 H_2 leak into aft compartment was detected during FRF. Cracks in SSME No.1 detected by second FRF post-firing inspection.	All SSME's were removed and replaced. Extensive failure analysis, testing, and fixes caused launch delay of 2 months and 10 days.	See problem MSFC FRF-3, and MSFC Delta FRF-3.
				IUS failed to place TDRS in geosynchronous orbit.	Extensive TDRS maneuvering to achieve proper orbit was required Failure analysis and fixes delayed other IUS-boosted payloads and Spacelab launch.	
				Humidity separator B circuit breaker tripped due to burned wire bundle.	Extensive review was made of wire routing and protection from abrasion.	See problem STS 6-8.
7	7	099	E	Weather at KSC was unacceptable for landing.	Orbiter landed two revolutions later at Edwards AFB. Landing occurred on revolution 98 instead of the planned revolution 96.	

*PD = Delay on Pad; D = Launch Delay; E = Mission Extended; and S = Mission Shortened

Source: JSC/VF Program Mission Reports, STS-1 and subsequent missions.
JSC/VF3 Flight Problem Closures, STS-1 and subsequent missions.

SHUTTLE FLIGHT HISTORIES
EVENTS ALTERING MISSION DURATION OR CAUSING SIGNIFICANT IMPACT TO SHUTTLE FLIGHT PROGRAM

Miss. Seq. No.	STS-No.	Orb. OV-	Miss. Changes*	Event	Impact	Remarks
8	8	099	PD	On-orbit TDRS testing required.	Launch was delayed 10 days.	Test of TDRSS required to assure operation of system in preparation for first Spacelab mission.
			D	Bad weather at KSC.	Launch was delayed 17 minutes.	
			PD	SRB nozzle erosion was found after recovery.	Rollback and vehicle destack was required to change SRB nozzles prior to STS-9 flight causing a 30-day launch delay on STS-9.	
9	9	102		Fuel cells produced excessive hydrogen.	Water with gas was dumped through the flash evaporator. Additional hydrogen separator was installed for near-term follow-on flights.	See problem STS 9-13.
			E	GPC 1 and 2 failed and IMU 1 failed.	Landing was delayed by approximately 8 hours to analyze problems and reconfigure for landing.	See problem STS 9-23, 24, and 25.
				APU 1 and 2 underspeed shutdown occurred after landing.	All 3 APU's were removed for repair and analysis. Extensive evaluation isolated the problem to a cracked injector stem. Exhaust duct purge was implemented and APU retrofit of new stems was initiated.	See problem STS 9-26
				Left-hand OMS pod burn-through was due to critical missing tile plus high energy entry.	OMS pod was removed for repair.	See problem STS 9-32
10	41B	099	PD	Ongoing APU failure analysis	Launch was delayed 4 days	See problem STS 9-26.
				RMS wrist joint failed.	SPAS could not be deployed. EVA replanned and executed. RMS was removed postflight.	See problem STS 41B-18.
				WESTAR and PALAPA PAM burns failed.	PALAPA deployment was delayed one day. Rescheduling of PAM-boosted payloads resulted.	
				Ice formed on dump nozzles and caused damage to left-hand OMS pod during entry.	Left-hand OMS pod repair required Retrofit of OV-103 OMS pod was required for STS 41-C. Repair of cracked water line was completed. Operational changes implemented for STS 41-C and subs. Design changes in dump nozzle area implemented for STS 41-D.	See problem STS 41B-27 and STS 41D-14.

*PD = Delay on Pad; D = Launch Delay; E = Mission Extended; and S = Mission Shortened

Source: JSC/VF Program Mission Reports, STS-1 and subsequent missions.
JSC/VF3 Flight Problem Closures, STS-1 and subsequent missions.

SHUTTLE FLIGHT HISTORIES

EVENTS ALTERING MISSION DURATION OR CAUSING SIGNIFICANT IMPACT TO SHUTTLE FLIGHT PROGRAM

Miss. Seq. No.	STS-No.	Orb. OV-	Miss. Changes*	Event	Impact	Remarks
11	41C	099	PD	Right hand OMS pod AFRSI replaced to preclude pod burn through in the event of a maximum heating condition on entry with LDEF.	Launch was delayed 2 days.	See problem STS 41C-8
			E	TPAD (trunnion pin attachment device) failed to grapple with the SMM (Solar Maximum Mission) spacecraft.	One-day mission extension was required for replanning direct grapple of SMM with RMS.	
			E	Weather as KSC was unacceptable for landing.	Landing occurred at Edwards AFB. Mission was extended one revolution.	
12	41D	103	D	Debonded engine shield found after FRF required SSME 1 replacement.	Launch delayed 3 days.	
			PD	GPC5 failed.	Launch delayed 24 hours for problem analysis.	See problem STS 41D-2.
			PD	SSME 3 Main Fuel Valve actuator channel A miscompare at LO-6 seconds.	Launch delayed for 65 days for extensive analysis and testing. Vehicle returned to OPE and payloads remanifested with minimum impact to payload schedules.	See problem STS 41D-5, -6.
			PD	Prelaunch analysis confirmed timing incompatibility between the MEC (master events controller) and the flight software relating to SRB fire commands.	Launch was delayed 24 hours to verify and implement software patch to assure all 3 SRB fire commands were issued in proper time interval.	
13	41G	099		Right OMS pod structure damaged during entry due to faulty bond of FRSI filler strip.	OMS pod removed for major repair	See problem STS 41G-5.
				Tile screed material found degraded beneath missing tile and over extensive area of the Orbiter underbody.	OV-103 replaced OV-099 for the 51-A mission and considerable payload rescheduling was required for subsequent flights.	See problem STS 41G-25.
14	51A	103	PD	Winds aloft exceeded Orbiter structural limits on 7 Nov 1984.	Launch delayed 24 hours to November 8, 1984.	

*PD = Delay on Pad; D = Launch Delay; E = Mission Extended; and S = Mission Shortened

Source: JSC/VF Program Mission Reports, STS-1 and subsequent missions.
JSC/VF3 Flight Problem Closures, STS-1 and subsequent missions.

SHUTTLE FLIGHT HISTORIES

EVENTS ALTERING MISSION DURATION OR CAUSING SIGNIFICANT IMPACT TO SHUTTLE FLIGHT PROGRAM

Miss. Seq. No.	STS-No.	Orb. OV-	Miss. Changes*	Event	Impact	Remarks
15	51C	103	PD	Weather at KSC was unacceptable for launch.	Launch delayed one day.	Cold weather at KSC caused scrub prior to propellant loading due to concerns about ET icing.
	51E	099	D	Tile replacement caused by deteriorated screed.	Launch rescheduled to 2/27/85 from 2/20/85.	See problem STS 41G-25.
			PD	Hydrogen umbilical leak.	Launch rescheduled to 3/3/85.	
			PD	TDRS payload had problem with communication system.	Mission 51E was cancelled on 3/7/85. Orbiter destacked and payloads remanifested.	
16	51D	103	D	Remanifesting of payloads from 51E (Telesat-I).	Launch rescheduled to 3/28/85 from 3/19/85.	
			D	Facility access platform in OPF dropped and damaged the payload bay door.	Launch delayed 15 days, rescheduled to 4/12/85.	
			D	Ship in SRB impact area.	Launch delayed 55 minutes.	
				Extensive brake damage and blown tire at landing.	Future flights to land at DFRC until nose wheel steering is implemented.	See problems STS 51D-12 and 13.
17	51B	099	D	Launch Processing System failure.	Launch delayed for 2 minutes 18 seconds.	
18	51G	103		None.	None.	None.
19	51F	099	PD	Launch aborted at T-3 second because ME 2 chamber coolant valve (CCV) was slow in closing from 100% open to 70% open.	Launch delayed 17 days.	The CCV, CCV actuator, CCV wiring harness, and controller on ME 2 were replaced.
			D	Uplink TMBU incorrect address.	Launch delayed 1 hour 37 minutes.	See STS 51F-5
			E	Abort to Orbit required considerable mission replanning	Mission extended for 17 revolutions for extended payload activities.	SSME 2 shutdown due to faultly engine temperature sensors.
20	51I	103	PD	Thunderstorms in KSC area.	Launch delayed 1 day from 8/24/85 to 8/25/85.	See problem STS 51I-1.
			PD	GPC 5 failed.	Launch delayed 2 days from 8/25/85 to 8/27/85.	See problem STS 51I-1.
			D	Weather delay awaiting clearing in clouds cover, and ship in SRB recovery area.	Lift-off delayeld 3 minutes 1 second.	None.
			S	AUSSAT sunshield hung-up on RMS camera.	Mission shortened 1 day due to early deployment of AUSSAT.	Procedural error in camera operation.

*PD = Delay on Pad; D = Launch Delay; E = Mission Extended; and S = Mission Shortened

Source: JSC/VF Program Mission Reports, STS-1 and subsequent missions.
JSC/VF3 Flight Problem Closures, STS-1 and subsequent missions.

SHUTTLE FLIGHT HISTORIES

EVENTS ALTERING MISSION DURATION OR CAUSING SIGNIFICANT IMPACT TO SHUTTLE FLIGHT PROGRAM

Miss. Seq. No.	STS-No.	Orb. OV-	Miss. Changes*	Event	Impact	Remarks
21	51J	104	PD	DOD FLIGHT		
22	61A	099		None	None	None
23	61B	104	S	Edwards lake bed wet, landed on Edwards 22 concrete runway.	Mission shortened by one revolution due to lighting conditions on Edwards 22.	None
24	61C (32)	102 7	PD	Work could not be completed in the Orbiter aft compartment in time to support a Dec. 18, 1985, launch.	Launch delayed 24 hours. Rescheduled for December 18, 1985, launch.	Launch reschedule occurred before PRSD loading had started.
			PD	Launch scrubbed at T-14 seconds due to an indication that the right SRB HPU was exceeding RPM redline speed limits.	Launch delayed 18 days. Rescheduled for January 6, 1986. KSC went to a limited operations mode from 12/24/85 thru 1/1/86.	Analysis showed this was a false indication and the HPU had not exceeded redline speed limits. Earliest launch date possible was originally noted as January 4, 1986, but this was revised to January 6, 1986, to provide additional flight crew training time over the holiday period.
			PD	Launch scrubbed at T-31 seconds due to accidental draining of approximately 14,000 pounds of LOX from ET. Resulted in colder, denser LOX from the ET tank, causing the LOX temperature redline to be exceeded at engine interface. Recovery from this situation extended beyond the launch window for the SATCOM KU-1 satellite.	Launch delayed 24 hours. Rescheduled for January 7, 1986.	None.
			PD	Bad weather at both TAL sites (Moron, Spain and Dakar, Senegal) and marginal launch weather at KSC culminated in a launch scrub at T-9 minutes.	Launch delayed 48 hours. Rescheduled for January 9, 1986.	Two-day delay required to allow time to assure the integrity of MPS low-pressure fuel ducts.
			PD	A launch pad LO_2 sensor that had broken off lodged in a prevalve at ME2. It was determined this sensor had broken during the January 7, 1986, launch scrub.	Launch delayed 24 hours. Rescheduled for January 10, 1986.	Sensor failed due to a bad weld. The anomaly was discovered when an anti-slam valve failed to operate on January 8, 1986.
			PD	Bad weather at KSC.	Launch delayed 48 hour, rescheduled for January 12, 1986.	None

*PD = Delay on Pad; D = Launch Delay; E = Mission Extended; and S = Mission Shortened

Source: JSC/VF Program Mission Reports, STS-1 and subsequent missions.
JSC/VF3 Flight Problem Closures, STS-1 and subsequent missions.

SHUTTLE FLIGHT HISTORIES
EVENTS ALTERING MISSION DURATION OR CAUSING SIGNIFICANT IMPACT TO SHUTTLE FLIGHT PROGRAM

Miss. Seq. No.	STS-No.	Orb. OV-	Miss. Changes*	Event	Impact	Remarks
24 (Continued)	61C (32)	102 7	S	Landing was rescheduled from January 17 to January 16 to save turnaround time at KSC. This early landing attempt was later abandoned due to unacceptable weather at KSC.	None	None
			E	Bad weather at KSC prohibited landing on originally scheduled landing date (January 17).	Landing was delayed 24 hours, rescheduled for January 18, 1986.	None
			E	Bad weather prohibited at KSC on January 18, 1986.	Mission extended one revolution and then landed at EAFB on January 18, 1986.	None
25	51-L (33)	099 10	PD	Delay in launching STS 61-C resulted in rescheduled work at KSC and slipping launch date of STS 51-L.	Launch delayed 24 hours, rescheduled to January 24, 1986, at 1543 e.s.t.	None.
			PD	Delays in landing STS 61-C and the resultant ferry operation activities resulted in rescheduling launch date for STS 51-L.	Launch delayed 24 hours, rescheduled to January 25, 1986, at 1545 e.s.t.	None.
			PD	Weather at TAL (Dakar, Senegal) was bad. TAL was changed to Casablanca, Morocco, which is not equipped for night landing.	T-0 was moved to a morning lift-off to utilize Casablanca as TAL site. Launch processing was unable to meet a morning (0936 e.s.t.) lift-off time for January 25, 1986, thus the launch was delayed until January 26, 1986.	None.
			PD	Weather at KSC was predicted to be unacceptable for launch at KSC on January 26, 1986.	Launch delayed 24 hours, rescheduled for January 27, 1986 at 0937 e.s.t.	None.
			PD	GSE hatch-closing fixture could not be removed from the Orbiter hatch, fixture had to be sawed off and attaching bolt drilled out before close-out could be completed. Launch was delayed and cross winds came up at KSC landing facility that were beyound RTLS limits.	Launch delayed 24 hours, rescheduled for January 28, 1986 at 0938 e.s.t.	See problem STS 51-L 2.

*PD = Delay on Pad; D = Launch Delay; E = Mission Extended; and S = Mission Shortened

Source: JSC/VF Program Mission Reports, STS-1 and subsequent missions.
JSC/VF3 Flight Problem Closures, STS-1 and subsequent missions.

SHUTTLE FLIGHT HISTORIES
EVENTS ALTERING MISSION DURATION OR CAUSING SIGNIFICANT IMPACT TO SHUTTLE FLIGHT PROGRAM

Miss. Seq. No.	STS-No.	Orb. OV-	Miss. Changes*	Event	Impact	Remarks
25	51-L (33) (Continued)	099 10	D	A Hardware Interface Module (HIM) in the Launch Processing System (LPS) which monitored the fire detection system failed during ET LH_2 tanking.	LH_2 tanking was delayed several hours until the HIM could be repaired. This slipped the launch T-0 time from 0938 e.s.t. to 1138 e.s.t.	None.
			S	Explosion destroyed Shuttle vehicle at approximately T+73 seconds.	Major delay in Space Transportation System program. A complete review of all Shuttle elements design and launch procedures instituted.	Burnthrough of RSRB lower field joint resulted in destruction of vehicle and loss of crew.
26	26	103	D	Winds aloft unacceptable.	The launch was delayed 1 hour 38 minutes because the winds aloft were different than planned profile. Evaluation showed positive margins and launch continued.	None.
27	27	104	D	Winds aloft unacceptable.	Launch was scrubbed and rescheduled for 24 hours later.	
			D	Winds aloft unacceptable. TAL weather briefly unacceptable.	Countdown held at T-9 minute hold for unacceptable winds aloft. Countdown held at T-31 seconds for 1 minute 11 seconds for weather conditions at TAL sites.	
28	29	103	D	Fog at KSC and unacceptable winds aloft.	1 hour 50 minute hold at T-9 minutes for fog dispersal and acceptable winds aloft - countdown resumed at 0948 e.d.t. and launch occurred at approximately 0957 e.d.t.	Successful launch 4-13-89 approximately 0957 e.d.t.
29	30	104	D	Winds aloft at KSC unacceptable.	Countdown held at T-9 minutes for 40 minutes for unacceptable wind aloft for RTLS abort.	4-28-89
			D	Range safety system computer hold.	Countdown held at T-9 minutes for additional 5 minutes for range safety system (RSS) computer.	4-28-89
			D	Main engine 1 main component failure light.	Countdown held at T-31 seconds for SSME 1 main component failure light. Engine 1 LH2 recirculation pump had stopped. Launch scrubbed and recycled to 5/4/89.	4-28-89
			D	Visibility at KSC for RTLS	Held at T-9 minutes and T-5 minutes for approximately 60 minutes. At 14:42 e.d.t., countdown resumed at T-5 minutes.	Successful launch 5-4-89, 14:46 e.d.t.

*PD = Delay on Pad; D = Launch Delay; E = Mission Extended; and S = Mission Shortened

Source: JSC/VF Program Mission Reports, STS-1 and subsequent missions.
JSC/VF3 Flight Problem Closures, STS-1 and subsequent missions.

SHUTTLE FLIGHT HISTORIES
EVENTS ALTERING MISSION DURATION OR CAUSING SIGNIFICANT IMPACT TO SHUTTLE FLIGHT PROGRAM

Miss. Seq. No.	STS-No.	Orb. OV-	Miss. Changes*	Event	Impact	Remarks
30	28	102		DOD Mission	DOD Mission	Successful launch on 8-8-89, at 7:37:00 c.d.t.
31	34	104	D	a) T-19 hrs, SSME and controller failed. remove/replace. b) T-5 minute hold for RTLS weather. c) T-5 minute hold for RTLS and TAL weather.	a) Launch rescheduled from 10-12-89, 12:29 c.d.t., to 10-17-89, 11:57 c.d.t. b) 24 hr reschedule. c) Resumed count and launched at 11:53 c.d.t.	Originally scheduled:10-12-89, 12:29 c.d.t. Rescheduled: 10-17-89, 11:57 c.d.t. Actual: 10-18-89, 11:53 c.d.t.
32	33	103		DOD Mission	DOD Mission	Successful launch on 11-29-89, at 6:23:30 c.s.t.
33	32	102	PD D	a) Launch pad configuration problems. b) T-9 minute hold lengthened because of unsatisfactory weather in RTLS landing area.	a) Launch rescheduled from 12-18-89 to 1-8-90. b) Launch delayed to end of window. Scrubbed and rescheduled for 1-9-90.	Vehicle launch at planned time of 06:35 a.m. c.s.t. on 1-9-90.
34	36	104		DOD Mission	DOD Mission	
35	31	103	PD	a) Hold at T-4 minutes for APU-1 anomalies. Launch scrubbed. b) Unscheduled hold at T-31 seconds for fill and drain valve failure to close automatically. Valve closed manually.	a) Launch rescheduled for 4-24-90 at 7:31 a.m. c.d.t. b) Countdown was held for 2 minutes 52 seconds to close valve.	Vehicle launch at 7:33:50.99 a.m. c.d.t.

*PD = Delay on Pad; D = Launch Delay; E = Mission Extended; and S = Mission Shortened

Source: JSC/VF Program Mission Reports, STS-1 and subsequent missions.
JSC/VF3 Flight Problem Closures, STS-1 and subsequent missions.

SHUTTLE FLIGHT HISTORIES
EVENTS ALTERING MISSION DURATION OR CAUSING SIGNIFICANT IMPACT TO SHUTTLE FLIGHT PROGRAM

Miss. Seq. No.	STS-No.	Orb. OV-	Miss. Changes*	Event	Impact	Remarks
36	41	103	D	a) Unscheduled hold at T-9 minutes of 10 minutes 43 seconds for rain showers.	a) Resumed countdown	
			D	b) Unscheduled hold at T-5 minutes of 10 seconds to mask WSB 2 'OK" indication.	b) Resumed countdown	
			D	c) Unscheduled hold at T-31 seconds of 1 minute 22 seconds for interface purge pressure oscillations.	c) Resumed countdown	Vehicle launch occurred at 0747 EDT on 10-06-90
37	38	104		DOD Mission	DOD Mission	
38	35	102	PD	a) Excessive hydrogen leakage.	a) Launch rescheduled from 5/29/90	
			PD	b) Loss of payload telemetry	b) Launch rescheduled from 8/9/90	
			PD	c) Excessive hydrogen leakage	c) Launch rescheduled from 9/5/90 and 9/17/90	
			D	d) Countdown held for 21 minutes to verify minimums for optical coverage and radar acquisition	d) Resumed countdown	Launch occurred at 0149 EDT on 12/2/90

*PD = Delay on Pad; D = Launch Delay; E = Mission Extended; and S = Mission Shortened

Source: JSC/VF Program Mission Reports, STS-1 and subsequent missions.
JSC/VF3 Flight Problem Closures, STS-1 and subsequent missions.

SPECIFICATIONS FOR AVIONICS INCLUDING DPS, GNC, AND COMMUNICATIONS & TRACKING

ITEM	PART NO.		NOMENCLATURE
AA	MC621-0043	2043	ACCELEROMETER ASSEMBLY
ACCU	MC409-0005	0001	AUDIO CENTRAL CONTROL UNIT
ADI	MC432-0235	0002	ATTITUDE DIRECTION INDICATOR
ADTA	MC409-0011	0006	AIR DATA TRANSDUCER ASSEMBLY
AI	MC432-0219	0002	ACCELERATION INDICATOR
AME	MC432-0224	0022	AMI ELECTRONICS
AMI	MC432-0224	0011	ALPHA MACH INDICATOR
ANSA	MC478-0106	4004	ANTENNA SWITCH ASSY S-BAND
ASA	MC621-0043	6046	AEROSURFACE SERVO AMPLIFIER
ATU AL	MC409-0005	0012	AUDIO TERMINAL UNIT AIRLOCK
ATU LT	MC409-0005	0012	AUDIO TERMINAL UNIT LEFT
ATU MD	MC409-0005	0012	AUDIO TERMINAL UNIT MIDDECK
ATU MS	MC409-0005	0012	AUDIO TERMINAL UNIT MISSION STATION
ATU PS	MC409-0005	0012	AUDIO TERMINAL UNIT PAYLOAD STATION
ATU RT	MC409-0005	0012	AUDIO TERMINAL UNIT RIGHT
ATVC	MC621-0043	6541	ASCENT THRUST VECTOR CONTROLLER
AVVE	MC432-0226	0022	AVVI ELECTRONICS
AVVI	MC432-0226	0011	ATTITUDE VERTICAL VELOCITY INDICATOR
BF PDU	MC621-0056	0053	BODYFLAP POWER DRIVER UNIT
DA	MC409-0025	3001	DEPLOYED ASSY
DA	MC409-0025	3005	DEPLOYED ASSY
DDU	MC409-0023	0003	DISPLAY DRIVER UNIT,0002 (OV-103)
EL AS1	MC409-0025	1001	ELECTRONICS ASSY KU-BAND
EL AS2	MC409-0025	2001	ELECTRONICS ASSY KU-BAND
ESA LI	MC621-0014	0017	ELEVON SERVO ACTUATOR LEFT INBOARD
ESA LO	MC621-0014	0018	ELEVON SERVO ACTUATOR LEFT OUTBOARD
ESA RI	MC621-0014	0017	ELEVON SERVO ACTUATOR RIGHT INBOARD
ESA RO	MC621-0014	0019	ELEVON SERVO ACTUATOR RIGHT OUTBOARD
EVAX			EVA/ATC TRANSCEIVER UHF
FM XM	MC478-0106	3001	FM TRANSMITTER S-BAND
FMS	MC478-0106	3501	FM SIGNAL PROCESSOR S-BAND
GCIL	MC450-0051	0002	GROUND CONTROL INTERFACE LOGIC
HSI	MC432-0218	0003	HORIZONTAL SITUATION INDICATOR
IMU	MC409-0004	0010	INERTIAL MEASUREMENT UNIT
KB SP	MC409-0025	4001	SIGNAL PROCESSOR KU-BAND
MLS DEC	MC409-0017	0006	MLS DECODER
MLS RF	MC409-0017	0001	MICROWAVE LANDING SYSTEM RF ASSEMBLY
MPSACTP	MC621-0015	0017,18	MAIN PROPULSION SYSTEM ACTUATOR PITCH
MPSACTY	MC621-0015	0019,28	MPS ACTUATOR YAW
NSP	MC476-0137	0004	NETWORK SIGNAL PROCESSOR
OMSACTP	MC621-0009	2161	OMS ACTUATOR PITCH
OMSACTY	MC621-0009	2163	OMS ACTUATOR YAW
OMSCONP	MC621-0009	0125	OMS CONTROLLER PRIMARY
OMSCONS	MC621-0009	0125	OMS CONTROLLER STANDBY
PL SP	MC476-0138	0004	PAYLOAD SIGNAL PROCESSOR S-BAND
PLINT	MC478-0105	0001	PAYLOAD INTERROGATER S-BAND
PLINTX	ME452-0152	0001	PAYLOAD INTERROGATER TRANSFER SWITCH
PRE	MC478-0106	2001	PRE-AMPLIFIER S-BAND
PWR	MC478-0106	2501	POWER AMPLIFIER S-BAND

SPECIFICATIONS FOR AVIONICS INCLUDING DPS, GNC, AND COMMUNICATIONS & TRACKING

ITEM	PART NO.		NOMENCLATURE
RALT	MC409-0015	0004	RADAR ALTIMETER
RGA	MC493-0015	0011	RATE GYRO ASSEMBLY
RGASRBL	MC493-0015	0105	LEFT SOLID ROCKET BOOSTER RGA
RGASRBR	MC493-0015	0105	RIGHT SRB RGA
RHC	MC621-0043	3047	ROTATION HAND CONTROLLER
RJDA	MC621-0043	6344	REACTION JET DRIVER AFT
RJDF	MC621-0043	6244	RJD FORWARD
RPTA	MC621-0043	3440	RUDDER PEDAL TRANSDUCER ASSEMBLY
RS PDU	MC621-0053	0048	RUDDER/SPEEDBRAKE POWER DRIVER UNIT
SBC	MC450-0064	0001	SWITCH BEAM CONTROL ASSY S-BAND
SBTC	MC621-0043	3240	SPEEDBRAKE/THRUST CONTROLLER
SPA	MC409-0025	4001	SIGNAL PROCESSING ASSY
SPI	MC432-0221	0011	SURFACE POSITION INDICATOR
ST	MC431-0128	0013	STAR TRACKER
TACAN	MC409-0014	0006	TACTICAL AIR NAVIGATION
THC	MC621-0043	3140	TRANSLATION HAND CONTROLLER
XPOND	MC478-0106	1001	TRANSPONDER S-BAND

ORBITER AVIONICS

The Orbiter Avionics section of this document has been reformatted beginning with the STS-41 (36th Shuttle flight). Data normally contained in the following tables are now shown in computer printout format. The new presentation contains all categories of information contained in the tables covering STS-1 through STS-35. In addition, data covering the displays and controls subsystem, electrical power distribution and controls subsystem, modular auxiliary data subsystem, and the operational instrumentation subsystem have been added for completeness of data.

ORBITER AVIONICS DATA PROCESSING SYSTEM
COMPONENT S/N - LOCATION MATRIX

MSN SEQ NO.	STS NO.	ORB OV-	GENERAL PURPOSE COMPUTER												MASS MEM UNIT		MULTI-FUNCTION CRT DISPLAY SYSTEM										
			CENTRAL PROCESSING UNIT						INPUT-OUTPUT PROCESSOR								DEU				DU				KU		
			1	2	3	4	5	SP	1	2	3	4	5	SP	1	2	1	2	3	4	1	2	3	4	1	2	3
1	1	102	28	34	29	31	27	24	24	25	30	29	31	12	12	15	27	17	28	15	24	25	26	23	19	21	22
2	2	102	28	34	29	31	27	33	24	25	28	29	31	12	12	15	27	17	28	15	24	25	26	28	19	21	22
2	***	102																			28			24			
3	3	102	24	34	29	31	27	33	22	25	28	29	31	12	14	10	27	17	28	15	23	24	26	21	19	21	22
4	4	102	24	34	29	31	27	33	22	25	28	29	31	12	14	10	20	17	28	15	23	24	26	21	19	21	22
5	5	102	24	34	29	31	27		32	25	28	29	31		14	10	20	26	28	15	23	24	26	21	11	21	22
6	6	099	28	32	9	12	33		23	34	7	12	33		11	12	25	22	19	12	17	25	22	20	13	18	12
7	7	099	28	25	9	12	33		23	10	7	12	33		11	12	25	22	19	12	17	25	22	20	13	18	12
8	8	099	28	25	9	12	33		23	10	7	12	33		11	12	25	22	19	12	17	7	27	20	13	18	12
9	9	102	11	34	29	31	27		32	25	28	29	31		14	10	20	24	28	15	28	12	4	25	11	21	22
10	41B	099	33	31	29	9	27	24	7	29	33	24	28	10	11	12	25	22	7	12	17	7	27	20	13	18	12
11	41C	099	11	35	29	9	27		12	35	33	24	28		11	12	25	22	7	3	17	7	11	20	13	18	12
12	***	103																				18		14			
12	41D	103	12	22	33	31	35		25	1	32	10	35		8	13	27	13	19	26	16	14	13	18	1	6	17
13	41G	099	11	19	29	9	27		12	17	33	24	28		11	15	28	22	7	3	22	7	11	20	13	18	12
14	51A	103	12	22	33	31	35		25	1	32	10	35		8	5	27	13	19	26	16	18	13	3	1	6	17
15	51C	103	12	36	33	31	35	34	25	36	32	10	35	7	8	3	27	13	19	26	16	18	33	27	1	6	17
16	51D	103	12	36	33	31	35	34	25	36	32	10	35	7	8	3	27	13	19	26	16	18	33	27	1	6	17
17	51B	099	11	19	26	9	27	34	12	17	33	2	28	7	11	15	28	31	17	3	22	17	11	20	13	24	12
18	51G	103	12	06	33	31	35	34	25	21	27	10	35	7	8	5	27	13	7	26	14	19	33	27	1	6	17
19	51F	099	11	19	26	9	27	34	12	09	33	2	08	7	11	15	28	31	17	3	18	17	16	7	13	24	12
20	51I	103	12	06	33	31	15	34	25	21	27	10	30	7	8	5	27	13	7	26	14	19	33	27	1	6	17
21	51J	104	37	05	01	17	23		08	01	26	37	20		04	06	21	29	30	22	20	07	22	03	04	10	05
22	61A	099	11	19	26	09	27		12	09	33	02	28		11	15	28	31	16	03	18	17	34	23	13	24	12
23	61B	104	17	05	24	22	23		37	2	17	15	20		04	06	21	29	30	22	24	07	22	03	04	10	05
24	61C	102	15	29	01	36	34	24	22	29	01	36	07	17	12	02	19	24	9	15	26	35	27	19	11	21	22
25	51L	099	11	19	26	09	27	12	12	09	33	02	28	27	11	15	28	31	16	03	18	17	34	23	13	24	12
26	26	103	05	20	24	38	22	21	01	38	08	30	36	37	08	05	07	34	21	25	28	14	10	04	01	06	17
27	27	104	29	10	03	36	15	33	01	10	35	24	15	25	04	06	01	29	26	12	21	36	03	22	04	10	05
28	29	103	05	20	24	34	22	31	01	38	08	30	36	23	08	05	07	27	21	25	28	14	10	04	01	06	17
29	30	104	29	10	35	36/7 **	15	07	29	10	35	24/ 26*	15	26	04	06	13	29	26	12	21	36	16	22	04	10	05
30	28	102	21	6	33	17	28	25	31	32	25	37	22	20	13	07	15	32	9	33	26	35	27	19	19	15	25
31	34	104	29	10	35	7	15	37	29	10	23	26	15	7	04	06	20	29	26	12	21	36	16	22	04	10	05
32	33	103	05	20	24	34	22	23	01	38	08	30	20	21	08	05	07	22	21	25	25	14	10	04	01	06	17
33	32	102	21	6	33	17	28	1	31	32	25	37	21	36	10	07	24	32	9	33	26	35	27	19	19	15	25
31	36	104	29	10	35	7	15	37	29	10	23	26	15	7	04	06	20	29	26	12	21	36	16	22	04	10	05
35	31	103	31	20	24	34	22	23	01	38	08	30	20	21	08	05	07	22	21	25	25	14	10	04	01	06	17

* IFM S/N 24 REPLACED BY S/N 26
** IFM S/N 36 REPLACED BY S/N 7
*** IN STS NO. INDICATES INFLIGHT COMPONENT SWAP PERFORMED BY CREW

ORBITER AVIONICS DATA PROCESSING SYSTEM
COMPONENT S/N - LOCATION MATRIX

MSN SEQ NO.	STS NO.	ORB OV-	MULTIPLEXER - DEMULTIPLEXER																			ENGINE INTF UNIT		
			FF				FA				LF/LA		PL		OF				OA					
			1	2	3	4	1	2	3	4	1	2	1	2	1	2	3	4	1	2	3	1	2	3
1	1	102	58	59	60	30	65	63	62	64	69	68	76	27	67	66	70	71	72	73	74	9	11	12
2	2	102	58	59	60	30	65	63	62	64	69	68	76	27	67	66	93	71	72	73	74	9	11	12
2	***	102																						
3	3	102	58	59	60	30	65	63	62	64	69	57	76	27	67	66	93	71	72	73	74	9	11	12
4	4	102	58	59	60	30	65	63	69	64	69	57	76	27	67	66	93	71	72	73	74	9	11	12
5	5	102	58	59	60	30	65	63	69	62	69	57	76	27	67	66	93	71	72	73	74	9	11	12
6	6	099	94	95	97	96	102	100	103	101	108	107	98	75	34	91	92	90	104	105	106	12	5	9
7	7	099	94	95	97	96	102	100	103	101	108	107	98	75	34	91	92	90	104	105	106	12	11	9
8	8	099	94	95	97	96	102	100	103	101	108	107	98	75	34	91	92	90	104	105	106	12	11	9
9	9	102	61	59	60	30	65	63	43	62	57	68	76	2	67	66	93	71	18	126	136	19	13	20
10	41B	099	94	95	22	96	102	100	103	101	69	107	98	75	34	70	92	90	104	105	106	14	16	18
11	41C	099	109	95	22	96	102	100	103	101	69	107	98	75	34	70	92	90	104	105	106	14	16	18
12	***	103																						
12	41D	103	58	112	97	110	121	123	122	64	113	114	99	120	117	116	115	118	72	73	125	15	21	17
13	41G	099	109	95	22	96	102	100	103	101	69	107	98	75	34	70	92	90	104	105	106	14	16	18
14	51A	103	58	112	97	110	121	123	122	64	113	114	99	120	117	116	115	118	72	73	125	15	21	17
15	51C	103	58	112	97	110	121	123	122	64	113	114	99	120	117	116	115	118	72	73	125	15	21	17
16	51D	103	58	112	97	110	121	123	122	64	113	114	99	120	117	116	115	118	72	73	125	15	21	17
17	51B	099	109	95	22	96	102	100	103	101	69	107	98	75	92	70	144	90	104	105	106	14	16	18
18	51G	103	58	94	97	110	121	123	122	64	113	114	99	120	117	116	115	118	72	73	125	15	21	17
19	51F	099	109	95	22	96	102	100	103	101	69	107	98	75	92	70	144	90	104	105	106	14	16	18
20	51I	103	58	94	97	112	121	123	09	64	113	114	99	120	117	116	115	118	72	73	125	15	21	17
21	51J	104	59	60	30	61	65	124	134	135	108	138	119	27	145	93	67	71	136	127	74	22	12	11
22	61A	099	142	95	22	96	102	100	103	101	69	107	147	75	92	70	34	90	104	105	106	14	16	18
23	61B	104	110	60	30	61	121	124	134	123	108	138	119	27	145	93	67	71	136	127	74	22	12	11
24	61C	102	109	112	97	111	132	63	43	62	57	68	152	02	149	144	115	146	18	126	137	19	13	20
25	51L	099	142	95	22	96	102	100	103	101	69	107	147	75	92	70	34	90	104	105	106	14	16	18
26	26	103	143	153	140	59	122	124	155	65	113	114	99	98	145	116	66	118	55	73	125	15	21	17
27	27	104	110	97	94	61	121	64	43	123	108	157	310	309	52	93	67	71	18	127	74	22	12	11
28	29	103	143	153	140	59	122	124	155	65	113	114	99	98	145	116	66	118	55	73	151	15	21	17
29	30	104	110	97	141	61	121	64	43	123	108	157	119	27	52	93	67	71	136	127	74	22	12	09
30	28	102	109	112	60	154	132	63	135	156	139	68	152	120	144	91	115	146	150	126	137	19	20	13
31	34	104	110	97	141	94	133	64	43	123	108	157	119	27	52	93	67	71	136	127	74	22	12	09
32	33	103	162	153	140	59	122	124	155	65	113	114	99	76	145	116	66	118	55	73	125	10	17	15
33	32	102	109	112	60	154	132	63	135	156	139	68	152	120	144	91	115	146	150	126	137	23	11	21
34	36	104	110	97	141	94	133	64	43	123	108	157	119	27	52	93	67	71	136	127	74	22	12	09
35	31	103	162	153	140	59	122	124	155	65	113	114	99	76	145	116	66	118	55	73	125	10	17	15

MISS SEQ	STS	ORB	SUBSYSTEM	LRU NOMENCLATURE	PART NUMBER	DASH NUMBER	SERIAL NUMBER	SLOT	STAT
36	STS-41	OV103	DPS	CENTRAL PROCESSING UNIT	MC615-0001	-0210	0000000031	1	F
36	STS-41	OV103	DPS	CENTRAL PROCESSING UNIT	MC615-0001	-0210	0000000020	2	F
36	STS-41	OV103	DPS	CENTRAL PROCESSING UNIT	MC615-0001	-0210	0000000024	3	F
36	STS-41	OV103	DPS	CENTRAL PROCESSING UNIT	MC615-0001	-0210	0000000034	4	F
36	STS-41	OV103	DPS	CENTRAL PROCESSING UNIT	MC615-0001	-0210	0000000022	5	F
36	STS-41	OV103	DPS	CENTRAL PROCESSING UNIT	MC615-0001	-0210	0000000038	6	F
37	STS-38	OV104	DPS	CENTRAL PROCESSING UNIT	MC615-0001	-0210	0000000029	1	F
37	STS-38	OV104	DPS	CENTRAL PROCESSING UNIT	MC615-0001	-0210	0000000023	2	F
37	STS-38	OV104	DPS	CENTRAL PROCESSING UNIT	MC615-0001	-0210	0000000035	3	F
37	STS-38	OV104	DPS	CENTRAL PROCESSING UNIT	MC615-0001	-0210	0000000007	4	F
37	STS-38	OV104	DPS	CENTRAL PROCESSING UNIT	MC615-0001	-0210	0000000015	5	F
37	STS-38	OV104	DPS	CENTRAL PROCESSING UNIT	MC615-0001	-0210	0000000036	6	F
38	STS-35	OV102	DPS	CENTRAL PROCESSING UNIT	MC615-0001	-0210	0000000021	1	F
38	STS-35	OV102	DPS	CENTRAL PROCESSING UNIT	MC615-0001	-0210	0000000006	2	F
38	STS-35	OV102	DPS	CENTRAL PROCESSING UNIT	MC615-0001	-0210	0000000033	3	F
38	STS-35	OV102	DPS	CENTRAL PROCESSING UNIT	MC615-0001	-0210	0000000017	4	F
38	STS-35	OV102	DPS	CENTRAL PROCESSING UNIT	MC615-0001	-0210	0000000038	5	F
38	STS-35	OV102	DPS	CENTRAL PROCESSING UNIT	MC615-0001	-0210	0000000001	6	F
36	STS-41	OV103	DPS	DATA BUS ISOLATION AMP.	MC409-0019	-0002	0000000018	1	F
36	STS-41	OV103	DPS	DATA BUS ISOLATION AMP.	MC409-0019	-0002	0000000001	2	F
37	STS-38	OV104	DPS	DATA BUS ISOLATION AMP.	MC409-0019	-0002	0000000017	1	F
37	STS-38	OV104	DPS	DATA BUS ISOLATION AMP.	MC409-0019	-0002	0000000020	2	F
38	STS-35	OV102	DPS	DATA BUS ISOLATION AMP.	MC409-0019	-0002	0000000009	1	F
38	STS-35	OV102	DPS	DATA BUS ISOLATION AMP.	MC409-0019	-0002	0000000008	2	F
36	STS-41	OV103	DPS	DISPLAY ELECTRONICS UNIT	MC615-0008	-0109	0000000007	1	F
36	STS-41	OV103	DPS	DISPLAY ELECTRONICS UNIT	MC615-0008	-0109	0000000022	2	F
36	STS-41	OV103	DPS	DISPLAY ELECTRONICS UNIT	MC615-0008	-0109	0000000021	3	F
36	STS-41	OV103	DPS	DISPLAY ELECTRONICS UNIT	MC615-0008	-0108	0000000025	4	F
37	STS-38	OV104	DPS	DISPLAY ELECTRONICS UNIT	MC615-0008	-0109	0000000020	1	F
37	STS-38	OV104	DPS	DISPLAY ELECTRONICS UNIT	MC615-0008	-0108	0000000029	2	F
37	STS-38	OV104	DPS	DISPLAY ELECTRONICS UNIT	MC615-0008	-0109	0000000026	3	F
37	STS-38	OV104	DPS	DISPLAY ELECTRONICS UNIT	MC615-0008	-0108	0000000012	4	F
38	STS-35	OV102	DPS	DISPLAY ELECTRONICS UNIT	MC615-0008	-0109	0000000024	1	F
38	STS-35	OV102	DPS	DISPLAY ELECTRONICS UNIT	MC615-0008	-0109	0000000032	2	F
38	STS-35	OV102	DPS	DISPLAY ELECTRONICS UNIT	MC615-0008	-0109	0000000018	3	F
38	STS-35	OV102	DPS	DISPLAY ELECTRONICS UNIT	MC615-0008	-0109	0000000033	4	F
36	STS-41	OV103	DPS	DISPLAY UNIT	MC615-0006	-0112	0000000026		F
36	STS-41	OV103	DPS	DISPLAY UNIT	MC615-0006	-0112	0000000014	2	F
36	STS-41	OV103	DPS	DISPLAY UNIT	MC615-0006	-0112	0000000010	3	F
36	STS-41	OV103	DPS	DISPLAY UNIT	MC615-0006	-0112	0000000004	4	F
37	STS-38	OV104	DPS	DISPLAY UNIT	MC615-0006	-0110	0000000028	1	F
37	STS-38	OV104	DPS	DISPLAY UNIT	MC615-0006	-0112	0000000011	2	F
37	STS-38	OV104	DPS	DISPLAY UNIT	MC615-0006	-0112	0000000022	3	F
37	STS-38	OV104	DPS	DISPLAY UNIT	MC615-0006	-0112	0000000036	4	F
38	STS-35	OV102	DPS	DISPLAY UNIT	MC615-0006	-0112	0000000013	1	F
38	STS-35	OV102	DPS	DISPLAY UNIT	MC615-0006	-0112	0000000012	2	F
38	STS-35	OV102	DPS	DISPLAY UNIT	MC615-0006	-0112	0000000003	3	F
38	STS-35	OV102	DPS	DISPLAY UNIT	MC615-0006	-0112	0000000007	4	F
36	STS-41	OV103	DPS	ENGINE INTERFACE UNIT	MC409-0009	-0012	0000000010	1	F
36	STS-41	OV103	DPS	ENGINE INTERFACE UNIT	MC409-0009	-0012	0000000017	2	F
36	STS-41	OV103	DPS	ENGINE INTERFACE UNIT	MC409-0009	-0012	0000000015	3	F
37	STS-38	OV104	DPS	ENGINE INTERFACE UNIT	MC409-0009	-0012	0000000020	1	F
37	STS-38	OV104	DPS	ENGINE INTERFACE UNIT	MC409-0009	-0012	0000000013	2	F
37	STS-38	OV104	DPS	ENGINE INTERFACE UNIT	MC409-0009	-0012	0000000019	3	F
38	STS-35	OV102	DPS	ENGINE INTERFACE UNIT	MC409-0009	-0012	0000000022	1	F

MISS SEQ	STS	ORB	SUBSYSTEM	LRU NOMENCLATURE	PART NUMBER	DASH NUMBER	SERIAL NUMBER	SLOT	STAT
38	STS-35	OV102	DPS	ENGINE INTERFACE UNIT	MC409-0009	-0012	0000000011	2	F
38	STS-35	OV102	DPS	ENGINE INTERFACE UNIT	MC409-0009	-0012	0000000021	3	F
36	STS-41	OV103	DPS	INPUT/OUTPUT PROCESSING UNIT	MC615-0001	-0314	0000000001	1	F
36	STS-41	OV103	DPS	INPUT/OUTPUT PROCESSING UNIT	MC615-0001	-0314	0000000038	2	F
36	STS-41	OV103	DPS	INPUT/OUTPUT PROCESSING UNIT	MC615-0001	-0314	0000000008	3	F
36	STS-41	OV103	DPS	INPUT/OUTPUT PROCESSING UNIT	MC615-0001	-0314	0000000030	4	F
36	STS-41	OV103	DPS	INPUT/OUTPUT PROCESSING UNIT	MC615-0001	-0314	0000000020	5	F
37	STS-38	OV104	DPS	INPUT/OUTPUT PROCESSING UNIT	MC615-0001	-0314	0000000017		F
37	STS-38	OV104	DPS	INPUT/OUTPUT PROCESSING UNIT	MC615-0001	-0314	0000000029	1	F
37	STS-38	OV104	DPS	INPUT/OUTPUT PROCESSING UNIT	MC615-0001	-0314	0000000023	3	F
37	STS-38	OV104	DPS	INPUT/OUTPUT PROCESSING UNIT	MC615-0001	-0314	0000000026	4	F
37	STS-38	OV104	DPS	INPUT/OUTPUT PROCESSING UNIT	MC615-0001	-0314	0000000015	5	F
38	STS-35	OV102	DPS	INPUT/OUTPUT PROCESSING UNIT	MC615-0001	-0314	0000000031	1	F
38	STS-35	OV102	DPS	INPUT/OUTPUT PROCESSING UNIT	MC615-0001	-0314	0000000032	2	F
38	STS-35	OV102	DPS	INPUT/OUTPUT PROCESSING UNIT	MC615-0001	-0314	0000000025	3	F
38	STS-35	OV102	DPS	INPUT/OUTPUT PROCESSING UNIT	MC615-0001	-0314	0000000037	4	F
38	STS-35	OV102	DPS	INPUT/OUTPUT PROCESSING UNIT	MC615-0001	-0314	0000000024	6	F
36	STS-41	OV103	DPS	KEYBOARD UNIT	MC615-0007	-0104	0000000001	1	F
36	STS-41	OV103	DPS	KEYBOARD UNIT	MC615-0007	-0104	0000000006	2	F
36	STS-41	OV103	DPS	KEYBOARD UNIT	MC615-0007	-0104	0000000017	3	F
37	STS-38	OV104	DPS	KEYBOARD UNIT	MC615-0007	-0104	0000000004	1	F
37	STS-38	OV104	DPS	KEYBOARD UNIT	MC615-0007	-0104	0000000010	2	F
37	STS-38	OV104	DPS	KEYBOARD UNIT	MC615-0007	-0104	0000000005	3	F
38	STS-35	OV102	DPS	KEYBOARD UNIT	MC615-0007	-0104	0000000019	1	F
38	STS-35	OV102	DPS	KEYBOARD UNIT	MC615-0007	-0104	0000000015	2	F
38	STS-35	OV102	DPS	KEYBOARD UNIT	MC615-0007	-0104	0000000025	3	F
36	STS-41	OV103	DPS	FLIGHT AFT MULT./DEMULT.	MC615-0004	-6210	0000000122	1	F
36	STS-41	OV103	DPS	FLIGHT AFT MULT./DEMULT.	MC615-0004	-6210	0000000124	2	F
36	STS-41	OV103	DPS	FLIGHT AFT MULT./DEMULT.	MC615-0004	-6210	0000000155	3	F
36	STS-41	OV103	DPS	FLIGHT AFT MULT./DEMULT.	MC615-0004	-5210	0000000065	4	F
37	STS-38	OV104	DPS	FLIGHT AFT MULT./DEMULT.	MC615-0004	-6210	0000000134	1	F
37	STS-38	OV104	DPS	FLIGHT AFT MULT./DEMULT.	MC615-0004	-5210	0000000064	2	F
37	STS-38	OV104	DPS	FLIGHT AFT MULT./DEMULT.	MC615-0004	-5210	0000000043	3	F
37	STS-38	OV104	DPS	FLIGHT AFT MULT./DEMULT.	MC615-0004	-6210	0000000123	4	F
38	STS-35	OV102	DPS	FLIGHT AFT MULT./DEMULT.	MC615-0004	-6210	0000000132	1	F
38	STS-35	OV102	DPS	FLIGHT AFT MULT./DEMULT.	MC615-0004	-5210	0000000063	2	F
38	STS-35	OV102	DPS	FLIGHT AFT MULT./DEMULT.	MC615-0004	-6210	0000000135	3	F
38	STS-35	OV102	DPS	FLIGHT AFT MULT./DEMULT.	MC615-0004	-6210	0000000156	4	F
36	STS-41	OV103	DPS	FLIGHT FWD MULT./DEMULT.	MC615-0004	-5110	0000000030	1	F
36	STS-41	OV103	DPS	FLIGHT FWD MULT./DEMULT.	MC615-0004	-6110	0000000153	2	F
36	STS-41	OV103	DPS	FLIGHT FWD MULT./DEMULT.	MC615-0004	-6110	0000000140	3	F
36	STS-41	OV103	DPS	FLIGHT FWD MULT./DEMULT.	MC615-0004	-5110	0000000059	4	F
37	STS-38	OV104	DPS	FLIGHT FWD MULT./DEMULT.	MC615-0004	-6110	0000000110	1	F
37	STS-38	OV104	DPS	FLIGHT FWD MULT./DEMULT.	MC615-0004	-6110	0000000097	2	F
37	STS-38	OV104	DPS	FLIGHT FWD MULT./DEMULT.	MC615-0004	-6110	0000000141	3	F
37	STS-38	OV104	DPS	FLIGHT FWD MULT./DEMULT.	MC615-0004	-6110	0000000094	4	F
38	STS-35	OV102	DPS	FLIGHT FWD MULT./DEMULT.	MC615-0004	-6110	0000000109	1	F
38	STS-35	OV102	DPS	FLIGHT FWD MULT./DEMULT.	MC615-0004	-6110	0000000112	2	F
38	STS-35	OV102	DPS	FLIGHT FWD MULT./DEMULT.	MC615-0004	-5110	0000000060	3	F
38	STS-35	OV102	DPS	FLIGHT FWD MULT./DEMULT.	MC615-0004	-6110	0000000154	4	F
36	STS-41	OV103	DPS	COMMAND DECODER MULT./DEMULT.	MC615-0004	-6610	0000000113	1	F
36	STS-41	OV103	DPS	COMMAND DECODER MULT./DEMULT.	MC615-0004	-6610	0000000114	2	F
37	STS-38	OV104	DPS	COMMAND DECODER MULT./DEMULT.	MC615-0004	-6610	0000000108	1	F
37	STS-38	OV104	DPS	COMMAND DECODER MULT./DEMULT.	MC615-0004	-6610	0000000157	2	F

MISS SEQ	STS	ORB	SUBSYSTEM	LRU NOMENCLATURE	PART NUMBER	DASH NUMBER	SERIAL NUMBER	SLOT	STAT
38	STS-35	OV102	DPS	COMMAND DECODER MULT./DEMULT.	MC615-0004	-6610	0000000139	1	F
38	STS-35	OV102	DPS	COMMAND DECODER MULT./DEMULT.	MC615-0004	-5600	0000000068	2	F
36	STS-41	OV103	DPS	PAYLOAD MULT./DEMULT.	MC615-0004	-6710	0000000099	1	F
36	STS-41	OV103	DPS	PAYLOAD MULT./DEMULT.	MC615-0004	-5710	0000000076	2	F
37	STS-38	OV104	DPS	PAYLOAD MULT./DEMULT.	MC615-0004	-6710	0000000119	1	F
37	STS-38	OV104	DPS	PAYLOAD MULT./DEMULT.	MC615-0004	-5710	0000000002	2	F
38	STS-35	OV102	DPS	PAYLOAD MULT./DEMULT.	MC615-0004	-6710	0000000152	1	F
38	STS-35	OV102	DPS	PAYLOAD MULT./DEMULT.	MC615-0004	-6710	0000000120	2	F
36	STS-41	OV103	DPS	MASS MEMORY UNIT	MC615-0005	-0202	000000PD08	1	F
37	STS-38	OV104	DPS	MASS MEMORY UNIT	MC615-0005	-0202	000000PD05	1	F
37	STS-38	OV104	DPS	MASS MEMORY UNIT	MC615-0005	-0202	000000PD06	2	F
38	STS-35	OV102	DPS	MASS MEMORY UNIT	MC615-0005	-0201	000000PD10	1	F
38	STS-35	OV102	DPS	MASS MEMORY UNIT	MC615-0005	-0202	000000PD07	2	F

ORBITER AVIONICS GUIDANCE, NAVIGATION, AND CONTROL
COMPONENT S/N - LOCATION MATRIX

MSN SEQ NO.	STS NO.	ORB OV-	IMU			ST		TACAN			MLS RF			MLS DEC			RALT	
			1	2	3	-Z	-Y	1	2	3	1	2	3	1	2	3	1	2
1	1	102	18	11	21	5	3	65	60	64	12	6	19	17	18	19		
2	2	102	18	11	12	5	3	65	34	64	12	6	19	17	18	19		
3	3	102	18	11	12	5	3	65	34	64	12	6	19	8	20	21		
4	4	102	18	11	16	5	3	65	34	64	12	6	19	8	20	21		
5	5	102	18	11	21	5	3	65	60	64	12	6	19	8	20	13		
6	6	099	7	13	19	7	2	70	69	34	28	9	12	20	24	21	16	17
7	7	099	4	13	1	7	2	70	69	34	28	9	12	20	24	21	16	11
8	8	099	4	13	1	7	2	70	69	34	28	9	12	20	24	21	18	17
9	9	102	18	11	21	5	3	65	72	35	18	20	19	18	17	10	14	15
10	41B	099	9	11	1	7	2	70	69	34	28	9	12	20	24	21	18	17
11	41C	099	9	11	1	7	2	70	69	34	28	9	12	20	24	21	18	17
12	41D	103	7	5	4	9	11	63	64	66	23	22	21	28	27	22	13	4
13	41G	099	9	11	1	7	2	70	69	34	28	9	12	20	24	21	18	17
14	51A	103	7	5	4	9	11	63	64	66	23	22	21	28	27	22	13	4
15	51C	103	7	5	4	9	11	63	64	66	23	22	20	28	27	22	13	12
16	51D	103	7	5	4	9	11	63	64	60	23	22	20	28	27	22	11	13
17	51B	099	9	11	1	7	10	70	69	34	28	9	18	20	24	21	18	17
18	51G	103	7	5	4	9	11	63	64	66	23	22	20	28	08	22	11	13
19	51F	099	13	11	1	7	10	70	69	34	28	9	18	20	24	13	18	17
20	51I	103	7	5	4	9	11	63	64	72	23	22	20	28	08	22	11	13
21	51J	104	14	21	12	12	8	75	62	73	24	25	26	19	26	23	6	7
22	61A	099	13	11	1	7	10	70	74	34	28	9	18	20	02	13	18	17
23	61B	104	14	21	12	12	8	58	62	73	24	26	25	19	26	23	6	7
24	61C	102	24	23	10	5	3	48	71	35	21	20	19	18	17	10	14	15
25	51L	099	13	11	1	7	10	70	74	34	28	9	18	20	02	13	18	17
26	26	103	7	5	20	9	13	64	69	72	6	29	27	28	8	22	20	19
27	27	104	14	18	12	11	8	62	68	73	24	26	25	19	26	23	21	22
28	29	103	7	5	20	9	13	64	69	72	6	29	27	28	8	22	20	19
29	30	104	14	18	12	11	8	70	65	60	19	26	25	19	26	23	21	22
30	28	102	24	23	10	6	3	48	71	63	23	12	20	18	17	10	23	25
31	34	104	14	9	12	11	8	70	62	60	19	26	29	19	26	23	21	22
32	33	103	7	5	20	9	13	64	65	72	6	20	27	28	8	22	20	19
33	32	102	24	23	10	6	3	48	71	63	23	12	22	18	17	10	23	25
34	36	104	14	9	12	11	8	73	62	67	19	26	29	19	26	23	21	22
35	31	103	7	5	20	9	13	64	65	72	6	20	27	28	8	22	20	19

ORBITER AVIONICS GUIDANCE, NAVIGATION, AND CONTROL
COMPONENT S/N - LOCATION MATRIX

MSN SEQ NO.	STS NO.	ORB OV-	ADTA				AA				RGA				LSRB RGA			RSRB RGA		
			1	2	**3	**4	1	2	3	4	1	2	3	4	1	2	3	1	2	3
1	1	102	611	614	612	610	11	6	8	7	14	15	16	17	36	37	38	24	25	26
2	2	102	611	614	612	610	11	6	8	7	14	15	16	17	39	27	16	44	20	28
3	3	102	611	614	612	610	9	12	13	14	14	15	16	17	22	42	38	48	47	46
4	4	102	611	614	612	610	9	12	13	14	14	15	16	17	33	35	41	24	25	45
5	5	102	611	614	612	610	9	12	13	14	14	15	16	17	31	36	40	12	10	14
6	6	099	303	610	301	304	15	16	17	18	21	18	20	19	11	13	15	23	29	34
7	7	099	303	610	301	304	15	16	17	18	21	18	20	19	39	27	38	43	28	46
8	8	099	303	610	301	304	15	16	17	18	21	18	20	19	42	37	44	20	22	30
9	9	102	309	312	605	314	23	6	24	7	14	15	16	17	12	36	14	43	28	39
10	41B	099	303	610	301	304	15	16	17	18	21	18	20	19	11	13	29	17	34	48
11	41C	099	303	302	301	304	15	16	17	18	21	18	20	19	42	30	22	46	44	37
12	41D	103	308	307	305	306	19	20	22	21	26	25	24	22	38	18	21	32	40	10
13	41G	099	303	302	301	304	15	16	17	18	21	18	20	19	43	28	16	31	15	23
14	51A	103	308	307	305	306	19	20	22	21	26	25	24	22	19	27	50	20	29	34
15	51C	103	308	307	305	306	19	20	22	21	26	25	24	22	37	44	46	11	26	39
16	51D	103	308	307	305	306	19	20	22	21	26	25	24	22	32	48	51	21	38	40
17	51B	099	303	302	301	304	15	16	17	18	21	18	20	19	13	14	36	12	17	49
18	51G	103	308	307	305	306	19	20	22	21	26	25	24	22	10	18	52	22	53	56
19	51F	099	303	302	301	304	15	16	17	18	21	18	20	19	42	55	57	23	30	31
20	51I	103	308	307	305	306	19	20	22	21	26	25	24	22	60	44	46	54	61	62
21	51J	104	410	412	411	404	9	13	25	12	27	30	29	28	50	58	63	51	64	65
22	61A	099	303	302	301	304	15	16	17	18	21	18	20	19	21	32	66	13	14	16
23	61B	104	410	412	411	404	9	13	25	12	27	30	29	28	15	28	36	18	40	67
24	61C	102	309	312	310	405	23	6	24	7	14	15	16	17	47	52	69	43	56	76
25	51L	099	303	302	301	304	15	16	17	18	21	18	20	19	42	55	70	23	30	31
26	26	103	308	307	305	306	19	20	22	21	23	31	24	22	*	86	87	*	85	90
27	27	104	410	412	411	404	9	13	25	12	27	30	29	26	*	81	89	*	83	84
28	29	103	009	012	005	006	19	20	22	21	23	31	24	22	*	86	87	*	85	90
29	30	104	410	412	411	404	9	13	25	12	27	32	29	28	*	81	89	*	61	84
30	28	102	414	008	011	405	23	6	24	7	14	15	16	17	9	79	80	*	91	92
31	34	104	410	412	411	404	9	13	25	12	27	32	29	28	*	93	95	*	94	96
32	33	103	009	012	007	006	19	20	22	21	23	31	24	22	*	97	99	*	98	100
33	32	102	414	008	011	405	23	6	24	7	14	15	16	17	*	88	114	*	113	115
34	36	104	410	412	411	404	9	13	25	12	27	32	29	28	*	105	107	*	106	108
35	31	103	009	012	007	006	19	20	22	21	23	31	24	22	*	109	111	*	110	112

* In accordance with Program Requirements Control Board direction, only 2 rate gyro assemblies per SRB. New positions are left SRB positions 1 and 3, and right SRB positions 2 and 4.

** ADTA Legend:
Slot 3 = 3180XX
Slot 4 = 674XX

ORBITER AVIONICS GUIDANCE, NAVIGATION, AND CONTROL
COMPONENT S/N - LOCATION MATRIX

MSN SEQ NO.	STS NO.	ORB OV-	DDU			HSI		AI	SPI	AMI		AME		AVVI		AVVE		ASA				RHC		
			CDR	PLT	AFT	CDR	PLT			CDR	PLT	CDR	PLT	CDR	PLT	CDR	PLT	1	2	3	4	CDR	PLT	AFT
1	1	102	8	9	10	8	9	4	6	9	10	9	10	9	10	9	10	11	12	14	16	9	10	8
2	2	102	8	9	10	8	6	4	6	9	10	9	10	9	10	9	10	11	12	14	16	9	10	8
3	3	102	8	9	10	8	6	4	6	9	10	9	10	9	10	9	10	11	12	14	16	9	2	8
4	4	102	8	9	10	8	6	4	6	9	10	9	10	9	10	9	10	11	12	14	16	9	2	8
5	5	102	8	9	10	8	6	4	6	9	10	9	10	9	10	9	10	11	12	14	16	9	2	8
6	6	099	11	12	13	11	12	1	7	12	11	12	11	13	14	12	11	23	26	25	24	13	12	15
7	7	099	11	12	13	11	9	1	7	12	11	12	11	13	14	12	11	23	26	25	24	13	12	15
8	8	099	11	14	13	11	9	1	7	12	11	12	11	13	14	12	11	23	26	25	24	13	12	15
9	9	102	8	10	9	6	8	4	6	9	10	9	10	9	10	9	10	20	21	22	30	9	2	11
10	41B	099	11	14	13	11	9	1	7	12	11	12	11	13	14	12	11	23	26	25	24	13	12	15
11	41C	099	11	14	13	11	9	1	7	12	11	12	11	13	14	12	11	23	26	25	24	13	12	15
12	41D	103	12	16	17	14	13	2	8	14	13	14	13	16	13	16	13	29	27	28	19	17	10	16
13	41G	099	11	14	13	11	9	1	7	12	11	12	11	13	14	12	11	23	26	25	24	19	20	8
14	51A	103	12	16	17	14	13	2	8	14	13	14	13	16	13	16	13	29	27	28	19	17	10	16
15	51C	103	12	16	17	14	13	2	8	14	17	14	17	16	11	16	13	29	27	28	19	17	10	16
16	51D	103	12	16	17	14	13	2	8	14	17	14	17	16	11	16	13	29	27	28	19	17	10	16
17	51B	099	11	14	13	11	9	1	7	12	11	12	11	13	14	12	11	23	26	25	24	19	20	8
18	51G	103	7	16	17	14	13	2	8	14	17	14	17	16	11	16	13	29	27	28	19	17	10	16
19	51F	099	11	14	13	11	9	1	7	12	11	12	11	13	14	12	11	23	26	25	24	19	20	8
20	51I	103	7	16	17	14	13	2	9	14	17	14	17	16	11	16	13	29	27	28	19	11	10	16
21	51J	104	18	20		16	15	6		15	13	7	13	15	17	14	17	16	11	12	14	02	21	12
22	61A	099	11	14	13	11	9	1	7	12	11	12	11	13	14	12	11	23	26	25	24	19	20	8
23	61B	104	18	20	19	16	15	6	10	10	13	7	13	15	17	14	17	16	11	12	14	02	21	12
24	61C	102	8	10	9	6	8	4	6	16	10	9	10	9	10	9	10	20	21	22	30	13	18	14
25	51L	099	11	14	13	11	12	1	7	12	11	12	11	13	14	12	11	23	26	25	24	19	20	8
26	26	103	17	9	15	14	9	2E	6	14	17	14	17	16	11	16	13	29	27	28	19	11	9	15
27	27	104	12	19	7	16	15	6E	9	7	13	9	13	14	17	14	17	16	11	12	14	2	21	12
28	29	103	17	9	15	14	9	5E	6	14	17	14	17	16	11	16	13	29	27	28	19	11	9	15
29	30	104	12	19	7	13	15	6E	5	3	13	7	13	12	15	14	17	31	11	12	14	2	21	12
30	28	102	8	20	18	6	8	4E	8	16	9	10	9	10	9	9	10	20	21	22	30	18	13	14
31	34	104	12	19	7	13	15	6E	5	3	13	7	13	12	15	14	17	31	11	12	14	2	21	12
32	33	103	17	9	15	14	9	5E	6	14	17	14	17	16	11	16	13	29	27	28	19	11	9	15
33	32	102	8	20	18	6	8	4E	8	16	9	10	9	17	9	9	10	20	21	22	30	18	13	14
34	36	104	10	19	7	13	10	6E	10	10	13	7	13	12	15	14	17	31	11	12	14	2	21	12
35	31	103	17	9	15	14	9	5E	6	14	17	14	17	16	11	16	13	29	27	28	19	11	9	15

ORBITER AVIONICS GUIDANCE, NAVIGATION, AND CONTROL
COMPONENT S/N - LOCATION MATRIX

MSN SEQ NO.	STS NO.	ORB OV-	THC		SBTC		RPTA		ADI			RJDF		RJDA		PDU		ATVC			
			FWD	AFT	CDR	PLT	CDR	PLT	CDR	PLT	AFT	1	2	1	2	RS	BF	1	2	3	4
1	1	102	2	3	4	5	4	5	9	8	10	4	13	2	7	401	401	11	8	9	10
2	2	102	2	3	4	5	4	5	9	8	10	4	13	2	7	401	401	11	8	9	10
3	3	102	2	3	4	5	4	5	9	8	10	4	13	2	7	401	401	11	8	9	10
4	4	102	2	3	4	5	4	5	9	8	10	4	13	2	7	401	401	11	8	9	10
5	5	102	2	3	4	5	4	5	9	8	10	19	21	18	20	TBS	TBS	11	8	9	10
6	6	099	5	6	6	7	6	7	12	4	14	17	16	14	15	403	403	16	15	18	14
7	7	099	5	6	6	7	6	7	12	4	14	17	16	14	15	403	403	16	15	18	14
8	8	099	5	6	6	7	6	7	12	4	14	17	16	14	15	403	403	16	15	18	14
9	9	102	2	3	4	5	4	5	9	8	10	19	24	18	20	401	401	11	8	9	10
10	41B	099	5	6	6	7	6	7	12	4	14	17	16	14	15	403	403	16	15	18	14
11	41C	099	5	6	6	7	6	7	12	4	14	17	16	14	15	403	403	16	15	18	22
12	41D	103	4	8	9	10	8	2	11	15	13	10	25	6	22	404	505	19	21	20	23
13	41G	099	5	6	6	7	6	7	12	4	14	17	16	14	15	403	403	16	15	18	22
14	51A	103	4	8	9	10	8	2	11	15	13	10	25	6	22	404	505	19	21	20	23
15	51C	103	4	8	9	10	8	2	11	15	13	10	21	6	22	404	505	19	21	20	23
16	51D	103	4	8	9	10	8	2	11	15	13	10	21	6	22	404	505	19	21	20	23
17	51B	099	5	6	6	7	6	7	12	4	14	17	16	14	23	403	403	16	15	18	22
18	51G	103	8	4	10	9	8	2	11	15	13	10	21	6	22	404	505	19	21	20	23
19	51F	099	5	6	6	7	6	7	12	4	14	17	16	14	23	403	404	16	15	18	22
20	51I	103	8	4	10	9	8	2	11	15	13	10	21	6	22	404	505	19	21	20	23
21	51J	104	9	10	1	11	10	11	17	18	16	13	04	2	7	405	403	27	25	26	17
22	61A	099	5	6	6	7	6	7	12	4	14	17	16	14	23	403	404	16	15	18	22
23	61B	104	9	10	1	11	10	11	17	18	16	13	4	2	7	405	403	27	25	26	17
24	61C	102	2	3	5	4	5	4	9	8	10	19	24	18	20	401	406	11	8	9	10
25	51L	099	5	6	6	7	6	7	12	4	14	17	16	14	26	403	404	16	15	18	22
26	26	103	8	4	10	9	8	2	11	15	13	10	21	6	22	404	505	19	21	20	23
27	27	104	9	10	1	11	10	11	17	18	16	13	04	2	7	405	403	27	25	26	17
28	29	103	8	4	10	9	8	2	11	15	13	10	21	6	22	404	505	19	20	21	23
29	30	104	9	10	1	11	10	11	17	18	16	13	4	2	7	405	403	27	25	14	17
30	28	102	2	7	4	12	4	5	9	8	10	19	24	18	20	406	405	11	8	9	10
31	34	104	9	10	1	11	10	11	17	18	16	13	4	2	7	403	406	27	25	14	17
32	33	103	8	4	10	9	8	2	11	15	13	10	21	6	22	405	403	19	21	20	23
33	32	102	2	7	4	12	4	5	9	8	10	19	24	18	20	406	405	11	8	9	10
34	36	104	9	10	1	11	10	11	17	18	16	13	4	2	7	403	406	27	25	14	17
35	31	103	8	4	10	9	8	2	11	15	13	10	21	6	22	405	403	19	21	20	23

ORBITER AVIONICS GUIDANCE, NAVIGATION, AND CONTROL
COMPONENT S/N - LOCATION MATRIX

MSN SEQ NO.	STS NO.	ORB OV-	OMS PODS		OMS CONTROLLER				OMS ACTUATOR				MPS ACTUATORS						ELEVON SERVO ACTUATORS			
					LH		RH		LH		RH		ME1		ME2		ME3					
			LH	RH	PRI	SEC	PRI	SEC	PIT	YAW	PIT	YAW	PIT	YAW	PIT	YAW	PIT	YAW	LI	LO	RI	RO
1	1	102	LV01	RV01	110	109	106	107	1104	3109	1103	3108	2602	2803	2701	2801	2709	2810	1702	1802	1703	1901
2	2	102	LV01	RV01	110	109	106	107	1104	3109	1112	3108	2602	2803	2701	2801	2709	2810	1702	1802	1703	1901
3	3	102	LV01	RV01	110	109	106	107	1104	3109	1114	3108	2602	2803	2701	2801	2709	2810	1702	1802	1703	1901
4	4	102	LV01	RV01	110	109	106	107	1104	3109	1114	3108	2602	2803	2701	2801	2709	2810	1702	1802	1703	1901
5	5	102	LV01	RV01	110	109	106	107	1104	3109	1114	3108	2602	2803	2701	2801	2709	2810	1702	1802	1703	1901
6	6	099	LP01	RP01	111	117	122	114	1111	3120	1113	3119	1703	1906	1804	1905	1803	1907	1707	1803	1706	1904
7	7	099	LP01	RP01	111	124	122	114	1111	3120	1113	3119	1703	1906	1804	1905	1803	1907	1707	1803	1706	1904
8	8	099	LP01	RP01	111	124	122	114	1111	3120	1113	3119	1703	1906	1804	1905	1803	1907	1707	1803	1706	1904
9	9	102	LV01	RV01	110	109	106	107	1112	3125	1114	3118	2602	2803	2701	2801	2709	2810	1702	1802	1703	1901
10	41B	099	LP01	RP01	111	124	122	114	1111	3120	1113	3119	1703	1906	1804	1905	1803	1907	1707	1803	1706	1904
11	41C	099	LP03	RP01	120	119	122	114	1116	3122	1113	3119	1703	1906	1804	1905	1803	1907	1707	1803	1706	1904
12	41D	103	LP03	RP03	120	119	116	113	1113	3122	1115	3121	2604	2808	2705	2809	2706	2802	1709	1804	1712	1905
13	41G	099	LP01	RP01	111	124	122	114	1111	3120	1104	3119	1703	1906	1804	1905	1803	1907	1709	1804	1712	1905
14	51A	103	LP03	RP03	120	119	116	113	1113	3122	1115	3121	2604	2808	2705	2809	2706	2802	1707	1803	1706	1904
15	51C	103	LP03	RP03	120	119	116	113	1113	3122	1115	3121	2604	2808	2705	2809	2706	2802	1709	1804	1708	1905
16	51D	103	LP03	RP03	120	119	116	113	1113	3122	1115	3121	2604	2808	2705	2809	2706	2802	1709	1804	1712	1905
17	51B	099	LP01	RP04	111	124	112	121	1111	3120	1123	3117	1703	1906	1804	1905	1803	1907	1707	1803	1706	1904
18	51G	103	LP04	RP03	115	118	116	113	1125	3129	1115	3121	2604	2808	2705	2809	2706	2802	1709	1804	1712	1905
19	51F	099	LP01	RP04	111	124	112	121	1111	3120	1123	3117	1703	1906	1804	1905	1803	1907	1707	1803	1706	1904
20	51I	103	LP04	RP03	115	118	116	113	1125	3129	1115	3121	2604	2808	2705	2809	2706	2802	1709	1804	1712	1905
21	51J	104	LP03	RP01	120	119	122	117	1113	3122	1104	3119	2605	2814	2708	2812	2707	2811	1710	1805	1711	1906
22	61A	099	LP01	RP03	111	124	116	113	1111	3120	1115	3121	1703	1906	1804	1905	2702	1907	1707	1803	1706	1904
23	61B	104	LP03	RP01	120	119	122	117	1113	3122	1104	3119	2605	2814	2708	2812	2707	2811	1710	1805	1711	1906
24	61C	102	LP04	RP04	115	118	123	121	1125	3129	1123	3117	2602	2803	2701	2801	2709	2810	1702	1802	1703	1901
25	51L	099	LP01	RP01	113	106	109	114	1112	3108	1126	3128	1703	1906	1804	1905	2702	1907	1707	1803	1706	1904
26	26	103	LP04	RP03	107	118	116	115	0125	0129	0115	0121	2604	2808	2703	2809	2706	2802	1709	1804	1712	1907
27	27	104	LP01	RP01	126	111	110	117	0111	0120	0114	0119	2605	2814	2708	2812	2707	2811	1710	1802	1711	1906
28	29	103	LP04	RP03	107	118	116	115	0125	0129	0115	0121	2604	2808	2703	2813	2706	2802	1709	1804	1712	1907
29	30	104	LP01	RP01	126	111	110	117	0111	0120	0114	0119	2605	2814	2708	2812	2707	2811	1710	1802	1711	1906
30	28	102	LP04	RP04	115	118	123	121	1125	3129	1123	3117	2602	2803	2701	2801	2709	2810	1702	1802	1703	1901
31	34	104	LP01	RP01	126	111	110	117	0111	0120	0114	0119	2605	2814	2708	2812	2707	2811	1710	1802	1711	1906
32	33	103	LP04	RP03	107	118	116	115	0125	0129	0115	0121	2604	2808	2703	2813	2706	2802	1709	1804	1712	1907
33	32	102	LP04	RP04	115	118	123	121	1125	3129	1123	3117	2602	2803	2703	2801	2707	2810	1702	1802	1703	1901
34	36	104	LP01	RP01	126	111	110	117	0111	0120	0114	0119	2605	2814	2708	2812	2707	2811	1710	1802	1711	1906
35	31	103	LP04	RP03	107	118	116	115	0125	0129	0115	0121	2604	2808	2703	2813	2706	2802	1709	1804	1712	1907

LV01 = E112; ORIGINALLY DELIVERED WITH OV102
LP01 = E111; ORIGINALLY DELIVERED WITH OV099
LP03 = E113; ORIGINALLY DELIVERED WITH OV103
LP04 = E114; ORIGINALLY DELIVERED WITH OV104
LP05 = E115; TO BE DELIVERED WITH OV105

RV01 = E122; ORIGINALLY DELIVERED WITH OV102
RP01 = E121; ORIGINALLY DELIVERED WITH OV099
RP03 = E123; ORIGINALLY DELIVERED WITH OV103
RP04 = E124; ORIGINALLY DELIVERED WITH OV104
RP05 = E125; TO BE DELIVERED WITH OV105

MISS SEQ	STS	ORB	SUBSYSTEM	LRU NOMENCLATURE	PART NUMBER	DASH NUMBER	SERIAL NUMBER	SLOT	STAT
36	STS-41	OV103	GNC	ACCELEROMETER ASSEMBLY	MC621-0043	-2043	0000000019	1	F
36	STS-41	OV103	GNC	ACCELEROMETER ASSEMBLY	MC621-0043	-2043	0000000020	2	F
36	STS-41	OV103	GNC	ACCELEROMETER ASSEMBLY	MC621-0043	-2043	0000000022	3	F
36	STS-41	OV103	GNC	ACCELEROMETER ASSEMBLY	MC621-0043	-2043	0000000021	4	F
37	STS-38	OV104	GNC	ACCELEROMETER ASSEMBLY	MC621-0043	-2043	0000000009	1	F
37	STS-38	OV104	GNC	ACCELEROMETER ASSEMBLY	MC621-0043	-2043	0000000013	2	F
37	STS-38	OV104	GNC	ACCELEROMETER ASSEMBLY	MC621-0043	-2043	0000000025	3	F
37	STS-38	OV104	GNC	ACCELEROMETER ASSEMBLY	MC621-0043	-2043	0000000012	4	F
38	STS-35	OV102	GNC	ACCELEROMETER ASSEMBLY	MC621-0043	-2043	0000000023	1	F
38	STS-35	OV102	GNC	ACCELEROMETER ASSEMBLY	MC621-0043	-2043	0000000006	2	F
38	STS-35	OV102	GNC	ACCELEROMETER ASSEMBLY	MC621-0043	-2043	0000000011	3	F
38	STS-35	OV102	GNC	ACCELEROMETER ASSEMBLY	MC621-0043	-2043	0000000007	4	F
36	STS-41	OV103	GNC	AIR DATA PROBE	MC432-0206	-0005	0004274663	L	F
36	STS-41	OV103	GNC	AIR DATA PROBE	MC432-0206	-0005	0004274667	R	F
37	STS-38	OV104	GNC	AIR DATA PROBE	MC432-0206	-0005	0004274662	L	F
37	STS-38	OV104	GNC	AIR DATA PROBE	MC432-0206	-0005	0004274664	R	F
38	STS-35	OV102	GNC	AIR DATA PROBE	MC432-0206	-0005	0004274661	L	F
38	STS-35	OV102	GNC	AIR DATA PROBE	MC432-0206	-0005	0004274626	R	F
36	STS-41	OV103	GNC	AIR DATA TRANSDUCER ASSEMBLY	MC409-0011	-0006	0000318009	1	F
36	STS-41	OV103	GNC	AIR DATA TRANSDUCER ASSEMBLY	MC409-0011	-0006	0000318012	2	F
36	STS-41	OV103	GNC	AIR DATA TRANSDUCER ASSEMBLY	MC409-0011	-0006	0000318007	3	F
36	STS-41	OV103	GNC	AIR DATA TRANSDUCER ASSEMBLY	MC409-0011	-0006	0000067414	4	F
37	STS-38	OV104	GNC	AIR DATA TRANSDUCER ASSEMBLY	MC409-0011	-0006	0000318005	1	F
37	STS-38	OV104	GNC	AIR DATA TRANSDUCER ASSEMBLY	MC409-0011	-0006	0000067412	2	F
37	STS-38	OV104	GNC	AIR DATA TRANSDUCER ASSEMBLY	MC409-0011	-0006	0000000631	3	F
37	STS-38	OV104	GNC	AIR DATA TRANSDUCER ASSEMBLY	MC409-0011	-0006	0000067404	4	F
38	STS-35	OV102	GNC	AIR DATA TRANSDUCER ASSEMBLY	MC409-0011	-0006	0000067411	1	F
38	STS-35	OV102	GNC	AIR DATA TRANSDUCER ASSEMBLY	MC409-0011	-0006	0000318008	2	F
38	STS-35	OV102	GNC	AIR DATA TRANSDUCER ASSEMBLY	MC409-0011	-0006	0000318011	3	F
38	STS-35	OV102	GNC	AIR DATA TRANSDUCER ASSEMBLY	MC409-0011	-0006	0000067405	4	F
36	STS-41	OV103	GNC	AERO SURFACE SERVO AMP	MC621-0043	-6046	0000000029	1	F
36	STS-41	OV103	GNC	AERO SURFACE SERVO AMP	MC621-0043	-6046	0000000018	2	F
36	STS-41	OV103	GNC	AERO SURFACE SERVO AMP	MC621-0043	-6046	0000000028	3	F
36	STS-41	OV103	GNC	AERO SURFACE SERVO AMP	MC621-0043	-6046	0000000019	4	F
37	STS-38	OV104	GNC	AERO SURFACE SERVO AMP	MC621-0043	-6046	0000000031	1	F
37	STS-38	OV104	GNC	AERO SURFACE SERVO AMP	MC621-0043	-6046	0000000011	2	F
37	STS-38	OV104	GNC	AERO SURFACE SERVO AMP	MC621-0043	-6046	0000000012	3	F
37	STS-38	OV104	GNC	AERO SURFACE SERVO AMP	MC621-0043	-6046	0000000014	4	F
38	STS-35	OV102	GNC	AERO SURFACE SERVO AMP	MC621-0043	-6046	0000000020	1	F
38	STS-35	OV102	GNC	AERO SURFACE SERVO AMP	MC621-0043	-6046	0000000021	2	F
38	STS-35	OV102	GNC	AERO SURFACE SERVO AMP	MC621-0043	-6046	0000000022	3	F
38	STS-35	OV102	GNC	AERO SURFACE SERVO AMP	MC621-0043	-6046	0000000030	4	F
36	STS-41	OV103	GNC	ASCENT THRUST VECTOR CONTROL	MC621-0043	-6541	0000000019	1	F
36	STS-41	OV103	GNC	ASCENT THRUST VECTOR CONTROL	MC621-0043	-6541	0000000021	2	F
36	STS-41	OV103	GNC	ASCENT THRUST VECTOR CONTROL	MC621-0043	-6541	0000000020	3	F
36	STS-41	OV103	GNC	ASCENT THRUST VECTOR CONTROL	MC621-0043	-6541	0000000023	4	F
37	STS-38	OV104	GNC	ASCENT THRUST VECTOR CONTROL	MC621-0043	-6541	0000000027	1	F
37	STS-38	OV104	GNC	ASCENT THRUST VECTOR CONTROL	MC621-0043	-6541	0000000025	2	F
37	STS-38	OV104	GNC	ASCENT THRUST VECTOR CONTROL	MC621-0043	-6541	0000000014	3	F
37	STS-38	OV104	GNC	ASCENT THRUST VECTOR CONTROL	MC621-0043	-6541	0000000017	4	F
38	STS-35	OV102	GNC	ASCENT THRUST VECTOR CONTROL	MC621-0043	-6541	0000000011	1	F
38	STS-35	OV102	GNC	ASCENT THRUST VECTOR CONTROL	MC621-0043	-6541	0000000008	2	F
38	STS-35	OV102	GNC	ASCENT THRUST VECTOR CONTROL	MC621-0043	-6541	0000000009	3	F
38	STS-35	OV102	GNC	ASCENT THRUST VECTOR CONTROL	MC621-0043	-6541	0000000010	4	F

MISS SEQ	STS	ORB	SUBSYSTEM	LRU NOMENCLATURE	PART NUMBER	DASH NUMBER	SERIAL NUMBER	SLOT	STAT
36	STS-41	OV103	GNC	BODY FLAP ACTUATION	MC621-0056	-0016	0000000306		F
36	STS-41	OV103	GNC	BODY FLAP ACTUATION	MC621-0056	-0019	0000000306		F
36	STS-41	OV103	GNC	BODY FLAP ACTUATION	MC621-0056	-0017	0000000313		F
36	STS-41	OV103	GNC	BODY FLAP ACTUATION	MC621-0056	-0017	0000000314		F
36	STS-41	OV103	GNC	BODY FLAP ACTUATION	MC621-0056	-0073	0000000403		F
36	STS-41	OV103	GNC	BODY FLAP ACTUATION	MC621-0056	-0024	0000000402	LIB	F
36	STS-41	OV103	GNC	BODY FLAP ACTUATION	MC621-0056	-0022	0000000407	LOB	F
36	STS-41	OV103	GNC	BODY FLAP ACTUATION	MC621-0056	-0021	0000000403	RIB	F
36	STS-41	OV103	GNC	BODY FLAP ACTUATION	MC621-0056	-0022	0000000408	ROB	F
37	STS-38	OV104	GNC	BODY FLAP ACTUATION	MC621-0056	-0016	0000000308		F
37	STS-38	OV104	GNC	BODY FLAP ACTUATION	MC621-0056	-0019	0000000308		F
37	STS-38	OV104	GNC	BODY FLAP ACTUATION	MC621-0056	-0017	0000000315		F
37	STS-38	OV104	GNC	BODY FLAP ACTUATION	MC621-0056	-0017	0000000316		F
37	STS-38	OV104	GNC	BODY FLAP ACTUATION	MC621-0056	-0073	0000000406		F
37	STS-38	OV104	GNC	BODY FLAP ACTUATION	MC621-0056	-0024	0000000303	LIB	F
37	STS-38	OV104	GNC	BODY FLAP ACTUATION	MC621-0056	-0022	0000000402	LOB	F
37	STS-38	OV104	GNC	BODY FLAP ACTUATION	MC621-0056	-0021	0000000404	RIB	F
37	STS-38	OV104	GNC	BODY FLAP ACTUATION	MC621-0056	-0022	0000000409	ROB	F
38	STS-35	OV102	GNC	BODY FLAP ACTUATION	MC621-0056	-0019	0000000307		F
38	STS-35	OV102	GNC	BODY FLAP ACTUATION	MC621-0056	-0016	0000000307		F
38	STS-35	OV102	GNC	BODY FLAP ACTUATION	MC621-0056	-0017	0000000311		F
38	STS-35	OV102	GNC	BODY FLAP ACTUATION	MC621-0056	-0017	0000000312		F
38	STS-35	OV102	GNC	BODY FLAP ACTUATION	MC621-0056	-0083	0000000405		F
38	STS-35	OV102	GNC	BODY FLAP ACTUATION	MC621-0056	-0024	0000000403	LIB	F
38	STS-35	OV102	GNC	BODY FLAP ACTUATION	MC621-0056	-0022	0000000410	LOB	F
38	STS-35	OV102	GNC	BODY FLAP ACTUATION	MC621-0056	-0011	0000000401	RIB	F
38	STS-35	OV102	GNC	BODY FLAP ACTUATION	MC621-0056	-0022	0000000404	ROB	F
36	STS-41	OV103	GNC	ELEVON ACTUATORS	MC621-0014	-0017	0000000009	LIB	F
36	STS-41	OV103	GNC	ELEVON ACTUATORS	MC621-0014	-0018	0000000004	LOB	F
36	STS-41	OV103	GNC	ELEVON ACTUATORS	MC621-0014	-0017	0000000012	RIB	F
36	STS-41	OV103	GNC	ELEVON ACTUATORS	MC621-0014	-0019	0000000007	ROB	F
37	STS-38	OV104	GNC	ELEVON ACTUATORS	MC621-0014	-0017	0000000010	LIB	F
37	STS-38	OV104	GNC	ELEVON ACTUATORS	MC621-0014	-0018	0000000002	LOB	F
37	STS-38	OV104	GNC	ELEVON ACTUATORS	MC621-0014	-0017	0000000008	RIB	F
37	STS-38	OV104	GNC	ELEVON ACTUATORS	MC621-0014	-0019	0000000006	ROB	F
38	STS-35	OV102	GNC	ELEVON ACTUATORS	MC621-0014	-0017	0000000002	LIB	F
38	STS-35	OV102	GNC	ELEVON ACTUATORS	MC621-0014	-0018	0000000006	LOB	F
38	STS-35	OV102	GNC	ELEVON ACTUATORS	MC621-0014	-0017	0000000003	RIB	F
38	STS-35	OV102	GNC	ELEVON ACTUATORS	MC621-0014	-0019	0000000001	ROB	F
36	STS-41	OV103	GNC	INERTIAL MEASUREMENT UNIT	MC409-0004	-0010	0000000010	1	F
36	STS-41	OV103	GNC	INERTIAL MEASUREMENT UNIT	MC409-0004	-0010	0000000005	2	F
36	STS-41	OV103	GNC	INERTIAL MEASUREMENT UNIT	MC409-0004	-0010	0000000020	3	F
37	STS-38	OV104	GNC	INERTIAL MEASUREMENT UNIT	MC409-0004	-0010	0000000014	1	F
37	STS-38	OV104	GNC	INERTIAL MEASUREMENT UNIT	MC409-0004	-0010	0000000009	2	F
37	STS-38	OV104	GNC	INERTIAL MEASUREMENT UNIT	MC409-0004	-0010	0000000012	3	F
38	STS-35	OV102	GNC	INERTIAL MEASUREMENT UNIT	MC409-0004	-0010	0000000025	1	F
38	STS-35	OV102	GNC	INERTIAL MEASUREMENT UNIT	MC409-0004	-0010	0000000023	2	F
38	STS-35	OV102	GNC	INERTIAL MEASUREMENT UNIT	MC409-0004	-0010	0000000016	3	F
36	STS-41	OV103	GNC	MAIN ENGINE ACTUATORS	MC621-0015	-0026	0000000004	1P	F
36	STS-41	OV103	GNC	MAIN ENGINE ACTUATORS	MC621-0015	-0028	0000000008	1Y	F
36	STS-41	OV103	GNC	MAIN ENGINE ACTUATORS	MC621-0015	-0027	0000000003	2P	F
36	STS-41	OV103	GNC	MAIN ENGINE ACTUATORS	MC621-0015	-0028	0000000013	2Y	F
36	STS-41	OV103	GNC	MAIN ENGINE ACTUATORS	MC621-0015	-0027	0000000006	3P	F
36	STS-41	OV103	GNC	MAIN ENGINE ACTUATORS	MC621-0015	-0028	0000000002	3Y	F
37	STS-38	OV104	GNC	MAIN ENGINE ACTUATORS	MC621-0015	-0026	0000000005	1P	F

MISS SEQ	STS	ORB	SUBSYSTEM	LRU NOMENCLATURE	PART NUMBER	DASH NUMBER	SERIAL NUMBER	SLOT	STAT
37	STS-38	OV104	GNC	MAIN ENGINE ACTUATORS	MC621-0015	-0028	0000000014	1Y	F
37	STS-38	OV104	GNC	MAIN ENGINE ACTUATROS	MC621-0015	-0027	0000000008	2P	F
37	STS-38	OV104	GNC	MAIN ENGINE ACTUATORS	MC621-0015	-0028	0000000012	2Y	F
37	STS-38	OV104	GNC	MAIN ENGINE ACTUATORS	MC621-0015	-0027	0000000007	3P	F
37	STS-38	OV104	GNC	MAIN ENGINE ACTUATORS	MC621-0015	-0028	0000000011	3Y	F
38	STS-35	OV102	GNC	MAIN ENGINE ACTUATORS	MC621-0015	-0026	0000000002	1P	F
38	STS-35	OV102	GNC	MAIN ENGINE ACTUATORS	MC621-0015	-0028	0000000003	1Y	F
38	STS-35	OV102	GNC	MAIN ENGINE ACTUATORS	MC621-0015	-0027	0000000001	2P	F
38	STS-35	OV102	GNC	MAIN ENGINE ACTUATORS	MC621-0015	-0028	0000000001	2Y	F
38	STS-35	OV102	GNC	MAIN ENGINE ACTUATORS	MC621-0015	-0027	0000000009	3P	F
38	STS-35	OV102	GNC	MAIN ENGINE ACTUATORS	MC621-0015	-0028	0000000010	3Y	F
36	STS-41	OV103	GNC	NOSEWHEEL STEERING ASSY-ACTUATOR	MC621-0058	-0010	9643000005		F
37	STS-38	OV104	GNC	NOSEWHEEL STEERING ASSY-ACTUATOR	MC621-0058	-0017	9643000006		F
38	STS-35	OV102	GNC	NOSEWHEEL STEERING ASSY-ACTUATOR	MC621-0058	-0010	9643000003		F
36	STS-41	OV103	GNC	NOSEWHEEL STEERING ASSY-DIRECT TRANSDUCER	MC621-0058	-0014	9643001004		F
37	STS-38	OV104	GNC	NOSEWHEEL STEERING ASSY-DIRECT TRANSDUCER	MC621-0058	-0014	9643001003		F
38	STS-35	OV102	GNC	NOSEWHEEL STEERING ASSY-DIRECT TRANSDUCER	MC621-0058	-0014	9643001002		F
36	STS-41	OV103	GNC	NOSEWHEEL STEERING ASSY-STEERING CONTROL BOX	MC621-0058	-0015	9643000003		F
37	STS-38	OV104	GNC	NOSEWHEEL STEERING ASSY-STEERING CONTROL BOX	MC621-0058	-0015	9643000006		F
38	STS-35	OV102	GNC	NOSEWHEEL STEERING ASSY-STEERING CONTROL BOX	MC621-0058	-0015	9643000004		F
36	STS-41	OV103	GNC	RATE GYRO ASSY-ORBITER	MC493-0015	-0011	0000000023	1	F
36	STS-41	OV103	GNC	RATE GYRO ASSY-ORBITER	MC493-0015	-0011	0000000031	2	F
36	STS-41	OV103	GNC	RATE GYRO ASSY-ORBITER	MC493-0015	-0011	0000000024	3	F
36	STS-41	OV103	GNC	RATE GYRO ASSY-ORBITER	MC493-0015	-0011	0000000022	4	F
37	STS-38	OV104	GNC	RATE GYRO ASSY-ORBITER	MC493-0015	-0011	0000000027	1	F
37	STS-38	OV104	GNC	RATE GYRO ASSY-ORBITER	MC493-0015	-0011	0000000032	2	F
37	STS-38	OV104	GNC	RATE GYRO ASSY-ORBITER	MC493-0015	-0011	0000000029	3	F
37	STS-38	OV104	GNC	RATE GYRO ASSY-ORBITER	MC493-0015	-0011	0000000028	4	F
38	STS-35	OV102	GNC	RATE GYRO ASSY-ORBITER	MC493-0015	-0010	0000000014	1	F
38	STS-35	OV102	GNC	RATE GYRO ASSY-ORBITER	MC493-0015	-0010	0000000015	2	F
38	STS-35	OV102	GNC	RATE GYRO ASSY-ORBITER	MC493-0015	-0010	0000000016	3	F
38	STS-35	OV102	GNC	RATE GYRO ASSY-ORBITER	MC493-0015	-0010	0000000017	4	F
37	STS-38	OV104	GNC	RATE GYRO ASSY SRB	MC493-0015	-0105	0000000116	1	F
37	STS-38	OV104	GNC	RATE GYRO ASSY SRB	MC493-0015	-0105	0000000123	2	F
37	STS-38	OV104	GNC	RATE GYRO ASSY SRB	MC493-0015	-0105	0000000118	3	F
37	STS-38	OV104	GNC	RATE GYRO ASSY SRB	MC493-0015	-0105	0000000119	4	F
36	STS-41	OV103	GNC	RATE GYRO ASSY SRB	MC493-0015	-0105	0000000065	1	F
36	STS-41	OV103	GNC	RATE GYRO ASSY SRB	MC493-0015	-0105	0000000066	2	F
36	STS-41	OV103	GNC	RATE GYRO ASSY SRB	MC493-0015	-0105	0000000057	3	F
36	STS-41	OV103	GNC	RATE GYRO ASSY SRB	MC493-0015	-0105	0000000083	4	F
38	STS-35	OV102	GNC	RATE GYRO ASSY SRB	MC493-0015	-0105	0000000088	1	F
38	STS-35	OV102	GNC	RATE GYRO ASSY SRB	MC493-0015	-0105	0000000113	2	F
38	STS-35	OV102	GNC	RATE GYRO ASSY SRB	MC493-0015	-0105	0000000114	3	F
38	STS-35	OV102	GNC	RATE GYRO ASSY SRB	MC493-0015	-0105	0000000115	4	F
36	STS-41	OV103	GNC	ROTATION HAND CONTROL	MC621-0043	-3047	0000000011	1	F
36	STS-41	OV103	GNC	ROTATION HAND CONTROL	MC621-0043	-3047	0000000009	2	F
36	STS-41	OV103	GNC	ROTATION HAND CONTROL	MC621-0043	-3047	0000000015	3	F
37	STS-38	OV104	GNC	ROTATION HAND CONTROL	MC621-0043	-3047	0000000002	1	F
37	STS-38	OV104	GNC	ROTATION HAND CONTROL	MC621-0043	-3047	0000000021	2	F
37	STS-38	OV104	GNC	ROTATION HAND CONTROL	MC621-0043	-3047	0000000012	3	F
38	STS-35	OV102	GNC	ROTATION HAND CONTROL	MC621-0043	-3047	0000000018	1	F
38	STS-35	OV102	GNC	ROTATION HAND CONTROL	MC621-0043	-3047	0000000013	2	F
38	STS-35	OV102	GNC	ROTATION HAND CONTROL	MC621-0043	-3047	0000000014	3	F
36	STS-41	OV103	GNC	AFT REACTION JET DRIVER	MC621-0043	-6344	0000000006	1	F

MIS SEQ	STS	ORB	SUBSYSTEM	LRU NOMENCLATURE					
36	STS-41	OV103	GNC	AFT REACTION JET DRIVER	MC621-0043	-6344	0000000022	2	F
37	STS-38	OV104	GNC	AFT REACTION JET DRIVER	MC621-0043	-6344	0000000002	1	F
37	STS-38	OV104	GNC	AFT REACTION JET DRIVER	MC621-0043	-6344	0000000007	2	F
38	STS-35	OV102	GNC	AFT REACTION JET DRIVER	MC621-0043	-6344	0000000018	1	F
38	STS-35	OV102	GNC	AFT REACTION JET DRIVER	MC621-0043	-6344	0000000020	2	F
36	STS-41	OV103	GNC	FWD REACTION JET DRIVER	MC621-0043	-6244	0000000010	1	F
36	STS-41	OV103	GNC	FWD REACTION JET DRIVER	MC621-0043	-6244	0000000021	2	F
37	STS-38	OV104	GNC	FWD REACTION JET DRIVER	MC621-0043	-6244	0000000013	1	F
37	STS-38	OV104	GNC	FWD REACTION JET DRIVER	MC621-0043	-6244	0000000004	2	F
38	STS-35	OV102	GNC	FWD REACTION JET DRIVER	MC621-0043	-6244	0000000019	1	F
38	STS-35	OV102	GNC	FWD REACTION JET DRIVER	MC621-0043	-6244	0000000024	2	F
36	STS-41	OV103	GNC	RUDDER SPEEDBRAKE ACTUATION	MC621-0053	-0014	0000000303		F
36	STS-41	OV103	GNC	RUDDER SPEEDBRAKE ACTUATION	MC621-0053	-0005	0000000305		F
36	STS-41	OV103	GNC	RUDDER SPEEDBRAKE ACTUATION	MC621-0053	-0003	0000000305		F
36	STS-41	OV103	GNC	RUDDER SPEEDBRAKE ACTUATION	MC621-0053	-0013	0000000305		F
36	STS-41	OV103	GNC	RUDDER SPEEDBRAKE ACTUATION	MC621-0053	-0006	0000000306		F
36	STS-41	OV103	GNC	RUDDER SPEEDBRAKE ACTUATION	MC621-0053	-0005	0000000306		F
36	STS-41	OV103	GNC	RUDDER SPEEDBRAKE ACTUATION	MC621-0053	-0007	0000000307		F
36	STS-41	OV103	GNC	RUDDER SPEEDBRAKE ACTUATION	MC621-0053	-0010	0000000310		F
36	STS-41	OV103	GNC	RUDDER SPEEDBRAKE ACTUATION	MC621-0053	-0010	0000000311		F
36	STS-41	OV103	GNC	RUDDER SPEEDBRAKE ACTUATION	MC621-0053	-0068	0000000405		F
36	STS-41	OV103	GNC	RUDDER SPEEDBRAKE ACTUATION	MC621-0053	-0049	0000000403	1	F
36	STS-41	OV103	GNC	RUDDER SPEEDBRAKE ACTUATION	MC621-0053	-0040	0000000403	2	F
36	STS-41	OV103	GNC	RUDDER SPEEDBRAKE ACTUATION	MC621-0053	-0041	0000000403	3	F
36	STS-41	OV103	GNC	RUDDER SPEEDBRAKE ACTUATION	MC621-0053	-0042	0000000403	4	F
37	STS-38	OV104	GNC	RUDDER SPEEDBRAKE ACTUATION	MC621-0053	-0014	0000000305		F
37	STS-38	OV104	GNC	RUDDER SPEEDBRAKE ACTUATION	MC621-0053	-0003	0000000306		F
37	STS-38	OV104	GNC	RUDDER SPEEDBRAKE ACTUATION	MC621-0053	-0013	0000000306		F
37	STS-38	OV104	GNC	RUDDER SPEEDBRAKE ACTUATION	MC621-0053	-0005	0000000307		F
37	STS-38	OV104	GNC	RUDDER SPEEDBRAKE ACTUATION	MC621-0053	-0007	0000000308		F
37	STS-38	OV104	GNC	RUDDER SPEEDBRAKE ACTUATION	MC621-0053	-0005	0000000308		F
37	STS-38	OV104	GNC	RUDDER SPEEDBRAKE ACTUATION	MC621-0053	-0007	0000000309		
37	STS-38	OV104	GNC	RUDDER SPEEDBRAKE ACTUATION	MC621-0053	-0010	0000000312		F
37	STS-38	OV104	GNC	RUDDER SPEEDBRAKE ACTUATION	MC621-0053	-0010	0000000313		F
37	STS-38	OV104	GNC	RUDDER SPEEDBRAKE ACTUATION	MC621-0053	-0068	0000000403		F
37	STS-38	OV104	GNC	RUDDER SPEEDBRAKE ACTUATION	MC621-0053	-0006	0000000404		F
37	STS-38	OV104	GNC	RUDDER SPEEDBRAKE ACTUATION	MC621-0053	-0049	0000000404	1	F
37	STS-38	OV104	GNC	RUDDER SPEEDBRAKE ACTUATION	MC621-0053	-0040	0000000404	2	F
37	STS-38	OV104	GNC	RUDDER SPEEDBRAKE ACTUATION	MC621-0053	-0041	0000000404	3	F
37	STS-38	OV104	GNC	RUDDER SPEEDBRAKE ACTUATION	MC621-0053	-0042	0000000404	4	F
38	STS-35	OV102	GNC	RUDDER SPEEDBRAKE ACTUATION	MC621-0053	-0005	0000000301		F
38	STS-35	OV102	GNC	RUDDER SPEEDBRAKE ACTUATION	MC621-0053	-0014	0000000301		F
38	STS-35	OV102	GNC	RUDDER SPEEDBRAKE ACTUATION	MC621-0053	-0003	0000000302		F
38	STS-35	OV102	GNC	RUDDER SPEEDBRAKE ACTUATION	MC621-0053	-0007	0000000302		F
38	STS-35	OV102	GNC	RUDDER SPEEDBRAKE ACTUATION	MC621-0053	-0006	0000000302		F
38	STS-35	OV102	GNC	RUDDER SPEEDBRAKE ACTUATION	MC621-0053	-0005	0000000302		F
38	STS-35	OV102	GNC	RUDDER SPEEDBRAKE ACTUATION	MC621-0053	-0007	0000000303		F
38	STS-35	OV102	GNC	RUDDER SPEEDBRAKE ACTUATION	MC621-0053	-0013	0000000303		F
38	STS-35	OV102	GNC	RUDDER SPEEDBRAKE ACTUATION	MC621-0053	-0010	0000000304		F
38	STS-35	OV102	GNC	RUDDER SPEEDBRAKE ACTUATION	MC621-0053	-0010	0000000307		F
38	STS-35	OV102	GNC	RUDDER SPEEDBRAKE ACTUATION	MC621-0053	-0068	0000000406		F
38	STS-35	OV102	GNC	RUDDER SPEEDBRAKE ACTUATION	MC621-0053	-0051	0000000401	1	F
38	STS-35	OV102	GNC	RUDDER SPEEDBRAKE ACTUATION	MC621-0053	-0052	0000000401	2	F
38	STS-35	OV102	GNC	RUDDER SPEEDBRAKE ACTUATION	MC621-0053	-0055	0000000401	3	F
38	STS-35	OV102	GNC	RUDDER SPEEDBRAKE ACTUATION	MC621-0053	-0056	0000000401	4	F
36	STS-41	OV103	GNC	STEERING POSITION AMPLIFIER	MC621-0043	-3641	0000000007		F
37	STS-38	OV104	GNC	STEERING POSITION AMPLIFIER	MC621-0043	-3641	0000000006		F
38	STS-35	OV102	GNC	STEERING POSITION AMPLIFIER	MC621-0043	-3641	0000000005		F

MISS SEQ	STS	ORB	SUBSYSTEM	LRU NOMENCLATURE	PART NUMBER	DASH NUMBER	SERIAL NUMBER	SLOT	STAT
37	STS-38	OV104	GNC	STEERING POSITION TRANSDUCER	MC621-0043	-3740	0000000005		F
38	STS-35	OV102	GNC	STEERING POSITION TRANSDUCER	MC621-0043	-3740	0000000002		F
36	STS-41	OV103	GNC	STEERING POSITION TRANSDUCER	MC621-0043	-3740	0000000006		F
36	STS-41	OV103	GNC	STAR TRACKER UNIT	MC431-0128	-0013	0000000013	Y	F
36	STS-41	OV103	GNC	STAR TRACKER UNIT	MC431-0128	-0013	0000000009	Z	F
37	STS-38	OV104	GNC	STAR TRACKER UNIT	MC431-0128	-0013	0000000008	Y	F
37	STS-38	OV104	GNC	STAR TRACKER UNIT	MC431-0128	-0013	0000000011	Z	F
38	STS-35	OV102	GNC	STAR TRACKER UNIT	MC431-0128	-0012	0000000002	Y	F
38	STS-35	OV102	GNC	STAR TRACKER UNIT	MC431-0128	-0012	0000000006	Z	F
36	STS-41	OV103	GNC	STAR TRACKER UNIT LIGHT SHADE	MC431-0128	-0007	0000000007	Y	F
36	STS-41	OV103	GNC	STAR TRACKER UNIT LIGHT SHADE	MC431-0128	-0104	0000000006	Z	F
37	STS-38	OV104	GNC	STAR TRACKER UNIT LIGHT SHADE	MC431-0128	-0007	0000000006	Y	F
37	STS-38	OV104	GNC	STAR TRACKER UNIT LIGHT SHADE	MC431-0128	-0204	0000000005	Z	F
38	STS-35	OV102	GNC	STAR TRACKER UNIT LIGHT SHADE	MC431-0128	-0107	0000000005	Y	F
38	STS-35	OV102	GNC	STAR TRACKER UNIT LIGHT SHADE	MC431-0128	-0204	0000000004	Z	F
36	STS-41	OV103	GNC	STAR TRACKER UNIT PROTECTIVE WINDOW ASSY	MC431-0128	-0008	0000000005	Y	F
36	STS-41	OV103	GNC	STAR TRACKER UNIT PROTECTIVE WINDOW ASSY	MC431-0128	-0008	0000000009	Z	F
37	STS-38	OV104	GNC	STAR TRACKER UNIT PROTECTIVE WINDOW ASSY	MC431-0128	-0008	0000000003	Y	F
37	STS-38	OV104	GNC	STAR TRACKER UNIT PROTECTIVE WINDOW ASSY	MC431-0128	-0008	0000000002	Z	F
38	STS-35	OV102	GNC	STAR TRACKER UNIT PROTECTIVE WINDOW ASSY	MC431-0128	-0008	0000000006	Y	F
38	STS-35	OV102	GNC	STAR TRACKER UNIT PROTECTIVE WINDOW ASSY	MC431-0128	-0008	0000000008	Z	F

ORBITER AVIONICS COMMUNICATION & TRACKING SYSTEM
COMPONENT S/N - LOCATION MATRIX

MSN SEQ NO.	STS NO.	ORB OV-	S - BAND																			
			PL INT			PL SP		FMS	XPOND		SBCA	ANSA	PRE	PWR	FM	XM	SWITCH BEAM ANT				HEMI ANT		PAY-LOAD ANT.
			X	1	2	1	2		1	2					1	2	LL DAX	LR DAY	UL DBT	UR DBU	UPR DBM	LWR DBN	
1	1	102																					
2	2	102																					
3	3	102																					
4	4	102																					
5	5	102																					
6	6	099	9	303	305	304	307	304	305	302	7	304	304	304									
7	7	099	9	303	305	304	307	304	305	302	7	304	304	304									
8	8	099	9	303	305	304	307	304	305	302	7	304	304	304			0002	0002	0002	0003			
9	9	102		302	306	305	308	303	301	304		303	303	303	302	303	0001	0001	0001	0002			
10	41B	099	9	303	305	304	307	304	305	302	7	304	304	304			0004	0004	0004	0005			
11	41C	099	9	303	305	304	307	304	305	302	7	304	304	304			0004	0002	0004	0003			
12	41D	103	3	304	307	303	302	302	307	306	6	305	305	305	310	309	0003	0003	0003	0004			
13	41G	099	9	303	305	304	307	304	305	302	7	304	304	304			0002	0004	0002	0005			
14	51A	103	3	304	307	303	302	302	307	306	6	305	305	305	310	309	0003	0001	0001	0002			
15	51C	103	3	304	307	303	302	302	307	306	6	305	305	305	310	309	0003	0001	0001	0002			
16	51D	103	3	304	307	303	302	302	307	306	6	305	305	305	310	309	0003	0001	0001	0002	0004	0004	02005
17	51B	099	9	303	305	304	307	304	305	302	7	304	304	304			0002	0004	0002	0005	0002	0003	02003
18	51G	103	3	304	307	303	302	302	307	306	6	305	305	305	310	309	0003	0001	0001	0002	0004	0004	02005
19	51F	099	9	303	305	304	307	304	305	302	7	304	304	304			0002	0004	0002	0005	0002	0003	02003
20	51I	103	3	304	307	303	302	302	307	306	6	305	305	305	310	309	0003	0001	0001	0002	0004	0004	02005
21	51J	104		309	310	310	309		309	308	9	302	301		307	308	0004	0002	0004	0003	0003	0002	
22	61A	099	9	303	305	304	307	304	305	302	7	304	304	304			0002	0004	0002	0005	0002	0003	02003
23	61B	104		309	310	310	309		309	308	9	302	301		307	308	0004	0002	0004	0003	0003	0002	
24	61C	102		302	306	305	308	303	301	304		303	303	303	302	303							
25	51L	099	9	303	305	304	307	304	305	302	7	304	304	304			0002	0004	0002	0005	0002	0001	02003
26	26	103	3	304	307	306	303	302	307	306	11	305	305	303	310	309	0003	0003	0001	0004	0003	0003	03006
27	27	104		309	310	310	309	306	310	308	9	302	301	306	307	308	0004	0002	0004	0003	0004	0004	TBS
28	29	103	3	304	307	306	303	302	307	306	11	305	305	307	310	309	0003	0003	0001	0004	0003	0003	G0006
29	30	104		309	310	310	309	306	310	308	9	302	301	306	307	308	0004	0002	0004	0003	0003	0002	G0007
30	28	102	2	308	302	305	308	303	304	301	10	304	303	301	304	303	0005	0005	0005	0002	0001	0005	G0002
31	34	104	13	310	309	310	309	306	310	309	9	302	301	306	307	308	0004	0002	0004	0003	0003	0002	G0007
32	33	103	10	304	307	303	306	302	307	306	11	305	305	307	310	309	0003	0003	0001	0006	0004	0004	G0006
33	32	102	2	308	302	305	308	303	304	301	10	304	303	305	304	303	0005	0001	0005	0002	0001	0005	G0002
34	36	104	13	310	309	310	309	306	310	309	8	302		306	307	308	0004	0002	0003	0004	0003	0002	G0007
35	31	103	10	304	307	303	306	302	307	306	11	305	305	307	310	309	0003	0003	0001	0006	0004	0004	G0006

ORBITER AVIONICS COMMUNICATION & TRACKING SYSTEM
COMPONENT S/N - LOCATION MATRIX

MSN SEQ NO.	STS NO.	ORB OV-	KU - BAND								
			DA	EL AS		SPA	ACCU	NSP		EVAX	GCIL
				1	2			1	2		
1	1	102								1004	
2	2	102								1004	
3	3	102								1004	
4	4	102								1004	
5	5	102								1004	
6	6	099					5	306	305	1006	7
7	7	099	102	102	102	102	5	306	305	1006	7
8	8	099	102	102	102	102	5	306	305	1008	7
9	9	102	104	104	104	104		301	304	1009	8
10	41B	099	103	103	103	103	5	306	305	1008	7
11	41C	099	103	103	103	103	5	306	305	1008	7
12	41D	103	102	104	104	104				1007	
13	41G	099	103	105	103	103	5	306	305	1008	10
14	51A	103	102	104	104	104	7	308		1007	
15	51C	103	102	104	104	104	7	308		1007	
16	51D	103	102	104	104	104	7	308		1007	
17	51B	099	104	102	103	103	5	306	305	1008	10
18	51G	103	103	105	104	104	7	308		1007	4
19	51F	099	104	102	103	103	5	306	305	1008	7
20	51I	103	103	105	104	104	7	308	302	1007	4
21	51J	104	N/A	N/A	N/A	N/A		310	309	1004	5
22	61A	099	104	102	103	103	5	306	305	1008	7
23	61B	104	N/A	N/A	N/A	N/A				1004	
24	61C	102	102	103	102	102	2	301	304	1009	
25	51L	099	104	102	103	103	5	306	305	1008	7
26	26	103	105	105	104	104	7	302	308	1007	4
27	27	104	103	104	105	105	4	307	309	1004	10
28	29	103	102	106	104	104	7	302	308	1007	4
29	30	104	103	104	105	105	4	307	309	1004	10
30	28	102	105	103	102	102	2	301	304	1009	9
31	34	104	103	104	105	105	4	307	309	1004	10
32	33	103	106	106	104	104	7	302	308	1007	4
33	32	102	105	103	102	102	2	301	304	1009	9
34	36	104	103	104	105	105	4	307	309	1004	10
35	31	103	102	106	104	104	7	302	308	1007	4

MISS SEQ	STS	ORB	SUBSYSTEM	LRU NOMENCLATURE	PART NUMBER	DASH NUMBER	SERIAL NUMBER	SLOT	STAT
36	STS-41	OV103	CT	AUDIO CENTRAL CONTROL EQUIPMENT	MC409-0005	-0001	0000000007		F
37	STS-38	OV104	CT	AUDIO CENTRAL CONTROL EQUIPMENT	MC409-0005	-0001	0000000004		F
38	STS-35	OV102	CT	AUDIO CENTRAL CONTROL EQUIPMENT	MC409-0005	-0001	0000000002		F
36	STS-41	OV103	CT	ANTENNA, AIRLOCK	V075-730513	-004	0000J74328		F
37	STS-38	OV104	CT	ANTENNA, AIRLOCK	V075-730513	-004	0000BA8617		F
38	STS-35	OV102	CT	ANTENNA, AIRLOCK	V075-730513	-003	0000J54726		F
36	STS-41	OV103	CT	AUDIO TERM UNITS	MC409-0005	-0012	0000000019		F
36	STS-41	OV103	CT	AUDIO TERM UNITS	MC409-0005	-0012	0000000025		F
36	STS-41	OV103	CT	AUDIO TERM UNITS	MC409-0005	-0012	0000000026		F
36	STS-41	OV103	CT	AUDIO TERM UNITS	MC409-0005	-0012	0000000027		F
36	STS-41	OV103	CT	AUDIO TERM UNITS	MC409-0005	-0012	0000000028		F
36	STS-41	OV103	CT	AUDIO TERM UNITS	MC409-0005	-0012	0000000030		F
37	STS-38	OV104	CT	AUDIO TERM UNITS	MC409-0005	-0012	0000000037		F
37	STS-38	OV104	CT	AUDIO TERM UNITS	MC409-0005	-0012	0000000038		F
37	STS-38	OV104	CT	AUDIO TERM UNITS	MC409-0005	-0012	0000000039		F
37	STS-38	OV104	CT	AUDIO TERM UNITS	MC409-0005	-0012	0000000040		F
37	STS-38	OV104	CT	AUDIO TERM UNITS	MC409-0005	-0012	0000000041		F
37	STS-38	OV104	CT	AUDIO TERM UNITS	MC409-0005	-0012	0000000042		F
38	STS-35	OV102	CT	AUDIO TERM UNITS	MC409-0005	-0012	0000000001		F
38	STS-35	OV102	CT	AUDIO TERM UNITS	MC409-0005	-0012	0000000008		F
38	STS-35	OV102	CT	AUDIO TERM UNITS	MC409-0005	-0012	0000000010		F
38	STS-35	OV102	CT	AUDIO TERM UNITS	MC409-0005	-0012	0000000013		F
38	STS-35	OV102	CT	AUDIO TERM UNITS	MC409-0005	-0012	0000000014		F
38	STS-35	OV102	CT	AUDIO TERM UNITS	MC409-0005	-0012	0000000015		F
38	STS-35	OV102	CT	AUDIO TERM UNITS	MC409-0005	-0012	0000000016		F
38	STS-35	OV102	CT	AUDIO TERM UNITS	MC409-0005	-0012	0000000018		F
36	STS-41	OV103	CT	COMMUNICATION SECURITY	KGX-60	MOD1/3	0000000013	1	F
36	STS-41	OV103	CT	COMMUNICATION SECURITY	KGX-60	MOD1/3	0000000016	2	F
36	STS-41	OV103	CT	COMMUNICATION SECURITY	KGX-60	MOD1	0000000009	3	F
37	STS-38	OV104	CT	COMMUNICATION SECURITY	KGX-60	MOD1/3	0000000004	1	F
37	STS-38	OV104	CT	COMMUNICATION SECURITY	KGX-60	MOD1/3	0000000003	2	F
37	STS-38	OV104	CT	COMMUNICATION SECURITY	KGX-60	MOD1	0000000001	3	F
38	STS-35	OV102	CT	COMMUNICATION SECURITY	KGX-60	MOD1/3	0000000010	1	F
38	STS-35	OV102	CT	COMMUNICATION SECURITY	KGX-60	MOD1/3	0000000012	2	F
38	STS-35	OV102	CT	COMMUNICATION SECURITY	KGX-60	MOD1	0000000007	3	F
36	STS-41	OV103	CT	DEPLOYED ELEC ASSY	MC409-0025	-DEA	0000000103		F
37	STS-38	OV104	CT	DEPLOYED ELEC ASSY	MC409-0025	-DEA	0000000104		F
38	STS-35	OV102	CT	DEPLOYED ELEC ASSY	MC409-0025	-DEA	0000000106		F
36	STS-41	OV103	CT	S-BAND FM SIGNAL PROC.	MC478-0106	-3501	0000000302		F
37	STS-38	OV104	CT	S-BAND FM SIGNAL PROC.	MC478-0106	-3501	0000000306		F
38	STS-35	OV102	CT	S-BAND FM SIGNAL PROC.	MC478-0106	-3501	0000000303		F
36	STS-41	OV103	CT	S-BAND FM TRANSMITTER	MC478-0106	-3001	0000000310	1	F
36	STS-41	OV103	CT	S-BAND FM TRANSMITTER	MC478-0106	-3001	0000000309	2	F
37	STS-38	OV104	CT	S-BAND FM TRANSMITTER	MC478-0106	-3001	0000000307	1	F
37	STS-38	OV104	CT	S-BAND FM TRANSMITTER	MC478-0106	-3001	0000000308	2	F
38	STS-35	OV102	CT	S-BAND FM TRANSMITTER	MC478-0106	-3001	0000000302	1	F
38	STS-35	OV102	CT	S-BAND FM TRANSMITTER	MC478-0106	-3001	0000000303	2	F
36	STS-41	OV103	CT	ANTENNA, HEMI/GPS	MC481-0090	-0003	000DBN0004	L	F
36	STS-41	OV103	CT	ANTENNA, HEMI/GPS	MC481-0090	-0004	000DBM0004	U	F
37	STS-38	OV104	CT	ANTENNA, HEMI/GPS	MC481-0090	-0003	000DBN0002	L	F
37	STS-38	OV104	CT	ANTENNA, HEMI/GPS	MC481-0090	-0004	000DBM0003	U	F
38	STS-35	OV102	CT	ANTENNA, HEMI/GPS	MC481-0090	-0003	000DBN0005	L	F

MISS SEQ	STS	ORB	SUBSYSTEM	LRU NOMENCLATURE	PART NUMBER	DASH NUMBER	SERIAL NUMBER	SLOT	STAT
38	STS-35	OV102	CT	ANTENNA, HEMI/GPS	MC481-0090	-0004	000DBM0001	U	F
37	STS-38	OV104	CT	HDST I/F UNIT III	MC409-0005	-0045	0000000004		F
37	STS-38	OV104	CT	HDST I/F UNIT III	MC409-0005	-0045	0000000018		F
37	STS-38	OV104	CT	HDST I/F UNIT III	MC409-0005	-0045	0000000020		F
36	STS-41	OV103	CT	DEPLOYED ASSY	MC409-0025	-3008	0000000105		F
37	STS-38	OV104	CT	DEPLOYED ASSY	MC409-0025	-3006	0000000103		F
38	STS-35	OV102	CT	DEPLOYED ASSY	MC409-0025	-3008	0000000106		F
36	STS-41	OV103	CT	KU-BAND ELEC. ASSY-1 EA-1	MC409-0025	-1005	0000000106		F
37	STS-38	OV104	CT	KU-BAND ELEC. ASSY-1 EA-1	MC409-0025	-1005	0000000104		F
38	STS-35	OV102	CT	KU-BAND ELEC. ASSY-1 EA-1	MC409-0025	-1005	0000000103		F
36	STS-41	OV103	CT	ELECT ASSY-2 EA-2	MC409-0025	-2001	0000000104		F
37	STS-38	OV104	CT	ELECT ASSY-2 EA-2	MC409-0025	-2005	0000000105		F
38	STS-35	OV102	CT	ELECT ASSY-2 EA-2	MC409-0025	-2001	0000000102		F
36	STS-41	OV103	CT	SIGNAL PROCESSOR ASSY	MC409-0025	-4001	0000000104		F
37	STS-38	OV104	CT	SIGNAL PROCESSOR ASSY	MC409-0025	-4001	0000000105		F
38	STS-35	OV102	CT	SIGNAL PROCESSOR ASSY	MC409-0025	-4001	0000000102		F
36	STS-41	OV103	CT	MICROWAVE SCANNING BEAM DECODER ASSY	MC409-0017	-0008	0000000028	1	F
36	STS-41	OV103	CT	MICROWAVE SCANNING BEAM DECODER ASSY	MC409-0017	-0008	0000000008	2	F
36	STS-41	OV103	CT	MICROWAVE SCANNING BEAM DECODER ASSY	MC409-0017	-0008	0000000013	3	F
37	STS-38	OV104	CT	MICROWAVE SCANNING BEAM DECODER ASSY	MC409-0017	-0008	0000000019	1	F
37	STS-38	OV104	CT	MICROWAVE SCANNING BEAM DECODER ASSY	MC409-0017	-0008	0000000026	2	F
37	STS-38	OV104	CT	MICROWAVE SCANNING BEAM DECODER ASSY	MC409-0017	-0006	0000000023	3	F
38	STS-35	OV102	CT	MICROWAVE SCANNING BEAM DECODER ASSY	MC409-0017	-0008	0000000018	1	F
38	STS-35	OV102	CT	MICROWAVE SCANNING BEAM DECODER ASSY	MC409-0017	-0008	0000000017	2	F
38	STS-35	OV102	CT	MICROWAVE SCANNING BEAM DECODER ASSY	MC409-0017	-0008	0000000010	3	F
36	STS-41	OV103	CT	MICROWAVE SCAN BEAM LANDING SYSTEM ANTENNA	MC481-0067	-0001	0000000047	1	F
36	STS-41	OV103	CT	MICROWAVE SCAN BEAM LANDING SYSTEM ANTENNA	MC481-0067	-0001	0000000033	2	F
36	STS-41	OV103	CT	MICROWAVE SCAN BEAM LANDING SYSTEM ANTENNA	MC481-0067	-0001	0000000032	3	F
37	STS-38	OV104	CT	MICROWAVE SCAN BEAM LANDING SYSTEM ANTENNA	MC481-0067	-0001	0000000031	1	F
37	STS-38	OV104	CT	MICROWAVE SCAN BEAM LANDING SYSTEM ANTENNA	MC481-0067	-0001	0000000038	2	F
37	STS-38	OV104	CT	MICROWAVE SCAN BEAM LANDING SYSTEM ANTENNA	MC481-0067	-0001	0000000035	3	F
38	STS-35	OV102	CT	MICROWAVE SCAN BEAM LANDING SYSTEM ANTENNA	MC481-0067	-0001	0000000013	1	F
38	STS-35	OV102	CT	MICROWAVE SCAN BEAM LANDING SYSTEM ANTENNA	MC481-0067	-0001	0000000019	2	F
38	STS-35	OV102	CT	MICROWAVE SCAN BEAM LANDING SYSTEM ANTENNA	MC481-0067	-0001	0000000012	3	F
36	STS-41	OV103	CT	MICROWAVE SCANNING BEAM RF ASSY	MC409-0017	-0007	0000000006	1	F
36	STS-41	OV103	CT	MICROWAVE SCANNING BEAM RF ASSY	MC409-0017	-0007	0000000020	2	F
36	STS-41	OV103	CT	MICROWAVE SCANNING BEAM RF ASSY	MC409-0017	-0007	0000000027	3	F
37	STS-38	OV104	CT	MICROWAVE SCANNING BEAM RF ASSY	MC409-0017	-0007	0000000019	1	F
37	STS-38	OV104	CT	MICROWAVE SCANNING BEAM RF ASSY	MC409-0017	-0003	0000000026	2	F
37	STS-38	OV104	CT	MICROWAVE SCANNING BEAM RF ASSY	MC409-0017	-0007	0000000029	3	F
38	STS-35	OV102	CT	MICROWAVE SCANNING BEAM RF ASSY	MC409-0017	-0003	0000000023	1	F
38	STS-35	OV102	CT	MICROWAVE SCANNING BEAM RF ASSY	MC409-0017	-0003	0000000012	2	F
38	STS-35	OV102	CT	MICROWAVE SCANNING BEAM RF ASSY	MC409-0017	-0007	0000000022	3	F
36	STS-41	OV103	CT	NETWORK SIGNAL PROCESSOR	MC476-0137	-0004	0000000302	1	F
36	STS-41	OV103	CT	NETWORK SIGNAL PROCESSOR	MC476-0137	-0004	0000000308	2	F
37	STS-38	OV104	CT	NETWORK SIGNAL PROCESSOR	MC476-0137	-0004	0000000307	1	F
37	STS-38	OV104	CT	NETWORK SIGNAL PROCESSOR	MC476-0137	-0004	0000000309	2	F
38	STS-35	OV102	CT	NETWORK SIGNAL PROCESSOR	MC476-0137	-0004	0000000301	1	F
38	STS-35	OV102	CT	NETWORK SIGNAL PROCESSOR	MC476-0137	-0004	0000000304	2	F
36	STS-41	OV103	CT	ANTENNA, PAYLOAD	MC481-0071	-0002	000DAG0006		F

MISS SEQ	STS	ORB	SUBSYSTEM	LRU NOMENCLATURE	PART NUMBER	DASH NUMBER	SERIAL NUMBER	SLOT	STAT
37	STS-38	OV104	CT	ANTENNA, PAYLOAD	MC481-0071	-0002	000DAG0007		F
38	STS-35	OV102	CT	ANTENNA, PAYLOAD	MC481-0071	-0002	000DAG0002		F
36	STS-41	OV103	CT	PAYLOAD INTERROGRATOR	MC478-0105	-0001	0000000304	1	F
36	STS-41	OV103	CT	PAYLOAD INTERROGRATOR	MC478-0105	-0001	0000000307	2	F
37	STS-38	OV104	CT	PAYLOAD INTERROGRATOR	MC478-0105	-0001	0000000310	1	F
37	STS-38	OV104	CT	PAYLOAD INTERROGRATOR	MC478-0105	-0001	0000000309	2	F
38	STS-35	OV102	CT	PAYLOAD INTERROGRATOR	MC478-0105	-0001	0000000308	1	F
38	STS-35	OV102	CT	PAYLOAD INTERROGRATOR	MC478-0105	-0001	0000000302	2	F
36	STS-41	OV103	CT	S-BD PREAMPLIFIER ASSY	MC478-0106	-2001	0000000305		F
37	STS-38	OV104	CT	S-BD PREAMPLIFIER ASSY	MC478-0106	-2001	0000000301		F
38	STS-35	OV102	CT	S-BD PREAMPLIFIER ASSY	MC478-0106	-2001	0000000303		F
36	STS-41	OV103	CT	PAYLOAD SIGNAL PROCESSOR ASSY	MC476-0138	-0004	0000000303	1	F
36	STS-41	OV103	CT	PAYLOAD SIGNAL PROCESSOR ASSY	MC476-0138	-0004	0000000306	2	F
37	STS-38	OV104	CT	PAYLOAD SIGNAL PROCESSOR ASSY	MC476-0138	-0004	0000000310	1	F
37	STS-38	OV104	CT	PAYLOAD SIGNAL PROCESSOR ASSY	MC476-0138	-0004	0000000309	2	F
38	STS-35	OV102	CT	PAYLOAD SIGNAL PROCESSOR ASSY	MC476-0138	-0004	0000000305	1	F
38	STS-35	OV102	CT	PAYLOAD SIGNAL PROCESSOR ASSY	MC476-0138	-0004	0000000308	2	F
36	STS-41	OV103	CT	S-BD PWR-AMP	MC478-0106	-2501	0000000307		F
37	STS-38	OV104	CT	S-BD PWR-AMP	MC478-0106	-2501	0000000306		F
38	STS-35	OV102	CT	S-BD PWR-AMP	MC478-0106	-2501	0000000305		F
36	STS-41	OV103	CT	RADAR ALTIMETER	MC409-0015	-0005	0000000020	1	F
36	STS-41	OV103	CT	RADAR ALTIMETER	MC409-0015	-0005	0000000019	2	F
37	STS-38	OV104	CT	RADAR ALTIMETER	MC409-0015	-0005	0000000021	1	F
37	STS-38	OV104	CT	RADAR ALTIMETER	MC409-0015	-0005	0000000022	2	F
38	STS-35	OV102	CT	RADAR ALTIMETER	MC409-0015	-0005	0000000023	1	F
38	STS-35	OV102	CT	RADAR ALTIMETER	MC409-0015	-0005	0000000025	2	F
36	STS-41	OV103	CT	RADAR ANTENNAS, ALTIMETER	MC481-0072	-0005	0000000010	1	F
36	STS-41	OV103	CT	RADAR ANTENNAS, ALTIMETER	MC481-0072	-0005	0000000011	1	F
36	STS-41	OV103	CT	RADAR ANTENNAS, ALTIMETER	MC481-0072	-0006	0000000008	2	F
36	STS-41	OV103	CT	RADAR ANTENNAS, ALTIMETER	MC481-0072	-0006	0000000012	2	F
37	STS-38	OV104	CT	RADAR ANTENNAS, ALTIMETER	MC481-0072	-0005	0000000012	1	F
37	STS-38	OV104	CT	RADAR ANTENNAS, ALTIMETER	MC481-0072	-0005	0000000013	1	F
37	STS-38	OV104	CT	RADAR ANTENNAS, ALTIMETER	MC481-0072	-0006	0000000013	2	F
37	STS-38	OV104	CT	RADAR ANTENNAS, ALTIMETER	MC481-0072	-0006	0000000014	2	F
38	STS-35	OV102	CT	RADAR ANTENNAS, ALTIMETER	MC481-0072	-0003	0000000004	1	F
38	STS-35	OV102	CT	RADAR ANTENNAS, ALTIMETER	MC481-0072	-0003	0000000007	1	F
38	STS-35	OV102	CT	RADAR ANTENNAS, ALTIMETER	MC481-0072	-0004	0000000006	2	F
38	STS-35	OV102	CT	RADAR ANTENNAS, ALTIMETER	MC481-0072	-0004	0000000007	2	F
37	STS-38	OV104	CT	RATE SENSOR ASSY	MC409-0025	-XXXX	0000000105		F
38	STS-35	OV102	CT	RATE SENSOR ASSY	MC409-0025	-XXXX	0000000107		F
36	STS-41	OV103	CT	RATE SENSOR ASSY	MC409-0025	-XXXX	0000000106		F
36	STS-41	OV103	CT	S-BAND SWITCH BEAM CONTROL ASSY	MC450-0064	-0001	0000000011		F
37	STS-38	OV104	CT	S-BAND SWITCH BEAM CONTROL ASSY	MC450-0064	-0001	0000000008		F
38	STS-35	OV102	CT	S-BAND SWITCH BEAM CONTROL ASSY	MC450-0064	-0001	0000000010		F
36	STS-41	OV103	CT	S-BD ANTENNAS, QUAD	MC481-0088	-0041	000DAX0003	LL	F
36	STS-41	OV103	CT	S-BD ANTENNAS, QUAD	MC481-0088	-0042	000DAY0003	LR	F
36	STS-41	OV103	CT	S-BD ANTENNAS, QUAD	MC481-0088	-0043	000DBT0001	UL	F
36	STS-41	OV103	CT	S-BD ANTENNAS, QUAD	MC481-0088	-0054	000DBU0006	UR	F
37	STS-38	OV104	CT	S-BD ANTENNAS, QUAD	MC481-0088	-0041	000DAX0004	LL	F
37	STS-38	OV104	CT	S-BD ANTENNAS, QUAD	MC481-0088	-0042	000DAY0002	LR	F
37	STS-38	OV104	CT	S-BD ANTENNAS, QUAD	MC481-0088	-0043	000DBT0003	UL	F

MISS SEQ	STS	ORB	SUBSYSTEM	LRU NOMENCLATURE	PART NUMBER	DASH NUMBER	SERIAL NUMBER	SLOT	STAT
37	STS-38	OV104	CT	S-BD ANTENNAS, QUAD	MC481-0088	-0054	000DBU0004	UR	F
38	STS-35	OV102	CT	S-BD ANTENNAS, QUAD	MC481-0088	-0051	000DAX0005	LL	F
38	STS-35	OV102	CT	S-BD ANTENNAS, QUAD	MC481-0088	-0052	000DAY0001	LR	F
38	STS-35	OV102	CT	S-BD ANTENNAS, QUAD	MC481-0088	-0053	000DBT0005	UL	F
38	STS-35	OV102	CT	S-BD ANTENNAS, QUAD	MC481-0088	-0044	000DBU0002	UR	F
36	STS-41	OV103	CT	S-BD SWITCH ASSY	MC478-0106	-4004	0000000305		F
37	STS-38	OV104	CT	S-BD SWITCH ASSY	MC478-0106	-4004	0000000302		F
38	STS-35	OV102	CT	S-BD SWITCH ASSY	MC478-0106	-4004	0000000304		F
36	STS-41	OV103	CT	SPKR MIC UNIT	MC409-0005	-0024	0000000010		F
36	STS-41	OV103	CT	SPKR MIC UNIT	MC409-0005	-0024	0000000011		F
37	STS-38	OV104	CT	SPKR MIC UNIT	MC409-0005	-0024	0000000012		F
37	STS-38	OV104	CT	SPKR MIC UNIT	MC409-0005	-0024	0000000013		F
38	STS-35	OV102	CT	SPKR MIC UNIT	MC409-0005	-0024	0000000001		F
38	STS-35	OV102	CT	SPKR MIC UNIT	MC409-0005	-0024	0000000005		F
36	STS-41	OV103	CT	TACTICAL AIR NAVIGATION	MC409-0014	-0006	0000015064	1	F
36	STS-41	OV103	CT	TACTICAL AIR NAVIGATION	MC409-0014	-0006	0000015065	2	F
36	STS-41	OV103	CT	TACTICAL AIR NAVIGATION	MC409-0014	-0006	0000015072	3	F
37	STS-38	OV104	CT	TACTICAL AIR NAVIGATION	MC409-0014	-0006	0000015073	1	F
37	STS-38	OV104	CT	TACTICAL AIR NAVIGATION	MC409-0014	-0006	0000015062	2	F
37	STS-38	OV104	CT	TACTICAL AIR NAVIGATION	MC409-0014	-0006	0000015067	3	F
38	STS-35	OV102	CT	TACTICAL AIR NAVIGATION	MC409-0014	-0006	0000015048	1	F
38	STS-35	OV102	CT	TACTICAL AIR NAVIGATION	MC409-0014	-0006	0000015071	2	F
38	STS-35	OV102	CT	TACTICAL AIR NAVIGATION	MC409-0014	-0006	0000015063	3	F
36	STS-41	OV103	CT	ANTENNAS, TACAN	MC481-0068	-0002	0000001027	1L	F
36	STS-41	OV103	CT	ANTENNAS, TACAN	MC481-0068	-0002	0000001033	1U	F
36	STS-41	OV103	CT	ANTENNAS, TACAN	MC481-0068	-0002	0000001030	2L	F
36	STS-41	OV103	CT	ANTENNAS, TACAN	MC481-0068	-0002	0000001032	2U	F
36	STS-41	OV103	CT	ANTENNAS, TACAN	MC481-0068	-0002	0000001024	3L	F
36	STS-41	OV103	CT	ANTENNAS, TACAN	MC481-0068	-0002	0000001028	3U	F
37	STS-38	OV104	CT	ANTENNAS, TACAN	MC481-0068	-0002	0000001031	1L	F
37	STS-38	OV104	CT	ANTENNAS, TACAN	MC481-0068	-0002	0000001034	1U	F
37	STS-38	OV104	CT	ANTENNAS, TACAN	MC481-0068	-0002	0000001038	2L	F
37	STS-38	OV104	CT	ANTENNAS, TACAN	MC481-0068	-0002	0000001021	2U	F
37	STS-38	OV104	CT	ANTENNAS, TACAN	MC481-0068	-0002	0000001036	3L	F
38	STS-35	OV102	CT	ANTENNAS, TACAN	MC481-0068	-0002	0000001037	3U	F
38	STS-35	OV102	CT	ANTENNAS, TACAN	MC481-0068	-0002	0000001012	1L	F
38	STS-35	OV102	CT	ANTENNAS, TACAN	MC481-0068	-0002	0000001015	1U	F
38	STS-35	OV102	CT	ANTENNAS, TACAN	MC481-0068	-0002	0000001013	2L	F
38	STS-35	OV102	CT	ANTENNAS, TACAN	MC481-0068	-0002	0000001016	2U	F
38	STS-35	OV102	CT	ANTENNAS, TACAN	MC481-0068	-0002	0000001018	3L	F
38	STS-35	OV102	CT	ANTENNAS, TACAN	MC481-0068	-0002	0000001014	3U	F
36	STS-41	OV103	CT	ANTENNA, UHF	MC481-0066	-0001	0000000006		F
37	STS-38	OV104	CT	ANTENNA, UHF	MC481-0066	-0001	0000000005		F
38	STS-35	OV102	CT	ANTENNA, UHF	MC481-0066	-0001	0000000002		F
36	STS-41	OV103	CT	S-BAND TRANSPONDER	MC478-0106	-1001	0000000307	1	F
36	STS-41	OV103	CT	S-BAND TRANSPONDER	MC478-0106	-1001	0000000306	2	F
37	STS-38	OV104	CT	S-BAND TRANSPONDER	MC478-0106	-1001	0000000310	1	F
37	STS-38	OV104	CT	S-BAND TRANSPONDER	MC478-0106	-1001	0000000308	2	F
38	STS-35	OV102	CT	S-BAND TRANSPONDER	MC478-0106	-1001	0000000304	1	F
38	STS-35	OV102	CT	S-BAND TRANSPONDER	MC478-0106	-1001	0000000301	2	F

AVIONICS
DISPLAY AND CONTROL (DC) SUBSYSTEM

MISS SEQ	STS	ORB	SUBSYSTEM	LRU NOMENCLATURE	PART NUMBER	DASH NUMBER	SERIAL NUMBER	SLOT	STAT
36	STS-41	OV103	DC	ANNUNCIATOR CONTROL ASSEMBLY	MC434-0283	-0003	9623087811	1	F
36	STS-41	OV103	DC	ANNUNCIATOR CONTROL ASSEMBLY	MC434-0283	-0003	9623087810	2	F
36	STS-41	OV103	DC	ANNUNCIATOR CONTROL ASSEMBLY	MC434-0283	-0003	9623108018	3	F
36	STS-41	OV103	DC	ANNUNCIATOR CONTROL ASSEMBLY	MC434-0283	-0003	9623048123	4	F
36	STS-41	OV103	DC	ANNUNCIATOR CONTROL ASSEMBLY	MC434-0283	-0003	9623048126	5	F
37	STS-38	OV104	DC	ANNUNCIATOR CONTROL ASSEMBLY	MC434-0283	-0003	9623057809	1	F
37	STS-38	OV104	DC	ANNUNCIATOR CONTROL ASSEMBLY	MC434-0283	-0003	9623048124	2	F
37	STS-38	OV104	DC	ANNUNCIATOR CONTROL ASSEMBLY	MC434-0283	-0003	9623058334	3	F
37	STS-38	OV104	DC	ANNUNCIATOR CONTROL ASSEMBLY	MC434-0283	-0003	4530077805	4	F
38	STS-35	OV102	DC	ANNUNCIATOR CONTROL ASSEMBLY	MC434-0283	-0003	9623068129	5	F
38	STS-35	OV102	DC	ANNUNCIATOR CONTROL ASSEMBLY	MC434-0283	-0003	9623098231	1	F
38	STS-35	OV102	DC	ANNUNCIATOR CONTROL ASSEMBLY	MC434-0283	-0003	9623108020	2	F
38	STS-35	OV102	DC	ANNUNCIATOR CONTROL ASSEMBLY	MC434-0283	-0003	9623048121	3	F
38	STS-35	OV102	DC	ANNUNCIATOR CONTROL ASSEMBLY	MC434-0283	-0003	9623098232	4	F
36	STS-41	OV103	DC	ATTITUDE DIRECTOR INDICATOR	MC432-0235	-0002	5351000011	1	F
36	STS-41	OV103	DC	ATTITUDE DIRECTOR INDICATOR	MC432-0235	-0002	5351000015	2	F
36	STS-41	OV103	DC	ATTITUDE DIRECTOR INDICATOR	MC432-0235	-0002	5351000013	3	F
37	STS-38	OV104	DC	ATTITUDE DIRECTOR INDICATOR	MC432-0235	-0002	5351000017	1	F
37	STS-38	OV104	DC	ATTITUDE DIRECTOR INDICATOR	MC432-0235	-0002	5351000018	2	F
37	STS-38	OV104	DC	ATTITUDE DIRECTOR INDICATOR	MC432-0235	-0002	5351000016	3	F
38	STS-35	OV102	DC	ATTITUDE DIRECTOR INDICATOR	MC432-0235	-0002	5351000009	1	F
38	STS-35	OV102	DC	ATTITUDE DIRECTOR INDICATOR	MC432-0235	-0002	5351000008	2	F
38	STS-35	OV102	DC	ATTITUDE DIRECTOR INDICATOR	MC432-0235	-0002	5351000010	3	F
36	STS-41	OV103	DC	ANNUNICATOR DISPLAY UNIT	MC434-0080	-0012	9623108209		F
37	STS-38	OV104	DC	ANNUNICATOR DISPLAY UNIT	MC434-0080	-0012	9623098208		F
38	STS-35	OV102	DC	ANNUNICATOR DISPLAY UNIT	MC434-0080	-0012	9623067802		F
36	STS-41	OV103	DC	ALPHA-MACH ELECTRONICS	MC432-0224	-0022	0008201014	1	F
36	STS-41	OV103	DC	ALPHA-MACH ELECTRONICS	MC432-0224	-0022	0008302017	2	F
37	STS-38	OV104	DC	ALPHA-MACH ELECTRONICS	MC432-0224	-0022	0007603007	1	F
37	STS-38	OV104	DC	ALPHA-MACH ELECTRONICS	MC432-0224	-0022	0008201013	2	F
38	STS-35	OV102	DC	ALPHA-MACH ELECTRONICS	MC432-0224	-0022	0007803010	1	F
38	STS-35	OV102	DC	ALPHA-MACH ELECTRONICS	MC432-0224	-0022	0007603009	2	F
36	STS-41	OV103	DC	ALPHA-MACH INDICATORS	MC432-0224	-0011	0008201014	1	F
36	STS-41	OV103	DC	ALPHA-MACH INDICATORS	MC432-0224	-0011	0008302017	2	F
37	STS-38	OV104	DC	ALPHA-MACH INDICATORS	MC432-0224	-0011	0008201013	1	F
37	STS-38	OV104	DC	ALPHA-MACH INDICATORS	MC432-0224	-0011	0007803010	2	F
38	STS-35	OV102	DC	ALPHA-MACH INDICATORS	MC432-0224	-0011	0008302016	1	F
38	STS-35	OV102	DC	ALPHA-MACH INDICATORS	MC432-0224	-0011	0007803009	2	F
36	STS-41	OV103	DC	FIRE WARNING ANNUNCIATOR	MC434-0073	-0011	0000008002		F
37	STS-38	OV104	DC	FIRE WARNING ANNUNCIATOR	MC434-0073	-0011	0000008305		F
38	STS-35	OV102	DC	FIRE WARNING ANNUNCIATOR	MC434-0073	-0011	0000127703		F
36	STS-41	OV103	DC	ALTITUDE VERTICAL VELOCITY ELECTRONICS	MC432-0226	-0022	9728302016	1	F
36	STS-41	OV103	DC	ALTITUDE VERTICAL VELOCITY ELECTRONICS	MC432-0226	-0022	3158201013	2	F
37	STS-38	OV104	DC	ALTITUDE VERTICAL VELOCITY ELECTRONICS	MC432-0226	-0022	3158201014	1	F
37	STS-38	OV104	DC	ALTITUDE VERTICAL VELOCITY ELECTRONICS	MC432-0226	-0022	9728302017	2	F
38	STS-35	OV102	DC	ALTITUDE VERTICAL VELOCITY ELECTRONICS	MC432-0226	-0022	3157803009	1	F
38	STS-35	OV102	DC	ALTITUDE VERTICAL VELOCITY ELECTRONICS	MC432-0226	-0022	3157803010	2	F
36	STS-41	OV103	DC	ALTITUDE VERTICAL VELOCITY INDICATOR	MC432-0226	-0011	3158302016	1	F
36	STS-41	OV103	DC	ALTITUDE VERTICAL VELOCITY INDICATOR	MC432-0226	-0011	3158107011	2	F
37	STS-38	OV104	DC	ALTITUDE VERTICAL VELOCITY INDICATOR	MC432-0226	-0011	3158107012	1	F

MISS SEQ	STS	ORB	SUBSYSTEM	LRU NOMENCLATURE	PART NUMBER	DASH NUMBER	SERIAL NUMBER	SLOT	STAT
37	STS-38	OV104	DC	ALTITUDE VERTICAL VELOCITY INDICATOR	MC432-0226	-0011	9728209015	2	F
38	STS-35	OV102	DC	ALTITUDE VERTICAL VELOCITY INDICATOR	MC432-0226	-0011	9728302017	1	F
38	STS-35	OV102	DC	ALTITUDE VERTICAL VELOCITY INDICATOR	MC432-0226	-0011	3157803009	2	F
36	STS-41	OV103	DC	COMPUTER I/F COND. UNIT	MC434-0080	-0001	9623058012		F
37	STS-38	OV104	DC	COMPUTER I/F COND. UNIT	MC434-0080	-0001	9623078313		F
38	STS-35	OV102	DC	COMPUTER I/F COND. UNIT	MC434-0080	-0001	9623283014		F
36	STS-41	OV103	DC	CROSSPOINTER INDICATOR	MC432-0233	-0001	000203005E		F
37	STS-38	OV104	DC	CROSSPOINTER	MC432-0233	-0001	000208007E		F
38	STS-35	OV102	DC	CROSSPOINTER INDICATOR	MC432-0233	-0001	000206006E		F
36	STS-41	OV103	DC	CAUTION/WARNING ANNUNCIATOR	MC434-0069	-0012	9623038210		F
37	STS-38	OV104	DC	CAUTION/WARNING ANNUNCIATOR	MC434-0069	-0012	6230187012		F
38	STS-35	OV102	DC	CAUTION/WARNING ANNUNCIATOR	MC434-0069	-0012	9623127805		F
36	STS-41	OV103	DC	CAUTION AND WARNING ELECTRONICS	MC409-0012	-0031	0000000008		F
37	STS-38	OV104	DC	CAUTION AND WARNING ELECTRONICS	MC409-0012	-0031	0000000007		F
38	STS-35	OV102	DC	CAUTION AND WARNING ELECTRONICS	MC409-0012	-0031	0000000005		F
36	STS-41	OV103	DC	CAUTION AND WARNING LIMIT MODULE	MC409-0012	-0113	0000000013		F
37	STS-38	OV104	DC	CAUTION AND WARNING LIMIT MODULE	MC409-0012	-0113	0000000014		F
38	STS-35	OV102	DC	CAUTION AND WARNING LIMIT MODULE	MC409-0012	-0113	0000000011		F
36	STS-41	OV103	DC	CAUTION WARNING STATUS	MC409-0012	-0002	0000000006		F
37	STS-38	OV104	DC	CAUTION WARNING STATUS	MC409-0012	-0002	0000000001		F
38	STS-35	OV102	DC	CAUTION WARNING STATUS	MC409-0012	-0002	0000000004		F
36	STS-41	OV103	DC	DISPLAY DRIVER UNIT	MC409-0023	-0002	0000000009	1	F
36	STS-41	OV103	DC	DISPLAY DRIVER UNIT	MC409-0023	-0003	0000000017	2	F
36	STS-41	OV103	DC	DISPLAY DRIVER UNIT	MC409-0023	-0003	0000000015	3	F
37	STS-38	OV104	DC	DISPLAY DRIVER UNIT	MC409-0023	-0004	0000000010	1	F
37	STS-38	OV104	DC	DISPLAY DRIVER UNIT	MC409-0023	-0004	0000000014	2	F
37	STS-38	OV104	DC	DISPLAY DRIVER UNIT	MC409-0023	-0002	0000000007	3	F
38	STS-35	OV102	DC	DISPLAY DRIVER UNIT	MC409-0023	-0002	0000000008	1	F
38	STS-35	OV102	DC	DISPLAY DRIVER UNIT	MC409-0023	-0004	0000000020	2	F
38	STS-35	OV102	DC	DISPLAY DRIVER UNIT	MC409-0023	-0004	0000000018	3	F
36	STS-41	OV103	DC	LITE EXTERIOR BULKHEAD FLOODLIGHT	MC434-0062	-0033	0000000596		F
37	STS-38	OV104	DC	LITE-EXTERIOR BULKHEAD FLOODLIGHT	MC434-0062	-0033	0000000245		F
38	STS-35	OV102	DC	LITE-EXTERIOR BULKHEAD FLOODLIGHT	MC434-0062	-0033	0000000460		F
36	STS-41	OV103	DC	LITE-EXTERIOR ELECTRONICS NBR 1	MC434-0062	-0011	0000000402		F
37	STS-38	OV104	DC	LITE-EXTERIOR ELECTRONICS NBR 1	MC434-0062	-0011	0000000218		F
38	STS-35	OV102	DC	LITE-EXTERIOR ELECTRONICS NBR 1	MC434-0062	-0011	0000000592		F
36	STS-41	OV103	DC	LITE-EXTERIOR ELECTRONICS 2	MC434-0062	-0035	0000000591		F
37	STS-38	OV104	DC	LITE-EXTERIOR ELECTRONICS NBR 2	MC434-0062	-0035	0000000219		F
38	STS-35	OV102	DC	LITE-EXTERIOR ELECTRONICS NBR 2	MC434-0062	-0035	0000000603		F
36	STS-41	OV103	DC	LITE-EXTERIOR PAYLOAD	MC434-0062	-0032	0000000447	1	F
36	STS-41	OV103	DC	LITE-EXTERIOR PAYLOAD	MC434-0062	-0032	0000000457	2	F
36	STS-41	OV103	DC	LITE-EXTERIOR PAYLOAD	MC434-0062	-0032	0000000449	3	F
36	STS-41	OV103	DC	LITE-EXTERIOR PAYLOAD	MC434-0062	-0032	0000000450	4	F
36	STS-41	OV103	DC	LITE-EXTERIOR PAYLOAD	MC434-0062	-0032	0000000577	4	F
36	STS-41	OV103	DC	LITE-EXTERIOR PAYLOAD	MC434-0062	-0022	0000000451	5	F
37	STS-38	OV104	DC	LITE-EXTERIOR PAYLOAD	MC434-0062	-0032	0000000578	1	F
37	STS-38	OV104	DC	LITE-EXTERIOR PAYLOAD	MC434-0062	-0032	0000000456	2	F
37	STS-38	OV104	DC	LITE-EXTERIOR PAYLOAD	MC434-0062	-0032	0000000237	3	F

MISS SEQ	STS	ORB	SUBSYSTEM	LRU NOMENCLATURE	PART NUMBER	DASH NUMBER	SERIAL NUMBER	SLOT	STAT
37	STS-38	OV104	DC	LITE-EXTERIOR PAYLOAD	MC434-0062	-0032	0000000455	4	F
37	STS-38	OV104	DC	LITE-EXTERIOR PAYLOAD	MC434-0062	-0032	0000000454	5	F
37	STS-38	OV104	DC	LITE-EXTERIOR PAYLOAD	MC434-0062	-0032	0000000581	6	F
38	STS-35	OV102	DC	LITE-EXTERIOR PAYLOAD	MC434-0062	-0032	0000000580	1	F
38	STS-35	OV102	DC	LITE-EXTERIOR PAYLOAD	50034-0062	-0032	0000000582	2	F
38	STS-35	OV102	DC	LITE-EXTERIOR PAYLOAD	MC434-0062	-0032	0000000583	3	F
38	STS-35	OV102	DC	LITE-EXTERIOR PAYLOAD	MC434-0062	-0032	0000000453	4	F
38	STS-35	OV102	DC	LITE-EXTERIOR PAYLOAD	MC434-0062	-0032	0000000240	5	F
38	STS-35	OV102	DC	LITE-EXTERIOR PAYLOAD	MC434-0062	-0032	0000000243	6	F
36	STS-41	OV103	DC	EVENT TIMER	MC456-0053	-0002	0000000008		F
36	STS-41	OV103	DC	EVENT TIMER	MC456-0053	-0002	0000000010		F
37	STS-38	OV104	DC	EVENT TIMER	MC456-0053	-0002	0000000014	1	F
37	STS-38	OV104	DC	EVENT TIMER	MC456-0053	-0002	0000000013	2	F
38	STS-35	OV102	DC	EVENT TIMER	MC456-0053	-0001	0000000002		F
38	STS-35	OV102	DC	EVENT TIMER	MC456-0053	-0002	0000000005	1	F
36	STS-41	OV103	DC	FLOOD LITE	MC434-0078	-0008	0000000103		F
36	STS-41	OV103	DC	FLOOD LITE	MC434-0078	-0007	0000000205		F
36	STS-41	OV103	DC	FLOOD LITE	MC434-0078	-0008	0000068103		F
37	STS-38	OV104	DC	FLOOD LITE	MC434-0078	-0007	0000000307		F
37	STS-38	OV104	DC	FLOOD LITE	MC434-0078	-0008	0000000308		F
38	STS-35	OV102	DC	FLOOD LITE	MC434-0078	-0005	0000000805		F
38	STS-35	OV102	DC	FLOOD LITE	MC434-0078	-0006	0000000809		F
36	STS-41	OV103	DC	ACCELEROMETER INDICATOR	MC432-0219	-0002	000000005E		F
37	STS-38	OV104	DC	ACCELEROMETER INDICATOR	MC432-0219	-0002	000000006E		F
38	STS-35	OV102	DC	ACCELEROMETER INDICATOR	MC432-0219	-0002	000000004E		F
36	STS-41	OV103	DC	HORIZONTAL SITUATION INDICATOR	MC432-0218	-0003	0000000014	1	F
36	STS-41	OV103	DC	HORIZONTAL SITUATION INDICATOR	MC432-0218	-0004	0000000009	2	F
37	STS-38	OV104	DC	HORIZONTAL SITUATION INDICATOR	MC432-0218	-0004	0000000016	1	F
37	STS-38	OV104	DC	HORIZONTAL SITUATION INDICATOR	MC432-0218	-0004	0000000015	2	F
38	STS-35	OV102	DC	HORIZONTAL SITUATION INDICATOR	MC432-0218	-0004	0000000006	1	F
38	STS-35	OV102	DC	HORIZONTAL SITUATION INDICATOR	MC432-0218	-0003	0000000008	2	F
36	STS-41	OV103	DC	HEAD UP DISPLAY ELECTRONICS	MC409-0096	-0012	0000000114	1	F
36	STS-41	OV103	DC	HEAD UP DISPLAY ELECTRONICS	MC409-0096	-0012	0000000118	2	F
37	STS-38	OV104	DC	HEAD UP DISPLAY ELECTRONICS	MC409-0096	-0012	0000000110	1	F
37	STS-38	OV104	DC	HEAD UP DISPLAY ELECTRONICS	MC409-0096	-0012	0000000115	2	F
38	STS-35	OV102	DC	HEAD UP DISPLAY ELECTRONICS	MC409-0096	-0012	0000000102	1	F
38	STS-35	OV102	DC	HEAD UP DISPLAY ELECTRONICS	MC409-0096	-0012	0000000117	2	F
36	STS-41	OV103	DC	LITE-INTERIOR	MC434-0068	-0011	0000000135		F
36	STS-41	OV103	DC	LITE-INTERIOR	MC434-0068	-0014	0000000300		F
36	STS-41	OV103	DC	LITE-INTERIOR	MC434-0068	-0014	0000000306		F
36	STS-41	OV103	DC	LITE-INTERIOR	MC434-0068	-0014	0000000308		F
36	STS-41	OV103	DC	LITE-INTERIOR	MC434-0068	-0014	0000000312		F
36	STS-41	OV103	DC	LITE-INTERIOR	MC434-0068	-0014	0000000316		F
36	STS-41	OV103	DC	LITE-INTERIOR	MC434-0068	-0014	0000000317		F
36	STS-41	OV103	DC	LITE-INTERIOR	MC434-0068	-0014	0000000318		F
36	STS-41	OV103	DC	LITE-INTERIOR	MC434-0068	-0014	0000000323		F
36	STS-41	OV103	DC	LITE-INTERIOR	MC434-0068	-0014	0000000325		F
36	STS-41	OV103	DC	LITE-INTERIOR	MC434-0068	-0009	0000000328		F
36	STS-41	OV103	DC	LITE-INTERIOR	MC434-0068	-0009	0000000336		F
36	STS-41	OV103	DC	LITE-INTERIOR	MC434-0068	-0022	0000000363		F
37	STS-38	OV104	DC	LITE-INTERIOR	MC434-0068	-0015	0000000252		F
37	STS-38	OV104	DC	LITE-INTERIOR	MC434-0068	-0015	0000000253		F
37	STS-38	OV104	DC	LITE-INTERIOR	MC434-0068	-0016	0000000263		F
37	STS-38	OV104	DC	LITE-INTERIOR	MC434-0068	-0016	0000000264		F

MISS SEQ	STS	ORB	SUBSYSTEM	LRU NOMENCLATURE	PART NUMBER	DASH NUMBER	SERIAL NUMBER	SLOT	STAT
37	STS-38	OV104	DC	LITE-INTERIOR	MC434-0068	-0014	0000000303		F
37	STS-38	OV104	DC	LITE-INTERIOR	MC434-0068	-0014	0000000305		F
37	STS-38	OV104	DC	LITE-INTERIOR	MC434-0068	-0014	0000000307		F
37	STS-38	OV104	DC	LITE-INTERIOR	MC434-0068	-0014	0000000309		F
37	STS-38	OV104	DC	LITE-INTERIOR	MC434-0068	-0014	0000000310		F
37	STS-38	OV104	DC	LITE-INTERIOR	MC434-0068	-0014	0000000314		F
37	STS-38	OV104	DC	LITE-INTERIOR	MC434-0068	-0014	0000000315		F
37	STS-38	OV104	DC	LITE-INTERIOR	MC434-0068	-0014	0000000321		F
37	STS-38	OV104	DC	LITE-INTERIOR	MC434-0068	-0014	0000000322		F
37	STS-38	OV104	DC	LITE-INTERIOR	MC434-0068	-0009	0000000333		F
37	STS-38	OV104	DC	LITE-INTERIOR	MC434-0068	-0009	0000000334		F
37	STS-38	OV104	DC	LITE-INTERIOR	MC434-0068	-0021	0000000356		F
37	STS-38	OV104	DC	LITE-INTERIOR	MC434-0068	-0022	0000000362		F
37	STS-38	OV104	DC	LITE-INTERIOR	MC434-0068	-0011	0000000369		F
37	STS-38	OV104	DC	LITE-INTERIOR	MC434-0068	-0021	0000000425		F
38	STS-35	OV102	DC	LITE-INTERIOR	MC434-0068	-0016	0000000105		F
38	STS-35	OV102	DC	LITE-INTERIOR	MC434-0068	-0018	0000000111		F
38	STS-35	OV102	DC	LITE-INTERIOR	MC434-0068	-0011	0000000137		F
38	STS-35	OV102	DC	LITE-INTERIOR	MC434-0068	-0015	0000000594		F
36	STS-41	OV103	DC	LIGHT DIMMER	MC459-0004	-0001	0000118049	X	F
36	STS-41	OV103	DC	LIGHT DIMMER	MC459-0004	-0001	0000108157	Y	F
36	STS-41	OV103	DC	LIGHT DIMMER	MC459-0004	-0001	0000108158	Z	F
36	STS-41	OV103	DC	LIGHT DIMMER	MC459-0004	-0001	0000068033	1	F
36	STS-41	OV103	DC	LIGHT DIMMER	MC459-0004	-0001	0000068035	2	F
36	STS-41	OV103	DC	LIGHT DIMMER	MC459-0004	-0001	0000068036	3	F
36	STS-41	OV103	DC	LIGHT DIMMER	MC459-0004	-0001	0000068037	4	F
36	STS-41	OV103	DC	LIGHT DIMMER	MC459-0004	-0001	0000068038	5	F
36	STS-41	OV103	DC	LIGHT DIMMER	MC459-0004	-0001	0000068039	6	F
36	STS-41	OV103	DC	LIGHT DIMMER	MC459-0004	-0001	0000068040	7	F
36	STS-41	OV103	DC	LIGHT DIMMER	MC459-0004	-0001	0000068041	8	F
36	STS-41	OV103	DC	LIGHT DIMMER	MC459-0004	-0001	0000118048	9	F
37	STS-38	OV104	DC	LIGHT DIMMER	MC459-0004	-0001	0000018265	X	F
37	STS-38	OV104	DC	LIGHT DIMMER	MC459-0004	-0001	0000018266	Y	F
37	STS-38	OV104	DC	LIGHT DIMMER	MC459-0004	-0001	0000018267	Z	F
37	STS-38	OV104	DC	LIGHT DIMMER	MC459-0004	-0001	0000027808	1	F
37	STS-38	OV104	DC	LIGHT DIMMER	MC459-0004	-0001	0000068043	2	F
37	STS-38	OV104	DC	LIGHT DIMMER	MC459-0004	-0001	0000108046	3	F
37	STS-38	OV104	DC	LIGHT DIMMER	MC459-0004	-0001	0000108156	4	F
37	STS-38	OV104	DC	LIGHT DIMMER	MC459-0004	-0001	0000108159	5	F
37	STS-38	OV104	DC	LIGHT DIMMER	MC459-0004	-0001	0000018260	6	F
37	STS-38	OV104	DC	LIGHT DIMMER	MC459-0004	-0001	0000018261	7	F
37	STS-38	OV104	DC	LIGHT DIMMER	MC459-0004	-0001	0000018262	8	F
37	STS-38	OV104	DC	LIGHT DIMMER	MC459-0004	-0001	0000018264	9	F
38	STS-35	OV102	DC	LIGHT DIMMER	MC459-0004	-0001	0000108044	X	F
38	STS-35	OV102	DC	LIGHT DIMMER	MC459-0004	-0001	0000108052	Y	F
38	STS-35	OV102	DC	LIGHT DIMMER	MC459-0004	-0001	0001286071	Z	F
38	STS-35	OV102	DC	LIGHT DIMMER	MC459-0004	-0001	0000027804	1	F
38	STS-35	OV102	DC	LIGHT DIMMER	MC459-0004	-0001	0000027809	2	F
38	STS-35	OV102	DC	LIGHT DIMMER	MC459-0004	-0001	0000027810	3	F
38	STS-35	OV102	DC	LIGHT DIMMER	MC459-0004	-0001	0000027811	4	F
38	STS-35	OV102	DC	LIGHT DIMMER	MC459-0004	-0001	0000027812	5	F
38	STS-35	OV102	DC	LIGHT DIMMER	MC459-0004	-0001	0000027813	6	F
38	STS-35	OV102	DC	LIGHT DIMMER	MC459-0004	-0001	0000027802	7	F
38	STS-35	OV102	DC	LIGHT DIMMER	MC459-0004	-0001	0000027805	8	F
38	STS-35	OV102	DC	LIGHT DIMMER	MC459-0004	-0001	0000037830	9	F
36	STS-41	OV103	DC	MISSION TIMER	MC456-0054	-0002	0000000011	1	F
36	STS-41	OV103	DC	MISSION TIMER	MC456-0054	-0002	0000000013	2	F

MISS SEQ	STS	ORB	SUBSYSTEM	LRU NOMENCLATURE	PART NUMBER	DASH NUMBER	SERIAL NUMBER	SLOT	STAT
37	STS-38	OV104	DC	MISSION TIMER	MC456-0054	-0002	0000000012	1	F
37	STS-38	OV104	DC	MISSION TIMER	MC456-0054	-0002	0000000010	2	F
38	STS-35	OV102	DC	MISSION TIMER	MC456-0054	-0001	0000000003	1	F
38	STS-35	OV102	DC	MISSION TIMER	MC456-0054	-0002	0000000004	2	F
36	STS-41	OV103	DC	PILOT DISPLAY UNIT	MC409-0096	-0021	0000000116		F
36	STS-41	OV103	DC	PILOT DISPLAY UNIT	MC409-0096	-0031	0000000118		F
37	STS-38	OV104	DC	PILOT DISPLAY UNIT	MC409-0096	-0031	0000000112		F
37	STS-38	OV104	DC	PILOT DISPLAY UNIT	MC409-0096	-0031	0000000115		F
38	STS-35	OV102	DC	PILOT DISPLAY UNIT	MC409-0096	-0041	0000000109	1	F
38	STS-35	OV102	DC	PILOT DISPLAY UNIT	MC409-0096	-0031	0000000110	2	F
36	STS-41	OV103	DC	METER, PROPELLANT QUANTITY	MC432-0229	-0011	0003058207		F
37	STS-38	OV104	DC	METER, PROPELLANT QUANTITY	MC432-0229	-0021	0000387010		F
38	STS-35	OV102	DC	METER, PROPELLANT QUANTITY	MC432-0229	-0021	0003048106		F
36	STS-41	OV103	DC	METER-ROUND ELEC	MC432-0237	-0004	2200004105		F
36	STS-41	OV103	DC	METER-ROUND ELEC	MC432-0237	-0006	2200006105		F
36	STS-41	OV103	DC	METER-ROUND ELEC	MC432-0237	-0007	2200007105		F
37	STS-38	OV104	DC	METER-ROUND ELEC	MC432-0237	-0004	2200004106		F
37	STS-38	OV104	DC	METER-ROUND ELEC	MC432-0237	-0006	2200006108		F
37	STS-38	OV104	DC	METER-ROUND ELEC	MC432-0237	-0007	2200007106		F
38	STS-35	OV102	DC	METER-ROUND ELEC	MC432-0237	-0004	2200004101		F
38	STS-35	OV102	DC	METER-ROUND ELEC	MC432-0237	-0006	2200006102		F
38	STS-35	OV102	DC	METER-ROUND ELEC	MC432-0237	-0007	2200007102		F
36	STS-41	OV103	DC	RUDDER PEDAL TRANSDUCER ASSY	MC621-0043	-3440	0000000008	1	F
36	STS-41	OV103	DC	RUDDER PEDAL TRANSDUCER ASSY	MC621-0043	-3440	0000000002	2	F
37	STS-38	OV104	DC	RUDDER PEDAL TRANSDUCER ASSY	MC621-0043	-3440	0000000010	1	F
37	STS-38	OV104	DC	RUDDER PEDAL TRANSDUCER ASSY	MC621-0043	-3440	0000000011	2	F
38	STS-35	OV102	DC	RUDDER PEDAL TRANSDUCER ASSY	MC621-0043	-3440	0000000004	1	F
38	STS-35	OV102	DC	RUDDER PEDAL TRANSDUCER ASSY	MC621-0043	-3440	0000000005	2	F
36	STS-41	OV103	DC	RENDEZVOUS RADAR INDICATOR	MC432-0255	-0002	0000000206		F
37	STS-38	OV104	DC	RENDEZVOUS RADAR INDICATOR	MC432-0255	-0002	0000000104		F
38	STS-35	OV102	DC	RENDEZVOUS RADAR INDICATOR	MC432-0255	-0002	0000098203		F
36	STS-41	OV103	DC	SPEED BRAKE THRUST CONTROLLER	MC621-0043	-3240	0000000010	1	F
36	STS-41	OV103	DC	SPEED BRAKE THRUST CONTROLLER	MC621-0043	-3240	0000000009	2	F
37	STS-38	OV104	DC	SPEED BRAKE THRUST CONTROLLER	MC621-0043	-3240	0000000011	1	F
37	STS-38	OV104	DC	SPEED BRAKE THRUST CONTROLLER	MC621-0043	-3240	0000000001	2	F
38	STS-35	OV102	DC	SPEED BRAKE THRUST CONTROLLER	MC621-0043	-3240	0000000004	1	F
38	STS-35	OV102	DC	SPEED BRAKE THRUST CONTROLLER	MC621-0043	-3240	0000000012	2	F
36	STS-41	OV103	DC	SURFACE POSITION INDICATOR	MC432-0221	-0011	0007803006		F
37	STS-38	OV104	DC	SURFACE POSITION INDICATOR	MC432-0221	-0031	0008303010		F
38	STS-35	OV102	DC	SURFACE POSITION INDICATOR	MC432-0221	-0031	0008201008		F
36	STS-41	OV103	DC	METER-TAPE	MC432-0232	-0017	0000000004		F
36	STS-41	OV103	DC	METER-TAPE	MC432-0232	-0012	0000000004		F
36	STS-41	OV103	DC	METER-TAPE	MC432-0232	-0008	0000000005		F
36	STS-41	OV103	DC	METER-TAPE	MC432-0232	-0018	000000006A		F
36	STS-41	OV103	DC	METER-TAPE	MC432-0232	-0015	000000006A		F
36	STS-41	OV103	DC	METER-TAPE	MC432-0232	-0009	000000006A		F
36	STS-41	OV103	DC	METER-TAPE	MC432-0232	-0010	000000007A		F
37	STS-38	OV104	DC	METER-TAPE	MC432-0232	-0017	000000005A		F
37	STS-38	OV104	DC	METER-TAPE	MC432-0232	-0009	000000005A		F
37	STS-38	OV104	DC	METER-TAPE	MC432-0232	-0015	000000005A		F

MISS SEQ	STS	ORB	SUBSYSTEM	LRU NOMENCLATURE	PART NUMBER	DASH NUMBER	SERIAL NUMBER	SLOT	STAT
37	STS-38	OV104	DC	METER-TAPE	MC432-0232	-0018	000000005A		F
37	STS-38	OV104	DC	METER-TAPE	MC432-0232	-0012	000000006A		F
37	STS-38	OV104	DC	METER-TAPE	MC432-0232	-0008	000000007A		F
37	STS-38	OV104	DC	METER-TAPE	MC432-0232	-0010	008748006A		F
38	STS-35	OV102	DC	METER-TAPE	MC432-0232	-0017	0000000003		F
38	STS-35	OV102	DC	METER-TAPE	MC432-0232	-0012	0000000003		F
38	STS-35	OV102	DC	METER-TAPE	MC432-0232	-0009	0000000003		F
38	STS-35	OV102	DC	METER-TAPE	MC432-0232	-0010	0000000004		F
38	STS-35	OV102	DC	METER-TAPE	MC432-0232	-0015	0000000004		F
38	STS-35	OV102	DC	METER-TAPE	MC432-0232	-0008	0000000006		F
38	STS-35	OV102	DC	METER-TAPE	MC432-0232	-0018	000000007A		F
36	STS-41	OV103	DC	TRANSLATION HAND CONTROLLER	MC621-0043	-3140	0000000008	1	F
36	STS-41	OV103	DC	TRANSLATION HAND CONTROLLER	MC621-0043	-3140	0000000004	3	F
37	STS-38	OV104	DC	TRANSLATION HAND CONTROLLER	MC621-0043	-3140	0000000009	1	F
37	STS-38	OV104	DC	TRANSLATION HAND CONTROLLER	MC621-0043	-3140	0000000010	3	F
38	STS-35	OV102	DC	TRANSLATION HAND CONTROLLER	MC621-0043	-3140	0000000002	1	F
38	STS-35	OV102	DC	TRANSLATION HAND CONTROLLER	MC621-0043	-3140	0000000007	3	F
36	STS-41	OV103	DC	METER-VERTICAL SCALE	MC432-0238	-0009	0380009105		F
36	STS-41	OV103	DC	METER-VERTICAL SCALE	MC432-0238	-0010	0380010105		F
36	STS-41	OV103	DC	METER-VERTICAL SCALE	MC432-0238	-0011	0380011105		F
36	STS-41	OV103	DC	METER-VERTICAL SCALE	MC432-0238	-0012	0380012105		F
36	STS-41	OV103	DC	METER-VERTICAL SCALE	MC432-0238	-0014	0380014111		F
36	STS-41	OV103	DC	METER-VERTICAL SCALE	MC432-0238	-0014	0380014112		F
36	STS-41	OV103	DC	METER-VERTICAL SCALE	MC432-0238	-0014	0380014113		F
36	STS-41	OV103	DC	METER-VERTICAL SCALE	MC432-0238	-0016	0380016105		F
36	STS-41	OV103	DC	METER-VERTICAL SCALE	MC432-0238	-0017	0380017105		F
36	STS-41	OV103	DC	METER-VERTICAL SCALE	MC432-0238	-0024	0380024105		F
36	STS-41	OV103	DC	METER-VERTICAL SCALE	MC432-0238	-0026	0380026101		F
36	STS-41	OV103	DC	METER-VERTICAL SCALE	MC432-0238	-0028	0380028101		F
36	STS-41	OV103	DC	METER-VERTICAL SCALE	MC432-0238	-0007	0790007105		F
36	STS-41	OV103	DC	METER-VERTICAL SCALE	MC432-0238	-0008	0790008105		F
36	STS-41	OV103	DC	METER-VERTICAL SCALE	MC432-0238	-0019	0790019104		F
37	STS-38	OV104	DC	METER-VERTICAL SCALE	MC432-0238	-0011	0000011106		F
37	STS-38	OV104	DC	METER-VERTICAL SCALE	MC432-0238	-0009	0380009106		F
37	STS-38	OV104	DC	METER-VERTICAL SCALE	MC432-0238	-0010	0380010106		F
37	STS-38	OV104	DC	METER-VERTICAL SCALE	MC432-0238	-0012	0380012106		F
37	STS-38	OV104	DC	METER-VERTICAL SCALE	MC432-0238	-0014	0380014114		F
37	STS-38	OV104	DC	METER-VERTICAL SCALE	MC432-0238	-0014	0380014115		F
37	STS-38	OV104	DC	METER-VERTICAL SCALE	MC432-0238	-0014	0380014116		F
37	STS-38	OV104	DC	METER-VERTICAL SCALE	MC432-0238	-0016	0380016106		F
37	STS-38	OV104	DC	METER-VERTICAL SCALE	MC432-0238	-0017	0380017106		F
37	STS-38	OV104	DC	METER-VERTICAL SCALE	MC432-0238	-0024	0380024106		F
37	STS-38	OV104	DC	METER-VERTICAL SCALE	MC432-0238	-0028	0380028102		F
37	STS-38	OV104	DC	METER-VERTICAL SCALE	MC432-0238	-0007	0790007106		F
37	STS-38	OV104	DC	METER-VERTICAL SCALE	MC432-0238	-0008	0790008106		F
37	STS-38	OV104	DC	METER-VERTICAL SCALE	MC432-0238	-0019	0790019105		F
38	STS-35	OV102	DC	METER-VERTICAL SCALE	MC432-0238	-0010	0000010103		F
38	STS-35	OV102	DC	METER-VERTICAL SCALE	MC432-0238	-0009	0380009101		F
38	STS-35	OV102	DC	METER-VERTICAL SCALE	MC432-0238	-0011	0380011101		F
38	STS-35	OV102	DC	METER-VERTICAL SCALE	MC432-0238	-0012	0380012101		F
38	STS-35	OV102	DC	METER-VERTICAL SCALE	MC432-0238	-0014	0380014102		F
38	STS-35	OV102	DC	METER-VERTICAL SCALE	MC432-0238	-0014	0380014103		F
38	STS-35	OV102	DC	METER-VERTICAL SCALE	MC432-0238	-0014	0380014107		F
38	STS-35	OV102	DC	METER-VERTICAL SCALE	MC432-0238	-0016	0380016101		F
38	STS-35	OV102	DC	METER-VERTICAL SCALE	MC432-0238	-0017	0380017101		F
38	STS-35	OV102	DC	METER-VERTICAL SCALE	MC432-0238	-0024	0380024101		F
38	STS-35	OV102	DC	METER-VERTICAL SCALE	MC432-0238	-0028	0380028105		F

MISS SEQ	STS	ORB	SUBSYSTEM	LRU NOMENCLATURE	PART NUMBER	DASH NUMBER	SERIAL NUMBER	SLOT	STAT
38	STS-35	OV102	DC	METER-VERTICAL SCALE	MC432-0238	-0007	0790007101		F
38	STS-35	OV102	DC	METER-VERTICAL SCALE	MC432-0238	-0008	0790008102		F
38	STS-35	OV102	DC	METER-VERTICAL SCALE	MC432-0238	-0019	0790019101		F

AVIONICS
ELECTRICAL POWER DISTRIBUTION AND CONTROL (EPDC) SUBSYSTEM

MISS SEQ	STS	ORB	SUBSYSTEM	LRU NOMENCLATURE	PART NUMBER	DASH NUMBER	SERIAL NUMBER	SLOT	STAT
36	STS-41	OV103	EPDC	FLIGHT CONTROL ACTUATOR POWER ASSEMBLY	V070-764350	-004	0000AD9162	1	F
36	STS-41	OV103	EPDC	FLIGHT CONTROL ACTUATOR POWER ASSEMBLY	V070-764350	-004	0000J76030	2	F
37	STS-38	OV104	EPDC	FLIGHT CONTROL ACTUATOR POWER ASSEMBLY	V070-764350	-004	0000AF0716	1	F
37	STS-38	OV104	EPDC	FLIGHT CONTROL ACTUATOR POWER ASSEMBLY	V070-764350	-004	0000AF0729	2	F
38	STS-35	OV102	EPDC	FLIGHT CONTROL ACTUATOR POWER ASSEMBLY	V070-764350	-003	0000A46408	1	F
38	STS-35	OV102	EPDC	FLIGHT CONTROL ACTUATOR POWER ASSEMBLY	V070-764350	-003	0000A46409	2	F
36	STS-41	OV103	EPDC	AFT HYBRID LOAD CONTROLLER NBR 1	MC450-0057	-0001	756MYD0004	1	F
37	STS-38	OV104	EPDC	AFT HYBRID LOAD CONTROLLER NBR 1	MC450-0057	-0001	756MYD0003	1	F
38	STS-35	OV102	EPDC	AFT HYBRID LOAD CONTROLLER NBR 1	MC450-0057	-0001	756MYD0006	1	F
36	STS-41	OV103	EPDC	AFT HYBRID LOAD CONTROLLER NBR 2	MC450-0058	-0001	756MYF0004	2	F
37	STS-38	OV104	EPDC	AFT HYBRID LOAD CONTROLLER NBR 2	MC450-0058	-0001	756MYF0001	2	F
38	STS-35	OV102	EPDC	AFT HYBRID LOAD CONTROLLER NBR 2	MC450-0058	-0001	756MYF0002	2	F
36	STS-41	OV103	EPDC	AFT HYBRID LOAD CONTROLLER NBR 3	MC450-0059	-0001	756MYH0003	3	F
37	STS-38	OV104	EPDC	AFT HYBRID LOAD CONTROLLER NBR 3	MC450-0059	-0001	756MYH0004	3	F
38	STS-35	OV102	EPDC	AFT HYBRID LOAD CONTROLLER NBR 3	MC450-0059	-0001	756MYH0002	3	F
36	STS-41	OV103	EPDC	AFT MOTOR CONTROL ASSY NBR 1	V070-765410	-002	0000AM6518		F
37	STS-38	OV104	EPDC	AFT MOTOR CONTROL ASSY NBR 1	V070-765410	-002	0000F71020		F
38	STS-35	OV102	EPDC	AFT MOTOR CONTROL ASSY NBR 1	V070-765630	-004	0000601094	1	F
36	STS-41	OV103	EPDC	AFT MOTOR CONTROL ASSY NBR 2	V070-765420	-001	0000F71036	2	F
37	STS-38	OV104	EPDC	AFT MOTOR CONTROL ASSY NBR 2	V070-765420	-001	0000AM6266	2	F
38	STS-35	OV102	EPDC	AFT MOTOR CONTROL ASSY NBR 2	V070-765420	-001	0000N19382	2	F
36	STS-41	OV103	EPDC	AFT MOTOR CONTROL ASSY NBR 3	V070-765430	-001	0000N19381	3	F
37	STS-38	OV104	EPDC	AFT MOTOR CONTROL ASSY NBR 3	V070-765430	-001	0000AM3349	3	F
38	STS-35	OV102	EPDC	AFT MOTOR CONTROL ASSY NBR 3	V070-765430	-001	0000F71021	3	F
36	STS-41	OV103	EPDC	AFT POWER CONTROL ASSY NBR 1	V070-765310	-005	0000F66220	1	F
37	STS-38	OV104	EPDC	AFT POWER CONTROL ASSY NBR 1	V070-765310	-003	0000AM6520	1	F
38	STS-35	OV102	EPDC	AFT POWER CONTROL ASSY NBR 1	V070-765310	-007	0000C09112	1	F
36	STS-41	OV103	EPDC	AFT POWER CONTROL ASSY NBR 2	V070-765320	-005	0000F66222	2	F
37	STS-38	OV104	EPDC	AFT POWER CONTROL ASSY NBR 2	V070-765320	-007	0000C39315		F
38	STS-35	OV102	EPDC	AFT POWER CONTROL ASSY NBR 2	V070-765220	-010	0000155728	2	F
36	STS-41	OV103	EPDC	AFT POWER CONTROL ASSY NBR 3	V070-765330	-008	0000J43296	3	F
37	STS-38	OV104	EPDC	AFT POWER CONTROL ASSY NBR 3	V070-765330	-009	0000AM6519	3	F
38	STS-35	OV102	EPDC	AFT POWER CONTROL ASSY NBR 3	V070-765240	-011	0000265334	3	F
36	STS-41	OV103	EPDC	AFT POWER CONTROL ASSY 4,5,6	V070-765280	-026	0000155796	4	F
36	STS-41	OV103	EPDC	AFT POWER CONTROL ASSY 4,5,6	V070-765280	-026	0000155797	5	F
36	STS-41	OV103	EPDC	AFT POWER CONTROL ASSY 4,5,6	V070-765280	-028	0000E71704	6	F
37	STS-38	OV104	EPDC	AFT POWER CONTROL ASSY 4,5,6	V070-765280	-027	0000J53758	4	F
37	STS-38	OV104	EPDC	AFT POWER CONTROL ASSY 4,5,6	V070-765280	-027	0000J53760	5	F
37	STS-38	OV104	EPDC	AFT POWER CONTROL ASSY 4,5,6	V070-765280	-026	0000155798	6	F
38	STS-35	OV102	EPDC	AFT POWER CONTROL ASSY 4,5,6	V070-765280	-027	0000F58293	4	F
38	STS-35	OV102	EPDC	AFT POWER CONTROL ASSY 4,5,6	V070-765280	-027	0000J53759	5	F
38	STS-35	OV102	EPDC	AFT POWER CONTROL ASSY 4,5,6	V070-765280	-028	0000E71705	6	F
36	STS-41	OV103	EPDC	BACKUP FLIGHT CONTROLLER	MC615-0023	-0004	0000TJR001	1	F
36	STS-41	OV103	EPDC	BACKUP FLIGHT CONTROLLER	MC615-0023	-0004	0000TJR004	2	F
36	STS-41	OV103	EPDC	BACKUP FLIGHT CONTROLLER	MC615-0023	-0004	0000TJR008	3	F
37	STS-38	OV104	EPDC	BACKUP FLIGHT CONTROLLER	MC615-0023	-0004	0000TJR013	1	F
37	STS-38	OV104	EPDC	BACKUP FLIGHT CONTROLLER	MC615-0023	-0004	0000TJR007	2	F

MISS SEQ	STS	ORB	SUBSYSTEM	LRU NOMENCLATURE	PART NUMBER	DASH NUMBER	SERIAL NUMBER	SLOT	STAT
37	STS-38	OV104	EPDC	BACKUP FLIGHT CONTROLLER	MC615-0023	-0004	0000TJR015	3	F
38	STS-35	OV102	EPDC	BACKUP FLIGHT CONTROLLER	MC615-0023	-0004	0000TJR014	1	F
38	STS-35	OV102	EPDC	BACKUP FLIGHT CONTROLLER	MC615-0023	-0004	0000TJR003	2	F
38	STS-35	OV102	EPDC	BACKUP FLIGHT CONTROLLER	MC615-0023	-0004	0000TJR002	3	F
36	STS-41	OV103	EPDC	CRYO HEATER CONTROL ASSY	V070-764470	-018	0000N18891	1	F
36	STS-41	OV103	EPDC	CRYO HEATER CONTROL ASSY	V070-764470	-018	0000J75615	2	F
36	STS-41	OV103	EPDC	CRYO HEATER CONTROL ASSY	V070-764470	-019	0000AC6147	3	F
36	STS-41	OV103	EPDC	CRYO HEATER CONTROL ASSY	V070-764470	-019	0000AC6146	4	F
37	STS-38	OV104	EPDC	CRYO HEATER CONTROL ASSY	V070-764470	-018	0000J47318	1	F
37	STS-38	OV104	EPDC	CRYO HEATER CONTROL ASSY	V070-764470	-018	0000J47317	2	F
37	STS-38	OV104	EPDC	CRYO HEATER CONTROL ASSY	V070-764470	-019	0000AU4326	3	F
38	STS-35	OV102	EPDC	CRYO HEATER CONTROL ASSY	V070-764470	-020	0000280093	1	F
38	STS-35	OV102	EPDC	CRYO HEATER CONTROL ASSY	V070-764470	-020	0000280092	2	F
38	STS-35	OV102	EPDC	CRYO HEATER CONTROL ASSY	V070-764470	-019	0000AU4327	3	F
38	STS-35	OV102	EPDC	CRYO HEATER CONTROL ASSY	V070-764470	-021	0000B04570	4	F
38	STS-35	OV102	EPDC	DFI POWER DISTRIBUTION ASSY	V070-783560	-001	0000264641		F
36	STS-41	OV103	EPDC	DIODE BOX ASSY	V070-765380	-001	0000J43480	1	F
36	STS-41	OV103	EPDC	DIODE BOX ASSY	V070-765380	-001	0000J43479	2	F
36	STS-41	OV103	EPDC	DIODE BOX ASSY	V070-765380	-001	0000J43481	3	F
37	STS-38	OV104	EPDC	DIODE BOX ASSY	V070-765380	-001	0000AM5621	1	F
37	STS-38	OV104	EPDC	DIODE BOX ASSY	V070-765380	-001	0000AM5622	2	F
37	STS-38	OV104	EPDC	DIODE BOX ASSY	V070-765380	-001	0000AM5623	3	F
38	STS-35	OV102	EPDC	DIODE BOX ASSY	V070-765380	-001	0000AM0862	1	F
38	STS-35	OV102	EPDC	DIODE BOX ASSY	V070-765380	-001	0000AM0863	2	F
38	STS-35	OV102	EPDC	DIODE BOX ASSY	V070-765380	-001	0000AM0864	3	F
36	STS-41	OV103	EPDC	EMU PWR SUP/BATTERY CHARGER	MC461-0032	-0003	0000078207		F
37	STS-38	OV104	EPDC	EMU PWR SUP/BATTERY CHARGER	MC461-0032	-0003	0001082009		F
38	STS-35	OV102	EPDC	EMU PWR SUP/BATTERY CHARGER	MC461-0032	-0003	0000982008		F
36	STS-41	OV103	EPDC	FWD HYBRID LOAD CONTROLLER NBR 1	MC450-0054	-0001	756MXR0005	1	F
37	STS-38	OV104	EPDC	FWD HYBRID LOAD CONTROLLER NBR 1	MC450-0054	-0001	756MXR0003	1	F
38	STS-35	OV102	EPDC	FWD HYBRID LOAD CONTROLLER NBR 1	MC450-0054	-0001	756MXR0004		F
36	STS-41	OV103	EPDC	FWD HYBRID LOAD CONTROLLER NBR 2	MC450-0055	-0002	756MXV0004	2	F
37	STS-38	OV104	EPDC	FWD HYBRID LOAD CONTROLLER NBR 2	MC450-0055	-0002	756MXV0005	2	F
38	STS-35	OV102	EPDC	FWD HYBRID LOAD CONTROLLER NBR 2	MC450-0055	-0002	756MXV0006	2	F
36	STS-41	OV103	EPDC	FWD HYBRID LOAD CONTROLLER NBR 3	MC450-0056	-0002	756MXX0003	3	F
37	STS-38	OV104	EPDC	FWD HYBRID LOAD CONTROLLER NBR 3	MC450-0056	-0002	756MXX0004	3	F
38	STS-35	OV102	EPDC	FWD HYBRID LOAD CONTROLLER NBR 3	MC450-0056	-0001	756MXX0001	3	F
36	STS-41	OV103	EPDC	FWD MOTOR CONTROL ASSY NBR 1	V070-763600	-002	0000J85217	1	F
37	STS-38	OV104	EPDC	FWD MOTOR CONTROL ASSY NBR 1	V070-763600	-002	0000AN5492	1	F
38	STS-35	OV102	EPDC	FWD MOTOR CONTROL ASSY NBR 1	V070-763600	-001	0000608384	1	F
36	STS-41	OV103	EPDC	FWD MOTOR CONTROL ASSY NBR 2	V070-763620	-003	0000J85714	2	F
37	STS-38	OV104	EPDC	FWD MOTOR CONTROL ASSY NBR 2	V070-763620	-003	0000AU7745	2	F
38	STS-35	OV102	EPDC	FWD MOTOR CONTROL ASSY NBR 2	V070-763620	-003	0000F71097	2	F
36	STS-41	OV103	EPDC	FWD MOTOR CONTROL ASSY NBR 3	V070-763630	-003	0000J25040	3	F
37	STS-38	OV104	EPDC	FWD MOTOR CONTROL ASSY NBR 3	V070-763630	-003	0000AU6494	3	F
38	STS-35	OV102	EPDC	FWD MOTOR CONTROL ASSY NBR 3	V070-763630	-003	0000F71098	3	F
36	STS-41	OV103	EPDC	FWD POWER CONTROL ASSY NBR 1	V070-763320	-022	0000AX2619	1	F
37	STS-38	OV104	EPDC	FWD POWER CONTROL ASSY NBR 1	V070-763320	-025	0000266775		F
38	STS-35	OV102	EPDC	FWD POWER CONTROL ASSY NBR 1	V070-763320	-024	0000B35293	1	F

MISS SEQ	STS	ORB	SUBSYSTEM	LRU NOMENCLATURE	PART NUMBER	DASH NUMBER	SERIAL NUMBER	SLOT	STAT
36	STS-41	OV103	EPDC	FWD POWER CONTROL ASSY NBR 2	V070-763340	-007	0000J12867	2	F
37	STS-38	OV104	EPDC	FWD POWER CONTROL ASSY NBR 2	V070-763340	-009	0000620303	2	F
38	STS-35	OV102	EPDC	FWD POWER CONTROL ASSY NBR 2	V070-763340	-010	0000F66179	2	F
36	STS-41	OV103	EPDC	FWD POWER CONTROL ASSY NBR 3	V070-763360	-020	0000620749	3	F
37	STS-38	OV104	EPDC	FWD POWER CONTROL ASSY NBR 3	V070-763360	-021	0000J12866	3	F
38	STS-35	OV102	EPDC	FWD POWER CONTROL ASSY NBR 3	V070-763360	-022	0000AX2618	3	F
36	STS-41	OV103	EPDC	GROUND CONTROL INTERFACE LOGIC	MC450-0051	-0002	0000000004		F
37	STS-38	OV104	EPDC	GROUND CONTROL INTERFACE LOGIC	MC450-0051	-0002	0000000010		F
38	STS-35	OV102	EPDC	GROUND CONTROL INTERFACE LOGIC	MC450-0051	-0002	0000000009		F
36	STS-41	OV103	EPDC	INVERTER DISTRIBUTION AND CONTROL ASSY	V070-763380	-005	0000F58661	1	F
36	STS-41	OV103	EPDC	INVERTER DISTRIBUTION AND CONTROL ASSY	V070-763380	-005	0000F58660	2	F
36	STS-41	OV103	EPDC	INVERTER DISTRIBUTION AND CONTROL ASSY	V070-763380	-005	0000F58659	3	F
37	STS-38	OV104	EPDC	INVERTER DISTRIBUTION AND CONTROL ASSY	V070-763380	-005	0000J48225	1	F
37	STS-38	OV104	EPDC	INVERTER DISTRIBUTION AND CONTROL ASSY	V070-763380	-005	0000J48224	2	F
37	STS-38	OV104	EPDC	INVERTER DISTRIBUTION AND CONTROL ASSY	V070-763380	-005	0000J48226	3	F
38	STS-35	OV102	EPDC	INVERTER DISTRIBUTION AND CONTROL ASSY	V070-763380	-006	0000F58231	1	F
38	STS-35	OV102	EPDC	INVERTER DISTRIBUTION AND CONTROL ASSY	V070-763380	-004	0000151635	2	F
38	STS-35	OV102	EPDC	INVERTER DISTRIBUTION AND CONTROL ASSY	V070-763380	-004	0000151634	3	F
36	STS-41	OV103	EPDC	INVERTER	MC495-0012	-0004	0000000017	1A	F
36	STS-41	OV103	EPDC	INVERTER	MC495-0012	-0004	0000000024	1B	F
36	STS-41	OV103	EPDC	INVERTER	MC495-0012	-0004	0000000055	1C	F
36	STS-41	OV103	EPDC	INVERTER	MC495-0012	-0004	0000000021	2A	F
36	STS-41	OV103	EPDC	INVERTER	MC495-0012	-0004	0000000050	2B	F
36	STS-41	OV103	EPDC	INVERTER	MC495-0012	-0004	0000000056	2C	F
36	STS-41	OV103	EPDC	INVERTER	MC495-0012	-0004	0000000025	3A	F
36	STS-41	OV103	EPDC	INVERTER	MC495-0012	-0004	0000000053	3B	F
36	STS-41	OV103	EPDC	INVERTER	MC495-0012	-0004	0000000057	3C	F
37	STS-38	OV104	EPDC	INVERTER	MC495-0012	-0004	0000000058	1A	F
37	STS-38	OV104	EPDC	INVERTER	MC495-0012	-0004	0000000062	1B	F
37	STS-38	OV104	EPDC	INVERTER	MC495-0012	-0004	0000000060	1C	F
37	STS-38	OV104	EPDC	INVERTER	MC495-0012	-0004	0000000042	2A	F
37	STS-38	OV104	EPDC	INVERTER	MC495-0012	-0004	0000000033	2B	F
37	STS-38	OV104	EPDC	INVERTER	MC495-0012	-0004	0000000018	2C	F
37	STS-38	OV104	EPDC	INVERTER	MC495-0012	-0004	0000000054	3A	F
37	STS-38	OV104	EPDC	INVERTER	MC495-0012	-0004	0000000051	3B	F
37	STS-38	OV104	EPDC	INVERTER	MC495-0012	-0004	0000000061	3C	F
38	STS-35	OV102	EPDC	INVERTER	MC495-0012	-0004	0000000036	1A	F
38	STS-35	OV102	EPDC	INVERTER	MC495-0012	-0004	0000000048	1B	F
38	STS-35	OV102	EPDC	INVERTER	MC495-0012	-0004	0000000035	1C	F
38	STS-35	OV102	EPDC	INVERTER	MC495-0012	-0004	0000000059	2A	F
38	STS-35	OV102	EPDC	INVERTER	MC495-0012	-0004	0000000039	2B	F
38	STS-35	OV102	EPDC	INVERTER	MC495-0012	-0004	0000000040	2C	F
38	STS-35	OV102	EPDC	INVERTER	MC495-0012	-0004	0000000037	3A	F
38	STS-35	OV102	EPDC	INVERTER	MC495-0012	-0004	0000000041	3B	F
38	STS-35	OV102	EPDC	INVERTER	MC495-0012	-0004	0000000047	3C	F
36	STS-41	OV103	EPDC	MADS CONTROL ASSY'S	V408-763220	-002	0000N12307		F
37	STS-38	OV104	EPDC	MADS CONTROL ASSY'S	V408-763220	-002	0000BH2726		F
37	STS-38	OV104	EPDC	MADS POWER DISTRIBUTION ASSY'S	V408-764590	-001	0000BW1972		F
38	STS-35	OV102	EPDC	MADS POWER DISTRIBUTION ASSY'S	V408-764590	-001	0000BE7928		F
36	STS-41	OV103	EPDC	MAIN POWER DISTRIBUTION ASSEMBLY NBR 1	V070-764200	-002	0000J76604	1	F
37	STS-38	OV104	EPDC	MAIN POWER DISTRIBUTION ASSEMBLY NBR 1	V070-764200	-002	0000AU4313	1	F
38	STS-35	OV102	EPDC	MAIN POWER DISTRIBUTION ASSEMBLY NBR 1	V070-764200	-004	0000A07834	1	F

MISS SEQ	STS	ORB	SUBSYSTEM	LRU NOMENCLATURE	PART NUMBER	DASH NUMBER	SERIAL NUMBER	SLOT	STAT
36	STS-41	OV103	EPDC	MAIN POWER DISTRIBUTION ASSEMBLY NBR 2	V070-764220	-002	0000J78988	2	F
37	STS-38	OV104	EPDC	MAIN POWER DISTRIBUTION ASSEMBLY NBR 2	V070-764220	-002	0000AF0715	2	F
38	STS-35	OV102	EPDC	MAIN POWER DISTRIBUTION ASSEMBLY NBR 2	V070-764220	-003	0000665318	2	F
36	STS-41	OV103	EPDC	MAIN POWER DISTRIBUTION ASSEMBLY NBR 3	V070-764230	-005	0000J71912	3	F
37	STS-38	OV104	EPDC	MAIN POWER DISTRIBUTION ASSEMBLY NBR 3	V070-764230	-005	0000AX3420	3	F
38	STS-35	OV102	EPDC	MAIN POWER DISTRIBUTION ASSEMBLY NBR 3	V070-764230	-007	0000665319	3	F
36	STS-41	OV103	EPDC	MASTER EVENTS CONTROLLER	MC450-0016	-0006	0000LMV009	1	F
36	STS-41	OV103	EPDC	MASTER EVENTS CONTROLLER	MC450-0016	-0006	0000LMV002	2	F
37	STS-38	OV104	EPDC	MASTER EVENTS CONTROLLER	MC450-0016	-0006	0000LMV005	1	F
37	STS-38	OV104	EPDC	MASTER EVENTS CONTROLLER	MC450-0016	-0006	0000LMV004	2	F
38	STS-35	OV102	EPDC	MASTER EVENTS CONTROLLER	MC450-0016	-0006	0000LMV001	1	F
38	STS-35	OV102	EPDC	MASTER EVENTS CONTROLLER	MC450-0016	-0006	0000LMV008	2	F
36	STS-41	OV103	EPDC	MIDBODY JETTISON CONTROL ASSY	V082-764360	-003	0000AU1175		F
37	STS-38	OV104	EPDC	MIDBODY JETTISON CONTROL ASSY	V082-764360	-003	0000BF0745		F
38	STS-35	OV102	EPDC	MIDBODY JETTISON CONTROL ASSY	V082-764360	-001	0000A78557		F
36	STS-41	OV103	EPDC	MID MOTOR CONTROL ASSY NBR 1	V070-764610	-004	0000J53761	1	F
37	STS-38	OV104	EPDC	MID MOTOR CONTROL ASSY NBR 1	V070-764610	-004	0000F71033	1	F
38	STS-35	OV102	EPDC	MID MOTOR CONTROL ASSY NBR 1	V070-764520	-005	0000A01625	1	F
36	STS-41	OV103	EPDC	MID MOTOR CONTROL ASSY NBR 2	V070-764620	-006	0000B93124	2	F
37	STS-38	OV104	EPDC	MID MOTOR CONTROL ASSY NBR 2	V070-764620	-005	0000AU7767	2	F
38	STS-35	OV102	EPDC	MID MOTOR CONTROL ASSY NBR 2	V070-764530	-005	0000640859	2	F
36	STS-41	OV103	EPDC	MID MOTOR CONTROL ASSY NBR 3	V070-764630	-004	0000F71030		F
37	STS-38	OV104	EPDC	MID MOTOR CONTROL ASSY NBR 3	V070-764630	-004	0000AU0704	3	F
38	STS-35	OV102	EPDC	MID MOTOR CONTROL ASSY NBR 3	V070-764550	-005	0000A26452	3	F
36	STS-41	OV103	EPDC	MID MOTOR CONTROL ASSY NBR 4	V070-764500	-006	0000A01551		F
37	STS-38	OV104	EPDC	MID MOTOR CONTROL ASSY NBR 4	V070-764640	-005	0000F71028	4	F
38	STS-35	OV102	EPDC	MID MOTOR CONTROL ASSY NBR 4	V070-764640	-005	0000AU4139	4	F
36	STS-41	OV103	EPDC	MID POWER CONTROL ASSY NBR 1	V070-764400	-016	0000AU3690	1	F
37	STS-38	OV104	EPDC	MID POWER CONTROL ASSY NBR 1	V070-764400	-015	0000J43443	1	F
38	STS-35	OV102	EPDC	MID POWER CONTROL ASSY NBR 1	V070-764400	-015	0000F71022	1	F
36	STS-41	OV103	EPDC	MID POWER CONTROL ASSY NBR 2	V070-764430	-016	0000AW2439	2	F
37	STS-38	OV104	EPDC	MID POWER CONTROL ASSY NBR 2	V070-764430	-015	0000J55046	2	F
38	STS-35	OV102	EPDC	MID POWER CONTROL ASSY NBR 2	V070-764430	-015	0000F71099		F
36	STS-41	OV103	EPDC	MID POWER CONTROL ASSY NBR 3	V070-764450	-014	0000A25809	3	F
37	STS-38	OV104	EPDC	MID POWER CONTROL ASSY NBR 3	V070-764450	-016	0000AU7720	3	F
38	STS-35	OV102	EPDC	MID POWER CONTROL ASSY NBR 3	V070-764450	-015	0000F71023	3	F
37	STS-38	OV104	EPDC	PAYLOAD POWER EQUIPMENT	V712-764700	-001	0000P11841		F
37	STS-38	OV104	EPDC	PAYLOAD POWER EQUIPMENT	V712-764700	-001	0000P12876		F
38	STS-35	OV102	EPDC	PAYLOAD POWER EQUIPMENT	V565-763200	-003	0000B26480		F
36	STS-41	OV103	EPDC	PROXIMITY SWITCH ELECTRONICS	MC452-0124	-0009	8748000014		F
36	STS-41	OV103	EPDC	PROXIMITY SWITCH ELECTRONICS	MC452-0124	-0009	8748000015		F
37	STS-38	OV104	EPDC	PROXIMITY SWITCH ELECTRONICS	MC452-0124	-0009	8748000003		F
37	STS-38	OV104	EPDC	PROXIMITY SWITCH ELECTRONICS	MC452-0124	-0009	8748000006		F
38	STS-35	OV102	EPDC	PROXIMITY SWITCH ELECTRONICS	MC452-0124	-0009	8748000017	1	F
38	STS-35	OV102	EPDC	PROXIMITY SWITCH ELECTRONICS	MC452-0124	-0009	8748000010	2	F

AVIONICS
MODULAR AUXILARY DATA (MADS) SUBSYSTEM

MISS SEQ	STS	ORB	SUBSYSTEM	LRU NOMENCLATURE	PART NUMBER	DASH NUMBER	SERIAL NUMBER	SLOT	STAT
36	STS-41	OV103	MADS	MADS FREQUENCY DIVISION MULTIPLEXER	MC409-0010	-0003	AVS0876007	1	F
36	STS-41	OV103	MADS	MADS FREQUENCY DIVISION MULTIPLEXER	MC409-0010	-0003	AVS0477012	2	F
37	STS-38	OV104	MADS	MADS FREQUENCY DIVISION MULTIPLEXER	MC409-0010	-0003	AVS1277018	1	F
37	STS-38	OV104	MADS	MADS FREQUENCY DIVISION MULTIPLEXER	MC409-0010	-0003	AVS0876009	2	F
38	STS-35	OV102	MADS	MADS FREQUENCY DIVISION MULTIPLEXER	MC409-0010	-0003	AVS0876008	1	F
38	STS-35	OV102	MADS	MADS FREQUENCY DIVISION MULTIPLEXER	MC409-0010	-0003	AVS0576005	2	F
36	STS-41	OV103	MADS	MADS PULSE CODE MODULATION	MC476-0251	-0004	0000000309	1	F
37	STS-38	OV104	MADS	MADS PULSE CODE MODULATION	MC476-0251	-0004	0000000307	1	F
38	STS-35	OV102	MADS	MADS PULSE CODE MODULATION	MC476-0251	-0004	0000000305	1	F
38	STS-35	OV102	MADS	MADS PULSE CODE MODULATION	MC476-0251	-0004	0000000306	2	F
38	STS-35	OV102	MADS	MADS PULSE CODE MODULATION	MC476-0251	-0004	0000000301	3	F
36	STS-41	OV103	MADS	RECORDERS/DAM	ME435-0055	-0101	0000001006		F
37	STS-38	OV104	MADS	RECORDERS/DAM	ME435-0055	-0101	0000001005		F
38	STS-35	OV102	MADS	RECORDERS/DAM	ME435-0055	-0101	0000001002		F

AVIONICS
OPERATIONAL INSTRUMENTATION (OI) SUBSYSTEM

MISS SEQ	STS	ORB	SUBSYSTEM	LRU NOMENCLATURE	PART NUMBER	DASH NUMBER	SERIAL NUMBER	SLOT	STAT
36	STS-41	OV103	OI	OPER. INST. AFT MULT./DEMULT.	MC615-0004	-5410	0000000055	1	F
36	STS-41	OV103	OI	OPER. INST. AFT MULT./DEMULT.	MC615-0004	-5410	0000000073	2	F
36	STS-41	OV103	OI	OPER. INST. AFT MULT./DEMULT.	MC615-0004	-6410	0000000125	3	F
37	STS-38	OV104	OI	OPER. INST. AFT MULT./DEMULT.	MC615-0004	-6410	0000000136	1	F
37	STS-38	OV104	OI	OPER. INST. AFT MULT./DEMULT.	MC615-0004	-6410	0000000127	2	F
37	STS-38	OV104	OI	OPER. INST. AFT MULT./DEMULT.	MC615-0004	-5410	0000000074	3	F
38	STS-35	OV102	OI	OPER. INST. AFT MULT./DEMULT.	MC615-0004	-5410	0000000018		F
38	STS-35	OV102	OI	OPER. INST. AFT MULT./DEMULT.	MC615-0004	-6410	0000000126	2	F
38	STS-35	OV102	OI	OPER. INST. AFT MULT./DEMULT.	MC615-0004	-6410	0000000137	3	F
36	STS-41	OV103	OI	OPER. INST. FWD MULT./DEMULT.	MC615-0004	-6310	0000000145	1	F
36	STS-41	OV103	OI	OPER. INST. FWD MULT./DEMULT.	MC615-0004	-6310	0000000116	2	F
36	STS-41	OV103	OI	OPER. INST. FWD MULT./DEMULT.	MC615-0004	-5310	0000000066	3	F
36	STS-41	OV103	OI	OPER. INST. FWD MULT./DEMULT.	MC615-0004	-6510	0000000118	4	F
37	STS-38	OV104	OI	OPER. INST. FWD MULT./DEMULT.	MC615-0004	-5310	0000000052	1	F
37	STS-38	OV104	OI	OPER. INST. FWD MULT./DEMULT.	MC615-0004	-6310	0000000148	2	F
37	STS-38	OV104	OI	OPER. INST. FWD MULT./DEMULT.	MC615-0004	-5300	0000000067	3	F
37	STS-38	OV104	OI	OPER. INST. FWD MULT./DEMULT.	MC615-0004	-6510	0000000158	4	F
38	STS-35	OV102	OI	OPER. INST. FWD MULT./DEMULT.	MC615-0004	-6310	0000000144	1	F
38	STS-35	OV102	OI	OPER. INST. FWD MULT./DEMULT.	MC615-0004	-6310	0000000091	2	F
38	STS-35	OV102	OI	OPER. INST. FWD MULT./DEMULT.	MC615-0004	-6310	0000000115	3	F
38	STS-35	OV102	OI	OPER. INST. FWD MULT./DEMULT.	MC615-0004	-6510	0000000146	4	F
36	STS-41	OV103	OI	MASTER TIMING UNIT	MC456-0051	-0005	0000000005		F
37	STS-38	OV104	OI	MASTER TIMING UNIT	MC456-0051	-0005	0000000007		F
38	STS-35	OV102	OI	MASTER TIMING UNIT	MC456-0051	-0001	0000000002		F
36	STS-41	OV103	OI	PULSE CODE MOD	MC476-0130	-0709	0000000012	1	F
36	STS-41	OV103	OI	PULSE CODE MOD	MC476-0130	-0709	0000000010	2	F
37	STS-38	OV104	OI	PULSE CODE MOD	MC476-0130	-0709	0000000006	1	F
37	STS-38	OV104	OI	PULSE CODE MOD	MC476-0130	-0709	0000000011	2	F
38	STS-35	OV102	OI	PULSE CODE MOD	MC476-0130	-0709	0000000003	1	F
38	STS-35	OV102	OI	PULSE CODE MOD	MC476-0130	-0709	0000000002	2	F
36	STS-41	OV103	OI	PAYLOAD DATA INTERLEAVER	MC476-0136	-0005	0000000005		F
37	STS-38	OV104	OI	PAYLOAD DATA INTERLEAVER	MC476-0136	-0005	0000000007		F
38	STS-35	OV102	OI	PAYLOAD DATA INTERLEAVER	MC476-0136	-0005	0000000004		F
36	STS-41	OV103	OI	PLB/ORB TIMING BUFFER	MC456-0060	-0003	0000000009		F
36	STS-41	OV103	OI	PLB/ORB TIMING BUFFER	MC456-0060	-0003	0000000011		F
37	STS-38	OV104	OI	PLB/ORB TIMING BUFFER	MC456-0060	-0003	0000000005		F
37	STS-38	OV104	OI	PLB/ORB TIMING BUFFER	MC456-0060	-0003	0000000012		F
38	STS-35	OV102	OI	PLB/ORB TIMING BUFFER	MC456-0060	-0003	0000000007		F
38	STS-35	OV102	OI	PLB/ORB TIMING BUFFER	MC456-0060	-0003	0000000008		F

*** END OF REPORT ***

ORBITER PROPULSION SYSTEMS
COMPONENT S/N - LOCATION MATRIX

PRIMARY SPEC: MC 467-0028-XXXX RCS FORWARD THRUSTERS PN/SN VERNIER SPEC: MC 467-0029-XXXX

MSN SEQ NO.	STS NO.	ORB OV-	PRIMARY														VERNIER		* CAUSE OF POSTFLIGHT REPLACEMENT
			F1F	F2F	F3F	F1U	F2U	F3U	F2R	F4R	F2D	F4D	F1L	F3L	F1D	F3D	F5R	F5L	
1	1	102	0112 102	0132 103	0122 101	0115 109	0135 110	0125 108	0134 114	0144 113	0136 106	0146 107	0113 112	0123 111	0116 104	0126 105	0158 106	0157 105	
2	2	102	0112 102	0132 103	0122 101	0115 109	0135 110	0125 108	0134 114	0144 113	0136 106	0146 107	0113 112	0123 111	0116 104	0126 105	0158 106	0157 105	
3	3	102	0112 *102	0132 103	0122 101	0115 *109	0135 *110	0125 *108	0134 *114	0144 113	0136 106	0146 107	0113 *112	0123 111	0116 104	0126 105	0158 106	0157 105	GYPSUM CONTAM.
4	4	102	1112 202	0132 123	0122 101	2115 209	2135 210	1125 208	1134 214	0144 113	0136 106	0146 107	1113 *212	0123 111	0116 104	0126 105	0158 *106	0157 *105	F1L OX VLV LK. VERN COATING PROB.
5	5	102	1112 202	0132 123	0122 101	2115 209	2135 210	1125 208	1134 214	0144 *113	0136 106	0146 *107	0413 112	0123 111	0116 104	0126 105	3158 204	3157 203	F4R LOW PC. F4D OX VLV FAIL.
6	6	099	3112 302	1132 203	1122 201	4115 309	4135 310	3125 308	4134 314	1144 213	1136 206	1146 207	4113 312	1123 211	1116 204	1126 205	3158 304	3157 303	
7	7	099	3112 302	1132 203	1122 201	4115 309	4135 310	3125 308	4134 314	1144 213	1136 206	1146 207	4113 312	1123 211	1116 204	1126 205	3158 304	3157 303	
8	8	099	3112 302	1132 203	1122 201	4115 309	4135 310	3125 308	4134 314	1144 213	1136 206	1146 207	4113 312	1123 211	1116 204	1126 *205	3158 304	3157 303	OX VLV LK.
9	9	102	1112 202	0132 103	0122 101	2115 209	2135 210	2125 208	1134 214	0444 113	0136 106	4146 407	0413 112	0123 111	0116 104	0126 105	3158 204	3157 203	
10	41B	099	3112 302	1132 203	1122 201	4115 309	4135 310	3125 308	4134 314	1144 213	1136 206	1146 207	4113 312	1123 211	1116 204	4126 405	3158 304	3157 303	
11	41C	099	3112 302	1132 203	1122 201	4115 309	4135 310	3125 308	4134 314	1144 213	1136 206	1146 207	4113 312	1123 211	1116 204	4126 405	3158 304	3157 303	
12	41D	103	0412 102	4132 303	4122 301	0415 109	0435 110	0425 108	0434 114	4144 313	4136 306	4146 307	2113 212	4123 311	4116 304	4126 305	3158 404	3157 403	
13	41G	099	3112 302	1132 203	1122 201	4115 309	4135 310	3125 308	4134 314	1144 213	1136 206	1146 207	4113 312	1123 211	1116 204	4126 405	3158 304	3157 303	
14	51A	103	0412 102	4132 303	4122 301	0415 109	0435 110	0425 108	0434 114	4144 313	4136 306	4146 307	2113 212	4123 311	4116 304	4126 305	3158 404	3157 403	

ORBITER PROPULSION SYSTEMS
COMPONENT S/N - LOCATION MATRIX

PRIMARY SPEC: MC 467-0028-XXXX RCS FORWARD THRUSTERS PN/SN VERNIER SPEC: MC 467-0029-XXXX

MSN SEQ NO.	STS NO.	ORB OV-	PRIMARY														VERNIER		* CAUSE OF POSTFLIGHT REPLACEMENT
			F1F	F2F	F3F	F1U	F2U	F3U	F2R	F4R	F2D	F4D	F1L	F3L	F1D	F3D	F5R	F5L	
15	51C	103	0412 102	4132 303	4122 301	0415 109	0435 110	0425 108	0434 114	4144 313	4136 306	4146 307	2113 212	4123 311	4116 304	4126 305	3158 404	3157 403	
16	51D	103	0412 102	4132 303	4122 301	0415 109	0435 110	0425 108	0434 114	4144 313	4136 306	4146 307	2113 212	4123 311	4116 304	4126 305	3158 404	3157 403	
17	51B	099	3112 302	1132 203	1122 201	4115 309	4135 310	3125 308	4134 314	1144 213	1136 206	1146 207	4113 312	1123 211	1116 204	4126 405	3158 304	3157 303	
18	51G	103	0412 102	4132 303	4122 301	0415 109	0435 110	0425 108	0434 114	4144 313	4136 306	4146 307	2113 212	4123 311	4116 304	4126 305	3158 404	3157 403	
19	51F	099	3112 302	1132 203	1122 201	4115 309	4135 310	3125 308	4134 314	1144 213	1136 206	1146 207	4113 312	1123 211	1116 204	4126 405	3158 304	3157 303	
20	51I	103	0412 *102	4132 303	4122 301	0415 109	0435 110	0425 108	0434 114	4144 313	4136 306	4146 307	2113 212	4123 311	4116 304	4126 305	3158 404	3157 403	REPAIRED PC TUBE. REINSTALLED.
21	51J	104	4112 402	4132 403	4122 401	4115 409	4135 410	4125 408	4134 414	4144 413	4136 406	0146 107	4113 412	4123 411	4116 404	4126 455	4158 453	3157 452	
22	61A	099	3112 302	1132 203	1122 201	4115 309	4135 310	3125 308	4134 314	1144 213	1136 206	1146 207	4113 312	1123 211	1116 204	4126 405	3158 304	3157 303	
23	61B	104	4112 402	4132 403	4122 401	4115 409	4135 410	4125 408	4134 414	4144 413	4136 406	0146 107	4113 412	4123 411	4116 404	4126 455	4158 453	3157 452	
24	61C	102	4112 452	4132 453	4122 451	4115 459	4135 460	4125 458	4134 464	4144 463	0136 106	4146 407	0413 112	0123 111	0116 104	0126 105	3158 204	4157 463	
25	51L	099	3112 302	1132 203	1122 201	4115 309	4135 310	3125 308	4134 314	1144 213	1136 206	1146 207	4113 312	1123 211	1116 204	4126 405	3158 304	3157 303	
26	26	103	5112 202	5132 453	5122 101	5115 109	5135 460	5125 488	5134 464	5144 113	5136 456	5146 457	5113 462	5123 311	5116 454	5126 205	3158 404	3157 452	
27	27	104	5112 452	5132 403	5122 301	5115 459	5135 210	5125 108	5134 414	5144 313	5136 106	5146 407	5113 112	5123 461	5116 304	5126 455	4158 453	7157 105	
28	29	103	5112 202	5132 453	5122 101	5115 109	5135 460	5125 488	5134 464	5144 113	5136 456	5146 457	5113 462	5123 311	5116 454	5126 205	3158 404	3157 452	
29	30	104	5112 452	5132 403	5122 301	5115 459	5135 210	5125 108	5134 414	5144 313	5136 106	5146 407	5113 112	5123 461	5116 304	5126 455	4158 453	7157 105	

ORBITER PROPULSION SYSTEMS
COMPONENT S/N - LOCATION MATRIX

PRIMARY SPEC: MC 467-0028-XXXX RCS FORWARD THRUSTERS PN/SN VERNIER SPEC: MC 467-0029-XXXX

MSN SEQ NO.	STS NO.	ORB OV-	PRIMARY														VERNIER		* CAUSE OF POSTFLIGHT REPLACEMENT
			F1F	F2F	F3F	F1U	F2U	F3U	F2R	F4R	F2D	F4D	F1L	F3L	F1D	F3D	F5R	F5L	
30	28	102	5112 402	5132 103	5122 451	5115 409	5135 110	5125 408	5134 214	5144 463	5136 406	5146 107	5113 212	5123 411	5116 404	5126 305	3158 *204	4157 *463	F5R REMOVED DUE TO OX LEAK. F5L REMOVED TO REPAIR HEATER.
31	34	104	5112 452	5132 403	5122 301	5115 459	5135 210	5125 108	5134 414	5144 313	5136 106	5146 407	5113 112	5123 461	5116 304	5126 455	4158 453	7157 105	
32	33	103	5112 202	5132 453	5122 101	5115 109	5135 460	5125 488	5134 464	5144 113	5136 456	5146 457	5113 462	5123 311	5116 454	5126 205	3158 404	3157 452	
33	32	102	5112 402	5132 103	5122 451	5115 409	5135 110	5125 408	5134 214	5144 463	5136 406	5146 107	5113 212	5123 411	5116 404	5126 305	4158 464	4157 203	
34	36	104	5112 452	5132 403	5122 301	5115 459	5135 210	5125 108	5134 414	5144 313	5136 106	5146 407	5113 112	5123 461	5116 304	5126 455	4158 453	7157 105	
35	31	103	5112 202	5132 453	5122 101	5115 109	5135 460	5125 488	5134 464	5144 113	5136 456	5146 457	5113 462	5123 311	5116 454	5126 205	3158 404	3157 452	
36	41	103	5112 202	5132 453	5122 101	5115 109	5135 460	5125 488	5134 464	5144 113	5136 456	5146 457	5113 462	5123 311	5116 484	5126 205	3158 404	3157 452	
37	38	104	5112 452	5132 403	5122 301	5115 459	5135 210	5125 108	5134 414	5144 313	5136 106	5146 407	5113 112	5123 461	5116 304	5126 455	4158 453	7157 105	
38	35	102	5112 402	5132 103	5122 451	5115 409	5135 110	5125 408	5134 214	5144 463	5136 406	5146 107	5113 212	5123 411	5116 404	5126 305	4158 464	3157 203	

ORBITER PROPULSION SYSTEMS
COMPONENT S/N - LOCATION MATRIX

PRIMARY SPEC: MC 467-0028-XXXX LEFT HAND POD RCS THRUSTERS PN/SN VERNIER SPEC: MC 467-0029-XXXX

MSN SEQ NO.	STS NO.	ORB OV-	POD S/N LH	PRIMARY												VERNIER		* CAUSE OF POSTFLIGHT REPLACEMENT
				L1L	L2L	L3L	L4L	L1U	L2U	L4U	L2D	L3D	L4D	L1A	L3A	L5L	L5D	
1	1	102	L102	0200 135	0200 138	0200 137	0200 136	0001 141	0001 125	0001 128	0001 126	0001 129	0001 127	0300 155	0300 118	0200 108	0001 102	
2	2	102	L102	0200 135	0200 138	0200 137	0200 136	0001 141	0001 125	0001 128	0001 126	0001 129	0001 127	0300 155	0300 118	0200 108	0001 102	
3	3	102	L102	0200 135	0200 138	0200 *137	0200 136	0001 *141	0001 *125	0001 *128	0001 126	0001 129	0001 127	0300 155	0300 118	0200 108	0001 102	L3L FAULTY HEATER GYPSUM CONTAMINATION
4	4	102	L102	0200 135	0200 138	3200 333	0200 136	3001 319	3001 320	3001 321	0001 126	0001 129	0001 127	0300 155	0300 118	0200 *108	0001 *102	VERNIER COATING PROBLEM
5	5	102	L102	0200 135	0200 138	3200 333	0200 136	3001 319	3001 320	3001 321	0001 126	0001 129	0001 127	0300 155	0300 118	3200 206	3001 301	
6	6	099	L099	2200 231	2201 134	2200 236	2200 238	2001 224	2001 226	2001 227	2001 *221	2001 228	2001 229	2300 216	2300 218	3200 306	3001 302	FUEL VLV LEAK
7	7	099	L099	2200 231	2201 134	2200 236	2200 238	2001 224	2001 226	2001 227	3001 421	2001 228	2001 229	2300 216	2300 218	3200 306	3001 302	
8	8	099	L099	2200 231	2201 134	2200 236	2200 238	2001 224	2001 226	2001 227	3001 421	2001 *228	2001 229	2300 216	2300 218	3200 306	3001 302	FUEL VLV LEAK
9	9	102	L102	0200 135	0200 138	3200 333	0200 136	3001 319	3001 320	3001 321	0001 126	0001 129	0001 127	0300 155	0300 118	3200 206	3001 301	
10	41B	099	L099	2200 231	2201 134	2200 236	2200 238	2001 224	2001 226	2001 227	3001 421	3001 429	2001 229	2300 216	2300 218	3200 306	3001 *302	OX VLV LEAK 41C PREFLT
11	41C	099	L103	2202 137	3200 337	3200 336	3200 338	0401 141	0401 124	0401 120	0401 128	0401 125	0401 119	3300 317	3300 318	3200 405	4001 461	
12	41D	103	L103	2202 137	3200 337	3200 336	3200 338	0401 141	0401 124	0401 120	0401 128	0401 125	0401 119	3300 317	3300 318	4200 456	4001 461	
13	41G	099	L099	2200 231	2201 134	2200 236	2200 238	2001 224	2001 226	2001 227	3001 421	3001 429	2001 229	2300 216	2300 218	3200 306	3001 302	
14	51A	103	L103	2202 137	3200 337	3200 336	3200 338	0401 141	0401 124	0401 120	0401 128	0401 125	0401 119	3300 317	3300 318	4200 456	4001 461	

ORBITER PROPULSION SYSTEMS
COMPONENT S/N - LOCATION MATRIX

PRIMARY SPEC: MC 467-0028-XXXX LEFT HAND POD RCS THRUSTERS PN/SN VERNIER SPEC: MC 467-0029-XXXX

MSN SEQ NO.	STS NO.	ORB OV-	POD S/N LH	PRIMARY												VERNIER		* CAUSE OF POSTFLIGHT REPLACEMENT
				L1L	L2L	L3L	L4L	L1U	L2U	L4U	L2D	L3D	L4D	L1A	L3A	L5L	L5D	
15	51C	103	L103	2202 137	3200 337	3200 336	3200 338	0401 141	0401 124	0401 120	0401 128	0401 125	0401 119	3300 317	3300 318	4200 456	4001 461	
16	51D	103	L103	2202 137	3200 337	3200 336	3200 338	0401 141	0401 124	0401 120	0401 128	0401 125	0401 119	3300 317	3300 318	4200 456	4001 461	
17	51B	099	L099	2200 231	2201 134	2200 236	2200 238	2001 224	2001 226	2001 227	3001 421	3001 429	2001 229	2300 216	2300 218	3200 306	3001 302	
18	51G	103	L104	3200 467	3200 437	3200 433	3200 436	2001 221	3001 430	3001 427	3001 428	3001 466	3001 426	3300 418	3300 415	4200 465	4001 462	
19	51F	099	L099	2200 231	2201 134	2200 236	2200 238	2001 224	2001 226	2001 227	3001 421	3001 429	2001 229	2300 216	2300 218	3200 306	3001 302	
20	51I	103	L104	3200 467	3200 437	3200 433	3200 436	2001 221	3001 430	3001 427	3001 428	3001 466	3001 426	3300 418	3300 415	4200 465	4001 462	
21	51J	104	L103	2202 137	3200 337	3200 336	3200 338	0401 141	0401 124	0401 120	0401 128	0401 125	0401 119	3300 317	3300 318	4200 456	4001 461	
22	61A	099	L099	2200 231	2201 134	2200 236	2200 238	2001 224	2001 226	2001 227	3001 421	3001 429	2001 229	2300 216	2300 218	3200 306	3001 302	
23	61B	104	L103	2202 137	3200 337	3200 336	3200 338	0401 141	0401 124	0401 120	0401 128	0401 125	0401 119	3300 317	3300 318	4200 456	4001 461	
24	61C	102	L104	3200 467	3200 437	3200 433	3200 436	2001 221	3001 430	3001 427	3001 428	3001 466	3001 426	3300 418	3300 415	4200 465	4001 462	
25	51L	099	L102	0200 135	0200 138	3200 333	0200 136	3001 319	3001 320	3001 321	3001 473	0001 129	0001 127	0300 155	0300 118	3200 206	3001 301	
26	26	103	LP04	5200 233	5200 435	5200 133	5200 134	5001 427	5001 126	5001 122	5001 219	5001 325	5001 422	5300 217	5300 216	4200 465	4001 462	
27	27	104	LP01	5200 432	5200 331	5200 337	5200 238	5001 330	5001 425	5001 141	5001 328	5001 424	5001 423	5300 215	5300 418	3200 306	3001 302	
28	29	103	LP04	5200 233	5200 435	5200 133	5200 134	5001 427	5001 126	5001 122	5001 219	5001 325	5001 422	5300 217	5300 216	4200 465	4001 465	
29	30	104	LP01	5200 432	5200 331	5200 337	5200 238	5001 330	5001 425	5001 141	5001 328	5001 424	5001 423	5300 215	5300 418	3200 306	3001 306	

ORBITER PROPULSION SYSTEMS
COMPONENT S/N - LOCATION MATRIX

PRIMARY SPEC: MC 467-0028-XXXX LEFT HAND POD RCS THRUSTERS PN/SN VERNIER SPEC: MC 467-0029-XXXX

MSN SEQ NO.	STS NO.	ORB OV-	POD S/N LH	PRIMARY												VERNIER		* CAUSE OF POSTFLIGHT REPLACEMENT
				L1L	L2L	L3L	L4L	L1U	L2U	L4U	L2D	L3D	L4D	L1A	L3A	L5L	L5D	
30	28	102	LP03	5200 334	5200 438	5200 434	5200 237	5001 326	5001 420	5001 227	5001 229	5001 120	5001 230	5300 316	5300 318	4200 456	4001 461	
31	34	104	LP01	5200 432	5200 331	5200 337	5200 238	5001 330	5001 425	5001 141	5001 328	5001 *424	5001 423	5300 215	5300 418	3200 306	3001 302	* L2U removed due to oxidizer leakage. L3D scratched dynatube
32	33	103	LP04	5200 233	5200 435	5200 133	5200 134	5001 427	5001 126	5001 122	5001 219	5001 325	5001 422	5300 217	5300 216	4200 465	4001 462	
33	32	102	LP03	5200 334	5200 438	5200 434	5200 237	5001 326	5001 420	5001 227	5001 229	5001 120	5001 230	5300 316	5300 318	4200 456	4001 461	
34	36	104	LP01	5200 432	5200 331	5200 337	5200 238	5001 330	5001 419	5001 141	5001 328	5001 119	5001 423	5300 215	5300 418	3200 306	3001 302	
35	31	103	LP04	5200 233	5200 435	5200 133	5200 134	5001 427	5001 126	5001 122	5001 219	5001 325	5001 422	5300 217	5300 *216	4200 465	4001 462	* Oxidizer valve failed to open and leaked.
36	41	103	LP04	5200 233	5200 435	5200 133	5200 134	5001 427	5001 126	5001 122	5001 219	5001 325	5001 422	5300 217	5300 116	4200 465	4001 462	
37	38	104	LP01	5200 432	5200 331	5200 337	5200 238	5001 330	5001 419	5001 141	5001 328	5001 228	5001 423	5300 215	5300 418	3200 306	3001 302	
38	35	102	LP03	5200 334	5200 438	5200 434	5200 237	5001 326	5001 420	5001 227	5001 229	5001 120	5001 230	5300 316	5300 318	4200 456	4001 461	

ORBITER PROPULSION SYSTEMS
COMPONENT S/N - LOCATION MATRIX

PRIMARY SPEC: MC 467-0028-XXXX RIGHT HAND POD RCS THRUSTERS PN/SN VERNIER SPEC: MC 467-0029-XXXX

MSN SEQ NO.	STS NO.	ORB OV-	POD S/N RH	PRIMARY												VERNIER		* CAUSE OF POSTFLIGHT REPLACEMENT
				R1R	R2R	R3R	R4R	R1U	R2U	R4U	R2D	R3D	R4D	R1A	R3A	R5R	R5D	
1	1	102	R102	0200 131	0200 133	0200 *134	0200 142	0001 119	0001 120	0001 124	0001 122	0001 121	0001 123	0300 115	0300 116	0200 109	0001 101	OX VLV LK.
2	2	102	R102	0200 131	0200 133	1200 232	0200 142	0001 119	0001 120	0001 124	0001 122	0001 121	0001 123	0300 115	0300 116	0200 109	0001 101	
3	3	102	R102	0200 131	0200 133	1200 232	0200 142	0001 *119	0001 *120	0001 *124	0001 122	0001 121	0001 123	0300 115	0300 116	0200 109	0001 101	GYPSUM CONTAMINATION.
4	4	102	R102	0200 131	0200 133	1200 232	0200 142	3001 322	3001 323	3001 324	0001 122	0001 121	0001 123	0300 115	0300 116	0200 *109	0001 *101	VERNIER COATING PROBLEM.
5	5	102	R102	0200 131	0200 133	1200 232	0200 142	3001 322	3001 323	3001 324	0001 122	0001 121	0001 *123	0300 115	0300 116	3200 205	3001 202	HTR/CNTRLR FAILED.
6	6	099	R099	1200 234	1200 235	1200 233	2200 237	1001 225	1001 219	1001 220	1001 223	2001 230	1001 222	1300 215	2300 217	3200 108	3001 102	
7	7	099	R099	1200 234	1200 235	1200 233	2200 237	1001 225	1001 219	1001 220	1001 223	2001 230	1001 222	1300 215	2300 217	3200 108	3001 102	
8	8	099	R099	1200 234	1200 235	1200 233	2200 237	1001 225	1001 219	1001 220	1001 223	2001 230	1001 222	1300 215	2300 217	3200 108	3001 102	
9	9	102	R102	0200 131	0200 133	1200 232	0200 142	3001 322	3001 323	3001 324	0001 122	0001 121	0401 123	0300 115	0300 116	3200 205	3001 202	
10	41B	099	R099	1200 234	1200 235	1200 233	2200 237	1001 225	1001 219	1001 220	1001 223	2001 230	1001 222	1300 215	2300 217	3200 108	3001 *102	COATING DEFECT.
11	41C	099	R099	1200 234	1200 235	1200 233	2200 237	1001 225	1001 219	1001 220	1001 223	2001 230	1001 222	1300 215	2300 217	3200 *108	4001 451	COATING DAMAGE.
12	41D	103	R103	3200 335	3200 334	3200 331	3200 332	3001 329	3001 325	3001 330	3001 327	3001 328	3001 326	3300 315	3300 316	3200 406	3001 402	
13	41G	099	R099	1200 234	1200 235	1200 *233	2200 237	1001 225	1001 219	1001 220	1001 223	2001 230	1001 222	1300 215	2300 217	4200 466	4001 451	OX VLV FAILED OPEN.
14	51A	103	R103	3200 335	3200 334	3200 331	3200 332	3001 329	3001 325	3001 330	3001 327	3001 328	3001 326	3300 315	3300 316	3200 406	3001 402	

ORBITER PROPULSION SYSTEMS
COMPONENT S/N - LOCATION MATRIX

PRIMARY SPEC: MC 467-0028-XXXX RIGHT HAND POD RCS THRUSTERS PN/SN VERNIER SPEC: MC 467-0029-XXXX

MSN SEQ NO.	STS NO.	ORB OV-	POD S/N RH	PRIMARY												VERNIER		* CAUSE OF POSTFLIGHT REPLACEMENT
				R1R	R2R	R3R	R4R	R1U	R2U	R4U	R2D	R3D	R4D	R1A	R3A	R5R	R5D	
15	51C	103	R103	3200 335	3200 334	3200 331	3200 332	3001 329	3001 325	3001 330	3001 327	3001 328	3001 326	3300 315	3300 316	3200 406	3001 402	
16	51D	103	R103	3200 335	3200 334	3200 331	3200 332	3001 329	3001 325	3001 330	3001 327	3001 328	3001 326	3300 315	3300 316	3200 406	3001 402	
17	51B	099	R104	3200 435	3200 434	3200 431	3200 432	3001 423	3001 425	3001 420	3001 422	3001 424	3001 419	3300 465	3300 417	4200 454	4001 455	
18	51G	103	R103	3200 335	3200 334	3200 331	3200 332	3001 329	3001 325	3001 330	3001 327	3001 328	3001 326	3300 315	3300 316	3200 406	3001 402	
19	51F	099	R104	3200 435	3200 434	3200 431	3200 432	3001 423	3001 425	3001 420	3001 422	3001 424	3001 419	3300 465	3300 417	4200 454	4001 455	
20	51I	103	R103	3200 335	3200 334	3200 331	3200 332	3001 329	3001 325	3001 330	3001 327	3001 328	3001 326	3300 315	3300 316	3200 406	3001 402	
21	51J	104	R099	1200 234	1200 235	3200 438	2200 237	1001 225	1001 219	1001 220	1001 223	2001 230	1001 222	1300 215	2300 217	4200 466	4001 451	
22	61A	099	RP03	3200 335	3200 334	3200 331	3200 332	3001 329	3001 325	3001 330	3001 327	3001 328	3001 326	3300 315	3300 316	4200 406	4001 402	
23	61B	104	R099	1200 234	1200 235	3200 438	2200 237	1001 225	1001 219	1001 220	1001 223	2001 230	1001 222	1300 215	2300 217	4200 466	4001 451	
24	61C	102	R104	3200 435	3200 434	3200 431	3200 432	3001 423	3001 425	3001 420	3001 422	3001 424	3001 419	3300 465	3300 417	4200 454	4001 455	
25	51L	099	R102	0200 131	3200 475	1200 232	0200 142	3001 322	3001 323	3001 324	3001 474	0001 121	0401 123	3300 416	3300 472	3200 205	3001 202	
26	26	103	RP03	5200 467	5200 476	5200 335	5200 235	5001 220	5001 221	5001 429	5001 466	5001 228	5001 226	5300 116	5300 218	3200 405	3001 401	
27	27	104	RP01	5200 436	5200 332	5200 338	5200 236	5001 419	5001 224	5001 124	5001 428	5001 327	5001 225	5300 415	5300 315	4200 466	7001 101	
28	29	103	RP03	5200 467	5200 476	5200 335	5200 235	5001 *220	5001 221	5001 429	5001 466	5001 228	5001 226	5300 417	5300 218	3200 405	3001 401	* Oxidizer valve failed to open.
29	30	104	RP01	5200 436	5200 332	5200 338	5200 236	5001 *419	5001 224	5001 124	5001 428	5001 327	5001 225	5300 415	5300 315	4200 466	7001 101	* Oxidizer valve failed to open.

ORBITER PROPULSION SYSTEMS
COMPONENT S/N - LOCATION MATRIX

PRIMARY SPEC: MC 467-0028-XXXX RIGHT HAND POD RCS THRUSTERS PN/SN VERNIER SPEC: MC 467-0029-XXXX

MSN SEQ NO.	STS NO.	ORB OV-	POD S/N RH	PRIMARY												VERNIER		* CAUSE OF POSTFLIGHT REPLACEMENT
				R1R	R2R	R3R	R4R	R1U	R2U	R4U	R2D	R3D	R4D	R1A	R3A	R5R	R5D	
30	28	102	RP04	5200 137	5200 431	5200 336	5200 234	5001 426	5001 430	5001 329	5001 125	5001 421	5001 223	5300 465	5300 317	4200 454	7001 201	
31	34	104	RP03	5200 467	5200 476	5200 335	5200 235	5001 497	5001 221	5001 429	5001 466	5001 228	5001 226	5300 417	5300 218	3200 405	3001 401	
32	33	103	RP01	5200 436	5200 332	5200 338	5200 236	5001 424	5001 224	5001 124	5001 428	5001 327	5001 225	5300 415	5300 315	4200 466	7001 101	
33	32	102	RP04	5200 137	5200 431	5200 336	5200 234	5001 426	5001 430	5001 329	5001 125	5001 421	5001 223	5300 465	5300 317	4200 454	7001 201	
34	36	104	RP03	5200 467	5200 476	5200 335	5200 *235	5001 497	5001 221	5001 429	5001 466	5001 *228	5001 226	5300 417	5300 218	3200 405	3001 401	* Oxidizer valves failed to open.
35	31	103	RP01	5200 436	5200 332	5200 338	5200 236	5001 424	5001 224	5001 124	5001 428	5001 327	5001 225	5300 415	5300 315	4200 466	7001 101	
36	41	103	RP01	5200 436	5200 332	5200 338	5200 236	5001 424	5001 224	5001 124	5001 425	5001 327	5001 225	5300 415	5300 315	4200 466	7001 101	
37	38	104	RP03	5200 467	5200 476	5200 335	5200 *433	5001 497	5001 221	5001 429	5001 466	5001 *220	5001 496 **	5300 417	5300 218	4200 405	7001 401	* Oxidizer valve failues ** Oxidizer valve leaking
38	35	102	RP03	5200 137	5200 467	5200 336	5200 234	5001 426	5001 430	5001 329	5001 125	5001 421	5001 223	5300 465	5300 317	4200 454	7001 201	

QUAD CHECK VALVE FLIGHT SUMMARY

MSN SEQ NO.	STS NO.	ORB OV-	FORWARD REACTION CONTROL			LEFT-HAND POD					RIGHT-HAND POD				
			MOD	CV101	CV102	POD	CV201	CV202	CV401	CV402	POD	CV301	CV302	CV501	CV502
1	1	102	FRC2	4911233	4911229	LV01	4103918	4911251	4911234	4911227	RV01	4911232	4911228	4911231	4911254
2	2	102	FRC2	4911233	4911229	LV01	4103918	4911251	4911234	4911227	RV01	4911232	4911228	4911231	4911254
3	3	102	FRC2	4911233	4911229	LV01	4103918	4911251	4911234	4911227	RV01	4911232	4911228	4911231	4911254
4	4	102	FRC2	4911233	4911229	LV01	4103918	4911251	4911234	4911227	RV01	4911232	4911228	4911231	4911254
5	5	102	FRC2	4911233	4911229	LV01	4103918	4911251	4911234	4911227	RV01	4911232	4911228	4911231	4911254
6	6	099	FRC9	4914102	4103989	LP01	4914100	4914107	4914099	4914106	RP01	4105726	4914105	4911247	4914103
7	7	099	FRC9	4914102	4103989	LP01	4914100	4914107	4914099	4914106	RP01	4105726	4914105	4911247	4914103
8	8	099	FRC9	4914102	4103989	LP01	4914100	4914107	4914099	4914106	RP01	4105726	4914105	4911247	4914103
9	9	102	FRC2	4911233	4911229	LV01	4103918	4911251	4911234	4911227	RV01	4911232	4911228	4911231	4911254
10	41B	099	FRC9	4914102	4103989	LP01	4914100	4914107	4914099	4914106	RP01	4105726	4914105	4911247	4914103
11	41C	099	FRC9	4914102	4103989	LP03	4917560	4917559	4103990	4107155	RP01	4105726	4914105	4911247	4914103
12	41D	103	FRC3	4914634	4911250	LP03	4917560	4917559	4103990	4107155	RP03	4914101	4914630	4105757	4105727
13	41G	099	FRC9	4914102	4103989	LP01	4914100	4914107	4914099	4914106	RP01	4105726	4914105	4911248a	4914103
14	51A	103	FRC3	4914634	4911250	LP03	4917560	4917559	4103990	4107155	RP03	4914101	4914630	4105757	4105727
15	51C	103	FRC3	4914634	4911250	LP03	4917560	4917559	4103990	4107155	RP03	4914101	4914630	4105757	4105727
16	51D	103	FRC3	4914634	4911250	LP03	4917560	4917559	4103990	4107155	RP03	4914101	4914630	4105757	4105727
17	51B	099	FRC9	4914102	4103989	LP01	4914100	4914107	4914099	4914106	RP04	4105777	4917557	4105776	4107158
18	51G	103	FRC3	4914634	4911250	LP04	4917552	4914632	4917553	4917556	RP03	4914101	4914630	4105757	4105727
19	51F	099	FRC9	4914102	4103989	LP01	4914100	4914107	4914099	4914106	RP04	4105777	4917557	4105776	4107158
20	51I	103	FRC3	4914634	4911250	LP04	4917552	4914632	4917553	4917556	RP03	4914101	4914630	4105757	4105727
21	51J	104	FRC4	4911235	4917555	LP03	4917560	4917559	4103990	4107155	RP01	4105726	4914105	4911248	4914103
22	61A	099	FRC9	4914102	4103989	LP01	4914100	4914107	4914099	4914106	RP03	4914101	4914630	4105757	4105727
23	61B	104	FRC4	4911235	4917555	LP03	4917560	4917559	4103990	4107155	RP01	4105726	4914105	4911248	4914103
24	61C	102	FRC2	4911233	4911229	LP04	4917552	4914632	4917553	4917556	RP04	4105777	4917557	4105776	4107158
25	51L	099	FRC9	4914102b	4103989b	LV01	4103918b	4911251b	4103920c	4911227b	RV01	4911232b	4911228b	4911231b	4911254b
26	26	103	FRC3	4914634	4911250	LP04	4917552	4914632	4917553	4917556	RP03	4911247d	4914630	4105757	4103988e
27	27	104	FRC4	4911235	4917555	LP01	4911234f	4914104g	4914099	4914106	RP01	4105726	4914105	4911248	4914103
28	29	103	FRC3	4914634	4911250	LP04	4917552	4914632	4917553	4917556	RP03	4911247	4914630	4105757	4103988
29	30	104	FRC4	4911235	4917555	LP01	4911234	4914104	4914099	4914106	RP01	4105726	4914105	4911248	4914103
30	28	102	FRC2	4911233	4911229	LP03	4917560	4105727h	4914098i	4107155	RP04	4106777	4917557	4105776	4107158
31	34	104	FRC4	4911235	4917555	LP01	4911234	4914104	4914099	4914106	RP03	4911247	4914630	4105757	4103988
32	33	103	FRC3	4914634	4911250	LP04	4917552	4914632	4917553	4917556	RP01	4105726	4914105	4911248	4914103
33	32	102	FRC2	4911233	4911229	LP03	4917560	4105727	4914098	4107155	RP04	4106777	4917557	4105776	4107158
34	36	104	FRC4	4911235	4917555	LP01	4911234	4914104	4914099	4914106	RP03	4911247	4914630	4105757	4103988
35	31	103	FRC3	4914634	4911250	LP04	4917552	4914632	4917553	4917556	RP01	4105726	4914105	4911248	4914103
36	41	103	FRC3	4914634	4911250	LP04	4917552	4914632	4917553	4917558	RP01	4105726	4914107	4911248	4914103
37	38	104	FRC4	4911235	4917555	LP01	4911234	4914104	4914099	4914106	RP03	4911247	4914630	4105757	4103988
38	35	102	FRC2	4911233	4911229	LP03	4917560	4105727	4914098	4107155	RP04	4105777	4917557	4105776	4107158

LV01 = E112; Originally delivered with OV102
RV01 = E122; Originally delivered with OV102
LP01 = E111; Originally delivered with OV099
RP01 = E121; Originally delivered with OV099
LP03 = E113; Originally delivered with OV103
RP03 = E123; Originally delivered with OV103
LP04 = E114; Originally delivered with OV104
RP04 = E124; Originally delivered with OV104
LP05 = E115; To be delivered with OV105
RP05 = E125; To be delivered with OV105

CV101 = FRCS fuel quad check valve
CV102 = FRCS oxid quad check valve
CV201 = LRCS fuel quad check valve
CV202 = LRCS oxid quad check valve
CV301 = RRCS fuel quad check valve
CV302 = RRCS oxid quad check valve
CV401 = LOMS fuel quad check valve
CV402 = LOMS oxid quad check valve
CV501 = ROMS fuel quad check valve
CV502 = ROMS oxid quad check valve

MC284-0481-0001 = Oxid quad check valve
MC284-0481-0002 = Fuel quad check valve

Notes are found on following page.

a S\N 4911247 replaced with S/N 4911248 in 1984 (excessive reverse leakage). (Ref CAR# AC8256)
b Destroyed 51-L 1/28/86
c Destroyed 51-L 1/28/86. S/N 4911234 replaced with S/N 4100920 in 1985 (excessive reverse leakage). (Ref CAR# AD0380)
d S/N 4914101 replaced with S/N 4911247 in 1986 (excessive reverse leakage). (Ref CAR# AD0858)
e S/N 4105727 replaced with S/N 4100988 in 1986 (excessive reverse leakage). (Ref CAR# AD0920)
f S/N 4914100 replaced with S/N 4911234 in 1988 (high cracking pressure). (Ref CAR# AD1956)
g S/N 4914107 replaced with S/N 4914104 in 1988 (excessive reverse leakage). (Ref CAR# KB0182)
h S/N 4917559 replaced with S/N 4105727 in 1988 (excessive reverse leakage). (Ref CAR# KB0390)
i S/N 4103990 replaced with S/N 4914098 in 1989 (excessive reverse leakage). (Ref CAR# KB0XXX)

OMRSD FILE IX REQUIREMENT HISTORY

Flight	Vehicle	Number of requirements	Failed in-flight checkout	Ground checkout for in-flight anomaly	Ground checkout by request	Ground checkout waived
STS-26	OV-103	109	7	4	0	3
STS-27	OV-104	112	9	6	0	3
STS-29	OV-103	111	7	2	1	4
STS-30	OV-104	111	5	2	0	3
STS-28	OV-102	109	5	2	0	3
STS-34	OV-104	166	12	6	2	4
STS-33	OV-103	169	10	2	2	6
STS-32	OV-102	171	14	8	0	6
STS-36	OV-104	169	8	3	3	2
STS-31	OV-103	177	15	1	2	12
STS-41	OV-103	173	9	1	2	6
STS-38	OV-104	173	12	3	0	9
STS-35	OV-102	173	13	5	2	6

Data provided by VF5/MIP Group

DATA SOURCES

NASA/JSC

Program Mission Reports, STS-1 and subsequent missions -
Flight Data and Evaluation Office/VF

Flight Requirements Documents, STS-1 and subsequent missions -
Mission Integration Office/TM

Operational Flight Profiles, STS-1 and subsequent missions -
Flight Design and Dynamics Division/DM

Flight Readiness Review Reports, STS-1 and subsequent missions -
Space Shuttle Project Office/GA

Orbiter Mass Properties Summary -
Flight Data and Evaluation Office/VF

Problem Tracking Lists and Flight Problem Closeouts -
Flight Data and Evaluation Office/VF

Descent Postflight Summary -
Flight Analysis Branch/DM3
Rockwell Space Operations Company/R16D

Landing Performance Chart -
Mechanical Systems Branch/ES6

NASA/MSFC

Final Flight Evaluation Reports, STS-1 and subsequent missions -
Shuttle Projects Flight Evaluation Group/EE31

Rockwell International Corporation, Downey, CA.

Postflight Summaries, STS-1 and subsequent missions

STS Press Information Book with Mission Supplements

Lockheed Support Operations Company, KSC, FL.

Tire/Wheel and Brake Serial Number Data

Lockheed Engineering and Sciences Company, Houston, TX

Landing Deceleration Data, Calculated Brake Energies/Pressures and Brake Part/Serial Number Data, Landing and Ferry Data, and Orbiter Tire Data.

SHUTTLE IN-FLIGHT ANOMALY LIST

This part of the report is a listing of all Orbiter in-flight anomalies arranged in order by affected Work Unit Codes of the failed items from Shuttle flights STS-1 through STS-27R.

Column 1 - Work Unit Code (WUC): A six character alpha-numeric representation of the failed item, for example, V75MAE is the Orbiter Operational Instrumentation OPS 2 recorder, as noted in the master WUC listing.

Column 2 - Problem Number: For STS flights 1 through 9, the first number is the flight number and the second number is the number assigned to the problem on the Problem Tracking List for that flight. For example, 507 is flight STS-5, problem number 7.

For STS flights after STS-9, the first 3 characters define the flight number and the number after the dash indicates the number assigned to the problem on the Problem Tracking List. For example, 41B-6 is flight STS 41-B, problem number 6.

Column 3 - This number is the manufacturer's serial number of the Orbiter on which the anomaly occurred.

Column 4 - Corrective Action Record (CAR) number assigned to the failed part.

Column 5 - A brief title of the anomaly.

Note: The Problem Tracking List and Flight Problem Reports are prepared by the Flight Evaluation Office, VF3, Building 45, Johnson Space Center.

CAR's are maintained by the Quality Assurance Office, ND5, Building 45.

WUC's are maintained bythe Rockwell International Corporation, Orbiter Logistics Office, Downey, CA.

ORBITER SYSTEMS WORK UNIT CODE INDEX

V00 - GENERAL CATEGORY
V01 - EXPERIMENTS
V05 - PURGE, VENT, AND DRAIN
V06 - THERMAL CONTROL
V09 - THERMAL PROTECTION
V10 - WING
V13 - ELEVON'S
V33 - CREW MODULE
V34 - MID FUSELAGE
V35 - AFT FUSELAGE
V37 - PAYLOAD BAY DOORS
V39 - THERMAL BARRIERS, WINDOW
V41 - MAIN PROPULSION
V42 - REACTION CONTROL
V43 - ORBITAL MANEUVERING
V45 - ELECTRICAL POWER GENERATION AND POWER REACTANT STORAGE AND DISTRIBUTION
V46 - AUXILIARY POWER UNIT
V51 - LANDING/DECELERATION
V52 - BRAKE/SKID CONTROL
V54 - PAYLOAD RETENTION/DEPLOYMENT
V55 - PYROTECHNICS AND RANGE SAFETY
V56 - ATTACHMENT/SEPARATION, ET
V57 - AEROSURFACE CONTROL
V58 - HYDRAULICS
V59 - REMOTELY OPERATED DOORS
V61 - ATMOSPHERIC REVITALIZATION
V62 - WATER/WASTE MANAGEMENT
V63 - ACTIVE THERMAL CONTROL
V64 - AIRLOCK SUPPORT
V65 - CREW PROVISIONS & ACCOMMODATIONS
V66 - CREW EQUIPMENT
V71 - GUIDANCE AND NAVIGATION
V72 - DATA PROCESSING
V73 - DISPLAYS AND CONTROLS
V74 - COMMUNICATIONS AND TRACKING
V75 - OPERATIONAL INSTRUMENTATION
V76 - ELECTRICAL POWER DISTRIBUTION
V78 - DEVELOPMENT INSTRUMENTATION
V79 - FLIGHT CONTROL

INFLIGHT ANOMALY LIST
BY WUC

WUC	PROB#	ORB	CAR#	NOMENCLATURE
E41N00	27R-13	104		MPS LH2 MANIFOLD PRESS BELOW REG SET POINT
GFE	27R-06	104		TAGS PAPER JAM
V00GEN	1-35	102	NONE	ORB FIRST ROLL OVERSHOOT POORLY DAMPED AT 12 PSF
V00GEN	1-37	102	NONE	ORB TOUCHDOWN 3200 FEET LONG
V00GEN	1-53	102	NONE	ORB LATERAL OSCILLATION AT 1.6 MACH
V00GEN	2-33	102	NONE	ORB TOUCHDOWN 3300 FEET SHORT
V00GEN	2-49	102	NONE	ODOR IN THE CREW CABIN FROM WET TRASH
V00GEN	3-41	102	NONE	HIGH WINDS ALOFT ON "WAVE OFF" DAY
V00GEN	4-19	102	NONE	ORB TORQUING PRODUCED ATTITUDE EXCURSIONS
V00GEN	6-20	099	NONE	T-ZERO UMBILICAL DAMAGE
V00GEN	6-34	099	NONE	ODOR IN CABIN NEAR MLR
V00GEN	8-28	099	NONE	PAYLOAD BAY DEBRIS AFTER PAYLOAD DEPLOY
V00GEN	8-29	099	NONE	CABIN DEBRIS AND DUST
V00GEN	9-20	102	NONE	NOISES AND OSCILLATIONS REPORTED BY CREW
V00GEN	41B-28	099	NONE	TM FORMAT LOAD 161 HDR PROCESSING ERROR
V00GEN	41D-06	103	NONE	WATER & FIRE DAMAGE AFTER SSME ABORT SHUTDOWN
V00GEN	61A-13	099	NONE	STREAM OF PARTICULATE MATTER STRUCK THE ORBITER
V00PAY	7-03	099	NONE	ANIK SUNSHIELD HUNG-UP DURING CLOSURE
V00PAY	7-17	099	NONE	VIBRATION DURING PALAPA SPIN-UP
V00PAY	7-35	099	AC5725	SPAS ELECTRICAL DISCONNECT STOWED TALKBACK
V00PAY	41B-08	099	NONE	INTEGRATED RENDEZVOUS TARGET (BALLOON) FAILED
V00PAY	41C-17	099	NONE	FSS KEEL RETENTION LATCH DRIVE MOTOR LOST PHASE
V00PAY	41G-21	099	NONE	SIR-B ANTENNA OUTER LEAF DIVERGENT OSCILLATION
V00S/W	9-09	102	55799	GPC STATE VECTOR TIME TAG TO SL INC BY 1 DAY
V00S/W	9-11	102	NONE	SPACELAB TOTAL KW COMPUTATION READING ZERO
V00S/W	51B-05	099	NONE	SM ONBOARD DISPLAY DATA EXHIBITED ERRATIC VALUES
V00S/W	51B-19	099	NONE	BFS ERROR UPDATING RUNWAY
V00S/W	51D-10	103	NONE	PRIMARY AVIONICS SOFTWARE SYSTEM GNC GPC ERRORS
V00S/W	51F-08	099	NONE	GPC BODY RATE DATA TRANSFER INCOMPATABLE WITH SL
V00S/W	51I-08	103	NONE	BFS OMS 2 OUT OF PLANE VELOCITY 12.5 FPS GT PASS
V00S/W	51L-05	099	NONE	SRB NOZZLE CLEARANCE I-LOAD ERROR
V00S/W	61A-18	099	63070	POCC COMMAND RECEIVED A "PSP" INVALID REQUEST
V00S/W	61C-07	102	NONE	VERNIER RCS JETS FIRED EXCESSIVELY
V01GAS	4-09	102	04F015	GET AWAY SPECIAL ACTIVATION UNSUCCESSFUL
V01GAS	5-06	102	NONE	GET AWAY SPECIAL ENCODER ON WRONG PANEL
V010EX	2-25	102	HED0019	OEX RECORDER BELT MIS-TRACKED
V010EX	2-42	102	HED0020	AFT FUSELAGE GAS SAMPLER BOTTLES
V010EX	41G-24	099	HEN0047	ACIP FAILED PRELAUNCH
V010EX	51B-25	099	HEN0049	ACIP X-AXIS ANGULAR ACCELEROMETER FAILED HI
V01TDR	29-05	103	29RF05	PI CH 1 ERRONEOUS READING
V05A00	38-06	104	38RF06	RH VENT DOOR 1 & 2 PURGE FAILURE
V05NBK	2-45	102	NONE	LH WING VENT RELIEF DOOR OPENED
V05NBR	1-51	102	01F031	RH WING VENT DUCT STRUCTURAL FAILURE
V05NBU	1-51	102	01F031	LH WING VENT DUCT STRUCTURAL FAILURE
V05NCC	2-45	102	NONE	RH WING VENT RELIEF DOOR OPENED
V05000	31-17	103	GFE	5 OF 6 GAS SAMPLER BOTTLES LEAKED
V06A00	30-20	104	30RF27	1307 BULKHEAD BLANKET DAMAGE
V06F	51A-23	103	NONE	PAYLOAD BAY BLANKETS AND METAL DISCOLORED
V06R	2-43	102	NONE	STAR TRACKER CAVITY THERMAL BLANKETS DISCOLORED
V09B00	26-13	103	26RF13	RT WING "6 X 18" TPS LOST DURING/ASCENT

INFLIGHT ANOMALY LIST
BY WUC

WUC	PROB#	ORB	CAR#	NOMENCLATURE
V09000	29-25	103	29RF24	AFT (1307) BULKHEAD THERMAL BLANKETS LOOSE
V09TPS	1-09	102	NONE	TILE FAILURE ON OMS POD
V09TPS	1-32	102	01F015	OMS POD SKIN STRUCTURE DELAMINATED
V09TPS	2-19	102	02F024	TPS DAMAGE DURING ASCENT, ENTRY AND LANDING
V09TPS	2-19	102	02F031	TPS DAMAGE DURING ASCENT, ENTRY AND LANDING
V09TPS	2-19	102	02F022	TPS DAMAGE DURING ASCENT, ENTRY AND LANDING
V09TPS	3-16	102	NONE	TILES LOST FROM FWD FUSELAGE & UPPER BODY FLAP
V09TPS	4-01	102	NONE	ORBITER SURFACE TPS HAIL STORM DAMAGE
V09TPS	4-29	102	04F026	HRSI TILE ON BODY FLAP DEGRADED BY AFT VRCS
V09TPS	6-05	099	NONE	TPS DAMAGE TO OMS PODS AND NEAR WINDOWS & NOSECAP
V09TPS	7-27	099	NONE	TPS DAMAGE TO LOWER SURFACE, FRSI, AFRSI, AND TILES
V09TPS	8-27	099	NONE	TPS DAMAGE TO TILE, SSME INSULATION & ARCS AFRSI
V09TPS	9-32	102	NONE	LH OMS POD TPS DAMAGE
V09TPS	41B-27	099	NONE	TPS DAMAGE TO LH OMS POD AND NOSE AREA
V09TPS	41G-05	099	17F010	THERMAL PROTECTION SYSTEM DAMAGED ON OMS PODS
V09TPS	41G-25	099	17F015	MISSING TILE IN THE LH WING GLOVE AREA
V09TPS	51B-06	099	24F001	RIGHT OMS POD TPS PROTRUSION
V09TPS	51B-26	099	NONE	LH OUTBD ELEVON TILE SLUMPED & GAP FILLER BREACHED
V09TPS	51C-10	103	NONE	TPS HAD A LONG GOUGE UNDER THE LEFT WING
V09TPS	51F-15	099	NONE	TPS DAMAGE DURING ASCENT
V09TPS	51G-11	103	NONE	TPS DAMAGED BY DEBRIS
V09TPS	51I-13	103	NONE	RH OMS POD AFRSI STRIP LOOSE
V09TPS	51J-07	104	23F009	TPS DAMAGE ON LH INBD ELEVON AND NOSE CAP
V09TPS	61B-07	104	NONE	TPS BLANKET LIFTED ON UPPER LEFT WING
V10AEA	51D-14	103	23F009	LH OUTBD ELEVON TPS DAMAGED NEAR HINGE LINE
V13SA0	31-15	103	IM31RF17	MISSING SEAL MATERIAL, RH ELEVON FLIPPER DOORS 5, 6, 12, 13
V22B	3-46	102	AC3037	VERTICAL TAIL GRAPHITE SEAL TABS BROKEN
V23A	7-37	099	NONE	RUDDER SPEEDBRAKE SEALS DAMAGED
V33AAA	2-39	102	NONE	LH FORWARD WINDOWS DEGRADED BY SALT SPRAY
V33AAA	30-17	104	30RF24	DING ON FWD WINDOW 6
V33AAC	41G-08	099	NONE	FORWARD WINDOW (W1) WAS CHIPPED
V33ABA	2-39	102	NONE	RH FORWARD WINDOWS DEGRADED BY SALT SPRAY
V33ABA	8-32	099	NONE	RH FORWARD WINDOW (NO. 4) PITTED
V33ABA	41G-08	099	NONE	FORWARD WINDOW (W4) WAS CHIPPED
V33ABB	7-26	099	07F015	RH MID WINDOW (NO. 5) PITTED
V33ACA	41G-08	099	NONE	AFT FLIGHT DECK PORT WINDOW HAD ICE-LIKE PARTICLES
V33ADC	51A-19	103	NONE	RH OVERHEAD WINDOW (W7) TOOK 1/32-IN. DIAMETER HIT
V33A00	35-18	102	NONE	W-1 WINDOW HAS 0.15-INCH CHIP
V33B	6-22	099	06F016	CCTV MONITOR BRACKET DEBONDED FROM SIDEWALL
V33B	7-28	099	06F016	CCTV MONITOR BRACKET DEBONDED FROM SIDEWALL
V33SB	51L-01	099	NONE	SIDE HATCH MICROSWITCH FAILED
V33SB	51L-02	099	33F002	SIDE HATCH GSE HANDLE COULD NOT BE REMOVED
V33XXX	9-04	102	NONE	CABIN/SPACELAB HATCH D LEAKED
V33XXX	9-31	102	09F025	WCS DOOR OPENED DURING ENTRY
V33XXX	41B-15	099	11F012	STORAGE MD23R WCS & IMU FILTER DOOR DIFFICULTIES
V33XXX	41G-22A	099	09F025	VOL. "G", "H" AND WCS DOOR PROBLEMS
V33XXX	51D-16A	103	NONE	AV ACCESS PANEL R17 FASTENERS FAILED
V33XXX	51D-16B	103	NONE	LOCKER MA16N DID NOT CLOSE PROPERLY
V33XXX	61B-11A	104	NONE	PANEL FOR ACCESS TO IMU FILTERS MISALIGNED

INFLIGHT ANOMALY LIST
BY WUC

WUC	PROB#	ORB	CAR#	NOMENCLATURE
V33XXX	61B-11B	104	11F012	VOLUME "H" LOCKER (MD23R) HAD TO BE PRIED OPEN
V34SAC	9-38	102	NONE	MID FUSELAGE BONDLINE TEMP (V34T1108A) ERRATIC
V36000	41-12	103	41RF09	LOST 6-INCH SECTION OF PLBD AFT SEAL
V36000	35-16	102	NONE	PLBD ENVIRONMENTAL SEAL BECAME DEBONDED
V37	1-45	102	NONE	PAYLOAD BAY DOOR CLOSURE OVERLAP
V37AGA	3-09	102	03F007	LH PLBD AFT BULKHEAD ACTUATOR STALLED
V37AGA	4-13	102	04F005	LH PLBD AFT BULKHEAD ACTUATOR STALLED
V37B	51I-17	103	27F010	STARBOARD PAYLOAD BAY DOOR CLOSED SLOW
V37BBA	8-03	099	08F018	RH PLBD OPEN A INDICATION LATE
V37BGA	41D-23	103	14F012	AFT STBD PLBD OPEN MICROSWITCH STAYED ON
V37BGA	41D-23	103	14F012	STBD DR MTR 2 RAN THRU HALF OF LATCH CYCLE
V37C	3-09	102	03F006	LH PLBD FWD BULKHEAD READY TO LATCH SWITCH
V37D00	26-11	103	26RF05	STARBD PLB FWD READY-TO-LATCH INDICATOR FAILED
V37D00	29-09	103	29RF07	PLBD PORT B CLOSE INDICATION FAILED
V37D00	27-16	104		RH PLBD LATCH "B" INDICATOR
V37E	61B-06B	104	31F002	PLBD CLOSE A WAS PRESENT WITH DOOR OPEN
V37EAA	51B-18	099	24F010	PLBD CLOSE SEQUENCE FAILED ON PORT AFT LATCHES
V37F	61B-06A	104	31F001	PLBD AFT READY-TO-LATCH B PRESENT WITH DOOR OPEN
V37FAA	41B-34	099	NONE	PLBD RH AFT LATCH LOST ONE PHASE ON MOTOR 2
V37U&V	3-36	102	03F036	RADIATOR LATCH INDICATION LOST
V37X	1-55	102	NONE	PLBD HINGE 7 EXCEEDED TEMPERATURE LIMIT
V38000	34-19	104	34RF17	RH VENT DOOR 3 MOTOR 1 OPNS ON 2 PHASES
V39000	33-11	103	33RF13	-Y STAR TRACKER BLANKET DETACHED
V39AAA	1-44	102	NONE	NLG DOOR THERMAL BARRIER FELL OFF
V39XXX	27-07A	104		ORBITER RH BOTTOM WING AND FUS TPS DAMAGE
V39XXX	27-07B	104		R-OMS CARRIER PANEL MISSING
V39XXX	27-07C	104		TACAN 2 LWR C-BAND ANT MISS TPS TILE AND OVERHEATED
V41A	2-32	102	NONE	MOISTURE IN SSME'S DURING ENTRY
V41A	41D-05	103	NONE	SSME 3 SERVO ACTR MISCOMPARE ON MAIN FUEL VLV CH A
V41CAA	30-03	104	30RF01	SSME 1 LH2 RECIRC PUMP FAILURE
V41CAA	41D-03C	103	AC8374F	SSME 2 LH2 PUMP SPEED SENSOR (V41R1215A) FAILED
V41CAA	51I-04B	103	27F006	SSME 2 LH2 PUMP SPEED (V41R1215A) FAILED
V41CAA	51I-15	103	27F013	SSME 1 LH2 PUMP 1 CIRCUIT BREAKER TRIPPED
V41CAE	4-02	102	AC3363	MPS LO2 OVERBOARD BLEED VLV CLOSE B INDICATOR FAIL
V41CHA	7-01	099	07F003	MPS LH2 HIGH-POINT BLEED DISCONNECT LEAKED
V41DAE	36-02	104	36RF02	LH2 17" DISCONNECT B INDICATION INTERMITTENT
V41DAN	28-05A	102	28RF10	LEFT SSME LH2 INLET TEMP FAILED HIGH
V41DBF	29-21	103	29RF21	MPS LH2 MANIFOLD LEAK
V41DBF	51D-17	103	NONE	MPS LH2 MANIFOLD PRESSURE DECAY
V41DLD	4-21	102	04F001	LO2 17 IN DISCONNECT FLOW LINER DAMAGED
V41D00	26-14	103	KB0346	4 INCH LH2 ET/ORBITER DISCONNECT SEAL DAMAGE
V41DTJ	3-38	102	NONE	MPS 3 LOX PRE-VALVE RPC C ELECTRICAL LEAK
V41DTM	6-07	099	06F027	MPS 3 LH2 PREVALVE CLOSED INDICATION OFF
V41DTM	51J-01	104	AD0421	MPS 3 LH2 PREVALVE FAULTY INDICATIONS
V41EHA	1-30	102	01F067	LH2 T-ZERO UMBILICAL GND FILL DISCONNECT SEAL LEAK
V41EHA	2-35	102	AC0740	LH2 FILL & DRAIN DISCNT INTFCE-SEAL INSERT LOOSE
V41EHA	9-02	102	09F003	LH2 T-ZERO UMBILICAL LEAKAGE UP TO 3.4%
V41ELA	2-35	102	NONE	LO2 FILL & DRAIN DISCNT INTFCE-SEAL INSERT LOOSE
V41ELA	61C-01	102	NONE	MPS LO2 FILL AND DRAIN VALVE DID NOT CLOSE
V41E00	27-03	104	27RF03	LH2 TOPPING VALVE SHOWED SIMULTANEOUS OPEN/CLOSED

INFLIGHT ANOMALY LIST
BY WUC

WUC	PROB#	ORB	CAR#	NOMENCLATURE
V41E00	29-28	103	29RF29	LH2 OTBD FI&DR VLV SLO CLOSE AT DUMP TERMINATION
V41E00	32-25	102	IM32RF26	MPS LH2 FILL AND DRAIN RELIEF VALVE LEAK
V41ETC	3-39	102	03F035	MPS 3 LO2 BLEED SYS CK VLV FOR POGO RECIRC FAILED
V41G	6-26	099	NONE	MPS 3 LEG A HELIUM REG OUT PRESSURE RISE
V41G	7-36	099	NONE	MPS HELIUM PNEUMATIC SYSTEM LEAKAGE
V41G	41G-23	099	NONE	MPS HELIUM PNEUMATIC SYS PRESSURE DECAYED
V41G	51B-21	099	NONE	MPS HE SYS DECAY RATE HI DURING ENTRY REPRESS
V41G	51C-02	103	NONE	HELIUM LEAK IN MID-BODY
V41GCW	30-12	104	30RF19	MPS SSME REG OUTLET "B" C/V LEAK
V41GJB	6-17	099	06F008	MPS 1 GH2 FLOW CONTROL VALVE (LV56) HUNG UP
V41GJB	9-07	102	09F002	MPS 1 GH2 FLOW CONTROL VLV FAILED TO RSPD TO CMDS
V41GJE	26-07	103	26RF03	SSME 1 AND 2 GOX FLOW CONTROL VLVS SLUGGISH
V41GJE	29-04	103	29RF04	OX FCV 1 DELAYED START TO OPEN FCV 3 SLUGGISH
V41GJF	26-07	103	26RF03	SSME 1 AND 2 GOX FLOW CONTROL VLVS SLUGGISH
V41GLA	5-08	102	05F003	MPS 3 GO2 FLOW CONTROL VALVE (LV55) PARTIAL FAILURE
V41G00	30-02D	104	NONE	SSME 3 GH2 PRESS SYS TEMP
V41G00	30-02E	104	30RF08	CENTER ENGINE LH2 INLET PRESS XDUCER FAILED
V41G00	30-02H	104	30RF12	LEFT ENGINE LH2 INLET PRESS XDUCER BIASED LOW
V41G00	30-22	104	NONE	GO2 ENTRY PRESS LAGGED MPS LO2 REPRESS
V41JCF	41B-30	099	NONE	SSME 3 ATVC YAW CHANNEL 4 BYPASSED
V41KAD	1-31	102	NONE	MPS H2 TOPPING VALVE SLOW CLOSURE
V41KEB	51B-16	099	24F016	SSME 2 LO2 PREVALVE NO OPEN IND DURING LOX DUMP
V41KED	29-17	103	29RF17	SSME 1 LH2 PREVALVE SIGNATURE ANOMALY
V41L	5-05B	102	NONE	TEMP SENSOR (T41T1705A) ET LH2 ULLAGE FAILED HIGH
V41L	6-01J	099	06F036	ET LO2 100% LEVEL SENSOR (T41X1768E) FAILED WET
V41L	7-02F	099	07F031	ET LH2 ULLAGE PRESS (V41P1700C) STICKY
V41L	8-06D	099	NONE	TEMP 2 SENSOR (E41T1154A) SSME 1 MFV FAILED
V41L	8-06F	099	08F015	ET LH2 ULL PRESS 1(T41P1700C) & 3(T41P1701C) STICKY
V41L	41C-03A	099	13F006	ET LH2 100% FILL SENSOR (T41X1718E) INTERMITTENT
V41L	41D-03B	103	AC8354F	ET LH2 ULLAGE PRESSURE 2 (T41P1701C) READ LOW
V41L	51C-03D	103	NONE	ET LH2 100% FILL SENSOR (T41X1718E) ERRATIC
V41LBC	51A-02	103	NONE	MPS 3 HELIUM REG A OUT PRESSURE (V41P1354A) READ LO
V41LEA	41D-09C	103	14F003	PRESS TRNSDR MPS 1 LH2 INLET (V41P1100C) READ HIGH
V41LEA	51A-03C	103	NONE	PRESS TRNSDR MPS 1 LH2 INLET (V41P1100C) READ HIGH
V41LEA	61B-02A	104	31F012	PRESS TRNSDR MPS 1 LH2 INLET (V41P1100C) ERRATIC
V41LEB	8-06C	099	08F010	PRESS TRNSDR MPS 2 LH2 INLET (V41P1200C)FAILED HIGH
V41LEB	26-04F	103	26RF21	SSME 2 LH2 INLET PRESS BIASED AND OSCILLATING
V41LEB	51A-03D	103	NONE	PRESS TRNSDR MPS 2 LH2 INLET (V41P1200C) READ HIGH
V41LEB	61B-02A	104	31F012	PRESS TRNSDR MPS 2 LH2 INLET (V41P1200C) LOW
V41LEC	3-10B	102	03F029	PRESS TRNSDR MPS 3 LH2 INLET (V41P1300C)FAILED HIGH
V41LEC	26-04B	103	26RF20	SSME 3 LH2 INLET PRESS TRANSDUCER FAILED
V41LEC	41D-09B	103	14F002	PRESS TRNSDR MPS 3 LH2 INLET (V41P1300C) READ LOW
V41LFA	9-03H	102	NONE	MPS HE SUPPLY PRESSURE (V41P1600A) DROPPED TO ZERO
V41LGB	1-06	102	01F037	PRESS TRNSDR MPS 2 GH2 OUTLET (V41P1260A)FAILED LOW
V41LGB	2-06	102	02F008	PRESS TRNSDR MPS 2 GH2 OUTLET (V41P1260A)FAILED HIG
V41LGB	6-01B	099	06F004	PRESS TRNSDR MPS 2 GH2 OUTLET (V41P1260A) FAILED
V41LGB	7-02C	099	07F006	PRESS TRNSDR MPS 2 GH2 OUTLET(V41P1260A)FAILED HIGH
V41LGB	8-06A	099	08F002	PRESS TRNSDR MPS 2 GH2 OUTLET(V41P1260A)FAILED HIGH
V41LGB	41B-02A	099	11F001	PRESS TRNSDR MPS 2 GH2 OUTLET (V41P1260A) FAILED HI
V41LGB	41C-03C	099	13F003	PRESS TRNSDR MPS 2 GH2 OUTLET (V41P1260A) FAILED HI

INFLIGHT ANOMALY LIST
BY WUC

WUC	PROB#	ORB	CAR#	NOMENCLATURE
V41LGB	41G-03A	099	17F001	PRESS TRNSDR MPS 2 GH2 OUTLET (V41P1260A) FAILED HI
V41LGB	51B-03A	099	24F002	PRESS TRNSDR MPS 2 GH2 OUTLET (V41P1260A) FAILED
V41LGB	51F-03A	099	26F002	PRESS TRNSDR MPS 2 GH2 OUTLET (V41P1260A) FAILED
V41LGB	51G-01A	103	NONE	PRESS TRNSDR MPS 2 GH2 OUTLET (V41P1260A) FAILED
V41LGB	51I-04A	103	24F002	PRESS TRNSDR MPS 2 GH2 OUTLET (V41P1260A) FAILED
V41LGC	7-02B	099	07F011	PRESS TRNSDR MPS 3 GH2 OUTLET(V41P1360A)FAILED HIGH
V41LGC	28-05D	102	28RF13	SSME 3 GH2 OUTLET TEMP ERRATIC
V41LHE	61C-04B	102	32F012	PRESS TRNSDR MPS 3 HE SUPPLY (V41P1350C) ERRATIC
V41LHJ	9-3I	102	NONE	ET GH2 ULLAGE PRESS SIGNAL COND NO 3 MALFUNCTION
V41LKD	41G-03B	099	17F002	TEMP SENS MPS 1 GH2 PRESS OUT (V41T1161A) FAILED
V41LKE	1-06	102	01F046	TEMP SENS MPS 2 GH2 PRESS OUT(V41T1261A) FLD HIGH
V41LKE	3-10A	102	03F028	TEMP SENS MPS 2 GH2 PRESS OUT (V41T1261A) FLD HIGH
V41LKE	4-06C	102	04F028	TEMP SENS MPS 2 GH2 PRESS OUT (V41T1261A) SHIFT
V41LKE	6-01A	099	06F003	TEMP SENS MPS 2 GH2 PRESS OUT (V41T1261A) FAILED
V41LKE	51C-03B	103	20F003	TEMP SENS MPS 2 GH2 PRESS OUT (V41T1261A) FAILED
V41LKE	61C-04A	102	32F001	TEMP SENS MPS 2 GH2 PRESS OUT (V41T1261A) FAILED
V41LKG	41D-09A	103	14F001	TEMP SENS MPS 3 GH2 PRESS OUT (V41T1361A) FAILED HI
V41LKG	51A-03A	103	19F001	TEMP SENS MPS 3 GH2 PRESS OUT (V41T1361A) FAILED
V41LMF	51J-03B	104	28F007	MPS-ENG 2 LH2 INLET TEMP (V41T1201C) FAILED
V41LMG	4-06B	102	04F024	TEMP TRNSDR MPS 3 LH2 INLET(V41T1301C)FAILED HIGH
V41L00	26-04H	103	NONE	ET LH2 98 PERCENT LIQ LEV SENSOR FLASHING
V41000	28-28	102	28RF29	SSME 1 GH2 FCV SLUGGISH RESPONSE
V41000	28-29	102	28RF30	GOX PRESS MANIFOLD SLOW TO PRESS
V41000	32-06	102	IM32RF07	GOX FLOW CONTROL VLV 2 SLUGGISH
V41XXX	41B-31	099	11F019	SSME 3 HE PANEL A ISOLATION VALVE LEAKED (LV5)
V42A00	28-03	102	28RF03	VERNIER THRUSTER F5R ANNUNCIATED LEAK
V42A00	28-07	102	28RF08	FWD RCS F5L HTR FAILED ON
V42AWC	1-01E	102	01F048	FRCS FUEL FWD PNL HTR STAYED ON WITH NO TEMP RESP
V42AWD	1-01F	102	NONE	FRCS OXIDIZER FWD PANEL HEATER THERMOSTAT INACTIVE
V42AWL	41G-16	099	17F016	RH OMS OXIDIZER DRAIN LINE TEMP ERRATIC
V42B	1-17	102	NONE	FRCS THRUSTER FUEL INJ TEMPS LOWER THAN PREDICTED
V42BLS	2-30	102	02F011	FRCS B LEG OX REG PRESS LOCKUP HIGH
V42BLS	27-08	104		RCS OXID B HE REG SLOW RESPONSE
V42BQB	41B-35	099	11F022	FRCS OX 3/4/5 TANK ISO VALVE STATUS LOST
V42BQD	41B-35	099	11F022	FRCS FUEL 3/4/5 TANK ISO VALVE STATUS LOST
V42BQE	51C-13	103	AC9013	FORWARD RCS DILEMMA DURING DEORBIT
V42BQH	51A-18	103	13F001	FRCS MANIFOLD 3 OX ISO VLV LOST OPEN IND
V42BQL	41D-13	103	13F001	FRCS FUEL MANIFOLD 2 CLOSE IND (V42X1327X) FAILED
V42BQM	51A-18	103	13F001	FRCS MANIFOLD 3 FUEL ISO VLV LOST OPEN IND
V42BRA	4-06F	102	NONE	F1F RCS INJECTOR OX TEMP (V42T1501) RESPONSE SLOW
V42BSA	4-06F	102	NONE	F1F RCS INJECTOR FUEL TEMP (V42T1502) RESPONSE
V42BTM	1-58	102	01F084	FRCS OX TANK STRUCT SUPPORT AFT Z STRUT DEFORMED
V42FUA	51I-10	103	27F004	PRIMARY THRUSTER-F1F CHAMBER FAILED OFF
V42FUB	4-04	102	04F004	PRIMARY THRUSTER-F1L OX LEAK
V42FUB	4-22	102	AC3446	PRIMARY THRUSTER-F1L WATER INTRUSION
V42FUH	4-22	102	AC3446	PRIMARY THRUSTER-F3D WATER INTRUSION
V42FUH	8-15	099	08F005	PRIMARY THRUSTER-F3D OX LEAK
V42FUH	41B-14	099	11F013	FRCS F3D HEATER THERMOSTAT SET POINT SHIFTED
V42FUK	1-50	102	01F050	PRIMARY THRUSTER-F2R OX INJ TEMP RESPONSE WRONG
V42FUN	51A-09	103	NONE	PRIMARY THRUSTER-F4R FUEL LEAK INDICATION

INFLIGHT ANOMALY LIST
BY WUC

WUC	PROB#	ORB	CAR#	NOMENCLATURE
V42FUP	5-18	102	05F002	PRIMARY THRUSTER-F4D FAILED OFF
V42FUR	2-46	102	NONE	VERNIER THRUSTER-F5L EXCEEDED TEMP LIMIT
V42FUR	3-06	102	03F043	VERNIER THRUSTER-F5L OX TEMP BIASED LOW
V42FUR	4-33	102	NONE	VERNIER THRUSTER-F5L NOZZLE COATING DEGRADED
V42GAA	9-14	102	09F006	VERNIER THRUSTER-L5L FAILED OFF FROM BUBBLES
V42GAG	8-15	099	08F004	PRIMARY THRUSTER-L3D FUEL LEAK
V42GAK	6-15	099	06F009	PRIMARY THRUSTER-L2D FUEL LEAK
V42GAK	51D-03B	103	23F010	LH RCS THRUSTER L2D CHAMBER PRESS READ LOW
V42GAL	61A-10	099	30F007	PRIMARY THRUSTER - L2L INJECTOR HEATER FAILED
V42HFV	41D-03A	103	AC8712	LH ARCS FUEL MANIFOLD PRESS 1 (V42P2112C) ERRATIC
V42JBA	2-36	102	02F013	LH ARCS PROPELLANT (FUEL) TANK PRESSURE SURGES
V42JBB	2-36	102	02F013	LH ARCS PROPELLANT (OXID) TANK PRESSURE SURGES
V42JBE	51G-04B	103	13F001	LH ARCS ISOLATION VALVE 1/2 CLOSED IND FAILED
V42JBW	41C-11	099	13F001	LH ARCS FUEL 3, 4 AND 5 ISO VALVE B STATUS LOST
V42JBW	51A-22	103	13F001	LH ARCS SYS B FUEL ISO VLV OPEN INDICATION LOST
V42JCG	41B-06	099	AC6471F	LH ARCS PRIMARY (FUEL A) GHE REG LEAKED
V42JCH	41G-15	099	17F012	LH ARCS PRIMARY (FUEL B) GHE REG INTERNAL LEAK
V42JCK	61C-12	102	NONE	LH ARCS OX TANK HELIUM REG B LEAKED
V42NAA	4-33	102	03F006	VERNIER THRUSTER-R5R NOZZLE COATING DEGRADED
V42NAA	9-14	102	09F006	VERNIER THRUSTER-R5R FAILED OFF FROM BUBBLES
V42NAB	4-06D	102	04F021	R5D RCS INJECTOR OX OR FUEL TEMP BIAS
V42NAC	5-07	102	05F001	PRIMARY THRUSTER-R4D HEATER CONTROLLER FAILED
V42NAC	51B-10	099	24F007	PRIMARY THRUSTER - R4D INJECTOR HEATER FAILED
V42NAE	6-03	099	NONE	PRIMARY THRUSTER-R4U SMALL OX LEAK
V42NAG	9-14	102	09F006	PRIMARY THRUSTER-R3D OX VALVE LEAKED
V42NAH	41G-02	099	17F011	PRIMARY THRUSTER - R3R FAILED OFF
V42NAJ	51D-15	103	23F003	PRIMARY THRUSTER - R2U OXIDIZER LEAK
V42NAN	29-01	103	NONE	THRUSTER R1U FAILED OFF DURING MATED COAST
V42NAP	30-05	104	30RF14	RCS JET R1U FAILED OFF POST SEP
V42NAP	51F-06	099	26F003	PRIMARY THRUSTER - R1R INJECTOR HEATER FAILED
V42000	38-07	104	38RF08	THRUSTERS R1U, R3D, R4U, F3L TRANSIENT LOW CH. PRESS
V42000	35-04	102	35RF02	LEFT RCS PANEL HEATER A FAILURE
V42000	35-20	102	NONE	RCS VERNIER THRUSTER R5D FAILED OFF
V42PFF	6-01F	099	NONE	RH ARCS AFT HOUSING THERMAL SW TEMP (V42T3304A) LOW
V42QBA	2-36	102	02F013	RH ARCS PROPELLANT (FUEL) TANK PRESSURE SURGES
V42QBB	2-36	102	02F013	RH ARCS PROPELLANT (OXID) TANK PRESSURE SURGES
V42QBD	7-16	099	07F021	RH ARCS SYS B FU B ISO VLV MAN 3,4,5 POS MISCOMPARE
V42QBF	1-21	102	01F033	RH ARCS FUEL MTR ISO VLV POS MICROSWITCH FAILED
V42QBT	41D-18	103	13F011	RH ARCS FUEL 3/4/5 CROSSFEED VLV DID NOT IND OPEN
V42QBT	51A-04	103	13F001	RH ARCS 3/4/5 FUEL CROSSFEED VLV DID NOT IND CLOSE
V42QBT	51G-04A	103	13F001	RH ARCS FUEL 3/4/5 CROSSFEED VLV OPEN IND FAILED
V42QBV	51A-04	103	13F001	RH ARCS 3/4/5 OX CROSSFEED VLV DID NOT IND CLOSE
V42QBW	51G-04C	103	13F001	RH ARCS OX TANK ISO VLV 3/4/5 OPEN IND FAILED
V42QCB	28-05B	102	28RF05	R RCS He OX TK PRESSURE 1 HIGH
V42QCC	30-09	104	30RF17	RT RCS "A" LEG OX HE ISOLATION VLV FAILED OPEN
V42QCG	61A-03A	099	AD0419	R RCS HELIUM REG LEG A OPERATED ON SECONDARY
V42QCH	5-01	102	AC4422	RH ARCS FUEL LEG B HELIUM REG LEAK
V42QCH	61A-03B	099	AD0419	R RCS HELIUM REG LEG B FAILED CLOSED
V42QCK	9-17	102	NONE	RH ARCS OXIDIZER PRI REG B INTERNAL LEAK
V42000	31-03a	103	31RF03	RCS JET L3A FAILED OFF-OXIDIZER

INFLIGHT ANOMALY LIST
BY WUC

WUC	PROB#	ORB	CAR#	NOMENCLATURE
V42000	31-03b	103	31RF06	RCS JET L3A OXIDIZER LEAK
V42000	36-06b	104	IM36RF09	L RCS OX TK ISO VALVE POSITION INTERMITTENT
V42000	36-06c	104	IM36RF09	L RCS OX XFD VALVE POSITION INTERMITTENT
V42000	36-06a	104	IM36RF09	R RCS MANIFOLD 1 OX ISO VALVE POSITION INTERMITTENT
V42000	36-04	104	IM36RF07	RCS THRUSTER R3D FAILED OFF
V42000	36-12	104	36RF14	THRUSTER R4R FAILED OFF
V43	51F-17	099	NONE	OMS BURNS ROUGH START TRANSIENTS
V43A	7-10	099	07F025	LH OMS FUEL X-FEED HI PT BLEED HTR THERMOSTAT FLD
V43AFK	51G-1C	103	NONE	LH OMS FEED LINE TEMP (V43T4216A) INCREASED
V43A00	27-11	104		LEFT OMS GN2 ISOL VALVE COIL FAILED
V43A00	32-03a	102	IM32RF03	RT OMS HE PRESS 2 LOW
V43B	1-61	102	NONE	LH OMS HE PURGE FLOW INOPERATIVE
V43BBJ	2-17	102	NONE	LH OMS CROSSFEED B FUEL VLV POSITION IND FAILED
V43BBL	2-17	102	NONE	LH OMS CROSSFEED B OX VLV POSITION IND FAILED
V43BCC	51A-08	103	AC8899F	LH OMS HELIUM ISOLATION VALVE LEAK
V43BCC	51A-08	103	19F021	LH OMS HELIUM ISOLATION VALVE LEAK
V43EBC	1-07	102	01F051	LH OMS QUANTITY TOTALIZER FUEL STICKING
V43EBC	2-05	102	02F010	LH OMS QUANTITY TOTALIZER FUEL AND OX HUNG UP
V43EBC	41B-07	099	NONE	LH OMS POD OX TANK AFT & TOTAL QUANTITIES FAILED
V43EBC	41C-19	099	13F009	LH OMS FUEL TOTAL QUANTITY GAGE READ LOW
V43EBC	41D-08	103	14F005	LH OMS FUEL TOTAL QUANTITY GAGE FAILED
V43E00	29-18	103	29RF18	LH OMS FUEL GAGE UNGAGEABLE QUANTITY
V43GAD	9-01	102	09F001	LH OMS SEC PTCH ACTUATOR DID NOT RESPOND TO PROFILE
V43GAD	26-1	103	26RF16	LEFT SECONDARY TVL, RPC NO. 1 GIMBAL DID NOT DRIVE
V43GAD	51I-18	103	NONE	LH OMS YAW PRIMARY ACTUATOR STOPPED MOVING
V43GAF	6-04	099	06F029	LH OMS ACT CONTR DRIVER OUTPUT TRANSISTOR SHORTED
V43GBK	7-30	099	07F020	LH OMS GN2 PRESS REG LEAK DURING DEORBIT BURN
V43H	1-01C	102	01F083	RH OMS AFT OX LOW PT DRAIN HTR A THERMOSTAT FAILED
V43H	41D-21	103	07F026	RH OMS OX LOW PT DRAIN LINE HTR B THERMOSTAT FAILED
V43H	51B-12	099	24F017	RH OMS OX LOW POINT DRAIN LINE HTR SET PT DRIFTED
V43HFL	7-02E	099	NONE	TEMP SENSOR RH OMS FUEL TANK (V43T5315A) READ LOW
V43HFL	8-06B	099	NONE	TEMP SENSOR, RH OMS FUEL TANK (V43T5315A) ERRATIC
V43HGG	51L-04	099	NONE	R5D OX INLET LINE TEMP (V42T3560A) FAILED
V43H00	32-03c	102	IM32RF14	RT OMS FUEL PRESS ERRATIC
V43JBD	41D-25	103	13F001	RH OMS FUEL TANK ISO VLV A OPEN IND FAILED
V43JBH	41C-07	099	13F001	RH OMS FUEL TANK ISO VLV SYS A POS IND MISCOMPARE
V43JBH	51F-14	099	13F001	RH OMS CROSSFEED LEG "A" FUEL MICROSWITCH FAILED
V43JBH	51I-11	103	13F001	RH OMS FUEL TANK ISO VLV SYS A BARBER POLE
V43JBJ	51F-12	099	13F001	RH OMS CROSSFEED LEG "B" FUEL MICROSWITCH FAILED
V43JBL	41D-24	103	13F001	RH OMS CROSSFEED B OX, FU NO OPEN OR CLOSE IND
V43JCF	51F-16	099	26F008	RH OMS ULLAGE PRESSURE HIGH
V43J00	33-04D	103	33RF10	R OMS QNTY OFF-SCALE HIGH
V43MBC	1-07	102	01F096	RH OMS QUAN TOTALIZER FUEL AND OX STICKING
V43MBC	2-05	102	02F010	RH OMS QUAN TOTALIZER OX READ HIGH
V43MBC	5-05D	102	NONE	RH OMS QNTY SENS OX LEVEL (V43X5233X) FAILED LOW
V43MBC	6-01C	099	06F024	RH OMS QUANTITY SENSOR OX TOTAL (V43Q5231C) STUCK
V43MBC	7-18	099	07F012	RH OMS TOTALIZER FUEL AND OX FAILED
V43MBC	30-08	104	30RF16	RT OMS FUEL TOTAL QUANTITY GAGE FAILED
V43MBC	51C-12	103	20F006	RH OMS FUEL AND OX QUANTITY GAGES WENT TO ZERO
V43MBC	51J-06	104	28F010	RH OMS FUEL TOTAL QUANTITY READING OFFSET

INFLIGHT ANOMALY LIST
BY WUC

WUC	PROB#	ORB	CAR#	NOMENCLATURE
V43MBC	28-17	102	28RF21	R OMS FUEL QUANTITY GAUGE HIGH
V43NAB	1-24	102	01F060	RH OMS ENGINE OX INLET PRESS DROP
V43NAC	5-23	102	AC4919	RH OMS ENG NOZ HAD SEVERAL SCRATCHES INSIDE BELL
V43NAC	61A-17	099	AD0448	RH OMS ENG HAD CRACKS IN LIGHT WEIGHT ENG BELL
V43NAD	1-12	102	01F016	RH OMS PITCH GIMBAL ACTUATOR RESPONSE SLOW
V43NAU	31-02d	103	IM31RF13	R OMS ENG FUEL INLET PRESS ERRATIC
V43NBK	9-28	102	09F027	RH OMS GN2 REG SHIFTED DOWN DURING BURNS
V43NBK	30-14	104	NONE	R OMS GN2 PRESS REG LOW
V43N00	34-09	104	34RF13	R OMS ENG COVER HTR SYS B FAILED OFF
V43N00	32-04	102	IM32RF06	R OMS NO-BACK DEVICE MOVED/ASCENT
V43XJB	61B-03	104	NONE	OMS OX CROSSFEED LINE SYS A HEATER FAILED
V45A	9-13	102	09F016	EXCESSIVE GH2 IN THE FUEL CELL WATER
V45AAA	2-08	102	02F001	FUEL CELL 1 FAILURE
V45AAA	2-18	102	02F042	FUEL CELL 1 HYDROGEN FLOW METER READ LOW
V45AAA	4-03	102	04F003	FUEL CELL 1 CONDENSER EXIT TEMP READ LOW
V45AAA	6-29	099	06F017	F/C 1 COOLANT PUMP DELTA P SWITCH FAILED ON
V45AAA	41D-12	103	14F007	FUEL CELL 1 PERFORMANCE MONITOR FAILED
V45AAA	51I-04C	103	AC9809	FUEL CELL 1 HYDROGEN FLOW METER (V45R0170A) ERRATIC
V45AAA	51J-03A	104	NONE	FUEL CELL 1 HYDROGEN FLOW (V45R0170A) LOW
V45AAA	61A-01	099	30F004	FUEL CELL 1 TCE UNSTABLE
V45ABA	2-09	102	02F002	FUEL CELL 2 OX FLOW METER FAILED HIGH
V45ABA	6-01I	099	06F026	F/C 2 H2 FLOWRATE (V45R0270A) FAILED
V45ABA	30-02F	104	30RF09	FUEL CELL 2 H2 FLOW METER FAILED HIGH
V45ABA	61B-09	104	31F003	FUEL CELL 2 PERFORMANCE DEGRADATION
V45ABA	31-06	103	31RF07	FUEL CELL 2 FLOW RATE HIGH
V45ABA	32-03c	102	IM32RF05	FUEL CELL 2 EVAP OUT TEMP SLOW RESPONSE
V45ACA	2-12	102	02F002	FUEL CELL 3 OX FLOW METER (V45R0360A) ERRATIC
V45ACA	51J-03E	104	AC9761	F/C 3 OXYGEN FLOW METER (V45R0360A) FAILED
V45CAJ	29-16	103	29RF-16	FUEL CELL 1 H2O RELIEF VALVE TEMP OVERSHOOT
V45CAR	4-30	102	NONE	F/C 2 H2O RELIEF VLV HEATER B FAILED
V45DAH	1-23	102	NONE	WATER RELIEF NOZZLE TEMP HIGH
V45DA0	27-12	104		FUEL CELL 2 ALT H2O LINE TEMPS
V45JAA	29-03	103	29RF01	PRSD CRYO H2 TANK PRESS HIGH
V45JAB	3-10	102	03F047	H2 TANK 2 QUANTITY (V45Q2205A) FAILED HIGH
V45JAB	4-06A	102	NONE	H2 TANK 2 QUANTITY (V45Q2205A) READ LOW
V45JAB	4-16	102	NONE	H2 TANK 2 HEATER B FAILED
V45J00	28-05C	102	28RF06	FCP 1 H2 FLOW ERRATIC
V45PAA	3-01	102	NONE	H2 CRYO CONTROL BOX 1 RPC 2 FAILED ON
V45PAA	4-07	102	04F025	H2 TANK 4 HEATER A FAILED
V45PAB	51D-01	103	23F012	CRYO O2 TANK 1 CONTROLLER AUTO MODE FAILED
V45PAJ	61A-02	099	30F005	H2 TANK 1 CONTROL PRESSURE FAILED
V45Q	61B-01	104	NONE	FUEL CELL CRYO O2 SPEC PURITY EXCEEDED
V45QA0	34-12	104	34RF12	CRYO O2 MANIFOLD 2 ISO VLV DID NOT CLOSE
V45QA0	33-08	103	33RF09	CRYO O2 TANK 1 CHECK VALVE STICKY
V45VAA	3-03	102	NONE	O2 TANK 3 HEATER A TRIP INDICATION
V45VAA	9-22	102	AC6878	O2 TANK 3 QUANTITY RAPID DROP
V45VAB	1-10	102	01F001	O2 MANIFOLD 2 PRESSURE (V45P1451A) READ LOW
V45VAC	1-10	102	01F001	O2 MANIFOLD 1 PRESSURE (V45P1140A) READ LOW
V45VAG	51C-07	103	NONE	O2 TANK 2 HEATER CONTROL PRESSURE FAILED MOMENTARILY
V46A	1-59	102	01F099	HIGH APU VIBRATION

INFLIGHT ANOMALY LIST
BY WUC

WUC	PROB#	ORB	CAR#	NOMENCLATURE
V46AAA	1-42	102	NONE	APU 1 LOW CHAMBER PRESS DURING ON ORBIT START
V46AAA	2-01	102	AC0878	APU 1 LUBE OIL OUTLET PRESS HIGH FILTER PLUGGED
V46AAA	2-07	102	02F009	APU 1 MANIFOLD FITTING LEAKED COOLING WATER
V46AAA	9-26	102	09F012	APU 1 UNDERSPEED SHUTDOWN
V46AAA	27-01B	104		APU 1 GG BED TEMP BIAS 45 DEG HIGH
V46AAA	27-01D	104		APU 1 GG VALVE MODULE T-1 TEMP BIASED 40 DEG HIGH
V46AAA	41B-02B	099	11F010	APU 1 GAS GEN INJ TEMP (V46T0174A) 600 DEG F LOW
V46AAA	51B-14	099	24F011	APU 1 FUEL BY-PASS LINE HTR B FAILED ON
V46AAA	51F-02	099	26F007	APU 1 LUBE OIL OUTLET AND GEARBOX GN2 PRESSURE HIGH
V46AAA	51J-03C	104	NONE	APU 1 GGVM TEMP (V46T0171A) FAILED
V46AAA	61A-04	099	26F007	APU 1 GEARBOX GN2 PRESSURE HIGH
V46AAA	61C-03	102	26F007	APU 1 GEARBOX GN2 PRESSURE HIGH
V46AAA	34-04	104	34RF05	APU 1 FAULT TO HIGH SPEED
V46AAA	31-11	103	31RF12	APU 1 FUEL PUMP/GGVM HTR SYS A THERMOSTAT SETPOINT CHANGE
V46AAA	31-01	103	31RF01	APU 1 TURBINE OVERSPEED
V46AAA	36-03b	104	36RF04	APU 1 EGT 1 FAILED
V46AAA	36-03c	104	36RF05	APU 1 GGVM TEMP HIGH
V46AAA	41-03	103	41RF01	APU 1 GG/FP HEATER SYSTEM FAILED ON
V46AAA	35-11	102	35RF05	APU 2 GG BED TEMPERATURE RESPONSE
V46AAB	1-19	102	01F013	APU 2 GAS GENERATOR HEATER ELEMENTS FAILED
V46AAB	1-59	102	01F099	APU 2 VIBRATION LEVELS HIGH
V46AAB	7-02G	099	NONE	TEMP SENSOR (V46T0262A) APU 2 BEARING TEMP FAILED
V46AAB	9-26	102	09F013	APU 2 UNDERSPEED SHUTDOWN
V46AAB	27-04	104		APU 2 GG HEATER SYSTEM FAILED
V46AAB	41B-26	099	11F018	APU 2 GG/FUEL PUMP HEATER SYS A FAILED OFF
V46AAB	41G-03C	099	AC8752	APU 2 BEARING 1 TEMP (V46T0261A) FAILED
V46AAB	32-03d	102	IM32RF10	APU 2 GGT/INJ TEMP MISCOMPARE
V46AAC	1-42	102	01F056	APU 3 CHAMBER PRESS DURING ON ORBIT START
V46AAC	1-59	102	01F099	APU 3 VIBRATION LEVEL HIGH
V46AAC	4-05	102	04F010	APU 3 LUBE OIL PRESS HIGH FILTER PLUGGED
V46AAC	4-05	102	04F013	APU 3 LUBE OIL PRESS HIGH FILTER PLUGGED
V46AAC	7-20	099	07F010	APU 3 UNDERSPEED SHUTDOWN DURING ON ORBIT CHECKOUT
V46AAC	41B-02C	099	11F007	APU 3 GAS GENERATOR PRESS (V46P0320A) 100 PSIA HIGH
V46AAC	51D-07	103	23F014	APU 3 SHUTDOWN LOAD ABNORMAL
V46AAC	31-08	103	31RF08	APU 3 PUMP BYPASS HTR A FAILED ON
V46AAC	32-02	102	IM32RF02	APU 3 OIL OUTLET PRESSURE HIGH
V46AAC	34-08	104	34RF09	APU 3 SEAL LEAK INTO DRAIN BOTTLE
V46ADB	30-02G	104	30RF11	APU 1 EGT 2 FAILED
V46ADB	34-03A	104	34RF19	APU 2 EGT 1 FAILED
V46ADC	34-03B	104	34RF04	APU 3 EGT 1 FAILED LOW
V46ADC	34-03C	104	34RF18	APU 3 EGT 2 FAILED LOW
V46ADC	33-04B	103	33RF06	APU 1 EGT 2 FAILED DURING ENTRY
V46ADC	33-04C	103	33RF07	APU 3 EGT 2 FAILED DURING ENTRY
V46AEA	33-01	103	33RF01	APU 1 LUBE OIL OUT PRESS HIGH
V46A00	26-12	103	26RF04	APU 3 LOW CHAMBER PRESS/HI FUEL USAGE
V46A00	30-06	104	30RF15	APU 2 GG FUEL PUMP "A" HEATERS INOP
V46A00	34-10	104	34RF11	APU 2 FUEL PUMP HEATER B CYCLING HIGH
V46A00	34-03A	104	34RF03	APU 3 INJ TEMP BIAS LOW
V46BAA	4-23	102	AC1697	APU 1 FUEL TANK DECAY GN2 QD LEAK

INFLIGHT ANOMALY LIST
BY WUC

WUC	PROB#	ORB	CAR#	NOMENCLATURE
V46BAC	3-24	102	AC1697	APU 3 FUEL TANK PRESSURE DECAY GN2 QD LEAK
V46BCA	61A-05	099	30F014	APU 1 FUEL TANK ISO VLV TEMP LOW ON HEATER A
V46BCA	61C-05	102	32F006	APU 1 ISO VALVE TEMPERATURE LOW
V46BCB	61C-05	102	32F006	APU 3 ISO VALVE TEMPERATURE LOW
V46BCC	28-12	102	28RF14	APU ISOL VALVE TALK BACK FAILURE
V46BLA	6-13	099	AC5531	APU 1 SEAL CAVITY DRAIN LEAK
V46BLB	3-05	102	03F003	APU 2 RELIEF VALVE LEAK
V46BLB	6-13	099	AC5531	APU 2 PRESS TRANSDUCER O-RING SEAL LEAK
V46BLB	7-09	099	AC5531	APU 2 SEAL CAVITY DRAIN LEAK
V46BLB	8-05	099	AC5531	APU 2 SEAL CAVITY DRAIN LEAK
V46BLB	51A-01	103	NONE	APU 2 WATER SPRAY VALVE SYSTEM A FAILED
V46BLC	4-15	102	04F008	APU 3 RELIEF VALVE LEAK
V46BLC	6-13	099	AC5531	APU 3 RELIEF VALVE LEAK
V46BLC	7-09	099	AC5531	APU 3 SEAL CAVITY DRAIN LEAK
V46CBA	30-02B	104	NONE	APU 1 EGT 1 FAILED
V46CBA	31-02b	103	IM31RF10	APU 1 EGT 1 FAILED
V46CBA	36-03a	104	IM36RF03	APU 1 EGT 1 FAILED
V46CBB	27-01A	104		APU NO 1 EGT NO 2 ERRATIC
V46CBB	31-02a	103	IM31RF02	APU 1 EGT 2 FAILED
V46CCA	30-02C	104	30RF06	APU 2 EGT 1 FAILED
V46CCB	32-03g	102	IM32RF23	APU 2 EGT 2 ERRATIC
V46CDA	30-02A	104	30RF05	APU 3 EGT 2 FAILED
V46CDB	31-02c	103	IM31RF11	APU 3 EGT 2 FAILED
V46CDB	36-03e	104	IM36RF20	APU 3 EGT 2 FAILED
V46CDB	32-03b	102	IM32RF04	APU 3 EGT 2 FAILED
V46DCO	33-16	103	NONE	APU 1 AND APU 3 BYPASS LINE "A" TEMPS ERRATIC
V46DCO	34-06	104	NONE	APU 2 GG/FP HTR "A" INOPERATIVE
V46DCO	28-18	102	28RF22	APU 1 TEST LINE TEMP HIGH
V46DCO	41-11A	103	41RF08	APU 2 HEATER 2A SET POINT DRIFT
V46DCO	41-11B	103	41RF08	APU 3 HEATER 3A SET POINT DRIFT
V46DKD	1-01B	102	01F072	THERMOSTAT FOR HEATER EXHIBITED CREEP
V46DKE	1-01D	102	AB9526	THERMOSTATS FOR HEATERS EXHIBITED CREEP
V46DMD	7-08	099	07F005	THERMOSTAT APU 2 SERVICE LINE HEATER FAILED
V46DMG	41G-07	099	NONE	APU 2 PUMP DRAIN LINE HEATER A FAILED
V46DMK	41C-16	099	NONE	APU 2 PUMP WATER LINE SYSTEM B HEATER FAILED
V46DML	51B-08	099	24F012	APU 3 SEAL CAVITY DRAIN LINE HEATER 3A FAILED
V46DMM	7-19	099	07F026	THERMOSTAT APU 3 WATER INJ LINE HEATER FAILED
V46DNM	61C-06	102	32F008	APU 3 FUEL LINE SYS B HEATER FAILED
V46GBG	51G-02	103	NONE	APU 2 FUEL PUMP WATER COOLING VLV SYS A FAILED
V46GE	41B-01	099	11F009	APU GGVM H20 COOLING SYSTEM A FAILED OFF
V46GE	41C-04	099	NONE	APU 1, 2 AND 3 GGVM TEMPERATURES DROPPED
V46GGA	7-19	099	07F030	THERMOSTAT APU 3 SEAL CAVITY DL HEATER FAILED
V46KCC	2-01	102	AC0878	APU 3 LUBE OIL PRESSURE HIGH FILTER PLUGGED
V46XXX	2-03	102	NONE	THERMOSTATS (10) HEATER SYSTEMS EXHIBITED DITHER
V51ABB	6-27	099	NONE	LANDING GEAR ISO VLV SYS 2 DID NOT ACTIVATE
V51ABB	41D-20	103	NONE	LANDING GEAR ISO VLV 2 INDICATED OPEN
V51ABH	51B-22	099	AC9961	MLG GEAR DUMP VALVE LEAKED AFTER LANDING
V51BAA	61B-12	104	NONE	NOSE LANDING GEAR STRUT LOW
V51BCB	28-04	102	28RF04	NLG WEIGHT ON WHEELS SENSOR FAILED
V51B00	30-16	104	30RF23	NOSE WHEEL STEERING ENABLE LATE

INFLIGHT ANOMALY LIST
BY WUC

WUC	PROB#	ORB	CAR#	NOMENCLATURE
V51CAA	30-15B	104	30RF22	LH MAIN LANDING GEAR FLUID LEAK
V51CAA	51A-27	103	NONE	LEFT MAIN LANDING GEAR STRUT LOW
V51CCE	9-3D	102	NONE	LH MLG DOOR CLOSE DISCRETE IND RELEASED
V51CDA	1-25	102	01F004	LH OUTBOARD MLG TIRE WAS CUT
V51CDA	41B-32	099	NONE	LH OTBD MLG TIRE HAD A FLAT SPOT
V51CDA	41G-18	099	NONE	LH OTBD MLG TIRE HAD A FLAT SPOT
V51CDB	41B-32	099	NONE	LH INBD MLG TIRE HAD A FLAT SPOT
V51CDB	41G-18	099	NONE	LH INBD MLG TIRE HAD A FLAT SPOT
V51EAA	30-15	104	30RF21	RH MAIN LANDING GEAR FLUID LEAK
V51EAA	41D-26	103	14F018	VEHICLE LURCHED TO RIGHT AT NOSE GEAR TOUCHDOWN
V51EAD	1-26	102	01F003	RH MLG UPLOCK ROLLER SPLIT DURING DEPLOY
V51EDA	41B-32	099	NONE	RH INBD MLG TIRE HAD A FLAT SPOT
V51EDA	41G-18	099	NONE	RH INBD MLG TIRE HAD A FLAT SPOT & TREAD RIB WORN
V51EDA	51D-12	103	08F011	RH INBD MLG TIRE BLEW
V51EDB	41B-32	099	NONE	RH OTBD MLG TIRE HAD A FLAT SPOT
V51EDB	41G-18	099	NONE	RH OTBD MLG TIRE HAD A FLAT SPOT
V51SJA	1-49	102	NONE	RH MLG DOOR BUCKLED
V51SJA	51A-28	103	NONE	RH MLG DOOR BENT
V52AAA	41C-21	099	13F007	LH MLG OUTBD BRAKE DAMAGED
V52AAA	41G-17	099	08F011	LH MLG OUTBD BRAKE ROTOR 3 CRACKED
V52AAA	51B-20	099	08F011	LH MLG OUTBD BRAKE DAMAGED
V52AAB	4-31	102	NONE	LH MLG INBD BRAKE ROTORS 3&4 DAMAGED
V52AAB	5-22	102	05F009	LH MLG INBD BRAKE STATORS & ROTORS DAMAGED
V52AAB	41C-21	099	13F007	LH MLG INBD BRAKE DAMAGED
V52AAB	51B-20	099	08F011	LH MLG INBD BRAKE DAMAGED
V52AAC	3-43	102	03F037	RH MLG OUTBD BRAKE ROTOR CRACKED
V52AAC	7-24	099	07F013	RH MLG OUTBD BRAKE RETAINER WASHERS BROKEN
V52AAC	8-22	099	08F011	RH MLG OUTBD BRAKE RETAINER WASHERS BROKEN
V52AAC	9-27	102	09F011	RH MLG OUTBD BRAKE DAMAGED
V52AAC	29-30	103	NONE	RH OUTBD BRAKE ROTOR CRACK
V52AAC	41B-29	099	11F006	RH MLG OUTBD BRAKE DAMAGED
V52AAC	41C-21	099	13F007	RH MLG OUTBD BRAKE DAMAGED
V52AAC	41D-27	103	14F019	OSCILLATING LINEAR ACCELERATION DURING LT BRAKING
V52AAC	41G-17	099	08F011	RH MLG OUTBD BRAKE ROTOR 4 CRACKED
V52AAC	51D-13	103	08F011	RH MLG OUTBD BRAKE DAMAGED
V52AAD	1-27	102	01F076	RH MLG INBD BRAKE OVERPRESSURE COMMANDED
V52AAD	4-31	102	NONE	RH MLG INBD BRAKE ROTORS 3&4 DAMAGED
V52AAD	6-38	099	06F012	RH MLG INBD BRAKE STATORS CRACKED
V52AAD	7-24	099	07F013	RH MLG INBD BRAKE ROTORS 3&4 BROKEN
V52AAD	8-22	099	08F011	RH MLG INBD BRAKE RETAINER WASHERS BROKEN
V52AAD	41C-21	099	13F007	RH MLG INBD BRAKE DAMAGED
V52AAD	41G-17	099	08F011	RH MLG INBD BRAKE ROTOR 4 CRACKED
V52AAD	51D-13	103	08F011	RH MLG INBD BRAKE DAMAGED
V52AAD	61C-14	102	08F011	RH MLG INBD BRAKE DAMAGED
V52JAD	1-27	102	01F026	RH MLG BRAKE/SKID CONTROL BOX ZENER DIODE FAILED
V52JE	51A-26	103	19F020	BRAKE HYDRAULIC PRESSURE INCREASED
V52JJ	6-35	099	NONE	RUDDER PEDAL DEFLECTION EXCESSIVE
V52JS	51G-1B	103	25F011	LH MLG OUTBD BRAKE PRESSURE SYS 4 READ LOW
V54BA	2-16	102	RMS1010	RMS SHOULDER YAW JOINT BACKUP MODE CABLE BROKEN
V54BA	41B-18	099	RMS1317	RMS WRIST JOINT FAILED

INFLIGHT ANOMALY LIST
BY WUC

WUC	PROB#	ORB	CAR#	NOMENCLATURE
V54BA	41C-20	099	NONE	RMS WRIST ROLL JOINT MOVED WHEN ARM IN PITCH MODE
V54BC	3-22	102	NONE	RMS WRIST PITCH ENCODER CHECK GAVE FALSE ALARMS
V54BC	3-30	102	NONE	RMS WRIST YAW SERVO PA COMMUTATOR BITE ALARM
V54BC	4-10	102	RMS1011	RMS END EFFECTOR STAT FLAGS INCORRECT, WIRES BROKEN
V54BC	51I-05	103	RMS1319	RMS ELBOW JOINT FAILED TO RESPOND TO COMMANDS
V54C	8-04	099	08F017	RMS MPM FWD PEDESTAL DEPLOY SWITCH A RIG IMPROPER
V54CBX	3-12	102	03F008	RMS MPM AFT PDSTL 1 READY-FOR-LATCH IND SWCH FAILED
V54CBX	51A-07	103	19F007	RMS AFT MRL SYS 1 READY TO LATCH IND LOST
V54D00	31-18	103	PR-RMS-3 -11-0016 GFE	RMS END EFFECTOR SNARE WIRES APPROX 1/2" OUT OF GROOVES
V54FAA	41C-10	099	13F004	RMS DEPLOY SW FOR SHOULDER MPM PED WENT TO ZERO
V54FAA	61A-12	099	30F003	RMS DEPLOY SW FOR SHOULDER MPM PED WENT TO ZERO
V55FAJ	1-38	102	EP0046F	NASA STANDARD DETONATOR NOT FIRED, TIMING SKEW
V55FAR	51J-02	104	NONE	PORT MPM PYRO INITIATOR CKT FAILED SELF TEST
V55KBA	8-23	099	EE0055F	NOSE STRUT THRUSTER PISTON FOUND ON RUNWAY
V55RSS	2-48	102	NONE	RANGE SAFETY SYSTEM COMMAND RESPONSE PULSE MISSED
V56AAA	7-34	099	07F022	ET FWD ATTACH SHEAR BOLT OUTSIDE MOLD LINE
V56AAA	34-21	104	34RF22	R.H. STOP BOLT BENT ON CENTERING RING OF FWD SEP.
V56A00	33-10	103	33RF12	FWD ATTACH PTS SYS A AND B CONNECTORS BROKEN
V56A00	32-26	102	32RF27	FWD ET SEP ASSY CT MECH BOLT COMPRESSED
V56A00	41-07	103	41RF04	DEBRIS PLUNGER FAILURE
V56A00	35-21	102	NONE	RH AFT SEPARATION HOLE PLUGGER FAILURE
V56D00	27-02	104	27RF02	LEFT ET UMB DOOR READY TO LATCH OFF; S/B ON
V56E	51B-02	099	24F009	RIGHT ET DOOR MOTOR B INOPERATIVE
V56E	51D-02	103	NONE	RH ET DOOR LATCHES A & B INDICATED OFF
V56JBB	1-43	102	01F056	UMBILICAL RELEASE BLAST CONTAINERS CRACKED
V56JB0	29-19	103	29RF19	AFT SEP HOLE PLUGGER DID NOT MOVE FULL STROKE
V56J00	34-20	104	34RF21	ET/ORB LOX AFT SEP HOLE PLUGGER FAILED
V56000	29-06	103	29RF06	EXCESS VAPOR AT H2 ET/ORB UMBILICAL
V56000	29-12	103	29RF11	17 INCH DISCONNECT LEAK
V56000	29-13	103	29RF12	LH2 4 INCH DISCONNECT SLOW TO CLOSE
V56000	30-18	104	30RF25	ET LO2 UMB YOKE AND DETONATORS
V56000	28-22	102	NONE	UMBILICAL WELL CAMERA INOP.
V56000	35-22	102	NONE	RH STOP BOLT FORWARD ET ATTACHMENT BENT
V56X	2-40	102	02F023	ET AFT STRUCTURAL ATTACH SPACERS LOOSE
V56X	51I-19	103	27F011	ET ATTACHMENT PLATE HAD BOLT MISSING
V57ACA	41D-28	103	NONE	RH INBOARD ELEVON SECONDARY DELTA P CH 4 HIGH
V57ACA	51C-01	103	20F001	RH INBOARD ELEVON CH4 SECONDARY DELTA P FORCE FIGHT
V57BAH	41B-16	099	NONE	PDU R/S SYS 3 SECONDARY SWITCHING VLV IND FAILED
V57CAK	1-39	102	NONE	BODY FLAP EXCEEDED PRED HYPERSONIC TRIM ATTITUDE
V57CAK	1-56	102	NONE	BODY FLAP CARRIER PLATE OVER TEMPERATURE
V57EA	61B-02C	104	NONE	BODY FLAP LWR CENTERLINE TEMP SENSOR FAILED
V57000	28-24	102	28RF27	BODY FLAP EXCESSIVE DEFLECTION
V57000	28-30	102	28RF31	EARLY TRANSITION
V57000	35-24	102	NONE	POSTLANDING ICE ON RUDDER/SPEEDBRAKE PANELS
V58	51I-16	103	NONE	OIL SEEPAGE IN RIGHT MAIN LANDING GEAR WELL
V58AAA	2-24	102	NONE	HYD RESERVOIR 1 FLUID LEVEL DROPPED AT GEAR DEPLOY
V58AAD	9-03G	102	NONE	HYD RES PRESSURE 1 XDUCER (V58P0131A) FAILED
V58AAP	8-08	099	08F021	HYD SYS 1 ACCUMULATOR PRESS DROP

INFLIGHT ANOMALY LIST
BY WUC

WUC	PROB#	ORB	CAR#	NOMENCLATURE
V58AAP	41D-16	103	14F016	HYDRAULIC SYSTEM 1 UNLOADER VALVE MALFUNCTIONED
V58AAP	41G-01	099	17F003	HYDRAULIC ACCUMULATOR 1 PRESSURE DROPPED
V58ABB	1-48	102	01F047	HYD PUMP SUCTION FLEX HOSE FITTING LEAKED
V58ACA	5-05A	102	05F004	WSB REG OUT PRESS FAILED
V58ACA	8-17	099	NONE	WSB 1 GN2 PRESS REG RELIEF VLV LEAKED
V58ACA	51A-06	103	NONE	WSB 1 GN2 REG OUT PRESSURE DROPPED
V58ACA	34-03E	104	34RF20	WSB 3 REG OUT PRESS FAILED
V58ACA	35-19	102	NONE	WSB 2 WAX BUILDUP
V58ACC	2-28	102	NONE	WSB CONTROLLER, PRI ERRONEOUS READY SIGNAL
V58ACC	61C-13	102	AD0927	WSB 1 SYS A COOLING WATER USAGE RATE HI
V58AEO	26-04D	103	26RF18	HYD SYS 1 "B" SUPPLY PRESSURE BIASED LOW
V58AF	9-30	102	NONE	WSB 1 BYPASS VALVE INDICATION MALFUNCTION
V58AJD	51J-08	104	NONE	MPS 1 & 2 PITCH & YAW ACTUATOR DELTA P HI
V58AOO	36-08	104	36RF11	HYD SYS 1 LEAK
V58AOO	36-17	104	36RF19	HYD SYSTEM 1 PRESS LOW
V58AOO	36-20	104	36RF23	HYD 1 RESERVOIR PRESS XDUCER STUCK
V58BAM	6-28	099	06F001	HYDRAULIC ACCUMULATOR SEAL GAS LEAK
V58BAM	7-06	099	AC5702	HYD SYS 2 ACCUMULATOR PRESS DECAY
V58BAM	27-14	104		HYD SYSTEM 2 ACCOM LOW
V58BAQ	41-10	103	41RF07	HYDRAULIC SYSTEM 2 PRIORITY VALVE SLUGGISH
V58BBL	51B-03B	099	NONE	HYD SYS 2 MAIN PUMP PRESSURE B (V58P0215C) BIASD LO
V58BBS	6-01D	099	06F019	HYD RTN LINE TEMPS CROSSWIRED
V58BBS	6-01G	099	06F019	HYD RTN LINE TEMPS CROSSWIRED
V58BBS	9-03E	102	NONE	TEMP (V58T1650A) BODY FLAP DRAIN LINE READING LOW
V58BCA	51J-04	104	28F009	WSB 2 REG PRESSURE DECAY
V58BCA	31-05	103	31RF05	WSB 2 VENT HTR A FAILED OFF
V58BCC	38-01	104	38RF01	WSB 2 NOT COOLING ON CONTROLLER A
V58BCN	8-01	099	08F003	HYDRAULIC CIRC. PUMP 2 FAILED TO START
V58BCO	34-18	104	34RF16	WSB 2 VENT TEMP A-NO RESPONSE
V58BCO	36-07	104	36RF10	WSB 2 VENT SYSTEM A HTR FAILED
V58BOO	33-17	103	NONE	HYD SYS 2 H2O SPRAY BOILER GN2 PRESS DECAY
V58BOO	28-23	102	28RF26	HYD SYS 2 UNLOADER VLV OUT-OF-SPEC
V58CAA	2-24	102	NONE	HYDRAULIC RESERVOIR 3-LEVEL DROP DURING ENTRY
V58CAM	51D-06	103	23F001	HYD SYS 3 ACCUMULATOR RAPID PRESSURE DECAYS
V58CAP	41D-17	103	14F017	HYDRAULIC SYSTEM 3 BOOTSTRAP PRESSURE DROP
V58CAP	51I-03	103	AC6190	HYD SYSTEM 3 ACCUMULATOR BOOTSTRAP PRESSURE LOW
V58CBA	41D-07	103	AC8341F	HYDRAULIC SYSTEM 3 PUMP LEAKED
V58CCA	2-04	102	NONE	WSB 3 FROZE DURING ASCENT
V58CCA	3-04	102	03F002	WSB 3 FROZE - APU SHUTDOWN
V58CCA	7-22	099	07F014	WSB 3 WATER DEPLETED DURING ENTRY
V58CCA	9-06	102	NONE	WSB 3 LUBE OIL RET TEMP OVERSHOOT
V58CCA	61B-05	104	28F009	WSB 3 GN2 REG OUTLET PRESSURE DECAYED
V58CCA	32-23	102	32RF24	WSB 3 CONTROLLER A OVERCOOLING
V58CCA	35-17	102	NONE	WSB 3A OPERATIONS ABNORMAL
V58CCC	8-14	099	08F020	WSB 3-CONTROLLER EXTRA PULSES
V58CCC	51B-01	099	24F013	WSB 3 CONTROLLER A INOPERATIVE
V58CCC	61C-11	102	32F004	WSB-3 SYS A HEATER OPERATION ERRATIC
V58CEO	26-04E	103	26RF19	HYD CIRC PUMP PRESSURE NO. 3 BIASED LOW
V58CEP	9-03A	102	NONE	TEMP (V58T0388A) BODY FLAP RET LINE READING LOW
V58CET	3-10	102	03F031	TEMP SENSOR (V58T0398) FAILED HIGH

INFLIGHT ANOMALY LIST
BY WUC

WUC	PROB#	ORB	CAR#	NOMENCLATURE
V58KAA	3-10	102	03F030	TEMP SENSOR (V58T1143) HYD SYS RTN BIASED LOW
V58KAA	4-06E	102	NONE	TEMP (V58T1143) FALSE RESPONSE TO CRYO
V58000	29-26	103	NONE	HYD SYS 1 AND 2 ACCUM ASC PRESS LOCKED UP LOW
V58000	33-07	103	33RF08	HYD SYS 1 AND 2 ACCUM PRESS LOCKUP LOW
V58000	32-16	102	IM32RF16	HYD SYS 1 AND 2 CIRC PUMP UNLOADER VALVES LEAK
V58000	32-17	102	IM32RF17	WSB 2 AND 3 EXCESS REG PRESS DECAY
V59HAA	7-23	099	07F019	LH AIR DATA PROBE TEMPORARY HANG-UP
V59X	1-29	102	NONE	RH ET DOOR STRIKE PLATE DISCOLORED
V59X	8-26	099	NONE	RH ET ATTACH BOLT HOLE PLUGGER HUNG UP-DEBRIS
V60000	27-09	104		CABIN TEMP CONTROLLER 2 CNTRL FROZEN
V60000	28-21	102	28RF25	CREW EXPERIENCED SNEEZING
V60000	31-04	103	IM31RF04	SUPPLY WATER TANK BELLOWS STUCK
V61AAA	1-14	102	NONE	O2/N2 CONTROL PANEL-VALVE LEAK
V61AAA	1-28	102	01F036	O2/N2 CONTROL PANEL-CROSSOVER VALVE LEAK
V61AAA	5-20	102	05F011	O2/N2 CONTROL PANEL-HIGH O2 FLOW
V61AAA	6-11	099	06F006	O2/N2 CONTROL PANEL-HIGH O2 & N2 FLOW
V61AAA	6-30	099	06F034	O2/N2 CONTROL PANEL-O2 REGS LEAKING
V61AAA	7-04	099	06F006	O2/N2 CONTROL PANEL-HIGH O2 FLOW
V61AAA	41C-18	099	NONE	ECLSS GN2 SYS 2 REGULATOR LOCKUP PRESSURE HIGH
V61AAA	51B-17	099	NONE	HIGH O2 FLOW ON PRESSURE CONTROL SYSTEM 2
V61AAB	3-17	102	03F012	O2/N2 AUX SUPPLY PANEL LEAKED WHEN COLD
V61ABH	41D-22	103	NONE	OXYGEN LEAK DOWNSTREAM OF ECS SUPPLY VALVE 2
V61C	51I-14	103	NONE	HIGH PPO2 IN CABIN AND ECLSS O2 PRESS TRACKED CRYO
V61C00	30-01	104	NONE	CABIN PRESSURE TRANSDUCER FAILED
V61DAH	51L-03	099	NONE	PPO2 SENSOR "A" FAILED
V61DAL	8-30	099	08F016	LIOH CARTRIDGES-CREW IRRITATION
V61DAM	4-25	102	04F007	PPO2 SENSORS RESPOND TO TRANSIENTS
V61DAN	1-54	102	NONE	CABIN DP/DT ALARM - ASCENT
V61JAA	5-10	102	05F018	HUMIDITY SEPARATOR - RESTRICTED
V61JAA	6-39	099	NONE	HUMIDITY SEPARATOR - RESTRICTED
V61JAA	27-05	104	27RF01	HUMIDITY SEPERATOR "B" FLOODED
V61JAA	36-11	104	36RF13	FREE WATER NEAR HUMIDITY SEP A
V61JAA	32-07a	102	IM32RF08	HUM SEP B WATER LEAKAGE
V61JAA	32-07b	102	IM32RF15	HUM SEP A WATER LEAKAGE
V61J00	29-14b	103	29RF13	FES PRIMARY B OUTLET OSCILLATION
V61LAA	1-13	102	NONE	CABIN TEMP VARIATIONS
V61QBA	6-02	099	NONE	AV BAY 1 FAN B SLOWED BY DEBRIS
V61QBF	3-44	102	NONE	HEAT EXCHANGER SLURPER CLOGGED
V61QBF	6-08	099	06F013	HUMIDITY SEPARATOR B CB OPENED - BURNED WIRES
V61000	61C-10	102	32F003	O2 PRESS CONTROL SYS 2 FLOW SENSOR READ LOW
V62AAA	2-27	102	02F007	GAS IN WATER
V62ABA	30-23	104	NONE	HIGH IODINE CONCENTRATION IN DRINKING WATER
V62AEA	1-16	102	NONE	POTABLE WATER TANK QTY X'DUCER STUCK
V62AEA	8-18	099	NONE	WATER TANK B UNSUCCESSFUL DUMP, ICE IN NOZZLE
V62AJD	28-09	102	28RF11	POTABLE WATER DUMP VALVE FAILED
V62AJE	41D-14	103	14F023	SUPPLY WATER DUMP NOZZLE ICED
V62AJE	51I-06	103	27F009	POTABLE WATER NOZZLE TEMP DROPPED DURING WATER DUMP
V62A00	26-09	103	NONE	WSB 1 RELIEF VALVE LEAK
V62A00	28-05E	102	28RF18	SUPPLY WATER TANK B QUANTITY ERRATIC
V62A00	28-13	102	28RF15	SUPPLY H2O DUMPLINE T-STAT IMPROPER OPS.

INFLIGHT ANOMALY LIST
BY WUC

WUC	PROB#	ORB	CAR#	NOMENCLATURE
V62A00	28-20	102	28RF24	IODINE IN DRINKING WATER
V62A00	32-03f	102	32RF19	SUPPLY WATER TK B QTY DROPOUTS
V62A00	35-05	102	35RF03	WASTE WATER DUMP DEGRADED AND FINALLY STOPPED
V62BAC	41B-13	099	11F017	SUPPLY WATER DUMP VALVE FAILED TO OPEN
V62BAD	51I-02	103	AD2016	WATER FLOW RATE TO GALLEY LOW
V62EA	3-47	102	AC3123	URINE CUP AND FILTER LEAKED
V62EAA	1-33	102	01F014	WASTE COLLECTOR-LOW URINE FLOW & AIR FLOW
V62EAA	3-14	102	03F010	WCS SLINGER MOTOR STOPPED
V62EAA	3-19	102	03F014	WCS VACUUM VENT VLV KNOB FAILED
V62EAA	4-24	102	04F020	WCS WMS PROBLEMS
V62EAG	6-40	099	06F035	WMS FAN NOISY
V62EAG	7-25	099	07F018	WMS SLINGER STOPPED
V62EAG	8-16	099	08F006	WASTE COLLECTOR NOISY AND SLOW, LEAKED AIR
V62EAG	41B-04	099	11F002	WCS FAN SEPARATOR 1 DID NOT SPIN UP TO FULL SPEED
V62EAG	41C-09	099	13F008	WCS FAN SEP 2 FAILED AND FAN SEP 1 DEGRADED
V62EAG	51A-16	103	NONE	WCS FAN SEP 1 AC 1 PH A CURRENT LOW
V62EAG	51C-06	103	NONE	WCS FAN SEP 1 AC1 PHASES A&B LOW CURRENT TRANSIENTS
V62EAG	51G-03	103	NONE	WCS FAN SEP 1 MOTOR CURRENT HIGH
V62EAG	61A-14	099	AD0506	WCS FAN SEPARATOR 1 DID NOT START
V62EAJ	33-02	103	33RF02	WCS LEAK
V62EA0	26-10	103	26RF06	WCS FAN FLOODED
V62ECW	41D-14	103	14F023	WASTE WATER DUMP NOZZLE ICED
V62EED	6-41	099	06F020	H20 TK D VALVE CRACKED
V62E00	32-21	102	IM32RF21	WASTE WATER DUMP NOZZLE BLOCKED
V62FAH	8-24	099	NONE	THERMOSTAT B SHIFTED ON POTABLE WATER DUMPLINE
V62H20	6-42	099	NONE	GAS IN POTABLE WATER
V62JAB	1-36	102	01F022	SMOKE DETECTOR-FAILED SELF TEST
V62JAB	8-09	099	08F001	SMOKE DETECTOR-FALSE ALARM
V62JAC	3-33	102	03F024	SMOKE DETECTOR-2A CONTINUOUS FALSE ALARM
V62JAC	51B-09	099	24F004	SMOKE DETECTOR IN AVIONICS BAY 2A FAILED SELF TEST
V62JAC	28-14	102	28RF16	AV BAY 2A SMOKE CONCENTRATION BIAS LOW
V62JAD	51F-11	099	24F004	SMOKE DETECTOR IN AVIONICS BAY 2B FAILED SELF TEST
V62JAE	3-07	102	03F004	SMOKE DETECTOR FAILED SELF TEST
V62JAF	61A-07	099	30F001	SMOKE DETECTOR 3B TRIGGERED FALSE ALARMS
V62J00	32-19	102	32RF20	SMOKE DETECTOR 3A TRANSIENT ALARM
V62J00	38-09	104	NONE	SMOKE DETECTOR TRANSIENTS
V63A	51J-03D	104	NONE	FREON COOLANT LOOP TEMPERATURES UNUSUAL
V63A00	28-15	102	28RF17	LOW FREON FLOW
V63ASF	9-03F	102	NONE	FCL 2 P/L HEAT EXCHANGER FLOWRATE SHIFTED LOW
V63JAA	3-35	102	03F025	NH3 BOILER ISO. VLVS CONTAMINATED
V63JB0	41-09	103	41RF06	AMMONIA BOILER PRIMARY A CONTROLLER FAILURE
V63JCF	9-03B	102	NONE	FES TOPPING DUCT AFT HTR TEMP (V63T1802A) FAILED
V63JCM	6-01L	099	NONE	RH FES FEEDLINE TEMP (NO FAILURE)
V63JCT	6-01E	099	NONE	LH FES FEEDLINE TEMP (NO FAILURE)
V63JDD	51I-09	103	AC8418	FES TOPPING DUCT ZONE H HEATER B FAILED
V63LAA	2-11	102	02F006	FLASH EVAPORATOR SYS "A" BROKE-TEMP SENSOR DRIFT
V63LAA	3-31	102	03F023	FLASH EVAPORATOR CONTROL SENSOR RESPONSE LOW
V63LAA	6-01H	099	06F031	FES HILOAD FEEDLINE TEMP SNSR MISLOCATED
V63LAA	41G-09	099	17F004	FES SHUTDOWN USING BOTH CONTROLLERS
V63LAA	33-13	103	33RF13	FES "B" OUTLET TEMP OSCILLATIONS

INFLIGHT ANOMALY LIST
BY WUC

WUC	PROB#	ORB	CAR#	NOMENCLATURE
V63LAA	38-02	104	38RF02	FES WATER SUPPLY HEATER LOW
V63LAC	7-02A	099	07F027	FLASH EVAP FLOWMETER FAILED
V63LBA	41D-01	103	AC8418F	FES DUCT HEATERS IN SYSTEMS A & B FAILED
V63LDC	4-17	102	04F006	FES HIGH LOAD DUCT HTR FAILED
V63LDC	34-07	104	34RF08	FES HI LOAD INBOARD DUCT TEMP LOW
V63LJC	6-18	099	06F028	RH FEEDLINE THERMOSTAT FAILED
V63L00	26-05A	103	26RF11	ASCENT HI LOAD EVAP FROZE
V63L00	26-05B	103	26RF11	FES SHUTDOWN ON ENTRY
V63L00	26-09	103	26RF12	WSB SYS 1 GH2 PRESS DECAY
V63L00	26-19	103	26RF12	WSB SYS 1 GN2 TANK LEAK
V63L00	29-10	103	29RF09	WSB 3 LOW RELIEF VALVE RESEAT PRESS
V63L00	29-11	103	29RF10	WSB 1 LEAK
V63L00	30-10	104	30RF18	WSB 3 NITROGEN PRESS DELAY
V63L00	36-14	104	IM36RF16	FES PRIMARY CONTROLLER A SHUTDOWN
V63LSG	32-14	102	IM32RF12	FES TOP DUCT HTR B FAILED
V63LSN	26-04G	103	26RF21	FREON LOOP 2 EVAP OUT TEMP DEBONDED SENSOR
V63000	30-21	104	NONE	AFT FUSELAGE TEMP LOW PRELAUNCH
V64AAJ	9-10	102	09F005	AIRLOCK HATCH A DIFFICULT TO OPEN
V64AAJ	51F-19	099	26F009	AIRLOCK HATCH A DIFFICULT TO LATCH FOR ENTRY
V64AAJ	51J-10	104	28F005	AIRLOCK HATCH A TAPERED PIN DID NOT LATCH
V64AAJ	61B-10	104	31F005	A/L INNER HATCH COULD NOT BE LATCHED FULL OPEN
V64AAK	6-10	099	06F015	AIRLOCK HATCH SEAL CAME OUT OF GROOVE
V64ADA	1-03	102	NONE	AIRLOCK TO PLB SENSE PORT CAPPED
V64AEA	4-32	102	NONE	AIRLOCK VENT DUCT DAMAGED
V64C	51D-16C	103	NONE	AIRLOCK DEPRESS VLV COVER HARD TO REMOVE
V64EAA	51A-13	103	19F003	A/L EMU BATTERY CHARGER/PWR SUPPLY 1 VOLTAGE HIGH
V65	51F-22	099	11F012	MISC. CREW EQUIPMENT
V65A	1-41	102	AB9518	EJECTION SEAT HANDLE CLIP INSTL. PROBLEM
V65AAA	28-19	102	28RF23	GROMMET ON WET TRASH CAME LOOSE
V65ABA	28-02	102	28RF02	PILOT'S SEAT MOVED AFT DURING ASCENT
V65ABA	35-23	102	35RF15	PILOT SEAT DOWN LIMIT SWITCH FAILURE
V65ACA	30-04A	104	30RF13	MSI 1 RH SHOULDER BELT ADJUSTER "C" CUP MISSING
V65C	61A-08	099	30F002	SLEEP STATION SLIDING PANEL COULD NOT BE REMOVED
V65HBB	1-40	102	01F034	STOWAGE LOCKER DOORS HUNG UP
V65HBB	2-37	102	02F038	STOWAGE LOCKER DOORS HUNG UP
V65HBB	6-31	099	NONE	DOORS AND LOCKERS WOULD NOT CLOSE
V65HBB	7-33	099	07F023	STOWAGE LOCKER DOORS HUNG UP
V65H00	36-05a	104	IM36RF08	VOLUME H DOOR AND LATCH BINDING
V65H00	36-05b	104	IM36RF21	LIOH STOWAGE VOLUME COULD NOT BE REMOVED
V65000	29-07	103	DREE649	TAGS DEVELOPER OVERHEAT
V65000	31-10	103	GFE	TAGS NOT RESPONDING TO PAPER ADVANCE COMMANDS
V65000	36-18	104	GFE	TAGS PAPER FOLDING
V66BAA	26-08	103	26RF02	COAS WOULD NOT MOUNT AT FWD STATION
V66BAA	29-15	103	211F001	PLUS X COAS CALIBRATION DISCREPANCIES
V66B00	31-13	103	IM31RF16	PLUS X COAS MISALIGNMENT
V66E	41C-14	099	EE0582	EVA COMMUNICATIONS LOST FOR EV-2 ON MODE A
V66E	41C-15	099	EE0582	EVA VHF COMMUNICATIONS DEGRADED
V66E	51D-09	103	EE607F	EV-2 COMM FROM GROUND ONLY 25% UNDERSTOOD
V66E	31-07	103	GFE	EMU2 POWER RESTART MESSAGES (GFE)
V66F	2-21	102	NONE	DATA ACQUISITION CAMERA DRIVE JAMMED

INFLIGHT ANOMALY LIST
BY WUC

WUC	PROB#	ORB	CAR#	NOMENCLATURE
V66F	2-50	102	NONE	PDRS CAMERAS - 2 RAN AT WRONG SPEED
V66F	3-18	102	NONE	PDRS DAC (16MM CAMERAS) COLD START FAILURE
V66F	3-42	102	NONE	EARLY SHUTDOWN, DEBRIS CAMERA
V66F	3-45	102	NONE	CAMERA END OF FILM LIGHTS INOPERATIVE
V66F	41C-26	099	NONE	ET SEP CAMERA FAILED TO OPERATE
V66F	51A-14D	103	NONE	ARRIFLEX 16MM CAMERA FAILED
V66G	1-20	102	NONE	CREW HEADSETS HAD SQUEAL
V66G	3-25	102	NONE	WCCU UNIT A FAILED - BROKEN WIRE
V66G	4-27	102	NONE	WCCU "B" INTERMITTANT
V66G	5-11	102	EE0549F	WCCU'S A & B FAILED
V66G	6-23	099	EE0557F	WCCU'S A & B
V66G	7-13	099	EE0561/	WCCU'S FAILED
V66G	8-02	099	NONE	WCCU'S "A" FAILED, MANY NOISY
V66G	41B-05	099	NONE	WCCU B CAUSED INTERCOM VOICE LOOP NOISE
V66G	51A-14A	103	EE0594F	WCCU "A" HAD A HOT MIKE
V66G	51B-24	099	NONE	WCCU LEG UNIT A PTT BUTTON STUCK
V66G	61A-15A	099	EE0617F	WCCU "C" VOX OPERATED IN PTT
V66G	61A-15B	099	NONE	VLWHS FOR PILOT & MS-1 SIDE TONE REDUCED OR LOST
V66H	5-12	102	NONE	EMU FAN MOTOR FAILED
V66H	5-14	102	NONE	EMU PRESS REG BIASED
V66H	5-25	102	H0040F	EMU BATTERIES DISCHARGED BY CONDITIONER
V66H	6-14	099	H0044F	EMU LIGHT BATTERIES FAILED
V66H	41B-21	099	EMU1364	EMU SUBLIMATOR "P HIGH" MESSAGES
V66H	41B-09	099	NONE	EMU 2 LIGHT PROTECTIVE LENS CRACKED
V66H	41C-22	099	1364C-1	EMU SUBLIMATOR "P HIGH" MESSAGES
V66H	51A-10	103	ILC71&7	BOTH LEFT SIDE EMU HELMET LIGHTS INOPERATIVE
V66J	41B-22	099	NONE	EVA ANCILLARY EQUIPMENT PROBLEMS
V66J	41C-08	099	NONE	TPAD FAILED TO CAPTURE SOLAR MAX SATELLITE
V66J	41C-23	099	13F012	PORT SLIDE WIRE BRAIDED COVERING FRAYED
V66J	41G-22B	099	H0070F	EVA FLASHLIGHT FAILED
V66J	41G-22C	099	NONE	EVA SLIDE WIRE CUSHION STRAP DIFFICULT TO SECURE
V66J	41G-22D	099	NONE	SLIDE WIRE SAFETY TETHER TENSION TOO HIGH
V66J	51A-14	103	NONE	EVA ANCILLARY EQUIPMENT FAILURES
V66K	5-16	102	SE2011	POTABLE H20 DISPENSER NEEDLE PLUGGED
V66K	41C-25	099	NONE	GALLEY WATER DISPENSER DID NOT SHUT OFF FLOW
V66K	41G-13	099	NONE	GALLEY DOORS DID NOT STAY OPEN
V66K	51B-07	099	HEN0050	GALLEY DID NOT DISPENSE WATER
V66K	51G-14	103	SP5041F	GALLEY WATER DISPENSER ERRATIC
V66K	51I-12	103	HEN0050	GALLEY WATER FLOW DID NOT SHUT OFF
V66000	2-47	102	NONE	THEODOLITE LOOSE IN MOUNT
V66000	3-26	102	SE2002	DRINK BAGS CAP SEAL FAILED
V66000	26-17A	103	NONE	VIDEO CASSETTE TAPES JAMMED
V66000	26-17B	103	NONE	VACUUM CLEANER FLIPPER FAILED
V66000	26-17C	103	NONE	SEAT BACK WOULD NOT FOLD WITH PARACHUTES
V66000	26-17D	103	NONE	ORB AFT FUS GAS SAMPLING SYS FAILED
V66000	26-17E	103	NONE	DOSIMETER READS HIGH
V66000	26-18	103	NONE	FWD PORT FLOODLIGHT FAILED
V66000	26-3	103	EC0380*	SUIT FAN 5 AMP FUSES BLEW FOR PLT AND MS-1
V66000	29-29	103	NONE	WIRELESS COMM SET MULTIPLE BATT CHANGES
V66000	30-04B	104	NONE	ARRIFLEX CAMERA OPERATE LEVER FAILED

INFLIGHT ANOMALY LIST
BY WUC

WUC	PROB#	ORB	CAR#	NOMENCLATURE
V66000	30-04C	104	NONE	GALLEY FAILURES
V66000	30-04D	104	NONE	HASSEL BLAD 70 MM CAMERA FAILED
V66000	30-04E	104	NONE	CCTV CAMERA A - SPOTS ON IMAGE
V66000	30-04F	104	NONE	TELEPRINTER MESSAGES ILLEGIBLE
V66000	30-07	104	NONE	TAGS JAM
V66000	30-13	104	NONE	MS-3 COMM CAP HEADSET FAILED
V66000	41C-24	099	NONE	PHOTO AND GALLEY BRACKETS DEBONDED
V66000	41G-13	099	NONE	TWO BRACKETS ATTACHED TO GALLEY DEBONDED
V66000	41G-22E	099	NONE	OUTER HATCH EQUALIZATION VALVE COVER BROKE LOOSE
V66000	51A-14F	103	19F019	MULTI-USE BRACKETS BROKE AT ELBOW
V66000	33-03	103	NONE	TAGS JAM INDICATIONS
V66000	33-12	103	33RF14	+X COAS LINE OF SIGHT VARIATIONS
V66000	33-14A	103	NONE	GALLEY HOT AND COLD H20 DISPENSE FAILED
V66000	33-14B	103	NONE	GALLEY REHYDRATION SLIDE STICKY
V66000	33-15	103	NONE	16 MM ARRIFLEX CAMERA INOP
V66000	34-11	104	FIAR BFCE 2-10-F004	70MM HASSELBLAD CAMERA FAILED
V66000	34-13	104	NONE	TAGS OVERTEMP INDICATION
V66000	34-16A	104	NONE	DARK ARC ACROSS CCTV CAMERA C
V66000	34-16B	104	NONE	CCTV CAMERA B HAD SPOT ON SCREEN
V66000	31-16	103	GFE	GALLEY WATER UNDERDISPENSE
V66000	36-10	104	FAIR-BFCE 026F001 GFE	PRESS CONTROL SYSTEM 02 BLEED ORIFICE LEAK
V66000	32-05	102	GFE	TAGS PAPER JAMMED
V66000	32-09a	102	GFE	MS3 LIGHT DAMAGED - CREW INGRESS
V66000	32-11a	102	GFE	CCTV A - SPOT ON PICTURE
V66000	32-11b	102	GFE	RMS ELBOW CAMERA COLOR WHEEL FAILED
V66000	32-11c	102	GFE	CCTV C - POOR PICTURE
V66000	32-11d	102	GFE	CCTV D - SPOT ON PICTURE
V66000	32-12	102	GFE	RMS MASTER ALARM - UNKNOWN
V66000	32-13	102	GFE	RMS 'CONT ERROR' MESSAGE
V66000	32-20	102	GFE	RMS 'BRAKE SLIP' MESSAGE
V66000	32-27	102	IPR-35-V-0006	PLT SEAT WOULD NOT DRIVE DOWN
V66000	32-28	102	GFE	HANDHELD MIKE DEGRADED OUTPUT
V66000	32-29	102	PR PV6-1511 63-2 GFE	ORBITER GAS SAMPLER SYS MALFUNCTION
V66000	42-02A	103	GFE	CAMERA C IMAGE BURN
V66000	41-02B	103	GFE	CAMERA D INCORRECT COLOR PHASING
V66000	38-04A	104	GFE	VACUUM CLEANER SHORT CIRCUIT
V66000	38-04B	104	GFE	CCTV MONITOR 2 FAULT LIGHT
V66000	38-04C	104	GFE	CAMERA C - FAILURE TO FOCUS
V66000	38-04D	104	GFE	CAMERA D - NO POWER
V66000	35-01	102	GFE	OPERATIONS RECORDER 1 TRACK 2 FAILURE TO RECORD
V66000	35-02	102	GFE	TAGS PAPER JAM
V66000	35-03	102	GFE	TAGS UNJAMMING TOOL BROKE
V66000	35-06	102	GFE	FOUR HEADSETS FAILED

INFLIGHT ANOMALY LIST
BY WUC

WUC	PROB#	ORB	CAR#	NOMENCLATURE
V66000	35-07A	102	GFE	CCTV CAMERA B FAILED
V66000	35-07B	102	GFE	CAMERA C COLOR WHEEL STUCK
V66000	35-07C	102	GFE	CAMERA D INTERMITTENT POWER
V66000	35-08	102	GFE	OPERATIONS RECORDER 2 TRACK 5 FAILURE
V66000	35-09	102	GFE	PAYLOAD RECORDER TANK 5 FAILURE
V67	51D-08	103	NONE	EV-2 BIOMED DATA INOPERABLE DURING EVA
V70000	29-24	103	29RF25	INTERMITTENT AFT AUTO DAP LIGHT
V70000	32-08	102	IM32RF09	FWD DAP B SEL SW A CONTACT FAIL
V71AAA	7-07	099	NONE	IMU 1 EXCEEDED THRESHOLD OF GIMBLE ANGLE ERROR
V71AAA	9-24	102	09F014	IMU 1 15 VDC POWER SUPPLY FAILED
V71AAA	32-15	102	32RF13	IMU 1 REDUNDANCY MANAGEMENT FAILED
V71AAA	41-04	103	41RF02	IMU 1 REDUNDANACY MANAGEMENT FAIL
V71AAB	8-20	099	NONE	IMU 2 WENT TO STDBY THEN OK
V71AAC	3-11	102	03F034	IMU 3 ACCEL BIAS SHIFT
V71AAC	6-37	099	06F022	IMU 3 VELOCITY LIMIT FLAG SET
V71BAA	1-18	102	01F059	STAR TRACKER NO. 1 SHUTTER PROBLEM
V71BAA	51A-21	103	NONE	STAR TRACKER +Z SHUTTER LATCHUP
V71BAA	51C-08	103	AC9409	STAR TRACKER -Y SHUTTER LATCHUPS
V71BAB	2-38	102	NONE	STAR TRACKER NO. 2 BIT ERRORS
V71BAB	51C-08	103	AC9410	STAR TRACKER -Z SHUTTER LATCHUPS
V71B00	28-10	102	28RF12	STAR TRACKER -Y PRESS FAILED
V71B00	35-10	102	35RF04	-Z STAR TRACKER FAILED SELF-TEST
V71C00	31-12	103	IM31RF14	ADTA CIRCUIT BREAKER CONTAMINATION
V72AAA	28-01	102	28RF01	MMU-1 I/O ERROR AT OPS-1 TRANSITION
V72ACA	8-19	099	08F009	GPC 1 AND 2 SPLIT, H'WARE BIT ERROR
V72ACA	9-23	102	09F007	GPC 1 FAILED REDUNDANT SET
V72ACA	9-23	102	09F008	GPC 1 FAILED REDUNDANT SET
V72ACA	41B-24	099	11F005	GPC 1 CONSISTENTLY DETECTED AN MSC TIMEOUT ON BCE 7
V72AEA	5-02	102	NONE	MDM FF1 - INTERNAL BITE ERROR
V72AEA	41C-01	099	AC7900	MDM FF1 CARD 5 FAILED
V72AEA	41C-02	099	NONE	SRB SEP AUTO A FAILED/BROKEN WIRE TO MDM FF1
V72CCA	5-03	102	NONE	GPC 2 FAIL TO SYNC (PRELAUNCH)
V72CCA	6-24	099	06F011	GPC 2 FAILED INDICATION
V72CCA	6-24	099	06F025	TRANSIENT FAILURE IN CPU
V72CCA	9-25	102	09F009	GPC 2 FAILED AND MEMORY ALTERED
V72CCA	9-25	102	09F010	GPC 2 FAILED AND MEMORY ALTERED
V72CCA	30-11	104	30RF2&3	GPC 4 FAILED TO SYNC
V72CCB	41D-02	103	AC8304F	GPC 5 (BFS) FAILED DURING PRELAUNCHS OPNS
V72CCB	51I-01	103	27F001	BFS COMPUTER FAILURE
V72CCB	51I-01	103	27F002	BFS COMPUTER FAILURE
V72CEB	3-37	102	NONE	MDM FF4 1/O ERROR
V72EDA	9-33	102	NONE	INVALID U/L CMDS FROM ORBITER TO SPACELAB
V72GEA	34-05	104	34RF06	MDM FA-1 FAILED
V72LAA	1-05	102	NONE	ENGINE INTERFACE UNIT NO. 3 PORT BYPASS
V72LAA	34-02	104	34RF06	EIU 3 BITE (MOMENTARY)
V72LEA	51G-06	103	25F002	MDM FA3 FAILURE
V72NAA	2-20	102	02F004	CRT DISPLAY NO. 1 SHORTED PWR TRANSISTOR
V72NAB	41D-10	103	14F004	CRT DISPLAY NO. 2 WENT BLANK
V72NAC	7-12	099	07F009	CRT DISPLAY NO. 3 PWR SUPPLY FAILURE
V72NAD	51A-05	103	19F006	CRT 4 FAILED

INFLIGHT ANOMALY LIST
BY WUC

WUC	PROB#	ORB	CAR#	NOMENCLATURE
V72NBA	3-29	102	03F022	KEYBOARD UNIT NO. 1 KEY STUCK
V72NBA	4-20	102	04F011	KEYBOARD UNIT NO. 1 KEY STUCK
V72NCB	5-04	102	05F010	DEU 2 FAILED
V72NCB	41G-10	099	17F008	DEU 2 FAILED
V72NCC	41G-11	099	17F009	RIGHT KEYBOARD CONTROL OF DEU 3 LOST
V72NCD	36-09	104	36RF12	CRT 4 SCREEN WENT BLANK
V72XXX	26-2	103	26RF17	PROB CONTAM NSP FWD LINK DATA RELAY X'PNDR 2
V73ABA	51B-04	099	NONE	ABORT LIGHT MALFUNCTIONED & LENS CRACKED
V73AKA	41D-04	103	AC8688	O2 SYSTEM 1 SUPPLY VALVE TALKBACK FAILED CLOSED
V73A00	34-01	104	34RF01	DDU 1 CHANGE OUT (AMI BIASED)
V73A00	28-06	102	28RF07	ABORT LIGHT "B" DID NOT ILLUMINATE
V73A00	28-16	102	28RF20	RADAR ALT 1 AND 2 LOST ALT IND AT 26 FT
V73AW7	27-21	104		SPI OFF FLAG AND 4 DEG L BIAS THROUGH OUT ENTRY
V73AWA	51C-15	103	20F007	ACA 1 INTERMITTENT IN THE LIGHT CONTROL CIRCUIT
V73AWC	41G-04	099	NONE	RH OMS ON-BOARD HELIUM PRESSURE GAGE FAILED
V73AWD	33-05	103	33RF04	CDR AMI VEL. IND OUT OF SPEC
V73AWH	30-19	104	30RF26	CMDR AWI READ HIGH DURING FCS CHECKOUT
V73AWP	6-33	099	NONE	HEADS UP DISPLAY - DECELERATION POINTER PEGGED
V73AWP	61A-16	099	30F013	HUD FOR PILOT HAD FORMAT DISCREPANCY
V73AWQ	1-15	102	01F029	CMDRS HORIZONTAL SITUATION IND COMPASS CARD STUCK
V73AWS	51G-12	103	NONE	G METER READ 1 G THROUGHOUT FLIGHT
V73AWW	26-20	103	26RF22	CDR ADI OPS 8 CHECKOUT DISCREPANCIES
V73AWW	41-06	103	41RF03	LEFT ADI RATE/SCALE SWITCH FAILURE
V73AWZ	51G-10	103	25F007	SURFACE POSITION INDICATOR OFF FLAG FAILED
V73BAA	41G-20	099	17F013	PAYLOAD STATION FLOODLIGHT INOPERATIVE
V73CBA	51A-20	103	NONE	FWD DAP PITCH/ROLL ROTATIONAL PULSE BUTTONS FAILED
V73CDA	51G-13	103	25F016	L OMS ENG ARM/PRESS SW LACKED POSITIVE DETENT
V73CEA	4-14	102	NONE	DAP AUTO SEL SWITCH CONTACT FAILED (SW 3 PNL C3A6)
V73CEB	41D-29	103	NONE	FWD DAP PANEL PBI LIGHT INTERMITTENT
V73CGA	51D-04	103	23F011	CDR's ADI P&Y ERROR NEEDLES ERRATIC
V73CGA	51J-11	104	28F011	LEFT DDU DATA GOOD BIT TOGGLED
V73CGB	7-21	099	07F017	DDU NO. 2 BITE FAIL
V73CGB	51F-21	099	26F010	PILOT'S DDU BITE FAIL
V73CGB	36-19	104	IM36RF22	RIGHT DDU INTERMITTENT BITE
V73EAS	41G-12	099	17F014	MET LOST ONE HORIZONTAL SEGEMENT ON LEFT DIGIT
V73ECD	51I-07	103	NONE	ANNUNCIATOR DISPLAY UNIT STATUS LIGHT INTERMITTENT
V73EHA	3-32	102	03F042	P/L MAIN BUS C TALKBACK - FAILED
V73EJM	6-19	099	06F018	HORIZONTAL SITUATION IND COUNTER WRONG
V73EJM	34-15	104	34RF14	PILOT HSI "PRI MILE" ERRONEOUS
V73GFE	41D-19	103	NONE	IMAX PHOTO FLOODLIGHT FAILED
V73GFE	51C-14	103	NONE	AC PHOTO FLOODLIGHT FAILED
V73HEB	61B-04	104	NONE	AFT EVENT TIMER LOST A READOUT SEGMENT
V73HHA	6-09	099	06F021	TV CAMERA ZOOM CONTROL INTERMITTENT
V73HNA	51G-08	103	NONE	UTILITY POWER AC3 PH B SPIKES ON PANEL A15
V73LFE	4-18	102	04F019	PLBD TALKBACK PANEL 13 INCORRECT INDICATION
V73000	41-08	103	41RF05	LEFT RHC TRIM INHIBIT SWITCH FAILURE
V73RDA	2-10	102	02F019	CB16 ON PANEL MA73C-OPEN
V73RDA	3-02	102	AC1739	INOPERATIVE MCA AC3 PWR CB11 ON PANEL MA73C
V73VAA	1-57	102	NONE	PLB FLOODLIGHT FAILED
V73VAA	4-11	102	04F016	PLB FLOODLIGHT FAILED

INFLIGHT ANOMALY LIST
BY WUC

WUC	PROB#	ORB	CAR#	NOMENCLATURE
V73VAA	5-17	102	05F006	PLB FLOODLIGHT FAILED
V73VAA	5-17	102	05F007	PLB FLOODLIGHT FAILED
V73VAA	51A-17	103	19F017	AFT PLB FLOODLIGHTS FAILED
V73VAA	51F-18	099	NONE	PLB FWD BULKHEAD FLOODLIGHT FAULTY START
V73VAA	31-09	103	IM31RF09	MID-STARBOARD PLB FLOODLIGHT OUT
V73VAA	32-10	102	IM32RF11	FWD BULKHEAD FLOODLIGHT INOP
V73VAC	4-11	102	04F014	FLOODLIGHT ELECTRONIC ASSY NO. 1 CORONA
V73VAD	51G-07	103	25F014	PAYLOAD BAY FLOODLIGHTS FAILED
V73V00	36-15a	104	IM36RF17	MID PORT PLB FLOODLIGHT FAILED
V73V00	36-15b	104	IM36RF17	AFT PORT PLB FLOODLIGHT FAILED
V73V00	36-15c	104	IM36RF17	AFT STBD PLB FLOODLIGHT FLICKERED
V73X	5-09	102	NONE	CB4 PANEL R15 FOUND OPEN
V73X	6-36	099	NONE	C&W MATRIX BLANKED BY READ SWITCHES
V74AAA	51A-24	103	19F016	S-BAND LOWER LEFT ANT PERFORMANCE BELOW NORMAL
V74AAA	51G-05	103	25F004	S-BAND LOWER LEFT ANT BEAM SWITCH INTERMITTENT
V74AAB	9-15	102	09F030	S-BAND LWR RH QUAD ANT ACQUISITION INTERMITTENT
V74AAB	61C-08	102	32F009	S-BAND LR ANTENNA PERFORMANCE ERRATIC
V74AAC	51B-11	099	24F005	S-BAND UPPER RIGHT ANTENNA REFLECTED POWER HIGH
V74AAC	61C-08	102	32F010	S-BAND UL ANTENNA PERFORMANCE ERRATIC
V74AAC	34-17	104	34RF15	S-BAND ULF ANT FAILED TO SWITCH
V74AAD	51B-11	099	24F006	S-BAND UPPER LEFT ANTENNA REFLECTED POWER ERRATIC
V74AAD	34-14	104	NONE	S-BAND URF ANT FAILED TO SWITCH
V74ABB	3-23	102	03F032	S-BAND X'PONDER NO. 1 CONTAMINATED RELAYS
V74ABE	3-21	102	03F032	S-BAND X'PONDER NO. 2 CONTAMINATED RELAYS
V74ABG	3-28	102	03F021	S-BAND POWER AMPLIFIER TWT DEGRADED
V74ABG	9-16	102	09F028	S-BAND POWER AMPLIFIER NO 2 FAILED
V74ABG	28-08	102	28RF09	S-BAND PWR AMP DEGRADED PERFORMANCE
V74ABH	8-07	099	08F007	S-BAND ANTENNA SWITCH-FAULTY POSITION INDICATION
V74ABH	9-18	102	09F029	S-BAND ANT SYS REFLECTED PWR INCREASED
V74ABH	41B-25	099	11F014	S-BAND ANTENNA ACQUISITION LATE WITH TDRSS
V74ABH	41D-11	103	14F008	S-BAND QUAD ANTENNA SWITCH MISCOMPARE
V74ABH	41D-11	103	14F021	S-BAND QUAD ANTENNA SWITCH MISCOMPARE
V74ABH	61A-09	099	30F009	S-BAND ANTENNA SWITCHED LATE
V74ABJ	32-01	102	IM32RF01	FM SYS 1 X'MITTER FAILED
V74AC	6-43	099	NONE	PAYLOAD INTERROGATER LOST LOCK - SPAS OPNS
V74AC	7-32	099	NONE	P/L INTERROGATOR RF LINK SYS 1
V74AJA	28-25	102	28RF28	NSP FRAME SYNC ERRORS
V74A00	32-18	102	32RF18	MULTIPLE S-BANK DROPOUTS
V74A00	35-13	102	35RF06	UPPER LEFT S-BAND ANTENNA PERFORMANCE POOR
V74BAA	9-19	102	NONE	GCIL SIMULTANEOUS ANTENNA MODES
V74BAA	51A-12	103	19F002	BOTH S-BAND ANT SW & BEAM SW "ON" CYCLES
V74JCA	4-34	102	NONE	UHF COMM NOISY DURING EVA DEMO
V74JCA	5-13	102	EE0547F	UHF TRANSCEIVER NOT KEYED BY AUDIO
V74JCA	6-21	099	EE0559F	UHF COMM ECHO DURING EVA
V74LBX	7-14	099	NONE	AUDIO TERMINAL UNIT-CONSTANT KEY ON AIR TO AIR
V74LJE	51G-09	103	NONE	SPEAKER MICROPHONE UNIT INTERMITTENT
V74000	35-15	102	NONE	NOISE ON AIR-TO-GROUND LOOP 2
V74PC0	33-09	103	33RF11	MSBLS 3 BITE (AGC)
V74PH	51B-13	099	24F008	KU-BAND RADAR MODE FAILED SELF TEST
V74PHA	41D-15	103	14F006	KU-BAND ANTENNA UNDAMPED OSCILLATION

INFLIGHT ANOMALY LIST
BY WUC

WUC	PROB#	ORB	CAR#	NOMENCLATURE
V74PHA	41G-06	099	17F005	KU-BAND ANTENNA GIMBAL CONTROL LOST
V74PHB	41B-33	099	11F021	KU-BAND RENDEZVOUS RADAR DID NOT LOCK ON FIRST EVA
V74PHB	41C-06	099	13F010	KU-BAND RENDEZVOUS RADAR FAILED SELF/TEST LOST LOCK
V74PHC	8-13	099	08F008	KU-BAND ANTENNA-HUNG-UP THEN CLEARED
V74PHC	9-12	102	09F020	KU-BAND ANT TWT FAILED TO COME ON
V74PHC	9-21	102	09F021	KU-BAND GYRO TEMP (V74T2967A) HIGH
V74PHC	41B-10	099	11F003	KU-BAND RF POWER OUTPUT WENT TO ZERO
V74PHC	51D-05	103	23F008	KU-BAND ANTENNA MOTION ERRATIC
V74PHO	26-06	103	26RF01	KU-BAND ANTENNA FAILED SELF TEST
V74PHO	27-15	104		KU-BAND CH 2 OPS RECORDER DUMPS
V74PHO	33-06	103	33RF05	KU-BAND RADAR FAILED SELF-TEST
V74POO	32-24	102	IM32RF25	KU-BAND ANT FEED HEATER ERRATIC
V74PSA	27-17	104		TACAN 1 DID NOT LOCK UP PRELAUNCH
V74PTA	1-22	102	NONE	TACAN 2 BEARING FAIL INDICATION
V74PTO	29-27	103	29RF28	TACAN 2 DROPPED LOCK POSTLANDING
V74PUA	51C-09	103	20F002	TACAN 3 DID NOT LOCK UP
V74PUA	51D-11	103	23F006	TACAN 3 RANGE AND BEARING FAILED
V74PUD	26-16	103	26RF09	RADAR ALT FAILED OFF AT LANDING
V74PVA	1-34	102	NONE	RADAR ALTIMETER NO. 1 FALSE LOCK
V74PVA	5-21	102	NONE	RADAR ALTIMETER NO. 1 INTMT LOCK ABOVE 1000 FT
V74PVA	7-29	099	07F028	RADAR ALTIMETER NO. 1 FALSE LOCK ON GEAR
V74PWA	1-34	102	NONE	RADAR ALTIMETER NO. 2 FALSE LOCK GEAR
V74PWA	51A-25	103	19F018	RADAR ALTIMETER 2 SHIFTED DURING LANDING
V74PWA	51C-11	103	20F005	RADAR ALTIMETER 2 ERRATIC AT HIGH ALTITUDE
V74QA	2-13	102	EE0506F	CCTV "B" OVERHEATED
V74QA	2-14	102	EE0504F	TV CAMERA CIRCUIT BREAKER-FAILED PWR SUPPLY
V74QA	2-15	102	EE0505F	PLB CCTV'S - CONTAMINATED LENSES
V74QA	3-08	102	EE0520F	RMS WRIST TV CAMERA FAILED PWR SUPPLY
V74QA	3-15	102	EE0519F	CCTV CAMERA "C" FAILED PWR SUPPLY
V74QA	3-20	102	EE0521F	CCTV CAMERA "B" OVERHEATED
V74QA	4-08	102	EE0533F	VTR MONITOR INPACT CIRCUIT FAILURE
V74QA	4-26	102	04F022	MID-DECK TV CAMERA
V74QA	5-24	102	EE0537F	VTR PLAYBACK OUT OF SYNC
V74QA	6-32	099	NONE	TV MONITORS FUZZY
V74QA	7-31	099	NONE	CCTV'S, "B" BLOOMING, "C" CABLE HANG UP
V74QA	8-10	099	EE0570F	TV CAMERAS-ZOOM & FOCUS "A" & "C" - "D" FAILED
V74QA	8-12	099	EE0567F	RMS ELBOW TV CAMERA LENS - LOOSE RING
V74QA	41B-03	099	NONE	PLB TV CAMERA D DID NOT TILT & SLOW TO PAN
V74QA	41B-19	099	EE0576F	EMU TV FAILED
V74QA	41B-20	099	NONE	RMS ELBOW TV FAILED
V74QA	41C-12	099	EE0583	PLB TV CAMERA'S B & C LASER RANGEFINDERS FAILED
V74QA	41C-13	099	EE0584	PAYLOAD BAY TV CAMERA D BLURRED
V74QA	41D-30	103	NONE	COLOR TV CAMERA ON RMS ELBOW SHOWED A HORIZ LINE
V74QA	41G-14	099	EE0592	COLOR TV CAMERA ON RMS ELBOW LOST COLOR WHEEL SYNC
V74QA	51A-11	103	EE0595F	PLB TV CAMERAS A & D HAD SPOTS & DIFFICULT TO FOCUS
V74QA	51F-09	099	EE612F	CCTV MONITORS 1 AND 2 PICTURE QUALITY POOR
V74QA	51F-10	099	EE611F	PLB COLOR TV CAMERA "D" LOSS SYNC
V74QA	51J-09	104	EE615F	PLB CAMERA B DIFFICULT TO FOCUS
V74QA	51J-09	104	EE616F	CAMERA C AZIMUTH & ELEVATION FAILED
V74QA	61C-09	102	EE0619	PLB COLOR TV CAMERA "D" FLICKERED

INFLIGHT ANOMALY LIST
BY WUC

WUC	PROB#	ORB	CAR#	NOMENCLATURE
V74QB	1-60	102	NONE	VIDEO TAPE RECORDER MOUNTS BROKEN
V74QB	3-13	102	EE0522F	VIDEO TAPE RECORDER CASSETTE JAMMED
V74QB	3-40	102	NONE	VIDEO TAPE RECORDER ERRONEOUS "NO VIDEO" LIGHT
V74QB	4-12	102	EE0532F	VIDEO TAPE RECORDER FAILED TO REWIND
V74QB	41B-23	099	EE0578F	VIDEO TAPE RECORDER CREASING TAPES
V74QB	61B-08	104	EE618F	VIDEO TAPE RECORDER 3 FAILED
V74QN	51B-23	099	NONE	PLB B&W TV CAMERA "A" DID NOT RSPND TO ALC PBI CMDS
V74QN	51F-04	099	EE610F	PLB B&W CAMERA "A" FAR FIELD FOCUS FAILED
V74RA	6-25	099	EE0556F	TELEPRINTER REMAINED IN HIGH POWER MODE
V74RB	7-15	099	NAC0015	TEXT AND GRAPHICS PAPER JAM
V74RB	8-11	099	EE0569F	TEXT AND GRAPHICS VIDEO CIRCUIT FAILED
V75A00	29-02C	103	NONE	SSME 3 POWER SUPPLY TEMP ERRATIC
V75A00	33-04A	103	33RF03	RCS FIU PRESS X'DUCER FAILED
V75AX	7-05	099	NONE	MEASUREMENT V58H0955A ROB ELEVON, TRANSIENT
V75C00	26-15	103	FAIR*	OPS 2 RCDR MODULATED IN REWIND
V75C00	27-22	104	NONE	TEMP LOSS OF OPS 2 TLM RCDR TRACK 2
V75C00	29-20	103	29RF20	UNABLE TO DUMP OX-1 RECORDER, TRACK 2
V75DAX	6-01K	099	NONE	TEMP SENSOR (V45T0422) FC2 H20 RELIEF VLV TEMP
V75EBM	26-04C	103	26RF08	APU 1 EGT TRANSDUCER FAILED
V75EBM	29-02A	103	29RF03	APU 3 EGT 2 (V46T0340A) FAILED
V75EBM	29-02B	103	29RF14	APU 1 EGT 1 (V46T0142A)
V75EBM	41D-09D	103	14F011	APU 1 EXHAUST GAS TEMP (V46T0140A) ERRATIC
V75EBM	51A-03B	103	19F005	APU 1 EXHAUST GAS TEMPERATURE 2 (V46T0140A) FAILED
V75EBM	51C-03A	103	20F004	APU 1 EXHAUST GAS TEMPERATURE 2 (V46T0140A) FAILED
V75EBM	61B-02B	104	31F010	APU 1 EXHAUST GAS TEMP (V46T0142A) INTERMITTENT
V75EBN	51D-03A	103	AC7837	APU 1 EXHAUST GAS TEMPERATURE (V46T0142A) FAILED
V75EBP	7-02D	099	07F008	TEMPERATURE SENSOR
V75EBP	51I-04D	103	AC7837	APU 1 EXHAUST GAS TEMPERATURE (V46T0142A) FAILED
V75EBY	51J-03F	104	AC7837	APU 1 EXHAUST GAS TEMP 2 (V46T0140A) FAILED
V75ECK	5-05C	102	05F015	APU 3 TURB EX TEMP FAILED
V75ECK	41C-03B	099	13F005	APU 3 TURBINE EXHAUST TEMP (V46T0342A) FAILED
V75ECM	9-03J	102	09F026	APU 3 TURBINE EXH TEMP NO 1 DROPPED & RECOVERED
V75ECM	26-04A	103	26RF07	APU 3 EGT TRANSDUCER FAILED
V75ECP	7-02H	099	NONE	TEMPERATURE SENSOR APU 1 TURB EXT FAILED
V75ECP	8-06E	099	08F014	TEMPERATURE SENSOR APU 3 LUBE OIL OUT BIASED
V75ECP	41D-03D	103	AC8348F	APU 3 LUBE OIL OUT PRESS (V46P0353A) BIASED LOW
V75KAA	2-23	102	02F015	PRESSURE TRANSDUCER V64P0201 FAILED
V75LAA	1-04	102	01F021	SIGNAL CONDITIONER POWER SUPPLY FAILURE
V75MA	41B-11	099	NONE	GN&C DOWNLIST DATA INCORRECT IN LOW DATA RATE
V75MAA	8-31	099	NONE	MASTER TIMING UNIT BITE BITS - NO NORMAL OPERATION
V75MAA	9-08	102	NONE	PCMMU FORMAT 103 SM DATA LOST
V75MAB	61A-11	099	HEN056F	PAYLOAD RECORDER TRACK 5 NOT RECOVERABLE
V75MAC	51F-01	099	26F006	PAYLOAD DATA INTERLEAVER DYNAMIC WRAP TEST FAILURE
V75MAD	6-06	099	ODET167	OPS 1 RECORDER TAPE BROKEN BY LOOSE SCREW
V75MAD	7-11	099	EE0565F	OPS 1 RECORDER NOISE ON DUMP WHEN REWINDING
V75MAE	8-21	099	NONE	OPS 2 RECORDER NOISE ON DUMP WHEN REWINDING
V75MAE	29-08	103	DR-BH93	OPS-2 RCDR TRACK 4 INOPERATIVE
V75MAE	51F-13	099	HEN0053	OPS RECORDER 2 TRACK 6 MALFUNCTION
V75MAE	51J-05	104	HEN0055	OPS RECORDER 2 TRACKS 7, 8 & 9 INTERMITTENT
V75MAJ	5-15	102	05F005	MISSION TIMER-PANEL A4 INOPERATIVE

INFLIGHT ANOMALY LIST
BY WUC

WUC	PROB#	ORB	CAR#	NOMENCLATURE
V75MAK	5-15	102	05F005	EVENT TIMER, PANEL A4 INOPERATIVE
V75NAB	6-12	099	AC5458	MDM-OF2 DATA OUTPUT INVALID
V75NAC	2-02	102	NONE	MDM-OF3 - HYBRID FAILURE
V75NAD	9-05	102	09F031	LRCS 3/4/5A TANK ISO VLVS POS INDICATOR FAILED
V75000	29-22	103	29RF22	RH MAIN LANDING GEAR STRAIN GAGE HARNESS SEPARATION
V75000	28-05F	102	28RF19	OI MEASUREMENTS MISWIRED
V75000	38-03A	104	38RF03	PRSD HYDROGEN TANK 3 QUANTITY FAILURE
V75000	38-03B	104	38RF04	APU 3 X-AXIS ACCELEROMETER ERRATIC
V75000	38-03C	104	38RF07	MAIN A MPC 1 AMPERES TRANSDUCER FAILURE
V75000	38-05	104	38RF05	APU INSTRUMENTATION ERRATIC
V75000	38-08	104	NONE	CONTINUOUS TIRE PRESSURE FDA AFTER LANDING
V75PAA	41C-03D	099	NONE	LH OMS POD SKIN TEMP (V09T1030A) READ LOW
V75PAC	1-11	102	01F032	CURRENT SENSOR INDICATED OPEN
V76AAC	51C-03C	103	NONE	MAIN BUS B FWD PCA AMMETER VERY NOISY
V76ECA	3-34	102	03F044	MOTOR CONTROL ASSY 3 - RELAY FAILED
V76ECC	41C-05	099	13F013	AFT MCA 2 STATUS DISCRETE (V76X2261E) SHOWED OPEN
V76ECF	8-25	099	AC6684	MOTOR CONTROL ASSY 2 - RELAY HANG-UP
V76ECF	51B-15	099	24F015	MID MCA 2 OPS STATUS 5 (V76X2225E) IND ZERO
V76EDA	61C-02	102	AD0733	FUEL CELL 1 POWER TO ESS BUS 1BC ERRATIC
V76EJE	1-01A	102	NONE	AFT LOAD CONTROLLER 2
V76EJE	41B-17	099	11F011	RCS JETS R5R & R5D FAILED OFF; AFT LCA 2 FAILED
V76JAB	5-19	102	05F017	AC 1 PHASE B INVERTER DISCONNECTED FROM BUS
V76JAE	36-01	104	36RF01	AC 2 PHASE A INVERTER FAILED
V76000	28-11	102	FAIR BFCE 29F012	MAIN C UTILITY OUTLET 1 SHORT CIRCUIT
V78C	1-08	102	EE0457F	DFI/PCM RECORDER TAPE MECH JAMMED
V78C	1-47	102	NONE	DFI WIDEBAND AND PCM RECORDERS SMALL DATA DROPOUT
V78C	3-27	102	03F020	DFI W/B RECORDER TAPE TENSION LAMP FAILURE
V78C	4-28	102	0DET142	DFI PCM RECORDER DATA ERASED DURING DUMP
V78DFI	1-46	102	NONE	DFI SENSOR MOUNTING ASSY
V78DFI	1-52	102	NONE	DFI MEASUREMENTS
V78DFI	2-41	102	NONE	DFI MEASUREMENTS
V78DFI	2-44	102	NONE	DFI MEASUREMENTS
V78MAD	51A-29	103	19F022	MADS DATA NOISY & SNAPSHOT MALFUNCTION
V78MAD	61A-06	099	30F008	MADS PCM MASTER BITE (V78X9611E) FAILED
V78000	27-23	104	NONE	MADS PCM 1 BITE; H2 FILL/DRN VLV RESP OUT OF SPEC
V79	9-34	102	NONE	INADVERTENT FLIGHT CONTROL CH 2 SHUTDOWN
V79	51F-20	099	NONE	DIGITAL AUTO PILOT DOWNMODED TO MANUAL
V79ACD	9-29	102	09F018	ATVC-3 ME ACTUATOR CH 3 FAIL IND
V79AD	51F-07	099	26F001	LEFT SRB YAW AXIS RATE GYRO ASSEMBLY FAILED
V79ECB	41B-12	099	NONE	RH ARCS R3A DRIVER OUTPUT DISCRETE FAILED
V79000	28-27	102	NONE	CREW REPORT LOUD THUMP/THUD AT FIRST OPS-1 TRANS
V79000	32-22	102	IM32RF22	BFS GPC ERRORS
V79WCB	2-34	102	02F018	PILOT RHC - ROLL TRIM SWITCH FAIL
V79WD	1-02	102	NONE	PASS & BFS TIMING SKEW
V79WD	51C-05A	103	NONE	BFS DID NOT PROCEED TO MAJOR MODE 104 AFTER ET SEP
V79WD	51C-05B	103	NONE	BFS DEORBIT IGNITION TIME WAS 8 SECONDS LATE
V79WD	51F-05	099	NONE	BFS LOGGED STORE PROTECT VIOLATION
V79W00	41-05	103	NONE	BFS BACKUP DP/DT TRIGGERED FDA

MSFC FLIGHT PROBLEMS

FLIGHT/ELEMENT/NUMBER	NOMENCLATURE
STS-1/ET/1	ET tumble system malfunction
STS-1/ET/2	High ET LOX tank bulkhead and Y-ring oscillatory loads
STS-1/ET/3	ET LH2 forward dome vibration exceedance
STS-1/MPS/1[a]	ME-2 GH_2 out temp failure
STS-1/MPS/2[a]	ME-2 GH_2 out press failure
STS-1/MPS/3[a]	MPS H_2 topping valve slow closure after dump
STS-1/MPS/4	ME-1 GO_2 FCV failed to open fully
STS-1/MPS/5	ME-2 helium loss during second vacuum inerting
STS-1/MPS/6	H_2 concentration in Orbiter aft fuselage compartment
STS-1/MPS/7[a]	Orbiter T-0 H_2 umbilical disc leak during loading
STS-1/SRB/1	Damaged main chute flotation packages
STS-1/SRB/2	Excessive temperatures in aft skirts during entry
STS-1/SRB/3	Frustum location-aid malfunction
STS-1/SRB/4	Tearing of main chute canopy
STS-1/SRB/5	SRB component vibroacoustic exceedances
STS-1/SRB/6	Unscheduled FDM autocalibration at frustun release
STS-1/SRB/7	SRM thermal curtain failure during reentry
STS-1/SRB/8	One drogue parachute first stage reefing line cutter failed
STS-1/SRB/9	Ignition overpressure significantly larger than predicted
STS-1/SSME/1	Channel A and B MCC PC drift
STS-1/SSME/2	ME-3 fuel preburner baffle erosion
STS-1/SSME/3	Two nozzle tube leaks
STS-1/SSME/4	Isp discrepancy
STS-2/ET/1	ET aft LOX dome accelerometer data erroneous
STS-2/MPS/1	LO_2 100 percent liquid level sensor failure
STS-2/MPS/2	LO_2 ECO sensor failed wet after STS-2 scrub
STS-2/MPS/3	ME-2 press supply temp transducer failure
STS-2/MPS/4[a]	ME-2 press supply press transducer failure
STS-2/MPS/5	LO_2 tank ullage press low during fast fill to topping
STS-2/MPS/6[a]	LO_2 and LH_2 8-inch disconnect inserts loose

[a]Appears in JSC list also.

MSFC FLIGHT PROBLEMS (Continued)

FLIGHT/ELEMENT/NUMBER	NOMENCLATURE
STS-2/MPS/7	Improper MDM commands to open helium isolation valves
STS-2/MPS/8	Orbiter feed system vacuum inerting terminated early
STS-2/MPS/9	High helium concentration in ET intertank area during LH_2 loading
STS-2/SRB/1	Failure to separate nozzle extensions during reentry
STS-2/SRB/2	VHF recovery beacon transmitter on right SRB failed
STS-2/SRB/3	SRB holddown bolts did not eject
STS-2/SRB/4	Aft IEA reentry vibration exceedance
STS-2/SRB/5	Excessive temp in aft skirt during reentry
STS-2/SRB/6	TVC upper frame vibration exceedance during reentry
STS-2/SRB/7	LH SRB range safety no. 1 vibration exceedance during reentry
STS-2/SRB/8	APU gear boxes contaminated with wax
STS-2/SRB/9	Broken springs in APU fuel pump
STS-2/SRB/10	Unscheduled FDM autocalibration at frustum release
STS-2/SRB/11	RH SRM aft field joint gas leak to primary O-ring with erosion
STS-2/SRB/12	Failure of SRM thermal curtains during reentry
STS-2/SRB/13	Forward BSM covers missing
STS-2/SSME/1	One nozzle tube leak
STS-2/SSME/2	Isp discrepancy
STS-3/ET/1	High ET LOX tank bulkhead and Y-ring oscillatory loads
STS-3/MPS/1	GN_2 heater overtemp sensor in GSE failed during loading
STS-3/MPS/2	ME-2 GH_2 press out temp failure
STS-3/MPS/3[a]	High MPS helium usage during entry
STS-3/SRB/1	One RH SRB main chute failure 3 sec after deployment
STS-3/SRB/2	One RH SRB main chute not recovered
STS-3/SRB/3	SRB aft IEA reentry vibration exceedance
STS-3/SRB/4	Failure of SRM thermal curtains
STS-3/SRB/5	Forward BSM covers missing
STS-3/SRB/6	TPS spallation on frustums
STS-3/SSME/1	One nozzle tube leak
STS-3/SSME/2	Isp discrepancy

[a]Appears in JSC list also.

MSFC FLIGHT PROBLEMS (Continued)

FLIGHT/ELEMENT/NUMBER	NOMENCLATURE
STS-4/ET/1	High ET LOX tank bulkhead and Y-ring oscillatory loads
STS-4/ET/2	TPS failure: charring, SOFI popcorning, divots, and lost TPS
STS-4/MPS/1[a]	MPS LO_2 bleed valve position indicator switch malfunction
STS-4/MPS/2	Facility/Orbiter LO_2 interface temp failure
STS-4/MPS/3[a]	ME-2 GH_2 press out temp failure
STS-4/MPS/4	High helium concentration in ET intertank area during LH_2 loading
STS-4/MPS/5[a]	LO_2 17-inch disconnect flowliner failure
STS-4/SRB/1	Both SRB's failed to decelerate properly and were lost
STS-4/SRB/2	One holddown bolt did not eject properly
STS-4/SRB/3	One forward BSM cover missing
STS-4/SSME/1	ME-3 HPFTP impeller damage
STS-4/SSME/2	ME-2 sporadic MCC pressure oscillations
STS-4/SSME/3	ME-3 contamination in the OPB injector element A-11
STS-4/SSME/4	Elevon nozzle tube leaks
STS-4/SSME/5	Isp discrepancy
STS-5/MPS/1	LO_2 prevalves and fill/drain valves not closed properly
STS-5/MPS/2[a]	GO_2 FCV failed to open fully
STS-5/SRB/1	Failure of RH SRB fwd BSM mounting compartment to vent properly
STS-5/SRB/2	RH SRB aft IEA longitudinal vibration criteria exceedance
STS-5/SRB/3	Intermittent operation of flashing light
STS-5/SSME/1	SSME flight nozzle tube ruptures prior to lift-off
STS-5/SSME/2	Unexpected rise in HPOT secondary seal drain line temperatures
STS-5/SSME/3	Unexpected rise in HPOT secondary seal cavity pressure
STS-6/ET/1[a]	LO_2 level sensor no. 1 failed wet
STS-6/MPS/1[a]	ME-2 GH_2 press out temp failure
STS-6/MPS/2[a]	ME-2 GH_2 press out press failure
STS-6/MPS/3[a]	ME-1 GH_2 flow control valve hung up
STS-6/MPS/4[a]	ME-3 helium reg out press increase
STS-6/SRB/1	RH SRB aft skirt TPS dislodged at lift-off
STS-6/SRB/2	EPON shims on 6 launch posts came loose at lift-off

[a]Appears in JSC list also.

MSFC FLIGHT PROBLEMS (Continued)

FLIGHT/ELEMENT/NUMBER	NOMENCLATURE
STS-6/SRB/3	SRB flashing lights failed shortly after water impact
STS-6/SRB/4	RH SRB forward IEA connector corrosion
STS-6/SRB/5	Loose SRM case pin retainer bands
STS-6/SRB/6	Aft skirt TPS material debris
STS-6/SRB/7	Debris from aft skirt post EPON and EPON shims
STS-6/SRB/8	Unscheduled FDM autocalibration at frustum release
STS-6/SRB/9	RH SRB aft IEA longitudinal vibration criteria exceedance
STS-6/SRB/10	Gas paths on both SRM nozzle-to-case joints
STS-6/SSME/1	ME-3 HPFTP turbine disc temp drift
STS-6/SSME/2	ME-1 OPOV supply skin temp sensor failed
STS-6/SSME/3	ME-3 MFV disc skin temp sensor failed
STS-6/SSME/4	ME-2 fuel preburner ASI LOX supply line leak
STS-7/ET/1[a]	LH_2 ullage press sensor stuck
STS-7/ET/2	LH_2 100-percent level sensor inconsistencies
STS-7/MPS/1	GSE/Orbiter LO_2 inlet temp redline exceeded
STS-7/MPS/2[a]	Leak at high-point bleed T-0 umbilical disconnect
STS-7/MPS/3[a]	ME-2 and ME-3 GH_2 press supply press failed
STS-7/MPS/4[a]	LH2 tank ullage press meas stuck
STS-7/MPS/5	On-orbit leak downstream of isolation valves following vacuum inerting
STS-7/SRB/1	Aft IEA contact with ET ring cover
STS-7/SRB/2	LH SRB holddown post NSI cover plate screws missing
STS-7/SRB/3	SRB cable jacket pulled from connector molding
STS-7/SRB/4	SRB TPS found during launch platform walkdown
STS-7/SRB/5	SRB aft IEA vibroacoustic exceedance
STS-7/SRB/6	Holddown-post blast-container cover-plate screws missing
STS-7/SRB/7	Unscheduled FDM autocalibratlon at frustum release
STS-7/SRB/8	Low-frequency longitudinal vibration exceedance on the aft IEA during boost

aAppears in JSC list also.

MSFC FLIGHT PROBLEMS (Continued)

FLIGHT/ELEMENT/NUMBER	NOMENCLATURE
STS-7/SSME/1	ME-3 OPOV LOX supply line skin temp drift
STS-7/SSME/2	Cracks found in HPFT bolt-hole circle
STS-8/ET/1	Low LO_2 ullage pressure transducer readings
STS-8/MPS/1	LO_2 99.85-percent level meas failure
STS-8/MPS/2[a]	ME-2 GH_2 press supply press failure
STS-8/MPS/3	ME-2 LH_2 inlet press failure
STS-8/MPS/4	Pressure spike in aft compartment
STS-8/MPS/5	Isp variation greater than expected
STS-8/SRB/1	Holddown-post blast-container splice-plate bolts missing
STS-8/SRB/2	Main chute reefing line cutter failure
STS-8/SRB/3	Failure to remove recovery and DFI power at water impact
STS-8/SRB/4	Abnormal erosion pattern of nozzle nose rings
STS-8/SRB/5	Holddown post blast container cover plate bolts ejected and some missing
STS-8/SRB/6	Unscheduled FDM autocalibration at frustum release
STS-8/SRB/7	RGA yaw inconsistencies during flight
STS-8/SRB/8	Low frequency longitudinal vibration exceedance on the aft IEA during boost
STS-8/SRB/9	LH SRB flashing light failed before impact
STS-8/SSME/1	ME-1 LOX ASI supply line failure
STS-8/SSME/2	ME-1 HPFTP turbine disc temp decay
STS-8/SSME/3[a]	ME-1 MFV skin temp meas failure
STS-8/SSME/4	Fuel flow oscillations at lower power levels
STS-9/ET/1	Nose cone temp meas failure
STS-9/MPS/1[a]	H_2 leakage at T-0 unbilical disconnect
STS-9/MPS/2[a]	GH_2 FCV no. 1 did not fully open
STS-9/MPS/3	LO_2 tank ullage press slump
STS-9/MPS/4	LH_2 ET/Orbiter interface temperature exceedance
STS-9/SRB/1	Aft BSM heat seal rings broken away
STS-9/SRB/2	Main chute canopy damage
STS-9/SRB/3	Aft skirt shoe shim ejected at lift-off
STS-9/SRB/4	SRM violation of thrust imbalance design limits (waiver RWW-099 R1)
STS-9/SRB/5	Three APU's experienced hydrazine line failure during descent
STS-9/SRB/6	Eight O-rings on electrical cable connectors missing causing saltwater damage
STS-9/SSME/1	ME-1 LPOTP disc press Ch B meas failure

aAppears in JSC list also.

MSFC FLIGHT PROBLEMS (Continued)

FLIGHT/ELEMENT/NUMBER	NOMENCLATURE
STS-9/SSME/2	ME-3 fuel bleed valve position indicator failure
STS-9/SSME/3	ME-3 HPFT disc temp failure
STS-9/SSME/4	ME-3 overheat and localized melting of nozzle aft TPS
STS-11/MPS/1	ME-2 GN_2 Orbiter press supply press failed
STS-11/MPS/2	LO_2 residuals less than predicted
STS-11/SRB/1	LH SRB main chute failed to inflate
STS-11/SRB/2	SRM primary O-ring burn areas
STS-11/SRB/3	SRB rate gyro bench test failure
STS-11/SRB/4	SRM nozzle erosion
STS-11/SRB/5	Extensive aft skirt structural damage of LH SRB
STS-11/SRB/6	Two rate gyros failed postflight bench tests
STS-11/SRB/7	Hydrazine fill and drain line rupture during descent
STS-11/SRB/8	Low-frequency longitudinal vibration exceedance on the aft IEA during boost
STS-11/SRB/9	LH SRM nozzle throat inlet ablative ring separation from housing
STS-11/SRB/10	LH SRM forward center field joint gas leak to primary O-ring with erosion
STS-11/SRB/11	RH SRM gas leak and erosion to primary O-ring of nozzle-to-case joint
STS-11/SSME/1	ME-1 MFV skin temp meas failure
STS-11/SSME/2	ME-1 and ME-2 MFV burst diaphragm rupture
STS-11/SSME/3	ME-2 oxidizer preburner ASI chamber and injector face erosion
STS-11/SSME/4	ME-2 overheating and localized melting of aft manifold TPS
STS-11/SSME/5	ME-3 fuel bleed position indicator erroneous reading
STS-11/SSME/6	ME-3 HPFTP strut can damaged
STS-11/SSME/7	Chipped first-stage blade tips on HPOTP of engine S/N 2012
STS-41-C/ET/1[a]	LH_2 primary 100-percent liquid level sensor false indication
STS-41-C/MPS/1	Discrepancy among LO_2 load, usage, and residuals
STS-41-C/MPS/2	GH_2 pressurization supply pressure sensor failed
STS-41-C/SRB/1	RH SRB main chute failed to inflate
STS-41-C/SRB/2	LH SRB drogue chute damage
STS-41-C/SRB/3	LH SRB main chute damage
STS-41-C/SRB/4	Range safety system reduced signal strength

[a]Appears in JSC list also.

MSFC FLIGHT PROBLEMS (Continued)

FLIGHT/ELEMENT/NUMBER	NOMENCLATURE
STS-41-C/SRB/5	Voltage regulator failure
STS-41-C/SRB/6	Extensive RH SRB aft skirt structural damage
STS-41-C/SRB/7	Gas leak and erosion to primary O-ring of RH SRM nozzle-to-case joint
STS-41-D/ET/1	Nose cone temperature measurements failed (first attempt)
STS-41-D/MPS/1	GH_2 pressurization supply temperature sensor failed
STS-41-D/SRB/1	RSS antenna damaged
STS-41-D/SRB/2	Unscheduled FDM autocalibration at frustum release
STS 41-D/SRB/3	Hydrazine pump seal/lube oil overboard drain line melted
STS 41-D/SRB/4	Low-frequency radial vibration exceedance on the aft IEA
STS 41-D/SRB/5	One flashing light failed
STS 41-D/SRB/6	RH SRM forward field joint erosion
STS 41-D/SRB/7	LH SRM gas leak and erosion to primary O-ring of nozzle-to-case joint
STS 41-D/SSME/1[a]	ME-3 MFV failure (aborted launch)
STS 41-D/SSME/2	SSME vibration data dropout
STS 41-D/SSME/3	ME-3 Ch A press meas contained data spikes
STS 41-G/MPS/1[a]	Orbiter helium bottle press dropped
STS 41-G/MPS/2	High LH_2 tank back press during replenish
STS 41-G/MPS/3[a]	GH_2 pressurization system temperature and pressure sensors failed
STS 41-G/MPS/4	LO_2 tank ullage pressure slumped below expected minimum
STS 41-G/SRB/1	BSM aeroheat shield cover lost
STS 41-G/SSME/1	MFV skin temperature sensor failed
STS 51-A/MPS/1	High LH_2 tank back press during replenish
STS 51-A/MPS/2	High LO_2 tank ullage press during replenish
STS 51-A/MPS/3	Uneven LO_2 vent line flow
STS 51-A/MPS/4[a]	ME-3 helium reg leakage
STS 51-A/MPS/5	GH_2 pressurization system temperature sensor failed
STS 51-A/SRB/1	LSC fastener found in system tunnel
STS 51-A/SRB/2	LH SRM nozzle throat inlet ablative ring separation from housing
STS 51-A/SRB/3	Pinch marks on LH SRM center field joint primary and secondary O-rings
STS 51-A/SRB/4	Pinch marks on LH aft field joint primary O-ring

[a]Appears in JSC list also.

MSFC FLIGHT PROBLEMS (Continued)

FLIGHT/ELEMENT/NUMBER	NOMENCLATURE
STS 51-A/SSME/1	ME-1 LPFTP disc press meas failure
STS 51-A/SSME/2	ME-2 HPFTP disc temp meas failure
STS 51-A/SSME/3	ME-3 HPFTP lift-off seal leakage
STS 51-C/MPS/1[a]	High helium concentration in midfuselage
STS 51-C/MPS/2	GH_2 pressurization system temperature sensor failure
STS 51-C/SRB/1	LH SRB nozzle extension began breakup prior to nose cap jettison
STS 51-C/SRB/2	LH SRM nozzle throat inlet ablative ring separation from housing
STS 51-C/SRB/3	LH SRM forward field joint gas leak and erosion to primary O-ring
STS 51-C/SRB/4	RH SRM primary O-ring gas leak and erosion at center field joint
STS 51-C/SRB/5	Gas leaks to primary O-rings at nozzle-to-case joint on both SRMs
STS 51-C/SSME/1	ME-2 HPFTP disc temp meas failure
STS 51-C/SSME/2	ME-2 controller MFV servoactuator self-test failure
STS 51-C/SSME/3	Crack in Channel B sensor header pin
STS 51-D/MPS/1	High LH_2 tank backpressure during replenish
STS 51-D/SRB/1	RH SRB nozzle throat ring developed erosion pockets
STS 51-D/SRB/2	One yaw gyro did not track the others
STS 51-D/SRB/3	Gas leak and erosion in both SRM nozzle-to-case joints
STS 51-D/SSME/1	ME-1 HPFTP disc temp meas failure
STS 51-D/SSME/2	ME-1 HPFTV coolant liner press erratic
STS 51-D/SSME/3	OPOV LO_2 supply line temperature sensor failed
STS 51-B/MPS/1	LO_2 replenish not terminated as scheduled
STS 51-B/MPS/2	Failed to dump LO_2 through ME-3 during propellant dump
STS 51-B/MPS/3	GH_2 pressurization system pressure sensor failed
STS 51-B/SRB/1	Missing portion of RH SRM forward segment aft end flap
STS 51-B/SRB/2	One main parachute on each SRB failed to inflate properly
STS 51-B/SRB/3	RH SRB gas leak at primary O-ring of forward field joint
STS 51-B/SRB/4	Gas leak and erosion in both SRM nozzle-to-case joints. Erosion to secondary O-ring on LH SRM

[a]Appears in JSC list also.

MSFC FLIGHT PROBLEMS (Continued)

FLIGHT/ELEMENT/NUMBER	NOMENCLATURE
STS 51-B/SSME/1	ME-2 DCU loss of power
STS 51-B/SSME/2	Broken tab in HPOTP of engine S/N 2021
STS 51-G/MPS/1	Start of chilldown 25 min late
STS 51-G/MPS/2	GN_2 purge supply inadequate
STS 51-G/MPS/3	ME-2 LH_2 inlet press meas failure
STS 51-G/MPS/4	GH_2 pressurization system pressure sensor failure
STS 51-G/SRB/1	Four RGA's failed postflight bench tests
STS 51-G/SRB/2	One LH SRB parachute didn't inflate beyond first reef stage
STS 51-G/SRB/3	One flashing light failed
STS 51-G/SRB/4	Gas leaks and erosion on both SRM nozzle-to-case joints
STS 51-G/SRB/5	Gas leaks, but no erosion in either SRM igniter joint
STS 51-F/MPS/1	GH_2 pressurization system pressure sensor failed
STS 51-F/SRB/1	RGA "C" yaw gave full-scale negative output
STS 51-F/SRB/2	RH main chute sustained extensive damage
STS 51-F/SRB/3	One RGA yaw rate gyro failed full-scale negative
STS 51-F/SRB/4	LH SRM nozzle throat inlet ablative ring separation from housing
STS 51-F/SRB/5	LH SRM forward center joint primary O-ring had poor splice joints
STS 51-F/SRB/6	Gas leak in the RH SRM nozzle-to-case joint
STS 51-F/SRB/7	Gas leak but no erosion to LH SRM igniter joint
STS 51-F/SSME/1	ME-1 HPFTP disc temp Ch B meas failure
STS 51-F/SSME/2	ME-1 HPFTP disc temp Ch A meas failure
STS 51-F/SSME/3	ME-1 shutdown prematurely
STS 51-F/SSME/4	ME-3 HPFTP disc temp Ch B meas failure
STS 51-F/SSME/5	CCV ME-2 position indicator failure (on-pad abort)
STS 51-I/ET/1	Both nose-cone temperature measurements failed
STS 51-I/MPS/1	High Orbiter LO_2 inlet temp causing LO_2 stop flow
STS 51-I/MPS/2	TSM engine bleed temp high reading
STS 51-I/MPS/3	LH_2 100-percent secondary sensor no. 2 not calculated
STS 51-I/MPS/4	LH_2 recirc pump 1 stop
STS 51-I/MPS/5	GH_2 pressurization system pressure sensor failed

MSFC FLIGHT PROBLEMS (Continued)

FLIGHT/ELEMENT/NUMBER	NOMENCLATURE
STS 51-I/SRB/1	Holddown stud failed to eject
STS 51-I/SRB/2	One RGA pitch rate gyro failed postflight bench test
STS 51-I/SRB/3	Gas leak in the LH SRM nozzle-to-case joint
STS 51-I/SRB/4	Gas leaks in both inner and outer seals of LH SRM igniter joints. No seal damage
STS 51-I/SRB/5	Gas leaks, but no erosion to outer gasket of RH SRM igniter joint
STS 51-J/ET/1	LH_2 ullage press xducer no. 2 high
STS 51-J/MPS/1	LH_2 high-point bleed valve failure
STS 51-J/MPS/2	LO_2 replenish valve anomaly
STS 51-J/MPS/3	Avionics problems with controller to LH_2 prevalve no. 3 closing solenoid
STS 51-J/SRB/1	One RGA failed yaw postflight bench test
STS 51-J/SRB/2	Second stage reefing line cutter failed to fire
STS 5L-J/SRB/3	Segment of LH SRM nozzle outer boot ring missing
STS 51-J/SRB/4	Gas leak at primary seal of RH SRM igniter joints
STS 51-J/SSME/1	Engine SN 2019 fuel system purge pressure increase during start transient
STS 61-A/ET/1	LO_2 ullage pressure dropout
STS 61-A/MPS/1	LH_2 storage tank press high
STS 61-A/MPS/2	LH_2 recirc pumps not started at normal time
STS 61-A/MPS/3	High H_2 concentration at fill line flex hose flange
STS 61-A/SRB/1	Holddown stud failed to eject
STS 61-A/SRB/2	Three RGA's failed postflight bench test
STS 61-A/SRB/3	Hydrazine fire during descent
STS 61-A/SRB/4	Nozzle extension didn't sever
STS 61-A/SRB/5	Tilt fuel isolator valve ruptured, rock isolation valve missing
STS bl-A/SRB/6	Damage to forward skirt access door during towback
STS 61-A/SRB/7	LH center and aft field joints had gas leaks to primary O-rings
STS 61-A/SRB/8	RH forward field joint gas leak at primary O-ring
STS 61-A/SRB/9	Gas leaks occurred at both SRM nozzle-to-case joints. O-ring erosion to the right joint but not the leak.
STS 61-A/SRB/10	Gas leaks, but no erosion to outer seal of both SRM igniter joints
STS 61-A/SSME/1	OPOV LO_2 supply line temperature sensor failed

MSFC FLIGHT PROBLEMS (Continued)

FLIGHT/ELEMENT/NUMBER	NOMENCLATURE
STS 61-B/SRB/1	Aft skirt EPON shim missing
STS 61-B/SRB/2	Gas leaks and erosion in both SRM nozzle-to-case joints
STS 61-B/SRB/3	Gas leaks but no erosion to outer seal of both SRM igniter joints
STS 61-B/SSME/1	HPFTP turbine discharge temperature sensor failed
STS 61-C/ET/1	LO_2 ullage press dropout
STS 61-C/MPS/1	Valve sequencing out of order during terminal count
STS 61-C/MPS/2	Loss of primary HGDS
STS 61-C/MPS/3	Broken facility LO_2 temperature probe found in LO_2 prevalve visor (third launch attempt)
STS 61-C/MPS/4	GH_2 pressurization system pressure sensor failed
STS 61-C/SRB/1	LH flashing light failed
STS 61-B/SRB/2	LH SRB aft field joint gas leak and erosion at primary O-ring
STS 61-C/SRB/3	Gas leak in the LH SRM nozzle-to-case joint
STS 61-B/SRB/4	Gas leak and erosion in the RH SRM nozzle-to-case joint
STS 61-B/SRB/5	Gas leaks, but no erosion to outer seal of both SRM igniter joints
STS-26-B-1	Debris containment system (DCS) plunger did not properly seat at HDP 1, 3, 7, and 8.
STS-26-B-2	RH ETA ring aft IEA end cover (on tunnel side) and the two attach angle assemblies were missing after splashdown; ten cables were pulled out of connectors and were dangling in the water.
STS-26-B-3	SLA was missing from sloped face of LH SRB antenna (+Z axis).
STS-26-B-4	The RH SRB APU lube oil recirculating line was discovered leaking during gearbox (tilt-system A) servicing.
STS-26-B-5	A strap securing baro-switch tube assembly in the LH SRB frustum was broken at the fastener.
STS-26-B-6	A linear shaped charged (LSC) confined detonating fuse (CDF) line was found severed at the 401 ring connector during postflight assessment of the LH SRB.
STS-26-B-7	The RH SRB main parachute 3 experienced a tear from ribbons 131 to 148 in the 460-strength level region.

MSFC FLIGHT PROBLEMS (Continued)

FLIGHT/ELEMENT/NUMBER	NOMENCLATURE
STS-26-E-1	During postflight inspection of E-3 (S/N 2028), a nozzle tube split was discovered 3" down stream of joint G-15 nozzle-to-MCC interface.
STS-26-E-2	During postflight inspection, a leak check revealed a class II leak in the joint G15 (Main combustion chamber-to-nozzle interface) of E-1, S/N 2019.
STS-26-E-3	The HPFTP discharge temperature on channel B experienced decay and recovery (70 degrees) in the thrust bucket at 65 percent RPL (E-1, S/N 2019).
STS-26-E-4	The HPFTP coolant liner pressure experienced an oscillation (70 psia) at 104 percent RPL on E-1 S/N 2019.
STS-26-M-1	During postflight inspection of both SRMs, thermal protection system (TPS) cork covering DFI/GEI cable runs was missing in several places.
STS-26-M-2	Salt water penetrated all 6 field joint moisture barriers. Approximately 1 liter of water removed from left forward joint; similar amounts in others.
STS-26-T-1	The 98 percent (no. 2) LH2 level sensor reading changed from dry to wet at approximately 70 sec after T-0 and read intermittently between wet and dry until about T+130.
STS-27-B-1	EPON shim material torn loose. Fragments of the EPON shoe shim were torn loose in varying degrees from aft skirt posts 3, 4, 7, and 8.
STS-27-B-2	Nosecap MSA-1 debris. The right SRB nose cap MSA-1 material/debris has been associated with the damage to the Orbiter tiles.
STS-27-E-1	HPFTP discharge temperature on channel A failed high. The ME-3, S/N 2029, HPFTP discharge temperature at ch. A failed high at 277 seconds.
STS-27-E-2	MCC fuel injection pressure froze during max q bucket on ME-2. The MCC fuel injection pressure did not respond to throttling during the thrust bucket on ME-2, S/N 2030.

MSFC FLIGHT PROBLEMS (Continued)

FLIGHT/ELEMENT/NUMBER	NOMENCLATURE
STS-27-E-3	HPOTP inner-raceway cracked at bearing 3, wire particle found. During borescope inspection of ME-3 (S/N 2029), a crack of approximately 0.005 in. to 0.010 in. was detected at bearing 3 on the inner raceway of the HPOTP, (S/N 9109 R1).
STS-27-M-1	Ignition/igniter heaters charred. Some heat damage and charring was evidenced by discoloration at two locations of both igniter heaters.
STS-27-M-2	TPS extruded cork missing on right center field joint. A small unbonded area (apprx 3 1/2" x 3 1/2") of cork just above the buckle on the Kevlar band was found missing during the postflight work.
STS-27-M-3	Nozzle joint 1 bolts bent. Bolts were bent on the Right SRM (0-90 degrees quadrant) at nozzle joint 1 of exit cone.
STS-27-M-4	Seawater found in 5 of the 6. Small amounts of seawater were found in the moisture seal on 5 of the 6 field joints.
STS-27-M-5	Fretting corrosion of field joints. The "capture feature" surfaces of the SRM field joints encountered gouges, pits and/or scratches.
STS-29-M-1	The primary heater current to the aft field joint heater showed no voltage and a gradient temperature decrease during the countdown. The secondary heater was subsequently brought on.
STS-29-B-1	Extensive damage to the thrust vector control (TVC) components was found during the postflight inspection.
STS-29-B-2	A structural crack of about 3" was found in the aft skirt intermediate ring near holddown post 8.
STS-29-B-3	Extensive damage to the TVC components was found during the postflight inspection.
STS-29-M-2	Postflight inspection of the left center factory joint revealed several adhesive unbonds of the EPDM vulcanized weather seal.
STS-29-E-1	After landing, a leak in the main combustion chamber bond line was detected on main engine-1, S/N 2031.

MSFC FLIGHT PROBLEMS (Continued)

FLIGHT/ELEMENT/NUMBER	NOMENCLATURE
STS-29-B-4	The DCS plunger did not properly seat at holddown post 8 during lift-off operations.
STS-29-B-5	Super light ablator (SLA) was missing from the sloped face (+Z axis) of both SRB range safety system antennas.
STS-30-B-1	The number two left SRB main parachute (S/N 8045) collapsed shortly after inflation. As a result of higher loading during entry, parachute 3 had some broken suspension lines.
STS-30-B-2	The holddown post DCS did not function properly at locations 2, 3, 5, and 7.
STS-30-B-3	Four of the explosive transfer assembly (ETA) ring cover fasteners were sheared off near the in-harbor tow bracket of the left SRB.
STS-30-B-4	The left SRB ETA ring cap and web separation continues approximately 100 inches circumferentially on ring segment 283. The maximum gap is about 1/4 inch.
STS-30-M-1	Postflight inspection of the left SRM identified several aft edge unbonds of the factory joint weatherseals.
STS-30-M-2	Postflight inspection of the left SRM igniter revealed a cut at 285 degrees on the secondary seal of the outer gasket.
STS-30-M-3	The left SRM nozzle snubber ring was displaced slightly forward and wedged into the aft ring. Nozzle wedged out of null position.
STS-30-E-1	The main engine 3 (S/N 2029) AFV D/S skin temperature sensor 1 failed off-scale high at T + 413 seconds into the flight.
STS-28-B-1	Left SRB Frustum BSM Aeroheat Shield Door from lower right position missing. During recovery operations, the retrieval ship reported that the aeroheat shield door on the BSM (located on the lower right position of the BSM cluster) was missing from the left SRB Frustum.

MSFC FLIGHT PROBLEMS (Continued)

FLIGHT/ELEMENT/NUMBER	NOMENCLATURE
STS-28-B-2	Left SRB ETA ring bolts loose. Eighteen loose (only finger tight) 3/8" SRM Stub/ETA Ring aft web fasteners were identified on the left SRB during post-flight assessment. Six fasteners were located at the IEA position, and the remaining 12 were located randomly around the ETA Ring.
STS-28-B-3	Left SRB TVC tilt system lower frame attachment clevis crack. A crack was found on the TVC lower frame attachment clevis located adjacent to rib 5 on the left SRB aft skirt (S/N 09).
STS-28-M-1	Right SRM inner igniter gasket indentation of inner primary seal. During postflight inspection of the right SRM Igniter, a small depression was found at 220 degrees on the inner primary seal on the aft face of the inner gask-o-seal.
STS-28-M-2	Right SRM aft center segment ply separations of internal insulation. During postflight inspection operations at KSC, a ply separation was identified in the internal insulation of the right SRM aft center segment.
STS-34-B-1	Right SRB HDP 2 broached and shoe lifted from MLP during liftoff. The holddown stud at HDP 2 "hung up" during liftoff, resulting in broaching of the right SRB aft skirt HDP 2. The shoe also lifted from the MLP post during this time.
STS-34-B-2	Right SRB forward segment missing TPS from forward section of systems tunnel cover. A piece of MSA-1, 6" wide by 24" long was missing from the forward section of a systems tunnel cover on the right SRB forward skirt.
STS-34-B-3	Left SRB drogue parachute reefing line cutter failure. The 12-second reefing line cutter (located at gore 60) on the left SRB drogue parachute failed to fire.
STS-34-M-1	Left SRM rock actuator bracket damage. The left SRM 45-degree rock actuator bracket was damaged at the aft exit cone.

MSFC FLIGHT PROBLEMS (Continued)

FLIGHT/ELEMENT/NUMBER	NOMENCLATURE
STS-34-M-2	Left SRM factory joint weatherseal forward edge unbonds. Postflight operations at KSC revealed on left SRM indications of forward edge unbonds in two locations: forward segment dome-to-cylinder factory joint and the forward center segment factory joint weatherseals.
STS-34-M-3	Putty on right SRM igniter outer gasket and left SRM igniter outer gasket retainer. Putty was found up to the aft face of the outer primary gasket and into the seal void/gland area, between 234 and 5 degrees of the right SRM igniter. Also, putty was found on the aft face of the gasket retainer (0.11" max) and under the retainer from 262 to 297 deg of the left SRM.
STS-34-M-4	Left SRM center field joint aft side unbond of K5NA closeout. A 5" circumferential unbond of the K5NA closeout (located at the 0 deg radial location) was noted on the aft edge of the left SRM center field joint. The unbond is from the JPS cork as well as the motor case wall.
STS-34-M-5	Left and right SRM aft dome EPDM blisters. Blisters were found on the aft dome carbon-filled EPDM of both SRMs to varying levels.
STS-34-B-4	Right SRB aft BSM venting of confined detonating fuse (CDF). During separation of the right SRB, a CDF assembly in the aft BSM ignition system vented through its fiberglass braid.
STS-33-B-1	Right SRB missing epon shim material from HDP 3. An area of epon shim material, from the bottom of the right SRB HDP 3, was observed falling off during the launch.
STS-33-B-2	Right SRB HDP 3 stud hang up and broaching. The right SRB holddown stud at HDP 3 hung up during liftoff, resulting in broaching and thread impressions on the bore inside diameter.

MSFC FLIGHT PROBLEMS (Concluded)

FLIGHT/ELEMENT/NUMBER	NOMENCLATURE
STS-33-B-3	Left SRB ETA ring aft IEA end cover and cables sooted. The left SRB ETA ring aft IEA end cover experienced hot gas flow (aft to forward) through its interior from the tunnel side, resulting in sooting and varying degrees of heat exposure to 16 operational flight reusable cables.
STS-32-B-1	During postflight inspection at KSC, both left and right SRB's were noted as missing some of their EPDM and Q3-6077 materials from the upper strut location.
STS-32-B-2	During postflight inspection of the left SRB ETA Ring, six of the Hi-Lok fasteners which connect the web to cap were found protruding into the ETA Ring cover for the aft IEA.
STS-32-E-1	During postflight inspection of ME-2 (S/N 2022), a 5/64" diameter MCC debond was located in the aft region between adjacent feedslots and in line with nozzle tube number 664.
STS-32-E-2	During postflight inspection of ME-3 (S/N 2022), a 5/64" diameter MCC debond was noted 2" out from the throat area at the 6:00 o'clock position.
STS-32-E-3	During postflight inspection of ME-1 (S/N2024), a MCC gouge was noted 6 inches out from the throat area at the 6:00 o'clock position.
STS-32-M-1	During postflight inspection of the right SRM safe and arm gasket, a small depression was found in the crown of the secondary seal aft face.
STS-32-M-2	During the postflight assessment of the right SRM igniter inner gasket, raised areas of rubber were found along both sides of the gasket on the outer primary seals.
STS-32-T-1	Photographic review of the umbilical well camera film identified an unusual TPS pattern (18" X 24") as missing from the left forward bipod strut attach point on the intertank.

MSFC FLIGHT PROBLEMS (Concluded)

FLIGHT/ELEMENT/NUMBER	NOMENCLATURE
STS-36-B-1	During postflight inspection of the left SRB, a frustum separation pin from the ordnance ring was found embedded in the forward side of the ETA Ring instafoam between the -Y and -Z axes.
STS-36-B-2	During removal of the main parachute 3 deployment bag from the left SRB frustum, a nut was noted missing from the third restraint link bolt (from inboard) along the top of the Main Parachute Support Structure (MPSS) isogrid panel nearest the -Z axis.
STS-36-B-3	During postflight inspection of the right SRB aft skirt, a missing safety wire was found from a "B" nut on the GN2 purge tube assembly.
STS-36-B-4	The first stage (7-second) reefing line cutter, located at gore 45 of the left SRB drogue parachute (S/N 3036) did not fire.
STS-36-B-5	During postflight inspection of both the left and right SRB ETA Rings, several cable tie-wraps were found disengaged from the electrical cable assemblies.
STS-36-B-6	During postflight inspection of the right SRB ETA Ring, an area of cork approximately 5.5" X 3.0" was noted as missing from the aft side, located at the center of the web (+Z axis).
STS-36-B-7	During postflight inspection of the right SRB frustum, the MSFC Trowellable Ablator 2 (MTA-2) was found with voids at 16 ramp locations.
STS-36-M-1	During postflight inspection of the right SRM igniter outer joint, a small area of pitting was observed on the I.D. of the forward dome boss and on the O.D. of the igniter chamber at 175 degrees. Also, cadmium plating was damaged on the gask-o-seal at the same location.
STS-36-M-2	During postflight inspection of the left SRM igniter, a material separation was observed on the I.D. of the igniter adapter plug secondary o-ring. The separation measured approximately 0.700" in length (33% of o-ring circumference), by 0.045" in depth, at a 45 degree angle from the tangential plane of the surface.

MSFC FLIGHT PROBLEMS (Concluded)

FLIGHT/ELEMENT/NUMBER	NOMENCLATURE
STS-31-B-1	The left SRB aft IEA was dislocated from ETA Ring at water impact.
STS-31-B-2	A varying reduction of preload in fasteners existed at the frustum-to-ordnance ring interface on the left (20 of 296) and right (all) SRB's.
STS-31-B-3	The RSS crossover bracket on both SRB's is sooted around the P2 connector jam nut. Also, ballooning of the heat shrink tubing was observed on one cable in the right SRB RSS transition housing.
STS-31-B-4	The left SRB aft skirt was missing several areas of K5NA over MTA-2 and MTA-2 over MTA-2 (ranging from 4" X 10" to 5/8" X 5/8").
STS-31-E-1	During the STS-31 launch (hard-line data), three HPOTP strain gages indicated erroneous data.
STS-31-M-1	During the postflight inspection of the right SRM nozzle, the cowl/outer boot ring joint was separated, showing a gap of 1.8" at 216 degrees decreasing to 0" at 120 degrees.
STS-41-M-1	During the postflight inspection of both the left and right SRM igniters, the outer joints were found to have a blow-hole in the putty. Also, cadmium plating damage and sooting was observed.
STS-41-M-2	Abnormal erosion of the internal insulation (at the forward edge) was observed in both the left and right SRM aft dome-to-stiffener and stiffener-to-stiffener factory joints.
STS-38-B-1	Photographic analysis identified debris exiting from the base region of both SRB's during the period from lift-off + 26 to 40 seconds.
STS-38-B-2	The forward face of the right SRB ETA attachment ring had two areas of Instafoam missing.
STS-35-B-1	The three right SRB main parachutes failed to disconnect at water impact.
STS-35-T-1	During photographic review of the STS-35 astronaut's pictures of the ET in-flight, 10 circular TPS divots were observed on the Intertank-to-Hydrogen flange.

MSFC FLIGHT PROBLEMS (Concluded)

FLIGHT/ELEMENT/NUMBER	NOMENCLATURE
STS-35-M-1	During the follow-on postflight inspection of the left RSRM nozzle joint 3 at TC, a 1.5-inch gas path was observed through an RTV void at 195°, resulting in heat effects to the CCP surface and sooting to the primary O-ring.

ORBITER ATTITUDE TIMELINE

This section consists of data derived from the as-flown Orbiter attitude timelines and crew activity plans for each mission. The data are presented in chart form that show the progression of the mission from launch to entry interface with the varying Orbiter attitudes (roll, pitch, and yaw) and the time duration in each attitude. The chart also shows the Orbiter's velocity vector, i.e, which of the Orbiter's body axes is pointing forward along the orbital path.

The Beta angle, the angle between the sun vector and the orbital plane, is also shown for each 12-hour period of the mission.

The attitude data are omitted for certain Orbiter attitudes, such as passive thermal control (PTC) and solar inertial (SI), because during these maneuvers the Orbiter's attitude is constantly changing. Maneuvers that are generally of short duration, e.g. inertial measurement unit alignments, are also omitted from this chart.

The deployment of satellites is noted on the timeline as are certain other activites.

Charts for the STS-9, STS 41-G, and STS 51-F missions are not available for this issue, but will be added in the next revision.

The attitudes in this section are defined with respect to the Shuttle Orbiter body axes, as opposed to the Shuttle Orbiter structural dimensional axes.

a. The origin is at the Orbiter's center of gravity (c.g.).

b. The positive X-axis extends from the c.g. forward through the nose of the vehicle parallel to the structural X-axis.

c. The Z-axis is parallel to the Orbiter plane of symmetry and is perpendicular to the X-axis. The Z-axis is positive down with respect to the Orbiter fuselage.

d. The Y-body axis completes the right-hand orthogonal system, +Y is to the right.

BODY AXES

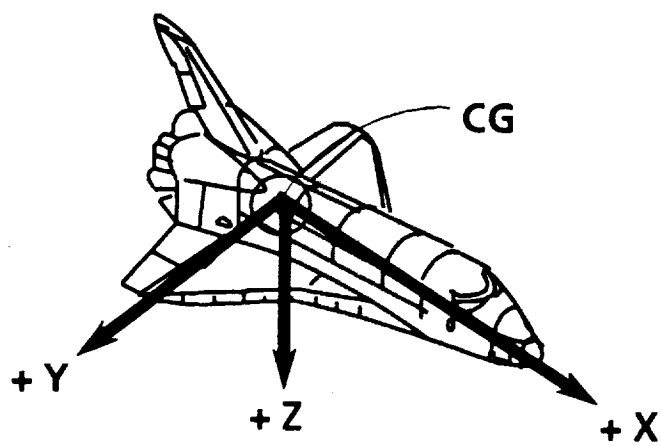

The following is a list of abbreviations and acronyms used in this section:

ATT Attitude

DUR Duration

LV Local Vertical

MET Mission Elapsed Time

SI Solar Inertial

VV Velocity Vector

β $\measuredangle$ Beta angle, angle between the sun vector and the orbital plane.

Θ Theta angle, sun look angle as viewed from cockpit position looking forward and up, clockwise viewed from port side.

Φ Phi angle, sun look angle as viewed from cockpit position looking starboard, as viewed from above.

ORBITER ATTITUDE TIMELINE

FOR MISSION SEQUENCE NOS.
1 (STS-1), 2 (STS-2), 3 (STS-3) AND 4 (STS-4)

MISSION SEQ NO.	1	β→	-25.1	-23.8	-22.4	-20.8	-19.4	-18.5
STS NO.	1	MET	12	24	36	48	60	
ORBITER OV-	102	ATT	-ZLV	+XLV	PTC	-ZLV	-XS1	-ZS1 E153:42
OMS PODS		VV	-X	+Z		-X		
PORT	102	DUR	21:25	3:20	2:15	14:40	1:59	3:02
STBD	102	ROLL	0	185		0	163	Θ_S0
		PITCH	180	267		180		Φ_S68
		YAW	0	2		0		

MISSION SEQ NO.	2	β→	-51.4	-50.2	-48.7	-47.1	-45.3
STS NO.	2	MET	12	24	36	48	60
ORBITER OV-	102	ATT	-ZLV			-XS1	-ZS1 E153:35
OMS PODS		VV	-X				
PORT	102	DUR	46:06			3:07	2:31
STBD	102	ROLL	180			Θ_S178	90
		PITCH	0			Φ_S186	0
		YAW	0				

MISSION SEQ NO.	3	β→	-34.0	-34.9	-35.5	-35.9	-36.1	-36.1	-35.9	-35.5	-34.9	-34.2	-33.3	-32.2	-30.9	-29.3
STS NO.	3	MET	12	24	36	48	60	MET1	72	MET1	84	MET1	96	108	120	132	144	156	168
ORBITER OV-	102	ATT	PTC	+XLV	-X SUN ORB RATE		PTC	NOSE TO SUN 2 REV/ORB ROLL					-ZS1		PTC	-ZS1
OMS PODS		VV	-ZLV +X +Y													
PORT	102	DUR	1:33 4:09	2:15	24:17		11:27	80:24					27:16		11:19	5:38
STBD	102	ROLL	180	238	Θ_S180			Θ_S0					Θ_S90			Θ90
		PITCH	0	266	Φ_S 0			Φ_S0					Φ_S 0			Φ 0
		YAW	0	358												

β→	-27.7	-26.0		
MET	190	MET1	192	MET1 204 MET1
ATT	-ZS1 PTC		-XS1 -ZS1	E119:34
VV				
DUR			2:48	2:45
ROLL	Θ_S90		Θ176	Θ_S90
PITCH	Φ_S0		Φ175	Φ_S0
YAW				

MISSION SEQ NO.	4	β→	-1.1	+0.2	+0.8	+1.9	+3.2	+4.7	+6.4	+8.0	+9.6	+11.2	+12.9	+15.0	+16.9	+20.5
STS NO.	4	MET	12	MET1	24	MET1	36	MET1	48	MET1	60	MET1	72	MET1	84	MET1	96	108	120	132	144	156	168	171
ORBITER OV-	102	ATT	-ZLV	+XLV	+ZS1	-ZLV	-ZS1	+XSV	-ZLV	-ZS1	+XS1	+ZS1	PTC	-XS1	PTC	-XS1	-ZS1	E168:40
OMS PODS		VV	-Y	+Y	+Y			+Y	+Y							
PORT	102	DUR	4:15	2:32	10:51		3:06	6:46	12:00	4:18	7:01	22:47	10:13	60:42	12:19	4:34	2:00
STBD	102	ROLL	0	249	Θ_S 90	0	90	245	0	Θ_S 90	Θ_S 90	Θ_S 90		Θ_S177		Θ_S176	70	
		PITCH	192	268	Φ_S145	192	30	268	192	Φ_S180	Φ_S180	Φ_S180		Φ_S352		Φ_S178	0	
		YAW	90	358		90		358	90									

ORBITER ATTITUDE TIMELINE

FOR MISSION SEQUENCE NOS.

5 (STS-5), 6 (STS-6), 7 (STS-7) AND 8 (STS-8)

MISSION SEQ NO.	5																							
STS NO.	5	MET	-25.9		-24.1		-22.3		-20.3		-18.4		-16.5		-14.7		-12.8		-10.9		-9.1		-7.4	
ORBITER OV-	102	ATT	-ZLV	-ZLV	-ZLV				+YSI								-XSI NOSE ↑10°				PTC	-XSI	-ZSI	E1121:44
OMS PODS		VV	+X	+X	+X																			
PORT	102	DUR	2:09	3:56	26:22				46:49								24:06				11:12	3:38	2:17	
STBD	102	ROLL	210	180	180				Θ_S 90								Θ_S 10					Θ_S176	70	
		PITCH	0	0	0				Θ_S 90								Θ_S180					Θ_S179	0	
		YAW	0	0	0																			
		DEPLOYS					SBS				TELESAT													

MISSION SEQ NO.	6																							
STS NO.	6	MET	-21.6		-21.9		-21.7		-21.9		-21.9		-21.8		-21.5		-21.0		-20.4		-19.7		-18.8	
ORBITER OV-	099	ATT	-ZLV	-ZLV	-ZLV						-ZLV	-ZLV									-XSI		E1119:43	
OMS PODS		VV	+Y	+X	+X						+Y	+X												
PORT	099	DUR	4:24	4:07	42:45						2:50	60:09									2:38			
STBD	099	ROLL	180	180	180						180	180									Θ_S173			
		PITCH	0	0	0						0	0									Θ_S152			
		YAW	0	0	0						270	0												
		DEPLOYS					TDRS																	

MISSION SEQ NO.	7																											
STS NO.	7	MET	+17.5		+19.1		+21.1		+23.2		+25.2		+27.2		+29.3		+31.3		+33.3		+35.3		+37.2		+39.1		+40.9	
ORBITER OV-	099	ATT	-ZLV	-ZLV					-ZLV										-XLV		-ZLV		-ZLV	-ZLV	-XSI	-YSI		E1145:48
OMS PODS		VV	+X	+X					+X										+Z		+X		+X	+X				
PORT	099	DUR	3:02	5:39					66:24										8:27		13:28		4:48	10:09	4:54	2:48		
STBD	099	ROLL	180	180					180										0		180		0	180	Θ_S176	Θ_S 47		
		PITCH	0	0					0										90		0		180	0	Θ_S179	Θ_S296		
		YAW	0	0					0										0		0		0	0				
		DEPLOYS					ANIK		PALAPA																			

MISSION SEQ NO.	8																							
STS NO.	8	MET	+36.4				+37.0				+36.6				+35.4				+33.4				+30.9	+29.4
ORBITER OV-	099	ATT	-ZLV				-ZLV	-XSI	-ZLV				-XLV	-ZLV		-XLV	-ZLV		+XLV		SI		E1144:38	
OMS PODS		VV	+X				+X	ORB RATE	+X				-Z	+X		-Z	+X		-Z		-X			
PORT	099	DUR	23:36				7:53	13:50	33:30				11:50	11:47		11:48	3:13		21:09		2:56			
STBD	099	ROLL	180				180	Θ_S180	180				180	180		0	180		0		Θ_S180			
		PITCH	0				0	Θ_S0	0				90	0		270	0		270		Θ_S0			
		YAW	0				0		0				0	0		0	0		0					
		DEPLOYS						INSAT																

C106234C. ART: 1

ORBITER ATTITUDE TIMELINE

FOR MISSION SEQUENCE NO.
9 (STS-9), AND 10 (STS-41B)

MISSION SEQ NO.	9
STS NO.	9
ORBITER OV-	102
OMS PODS	
PORT	LV01
STBD	RV01

MET	-41.8	-44.2	-46.6	-49.1	-51.6	-54.0	-56.5	-58.9	-61.3	-63.7	-66.1	-68.4	-70.6	-72.7	-74.7
ATT	-XLV	-ZLV	-XLV	-ZLV	ROTR	COLD TEST ROT	*MISC. ATTITUDES	-ZLV	*MISC. ATTITUDES	-ZLV	*MISC. ATTITUDES	-ZLV	HOT TEST COOL		
VV	Y	X	Z	-X				-X		-X		-X			
DUR	7:39	5:04	5:27	5:11	6:42	13:08		8:17		6:07		6:51	7:16	5:28	
ROLL	90	180	0	0	335.78	267		0		0		0	202.7	158	
PITCH	90	0	90	180	66	66		180		180		180	336.1	173	
YAW	0	0	0	0	22	22		0		0		0	9.2	0	
DEPLOYS															

*MISCELLANEOUS SHORT TERM ATTITUDES TO COMPLETE DTO'S. SEE REAL TIME ATTITUDE TIMELINE PRINTOUT.

MET	-76.5	-78.0	-79.0	-79.5	-79.4	-78.7
ATT	DWN	-Z SUN	*MISC. ATTITUDES	-ZSI	PTC	TAIL SUN
VV						
DUR	6:22			4:00	6:15	3:28
ROLL	331.7			213	313	113
PITCH	144.6			9	6	76
YAW	323.6			315	293	18
DEPLOYS						

← DEORBIT BURN 246:56:30

← EI 247:11

MISSION SEQ NO.	10
STS NO.	41B
ORBITER OV-	099
OMS PODS	
PORT	099
STBD	099

MET	-26.8		-24.9	-22.8	-20.6	-18.5	-16.3	-14.2	-12.0	-9.9	-7.9	-5.9	-3.8	-2.0
ATT	-ZLV		-ZLV		+XLV	-ZLV		-ZLV	-ZLV	-XLV	-ZLV	-ZSI	-YSI	-ZLV
VV	+X		+X		-Z	+X		+X	-X	+Z	+X			-X
DUR	6:06		37:30		5:39	19:40		17:48	3:37	10:19	33:13	10:34	2:33	16:33
ROLL	180		180		0	180		180	0	0	180	θ_s60	θ_s90	0
PITCH	0		0		270	0		0	180	90	0	θ_s20	θ_s90	180
YAW	0		0		0	0		0	0	120	0			0
DEPLOYS		WESTAR					PALAPA							

MET	0.2	1.5	3.1
ATT	-ZLV	-XSI	EI 190:40
VV	+X		
DUR	17:04	3:02	
ROLL	180	θ_s180	
PITCH	0	θ_s0	
YAW	0		
DEPLOYS			

C107572C. ART. 2

ORBITER ATTITUDE TIMELINE

FOR MISSION SEQUENCE NO.

11 (STS 41-C), 12 (STS 41-D), AND 13 (STS-41G)

MISSION SEQ NO.	11	MET	-12	-9	-5	-2	+2	+3	+6	+10	+13	+14
STS NO.	41C	ATT	-ZLV	-ZLV	+XLV	-ZSI	-ZLV	-ZLV	TAIL SUN	-XLV	-ZLV	-XSI
		VV	+X	+X	-Z		-Y	+X	SI	+Z	-X	
ORBITER OV-	099	DUR	25:24	14:41	51:50	5:30	14:07	5:20	20:18	8:57	10:48	3:02
		ROLL	180	180	0	θ_S 60	180	180	θ_S 170	0	0	θ_S 180
OMS PODS		PITCH	0	0	270	ϕ_S 20	0	0	ϕ_S 270	90	180	ϕ_S 0
PORT	103	YAW	0	0	0		270	0		0	270	
STBD	103	DEPLOYS		LDEF								

MISSION SEQ NO.	12	MET	-2.	+1.	2.	4.6	8.	16.	19.
STS NO.	41D	ATT	-ZLV -ZLV	-ZLV	-ZLV	-ZLV TAIL 99	TAIL 99 -Z SI	NOSE/PORT SUN SI	-ZLV	-ZLV	-XSI
		VV	+X +Y	-Y	+X	-Y	+X	-Y	-Y	+X	-X	
ORBITER OV-	103	DUR	1:46 4:28	15:16	8:45	13:48	1:44 4:02	13:09	7:08 1:36	15:13	1:36 3:02 1:36	16:41	5:19	9:29	3:14
		ROLL	180 180	180	180	180	180 300	180	300 θ_S 90	θ_S 30	θ_S 180 300 θ_S 90	θ_S 30	180	0	θ_S 180
OMS PODS		PITCH	0 0	0	0	0 90	0	90 ϕ_S 0	ϕ_S 90	ϕ_S 0 90 ϕ_S 0	ϕ_S 90	0	180	ϕ_S 0
PORT	103	YAW	0 270	270	0	270	0 0	0	0	0		0	0
STBD	103	DEPLOYS	SBS	SYNCOM		TELSTAR						

MISSION SEQ NO.	13	MET	-53.6	-52.3	-50.9	-49.3	-47.6	-45.7	-43.8	-41.8	-39.0	-37.7	-35.6	-33.4	-31.2	-29.0	-26.7
STS NO.	41G	ATT	-ZLV *	-ZLV *	-ZLV *	-ZLV	*	-ZLV	*	-ZLV	*	-ZLV	*	-ZLV	*	-ZLV	*
		VV	+X	+X	-X	+X		+X		+X		+X		+X		+X	
ORBITER OV-	099	DUR	2:55	10:22	3:32	13:9		10:07		12:17		8:56		9:04		9:21	
		ROLL	180	180	180	180		180		180		180		180		180	
OMS PODS		PITCH	0	0	0	0		0		0		0		0		0	
PORT	LP01	YAW	0	0	0	0		0		0		0		0		0	
STBD	RP01	DEPLOYS															

*MISCELLANEOUS SHORT TERM ATTITUDES TO COMPLETE DTO'S. SEE REAL TIME ATTITUDE TIMELINE PRINTOUT.

	MET	-24.5	-22.2
	ATT	*	DEORBIT BURN 194:18:00
	VV		EI 196:47:06
	DUR		
	ROLL		
	PITCH		
	YAW		
	DEPLOYS		

1

1. FOLDOUT FRAME

MISSION SEQ NO.	14	MET	-27.7	
STS NO.	51A	ATT	-ZLV	-ZLV
		VV	+X	+X
ORBITER OV-	103	DUR	1:17	7:19
		ROLL	212	180
OMS PODS		PITCH	0	0
PORT	103	YAW	0	0
STBD	103	DEPLOYS		

MET		
ATT		
VV		
DUR		
ROLL		
PITCH		
YAW		
DEPLOYS		

MISSION SEQUENCE NO.

MISSION SEQ NO.	16	MET	-9.0	
STS NO.	51D	ATT	-ZLV	-ZLV
		VV	+X	+X
ORBITER OV-	103	DUR	1:53	6:04
		ROLL	180	180
OMS PODS		PITCH	0	0
PORT	102	YAW	0	0
STBD	102	DEPLOYS		TEL

MISSION SEQ NO.	17	MET	-28.0	
STS NO.	51B	ATT	-ZLV	
		VV	+X	
ORBITER OV-	099	DUR	3:32	4:15
		ROLL	180	
OMS PODS		PITCH	0	
PORT	102	YAW	0	
STBD	102	DEPLOYS	TDRS	ATMOS

2.

FOLDOUT FRAME

-23.8		-20			-16.5				-12
12 24	36	48		60		72	84	96	
-ZLV	-ZLV	-ZLV	-ZLV	-ZLV	-ZLV	-ZLV	-ZLV	+XLV	STBD/ TOP S1
-Y	+X	-Y	-X	+X	-Y	+X	-Y	-Z	
13:36	8:14	10:22	4:26	5:06	16:47	7:05	12:36	4:25	5:18
180	180	180	0	180	265	182	180	0	θ_S90
0	0	0	180	0	262	358	0	270	ϕ_S60
270	0	270	0	0	79	1	270	0	OM130
	TELSAT		SYNCOM						

-0.6	
180 192 204	
+XLV	E1191:15
-Z	
14:03	
0	
270	
0	

15 - DEPARTMENT OF DEFENSE MISSION - DATA NOT AVAILABLE

		-2.4	+.06	+1.7		+5.6	
12 24	36	48		60		72 84	96
-ZLV		+XLV		+XLV		-XLV	
-Y		+Z		+Z		+Z	
11:32		24:13		36:53		6:59	
0		180		180		0	
180		270		270		90	
270		0		0		0	
ESAT	SYNCOM		IMAGE				

-29.0		-30.3		-31.7		-33.0	
12 24	36	48		60		72 84	96
	-XLV						
	-Y						
	126:17						
	90						
	90						
	2						
ATTITUDE							

ORBITER ATTITUDE TIMELINE

FOR MISSION SEQUENCE NOS. 14 (STS-51A), 16 (STS-51D) AND 17 (STS-51B)

.4	-9.2		-5.3		-2.7
108	120	132	144	156	
STBD/ TOP SI	STBD/ TOP SI	+XLV	STBD/ TOP SI	STBD/ TOP SI	
		-Z			
22:40	13:27	6:57	4:32	24:44	
θ_S90	θ_S86	0	θ_S90	θ_S86	
ϕ_S50	ϕ_S51	270	ϕ_S50	ϕ_S51	
OM110	OM179	0	OM122	OM179	

	+9.8					+17.0		
108	120	132	144	156	168	180		
-XLV	-XLV		-ZLV		-ZLV	+XSI		EI167:20
+Z	-Z		+X		+X			
17:36	4:26		19:53		13:59	3:13		
180	0		180		180	θ_S180		
270	290		270		0	ϕ_S0		
0	0		0		0			
	SYNCOM APPROACH			PRESS CONFERENCE				

	-34.4		-35.8	-36.5		-38.0
108	120	132	144	156	168	180
				NOSE SI - NOSE UP 10°	-XSI	
						EI167:38
				19:06	2:30	
				θ_S10	θ_S180	
				ϕ_S180	ϕ_S0	

C106236C.ART; 1

MISSION SEQ NO.	18	MET	+18.4			+22.5		
STS NO.	51G	ATT	-ZLV	-ZLV	-ZLV		-ZLV	-ZLV
		VV	+X	+Y	+Y		-X	+Y
ORBITER OV-	103	DUR	1:43	4:23	16:43		3:51	15:58
OMS PODS		ROLL	145	180	180		0	180
PORT	104	PITCH	0	0	0		180	0
STBD	103	YAW	0	90	90		0	90
		DEPLOYS		MORELOS		ARABSAT		TELST

MISSION SEQ NO.	19	MET		+29.4°		+26.8°		+24.3°	
STS NO.	51F	ATT	(1)	PERS	-XLV	(1)	-Z ROT	(1) PERS	(1)
		VV			+Y				+X ROT
ORBITER OV-	099	DUR		4:47	3:55		3:05	3:01	5:17
OMS PODS		ROLL		55°	90°		107°	53°	0°
PORT	LP99	PITCH		180°	90°		199°	162°	3°
STBD	RP04	YAW		348°	0°		15°	1°	0°
		DEPLOYS				PDP			

(1) MISCELLANEOUS SHORT-TERM ATTITUDES TO COMPLETE

MISSION SEQ NO.	20	MET	+6.4		+10.0		+13.8
STS NO.	51I	ATT	-ZLV	-ZLV	-ZLV	-ZLV	
		VV	-X	-Y	+X	+X	
ORBITER OV-	103	DUR	4:30	3:02	33:16		
OMS PODS		ROLL	20	0	180	180	
PORT	104	PITCH	180	180	0	0	
STBD	103	YAW	0	270	0	0	
		DEPLOYS		AUSSAT ASC			SYNCOM DEPLO

MISSION SEQUENCE NO. 21 - DEPARTMENT OF DEFENSE

MISSION SEQ NO.	22	MET					
STS NO.	61A	ATT	-ZLV	-ZLV	-YSI	+XLV	+ZLV
		VV	+X	+Y		+Y	+X
ORBITER OV-	099	DUR	2:59 8:06	4:56 9:07	4:22	9:06	10:35
OMS PODS		ROLL	180	0	θ_S90	264	0
PORT	099	PITCH	0	180	θ_S130	270	180
STBD	104	YAW	0	90		358	0
		DEPLOYS		GLOMR			

	+30.2			+33.9	+37.6			+41.2
60	72		84	96	108	120		132
-ZLV	-ZLV		-ZLV	-ZLV	+XLV	-X		-ZLV
-X	+Y		+X	+Y	-Z	+Z		+X
12:46	7:13		22:14	15:05	5:31	1:44		16:49
0	180		180	0	0	0		180
180	0		0	180	270	90		0
0	90		0	270	0	0		
'AR		SPARTAN				ORBIT ADJUST		CREW PR

+21.8°	+19.3°		+16.8°	+14.3°	+11.8°	+9.6°	+7.2°	+4.8°
60	72		84	96	108	120		132
1	PERSEUS	1		1			CCFD VIRGO	1	VELA	1
			+X ROT						
	6:02		3:04				10:22		4:33	
	53°		0°				103°		112°	
	162°		3°				22°		295°	
	1°		0°				64°		17°	
PDP				PDP						

: DTOS. SEE REAL TIME ATTITUDE TIMELINE PRINTOUT.

	+17.2			+20.7		+23.7	
60	72	84	96	108	120		132
·ZLV	-ZLV	-ZLV	+XLV	+ZLV	-ZLV		
+X	-Y	+Y	-Z	+X	-Y		
:25	14:13	22:55	3:58	2:55	24:51		
180	0	0	0	0	0		
0	180	180	285	0	180		
0	270	90	0	0	270		
Y						SYNCOM REDEPLOY	

MISSION DATA NOT AVAILABLE.

60	72	84	96	108	120		132		
-YSI	+XLV	-ZLV	+XLV	-ZLV	+XLV	-ZLV		+XLV	-ZLV
	+Y	-Y	+Y	-X	+Y	+Y		+Y	-X
4:39	8:59	11:56	10:51	12:11	12:02	11:01	5:49	7:20	8:36
θ_S90	264	0	264	0	264	0		265	0
θ_S130	270	180	270	180	270	180		270	180
	358	90	358	0	358	90		358	0

ORBITER ATTITUDE TIMELINE

FOR MISSION SEQUENCE NOS.

-51G), 19 (STS-51F), 20 (STS-51I) AND 22 (STS-61A)

		+44.0		
144	156		168	180
	-XLV	-ZLV	-XSI	EI 169:03
	+Z	+X		
	1:58	17:16	2:59	
	0	180	θ_S 180	
	90	0	ϕ_S 0	
	0	0		
ESS CONFERENCE				

+2.4°	0.0°	-2.2°	-4.5°				
144	156	168	180	182	204		
THERMAL 1	MOD PERSEUS	MOD CENTAURUS	IPS VET / SOLAR OBS	-ZLV	TAIL SUN		DEORBIT BURN MET 218:18:43:00
				+X			LANDING EAFB MET 218:19:45:26
8:10	13:32	7:21	2:11 / 3:11	5:15	4:40		
233°	53°	155°	18° / 146°	180°	3°		
174°	160°	265°	87° / 336°	0.00°	17°		
34°	0°	14°	26° / 23°	0.00°	318°		

+26.6	+28.8		
144	156	168	180
-ZLV		-XSI	EI 169:55
+X			
33:16		3:02	
180		θ_S 180	
0		ϕ_S 0	
0			

	+44.0		
144	156	168	180
-YSI	PTC	-XSI	EI 168:34
5:07	10:14	3:36	
θ_S 90		θ_S 180	
ϕ_S 80		ϕ_S 0	

C106237C.ART, 3

ORBITER ATTITUDE TIMELINE

FOR MISSION SEQUENCE NOS.
23 (STS 61B) AND 24 (STS 61C)
25 (STS 51-L) STS-26, AND STS-27

MISSION SEQ NO.	23	MET	-9.4	-11.4	-13.4	-15.3	-17.3	-19.3	-21.3	-23.3	-25.4	-27.4	-29.5	-31.5	-33.5	-35.4
STS NO.	61B	ATT	-ZLV	-ZLV	-ZLV	-ZLV	-ZLV	-ZLV			-ZLV	-ZLV	+ZSI	-ZLV	-YLV +XLV	-ZLV -XSI
ORBITER OV-	104	VV	+X	-X	+X	-X	+X	+X			-X	+X		+X	+X +Y	-X
OMS PODS		DUR	3:12	14:48	5:09	10:40	3:14	50:11			12:34	12:09	12:49	4:04	2:57 3:06	10:47 3:35
PORT	099	ROLL	180	0	180	0	180	180			0	180	Θ_S90°	180	270 270	0 Θ_S180
STBD	104	PITCH	0	180	0	180	0	0			180	0	Φ_S120°	0	0 270	180 Φ_S0
		YAW	0	0	0	0	0	0			0	0		0	0 0	0
		DEPLOYS	HORELOS DEPLOY		AUSSAT		SATCOM				PHANTOM TARGET					

EI 164:34

MISSION SEQ NO.	24	MET	-26.3	-24.3	-22.3	-20.3	-18.4	-16.5	-14.6	-12.7	-10.9	-9.2	-7.5	-5.8	-4.1
STS NO.	61C	ATT	-ZLV -ZLV	+YSI	UVX	-ZLV	UVX	-ZLV	-XLV	PTC	-XSI SI	-ZLV	-XSI -ZLV +XLV	-ZLV	-XSI
ORBITER OV-	102	VV	+X +X			-Y		-Y	-Z			-Y	-Y +Z	+X	
OMS PODS		DUR	3:10 4:24	11:19		15:45		12:33	5:42	10:37	3:15 7:15	12:13	3:10 2:30	1:38 12:28	3:13
PORT	103	ROLL	215 180	Θ_S90°		180		180	0		Θ_S90 Θ_S80	180	Θ_S180 180	180 180	Θ_S180
STBD	099	PITCH	0 0	Φ_S90°		0		0	240		Φ_S90 Φ_S40	0	Φ_S 0 0	270 0	Φ_S 0
		YAW	0 0			270		270	0			0	0	0	
		DEPLOYS	SATCOM DEPLOY						UVX	PRESS CONF	CHAMP		DEORBIT ATTITUDE		

EI 145:28

MISSION SEQUENCE NO. 25 - DATA NOT APPLICABLE.

MISSION SEQ NO.	26	MET	-30°	-27°	-25°	-23°	-21°
STS NO.	26R	ATT	-ZLV -ZLV	-ZLV -ZLV	-ZLV -ZLV	-ZLV -ZLV	-XSI DE-ORB
ORBITER OV-	103	VV	-Y +X	+Y +Y	-Z -X +X	-X +X	
OMS PODS		DUR	3:10° 10°:10°	11°:50° 11°:40°	2° 8°:35° 11°:44°	11°:50° 11°:50°	2°:40°
PORT	109	ROLL	180 180	180 180	50 180 180	180 180	30 61
STBD	114	PITCH	0 0	0 0	283 0 0	0 0	350 179
		YAW	61 0	0 0	0 0 0	0 0	12 332
		DEPLOYS	TDRS				

EI-98°:30°

MISSION SEQUENCE NO. 27 - DEPARTMENT OF DEFENSE MISSION - DATA NOT AVAILABLE.

C107445C.ART;2

ORBITER ATTITUDE TIMELINE

FOR MISSION SEQUENCE NO.
28 (STS-29R), 29 (STS 30R)
30 (STS-28R), 31 (STS-34R) AND 32 (STS-33R)

MISSION SEQ NO.	28	MET	-25.1	-23.2	-21.1	-19.0	-16.9	-15.7	-12.9	-10.7	-8.3	-6.2	-4.1
STS NO.	29R	ATT	-ZLV	-ZLV		-ZLV	-ZLV -XSI	-ZLV			-ZLV	-ZLV	-XSI
ORBITER OV-	103	VV	+Y	+X		+X	+Y	+X			+Y	+X	
OMS PODS		DUR	2:35	30:25		11:10	2:20	43:20			5:10	14:20	
PORT	LP04	ROLL	+180	+180		+180	+180	+180			+180	+180	
STBD	RP03	PITCH	0	0		0	0	0			0	0	
		YAW	+90	0		0	+90	0			+90	0	
		DEPLOYS	TDRS DEPLOY		IMAX		IMAX		TDRS ATT			IMU ALIGN	

DEORB. BURN 118:38
EI 119:08

MISSION SEQ NO.	29	MET	-8.7	-9.8		-10.6		-11.4		-12.1		-12.6		-13.0	-13.2	-13.3
STS NO.	30R	ATT	-ZLV	-ZLV	IMU	-ZLV	TDRS	-ZLV		-ZLV	TDRS	-ZLV		-ZLV	-ZLV	TAIL SUN
ORBITER OV-	104	VV	-X	-Y		+X		-Y		+X		-Y		+X	-Y	
OMS PODS		DUR	2:06	11:20		4:10		11:10		8:10		11:30		10:10	10:15	2:55
PORT	LP99	ROLL	350	0		180		0		180		0		180	0	168
STBD	RP99	PITCH	180	180		0		180		0		180		0	180	165
		YAW	0	270		0		270		0		270		0	270	321
		DEPLOYS	MAGELLAN													

DEORB. BURN 95:53:50
EI 96:28:52

MISSION SEQUENCE NO. 30 - DEPARTMENT OF DEFENSE MISSION - DATA NOT AVAILABLE.

MISSION SEQ NO.	31	MET	-30.8		-32.6	-34.4	-36.1	-37.7	-39.1	-40.3	-41.3		-42.4	-43.1	-43.6
STS NO.	34R	ATT	+ZSI		-ZLV			-ZLV		-ZLV		-ZLV	+XLV	-ZLV	
ORBITER OV-	104	VV			+XVV			+XVV		+YVV		+YVV	-YVV	+YVV	
OMS PODS		DUR	2' 30"		42' 40"			26' 40"		13' 20"	2' 50"	1' 5"	8' 35"	12' 20"	
PORT	LP99	ROLL	162	12	180			180		180		180	114	180	
STBD	RP99	PITCH	83	272	0			0		0		0	287	0	
		YAW	2	27	0			0		90		90	3	90	
		DEPLOYS	GALILEO				IMAX				TDRSS ATTITUDE				

DEORBIT BURN MET 118:38:06
EI MET 119:08:38

MISSION SEQUENCE NO. 32 - DEPARTMENT OF DEFENSE MISSION - DATA NOT AVAILABLE.

C107563C. ART: 2

ORBITER ATTITUDE TIMELINE

FOR MISSION SEQUENCE NO.
33 (STS-32), 34 (STS 36),
AND 35 (STS-31)

MISSION SEQ NO.	33	#	-33.6	-31.7	-29.7	-27.9	-25.8	-23.5	-21.4	-19.6	-17.3	-15.3	-13.3	-11.4	-9.5	-7.6	-5.9
STS NO.	32	MET	12	24	36	48	60	72	84	96	108	120	132	144	156	168	180
ORBITER OV-	102	ATT	-ZLV	-ZLV / -ZLV	-ZLV	+XLV	-ZLV / -ZLV	+XLV / -ZLV / -XLV	-ZLV	-ZLV	-ZLV	-ZLV	-ZLV	-ZLV	-ZLV	-ZLV	-ZLV
OMS PODS		VV	+Y	+Y	+Y	-Y	+X / +Y	-Z / -X / +Z	-Y	-Y	-Y	-Y	-Y	-Y	-Y	-Y	-Y
PORT	LP03	DUR	23:12	2:34	13:42	7:55	2:07 / 15:05	4:33 / 2:15 / 5:32	10:27	3:05	5:24	8:44	12:52	9:45	11:13	9:31	10:01 / 9:31
STBD	RP04	ROLL	180		180	PLB	180		NOSE NORTH	0	0	0	0	0	0	0	0 / 0
		PITCH	0		0	SOUTH	0			180	180	180	180	180	180	180	180 / 180
		YAW	90		90		90			270	270	270	270	270	270	270	270 / 270
		DEPLOYS		SYNCOM	NC2 BURN				LDEF GPS	H2O DUMP	CREW CONF.						

#	-4.1	-2.5	-1.0	.5	1.8	3.0	4.2
MET	180 / 192	204	216	228	240	252	264 / 276
ATT	-ZLV	-ZLV	-ZLV / -ZLV	+XLV	+XSI / -ZLV	-ZLV	+XLV / +XSI
VV	-Y	-Y	-Y / -Y	-Y	-Y	-Y	-Y
DUR	12:30	9:35	6:32 / 1:33	11:24	4:50 / 1:50	5:34	8:49 / 1:30
ROLL	0	0	0 / 0	90	COLD	0	90 / COLD
PITCH	180	180	180 / 1000	270	SOAK	180	270 / SOAK
YAW	270	270	270 / 300	335		270	335
DEPLOYS			BIASED	BIASED / IMU		BIASED / IMU	

DEORB. BURN 259:55:22

EI 260:29:26

MISSION SEQ NO.	34	#	12	24	36	48	60	72
STS NO.	36	MET						
ORBITER OV-	104	ATT						
OMS PODS		VV						
PORT	LP01	DUR						
STBD	RP03	ROLL	DEPARTMENT OF DEFENSE MISSION - DATA NOT AVAILABLE.					
		PITCH						
		YAW						
		DEPLOYS						

MISSION SEQ NO.	35	#	2.5	4.3	6.1	7.9	9.8	11.6	13.5	15.2	17.0	18.9	20.8
STS NO.	31	MET	12	24	36	48	60	72	84	96	108	120	132
ORBITER OV-	103	ATT	-ZLV	-ZLV	HST DEPLOY ATT. / -YLV	-XLV	+XLV	-ZLV	-ZLV / +XLV	+XLV	-ZLV / -ZLV / -ZLV / IH	-ZLV / -ZLV	XSI
OMS PODS		VV	+Y	-Y	(048.057) / -Z	-Y	+Y	-Y	-Y / +Y	+Y	+Y / -Y / +Y	+X / +Y	
PORT	LP04	DUR	5:55	13:20	7:40 / 12:24	1:25	9:27	9:29	1:57 / 3:19 / 5:49		1:30 / 8:43 / 2:12 / 4:26	1:45 / 15:52	2:47
STBD	RP01	ROLL	195	195	PLB FWD	110	PLB NORTH	180	180 / PLB / PLB		200 / 195 / 195	195	
		PITCH	0	0		270		0	0 / NORTH / NORTH		0 / 0 / 0	0	
		YAW	90	270		0		270	290		90 / 270 / 90	90	
		DEPLOYS			HUBBLE SPACE TELESCOPE			NOSE NORTH		RCS BURN	CREW CONF.	RADIATOR COLD SOAK	

DEORBIT BURN 06:00:03:45

EI 06:00:48:38

C107800C.ART: 1

ORBITER ATTITUDE TIMELINE

FOR MISSION SEQUENCE NOS.
36 (STS-41), 37 (STS-38), AND 38 (STS-35)

MISSION SEQ NO.	36	MET	-10	-8.5	-7	-5	-3	-1	+1	+3	+5								
STS NO.	41	ATT	-ZLV	-ZLV	-ZLV	-ZLV	-ZSI	-ZLV	-ZLV	-ZLV	-ZLV	XSI	DE-ORB						
ORBITER OV-	103	VV	+X	+X	+X	+X		+X	+X	+X	+X								
OMS PODS		DUR	2' 10"	11' 43"	4' 23"	11' 47"	1' 47"	2' 52"	13' 14"	8' 33"	11' 40"	2' 37"		ENTRY INTERFACE 97' 39" MET					
PORT	LP04	ROLL	210	180	180	180		180	180	180	180	207	62	TOUCHDOWN 98' 10" MET					
STBD	RP01	PITCH	0	0	0	0		0	0	0	0	367	169						
		YAW	0	330	330	330		330	330	330	330	16	360						
		DEPLOYS	ULYSSES DEPLOY		OMS BURN	SSBUV	SSBUV		IMU/HUD	SSBUV		DEORBIT ATTITUDE							

MISSION SEQ NO.	37	MET	12 24 36 48 60 72
STS NO.	38	ATT	
ORBITER OV-	104	VV	
OMS PODS		DUR	DOD MISSION - DATA NOT AVAILABLE.
PORT	LP01	ROLL	
STBD	RP03	PITCH	
		YAW	
		DEPLOYS	

MISSION SEQ NO.	38	MET	12 24 36 48 60 72
STS NO.	35	ATT	
ORBITER OV-	102	VV	BECAUSE OF THE MANY ATTITUDE CHANGES REQUIRED
OMS PODS		DUR	BY ASTRO-1 AND BBXRT PAYLOADS, GRAPHICAL
PORT	LP03	ROLL	DISPLAY IS NOT FEASIBLE. AS FLOWN BETA ANGLES
STBD	RP04	PITCH	AND ATTITUDES ARE PRESENTED IN TABLES
		YAW	3-I AND 3-II.
		DEPLOYS	

C107917C. ART: 1

TABLE 3-I.- STS-35 BETA ANGLE RANGE

Mission elapsed time, day:hour	Beta angle, deg
0:00	+5
0:12	+5.5
1:00	+6
1:12	+6.5
2:00	+7
2:12	+7
3:00	+7
3:12	+6.5
4:00	+6
4:12	+5.5
5:00	+5
5:12	+4
6:00	+3
6:12	+2
7:00	+1
7:12	0
8:00	-1
8:12	-2
Entry	-3

TABLE 3-II.- STS-35 AS-FLOWN ATTITUDE TIMELINE

No.	Comment	Time, G.m.t./ M.E.T.	Mode	Matrix	Attitude		
					Roll	Pitch	Yaw
1	STS-35 Flight	336:00:00:00 0:06:49:01	LVLH		0.00	0.00	0.00
2	OMS-2	336:07:17:01 0:00:28:08	IH	MIR601	119.00	9.00	348.00
3	Bias -ZLV	336:08:11:01 0:01:22:00	LVLH		180.00	9.00	75.00
4	IMU -Z COAS	336:09:39:14 0:02:50:13	IH	MIR601	86.00	192.00	11.00
5	+X COAS	336:09:56:26 0:03:07:25	IH	MIR601	141.00	122.00	70.00
6	BBXRT BRIGHT EARTH	336:10:23:01 0:03:34:00	LVLH		0.00	180.00	309.00
7	BBXRT ALIGN #1	336:10:53:40 0:04:04:39	IH	MIR601	75.00	302.00	6.00
8	OSPCAL #1	336:12:28:01 0:05:39:00	IH	MIR601	18.00	205.00	58.00
9	BBXRT ALIGN #2	336:15:12:26 0:08:23:25	IH	MIR601	128.00	197.00	12.00
10	FREE DRIFT	336:15:38:01 0:08:41:00	IH	MIR601	131.00	212.00	33.00
11	FREE DRIFT	336:15:55:01 0:09:06:00	IH	MIR601	141.00	160.00	349.00
12	FREE DRIFT	336:15:59:31 0:09:10:30	IH	MIR601	141.00	160.00	342.00
13	FREE DRIFT	336:16:05:01 0:09:16:00	IH	MIR601	140.00	155.00	320.00
14	FREE DRIFT	336:16:11:01 0:09:22:00	IH	MIR601	128.00	129.00	300.00
15	FREE DRIFT	336:16:16:01 0:09:27:00	IH	MIR601	78.00	80.00	295.00
16	RETURN TO ATT	336:16:26:01 0:09:37:00	IH	MIR601	128.00	197.00	12.00
17	BBXRT BRIGHT OBJECT	336:16:42:40 0:09:53:39	IH	MIR601	242.00	186.00	351.00
18	OSP CAL	336:17:24:03 0:10:35:02	IH	MIR601	47.00	267.00	283.00
19	J-F&A	336:19:32:01 0:12:43:00	IH	MIR601	157.00	169.00	340.00
20	IMU ALIGN	336:21:51:01 0:15:02:08	IH	MIR601	145.00	176.00	353.00
21	J-F&A	336:21:59:01 0:15:10:00	IH	MIR601	157.00	169.00	340.00
22	2001-11	337:02:38:01 0:19:49:00	IH	MIR601	124.00	0.00	351.00
23	BBXRT ALIGN #4	337:03:12:40 0:20:23:39	IH	MIR601	112.00	99.00	300.00

TABLE 3-II.- STS-35 AS-FLOWN ATTITUDE TIMELINE (Cont'd)

No.	Comment	Time, G.m.t./ M.E.T.	Mode	Matrix	Attitude		Yaw
					Roll	Pitch	
24	2001-12	337:03:51:01 0:21:02:00	IH	MIR601	94.00	96.00	35.00
25	OSP CAL	337:04:44:50 0:21:55:57	IH	MIR601	18.00	205.00	50.00
26	0301-11U	337:06:13:45 0:23:24:44	LVLH		180.00	0.00	30.00
27	OSP CAL	337:06:49:33 1:00:00:32	IH	MIR601	18.00	205.00	50.00
28	3804-10B	337:07:58:59 1:01:09:58	IH	MIR601	61.00	56.00	290.00
29	0608-10N	337:08:37:10 1:01:40:09	IH	MIR601	84.00	236.00	279.00
30	9306-12B	337:09:31:34 1:02:42:33	IH	MIR601	169.00	69.00	296.00
31	0001-1GH	337:10:16:14 1:03:27:13	IH	MIR601	345.00	121.00	302.00
32	OSP CAL	337:11:16:19 1:04:27:18	IH	MIR601	18.00	205.00	50.00
33	0658-10M	337:12:22:44 1:05:33:43	IH	MIR601	62.00	259.00	301.00
34	8623-19B	337:13:51:05 1:07:02:04	IH	MIR601	228.00	165.00	314.00
35	4410-16H	337:14:47:31 1:07:58:30	IH	MIR601	55.00	83.00	307.00
36	2302-10M	337:15:36:00 1:08:46:59	IH	MIR601	95.00	129.00	334.00
37	INERTIAL HOLD	337:16:03:01 1:09:14:00	IH	MIR601	90.00	113.00	320.00
38	RETURN TO ATT	337:16:08:26 1:09:29:25	IH	MIR601	95.00	129.00	334.00
39	9301-11U	337:17:17:55 1:10:28:54	IH	MIR601	119.00	14.00	312.00
40	8116-40B	337:17:49:50 1:11:00:49	IH	MIR601	357.00	127.00	299.00
41	OSP CAL	337:18:49:01 1:12:00:00	IH	MIR601	171.00	48.00	280.00
42	4416-41B	337:19:52:01 1:13:03:00	IH	MIR601	69.00	50.00	290.00
43	CRAB ATT	337:20:38:01 1:13:49:00	IH	MIR601	98.00	87.00	22.00
44	8424-11H	337:21:33:01 1:14:44:00	IH	MIR601	23.00	124.00	290.00
45	4414-21B	337:21:57:13 1:15:08:12	IH	MIR601	108.00	93.00	16.00
46	2717-13H	337:23:07:45 1:16:18:44	IH	MIR601	268.00	130.00	307.00

TABLE 3-II.- STS-35 AS-FLOWN ATTITUDE TIMELINE (Cont'd)

No.	Comment	Time, G.m.t./ M.E.T.	Mode	Matrix	Attitude		
					Roll	Pitch	Yaw
47	OSP CAL	337:23:39:01 1:16:50:00	IH	MIR601	2.00	238.00	321.00
48	3227-30H	338:00:22:13 1:17:33:12	IH	MIR601	269.00	129.00	295.00
49	2609-11W	338:01:18:41 1:18:29:40	IH	MIR601	340.00	176.00	203.00
50	2417-11W	338:01:52:24 1:19:03:23	IH	MIR601	268.00	129.00	307.00
51	FREE DRIFT-IH	338:03:41:01 1:20:52:00	IH	MIR601	283.00	141.00	304.00
52	8202-40B	338:04:05:01 1:21:16:00	IH	MIR601	107.00	36.00	316.00
53	5116-10U	338:05:01:28 1:22:12:27	IH	MIR601	142.00	171.00	277.00
54	8415-11H	338:05:46:37 1:22:57:36	IH	MIR601	308.00	126.00	302.00
55	4416-20B	338:06:54:50 2:00:05:49	IH	MIR601	131.00	132.00	297.00
56	2111-20B	338:07:47:00 2:00:57:59	IH	MIR601	94.00	127.00	311.00
57	5102-10U	338:08:19:56 2:01:30:55	IH	MIR601	149.00	140.00	296.00
58	4503-10W	338:09:02:40 2:02:13:39	IH	MIR601	97.00	126.00	312.00
59	3749-11B	338:10:03:28 2:03:14:27	IH	MIR601	272.00	128.00	307.00
60	9106-10B	338:10:43:49 2:03:54:48	IH	MIR601	339.00	158.00	290.00
61	2881-I	338:11:20:33 2:04:31:32	IH	MIR601	46.00	208.00	343.00
62	IDIN HEATING	338:12:42:11 2:05:53:10	IH	MIR601	280.00	189.00	316.00
63	2881-1	338:13:26:11 2:06:37:10	IH	MIR601	46.00	288.00	343.00
64	3749-12B	338:14:11:55 2:07:22:54	IH	MIR601	240.00	87.00	314.00
65	-ZLV NOSE SOUTH	338:15:22:11 2:08:33:10	LVLH		180.00	0.00	90.00
66	OSP CAL	338:16:05:50 2:09:16:49	IH	MIR601	18.00	205.00	58.00
67	3805-16B	338:17:13:55 2:10:24:54	IH	MIR601	125.00	125.00	299.00
68	0606-10W	338:17:44:42 2:10:55:41	IH	MIR601	102.00	334.00	347.00
69	3206-23H	338:18:56:39 2:12:07:38	IH	MIR601	141.00	135.00	296.00

TABLE 3-II.- STS-35 AS-FLOWN ATTITUDE TIMELINE (Cont'd)

No.	Comment	Time, G.m.t./ M.E.T.	Mode	Matrix	Attitude		Yaw
					Roll	Pitch	
70	2107-20W	338:19:24:47 2:12:35:46	IH	MIR601	50.00	234.00	300.00
71	5108-10U	338:20:17:39 2:13:20:38	IH	MIR601	291.00	114.00	310.00
72	4414-25B	338:21:01:05 2:14:12:04	IH	MIR601	100.00	340.00	345.00
73	2307-21W	338:21:56:31 2:15:07:30	IH	MIR601	129.00	155.00	279.00
74	IDOP TEST	338:22:25:31 2:15:36:30	IH	MIR601	97.00	211.00	29.00
75	4412-10H	338:23:16:53 2:16:27:52	IH	MIR601	234.00	92.00	312.00
76	8002-11M	339:00:35:02 2:17:46:01	IH	MIR601	340.00	76.00	296.00
77	9305-12U	339:01:28:11 2:18:39:10	IH	MIR601	128.00	356.00	316.00
78	3804-11B	339:02:24:18 2:19:35:09	IH	MIR601	134.00	134.00	295.00
79	2509-10H	339:03:09:44 2:20:20:43	IH	MIR601	122.00	304.00	304.00
80	4405-20B	339:04:03:58 2:21:14:57	IH	MIR601	60.00	55.00	293.00
81	INERTIAL HOLD	339:04:16:01 2:21:27:00	IH	MIR601	95.00	99.00	300.00
82	IDOP TEST	339:04:34:01 2:21:45:00	IH	MIR601	97.00	211.00	29.00
83	4207-11W	339:05:24:26 2:22:35:24	IH	MIR601	125.00	148.00	290.00
84	6106-10U	339:05:51:03 2:23:02:02	IH	MIR601	149.00	140.00	294.00
85	8113-10U	339:06:25:38 2:23:36:37	IH	MIR601	66.00	135.00	306.00
86	4414-26B	339:07:20:00 3:00:31:07	IH	MIR601	69.00	176.00	9.00
87	4557-10W	339:08:34:49 3:01:45:48	IH	MIR601	217.00	350.00	84.00
88	6216-10U	339:09:26:19 3:02:37:18	IH	MIR601	124.00	287.00	283.00
89	4557-11W	339:10:10:03 3:03:21:02	IH	MIR601	307.00	153.00	280.00
90	2302-20W	339:10:53:07 3:04:04:06	IH	MIR601	75.00	82.00	337.00
91	-ZLV +YVV	339:11:45:36 3:04:56:35	LVLH		270.00	270.00	0.00
92	8307-11U	339:12:21:15 3:05:32:14	IH	MIR601	22.00	132.00	300.00

TABLE 3-II.- STS-35 AS-FLOWN ATTITUDE TIMELINE (Cont'd)

No.	Comment	Time, G.m.t./ M.E.T.	Mode	Matrix	Attitude		Yaw
					Roll	Pitch	
93	2102-10W	339:13:23:07 3:06:34:06	IH	MIR601	288.00	135.00	289.00
94	4419-10B	339:14:22:39 3:07:33:38	IH	MIR601	105.00	127.00	298.00
95	5104-11U	339:15:08:38 3:08:19:37	IH	MIR601	92.00	228.00	4.00
96	2217-11M	339:16:02:01 3:09:13:00	IH	MIR601	35.00	53.00	295.00
97	IDOP TEST	339:16:34:26 3:09:45:25	IH	MIR601	97.00	211.00	29.00
98	4416-21B	339:17:22:16 3:10:33:15	IH	MIR601	160.00	161.00	0.00
99	3705-20B	339:18:10:34 3:11:21:33	IH	MIR601	90.00	70.00	355.00
100	4416-50B ON PRCS	339:19:10:46 3:12:21:45	IH	MIR601	129.00	129.00	297.00
101	4201-10M	339:19:44:38 3:12:55:37	IH	MIR601	116.00	20.00	330.00
102	FREE DRIFT	339:20:05:01 3:13:16:00	IH	MIR601	116.00	20.00	330.00
103	ATT HOLD	339:20:11:31 3:13:22:30	IH	MIR601	137.00	6.00	330.00
104	RTN TO ATT	339:20:22:01 3:13:33:00	IH	MIR601	116.00	20.00	330.00
105	9304-11U	339:20:41:37 3:13:52:36	IH	MIR601	304.00	176.00	305.00
106	6314-24H	339:21:32:56 3:14:43:55	IH	MIR601	122.00	95.00	321.00
107	2133-10M	339:22:13:27 3:15:24:26	IH	MIR601	268.00	125.00	306.00
108	8424-13H	339:23:19:56 3:16:30:55	IH	MIR601	12.00	108.00	297.00
109	2801-13H	340:00:24:53 3:17:35:52	IH	MIR601	139.00	29.00	7.00
110	4530-10X	340:01:14:14 3:18:25:13	IH	MIR601	137.00	147.00	287.00
111	2122-10M	340:01:53:28 3:19:04:27	IH	MIR601	92.00	123.00	346.00
112	7310-10U	340:02:49:21 3:20:00:20	IH	MIR601	353.00	110.00	290.00
113	6205-10U	340:03:20:09 3:20:31:00	IH	MIR601	152.00	47.00	299.00
114	3814-10H	340:04:17:19 3:21:28:18	IH	MIR601	311.00	112.00	315.00
115	8415-13H	340:04:55:28 3:22:06:19	IH	MIR601	299.00	114.00	307.00

TABLE 3-II.- STS-35 AS-FLOWN ATTITUDE TIMELINE (Cont'd)

No.	Comment	Time, G.m.t./ M.E.T.	Mode	Matrix	Attitude		Yaw
					Roll	Pitch	
116	4413-10H	340:05:55:05 3:23:06:04	IH	MIR601	213.00	43.00	8.00
117	9202-11U	340:06:55:14 4:00:06:13	IH	MIR601	37.00	148.00	291.00
118	3805-11B	348:07:33:23 4:00:44:22	IH	MIR601	127.00	134.00	298.00
119	4448-10U	340:08:34:50 4:01:45:49	IH	MIR601	86.00	395.00	57.00
120	2235-11W	340:09:03:11 4:02:14:10	IH	MIR601	342.00	244.00	312.00
121	7205-10U	340:09:47:56 4:02:58:55	IH	MIR601	130.00	293.00	284.00
122	4211-10W	340:10:35:23 4:03:46:22	IH	MIR601	354.00	197.00	329.00
123	3752-18B	340:11:48:08 4:04:59:07	IH	MIR601	272.00	126.00	306.00
124	TDRS COMM	340:12:47:01 4:05:58:00	IH	MIR601	303.00	171.00	46.00
125	3115-10M	340:13:37:01 4:06:48:00	IH	MIR601	335.00	171.00	280.00
126	3805-15B	340:14:24:01 4:07:35:00	IH	MIR601	168.00	186.00	31.00
127	-ZLV NS H20 DUMP	340:15:22:01 4:08:33:00	LVLH		100.00	9.00	90.00
128	3752-17B	340:17:01:07 4:10:12:06	IH	MIR601	258.00	121.00	296.00
129	8424-26B	340:17:30:30 4:10:49:29	IH	MIR601	344.00	78.00	296.00
130	BBXRT	340:18:44:01 4:11:55:00	IH	MIR601	106.00	57.00	8.00
131	0010-11H	340:19:42:01 4:12:53:00	IH	MIR601	258.00	125.00	298.00
132	8117-22B	340:20:27:26 4:13:38:25	IH	MIR601	180.00	315.00	343.00
133	6682-11U	340:21:21:32 4:14:32:31	IH	MIR601	153.00	157.00	340.00
134	8415-23H	340:23:25:45 4:16:36:44	IH	MIR601	336.00	172.00	350.00
135	8623	341:00:24:01 4:17:35:20	IH	MIR601	295.00	242.00	299.00
136	2533-10H	341:01:39:23 4:18:50:22	IH	MIR601	201.00	315.00	314.00
137	2609-12M	341:02:18:01 4:19:29:00	IH	MIR601	356.00	200.00	23.00
138	6232-10U	341:03:09:01 4:20:20:00	IH	MIR601	343.00	127.00	326.00

TABLE 3-II.- STS-35 AS-FLOWN ATTITUDE TIMELINE (Cont'd)

No.	Comment	Time, G.m.t./ M.E.T.	Mode	Matrix	Attitude		
					Roll	Pitch	Yaw
139	6314-11U	341:03:45:01 4:20:56:00	IH	MIR601	40.00	347.00	334.00
140	8318-11U	341:04:41:38 4:21:52:37	IH	MIR601	3.00	480.00	327.00
141	6314-12U	341:05:17:53 4:22:28:52	IH	MIR601	45.00	340.00	340.00
142	8310-12U	341:06:13:53 4:23:24:52	IH	MIR601	3.00	48.00	327.00
143	6314-13U	341:06:51:07 5:00:02:06	IH	MIR601	42.00	319.00	2.00
144	8512-11H	341:09:21:40 5:02:32:39	IH	MIR601	335.00	171.00	355.00
145	8606-11M	341:12:13:32 5:05:24:31	IH	MIR601	89.00	241.00	341.00
146	THERMAL ATT	341:15:32:43 5:08:43:42	IH	MIR601	323.00	114.00	301.00
147	2801-14B	341:16:04:43 5:09:15:42	IH	MIR601	116.00	336.00	319.00
148	9502-1B	341:16:57:19 5:10:08:18	IH	MIR601	201.00	121.00	290.00
149	4116-32B	341:18:00:12 5:11:11:11	IH	MIR601	151.00	198.00	43.00
150	6105-13U	341:18:59:10 5:12:10:09	IH	MIR601	166.00	37.00	303.00
151	0301-13 -ZLV XX	341:19:53:33 5:13:04:32	LVLH		180.00	0.00	270.00
152	6105-14U	341:20:26:28 5:13:37:27	IH	MIR601	166.00	37.00	303.00
153	2533-1 H	341:21:20:57 5:14:31:56	IH	MIR601	196.00	304.00	350.00
154	1204-40H	341:22:05:26 5:15:16:24	IH	MIR601	42.00	118.00	356.00
155	THERMAL RECOVERY	341:23:14:21 5:16:25:20	IH	MIR601	38.00	110.00	291.00
156	4104-1 H	341:23:41:07 5:16:52:06	IH	MIR601	118.00	79.00	341.00
157	0658-20W	342:02:42:21 5:17:43:20	IH	MIR601	140.00	47.00	50.00
158	4416-33B	342:02:07:11 5:19:10:10	IH	MIR601	45.00	38.00	300.00
159	0658-21M	342:02:42:11 5:19:53:10	IH	MIR601	140.00	47.00	50.00
160	6203-19B	342:03:56:06 5:21:07:05	IH	MIR601	170.00	117.00	5.00
161	8116-19B	342:04:33:42 5:21:44:41	IH	MIR601	185.00	305.00	71.00

TABLE 3-II.- STS-35 AS-FLOWN ATTITUDE TIMELINE (Cont'd)

No.	Comment	Time, G.m.t./ M.E.T.	Mode	Matrix	Attitude Roll	Attitude Pitch	Yaw
162	2111-11B	342:05:48:41 5:22:59:40	IH	MIR601	37.00	27.00	359.00
163	4212-13H	342:07:08:09 6:00:19:08	IH	MIR601	8.00	204.00	32.00
164	THERMAL ATT	342:08:10:01 6:01:21:00	IH	MIR601	277.00	116.00	321.00
165	8282-33H	342:08:42:47 6:01:53:46	IH	MIR601	59.00	222.00	42.00
166	2209-11M	342:09:36:16 6:02:47:15	IH	MIR601	70.00	217.00	352.00
167	-ZLV NOSE SOUTH	342:11:25:01 6:04:36:00	LVLH		180.00	0.00	90.00
168	2189-12M	342:11:59:17 6:05:10:16	IH	MIR601	93.00	310.00	353.00
169	3817-19B	342:12:55:56 6:06:06:55	IH	MIR601	236.00	71.00	330.00
170	6602-13U	342:13:17:00 6:06:28:07	IH	MIR601	48.00	265.00	305.00
171	4503-11M	342:15:50:01 6:09:01:00	IH	MIR601	139.00	195.00	349.00
172	2107-21M	342:17:43:59 6:10:54:58	IH	MIR601	144.00	339.00	311.00
173	8623-14H	342:18:52:37 6:12:03:36	IH	MIR601	206.00	125.00	0.00
174	3218-10H	342:19:35:31 6:12:46:30	LVLH		195.00	330.00	340.00
175	0010-14H GALILEO	342:20:40:18 6:13:51:17	IH	MIR601	214.00	58.00	350.00
176	3218-20H	342:21:06:48 6:14:17:47	IH	MIR601	190.00	317.00	11.00
177	8623-11B	342:22:23:29 6:15:34:20	IH	MIR601	270.00	35.00	64.00
178	4421-22B	342:23:01:06 6:16:12:05	IH	MIR601	114.00	155.00	313.00
179	8282-41B	342:23:50:51 6:17:01:50	IH	MIR601	146.00	106.00	26.00
180	6308-13B	343:00:58:51 6:18:09:50	IH	MIR601	194.00	266.00	60.00
181	5103-21U	343:01:41:27 6:18:52:26	IH	MIR601	107.00	103.00	322.00
182	5107-12U	343:02:32:42 6:19:43:41	IH	MIR601	267.00	253.00	46.00
183	5103-22U	343:03:23:01 6:20:34:00	IH	MIR601	67.00	41.00	321.00
184	9385-13U	343:06:25:17 6:23:36:16	IH	MIR601	67.00	155.00	52.00

TABLE 3-II.- STS-35 AS-FLOWN ATTITUDE TIMELINE (Cont'd)

No.	Comment	Time, G.m.t./ M.E.T.	Mode	Matrix	Attitude		
					Roll	Pitch	Yaw
185	THERMAL RECOVERY	343:07:01:58 7:00:12:49	IH	MIR601	301.00	90.00	314.00
186	9319-18B	343:07:43:40 7:00:54:39	IH	MIR601	20.00	158.00	20.00
187	4518-13M	343:09:05:33 7:02:16:32	IH	MIR601	93.00	172.00	5.00
188	0658-23M	343:10:41:13 7:03:52:12	IH	MIR601	24.00	198.00	353.00
189	0510-19B	343:11:32:09 7:04:43:08	IH	MIR601	340.00	105.00	336:00
190	3888-19B	343:13:12:21 7:06:23:28	IH	MIR601	173.00	284.00	320.00
191	3213-20H	343:13:48:38 7:06:59:29	IH	MIR601	74.00	244.00	284.00
192	6119-11U	343:14:40:22 7:07:51:21	IH	MIR601	78.00	292.00	306.00
193	6308-14B	343:16:13:01 7:09:24:00	IH	MIR601	205.00	304.00	287.00
194	6424-14H	343:16:37:01 7:09:48:00	IH	MIR601	187.00	273.00	351.00
195	6148-11U	343:18:13:32 7:11:24:31	IH	MIR601	55.00	286.00	280.00
196	5105-10U	343:19:06:34 7:12:17:33	IH	MIR601	206.00	316.00	317.00
197	6119-11U	343:19:42:35 7:12:53:34	IH	MIR601	101.00	339.00	290.00
198	2235-12W	343:20:39:58 7:13:50:57	IH	MIR601	205.00	78.00	12.00
199	2217-10W	343:21:56:59 7:15:07:58	IH	MIR601	110.00	137.00	281.00
200	2102-11W	343:22:53:02 7:16:04:01	IH	MIR601	176.00	29.00	25.00
201	6308-15B	343:23:47:07 7:16:58:06	IH	MIR601	346.00	86.00	300.00
202	8101-24B	344:00:14:30 7:17:25:29	IH	MIR601	350.00	241.00	298.00
203	3212-13H	344:01:11:44 7:18:22:43	IH	MIR601	66.00	86.00	307.00
204	1284-50U	344:01:42:01 7:18:53:00	IH	MIR601	47.00	138.00	336.00
205	8303-11U	344:03:19:01 7:20:30:00	IH	MIR601	45.00	341.00	329.00
206	5116-11U	344:04:22:38 7:21:33:37	IH	MIR601	1.00	42.00	327.00
207	3288-11U	344:04:59:38 7:22:10:37	IH	MIR601	64.00	91.00	24.00

TABLE 3-II.- STS-35 AS-FLOWN ATTITUDE TIMELINE (Concluded)

No.	Comment	Time, G.m.t./ M.E.T.	Mode	Matrix	Attitude		
					Roll	Pitch	Yaw
208	DTO 902 START	344:05:55:38 7:23:06:37	LVLH		188.00	250.00	0.00
209	DTO 902 ROT INIT	344:06:01:01 7:23:12:00	ROTR	MIR601	113.00	320.00	44.00
210	DTO 902 ROT STOP	344:06:13:33 7:23:24:32	LVLH		180.00	90.00	0.00
211	7434-11U	344:06:30:57 7:23:41:56	IH	MIR601	28.00	15.00	65.00
212	6216-11U	344:00:04:08 8:01:15:07	IH	MIR601	13.00	156.00	30:00
213	2109-13M	344:09:26:00 8:02:36:59	IH	MIR601	83.00	100.00	2.00
214	3115-11M	344:10:42:50 8:03:53:49	IH	MIR601	339.00	176.00	335.00
215	-ZLV NOSE SOUTH	344:11:59:01 8:05:10:00	LVLH		180.00	0.00	30.00
216	4405-21B	344:12:49:57 8:06:00:56	IH	MIR601	158.00	168.00	336.00
217	8227-31H	344:14:00:53 8:07:11:52	IH	MIR601	280.00	144.00	297.00
218	1112-10H	344:14:45:39 8:07:56:30	IH	MIR601	183.00	227.00	49.00
219	4419-10B	344:15:57:01 8:09:00:00	IH	MIR601	163.00	227.00	19.00
220	8337-10D	344:10:39:01 8:11:50:00	IH	MIR601	280.00	0.00	277.00
221	-ZLV THERMAL	344:19:47:01 8:12:58:00	LVLH		100.00	0.00	70.00
222	INERTIAL HOLD	344:20:33:31 8:13:08:30	IH	MIR601	313.00	78.00	29.00
223	RETURNED TO -ZLV	344:21:05:29 8:14:16:28	LVLH		100.00	0.00	70.00
224	TAIL SUN	345:00:47:01 8:17:50:00	IH	MIR601	45.00	292.00	61.00
225	DEORBIT ALIGN	345:01:57:01 8:19:00:00	IH	MIR601	344.00	321.00	352.00
226	IMU VERIF	345:02:09:01 8:19:20:00	IH	MIR601	15.00	283.00	44.00
227	VERIF - PAIR A1	345:02:16:01 8:19:27:00	IH	MIR601	86.00	192.00	11.00
228	DEORBIT BURN ATT	345:02:30:01 8:19:41:00	IH	MIR601	124.00	120.00	56.00
229	183 ENTRY	345:04:54:22 8:22:05:21	IH	CURI01	285.00	334.36	357.15
230	184 ENTRY	345:05:18:09 8:22:29:00	LVLH		1.09	30.47	358.63

INDEX

Aft Fuselage;
    Gas samples analysis.....1-146
Anomalies,.....2-3
Auxiliary Power Unit Data;
    Serial number.....1-81
    Mission run time.....1-81
    Cumulative run time.....1-81
    Serial no./part no. matrix.....1-84
Astronauts; crew members.....1-6,1-10
    Flight experienced.....1-10
    Total hours flown.....1-10
    Affiliation.....1-10
    EVA Assignments,.....1-108
    flight hours,.....1-6,1-10
    flights flown,.....1-6,1-10
    flight position.....1-6,1-10
Brakes;
    Energies from landing.....1-67
    Maximum pressures.....1-67
Cargo;
    Lift-off weight.....1-16
    Deployed weight.....1-16
    Retrieved weight.....1-16
    Summary,.....1-16,1-19
Crew compartment payloads....1-19 thru 1-56
Crew members 1-6
Data sources,.....1-226
Dates;
    EVA,.....1-108
    ferry flights,.....1-72
    KSC processing,.....1-154
    landing,.....1-2
    launch,.....1-2
Distance;
    cross range,.....1-61
    from threshold;
    MGTD,.....1-64
    NGTD,.....1-64
    Brake initiated,.....1-64
    rollout,.....1-64
Duration;
    EVA,.....1-108
    ferry flight preparations,.....1-72
    flight,.....1-2
    KSC processing,.....1-154
    OMS 1 & 2 burns,.....1-57,1-98
    OMS burns,.....1-98
    rollout,.....1-64
    SRB burns,.....1-159
Electrical energy;
    average power,.....1-87
    average daily energy,.....1-87
    total electrical energy,.....1-87
    Orbiter ground power,.....1-154
Entry;
    Conditions;.....1-61
EVA Summary.....1-108
Events Altering.....1-192
    Mission Duration;
Ferry;
    Departure.....1-72
    Arrival.....1-72
Flight;
    Altitude.....1-2
    Revolutions.....1-2
Fuel Cells;
    Average electrical loads 1-87
    Part no./Serial no. matrix.....1-91
    Run time.....1-87
Getaway Specials (GAS).....1-19 thru 1-56
Launch;
    Date.....1-2
    Site.....1-2
    Time.....1-2
Landing;
    Date.....1-2
    Sink rates.....1-64
    Site.....1-2
    Time.....1-2
    Winds.....1-72
MSFC Element Anomalies,.....2-27
OMRSD File IX Requirements 1-225
OMS;
    burn summary.....1-98
    fuel,.....1-103
    oxidizer,.....1-103
    Propellant usage 1-103
    RCS interconnect,.....1-103
    Serial no. of engines.....1-98
OMS/RCS Pods and Flight Assignments ..1-107
Orbiter Mass Properties
    entry interface,.....1-77
    ferry,.....1-77
    landing,.....1-77
    lift-off,.....1-77
    Mach 3,.....1-77
RMS;
    mass handled,.....1-112
    Usage matrix 1/112
Payloads;
    cargo weight,.....1-16,1-19
    deployed weight,.....1-16,1-19
    retrieved weight,.....1-16
    return weight,.....1-16
Shuttle;
    lift-off,.....1-57
    In-flight anomaly list.....2-1

INDEX

Solid rocket booster;
ignition weight,.....1-159
separation weight,.....1-159
usable propellant,.....1-159
Orbital data;
highest altitude,.....1-2
apogee/perigee after OMS 1 & 2,....1-57
inclination,.....1-2
landing orbit,.....1-2
Orbiter;
names,.....1-1
times flown,.....1-2
tires.....1-94
Part/serial numbers;
Avionics 1-205
APU,.....1-81,1-84
brakes,.....1-67
check valves.....1-223
communications.....1-221
EMU,.....1-108
External tank,.....1-164
fuel cells,.....1-87,1-91
MMU,.....1-108
OMS engines,.....1-98
OMS pods,.....1-98
Propulsion 1-244
RMS,.....1-112
SSME,.....1-168,1-175,1-182, 1-189
Tires,..... 1-94
DPS,.....1-206
GN&C,.....1-211
RCS,.....1-244
Payloads;
Deployable,.....1-19
Attached,.....1-19
Getaway Special,.....1-19
Crew Compartment,.....1-19
Maximum Q during ascent;.....1-57
RCS;
Burn times,.....1-106
Check valve summary.....1-223
Configuration and usage data.....1-106
Component and location
matrix.....1-244,1-247,1-250
RCS/OMS pod assignments 1-107
Runway data .....
Run Time;
APU,.....1-81
fuel cells,.....1-87
EMU,.....1-108
MMU,.....1-108
Satellites;
Names.....1-15,1-19
Weights.....1-15,1-19
Site;
ferry flight stops,.....1-72
landing,.....1-2
launch,.....1-2
Specifications;
Avionics,.....1-203
Temperatures;
Cabin air,.....1-140
FES start out/in,.....1-137
Maximum structural temperature
from entry,.....1-116
Maximum temp rise during entry,...1-120
Radiator freon,.....1-137
Thermal Protection System;
Entry Temperatures.....1-116
Damage,.....1-123
Significant problems,.....1-126
Thrust;
SRB,.....1-159
Time;
ferry departure,.....1-72
ferry arrival,.....1-72
Time,G.m.t.;
landing,.....1-2
main gear TD,.....1-72
nose gear TD,.....1-72
wheels stop,.....1-72
launch,.....1-2
Time, MET;
ABS start,.....1-134
ET separation,.....1-53
FES start,.....1-137
MECO,.....1-57
OMS Ignition,.....1-57
PLBD open,.....1-137
Radiator deploy,.....1-137
Radiator flow start,.....1-137
Time, MET (Cont'd)
SRB separation,.....1-57
SSME:
maximum throttle, 1-168, 1-175,
1-182
maximum g throttle,.....1-168, 1-175
1-182
re-attained maximum throttle,.1-168,
1-175, 1-182
3g throttle,. 1-161, 1-175, 1-182
Timelines;
Mission,.....3-1,3-2
Tires;
Part nos., and usage matrix.....1-94

Velocity;
Orbiter:
approach and landing;
brake initiation,keas,.....1-64
MGTD,kgs,.....1-61
MGTD,keas,.....1-64
maximum,keas,.....1-61
NGTD,kgs,.....1-64
over threshold,keas,.....1-61
pitch rate,deg/sec,.....1-64
sink rate,fps,.....1-64
entry interface,fps,.....1-61
ET sep,fps;.....1-57
first roll reversal,fps;.....1-61
MECO,fps;.....1-57
SRB sep,fps;.....1-57
Waste;
dumps,.....1-143
Water;
crew use, lb,.....1-143
dumped, lb,.....1-143
fuel cell production,lb,.....1-143
FES Usage,.....1-137
Weights;
External tank
LH_2;
engine start command,.....1-164
MECO,.....1-164
residual,.....1-164
T-0,.....1-164
LO_2;
engine start command,.....1-164
MECO,.....1-164
residual,.....1-164
T-0,.....1-164
Impact after entry.....1-164
SRB;
burn time.....1-159
ignition characteristics.....1-159
separation data.....1-159
Wind, landing;
direction,.....1-72
speed,.....1-72
Windloads;
topload indicator,.....1-57
Window;
damage location.....1-130
disposition,.....1-130
Work Unit Code;
listing,.....2-2

*U.S.GOVERNMENT PRINTING OFFICE:1991-561-057/20106

NASA Hqs.
M/W. Lenoir
M/G. W. S. Abbey
M/R. Crippen
M/L. Stern
MC/C. M. Lee
MCF/W. Green
ME/K. Hudkins
ME/ R. Lopez
ME/W. Huning
ME/D. L. Winterhalter
ME/N. Frandsen
MEO/L. Sirota
MEO/R. Segert
MEO/K. Ulrich
MI/W. Hamby
MO/G. Krier
MO/E. Oliver
MO/H. Smith
MO/G. Ulrich
MOJ/C. F. Perry
MOL/O. T. Bumgardner
MP/H. T. Staples
Q/D. Greenly
QD/S. Dignan (2)
Q1/G. L. Roth (3)
QSS/J. McDevitt
R/A. D. Aldrich
S/R. H. Kohrs
SS/R. W. Moorehead

JSC
AB/P. J. Weitz
AC5/ J. W. Young
AP/ H. S. Stall
AP/D. Ward
AP3/J. E. Riley (15)
AP3/K. Fluegel
AP4/C. Biggs
AT/J. P. Loftus
BY4/J. Kovacevich
CA/D. R. Puddy
CA/J. Williams
CA3/M. Pestana
CB/D. C. Brandenstein (10)
CB/F. E. Gregory
CB/L. B. Hammond
CB/M. Cleave
CB/V. D. Brand
CB/R. L. Gibson
CB/W. B. D. Jones
CB/C. Hieb
CB/C. Meade
CB/S. Oswald
CB/K. Colgan
CB/L. J. Shriver
CB/W. M. Shepherd
CB/W. F. Readdy
CB6/J. Apt
CC5/C. F. Hayes (3)
DA/Library
DA2/T. W. Holloway
DA8/Library
DA8/J. Bantle
DA8/P. Maley
DA8/R. D. Legler
DA8/E. M. Henderson
DE2/T. L. Borrer
DF/J. Knight (3)
DF/Library
DF/R. N. Fitts
DF/R. Jackson
DF2/H. Clancy
DF22/M. D. Erminger (2)
DF24/R. Rodriguez
DF24/M. Williams-Smith
DF4/P. Dye
DF6/H. Dutton
DF7/J. E. Saultz
DF7/P. J. Cerna
DG/J. A. Wegener
DG47/Sim Supervisors (2)
DG48/M. Truly
DG6/R. D. Dell'Osso
DG66/J. Sims
DH4/J. Whiteley
DH6/R. Kellogg (2)
DH6/Library
DH6/A. J. Burge
DK/K. W. Russell
DM/J. C. Harpold
DM2/P. Collector
DM2/Library
DM2/M. Lewis
DM2/J. Oberg
DM3/R. Rojas
DM3/J. Crowley
DT/F. E. Hughes
DT2/M. Ciskowski
DT3/B. Pearson
EA/H. Pohl
EA/M. Engert
EA/E. S. Chevers
EA/P. M. Deans
EC/W. E. Ellis
EC/C. E. Whitsett
EC3/E. Winkler
EC3/D. F. Hughes
EC3/H. J. Brasseaux, Jr.
EC3/H. Rotter (2)
EC3/F. Ouellette
EC3/D. M. Hoy
EC5/H. Green
EC5/W. B. Wood
EC5/R. J. Marak
EC5/C. H. Seaman
EC6/B. Counts
EC6/B. Sauser
EC6/G. Lutz
EC7/L. A. Trevino
EE/L. Leonard
EE/R. W. Richards
EE/C. L. Ritterhouse
EE/C. K. Land
EE2/G. Nealis
EE2/E. L. Burrell
EE2/K. D. McLain
EE2/B. C. Embrey
EE2/L. R. Sutton
EE3/R. W. Armstrong
EE3/N. A. Olson
EE3/W. W. Seibert
EE3/P. E. Shack
EE3/A. W. Steiner
EE6/J. W. Griffin
EE6/R. W. Nuss
EE7/M. D. Schmalz
EE7/B. K. Vermillion
EE8/S. E. Davidson
EG/K. Cox
EG/P. C. Kramer
EG2/M. M. Hammerschmidt
EG2/H. G. Law, III
EG2/R. W. Loffi
EG2/E. T. Kubiak
EG2/K. L. Lindsay
EG2/V. M. Levy
EG2/G. G. McSwain
EG2/L. B. McWhorter
EG2/L. Bains
EG2/N. C. Smith
EG3/D. Kanipe
EG3/R. L. Barton
EG3/P. O. Romere
EG3/S. Derry
EG3/S. W. Millard
EG3/R. Meyerson
EG4/I. Saulietis
EG4/W. L. Jackson
EG4/M. E. Jones
EK/P. E. Sollock
EK5/K. W. Dunn
EK5/W. N. Trahan
EK5/K. F. Kindt
EK5/R. I. Macias
EK5/J. D. Miller
EK5/A. T. Heimer
EK6/J. F. Melugin
EK6/R. M. Williams
EP/C. Vaughn
EP/R. M. Egusquiza
EP2/H. J. Brasseaux
EP2/P. E. Cota
EP2/J. Seriale-Grush
EP2/S. Jones
EP2/J. C. Hooper
EP2/L. Jenkins (2)
EP2/D. Rigby
EP2/F. M. Plauche'
EP2/W. Scott
EP2/R. Kowalski
EP4/R. S. Baird
EP5/F. Alanis
EP5/W. C. Hoffman
EP5/N. Faget
ER2/A. E. Brandli
ES/D. C. Wade
ES12/W. G. McMullen
ES2/K. Edelstein
ES2/A. Levine
ES2/G. J. Miller (2)
ES2/C. T. Modlin
ES2/T. E. Pelischek
ES2/G. Overstreet
ES2/K. Nagy
ES2/P. D. Smith
ES23/S. Weiss
ES3/R. G. Brown
ES3/D. Curry
ES3/C. Ortiz
ES3/D. Tillian
ES3/J. A. Smith
ES3/P. Serna
ES3/J. Janney
ES4/D. A. Hamilton
ES5/S. Jacobs
ES5/G. M. Ecord
ES5/L. J. Leger
ES5/K. Albyn
ES6/W. R. Acres
ES6/N. R. Gonzalez
ES6/C. W. Norris
ET12/D. E. Tadlock
ET12/S. Snipes
ET2/C. Teixeira
GA/L. S. Nicholson
GR5/G. Germany
GK-5/Z. Byrns
GM/D. C. Shultz
ID3/M. K. Hendrix
ID3/E. W. Tiedt
ID3/R. L. Giesecke
ID3/R. R. Richard
ID3/R. L. Spann
JM2/Technical Library (2)
KA/J. Aaron
KM3/L. Arnim
MER-30/Library
MJ/T. R. Loe
MJ-DDMS/J. Larson
MJ/R. Kirby
MJ/G. Wilson
NA/C. S. Harlan
NA/M. E. Merrell
NA/G. A. Fielder
NB/D. L. Duston
ND/M. C. Perry
ND23/B. J. Fontenot
NS/D. W. Whittle
NS5/W. V. Bates
PA/R. L. Berry
SD2/Library (2)
SN15/D. Pitts
SN4/SSEOP/R. Nelson
SP/F. A. McAllister
SP3/M. W. Hix
SP3/J. T. Jackson
SP3/R. C. Malone
SP3/C. D. Wheelwright
SP4/J. W. Bohannon
SP4/R. L. Bond
SP4/R. Garcia
SP4/P. T. Mongan
SP4/T. A. Pletcher
SP4/J. H. Ragan
SP4/T. W. Rathjen
SP4/J. B. Thomas
SP4/L. Vazquez
SP4/F. A. Pearce
SP4/H. D. Yeates
SP5/J. O. Rippey
SP5/H. L. Roberts
TA/C. H. Lambert
TC/D. S. Grissom (17)
TC12/Customer Service (2)
TC2/G. Kenney
TC4/J. O'Loughlin
TJ/L. E. Bell
TJ2/G. Sandars
TM/E. W. Hoskins
TM2/G. Nield
TM4/R. W. Matthews
TM4/S. Hutchins
TM4/L. Pogue
VA/D. M. Germany
VA/J. C. Boykin
VA/G. Coultas
VE/P. Glynn
VE3/J. Norris
VE3/M. C. Coody (6)
VE4/W. H. Taylor (7)
VE5/J. R. Goodman
VF/D. W. Camp
VF/E. R. Hischke
VF2/W. Gaylor
VF2/O. C. Critzos (2)
VF3/D. W. Camp (12)
VF5/D. T. Hamilton
VG/F. Littleton (6)
VG/R. Burghduff
VG2/L. C. Moore
VG3/H. L. Hernandez
VG3/L. J. Moon
VN/L. O. Corcoran
VP/C. E. McCullough
VP/F. T. Burns
VP4/H. J. McMann
VP12/J. Peck
VP12/D. Fitts
VR/D. D. Ewart

For additions, deletions or changes to this list, contact R. W. Fricke, VF4, extension 33313, FTS 525-3313

PRECEDING PAGE BLANK NOT FILMED