NASA

E³

Energy Efficient Engine Flight Propulsion System Preliminary Design Review

November 20, 21, 1978

Executive Summary

M.C. Hemsworth

Aircraft Engine Group
Cincinnati, Ohio

GENERAL ELECTRIC

FPS PDR Agenda

- Introduction
- Engine Description
- Emissions
- Performance
- Performance Retention
- Noise
- Commercial Design
- Aircraft/Engine Integration
- Development Program

E067

PRECEDING PAGE BLANK NOT FILMED

Program Objectives

Develop and Demonstrate the Technology Base for Achieving Higher Thermodynamic and Propulsive Efficiencies in Future Commercial Turbofan Engines

- **Provide Preliminary Design of Flight Propulsion System (FPS)**
- **Develop Components and Technology**
- **Integrate Components Into a Core Test**
- **Integrate Components Into a Core/Low-Spool Test (ICLS)**

E068

NASA E^3 Goals

- Installed SFC
  - $\bar{>}$12% Improvement Over CF6-50C at Mach 0.8, 35K, MxCr
- Direct Operating Cost
  - $\bar{>}$5% Improvement Over a Scaled CF6-50C Same Adv. Aircraft
- Noise
  - Meet FAR-Part 36 (March 1978) Provision for Engine Growth
- Emissions
  - Meet EPA ~~Proposed~~ January 81 Standards

CO	3 lb per 1000 lb Thrust-hr per Cycle
UHC	0.4 lb per 1000 lb Thrust-hr per Cycle
NOx	3 lb per 1000 lb Thrust-hr per Cycle
Smoke	20 SAE-SN

- SFC Deterioration < 0.5 of CF6-50C
- Commercial Design Practices

E069

NASA/GE PROGRAMS CONTRIBUTING TO DESIGN

QCSEE – COMPOSITE NACELLES

EXP. CLEAN COMBUSTOR PROGRAM

FADEC – DIGITAL CONTROLS

GE/NASA Background Studies for

E^3 Cycle Selection

1974-75	STEDLEC	— Overall Pressure Ratio Selection at 38:1 Mixed-Exhaust
1975-76	AMAC	— Selection of 10 Stage 23:1 Compressor — 2 Stage HPT
1975-76	USTEDLEC	— Studies of Unconventional Engines
1977	Energy Efficient Engine	— Fan Pressure & Bypass Ratio & Configuration — Thrust Sizing (Scalable)

E070

E^3 FPS Major Characteristics

	FPS
Takeoff Thrust, Pounds	36,500
Cycle Pressure Ratio, MxCl	38
Bypass Ratio, MxCl	6.8
Fan Pressure Ratio, MxCl	1.65
Turbine Rotor Inlet Temperature	
SLS/86°F Day T/O, °F	2450
Redline, °F	2590
35K/.8 Mp/Std. Day MxCr, °F	2170
SFC, MxCr, Bare Engine	0.542
SFC, MxCr, Installed	0.571
Weight — Bare Engine, lbs	7250
Weight — Installed Engine, lbs	9000

Energy Efficient Engine

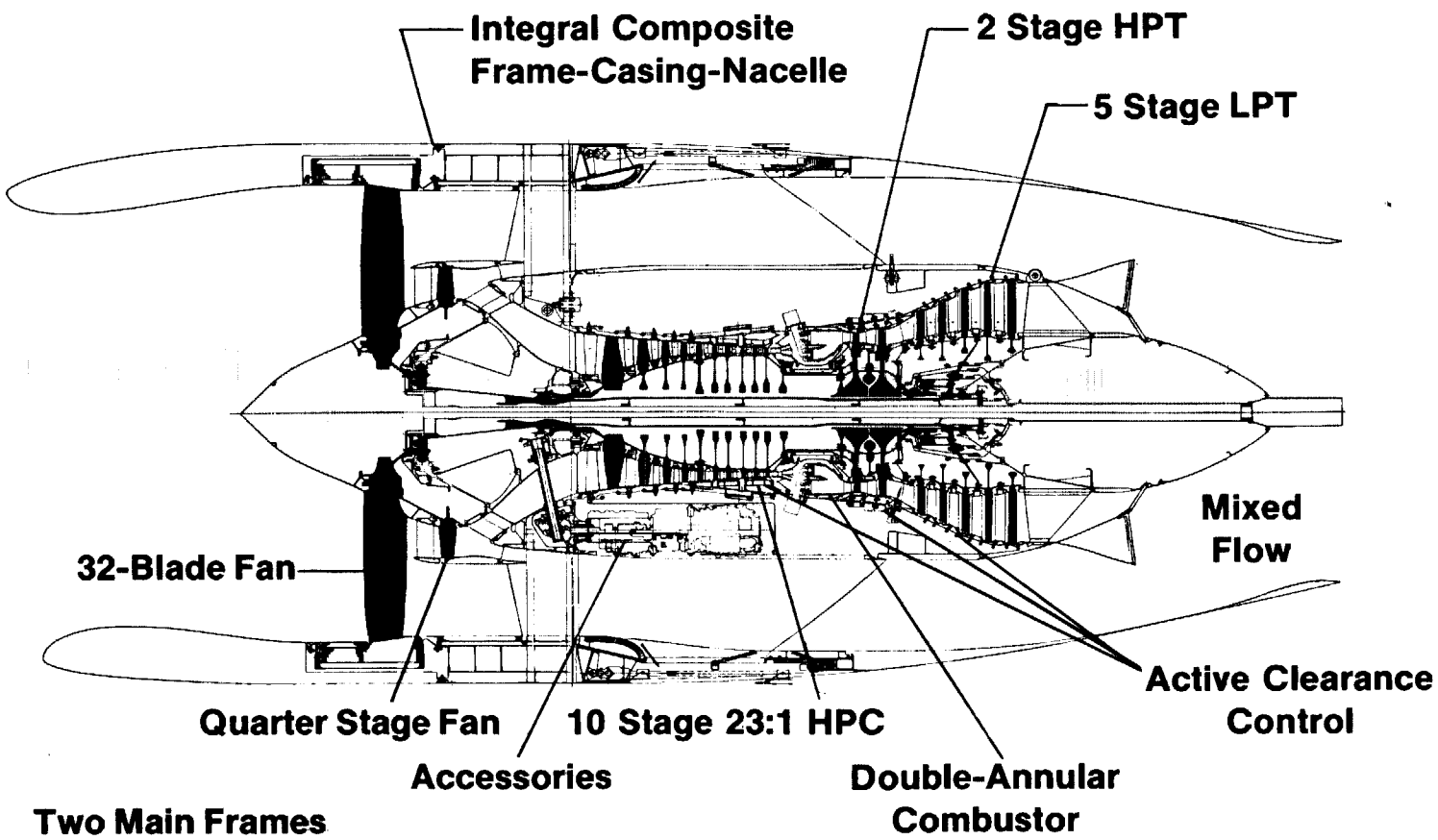

E072

E^3/Reference Engine Comparison

E^3 Engine

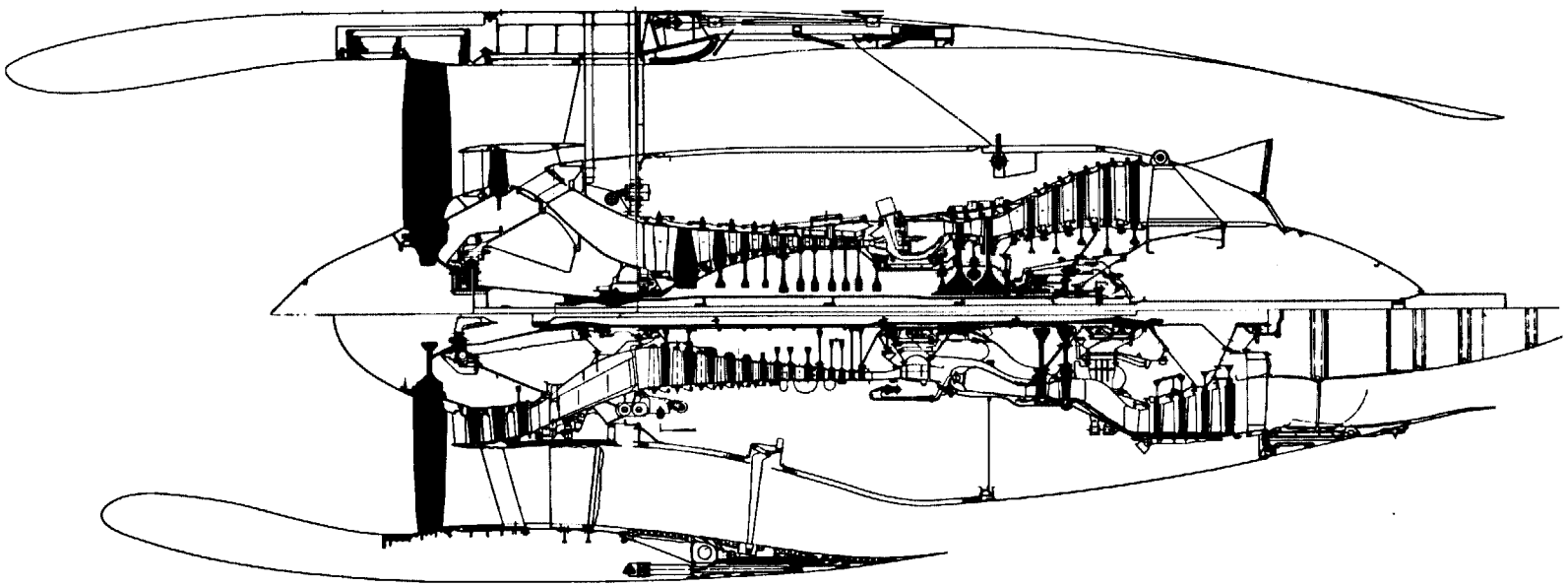

CF6-50C Reference Engine
(Scaled to E^3 MxCl Thrust)

E073

Comparison of E^3 to Reference CF6-50C

	CF6-50C	FPS PDR
Cycle Pressure Ratio, MxCl	32	38
Bypass Ratio, MxCl	4.2	6.8
Fan Pressure Ratio, MxCl	1.76	1.65
Turbine Rotor Inlet Temperature		
SKS/86°F Day T/O, °F	2445	2450
Redline, °F	2625	2590
35K/.8 Mp/Std. Day MxCr, °F	2000	2170
SFC, 35K/.8M MxCr, %	Base	-14.2
Fully Installed, %	Base	-14.6
(Nominal Cust. Bld. & HP)		
Weight, Installed	9860	9000
(50C Scaled to E^3 MxCl Thrust)		

Comparison of E^3 FPS with CF6-50C

- Advanced Cycle
- Advanced Technology Components
- Improved Component Efficiencies
- Short Engine
- Fewer Frames and Bearings
- Mixed Flow Nacelle
- Integrated Engine/Nacelle Structure
- Advanced Materials and Processes
- Fewer Airfoils
- Full Authority Digital Control

E075

Description and Advanced Materials

- Integrated Nacelle
- Thrust Reverser
- Fan
- HP Compressor
- Combustor/Emissions
- HP Turbine
- LP Turbine
- Mixer
- Controls
- FPS PDR — Proposal Comparison

E076

Energy Efficient Engine

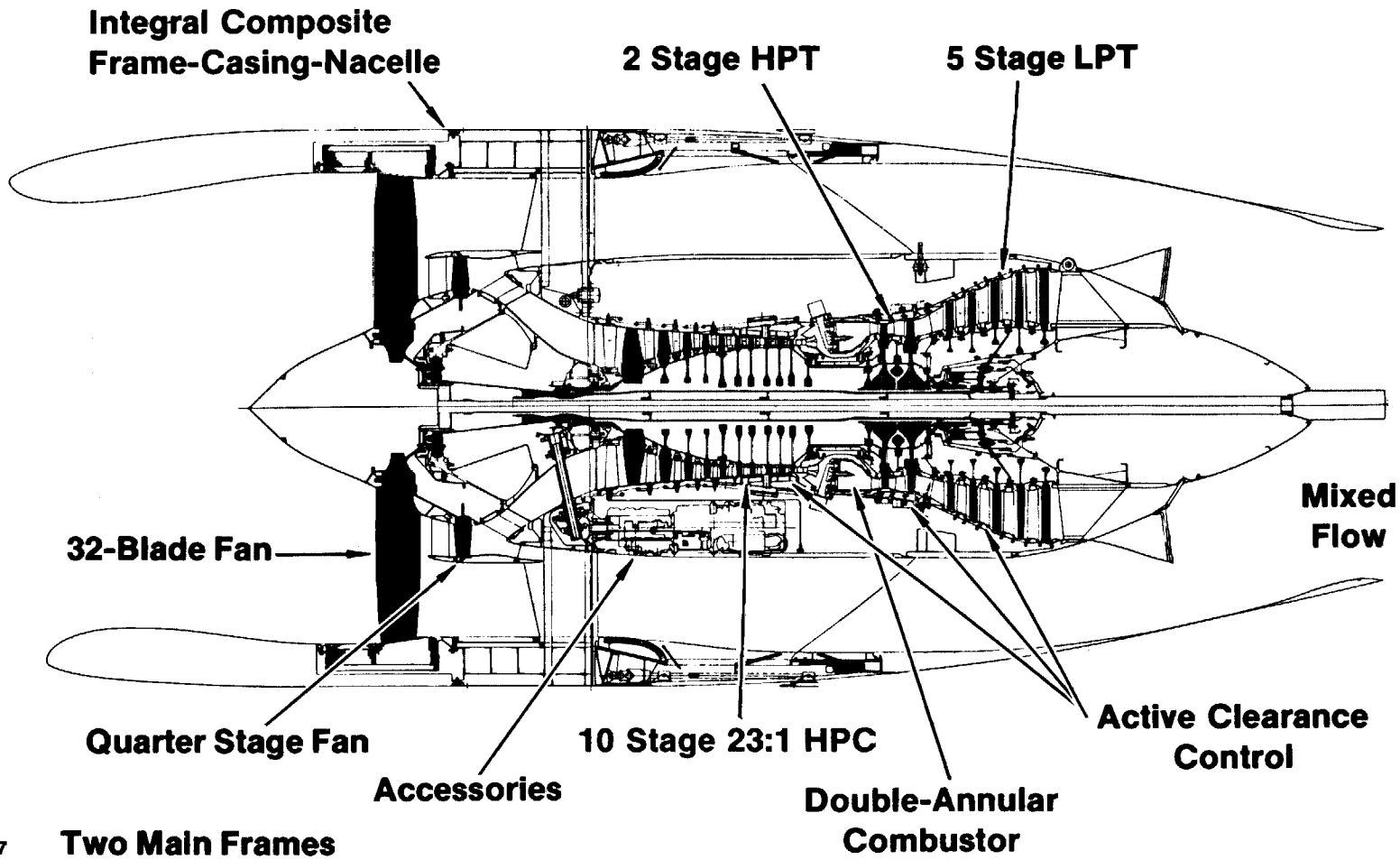

E077

E^3 Installation and Nacelle

- Composite Structure Inlet, Thrust Reverser, and Afterbody
- Kevlar/Steel Containment
- Integrated Structure/Bulk Absorber Acoustic Treatment
- Thin Nacelle
- Core Mounted Accessories
- Fan Reverser Entirely in Outer Cowl
- Core Thrust Spoiling
- Engine Mounting to Minimize Thrust, Maneuver, and Cowl Aero Load Deflection

E078

Nacelle General Arrangement

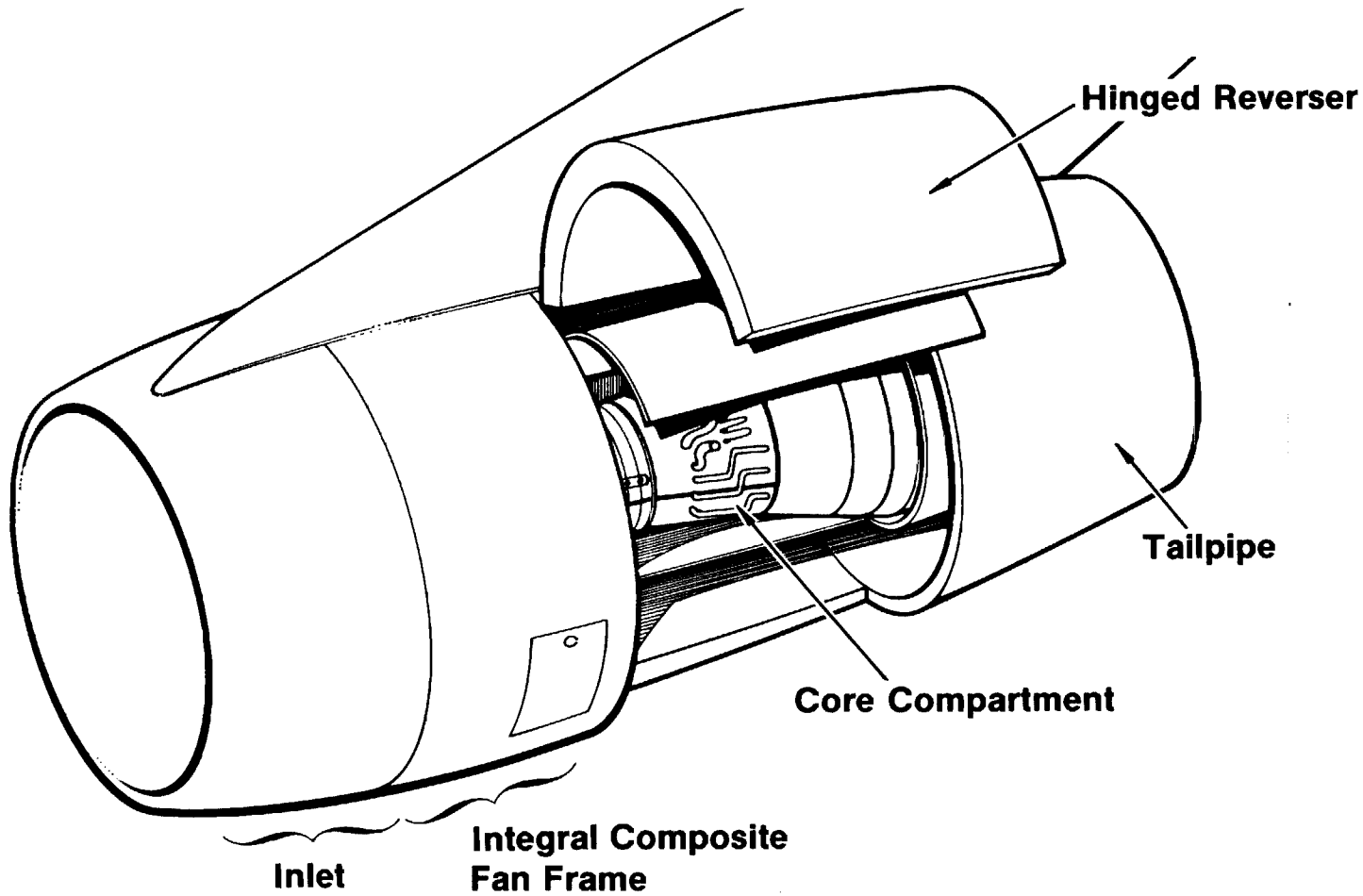

E079

Front mount – vert., side, & F loads

Back mount – vert & side on front part; vert. on back part. (A redundancy which is being changed.)

E^3 Nacelle

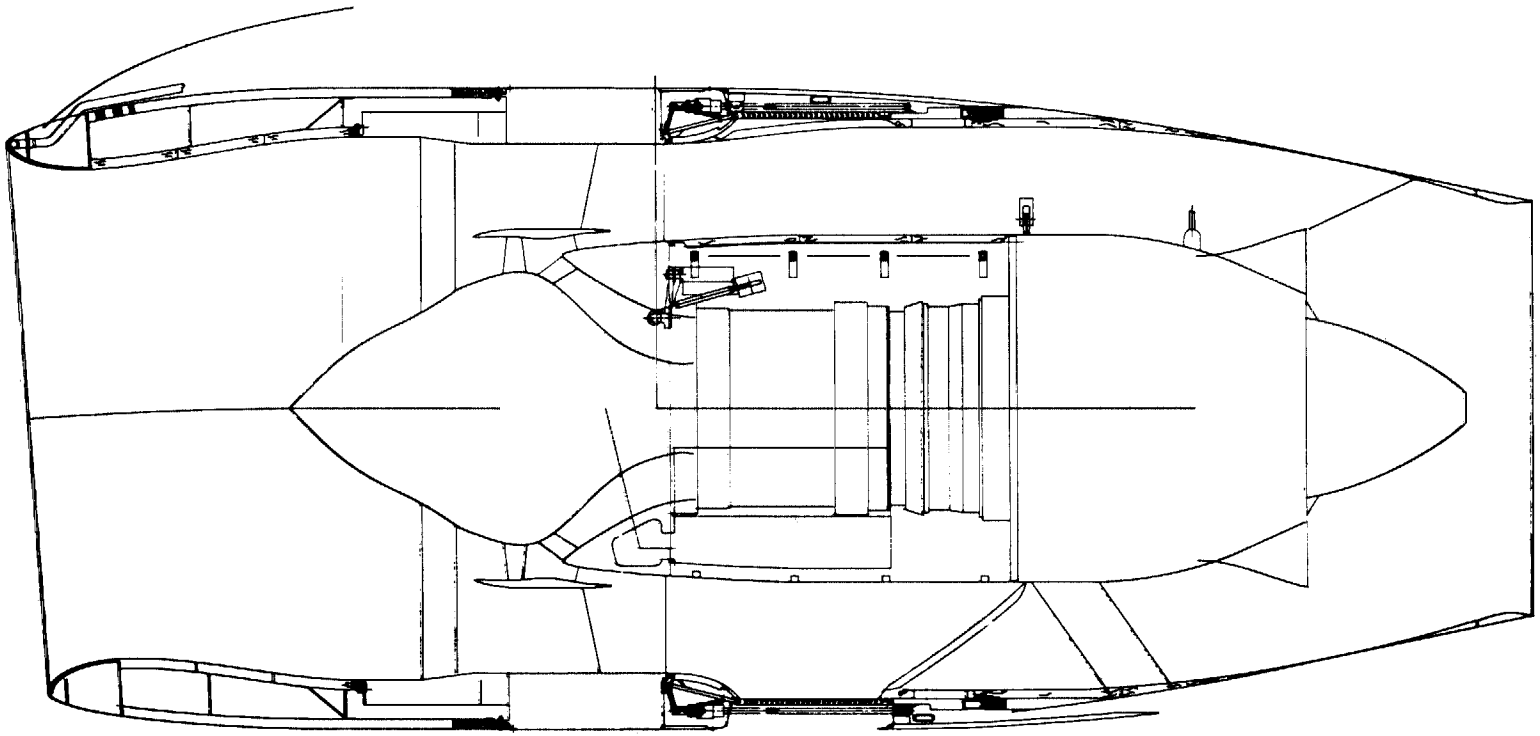

E080

Engine Reverse Thrust Comparison

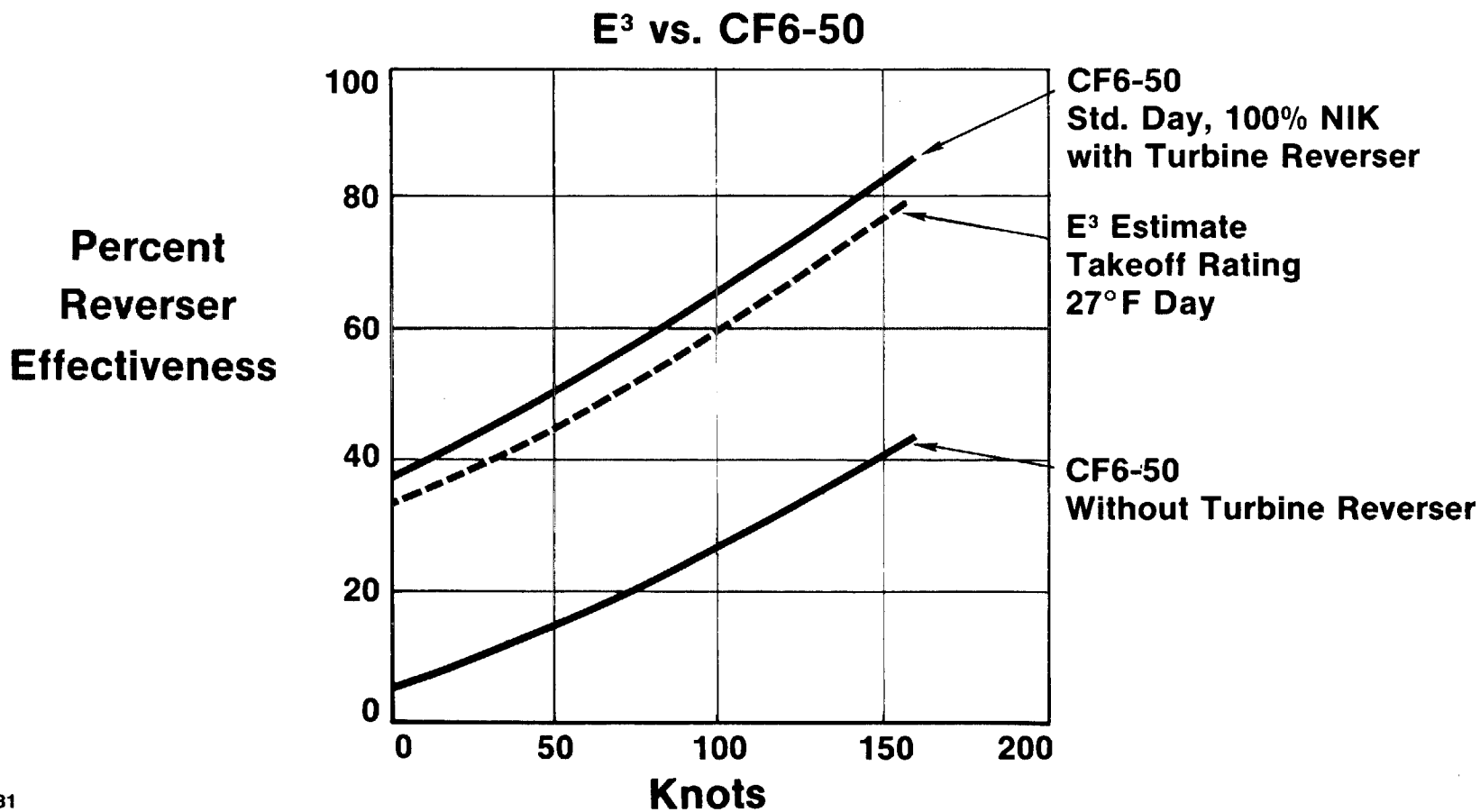

E081

Advanced or Development Materials

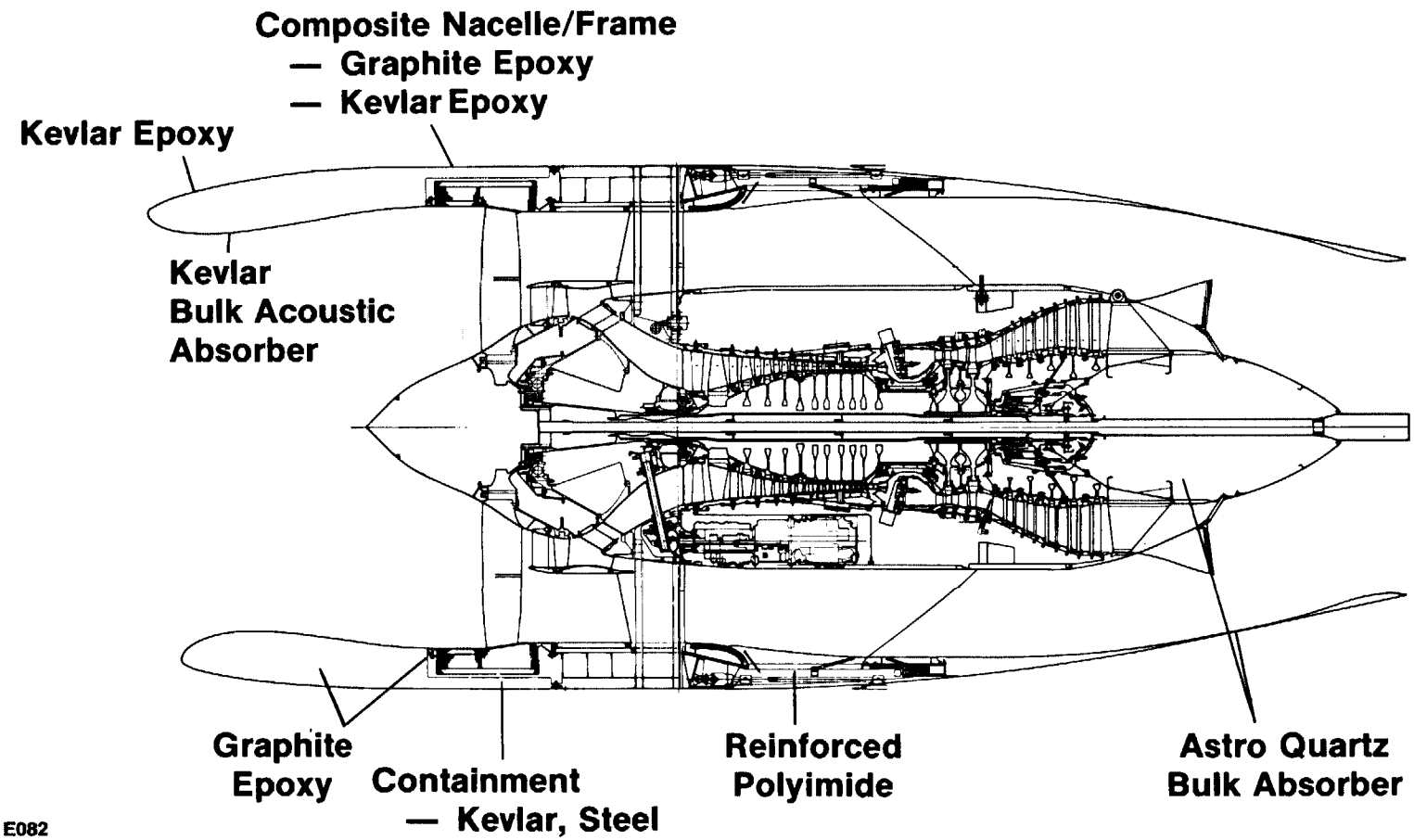

E082

FPS Cycle Component Adiabatic Efficiencies

Component	Max. Cruise
• Fan Bypass	.887
• Fan Hub	.892
• Compressor	.861
• Combustor	.995
• HPT	.924
• LPT (Includes HP/LP Duct Loss)	.917
• Mixing Effectiveness	.75

E083

Core Compressor Selection

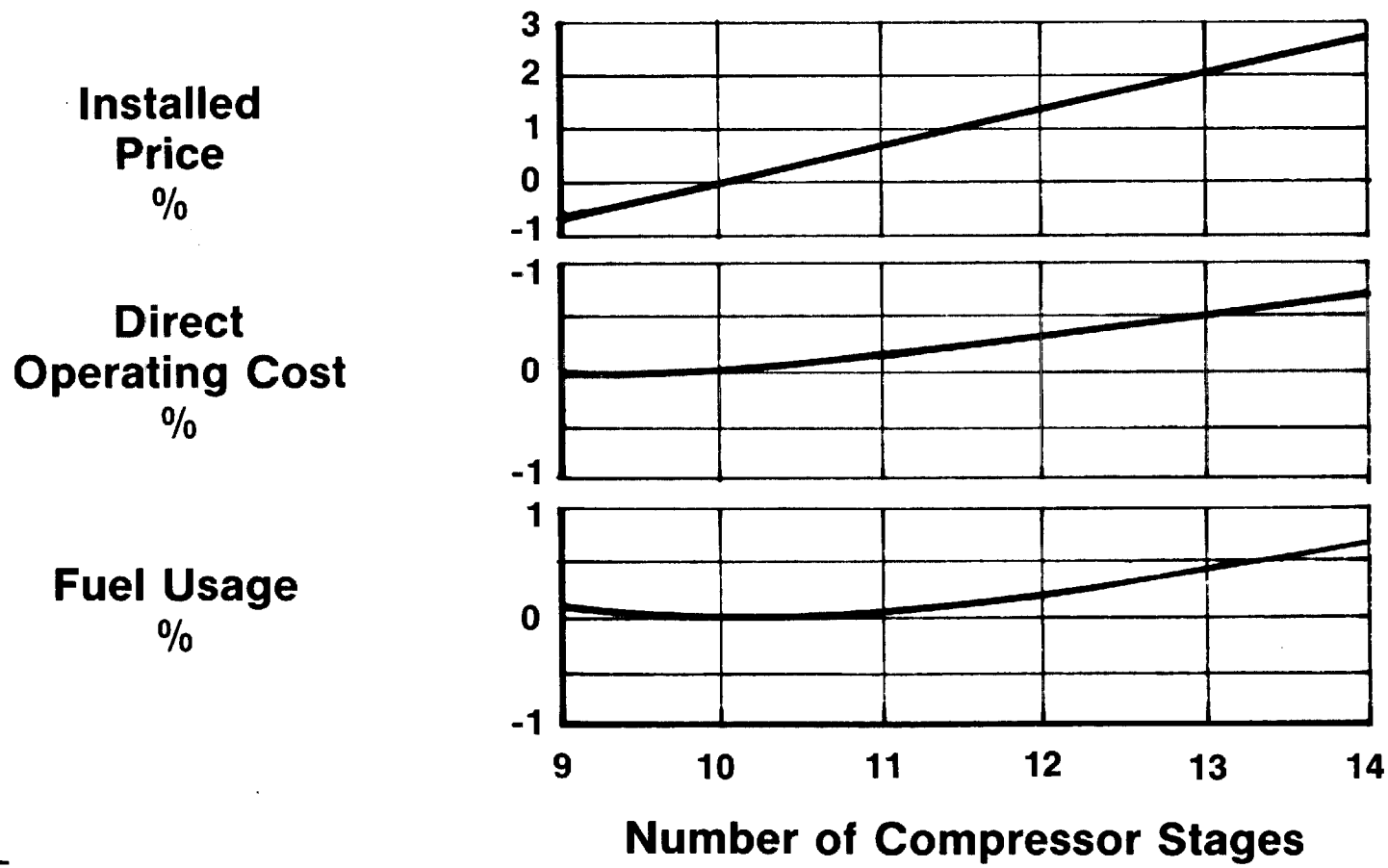

E^3 Fan

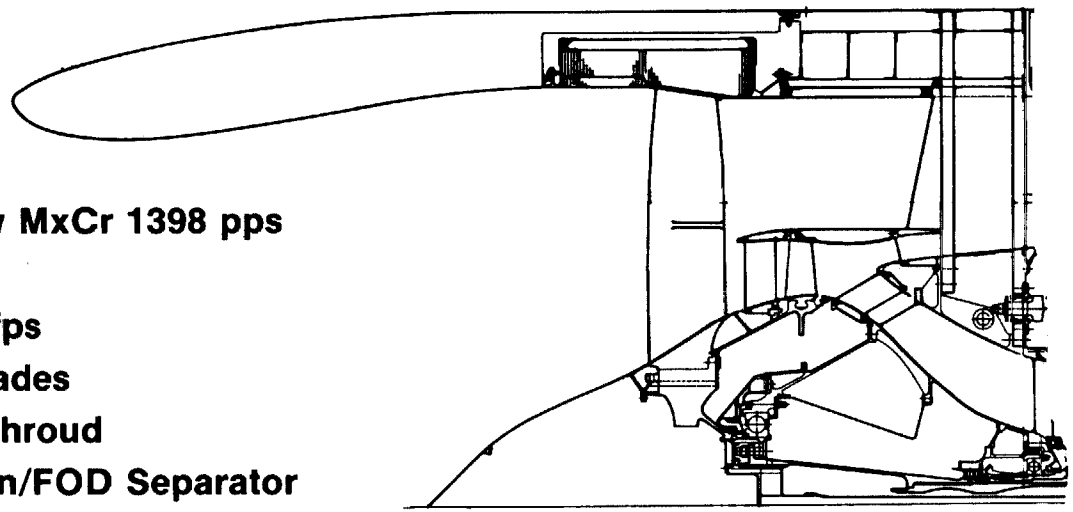

- Corrected Airflow MxCr 1398 pps
- 32 Ti Blades
- Tip Speed, 1315 fps
- Bird Resistant Blades
- Lower Mid Span Shroud
- Quarter Stage Fan/FOD Separator
- Metal/Kevlar Containment
- Integral Composite Stator/Frame
- Efficiency at MxCr
  - — Fan Bypass 0.887
  - — Fan Hub 0.892

E085

E^3 Alternate Fan Study

Objective: Best Balance for Future Commercial Engine

- SFC
- Initial Cost
- Direct Operating Cost
- Weight
- Durability

E086

Scope of Alternate Fan Study

- E^3 Proposal — Base, 38 Blades, 70% Span Shroud, Booster
- 38 Blades — No Booster, 70% Span Shroud
- 28 Blades — Pin Root, No Booster, Solid & Hollow Blades
- 32 Blades — With Booster, 50% Span Shroud
- 32 Blades — No Booster, 50% Span Shroud
- 20 Blades — No Shroud, No Booster, Hollow Blades

E087

32-Blade/Booster Fan vs. Baseline

- 0.5% Improvement in Fan Efficiency
- Improved Bird Ingestion Characteristics
- 3.0% Improvement in Stall Margin
- ~5% Reduced Cost
- Improved Adaptability to Future Lightweight Blade
- 0.5 EPNdB Increase in System Noise
- 100 lbs Weight Penalty for Solid Blades
- 0.06% Improvement in Δ DOC
- 0.3% Improvement in Δ SFC

E088

T_i - first 7 stages

FPS - var. stators in first 4 stages (+ IGV) as shown
ICCS - var. stators in first 6 stages (+ IGV) for testing flexibility.

Core Compressor Selection

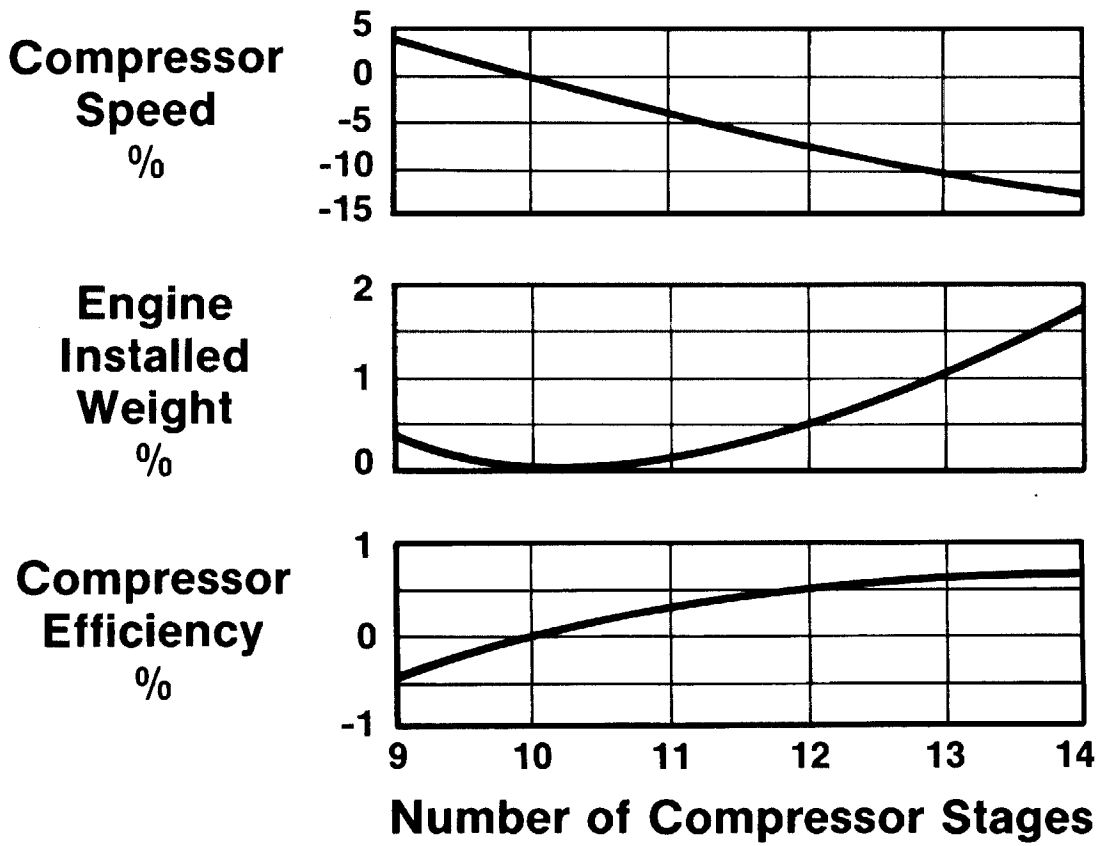

E088A

E^3 — CF6-50C Compressor Comparison

Parameter	E^3
Pressure Ratio — MxCl	23
Number of Stages	10
Corrected Airflow, pps — MxCr	118
ΔT (Work)/Stage, °F	89
Adiabatic Efficiency, °F — MxCr	86.1
Polytropic Efficiency, °F — MxCr	90.6

E089

Turbine cooling air comes from inside of split diffuser. This permits using midline compressor discharge air which is ~ 40-50°F cooler than air at the wall.

HP Compressor Tip Speed Comparison

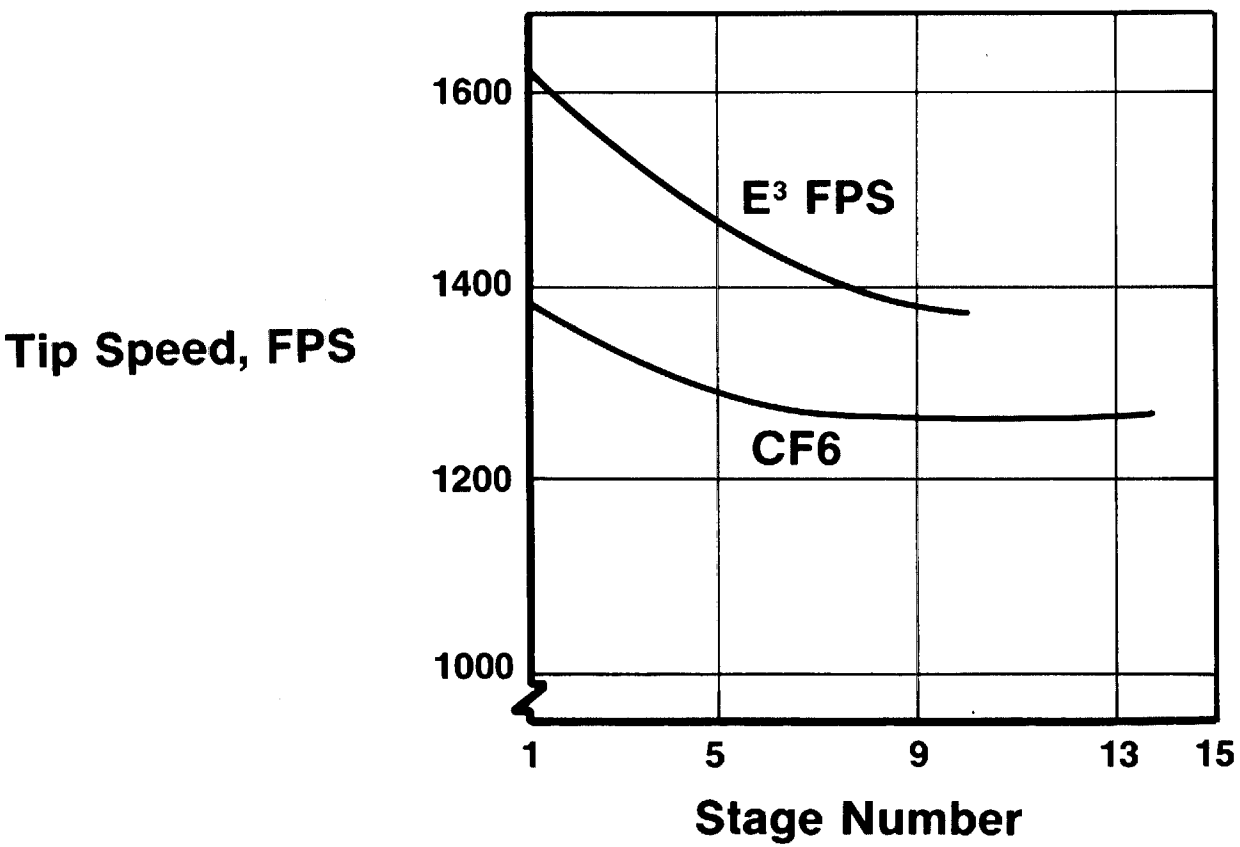

E090

HP Compressor Aspect Ratio Comparison

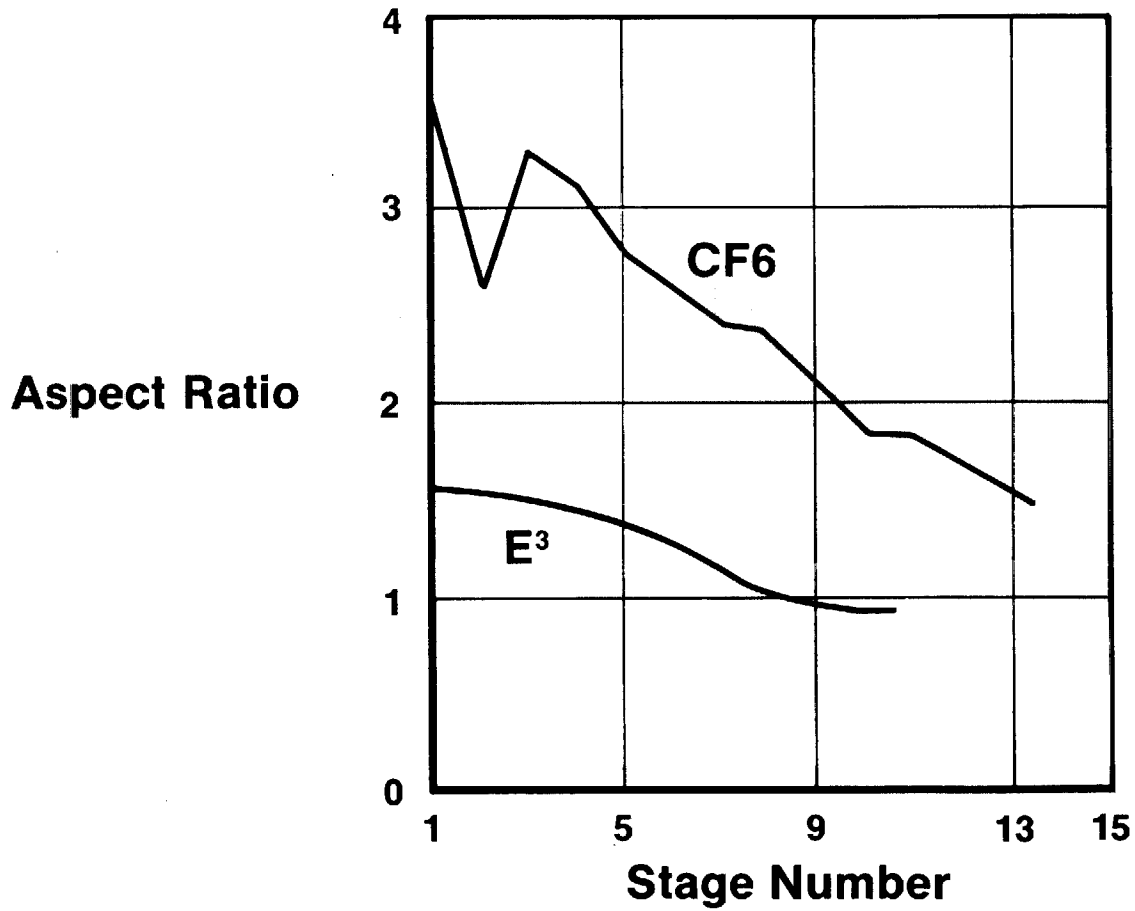

E091

E^3 High Pressure Compressor

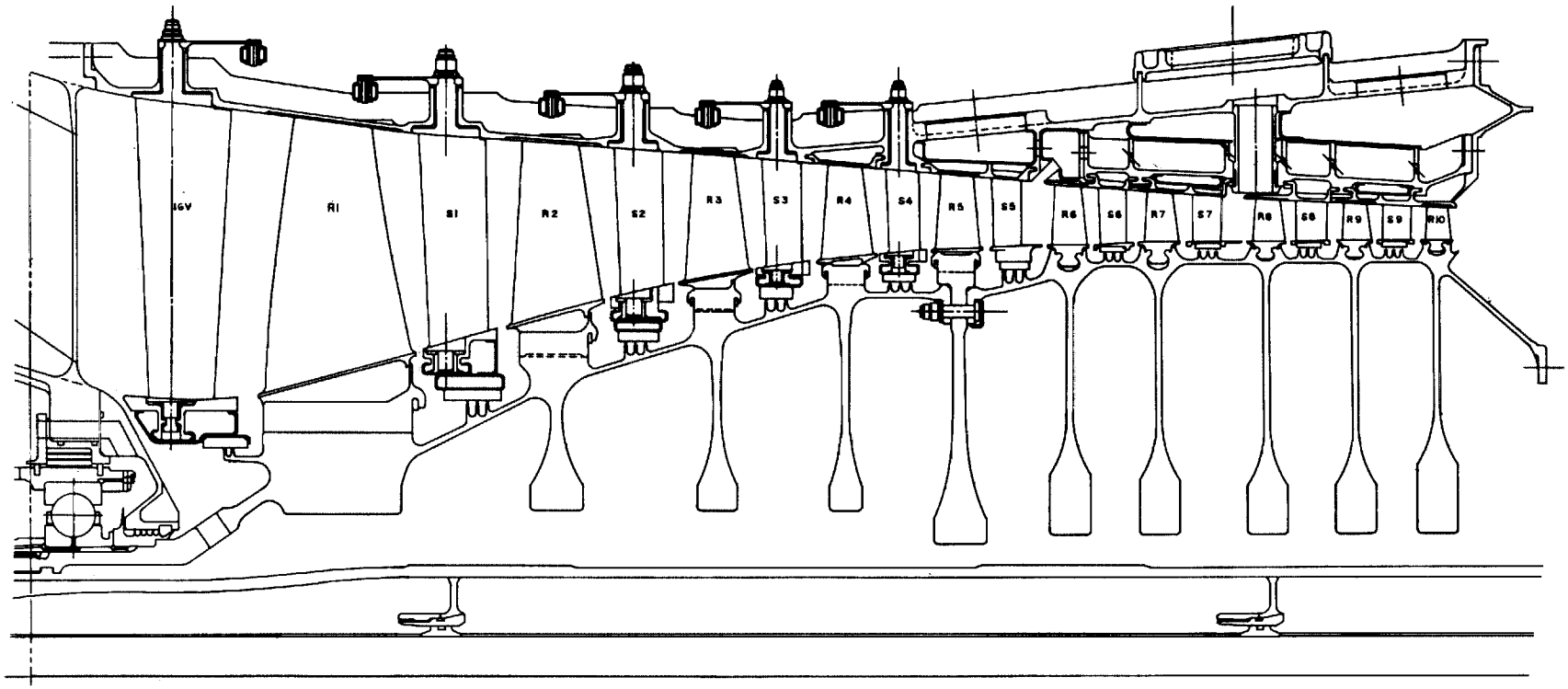

- 10 Stage, 23:1 PR
- Low Aspect Ratio, Rugged Blades
- Steel Casing
- Digital Control of Variable Stators
- Active Clearance Control Stages 6-10

E092

These chart are from AMAC studies.

E^3 Combustor

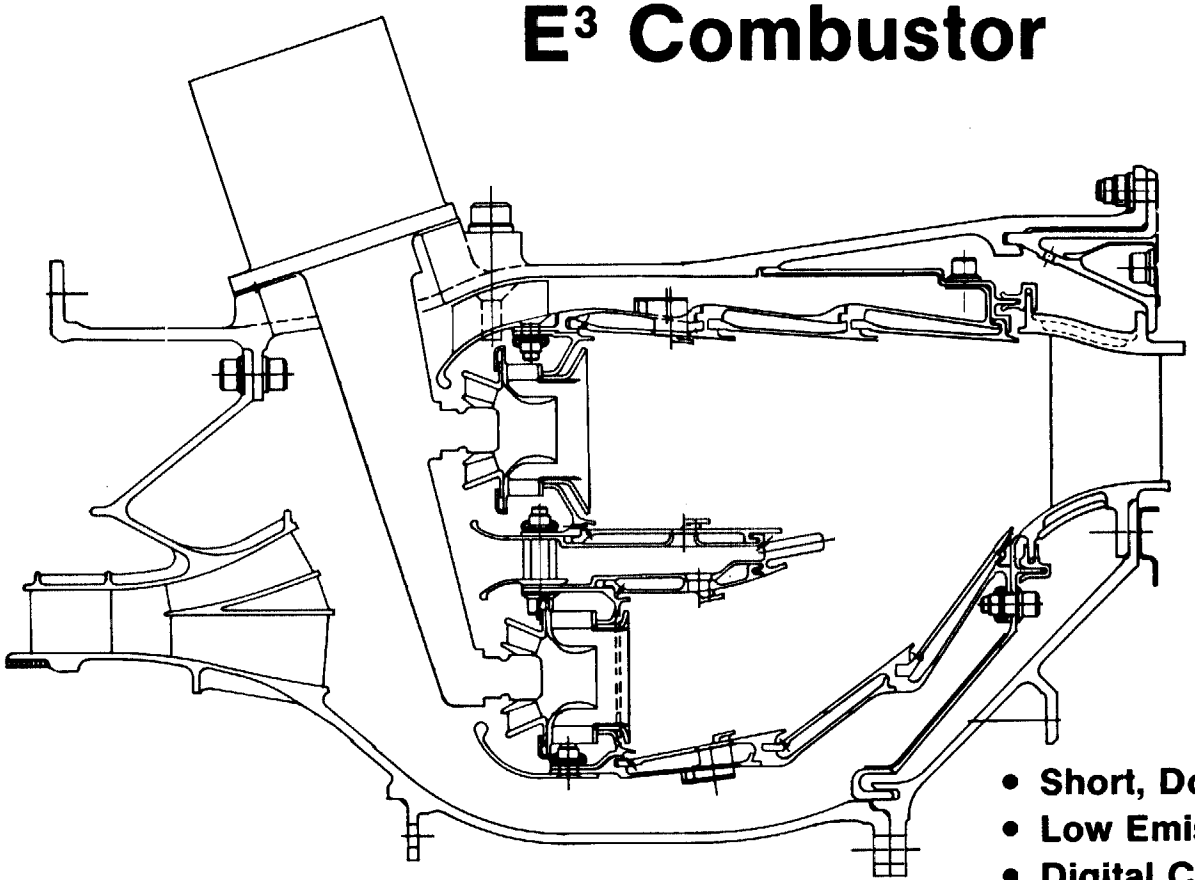

- Short, Double Annular
- Low Emissions
- Digital Control Staging
- Improved NASA ECCP Design
- Shingle Liner
- Advanced Diffuser

E093

Emissions

E094

E^3 Double Annular Combustor

Predicted Emission Characteristics

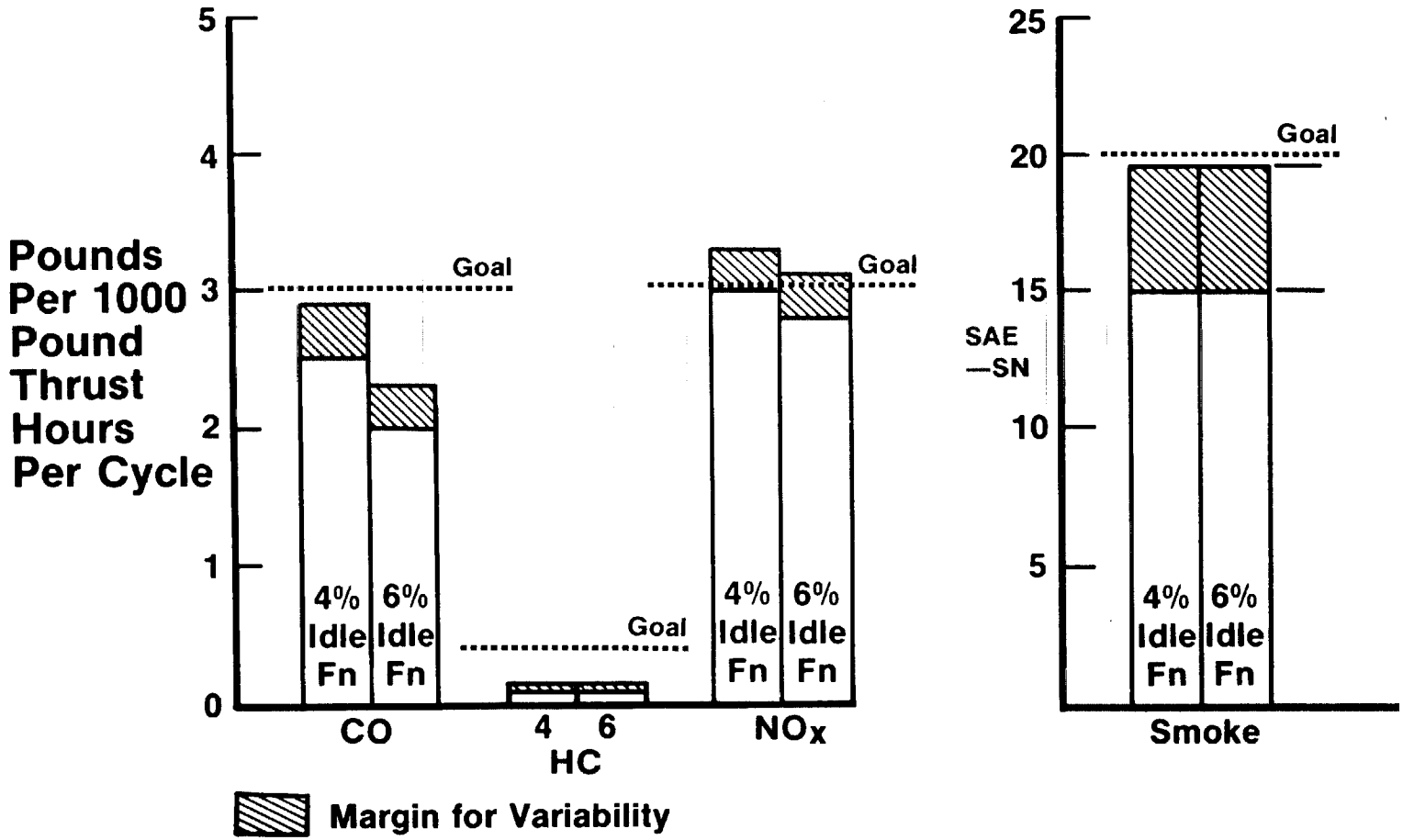

E095

Single Annular Combustor Study

E096

This is the combustor that was tested in sector conf.

- A modified F101 combustor

For F_C, the angle & length would be somewhat diff.

E^3 Single Annular Test Combustor

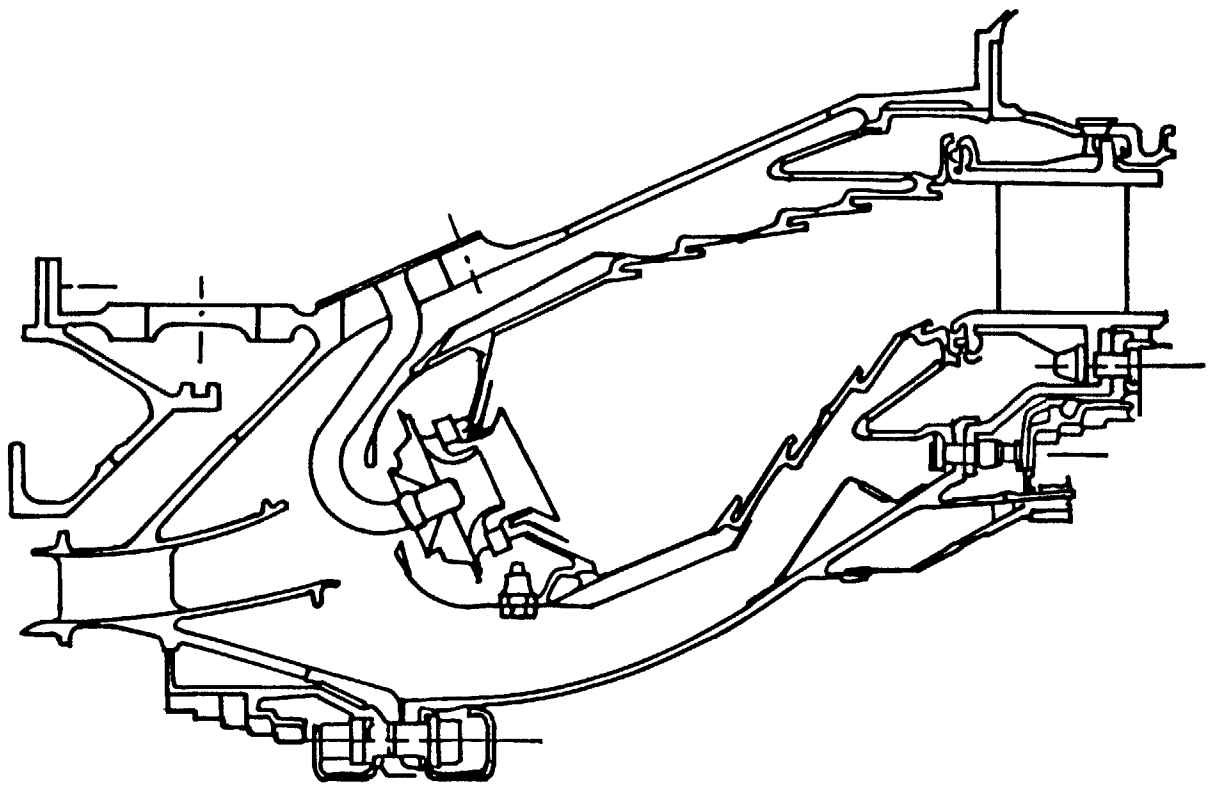

E097

what line life comparison of two? — same

E^3 Combustor Comparison

	Double Annular	Single Annular
• CO/HC Goals	Meets	Marginally Meets with 6% Idle
• NOx Goal	Marginally/ Meets	Exceeds E^3 Goal (Meets EPA Proposed 1984 Standard)
• System Weight, Pounds	240	170
• System Cost, Dollars	105,000	67,000
• System Complexity — Relative to CF6	Greater	Similar

E098

E^3 Single Annular Combustor

Emission Characteristics

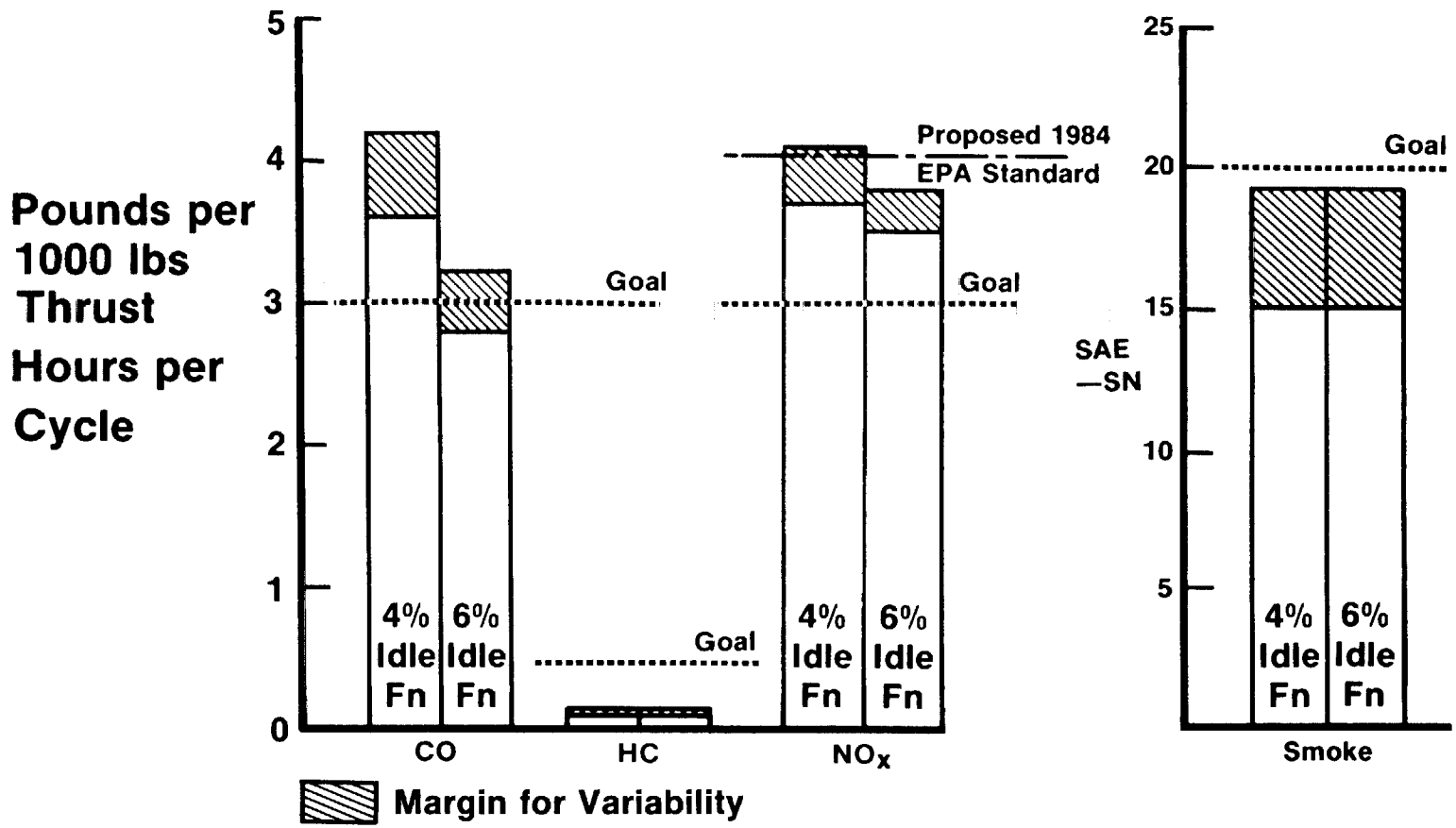

E099

Core compressor ~~tip~~ tip speed dictates core design. Higher tip speed leads to massive turbine discs (as compared to CF6). Tradeoffs show this is optimum.

E^3 HP Turbine

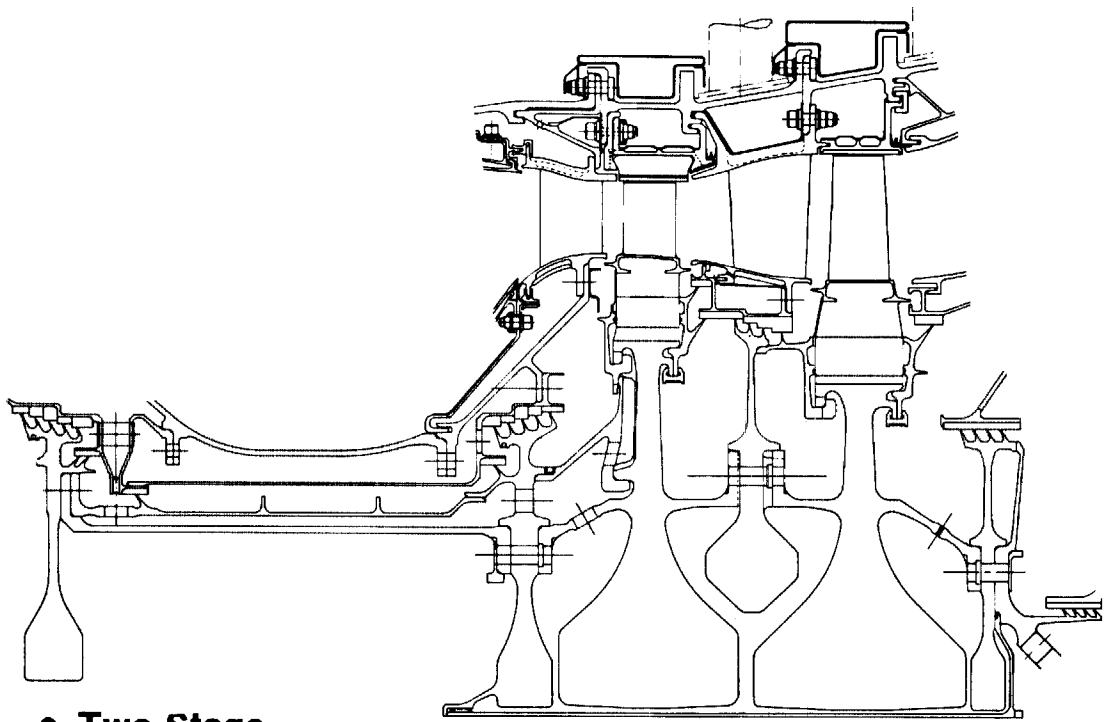

- Two Stage
- Improved Cooling Air Management
- Active Clearance Control
- Efficiency 0.924 at MxCr
- Thermal Barrier Coating (Possible Coolant Reduction)
- Advanced Materials

E100

E^3 HP Turbine Materials

(Rotor Components)

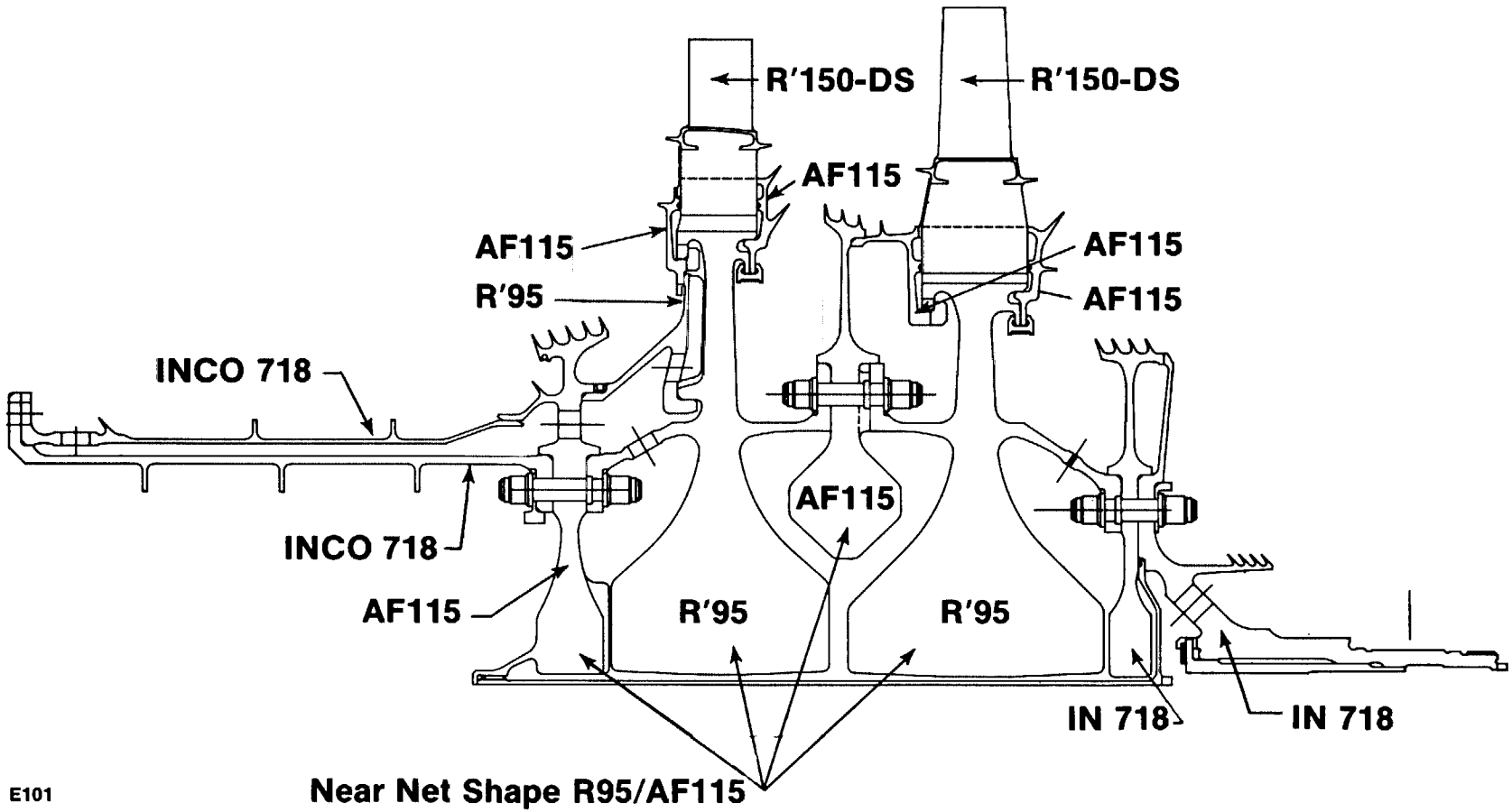

E101

Si C + abradable layer - ceramic shroud - lat. stage

E^3 HP Turbine Materials
(Static Component)

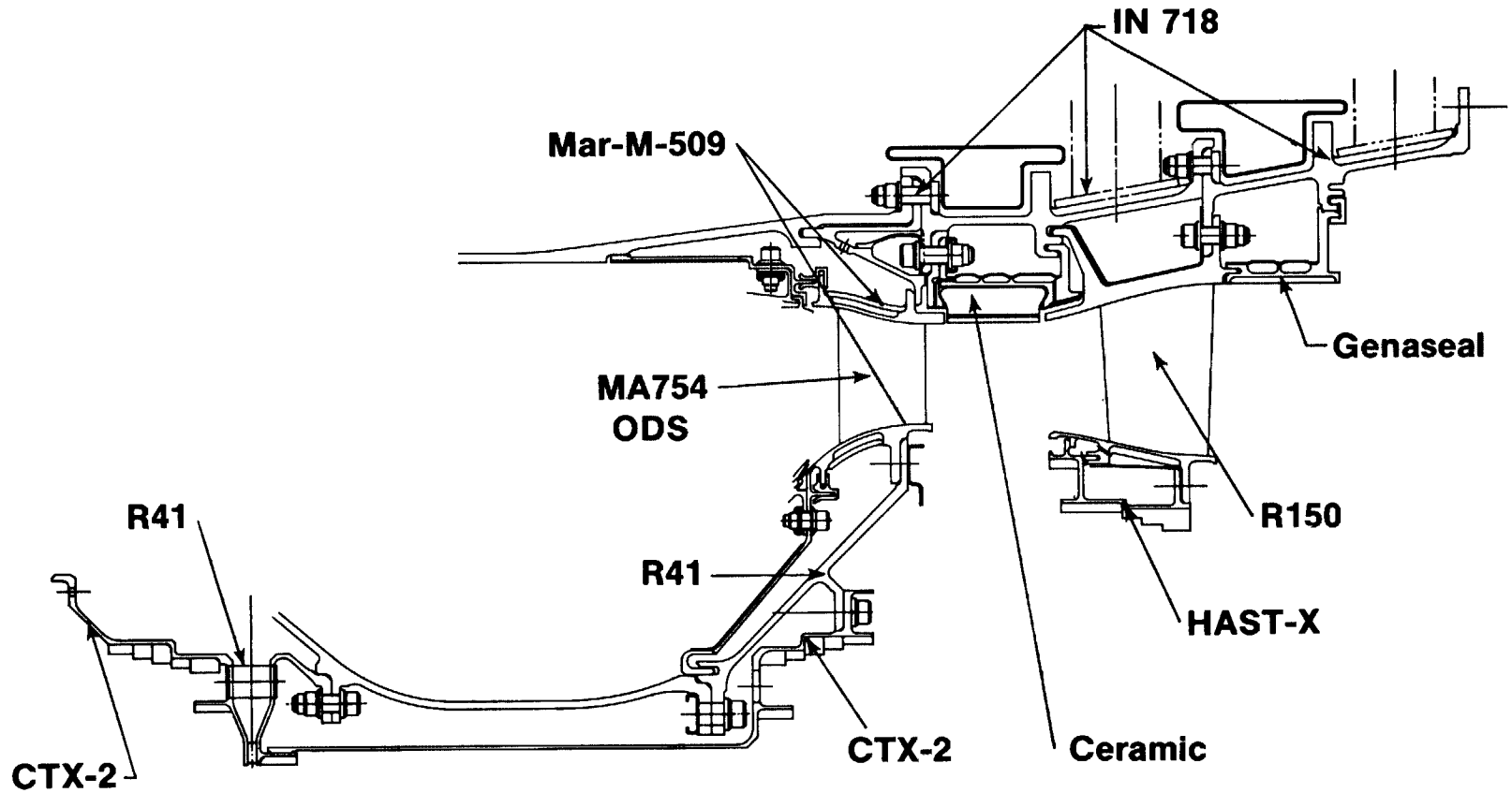

E102

4/#4 rotor – went from 112 to 156 blades to get a diff. noise freq.

E^3 LP Turbine

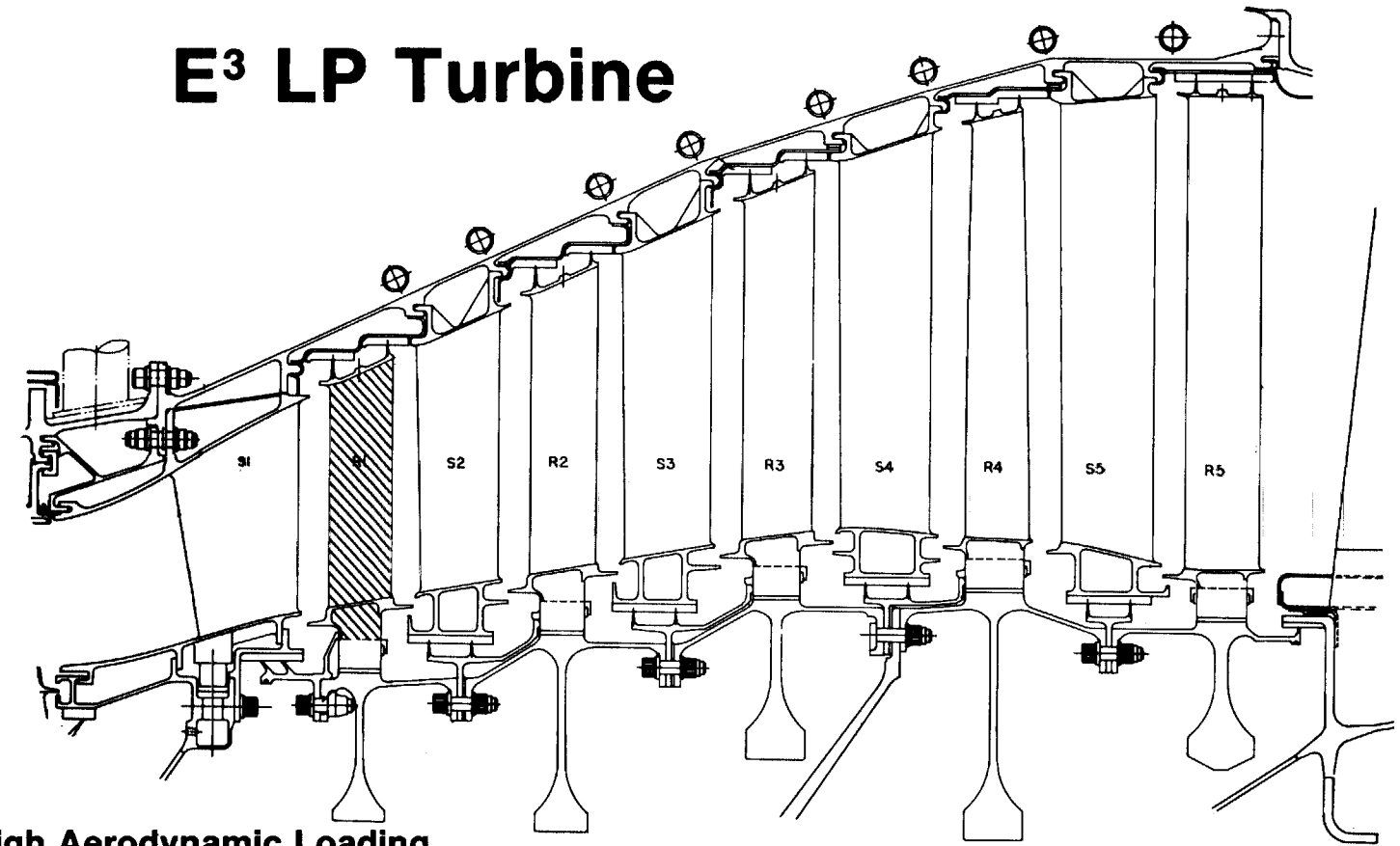

- High Aerodynamic Loading
- Active Clearance Control
- Low Noise
- Rene' 80 + HF Directionally Solidified (Blade 1)
- Efficiency at MxCr 0.917

E103

LPT Aero Design Selection

	4 Stage 2.8" Transition Duct	4½ Stage 2.8" Transition Duct	4½ Stage 4.0" Extended Transition	5 Stage 2.8" Duct	5½ Stage No-Transition Duct
Overall Average Loading	1.70	1.70	1.59	1.30	1.42
Max Stage Loading	2.46	2.21	1.90	1.69	1.65
Overall Efficiency % (Includes Duct Loss)	88.5	89.3	89.6	91.1*	90.8

*Efficiency Benefit Clearly Favored 5 Stage — 2.8" Duct

E104

Mixer

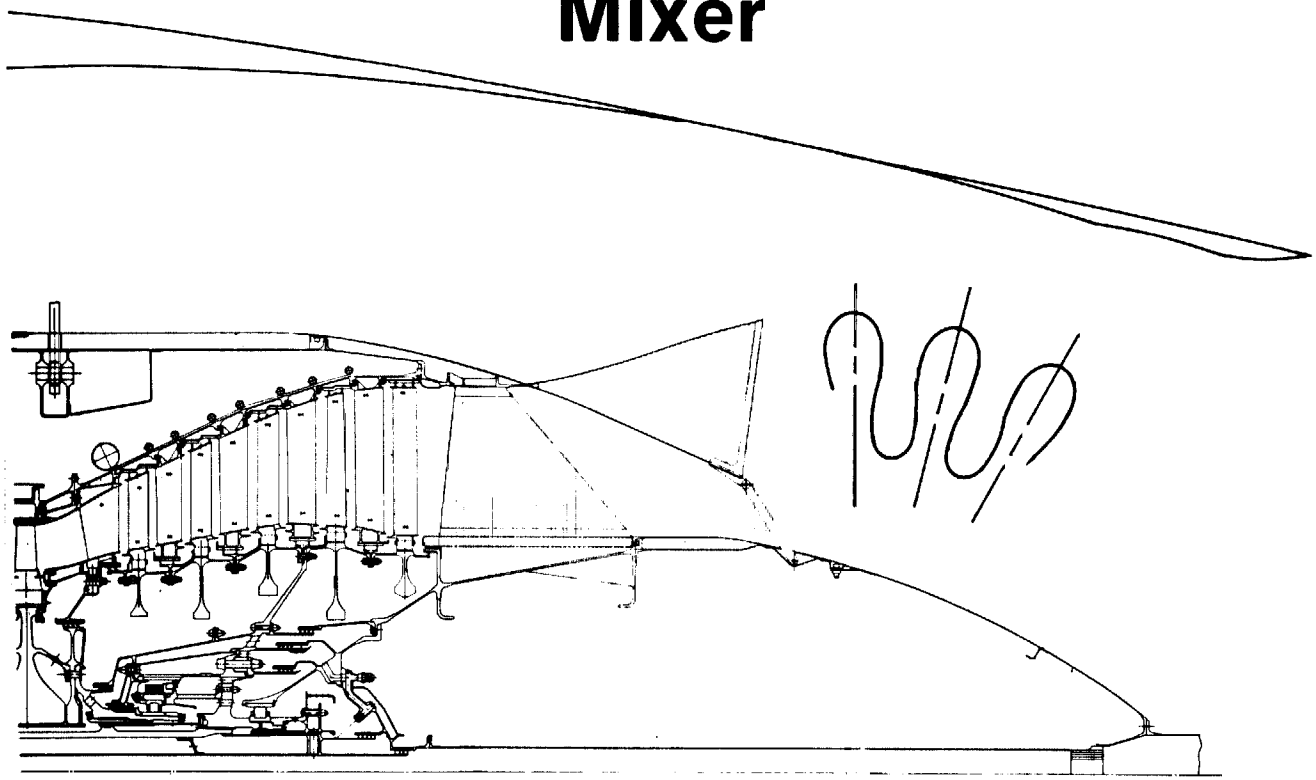

- Short Mixing Length
- Reverse Thrust Spoiling
- Noise Reduction
- Effectiveness at MxCr 0.75

E105

E^3 Mixed Flow Thrust Gains

M .8/35K MxCr

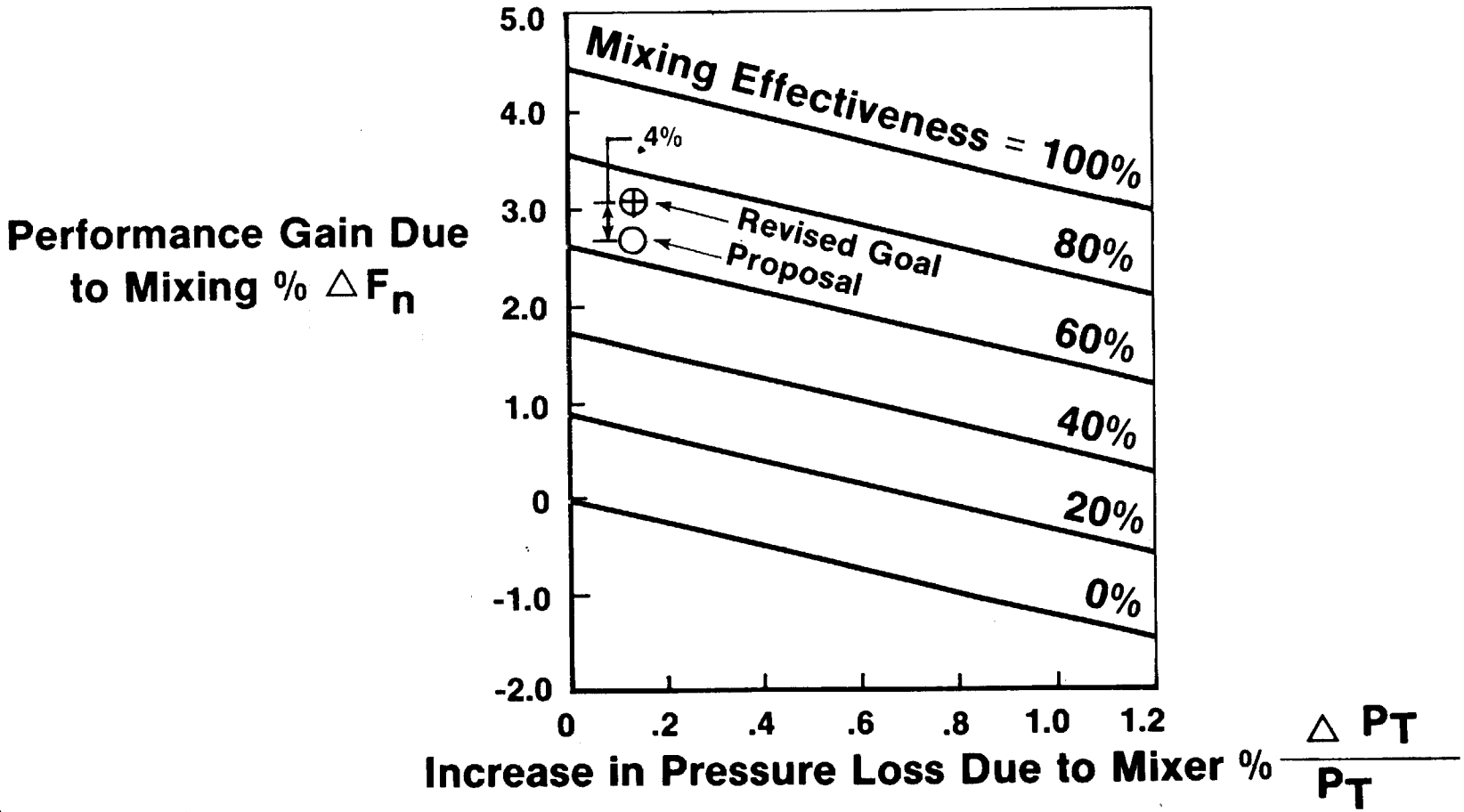

E106

TF. 34

Mixer Performance

Objectives

- Evaluate Altitude (Inflight) Performance of Mixer
- Correlate Engine — Scale Model Data

Description

- NASA-Lewis Propulsion Engine Technology (PET)
  — Altitude Test
- Full Scale TF34 Engine Mixer Technology Investigation
- Simulation of E^3 Cycle and Scale Model Mixer

E107

Long-Duct Nacelle Installation Effects

- E^3 NASA-Langley Wind Tunnel Test
- Evaluate E^3 Isolated Nacelle Drag
  - — Compare with Reference CF6-50C
- Evaluate Installation Effects of E^3 Long Duct Mixed Flow Nacelle
- Test February-March 1979, Follow-on Tests Planned for 1980

E108

Typical Fan Powered Nacelle Model

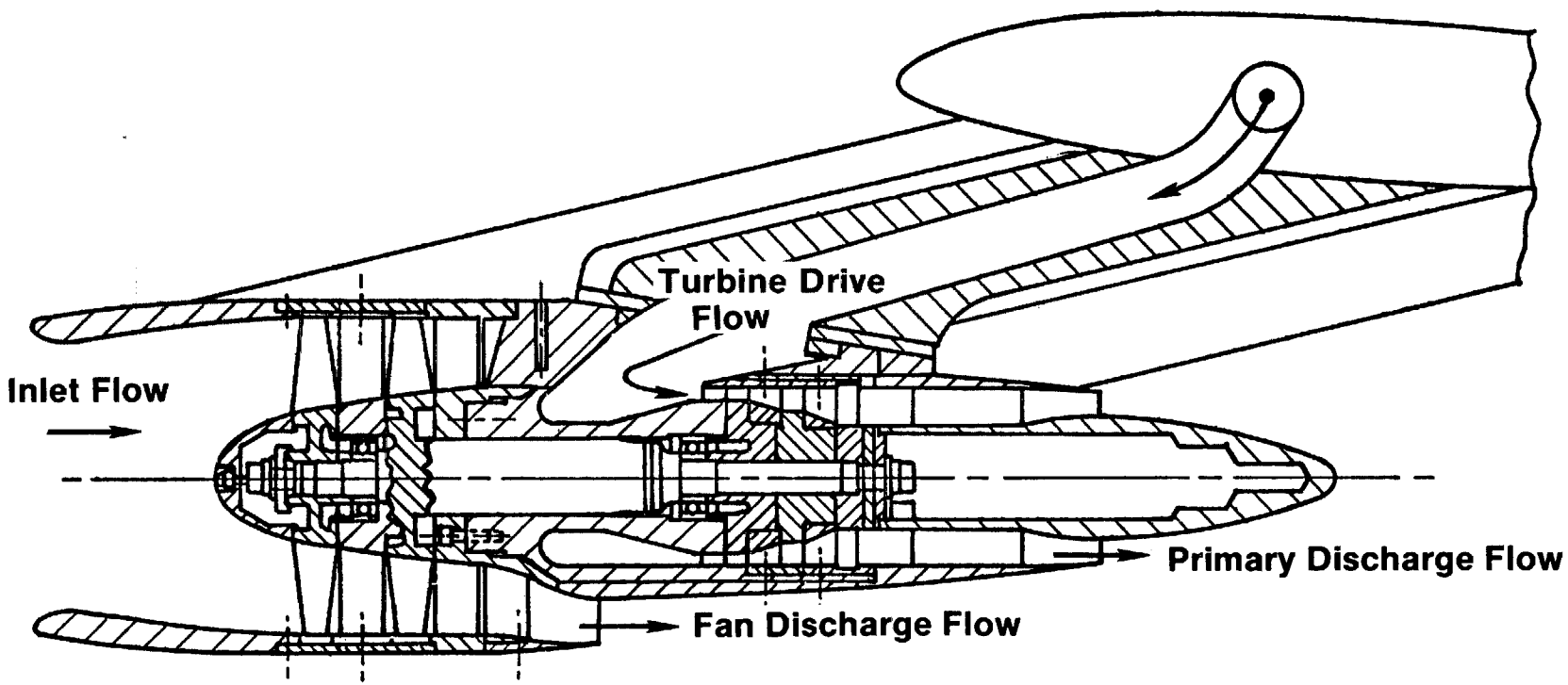

E109

Full Authority Digital Control

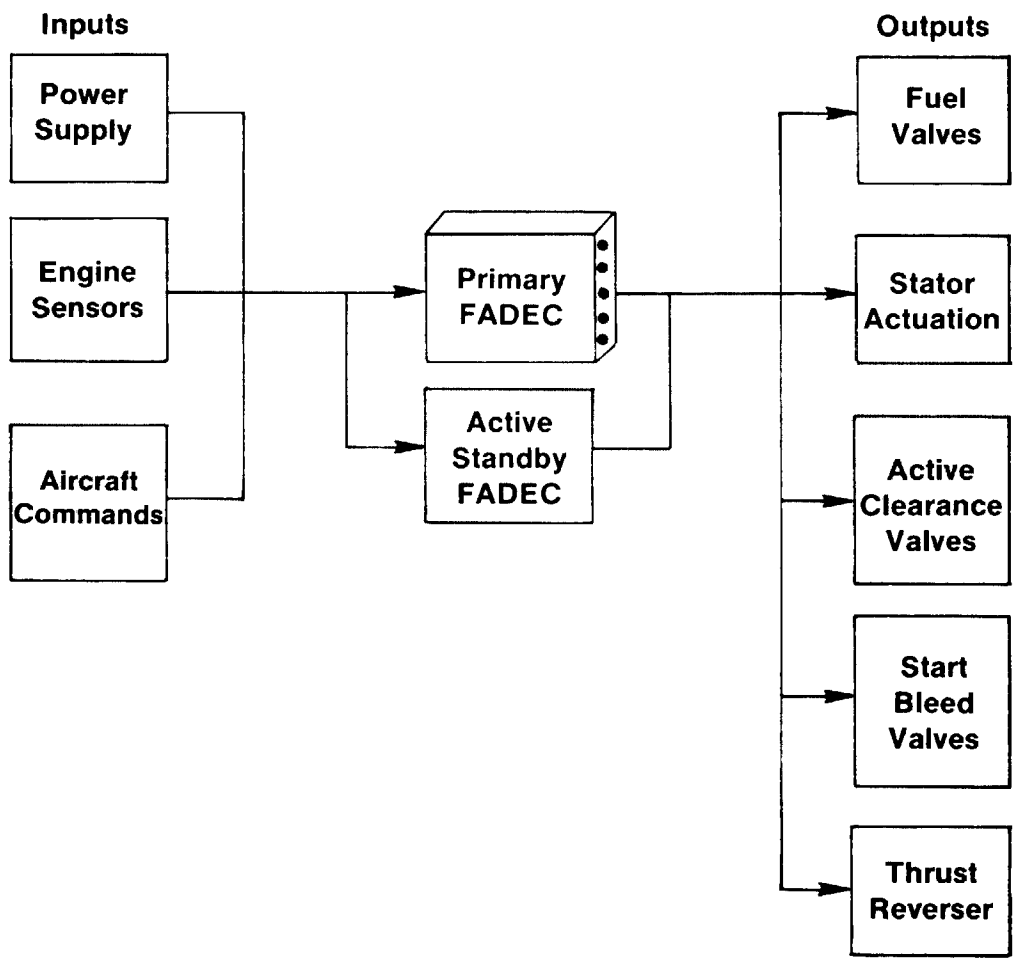

E110

Control System Inputs

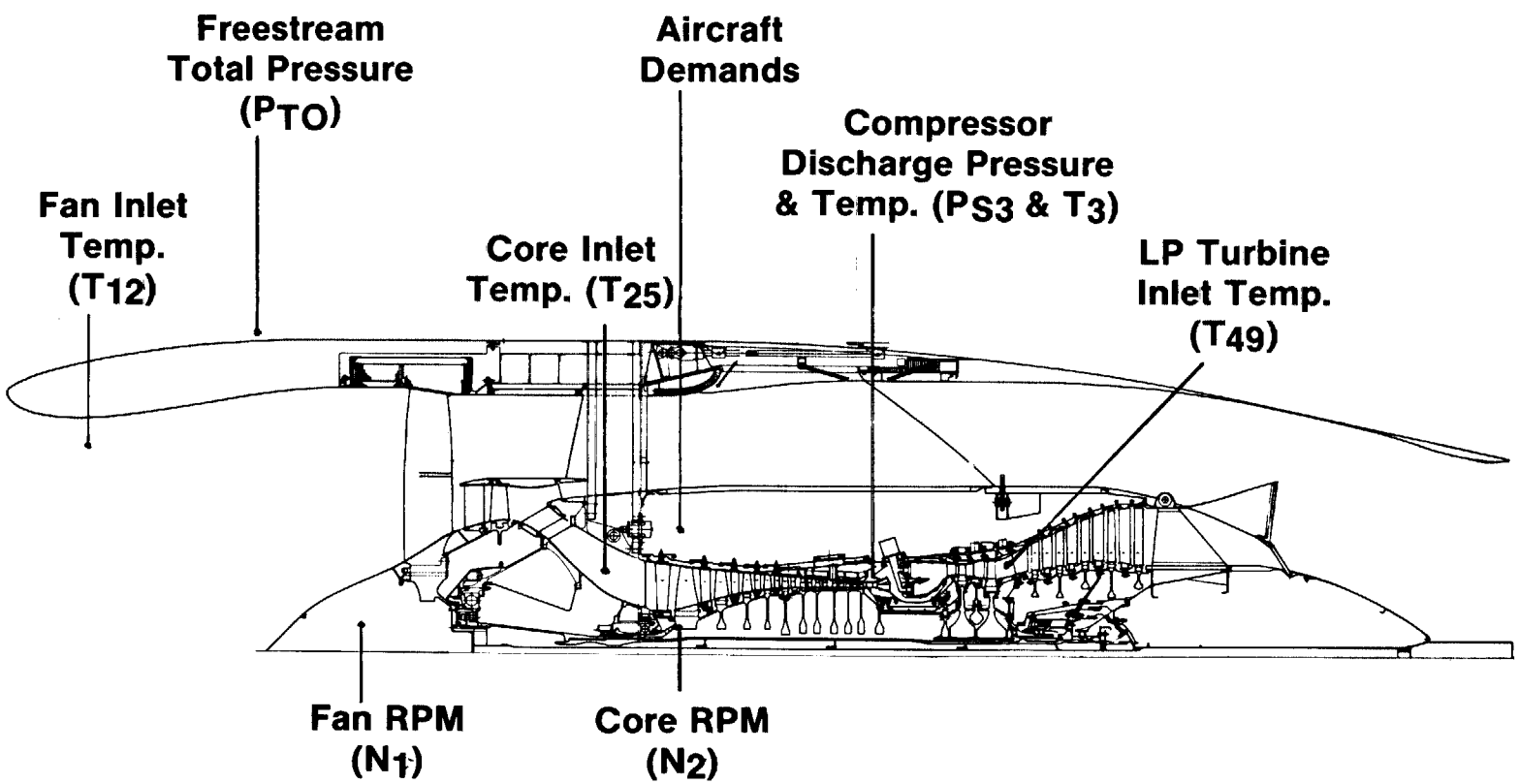

E111

Control System Outputs

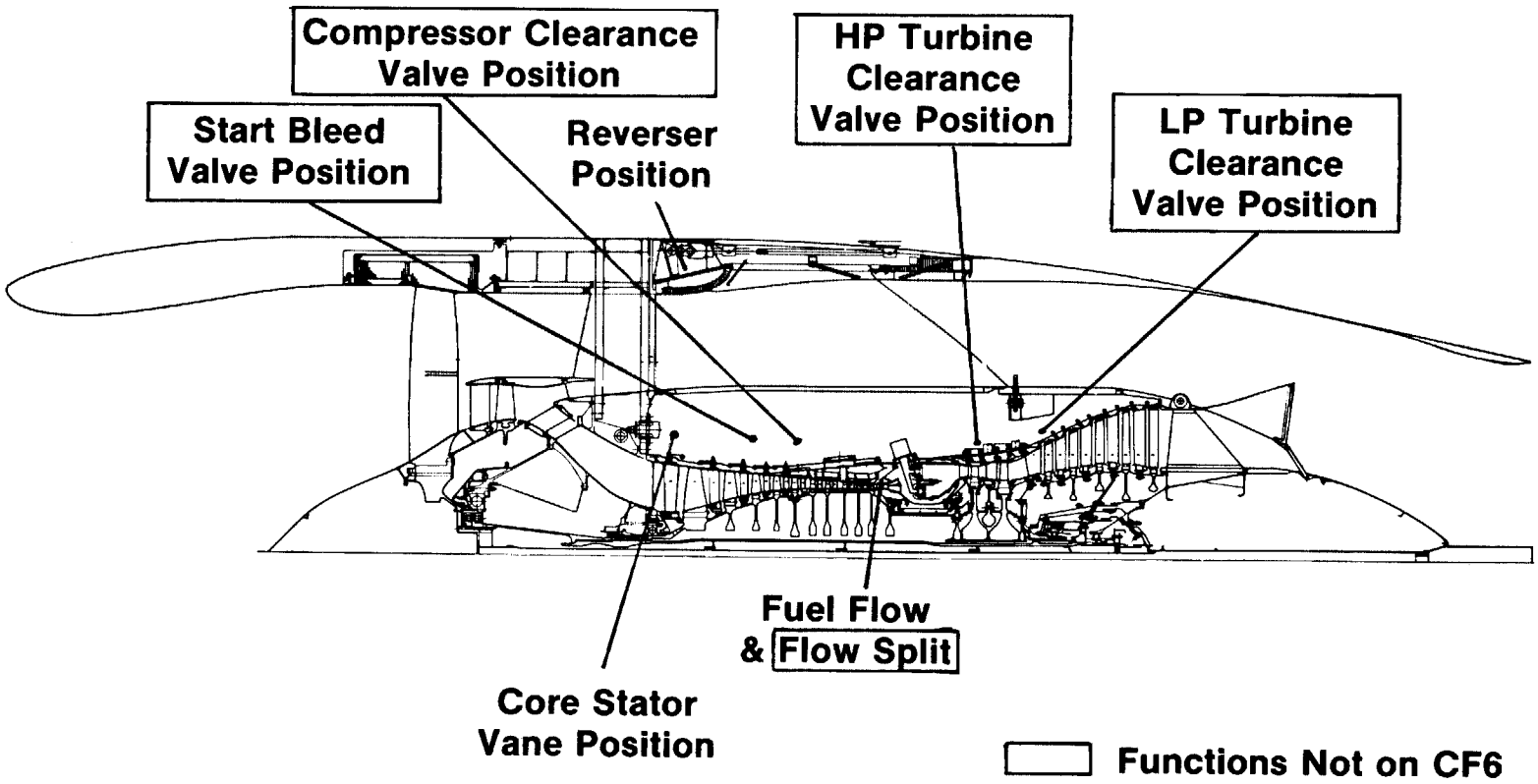

E112

FPS Control System Summary

- Basic Concept — Full Authority Digital Control
  - — Redundant Digital
  - — Self Test/Automatic Transfer
  - — Redundant Commands/Power Supply
- Sensor Failure Accommodation
- Large Scale Integration
- Advanced Hybrid Assembly
  - — Ceramic Multilayer Boards
  - — Thermally Matched Materials
  - — Tape Automated Bonding (Leads)

E113

E^3 Engine Comparison

	Proposal Engine	FPS PDR
• Fan	38-Blade	32-Blade
• Gearbox & Accessory Loc.	Pylon	Core Cowl
• HPT Rotor	CDP/7th Stg. ID	All CDP
• Fuel Air Heat Exchanger	In Turbine Stator Cooling Circuit	Customer Bleed Circuit
• HP Rotor Bearing Support	Hard Mount Bearings	Tuned Bearing Support/Damper
• LPT Clearance Control	Forced Air Cooling	Active Clearance Control

E114

E^3 FPS

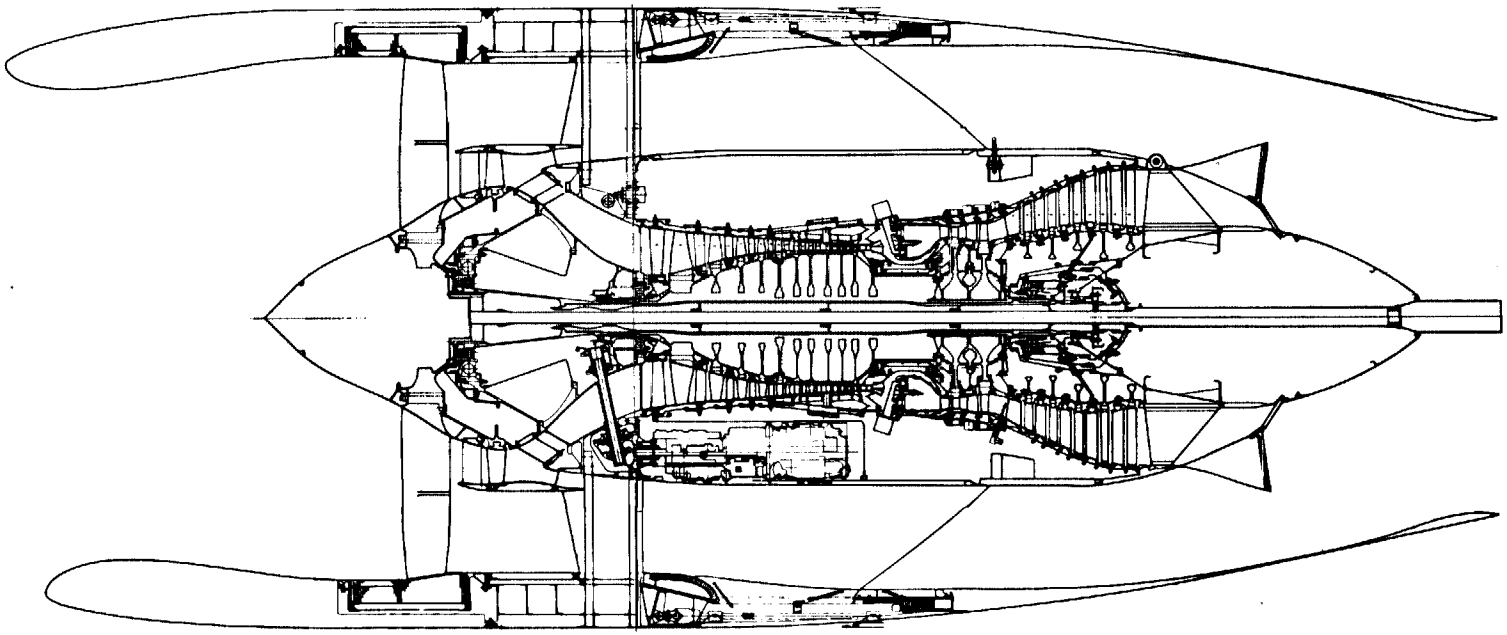

FPS PDR Agenda

- Introduction
- Engine Description
- Emissions
- Performance
- Performance Retention
- Noise
- Commercial Design
- Aircraft/Engine Integration
- Development Program

E115

E^3 FPS Performance

- Δ SFC vs. Program Goal
- Source of Benefits
- Fuel Heater/Regenerator
- Thermal Barrier Coating Potential

E116

E^3 Installed Performance Comparison

	NASA Goal	Proposal Forecast	FPS PDR Status
% ΔSFC, FPS	-12	-14.4	-14.6*
% Δ SFC, ICLS		-12.4	-12.4*

*Includes Benefit of Regenerative Fuel Heater

E117

E^3 SFC Improvement vs. CF6-50C (MxCr)

	% △ SFC	
• Component Adiabatic Efficiencies	-4.1	
• Mixed Flow Exhaust	-3.1	
• Increased Cycle Pressure Ratio (20%)	-1.0	
• Propulsive Efficiency (FPR-BPR)	-2.5	
• Increased Turbine Inlet Temperture (175° F)	-1.5	
• Cooling and Parasitic Flows	-1.0	
• Flowpath Pressure Losses	-0.1	
UNINSTALLED △ SFC		-13.3
• Reduced Isolated Nacelle Drag	-0.6	
• Integrated Aircraft Generator Cooling	-0.3	
INSTALLED △ SFC IMPROVEMENTS		-14.2
• Customer Bleed and Horsepower Effects	+0.4	
• Regenerative E^3 Fuel Heater	-0.8	
FULLY INSTALLED (Cust. Bleed & HP)		-14.6

E118

Fuel Heater/Regenerator

- Fuel Cooling of Aircraft Bleed (ECS) Air
  - — Eliminate Fan Air Cooling of ECS Air
  - — Replace Separate Fuel Anti-Ice Heater
- Non-Toxic Water/Antifreeze Intermediate Fluid for System Isolation
- 275° F Max. Fuel Temperature
- Optional Add-on to Engine
- SFC Benefit

— Heat Added to Fuel	0.35%
— Fan Cooling Air Saved	0.45%
Total SFC Reduction	0.8%

E119

Not book-kept into - 14.6% Δ SFC

Fuel Heater/Regenerator Schematic

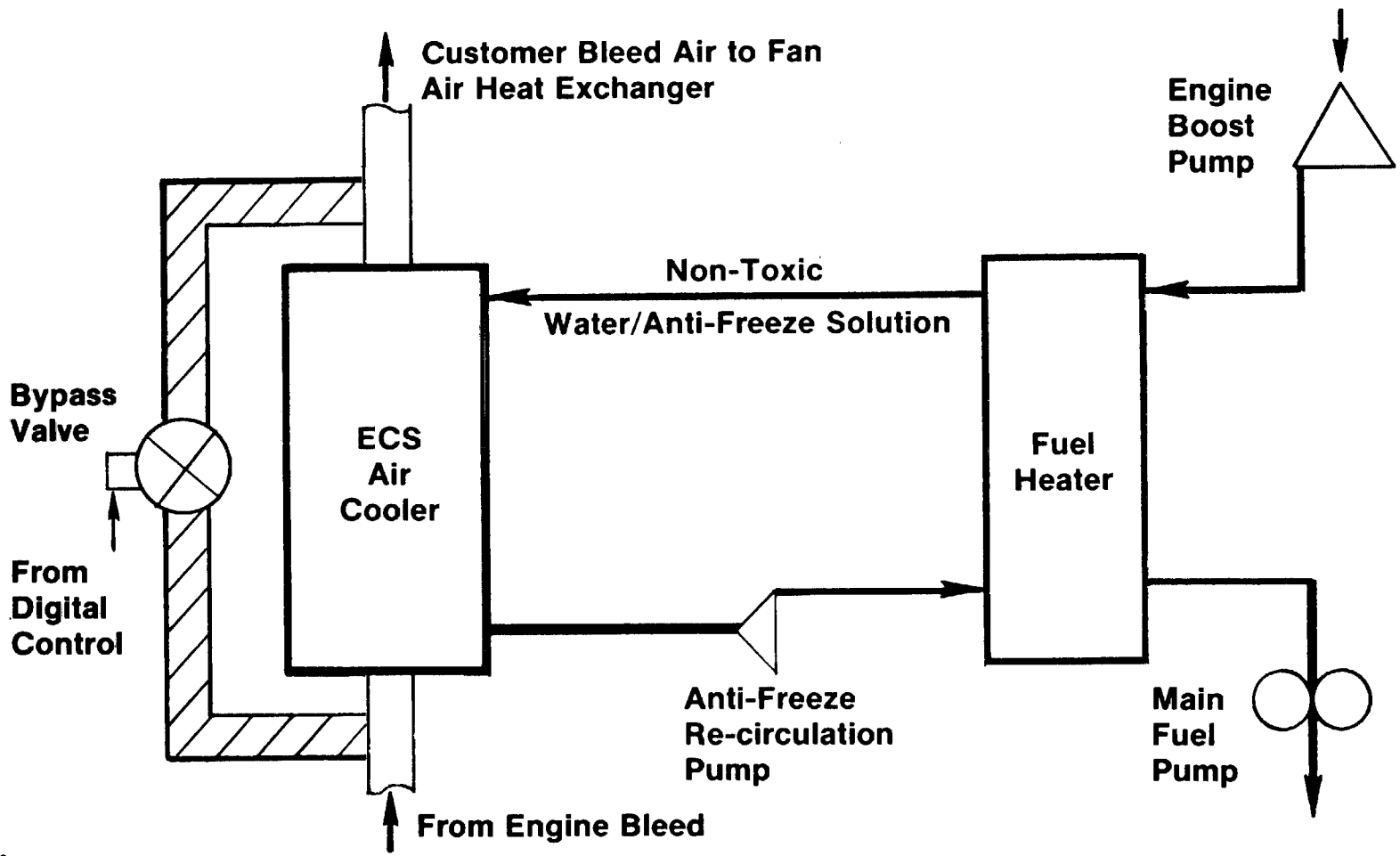

E120

E^3 HP Turbine Thermal Barrier Coating

E^3 HP Turbine Components	Maximum Bulk Metal ΔT °F	Coating Thickness Mils.	ΔSFC Benefit
• 1st Stage Nozzle Airfoil	-200	12	.09
• 1st Stage Nozzle Bands	-150	12	.04
• 1st Stage Bucket	-110	8	.19
• 2nd Stage Nozzle	-80	12	.09
• 2nd Stage Bucket	-40	8	.09

Maximum Potential Saving = .50

FPS Utilization Based on E^3 Supporting Technology TBC Work Results

— Decision Date Second Quarter 1980

E121

FPS PDR Agenda

- Introduction
- Engine Description
- Emissions
- Performance
- Performance Retention
- Noise
- Commercial Design
- Aircraft/Engine Integration
- Development Program

E122

Performance Retention

- Engine Design Features
- Clearance Control
- SFC Benefit

E123

Performance Retention Features

- Stiff Strong Static Engine Structure
- Short Stiff High Pressure Rotor
- Active Clearance Control — Rear Half HPC, HPT, LPT
- Selection of Materials/Control of Stator Temperature Response Rates to Match Rotor
- Engine Mounting and Structure to Minimize Thrust Induced, Aerodynamic, and Maneuver Deflections
- Provision for Transiently Larger Actively Controlled Clearances — When Engine Bending Loads are High
- Abradable Materials Minimize Stackup and Transient Penalties
- Booster Separator Reduces Core Erosion
- Designed for Heavy Unbalance

E124

Energy Efficient Engine

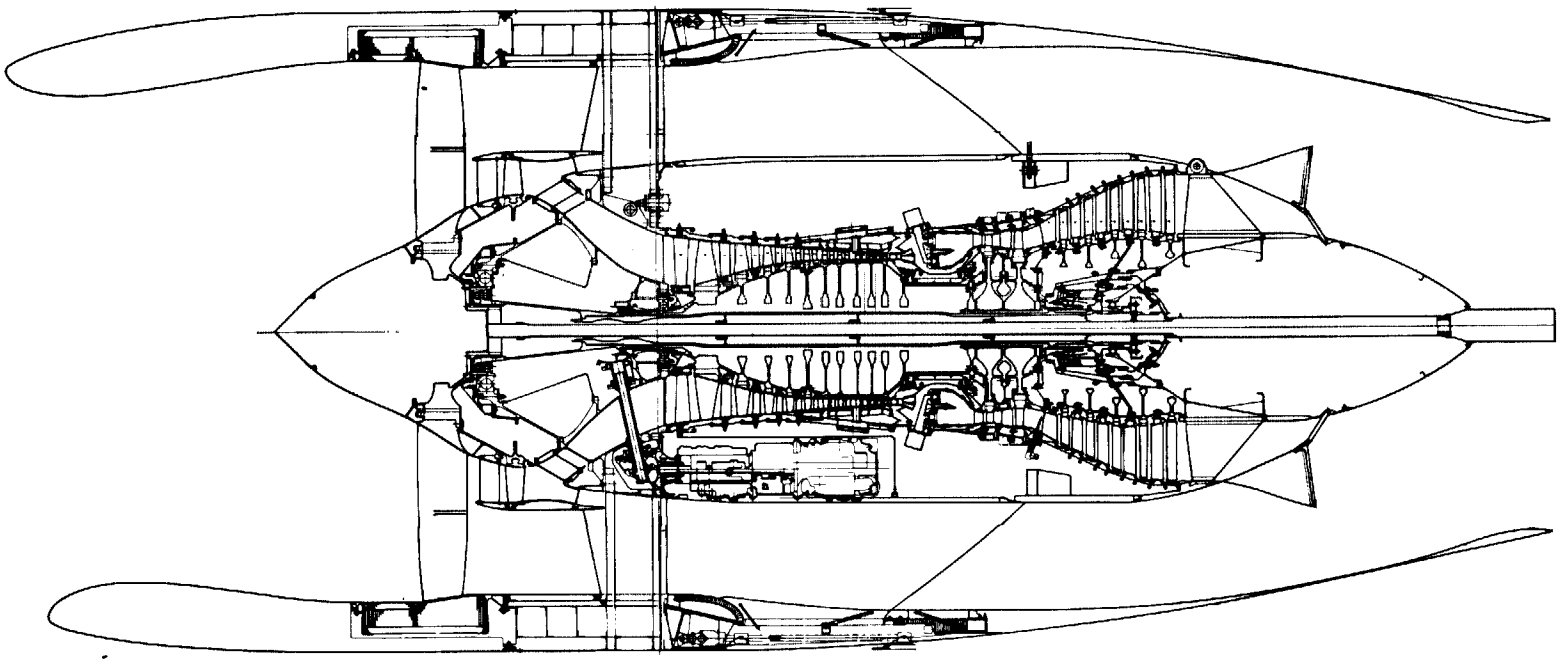

E125

Clearance Control

Passive — No Forced Stator Temp. Control

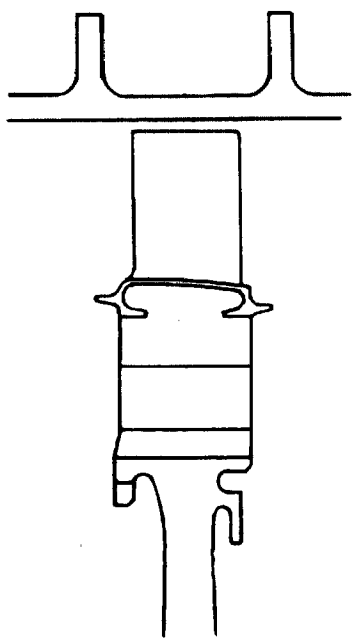

Forced Cooling (or Heating)

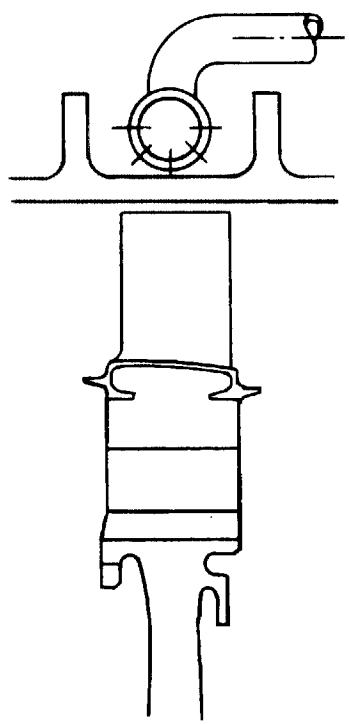

Active — Modulated Air Cooling (or Heating)

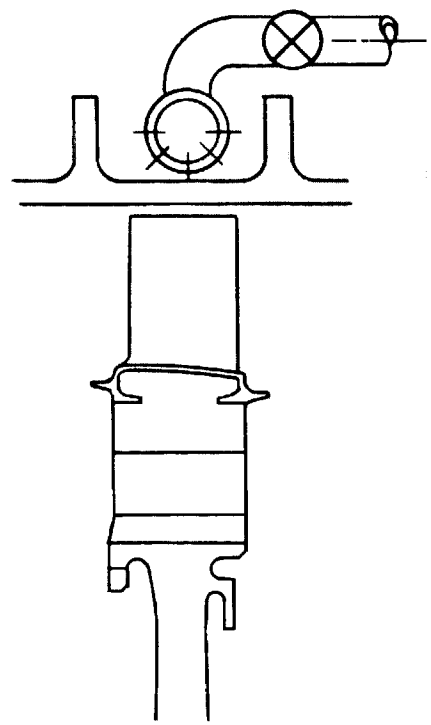

E126

Clearance Control Application

Engine	HP Compressor	HP Turbine	LP Turbine
TF39/CF6	Passive	Passive	Forced Air Cooling
F101/CFM56	Forced Air Cooling	Modulated Air Cooling	Forced Air Cooling
E^3	Modulated Air Cooling	Modulated Air Cooling	Modulated Air Cooling

E127

Typical Tip Clearance Behavior

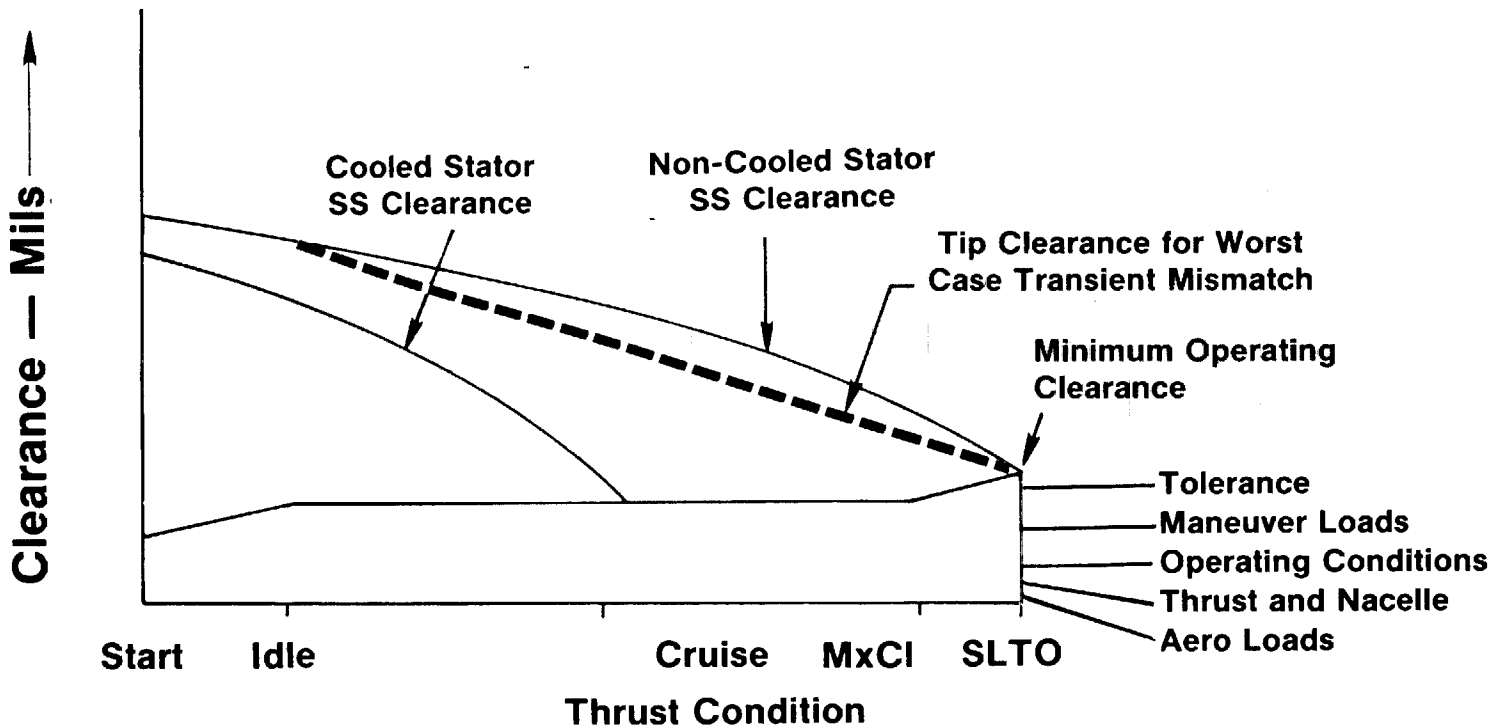

E128

Long Term Performance Retention

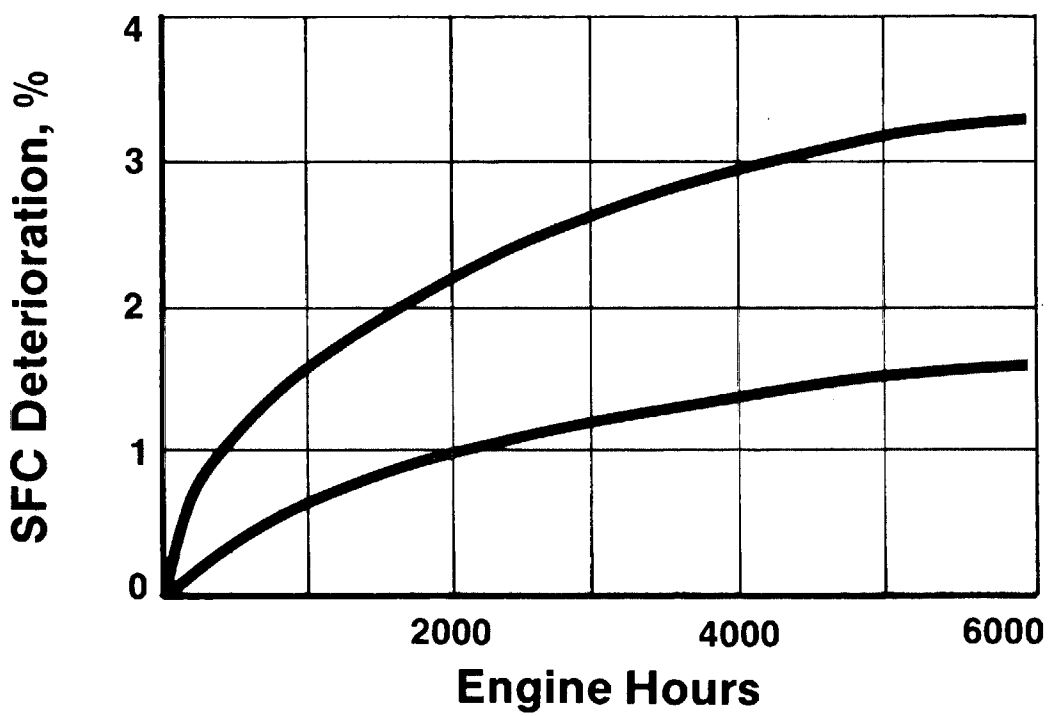

CF6-50C Integrated
Average for 6000 hrs
△ SFC 2.4%
(Includes Initial On-Wing Loss)

E^3 Projected Integrated
Average for 6000 hrs
△ SFC 1.2%

Improvement in Performance Retention (Half the Deterioration of CF6-50C) Will Result in Additional ~ 1% Improvement in Fleet Fuel Consumption Over the Operational Life of the Engine

E129

E^3 Noise Assessment

- Design Features
- Noise Estimates for Advanced Aircraft

E130

Energy Efficient Engine
Low Noise Design Features

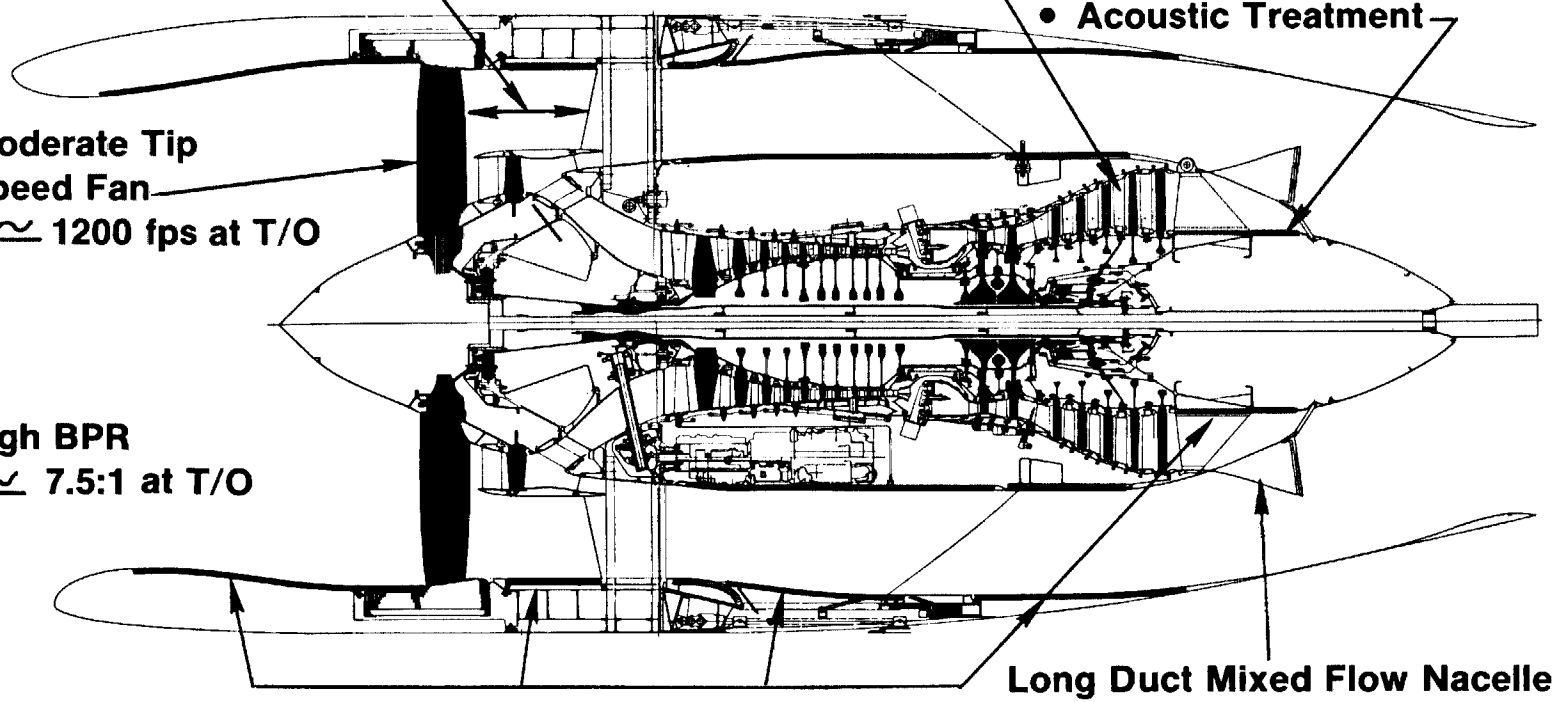

E131

Flight Noise Estimates for E^3 Adv. A/C

Re: FAR 36 (1978)

	Boeing Twinjet TOGW = 244,000 lb SLS Fn = 38,000 lb	Lockheed Trijet TOGW = 453,000 lb SLS Fn = 41,000 lb	Lockheed Quadjet TOGW = 627,000 lb SLS Fn = 38,000 lb
Takeoff Margin	-5.1	-6.7	-5.9
Sideline Margin	-9.2	-8.9	-8.9
Approach Margin (With A/F Noise)	-3.0	-3.9	-4.6

E132

FPS PDR Agenda

- Introduction
- Engine Description
- Emissions
- Performance
- Performance Retention
- Noise
- Commercial Design
- Aircraft/Engine Integration
- Development Program

E133

Design to Commercial Practices

- Stall Margins/Distortion Tolerance
- Life
- Reliability
- Maintainability
- Minimize Secondary Damage
- Growth Engine

E134

Stall Margins/Distortion Tolerance

Objectives

- Requirements
  - Surge Margin
  - Distortion Sensitivity
  - Distortion Transfer
- Stability Audit
  - Critical Operational Conditions
- Stability Analyses
  - Surge Line Estimation
  - Performance/Stability Trades

E135

↓ reduction in surge margin

↑ increase in operating line

Sample Stability Stack

Crosswind — Fan at T/O Thrust

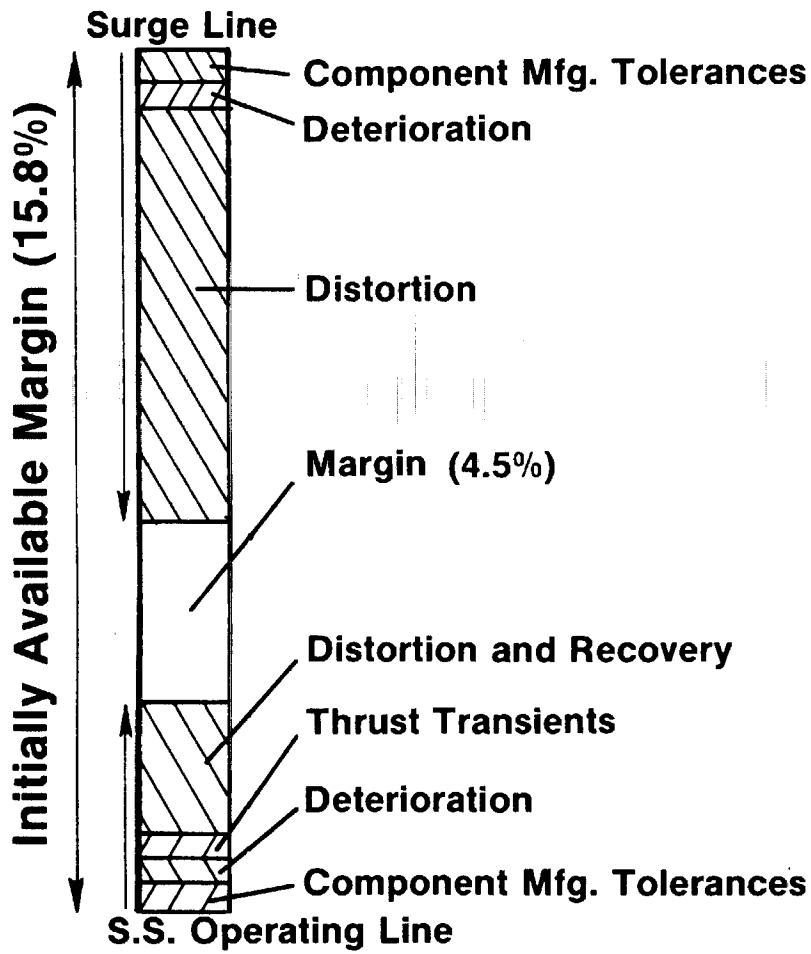

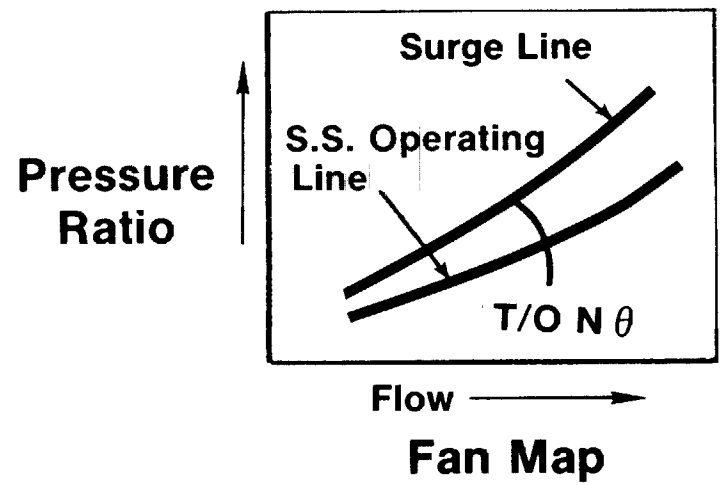

Fan Map

E136

Sample Stability Stack

Crosswind — HPC at T/O Thrust

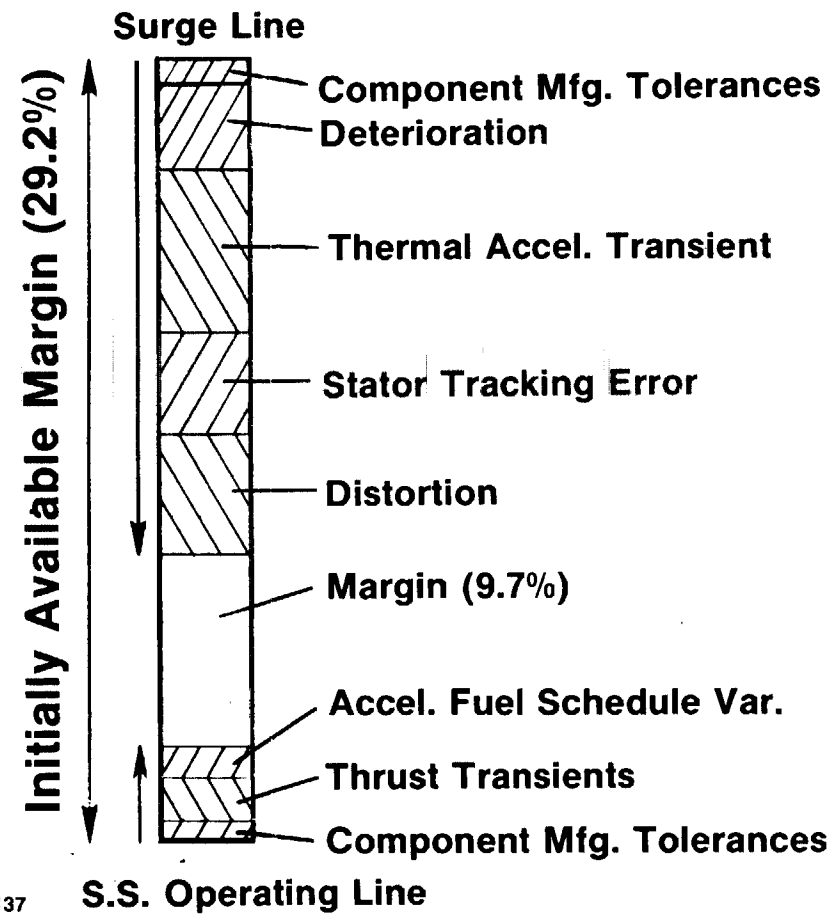

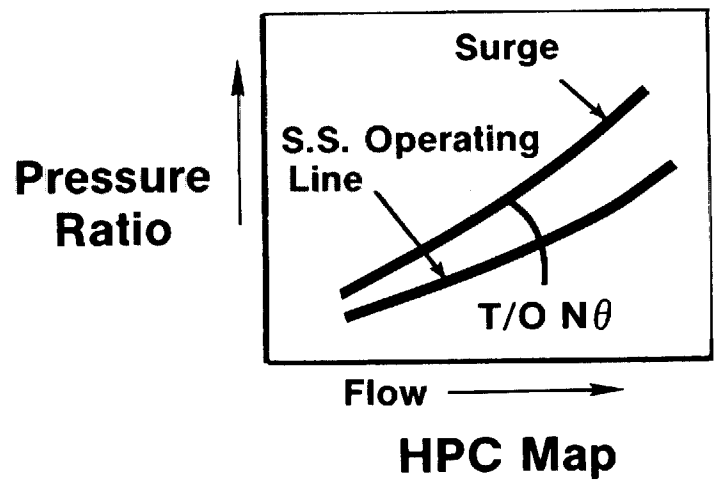

E137

Design Life Requirements

	Service Life	Total Life With Repairs
• Engine Life	18,000 Hours	36,000 Hours
— HP, LP Rotor Disks/ Shafts	18,000 Flt. Cycles	36,000 Flt. Cycles
— HP, LP Vanes/Blades, Combustor	9,000 Flt. Cycles	18,000 Flt. Cycles

E138

E^3 Engine
LCF Life Analysis Approach

- Determine the Full Mission Flight Map to Establish Stress, Temperature, and LCF Life — Max Severity
- Flight Cycle Mission Mix Analysis Using a Four Leg Life Summation

% Flight Time	Condition
20%	122° F
30%	86° F
20%	73° F
30%	69° F

E139

Had to add compressor; Low Aspect Ratio Blades

FPS Reliability Features

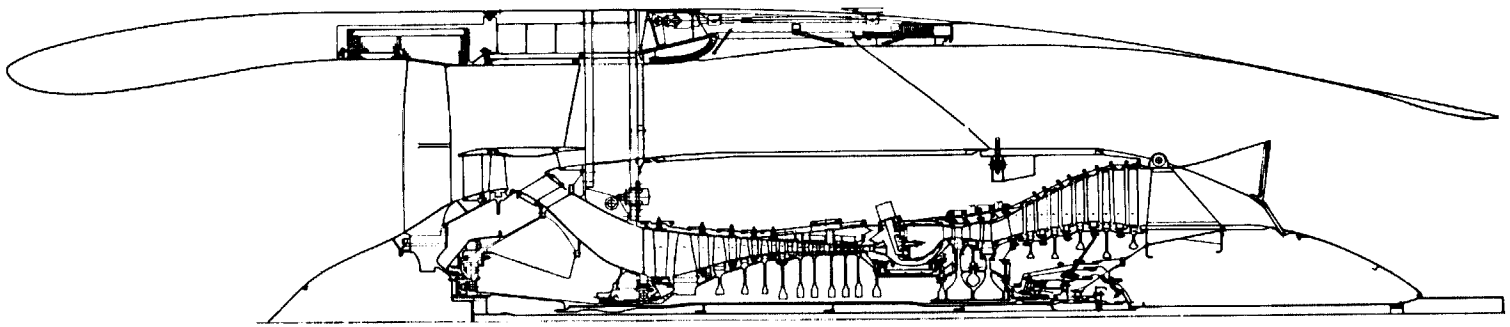

	FPS	CF6-50C
Blades	1456	1673
Vanes	1554	1750
Frames	2	4
Sumps	2	4
Main Shaft Brgs.	5	7

Combustor — Shingle Design has Lower Thermal Stresses and Mechanical Loads are Carried in the Shell Rather than the Liner

HPT & LPT — Have No Bolt Holes Through the Disk

Fan Booster — Has Built-in FOD Separation to Reduce FOD to Core Engine

E140

E^3 Maintainability Features

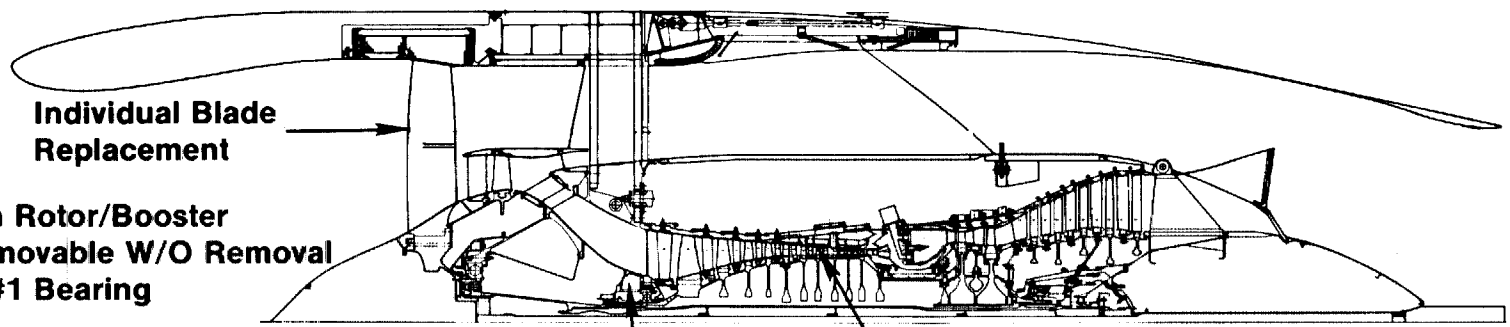

- Borescope & Radiographic Inspection Capability
- SOAP Sampling, Chip Detectors and Filter Bypass Capability on the Lube System
- Fan Module Can be Removed Without Removing Any Other Modules

E141

Energy Efficient Engine Modules

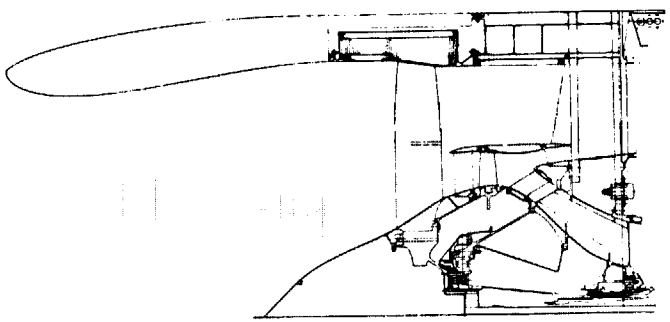

Fan & IGB Module

Core Module

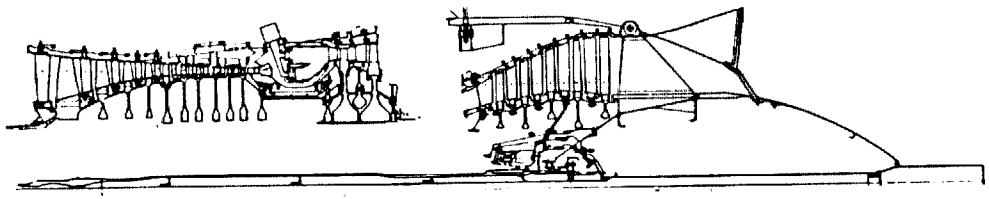

LPT Module

Accessory G/B Module

E142

Dynamic Response of Engine System

HP Rotor Unbalance — Blade Out
— Bowed Rotor

Excites LP Shaft Modes

High Bearing Loads

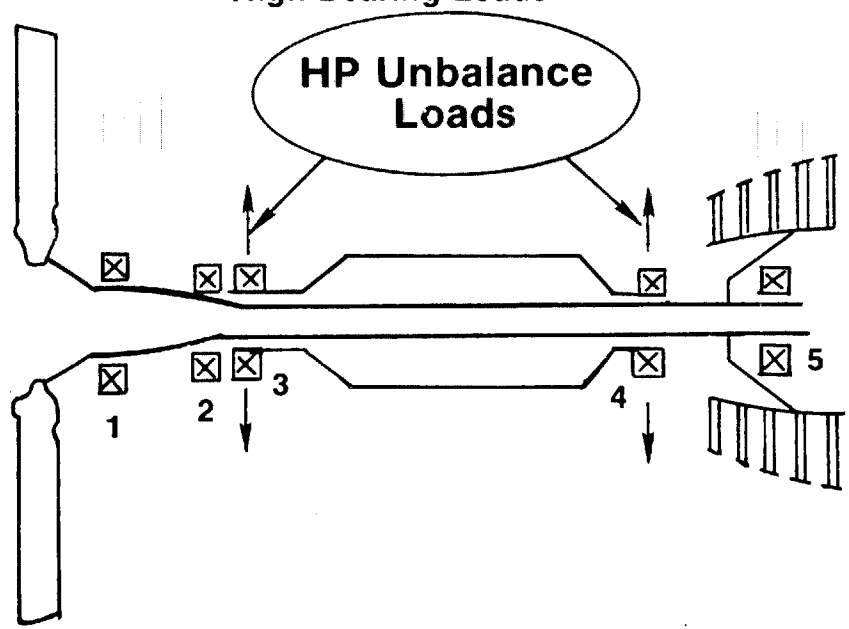

E143

Minimize Secondary Damage

- 150 Gm-in., Maintain Clearances
- 300 Gm-in., Normal Operation 18,000 Hours Bearing Life
- 1500 Gm-in., Blade Out Load, 10 Hours Bearing Life
- Rotor and Stator Structure Tolerant of Major Unbalance Forces

E144

Squeeze Film Damper

- Limits Unbalance Loads on Bearings
- Reduced Secondary Damage to Structure

No. 3 Bearing

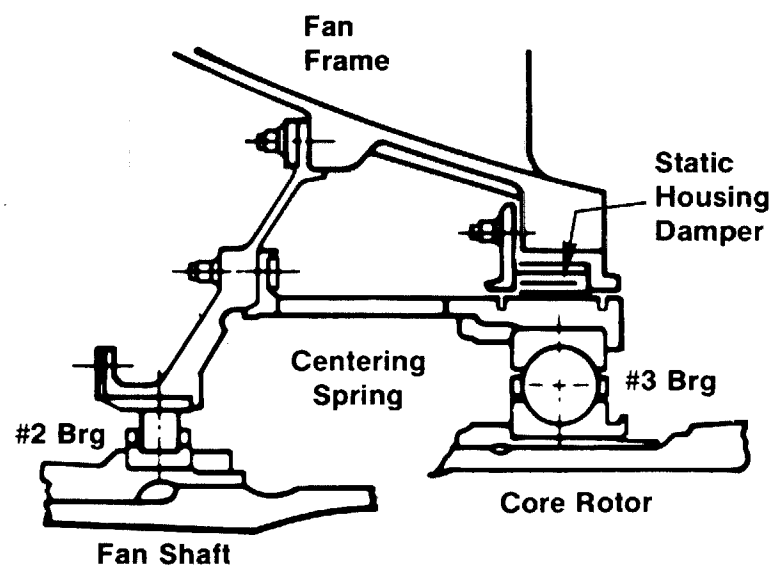

No. 4 Bearing

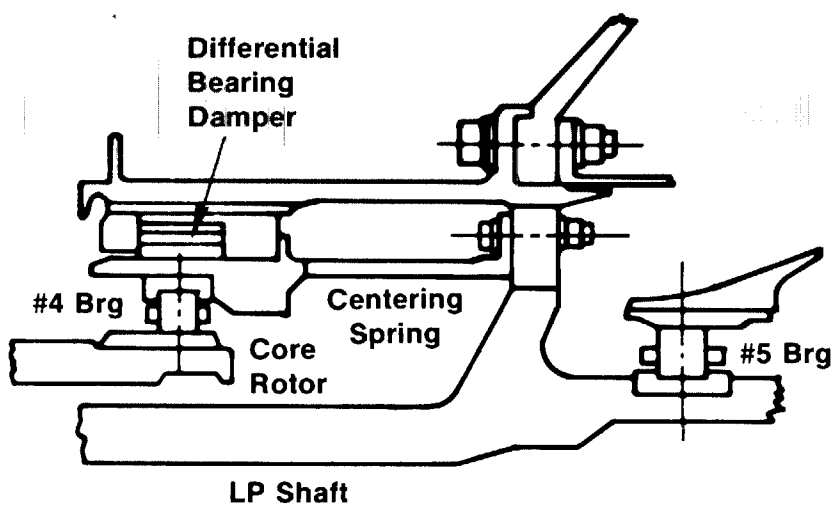

E145

E^3 FPS

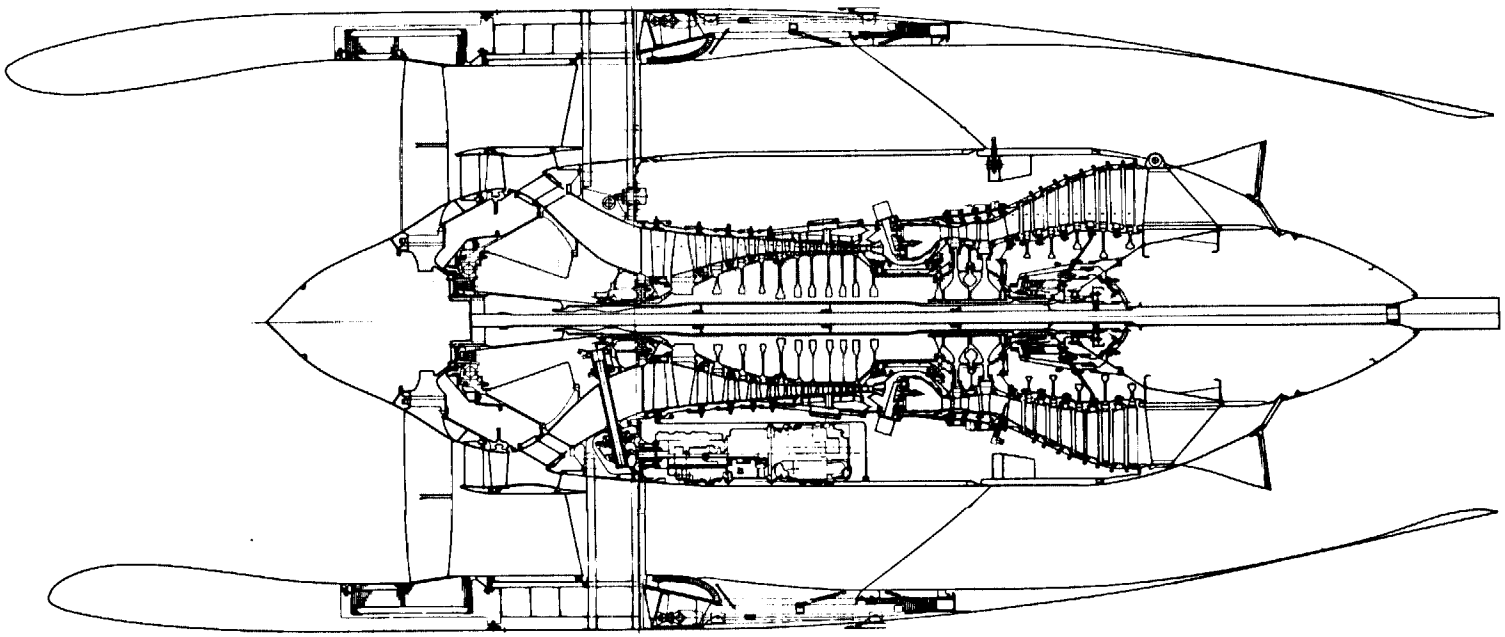

Major Characteristics
E^3 FPS and FPS Growth

	E^3	E^3 Growth
• Thrust at T/O, Pounds	36,500	43,800
• Cycle Pressure Ratio, MxCl	38	45
• Bypass Ratio, MxCl	6.8	5.4
• Fan Pressure Ratio, MxCl	1.65	1.75
• Turbine Rotor Inlet Temperature		
— SLS/86°F Day T/O, °F	2450	2630
— Red Line, °F	2590	2770
— 35K/.8 Mp/Std. Day MxCr, °F	2170	2270
• △SFC, MxCr (Standard Day)	Baseline	+3.8%
• Traded Noise Margin, DB (Domestic Trijet)	5.9	3

E146

20% Growth Engine Component Changes

- Flowpath Same as FPS
- New Fan Blade, Higher Tip Speed
- New Booster Blading
- Higher Core Speed & Flow
- Larger HP Turbine Nozzle Area
- Increased Cooling Flows
- Larger LP Turbine Flow Function
- New Mixer — Same Total Area
- Smaller Exhaust Nozzle

E147

FPS PDR Agenda

- Introduction
- Engine Description
- Emissions
- Performance
- Performance Retention
- Noise
- Commercial Design
- Aircraft/Engine Integration
- Development Program

E148

Aircraft Engine Integration

- Aircraft Company Studies
- Fuel Burned Benefits
- DOC Benefits
  - For Advanced Aircraft
  - Vs. Aircraft Range
- Fuel Burned Benefits
  - For Advanced Aircraft
  - Vs. Aircraft Range

E149

Aircraft/Engine Integration Studies

Boeing, Douglas, Lockheed Study Subcontracts

- Fuel Usage and Economic Evaluations
- Installation Design and Engine Equipment Placement
- Aircraft Noise Estimates
- Weight and SFC Trade Factors

E150

Aircraft/Engine Integration Studies

Aircraft Being Evaluated

• Boeing	Domestic Twin	196 PAX/2000 Miles
• Douglas	Domestic Trijet	458 PAX/3000 Miles
• Lockheed	Domestic Trijet	500 PAX/3000 Miles
• Lockheed	Intercontinental Quadjet	500 PAX/6500 Miles

E151

Economic Study Ground Rules

- E^3 and CF6-50C Scaling Data for Aircraft Co. Mission Evaluation
- Aircraft Cos. Sized Advanced Aircraft with Scaled CF6-50C and E^3 Engines
- Aircraft Cos. Calculated Δ Fuel Burned for Their Advanced Aircraft
- Δ DOC Calculated by GE Using NASA Coordinated Uniform Rules
  - Boeing 1977 Operating Cost Methods
  - Aircraft Characteristics (TOGW, Max. Landing Wt., Etc.,) Aircraft Company Supplied
  - Engine Price and Maintenance Cost Supplied by GE
  - All Costs in 1977 Dollars

Direct Operating Cost Improvement

(E³ Engine Vs. CF6-50C)

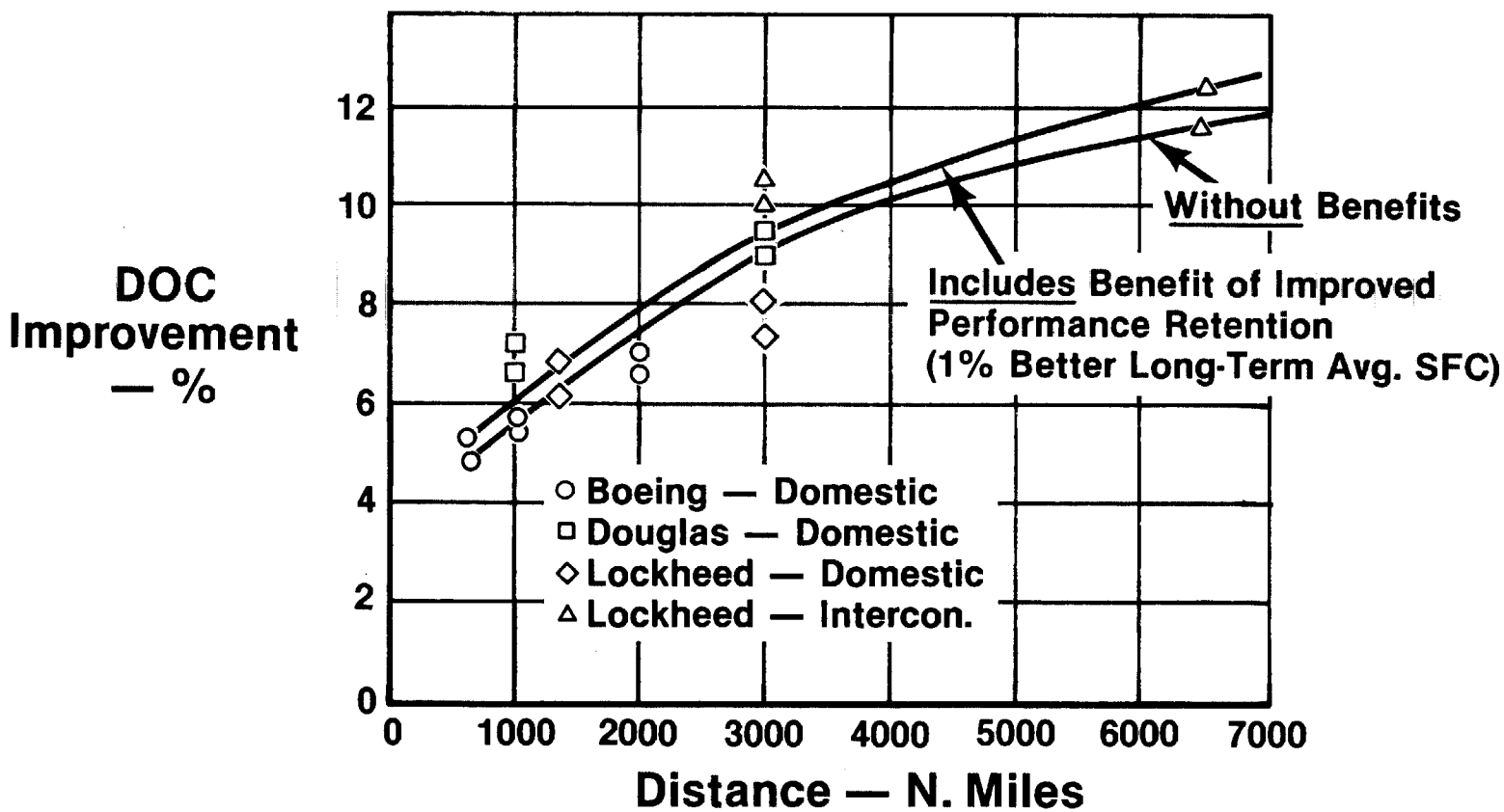

Direct Operating Cost Improvement

(E^3 Engine Vs. CF6-50C)

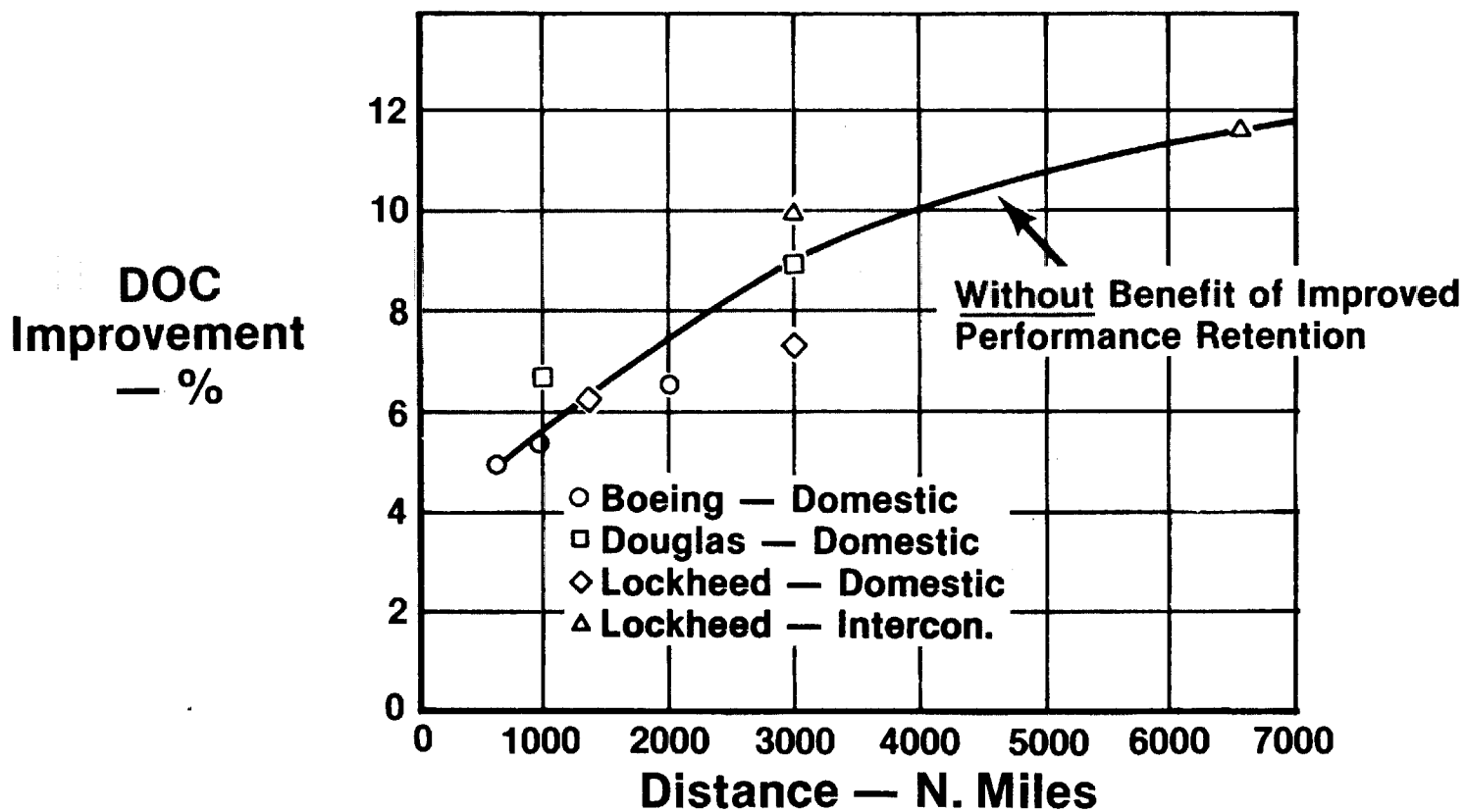

154

Economic Benefits, Direct Operating Cost

(NASA — Coordinated Rules)

	Mission	Range N. Miles	% △ DOC	Improved Ret. Benefit % △ DOC
• Boeing Twinfan	Design	2000	– 6.6	– 6.9
	Typical	1000	– 5.4	– 5.7
	Typical	665	– 5.0	– 5.3
• Douglas Trifan	Design	3000	– 9.0	– 9.5
	Typical	1000	– 6.7	– 7.2
• Lockheed Trifan	Design	3000	– 7.4	– 8.0
	Typical	1400	– 6.2	– 6.8
• Lockheed Quadfan	Design	6500	– 11.6	– 12.3
	Typical	3000	– 9.9	– 10.5

Block Fuel Savings

(E^3 Engine Vs. CF6-50C)

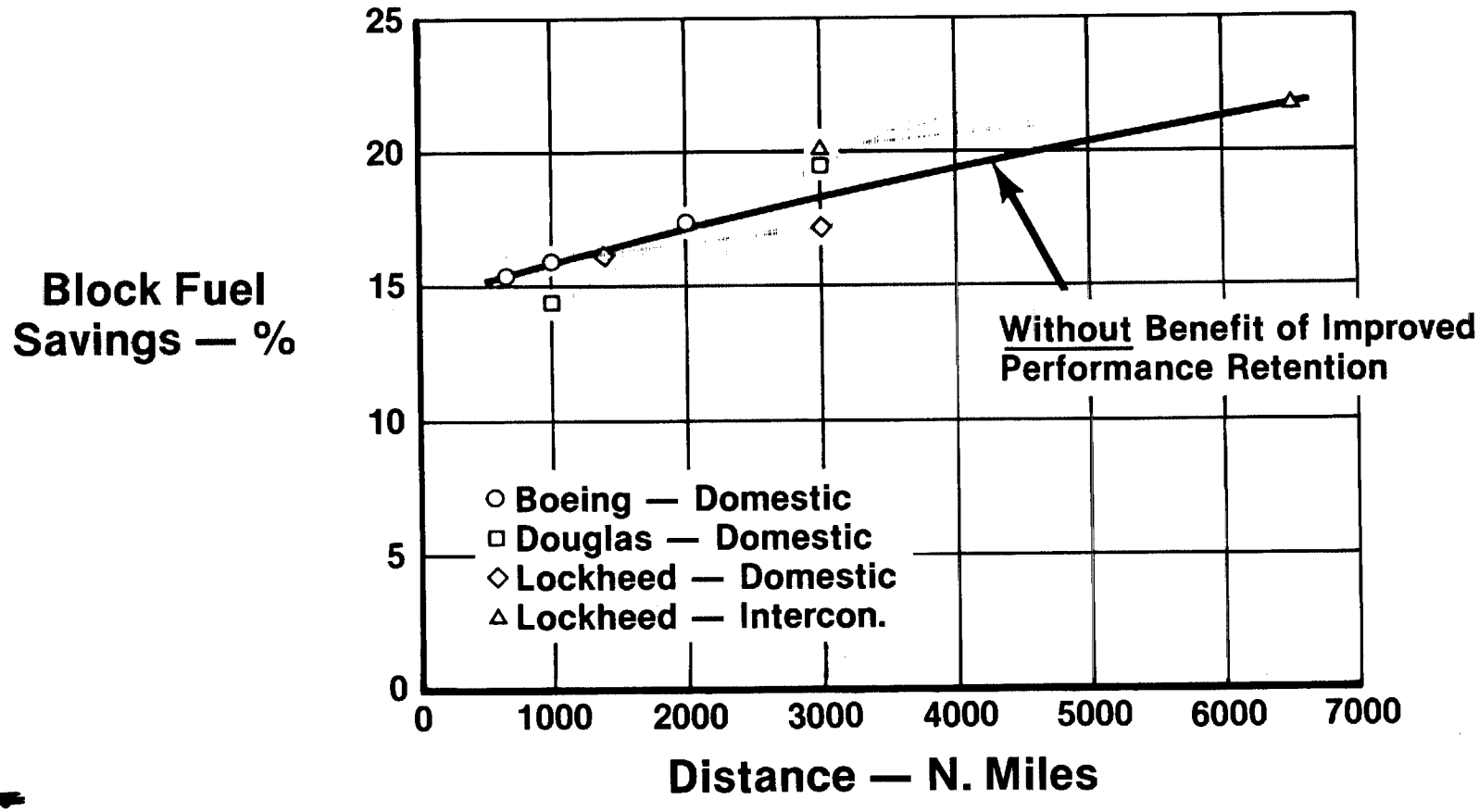

Elements of DOC for Design Mission

(Based on NASA Coordinated Economic Ground Rules)

Twin, 2000 Miles

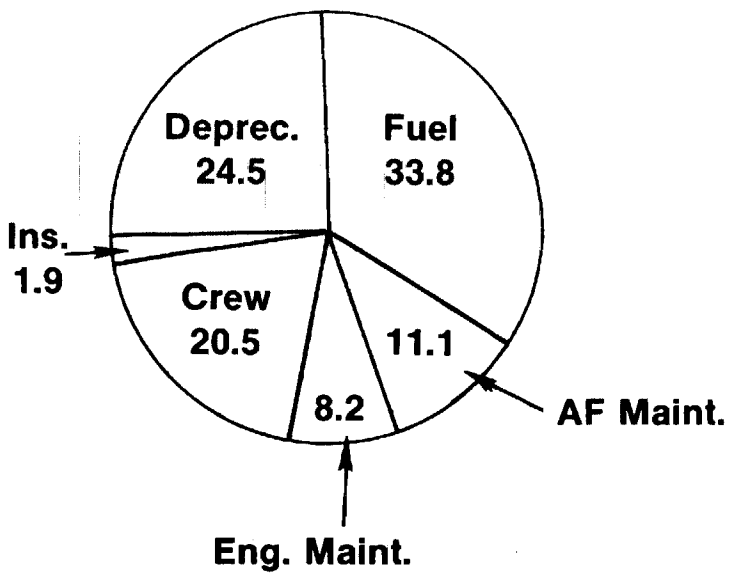

Quad, 6500 Miles

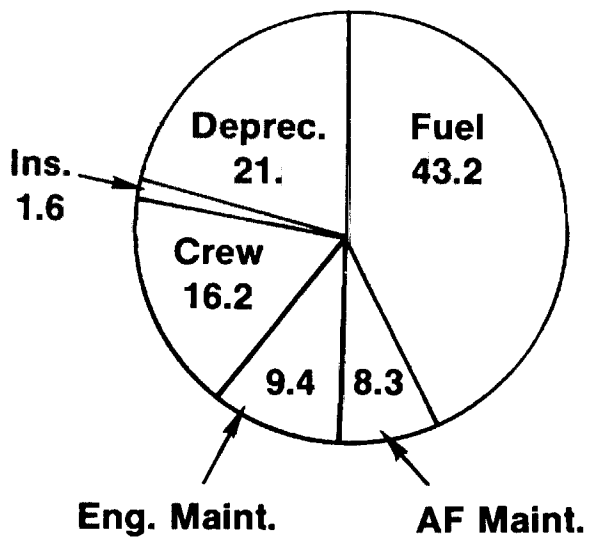

E157

E^3 Program

- Program Milestones
- FPS-ICLS Comparison

E158

E^3 Program Milestones

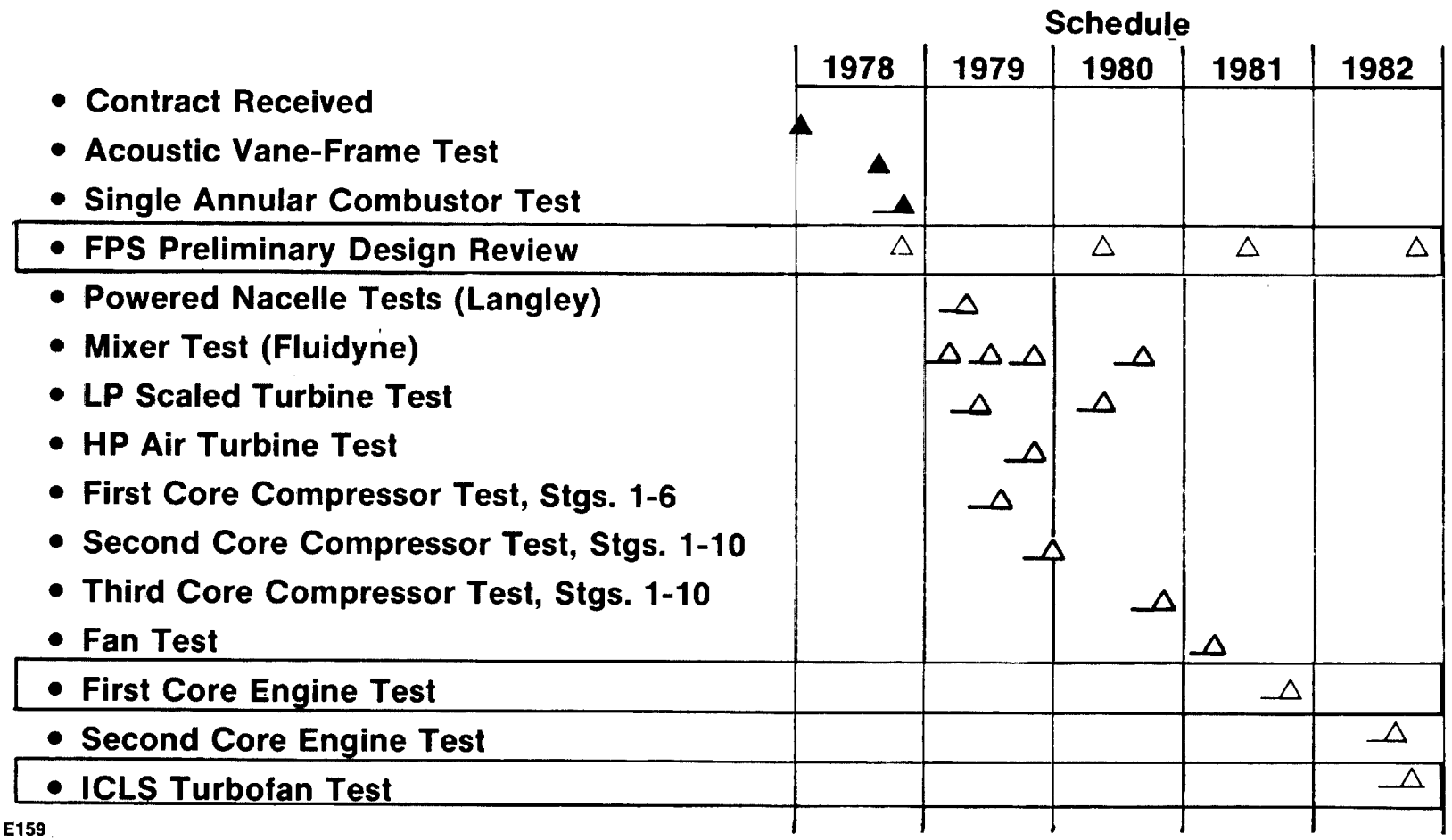

E159

ICLS
Req'd. Controls: FADEC - off engine. (But ~~co.~~ sponsored program will design & build an on-engine system which will be tested on ICLS, if possible.)

— Relies on QCSEE for composites background. Not exactly the same design as QCSEE.

Integrated Flight Propulsion System vs. Core Low-Spool

	FPS	ICLS
Performance, % △ SFC	-14.6	-12.4
Configuration	4 HPC Var. Stators	6 HPC Var. Stators
	Fuel Air Heat Exchanger	None (Possible)
	Thrust Reverser	Boiler Plate Nacelle
	Composite Frame	Metal Frame
	Access. Designed for Specific Installation	Slave Gearbox/ Available Pumps
Materials		
• Fan Frame	Composites, Aluminum	Steel
• 5 & 6 Vane	IN 718	A286
• Booster Vanes	Aluminum	Steel
• R95/AF115	AsHIP (Near Net Shape)	AsHIP (Pancake)

E160

E^3 Summary

• Introduction	NASA Program Objectives Will Be Met
• Engine Description	The Advanced Technology Components Provide the Basis for an Excellent Energy Efficient Commercial Engine
• Emissions	NASA/EPA Goals will be Met, NOx is Marginal
• Performance	FPS Forecast, -14.6% SFC Re. CF6-50C
• Performance Retention	An Additional 1% SFC Improvement is Projected Over the Operational Life
• Noise	A 3 DB Margin is Forecast Relative to FAR 36-1978
• Commercial Design	The FPS is a Commercial Design
• Aircraft/Engine Integration	Aircraft Co. Studies Verify FPS Benefits
• E^3 Program	ICLS Forecast, -12.4% SFC Re. CF6-50C

E161

Block Fuel Savings

(E^3 Engine Vs. CF6-50C)

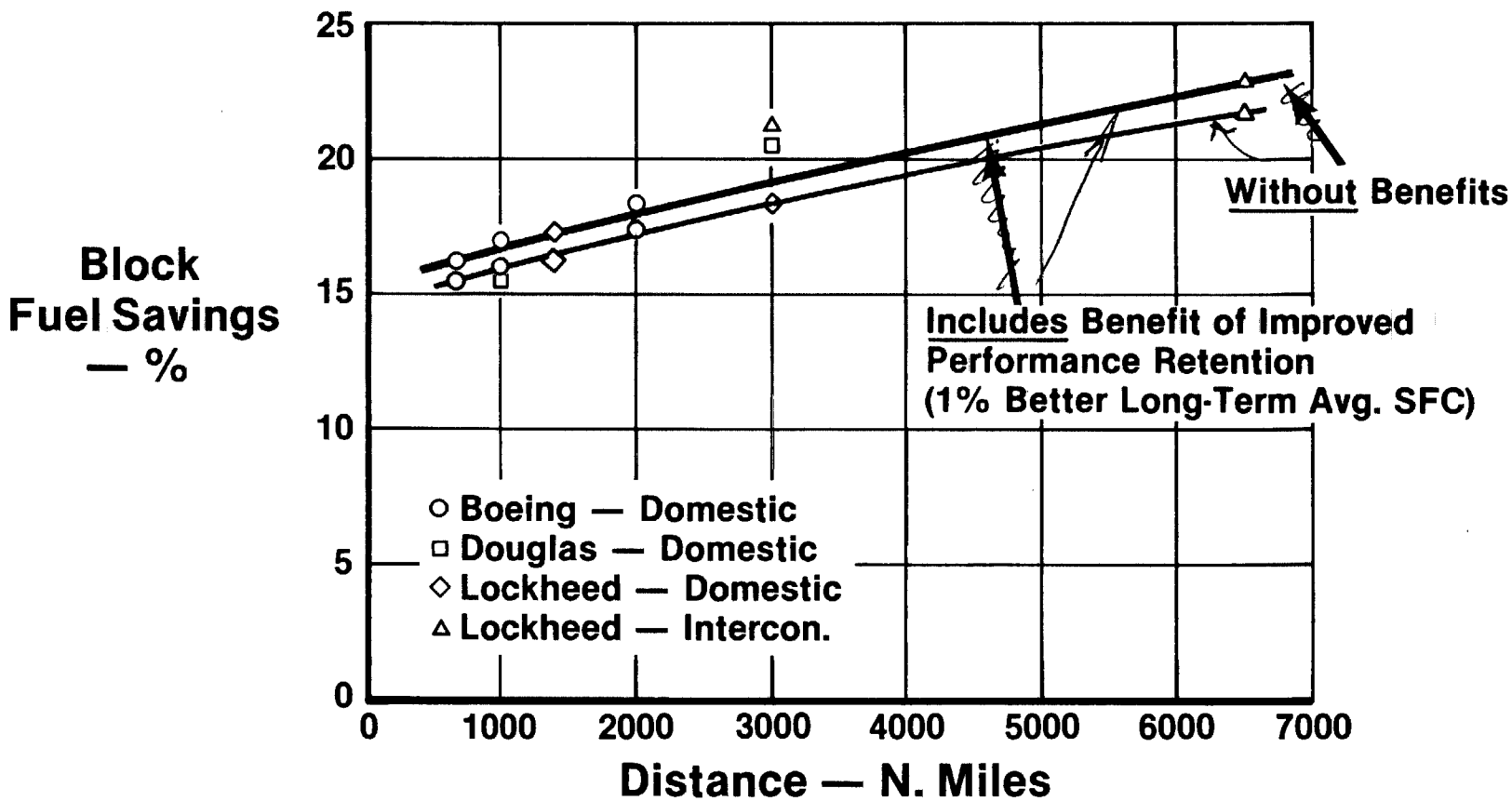

162

GENERAL ELECTRIC COMPANY
AIRCRAFT ENGINE GROUP

Economic Benefits, Block Fuel Reduction

	Mission	Range N. Miles	% Δ Block Fuel	Improved Ret. Benefit % Δ Block Fuel
• Boeing Twinfan	Design	2000	– 17.6	– 18.3
	Typical	1000	– 16.2	– 16.9
	Typical	665	– 15.5	– 16.3
• Douglas Trifan	Design	3000	– 19.5	– 20.5
	Typical	1000	– 14.5	– 15.4
• Lockheed Trifan	Design	3000	– 17.3	– 18.3
	Typical	1400	– 16.3	– 17.3
• Lockheed Quadfan	Design	6500	– 21.7	– 22.9
	Typical	3000	– 20.1	– 21.2

163