7N-07-CR
73733

Contract NAS3-20643

P-236

NASA

E 3

Energy Efficient Engine Integrated Core/Low Spool Test Vehicle

May 6, 1980

NASA-LEWIS Research Center

GENERAL ELECTRIC

Aircraft Engine Group
Cincinnati, Ohio

ORIGINAL CONTAINS
COLOR ILLUSTRATIONS

INTRODUCTION

INTRODUCTION

E^3 ICLS TEST VEHICLE PDR

AGENDA

INTRODUCTION	R. JOHNSTON
PROGRAM SCHEDULE AND HARDWARE FLOW	A. SAUNDERS
ICLS TEST VEHICLE CYCLE	P. ORTIZ
TESTING	D. MORRIS
TEST AND ALTITUDE PERFORMANCE	P. ORTIZ
SYSTEMS ENGINEERING	R. JOHNSTON
INLET AND NACELLE	P. HOLLOWAY
FAN	P. HOLLOWAY
CORE ENGINE	R. JOHNSTON
LOW PRESSURE TURBINE	T. THOMAS
TURBINE REAR FRAME AND MIXER	T. THOMAS
BEARINGS, SUMPS AND DRIVES	A. SAUNDERS
CONTROLS AND ACCESSORIES	A. SAUNDERS
CONCLUSION	R. JOHNSTON

R. JOHNSTON

ICLS VEHICLE PDR PURPOSE

REVIEW ICLS PROGRAM

- OVERALL VEHICLE DESIGN
- TEST OBJECTIVES
- DEGREE OF FPS/ICLS SIMULATION
- PLANNED INSTRUMENTATION
- PORTIONS OF THE TEST PLAN
- FACILITY CAPABILITIES
- SCHEDULES/MAJOR HARDWARE FLOW

ICLS TEST OBJECTIVES

- VERIFY SYSTEM DESIGN FEATURES (SUCH AS A.C.C.)
- VERIFY SUITABILITY OF DESIGN
- VERIFY PERFORMANCE LEVELS
- VERIFY SYSTEM BEHAVIOR (SUCH AS NOISE, EMISSIONS)

ICLS PDR LAYOUT

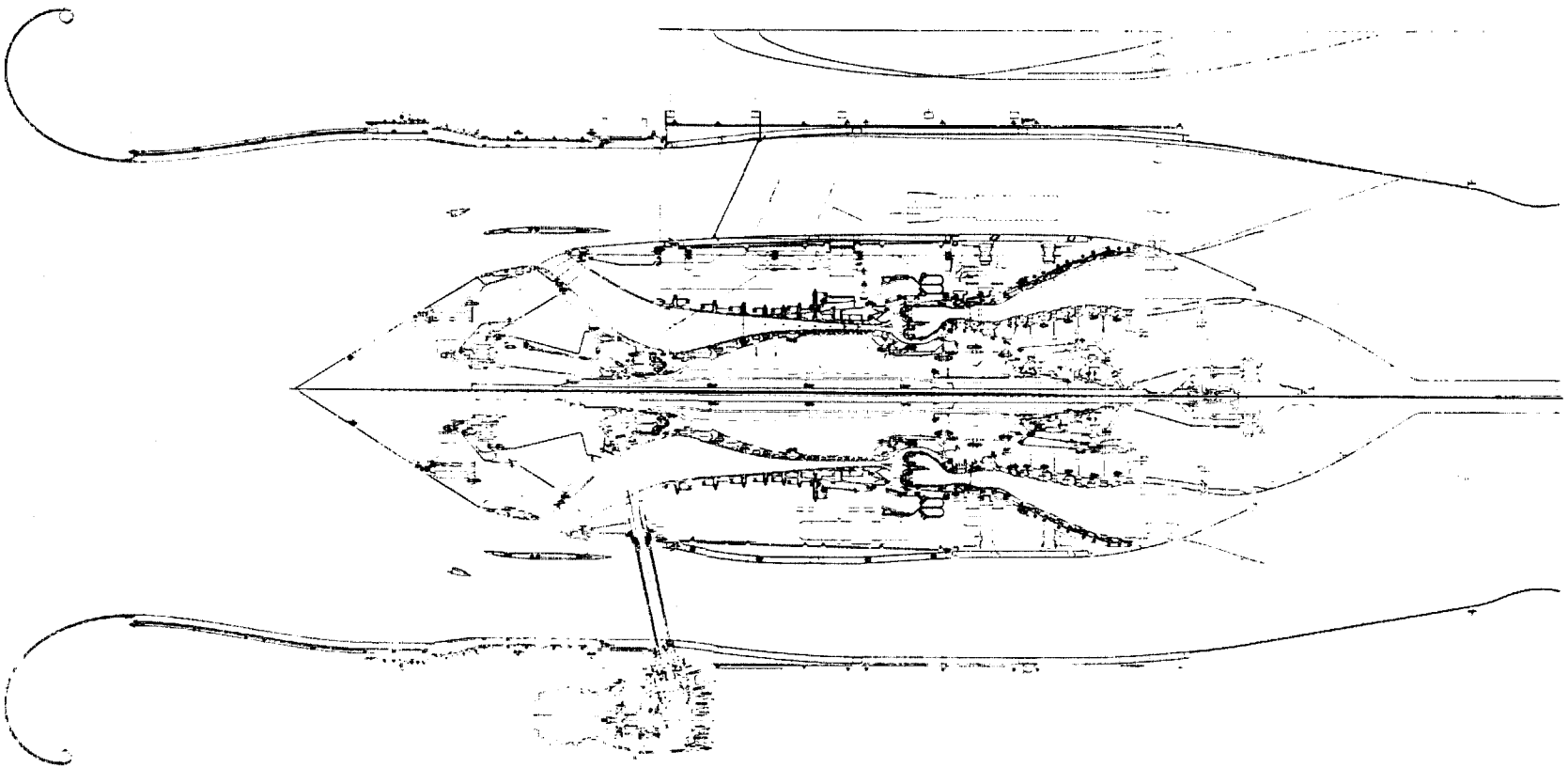

MAJOR DIFFERENCES ICLS ➡ FPS

- BOILER PLATE NACELLE AND FAN FRAME
- UNDROOPED INLET
- SOME MATERIAL SUBSTITUTION
- ICLS COMPONENT PERFORMANCE LEVELS
- SOME COMPONENT MATCHING DIFFERENCES
- INSTRUMENTATION
- SLAVE FAN MOUNTED GEARBOX

E805

PROGRAM SCHEDULE AND HARDWARE FLOW

PROGRAM SCHEDULE AND HARDWARE FLOW

AGENDA

- ICLS DEVELOPMENT SUBSTANTIATION
- COMPONENT DEVELOPMENT PLAN
- ICLS HARDWARE SOURCE
- DEVELOPMENT SCHEDULE

A. SAUNDERS

E306

ICLS

DESIGN AND DEVELOPMENT

SUBSTANTIATION PLAN

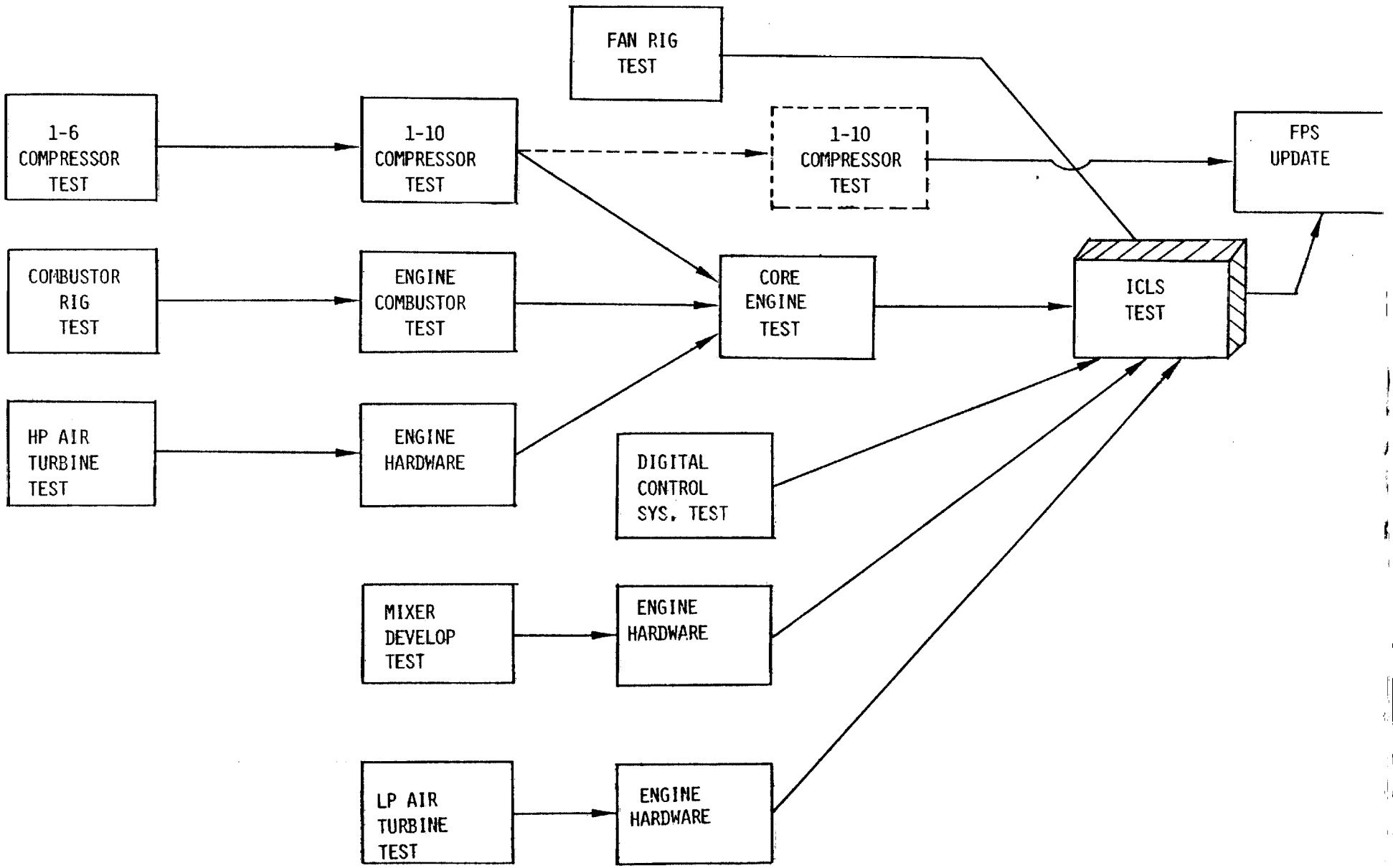

E807

FAN DEVELOPMENT/HARDWARE FLOW

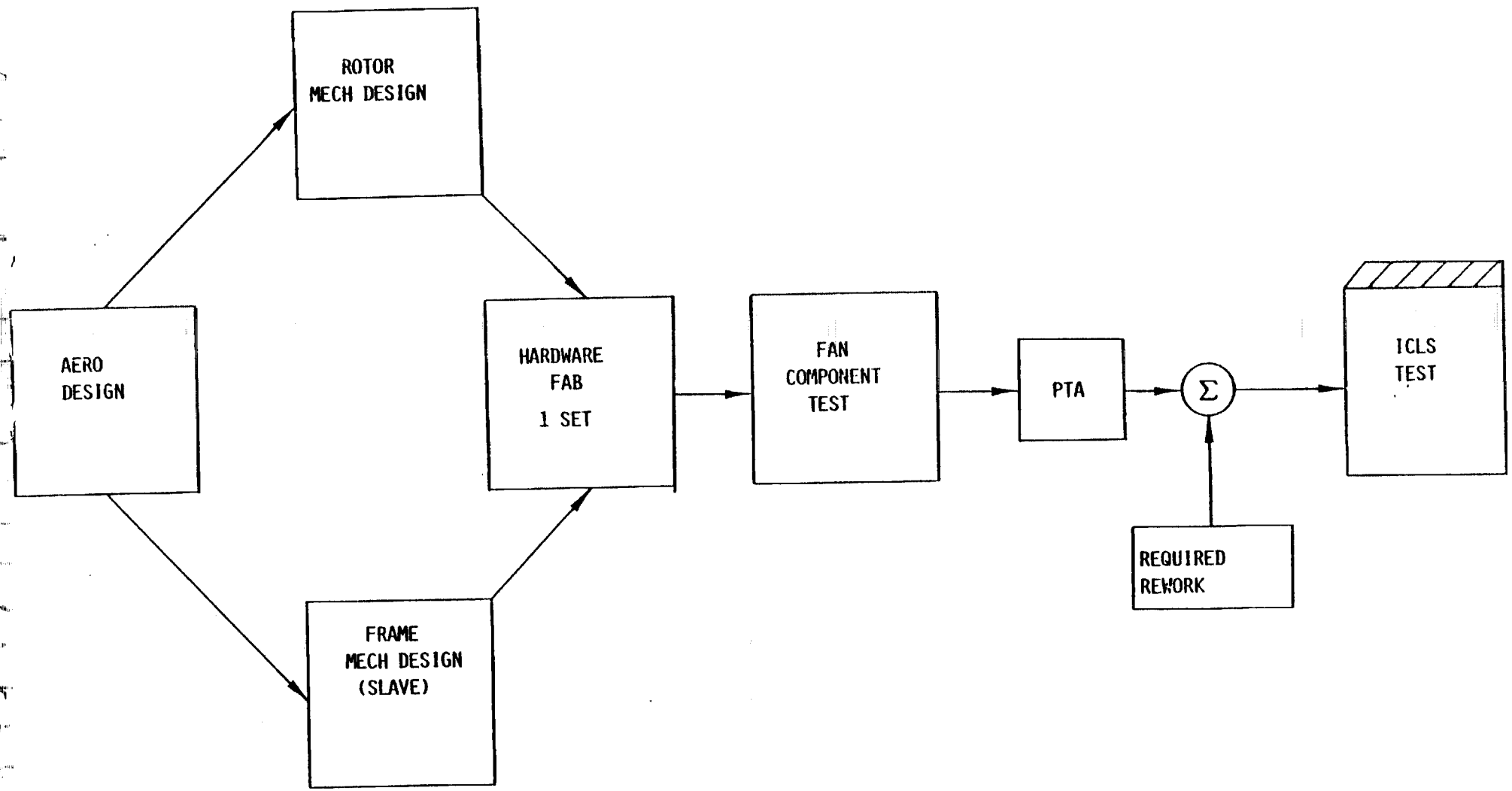

E808

HIGH PRESSURE COMPRESSOR

DEVELOPMENT PLAN/HARDWARE FLOW

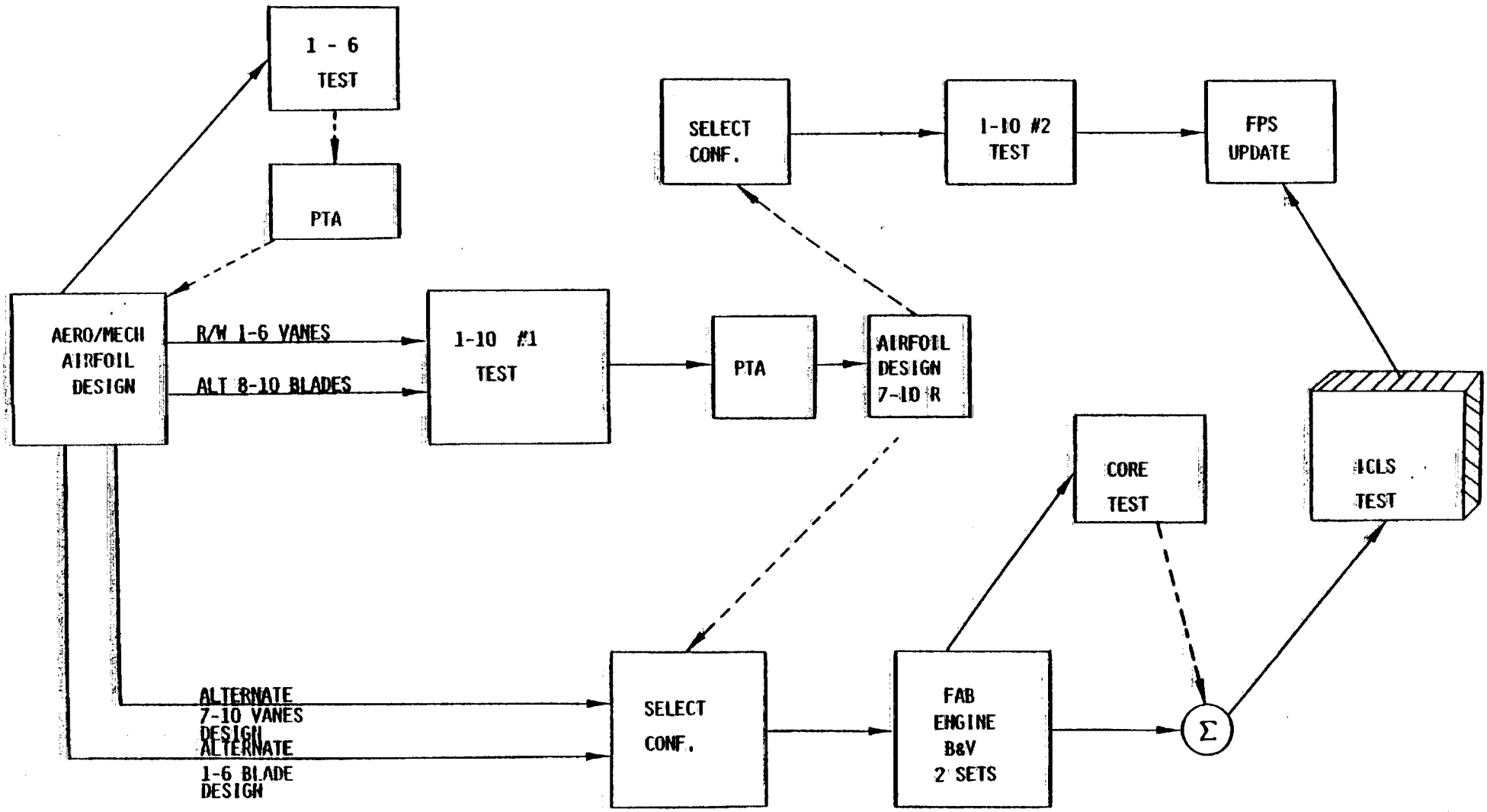

E809

COMBUSTOR DEVELOPMENT/HARDWARE FLOW

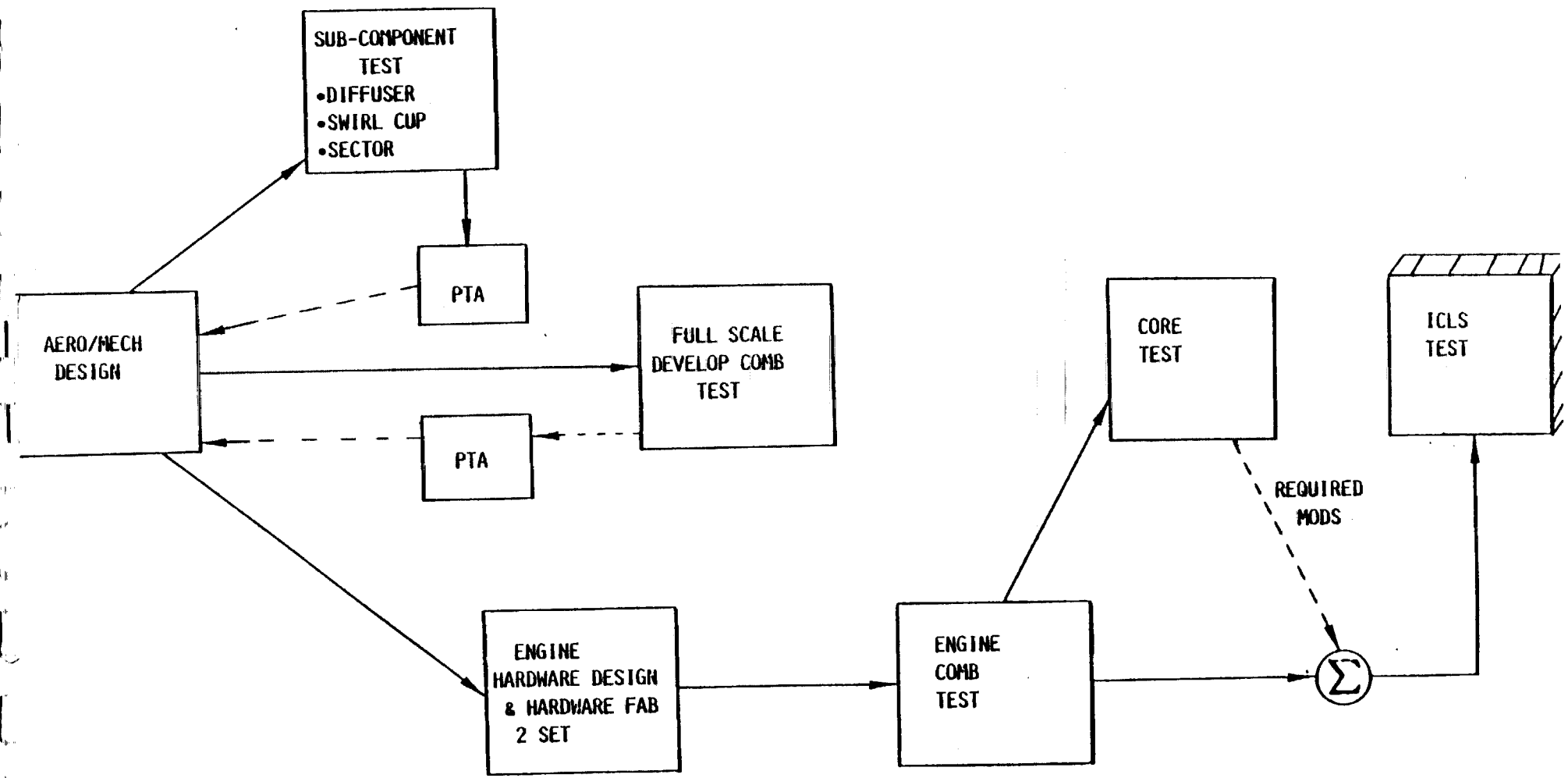

HIGH PRESSURE TURBINE

DEVELOPMENT PLAN/HARDWARE FLOW

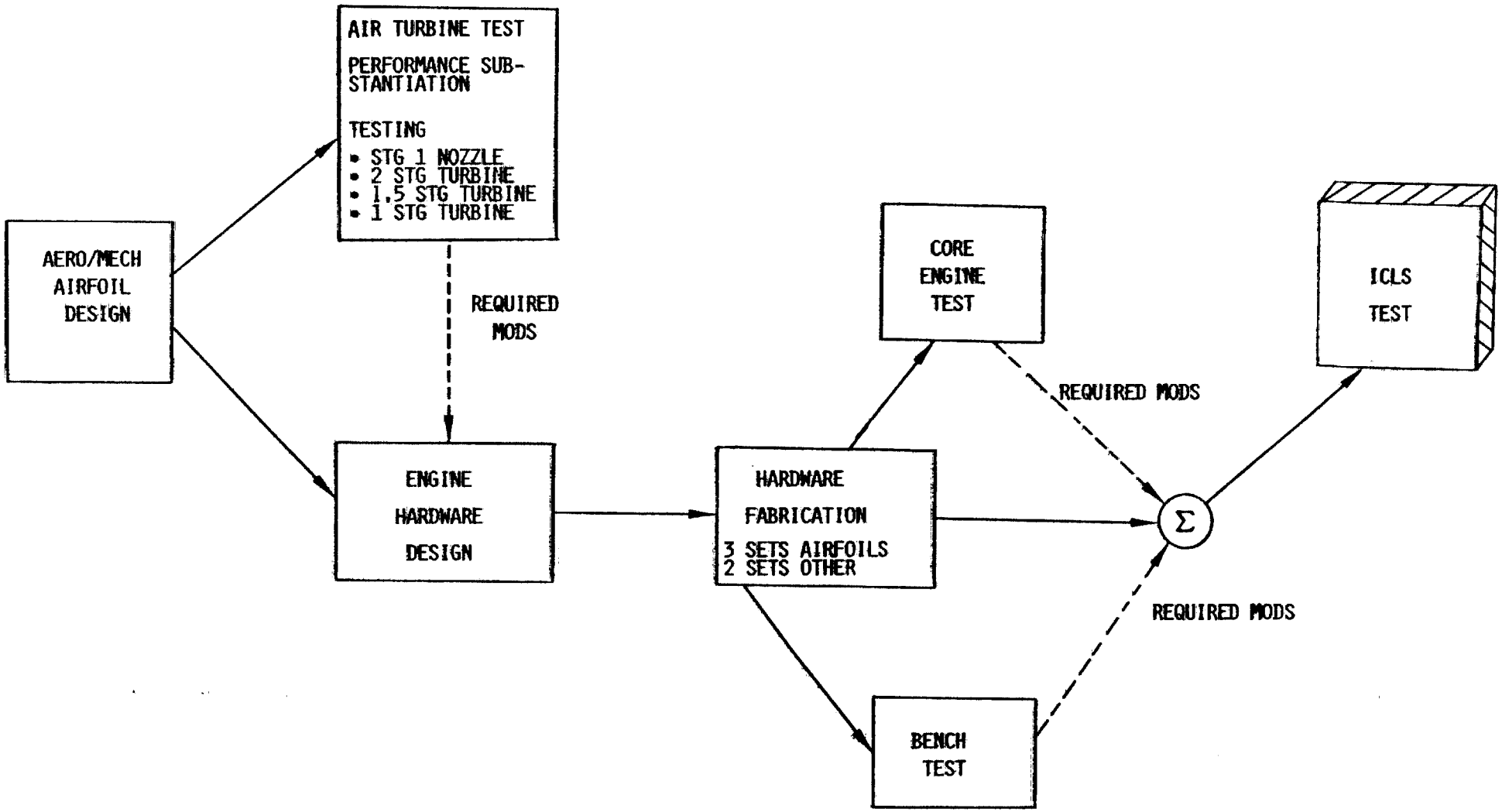

E811

LOW PRESSURE TURBINE

DEVELOPMENT PLAN/HARDWARE FLOW

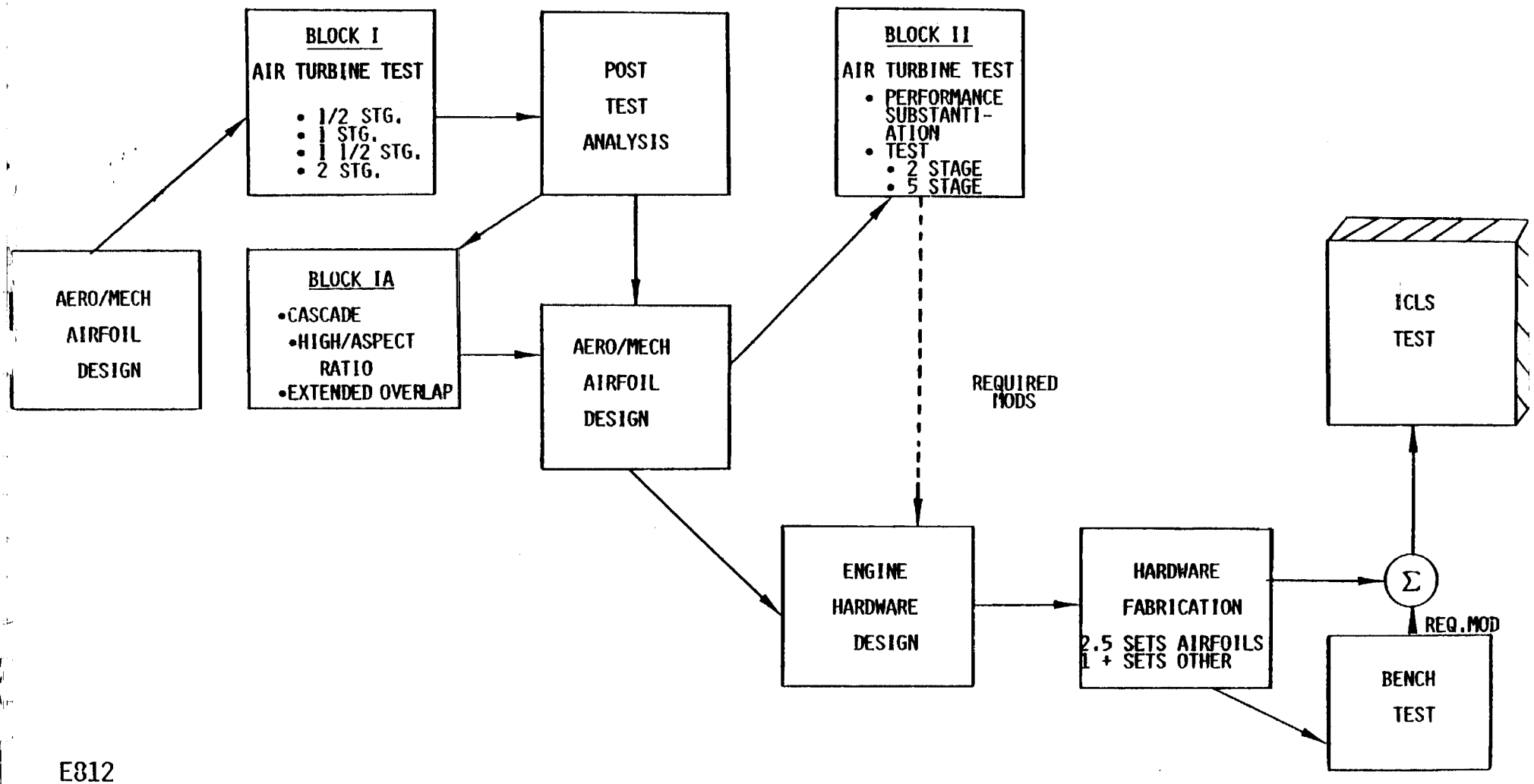

E812

MIXER DEVELOPMENT/HARDWARE FLOW

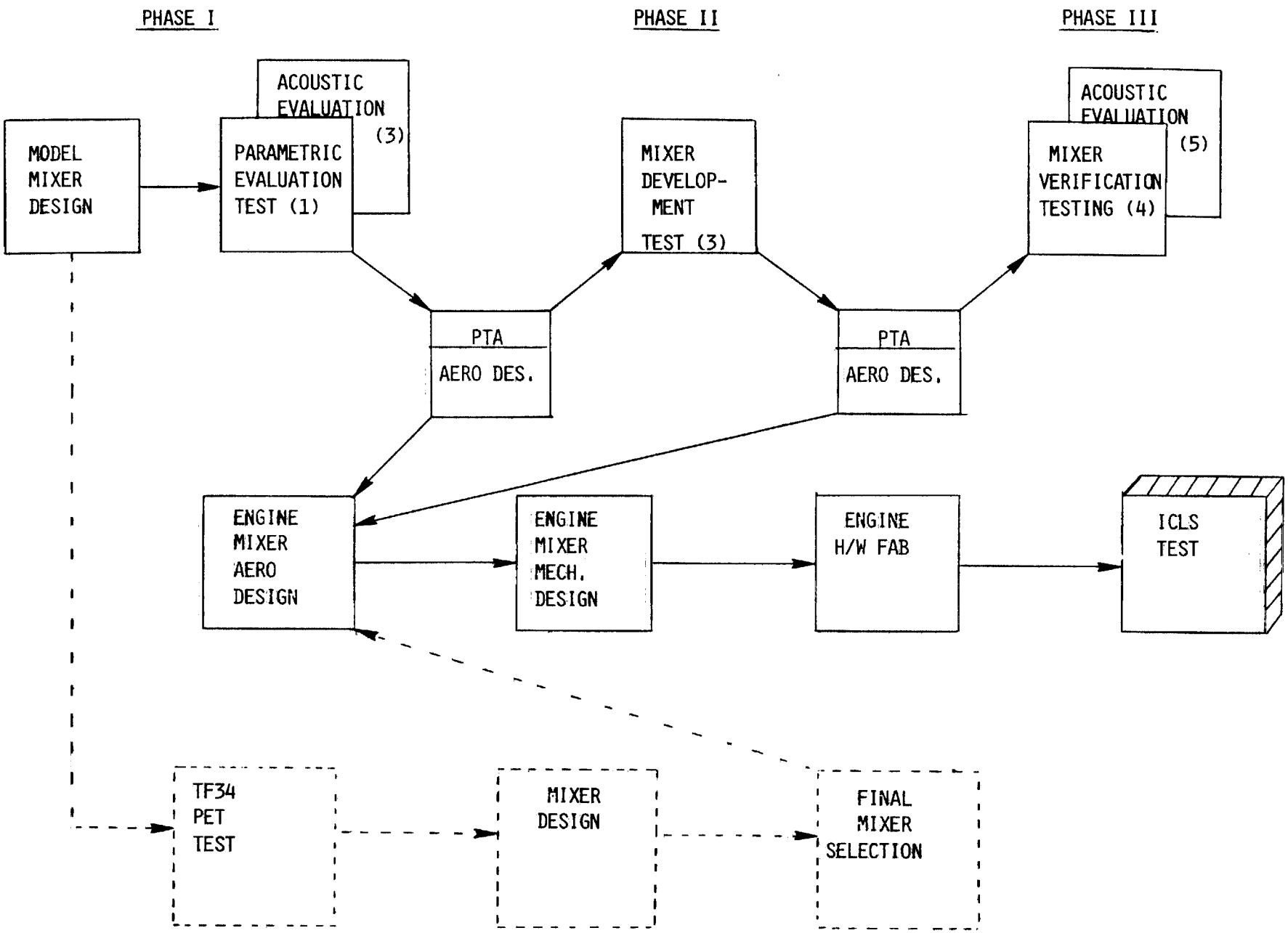

E813

CONTROLS

DEVELOPMENT PLAN/HARDWARE FLOW

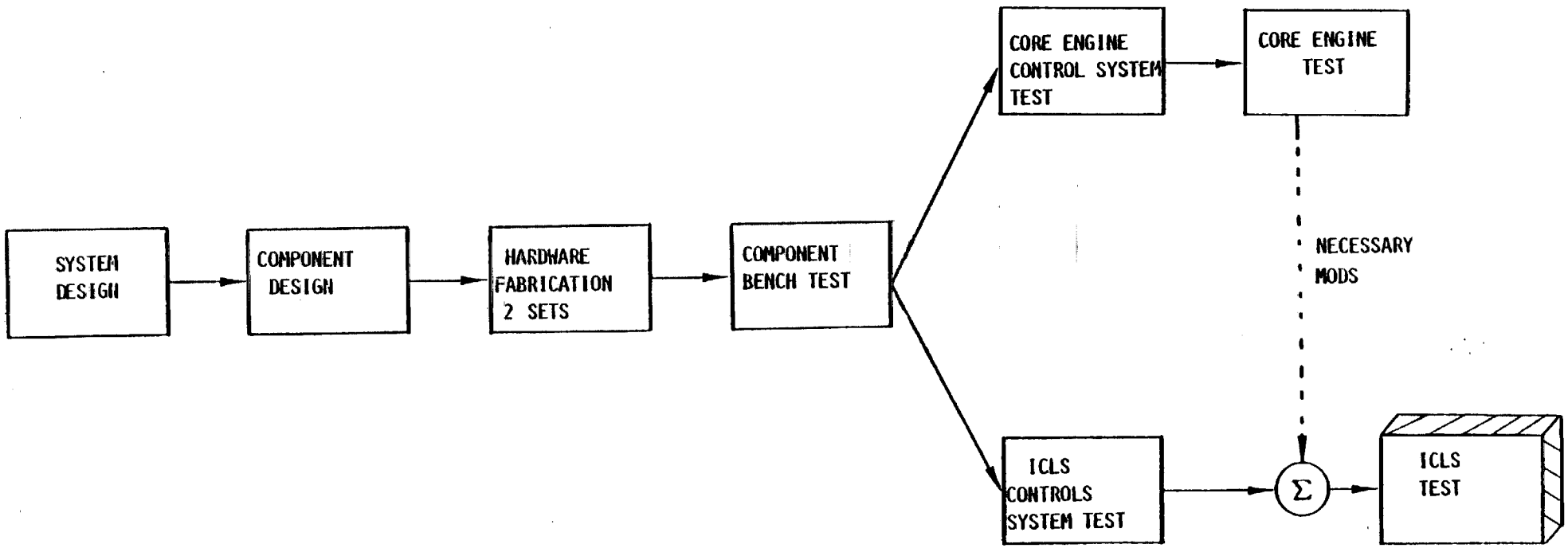

E814

ICLS HARDWARE SOURCES

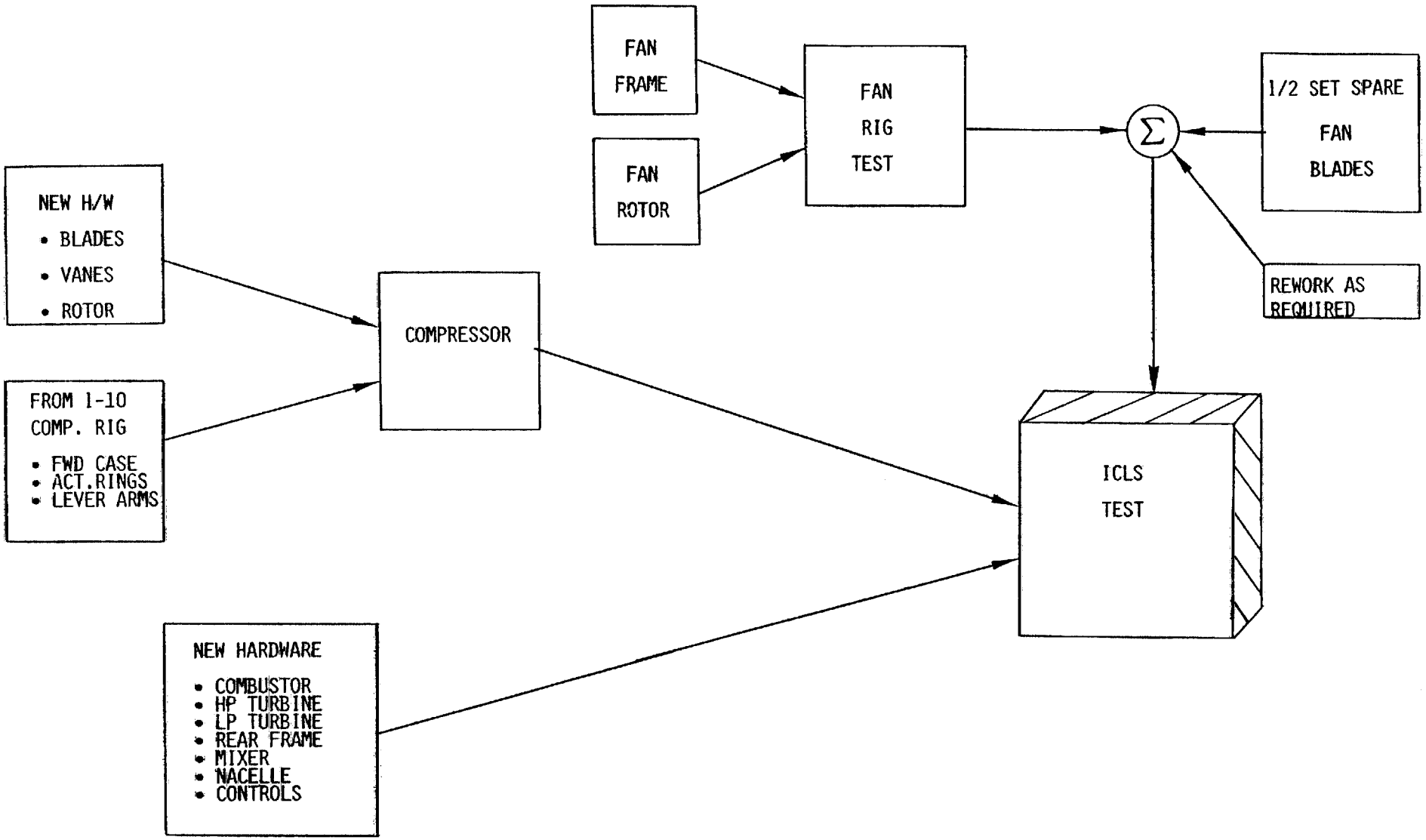

ICLS DEVELOPMENT SCHEDULE

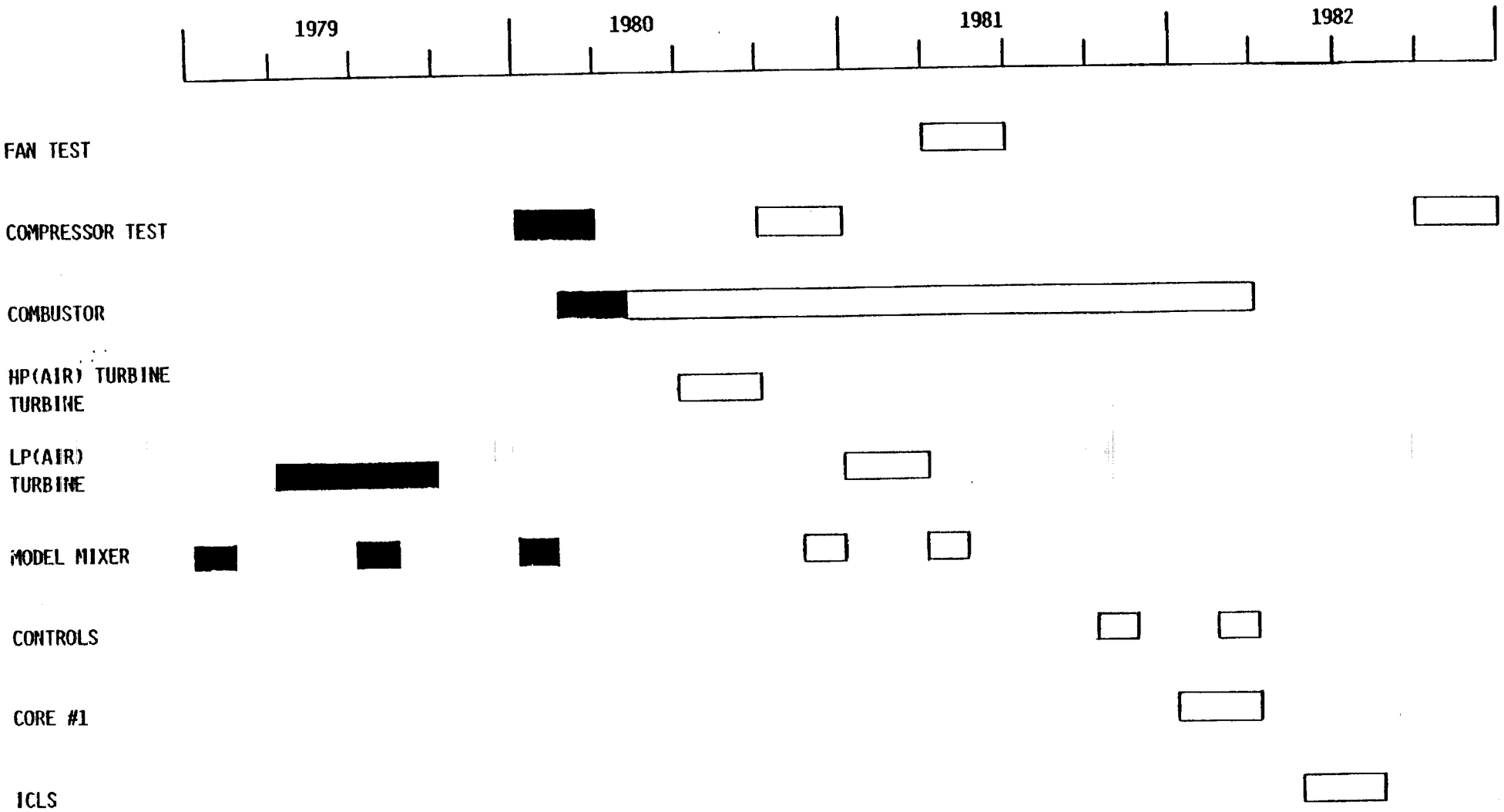

E816

ICLS TEST VEHICLE CYCLE

ICLS CYCLE AND PERFORMANCE PREDICTION

- ICLS TEST OBJECTIVES
- ICLS CYCLES
- TEST CONDITIONS AND OPERATING LIMITS
- PREDICTED PERFORMANCE

P. ORTIZ

E817

E^3 ICLS PERFORMANCE TEST OBJECTIVES

- EVALUATION OF COMPONENT AND OVERALL ENGINE SYSTEM PERFORMANCE
- THERMAL AND ROTATIONAL SPEED OVERSHOOT EVALUATION
- EVALUATE ACC PERFORMANCE EFFECTS
- VERIFY CONTROL SYSTEM POWER MANAGEMENT AND ENGINE MODEL FEATURES
- EVALUATE FAN OFF-DESIGN PERFORMANCE (TWO NOZZLE AREAS)
- VERIFY PERFORMANCE PROJECTIONS - MAX TO MIN INSTRUMENTATION
- EVALUATE FULL SCALE MIXER PERFORMANCE (TRAVERSE RAKE)
- CORRELATE DATA WITH CORE AND COMPONENT TESTS FOR CRUISE PERFORMANCE PROJECTIONS

ICLS CYCLE DEFINITIONS

FPS CYCLE

+ ICLS COMPONENT PERFORMANCE FORECAST
+ OPTIMIZE THE CYCLE FOR ICLS FORECAST PERFORMANCE BY INCREASING LPT NOZZLE AREA

ICLS FORECAST CYCLE

+ ENGINE CONFIGURATION CHANGES FOR TEST PURPOSES
+ INSTRUMENTATION CONFIGURATIONS

ICLS TEST VEHICLE CYCLE

+ COMPONENT TEST PERFORMANCE
+ ADDITIONAL ENGINE CONFIGURATION CHANGES NOT YET KNOWN

ICLS TEST VEHICLE STATUS CYCLE (PRETEST PREDICTIONS)

E819

ICLS COMPONENT PERFORMANCE FORECAST

COMPONENT PERFORMANCE - MAX. CRUISE	△ FROM FPS
FAN BYPASS	-0.5 PT.
FAN HUB	-0.7 PT.
COMPRESSOR	-1.0 PT.
HP TURBINE	-0.5 PT.
LP TURBINE	-0.6 PT.
COOLING PARASITICS	+1.0 %
MIXER EFFECTIVENESS	-5.0 %

ENGINE CONFIGURATION REVISIONS TO FORECAST ICLS FOR TEST PURPOSES

REVISION	CYCLE EFFECT
• NO FAN REVERSER	REDUCED FAN DUCT PRESSURE LOSS NO LEAKAGE
• INCREASED LP TURBINE NOZZLE AREA	INCREASED LPT $\frac{W\sqrt{T}}{P}$ REDUCED TURBINE TEMPERATURES INCREASED CORE SPEED
• ACCESSORY GEARBOX DRIVE SHAFT PYLON	INCREASED FAN DUCT PRESSURE LOSS
• NO ACOUSTIC PANELS WITH BELLMOUTH TESTS	REDUCED FAN DUCT AND CORE DUCT PRESSURE LOSSES

E821

INSTRUMENTATION MAX AND MIN PERFORMANCE LOSS CONFIGURATIONS FOR ICLS PERFORMANCE TEST

	MAX	MIN
• BELLMOUTH INLET (FLOW MEASUREMENT)	X	X
• INLET PT/PS RAKES	X	
• BOOSTER ROTOR DISCHARGE RAKES - VANE AND BYPASS	X	
• COMPRESSOR INLET PT/TT RAKES	X	X
• FAN EXIT ARC/RADIAL RAKES	X	
• COMPRESSOR EXIT RAKE	X	X
• HP TURBINE EXIT RAKE	X	X
• LP TURBINE EXIT RAKE	X	X
• NOZZLE EXIT TRAVERSE RAKE		
• MECHANICAL INTEGRITY INSTRUMENTATION	X	X

FPS AND ICLS TEST VEHICLE CYCLE COMPARISON

	MAX CR-35K/0.8 MACH/STD DAY		TAKEOFF/SLS/+27°F	
	FPS	ICLS*	FPS	ICLS*
UNINSTALLED THRUST	8425	8425	36,500	36,500
UNINSTALLED SFC	.542(BASE)	.556(+2.6%)	.304(BASE)	.314(+3.3%)
BYPASS RATIO	6.93	6.85	7.35	7.21
CYCLE PRESSURE RATIO	36.1	36.2	29.7	30.0
FAN PRESSURE RATIO	1.61	1.61	1.50	1.50
COMPRESSOR PRESSURE RATIO	22.6	22.8	20.0	20.3
HPT ROTOR INLET TEMPERATURE - °F	2170(BASE)	2218(+48)	2452(BASE)	2506(+54)
LPT FLOW FUNCTION - %△	BASE	+4.0%	BASE	+4.0%
%△SFC - RELATIVE TO CF6-50C				
- UNINSTALLED	-13.3	-11.1	N/A	N/A
- INSTALLED	-14.2	-12.0	N/A	N/A

*NO INSTRUMENTATION LOSSES

E823

FPS AND ICLS COMPONENT PERFORMANCE COMPARISON

35,000 FEET/0.8 MACH/STD DAY

PARAMETER	FPS	*ICLS FORECAST	*ICLS TEST VEHICLE
ADIABATIC EFFICIENCIES			
FAN BYPASS	.888	.884	.884
FAN HUB	.892	.885	.885
COMPRESSOR	.861	.851	.849
COMBUSTOR	.995	.995	.995
HP TURBINE	.924	.919	.919
LP TURBINE	.917	.910	.910
COOLING AND PARASITIC FLOWS			
COMPRESSOR DISCHARGE	6.88	7.88	7.88
MIXING EFFECTIVENESS	.75	.70	.70

*NO INSTRUMENTATION LOSSES

FPS AND ICLS MAX CRUISE CYCLE COMPARISON

35,000 FEET/0.8 MACH/STD DAY

PARAMETER	FPS	*ICLS FORECAST	*ICLS TEST VEHICLE
UNINSTALLED PERFORMANCE			
NET THRUST - LB	8425	8425	8425
SFC	.542	.555	.556
BYPASS RATIO	6.93	6.92	6.85
CYCLE PRESSURE RATIO	36.1	35.9	36.2
FAN			
CORRECTED FLOW - LB/SEC	1398	1390	1390
BYPASS PRESSURE RATIO	1.61	1.61	1.61
HUB PRESSURE RATIO	1.63	1.62	1.62
COMPRESSOR			
CORRECTED FLOW - LB/SEC	118.3	118.3	119.5
CORRECTED SPEED - %	99.6	99.6	99.8
PRESSURE RATIO	22.6	22.6	22.8
DISCHARGE TEMPERATURE - °F	893	902	907
HP TURBINE			
FLOW FUNCTION - $\frac{W\sqrt{T}}{P}$	17.6	17.6	17.6
ROTOR INLET TEMPERATURE - °F	2170	2223	2218
LP TURBINE			
FLOW FUNCTION - $\frac{W\sqrt{T}}{P}$	80.5(BASE)	82.6(+2.6%)	83.7(+4%)
NOZZLE INLET PRESSURE - PSIA	36.2	35.5	35.2
NOZZLE INLET TEMPERATURE -°F	1355	1388	1379

*NO INSTRUMENTATION LOSSES

E825

FPS AND ICLS TAKEOFF CYCLE COMPARISON

SEA LEVEL STATIC STD +27°F

PARAMETER	FPS	* ICLS FORECAST	*ICLS TEST VEHICLE
UNINSTALLED PERFORMANCE			
NET THRUST - LB	36,500	36,500	36,500
SFC	.304	.313	.314
BYPASS RATIO	7.35	7.30	7.21
CYCLE PRESSURE RATIO	29.7	29.8	30.0
FAN			
CORRECTED FLOW - LB/SEC	1274	1269	1269
BYPASS PRESSURE RATIO	1.50	1.50	1.50
HUB PRESSURE RATIO	1.51	1.51	1.51
COMPRESSOR			
CORRECTED FLOW - LB/SEC	108.8	109.1	110.4
CORRECTED SPEED - %	97.7	97.8	98.0
PRESSURE RATIO	20.0	20.1	20.3
DISCHARGE TEMPERATURE - °F	1074	1087	1092
HP TURBINE			
FLOW FUNCTION - $\frac{W\sqrt{T}}{P}$	17.6	17.6	17.6
ROTOR INLET TEMPERATURE - °F	2452	2511	2506
LP TURBINE			
FLOW FUNCTION - $\frac{W\sqrt{T}}{P}$	81.0(BASE)	83.1(+2.6%)	84.3(+4%)
NOZZLE INLET PRESSURE - PSIA	83.0	82.2	81.3
NOZZLE INLET TEMPERATURE - °F	1571	1606	1597

*NO INSTRUMENTATION LOSSES

ICLS TEST CONDITIONS

CONFIGURATION VARIATIONS

INLET - BELLMOUTH OR AERO ACOUSTIC INLET (AAI)

INSTRUMENTATION - SOME WILL BE REMOVED AS TESTS PROGRESS

NOZZLE AREA - STANDARD OR LARGE

TEST DATA RUNS

TEST TYPE	ENGINE INLET	INSTRUMENTATION	NOZZLE	EXHAUST TRAVERSE
MECHANICAL CHECKOUT	BELLMOUTH	MAXIMUM	STANDARD	NO
PERFORMANCE CALIBRATION	BELLMOUTH	MAXIMUM	STANDARD	NO
FAN LOW OPERATING LINE	BELLMOUTH	MAXIMUM	LARGE	NO
MIXER PERFORMANCE	BELLMOUTH	MAXIMUM	LARGE	YES
VERIFICATION PERFORMANCE	BELLMOUTH	MINIMUM	STANDARD	NO
INLET PERFORMANCE	AAI	MINIMUM (+INLET RAKE)	STANDARD	NO
ACOUSTIC	AAI	MINIMUM	STANDARD	NO
EMISSIONS	AAI	MINIMUM	STANDARD	NO

ICLS TEST VEHICLE OPERATING LIMITS

SEA LEVEL STATIC

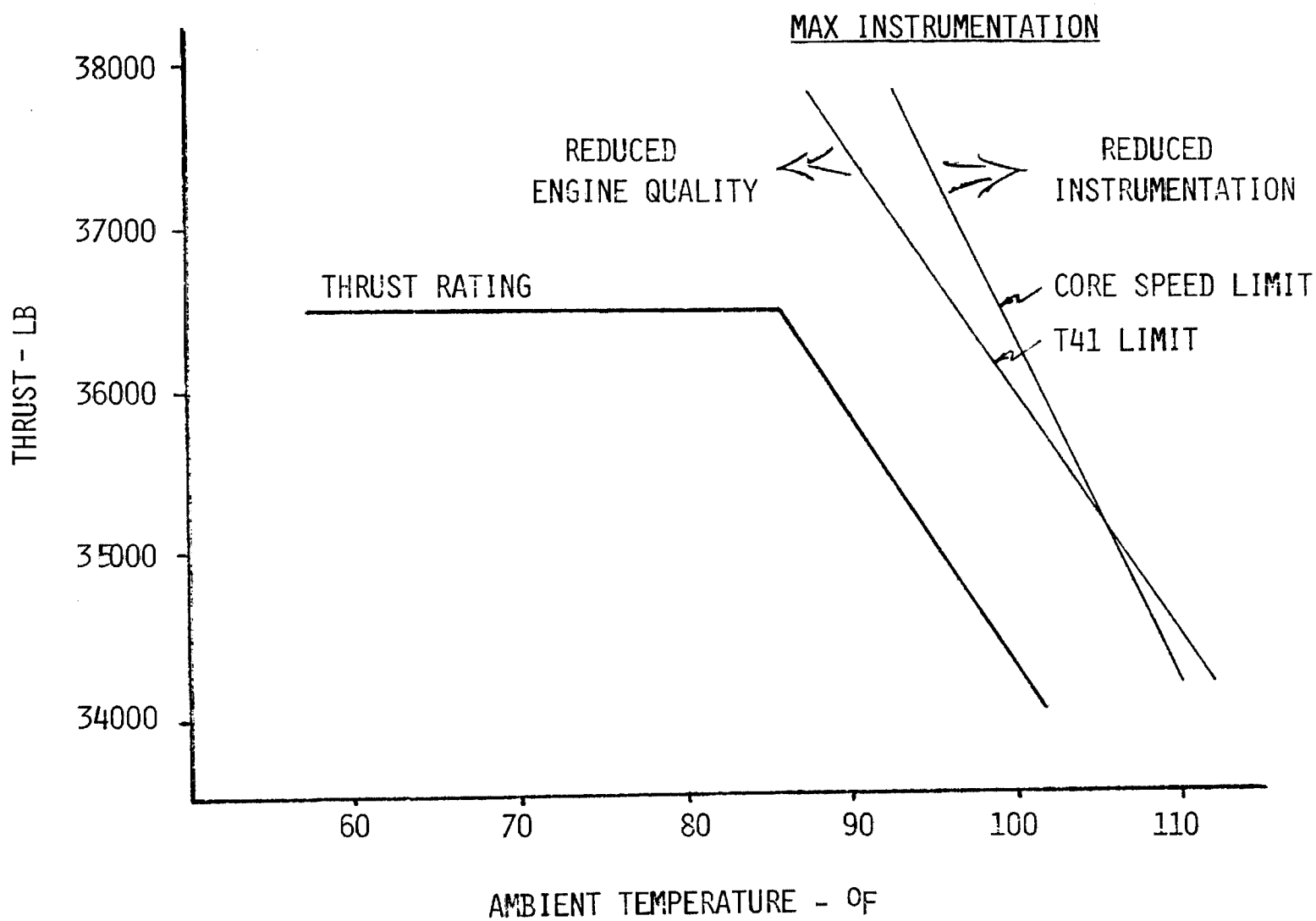

E828

ICLS SFC vs THRUST PREDICTION

35,000 FEET/0.8 MACH/STD DAY

ZERO BLEED AND POWER

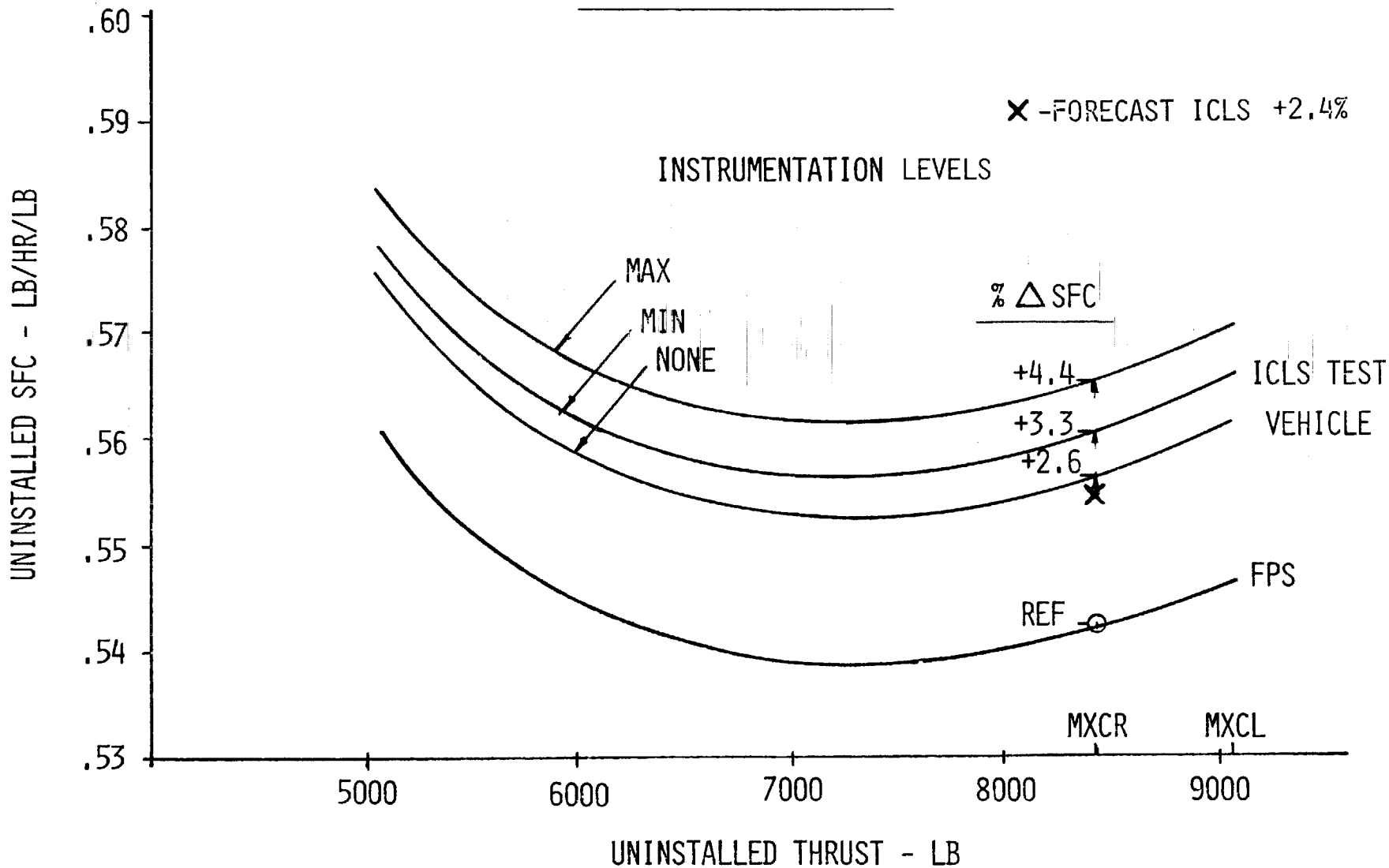

E829

ICLS SFC VS. THRUST PREDICTION

SEA LEVEL STATIC/STD + 27°F

ZERO BLEED & POWER

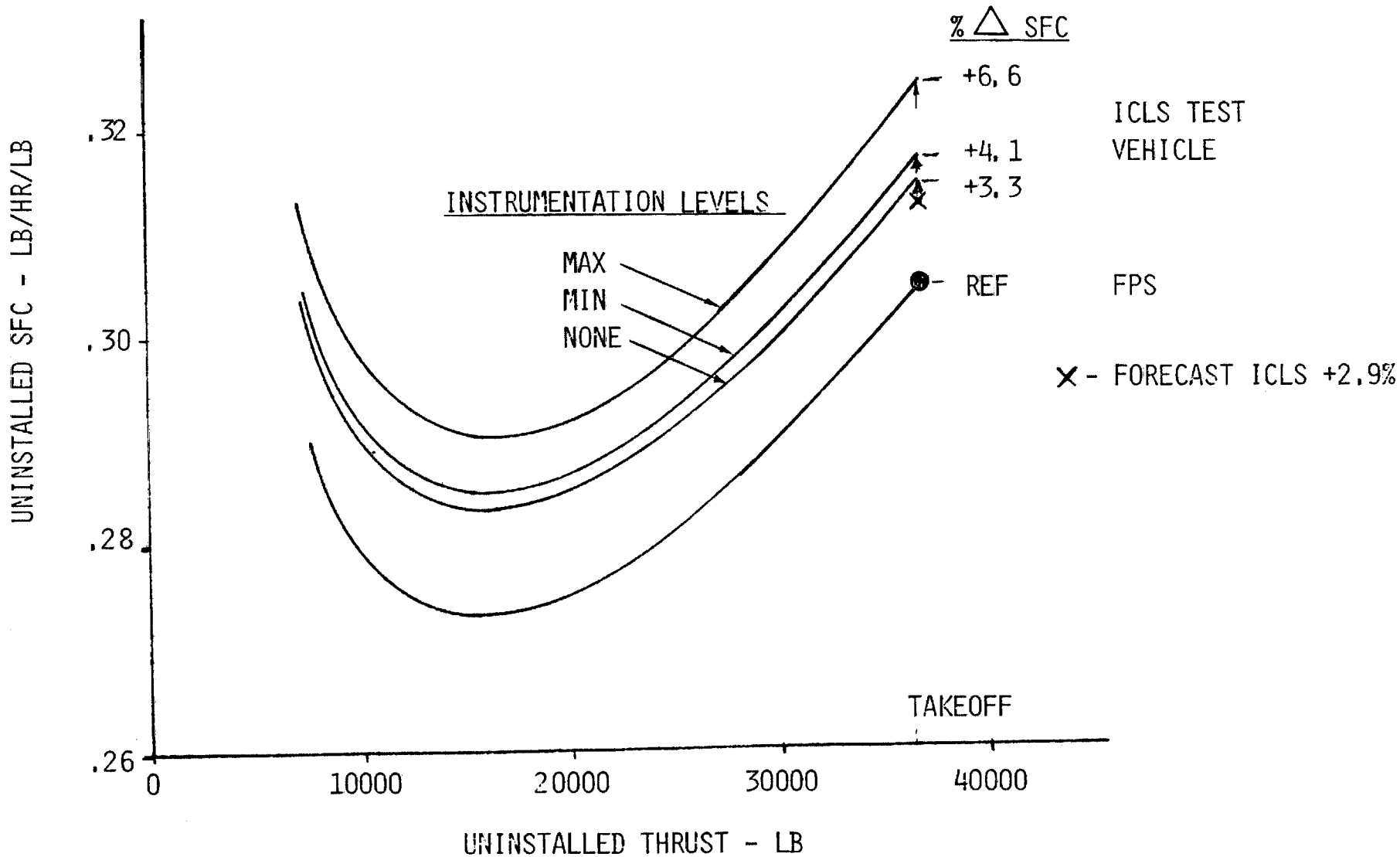

E830

TESTING

TESTING

- ASSEMBLY
- INSTRUMENTATION
- TEST

D. A. MORRIS

E^3 ICLS ASSEMBLY

MAIN ENGINE ASSEMBLY AREA

(BUILDING 500)

ROTOR BUILDUP AND BALANCE AREA

PLATE LAYOUT AND INSPECTION AREA

GEAR AND BEARING ASSEMBLY AREA

DEVELOPMENT MACHINE SHOP

WASH AND ZYGLO AREA

FLOW LABS

MAIN ENGINE BUILDUP

E^3 ICLS SUBASSEMBLIES

HP SYSTEM

COMPRESSOR ROTOR
FORWARD STATOR CASE
AFT STATOR CASE
CDN/COMBUSTOR/STAGE L HPT NOZZLE
HP TURBINE ROTOR
HPT SHROUD/STAGE 2 HPT NOZZLE
HP SYSTEM BALANCE

E833

E^3 ICLS SUBASSEMBLIES

LP SYSTEM/MAIN ENGINE

FAN ROTOR

FAN FRAME

LP TURBINE ROTOR

LPT STATOR CASE

TURBINE FRAME

LPT PACKAGE

BEARINGS

ACCESSORY AND INLET GEARBOX

E^3 ICLS ASSEMBLY SCHEDULE

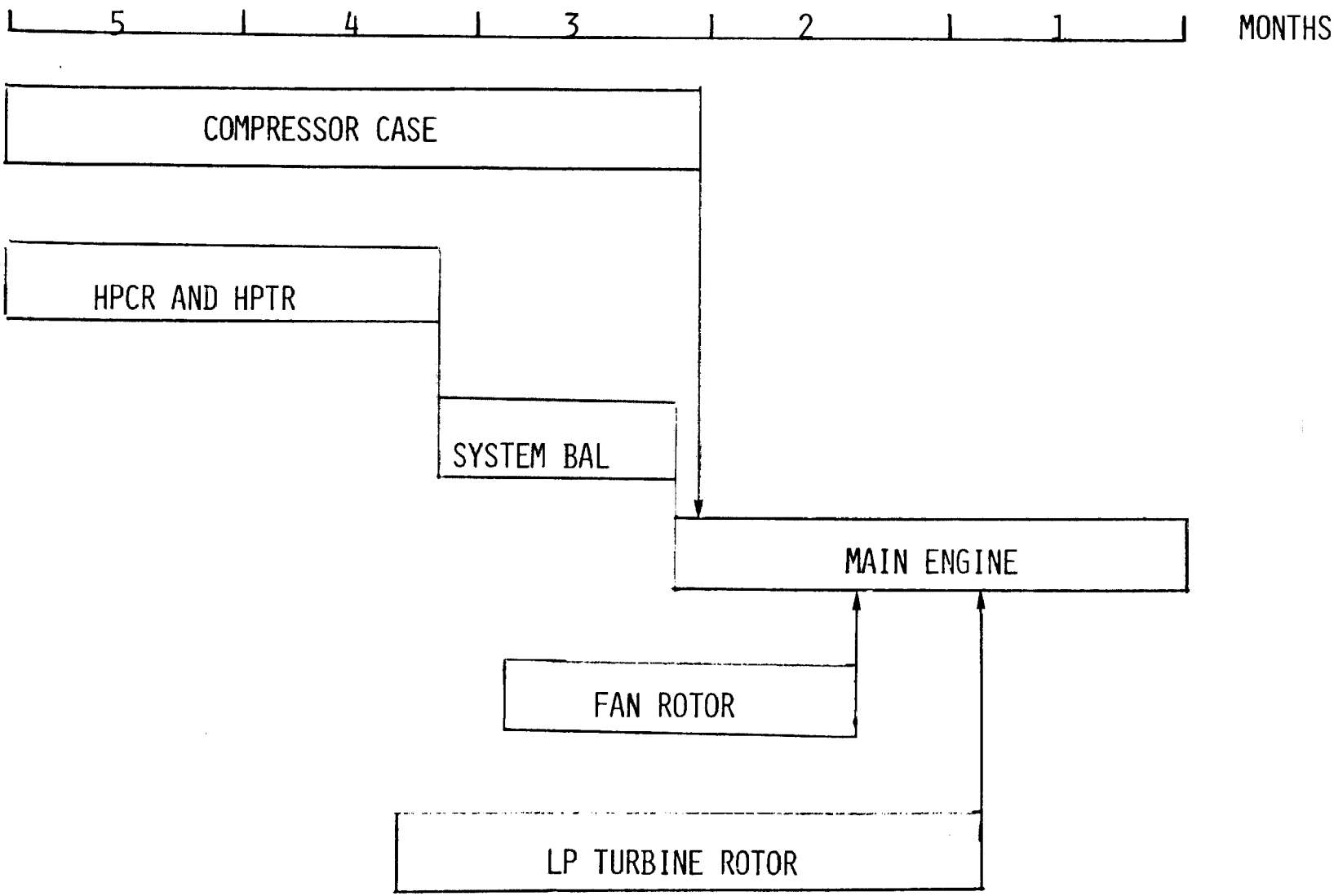

E835

E^3 ICLS ENGINE INSTRUMENTATION

E836

E^3 ICLS NACELLE INSTRUMENTATION

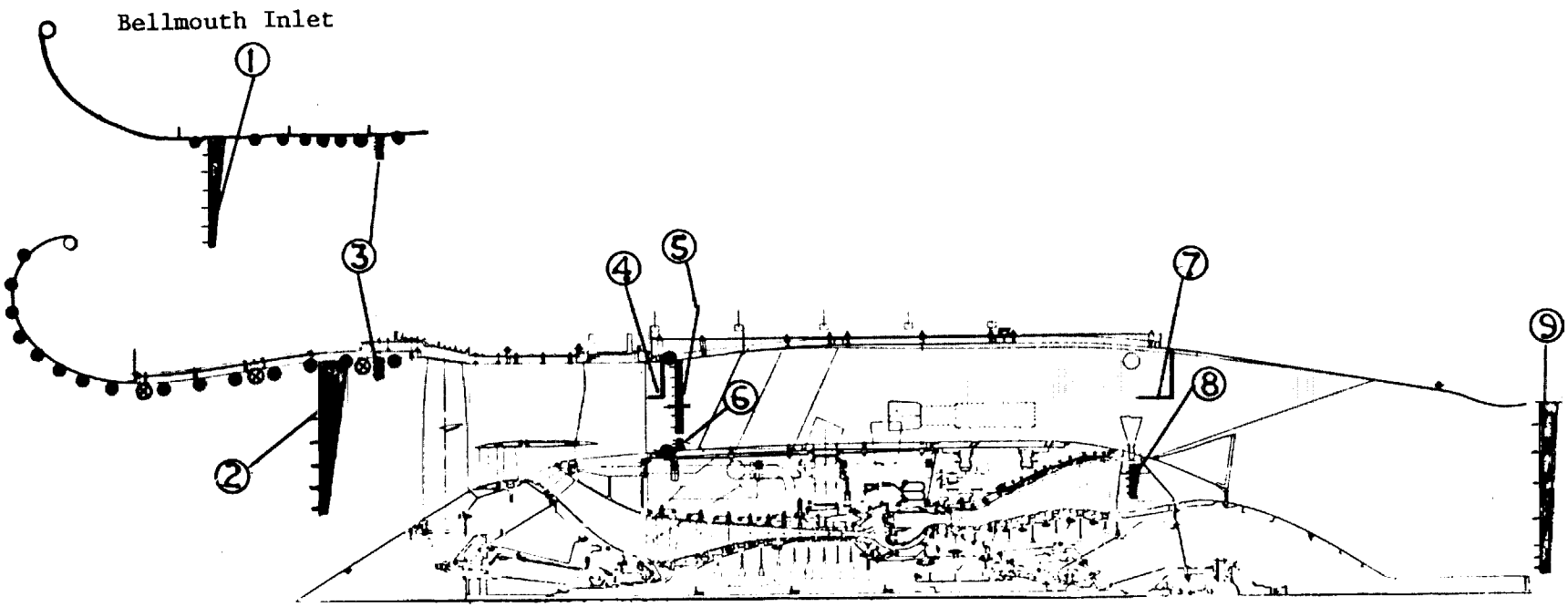

Item	Description	Type	Imm	Qty
1	Airflow rakes	Pt/Ps	6	4
2	Inlet rakes	Pt/Tt	5	4
3	Boundary layer rake	Pt	9	1
4&7	Acous traverse probes	XPS	-	1
5	Arc/radial rakes	Pt/Tt	11/7	7
6	Booster exit rake	Pt	5	1
8	LPT discharge rake	Pt/Tt	5	4
9	Exhaust plane rake	-	-	1

Additional Instrumentation

⊗ Wall dynamic pressure

● Wall static pressures

E837

E^3 ICLS FAN STATOR/ROTOR INSTRUMENTATION

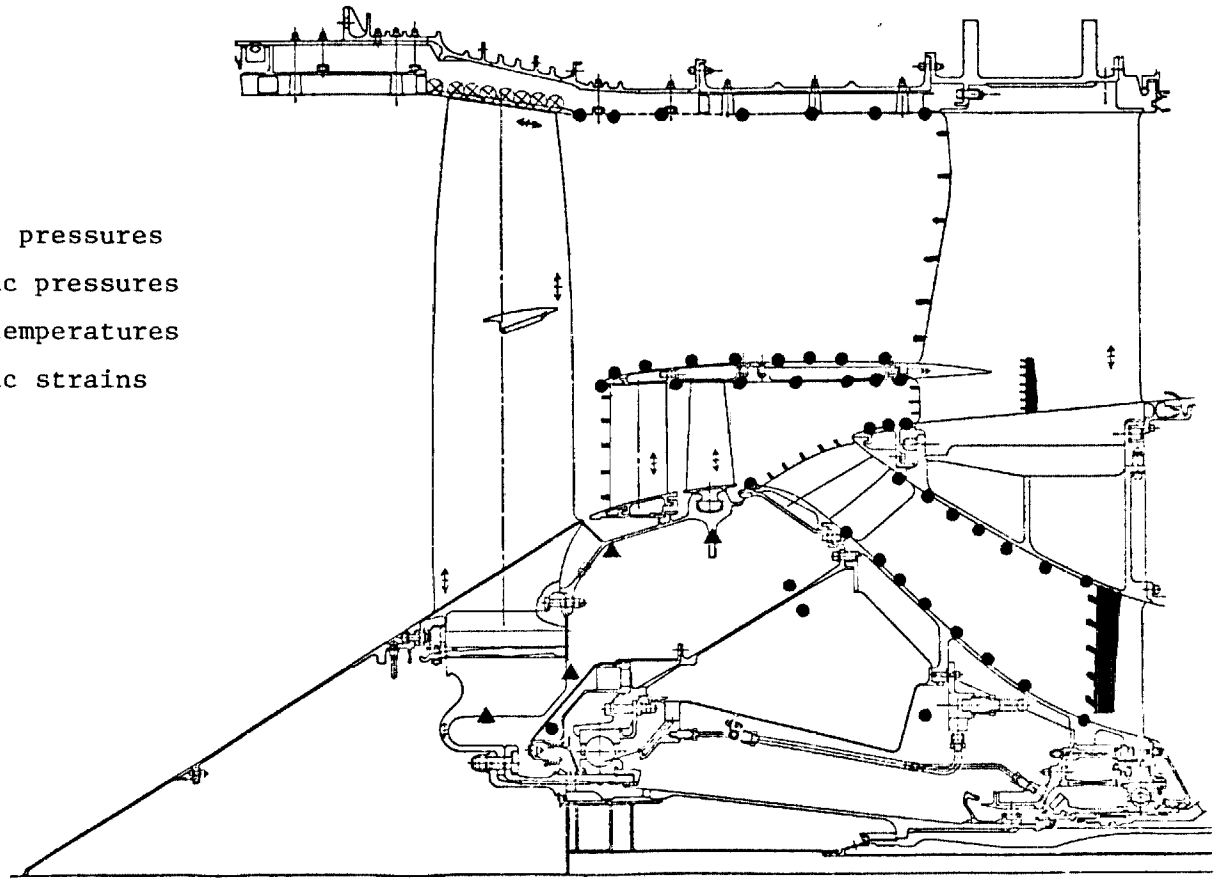

- VANE MOUNTED Pt/Tt SENSORS
- WALL STATIC PRESSURES
- COMPRESSOR INLET RAKES
- BOOSTER BYPASS RAKE
- OVER FAN BLADE KULITES
- ROTOR BLADE STRAIN GAGES
- STATOR STRAIN GAGES
- ROTOR DISKS SKIN THERMOCOUPLES

E^3 ICLS COMPRESSOR INSTRUMENTATION

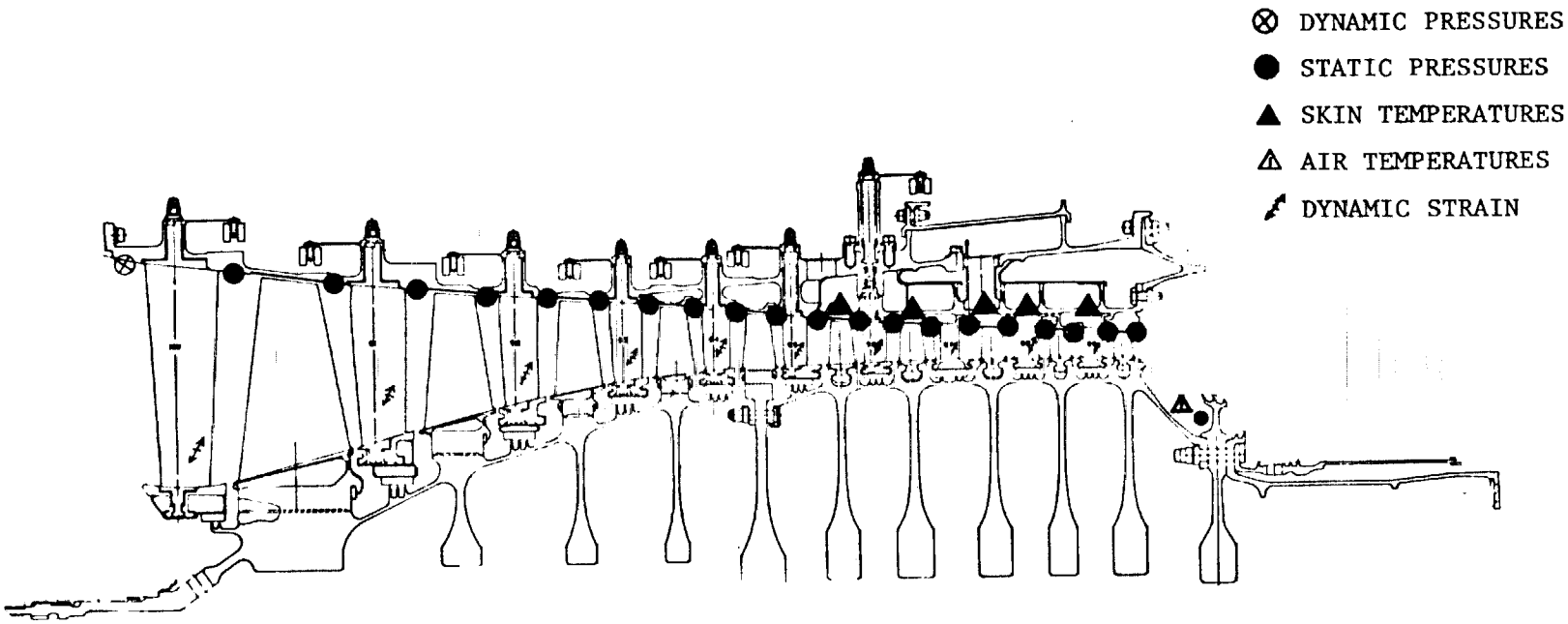

- INTERSTAGE STATIC PRESSURES
- INLET DYNAMIC PRESSURES
- CASING TEMPERATURES
- STATOR STRAIN GAGES
- CLEARANCEOMETERS - STAGES 3, 5 AND 10

E839

E^3 ICLS CDN INSTRUMENTATION

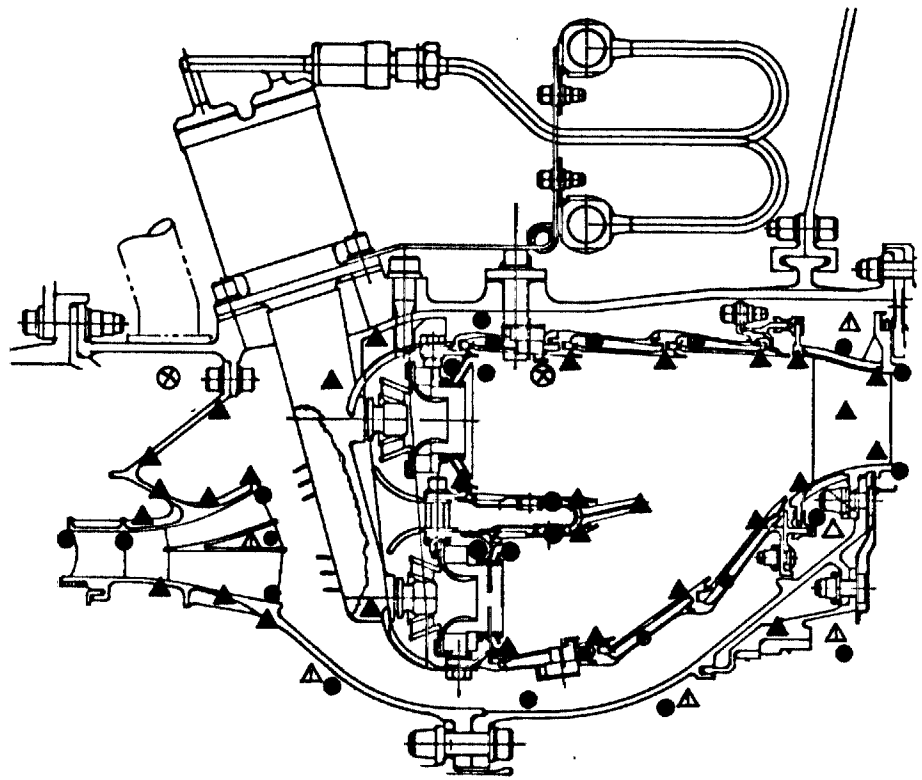

- STATIC PRESSURES
- SKIN TEMPERATURES
- AIR TEMPERATURES
- DYNAMIC PRESSURES

- DYNAMIC PRESSURE PROBES
- AIR AND SKIN THERMOCOUPLES
- WALL STATIC PRESSURES
- COMPRESSOR DISCHARGE RAKES (P_T/T_T)

E^3 ICLS HPT INSTRUMENTATION

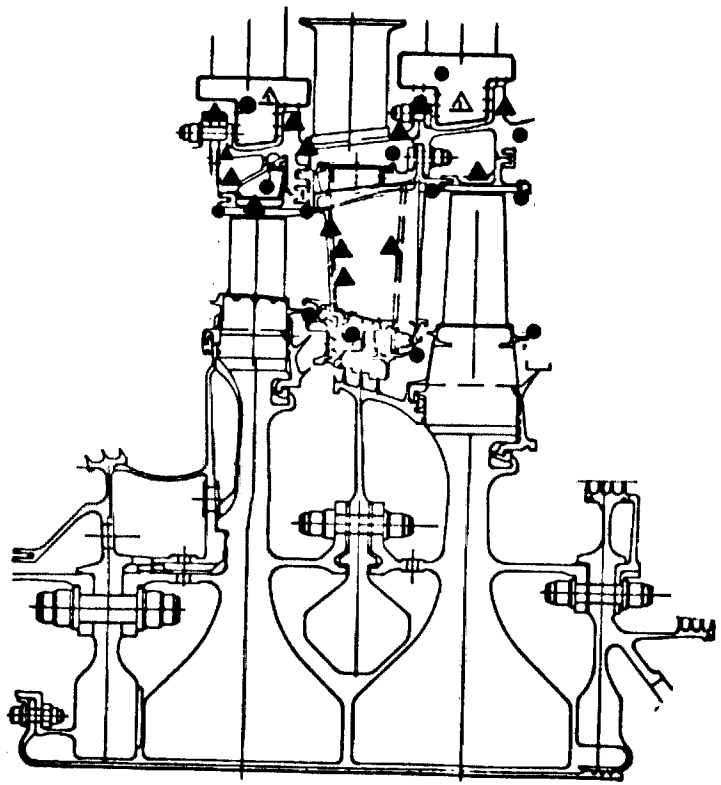

● STATIC PRESSURES
▲ SKIN TEMPERATURES
△ AIR TEMPERATURES

- SKIN THERMOCOUPLES
- AIR THERMOCOUPLES
- STATIC PRESSURES
- OPTICAL CLEARANCE PROBES

E841

E^3 ICLS LPT INSTRUMENTATION

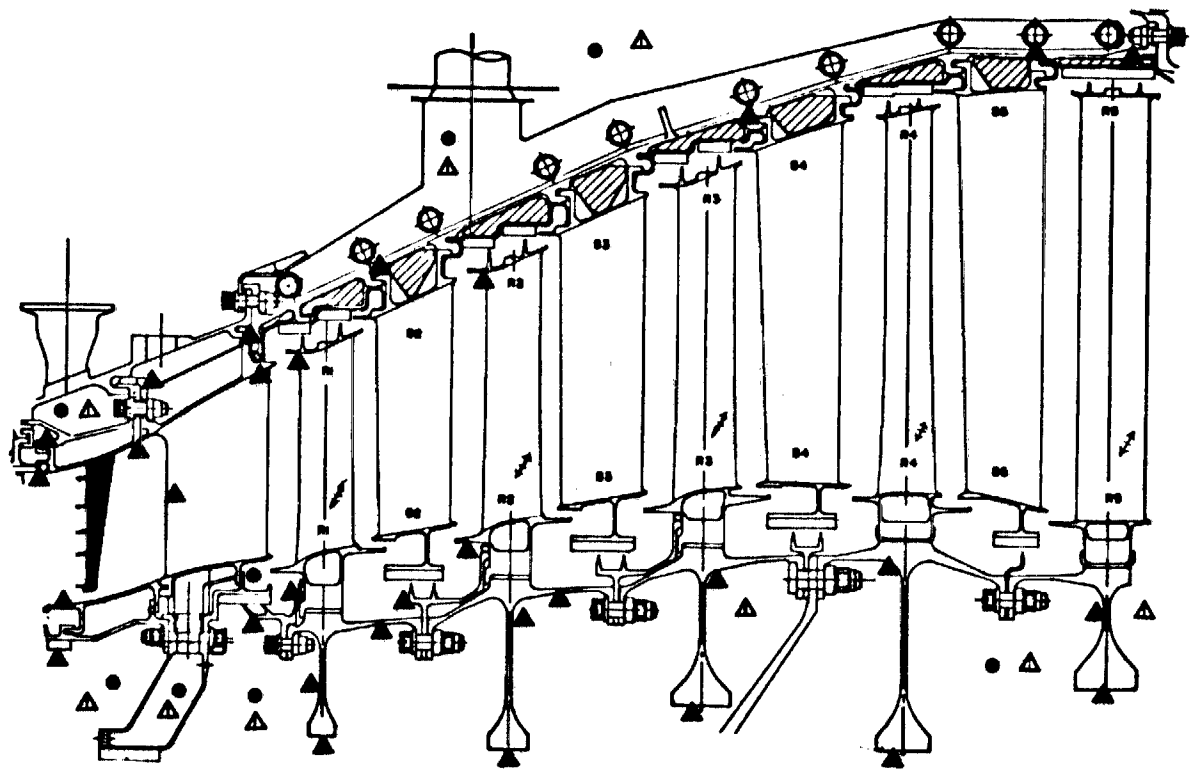

- STATIC PRESSURES
- SKIN TEMPERATURE
- AIR TEMPERATURES
- DYNAMIC STRAINS

- HPT TOTAL TEMPERATURE DISCHARGE RAKES
- HPT TOTAL PRESSURE DISCHARGE RAKES
- SKIN THERMOCOUPLES
- AIR THERMOCOUPLES
- STATIC PRESSURES

E842

AEROMECHANICAL INSTRUMENTATION

- FAN AND LP TURBINE AIRFOIL DYNAMIC STRAIN GAGES
- COMPRESSOR VARIABLE VANE ANGLE INDICATORS
- COMPRESSOR CASING THERMOCOUPLES
- COMBUSTOR THERMOCOUPLES
- HP TURBINE SHROUD AND CASING THERMOCOUPLES
- LP TURBINE SHROUD AND CASING THERMOCOUPLES
- CLEARANCE CONTROL AIR PRESSURES AND TEMPERATURES
- EMISSION PROBES

E843

SAFETY INSTRUMENTATION

- UNDERCOWL (FIRE DETECTION) THERMOCOUPLES
- SUMP PRESSURES AND TEMPERATURES
- BEARING THERMOCOUPLES
- ACCELEROMETERS ON BEARING SUPPORTS AND FRAMES
- PARASITIC PRESSURES, TEMPERATURES AND FLOWS
- CONTROL PARAMETERS
- FUEL FLOWS
- LP AND HP ROTOR SPEEDS
- THRUST

ACOUSTIC INSTRUMENTATION

INSTRUMENTATION	OBJECTIVE
FARFIELD MICROPHONES NEARFIELD MICROPHONES	• OVERALL ENGINE NOISE LEVELS • OVERALL TREATMENT EFFECTIVENESS
TWO AFT FAN DUCT ACOUSTIC PROBES	• IN-DUCT TREATMENT EFFECTIVENESS • SOURCE CHARACTERISTICS
INLET WALL KULITES	• IN-DUCT TREATMENT EFFECTIVENESS • SOURCE CHARACTERISTICS
DIRECTIONAL ARRAY	• SOURCE LOCATION; IDENTIFICATION OF PROBLEM AREAS (IF ANY)

E845

TEST

E846

TEST FACILITY STRUCTURAL HARDWARE

ENGINE MOUNT AND THRUST ADAPTER

REAR SUPPORT LINKS

INLET SUPPORT

FAN COWL SUPPORT

COWL STABILIZERS

E847

TEST FACILITY ELECTRICAL HARDWARE

CONTROL HARNESSES

ENGINE CONTROL MODULE

SPECIAL SIGNAL CONDITIONING

THROTTLE ADAPTER

SPECIAL ENGINE CONTROL CABLES

INSTRUMENTATION CABLE SET

BLEED VALVE CONTROL

TEST FACILITY SLAVE SERVICES

AIR START HARDWARE

FUEL SYSTEM DELIVERY HARDWARE

EMISSION MEASUREMENT HEATING SYSTEM

SHOP COOLING AIR

SLIPRING SERVICES

ELECTRICAL:

- 440V
- 110V, 60 Hz
- 110V, 400 Hz
- 28 VDC

TEST SITE DESCRIPTION

E850

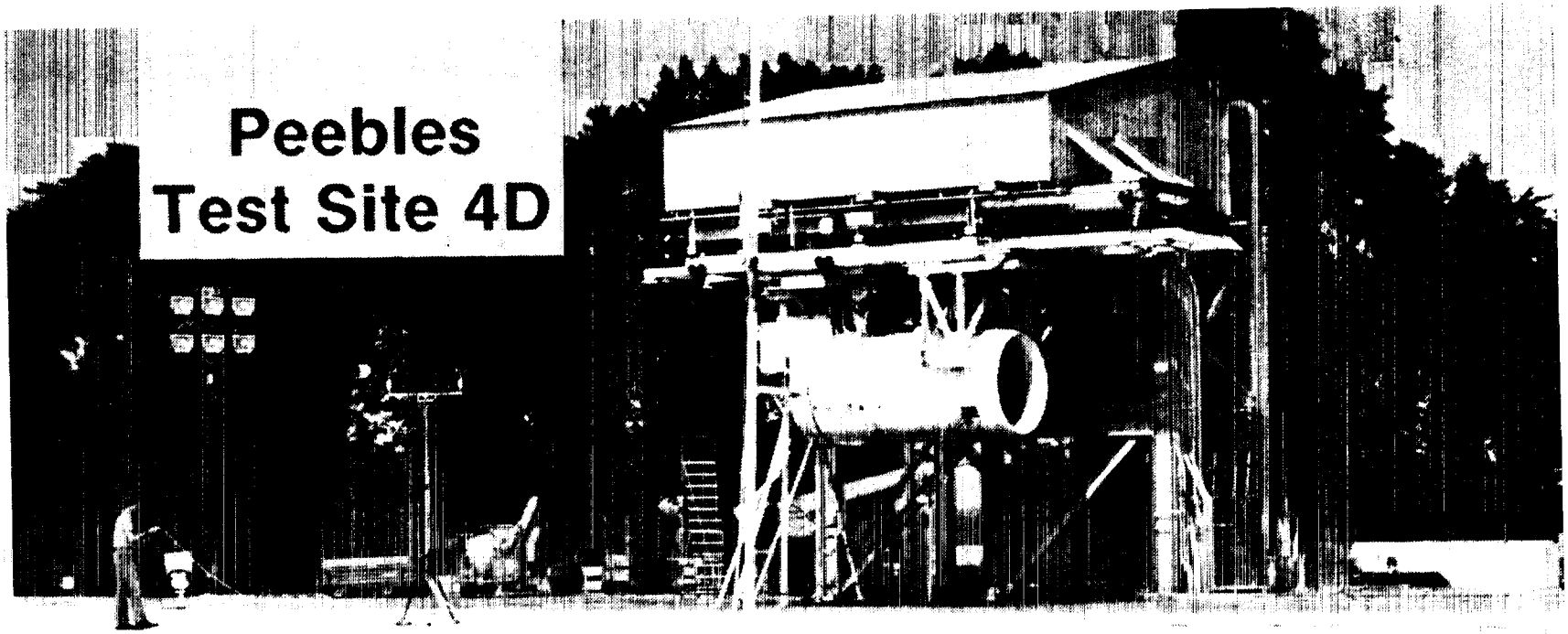

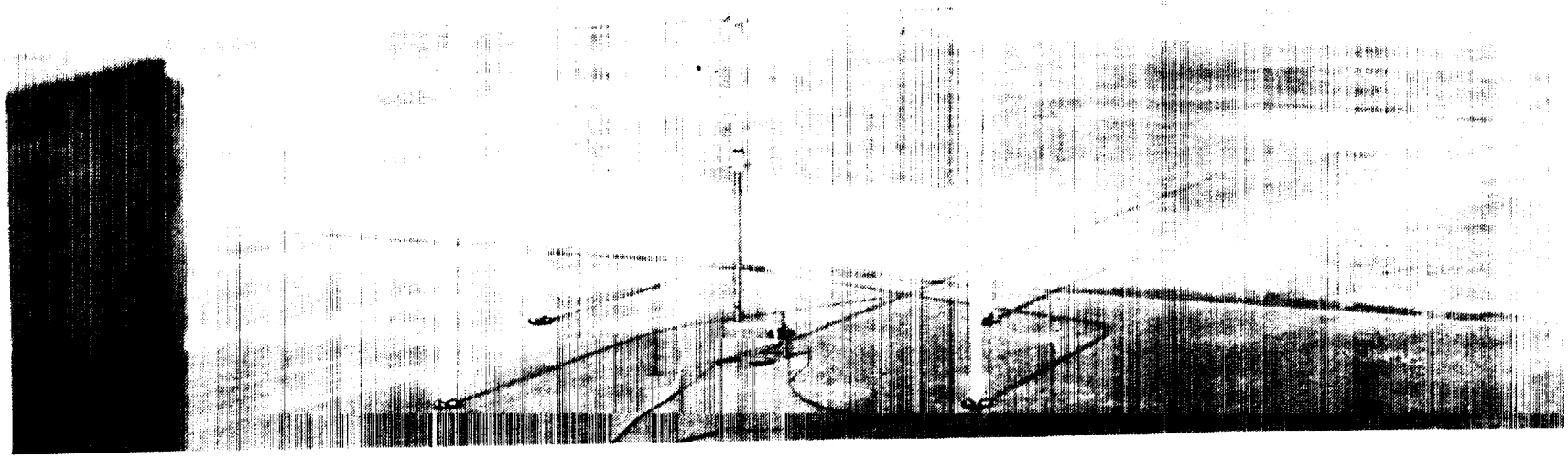

ORIGINAL PAGE
BLACK AND WHITE PHOTOGRAPH

PEEBLES SITE IVD CAPABILITIES

SERVICES

FILTERED WATER

SHOP AIR - 90 PSIG

DATA ACQUISITION

TAPE RECORDERS
LIGHT BEAM OSCILLOGRAPH
STRIP CHART RECORDERS
X-Y PLOTTERS
STEADY STATE DATA ACQUISITION
EXHAUST GAS MEASUREMENTS
TRANSIENT DATA ACQUISITION

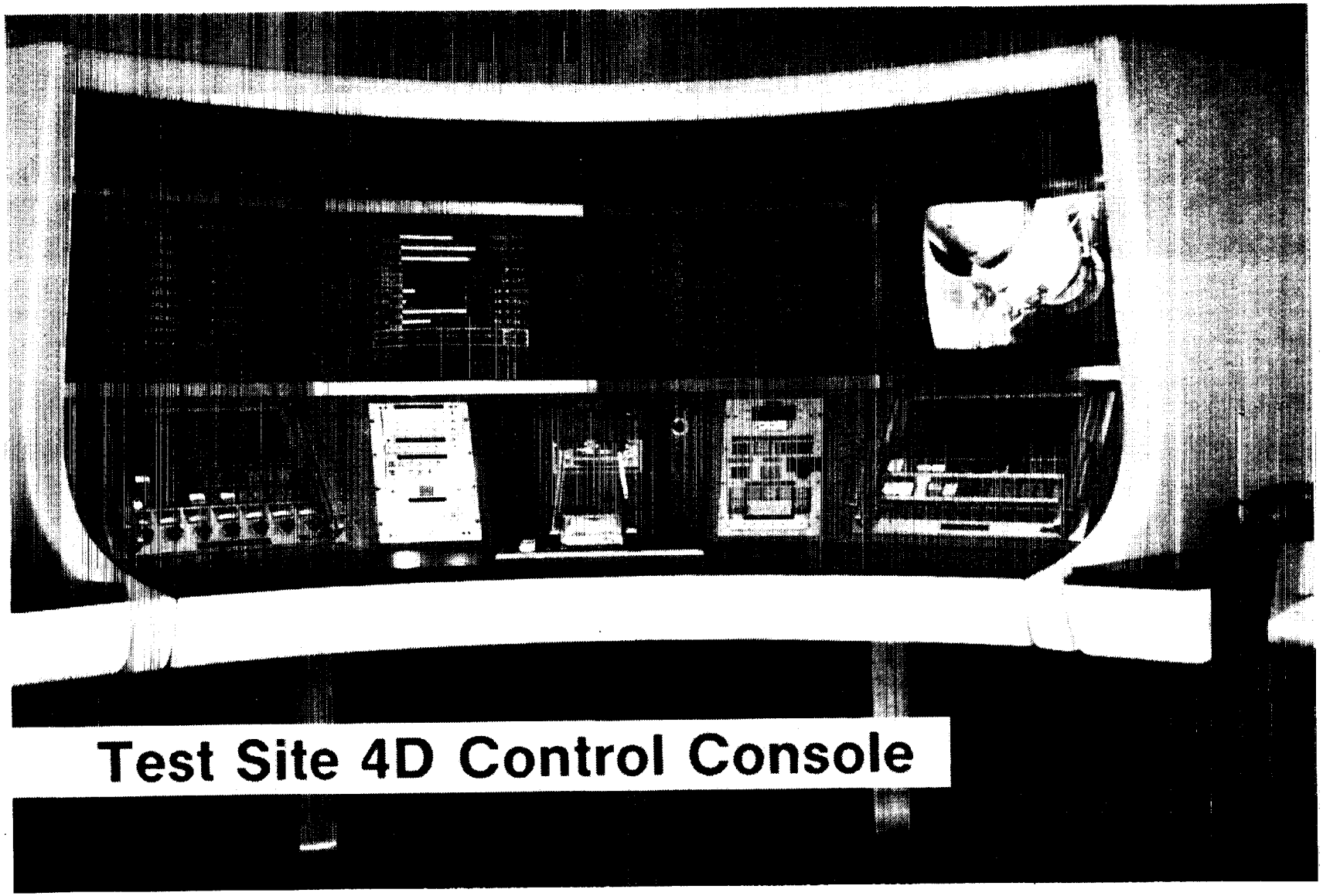

Test Site 4D Control Console

ORIGINAL PAGE
BLACK AND WHITE PHOTOGRAPH

PEEBLES SITE IVD CONTROL CONSOLE

PARAMETERS DISPLAYED IN DIGITAL AND/OR GRAPHIC FORM

CRT DISPLAY

PROGRAMMABLE CAUTION AND ALERT LIMITS

MINI COMPUTERS FOR DISPLAYING CORRECTED OR CALCULATED DATA

REAL TIME DATA DISPLAY

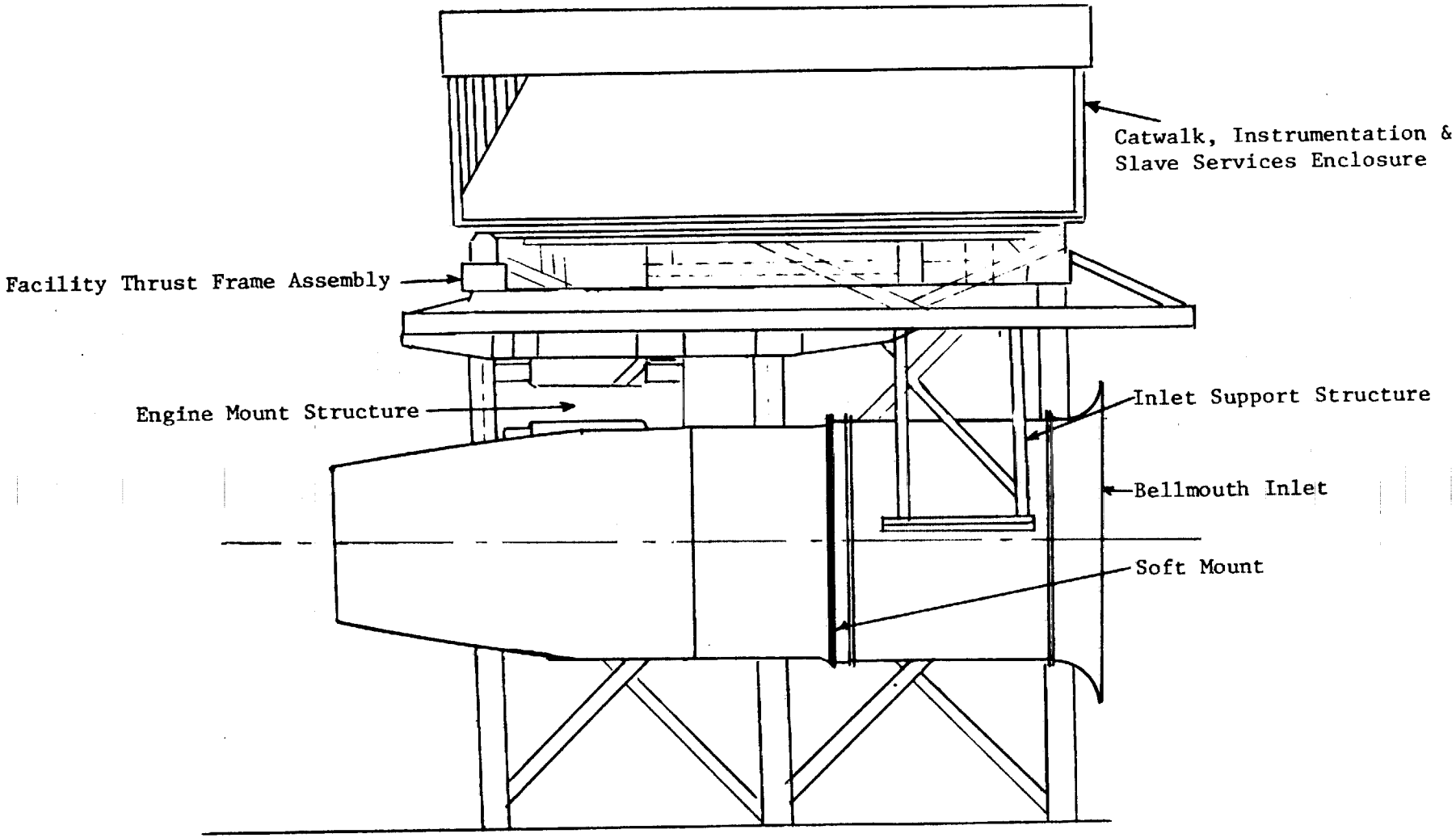

E^3 ICLS ENGINE PRELIMINARY INSTALLATION
SITE IVD - PEEBLES TEST OPERATION

E855

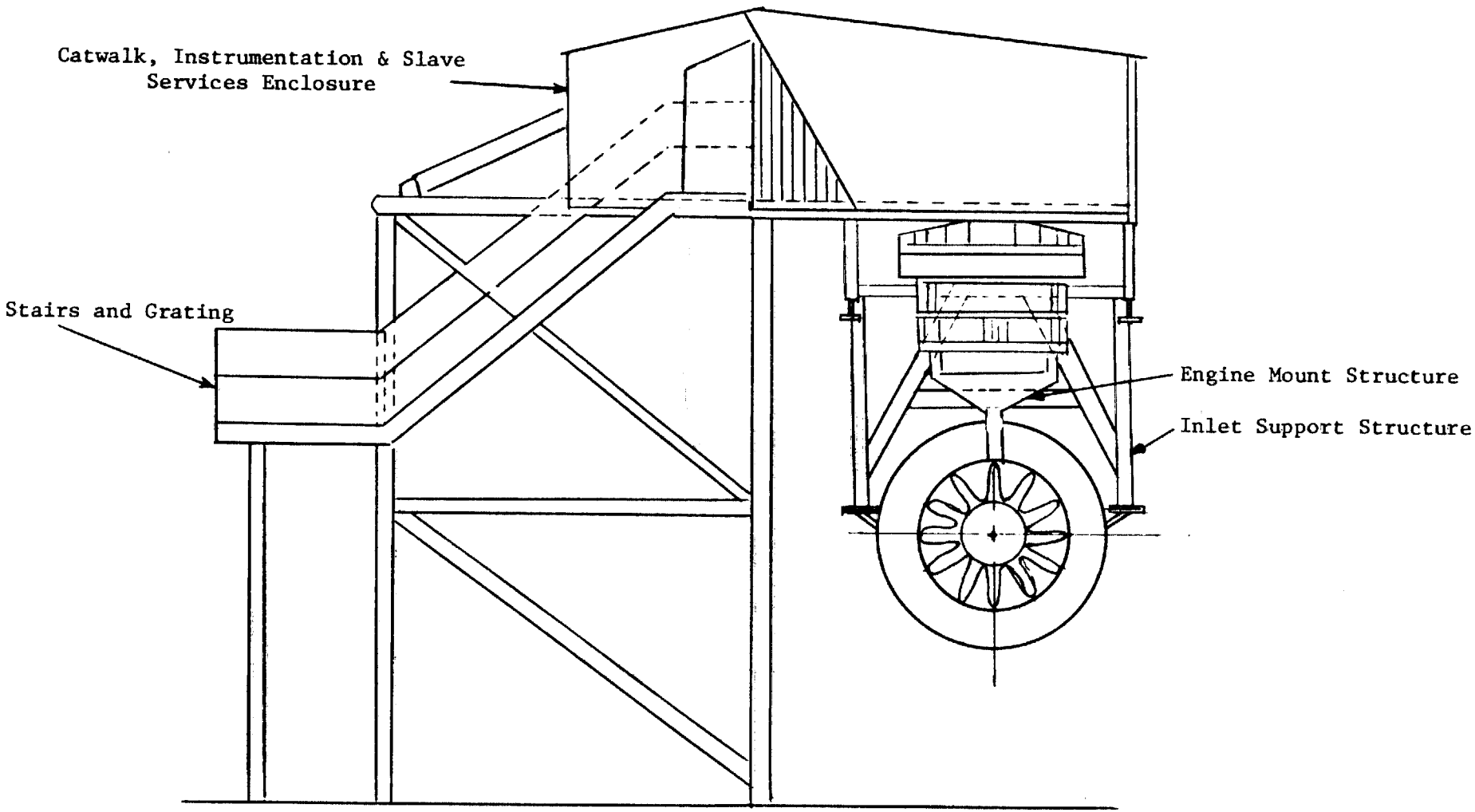

E^3 ICLS ENGINE PRELIMINARY INSTALLATION
SITE IVD - PEEBLES TEST OPERATION

E856

TESTING

E857

E^3 ICLS TEST CONFIGURATIONS

CONFIG.	INLET	ACOUSTIC TREATMENT	NOZZLE AREA	INSTRUMENTATION
1	BELLMOUTH	HARDWALL	STANDARD	AERO PERF.
2			OPEN	
3				MIXER PERF.
4			STANDARD	MIN. - AERO PERF.
5	AERO/ACOUSTIC			AERO PERF.
6				ACOUSTIC
7		BULK ABSORBER		
8				EMISSIONS

E858

E^3 ICLS TEST SCHEDULE

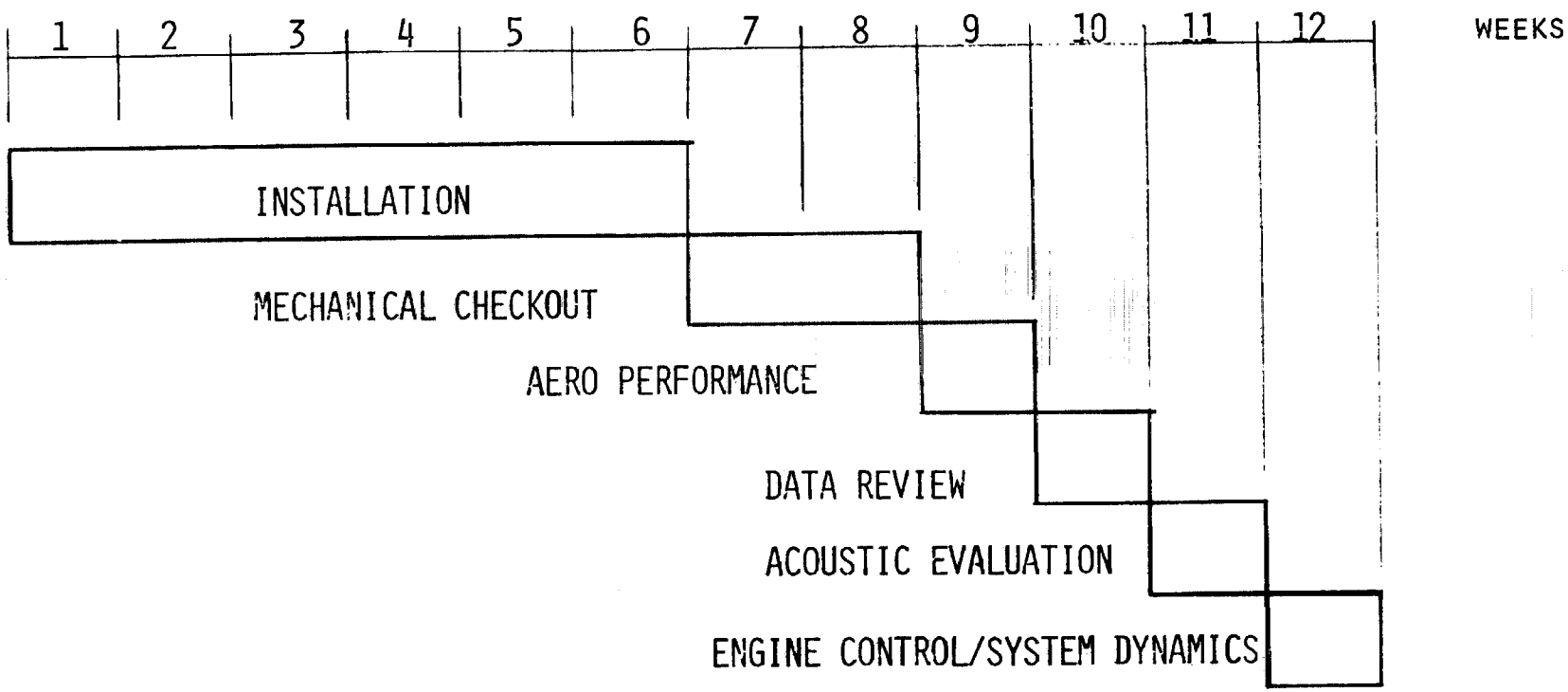

E859

INSTALLATION

MOUNT ENGINE IN TEST STAND

CONNECT INSTRUMENTATION

CONNECT SERVICE LINES

INSTALL NACELLE AND INLET

PRE-TEST ENGINEERING REVIEW

MECHANICAL CHECKOUT

DRY MOTOR

WET MOTOR

IDLE LEAK CHECK

SEAL RUN-IN

LP AIRFOIL STRESS SURVEY

VIBRATIONAL SURVEY

FAULT CORRECTION

AERO PERFORMANCE TEST OBJECTIVES

AERO MECHANICAL STABILITY

AERO/THERMODYNAMIC MATCHING

STEADY STATE DATA ACQUISITION

CLEARANCE CONTROL EVALUATION

SUMP AND ACCESSORY EVALUATION

EXPLORE OPERATING LINES (TWO)

BLEED EFFECTS

MIXER PERFORMANCE EVALUATION

E862

DATA REVIEW

VERIFICATION OF PREDICTED PERFORMANCE

PRELIMINARY DATA REVIEW

DEFINE ADDITIONAL TEST REQUIREMENTS

E863

ACOUSTIC TEST

ENGINE ACOUSTIC CHARACTERISTICS

FAR FIELD DATA

NEAR FIELD DATA

TRAVERSING ACOUSTIC PROBES

BASELINE EVALUATION (HARDWALL PANELS)

FULLY SUPPRESSED EVALUATION (TREATED PANELS)

EMISSIONS TEST

MEASURE EMISSION LEVELS

- o SMOKE
- o CO
- o HC
- o NO_x

E865

ENGINE CONTROL/SYSTEM DYNAMICS

CONTROL DYNAMICS EVALUATION

TRANSIENTS

DATA COMPLETION

E^3 ICLS DATA ACQUISITION

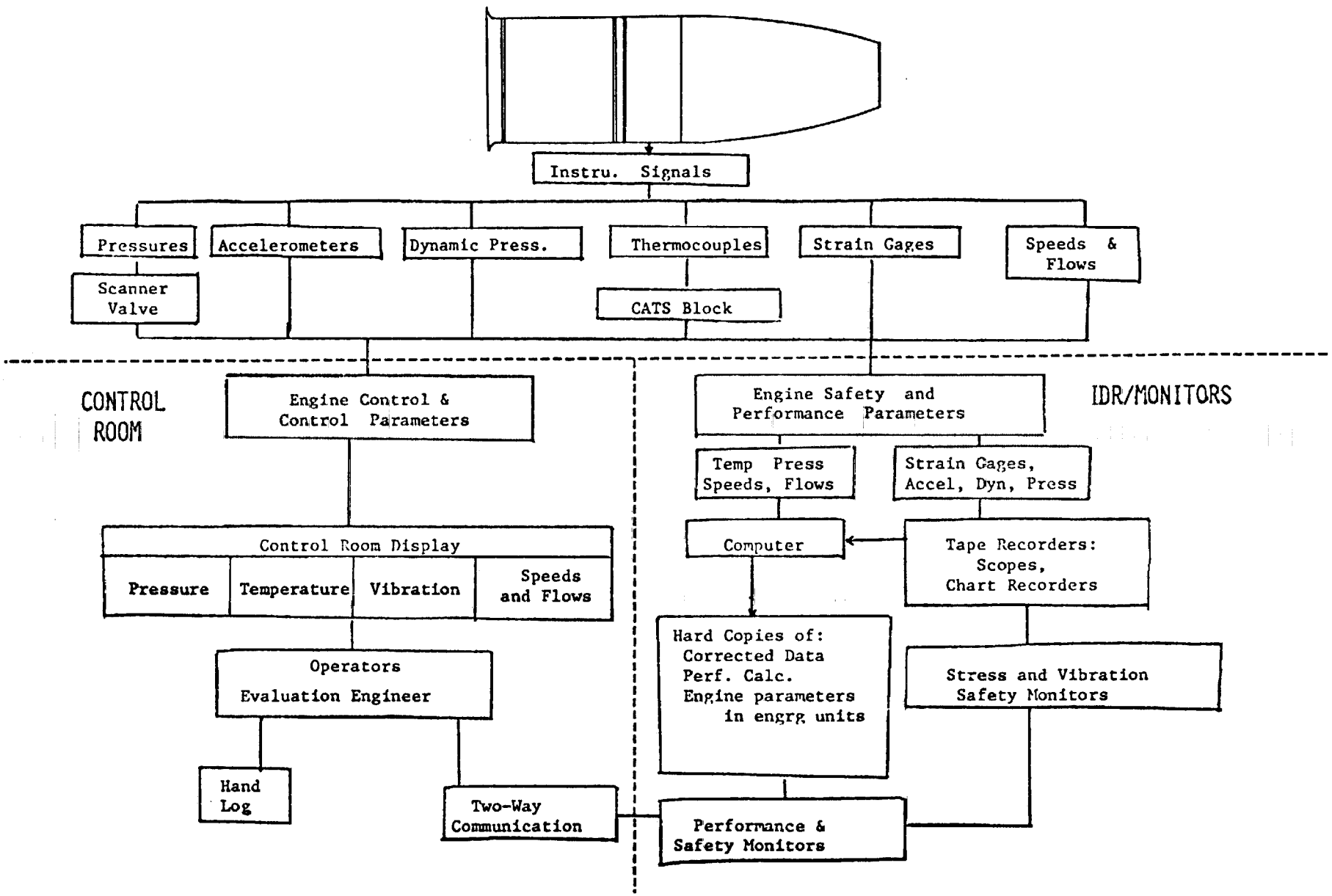

E867

E^3 ICLS POST - TEST INSPECTIONS

BORESCOPE COMPRESSOR, COMBUSTOR AND TURBINE

COMPRESSOR INLET AND TAIL PIPE INSPECTIONS

TEARDOWN TO MAJOR SUBASSEMBLIES

CLOSE VISUAL HARDWARE INSPECTIONS

REPORT ANY MECHANICAL DISCREPANCIES

SUPPLEMENT

ICLS ASSEMBLY SCHEMATICS

E869

E^3 ICLS COMPRESSOR ROTOR ASSEMBLY

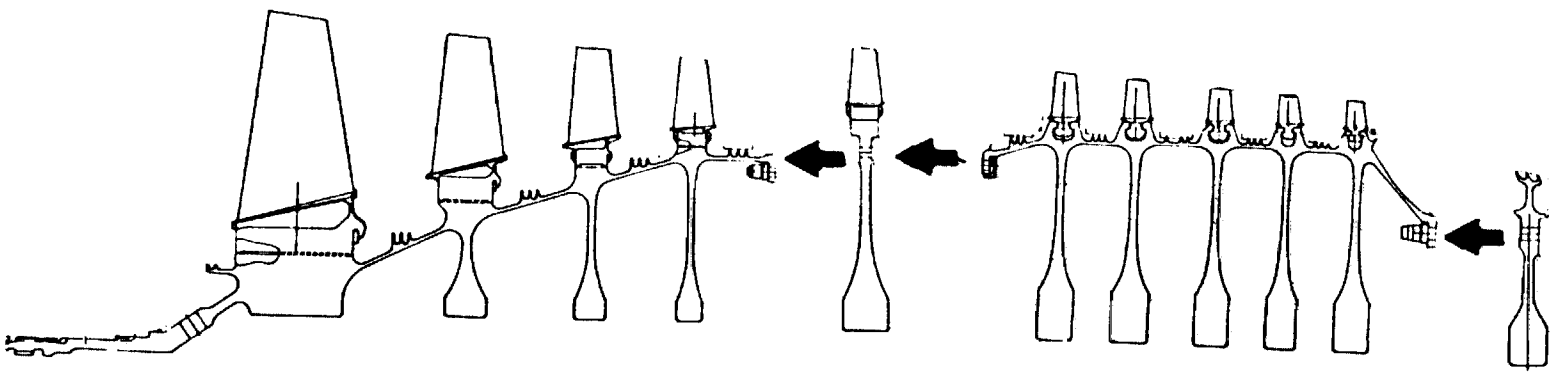

- CHECK BALANCE BOTH SPOOLS
- BLADE AND BALANCE EACH COMPONENT
- MATE ROTOR COMPONENTS

E870

E^3 ICLS COMPRESSOR ROTOR ASSEMBLY

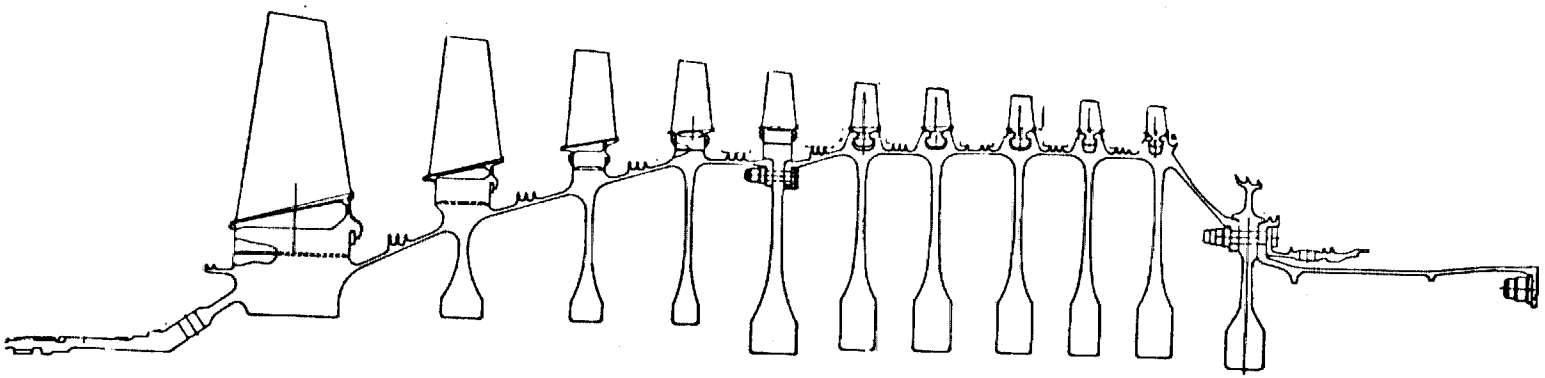

- BALANCE 1-10 SPOOL AND CDP SEAL
- TIP GRIND ROTOR BLADES
- ADD HP SHAFT
- FINAL BALANCE

E871

E^3 ICLS FORWARD STATOR CASE

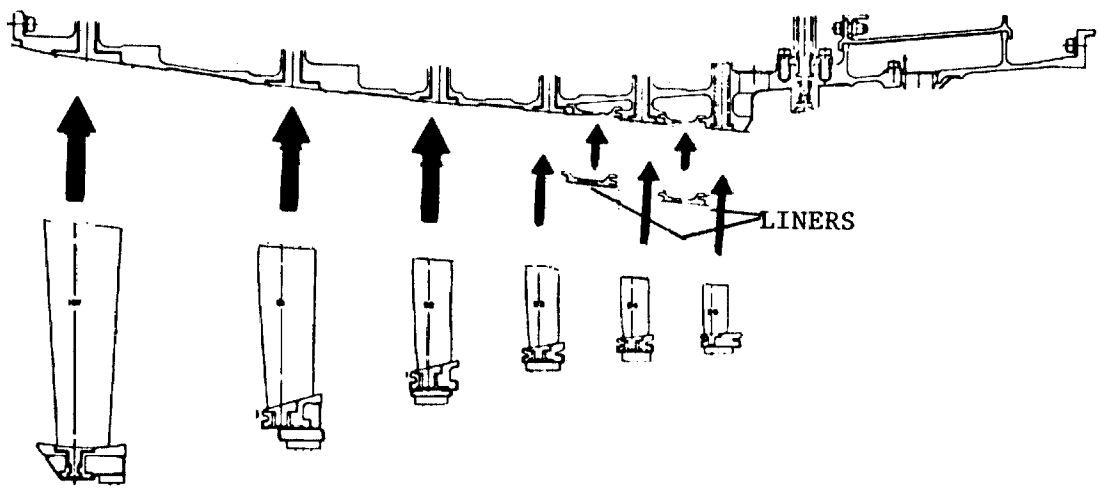

- INSTALL STAGE 4 AND STAGE 5 LINERS
- FLOWPATH GRIND
- INSTALL IGV AND STAGE 1-5 STATOR VANES AND SEALS
- SEAL GRIND

E^3 ICLS AFT STATOR ASSEMBLY

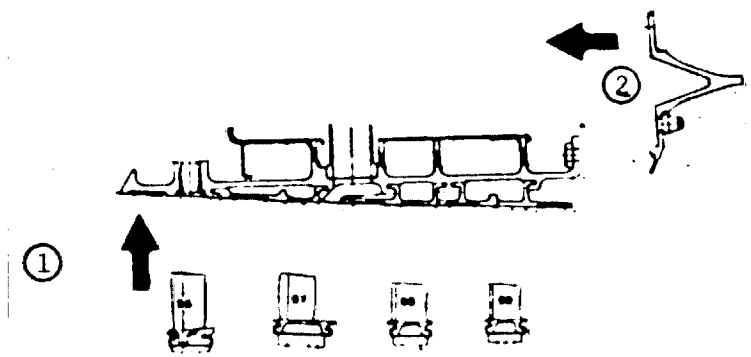

- INSTALL STAGE 6-10 STATOR VANES AND SEALS
- MATE CASING AND SUPPORT
- FLOWPATH AND SEAL GRIND

E873

E^3 ICLS COMPRESSOR STATOR ASSEMBLY

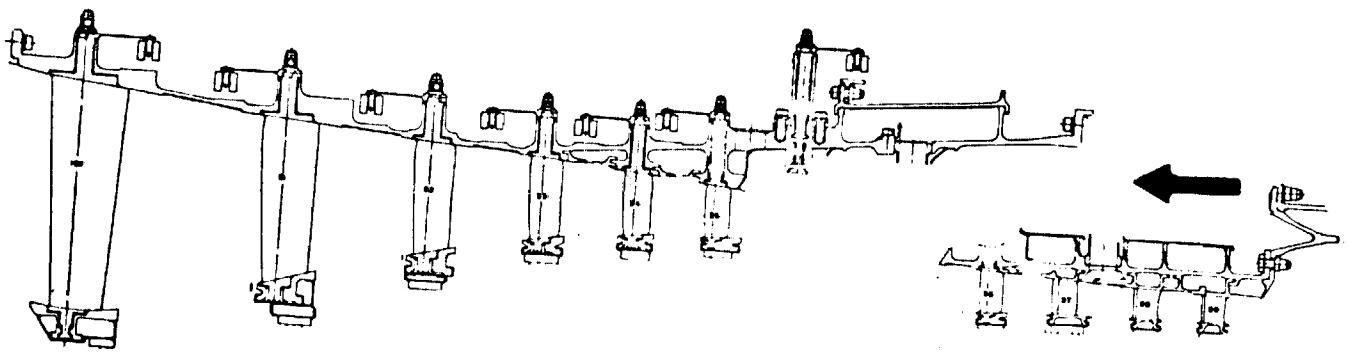

- MATE AFT AND FORWARD CASES
- TANGENT ANGLE CHECKS

E874

E^3 CDN ASSEMBLY

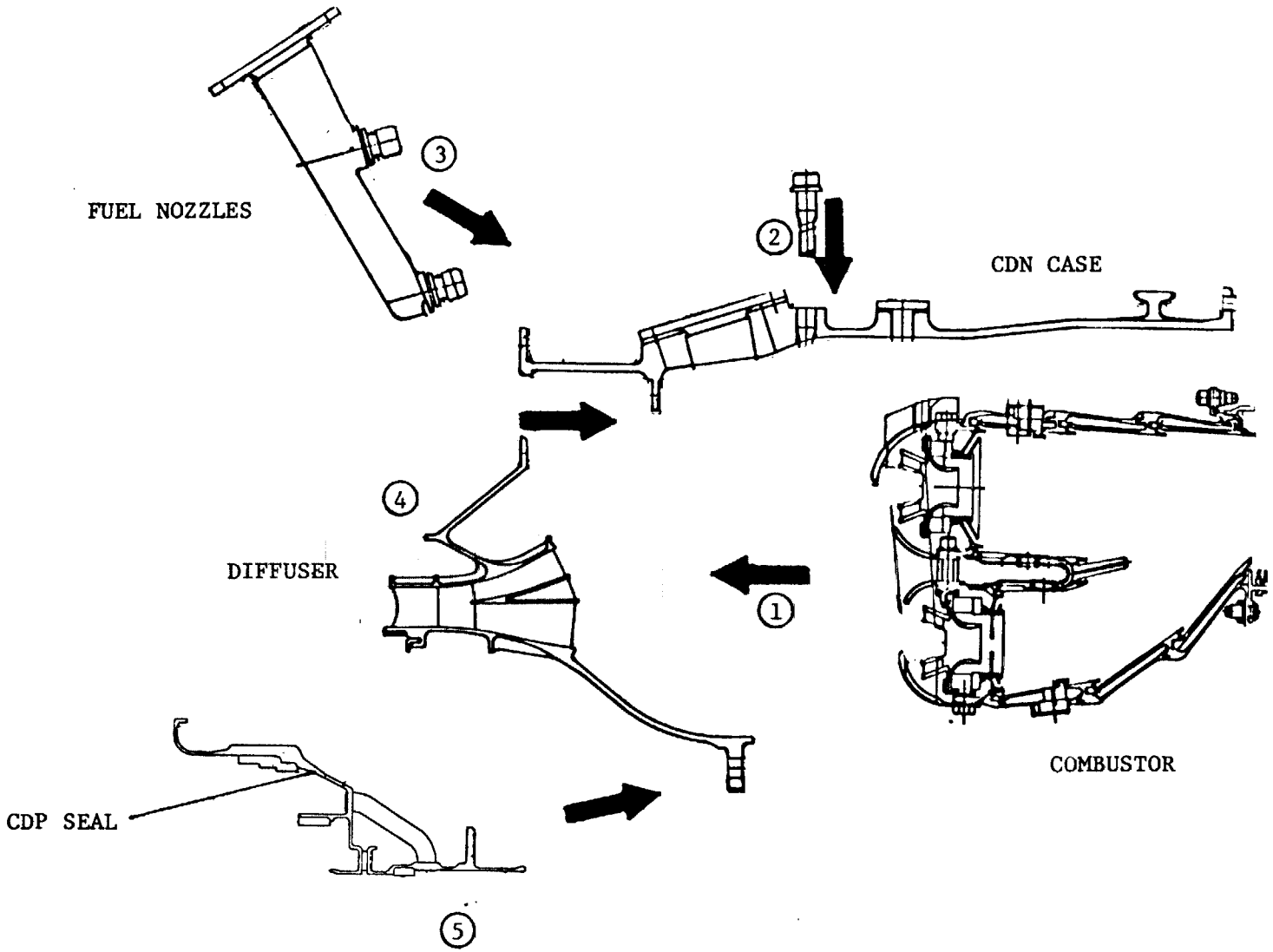

- BUILDUP COMBUSTOR ASSEMBLY

E^3 CDN/STAGE 1 HPTN ASSEMBLY

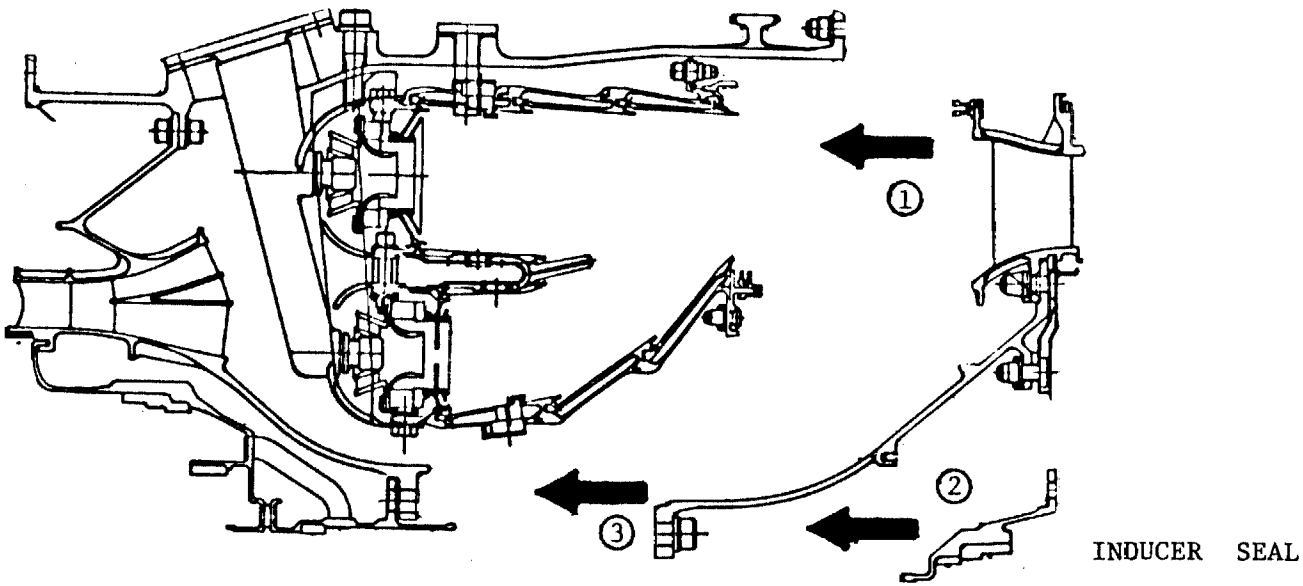

- BUILDUP STAGE 1 HPTN ASSEMBLY
- MATE NOZZLE AND COMBUSTOR ASSEMBLIES
- GRIND CDP AND INDUCER SEALS

E376

E^3 ICLS TURBINE ROTOR ASSEMBLY

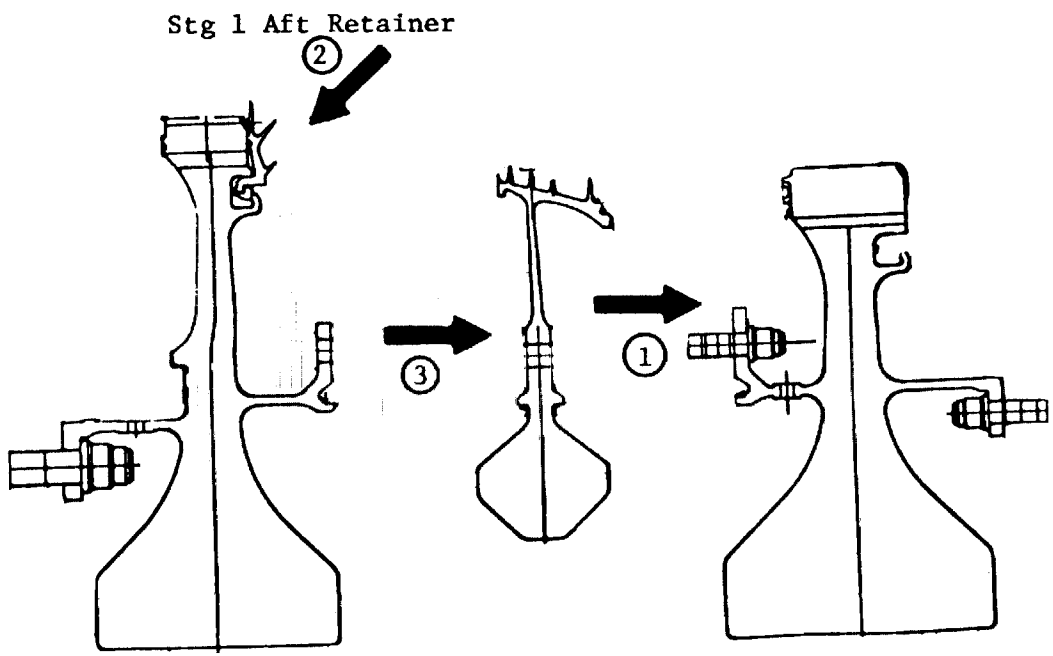

- STACK HPT ROTOR DISKS

E877

E^3 ICLS TURBINE ROTOR ASSEMBLY

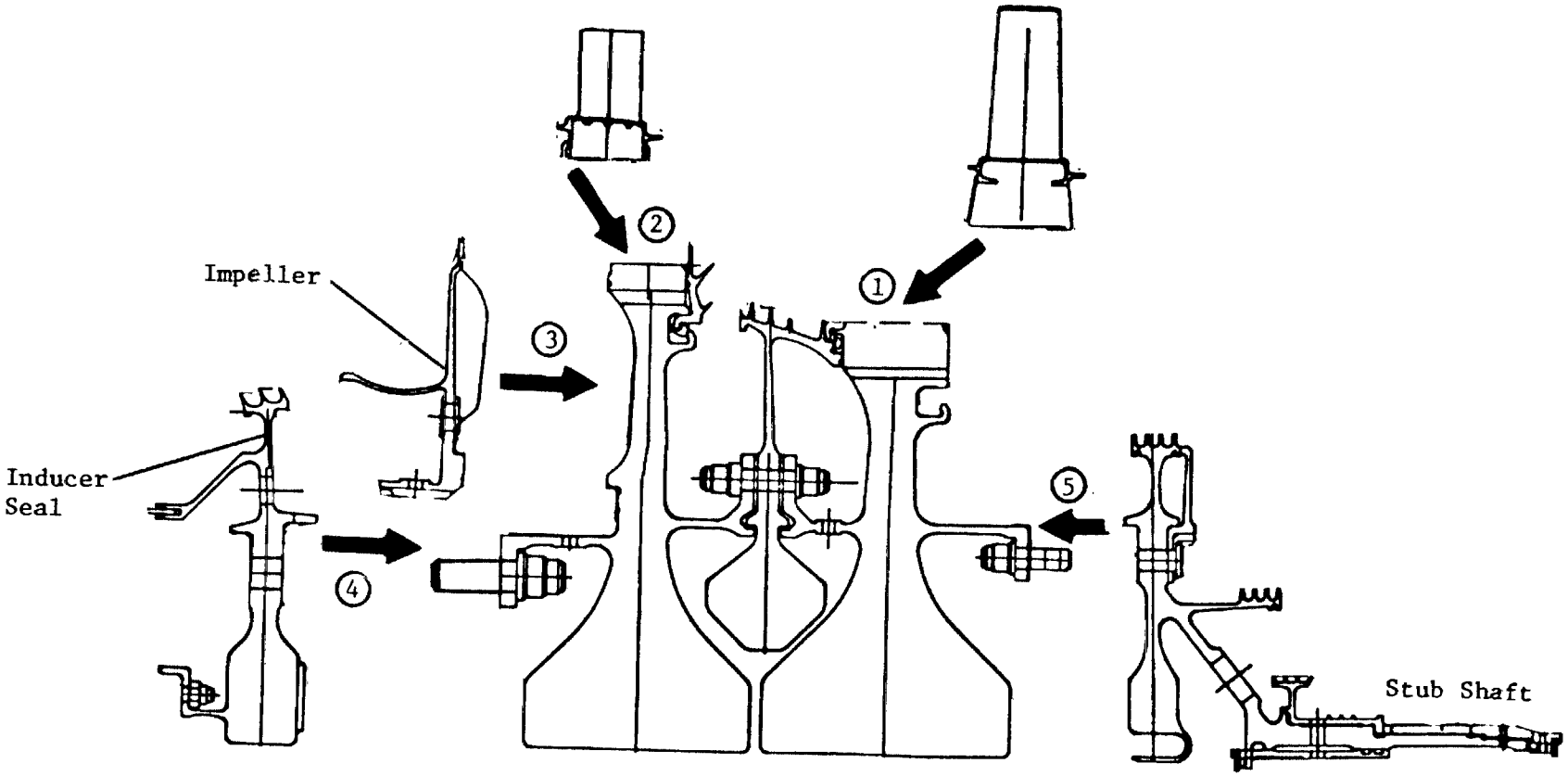

- INSTALL ROTOR BLADES AND SHIMS
- INSTALL IMPELLER AND SEAL DISKS

E878

E^3 ICLS HP TURBINE ROTOR ASSEMBLY

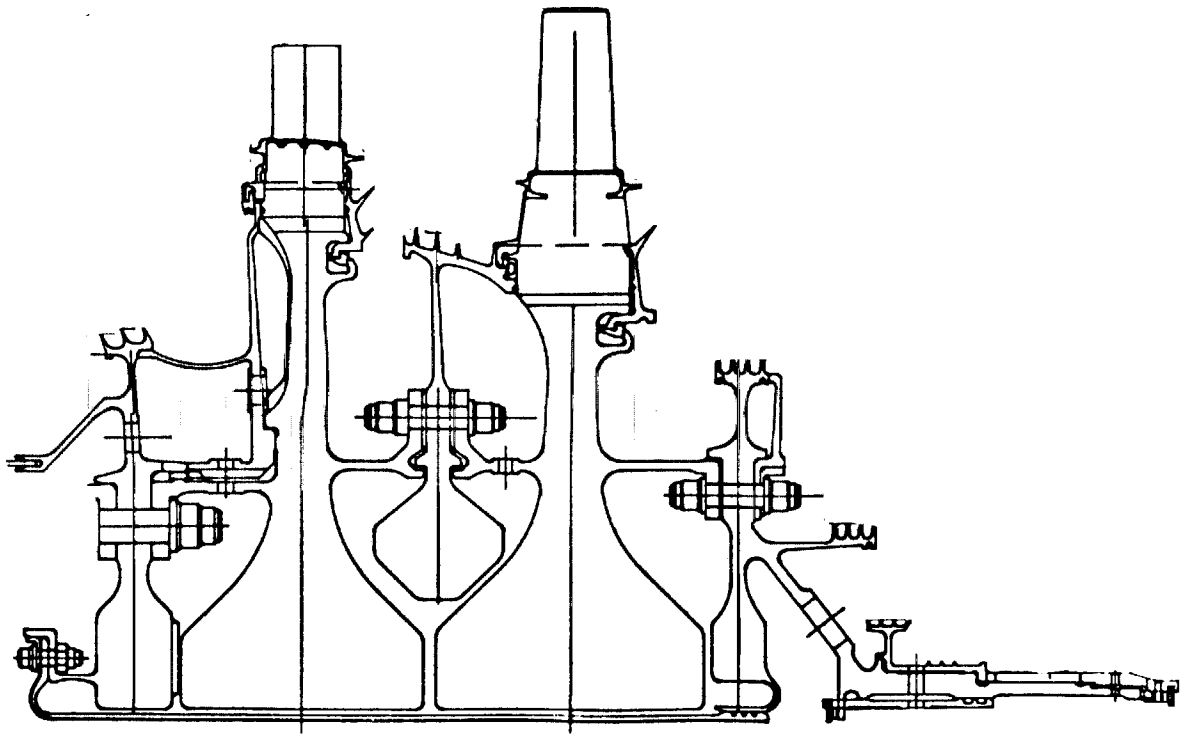

- BALANCE ROTOR
- BLADE TIP GRIND
- TEARDOWN AND REMOVE BLADE SHIMS
- REASSEMBLE ROTOR
- FINAL BALANCE

E379

E^3 ICLS HPT SHROUD ASSEMBLY

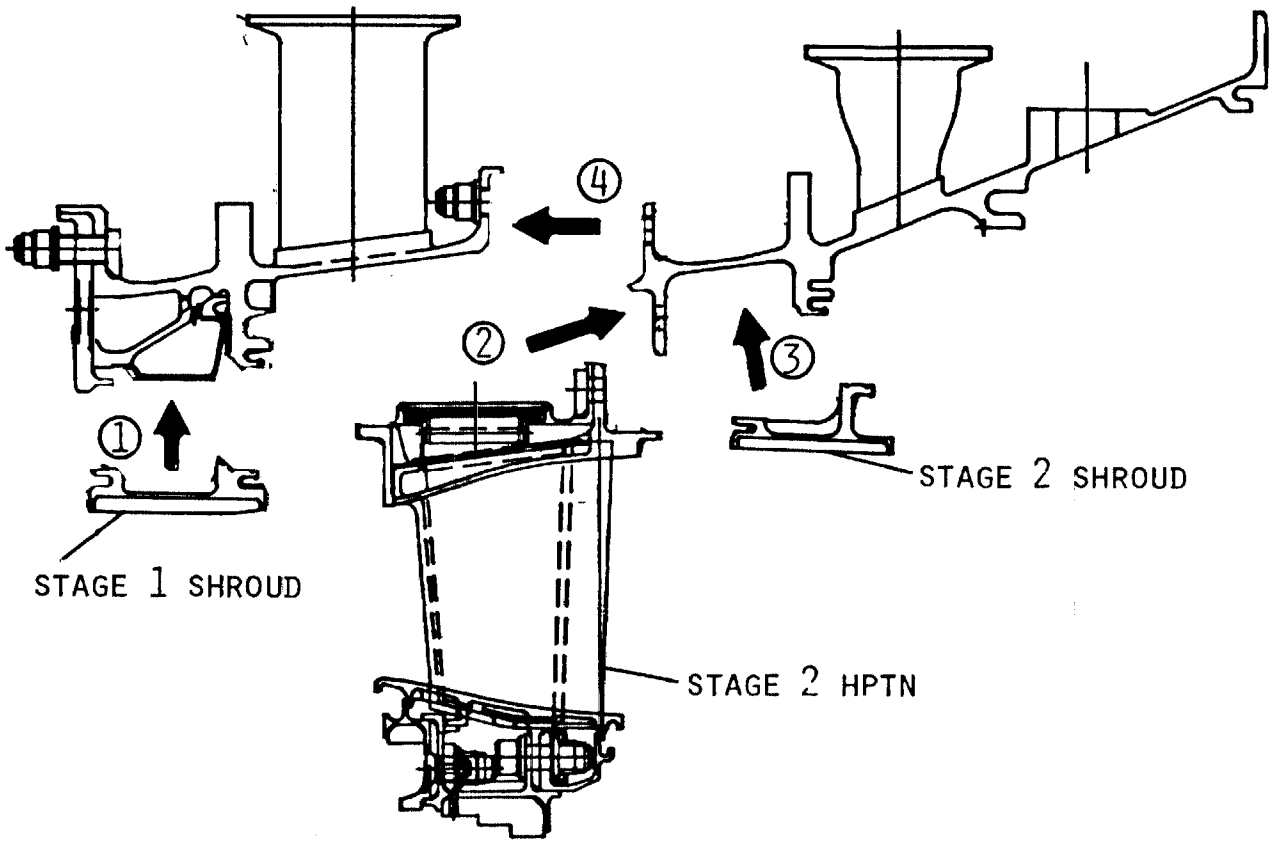

- INSTALL STAGE 1 SHROUDS
- ASSEMBLE STAGE 2 NOZZLE
- INSTALL STAGE 2 SHROUDS
- MATE STAGE 1 AND STAGE 2 SUPPORT CASINGS

E^3 ICLS HPT SHROUD ASSEMBLY

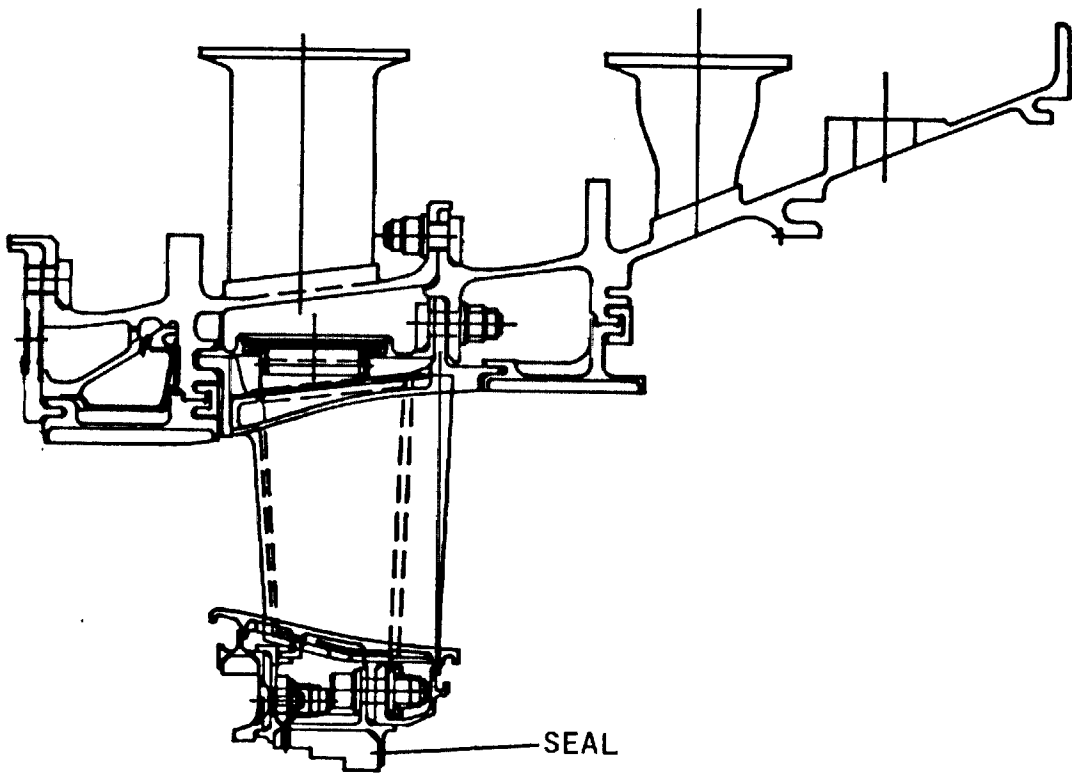

- GRIND STAGE 1 AND 2 SHROUDS
- GRIND STAGE 2 HPTN SEAL

E881

E^3 ICLS HP SYSTEM ASSEMBLY

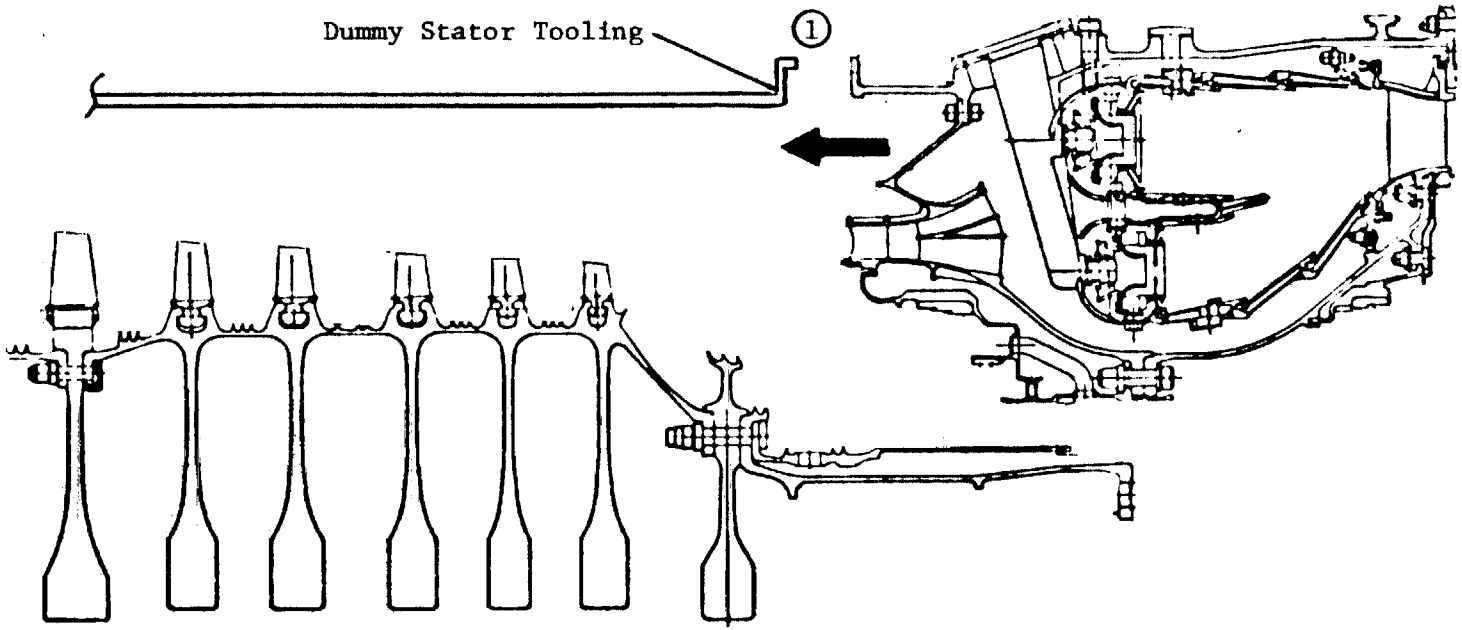

- MATE COMPRESSOR AND CDN ASSEMBLY

E882

E^3 ICLS HP SYSTEM ASSEMBLY

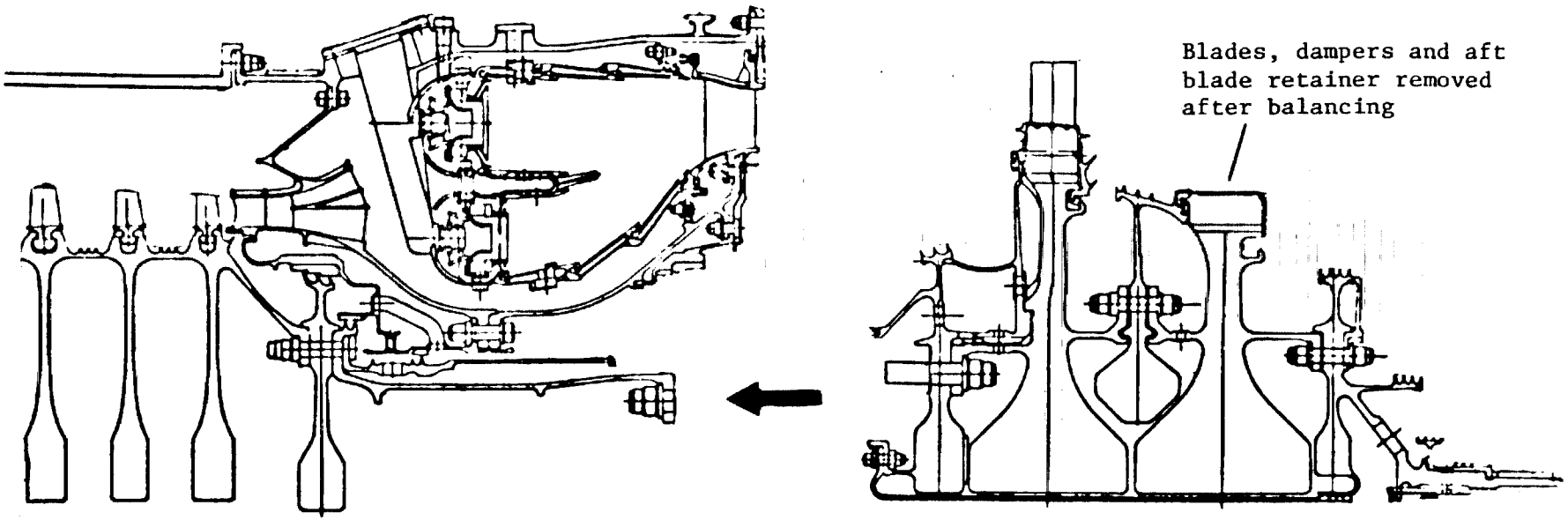

- MATE HP TURBINE AND COMPRESSOR ROTOR

E883

E^3 ICLS HP SYSTEM ASSEMBLY

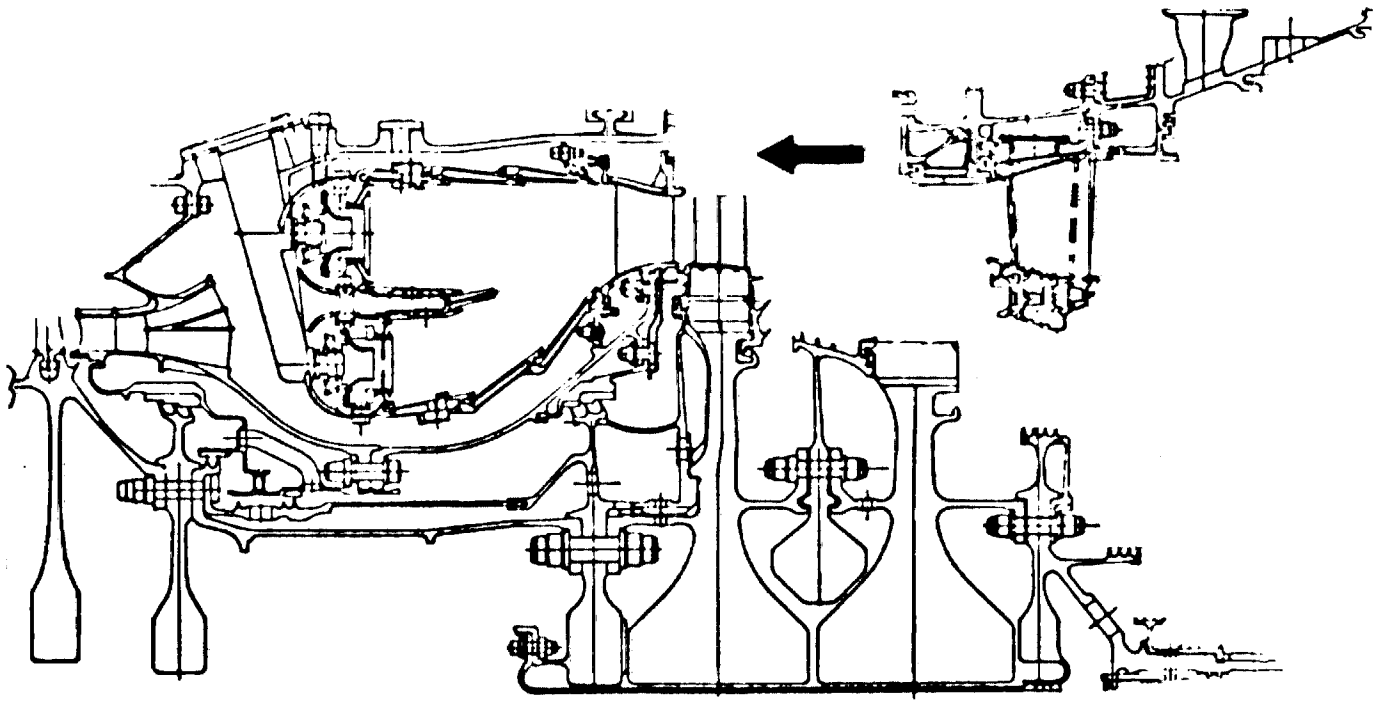

- INSTALL HPT SHROUD ASSEMBLY

E884

E^3 ICLS HP SYSTEM ASSEMBLY

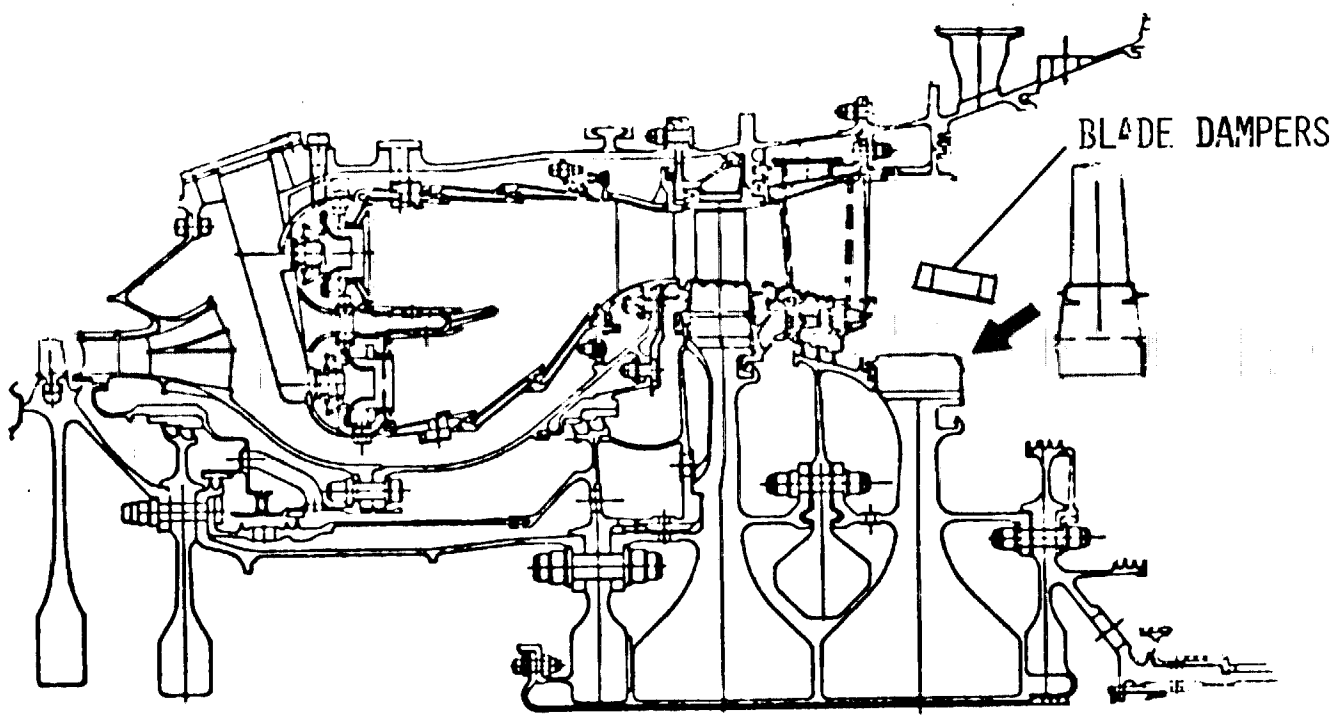

- INSTALL STAGE 2 TURBINE BLADES AND DAMPERS

E885

E^3 ICLS HP SYSTEM BALANCE

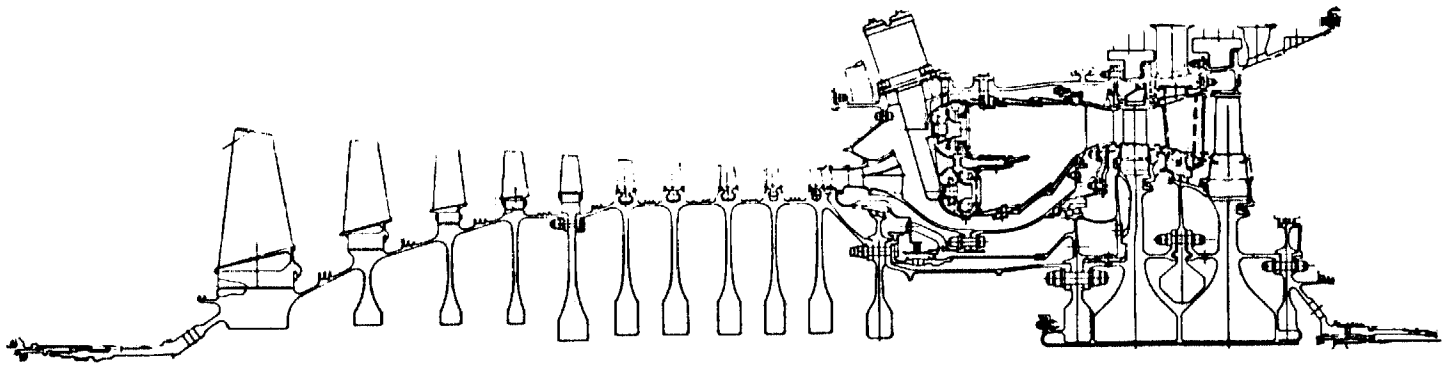

- SLAVE SUPPORTED CDN/HPT SHROUD ASSEMBLY
- BALANCE HP ROTOR ASSEMBLY

E886

E^3 ICLS FAN ROTOR ASSEMBLY

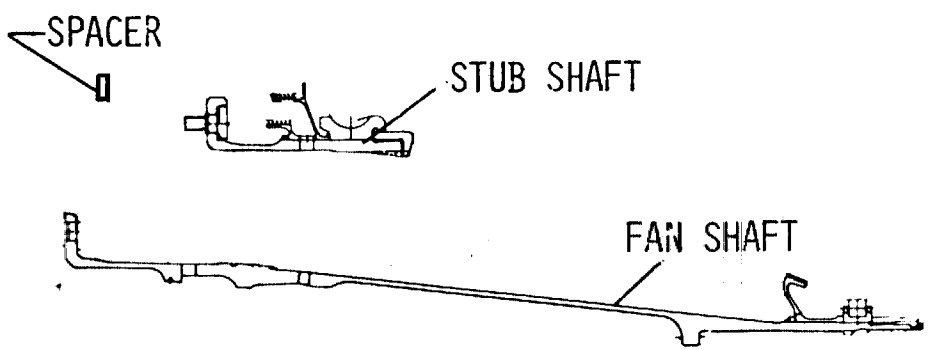

- INSTALL NO. 1 BEARING ROTATING HARDWARE ON STUB SHAFT
- INSTALL NO. 2 BEARING ROTATING HARDWARE ON FAN SHAFT
- MATE FAN AND STUB SHAFT
- BALANCE ASSEMBLY

E887

E^3 ICLS FAN ROTOR ASSEMBLY

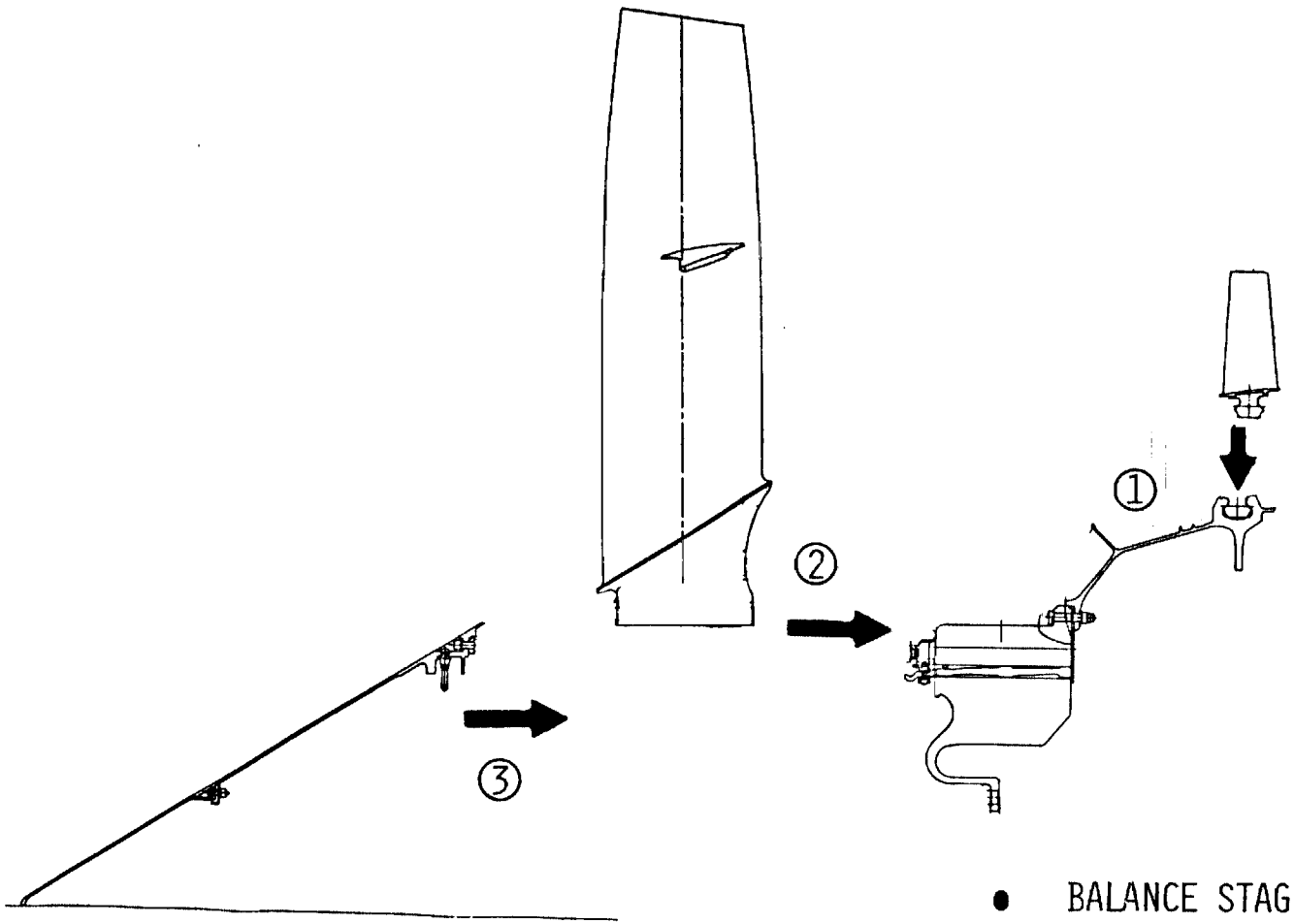

- BALANCE STAGE 1 & STAGE 2 DISK ASSEMBLY
- INSTALL ROTOR BLADES
- BALANCE
- INSTALL SPINNER
- FINAL BALANCE

E888

E^3 ICLS LPT CASE GRIND ASSEMBLY

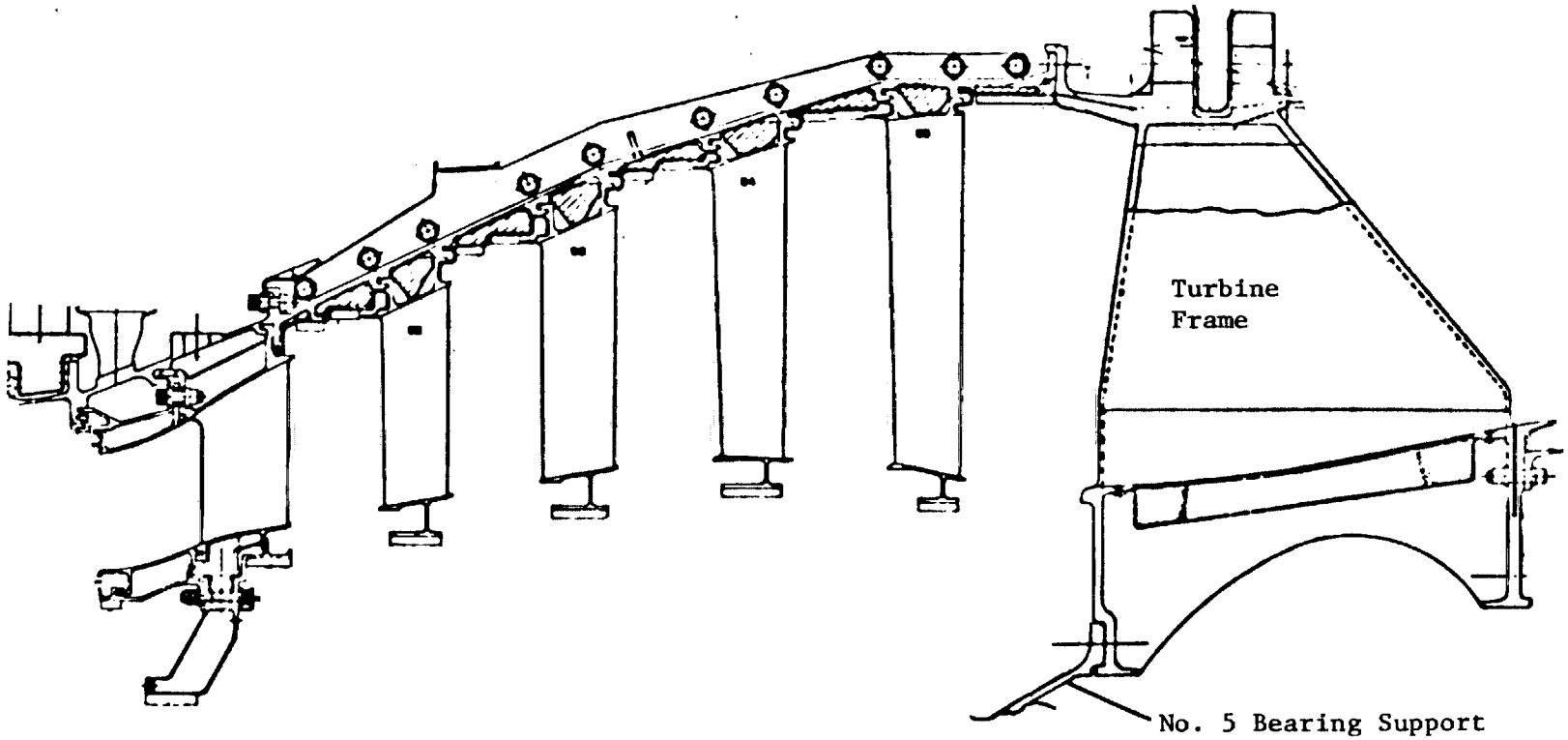

- ASSEMBLE STGS 1-5 VANES AND SHROUD ASSEMBLY IN CASE
- MATE LPT CASE, STAGE 2 HPT SHROUD SUPPORT AND TURBINE FRAME
- FLOWPATH GRIND AND SEAL GRIND

E889

E^3 ICLS LPT ROTOR ASSEMBLY

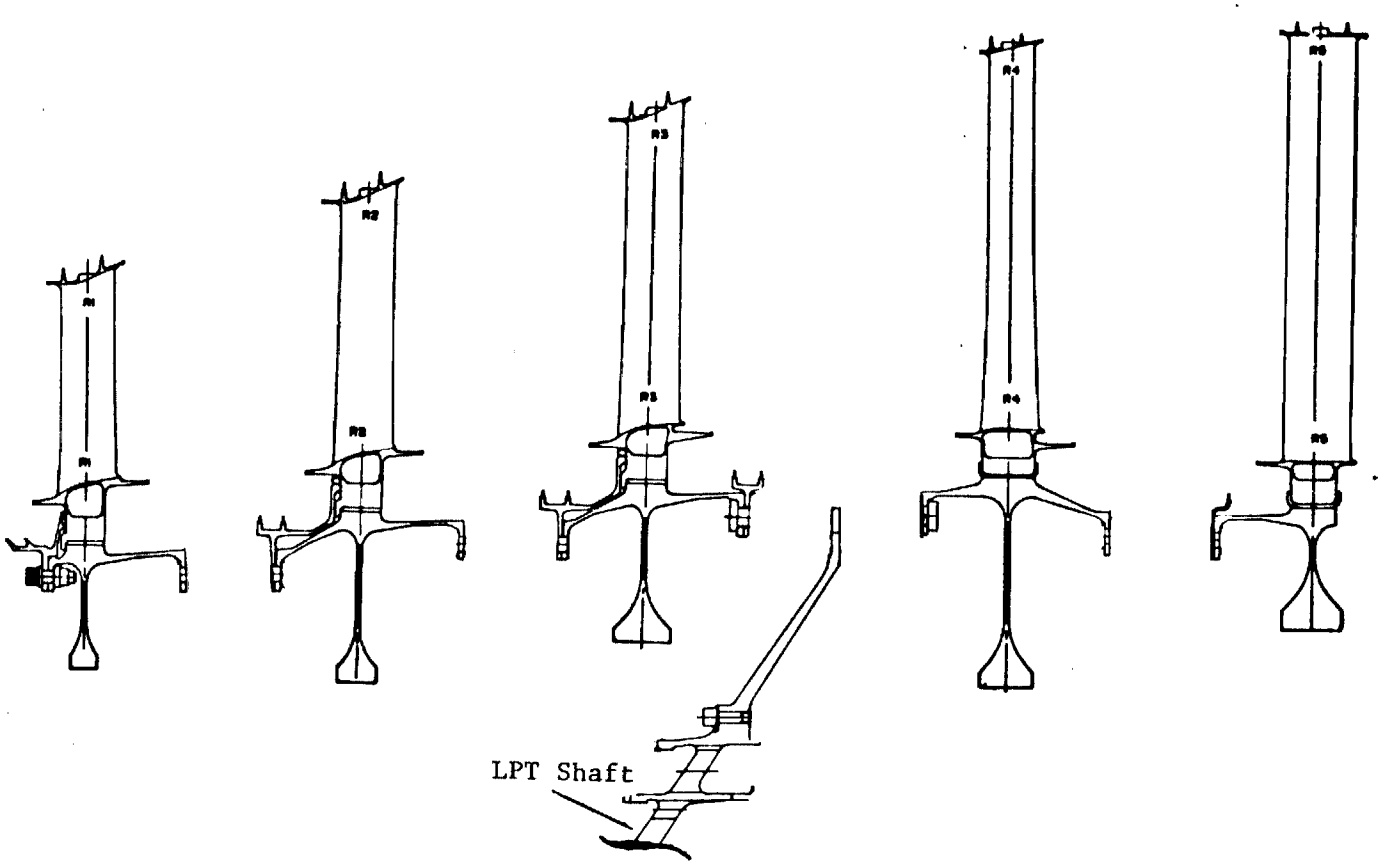

- BLADE AND BALANCE EACH SPOOL
- BALANCE SHAFT
- STACK SPOOLS AND SHAFT
- BALANCE LPTR ASSEMBLY
- TIP GRIND BLADES

E890

E^3 ICLS LPT ROTOR /STATOR ASSEMBLY

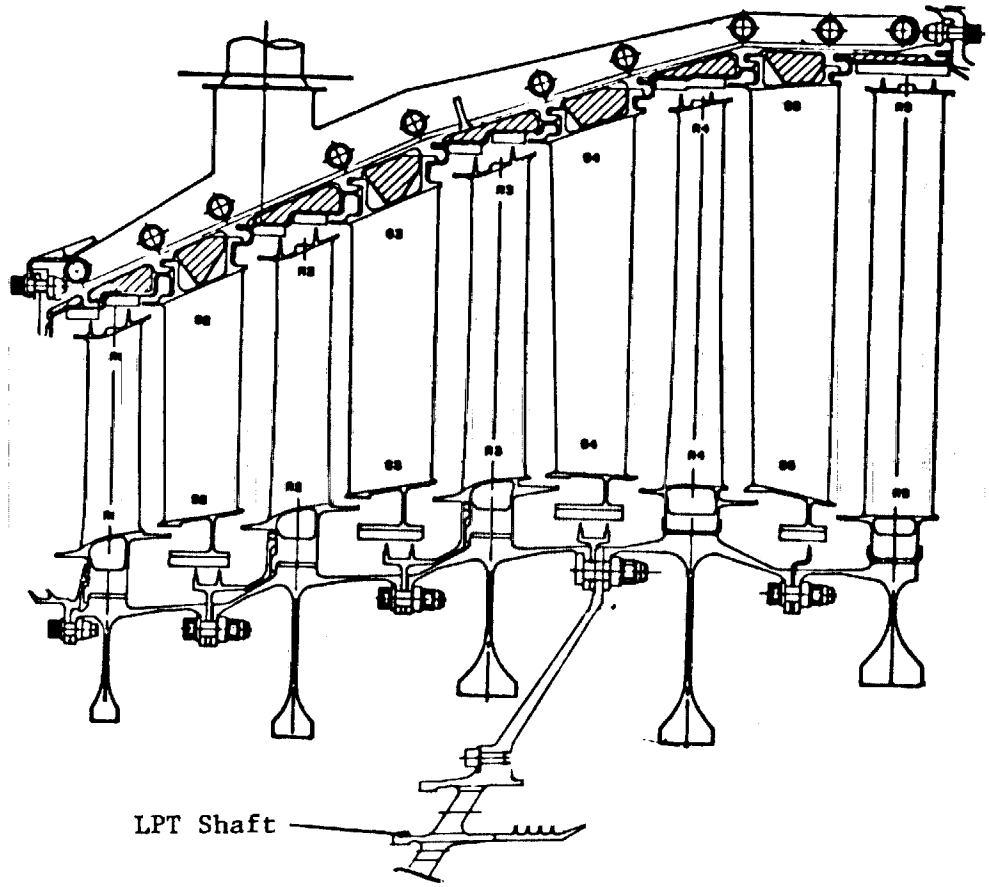

- STACK LPT ROTOR/STATOR ASSEMBLY
- BALANCE LPT ROTOR/STATOR ASSEMBLY
- SLAVE SUPPORTED CASING DURING BALANCE

E891

E^3 ICLS LPT PACKAGE

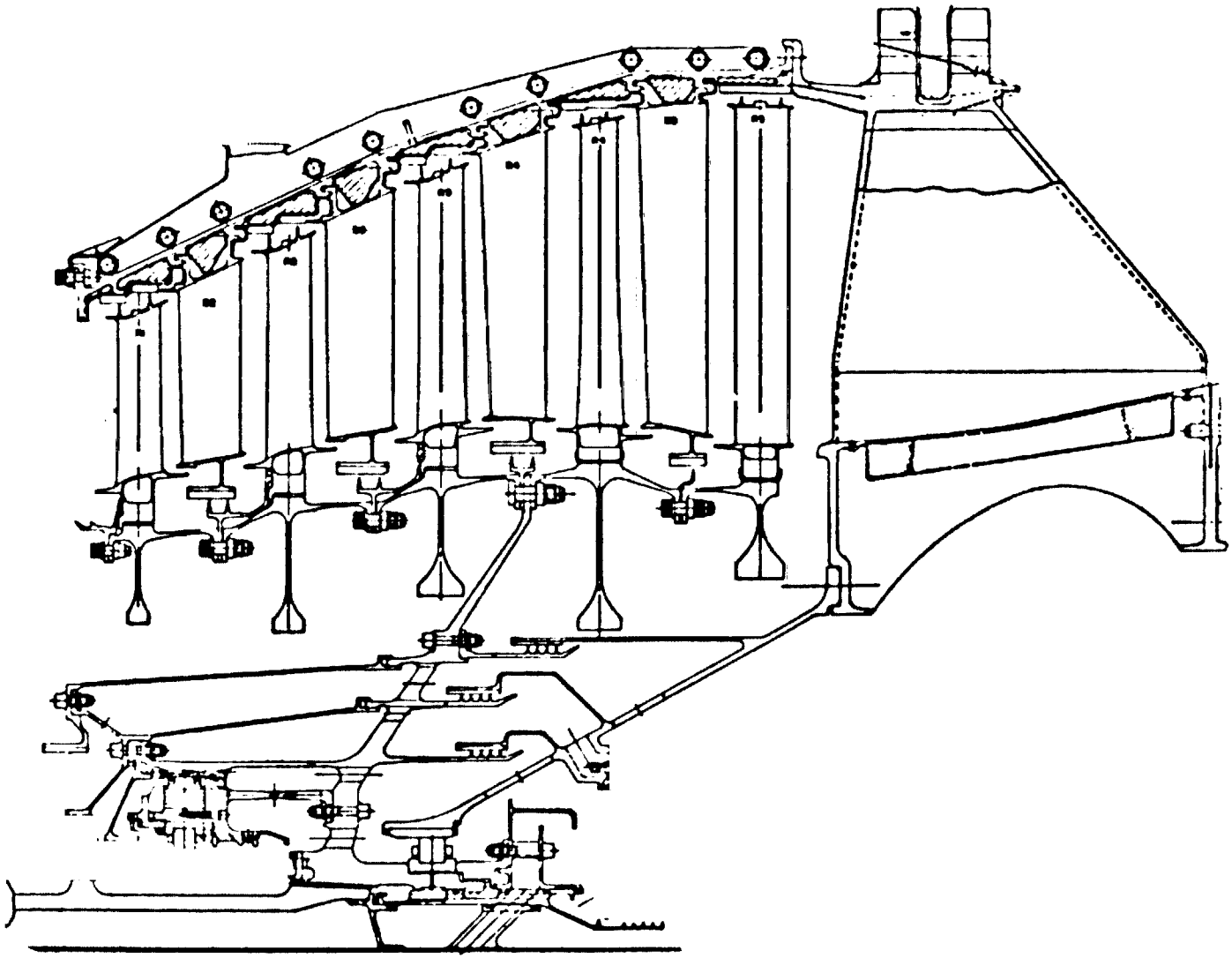

- BUILDUP AFT SUMP AND SEALS
- MATE LPT STATOR/ROTOR WITH TURBINE FRAME

E892

E^3 ICLS MAIN ENGINE ASSEMBLY

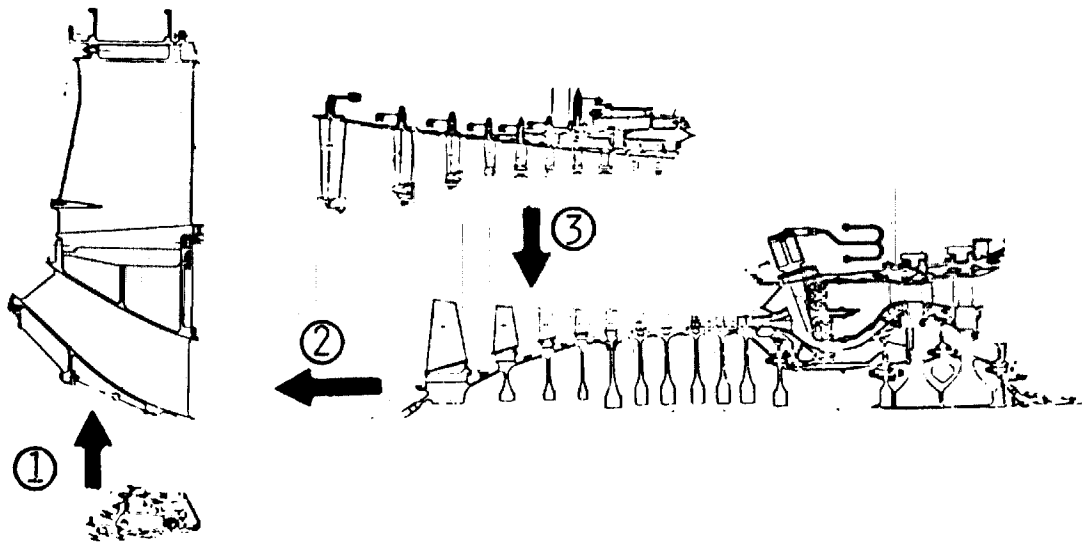

- INSTALL NO. 2/3 BEARING ASSEMBLY ON FAN FRAME
- MATE FRAME AND HP SYSTEM
- INSTALL STATOR CASES
- TURN ENGINE HORIZONTAL

E893

E^3 ICLS FAN FRAME ASSEMBLY

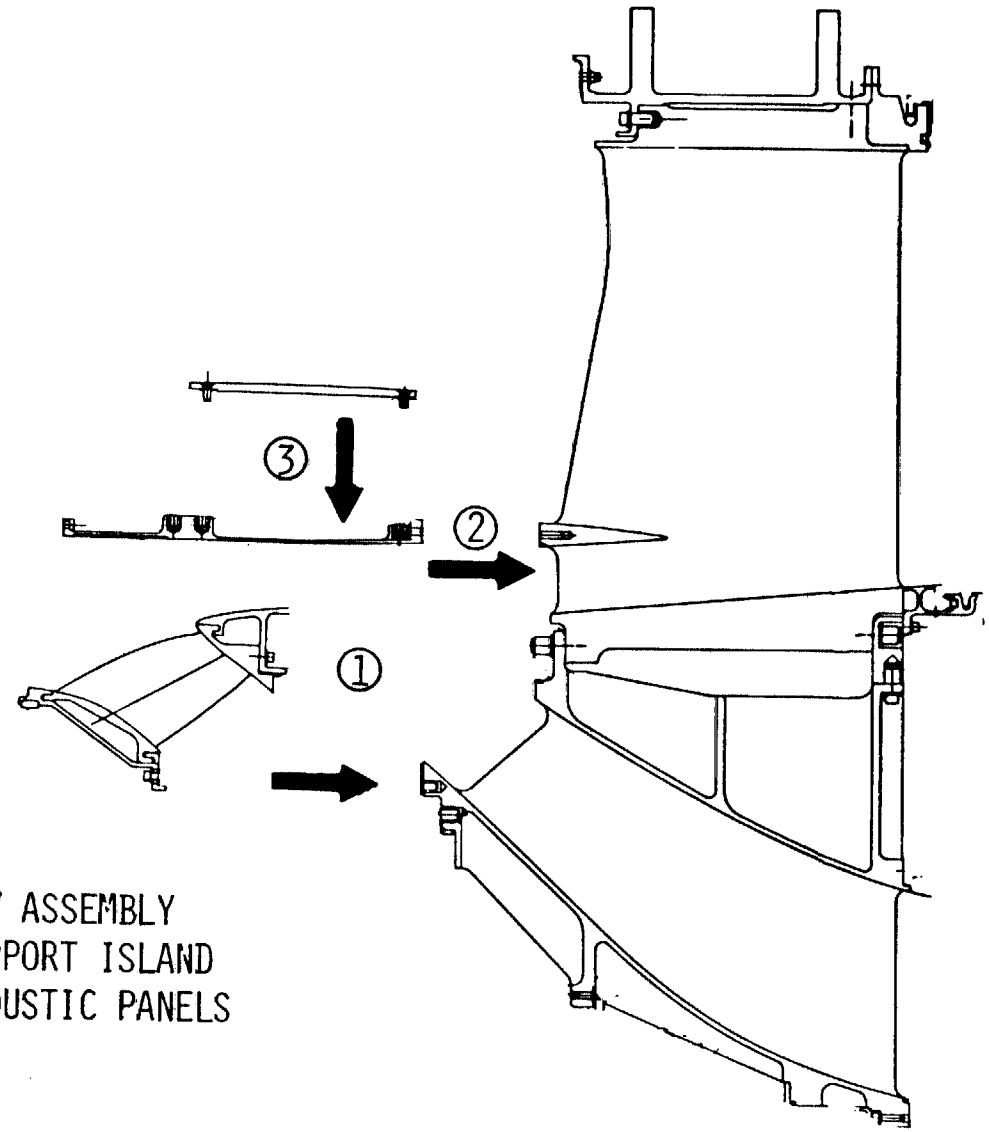

- INSTALL OGV ASSEMBLY
- INSTALL SUPPORT ISLAND
- INSTALL ACOUSTIC PANELS

E894

E^3 ICLS MAIN ENGINE ASSEMBLY

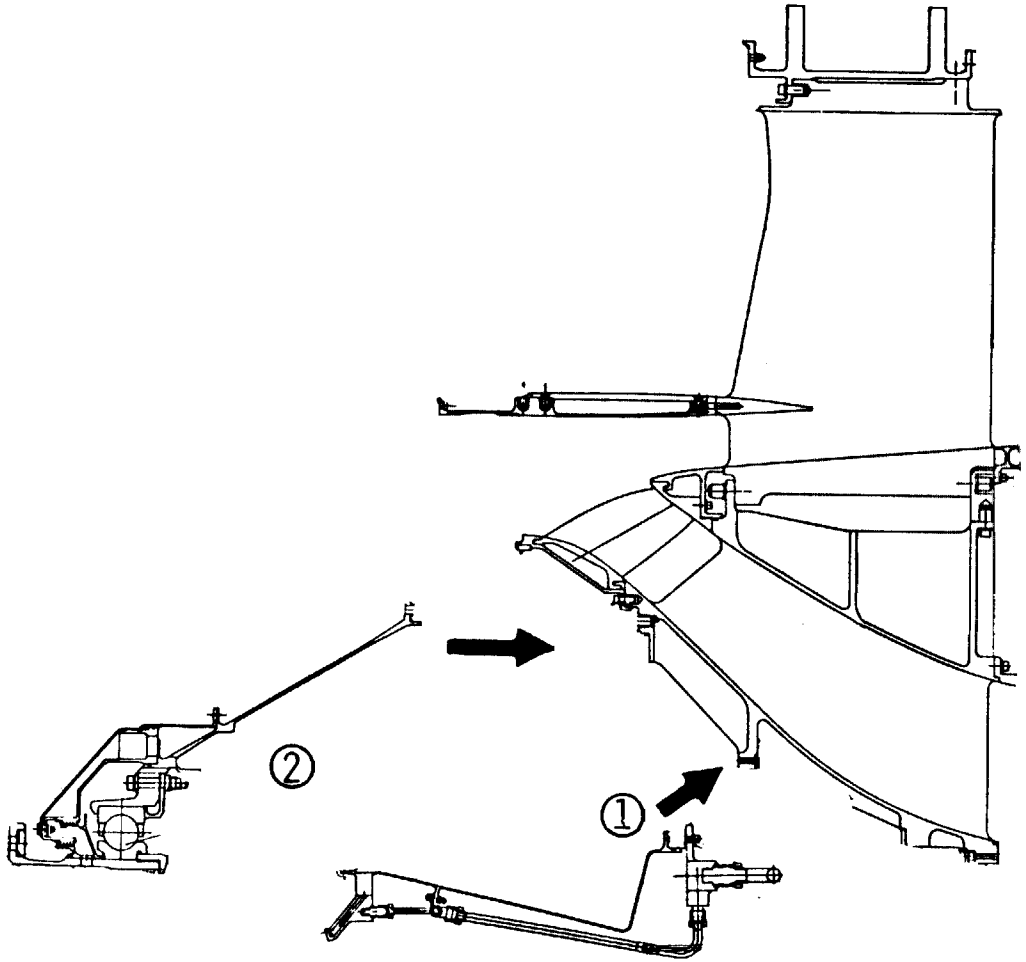

- INSTALL SUMP HARDWARE
- INSTALL NO. 1 BEARING ASSEMBLY

E895

E^3 ICLS MAIN ENGINE ASSEMBLY

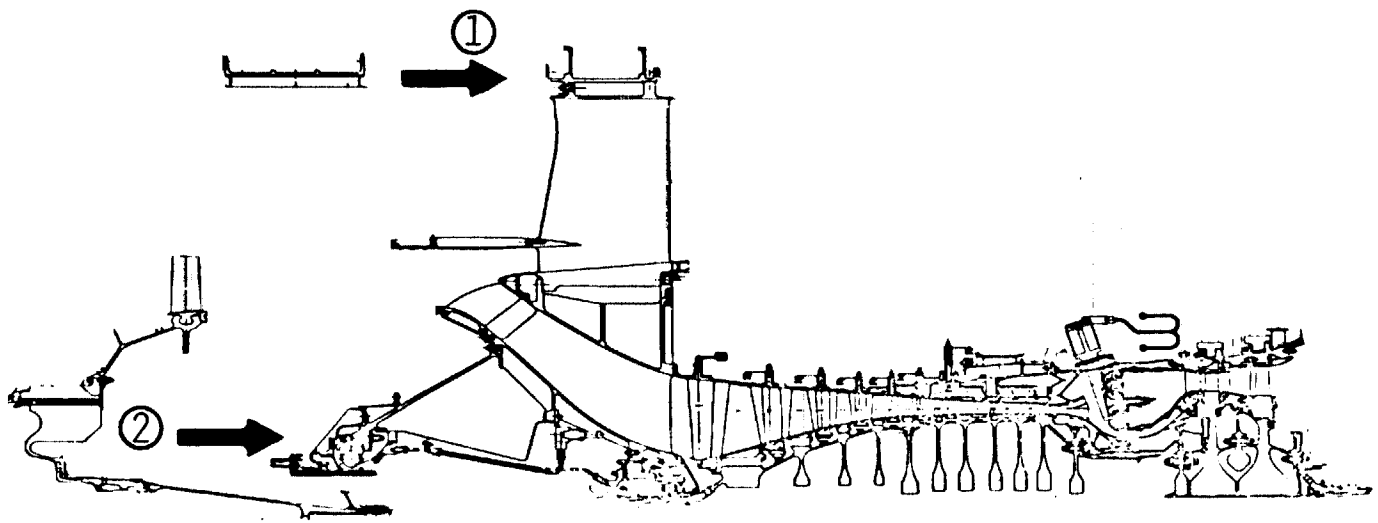

- INSTALL MID CASE
- INSTALL FAN ROTOR ASSEMBLY

E896

E^3 ICLS MAIN ENGINE ASSEMBLY

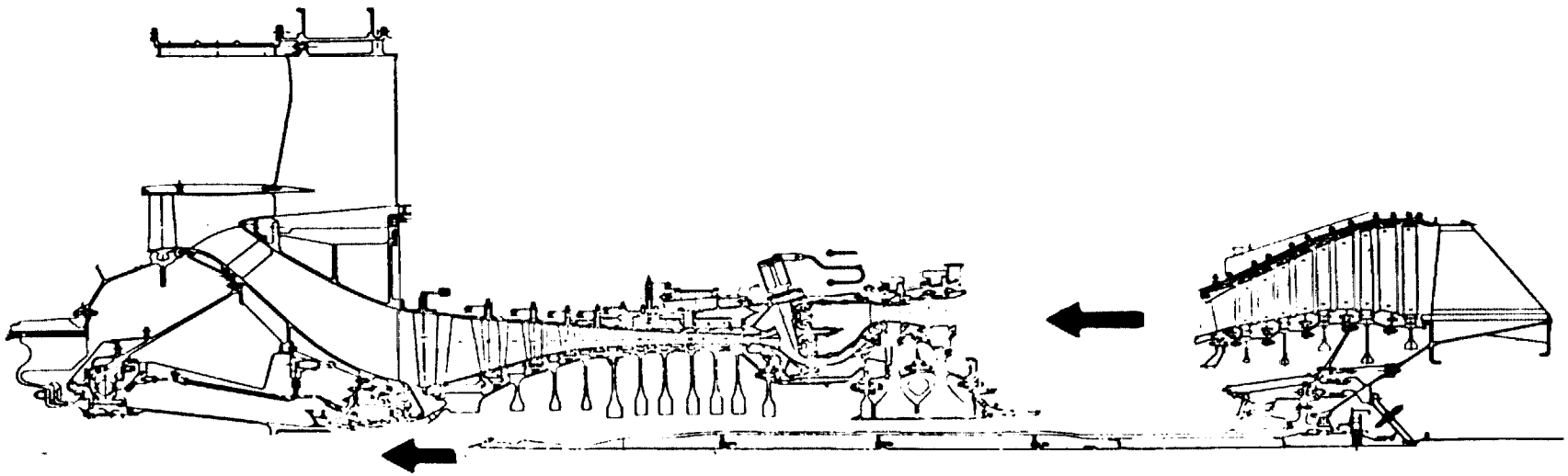

- INSTALL LPT PACKAGE

E897

E^3 ICLS MAIN ENGINE BUILDUP

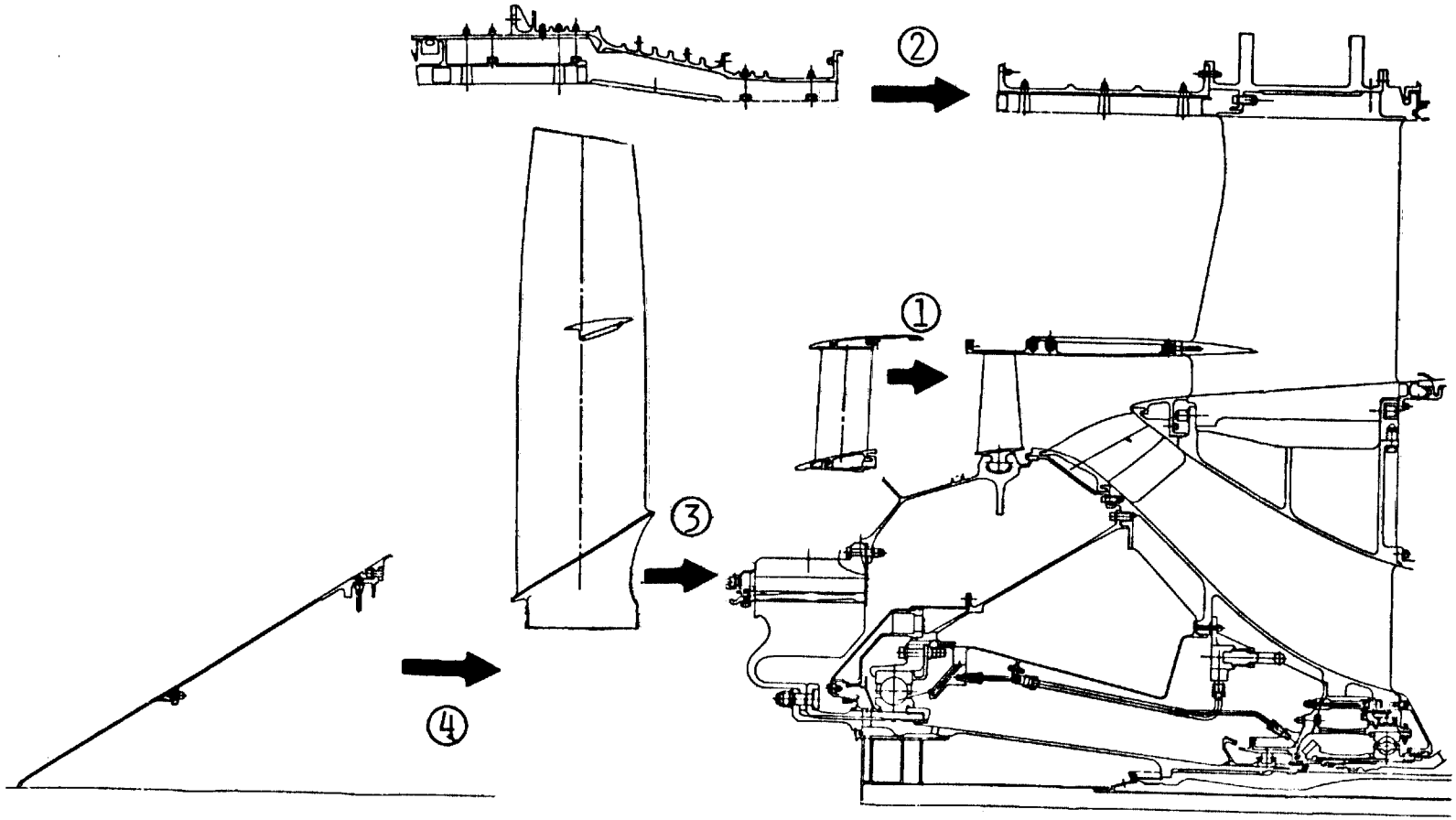

- INSTALL STAGE 1 STATOR ASSEMBLY
- INSTALL FAN CASE
- INSTALL FAN BLADES
- INSTALL SPINNER

E898

E^3 ICLS MAIN ENGINE ASSEMBLY

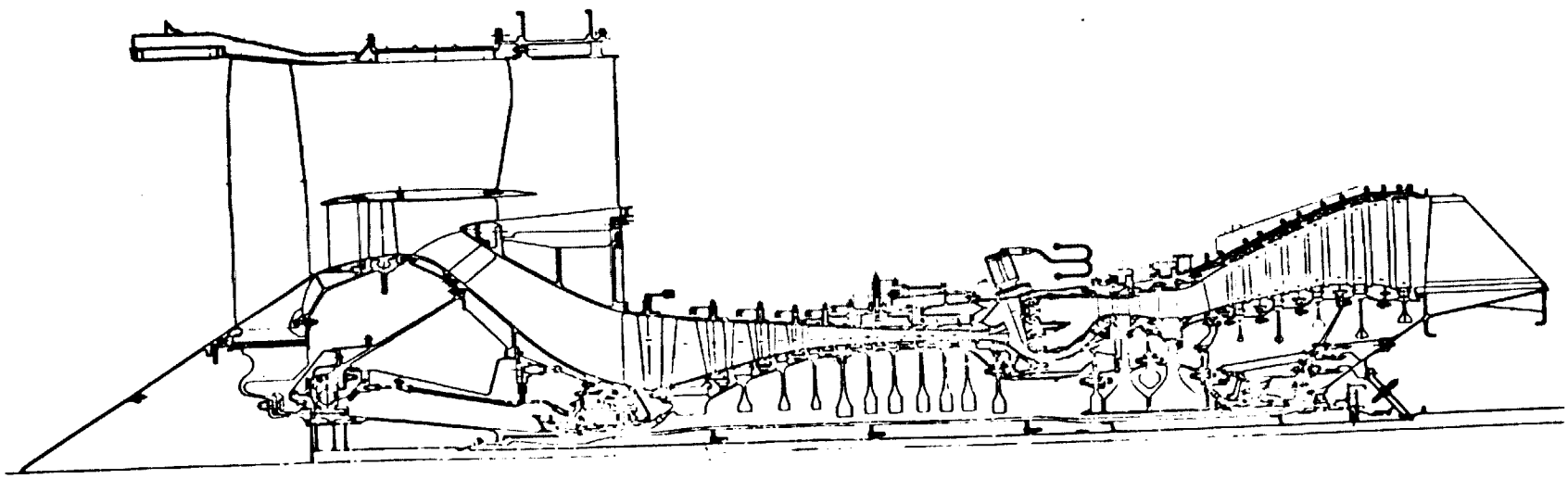

- INSTALL PIPING
- TERMINATE INSTRUMENTATION
- FINAL INSPECTIONS

E899

TEST AND ALTITUDE PERFORMANCE

PERFORMANCE ANALYSIS

AND

PREDICTION OF FLIGHT ENVELOPE PERFORMANCE

P. ORTIZ

E900

- TEST OBJECTIVES

- TEST PERFORMANCE ANALYSIS
  - ICLS INSTRUMENTATION
  - DEFINITION OF ENGINE PERFORMANCE ELEMENTS
  - CYCLE DECK ANALYSIS TOOL

- PREDICTION OF ENGINE FLIGHT PERFORMANCE
  - ENGINE PERFORMANCE ELEMENTS WHICH ARE EVALUATED IN ICLS TEST
  - ENGINE PERFORMANCE ELEMENTS WHICH ARE NOT EVALUATED IN ICLS TEST
  - ICLS AND FPS FINAL CYCLE DEVELOPMENT

E^3 ICLS PERFORMANCE TEST OBJECTIVES

- EVALUATION OF COMPONENT AND OVERALL ENGINE SYSTEM PERFORMANCE
- THERMAL AND ROTATIONAL SPEED OVERSHOOT EVALUATION
- EVALUATE ACC PERFORMANCE EFFECTS
- VERIFY CONTROL SYSTEM POWER MANAGEMENT AND ENGINE MODEL FEATURES
- EVALUATE FAN OFF-DESIGN PERFORMANCE (TWO NOZZLE AREAS)
- VERIFY PERFORMANCE PROJECTIONS - MAX TO MIN INSTRUMENTATION
- EVALUATE FULL SCALE MIXER PERFORMANCE (TRAVERSE RAKE)
- CORRELATE DATA WITH CORE AND COMPONENT TESTS FOR CRUISE PERFORMANCE PROJECTIONS

- TEST OBJECTIVES
- TEST PERFORMANCE ANALYSIS
  - ICLS INSTRUMENTATION
  - DEFINITION OF ENGINE PERFORMANCE ELEMENTS
  - CYCLE DECK ANALYSIS TOOL
- PREDICTION OF ENGINE FLIGHT PERFORMANCE
  - ENGINE PERFORMANCE ELEMENTS WHICH ARE EVALUATED IN ICLS TEST
  - ENGINE PERFORMANCE ELEMENTS WHICH ARE NOT EVALUATED IN ICLS TEST
  - ICLS AND FPS FINAL CYCLE DEVELOPMENT

ICLS PERFORMANCE INSTRUMENTATION SCHEMATIC

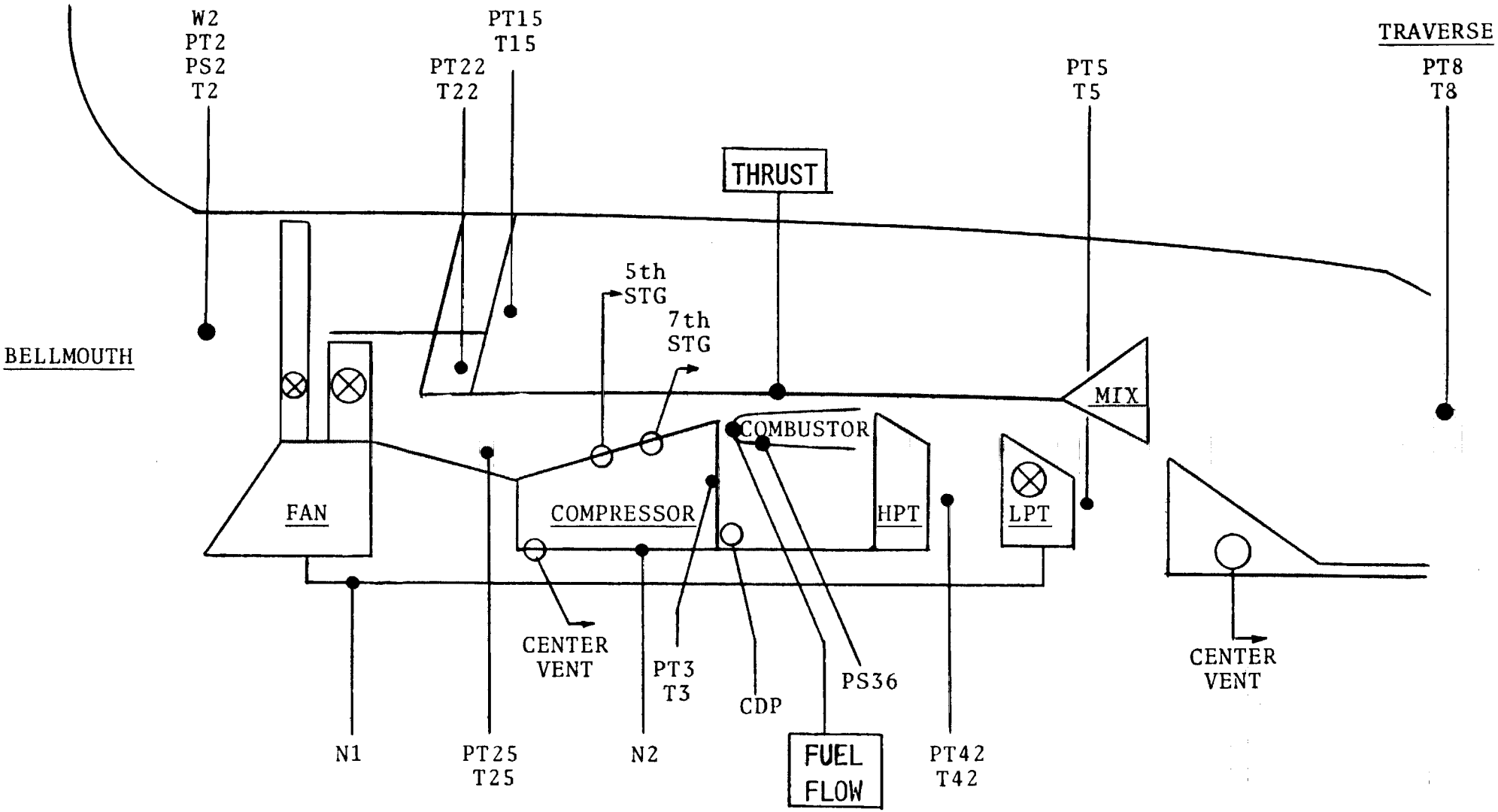

○ PARASITICS

⊗ MECHANICAL INTEGRITY

E902

ELEMENTS OF ICLS ENGINE PERFORMANCE

PERFORMANCE ITEM	ANALYTICAL	MODEL TEST	COMPONENT TEST	CORE ENGINE TEST	ICLS TEST
BELLMOUTH FLOW COEFFICIENT	X		X		
FAN - BYPASS MAP			X		X
FAN - HUB MAP			X		X
REYNOLDS EFFECTS	X				
BYPASS DUCT PRESSURE LOSS	X				
COMPRESSOR INLET DUCT				X	
COMPRESSOR MAP			X	X	X
REYNOLDS EFFECTS	X				
COMPRESSOR BLEED AND COOLING FLOWS				X	X
COMBUSTOR MAP			X	X	X
HP TURBINE MAP			X	X	X
ACTIVE CLEARANCE CONTROL SYSTEM				X	X
LP TURBINE MAP			X		X
REYNOLDS EFFECTS	X				
LPT COOLING FLOWS					X
ACTIVE CLEARANCE CONTROL SYSTEM					X
MIXER/EXHAUST PRESSURE LOSS	X				
MIXER EFFECTIVENESS		X			X
NOZZLE COEFFICIENTS	X				
SECONDARY FLOWS (INCL. CENTER VENT)					X
INSTRUMENTATION LOSSES	X				X

[ ] CORE ENGINE ELEMENTS

E903

PERFORMANCE ITEMS NOT EVALUATED BY DIRECT MEASUREMENT ON ANY TEST

- BYPASS DUCT PRESSURE LOSS*
- CORE DUCT PRESSURE LOSS*
- MIXING/EXHAUST DUCT PRESSURE LOSS*
- REYNOLDS EFFECTS
- NOZZLE PERFORMANCE*
- INDIVIDUAL INSTRUMENTATION LOSSES

*COMBINED EFFECTS EVALUATED IN CYCLE BALANCE TO MEASURED THRUST

CYCLE DECK DATA REDUCTION AND ANALYSIS PROGRAM

CYCLE DECK AUGMENTATION PACKAGE

- PRE-PROCESSOR
  - UNITS CONVERSION
  - DATA EDITING
  - DATA AVERAGING

- EXECUTIVE ROUTINE
  - GENERATION OF PRE-TEST PREDICTIONS
  - MODIFIES COMPONENTS TO MATCH TEST MEASUREMENTS FOR A BALANCED CYCLE
  - GENERATION OF MODIFIED CYCLE AT REFERENCE ENGINE INLET CONDITIONS

- MULTIPLE ANALYSIS PATHS
  - MULTIPLE PROGRAM MODES FOR ESTABLISHING ENGINE AIRFLOWS
  - MULTIPLE ITERATION OPTIONS FOR SETTING CYCLE VARIABLES NOT MEASURED

- TEST OBJECTIVES

- TEST PERFORMANCE ANALYSIS
  - ICLS INSTRUMENTATION
  - DEFINITION OF ENGINE PERFORMANCE ELEMENTS
  - CYCLE DECK ANALYSIS TOOL

- PREDICTION OF ENGINE FLIGHT PERFORMANCE
  - ENGINE PERFORMANCE ELEMENTS WHICH ARE EVALUATED IN ICLS TEST
  - ENGINE PERFORMANCE ELEMENTS WHICH ARE NOT EVALUATED IN ICLS TEST
  - ICLS AND FPS FINAL CYCLE DEVELOPMENT

E905A

ICLS FAN PERFORMANCE MAP

NOTE: FAN PERFORMANCE MAPPED BEYOND 100% SPEED IN THE FAN RIG TEST

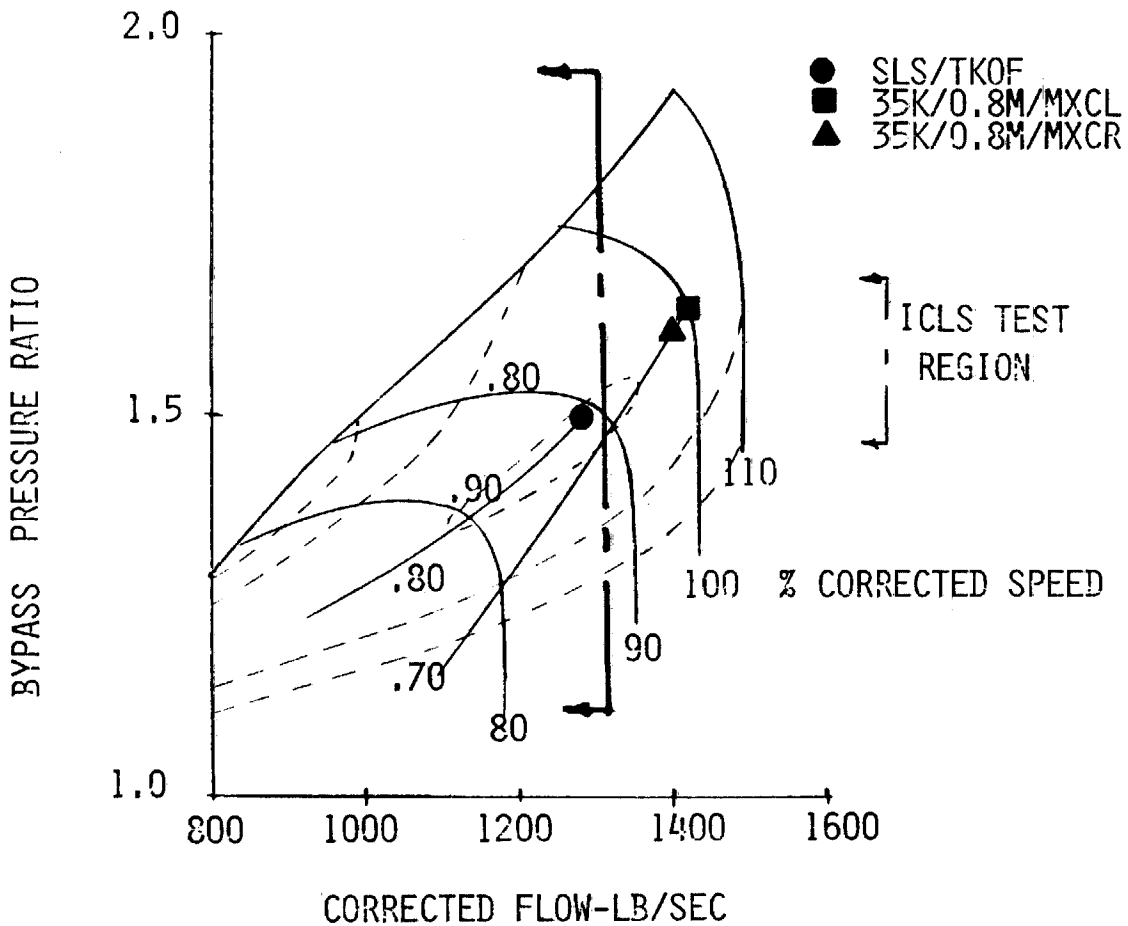

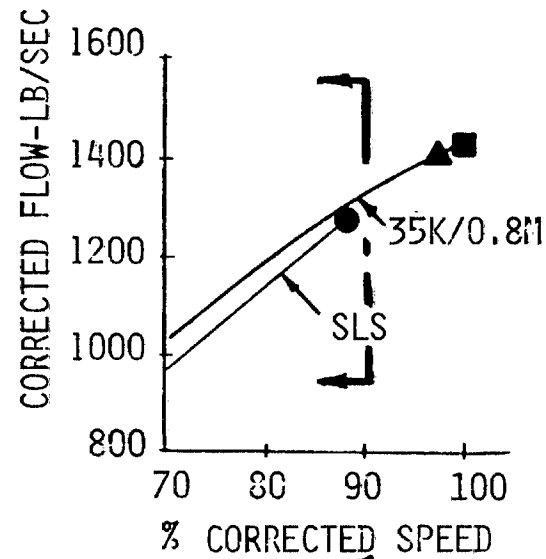

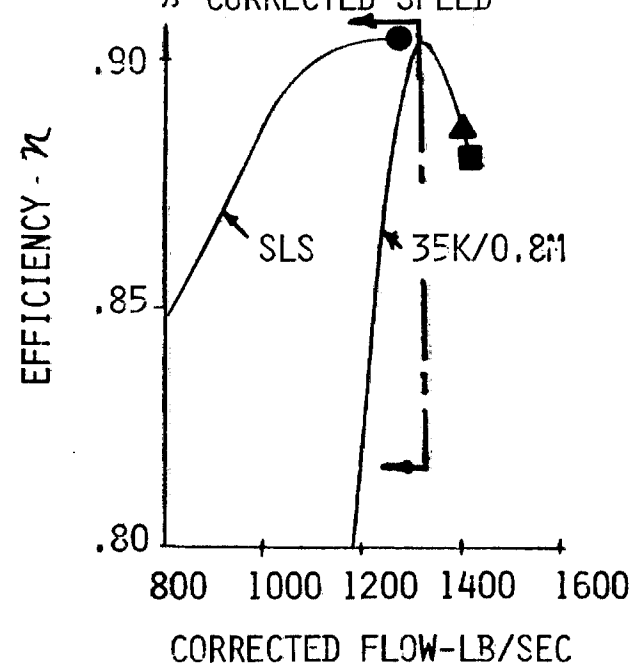

E906

ICLS COMPRESSOR PERFORMANCE MAP

NOTE: COMPRESSOR PERFORMANCE MAPPED BEYOND 100% SPEED IN THE CORE ENGINE TEST

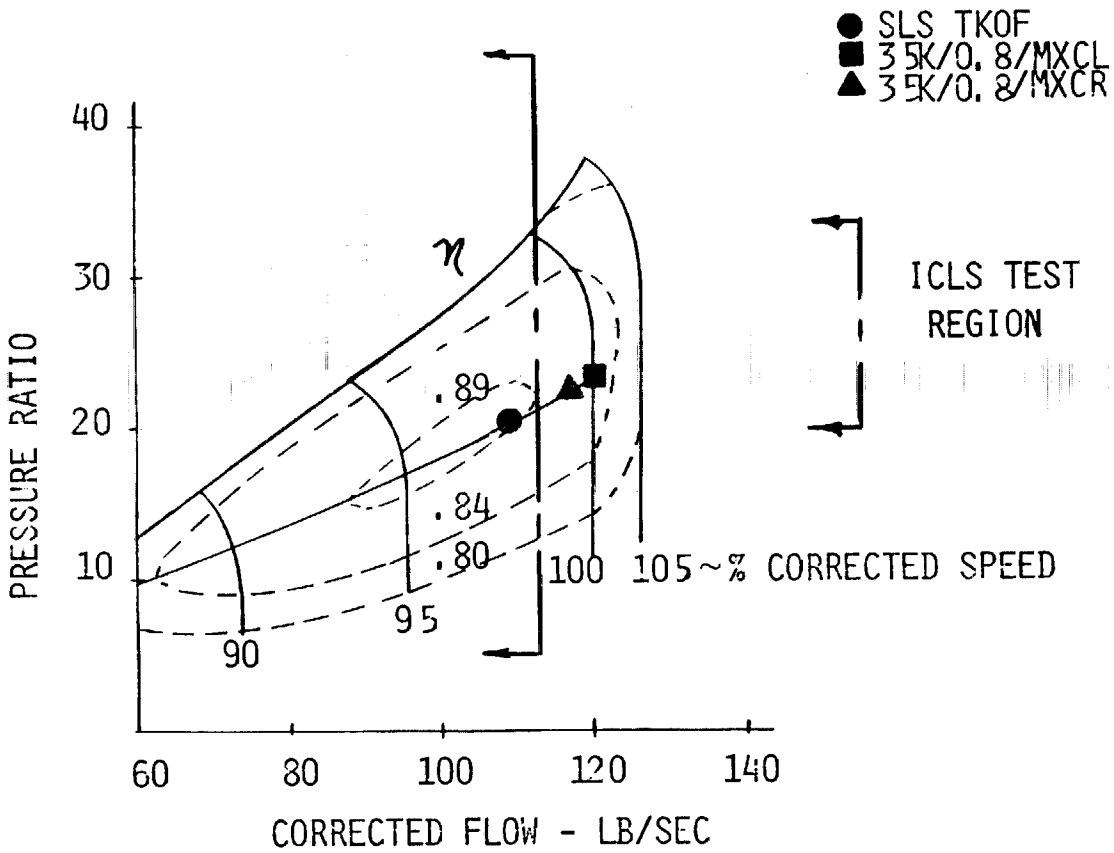

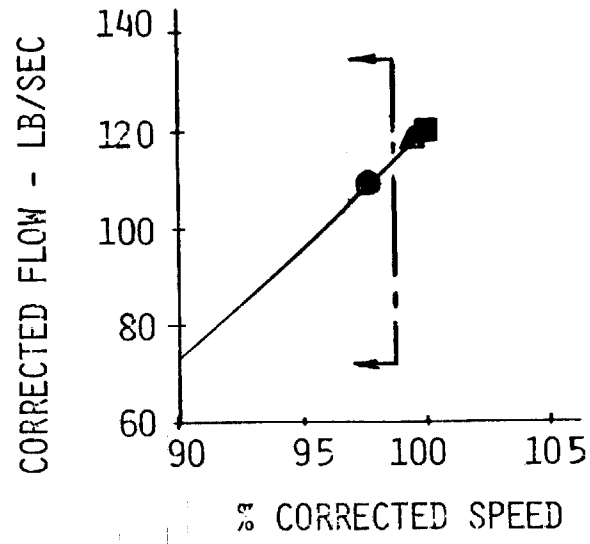

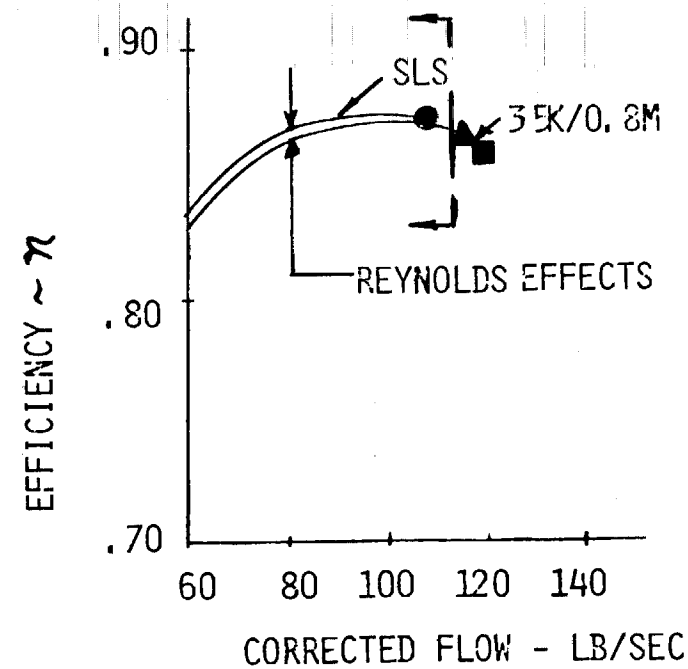

E907

ICLS FAN HUB PERFORMANCE MAP

NOTE: FAN HUB PERFORMANCE MAPPED BEYOND 100% SPEED IN THE FAN RIG TEST

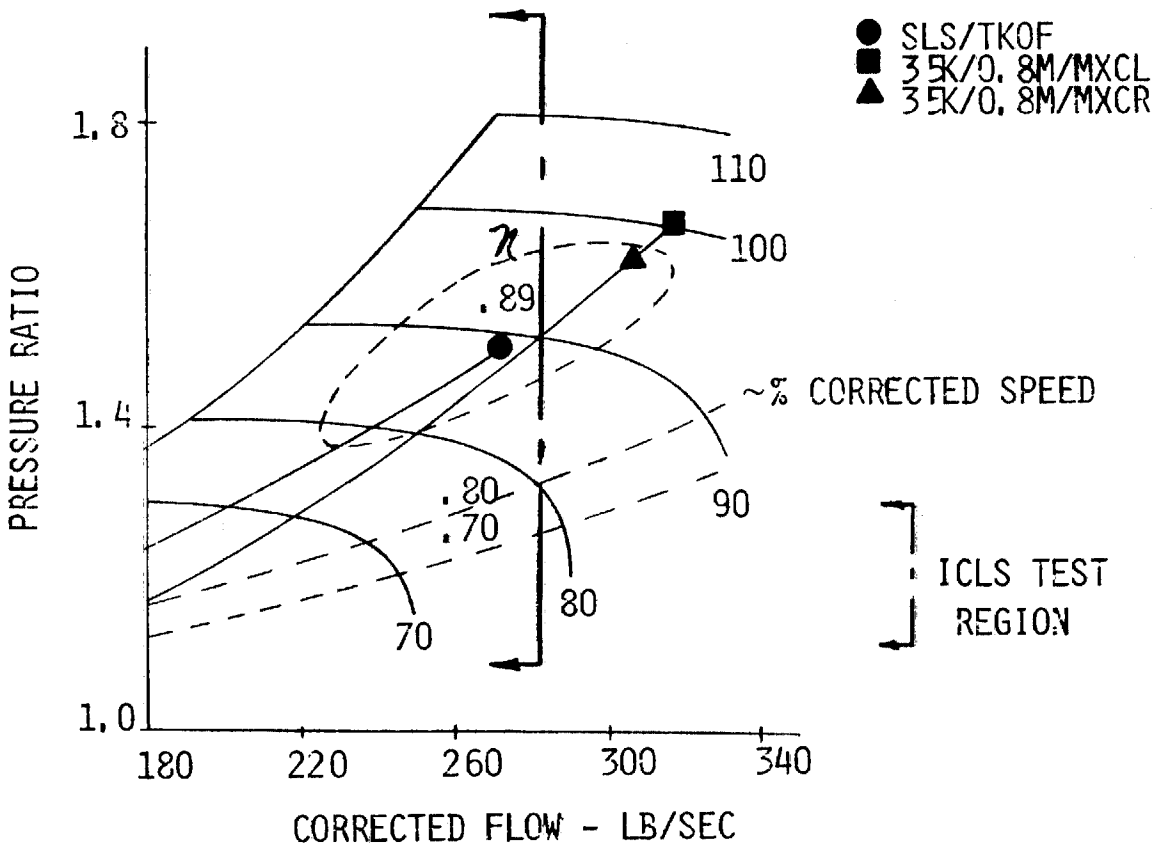

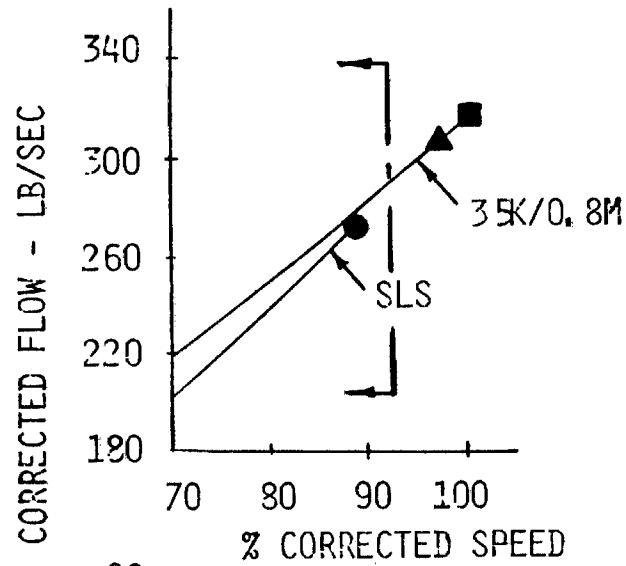

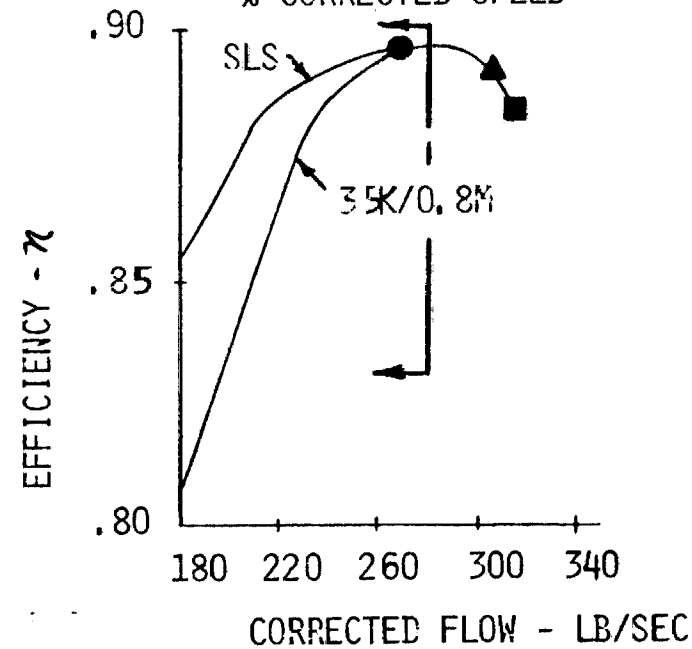

E908

COMBUSTOR MODEL

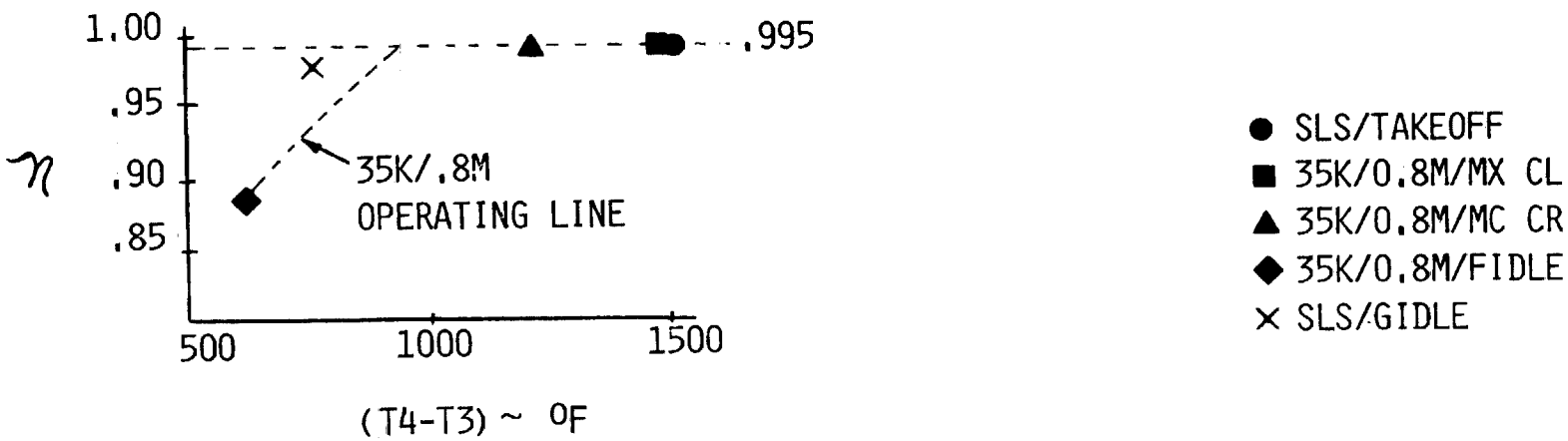

$$\eta = f\left[T3,\ P3,\ (T4-T3)\right]$$

$$\frac{P4}{P3} = f\left[\frac{\Delta P}{q3},\ \frac{T4}{T3}\right]$$

ICLS HP TURBINE AND LP TURBINE PERFORMANCE MAPS

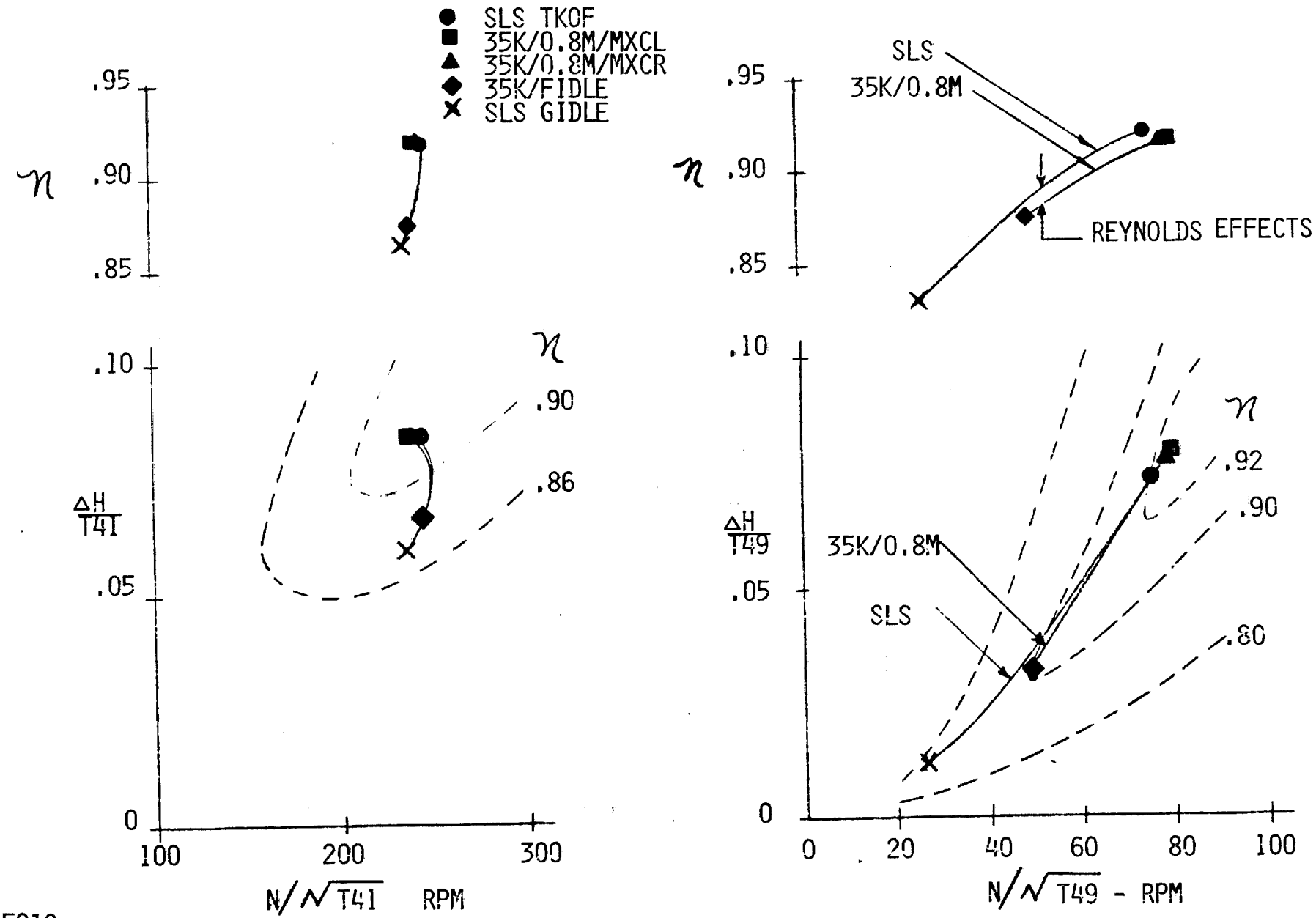

E910

ESTABLISHMENT OF CRUISE ALTITUDE PERFORMANCE ITEMS

NOT VERIFIED BY ICLS ITEMS

• FAN (BYPASS/HUB) PERFORMANCE AT HIGH CORRECTED SPEEDS	FAN RIG TEST
• REYNOLDS EFFECTS	
- FAN HUB	ANALYTICAL PREDICTION
- COMPRESSOR	ANALYTICAL PREDICTION
- LP TURBINE	ANALYTICAL/RIG TEST
• ENGINE NOZZLE VELOCITY AND FLOW COEFFICIENTS AT CHOKED PRESSURE RATIOS	ANALYTICAL PREDICTION
• MIXER/EXHAUST DUCT PERFORMANCE WITH CRUISE MIXER MACH NUMBERS AND REYNOLDS EFFECTS	MIXER MODEL TESTS PET MIXER TESTS
• EXHAUST SYSTEM DUCT PRESSURE LOSSES	ANALYTICAL PREDICTION
- BYPASS DUCT	
- CORE DUCT	

E911

ICLS EXHAUST SYSTEM PRESSURE LOSSES

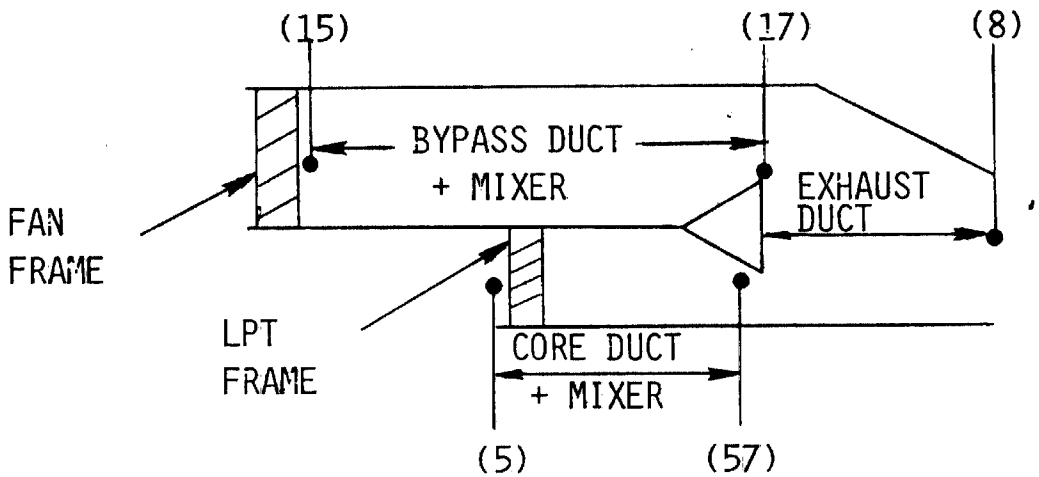

	PRESSURE LOSSES - % $\frac{\Delta P}{P}$			% ΔSFC SENSITIVITY	
	MAX CR	TAKEOFF	TOLERANCE	MAX CR	TAKEOFF
BYPASS + MIXER	1.31	1.23	± 0.2	± 0.25	± 0.42
CORE + MIXER	0.97	0.82	± 0.2	± 0.06	± 0.10
EXHAUST	0.34	0.31	± 0.1	± 0.14	± 0.25

MIXER EFFECTIVENESS AND THRUST INCREASE

CONFLUENT FLOW
(NO MIXING)

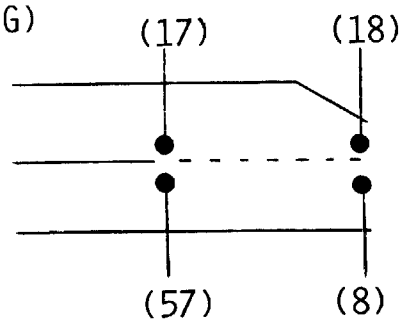

MIXED FLOW

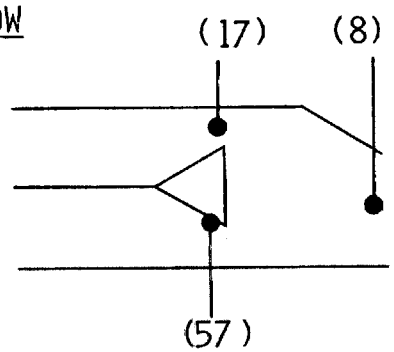

TOTAL CONFLUENT GROSS THRUST

$$FGC = FG18 + FG8$$

TOTAL MIXED GROSS THRUST

$$FGM = FGC + \triangle FGMIX$$

$$FGM = FGC + \frac{EPM\,(FGM_{100} - FGC)}{100}$$

FGM_{100} - 100% MIXED FLOW THRUST

EPM - % MIXING EFFECTIVENESS

% MIXED THRUST INCREASE	TAKEOFF	MAX CRUISE
GROSS THRUST	0.90	1.25
NET THRUST	0.90	3.14

E913

DEFINITION OF OPTIMUM ICLS CYCLE

+ ICLS TEST VEHICLE CYCLE MATCH AS TESTED (MIN INSTRUMENTATION)
+ REMOVE INSTRUMENTATION LOSSES
+ MODIFY FAN AND HUB MAPS IN HIGH SPEED REGION (RIG TEST DATA)
+ ADJUST FOR OTHER CRUISE PERFORMANCE ITEMS (Re EFFECTS, MIXER, CHOKED NOZZLE)

ICLS TEST VEHICLE STATUS CYCLE

+ REMATCH TEST VEHICLE COMPONENTS (TURBINE FLOW FUNCTIONS, MIXER AND NOZZLE AREAS)

OPTIMUM ICLS CYCLE - COMPARE WITH FORECAST ICLS

E914

PREDICTION OF FLIGHT PERFORMANCE

OPTIMUM ICLS CYCLE

- DEFINE COMPONENT MODIFICATIONS AS RESULT OF SUBSEQUENT COMPONENT DEVELOPMENT TESTS (SECOND CORE, ETC.)
- DEFINE ANTICIPATED COMPONENT IMPROVEMENTS FROM DESIGN MODIFICATIONS, ETC.
- REMATCH COMPONENTS FOR OPTIMUM CYCLE
- UPDATE NACELLE DRAG CHARACTERISTICS

FINAL FPS CYCLE - COMPARE WITH FPS PDR CYCLE

SUMMARY OF ICLS AND FPS CYCLE DEVELOPMENT

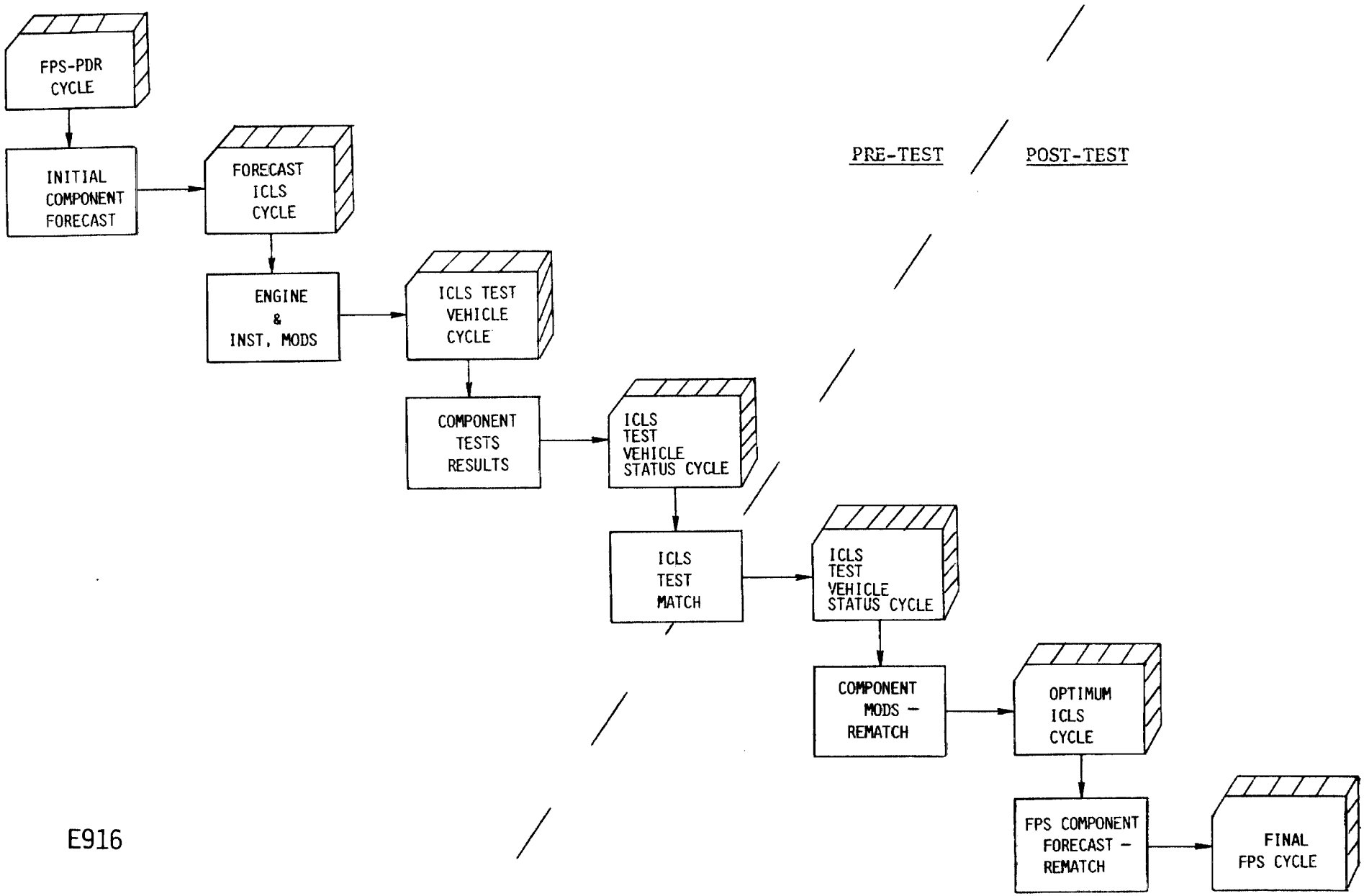

SYSTEMS ENGINEERING

SYSTEMS ENGINEERING

- SECONDARY FLOW
- EXTERNAL PIPING
- ACTIVE CLEARANCE CONTROL
- MOUNTING
- ACOUSTICS
- STARTING
- FAN & COMPRESSOR STABILITY
- VIBRATION

R. JOHNSTON

E917

PNEUMATIC SYSTEM ICLS/FPS COMPARISON

COMPONENT	ICLS	FPS
5TH STAGE AIR		
• CUSTOMER BLEED	6 PORTS (SMALL)	3 LARGE PORTS
• COMPRESSOR CLEARANCE CONTROL	BLEED @ 6 O'CLOCK	BLEED @ 12 O'CLOCK
• LPT COOLING	X	X
7TH STAGE AIR		
• START BLEED	X	X
• HPT COOLING	X	X
CDP AIR		
• CUSTOMER BLEED	X	X
• HPT COOLING	X	X
• LPT & HPT COOLING DURING START	UNIQUE	NOT REQUIRED
STARTER AIR ROUTING	UNIQUE	AFT COWL
TURBINE ACC VALVES	START VALVES	FLIGHT DESIGN

E918

SECONDARY FLOW SYSTEM

	CORE PDR	ICLS	FPS
• HPT CHARGEABLE COOLING %	9.01	9.39	SAME
• HPT NON-CHARGEABLE COOLING %	9.26	9.46	SAME
• CUSTOMER BLEED - 5TH, %	0-9.	SAME	SAME
• CUSTOMER BLEED - CDP, %	0-18.	SAME	SAME
• ACTIVE CLEARANCE CONTROL - HPT & LPT, %	.1-.6	SAME	SAME
• ACTIVE CLEARANCE CONTROL - HPC, %	0-.77	SAME	SAME
• CORE ROTOR COOLING, %	.48	.37	SAME

EXTERNAL ICLS PIPING

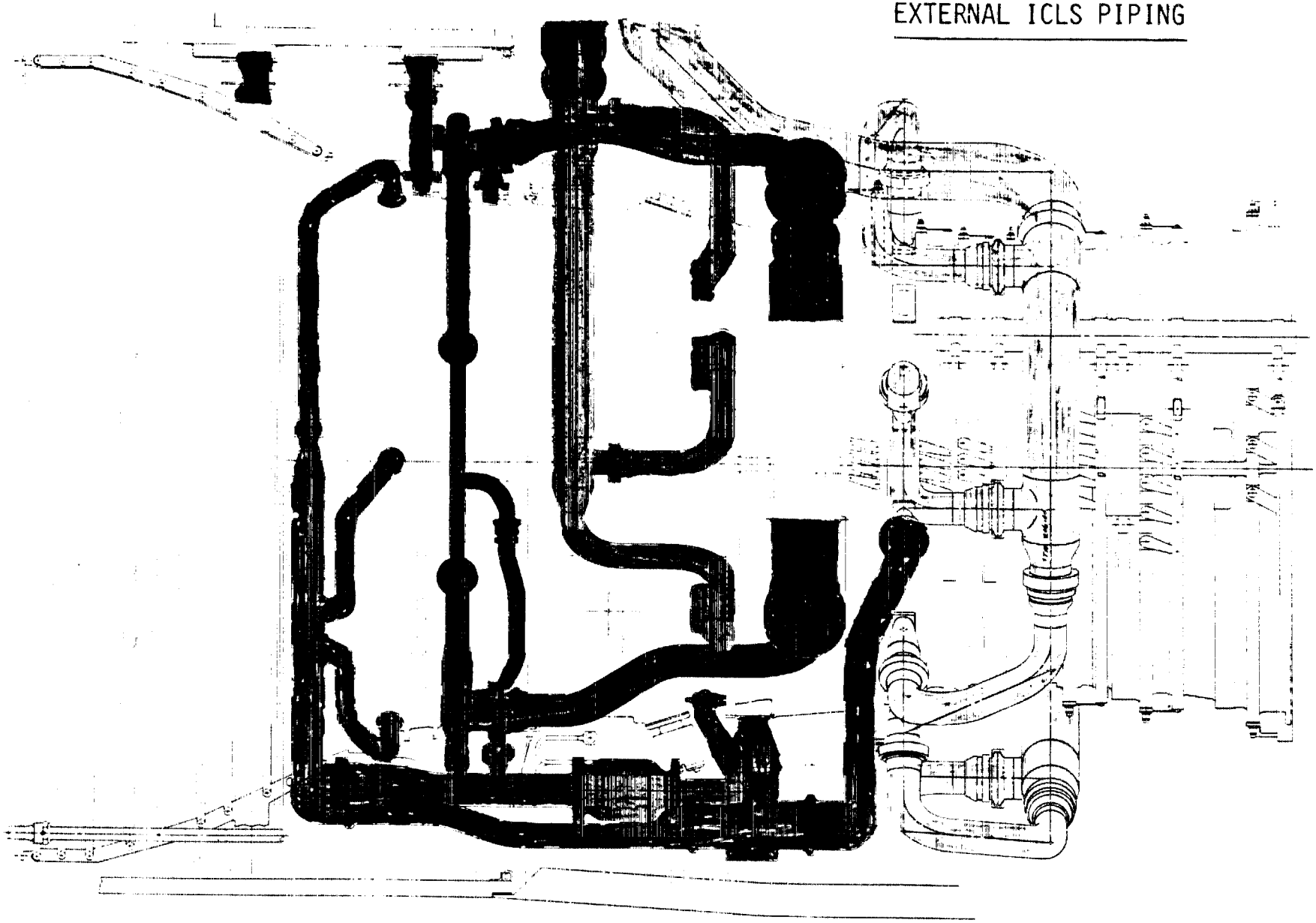

5TH STG. CUSTOMER BLEED

7TH STG. START BLEED

5TH LPT COOLING

7TH STG. HPT COOLING

CDP CUSTOMER BLEED

ACTIVE CLEARANCE CONTROL

ORIGINAL PAGE
COLOR PHOTOGRAPH

E920

EXTERNAL ICLS PIPING

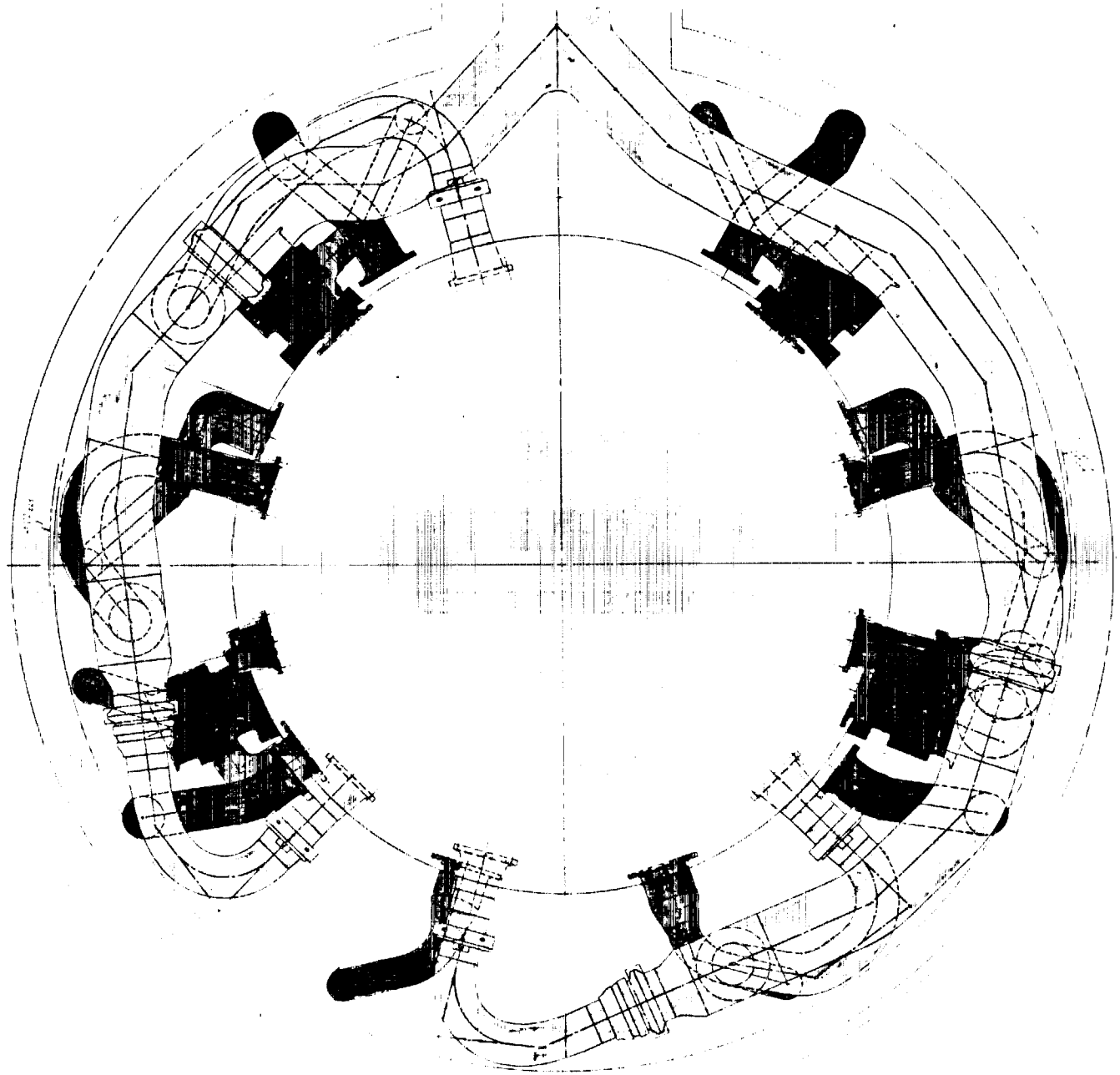

5TH STG. CUSTOMER BLEED

7TH STG. HPT COOLING

7TH STG. START BLEED

CDP CUSTOMER BLEED

5TH STG. LPT COOLING

ORIGINAL PAGE
COLOR PHOTOGRAPH

E921

ICLS A.C.C. SYSTEM

- HPC ACC SAME AS CORE PDR
- HPT ACC SAME AS CORE PDR
- LPT ACC SAME AS FPS PDR
- HPT & LPT INTAKE SYSTEM CHANGED
  - INTAKE SCOOP NOW ON PYLON SIDE WALL
  - SPLIT SCOOP IS EMPLOYED TO PROTECT AGAINST PRESSURE FLUCTUATIONS
  - SCOOP/PLENUM/VALVING LOCATED ABOVE AFT INNER COWL
  - 7TH STAGE STARTING VALVES BEING EMPLOYED FOR CONVENIENCE

HPC CLEARANCE CONTROL LOGIC

- CASING TEMPERATURE SENSED BY THERMOCOUPLE
- THERMOCOUPLE READING COMPARED WITH CALCULATED $T_{CASING\ S.S.} = f$ (POWER) BY CONTROL
- FOR POWER REDUCTIONS
  - COOLING AIR CUT-OFF UNTIL READING = $T_{CALC.\ S.S.}$ AND THEN MAINTAINED BY COOLING
- FOR POWER INCREASED
  - COOLING AIR ON UNTIL READING $\geq$ COOLING AIR TEMP., THEN OFF
  - COOLING AIR TURNED ON WHEN READING = $T_{CALC.\ S.S.}$ AND THEN MAINTAINED
- FAILURE MODE - GOES TO OPEN CLEARANCES

E923

HPT/LPT CLEARANCE CONTROL LOGIC

- CASING TEMPERATURE
- THERMOCOUPLE READING COMPARED WITH CALCULATED $T_{CASING\ S.S.} = f$ (POWER) BY CONTROL
- FOR POWER REDUCTION
  - COOLING AIR CUT-OFF UNTIL READING = $T_{CALC.\ S.S.}$ AND THEN MAINTAINED BY COOLING
- FOR POWER INCREASES
  - COOLING AIR CUT-OFF UNTIL READING = $T_{CALC.\ S.S.}$ AND THEN MAINTAINED BY COOLING
- FAILURE MODE - GOES TO OPEN CLEARANCES

Active Clearance Control Operation

Representative Turbine Stage

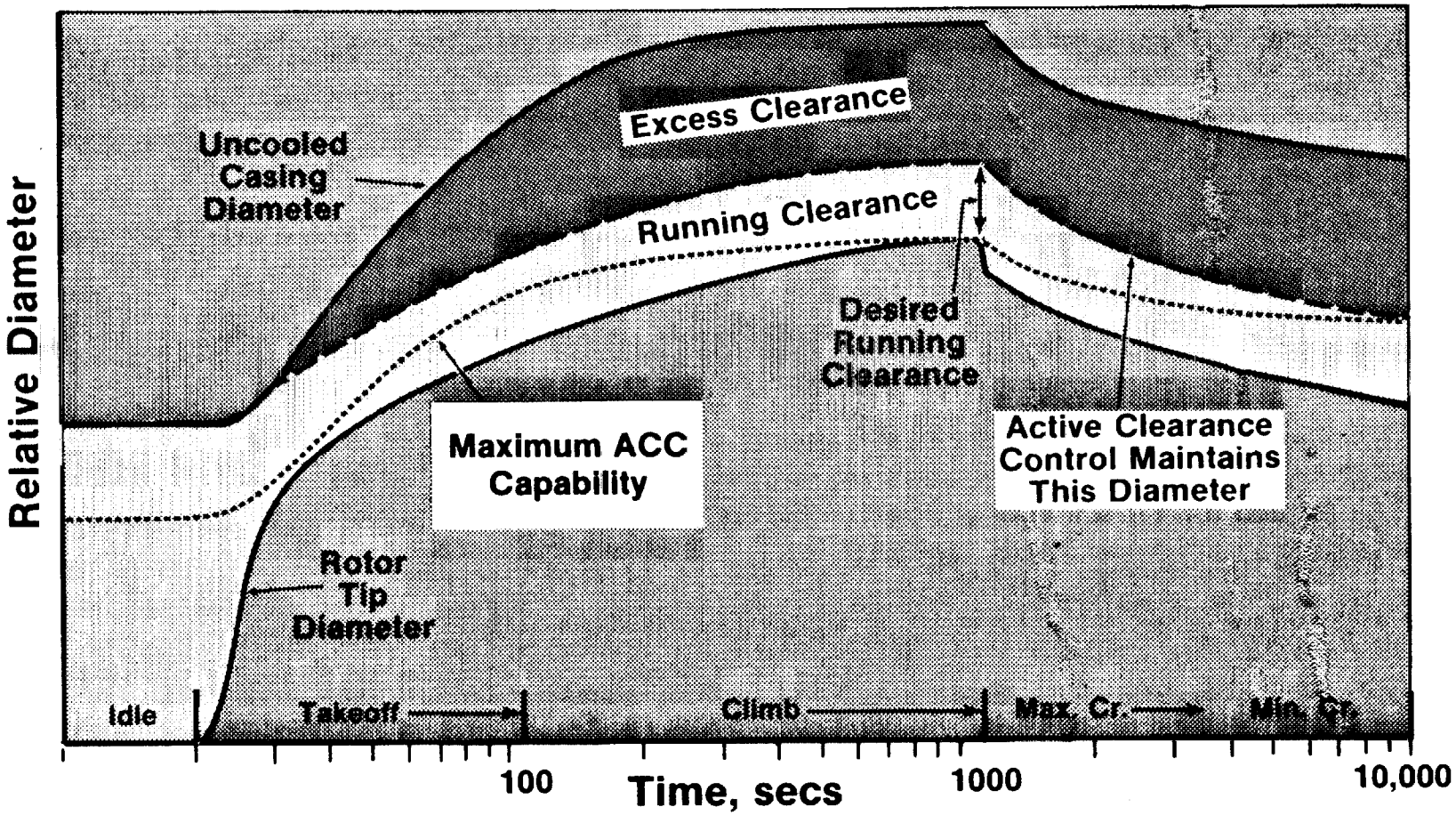

Effect of Active Clearance Control

High Power/Rapid Decel/Accel

Typical Passive System (Constant Cooling)

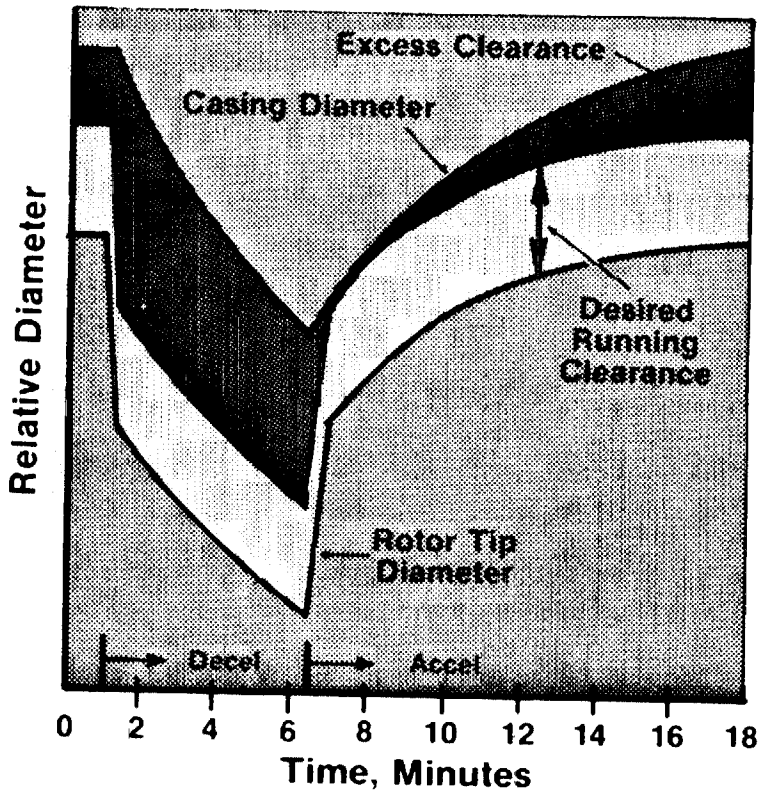

Active System (Variable Cooling)

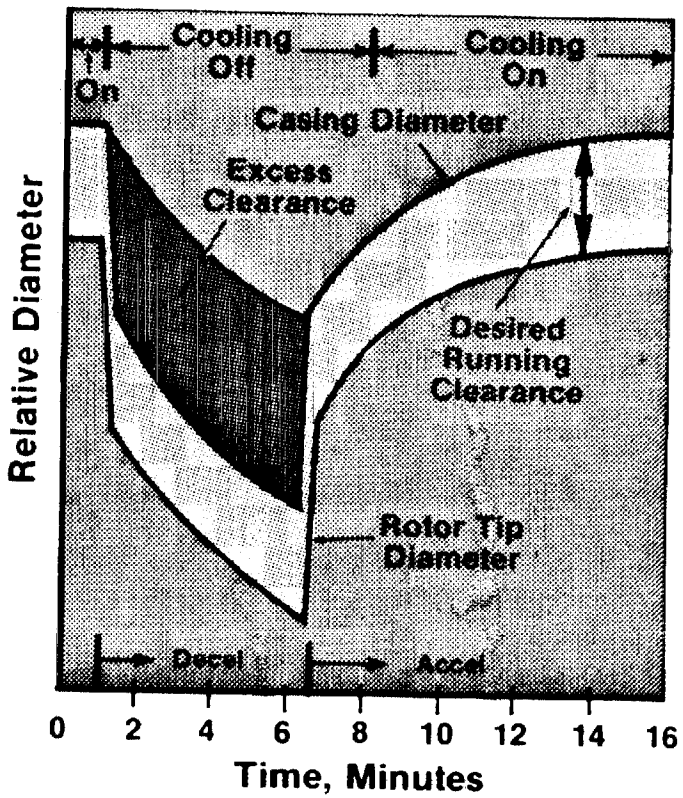

GENERAL ELECTRIC COMPANY, U.S.A.
AIRCRAFT ENGINE GROUP

COMPRESSOR CLEARANCE MEASUREMENT

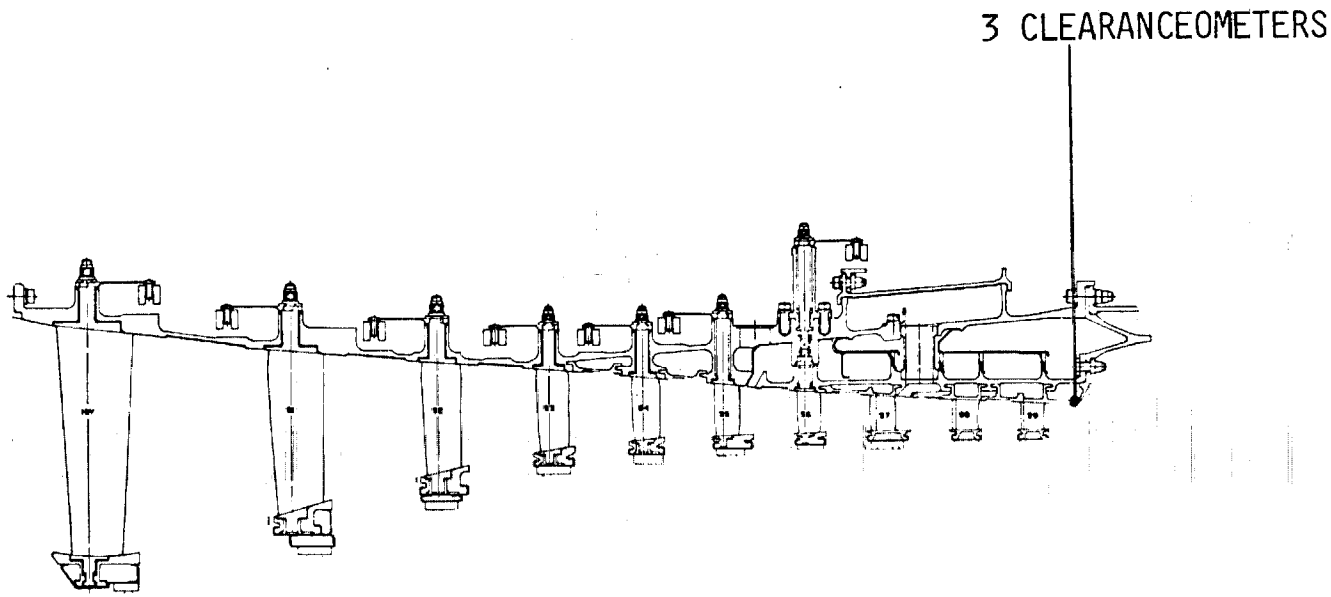

E927

ACTIVE CLEARANCE CONTROL INSTRUMENTATION

HPT, ICLS

INSTRUMENTATION

P_S = STATIC PRESSURE

T_M = METAL TEMPERATURE

T_A = AIR TEMPERATURE

P_{DM} = PROBE, DIRECT MEASUREMENT

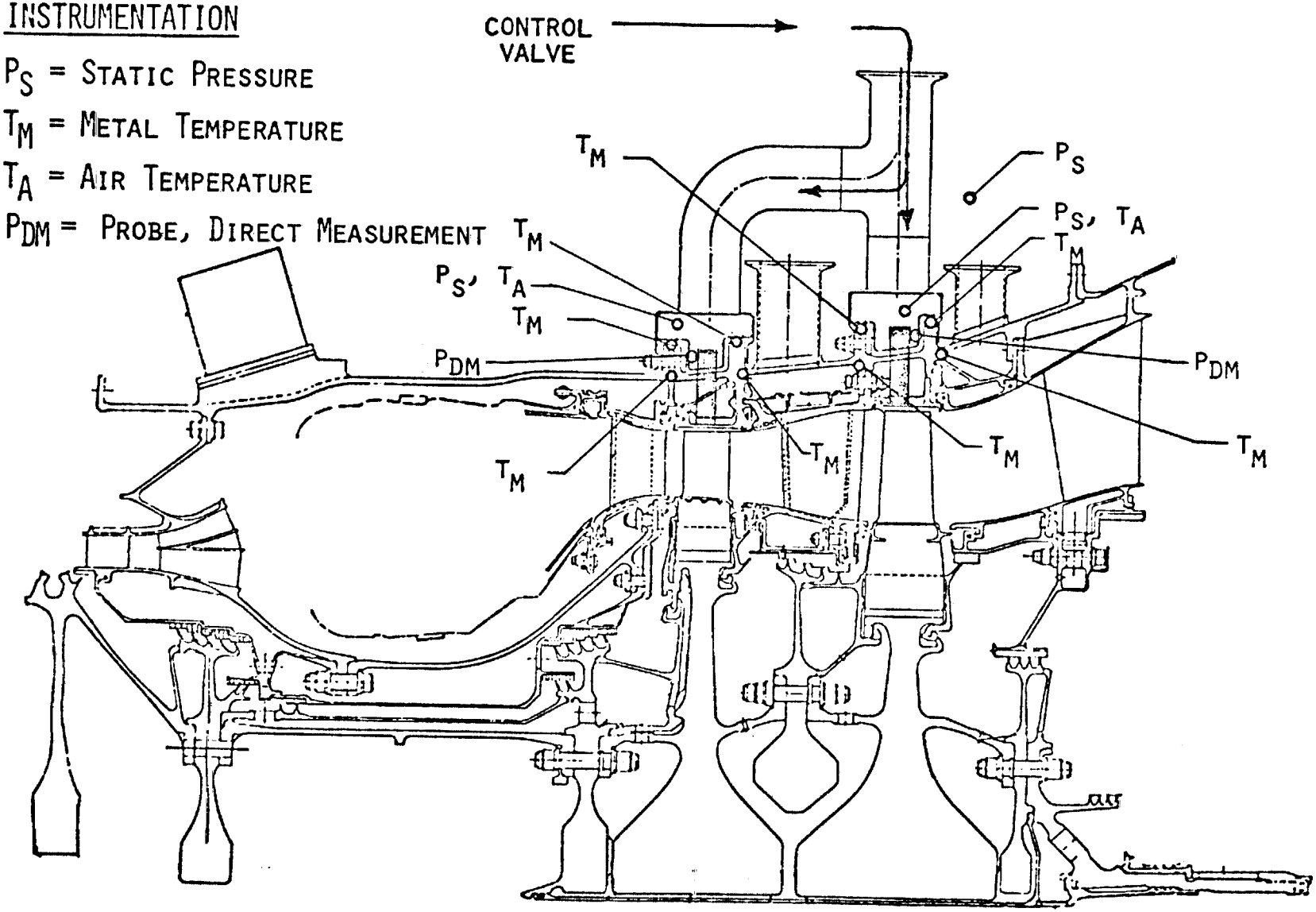

E328

HPT ACTIVE CLEARANCE CONTROL

DIRECT MEASUREMENT PROBES

- QUANTITY

  8 PROBES: 4, STAGE 1; 4, STAGE 2 } CORE & ICLS

  : ~90° SPACING

- TYPE: LASER DIODE

  : RADIAL CLEARANCE MEASURING

- PURPOSE: SUPPLEMENTS PRETEST CALCULATIONS AND OTHER INSTRUMENTATION

  : ALLOWS REAL TIME CLEARANCE EVALUATION, PERFORMANCE SENSITIVITY

E929

E^3 HPT DIRECT MEASUREMENT PROBE

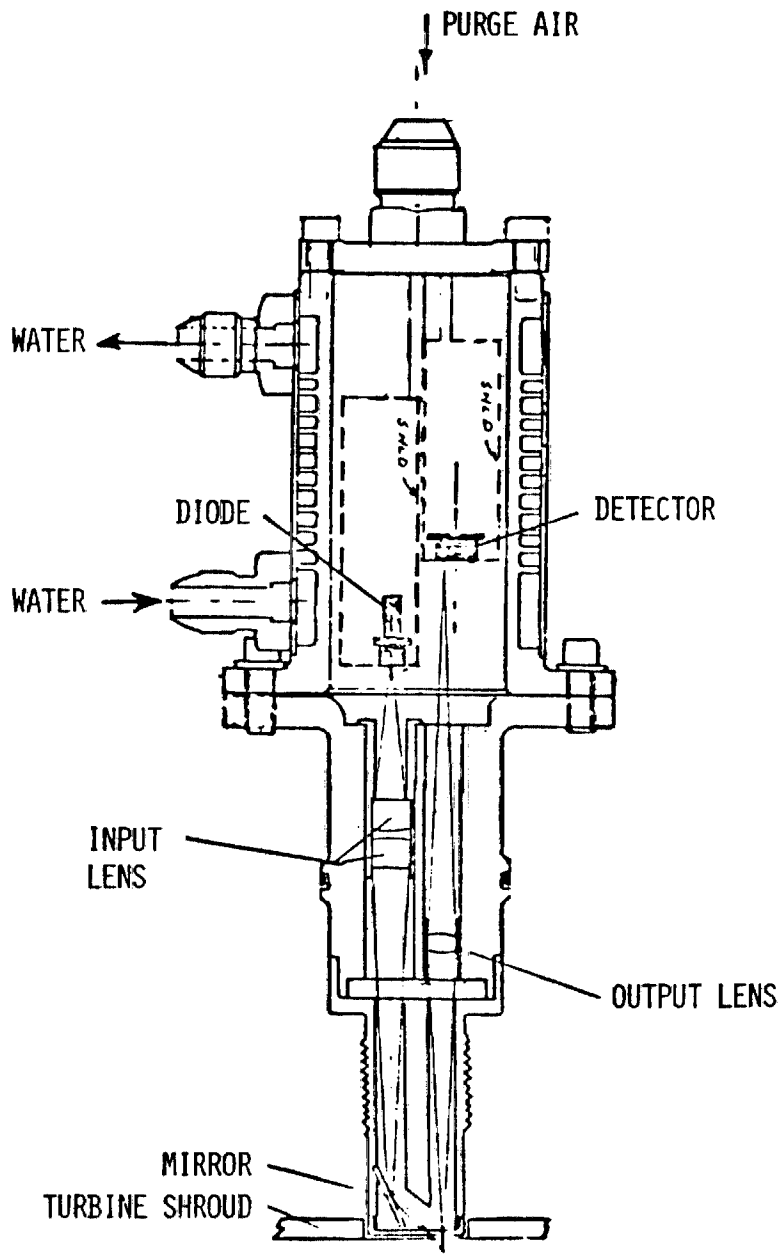

ACTIVE CLEARANCE CONTROL

ICLS EVALUATION DATA

NEEDED	OBTAINED	UTILIZED
• CASING RADIAL DEFLECTION	THERMOCOUPLES + AIR PRESS. / CALCULATE DEFLECTION	MODIFY PRE-TEST PREDICTIONS
• CASING OUT-OF-ROUND RADIAL DEFLECTION	CIRCUM. DISTR. OF THERMOCOUPLES / CALCULATE DEFLECTION	"
• ROTOR RADIAL DEFLECTION	• SPEED MEASUREMENT • DISK & BLADE THERMOCOUPLES	"
• COOLING EFFECTIVENESS	• CASING/ROTOR T/C • AIR PRESS. } CALCULATE	"
• CASING/ROTOR THERMAL RESPONSE	ANALYSIS - USING ABOVE DATA	"
• RUB DEPTH	• SHROUD WEAR MEASUREMENTS	COMPARE WITH CALCULATED CLEARANCES/RUBS

E931

E^3 ICLS ENGINE MOUNT

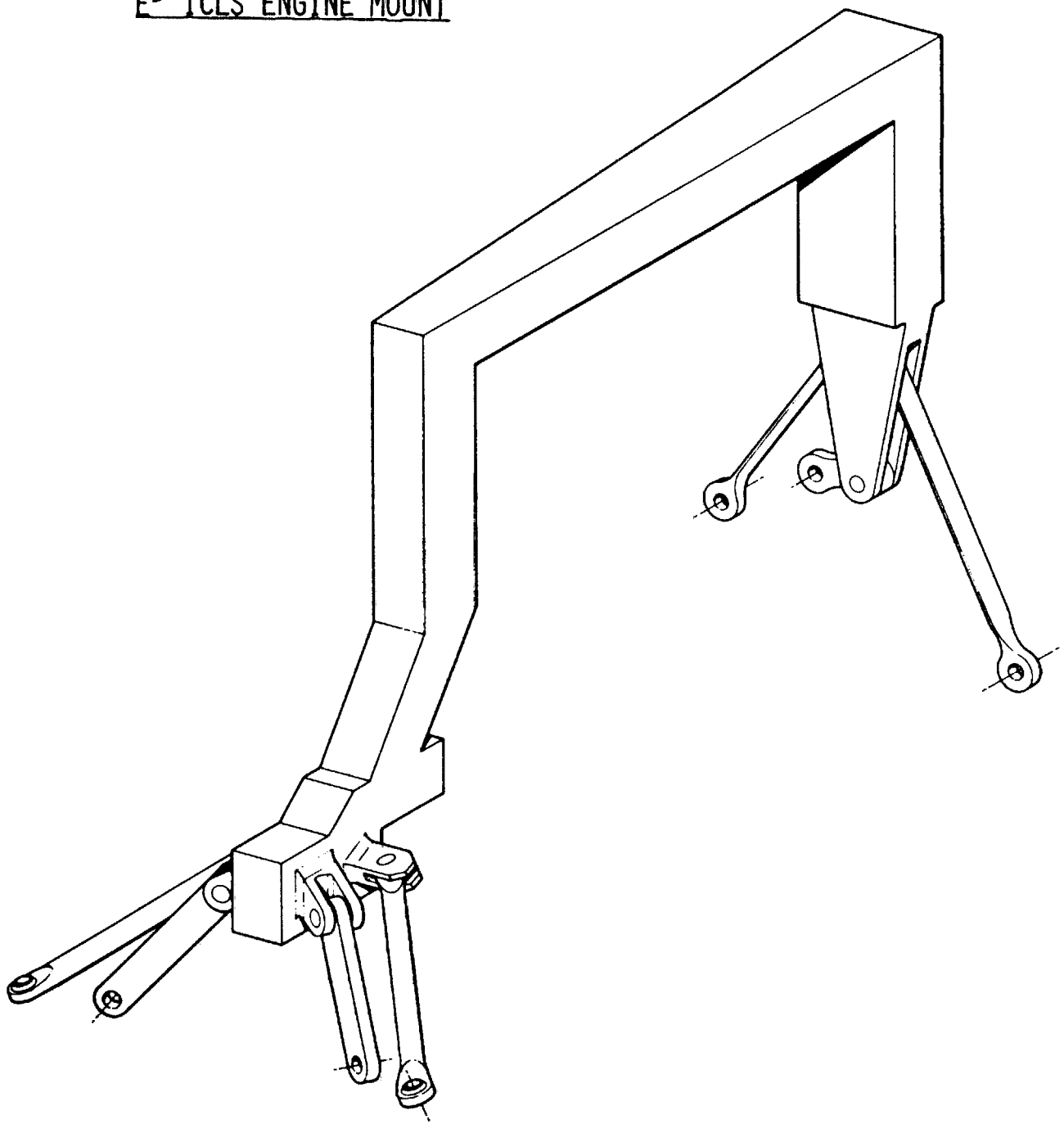

E932

ICLS TEST OBJECTIVES - ACOUSTICS

OBTAIN MEASURED ENGINE NOISE LEVELS FOR BOTH TREATED AND HARDWALL NACELLE CONFIGURATIONS:

- COMPARISON TO PRE-TEST PREDICTIONS
- PROJECT TO FLIGHT AND COMPARE RESULTS TO SYSTEM GOALS
- EVALUATE TREATMENT EFFECTIVENESS OF BULK ABSORBER
- RESOLUTION OF NOISE SOURCE PROBLEMS (IF ANY)

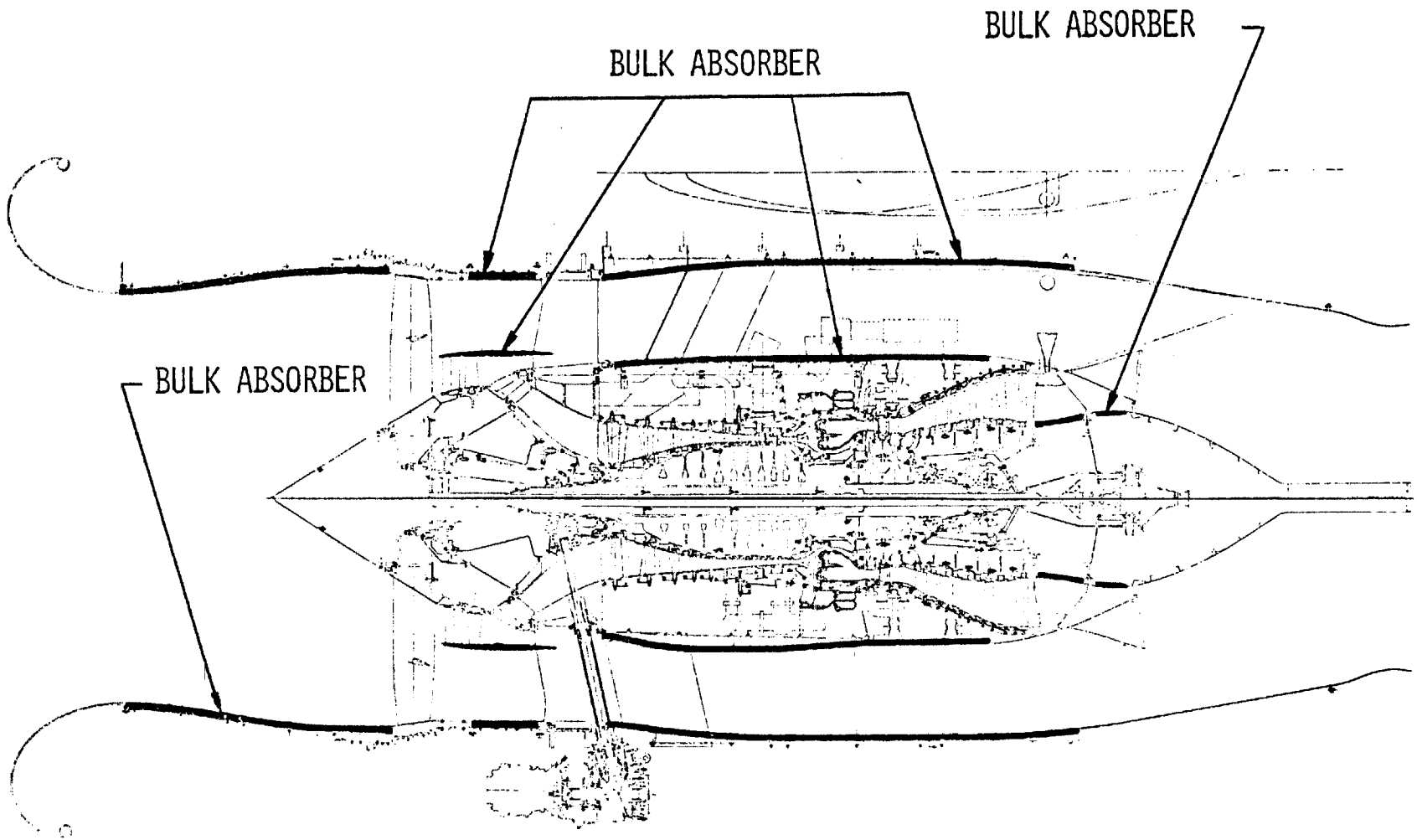

E^3 TREATED NACELLE CONFIGURATION

E934

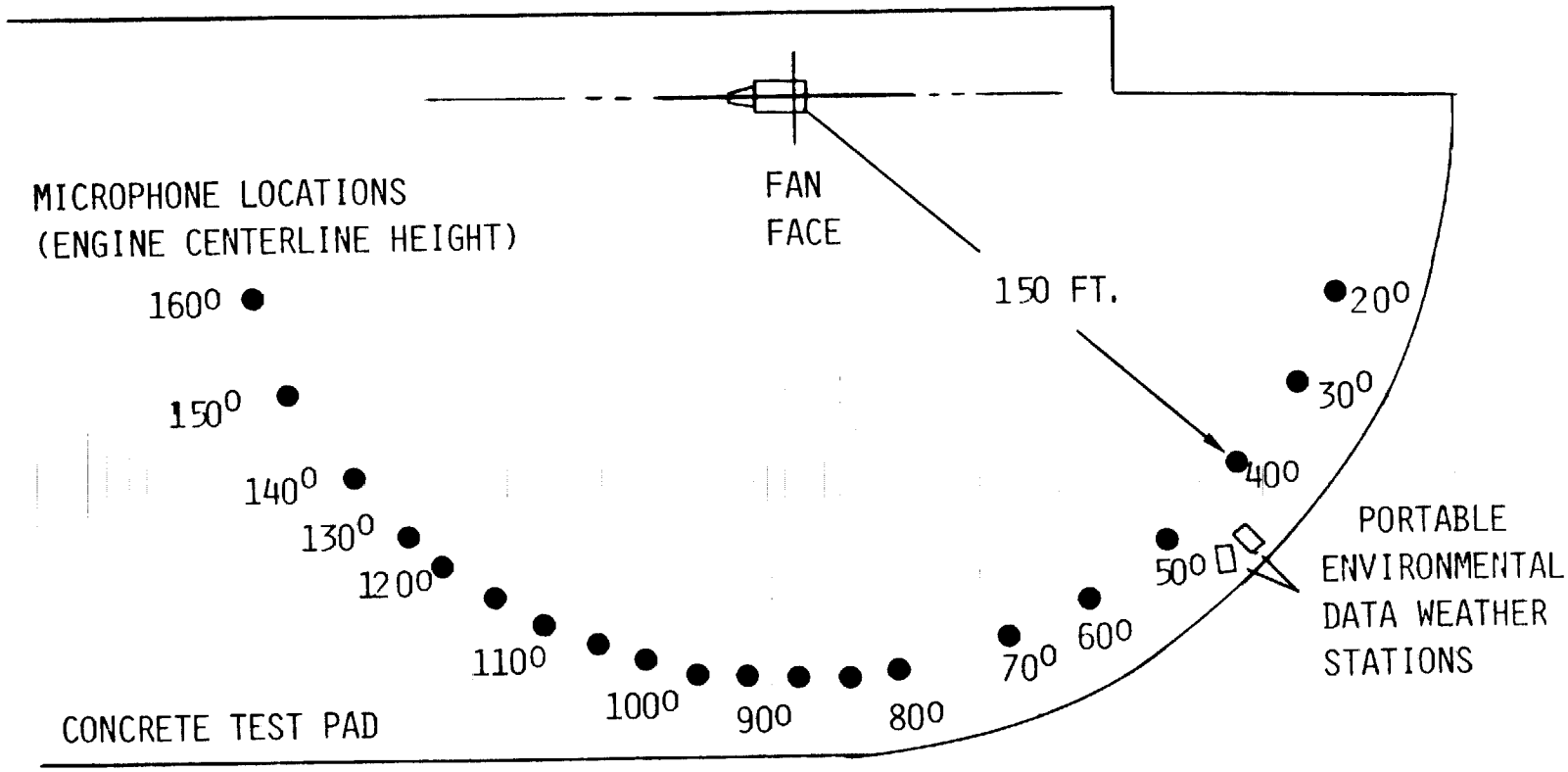

PEEBLES SITE 4D

ICLS STARTING

- STATUS
  - 1-6 HPC RIG TESTS ENCOURAGING ON LOW SPEED STALL MARGIN
  - REASONABLE START (60 SECONDS OR LESS) EXPECTED
- PROVISIONS
  - EXTRA STARTER CAN BE INSTALLED
  - CDP AUGMENTATION COOLING AIR AVAILABLE FOR HPT/LPT IF NEEDED

FAN AND COMPRESSOR STABILITY

ICLS DEMONSTRATOR IN OPERATIONAL ENVIRONMENT

STALL MARGIN FOR:

OPERATING LINE VARIATION, DETERIORATION AND DISTORTION.

SURGE LINE VARIATION, DETERIORATION AND DISTORTION.

POWER TRANSIENTS.

	REQUIRED STALL MARGIN	AVAILABLE STALL MARGIN
FAN @ GROUND IDLE	1.6	3.3
FAN @ TAKE-OFF	12.5	14.5
COMPRESSOR @ GROUND IDLE	22.1	30.7
COMPRESSOR @ TAKE-OFF	22.4	22.4

E937

Sample Stability Stack
Crosswind — Fan at T/O Thrust

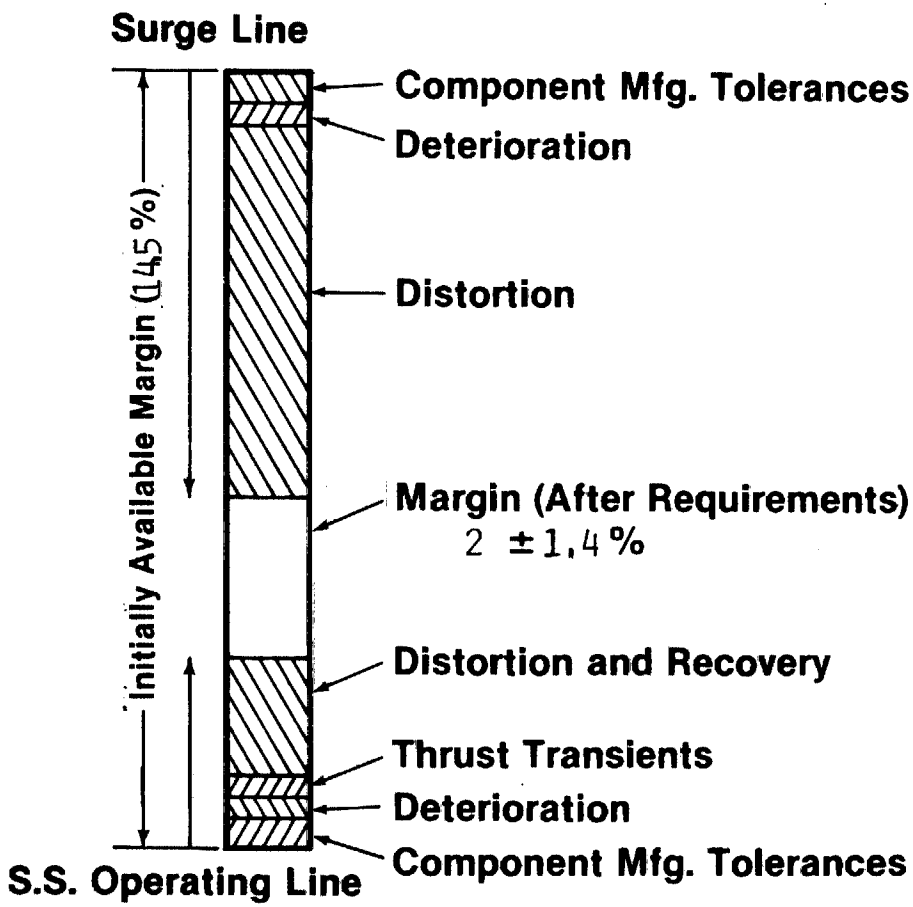

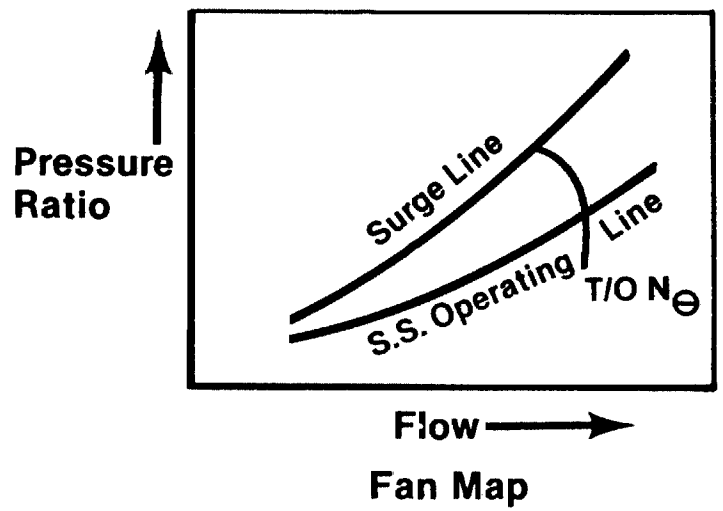

E938

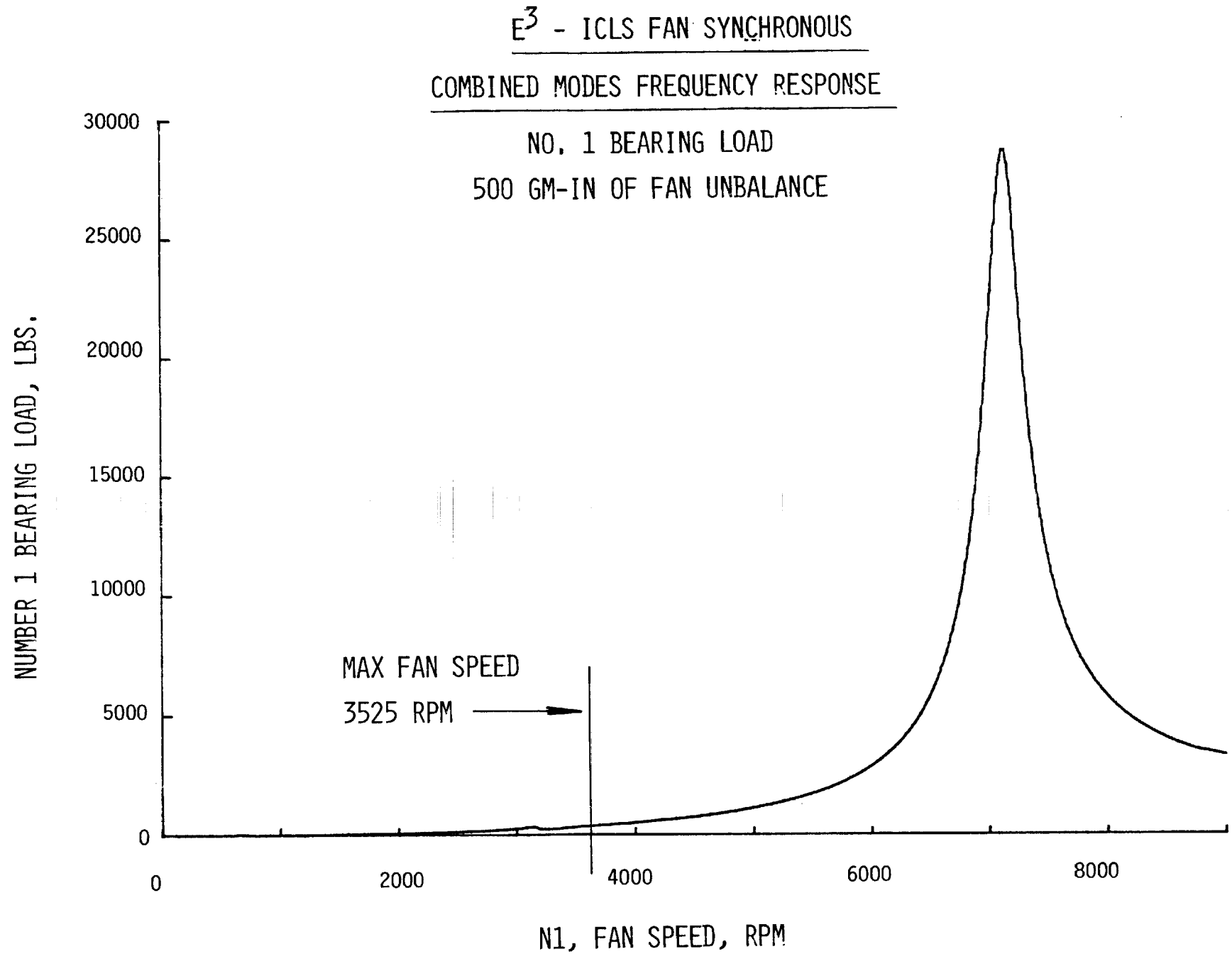
E3 - ICLS FAN SYNCHRONOUS
COMBINED MODES FREQUENCY RESPONSE
NO. 1 BEARING LOAD
500 GM-IN OF FAN UNBALANCE
NUMBER 1 BEARING LOAD, LBS.
30000
25000
20000
15000
10000
5000
0
MAX FAN SPEED
3525 RPM
0
2000
4000
6000
8000
N1, FAN SPEED, RPM

E939

INLET AND NACELLE

INLET AND NACELLE

- DESCRIPTION OF E^3 NACELLE COMPONENTS DESIGN
- DIFFERENCES BETWEEN ICLS AND FPS
- DEVELOPMENT TEST PROGRAM

P. HOLLOWAY

E940

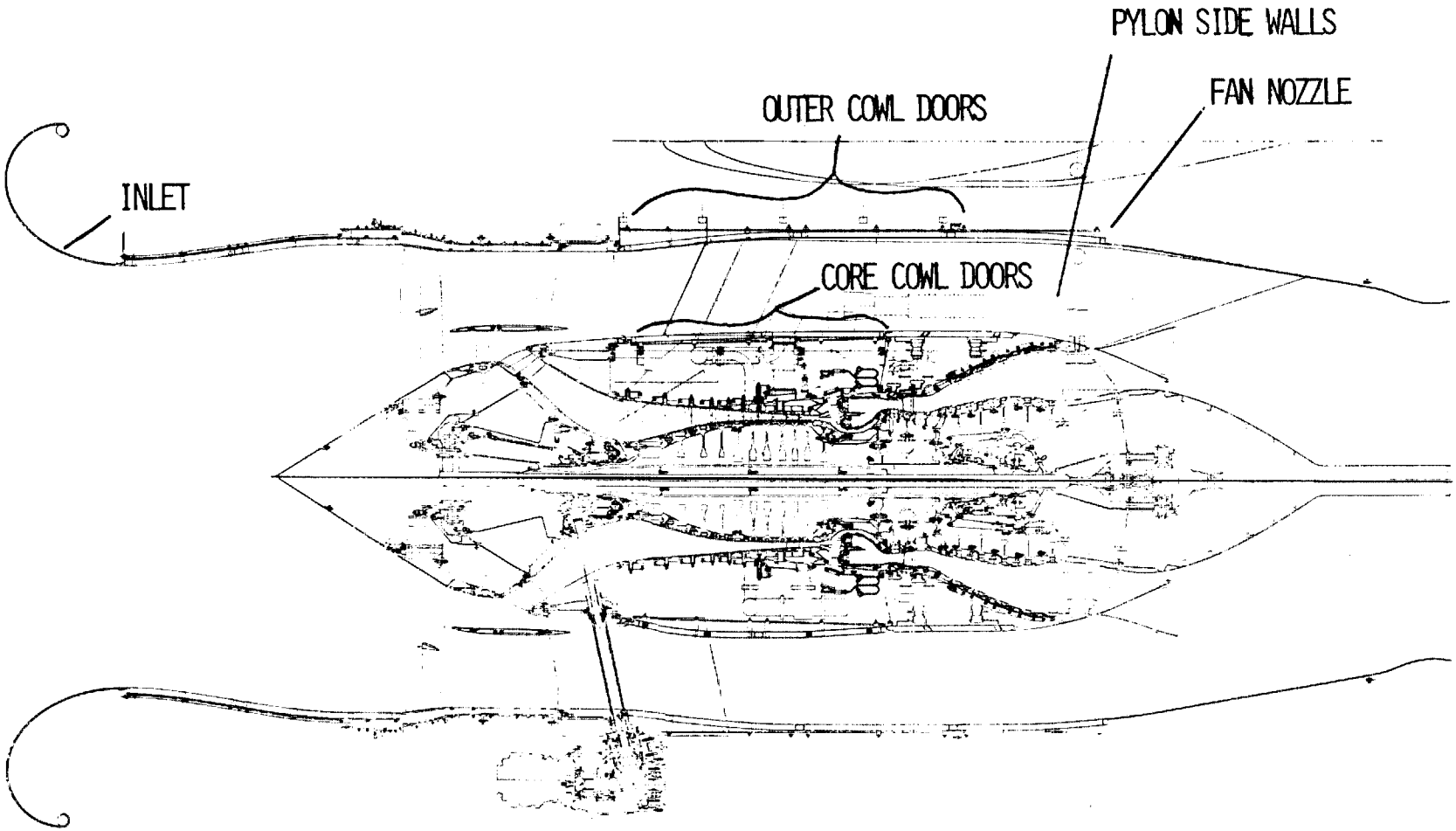
PYLON SIDE WALLS
FAN NOZZLE
OUTER COWL DOORS
INLET
CORE COWL DOORS

E941

ICLS NACELLE COMPONENTS

INLET

- INCLUDES AERO-ACOUSTIC LIP

OUTER COWL DOORS

- NO THRUST REVERSER

FAN NOZZLE

- TWO EXHAUST AREA CONFIGURATIONS

CORE COWL DOORS

PYLON SIDE WALLS

- INCLUDES APRONS

ICLS INLET AERO DESIGN

- THROAT SIZED CONSISTENT WITH CF6 BELLMOUTH DESIGN EXPERIENCE: MACH .58 AT DESIGN FLOW
- INLET DIFFUSER CONTOUR SAME AS FPS INLET
- LIP CONTOUR DEFINED FOR NO SEPARATION: UNIFORM FLOW ACCELERATION
- OVERALL LENGTH COMPATIBLE WITH LARGE FAN TEST FACILITY (LFTF) AND DISTORTION TEST REQUIREMENTS
- STC AND BOUNDARY LAYER ANALYSES CONDUCTED:
  - ASSURE UNIFORM FLOW FIELD
  - NO SEPARATION
  - DEFINE BELLMOUTH RECOVERY AND FLOW COEFFICIENT

E^3 ICLS BELLMOUTH INLET PRESSURE RECOVERY

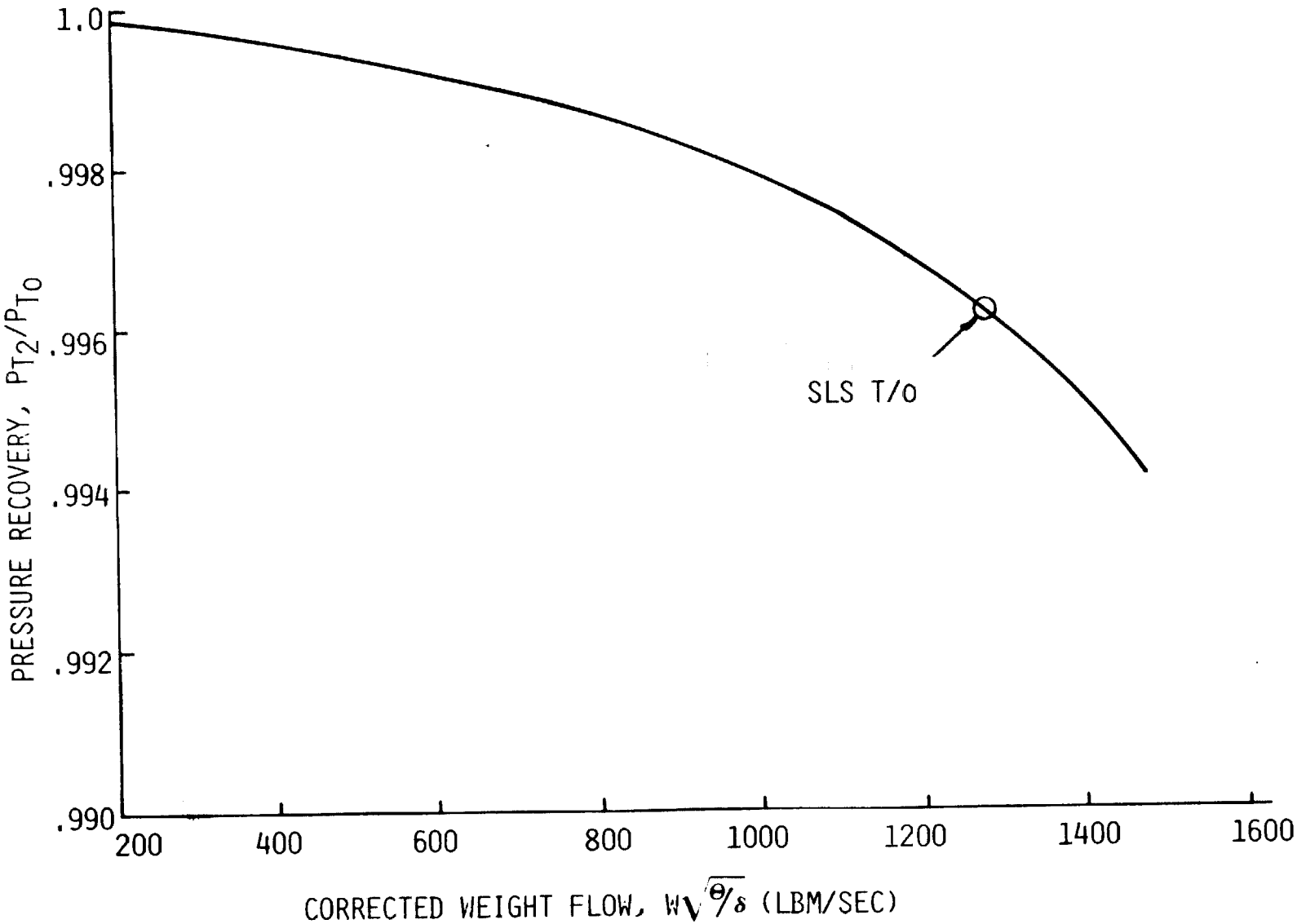

E944

INLET

MATERIAL - 6061-T6 ALUMINUM BASIC SHELL

- FIBERGLASS AERO-ACOUSTIC LIP

CONFIGURATION

- RING STIFFENED SHELL
  - NO EXTERIOR

SUPPORTED FROM FACILITY

- SOFT SEAL TO CONTAINMENT CASE

PANELS - ACOUSTIC & HARDWALL

  - TWO PANELS AXIALLY
  - 60° SEGMENTS CIRCUMFERENTIALLY

E945

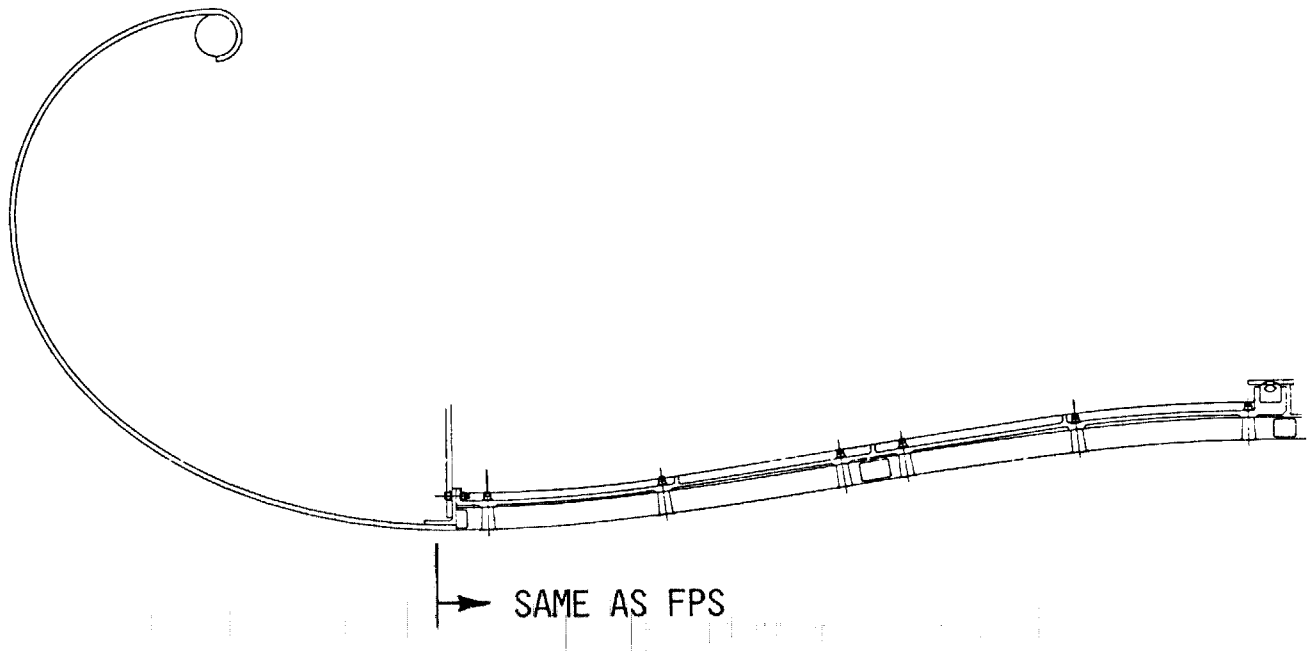

ICLS INLET DESIGN

E946

OUTER COWL DOORS

MATERIAL - 6061-T6 ALUMINUM

CONFIGURATION

- RING STIFFENED SHELL
- HINGED FROM PYLON APRON
- LATCHED AT BOTTOM
- SOFT SEAL TO FAN FIXED NOZZLE
- APPROXIMATELY 60 INCHES LONG
- NO EXTERNAL MOLD LINE
- NO REVERSER/BLOCKER DOOR GROOVE

PANELS - ACOUSTIC & HARDWALL

- TWO PANELS AXIALLY
- 60° SEGMENTS CIRCUMFERENTIALLY

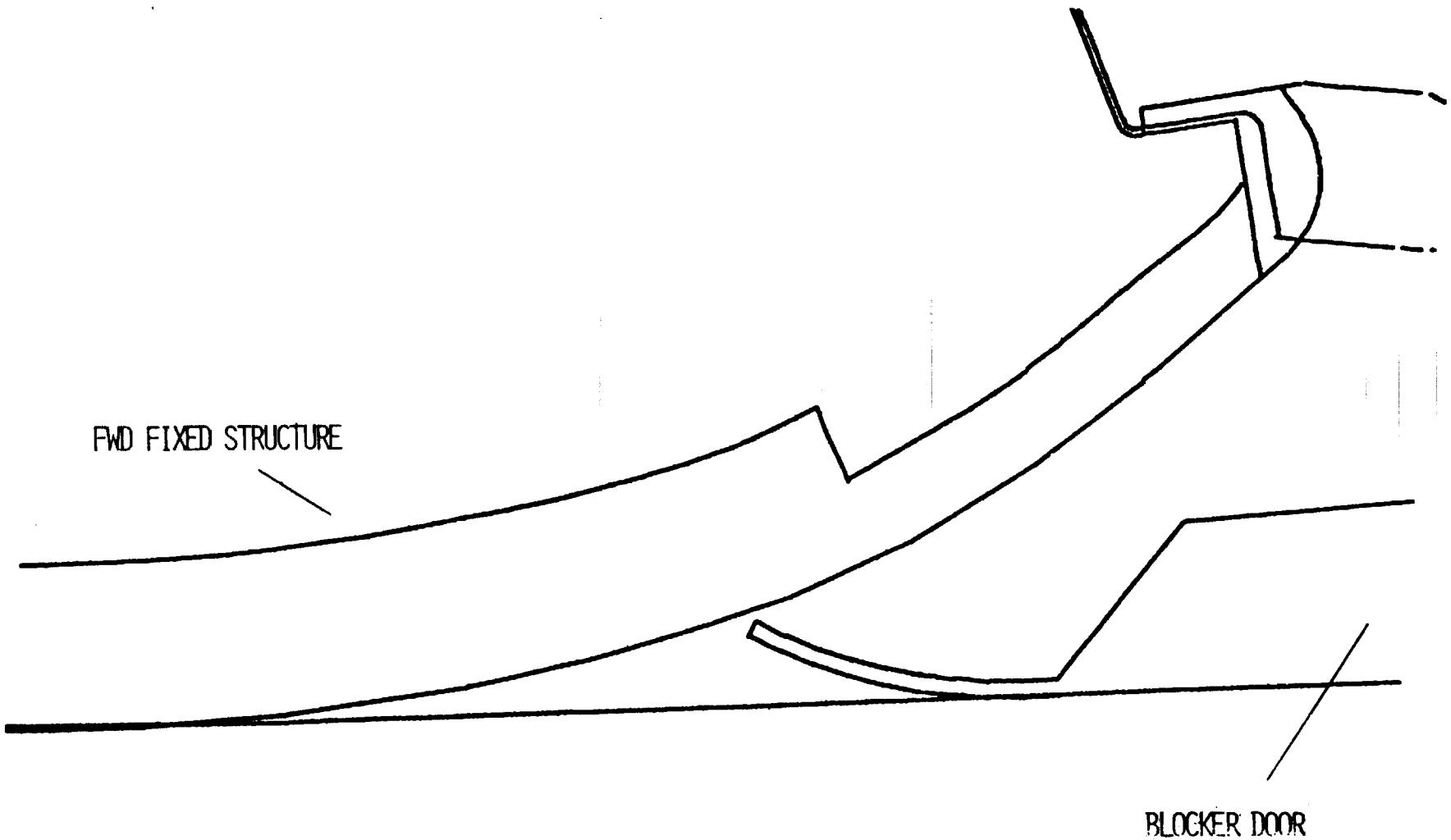

THRUST REVERSER FLOW PATH

E948

FIXED FAN NOZZLE

MATERIAL - 6061-T6 ALUMINUM FOR FWD 28 INCHES

- ACOUSTIC AND HARDWALL PANELS

- STEEL FOR AFT PORTION

- NO PANELS

- REPLACABLE AFT END TO CHANGE NOZZLE THROAT AREAS

CONFIGURATION

- EACH PART IN TWO 180° PIECES FOR EASE OF INSTALLATION

- CUT OUT AT TOP FOR PYLON

- MOUNTS TO PYLON

CORE COWL DOORS

MATERIAL - STEEL BASIC SHELL

- ALUMINUM PANELS

CONFIGURATION

- HINGED AT APRON & LATCHED AT BOTTOM
  - CUT OUT LOCALLY FOR BOTTOM PYLON
- INCORPORATES BUMP FOR FPS GEARBOX
  - STEEL COWLING ROUND, BUMP FORMED BY PANELS AND STANDOFFS
- TONGUE AND GROOVE AT FRONT-SLIP JOINT AT REAR

PYLON AND APRONS

- FINAL DESIGN NOT YET STARTED

DIFFERENCES BETWEEN ICLS AND FPS

- ICLS HARDWARE IS SLAVE HARDWARE
- INTERIOR FLOW LINES SAME AS FPS EXCEPT
  - NO REVERSER
  - NO DIP IN FLOWPATH AT BLOCKER DOOR L.E.
- TWO NOZZLES (ONE OVERSIZE FROM NOMINAL)

FAN

FAN

DESCRIPTION OF E^3 FAN DESIGN

DESIGN FEATURES

MATERIAL SELECTION

DIFFERENCES BETWEEN ICLS AND FPS

AERODYNAMIC DESIGN

MECHANICAL DESIGN

P. HOLLOWAY

DESIGN FEATURES

32 BLADE FAN

55% PART SPAN SHROUDED FAN BLADE

BOOSTER STAGE FOR CORE SUPER CHARGING

CORE BYPASS AT BOOSTER TO CENTRIFUGE INGESTED MATERIAL INTO FAN STREAM

INTEGRAL VANE FRAME AND OUTER NACELLE

SLAVE CONTAINMENT RING

INDEPENDENT DISK/BEARING/SHAFT JOINT DESIGN FOR IMPROVED TORQUE TRANSMISSION & REDUCED FAN OVERHANG

MODULAR DISASSEMBLY

ICLS FAN CROSS SECTION

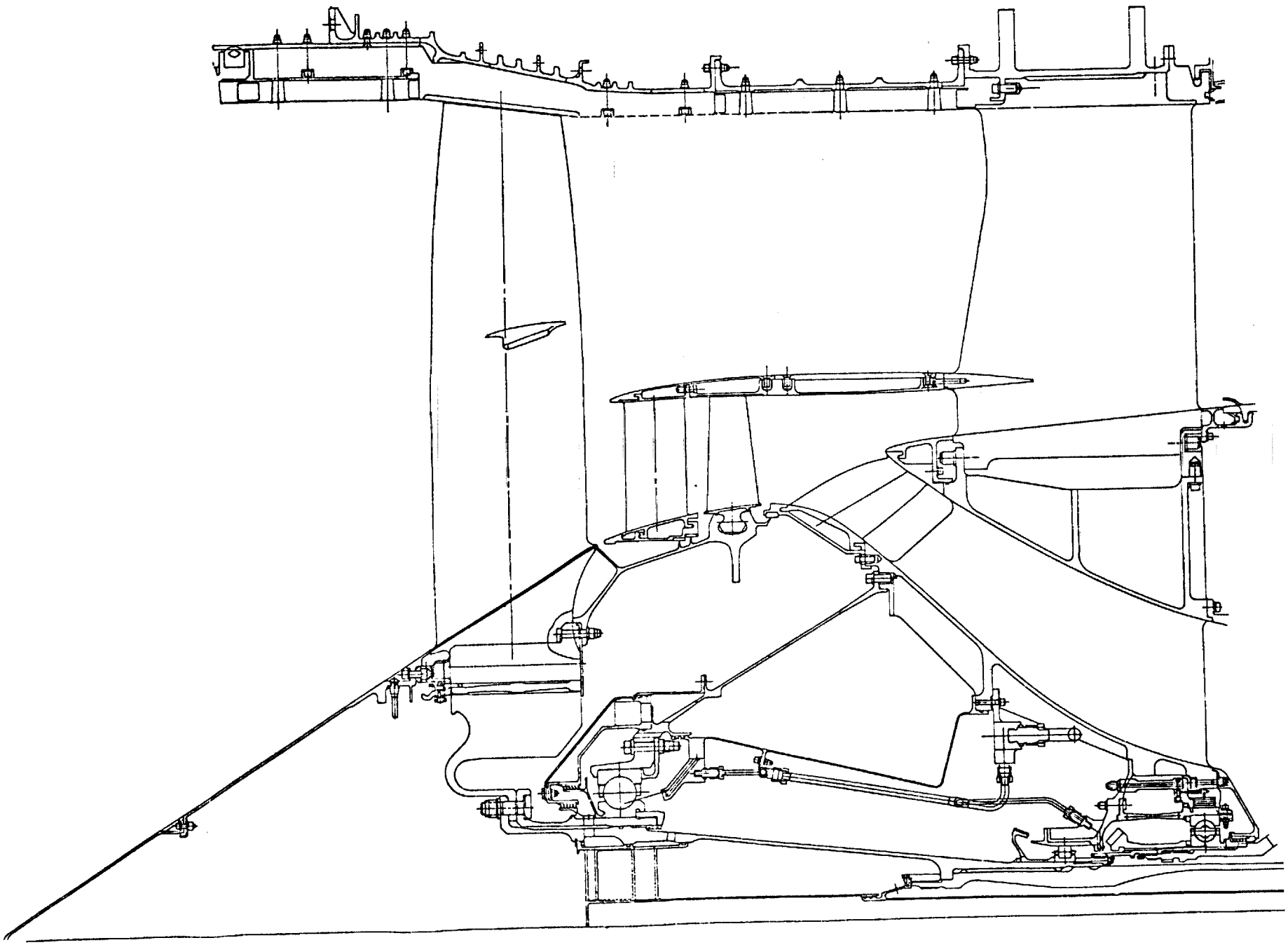

E955

DIFFERENCE BETWEEN ICLS AND FPS FAN

SLAVE METAL FAN FRAME AND FAN CASE

FABRICATED FRAME HUB OUT OF 17-4 PH

4340 SHAFT

SLAVE CONTAINMENT SYSTEM

E956

E^3 FAN FRAME DIFFERENCES

ICLS:

INTEGRAL VANE FRAME DESIGN (5 AIRFOIL FAMILIES - 6 CONFIGURATIONS)
AERODYNAMIC CONTOUR TAILORED FOR RADIAL DRIVESHAFT
GEARBOX MOUNTED TO OUTER CASING
CONVENTIONAL THRUST LOADING
ENGINE MOUNTS AT ± 45 FROM TOP VERTICAL ON CORE FRAME
HARDWARE REQUIRED FOR COWL AND NACELLE ATTACHMENT

FPS: (FLIGHT PROPULSION SYSTEM)

INTEGRAL VANE FRAME DESIGN (5 AIRFOIL FAMILIES - 5 CONFIGURATIONS)
FEATURES COMPOSITE BYPASS WITH METAL CORE FRAME
UTILIZES ADVANCED COMPOSITE CONTAINMENT

E957

E^3 FAN AERODYNAMIC DESIGN FEATURES

HIGH BYPASS RATIO - LOW RADIUS RATIO - HIGH SPECIFIC FLOW

MEDIUM ASPECT RATIO FAN BLADE WITH PART SPAN SHROUD

QUARTER STAGE ISLAND FOR CORE BOOST AND PARTICLE SEPARATION

LEANED AND SWEPT INNER OGV

BYPASS OGV'S SHAPED TO DIVERT FLOW AROUND PYLON

E958

MECHANICAL DESIGN FEATURES/GOALS

DESIGN FOR BIRD INGESTION TOLERANCE

INDIVIDUALLY REMOVABLE BLADES

NO AEROMECHANICAL INSTABILITY IN OPERATING RANGE

INTEGRAL VANE FRAME

E959

E^3 ICLS FAN ROTOR CONFIGURATION

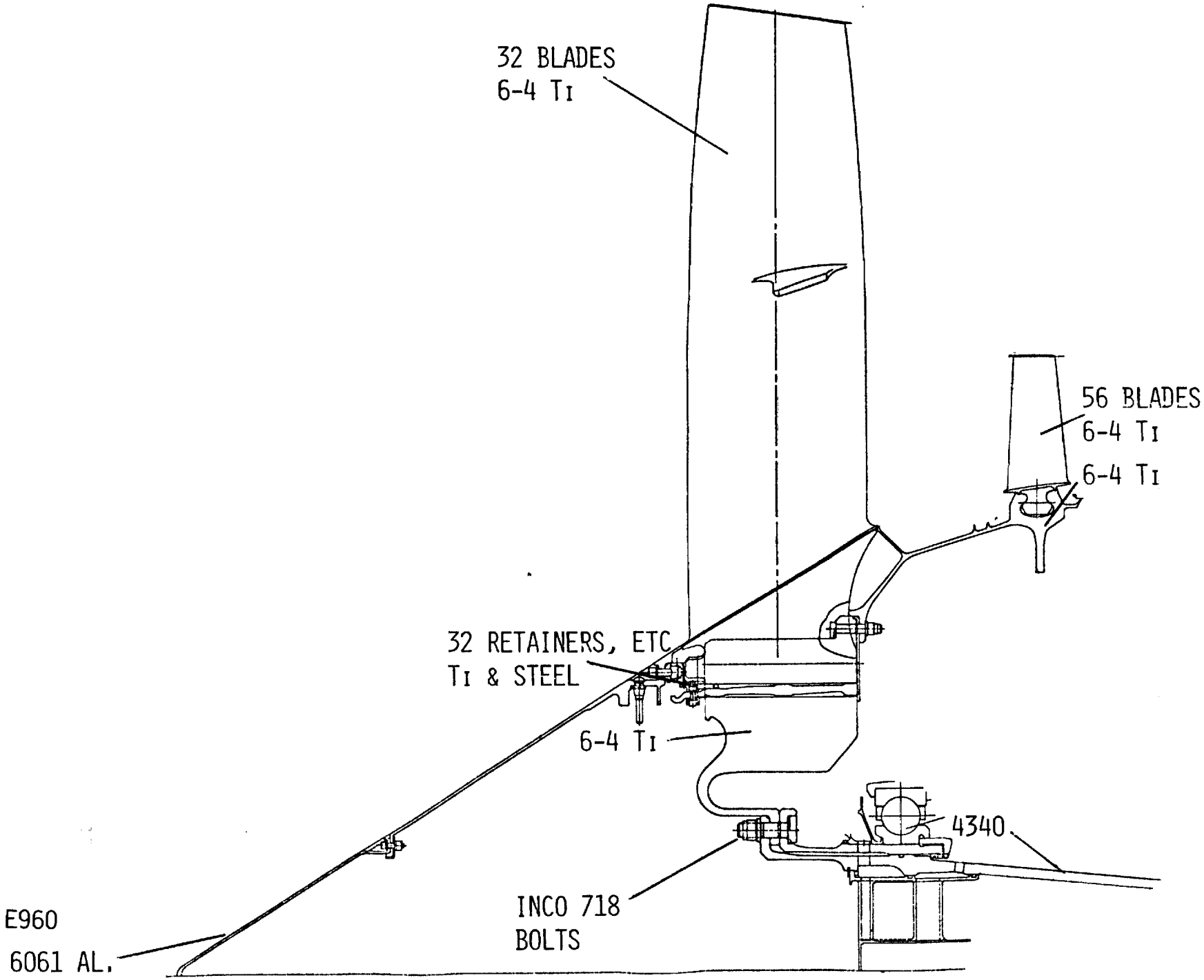

EEE ICLS FAN STATOR CONFIGURATION

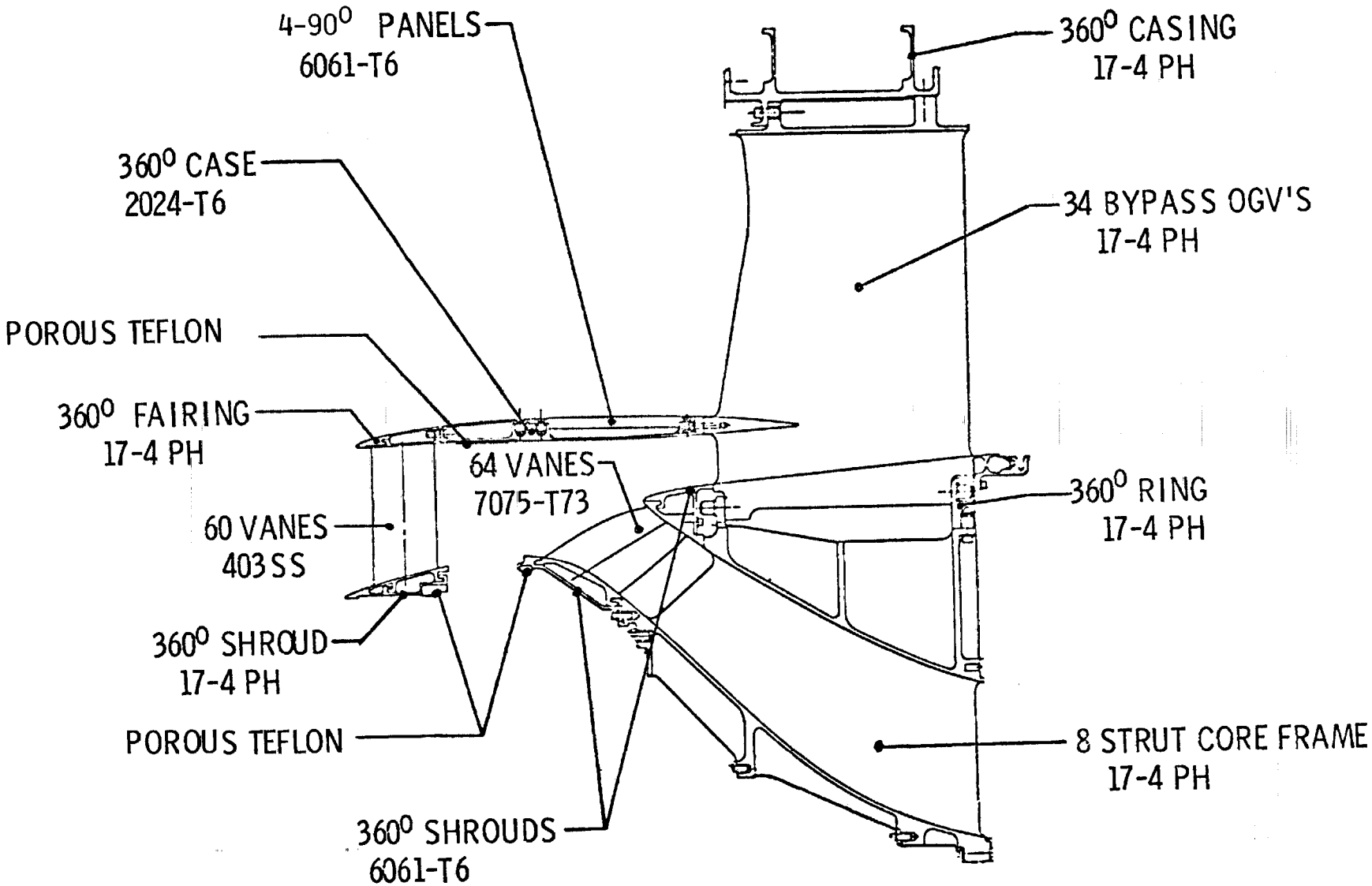

E961

PROPOSED MODIFICATIONS FOR ICLS DRIVESHAFT AND FAIRINGS

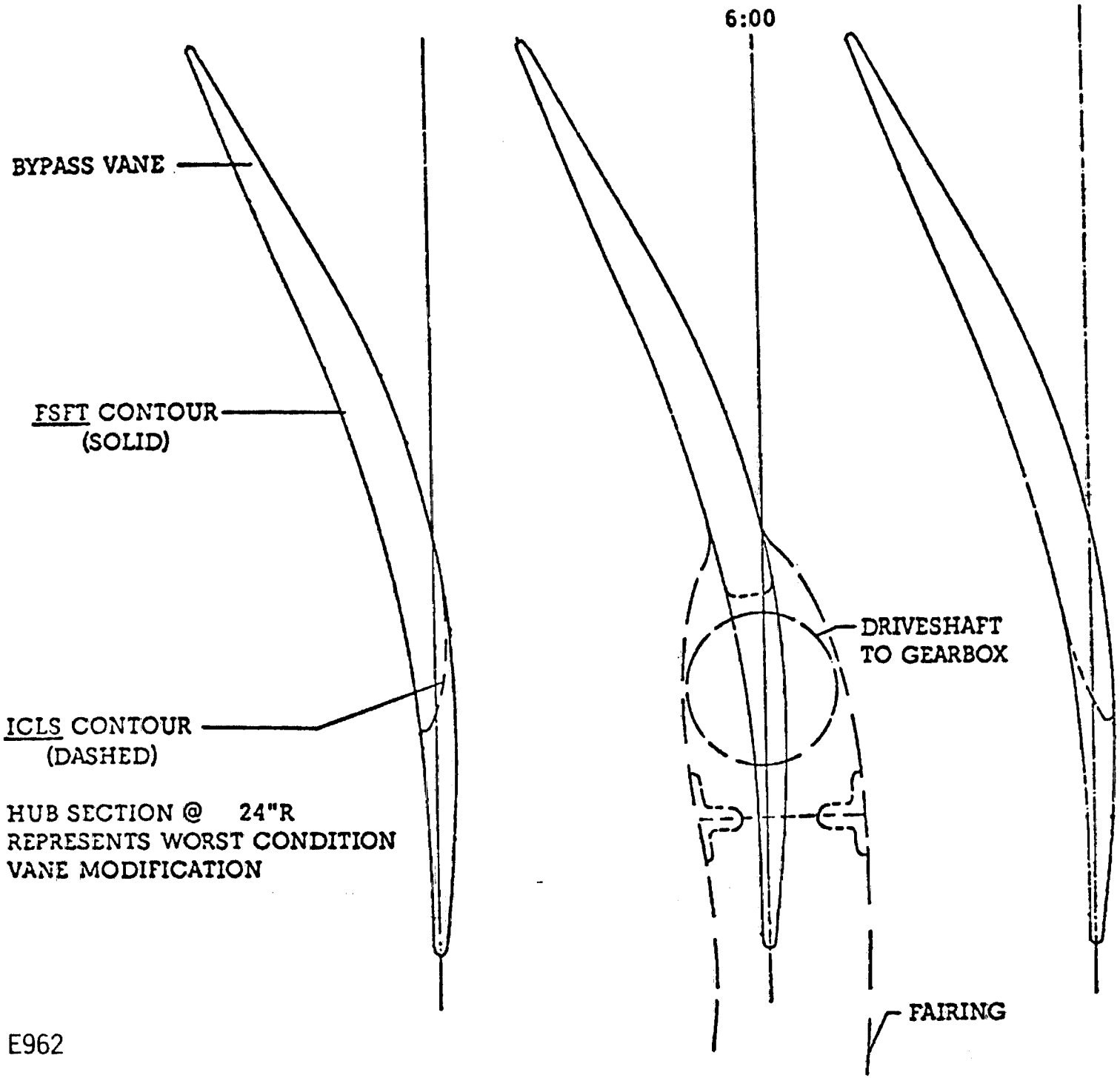

E962

CONTAINMENT CASE

- ADVANCED COMPOSITE CONTAINMENT DESIGN FOR FPS STUDY ONLY
- SLAVE HARDWARE TO BE USED FOR FSFT AND ICLS DUE TO COST
- DOES NOT HAVE TO SUPPORT INLET, EVEN FOR THE FPS
- ACOUSTIC TREATMENT
  - HARDWALL FOR FSFT
  - BOLT-IN HARDWALL AND BULK ABSORBER ACOUSTIC FOR ICLS

MID-CASE

- BOILER PLATE - ALUMINUM
- REPLACEABLE ACOUSTIC AND HARDWALL PANELS

E963

E^3 FAN CASINGS
FSFT AND ICLS

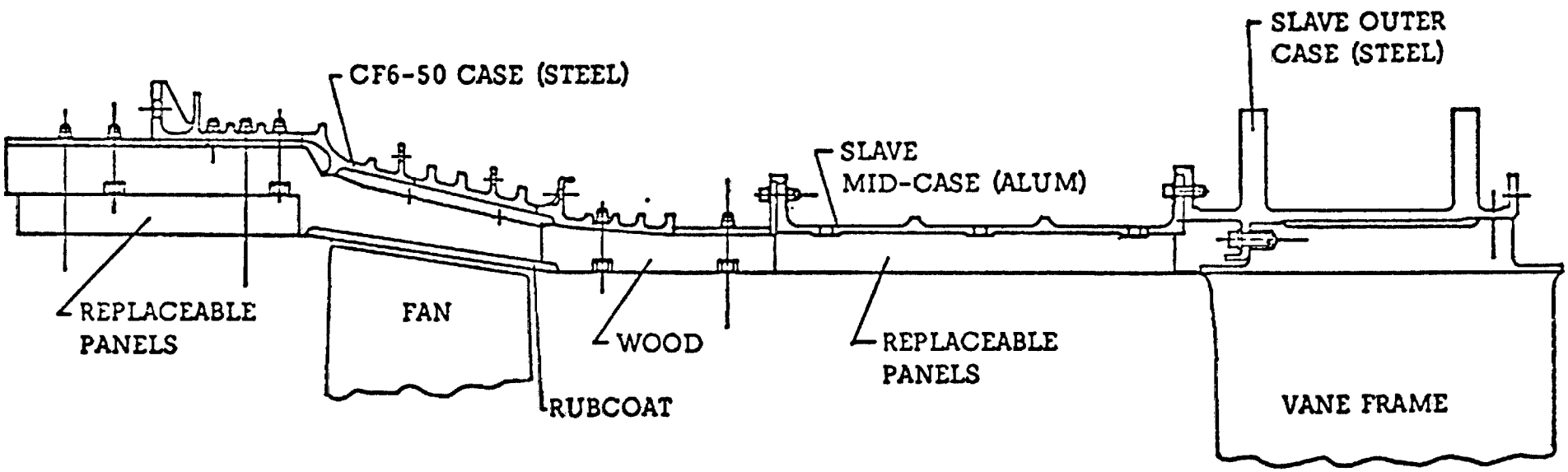

E964

ICLS FAN PERFORMANCE TEST OBJECTIVES

VERIFY PERFORMANCE ALONG SLS OPERATING LINE AND SIMULATED 70 - 75% CRUISE REGION

DEMONSTRATE COMPATIBILITY WITH INLET DUCT

DEMONSTRATE STALL - FREE BOOSTER OPERATION DURING ENGINE TRANSIENTS

VERIFY FRAME STIFFNESS ANALYSIS VS. ENGINE SYSTEM RESPONSE

E965

CORE ENGINE

ICLS CORE COMPONENTS

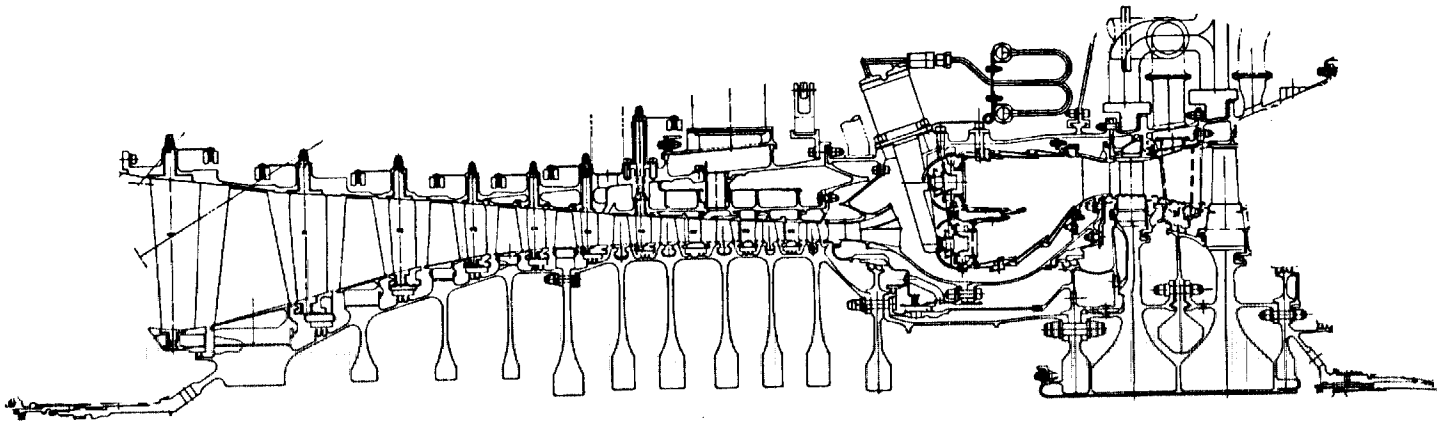

- HPC
- COMBUSTOR
- HPT

R. JOHNSTON

E966

ICLS COMPRESSOR

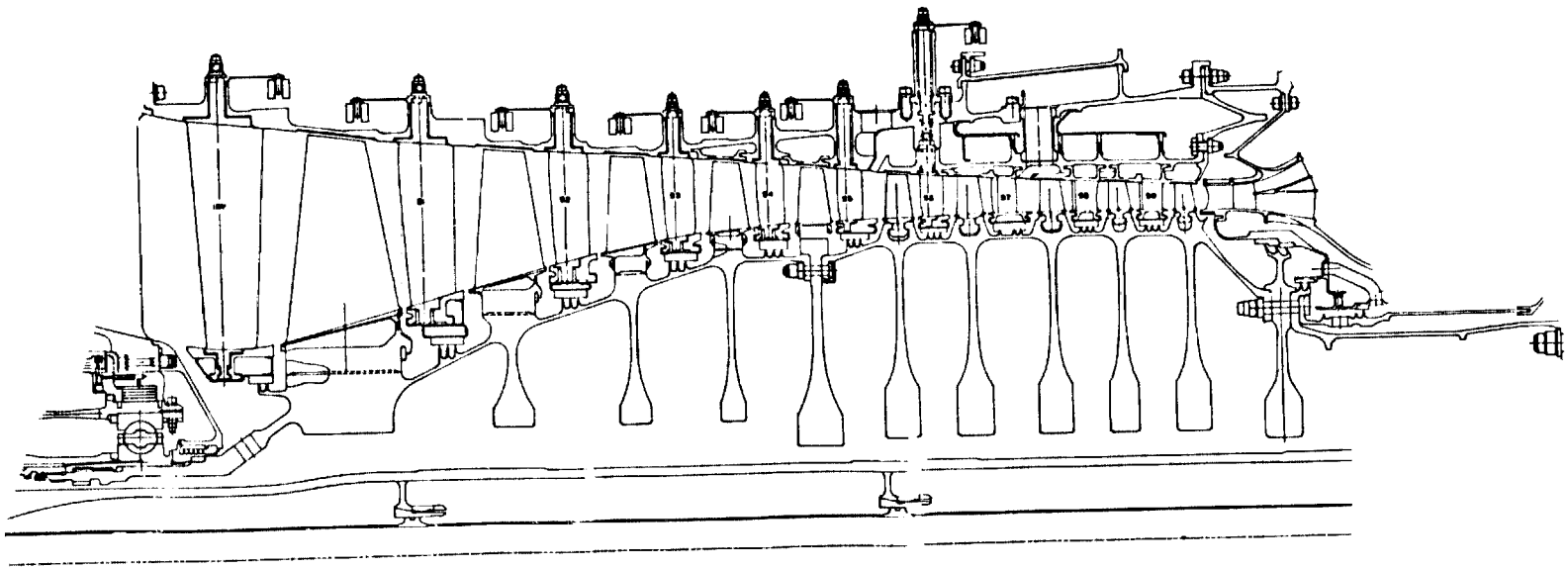

CHANGED FROM CORE PDR

- MODIFIED AERODYNAMICS RESULTING FROM RIG TESTS

DIFFERENCES FROM FPS

- IGV THRU STAGE 6 VANES VARIABLE IN ICLS. IGV THRU STAGE 4 IN FPS
- CUSTOMER BLEED PORT PROVISIONS
- LOCATION OF ACC PIPING

ICLS TEST OBJECTIVES FOR COMPRESSOR

- VERIFY PERFORMANCE ALONG OPERATING LINE
- DEMONSTRATE COMPATIBILITY WITH BOOSTER EXIT P_T, T_T PROFILES
- DEMONSTRATE STALL-FREE STARTS WITH FAN IN PLACE

E968

ICLS COMBUSTOR

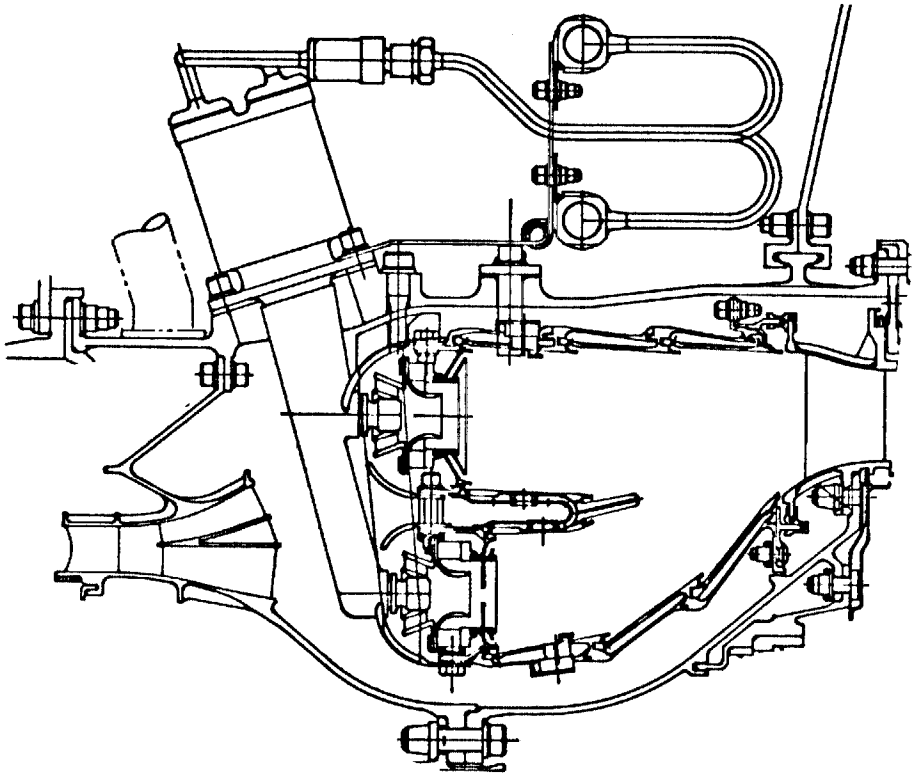

NO DIFFERENCES FROM CORE PDR OR FPS

E969

ICLS TEST OBJECTIVES FOR COMBUSTOR

- MEASURE STEADY-STATE/TRANSIENT COMBUSTOR METAL TEMPERATURES
- DETERMINE EXHAUST GAS EMISSIONS
- OBTAIN COMBUSTOR Δ P DATA

E970

ICLS HIGH PRESSURE TURBINE

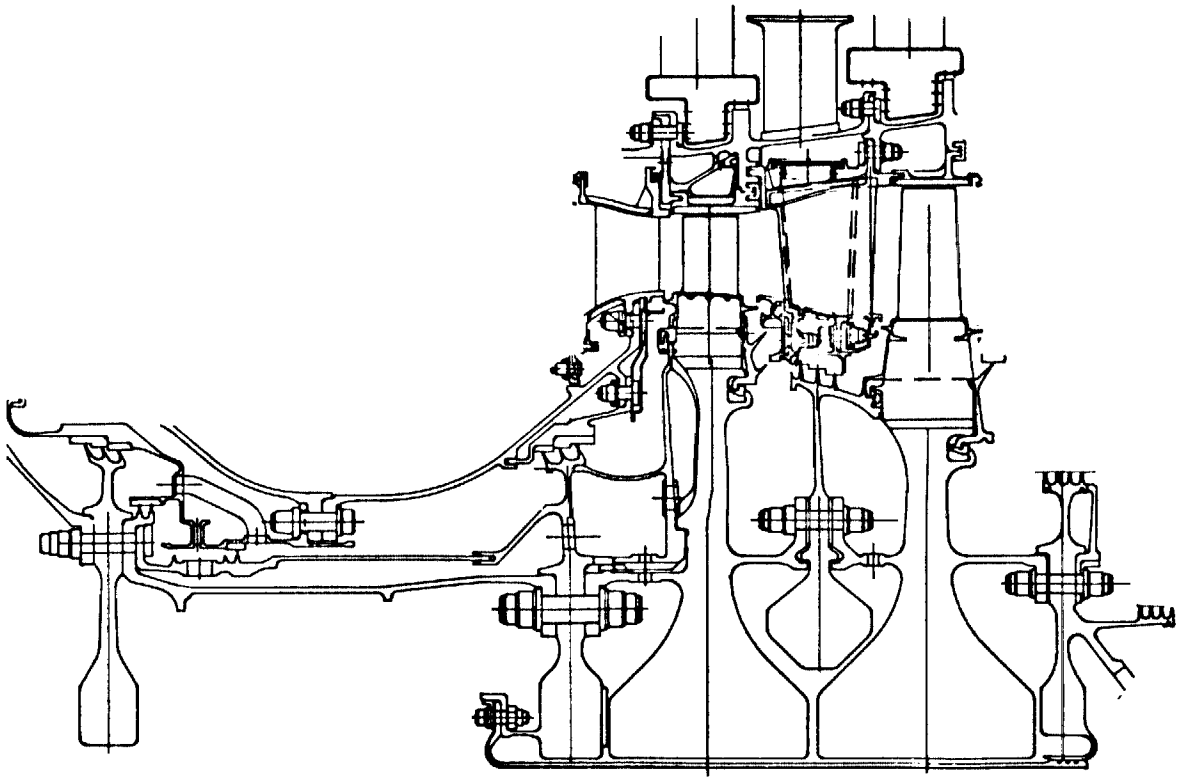

- ID FEED ONLY FOR STG. 1 VANE LEADING EDGE COOLING
- NO DIFFERENCES FROM FPS

E971

ICLS TEST OBJECTIVES FOR HP TURBINE

- DEMONSTRATE ACTIVE CLEARANCE CONTROL WITH FAN STREAM AIR
- AERODYNAMIC PERFORMANCE
- MECHANICAL/THERMAL INTEGRITY

E972

LOW PRESSURE TURBINE

LOW PRESSURE TURBINE

- ICLS OBJECTIVES
- DESIGN FEATURES, MATERIALS, COOLING SYSTEM
- BLOCK IIB AERODYNAMICS

T. THOMAS

E973

OBJECTIVES - ICLS ENGINE TEST

TEST EVALUATE:

- PERFORMANCE
- SYSTEM INTEGRATION
- DESIGN PARAMETER MEASUREMENTS
  - TEMPERATURE
  - STRESS/VIBRATORY RESPONSE
- MECHANICAL/THERMAL INTEGRITY

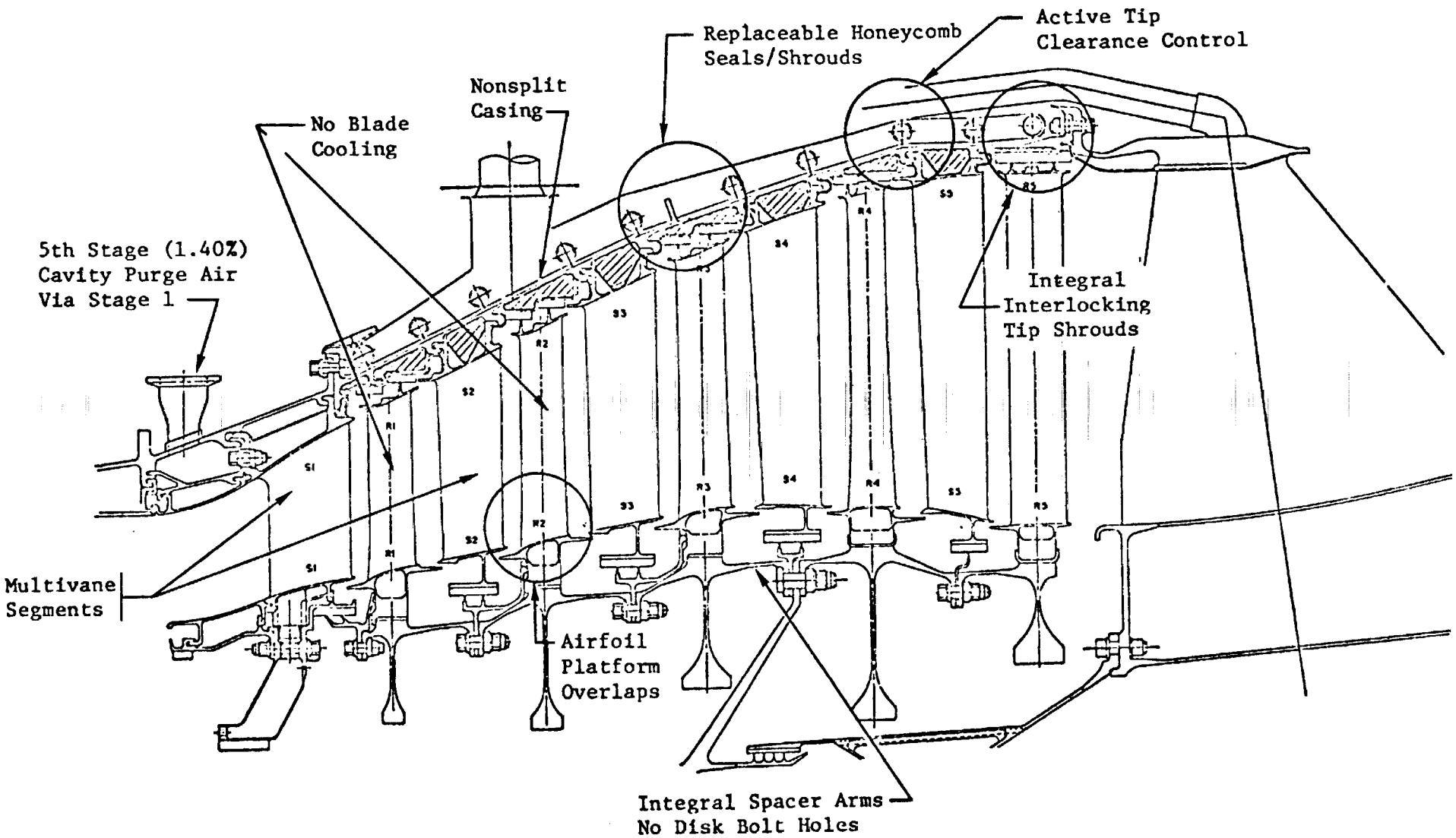

LP TURBINE DESIGN FEATURES

E975

BLOCK IIB LP TURBINE FEATURES

(COLD FLOWPATH)

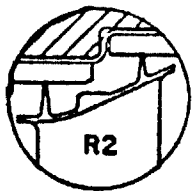

E^3 Block I

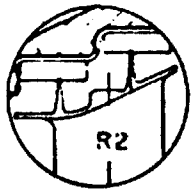

E^3 Block IIB

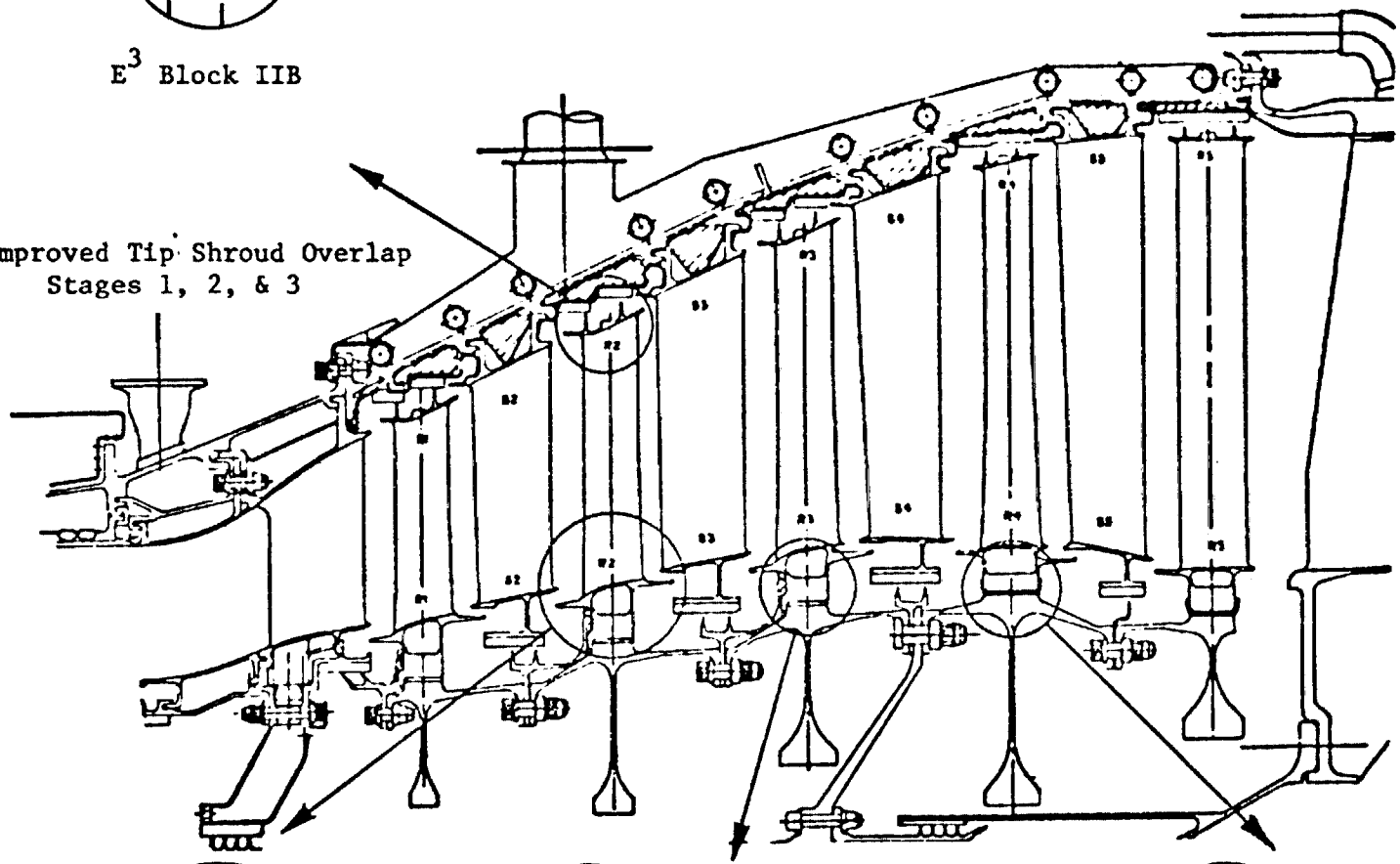

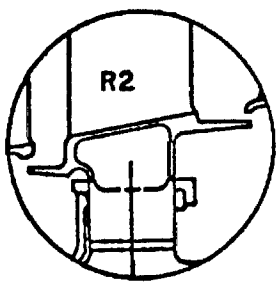

E^3 Block I

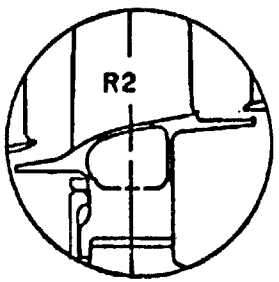

E^3 Block IIB

Improved Platform Overlaps
All Stages

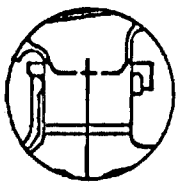

E^3 Block I

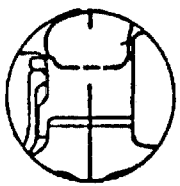

E^3 Block IIB

New Blade Retainers
Stages 1, 2, and 3

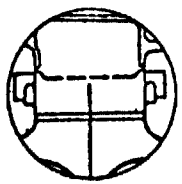

E^3 Block I

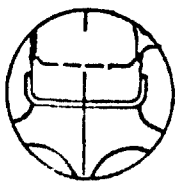

E^3 Block IIB

New Blade Retainers
Stages 4 and 5

E976

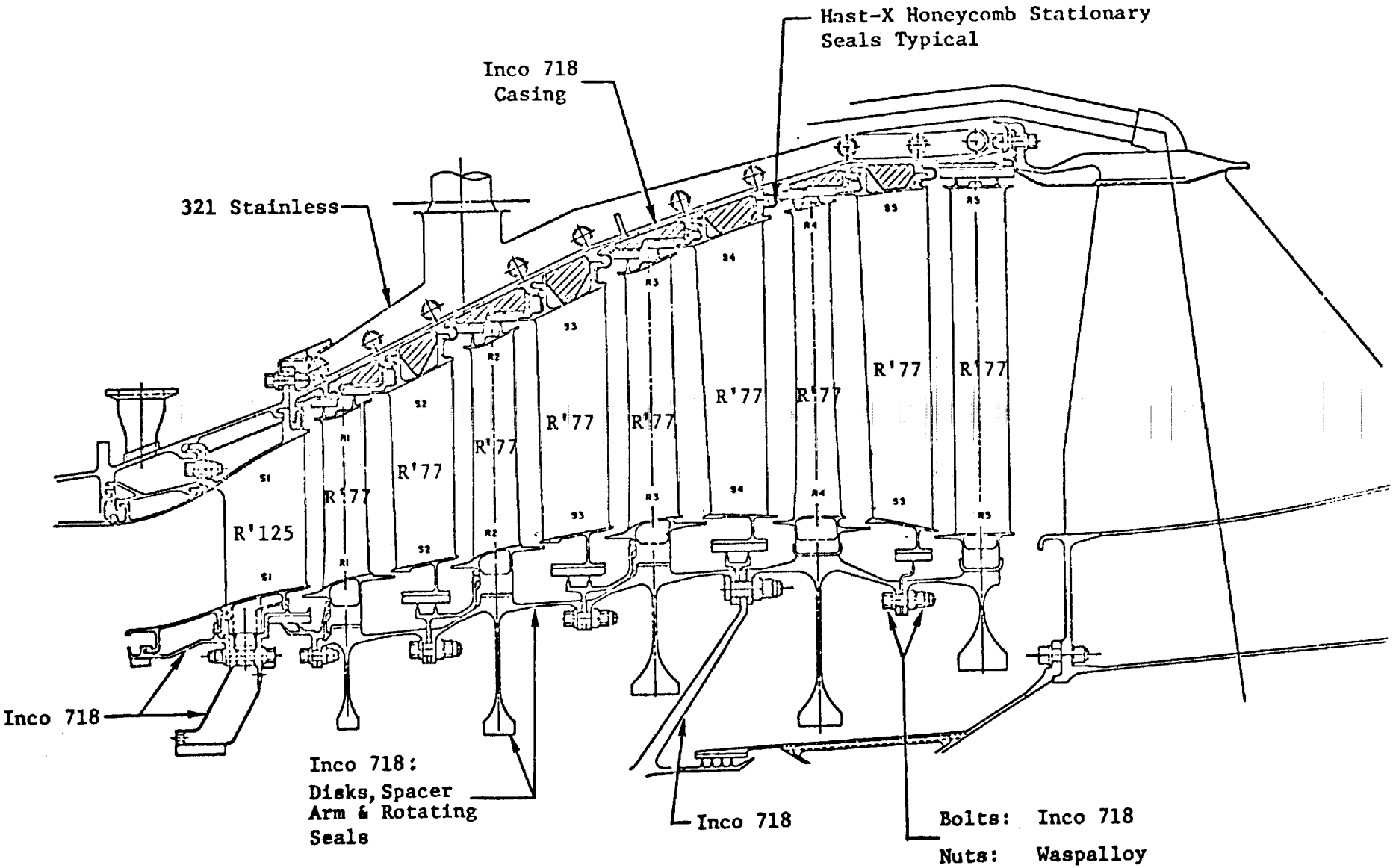

LP TURBINE MATERIALS

E977

LPT COOLING SYSTEM

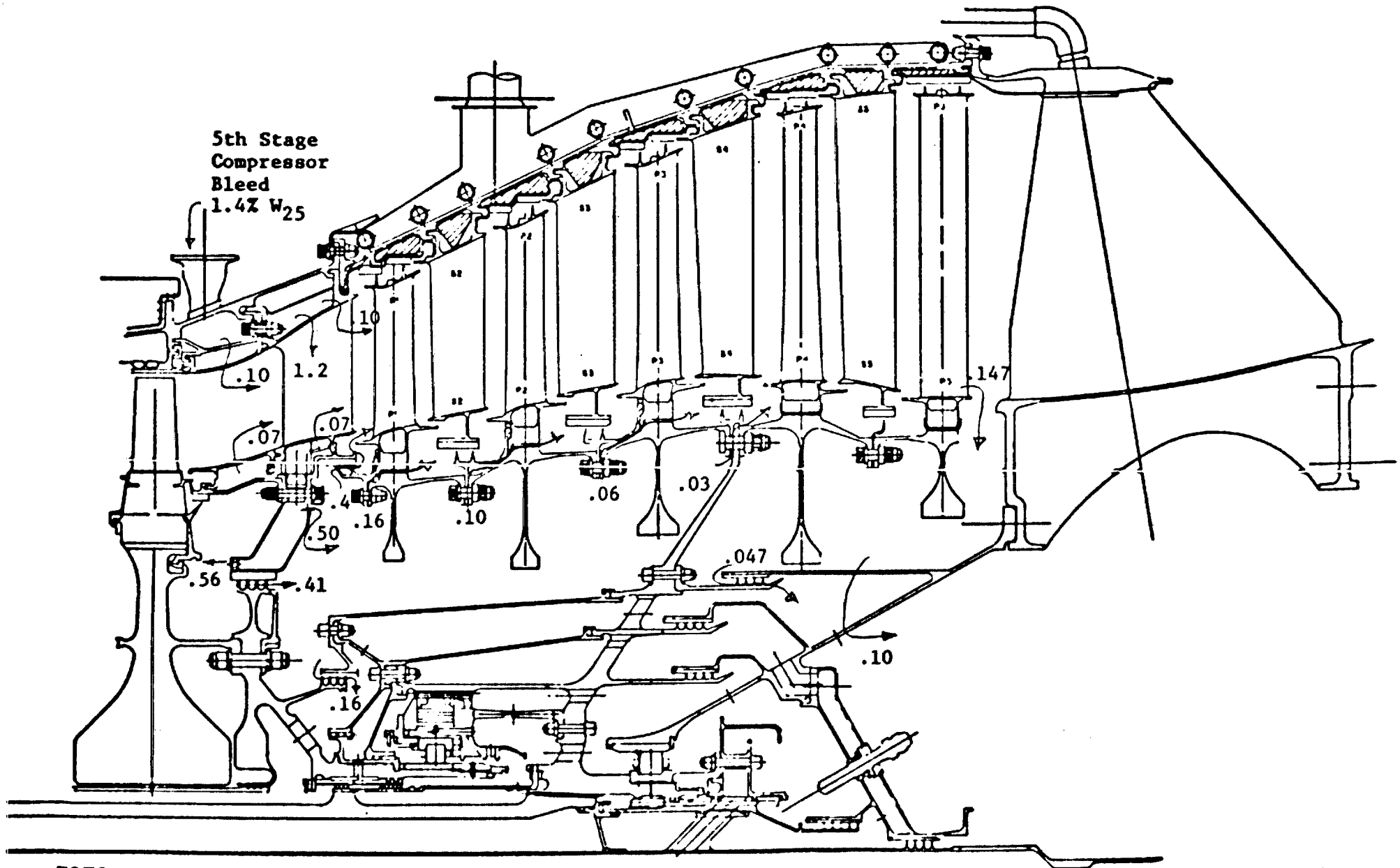

ICLS → FPS DIFFERENCE

- NONE

E979

TURBINE REAR FRAME AND MIXER

TRF AND MIXER

- TRF AND MIXER DESIGN
- MIXER AERO DESIGN FEATURE
- MIXER AERO TEST RESULTS

T. THOMAS

E980

TURBINE FRAME, MIXER AND CENTERBODY

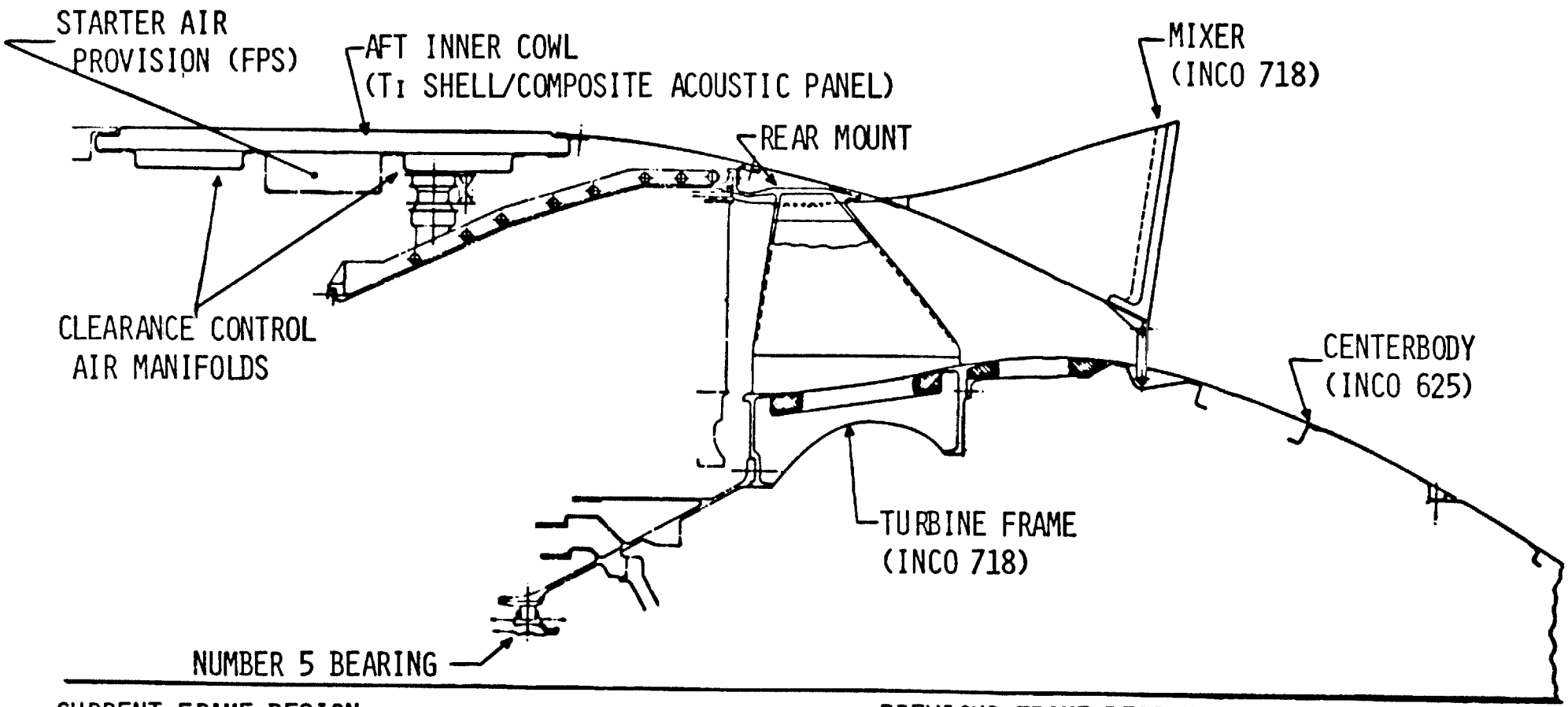

CURRENT FRAME DESIGN

- STIFFNESS OBJECTIVE 1×10^6 LB./IN.
- POLYGONAL OUTER CASING
- RADIAL STRUTS

PREVIOUS FRAME DESIGN

- STIFFNESS OBJECTIVE 5×10^5 LB./IN.
- ROUND OUTER CASING
- SEMI-TANGENTIAL STRUTS

E981

CURRENT DESIGN

FEATURE	
POLYGONAL CASING	• EFFICIENTLY CARRIES POINT MOUNT LOADS • THERMAL STRESSES UNIFORMLY DISTRIBUTED • STIFFNESS INCREASE
RADIAL STRUTS	• STIFFNESS INCREASE • SIMPLIFIED HUB/STRUT INTERFACE • WEIGHT SAVINGS
VARIABLE THICKNESS CASING PANELS	• PRODUCES LOWER STRESSES IN CAST STRUT END AND STRUT END/PANEL WELDS • PRODUCES HIGHER STRESSES IN PANEL SHEET MATERIAL
TEMPERATURE CONTROL	• LOWERS THERMAL STRESS • PROVIDES LONG LIFE DESIGN

E982

TRF MECHANICAL DESIGN FEATURES

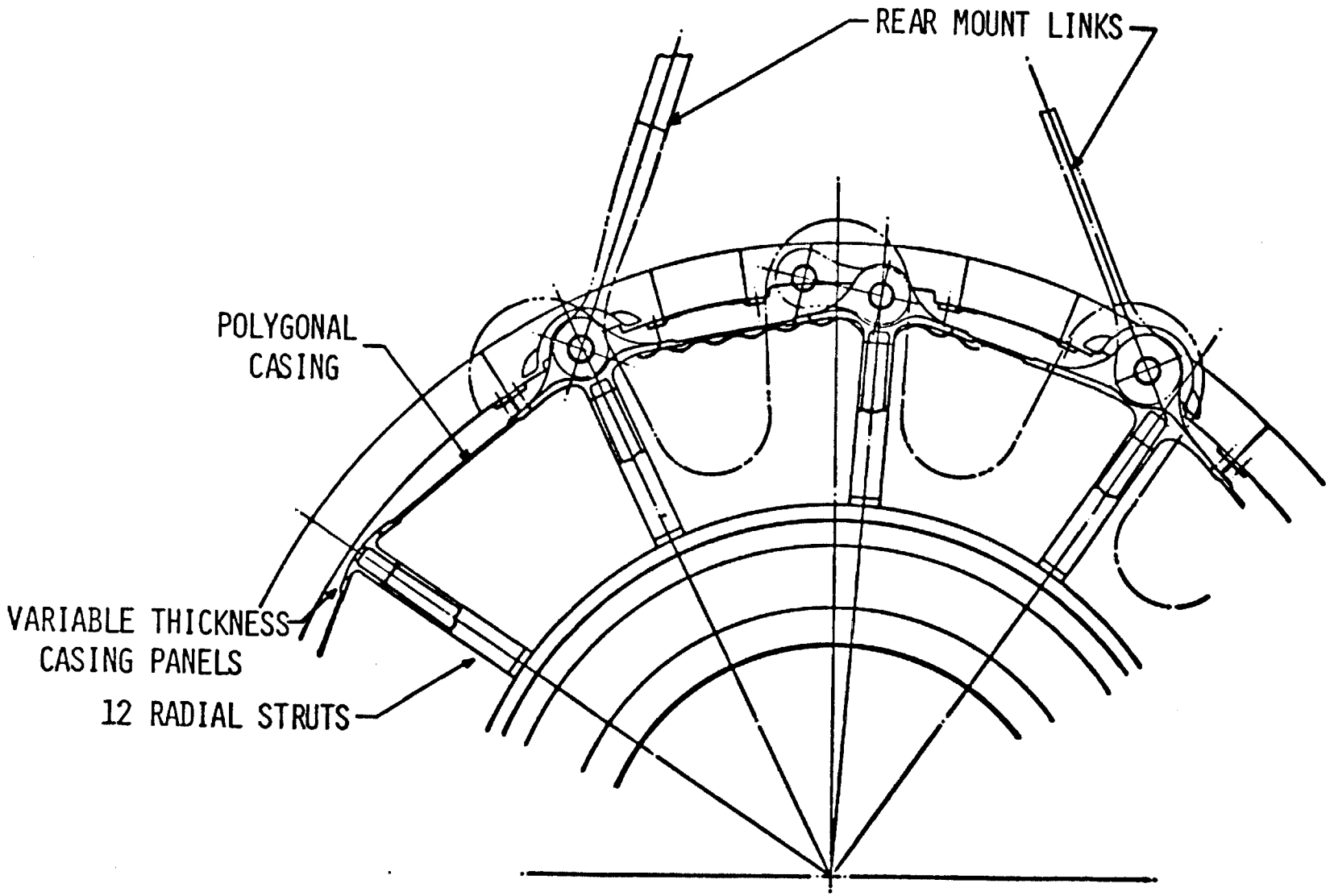

E983

MIXER AERO DESIGN GOALS

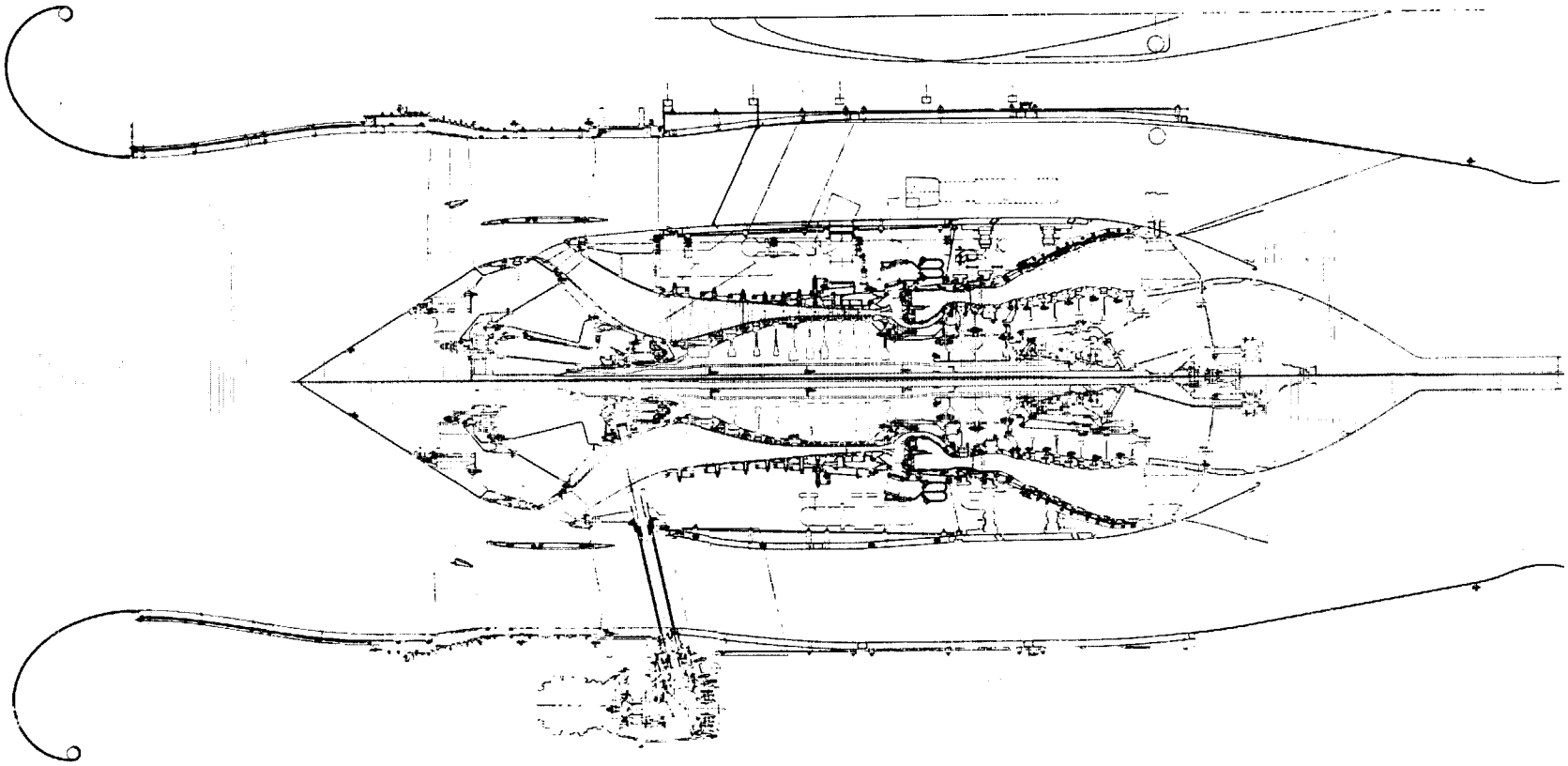

MIXING EFFECTIVENESS - 75%
MIXER PRESSURE LOSS - .2%

3.1% SFC IMPROVEMENT
AT M.8/35K MX CR

E984

STATUS MIXER AERO DESIGN FEATURES

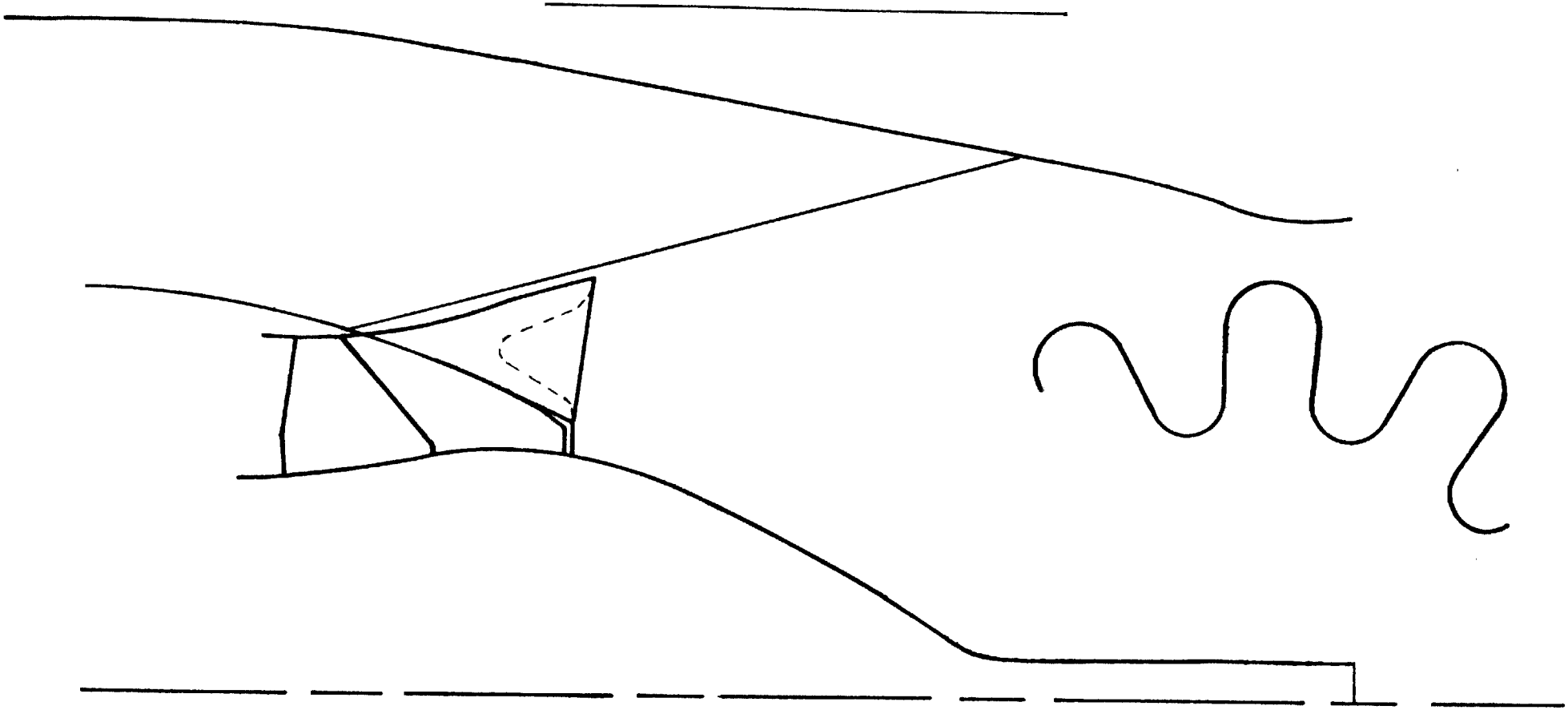

E985

E^3 STATUS FPS AND ICLS MIXER AERO DESIGN FEATURES

- 12 LOBES
- SCALLOPED SIDEWALLS
- INTEGRATED WITH PYLON AND ENGINE AFT MOUNT LINKS/ TURBINE FRAME
- FINAL AERO DESIGN DERIVED FROM PHSIII MIXER SCALE MODEL TEST (NOV. '80)

E986

PYLON/MOUNT/MIXER CROSS SECTION

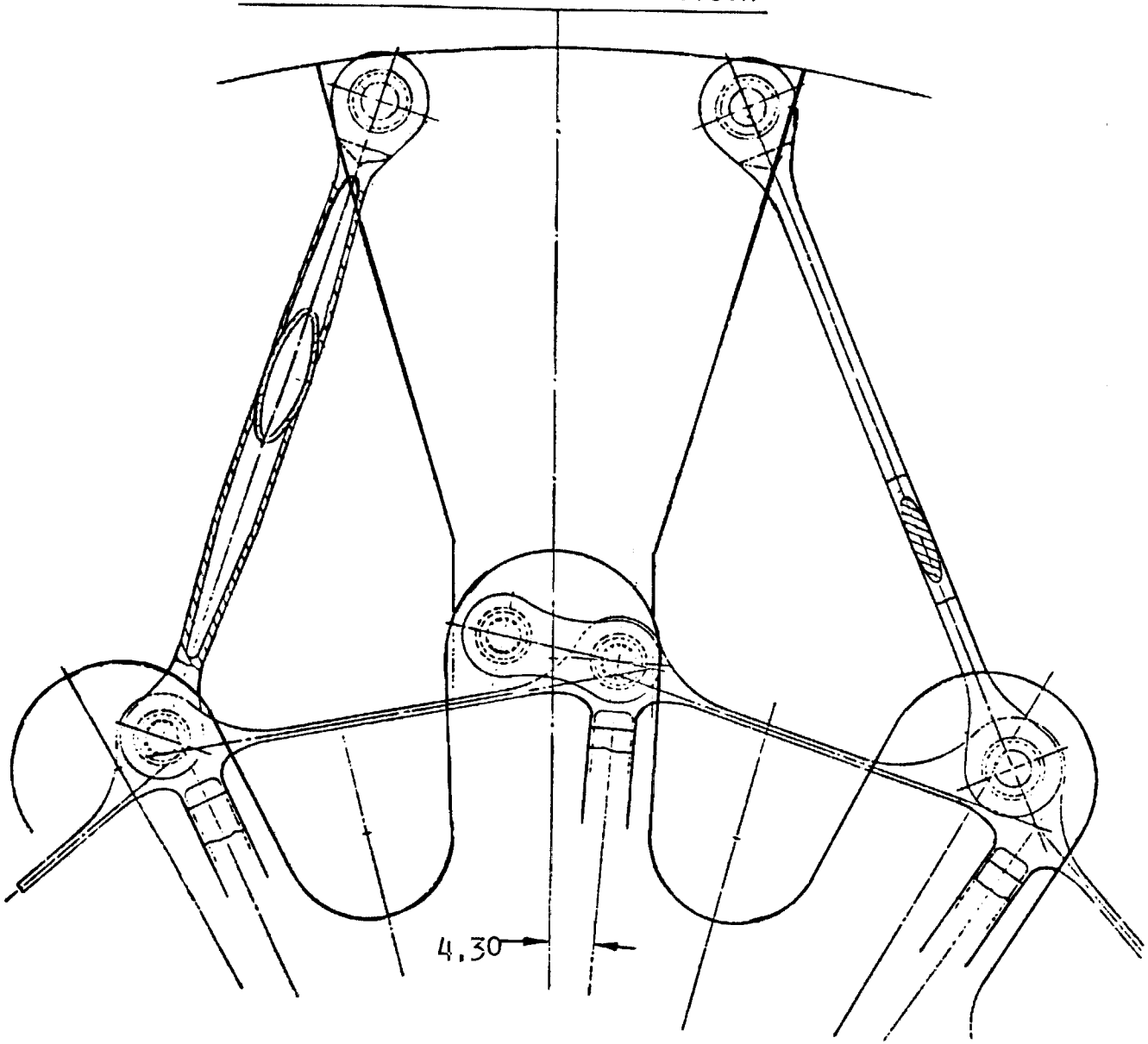

E987

FINAL MIXER SELECTION PLAN

- SELECT EXHAUST SYSTEM CONFIGURATION AND MIXER PENETRATION BASED ON PHASE I & II TEST RESULTS
- CONDUCT SPALDING ANALYSIS TO EVALUATE MIXER SHAPE
- TEST FOUR MIXERS TO DETERMINE OPTIMUM MIXER SHAPE
- SELECT BEST MIXER FOR ICLS: TEST OVER MAJOR E^3 OPERATING CONDITIONS
- DETERMINE CORE THRUST SPOILING/NOZZLE RECIRCULATION HEATING CHARACTERISTICS (REVERSE MODE)

E988

BEARINGS, SUMPS AND DRIVES

BEARINGS, SUMPS AND DRIVES

- DESIGN FEATURES
- SUMPS
- LUBE SYSTEM
- LP SHAFT
- DRIVES

A. SAUNDERS

E989

MECHANICAL DESIGN FEATURES

- TWO SUMP ENGINE
- 5 MAIN SHAFT BEARINGS
  - 1 INTERSHAFT BEARING
  - CORE BEARINGS SPRING MOUNTED AND FLUID DAMPED
- LABYRINTH SUMP SEALS
- CENTER VENT SYSTEM
- PROVIDES FOR CORE OR FAN COWL MOUNTED ACCESSORY GEAR
- PROVIDES MODULAR SEPARATION OF CORE AND FAN MODULE

ICLS TEST VEHICLE

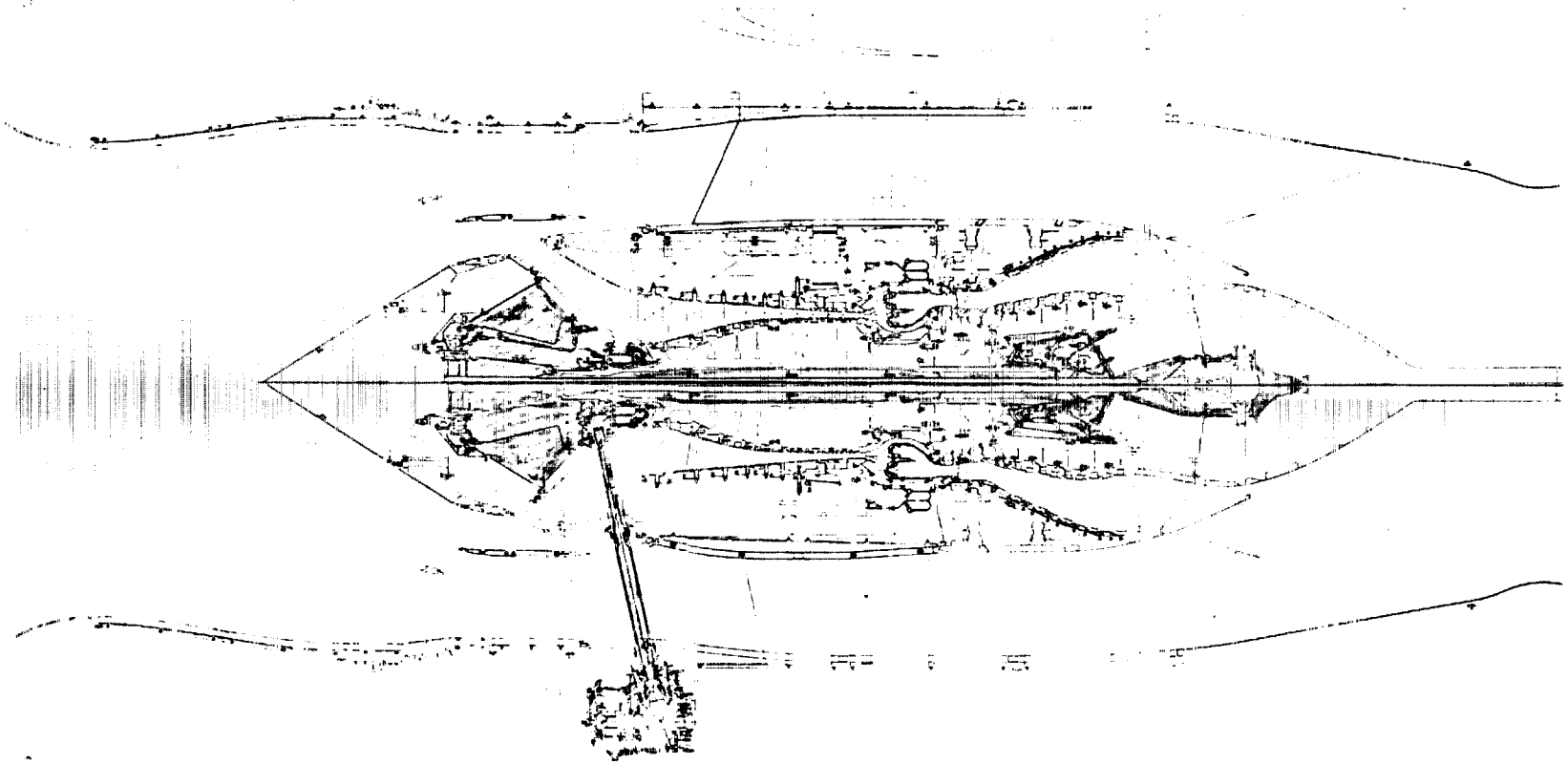

ORIGINAL PAGE
COLOR PHOTOGRAPH

E991

ICLS/CORE FWD SUMP COMPARISON

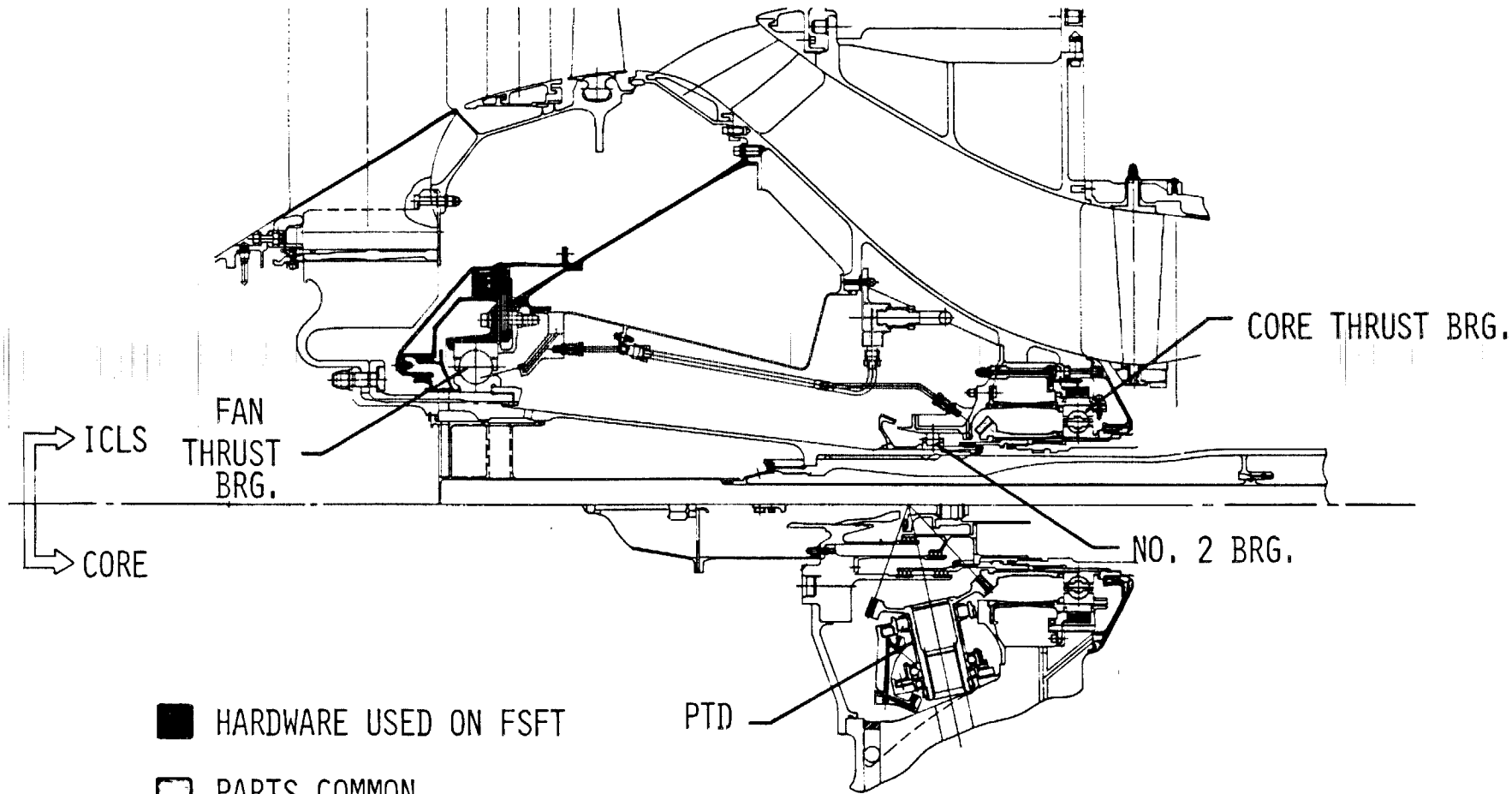

ORIGINAL PAGE
COLOR PHOTOGRAPH

E992

FORWARD SUMP ICLS/FPS COMPARISON SUMMARY

FEATURE	ICLS	FPS
• MAIN SHAFT BEARINGS	X	X
• AFT LABYRINTH	17-4 PH	EPOXY COMPOSITE (CF6)
• SPRING/DAMPER ASSEMBLY	X	X (EXCEPT LUBE SUPPLY)
• PTO GEARBOX	X	X (EXCEPT HOUSING)
• #2 BEARING HOUSING	17-4 PH	TITANIUM
• #1 BEARING HOUSING	17-4 PH	TITANIUM
• LUBE SYSTEM	X (SIMPLIFIED #1 BRG. AREA)	X
• FWD. SEAL HOUSING	321/17-4 PH	EPOXY COMPOSITE (CF6)
• FWD. LABYRINTH	X	X
• CORE MODULE/FAN MODULE SEPARATION	X	X

E993

ICLS/CORE AFT SUMP COMPARISON

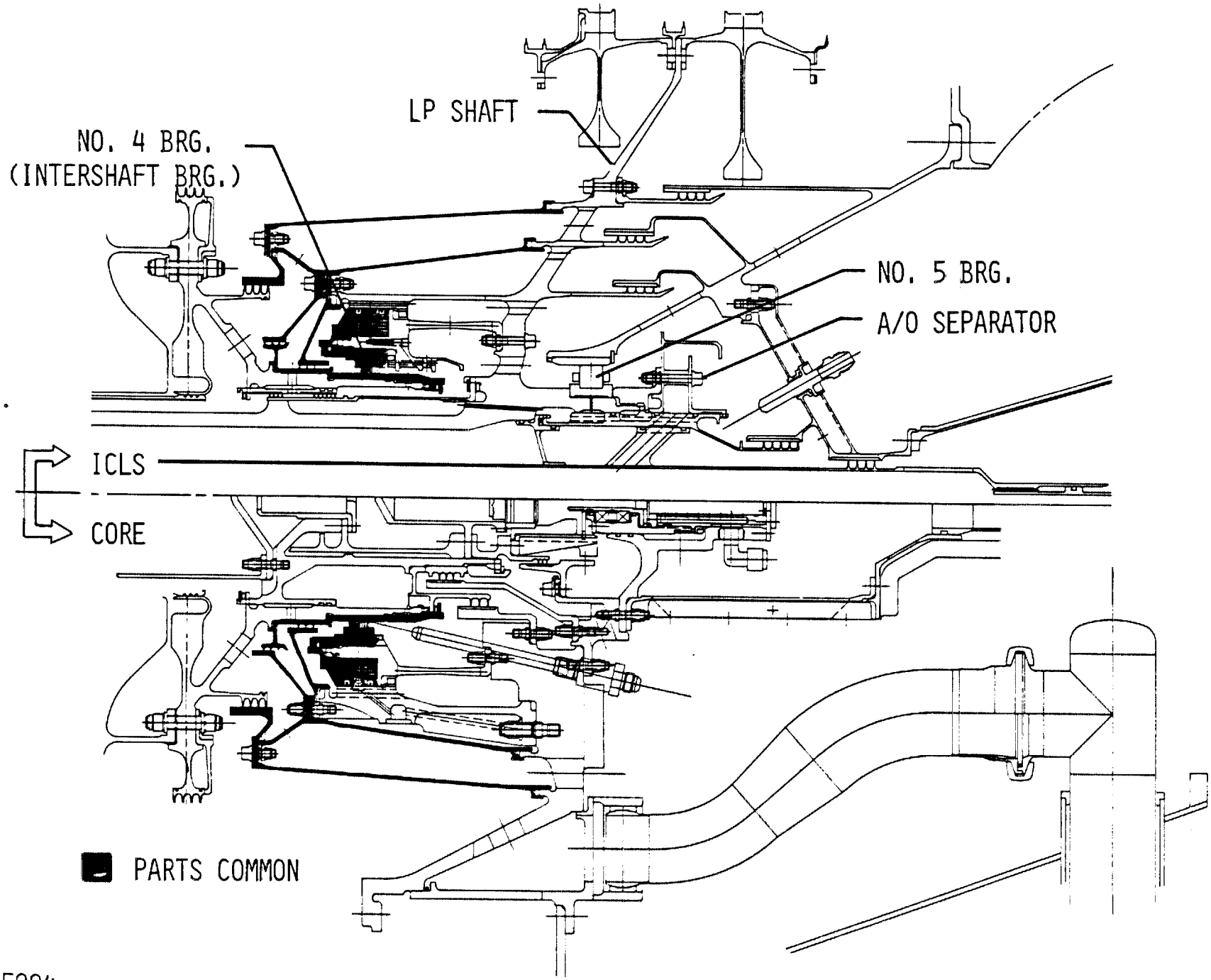

ORIGINAL PAGE
COLOR PHOTOGRAPH

E994

ICLS AFT SUMP
SLIP RING ASSEMBLY

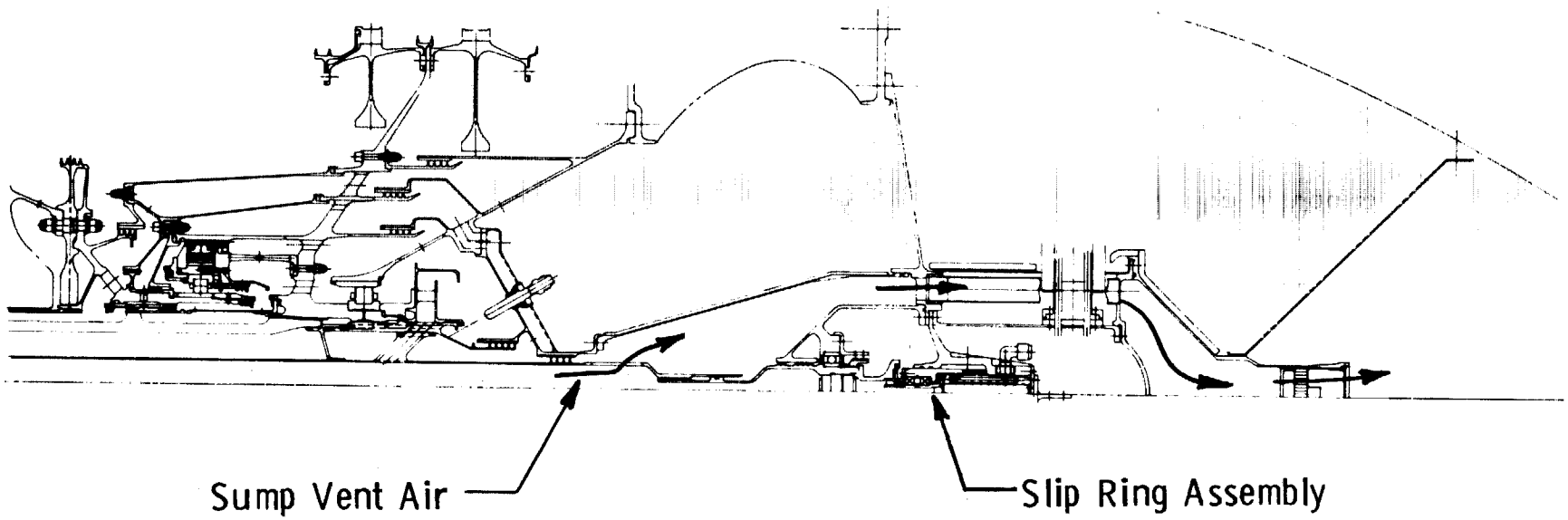

E995

AFT SUMP ICLS/FPS COMPARISON SUMMARY

FEATURE	ICLS	FPS
MAIN SHAFT BEARINGS	X	X
SUMP SEALING	X	X
SPRING/DAMPER ASSY.	X	X
SUPPORT HOUSINGS	X	X
AIR SEALS	X	X
LUBE SYSTEM	X	X
SLIP RING	UNIQUE TO ICLS	N/A
CENTER VENT SYSTEM	X	X

ICLS LUBE SYSTEM SCHEMATIC

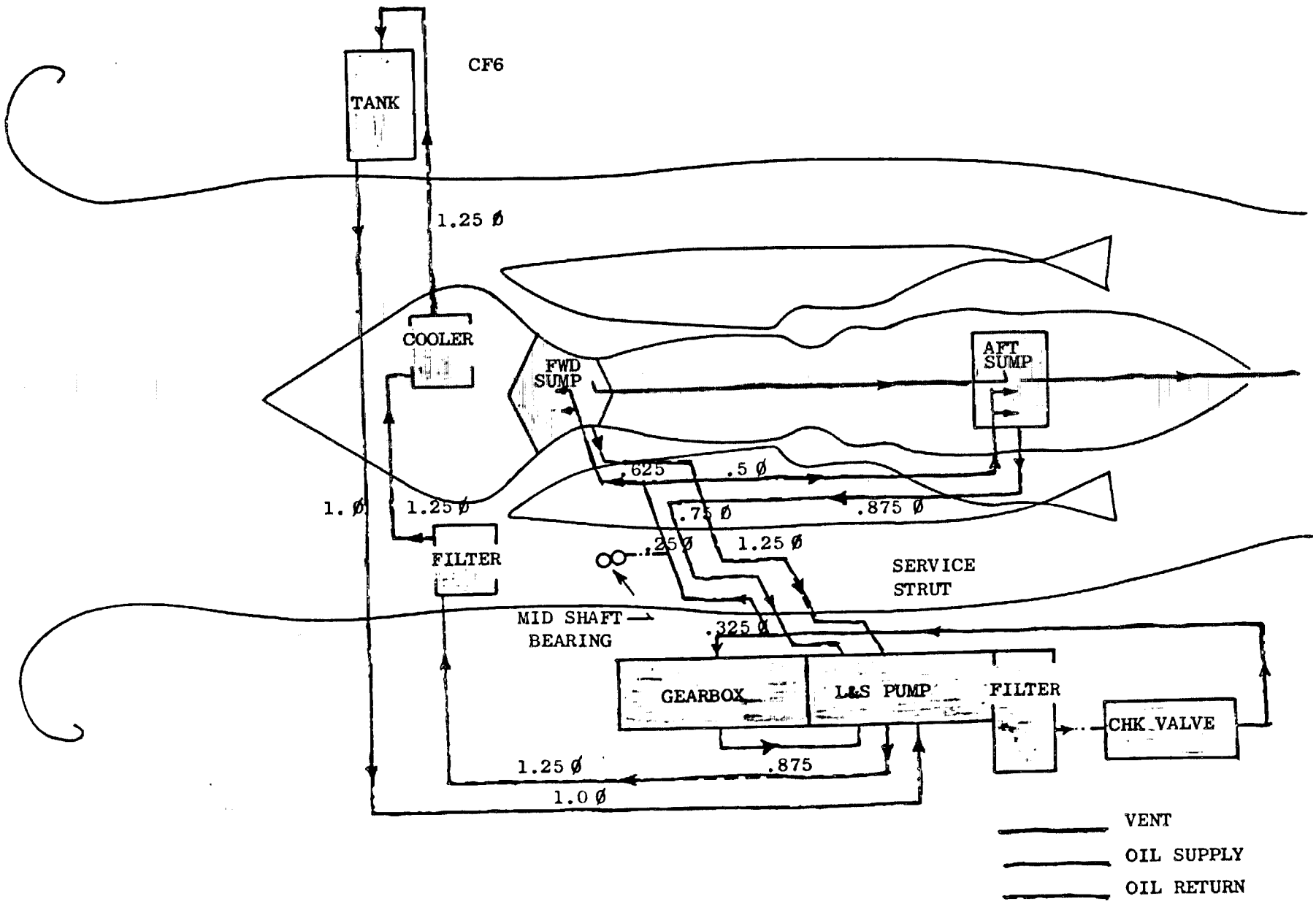

ORIGINAL PAGE
COLOR PHOTOGRAPH

E997

LUBE SYSTEM ICLS/FPS COMPARISON

COMPONENT	ICLS	FPS
OIL TANK	SLAVE (CF6)	FLIGHT
PUMP	SLAVE (CF6)	FLIGHT
COOLER	SLAVE	FLIGHT
OIL DELIVERY SYSTEM	X	X
OIL SCAVENGE SYSTEM	X	X

LP SHAFT DESIGN DESCRIPTION

FPS DESIGN

- 1-718 USED IN HIGHER TEMPERATURE AREA
- MARAGE 250 USED IN SHAFT AREA
  - HIGH STRENGTH CAPABILITY
- INERTIA WELD JOINT BETWEEN 1-718 AND MARAGE 250
  - BASED ON SUCCESSFUL CF6-80 WELD TEST PROGRAM

ICLS DESIGN

- A ONE PIECE 1-718 SHAFT WILL BE USED
- NO CHANGE IN ENGINE SYSTEM DYNAMICS
- OUTSIDE SHAFT CONFIGURATION SAME AS FPS
- MINOR DIFFERENCES ON INSIDE SHAFT CONFIGURATION
- DESIGNED FOR THE LOWER TORQUE LEVELS AND LIFE REQUIREMENTS OF THE ICLS

LOW PRESSURE TURBINE SHAFT

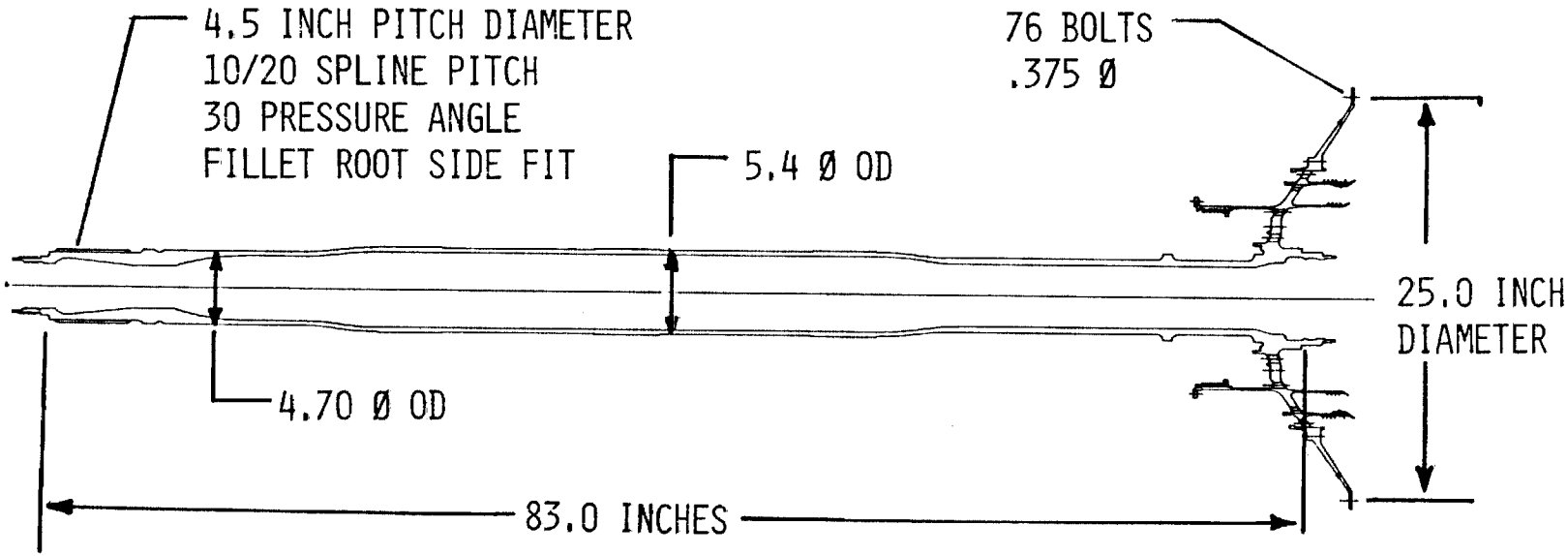

OVERALL DIMENSIONS

E1000

DRIVE SYSTEM DESIGN CRITERIA

- STARTER LOAD — 800 LB - FT @ ROTOR
- EXPECTED FPS LOAD REQUIREMENTS
  - ACCESSORY LOADS (CML) (BASED ON CF6 EXPERIENCE) — 325 HP
  - MAX HP — 442 HP
- EXPECTED ICLS LOAD REQUIREMENTS
  - ACCESSORY (CML) — 50 HP
  - MAX HP — 72 HP

FPS DESIGN REQUIREMENTS

TOTAL NO. OF STARTS	40000	
TOTAL SERVICE LIFE	35000	HR.

ICLS DESIGN REQUIREMENTS

TOTAL NO. OF STARTS	2000	
TOTAL LIFE	2000	HR.

E1001

ICLS PTO GEARBOX

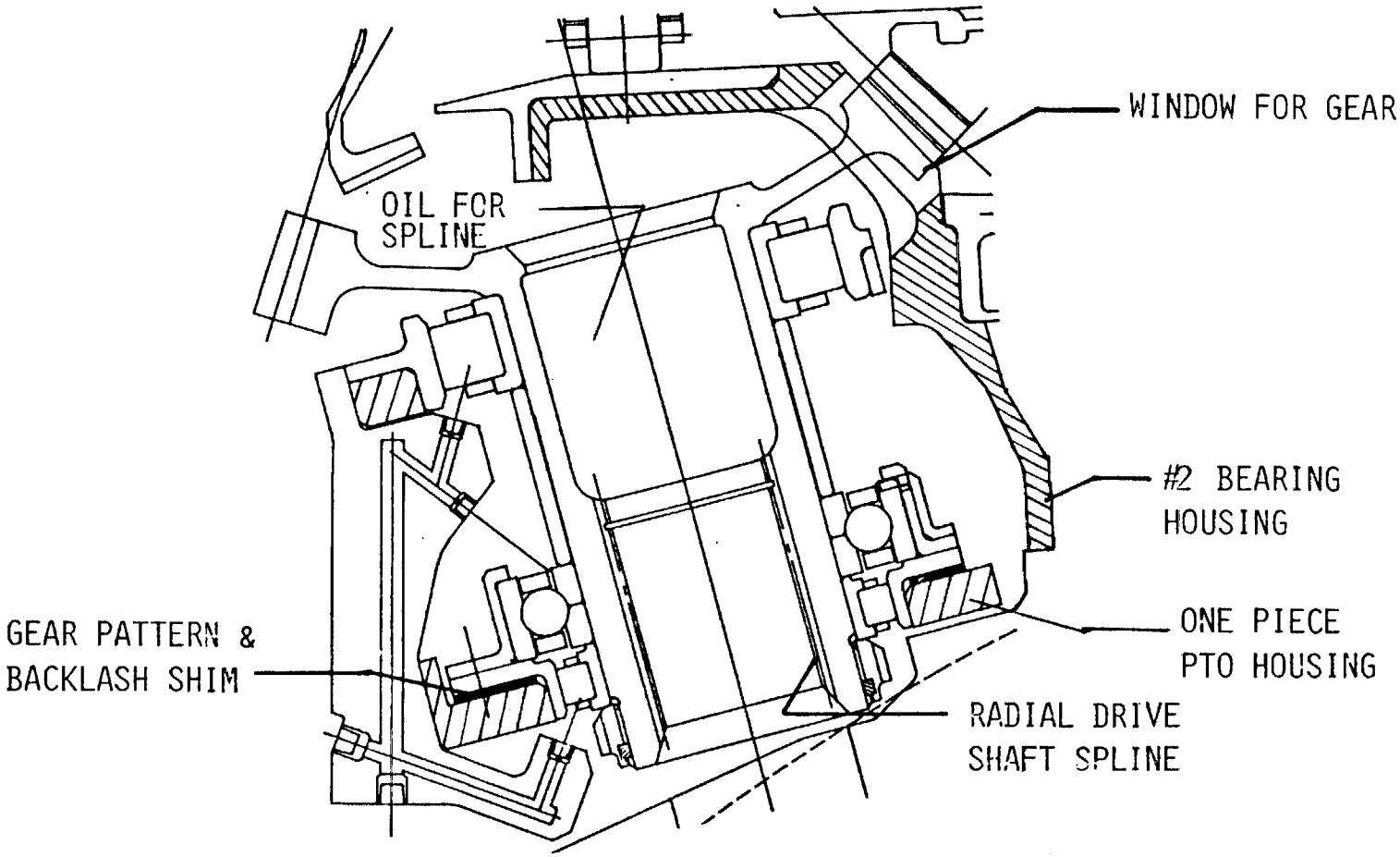

E1002

ICLS RADIAL DRIVE SHAFT

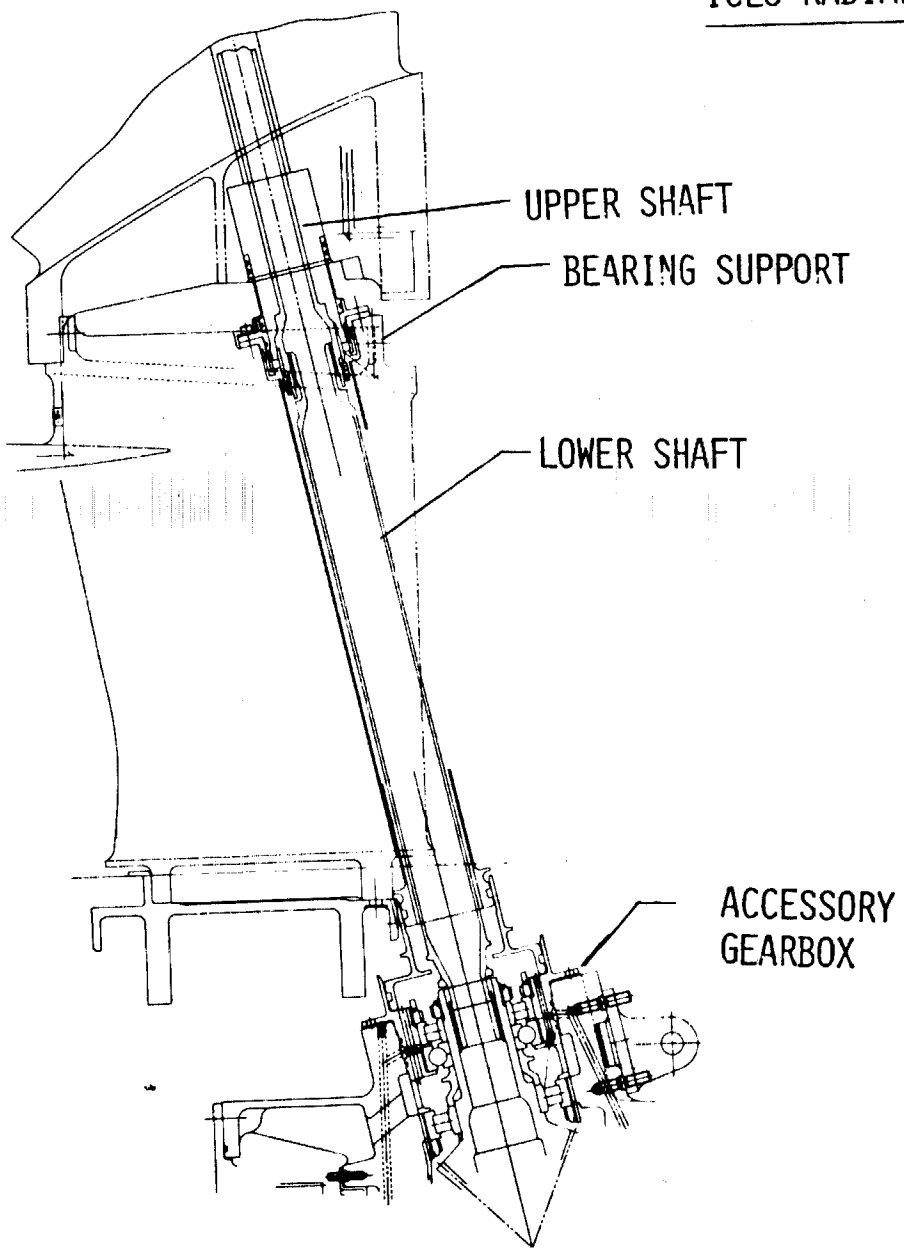

MATERIALS

DRIVE SHAFT : AISI 4340
BEARINGS : M50
O-RINGS : VITON

CRITICAL SPEED UPPER SHAFT.....30,000 RPM
CRITICAL SPEED LOWER SHAFT.....24,700 RPM
MAX OPERATING SPEED (FPS GROWTH)...19,313 RPM

CRITICAL SPEED MARGINS

$\frac{N_{CR}}{N_{OP\ GROWTH}} = 1.55 \quad 1.20$ UPPER SHAFT

$\frac{N_{CR}}{N_{OP\ GROWTH}} = 1.28 \quad 1.20$ LOWER SHAFT

E1003

E^3 ICLS ACCESSORY DRIVE SCHEMATIC

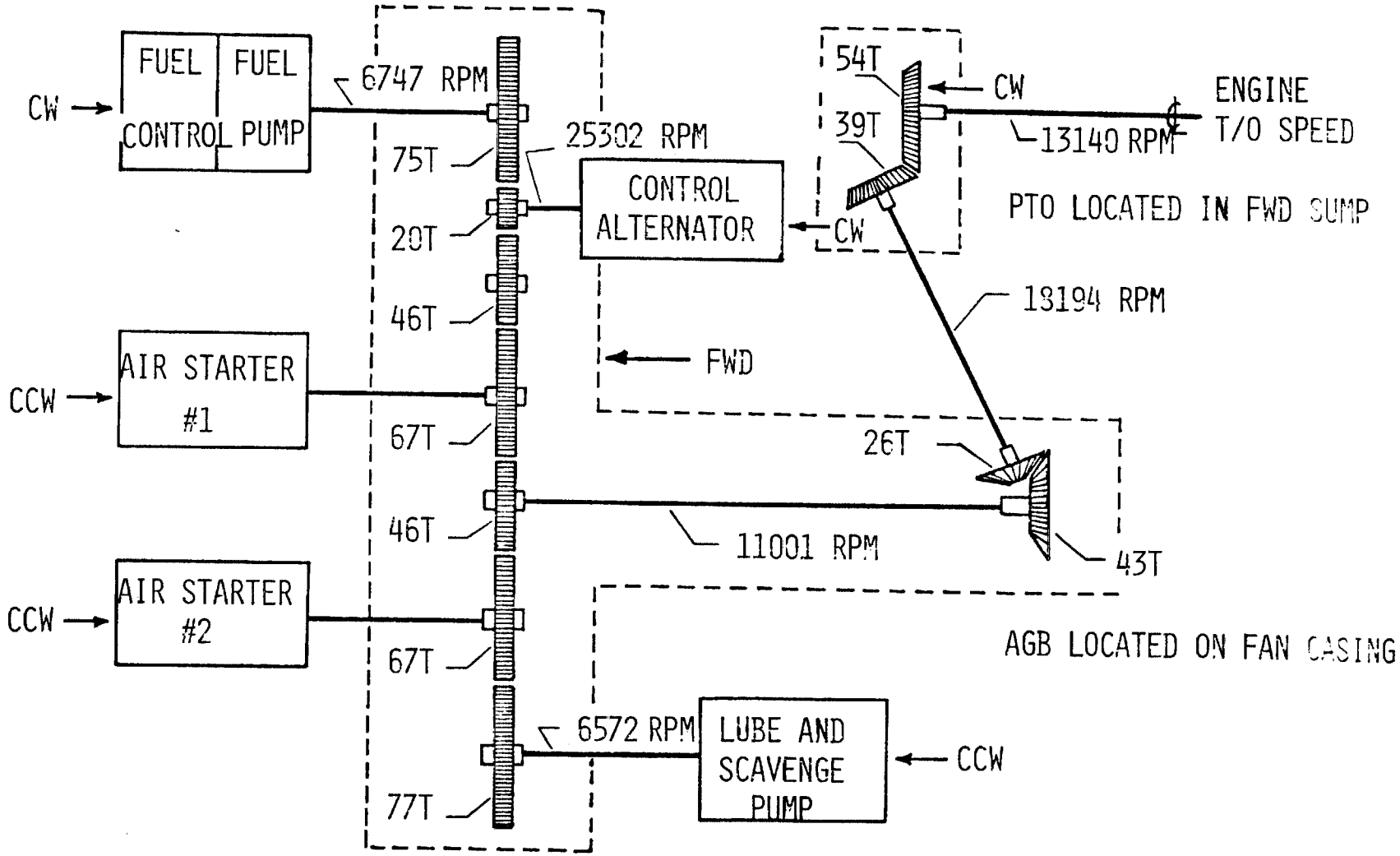

E1004

ICLS ACCESSORY GEARBOX

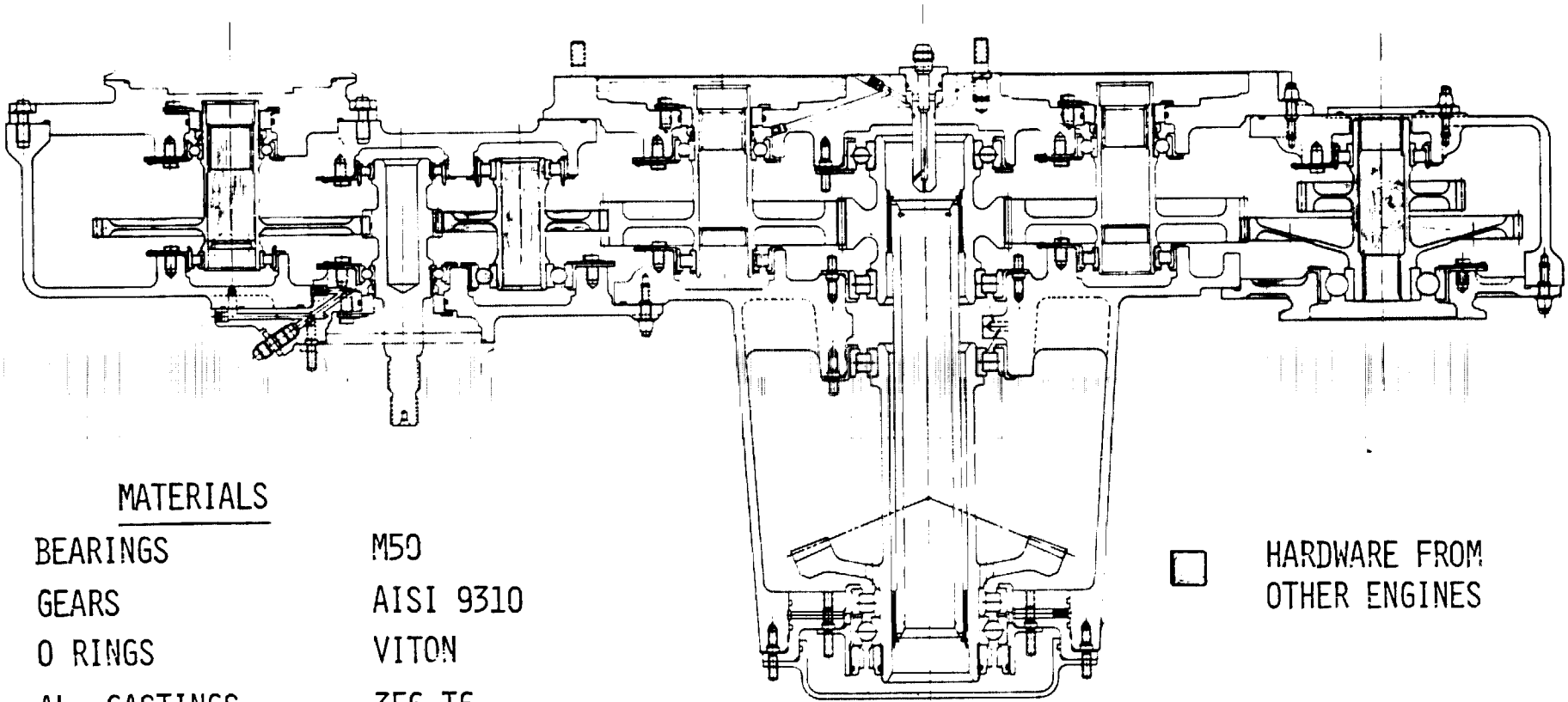

MATERIALS

BEARINGS	M50
GEARS	AISI 9310
O RINGS	VITON
AL. CASTINGS	356-T6
LINERS	AISI 4340

□ HARDWARE FROM OTHER ENGINES

ORIGINAL PAGE
COLOR PHOTOGRAPH

CONTROLS AND ACCESSORIES

CONTROLS AND ACCESSORIES

- DESIGN DESCRIPTION
- TEST OBJECTIVES
- INSTRUMENTATION
- DESIGN DIFFERENCES FROM FPS

A. SAUNDERS

E1006

ICLS ENGINE CONTROL SYSTEM

- CONTROLS SEVEN VARIABLES

FUEL FLOW	START BLEED VALVES
FUEL FLOW SPLIT	COMPR. CLEARANCE VALVE
CORE STATORS	HPT CLEARANCE VALVE
	LPT CLEARANCE VALVE

- AUTOMATIC OVERSPEED, OVERTEMP, STALL, BLOWOUT PROTECTION

- EXPERIMENTAL FLEXIBILITY
  - FAN RPM = f(PLA)
  - START BLEED, CLEARANCE VALVES ADJUSTABLE FROM CONTROL ROOM
  - FUEL, STATOR SCHEDULES ADJUSTABLE FROM CONTROL ROOM

E1007

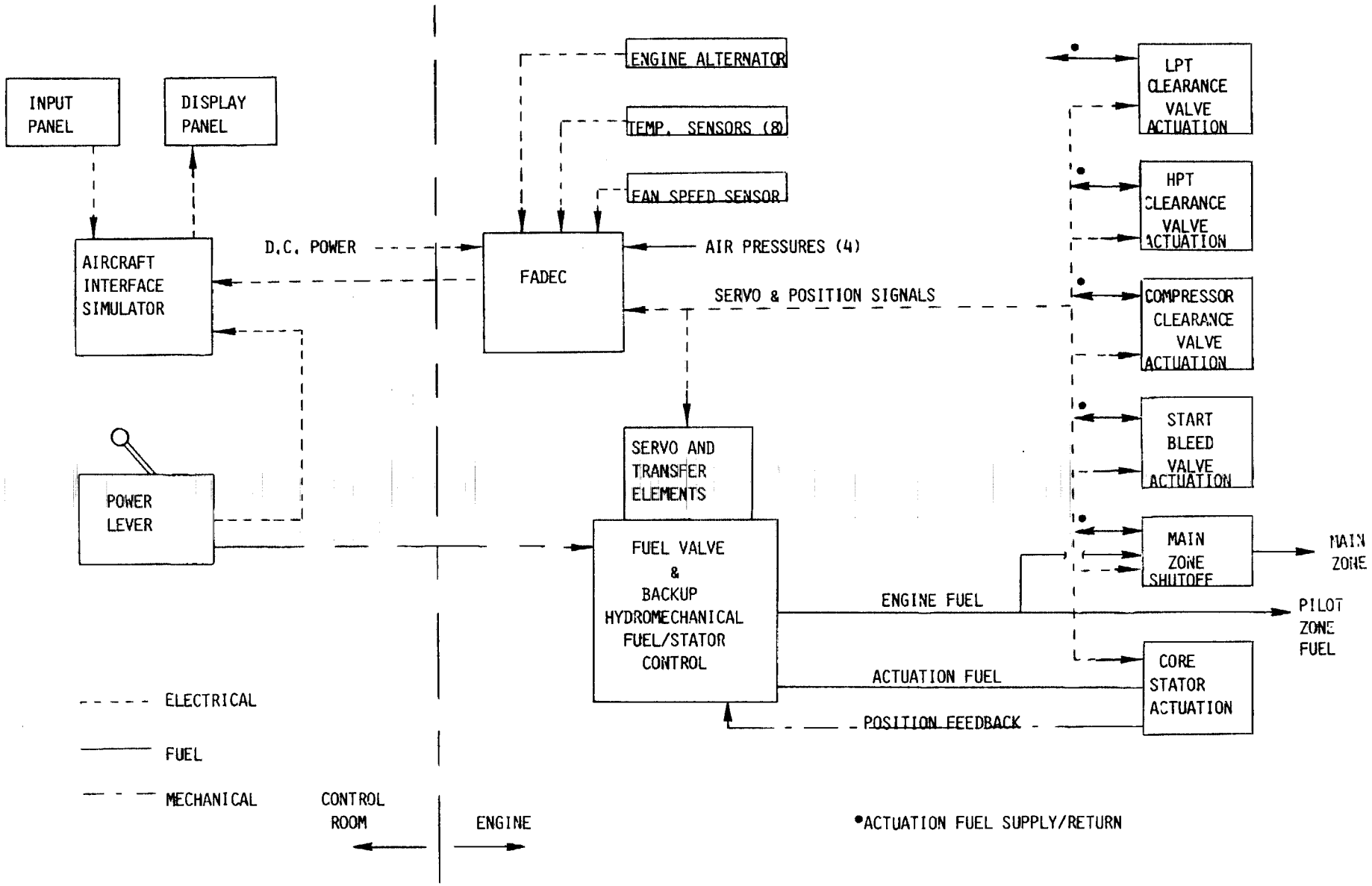
INPUT PANEL
DISPLAY PANEL
AIRCRAFT INTERFACE SIMULATOR
POWER LEVER
D.C. POWER
ENGINE ALTERNATOR
TEMP. SENSORS (8)
FAN SPEED SENSOR
FADEC
AIR PRESSURES (4)
SERVO & POSITION SIGNALS
SERVO AND TRANSFER ELEMENTS
FUEL VALVE & BACKUP HYDROMECHANICAL FUEL/STATOR CONTROL
ENGINE FUEL
ACTUATION FUEL
POSITION FEEDBACK
LPT CLEARANCE VALVE ACTUATION
HPT CLEARANCE VALVE ACTUATION
COMPRESSOR CLEARANCE VALVE ACTUATION
START BLEED VALVE ACTUATION
MAIN ZONE SHUTOFF
CORE STATOR ACTUATION
MAIN ZONE
PILOT ZONE FUEL
ELECTRICAL
FUEL
MECHANICAL
CONTROL ROOM
ENGINE
•ACTUATION FUEL SUPPLY/RETURN

E1008

BASIC CONTROL MECHANIZATION

- DIGITAL CONTROL IS PRIME ELEMENT
- HYDROMECHANICAL BACK-UP FOR FUEL AND CORE STATORS
  - CORE SPEED GOVERNING AS f (PLA)
  - REDUNDANT CORE OVERSPEED PROTECTION
  - ACCEL/DECEL FUEL SCHEDULES
  - STATOR SCHEDULE
- DIGITAL SELF-TEST/AUTO SWITCHOVER TO BACK-UP

E1009

CONTROL OF FUEL FLOW

- DIGITAL CONTROL PROVIDES PRIMARY CONTROL OF FUEL
  - MODULATES FUEL FLOW TO SET FAN RPM = f(PLA)
  - APPLIES SPEED, TEMPERATURE, STALL, BLOWOUT LIMITS
  - PROVIDES ADJUSTMENT FROM CONTROL ROOM OF SCHEDULES, LIMITS, DYNAMICS
- DIGITAL SELF-TEST PROVIDES AUTOMATIC SWITCHOVER TO HYDRO-MECHANICAL BACKUP
  - GOVERNS CORE RPM = f(PLA) INSTEAD OF FAN RPM
  - LESS FUEL SCHEDULING FLEXIBILITY
  - NO DIRECT OVERTEMP PROTECTION

E1010

CONTROL OF CORE STATORS

- DIGITAL CONTROL PROVIDES PRIMARY CONTROL OF STATORS
  - BASIC SCHEDULE = f (CORRECTED CORE RPM)
  - SCHEDULE CHANGE POSSIBLE FOR TRANSIENTS, OFF-DESIGN CONDITIONS
  - SCHEDULES, DYNAMICS ADJUSTABLE FROM CONTROL ROOM
- DIGITAL SELF - TEST PROVIDES AUTOMATIC SWITCH-OVER TO HYDRO-MECHANICAL BACKUP

E1011

CONTROL OF CLEARANCE CONTROL AIR VALVES

- SINGLE, ROTARY, FUEL ACTUATED VALVE FOR COMPRESSOR
- SINGLE, FUEL ACTUATED VALVES FOR TURBINES - ONE EACH FOR HP AND LP
- ALL CONTROLLED INDEPENDENTLY BY DIGITAL CONTROL
  - VALVES MODULATED TO SET STATOR CASE TEMPERATURES AS FUNCTION OF RPM & INTERNAL AIR TEMPERATURES
  - MANUAL REMOTE CONTROL MODE ALSO AVAILABLE

ICLS ENGINE CLEARANCE CONTROL

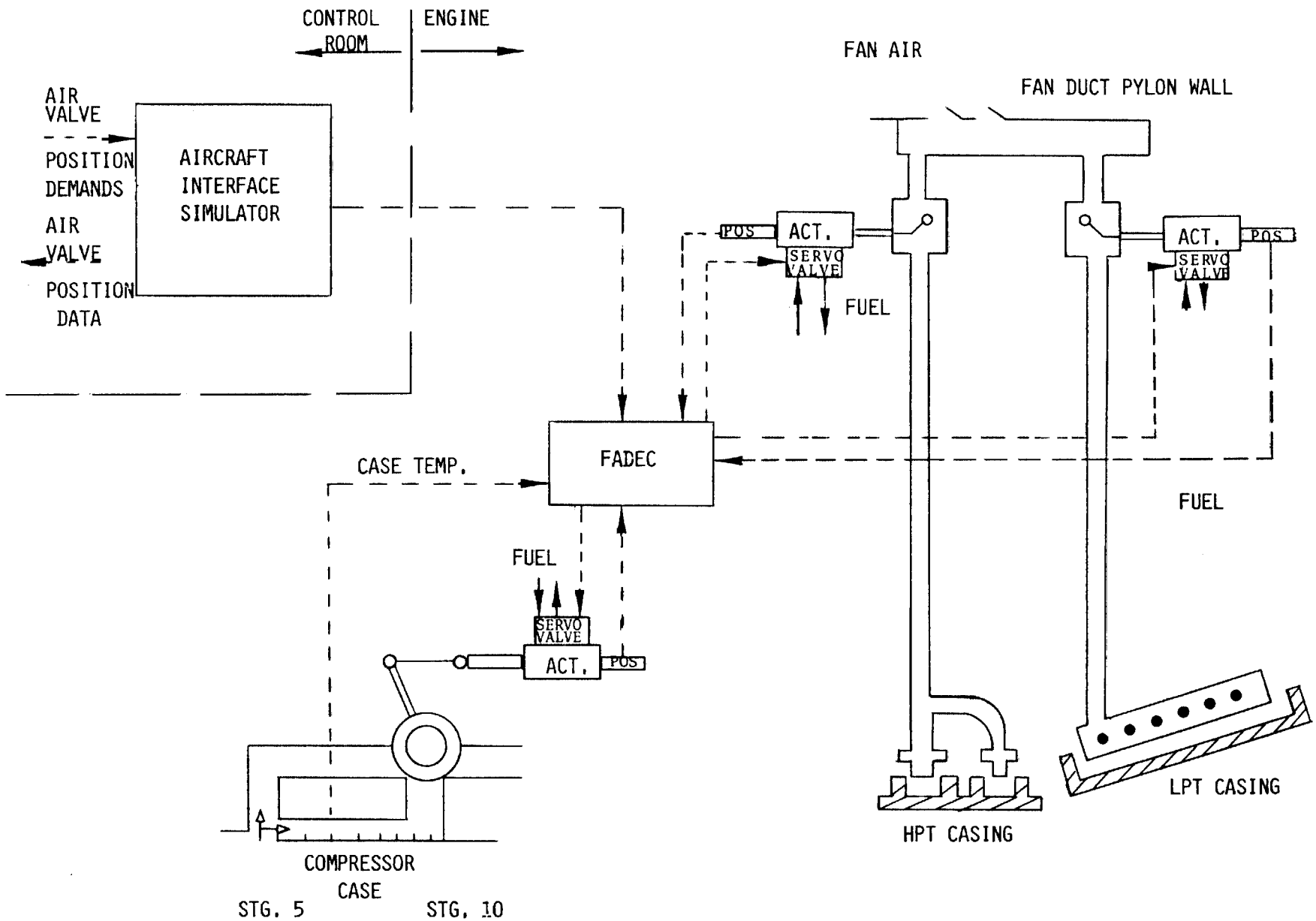

E1013

CONTROL OF START BLEED VALVES

- FOUR, MECHANICALLY CONNECTED VALVES
- SINGLE, FUEL OPERATED ACTUATOR
- CONTROLLED BY DIGITAL CONTROL
  - PRIMARY CONTROL MODE IS AUTOMATIC
  - MANUAL SCHEDULING AVAILABLE

E1014

INSTRUMENTATION

- CONTROL SYSTEM SENSED/CONTROLLED VARIABLES MONITORED THROUGH DIGITAL CONTROL
- INDEPENDENT DATA FOR CORRELATION
  - FUEL FLOW
  - STATOR POSITION
  - CYCLE PRESSURES & TEMPERATURES USED IN CONTROL
- CLEARANCE CONTROL SYSTEM PRESSURES AND TEMPERATURES
- FUEL/OIL TEMPERATURES FOR HEAT LOAD DETERMINATION
- TRANSIENT RECORDING OF KEY CONTROL VARIABLES

MAJOR CONTROL SYSTEM TEST GOALS

- ICLS ENGINE TEST

- VERIFY START-RANGE CHARACTERISTICS
- DEMONSTRATE FAN SPEED GOVERNING
- ESTABLISH CLEARANCE CONTROL CHARACTERISTICS
- DEMONSTRATE AUTOMATIC CLEARANCE CONTROL CONCEPT
- VERIFY T41 CALCULATION CONCEPT
- EXPLORE TRANSIENT CHARACTERISTICS

E1016

DIFFERENCES FROM FPS

- CONTROL REDUNDANCY FROM HYDRO-MECHANICAL BACK-UP RATHER THAN REDENDANT FADEC
- NON-FLIGHT DESIGN COMPONENTS
- MOST COMPONENTS NOT CORE MOUNTED
- NO THRUST REVERSER ACTUATION

E1017

CONCLUSION

CONCLUSION

ICLS TEST VEHICLE

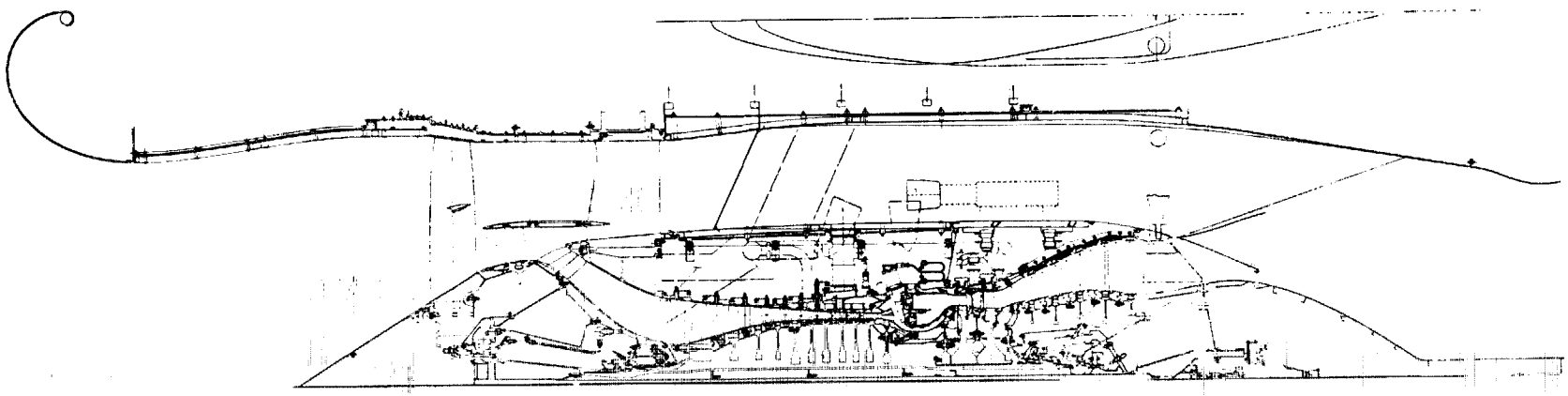

WILL EVALUATE:

- STARTING CHARACTERISTICS
- OPERATION OF COMPLETE ENGINE SYSTEM
- COMPONENT/ENGINE PERFORMANCE
- MECHANICAL DESIGN SUITABILITY
- SYSTEM CHARACTERISTICS

R. JOHNSTON

E1018

CONCLUSION

ICLS TESTING WILL DEMONSTRATE FPS TECHNOLOGY AND PROVIDE:

- VERIFICATION OF FPS DESIGN/CONFIGURATION
- A BASIS FOR ESTIMATING DEVELOPED FPS PERFORMANCE
- MEASUREMENT OF ICLS PROGRAM GOAL ACHIEVEMENT
- A BASIS FOR ESTIMATING FPS PROGRAM GOAL ACHIEVEMENT