THE BDM CORPORATION

10260 Old Columbia Road, Columbia, MD 21046-1218 • (301) 290-6200

OSSA SPACE STATION SERVICING DATA BOOK II

PART II

PREPARED FOR THE OFFICE OF SPACE SCIENCE AND APPLICATIONS (OSSA), NASA HEADQUARTERS

(NASA-CR-190373) OSSA SPACE STATION SERVICING DATA BOOK 2, PART 1 (BDM Corp.) 517 p

N92-70689

Unclas

Z9/18 0091468

NOVEMBER 30, 1987

BDM/COL-87-0910-TR

THE BDM CORPORATION

10260 Old Columbia Road, Columbia, MD 21046-1218 • (301) 290-6200

OSSA SPACE STATION SERVICING BOOK II

Part II

NOVEMBER 30, 1987

BDM/COL-87-0910-TR

This report has been prepared for the Office of Space Science and Applications (OSSA), NASA Headquarters

MICROGRAVITY AND MATERIALS PROCESSING FACILITY (MMPF): MISSION CODE SAAX0401

1.0 MMPF PROGRAM AND OPERATIONS INFORMATION

1.1 MMPF Points of Contact

Dr. Roger K. Crouch
NASA/HQ Code EN
Washington, D.C. 20546
(202) 453-1490

Gary E. Musgrave
Bionetics Corporation
Washington, D.C. 20546
(202) 863-1223

1.2 MMPF Objectives

To expand opportunities for processing very pure and new forms of materials in a controlled, microgravity environment. The experiments conducted in space will be sponsored by the academic, private, and government sectors. MMPF functions will include basic scientific research, technology development, commercial production proof of concept, commercial prototype manufacturing, and low volume full scale commercial production. Although both attached payloads and free-flyers are associated with the MMPF, this data book addresses only the materials processing scientific laboratory module.

1.3 MMPF Servicing Schedule

Launch Date:	1st quarter, 1995.
First Space Station Service:	1st quarter, 1995.
Servicing Interval:	1 month (from Logistics Module) for consumables replenishment, 3 months for reconfiguration.
Operational Lifetime:	20-30 years.

1.4 MMPF Orbital Parameters

MMPF is housed within a pressurized Space Station scientific laboratory module. Orbital parameters are those of the Space Station. Placement, however, of this laboratory should be near the SS center of gravity in order to maintain acceleration levels at less than 10^{-6} g.

2.0 MMPF PHYSICAL CHARACTERISTICS

2.1 MMPF Description

A continuously-manned, pressurized U.S. Laboratory (USL) module, attached directly to the Space Station, retains the Microgravity and Materials Processing Facility (MMPF). Within this laboratory experiments will be performed within, at present, seven disciplines (bioprocessing, combustion, electronic materials, fluids and transport phenomena, glasses and ceramics, metals and alloys, polymers and chemistry). Organizing experiments according to equipment allows the utilization of modular interchangeable equipment rack sets. At present, 30 such rack sets (called "facilities") will support all 200 plus experiments covering these seven disciplines. Each facility supports, on average, seven experiments (not all within a single discipline) by utilizing quick-installation experiment-specific equipment. Characterization equipment, also available in the laboratory, helps in the preliminary (and possibly more-specific) analysis of samples produced.

2.2 MMPF Physical Characteristics

The overall physical characteristics of the pressurized laboratory follow:

- Mass: 9000 kg (not including the USL)
- Wet Mass: N.A.
- Length: 15.0 m
- Width: 1.0 m
- Height: 3.0 m
- Envelope 45 m^3

The Space Station servicing load for MMPF, however, is based upon the equipment within (or attached to) the module. While the potential facilities and support equipment have been defined, the chronological progression of experiments/facilities is still under study. Section 2.4 discusses the variables which impact the MMPF payload (and thus the servicing of it). Without resolving these factors, the MMPF and its associated servicing requirements is roughly described as follows:

The MMPF payload, characterized by 7 to 17 cubic meters of logistics volume supports six to eight experiments in a 28 square meter rack frontal area module for 90 days. The payload volume and mass depend upon the mission's experiment-selection method, the available rack frontal area, the extent to which characterization of experimental yield is to be performed, and the scheduling of replacement/service parts.

Each facility consists of one to three racks of equipment. Present design characteristics vary between the 30 facilities:

Facility Characteristics

	Height	Width	Depth	Volume	Rack Frontal Area	Mass
Average	1.63 m	1.08 m	0.86 m	1.50 m^3	1.74 m^2	400 kg
Maximum	2.27 m	1.95 m	0.87 m	2.68 m^3	3.10 m^2	1700 kg
Minimum	1.58 m	0.44 m	0.85 m	0.61 m^3	0.70 m^2	75 kg

2.3 MMPF Moving Parts and Special Features

Forty two IOC characterization and support items of equipment have been identified. Many of these items contain moving parts. Examples of such include: the automated cutting/polishing unit, the centrifuge, and the gas sampling pumping system.

2.4 MMPF Consumables

Decisions must be made in several areas before quantitative figures may be stated regarding the servicing requirements of the MMPF laboratory. These areas include:

a. The rack frontal area available for the facilities. 28 square meters supports six to eight experiments for 90 days along with characterization equipment for on-orbit sample analysis. 24 square meters of frontal rack area decreases the amount of on-orbit characterization equipment but still tends to support six to eight experiments. Eight square meters of rack area not only reduces the number of experiments supported by 25% to 50% but also eliminates on-orbit characterization equipment.

b. The extent to which on-orbit characterization will be performed. Increased characterization effort will affect the number of experiments which can be performed during a mission due to the decrease in available space (taken up by the characterization equipment) and the associated increase in experiment duration time. Characterization equipment also requires service and support as do the facilities.

c. The basis for experiment selection. Organizing the experiments performed during a mission according to experimental facilities required tends to demand less support and service than does planning experiments according to discipline area.

d. Experimental chronological order. The progression of equipment change-out/installation can be planned to minimize the service/installation time.

e. The scheduling of replacement/update parts. Extending the expected lifetime of equipment/parts decreases the required volume and mass to be carried to the Space Station by the Shuttle and decreases (within reason) the amount of service time for the part replacement.

f. The length of the mission. Each visit by the Orbiter to the Space Station must supply replacement parts and consumables to last until the next visit of the Shuttle. This document assumes a 3-month interval between Orbiter visits.

g. Choice of characterization equipment. The setup time, calibration time, and calibration intervals of the chosen equipment affect the number of experiments that can be done during the 3-month operation, and thus affect the amount of consumables/samples required during that time period.

h. The number of crew-hours spent per elapsed hour in performing the experiments (i.e. the average number of people performing experiments at one time in the MMPF).

Over 200 potential experiments have been identified. Present plans indicate that six to eight experiments may be completed during a 90 day mission. Each of these experiments must be performed a number of times during this interval. Thus, without the determination of the previously mentioned 8 factors, to quantify the MMPF consumables to be supplied is a yet unachievable task.

The study listed in the Reference Section, averaging 42 strawmen based on varying decisions made for each of the 8 variables discussed in this Section, suggests that with an average panel area of 37 m^2 amd a crew representing 1.4 crew-hours per hour, an average of 6800 kg requiring 134000 liters of consumables volume would be required during every 90 day period. Section 14 evaluates a "typical" servicing mission. Results of this strawman analysis are presented in Section 15.

3.0 MMPF SERVICING INFORMATION

3.1 General Description of MMPF Servicing

Servicing activities include consumables resupply, finished product and waste material removal to earth, as well as equipment change-out, setup, and upgrade.

Materials removal/replenishment occurs every 30 days; change-out of facilities happens every 90 days. Space Station MMPF servicing activities are performed to prepare the module for new experiments. Either the experiment-specific equipment will be installed into the existing facility or a new facility will be installed into the module in addition to the experiment-specific equipment. Characterization equipment for initial examination of experimental results may also need to be installed.

3.2 MMPF Background

MMPF is a new facility housed within a U.S. Laboratory module.

3.3 Primary Role of Space Station in Servicing MMPF

The MMPF is part of the SS reference configuration. MMPF will be resupplied with consumables on a monthly basis from the logistics module, and be reconfigured every 90 days. The logistics module must therefore store 90 days of MMPF consumables/components.

3.4 Primary Space Station Facilities Required for Servicing MMPF

Access to servicing workbench and pressurized logistics module; hookup to SS interfaces; unpressurized logistics module; use of robotics and appropriate end effectors to transfer equipment into the MMPF via a potential external airlock; storage of raw materials, film, video tape, consumables, selected equipment, and finished products; access to an ultra-clean (class 100) room.

3.5 Space Station Personnel Required for Servicing MMPF

MMPF will be manned 24 hours per day with, as a minimum, the following: two shifts of 8 hours each with one Materials Science Ph.D. with a research background; one 8-hour shift with a Materials Science engineer.

3.6 Servicing Precautions for MMPF

Space Station maneuvers and docking which may impart accelerations in excess of 10^{-6} g to the MMPF must be coordinated with the experiment(s) in progress. Acceleration shall be continuously monitored and recorded and must be restrained to:

- under 10^{-6} g steady state vector acceleration
- under 0.001 g transient acceleration (for a few milliseconds). More precisely, amplitude restrictions are frequency dependent. The exact requirements are TBD.

Cryofluid lubricants may be unacceptable if traces of material entering the gas system change the coalescence properties of H_2O in the gas.

3.7 Orbital Maneuvering Vehicle (OMV) Flight Profile Support of MMPF

MMPF is a Space Station Scientific Laboratory Module and, thus, requires no OMV support.

4.0 MMPF SERVICING SAFETY CONSIDERATIONS

4.1 MMPF Hazardous Systems

Hazards within the MMPF depend upon the facilities and characterization equipment present. A summary of the hazards which may be encountered follows:

- Leakage of cooling fluids which may flash into vapor.
- Inert gases which pose a possible suffocation threat.
- Corrosive/reactive materials.

- Combustible substances.
- Toxic chemicals.
- Carcinogenic substances.
- Electrically conductive fibers (graphite) which may loft into the environment.
- Sharp edges or glassware.
- Exposure to generated x-rays and RF.
- Burning fuels in an enclosed area.
- EMI generation which could interfere with other systems.
- Extreme temperatures (high and low).
- High voltage.
- Extreme pressure (high and low).

4.2 MMPF Servicing Safety Precautions

If the laboratory is occupied by a single person, constant radio contact with others in the Space Station shall be maintained.

5.0 MMPF SERVICING INTERFACES AND RESOURCE REQUIREMENTS

5.1 MMPF Crew Convenience Features

A monitor/control station as well as a means of viewing externally attached payloads shall be provided.

Design interfaces for easy integration/deintegration of equipment (plug-in, latch-down simplicity) shall be provided.

Interior attachments for mounting standard size laboratory equipment shall be provided.

Experiment equipment attachment/disconnect shall not require special tooling.

5.2 MMPF Mechanical Interfaces

Hatches must allow passage of an equipment set measuring 1.0 m deep by 1.1 m wide by 1.9 m high (which is one standard double rack).

Air locks must allow passage of an equipment set measuring 1.0 m deep by 0.5 m wide by 1.9 m high (which is one standard single rack).

5.3 MMPF Umbilical Interfaces

Required umbilical interfaces depend upon the experiments and characterization equipment chosen for the mission. The frontal rack area as well as whether experiments are chosen as single discipline or mixed discipline missions affect which experiments are chosen. The quantities stated below approximate values at 24 or 28 square meters of frontal rack area.

Utilities must also be provided to the materials processing payloads attached to the exterior of the MMPF. The umbilicals required to support this equipment, as well as the power, are TBD and are not included in the values listed below.

a. Power
   - Operating
     * 28 kW average power peaking to 62 kW
   - Servicing
     * Servicing will be performed within available operating power limits.

b. Data
   - Servicing Digital Data
     * 1.25 Mbps
   - Video Data

     Servicing video data requirements are TBD pending a clearer definition of servicing versus operations

activities. For reference, video camera operation will generate 25 to 50 Gbit/sec of data for TBD amount of time. Hope exists for a 50 Gbit/sec downlink to transmit data to the ground within 24 hours of data collection. The SS shall provide a storage buffer for a critical time period of data collection - the amount of data to be stored in this buffer is TBD. Nevertheless, MMPF will require the maximum available TDRS data rate available.

- Voice data to ground availability

c. Fluid

Cryogens, cooling systems, gases, water, waste products

5.4 MMPF RF Communication Interface

MMPF will employ SS facilities for all RF communication.

5.5 MMPF Thermal Interface

The atmosphere within the pressurized module is a man-habitable environment with sufficient air circulation flow capacity to accommodate up to 6 people at any time (20 to 25 degrees C, less than 70% relative humidity, a dew point no less than 6 degrees Celsius, 14.7 +/- 0.2 psi, and 20% O_2 for flammability reasons).

6.0 MMPF SERVICING ENVIRONMENT

6.1 MMPF Pointing/Orientation Constraints

a. Exposure to Light

Not applicable; MMPF is not light sensitive.

b. Thermal Control

Not applicable; MMPF has no ambient heat restrictions.

6.2 MMPF Contamination Concerns

Materials processing requires a class 100000 clean room environment. Access to an ultra-clean (class 100) room is required.

6.3. MMPF Radiation Concerns

The radiation environment should be continuously recorded and monitored. X-rays generated during experimentation should also be carefully monitored.

7.0 MMPF SERVICING ACCOMMODATIONS

7.1 MMPF Equipment Access

MMPF is designed for on-orbit servicing with a high level of equipment accessibility. Most equipment is rack mounted.

7.2 MMPF Modularity

All MMPF experiment equipment is considered modular. Facilities will be designed for on-orbit replacement, and will have standardized mechanical, electrical, thermal, gaseous, and vacuum interfaces.

7.3 MMPF Automated Servicing

The potential for automated servicing is small.

7.4 MMPF Servicing in the Space Station Pressurized Modules

The storage location of facilities and characterization equipment will be in the Pressurized Logistics Carrier. The MMPF activities will also require workbenches for equipment repair and calibration. These activities may be moved to other SS pressurized modules.

8.0 MMPF SERVICING MATERIALS CHECKLIST

Servicing Equipment	Required	SS Provided	Comments	Ref.Section
ORUs (including SIs)	Yes	No	Facilities & Char.Equip.	9.0
Flight Support Equipment	No	No		10.0
Other Equipment	No	No		10.0
Servicing Equipment Carrier(s)	Yes	Yes		12.0
Servicing Consumables				
Propellant(s)	No	No		11.0
container(s)	No	No		11.0
Cryogen(s)	Yes	No		11.0
container(s)	Yes	Yes		11.0
Liquid(s)	Yes	No		11.0
container(s)	Yes	Yes		11.0
Gas(es)	Yes	No		11.0
container(s)	Yes	Yes		11.0
Other(s)	Yes	No	Solids	11.0
container(s)	Yes	Yes		11.0
Servicing Equipment Carrier(s)	Yes	Yes		12.0

9.0 MMPF ORBITAL REPLACEABLE UNITS (ORUs)

9.1 Servicing of MMPF ORUs

The 30 presently-identified facilities are listed below in Table MMPF-1. With 24 to 28 square meters of frontal rack area, a number of facilities may be installed at any one time. Every 90 days however, the facilities will be changed as required.

TABLE MMPF-1. MMPF STUDY FACILITIES

Name	Acronym	Number of Experiments Serviced
ACOUSTIC LEVITATOR	ALF	68
ALLOY SOLIDIFICATION	ASF	44
ATMOSPHERIC MICROPHYSICS	AMF	15
AUTOIGNITION FURNACE	AFF	11
BIOREACTOR/INCUBATOR	BIF	7
BRIDGMAN, LARGE	LBCGF	22
BRIDGMAN, SMALL	SBCGF	22
BULK CRYSTAL	BCF	5
CONTINUOUS FLOW ELECTROPHORESIS	CFEF	8
CRITICAL POINT PHENOMENA	CPPF	4
DROPLET/SPRAY BURNING	DBF	11
ELECTROEPITAXY	EF	5
ELECTROSTATIC LEVITATOR	ELF	8
EM LEVITATOR	EMLF	28
FLOAT ZONE	FZCGF	4
FLUID PHYSICS	FPF	6
FREE FLOAT	FFF	1
HIGH TEMPERATURE FURNACE	HTF	19
ISOELECTRIC FOCUSING	IFF	6
LATEX REACTOR	LRF	8
MEMBRANE PRODUCTION	MPF	2
OPTICAL FIBER PULLING	OFPF	3
ORGANIC & POLYMER CRYSTAL GROWTH	OPCGF	6
PREMIXED GAS COMBUSTION	PGCF	7
PROTEIN CRYSTAL GROWTH	PCGF	4
ROTATING SPHERICAL CONVECTION	RSCF	2
SOLID SURFACE BURNING	SSBF	6
SOLUTION CRYSTAL	SCF	10
VAPOR CRYSTAL	VCGF	8
VARIABLE FLOW SHELL GENERATOR	VFSGF	9

As noted in Section 2.4, depending upon numerous factors yet to be decided upon, characterization/support equipment may need to be changed out along with the facilities every 90 days. Forty two (42) IOC pieces of equipment have been identified and listed in Table MMPF-2. An additional 29 items are specified for growth and, as such, are not considered in this document.

9.2 MMPF ORU Physical Characteristics

Tables MMPF-3 and 4 summarize MMPF facility and characterization equipment physical characteristics, respectively. In addition, under the columns "Per Mission Mass/Volume," the physical requirements of replacements to maintain operation of this equipment is listed. Each item not only needs to be replaced at the end of its lifetime, but also requires replacement of components during its life. The sum of the spares mass/volume and the amortized mass/volume estimates the mass/volume per resupply mission required to maintain and replace limited life components and equipment. An assumption is made that four resupply missions per year are flown.

TABLE MMPF-2. MMPF IOC CHARACTERIZATION AND SUPPORT EQUIPMENT LIST

Equipment	Acronym	Number of Facilities* Potentially Used With
3-axis recording accelerometer unit	3A	29
Ampoule cutting/opening device	AO	7
Automated cutting/polishing unit	AP	16
Battery charger	BC	23
Cameras, camera locker	CL	28
Centrifuge	CF	11
Chemical supply storage facility	CS	22
Cleaning equipment	CE	29
Cryofluids storage tanks	CT	4
Digital multimeter	DM	27
Digital pressure transducer	DP	4
Digital recording oscilloscope	DR	26
Digital thermometers	DT	23
Electronics workbench	EW	25
EM-shielded storage locker	EM	23
Etching Equipment	EE	14
Film locker	FL	25
Fluid handling tools	FH	25
Fluids glovebox	FG	25
Freezer	FR	6
Gas mixing & distribution system	GM	5
Gas sampling bottles	GB	4
Gas sampling variable draw pumping system	GS	4
General purpose hand tools	GP	26
Master computer	MC	28
Microscope system	MS	26
Microscope supplies	MP	26
Optical pyrometer	OP	10
Particulate glovebox	PG	16
PH meter	PH	4
Portable UV sterilization source	PS	5
Quartz microprobe	QM	4
Refrigerator	RF	7
Scanning electron microscope	SM	9
Soldering equipment	SE	30
Specimen containers	SC	23
Sputtering deposition unit	SD	4
Video facilities	VF	15
Waste disposal system	WS	28
Water deionizer/depyrogenizer	WD	8
Work bench	WB	29
X-ray facility - general purpose	XR	7

*As noted in Section 2.4, the amount of Characterization/Support Equipment is yet to be determined for any facility/experiment.

TABLE MMPF-3. MMPF FACILITIES AND PER MISSION MAINTENANCE REQUIREMENTS PHYSICAL CHARACTERISTICS

Facility	Frontal Rack Area (m^2)	Volume (m^3)	Mass (kg)	Maintenance Per Mission Volume (m^3)	Maintenance Per Mission Mass (kg)
ALF	1.55	1.338	155	0.212	30.0
ASF	3.10	2.676	500	0.266	30.6
AMF	3.10	2.676	500	0.803	150.
AFF	2.25	1.945	200	0.583	60.
BIF	0.70	0.607	100	0.062	10.2
LBCGF	3.10	2.676	1695	0.576	250.
SBCGF	3.10	2.676	1295	0.290	140.
BCF	1.69	1.462	700	0.296	110.
CFEF	1.95	1.688	400	0.068	22.5
CPPF	2.24	1.909	500	0.494	150.
DBF	1.00	0.867	200	0.234	35.0
EF	1.55	1.338	440	0.143	45.7
ELF	1.55	1.338	300	0.012	18.8
EMLF	2.25	1.945	777	0.049	58.3
FZCGF	1.55	1.338	200	0.105	246.
FPF	1.55	1.338	440	0.201	96.4
FFF	1.55	1.338	250	0.000	0.00
HIF	0.70	0.607	300	0.053	26.2
IFF	0.70	0.607	120	0.106	21.0
LRF	1.55	1.338	124	0.117	29.8
MPF	0.70	0.607	75	0.053	17.5
OFPF	1.55	1.338	175	0.368	55.0
OPCGF	3.10	2.676	600	0.066	21.7
PGCF	1.55	1.338	200	0.201	30.0
PCGF	0.70	0.607	120	0.050	12.3
RSCF	1.55	1.337	130	0.118	11.4
SSBF	1.00	0.867	250	0.368	68.8
SCF	1.55	1.338	420	0.126	43.3
VCGF	1.38	1.204	500	0.151	54.2
VFSGF	2.22	1.926	400	1.070	220.

TABLE MMPF-4. IOC CHARACTERIZATION AND SUPPORT EQUIPMENT AND PER MISSION MAINTENANCE PHYSICAL REQUIREMENTS

Equipment	Volume(m^3)	Mass (kg)	Per Mission Volume (m^3)	Per Mission Mass (kg)
3A	0.0127	5.0	0.0006	0.150
AO	0.0000	10.	0.0000	0.50
AP	0.306	250.	0.0344	28.1
BC	0.00332	2.00	0.0002	0.12
CL	0.328	30.0	0.0076	0.75
CF	0.0842	30.0	0.0063	2.25
CS	0.155	30.0	0.0036	0.75
CE	0.125	15.0	0.125	15.0
CT	0.319	200.	0.876	55.0
DM	0.00058	0.45	0.0000	0.02
DP	0.005	1.0	0.0000	0.08
DR	0.0178	9.5	0.0007	0.36
DT	0.00034	0.21	0.0000	0.01
EW	1.34	350.	0.0669	17.5
EM	0.191	60.	0.0048	1.50
EE	0.0027	5.0	0.0003	0.56
FL	0.332	30.0	0.0096	0.75
FH	0.0996	20.0	0.0050	1.00
FG	0.13	86.	0.0118	7.54
FR	0.306	100.	0.0115	3.75
GM	0.265	40.0	0.0133	2.00
GB	0.048	15.0	0.0048	1.50
GS	0.047	20.0	0.0053	2.25
GP	0.100	50.0	0.0050	2.50
MC	0.459	50.0	0.0459	5.00
MS	0.268	50.0	0.0055	2.19
MP	0.060	10.	0.0600	10.0
OP	0.0045	1.50	0.0002	0.06
PG	0.60	181.	0.0526	15.8
PH	0.0002	0.5	0.0001	0.28
PS	0.0067	8.00	0.0003	0.40
QM	0.0000	1.0	0.0000	0.12
RF	0.344	54.4	0.0129	2.04
SM	1.543	250.	0.136	21.9
SE	0.0022	1.0	0.0001	0.04
SC	0.070	3.0	0.0035	0.15
SD	0.19	34.	0.0097	1.70
VF	0.300	200.	0.0262	17.5
WS	0.156	30.0	0.0169	3.38
WD	0.485	118.	0.0489	11.8
WB	0.649	40.0	0.0243	1.50
XR	1.338	400.	0.0522	26.2
TOTAL	10.694 m^3	2791 kg	0.900 m^3	264 kg

Because the experiment schedule (with associated equipment time lines) is not yet fully determined, exact figures regarding the replacement of limited life components are TBD. An estimate, based on the simultaneous support of all 30 facilities, along with all 71 IOC and post-IOC items of characterization and support equipment, indicates that nine cubic meters of 2500 kilograms mass is required per logistics resupply flight (four resupplies per year) to maintain the MMPF facilities. These figures represent the upper limits for the MMPF ORU support requirements. The strawman presented in Section 14 suggests that using only IOC characterization equipment and maintaining only six facilities at any time, requires four cubic meters of 850 kilograms mass per logistics resupply flight to maintain the MMPF equipment.

9.3 MMPF ORU Storage Requirements

Storage requirements are not available currently. Survival power, extreme temperature limits, etc. are TBD. However, for reference, operation power is presented in Table 5 for MMPF facility and in Table 6 for IOC characterization and support equipment.

Table MMPF-5. MMPF FACILITY POWER REQUIREMENTS

Facility	Input Power	Average Operation Power (W)
ALF	120 V, 400 Hz; 28 V DC	1970
ASF	120 V, 400 Hz; 28 V DC	2800
AMF	120/208, 400 Hz; 28 V DC	1180
AFF	120 V AC; 400 Hz; 28 V DC	4910
BIF	120 V AC, 28 V DC	200
LBCGF	120 V, 400 Hz; 28 V DC	3530
SBCGF	120 V, 400 Hz; 28 V DC	1050
BCF	120 V, 400 Hz; 28 V DC	10100
CFEF	120 V, 400 Hz; 28 V DC	1330
CPPF	120 V, 400 Hz; 28 V DC	460
DBF	120 V, 60 Hz; 28 V DC	256
EF	120 V, 400 Hz	14700
ELF	120 V, 400 Hz	400
EMLF	120 V, 240 V, 60 Hz	1100
FZCGF	120 V, 400 Hz; 28 V DC	7050
FPF	120 V, 400 Hz	2010
FFF	120 V, 400 Hz	600
HTF	120 V, 400 Hz; 28 V DC	3820
IFF	120 V, 400 Hz; 28 V DC	1400
LRF	120 V, 400 Hz	170
MPF	120 V, 60 Hz	150
OFPF	120 V, 400 Hz; 28 V DC	980
OPCGF	120 V, 60 Hz	650
PGCF	120 V, 400 Hz; 28 V DC	450
PCGF	120 V, 400 Hz; 28 V DC	330
RSCF	120 V, 400 Hz; 28 V DC	290
SSBF	120 V, 400 Hz; 28 V DC	260
SCF	120 V, 400 Hz	3050
VCGF	120 V, 400 Hz; 28 V DC	6850
VFSGF	120 V, 60 Hz; 28 V DC	1030

TABLE MMPF-6. IOC CHARACTERIZATION AND SUPPORT EQUIPMENT POWER REQUIREMENTS

Equipment	Input Power	Average Operation Power(W)
3A	28 V DC	20
AO	None	None
AP	120 V, 60 Hz, 400 Hz	500
BC	120 V, 60 Hz	10
CL	None	None
CF	28 V DC	200
CS	28V DC	15
CE	None	None
CT	None	None
DM	Battery Powered	1.8
DP	12-32 V DC	3.5
DR	120 V, 60 Hz	80
DT	12-32 V DC	3.5
EW	None	None
EM	None	None
EE	None	None
FL	None	None
FH	None	None
FG	120 V, 60 Hz	200
FR	120 V, 60 Hz	100
GM	12-32 V DC	5
GB	None	None
GS	120 V, 60 Hz	225
GP	None	None
MC	28 V DC	1000
MS	120 V, 60 Hz	150
MP	None	None
OP	9 V Battery Powered	20
PG	120 V, 60 Hz	200
PH	Battery Powered	N.A.
PS	120 V, 60 Hz	90
QM	None	None
RF	120 V, 60 Hz	500
SM	120 V, 60 Hz	500
SE	120 V, 60 Hz	100
SC	None	None
SD	208 V, 60 Hz	2150
VF	120 V	None
WS	120 V	375
WD	240 V, 60 Hz	3000
WB	None	None
XR	120 V, 60 Hz	4200

9.4 Other Environmental Requirements for MMPF ORUs

No information available.

10.0 MMPF FLIGHT SUPPORT AND MISCELLANEOUS SERVICING EQUIPMENT

10.1 Payload Flight Support Equipment (FSE)

All flight support equipment (tools, cabling, cleaning supplies, etc.) which will be used during servicing are contained within, or are externally attached to, the pressurized MMPF module. As this equipment is required for the operation of MMPF (not just for servicing it), these materials are considered to be ORUs and are described in the previous sections. For example, the calibration of equipment by using the electronics workbench (EW) often is integral to the experimental procedure. This workbench is considered to be an ORU even though this equipment may be used during installation servicing (thus it could be considered FSE). The cleaning of equipment between experiment runs is imperative before the next trial can begin and thus cannot wait until an actual SS servicing mission is scheduled. Cleaning supplies are also considered to be ORUs or consumables. Therefore, since FSE required for servicing MMPF has already been addressed in Section 9.0 under the category of ORUs, tabulation of FSE in this section is inappropriate.

In addition, one of the MMPF design criteria requires that experiment equipment attachment/disconnect shall not require any special tooling. Thus, there will be no equipment (FSE) which will be used only during servicing. All FSE can be included under the ORU equipment section.

10.2 Payload FSE Physical Characteristics

Not applicable.

10.3 Payload FSE Storage Requirements

Not applicable.

10.4 Miscellaneous Servicing Equipment

None.

11.0 MMPF SERVICING CONSUMABLES AND CONTAINERS

11.1 Description and Purpose

The operation of MMPF, the running of experiments, requires the input of samples and consumables. Each experiment will, most likely, need to run a number of times to attain statistically significant data. Section 11.2 provides specific information concerning the consumables and sample requirements per run of representative experiments supported by each facility.

11.2 Physical Characteristics

Table 7 indicates the number of trials which will be performed of each facility's representative experiment. Tables 8 and 9 show the consumables/samples required per run by IOC support equipment and by facility. Tables 10 and 11 quantify the materials which will be vented (rather than returned to Earth as waste) by facility and by IOC characterization equipment. The containers required to carry consumables and samples are assumed to be provided by the Space Station. The data in these tables were derived from the Integrated Data Base mentioned in the reference section.

TABLE MMPF-7. EXPERIMENT DURATION

Facility	Initial Run* (hr:min)	Each Additional Run** (hr:min)	Minimum Useful Number of Runs	Maximum Useful Number of Runs
ALF	20:50	31:00	2	80
ASF	17:30	15:30 + TBD	2	20
AMF	17:00 + TBD	15:30 + TBD	10	200
AAFF	31:20	31:40	10	200
BIF	188:50	190:50	1	5
LBCGF	56:20	55:10	1	3
SBCGF	47:40	46:30	5	15
BCF***	451:00	449:50	1	3
CFEF	148:20	150:20	5	40
CPPF****	273:00 + TBD	272:00 + TBD	1	9
DBF	9:40	11:10	20	200
EF	40:20	39:10	1	10
ELF	5:40	5:00	5	200
EMLF	6:00	5:10	5	200
FZCGF	33:20	33:20	5	20
FPF	31:20	28:50 + TBD	1	20
FFF	5:30	4:10 + TBD	5	50
HTF	12:10	14:20	5	15
IFF	10:30	12:50	5	50
LRF	56:40 + TBD	56:40 + TBD	1	30
MPF	18:10	12:10	5	100

TABLE MMPF-7. EXPERIMENT DURATION (CONT'D)

Facility	Initial Run* (hr:min)	Each Additional Run** (hr:min)	Minimum Useful Number of Runs	Maximum Useful Number of Runs
OFPF	22:40	20:40 + TBD	2	100
OPCGF	11:50	13:10	2	90
PGCF	7:10	8:40	20	200
PCGF	54:40	52:00 + TBD	1000	10000
RSCF	10:50 + TBD	8:20 + TBD	2	20
SSBF	9:20	10:50	20	200
SCF	33:20	35:00	1	20
VCGF	46:40	46:40	1	90
BFSGF	11:20	11:00	10	200

* Includes facilities, samples or crew preparation, the experiment, minimal characterization, reduction of data, and equipment cleaning.

** Includes facilities, samples or crew preparation, the experiment, minimal characterization, extra characterization and equipment cleaning.

*** Includes 240 hours to soak mixture and 168 hours of crystal growth

**** Includes 240 hours of checking periodically and a 24 hour wait to reach thermal equilibrium.

TABLE MMPF-8. CONSUMABLES REQUIRED PER RUN (BY IOC SUPPORT EQUIPMENT)

Equipment	H_2O Mass (kg)	H_2O Vol (l)	Other Liquids Mass (kg)	Other Liquids Vol (l)	Gases Mass (kg)	Gases Vol (l)	Solids Mass (kg)	Solids Vol (l)	Cryogens Mass (kg)	Cryogens Vol (l)
3A	TBD	TBD	TBD	TBD	TBD	TBD	TBD	TBD	TBD	TBD
AO	TBD	TBD	TBD	TBD	TBD	TBD	TBD	TBD	TBD	TBD
AP	0.5	0.5	0.045	0.05	0	0	0.065	0.05	0	0
BC	TBD	TBD	TBD	TBD	TBD	TBD	TBD	TBD	TBD	TBD
CL	0	0	0	0	0.125	100	0	0	0	0
CF	TBD	TBD	TBD	TBD	TBD	TBD	TBD	TBD	TBD	TBD
CS	0	0	0	0	1.286	1000	0	0	0	0
CE	0	0	0	0	0	0	0	0	0	0
CT	TBD	TBD	TBD	TBD	TBD	TBD	TBD	TBD	TBD	TBD
DM	TBD	TBD	TBD	TBD	TBD	TBD	TBD	TBD	TBD	TBD
DP	TBD	TBD	TBD	TBD	TBD	TBD	TBD	TBD	TBD	TBD
DR	TBD	TBD	TBD	TBD	TBD	TBD	TBD	TBD	TBD	TBD
DT	TBD	TBD	TBD	TBD	TBD	TBD	TBD	TBD	TBD	TBD
EW	TBD	TBD	TBD	TBD	TBD	TBD	TBD	TBD	TBD	TBD
EM	TBD	TBD	TBD	TBD	TBD	TBD	TBD	TBD	TBD	TBD
EE	0	0	0.849	0.106	0	0	0	0	0	0
FL	0	0	0	0	0	0	0	0	0	0
FH	TBD	TBD	TBD	TBD	TBD	TBD	TBD	TBD	TBD	TBD
FG	0	0	0	0	0.188	150	0	0	0	0
FR	0	0	0	0	0	0	0	0	210	260
GM	0	0	0	0	0.0125	10	0	0	0	0
GB	0	0	0	0	0.0125	10	0	0	0	0
GS	0	0	0	0	0.0125	10	0	0	0	0
GP	TBD	TBD	TBD	TBD	TBD	TBD	TBD	TBD	TBD	TBD
MC	TBD	TBD	TBD	TBD	TBD	TBD	TBD	TBD	TBD	TBD
MS	TBD	TBD	TBD	TBD	TBD	TBD	TBD	TBD	TBD	TBD
MP	TBD	TBD	TBD	TBD	TBD	TBD	TBD	TBD	TBD	TBD
OP	TBD	TBD	TBD	TBD	TBD	TBD	TBD	TBD	TBD	TBD
PG	TBD	TBD	TBD	TBD	TBD	TBD	TBD	TBD	TBD	TBD
PH	TBD	TBD	TBD	TBD	TBD	TBD	TBD	TBD	TBD	TBD

TABLE MMPF-8. CONSUMABLES REQUIRED PER RUN (BY IOC SUPPORT EQUIPMENT) (CONT'D)

Equipment	H_2O Mass (kg)	H_2O Vol (l)	Other Liquids Mass (kg)	Other Liquids Vol (l)	Gases Mass (kg)	Gases Vol (l)	Solids Mass (kg)	Solids Vol (l)	Cryogens Mass (kg)	Cryogens Vol (l)
PS	0	0	0	0	0.0621	48.3	0	0	0	0
QM	TBD	TBD	TBD	TBD	TBD	TBD	TBD	TBD	TBD	TBD
RF	TBD	TBD	TBD	TBD	TBD	TBD	TBD	TBD	TBD	TBD
SM	0	0	0	0	0.0504	28.3	0	0	1.61	2.00
SE	TBD	TBD	TBD	TBD	TBD	TBD	TBD	TBD	TBD	TBD
SC	TBD	TBD	TBD	TBD	TBD	TBD	TBD	TBD	TBD	TBD
SD	TBD	TBD	TBD	TBD	TBD	TBD	TBD	TBD	TBD	TBD
VF	TBD	TBD	TBD	TBD	TBD	TBD	TBD	TBD	TBD	TBD
WS	TBD	TBD	TBD	TBD	TBD	TBD	TBD	TBD	TBD	TBD
WD	0	0	0	0	0	0	2.5	2.0	0	0
WD	TBD	TBD	TBD	TBD	TBD	TBD	TBD	TBD	TBD	TBD
XR	0	0	0	0	0.25	200	0	0	0	0

TABLE MMPF-9. CONSUMABLES & SAMPLES REQUIRED PER RUN (BY FACILITY)

Facility	H_2O Mass (kg)	H_2O Vol (l)	Other Liquids Mass (kg)	Other Liquids Vol (l)	Gases Mass (kg)	Gases Vol (l)	Solids Mass (kg)	Solids Vol (l)	Cryogens Mass (kg)	Cryogens Vol (l)
ALF	2	2	2	2	0.580	455	0.6	0.1	0	0
ASF	8	8	6	6	1.77	1400	4.93	0.66	0.	0
AMF	10.	10.	0.021	0.021	0.091	70.7	0.1	0.02	0	0
AFF	0.5	0.5	0.05	0.05	5.41	4180	0	0	0	0
BIF	0.5	0.5	2.25	2.25	0.642	425	0.25	0.5	0	0
LBCGF	2	2	0.1	0.1	0.842	550	62.9	7.85	0	0
SBCGF	2	2	0.5	0.5	0.539	350	2.523	0.315	0	0
BCF	4.9	4.9	135	15.1	0.904	600	450	50	0	0
CFEF	140	140	8.76	7.96	0	0	0.40	0.30	0	0
CPPF	0	0	0.75	1.0	0.286	400	0	0	72.9	320
DBF	0.02	0.02	0.040	0.040	0.388	302	0	0	0	0
EF	2.0	2.0	0	0	0.672	1000.	12.5	32.0	0	0
ELF	0.1	0.1	0.01	0.01	0.094	74	0.016	0.0018	0	0
EMLF	0.1	0.1	0.01	0.01	0.0777	72	0.033	0.00177	0	0
FZCGF	1.0	1.0	0.1	0.1	0.0428	28	0.966	0.129	0	0
FPF	2.0	2.0	0.1	0.1	0.0375	30	2.0	1.0	0	0
FFF	0.1	0.1	0.01	0.01	0.116	90	0.01	0.0005	0	0
HTF	0.2	0.2	0.02	0.02	0.048	46.5	0.376	0.047	0	0
IFF	15	15	1.67	1.31	0	0	0.15	0.10	0	0
LRF	0	0	1.14	1.25	0	0	3.68	2.75	0	0
MPF	0.05	0.05	0.083	0.083	0	0	0	0	0	0
OFPF	1.0	1.0	0.1	0.1	0.641	88	0.6	0.1	0	0
OPCGF	4.0	4.0	72.4	68.9	0.0744	60	0.00002	0.00002	0	0
PGCF	0.02	0.02	0.388	303	0.01	0.01	0	0	0	0
PCGF	0.7	0.7	0.034	0.028	0.565	432	2.00	5.00	0	0
RSCF	0	0	1.12	1.00	0.0025	2.0	0.00002	0.00002	0	0
SSBF	0.02	0.02	0.002	0.002	0.388	302	0.025	0.05	0	0
SCF	2.0	2.0	11.3	5.25	0.451	361	0.751	15.0	0	0
VCGF	1.0	1.0	0.01	0.01	1.63	336	113.6	14.2	0	0
VFSGF	1.0	1.0	0.05	0.05	0.555	600	10.1	1.0	16.12	20.0

TABLE MMPF-10. MMPF FACILITY VENTING REQUIREMENTS PER RUN

Facility	H_2O Mass (kg)	H_2O Vol (l)	Other Liquids Mass (kg)	Other Liquids Vol (l)	Gases Mass (kg)	Gases Vol (l)	Solids Mass (kg)	Solids Vol (l)	Cryogens Mass (kg)	Cryogens Vol (l)
ALF	0.002	0.002	0.020	0.020	0.580	455	0.	0	0	0
ASF	0.008	0.008	0.060	0.060	1.77	1400	0.	0	0.	0
AMF	0.010	0.010	0.0002	0.0002	0.0906	70.7	0.	0	0.	0
AFF	0.0005	0.0005	0.0005	0.0005	9.33	7200	0.	0	0.	0
BIF	0.0005	0.0005	0.0025	0.0025	0.642	425	0.	0	0.	0
LBCGF	0.002	0.002	0.001	0.001	0.842	550	0.	0	0.	0
SBCGF	0.002	0.002	0.005	0.005	0.536	350	0.0002	0.0000	0.	0
BCF	0.0049	0.0049	0.001	0.001	0.904	600	0.	0	0.	0
CFEF	0.14	0.14	0.0060	0.0052	0.	0.	0.	0	0.	0
CPPF	0.0000	0.0000	0.0075	0.010	0.286	400	0.	0	52.8	260
DBF	0.0000	0.0000	0.0301	0.0301	0.724	542	0.	0	0.	0
EF	0.0020	0.0020	0.0000	0.0000	0.672	1000	0.0110	0.0020	0.	0
ELF	0.0001	0.0001	0.0000	0.0000	0.0940	74	0.	0	0.	0
EMLF	0.0001	0.0001	0.0000	0.0000	0.0777	72	0.	0	0.	0
FZCGF	0.0010	0.0010	0.0010	0.0010	0.0428	28	0.	0	0.	0
FPF	0.0020	0.0020	0.0021	0.0011	0.0375	30	0.	0	0.	0
FFF	0.0001	0.0001	0.0001	0.0001	0.116	90	0.	0	0.	0
HTF	0.0002	0.0002	0.0002	0.0002	0.0480	46.4	0.	0	0.	0
IFF	0.0150	0.0150	0.0140	0.0104	0.	0.	0.	0	0.	0
LRF	0.	0.	0.0001	0.0001	0.	0.	0.0001	0.0001	0.	0
MPF	0.0000	0.0000	0.0002	0.0002	0.	0.	0.	0	0.	0
OFPF	0.0010	0.0010	0.0010	0.0010	0.641	88.0	0.	0	0.	0
OPCGF	0.0040	0.0040	0.0350	0.0349	0.0744	60.0	0.	0	0.	0
PGCF	0.0000	0.0000	0.0001	0.0001	0.696	543	0.	0	0.	0
PCGF	0.0007	0.0007	0.0005	0.0003	0.566	432	0.	0	0.	0
RSCF	0.0000	0.0000	0.0051	0.0050	0.0025	2.00	0.	0	0.	0
SSBF	0.0000	0.0000	0.0000	0.0000	0.719	542	0.025	0.05	0.	0
SCF	0.0020	0.0020	0.0052	0.0032	0.451	361	0.	0	0.	0
VCGF	0.0010	0.0010	0.0001	0.0001	1.63	336	0.0114	0.0014	0.	0
VFSGF	0.0010	0.0010	0.0005	0.0005	0.555	600	0	0.	16.12	20

TABLE MMPF-11. IOC CHARACTERIZATION EQUIPMENT VENTING REQUIREMENTS PER RUN

Equipment	H_2O Mass (kg)	H_2O Vol (l)	Other Liquids Mass (kg)	Other Liquids Vol (l)	Gases Mass (kg)	Gases Vol (l)	Solids Mass (kg)	Solids Vol (l)	Cryogens Mass (kg)	Cryogens Vol (l)
3A	TBD	TBD	TBD	TBD	TBD	TBD	TBD	TBD	TBD	TBD
AO	TBD	TBD	TBD	TBD	TBD	TBD	TBD	TBD	TBD	TBD
AP	TBD	TBD	TBD	TBD	TBD	TBD	TBD	TBD	TBD	TBD
BC	TBD	TBD	TBD	TBD	TBD	TBD	TBD	TBD	TBD	TBD
CL	0	0	0	0	0.125	100	0	0	0	0
CF	TBD	TBD	TBD	TBD	TBD	TBD	TBD	TBD	TBD	TBD
CS	0	0	0	0	1.29	1000	0	0	0	0
CE	0	0	0	0	0	0	0	0	0	0
CT	TBD	TBD	TBD	TBD	TBD	TBD	TBD	TBD	TBD	TBD
DM	TBD	TBD	TBD	TBD	TBD	TBD	TBD	TBD	TBD	TBD
DP	TBD	TBD	TBD	TBD	TBD	TBD	TBD	TBD	TBD	TBD
DR	TBD	TBD	TBD	TBD	TBD	TBD	TBD	TBD	TBD	TBD
DT	TBD	TBD	TBD	TBD	TBD	TBD	TBD	TBD	TBD	TBD
EW	TBD	TBD	TBD	TBD	TBD	TBD	TBD	TBD	TBD	TBD
EM	TBD	TBD	TBD	TBD	TBD	TBD	TBD	TBD	TBD	TBD
EE	0	0	.0425	.0053	0	0	0	0	0	0
FL	0	0	0	0	0	0	0	0	0	0
FH	TBD	TBD	TBD	TBD	TBD	TBD	TBD	TBD	TBD	TBD
FG	TBD	TBD	TBD	TBD	TBD	TBD	TBD	TBD	TBD	TBD
FR	0	0	0	0	0	0	0	0	210	260

TABLE MMPF-11. IOC CHARACTERIZATION EQUIPMENT VENTING REQUIREMENTS PER RUN (CONT'D)

Equipment	H_2O Mass (kg)	H_2O Vol (l)	Other Liquids Mass (kg)	Other Liquids Vol (l)	Gases Mass (kg)	Gases Vol (l)	Solids Mass (kg)	Solids Vol (l)	Cryogens Mass (kg)	Cryogens Vol (l)
GM	0	0	0	0	0.0125	10.0	0	0	0	0
GB	0	0	0	0	0.0125	10.0	0	0	0	0
GS	0	0	0	0	0.0125	10.0	0	0	0	0
GP	0	0	0	0	0	0	0	0	0	0
MC	TBD	TBD	TBD	TBD	TBD	TBD	TBD	TBD	TBD	TBD
MS	TBD	TBD	TBD	TBD	TBD	TBD	TBD	TBD	TBD	TBD
MP	TBD	TBD	TBD	TBD	TBD	TBD	TBD	TBD	TBD	TBD
OP	TBD	TBD	TBD	TBD	TBD	TBD	TBD	TBD	TBD	TBD
PG	0	0	0	0	0.188	150.	0	0	0	0
PH	TBD	TBD	TBD	TBD	TBD	TBD	TBD	TBD	TBD	TBD
PS	0	0	0	0	0.0621	48.3	0	0	0	0
QM	TBD	TBD	TBD	TBD	TBD	TBD	TBD	TBD	TBD	TBD
RF	TBD	TBD	TBD	TBD	TBD	TBD	TBD	TBD	TBD	TBD
SM	0	0	0	0	0.0504	28.3	0	0	1.61	2.00
SE	TBD	TBD	TBD	TBD	TBD	TBD	TBD	TBD	TBD	TBD
SC	TBD	TBD	TBD	TBD	TBD	TBD	TBD	TBD	TBD	TBD
SD	TBD	TBD	TBD	TBD	TBD	TBD	TBD	TBD	TBD	TBD
VF	TBD	TBD	TBD	TBD	TBD	TBD	TBD	TBD	TBD	TBD
WS	TBD	TBD	TBD	TBD	TBD	TBD	TBD	TBD	TBD	TBD
WD	TBD	TBD	TBD	TBD	TBD	TBD	TBD	TBD	TBD	TBD
WB	TBD	TBD	TBD	TBD	TBD	TBD	TBD	TBD	TBD	TBD
XR	0	0	0	0	0.250	200.	0	0	0	0

11.3 Storage Requirements

None available.

12.0 CARRIERS FOR MMPF SERVICING MATERIALS

12.1 Description of Carriers

Servicing materials will be transported within the pressurized and the unpressurized logistics carriers. It is assumed that these carriers will be provided by the Space Station.

12.2 STS and SS Carrier Interfaces

None specified.

12.3 Servicing Materials/Carrier Interfaces

None specified.

13.0 MMPF ORBITAL SERVICING ACTIVITIES TIME ESTIMATES

13.1 Mission Servicing Ground Rules and Constraints

This document does not address contingency operations. Thus the use of the work benches for unexpected equipment repair is not considered here as a planned servicing activity. In addition, only IOC MMPF characterization and support equipment is considered; post-IOC or growth equipment is not included in this analysis. All equipment/facilities not currently in use are assumed to be stored in the pressurized logistics module. Upon changeout, equipment which is no longer required will be moved to and stored in this internal pressurized storage area. All consumables and samples are assumed to be stored in the unpressurized logistics module.

13.2 Preparatory Servicing Time Estimates

No servicing preparatory activities are identified.

13.3 Principal Servicing Time Estimates

Five types of activities may be performed during the MMPF's "principal" servicing. Every 30 days, 1) consumables and samples will be replenished, and 2) materials and specimen will be collected for return to earth. Every 90 days, 1) racks of equipment (or partial racks) will be changed-out, 2) characterization equipment will be installed or extracted, and 3) equipment used during the last 90 days will be maintained.

a. Consumables and Samples Replenishment

No estimates concerning the time required for materials replenishment are available.

b. Collection of Materials and Specimen for Earth Return

No time estimates are available for materials collection for return to Earth.

c. Facility Extraction or Installation*

Facility	Elapsed Time (hr:min)	IVA** Time (Crew-hr:min)	EVA*** Time (Crew-hr:min)	Robotics*** Time (hr:min)
ALF	1:30	2:10^	N/A	N/A
ASF	1:40	2:25^		
AMF	2:00	2:50^		
AFF	2:30	3:35^		
BIF	1:30	2:10^		
LBCGF	2:30	3:35^		
SBCGF	1:40	2:25^		
BCF	2:30	3:35^		
CFEF	1:30	2:10^		
CPPF	1:45	2:30^		
DBF	1:30	2:10^		
EF	1:30	2:10^		
ELF	1:45	2:30^		
EMLF	2:30	3:35^		
FZCGF	2:30	3:35^		
FPF	1:00	1:25^		
FFF	1:45	2:30^		
HIF	1:30	2:10^		
IFF	1:30	2:10^		
LRF	1:30	2:10^		
MPF	1:00	1:25^		
OFPF	1:30	2:10^		
OPCGF	1:30	2:10^		
PGCF	1:30	2:10^		
PCGF	1:30	2:10^		
RSCF	1:30	2:10^		
SSBF	1:30	2:10^		
SCF	1:00	1:25^		
VCGF	1:30	2:10^		
VFSGF	2:30	3:35^		

* Assumes that extraction time is the same as installation time.

** Assumes 1.43 crew-hours per hour (from Teledyne Brown/Boeing study)

*** Assumes that this is all done IVA

d. Characterization Equipment Installation/Extraction

No information is available regarding the time required to install or to extract characterization and support equipment.

e. Equipment Maintenance

No information is available regarding time estimates to maintain facilities and support equipments. In the strawman of Section 14, however, the BDM estimating equation based on MMPF facility installation is used to estimate maintenance time.

13.4 Close-Out Servicing Time Estimates

No activities identified.

14.0 MMPF STRAWMAN SERVICING SCENARIO

14.1 MMPF STRAWMAN SERVICING MISSION

This databook compiles information on a quarterly basis. Therefore, this strawman represents the servicing activities that would be required to support a "typical" quarter of MMPF experimentation. In order to do this, assumptions are made regarding the equipment already in the MMPF. The servicing scenario represents the setup of equipment which will support the next 90 days of experimentation, the supply of all consumables/samples that will be needed during this term, the collection of resultant specimen and waste materials, and the maintenance of equipment used during this period. (It is assumed

that maintenance is required only when equipment is used. Venting, calibration, and cleaning activities are assumed to have been completed by the MMPF specialists as they perform their experiments. This strawman servicing mission assumes that the experiments in progress and completed at the time of servicing are as follows:

	Experiment	Facility	Status
1.	Droplet Burning	DBF	In progress
2.	Electroexpitaxial Crystal Growth	EF	Complete
3.	Electromagnetic Containerless Processing	ELF	Complete
4.	Free Surface Phenomena	VFSGF	Complete
5.	Isoelectric Focusing	IFF	Complete
6.	Monodisperse Latex Spheres	SCF	Complete
7.	Protein Crystal Growth	SCF	In progress

The experiments which will be performed in the next 90 day mission are:

	Experiment	Facility	Objective
1.	Cloud Formation Microphysics	AMF	22 trials
2.	Continuous Flow Electrophoresis	CFEF	5 trials
3.	Directional Solidification	VCGF	5 trials
4.	Droplet Burning	DBF	30 trials
5.	Protein Crystal Growth	SCF	3 trials
6.	Solidification of Immiscible Alloys	ASF	10 trials
7.	Vapor Phase Crystal Growth	VCGF	5 trials

14.2 MMPF Description

MMPF is contained within a continuously-manned, pressurized, U.S. Laboratory. The overall physical characteristics are listed in Section 2.2.

14.3 Strawman Servicing Materials

a. ORUs

The following facilities need to be moved out of the active experiment area and stored in the pressurized logistics carrier. The support and characterization equipment required by both sets of experiments are common; no support equipment needs to be moved in this strawman.

Facility To Be Removed	Mass (kg)	Volume (m^3)	Elapsed Time (hr:min)	IVA Time (Crew-hr:min)	EVA Time (Crew-hr:min)	Robotics Time (hr:min)
1. EF	440	1.338	1:30^	2:10^	0:00	0:00
2. ELF	300	1.338	1:45^	2:30^	0:00	0:00
3. VFSGF	400	1.926	2:30^	3:35^	0:00	0:00
4. IFF	120	0.607	1:30^	2:10^	0:00	0:00
TOTAL	1260 kg	5.21 m^3	7:15^	10:25^	0:00	0:00

The following facilities must be moved into the active experiment area:

Facility To Be Installed	Mass (kg)	Volume (m^3)	Elapsed Time (hr:min)	IVA Time (Crew-hr:min)	EVA Time (Crew-hr:min)	Robotics Time (hr:min)
1. AMF	500	2.676	2:00^	2:50^	0:00	0:00
2. CFEF	400	1.688	1:30^	2:10^	0:00	0:00
3. VCGF	500	1.204	1:30^	2:10^	0:00	0:00
4. ASF	500	2.676	1:40^	2:25^	0:00	0:00
TOTAL	1900	8.24	6:40^	9:35^	0:00	0:00

To maintain the equipment used during this 90 day period, replacement components must be exchanged. The assumption is made that the useful lifetime of equipment decreases during the quarter in which it is in use; equipment in storage needs no maintenance component exchange. An assumption is made that all IOC characterization and support equipment is used except for the cryofluids storage tank (CT) and the sputtering deposition unit (SD).

The following table summarizes the servicing requirements of equipment maintenance for this quarter.

MAINTENANCE REQUIREMENTS*

Equipment	Per Quarter Mass (kg)	Per Quarter Volume (m^3)	Elapsed Time (Crew-hr:min)	IVA Time (Crew-hr:min)	EVA Time (Crew-hr:min)	Robotics Time (hr:min)
Characterization (All but CT and SD)	207	0.80	10:00^	15:00^	0:00^	0:00^
Facilities	336	1.65	5:00^	7:00^	0:00^	0:00^
TOTAL	540	2.5	15:00^	22:00^	0:00^	0:00^

*No data is available for equipment maintenance servicing. Assuming that this time is analogous to that required to install facilities allows the use of the BDM estimate: T = 90 + 0.03 M where T = elapsed time in minutes, and M is the mass (kg) of the facility serviced. Note, however, that the method used to apply this equation is significant due to the 90 minute constant. If grouped together, this equation suggests that 2 hours are required to service 6 facilities. Taken separately, 9 hours are required to service these same facilities. If taken together, this equation yields 3 hours to service the characterization equipment and 61 hours if taken separately. The time estimates presented in this table, thus, are quite approximate.

b. FSE and Miscellaneous Equipment

None Required.

c. Consumables and Containers

The following table summarizes the consumables and samples which will return to Earth as a result of the experiments performed during the 90 day period. Please note that Section 9's data is only indicative of the experiments which could be performed at a facility. Actual consumable requirements are not known and will vary according to the number of times that each experiment is run. Also, all TBD data of Section 9 were assumed to be zero.

SCENARIO CONSUMABLES AND SAMPLES REQUIREMENTS

Substance	STS Mass Up (kg)	STS Mass Down (kg)	STS Volume Up (l)	STS Volume Down (l)
Water*	1030	1030	1030	1030
Other Liquids	149	147	119	118
Gases	177	48	129360	38950
Solids	140	140	256	256
Cryogens	1070	0	1320	0
TOTAL	2570	1360	132100	40400

* Assumes no SS-based H_2O recycling

14.4 Estimated Up/Down Mass on STS to Support MMPF Strawman Servicing

SERVICING MATERIAL	MASS UNPRESSURIZED TRANSPORT (kg)	MASS PRESSURIZED TRANSPORT (kg)	MASS TOTAL (kg)
Equipment			
SI(s)	0	0	0
ORU(s)*	0	1900	1900
Unique FSE	0	0	0
Misc. Equipment**	0	540	540
Equipment Subtotal	0	2440	2440
Equipment Carrier(s)***	0	0	0
Subtotal, Equipment Mass Up	0	2440	2440
Subtotal, Equipment Mass Down	0	2440	2440
Consumables			
Consumables	2570 (U), 1360 (D)	0	2570/1360
Consumables Containers***	0	0	0
Consumables Containers' Carriers***	0	0	0
Subtotal, Consumables Mass Up	2570	0	2570
Subtotal, Consumables Mass Down	1360	0	1360
Total Mass Up	2570	2440	5000
Total Mass Down	1360	2440	3800

* Facilities
** Maintenance
*** Provided by the SS

14.5 Estimated Up/Down Volume on STS to Support MMPF Strawman Servicing

SERVICING MATERIAL	VOLUME, UNPRESSURIZED TRANSPORT (m^3)	VOLUME, PRESSURIZED TRANSPORT (m^3)	VOLUME, TOTAL (m^3)
Equipment			
SI(s)	0	0	0
ORU(s)*	0	8.2	8.2
Unique FSE	0	0	0
Misc. Equipment**	0	2.5	2.5
Equipment Subtotal	0	10.7	10.7
Equipment and Carriers Subtotal***	0	10.7	10.7
Consumables			
Consumables	130 (U), 40 (D)	0	130 (U), 40 (D)
Consumables, Containers, and Carriers***	130 (U), 40 (D)	0	130 (U), 40 (D)
Total Volume Up	130	10.7	141
Total Volume Down	40	10.7	51

* Facilities
** Maintenance
*** Containers and carriers provided by the SS

14.6 Storage on Space Station Required to Support Strawman MMPF Servicing

Continuous Storage	Unpressurized*	Pressurized**	Total
Mass (kg)	2600	2400	5000
Volume (m^3)	130	11	140
Average Power (watts)	TBD	0	TBD
Temperature Range (^oC)	TBD	20 to 25^oC	0
Temporary Storage			
Mass (kg)	0	0	0
Volume (m^3)	0	0	0
Average Power (watts)	0	0	0
Temperature Range (^oC)	-	-	

* Consumables storage
** Facilities storage

14.7 MMPF Strawman Servicing Power Estimate

	Operational Mode (watts)		Servicing Mode (watts)	
	Avg	Max	Avg	Max
MMPF	28000	62000	TBD	TBD

14.8 MMPF Strawman Servicing Time Estimates

Activity	Elapsed Time (hr:min)	IVA Time (Crew-hr:min)	EVA Time (Crew-hr:min)	Robotics Time (hr:min)
1. Maintain Used Equipment	15:00^	22:00^	0:00^	0:00^
2. Remove Facilities	7:15^	20:25^	0:00^	0:00^
3. Install Facilities	6:40^	9:35^	0:00^	0:00^
4. Remove Specimen and Waste	TBD	TBD	TBD	TBD
5. Replenish Samples and Consumables	TBD	TBD	TBD	TBD
TOTAL	29:00^ +TBD	52:00^ + TBD	TBD	TBD

14.9 OMV Flights in Support of MMPF Strawman Servicing

None Required.

15.0 OVERALL REQUIREMENTS SUMMARY FOR SS SERVICING OF MMPF

15.1 MMPF Milestones and Servicing Schedule (Nominal Mission Model)

Event	Location	Date
MMPF Launch	KSC	1st quarter, 1995
Servicing	SS-attached	every quarter
Payload Mission Termination		2018 or later

15.2 Summary of MMPF Mass Considerations

a. MMPF Mass
Servicing and Operational Mass: 9000 kg

b. MMPF Servicing Mass Up and Down in STS*

Event	Mass Up (kg)	Mass Down (kg)
Launch	9000	0
1st thru 44th servicing**	220000	167200
Termination	0	9000
Totals	229000	176200
SS Servicing Total	220000	167200

* This represents the requirements through the year 2005, i.e., only 11 years of MMPF's planned lifetime of 20-30 years.

** Based on 5000 kg Mass Up and 3800 kg Mass Down for each Servicing mission

c. MMPF Servicing Storage Mass on Space Station

	Storage Mass (kg)		
Calendar Year	Unpressurized	Pressurized	Total
1995	2600	2400	5000
1996	2600	2400	5000
1997	2600	2400	5000
1998	2600	2400	5000
1999	2600	2400	5000
2000	2600	2400	5000
2001	2600	2400	5000
2002	2600	2400	5000
2003	2600	2400	5000
2004	2600	2400	5000
2005	2600	2400	5000

15.3 Summary of MMPF Volume considerations

a. MMPF Volume

MMPF Volume, Operational Configuration: 45 m^3
MMPF Volume, Servicing Configuration: 45 m^3
MMPF Volume, Storage/Transportation Configuration: 45 m^3

b. MMPF Servicing Volumes Up and Down in STS*

Event	Volume Up (m^3)	Volume Down (m^3)
Launch	45	0
1st thru 44th Servicing Mission**	6100	2200
Termination	0	45
Totals	6205	2245
Servicing Total	6160	2200

* This represents the requirements through the year 2005, i.e. only 11 years of MMPF's planned lifetime of 20-30 years.

** Based on 140 m^3 volume up and 50 m^3 volume down each servicing mission.

c. MMPF Servicing Storage Volume on Space Station

	Storage Volume (m^3)		
Calendar Year	Unpressurized	Pressurized	Total
1995	130	11	140
1996	130	11	140
1997	130	11	140
1998	130	11	140
1999	130	11	140
2000	130	11	140
2001	130	11	140
2002	130	11	140
2003	130	11	140
2004	130	11	140
2005	130	11	140

15.4 Summary of MMPF Power Considerations

	Average	Maximum
MMPF Operational Power (watts)	28000	62000
MMPF Servicing Power (watts)	TBD	TBD
Storage Power, Servicing Materials (watts)	TBD	TBD

15.5 Summary of MMPF Servicing Time Estimates

Calendar Year	95	96	97	98	99	00	01	02	03	04	05
Elapsed Time (Hours:min)	116:00	116:00	116:00	116:00	116:00	116:00	116:00	116:00	116:00	116:00	116:0
IVA Time (Crew-Hrs:min)	208:00	208:00	208:00	208:00	208:00	208:00	208:00	208:00	208:00	208:00	208:0
EVA Time (Crew-Hrs:min)	TBD	TBD	TBD	TBD	TBD	TBD	TBD	TBD	TBD	TBD	TBD
TOTAL Crew-Time (Crew-Hrs:min)	208:00	208:00	208:00	208:00	208:00	208:00	208:00	208:00	208:00	208:00	208:0
Robotic Time (Hours:min)	TBD	TBD	TBD	TBD	TBD	TBD	TBD	TBD	TBD	TBD	TBD

Note: Totals do not reflect the data values which are TBD.

15.6 Summary of OMV Flights in Support of MMPF SS Servicing

None required.

REFERENCES

1. "Mission Requirements Database", January 1987, NASA/JSC

2. "Microgravity and Materials Processing Facility Study Data Release", Teledyne Brown Engineering & Boeing Aerospace Company, Huntsville, Alabama:

   Volume I, MMPF User Requirements Development, June 30, 1986

   Volume II, Experiment/Equipment Development, June 30, 1986

   Volume II, Appendix A. Integrated Data Base, June 30, 1986

   Volume III, MMPF System Requirements Development, June 30, 1986

   Volume II A, Issue February 1, 1987

   Volume IV, MMPF Programmatics and Planning, February 2, 1987

PLASMA INTERACTION MONITORING SYSTEM (PIMS): MISSION CODE TBD

1.0 PIMS PROGRAM AND OPERATIONS INFORMATION

1.1 PIMS Points of Contact

Dr. Stan Shawhan
NASA/HQ
Washington, D.C. 20546
(202) 453-1676

Mr. William Roberts
NASA/MSFC
Huntsville, Alabama
(204) 544-0621

1.2 PIMS Milestones and Objectives

The PIMS objective is to measure the induced space environment around the Space Station and the interactive effects between the Space Station and this environment.

1.3 PIMS Servicing Schedule

Launch Dates: 1st quarter, 1994 through 4th quarter 1997
First Space Station Service: No Servicing Planned
Servicing Interval: None
Operational Lifetime: better than 5 years

PIMS plans on launching an instrument package on every Space Station Main Base (MB) assembly launch.

1.4 PIMS Orbital Parameters

PIMS is a Space Station (SS) attached payload and, thus, has the same orbital parameters as the Space Station.

2.0 PIMS PHYSICAL CHARACTERISTICS

2.1 PIMS Description

PIMS is a system of distributed, autonomous instrument packages, each of which consists of a full set of common modules in a building-block approach. The individual instrument packages will

be outfitted to measure (at a minimum) magnetic and electric fields, neutral particle masses and densities, ion masses and densities, and electron densities, temperatures, and pitch angles. The locations of these packages will be chosen so that a comprehensive model of the Space Station's environment may be developed. Candidate locations for the package include ends of the transverse boom, the vicinity of the external attach points, the solar panels (or their booms) and the modules.

2.2 PIMS Physical Characteristics

Individual PIMS packages will weigh about 100 kilograms and will be about 0.5 cubic meters in volume (not including booms).

2.3 PIMS Moving Parts and Special Features

With the exception of some booms, PIMS has no moving parts. Instruments such as Langmuir probes, magnetometers, and ion mass spectrometers will be deployed on booms. The booms will only be a couple of meters in length at most, and will be retractable.

2.4 PIMS Consumables and Limited Life Components

PIMS has no consumables.

3.0 PIMS SERVICING INFORMATION

3.1 General Description of PIMS Servicing

PIMS does not require servicing. The individual PIMS packages will be replaced on orbit as required.

3.2 PIMS Background

Although PIMS itself has not flown before, the type of instruments that will be used have flown many times before.

3.3 Primary Role of SS in Servicing PIMS

None, no servicing is required.

3.4 Primary SS Facilities Required for Servicing PIMS

None, no servicing is required.

3.5 Space Station Personnel Required for Servicing PIMS

None, no servicing is required.

3.6 Servicing Precautions for PIMS

None, no servicing is required.

3.7 OMV Flight Profile in Support of PIMS Servicing

PIMS requires no OMV support.

4.0 PIMS SERVICING SAFETY CONSIDERATIONS

4.1 PIMS Hazardous Systems and Components

PIMS presents no identifiable servicing safety hazards to Space Station personnel.

4.2 PIMS Servicing Safety Precautions

None identified.

5.0 PIMS SERVICING INTERFACES AND RESOURCE REQUIREMENTS

5.1 PIMS Crew Convenience Features

No servicing convenience features are identified.

5.2 PIMS Mechanical Interfaces

TBD.

5.3 PIMS Umbilical Interfaces

PIMS requires power and data transmission/reception lines to the Space Station.

5.4 PIMS RF Communications Interface

No RF communications interface is required.

5.5 PIMS Thermal Interface

Individual PIMS packages will be thermally self sufficient and not require any interface to the Space Station active cooling loop.

6.0 PIMS SERVICING ENVIRONMENT

6.1 PIMS Pointing/Orientation Constraints

None identified.

6.2 PIMS Contamination Concerns

None. The PIMS mission is to measure the Stations' induced environment.

6.3 PIMS Radiation Concerns

TBD.

7.0 PIMS SERVICING ACCOMMODATIONS

7.1 PIMS Equipment Access

TBD.

7.2 PIMS Modularity

PIMS is envisioned as a system of distributed, autonomous instrument packages, each of which consists of a full set of common modules in a building-block approach.

7.3 PIMS Automated Servicing

The potential for automated servicing is TBD.

7.4 PIMS Servicing in the Space Station Pressurized Modules

PIMS requires no pressurized Space Station service.

8.0 PIMS SERVICING MATERIALS CHECKLIST

Servicing Equipment	Required	SS Provided	Ref, Section
ORUs (including SIs)	No	No	9.0
Flight Support Equipment	No	No	10.0
Other Equipment	No	No	10.0
Servicing Equipment Carriers	No	No	12.0
Servicing Consumables			
Propellant(s)	No	No	11.0
Container(s)	No	No	11.0
Cryogen(s)	No	No	11.0
Container(s)	No	No	11.0
Liquid(s)	No	No	11.0
Container(s)	No	No	11.0
Gas(es)	No	No	11.0
Container(s)	No	No	11.0
Other(s)	No	No	11.0
Container(s)			
Servicing Consumables Carriers	No	No	12.0

9.0 PIMS ORBITAL REPLACEABLE UNITS (ORUs)

9.1 Servicing of PIMS ORUs

None identified.

9.2 PIMS ORU Physical Characteristics

None identified.

9.3 PIMS ORU Storage Requirements

None.

9.4 Other Environmental Requirements for PIMS ORUs

None specified.

10.0 PIMS FLIGHT SUPPORT AND MISCELLANEOUS SERVICING EQUIPMENT

10.1 PIMS Flight Support Equipment (FSE)

The method of attachment of PIMS packages to station hardware (e.g., the truss, modules, solar array boom, etc.) is TBD. Cabling and umbilical requirements are also TBD.

10.2 PIMS FSE Physical Characteristics

No information available.

10.3 PIMS FSE Storage Requirements

None.

10.4 Miscellaneous Servicing Equipment

None identified.

11.0 PIMS SERVICING CONSUMABLES AND CONTAINERS

11.1 Description and Purpose

PIMS requires no consumables replenishment.

11.2 Physical Characteristics

Not applicable.

11.3 Storage Requirements

Not applicable.

12.0 CARRIERS FOR PIMS SERVICING MATERIALS

12.1 Description and Purpose of Carriers

Not applicable.

12.2 STS and SS Carrier Interfaces

Not applicable.

12.3 Servicing Materials/Carrier Interfaces

Not applicable.

13.0 PIMS ORBITAL SERVICING ACTIVITIES TIME ESTIMATES

13.1 Mission Servicing Ground Rules and Constraints

Not applicable.

13.2 Preparatory Servicing Time Estimates

Not applicable.

13.3 Principal Servicing Time Estimates

Not applicable.

13.4 Close-out Servicing Time Estimates

Not applicable.

14.0 PIMS STRAWMAN SERVICING SCENARIO

14.1 PIMS Strawman Servicing Mission

None.

14.2 PIMS Description

There is no PIMS servicing payload to describe.

14.3 Strawman Servicing Materials

None.

14.4 Estimated Up/Down Mass on STS to Support PIMS Strawman Servicing

None.

14.5 Estimated Up/Down Volume on STS to Support PIMS Strawman Servicing

None.

14.6 Storage on Space Station Required to Support PIMS Strawman Servicing

None.

14.7 PIMS Strawman Servicing Power Estimates

None.

14.8 PIMS Strawman Servicing Times

None

14.9 OMV Flights in Support of PIMS Strawman Servising Mission

PIMS requires no OMV support.

15.0 OVERALL REQUIREMENTS SUMMARY FOR SS SERVICING OF PIMS

15.1 PIMS Milestones and Servicing Schedule

Event	Location	Date
Launch	KSC	1st quarter, 1994

And on every subsequent Main Base Assembly flight.

15.2 Summary of PIMS Mass Considerations

Each PIMS instrument package has an operational weight of approximately 100 kilograms. No servicing, hence no servicing mass, is required.

15.3 Summary of PIMS Volume Considerations

Each PIMS operational package has a volume (not considering booms) of approximately 0.5 meters. No servicing, hence no servicing volume, is required.

15.4 Summary of PIMS Power Considerations

Each PIMS package is expected to require about 100 watts of power in its operational mode.

15.5 Summary of PIMS Servicing Time Estimates

No servicing is required.

15.6 Summary of OMV Flights in Support of PIMS SS Servicing

None required.

REFERENCES

1. Telephone interviews with Mr. William Roberts, NASA, MSFC, in September, 1987.

ADVANCED SOLAR OBSERVATORY PINHOLE OCCULTER FACILITY (POF): MISSION CODE SAAX0011

1.0 POF PROGRAM AND OPERATIONS INFORMATION

1.1 POF Points of Contact

Mr. Joseph Dabbs
Study Manager
NASA/MSFC
Huntsville, Alabama 35812
(205) 544-0623

1.2 POF Objectives

POF will utilize X-ray and coronagraphic equipment to study non-equilibrium plasma dynamics in the solar corona, and to investigate the acceleration of non-thermal particles in coronal disturbances.

1.3 POF Milestone and Servicing Schedule

Launch Date: 4th quarter, 1994.
First Space Station Service: 4th quarter, 1999.
Servicing Interval: 5 years.
Operational Lifetime: 15 years.

1.4 POF Orbital Parameters

POF is a solar-pointing SS payload attached to the upper boom. Orbital parameters are those of the SS.

2.0 POF PHYSICAL CHARACTERISTICS

2.1 POF Description

The Pinhole Occulter Facility is one of two payloads which comprise the Advanced Solar Observatory (ASO). The other payload is the High Resolution Solar Observatory (HRSO). Because HRSO operates independent of POF and provides scientifically significant data individually, HRSO is addressed in a separate section of this book.

POF utilizes a retractable meter boom to separate an occulting mask from an array of detectors and telescopes (Figure POF-1). An array of pinholes in the mask allows only X-rays to pass through to produce high resolution images of the sun on the X-ray detectors. The mask serves a second function by eclipsing the sun for coronal studies.

2.2 POF Physical Characteristics

The following table summarizes POF's physical characteristics both in the deployed and in the retracted (storage) conditions.

a.	Mass:	2700 kg
b.	Deployed Dimensions:	
	- Length:	32 m
	- Diameter:	4.3 m
	- Volume:	465 m^3
c.	Retracted Dimensions:	
	- Length:	8.2 m
	- Diameter:	4.3 m
	- Volume:	120 m^3

2.3 POF Moving Parts and Special Features

- The 32 to 50 meter boom extends/retracts.
- The instrument pointing system orients the entire POF.
- One of the X-ray experiments moves along a translation table.

2.4 POF Consumables

None required.

3.0 POF SERVICING INFORMATION

3.1 General Description of POF Servicing

The only SS servicing activity required by POF is the changeout of two proportional counters every five years.

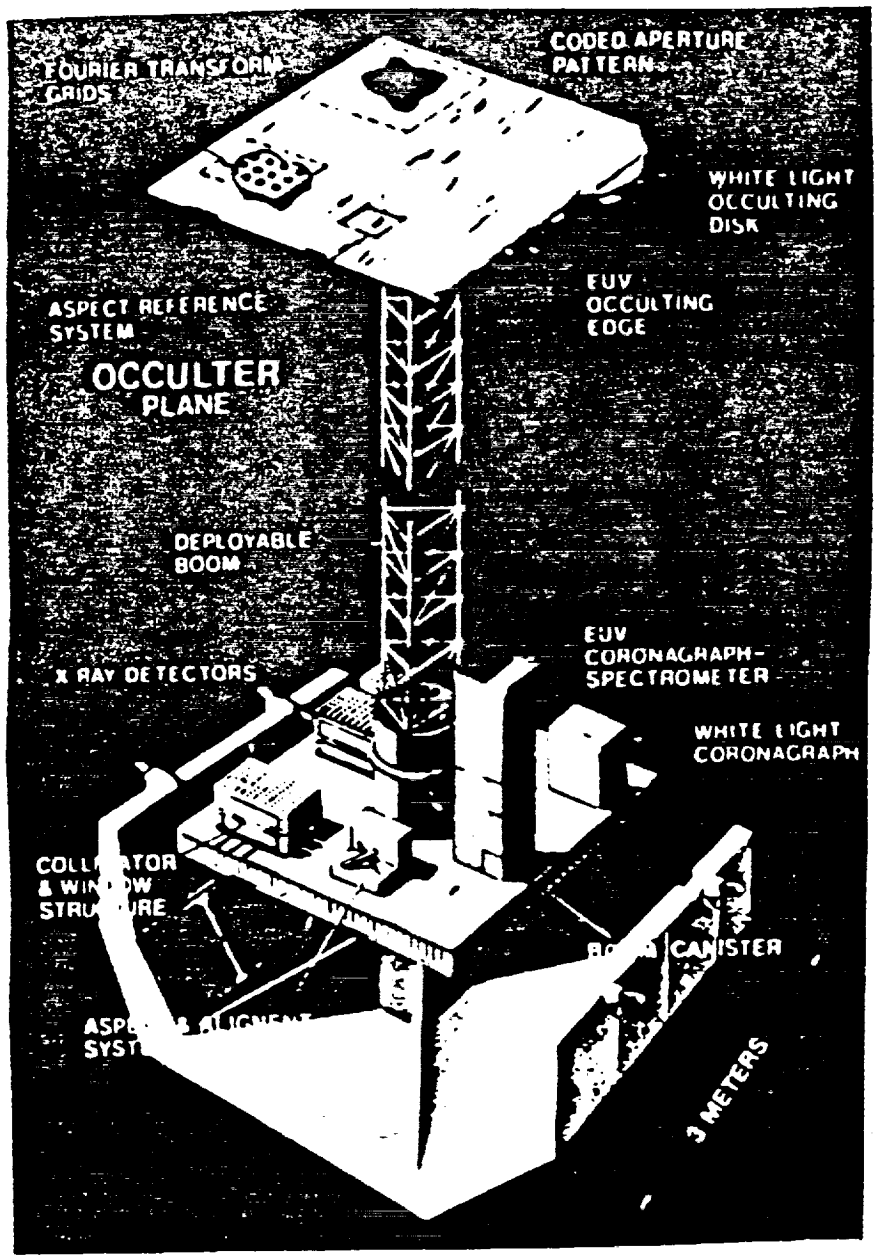

ORIGINAL PAGE IS
OF POOR QUALITY

Figure POF-1. The Pinhole Occulter Facility.

3.2 POF Background

None available.

3.3 Primary Role of Space Station in Servicing POF

To provide operational support and provide contingency maintenance of POF instruments and subsystems.

3.4 Primary Space Station Facilities Required for Servicing POF

- Robotics.
- Standard EVA tool kit.
- Internal pressurized work station (with appropriately large access hatch) large enough to accommodate POF electronics modules for contingency repair. Requirements for test equipment, tools, and piece parts are TBD.

3.5 Space Station Personnel Required for Servicing POF

- Trained technicians on Space Station.
- Specialists supporting from the ground.

3.6 Servicing Precautions for POF

No information available.

3.7 Orbital Maneuvering Vehicle (OMV) Flight Profile Support of POF

None required.

4.0 POF SERVICING SAFETY CONSIDERATIONS

4.1 POF Hazardous Systems

- Sealed proportional counters contain gases under pressure (about 1 atmosphere).

4.2 POF Servicing Safety Precautions

No information available.

5.0 POF SERVICING INTERFACES AND RESOURCE REQUIREMENTS

5.1 POF Crew Convenience Features

- handrails.
- foot restraint sockets.
- rounded corners and edges.
- tether rings.

5.2 POF Mechanical Interfaces

- Will use IPS mount.
- No specific information available.

5.3 POF Umbilical Interfaces

a. Power
   - 28 +1/-4 VDC.
   - 0.8 kW operating power.
   - 0.8 kW storage or servicing power.

b. Data
   - Servicing rates TBD.
   - Operational Data Channels
     * 124 kbps Fourier-Transform Imager.
     * 150 kbps UV Coronagraph/Spectrometer.
     * 1000 kbps White-Light/UV Coronagraph.
   - Operational Video Channel
     * 125 kbps Coded-Aperture Imager.

c. Fluids

   None.

5.4 POF RF Communication Interface

None.

5.5 POF Thermal Interface

- Maintain baseplate temperature at 21 +/-2 degrees Celsius; maintain Occulter Plane at 21 +/-3.3 degrees Celsius.
- Care required to avoid damaging aluminized kapton on instrument side walls, white paint on instrument platform, and teflon-coated glass cloth on all POF outer surfaces.

6.0 POF SERVICING ENVIRONMENT

6.1 POF Pointing/Orientation Constraints

a. Exposure to light

None identified.

b. Thermal Control

None identified.

6.2 POF Contamination Concerns

Class 10000 clean room environment required when working on instruments.

6.3 POF Radiation Concerns

No information available.

7.0 POF SERVICING ACCOMMODATIONS

7.1 POF Equipment Access

This is a new instrument complement and it will be designed with servicing in mind.

7.2 POF Modularity

Will have modular ORU's.

7.3 POF Automated Servicing

No information available.

7.4 POF Servicing in the Space Station Pressurized Modules

No information available.

8.0 POF SERVICING MATERIALS CHECKLIST

Servicing Equipment	Required	SS Provided	Comments	Ref.Section
ORUs (including SIs)	yes	no		9.0
Flight Support Equipment	no	no		10.0
Other Equipment	no	no		10.0
Servicing Equipment				
Carrier(s)	yes	no		12.0
Servicing Consumables				
Propellant(s)	no	no		11.0
container(s)	no	no		11.0
Cryogen(s)	no	no		11.0
container(s)	no	no		11.0
Liquids(s)	no	no		11.0
container(s)	no	no		11.0
Gas(es)	no	no		11.0
container(s)	no	no		11.0
Other(s)	no	no		11.0
container(s)	no	no		11.0
Servicing Consumables				
Carrier(s)	no	no		12.0

9.0 POF ORBITAL REPLACEABLE UNITS (ORUs)

9.1 Servicing of POF ORUs

a. Primary

Proportional Counters

b. Secondary

- High voltage power supply : HVPS
- UV Coronagraph/Spectronometer : UVCS
- Visible/UV Coronagraph : VUVC
- Fourier Transform X-ray Detector : FTXD
- Coded Aperture X-ray Detector : CAXD
- Aspect and alignment system (2) : AAS
- Mask alignment mechanism : MAM
- Star Tracker Pair : STP
- Fine attitude sensor (2) : FAS
- Coronagraph electronics : CE
- Spectrometer electronics : SE
- Fourier Transform X-ray detector electronics : FTXDE
- Coded Aperture X-ray detector electronics : CAXDE
- Mask : M
- Boom drive motor : BDM

9.2 POF ORU Physical Characteristics

a. Mass

- ORU : 210 kg
- ORU carrier : 90 kg

b. Dimensions and Volume requirements

- ORU : 1.0 m^3

9.3 POF ORU Storage Requirements

- Storage Mass : 210 kg
- Storage Volume : 1.0 m^3
- Power Requirements : TBD

9.4 Other Environmental Requirements for Payload ORU's

No information available.

10.0 POF FLIGHT SUPPORT AND MISCELLANEOUS SERVICING EQUIPMENT

10.1 POF Flight Support Equipment

None required.

10.2 POF FSE Physical Characteristics

Not applicable.

10.3 POF FSE Storage Requirements

Not applicable.

10.4 Miscellaneous Servicing Equipment

No information available.

11.0 POF SERVICING CONSUMABLES AND CONTAINERS

11.1 Description and Purpose

None required.

11.2 Physical Characteristics

Not applicable.

11.3 Storage Requirements

Not applicable.

12.0 CARRIERS FOR POF SERVICING MATERIALS

12.1 Description of Carriers used for Transporting ORUs

- Mass : 90 kg
- Volume : 2 m^3

12.2 STS and SS Carrier Interfaces

No information available.

12.3 Servicing Materials/Carrier Interfaces

No information available.

13.0 POF ORBITAL SERVICING ACTIVITIES TIME ESTIMATES

13.1 Mission Servicing Ground Rules and Constraints

No information available.

13.2 Preparatory Servicing Time Estimates

Activity	Elapsed Time (hr:min)	IVA Time (Crew-hr:min)	EVA Time (Crew-hr:min)	Robotics Time (hr:min)
1. Unloading Servicing Material from STS to SS	0:30^	0:30^	0:00^	0:30^
2. Transport Servicing Material To POF	1:30^	3:00^	3:00^	1:30^

13.3 Principal Servicing Time Estimates

Activity	Elapsed Time (hr:min)	IVA Time (Crew-hr:min)	EVA Time (Crew-hr:min)	Robotics Time (hr:min)
ORU Changeout	0:30	0:30	0:30	0:00

13.4 Close-out Servicing Time Estimates

Activity	Elapsed Time (hr:min)	IVA Time (Crew-hr:min)	EVA Time (Crew-hr:min)	Robotics Time (hr:min)
1. Transport Servicing Material From POF	1:30^	3:00^	3:00^	1:30^
2. Loading Servicing Material from SS to STS	0:30^	0:30^	0:00^	0:30^

14.0 POF STRAWMAN SERVICING SCENARIO

14.1 POF Strawman Servicing Mission

A typical servicing mission for the POF payload, strawman A, would be the changeout of two proportional counters every five years. This changeout would occur at the Space Station with material brought up by the orbiter (STS).

14.2 POF Description

POF's servicing configuration is identical to its operational configuration.

14.3 Strawman Servicing Materials

a. ORUs

Number	Mass (kg)	Volume(m^3)	Power (kW)
2	210	1.0	TBD

b. FSE and Miscellaneous Equipment

TBD.

c. Consumables and Containers

N.A.

d. Carriers

A carrier with a mass of 90 kg and a volume of 2 m^3 is used to transport the ORUs on the STS to the SS. After the servicing mission is completed, the carriers return on the STS.

14.4 Estimated Up/Down Mass on STS to Support POF Strawman Servicing

SERVICING MATERIAL	MASS, UNPRESSURIZED TRANSPORT (kg)	MASS, PRESSURIZED TRANSPORT (kg)	MASS, TOTAL (kg)
Equipment			
SI(s)	0	0	0
ORU(s)	210	0	210
Unique FSE	0	0	0
Misc. Equipment	0	0	0
Equipment Subtotal	210	0	210
Equipment Carrier(s)	90	0	90
Subtotal, Equipment Mass Up	300	0	300
Subtotal, Equipment Mass Down	300	0	300
Consumables			
Consumables	0	0	0
Consumables Containers	0	0	0
Consumables Containers' Carriers	0	0	0
Subtotal, Consumables Mass Up	0	0	0
Subtotal, Consumables Mass Down	0	0	0
Total Mass Up	300	0	300
Total Mass Down	300	0	300

14.5 Estimated Up/Down Volume on STS to Support POF Strawman Servicing

SERVICING MATERIAL	VOLUME, UNPRESSURIZED TRANSPORT (m^3)	VOLUME, PRESSURIZED TRANSPORT (m^3)	VOLUME, TOTAL (m^3)
Equipment			
SI(s)	0	0	0
ORU(s)	1.0	0	1.0
Unique FSE	0	0	0
Misc. Equipment	0	0	0
Equipment Subtotal	1.0	0	1.0
Equipment Carrier(s)	2.0	0	2.0
Equipment and Carriers Subtotal	3.0	0	3.0
Consumables			
Consumables in Containers	0	0	0
Consumables, Containers, and Carriers	0	0	0
Total Volume Up	3.0	0	3.0
Total Volume Down	3.0	0	3.0

14.6 Storage on Space Station Required to Support Strawman POF Servicing

Continuous Storage	Unpressurized	Pressurized	Total
Mass (kg)	0	0	0
Volume (m^3)	0	0	0
Average Power (watts)	0	0	0
Temperature Range (^oC)	-	-	
Temporary Storage			
Mass (kg)	300	0	300
Volume (m^3)	3	0	3
Average Power (watts)	TBD	0	TBD
Temperature Range (^oC)	TBD	-	TBD

14.7 POF Strawman Servicing Power Estimates (Watts)

	Operational Mode		Servicing Mode	
	AVG	MAX	AVG	MAX
POF (Bus + Instruments)	TBD	TBD	TBD	TBD

14.8 POF Strawman Servicing Times

Servicing Activity	Elapsed Time (hr:min)	IVA Time (Crew-hr:min)	EVA Time (Crew-hr:min)	Robotics Time (hr:min)
1. Unloading of Service Material from STS to SS	0:30^	0:30^	0:00^	0:30^
2. Transport Servicing Material To and From POF	3:00^	6:00^	6:00^	3:00^
3. ORU Changeout	0:30	0:30	0:30	0:00
4. Loading of Service Material from SS to STS	0:30^	0:30^	0:00^	0:30^
TOTALS	4:30^	7:30^	6:30^	4:00^

14.9 OMV Flights in Support of POF Strawman Servicing Mission

None Required.

15.0 OVERALL REQUIREMENTS SUMMARY FOR SS SERVICING OF POF

15.1 POF Milestone and Servicing Schedule (Nominal Mission Model)

Event	Location	Date	Comment
Payload Launch	STS	4th quarter, 1994	
1st Servicing	SS	4th quarter, 1999	A
2nd Servicing	SS	4th quarter, 2004	A
POF Mission Termination		4th quarter, 2009	

15.2 Summary of POF Mass Considerations

a. POF in Operational/Servicing Configurations

POF Mass (dry): 2700 kg
Consumables Mass: 0 kg

POF Mass (total): 2700 kg

b. POF Servicing Mass Up and Down in STS

Event	Mass Up (kg)	Mass Down (kg)
Launch	2700	
1st Servicing	300	300
2nd Servicing	300	300
POF Mission Termination		2700
Totals	3300	3300
Servicing Totals	600	600

c. POF Servicing Storage Mass on Space Station

Calendar Year	96	97	98	99	00	01	02	03	04	05
Storage Mass (kg)										
Unpressurized	0	0	0	300	0	0	0	0	300	0
Pressurized	0	0	0	0	0	0	0	0	0	0
Total	0	0	0	300	0	0	0	0	300	0

15.3 Summary of POF Volume Considerations

a. POF Volume

Operational Configuration:	465 m^3
Servicing Configuration:	465 m^3
Storage/Transportation Configuration:	120 m^3

b. POF Servicing Volumes Up and Down in STS

Event	Volume Up (m^3)	Volume Down (m^3)
Launch	120	
1st Servicing	3	3
2nd Servicing	3	3
Payload Mission Termination		120
Totals	126	126
Servicing Totals	6	6

c. POF Servicing Storage Volume on Space Station

Calendar Year	96	97	98	99	00	01	02	03	04	05
Storage Volume (m^3)										
Unpressurized	0	0	0	3	0	0	0	0	3	0
Pressurized	0	0	0	0	0	0	0	0	0	0
Total	0	0	0	3	0	0	0	0	3	0

15.4 Summary of POF Power Considerations

	AVG	MAX
Operational Power (watts)	800	TBD
Servicing Power (watts)	800	TBD
Storage Power, Servicing Materials (watts)	800	N.A.

15.5 Summary of POF Servicing Time Estimates

Calendar Year	94	95	96	97	98	99	00	01	02	03	04	05	Total
Elapsed Time (hr:min)	0	0	0	0	0	4:30^	0	0	0	0	4:30^	0	9:00^
IVA Time (Crew-hr:min)	0	0	0	0	0	7:30^	0	0	0	0	7:30^	0	15:00^
EVA Time (Crew-hr:min)	0	0	0	0	0	6:30^	0	0	0	0	6:30^	0	13:00^
Total Crew Time (hr:min)	0	0	0	0	0	14:00^	0	0	0	0	14:00^	0	28:00^
Robotic Time (hr:min)	0	0	0	0	0	4:00^	0	0	0	0	4:00^	0	8:00^

15.6 Summary of OMV Flights in Support of POF Servicing

Not applicable.

REFERENCES

1. Interview with John Fykes, MSFC, July 25, 1987

SPACE-BASED ANTENNA RANGE (SBAR): MISSION CODE SAAX0502

1.0 SBAR PROGRAM AND OPERATIONS INFORMATION

1.1 SBAR Points of Contact

Mr. George Knouse
NASA/HQ
(202) 453-1515

Mr. Thomas Campbell
NASA/Langley Research Center
(804) 865-3631

1.2 SBAR Mission Objectives

To test experimental communications links, antenna characteristics, payloads and other experimental spacecraft functions at the Space Station (SS) prior to spacecraft delivery via OMV/OTV to final operational orbit; to confirm design capabilities of new technology spacecraft for new communication links at, for example, optical and millimeter wave frequencies; and to test high data rates or on-board switching centers.

Antennas and satellites planned for deployment will be transported to the SS where they will be assembled, erected, unfurled, or otherwise prepared for deployment. Once prepared for deployment, the antenna or satellite will be tested on the antenna range and subsequently deployed to orbit.

Spacecraft (including antennas) to be tested would include commercial COMSATs (prior to geo-transfer) earth sensing satellites, scientific spacecraft, and other users. The experimental geo platform (SAAX501) and M-SAT-C (SAAX504) will probably use the antenna range. Emphasis will be placed on testing large antenna structures (20-100m) on-orbit.

1.3 SBAR Milestones and Servicing Schedule

Launch Date:	2nd quarter, 1997.
First Service:	2nd quarter, 1997.
Servicing Interval:	6 months.
Free Flyer refueling:	6 months.
Operational Lifetime:	Indefinite.

1.4 SBAR Orbital Parameters

- Crew consoles and some antenna test equipment are internal to SS
- Instrumented free-flyer co-orbits 20 - 200 nmi from SS.
- Antennas under test are unpressurized and attached externally to SS.

2.0 SBAR PHYSICAL CHARACTERISTICS

The SBAR program is currently undergoing pre-phase A definition. As a result, servicing requirements are largely to be defined. Thus, for the purposes of developing planning data for SBAR servicing, the following assumptions are made as the basis for the data presented herein:

(1) The SBAR free-flyer is assumed to be a Space Station SPARTAN with the identical physical characteristics and servicing requirements (by mission) of a SPARTAN as tabulated elsewhere in this databook;

(2) The SBAR internal control console will require servicing (equipment change-out and consumables resupply) after each SBAR test; and

(3) Any systems required to support test-antenna holding and positioning on the SS truss will be both provided and serviced by SS, hence no requirements for this system are presented here.

2.1 SBAR Description

a. Comments

SBAR requires full use of SS facilities. The SBAR will require: installation of antenna test equipment and room for a two-person crew within one of the pressurized modules; storage space and servicing support for an instrumented, free-flyer; and an assembly and/or holding area for the antenna under test.

SBAR combines the characteristics of free flyers and attached payloads. The SBAR free flyer transmits signals to the antenna or satellite under test. The free-flyer is

is expected to be deployed for approximately 2 to 5 days, every 6 months, and will rely on the OMV for SS proximity operations.

The attached SBAR equipment includes test equipment to evaluate both the antenna and the test antenna's holding/pointing system. SBAR will require some type of attaching mechanism for the antennas and satellites being tested. Since many of the antennas may be extremely large (20-100 m), the attachment mechanism must hold those antennas some TBD distance from the SS to prevent interference with SS operations.

b. Pressurized Module Facility

- One to two equipment double racks containing test equipment, antenna feed and control equipment, remote-control equipment for the instrumented free-flyer, recording equipment to record test data, and access to communications links to transmit data to the ground for analysis.
- Room for two crew.
- Window adjacent to crew console for visual observation.

c. Instrumented Free-Flyer

- Assumed to be a SPARTAN, consisting of an Operational Carrier (see 12.0) and test instruments.
- Dedicated to SBAR support.
- Deployed only briefly as required to support tests.
- Includes a visual device (e.g., TV monitor) and OMV interface.
- Requires storage at SS when not in use.
- Contains propulsion, ACS, power, and communications subsystems as well as a payload consisting of test equipment as the "science instrument."

d. Test Antenna Assembly/Holding Area

- Assumed to be SS-provided.
- Strongback for holding large experimental antennas.
- Steerable mount for aiming antennas under test.
- RF-controlled environment

- May require shroud or sun shield for thermal control, particularly if communications satellites are checked out on the SBAR prior to deployment.

2.2 SBAR Physical Characteristics*

a. Mass

- Internal Equipment:	100 kg
- Instrumented Free-Flyer (SPARTAN):	2965^ kg
- SS-Attached Antennas/Satellites Under Test:	1000-10000^ kg

b. Dimensions

- Internal Equipment:	0.2 x 1.0 x 1.0 m
- Observation Window:	TBD
- Instrumented Free-Flyer : with SA folded (SPARTAN)	2.5 x 4.6 m dia.
- Test Instrument and Interface Adapter:	3.8 x 2.3 x 1.3 m
- Test Antenna (Free-Flyer):	3.0^ m dia.
- High Gain Communication Antenna (Free-Flyer):	1.5^ m dia.
- High Gain Antenna Boom (Free-Flyer):	2.5^ m
- SS-Attached Antenna Under Test:	up to 100^ m dia.^

c. Envelope

- Internal Operating Facility:	2.0^m^3
- Free-Flyer	
HGA & SA Stowed:	2.5 x 4.6 m dia.
HGA & SA Deployed:	6.6 x 4.6 m dia.

2.3 SBAR Moving Parts and Special Features

a. Solar Arrays (Instrumented Free-Flyer)

No information currently available. Whether or not the instrumented free-flyer will require solar arrays is TBD.

b. Test Antenna (Instrumented Free-Flyer)

The instrumented free-flyer will carry an antenna which will be used to intercept patterns from the antenna under test.

Actual size and mounting are TBD. For purposes of this study, the test antenna is assumed to be a 3-meter dish.

c. High Gain Antenna (Instrumented Free-Flyer)

The instrumented free-flyer will also require a standard HGA for data relay to SS. Actual size and mounting are TBD. For purposes of the study, the free-flyer HGA is assumed to be a 1.5 meter dish on a 2.5 meter boom.

2.4 SBAR Consumables

a. Free-Flyer Consumables

- Hydrazine (380 kg maximum) for propulsion.
- Cold Gas (TBD kg maximum) in basic version of ACS.

b. Internal Console Consumables

- Recording media.

3.0 SBAR SERVICING INFORMATION

3.1 General Description of SBAR Servicing

SBAR operations will be conducted approximately twice a year, with the actual schedule to be driven by the schedules of the various programs which require SBAR support. Between tests, the SBAR free-flyer will be stored and any failed components on the SBAR console internal to SS will be replaced. Just prior to the conduct of a test, test-specific free-flyer payload test instrumentation will be installed; any spacecraft subsystem modules or components, such as batteries, requiring replacement, will be changed-out; the free-flyer will be refueled and test recording media will be replenished at the internal console. At the conclusion of the test, any special payload test instrumentation will be stored for return to ground along with any required recorded test results.

The SBAR free-flyer will be designed for on-orbit servicing in the SS Servicing Facility. Upon completion of an SBAR test, the free-flyer will fly to within 10 to 20 miles of the SS. The OMV will then be used to retrieve the free-flyer and return it to SS. The free-flyer will remain at SS for storage and servicing. The OMV will then be used to place the free-flyer about 10 to 20 miles from the SS for the next test and the free-flyer will maneuver to position using its propulsion subsystem.

3.2 SBAR Background

SBAR is currently a pre-phase A program with the objective of focusing on the investigation and test of large antenna structures and associated communications performance on-orbit. As presently planned, a first stage implementation will employ a SPARTAN/Orbiter concept in a test range configuration, moving to later stages employing SS for much larger antennas. The performance of such antenna systems will form the basis of programs such as future mobile ground satellite communications, extremely small Earth terminals, high resolution Earth sensing, and astrophysics applications.

3.3 Primary Role of Space Station in Servicing SBAR

Servicing will provide exchange of free-flyer test instruments, resupply of propellants on a scheduled basis (nominally, 2 times per year), contingency replacement of subsystem modules, and spacecraft storage on essentially a continuous basis. Servicing will also provide equipment change-out and recording media resupply for the internal SBAR console.

3.4 Primary Space Station Facilities Required for Servicing SBAR

- Trunnion sill and keel fittings for berthing in service/storage area (i.e., SS Servicing Facility).
- Sun shield or shroud for thermal control.
- Standard EVA tool kit and MMS Module Service Tool (MST).

- Temporary unpressurized storage for SBAR subsystem module(s) and one test instrument.
- Station to ground video and voice for servicing.
- Hydrazine refueling for propulsion subsystem.
- Cold gas replenishment if needed for ACS.
- Unpressurized storage for SBAR free-flyer.
- Internal stowage for console consumables and failed equipment.
- Workbench for contingency console repairs.

3.5 Space Station Personnel Required for Servicing SBAR

Current expectations are that all servicing will be performed by crew payload servicing personnel advised by system specialists on the ground.

3.6 Servicing Precautions for SBAR

- Install protective covers on instrument apertures (i.e., laser telescopes), etc., during servicing; remove prior to deployment.
- Install protective covers on subsystem thermal louver assemblies; remove before deployment.
- Others, TBD.

3.7 Orbital Maneuvering Vehicle (OMV) Flight Profiles in Support of SBAR

a. OMV Usage

The OMV is used to deploy the SBAR free-flyer to approximately 20 miles from SS and to retrieve it from the same distance. Two OMV round trips are, thus, required for each servicing of SBAR at the SS. It is anticipated that the Short Range Vehicle (SRV) version of the OMV will be adequate because of the "proximity operations" nature of the required deployments and retrievals. If the free-flyer or its test instruments are not functioning properly following deployment from the SS, it is desirable that an OMV provide a "contingency return" to the Station.

b. Alternate Means of Deploying/Retrieving SBAR Free-Flyer

A "mini-OMV", if available, is considered a possible alternate means for deploying/retrieving SBAR. A catapult launcher is a possible alternate means for deployment. Other means are currently under definition.

4.0 SBAR SERVICING SAFETY CONSIDERATIONS

4.1 Hazardous SBAR Subsystems and Components

- Hydrazine Propulsion Subsystem.
- Possible sharp edges on thermal louvers and other components.
- Deployed HGA booms.

4.2 SBAR Servicing Safety Precautions

- Monitor for hydrazine leakage; avoid EVA as necessary.
- Install protective covers on thermal louver assemblies and other sharp surfaces prior to EVA servicing.

4.3 SBAR Appendages

- Instrumented free-flyer handling procedures have not yet been defined.
- The antenna or satellite under test will be on an SS-provided steerable mount. Since many of these will be significant in the areas of size and mass, the effect on the SS when gimballing the antenna or satellite may be noticeable and may have to be planned for.

5.0 SBAR SERVICING INTERFACES AND RESOURCE REQUIREMENTS

5.1 SBAR Crew Convenience Features

- Handrails and/or handholds will be provided on the free-flyer carrier, test instrument interface structure, and along the sides of the subsystem modules.
- Tether rings and foot restraint sockets will be provided.
- Console equipment will include rack-slides.

5.2 SBAR Mechanical Interfaces

a. Free-flyer

- 3 MRMS grapple fixtures; 2 on the carrier and 1 on the test instrument interface structure.
- 4 STS sill trunnions.
- 1 STS keel trunnion.
- OMV interface to SBAR probably via one of the carrier-mounted grapple fixtures.

b. Internal Console

- Specific interface with the internal module structure is TBD.

5.3 SBAR Umbilical Interfaces

a. Free-Flyer

1. Power

- 28 V DC +/- 2%
- 0.5 kW during servicing or storage (maximum)
- 0.7 kW during checkout
- Planned connector will be identical or similar to the STS Standard Umbilical Retractor System (SURS). One connector will be employed for both signals and power.

2. Data

- Servicing data rates are TBD.
- 0.125, 1, and 2 kbps operational command rate

3. Fluid

If available, the free-flyer will employ the NASA standard refueling interface for refueling the hydrazine propulsion subsystem. The refueling method (ullage recompression) generates heat in the tank pressurant as it is recompressed by the incoming fuel; this heat buildup limits the speed with which refueling can be accomplished and requires close monitoring of pressurant temperature and pressure during refueling. Note: It is assumed that hydrazine for the propulsion subsystem will be provided by the SS.

b. Internal Console

- Power and data requirements for the console are TBD.

5.4 RF Communication Interface (Free-Flyer)

a. Forward Link (SS to Free-Flyer)

- The free-flyer employs fixed, omnidirectional antennas.
- Command rates are 0.125, 1, 2 kbps, from ground to free-flyer via SS.
- RF servicing requirements are TBD.

b. Return Link (Free-Flyer to SS)

- The free-flyer employs fixed, omnidirectional antennas.
- 5 watts.

5.5 SBAR Thermal Interface

a. Operational

SS-attached antenna under test must be maintained between -40 and +100 degrees C.

SS-attached antenna under test must be interfaced to SS heat transfer fluid loop. Heat rejection during operation will be between 2 and 9 kW.

b. Servicing/Storage

1. Free-Flyer

- Employs passive thermal control augmented by heaters.
- Temperature must be maintained between +7 and +50 degrees C during servicing and storage.
- When mounted on the OMV, the spacecraft modules must be powered-down because the OMV blocks the module radiators and prevents heat dissipation to space.

2. Internal Console

- No information available.

6.0 SBAR SERVICING ENVIRONMENT

6.1 SBAR Pointing/Orientation Constraints

Precautions may be necessary during free-flyer retrieval and deployment when covers to star trackers and instrument apertures are removed to prevent possible damage from direct sunlight.

6.2 SBAR Contamination Concerns

Test mission and instrument dependent; TBD.

6.3 SBAR Radiation Concerns

- None during SBAR inoperative periods (servicing, storage).
- Exposure to RF radiation and EMI must be limited or prevented during operating and test periods.

7.0 MISSION SERVICING ACCOMMODATIONS

7.1 SBAR Equipment Access

- All free-flyer subsystems and instruments are of modular design and are designed for access (and change-out). Access to SBAR harnessing is TBD.
- All rack-mounted internal console equipment is readily accessible.

7.2 SBAR Modularity

See paragraph 7.1 above.

7.3 Mission Automated Servicing

Possible options for robotic servicing etc., are TBD. Automation is considered desirable to reduce EVA crew time.

7.4 SBAR Servicing In The SS Pressurized Modules

- All SBAR console equipment changeout and consumables resupply will occur internal to SS, as well as contingency workbench repairs.
- Free-flyer subsystems are of MMS configuration and should physically fit through ports to SS pressurized modules if subsystem repair were to be elected.

8.0 SBAR SERVICING MATERIALS CHECKLIST

Servicing Equipment	Required	SS Provided	Comments	Ref. Section
ORUs (including SIs)	yes	no	spare free-flyer subsystem modules & console equipment, & replacement test instruments	9.0
Flight Support Equipment	yes	yes	tools to changeout SIs and ORUs	10.0
Other Equipment	TBD	TBD		10.0
Servicing Equipment Carrier(s)*	yes	no	Free-flyer Storage & Transport Carriers	12.0
Servicing Consumables				
Propellant(s)	yes	yes	hydrazine	11.0
container(s)	yes	yes	SS system or portable refueling tanker	11.0
Cryogen(s)	no	N.A.		11.0
container(s)	no	N.A.		11.0
Liquid(s)	no	N.A.		11.0
container(s)	no	N.A.		11.0
Gas(es)	yes	no	possible cold gas for ACS**	11.0
container(s)	yes	no		11.0
Other(s)	yes	N.A.	recording media	11.0
container(s)	no	N.A.	for console	11.0
Servicing Consumables Carrier(s)*	no	N.A.		12.0

* Carriers for servicing materials are typically used during transportation in STS Orbiter and/or during storage on SS.

** If ACS cold gas is required, it will be transported in pressurized tanks in the servicing equipment carriers.

9.0 SBAR ORBITAL REPLACEABLE UNITS (ORUs)

9.1 Servicing of SBAR ORUs

a. Primary

- Test Instruments and their Interface Structures will be changed out at every servicing. SI/IS

b. Secondary

- Console Equipment CE
- Solar Array (if used) SA
- Propulsion Module PM
- Power Subsystem Module PWR
- Attitude Control Subsystem Module ACS
- Communications and Data Handling Subsystem Module CADH

9.2 SBAR ORU Physical Characteristics

ORU REQUIRED			POWER (WATTS)		NUMBER	
NAME	MASS (kg)	DIMENSIONS (m)	CHECK-OUT	STORAGE	3S	SPARES(b)
CE	100^	0.20 x 1.00 x 1.00^	TBD	TBD	1	TBD
SI/IS	(a)	1.30 x 2.30 x 3.80	200 - 400	150	1	1
SA (b)	115	0.46 x 1.40 x 1.60	N.A.	0	1	1
PM (c)	520	0.75 x 1.40 x 1.50	50	50	1	1
PWR	115	0.46 x 1.22 x 1.22	58	50	1	1
ACS	91	0.46 x 1.22 x 1.22	160	30	1	1
CADH	45	0.46 x 0.75 x 1.22	80	30	1	1

(a) 870 kg Strawman test instruments/185 kg interface structure.

(b) Stowed dimensions (if used).

(c) Wet mass.

9.3 SBAR ORU Storage Requirements

- Storage temperature for all electronics modules is typically -5 to +50 degrees C. The free-flyer power module containing rechargeable storage batteries must be kept cool during storage. A temperature near 0 degrees C is desirable.
- Storage temperature for fueled propulsion module is +7 to +50 degrees C.
- Free-flyer storage may be unpressurized.
- Console equipment ORUs stowed internally.

9.4 Other Environmental Requirements for SBAR ORUs

No information available.

10.0 SBAR FLIGHT SUPPORT AND MISCELLANEOUS SERVICING EQUIPMENT

10.1 SBAR Flight Support Equipment (FSE)

SBAR FSE is expected to be minimal since standard SS tools should be sufficient. If an MMS Module Servicing Tool (MST) is not available at the SS, it will have to be included in the FSE. Other anticipated FSE will be sensor and thermal louver assembly covers; there should be little or no mission-unique tooling or cabling.

10.2 SBAR FSE Physical Characteristics

TBD.

10.3 SBAR FSE Storage Requirements

TBD.

10.4 Miscellaneous Servicing Equipment

TBD.

11.0 SBAR SERVICING CONSUMABLES AND CONTAINERS

11.1 Description and Purpose

a. Hydrazine for Free-Flyer Propulsion Subsystem

Hydrazine normally would be replenished during each servicing at SS (between free-flight missions). It is assumed that hydrazine will be obtained from a SS provided refueling system, probably a portable tanker. Up to 380 kg of hydrazine may be required 2 times per year.

b. Cold gas for ACS if basic version is utilized

Cold gas would be replenished during servicing at SS as required. Cold gas would be obtained from SS system if available. Alternate method of replenishing cold gas is TBD but could involve change-out of modular cold gas tanks. As much as TBD kg of cold gas could be required up to 2 times per year.

c. Recording Media for Console

Recording media for the internal test control console may require replenishment twice a year, and is assumed to be transported within the SS Logistics Module.

11.2 Physical Characteristics

a. Hydrazine

Assumed to be available from SS hydrazine supply system or portable tanker. Hydrazine is toxic and corrosive.

b. Cold Gas

Needed if basic version of ACS is used. Tankage would be "man rated". Cold gas is non-toxic and non-corrosive.

c. Recording Media

Specific media is TBD, but could include magnetic cassette, tape, or disk, or optical disk.

11.3 Storage Requirements

a. Hydrazine would be pumped directly from the SS supply system or portable tanker into the SBAR propulsion tankage. Hydrazine should be maintained at a temperature of 7° C or higher.

b. Cold gas storage volumes, pressures, and temperatures are TBD.

c. Recording media would be stowed in the console or stored in the Logistics Module.

12.0 CARRIERS FOR SBAR SERVICING MATERIALS

12.1 Description and Purpose

For the purpose of developing planning data herein, the SBAR free-flyer has been taken to be a Space Station SPARTAN.

The SPARTAN program will have available three unpressurized, structurally similar carriers on and around SS. The first, designated as the operational carrier, holds science (test) instruments during mission operations and is actually deployed from SS. The second, the storage carrier, is used only for the storage of replacement science (test) instruments and spare subsystems on the SS. It contains the power and signal interfaces necessary to monitor and control these items. The third carrier, the transport carrier, is used in the STS payload bay to bring new instruments and spare modules from the ground and to return flown instruments and/or malfunctioning subsystem modules to the ground. This carrier is not removed from the STS payload bay at the SS and functions only to hold instruments and modules during transit. However, because SBAR requires only two missions per year, a permanent storage carrier on SS is not considered necessary. Hence, SBAR will only require the Operational and Transport carriers.

The carrier for failed console equipment and console consummable recording media is assumed to be the Logistics Module.

a. Physical Characteristics of Free-Flyer Carriers

- The Operational Carrier equipped with a strawman test instrument payload (870 kg) and fully loaded with hydrazine (380 kg) has a total mass of about 2965 kg. Its packaged dimensions during STS transit and SS storage are 4.6 m diameter and 2.5 m length. Its packaged volume is about 42 m^3. The actual volume of

the operational carrier plus the protruding portion of the test instrument is 19 m^3.

- The Transport Carrier (which remains in the STS Orbiter bay) when carrying a replacement test instrument (870 kg) would have a total mass of about 1790 kg. Its dimensions are 4.6 m in diameter and about 1.5 m in length. Its volume is about 25 m^3. The actual volume of the Transport Carrier and its associated test instruments and/or subsystem modules is approximately 15 m^3.

12.2 STS and SS Carrier Interfaces

a. Free-flyer

Each type of SBAR carrier is supported in the STS Orbiter with the use of trunnions (at the sill) and with a keel fitting. STS power/signals etc., are provided through a standard electrical connector. The Operational Carrier is supported on the SS using some or all of the sill and keel fittings. Electrical connectors are similar to those used in the Orbiter.

b. SS

The Operational Carrier is considered to occupy essentially "permanent storage" space on the SS since it will reside at SS at all times except when the 2 to 5 day tests occur.

12.3 Servicing Materials/Carrier Interfaces

ORUs such as replacement test instruments would be removed from, and returned to, the carriers using the RMS, SSRMS, or Servicing Facility Manipulator and a grapple fixture located on the ORU. Smaller ORUs such as a subsystem modules could be handled in a similar manner or by one of the crew during EVA. These activities would take place in, or near, the SS Servicing Facility as part of free-flyer servicing or during STS Orbiter unloading/loading.

Servicing of the internal console would require only IVA support, and would entail crew activity in transporting equipment to and from internal stowed locations.

13.0 SBAR ORBITAL SERVICING ACTIVITIES TIME ESTIMATES

13.1 Mission Servicing Ground Rules and Constraints

It has been assumed that servicing will be carried out using SS crew IVA and EVA activities for both the free-flyer and internal SS console which make use of the RMS, SSRMS, special tools derived from the Multi-Mission Spacecraft (MMS) Project, and standard SS tools. Estimates of various parameters associated with SBAR on-orbit servicing missions are presented below and in Sections 14 and 15 of this Chapter.

13.2 Preparatory Servicing Time Estimates

Activity	Elapsed Time (hr:min)	IVA Time (Crew-hr:min)	EVA Time (Crew-hr:min)	Robotics Time (hr:min)
1. Unloading of Servicing Materials from STS Orbiter Bay to SS	0:30^	0:30^	0:00^	0:30^
2. Payload Berthing Related	3:30^	3:30^	3:00^	2:00^

13.3 Principal Servicing Time Estimates

	Activity	Elapsed Time (hr:min)	IVA Time (Crew-hr:min)	EVA Time (Crew-hr:min)	Robotics Time (hr:min)
1.	ORU Changeout (S.I.)	8:10^	12:20^	16:20^	4:00^
2.	ORU Changeout (SBAR subsystem)	1:20^	2:00^	2:40^	0:40^
3.	Hydrazine Replenishment (380 kg)	1:40^	1:40^	3:20^	0:00^
4.	Console Box Changeout	0:40^	1:00^	0:00^	0:00^
5.	Recording Media Consumable changeout	0:40^	1:00^	0:00^	0:00^

13.4 Close-out Servicing Time Estimates

Activity	Elapsed Time (hr:min)	IVA Time (Crew-hr:min)	EVA Time (Crew-hr:min)	Robotics Time (hr:min)
1. Payload Deberthing Related	5:30^	5:30 ^	3:00^	3:00^
2. Loading of Servicing Materials from SS SF to STS	0:30^	0:30^	0:00^	0:30^

14.0 SBAR STRAWMAN SERVICING SCENARIO

14.1 SBAR Strawman Servicing Mission

Four different types of strawman servicing missions have been defined. The first, designated Type A, occurs directly following the STS flight and unloading activities (considered "operational activities") which initially deliver SBAR to the Space Station and erect the first antenna to be tested on the range. The Type A strawman, which occurs only once, consists of deberthing the free-flyer from the Station, one deploying OMV flight, a subsequent retrieving OMV flight (following free-flight test data collection) and, finally, berthing of the free-flyer back at the Station. No principal servicing activities are included since it is assumed that when the STS delivers the free-flyer to the Station, it already carries a test instrument and a full supply of hydrazine propellant.

The Type B strawman servicing mission consists of preparatory activities (as described in Section 13.2), change-out of the test instrument, replenishment of free-flyer hydrazine and console recording media, and close-out activities (as described in Section 13.4).

The Type C strawman servicing mission is similar to Type B, but also includes the changeout of a free-flyer subsystem module (for example, ACS or CADH) and a console rack-mounted equipment box.

Strawman servicing mission Type D consists only of the provision of storage that the free-flyer requires from the SS during the periods (calendar year quarters) when it is not away from the Station on a free-flying test mission.

14.2 SBAR Description

The SBAR free-flyer payload (i.e., the Operational Carrier with test instrument) is located in the SS Servicing Facility during principal servicing. The solar array (if used) generally will be extended but can be folded when desirable. The typical dry mass with strawman test instrument would be about 2580 kg. The diameter is 4.6 m. Its length is about 2.5 m with the solar array folded and about 6.6 m with the array extended. The corresponding envelope volumes are 42 m^3 (array folded) and 110 m^3 (array extended).

14.3 Strawman Servicing Materials

a. ORUs

Type A Mission

- None required.

Type B Mission

- Replacement Test Instrument, One, 870 kg.

Type C Servicing

- Replacement Test Instrument, One, 870 kg
- Spare Sub-System module, One, 100 kg
- Replacement internal console box, 20 kg.

Type D Mission

- None required.

b. FSE and Miscellaneous Equipment

Tools and special test equipment (mission Types B and C) are required for the changeout of the test instrument and sub-system module, and console equipment. The mass and volume of this equipment is assumed to be negligible, however.

c. Consumables and Containers

A hydrazine mass of up to 380 kg (mission Types B and C) is transferred into the free-flyer propulsion system. Hydrazine is assumed to be available from a SS system or a portable refueling tanker. No Payload-provided containers are required. Recording media estimated at 10 kg and 0.1 m^3 (mission Types B and C), is replaced at the internal console from the logistics module.

d. Carriers

The flown test instrument and a free-flyer subsystem module (if defective) are taken from the Operational Carrier and changed-out with the replacement instrument and module that are removed from the Transport Carrier. The internal console equipment and recording media that are replaced and replenished (respectively) are assumed to be carried in the SS Logistics Module.

14.4 Estimated Up/Down Mass on STS to Support SBAR Servicing*

SERVICING MATERIAL	MASS UNPRESSURIZED TRANSPORT (kg)	MASS PRESSURIZED TRANSPORT (kg)	MASS TOTAL (kg)
Equipment			
SI(s)	1055/1055	0/0	1055/1055
ORU(s)	0/120	0/0	0/120
Unique FSE	0/0	0/0	0/0
Misc. Equipment	0/0	0/0	0/0
Equipment Subtotal	1055/1175	0/0	1055/1175
Equipment Carrier	735/735	0/0	735/735
Subtotal, Equipment Mass Up	1790/1910	0/0	1790/1910
Subtotal, Equipment Mass Down	1790/1910	0/0	1790/1910
Consumables**			
Consumables	10/10	0/0	10/10
Consumables Containers	0/0	0/0	0/0
Consumables Containers Carriers	0/0	0/0	0/0
Subtotal, Consumables Mass Up	10/10	0/0	10/10
Subtotal, Consumables Mass Down	10/10	0/0	10/10
Total Mass Up	1800/1920	0/0	1800/1920
Total Mass Down	1800/1920	0/0	1800/1920

* In this table, data are presented as Strawman B/Strawman C. Mass up consists of a single test instrument (870 kg), its interface structure (185 kg), and 10 kg of recording media for the internal console. For Strawman C, an additional 100kg subsystem module will be required on the Transport Carrier and a 20kg console box will be required in the Logistics Module. Mass down is the same for each respective Strawman. The instrument and its interface structure are carried up and down on the 735 kg Transport Carrier, and the recording media in the Logistics Module.

** Transport and storage of hydrazine which is required for refueling the propulsion subsystem of the free-flyer is considered a SS-provided service. Cold gas which could be required for one version of the ACS is not considered part of the selected strawman servicing missions.

14.5 Estimated STS Up/Down Volume to Support SBAR Strawman Servicing*

SERVICING MATERIAL	VOLUME UNPRESSURIZED TRANSPORT (m^3)	VOLUME PRESSURIZED TRANSPORT (m^3)	VOLUME, TOTAL (m^3)
Equipment			
SI(s)	11.4/11.4	0/0	11.4/11.4
ORU(s)	0/0.9	0/0	0/0.9
Unique FSE	0/0	0/0	0/0
Misc. Equipment	0/0	0/0	0/0
Equipment Subtotal	11.4/12.3	0/0	11.4/12.3
Equipment Carrier	11/11	0/0	11/11
Equipment and Carriers Subtotal	15/15	0/0	15/15
Consumables			
Consumables in Containers	0.1/0.1	0/0	0.1/0.1
Consumables, Containers and Carriers	0/0	0/0	0/0
Total Volume Up	15/15	0/0	15/15
Total Volume Down	15/15	0/0	15/15

*Note: The final volume of the carrier and its equipment is not necessarily equal to the sum of individual volumes due to volume "overlapping."

14.6 Storage on Space Station Required to Support Strawman Servicing

Continuous Storage*	Unpressurized	Pressurized	Total
Mass (kg)	1530	0	1530
Volume (m^3)	14	0	14
Average Power (watts)	310	0	310
Temperature Range (^oC)	+7 to +50	N.A.	+7 to +50
Temporary Storage**			
Mass (kg)	1155	30	1185
Volume (m^3)	5	0.3	5
Average Power (watts)	310	N.A.	310
Temperature Range (^oC)	+7 to +50	N.A.	+7 to +50

* Continuous ("permanent") storage is required for the Operational Carrier.

** Temporary storage is required for two quarters each year (in which the test range is active) for the test instrument and its interface (1055 kg, stored as part of the Operational Carrier) and 10 kg of recording media in the Logistics Module. For one quarter each year, temporary storage is required for a 100 kg free-flyer subsystem module ORU (within the volume of the operational carrier) and a 20 kg console box in the Logistics Module. Note that while the carrier's envelope is 14 m^3 and the test instrument's is 11.4 m^3 (see sections 9.2 and 14.5) the combined volume of the two is only 19 m^3. This is due to the test instruments being partially contained within the envelope of the carrier. Consequently, while the carrier's 14 m^3 are charged to continuous storage, only the delta, or 5 m^3, are charged to the test instrument for temporary storage.

14.7 SBAR Strawman Servicing Power Estimates

	Operational Mode (watts)		Servicing Mode (watts)		
	AVG	MAX	AVG	MAX	
Free-flyer Payload + Instruments)	650	800	TBD	750	(Bus
Internal Console	TBD	TBD	within available operational power.		

14.8 SBAR Strawman Servicing Times

Servicing Type A

Activity	Elapsed Time (hr:min)	IVA Time (Crew-hr:min)	EVA Time (Crew-hr:min)	Robotics Time (hr:min)
1. Deberthing Related	5:30^	5:30^	3:00^	3:00^
2. OMV Deploys Free-flyer	0:00	0:00	0:00	0:00
3. OMV Retrieves Free-flyer	0:00	0:00	0:00	0:00
4. Berthing Relating	3:30^	3:30^	3:00^	2:00^
Totals	9:00^	9:00^	6:00^	5:00^

Servicing Type B

Activity	Elapsed Time (hr:min)	IVA Time (Crew-hr:min)	EVA Time (Crew-hr:min)	Robotics Time (hr:min)
1. STS Brings Materials Up	0:00	0:00	0:00	0:00
2. Unload Materials	0:30^	0:30^	0:00	0:30^
3. Change-Out S.I.	8:10^	12:20^	16:20^	4:00^
4. Replenish Hydrazine	1:40^	1:40^	3:20^	0:00
5. Replenish Console	0:40^	1:00^	0:00	0:00
6. Deberthing Related	5:30^	5:30^	3:00^	3:00^
7. OMV Deploys Free-flyer	0:00	0:00	0:00	0:00
8. OMV Retrieves Free-flyer	0:00	0:00	0:00	0:00
9. Berthing Relating	3:30^	3:30^	3:00^	2:00^
10. Load Materials	0:30^	0:30^	0:00	0:30^
11. STS Takes Materials Down	0:00	0:00	0:00	0:00
Totals	20:30^	25:00^	25:40^	10:00^

Servicing Type C

Activity	Elapsed Time (hr:min)	IVA Time (Crew-hr:min)	EVA Time (Crew-hr:min)	Robotics Time (hr:min)
1. STS Brings Materials Up	0:00	0:00	0:00	0:00
2. Unload Materials	0:30^	0:30^	0:00	0:30^
3. Changeout S.I.	8:10^	12:20^	16:20^	4:00^
4. Changeout Subsystem	1:20^	2:00^	2:40^	0:40^
5. Replenish Hydrazine	1:40^	1:40^	3:20^	0:00
6. Changeout Console Box	0:40^	1:00^	0:00	0:00
7. Replenish Console	0:40^	1:00^	0:00	0:00
8. Deberthing Related	5:30^	5:30^	3:00^	3:00^
9. OMV Deploys Free-flyer	0:00	0:00	0:00	0:00
10. OMV Retrieves Free-flyer	0:00	0:00	0:00	0:00
11. Berthing Relating	3:30^	3:30^	3:00^	2:00^
12. Load Materials	0:30^	0:30^	0:00	0:30^
13. STS Takes Materials Down	0:00	0:00	0:00	0:00
Totals	22:30^	28:00^	28:20^	10:40^

Servicing Type D

No servicing times. Type D provides storage only for free-flyer between free-flying test missions.

14.9 OMV Flights* in Support of SBAR Strawman Servicing Missions

Flight Number	Purpose of Flight	Flight Schedule (CY, Quarter)
1	deployment	after servicing
2	retrieval	before servicing

*It is believed that the Short Range Vehicle (SRV) version of the OMV may be adequate for free-flyer deployment/retrieval.

15.0 OVERALL REQUIREMENTS SUMMARY FOR SS SERVICING OF SBAR

15.1 SBAR Milestone and Servicing Schedule

Event	Location	Date (CY Quarter)	Comments
Payload Launch	STS/ETR	1997, 2nd Quarter	
1st Servicing	SS	1997, 2nd	Type A
2nd Servicing	SS	1997, 4th	Type B
3rd Servicing	SS	1998, 2nd	Type C
4th Servicing	SS	1998, 4th	Type B
5th Servicing	SS	1999, 2nd	Type C
6th Servicing	SS	1999, 4th	Type B
7th Servicing	SS	2000, 2nd	Type C
8th Servicing	SS	2000, 4th	Type B

NOTES: The servicing pattern shown, i.e., Type C in the 2nd quarter of each year and Type B in the 4th quarter, is repeated through mission termination.

The different types of SBAR strawman servicing missions are defined in paragraph 14.1.

15.2 Summary of SBAR Mass Considerations

a. SBAR in Operational/Servicing Configurations

FF Mass (dry):	2585 kg
Console Mass:	100 kg
Consumables Mass:	380 kg
Console Consumables:	10 kg
SBAR Mass (total):	3075 kg

b. SBAR Servicing Mass Up and Down in STS*

Event	Quarter CY	Mass Up (kg)	Mass Down (kg)
Launch	2nd 1997	3075	
1st Servicing	2nd 1997	0	0
2nd Servicing	4th 1997	1800	1800
3rd Servicing	2nd 1998	1920	1920
4th Servicing	4th 1998	1800	1800
5th Servicing	2nd 1999	1920	1920
6th Servicing	4th 1999	1800	1800
7th Servicing	2nd 2000	1920	1920
8th Servicing	3rd 2000	1800	1800

* Mass up/down pattern continues through mission termination. STS Flights will normally occur prior to and following payload servicing. Table indicates mass up required for the servicing and mass down resulting from the servicing.

c. SBAR Servicing Storage Mass on Space Station

Calendar Year	95	96	97	98	99	00	01	02	03	04	05
Unpressurized											
Continuous	0	0	1530	1530	1530	1530	1530	1530	1530	1530	1530
Temporary	0	0	1155	1155	1155	1155	1155	1155	1155	1155	1155
Pressurized											
Continuous	0	0	0	0	0	0	0	0	0	0	0
Temporary	0	0	30	30	30	30	30	30	30	30	30
Total	0	0	2715	2715	2715	2715	2715	2715	2715	2715	2715

15.3 Summary of SBAR Volume Considerations

a. Free-flyer Volume

Operational Configuration*:	110 m^3
Servicing Configuration*:	110 m^3
Storage/Transportation Configuration*:	42 m^3

* Free-flyer solar array is deployed during operations and servicing. Solar array is folded during storage and transportation (if used).

b. Free-flyer Servicing Volumes Up and Down in STS

Event	Volume Up (m^3)	Volume Down (m^3)
Launch	19	
1st Servicing	0	0
2nd Servicing	15	15
3rd Servicing	15	15
4th Servicing	15	15
5th Servicing	15	15
	:	:
	:	:

c. SBAR Servicing Storage Volume on Space Station*

Calendar Year	95	96	97	98	99	00	01	02	03	04	05
Unpressurized											
Continuous	0	0	14	14	14	14	14	14	14	14	14
Temporary	0	0	5	5	5	5	5	5	5	5	5
Pressurized											
Continuous	0	0	0	0	0	0	0	0	0	0	0
Temporary	0	0	0.3	0.3	0.3	0.3	0.3	0.3	0.3	0.3	0.3
Total	0	0	19.3	19.3	19.3	19.3	19.3	19.3	19.3	19.3	19.3

*The SBAR full-flyer, which consists of an operational carrier and a test instrument, will essentially be stored permanently on station in an unpressurized environment. For the two quarters each year in which the range is active, this storage requires the full 19 m^3 full-flyer. For the two dormant quarters, only the carrier is present, at an approximate volume of 14 m^3. Hence, there is a need for continuous storage of 14 m^3 on station, and temporary storage for an additional 5 m^3 every other quarter.

15.4 Summary of SBAR Free-flyer Power Considerations*

	AVG	MAX
Operational Power (watts)	650	800
Servicing Power (watts)	TBD	750
Storage Power, Servicing Materials** (watts)	310	N.A.

* Internal console power requirements are TBD.

** Required for materials in Operational Carrier that is permanent storage on SS starting in 4th quarter of CY 1997.

15.5 Summary of SBAR Servicing Time Estimates

Calendar Year	95	96	97	98	99	00	01	02	03	04	05	TOTAL
Elapsed Time (hr:min)	0	0	20:30^	43:00^	43:00^	43:00^	43:00^	43:00^	43:00^	43:00^	43:00^	364:30^
IVA Time (Crew-hr:min)	0	0	25:00^	53:00^	53:00^	53:00^	53:00^	53:00^	53:00^	53:00^	53:00^	449:00^
EVA Time (Crew-hr:min)	0	0	25:40^	54:00^	54:00^	54:00^	54:00^	54:00^	54:00^	54:00^	54:00^	457:40^
Total Crew Time (hr:min)	0	0	50:40^	107:00^	107:00^	107:00^	107:00^	107:00^	107:00^	107:00^	107:00^	906:40^
Robotics Time (hr:min)	0	0	10:00^	20:40^	20:40^	20:40^	20:40^	20:40^	20:40^	20:40^	20:40^	175:20^

15.6 Summary of OMV Flights in Support of SBAR Servicing

The SBAR free-flyer will require four OMV flights per year.

REFERENCES

1. Mission Requirements Data Base (MRDB), NASA/JSC, January 17, 1987.

2. Technical discussions and data review with Mr. G. Knouse, SBAR Program Manager, during June, 1987 and September, 1987

3. OSSA Space Station Payload Servicing Data Book II, (This document); 3S.

SPACE INFRARED TELESCOPE FACILITY (SIRTF): MISSION CODE SAAX0004

1.0 SIRTF PROGRAM AND OPERATIONS INFORMATION

1.1 SIRTF Points of Contact

Mr. Jim Murphy
Manager of Study Office
NASA/ARC
Code SR, Mail Stop 244-15
Moffett Field, CA 94035
(415) 694-6530

Mr. Larry A. Manning
Deputy Study Manager
NASA/ARC
Code SRS, Mail Stop 244-15
Moffett Field, CA 94035
(415) 694-6530

Mr. Christopher B. Wiltsee
Systems Engineering Manager
NASA/ARC
Code SRA, Mail Stop 244-15
Moffett Field, CA 94035
(415) 694-5913

1.2 SIRTF Objectives

The Space Infrared Telescope Facility (SIRTF) will be a long-lived, space-based observatory designed to explore the infrared spectrum. As one of the four "great observatories" planned by NASA for the 1990s, SIRTF will be complementary to the Hubble Space Telescope (HST), Advanced X-ray Astrophysics Facility (AXAF), and Gamma Ray Observatory (GRO) spacecraft. SIRTF will be unique among these in that it will study astrophysical features and phenomena in the infrared region of the spectrum. To do this, SIRTF will use liquid helium to supercool optical and instrument surfaces to within 2 degrees Kelvin of absolute zero. The state-of-the-art cooling system, optics, and instruments will provide a thousand-fold increase in sensitivity over that previously available in this spectral region and will allow SIRTF to answer questions about the birth of stars, galaxies, and the Universe itself. Specifically, SIRTF will carry out investigations in the following six areas:

a. Protogalaxies

SIRTF will carry out a deep-space search for very distant, highly red-shifted protogalaxies which may now be detectable due to SIRTF's increased sensitivity. SIRTF will also be capable of imaging forming clusters of galaxies.

b. Quasi-Stellar Objects

SIRTF will provide the ability to study quasars in the infrared with greatly enhanced sensitivity.

c. Infrared Emissions from Galaxies

SIRTF will be able to determine the distribution of galaxies in space and time, search for evolutionary trends in galactic properties, and study the chemical compositions and physical properties which generate infrared radiation.

d. Missing Mass

SIRTF will be able to search for "missing mass" (objects with a high mass-to-luminosity ratio). SIRTF will look for halos of faint red stars around galaxies, cool material in clusters of galaxies, and brown dwarfs in the extra-solar neighborhoods.

e. Star Formation and the Interstellar Medium

SIRTF will examine the thermal balance, chemical composition, and dynamics of star formation; study individual protostellar objects in detail; and investigate the return of matter to the interstellar medium by studying circumstellar shells around evolved stars across the Milky Way galaxy. SIRTF will also carry out the first systematic infrared studies of star formation in other galaxies.

f. The Solar System

SIRTF will study the composition and structure of the atmospheres of the outer planets. SIRTF will also be able to determine the size and surface composition of small bodies in the outer Solar System which may be representative of the composition of the primordial solar nebula.

1.3 SIRTF Milestone and Servicing Schedule

Launch: 4th quarter, 1996

First Space Station Service: 2nd quarter, 1998

Servicing Interval: 18 months initially; 27 months thereafter

Operational Lifetime: 10 years

1.4 SIRTF Orbital Parameters

Apogee:	900 km (± 10 km)
Perigee:	900 km (± 10 km)
Inclination:	28.50 deg
Alignment:	co-alignment with Space Station orbit sufficient to meet servicing interval requirements using OMV for retrieval (estimated to occur every 9 months)

2.0 SIRTF PHYSICAL CHARACTERISTICS

2.1 SIRTF Facility Description

a. Comments

SIRTF will be a cryogenically cooled 1-meter class infrared telescope. It will be deployed on a Space Station co-orbiting platform. As such, SIRTF is being designed to operate independently of the Space Station (excepting scheduled or unscheduled servicing support). SIRTF will be composed of three major subsystems. The first is the telescope and instruments; the second is the cryogenic cooling system; and the third is the supporting spacecraft platform bus which provides power, communications, and attitude control for the telescope/instrument subsystem. Due to contamination concerns and because of SIRTF's size, the Orbital Maneuvering Vehicle (OMV) (rather than an integral propulsion subsystem) will be used for SIRTF deployment and retrieval. Figure SIRTF-1 shows the current SIRTF IR telescope and telescope subsystems' configuration.

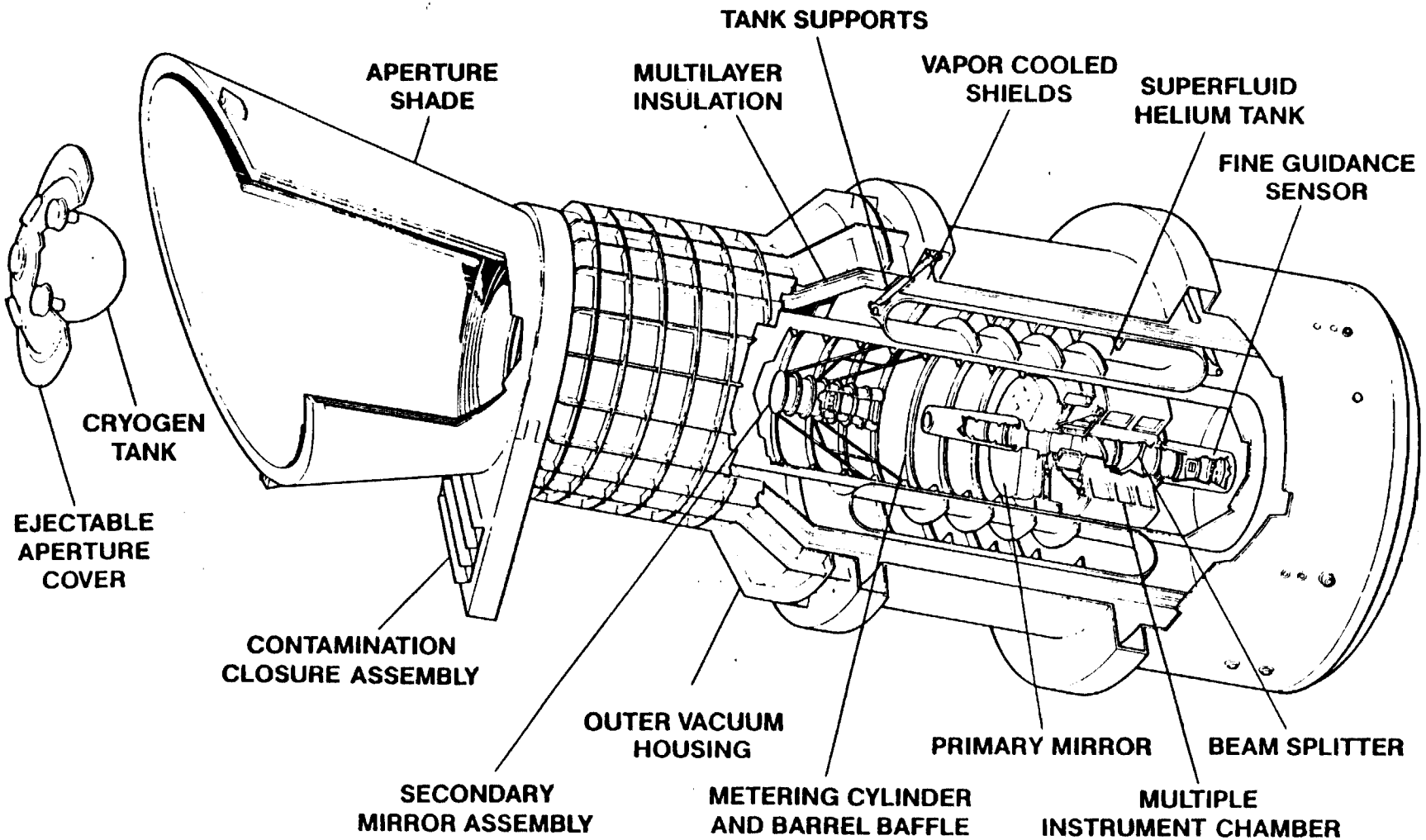

Figure SIRTF-1. SIRTF Telescope and Subsystems Configuration

b. Telescope

SIRTF will use a two-mirror Ritchey-Chretien optical system with a 92 cm aperture. The optics will be diffraction-limited at 2.5 microns (wavelength) with a bandwidth of 1.8 to 700 microns. The field-of-view (FOV) will be 7 arc-minutes. The telescope glass mirrors, instruments, and interior structure will be cooled to ~2 degrees Kelvin with liquid helium stored on-board. Beam switching rather than beam sharing will be used; this will allow instruments to have access to the full telescope FOV during operation (although this also means that only one instrument will be active at a time). A dichroic beam splitter will be used to pass the IR spectrum to one instrument port at a time (see Figure SIRTF-2). An asymmetrical sunshade will provide Sun and Earth-limb exclusion. SIRTF will be protected by an (ejectable) aperture vacuum cover during launch and deployment; there will also be an aperture closure assembly which may be remotely or automatically deployed during emergencies or for on-orbit servicing. SIRTF will carry three instruments: an Infrared Spectrometer (IRS), an Infrared Array Camera (IRAC), and a Multiband Imaging Photometer (MIPS). Instrument accommodations will be provided by the Multiple Instrument Chamber (MIC). The MIC is being designed to hold the three SIRTF instruments and will be integrated with the telescope subsystem.

The following listing provides an overview of SIRTF's telescope characteristics:

(1)	Diffraction Limit:	2.5 microns
(2)	Primary Mirror:	92 cm diameter, glass, f/1.5
(3)	Secondary Mirror:	two-axis
(4)	Tube Length:	253 cm
(5)	MIC:	1 meter diameter, 1 meter length

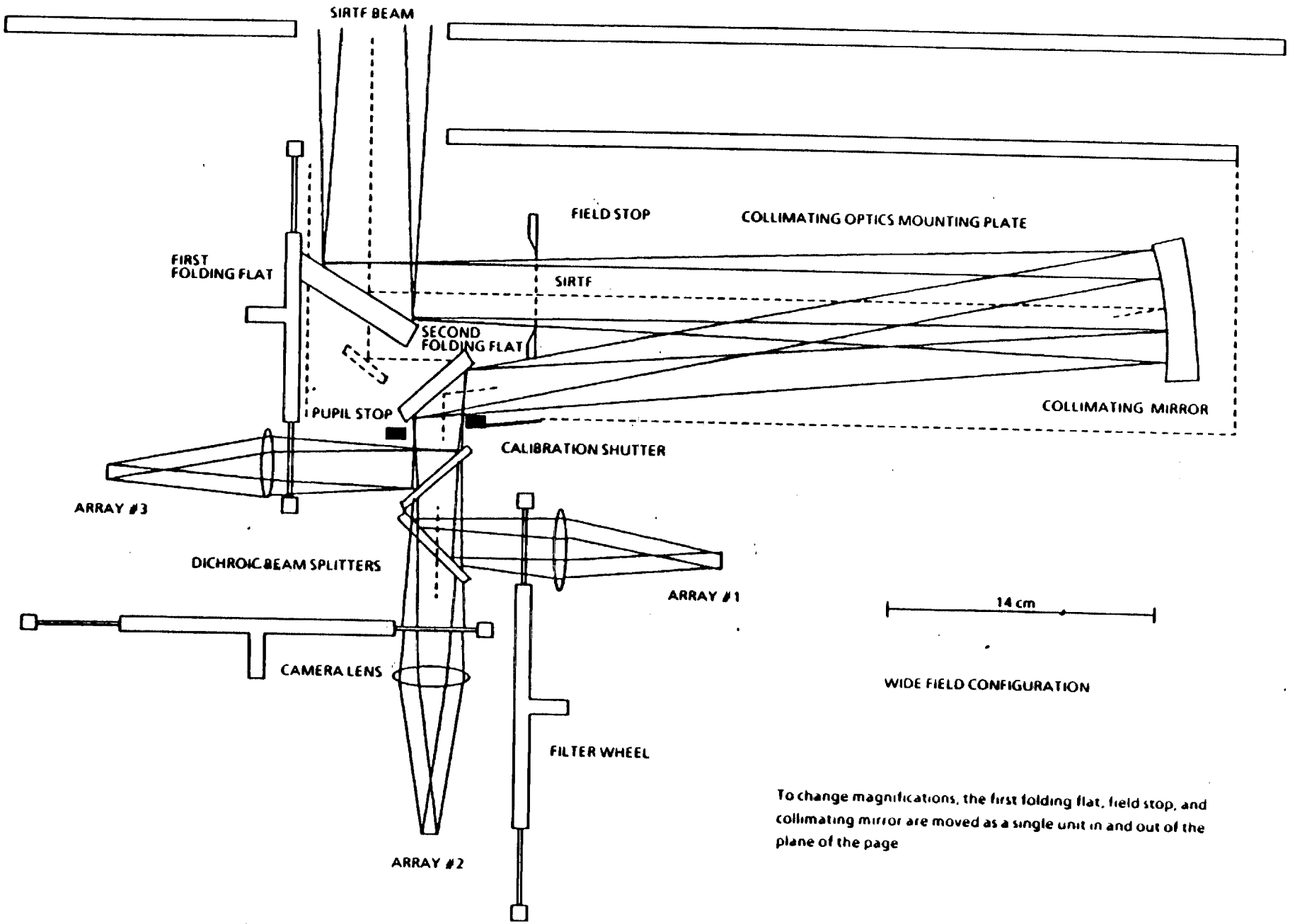

Figure SIRTF-2. Side View of the SIRTF IR Array Camera in the Wide-Field Configuration

(6)	Heat Load:	25 mW per instrument at 2 deg K
(7)	Fine-Guidance Sensor:	External
(8)	Realtime Operations:	None (preprogrammed studies only)
(9)	Image Motion Compensation:	None

c. Sunshade

SIRTF will employ an asymmetrical, truncated cone sunshade to prevent solar or terrestrial radiation from striking the interior of the telescope. The telescope boresight must be kept at least 59 degrees away from either the Sun or Earth limb. The inner shell of the sunshade itself will be cooled to minimize the amount of self-emitted thermal radiation entering the telescope aperture. During ground handling and launch, a lightweight vented dust cover will be fitted to the outside edge of the sunshade; this cover will be ejected on-orbit before the Shuttle deploys SIRTF and could be removed manually if remote jettison fails. An option under study is to make the dust cover a permanent part of SIRTF; retract/deploy mechanisms would then be included in the system. This feature would help minimize contamination of the interior of the sunshade during OMV, STS, or Space Station operations.

d. Aperture Closure

To protect the interior of the telescope tube and the telescope mirrors, SIRTF will incorporate a gate valve assembly at the open end of the telescope barrel. The aperture closure will be remotely deployable/retractable with manual overrides. This closure will protect the supercooled optics and telescope interior during OMV, STS, or Space Station operations. It will be lightweight and will not be vacuum-tight. An additional (jettisonable) cover will be used to complete the outer shell vacuum enclosure during ground testing and launch.

e. Outer Vacuum Housing

This will be the outer structural shell of the SIRTF observatory. The outer vacuum housing and jettisonable cover will be vacuum-tight to allow the evacuation of the telescope prior to launch. The outer vacuum housing will also provide structural stiffness for the telescope assembly and will have hardpoints for the attachment of spacecraft and telescope warm subsystem modules.

f. Cryogenic Cooling Subsystem

SIRTF will carry approximately 4,000 liters (580 kg) of liquid helium in an internal toroidal dewar. This will be used to keep the telescope mirrors, interior surfaces, and instruments at a temperature of ~2 degrees Kelvin. The cooling subsystem will build on the technology employed in the IRAS satellite and will allow a 27-month operating interval with a ~28 percent (i.e., ~7-month) margin. SIRTF is being designed for on-orbit cryogen replenishment from the Space Station (see Figure SIRTF-3) and will be serviced at 27-month intervals in order to achieve the facility's planned ten-year operational life.

g. SIRTF/Space Station Co-Orbiting Platform

Preliminary feasibility studies for flying SIRTF as a Space Station Platform Mission have been completed. The spacecraft structure will be a wraparound support structure for subsystem modules and appendages. An estimated 8 to 9 subsystem modules will be used. Power will be supplied by platform solar arrays sending 3 to 4 kW to Space Platform Orbital Replaceable Unit (SP ORU) power modules. The SP ORU power module will supply 20 kHz 208-volt AC or 150-volt DC power to the SIRTF. Communication/command/control capability will be provided by a standard SP ORU which meets or exceeds all SIRTF requirements. RF communications will be via a small ORU mounted on the HGA mast, operating over an S-band link. The HGA itself will be ~1.0 meter in

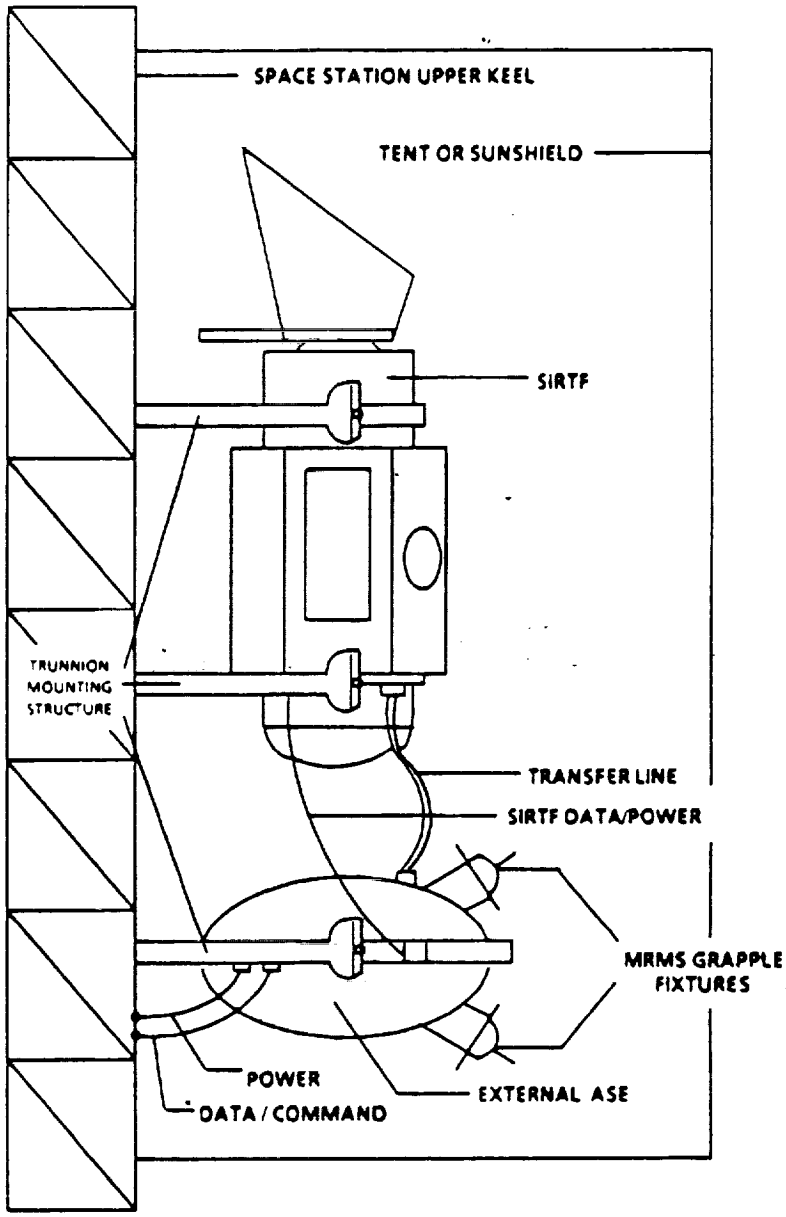

Figure SIRTF-3. SIRTF/Space Station Servicing Configuration Concept

diameter on a 2-meter mast. Pointing and control requirements will be satisfied by standard SP electronics and sensor ORUs; 6 HST-type Reaction Wheel Assemblies (RWAs) in 3 modules or 8 HST-type RWAs in 2 modules will be used for attitude control and slews.

2.2 SIRTF Physical Characteristics

a.	Mass (dry):	5,720 kg
b.	Dimensions (packaged):	9.3 m (length) x 4.47 m (diameter)
c.	Volume (packaged):	145.3 m^3

2.3 SIRTF Moving Parts and Special Features

a. MIC switchable dichroic beamsplitter - internal
b. IRS rotating grating shaft - internal
c. IRAC rotating filter wheels - internal
d. Telescope asymetrical sunshade - external
e. Telescope aperture vacuum cover - external; ejectable upon SIRTF deployment via remote control with EVA manual override provision
f. Telescope aperture closure assembly - external; remotely deployed with EVA manual override capability for on-orbit servicing
g. Solar array - external; based upon space platform design
h. High-gain antenna (HGA) assembly - external; based upon space platform antenna design
i. Helium vent - external

The HGA assembly will be stowed during SIRTF retrieval and servicing operations; it may deployed during SIRTF post-servicing checkout at the Space Station. The solar arrays will be stowed (or contingency jettisoned) during SIRTF retrieval, servicing, checkout, and reboost operations.

2.4 SIRTF Consumables and Limited-Life Parts

a. Consumables

- Cryogen for telescope cooling: the onboard toroidal cryogen dewar will have a maximum capacity of 4,000 liters (580 kg) of superfluid helium.

b. Limited-Life Parts

- Batteries
- Tape Recorders
- Solar Arrays

3.0 SIRTF SERVICING INFORMATION

3.1 General Description of SIRTF Servicing

SIRTF is being designed for on-orbit servicing at the SS, (see Figure SIRTF-4). SIRTF will be returned to the SS by the OMV at intervals of 27 months (after an initial 18-month interval following launch) when SIRTF orbital parameters are such that SS rendezvous can be achieved (i.e., primarily with an altitude change and minimal plane change). SIRTF will remain at the SS for up to 14 days. During this time, SIRTF support systems will be maintained and SIRTF cryogen will be replenished. Following servicing, SIRTF may require temporary deployment by the MRMS or OMV for checkout. Following limited verification of satisfactory operation, SIRTF will be returned to its operational orbit by the OMV. Prior to OMV return to the SS, SIRTF will be fully exercised by ground command. When the SIRTF Operations Control Center is satisfied with operation of the redeployed SIRTF, the OMV will return to the SS.

3.2 SIRTF Background

SIRTF will continue the investigative work begun by IRAS (Infrared Astronomical Satellite) in 1983. IRAS provided the first all-sky survey of infrared sources, locating over a quarter million infrared sources during its 11-month lifetime. However, IRAS (designed as a survey instrument) was far less sensitive than SIRTF will be. SIRTF will be a true space-based observatory

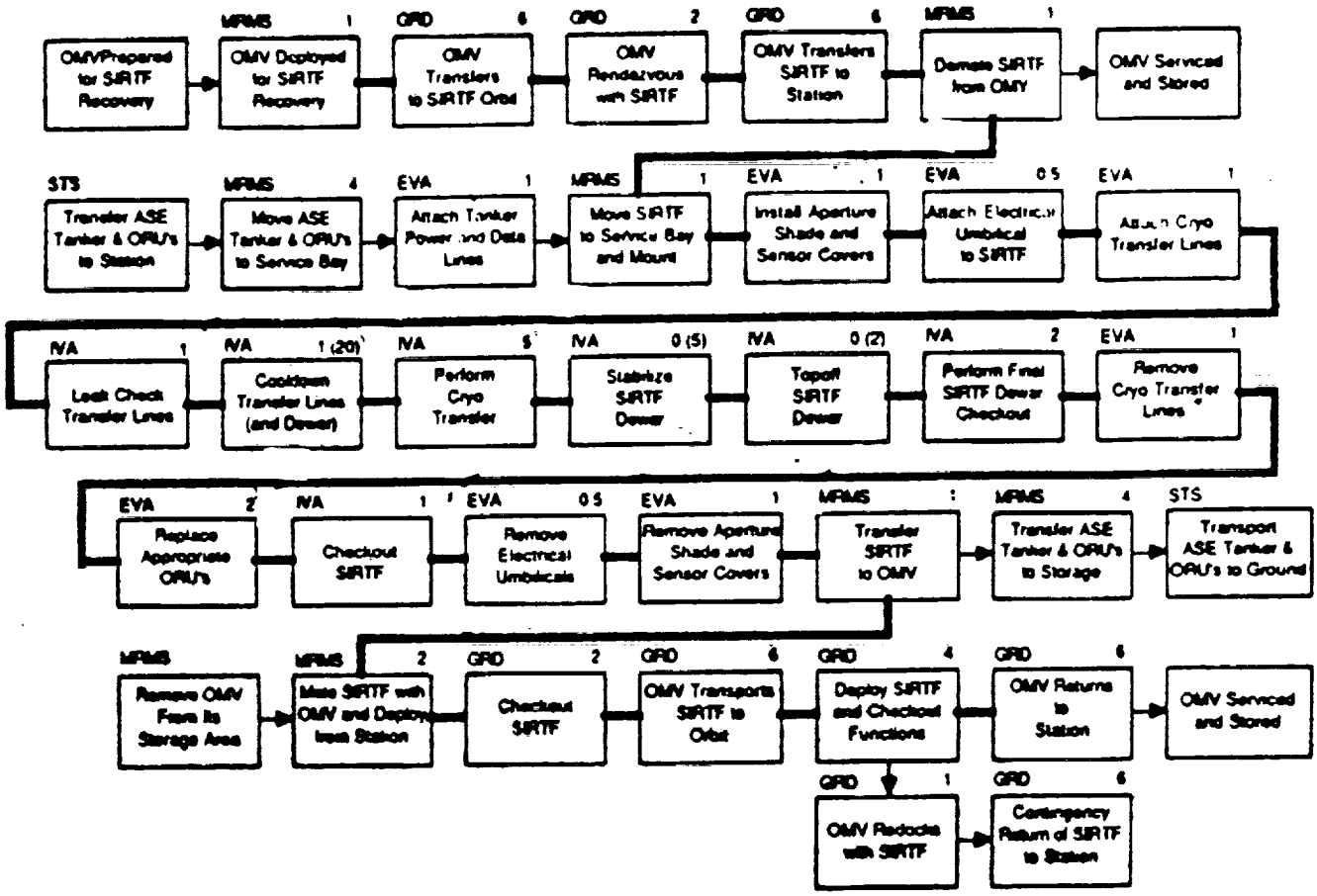

Figure SIRTF-4. SIRTF Servicing Operations Flow at the Space Station

with bandwidth, sensitivity, resolution, and imaging capabilities which will enable new science and allow the investigation of the many questions raised by the IRAS survey mission. SIRTF will support entirely new fields of research (such as infrared studies of solar-type stars). Many of IRAS' most exciting results were unexpected; there is every reason to believe that SIRTF's greatly improved capabilities will result in new and fundamental discoveries about our Universe.

3.3 Primary Role of Space Station in Servicing SIRTF

The Space Station will provide planned facility servicing at approximately 27-month intervals. This will involve replenishment of cryogen and changeout of modularized Orbital Replaceable Units (ORUs). Other possible servicing operations include repair of ORU and FSE components on a contingency basis within the SS pressurized workstation. Studies concerning the possibility of repairing or changing out SIRTF's cryogenically cooled science instruments and mechanisms on-orbit have led to the preliminary assessment that no servicing will be performed on any cooled subsystems within the telescope's interior.

3.4 Primary Space Station Facilities Required for Servicing SIRTF

a. Trunnion sill and keel fittings (or FSS-type cradle) for berthing
b. Sun shield or shroud for thermal control
c. Standard EVA tool kit
d. Temperature-controlled external storage for ORUs
e. Shrouded storage area for cryogen replenishment tanker (CRTR) containing up to 12,000 liters of superfluid liquid helium
f. Internal pressurized work station (with appropriately large access hatch) large enough to accommodate SIRTF telescope and instrument electronics modules for contingency repair. Requirements for test equipment, tools, and piece parts are TBD.

g. Voice/video/data links to allow ground personnel to monitor and support servicing activities

h. Mobile Remote Manipulator System (MRMS) to transport ORUs, tools, and personnel

3.5 Space Station Personnel Required for Servicing SIRTF

Current expectations are that all servicing will be performed by crew payload servicing personnel advised by SIRTF instrument or subsystem specialists on the ground. Replacement and cryogen replenishment operations will require personnel skilled in EVA operations; repair of electronics will require crew with the appropriate technical skills. Repair will be accomplished by EVA with IVA monitor or by IVA within internal pressurized work-stations. The SIRTF design will not preclude use of robotic manipulators for ORU replacement and cryogen replenishment.

3.6 Servicing Precautions for SIRTF

Install covers on sensors, radiators, and telescope aperture shade.

3.7 Orbital Maneuvering Vehicle (OMV) Flight Profile Support of SIRTF

The OMV will be required at launch (from the STS) to place SIRTF into its operational orbit. The OMV will be used for all servicing missions and must retrieve SIRTF to the Space Station, then return SIRTF to orbit (i.e., two OMV round trips are required per servicing mission).

At the appropriate coplanarity opportunity, the OMV will be dispatched from the SS to maneuver to the SIRTF orbit and rendezvous with it. The OMV will be controlled by the ground or the SS until it has departed the SS control zone; it will then perform an automatic maneuvering sequence to transfer it to SIRTF's vicinity. The final rendezvous and docking maneuvers with SIRTF will also be ground-controlled, using radar and television on the OMV in a "telepresence" mode. SIRTF's Attitude

Control System (ACS) will be inhibited just prior to final docking, having put SIRTF into an inertially stable attitude. The OMV will supply power (SIRTF standby mode) and communications (SIRTF engineering telemetry) during all attached phases. In order to minimize OMV-induced contamination of SIRTF, all final rendezvous and docking OMV maneuvers will be accomplished using the cold gas (GN_2) thrusters incorporated into the OMV; also, all OMV attitude control functions during the attached transit phases will need to use inert gas. The main delta-V maneuvering thrusters on the OMV will be pointed away from the SIRTF facility so that their effluents should pose minimal contamination problems, provided there is no bipropellant leakage. Following docking, electrical connection, and SIRTF appendage retraction, the OMV will transfer SIRTF to the SS vicinity using its automatic maneuvering mode. The entire OMV retrieval mission is estimated to take about 16 hours.

Once in the SS control zone, the OMV will be maneuvered by command to within the SS MRMS capture envelope where SIRTF will be grappled and the OMV will be released. The OMV will then be moved to its storage/refueling location to prepare for SIRTF redeployment a few days later. Upon completion of all servicing activities at the SS, the MRMS will then remove SIRTF from the Space Station Servicing Facility and transfer it for attachment to the OMV. The OMV will maneuver SIRTF to a safe distance for a partial checkout by ground command. Then, the OMV will transfer SIRTF to its 900 km circular operational orbit, detach itself, and stand by to view SIRTF appendage deployment. The SIRTF contamination aperture closure will be retracted for final checkout and science capability verification. Upon successful completion of this checkout, the OMV will return to the SS; if an anomaly were detected, the OMV would reattach to SIRTF and contingency return it to the SS for further servicing, as needed.

4.0 SIRTF SERVICING SAFETY CONSIDERATIONS

4.1 SIRTF Hazardous Systems

- Up to 12,000 liters of superfluid liquid helium used to cool the telescope will be contained in the replenishment tanker, transfer line, and SIRTF dewar
- Gaseous helium venting at 200 to 250 degrees K
- Cold disconnects on transfer line after transfer

4.2 SIRTF Servicing Safety Precautions

- Thermal gloves for handling cryogen transfer line couplers
- Mass spectrometer or similar device to monitor for helium leakage
- Internal sensors on replenishment tanker to monitor pressure

5.0 SIRTF SERVICING INTERFACES AND RESOURCE REQUIREMENTS

5.1 SIRTF Crew Convenience Features

- Handrails and handholds
- Tether rings and foot restraint sockets
- Rounded corners and edges
- Handles, blind-mate connectors, and captive fasteners on ORUs

5.2 SIRTF Mechanical Interfaces

- OMV (using FSS interface per HST)
- MRMS grapple fixture(s)
- STS sill and keel trunnions
- FSS berthing pins and connectors

5.3 SIRTF Umbilical Interfaces

a. Power

- 28 VDC operating and servicing for SIRTF electronics (or 208 VAC for COP)
- 0.3 kW operating (instruments and telescope subsystem)

- 1.37 kW operating (COP)
- 1.67 kW operating (total facility, with COP)
- 0.4 kW servicing/storage (bus, instruments, telescope subsystems, and servicing airborne support equipment)

b. Data

- 8 bps command rate during cryogen replenishment servicing; 1 kbps command rate during facility operations
- 512 bps telemetry rate during cryogen replenishment servicing
- Instrument checkout at the Space Station following superfluid helium resupply will be performed with an internal stimulator rather than by removing the telescope's sunshade cover. This may require the SS to acquire and downlink SIRTF instrument test data at 300 kbps (whether realtime or as a data dump is TBD); instrument test duration and frequency are TBD.
- 1.5 kbps engineering telemetry rate during operations
- up to 300 kbps science instrument (one at a time) data rate during operations

c. Fluid

- No direct interface with the SS is required. SIRTF will interface with the cryogen replenishment tanker through a tanker-mounted vacuum-jacketed transfer line and bayonnet disconnects.

5.4 SIRTF RF Communication Interface

- Not expected to be required during servicing; TBD during operations

5.5 SIRTF Thermal Interface

- Storage and service location critical to avoid excess use of cryogen

- External surface of telescope and cryogen replenishment tanker must be maintained between 150 and 210 degrees K during servicing. A low-emissivity tent or shroud is highly desirable.
- SIRTF requires thermal isolation from the SS during servicing to ensure minimal heat transfer across the temporary interface
- Temperature range for SIRTF non-cryogenically controlled instrument electronics and subsystem components is -23 to +27 degrees C during servicing and storage

6.0 SIRTF SERVICING ENVIRONMENT

6.1 SIRTF Pointing/Orientation Constraints

a. Exposure to Light

- With the telescope aperture shade cover removed (for on-orbit checkout, retrieval, and handling), the telescope boresight must not point within 59 degrees of the Sun or 59 degrees of the limb of the Earth (angles vary with SIRTF "roll" angle).
- Precautions must also be observed during retrieval, deployment, and handling prior to covering star trackers and fine-guidance sensors.

b. Thermal Control

- SIRTF must be shrouded or shaded on the Sun side.

c. Other

- With the telescope aperture shade cover open or removed, the normal to the aperture shade opening should be at least 90 degrees off the velocity vector.
- The above restrictions may be violated, if necessary, with the aperture closure closed or during OMV-powered maneuvers. The preferred orientation of SIRTF while attached to the OMV is for the OMV to shade SIRTF from the Sun.

6.2 SIRTF Contamination Concerns

- The SIRTF facility and ORUs require a Class 10K clean room environment for servicing.
- The column density of water, carbon dioxide, and hydrocarbons must be less than 10E+11 molecules/sq cm with the sunshade cover removed.
- SIRTF will employ a telescope aperture shade cover to help protect the cooled optics from contamination. This will be included with other SIRTF FSE and ORUs and will be installed onto SIRTF at the SS by EVA crew members. Contamination control requirements with aperture shade cover in place are TBD.
- Protection from molecular deposition due to outgassing from EVA suits must be provided for all cold surfaces (e.g., by an aperture shade cover or EMU modification).
- Acceptable mass loss from materials outgassing around SIRTF is estimated to be up to 3E-07 $g/cm^2/hr$ with the telescope aperture shade cover removed.
- Acceptable mass loss from materials outgassing around SIRTF with the telescope aperture shade cover in-place is TBD.
- In general, SIRTF contamination and outgassing concerns are for the protection of the supercooled optical surfaces. However, contamination of the facility's warm exterior may degrade critical thermal finishes and may in turn contaminate cooled optics when the aperture closure is opened on-orbit.

6.3 SIRTF Radiation Concerns

- Ionizing radiation only

7.0 SIRTF SERVICING ACCOMMODATIONS

7.1 SIRTF Equipment Access

- All ORUs (e.g., MPSs, SAs, and TRs) are externally located for ease of access. Access to internal components requires major disassembly and is not presently baselined.

7.2 SIRTF Modularity

- All support systems are modularized in Co-Orbiting Platform (COP) modules.

7.3 SIRTF Automated Servicing

- SIRTF's ORU modules (and possibly the telescope warm electronics housed in ORU module boxes) will be capable of robotic changeout by any ORU-compatible system.

7.4 SIRTF Servicing in the Space Station Pressurized Modules

Space Station internal servicing is a low-probability activity for SIRTF. While it is possible that a malfunctioning electronics module could be repaired (given adequate on-orbit repair facilities), it is more likely that a faulty module will be replaced with spares either stored on-orbit or sent from the ground.

8.0 SIRTF SERVICING MATERIALS CHECKLIST

Servicing Equipment	Required	SS-Provided	Comments	Ref. Section
ORUs (including SIs)	yes	yes	2 SS co-orbiting platform power modules; 1 COP low-capacity tape recorder module; 2 COP solar array panels	9.0
Flight Support Equipment	yes	no		10.0
Other Equipment	no	no		10.0
Servicing Equipment Carrier(s)*	yes	yes		12.0
Servicing Consumables				
Propellant(s)	no	no		11.0
container(s)	no	no		11.0
Cryogen(s)	yes	yes	liquid helium	11.0
container(s)	yes	yes	CRTR	11.0
Liquid(s)	no	no		11.0
container(s)	no	no		11.0
Gas(es)	no	no		11.0
container(s)	no	no		11.0
Other(s)	no	no		11.0
container(s)	no	no		11.0
Servicing Consumables Carrier(s)*	yes	yes		12.0

* Carriers for servicing materials are typically used during transportation in the STS Orbiter and/or during storage on the SS. A single carrier (e.g., the SS-provided Logistics Module) may be used.

9.0 SIRTF ORBITAL REPLACEABLE UNITS (ORUs)

9.1 Servicing of SIRTF ORUs

a. Primary

Spacecraft Modules

- Platform Modular Power Subsystem :MPS
- Platform Low-Capacity Tape Recorder :TR
- Platform Solar Array :SA

b. Secondary

Telescope Warm Electronics Module(s)*

- Fine-Guidance Sensor Electronics :FGSE
- Secondary Mirror Control Electronics :SMCE
- Cryogen Management Electronics :CME
- Beamsplitter Control Electronics :BCE

Instrument Warm Electronics Module(s)*

- Camera Electronics :CE
- Spectrometer Electronics :SE
- Photometer Electronics :PE

Spacecraft Modules

- Guidance, Navigation, and Control Subsystem :GN&C
- Communications and Data Handling Subsystem :CADH
- High-Gain Antenna :HGA
- Low-Gain Antenna :LGA
- HST-Type Reaction Wheel Assembly :RWA

(* 1 or 2 ORU modules will contain all telescope and instrument combined warm electronics)

9.2 SIRTF ORU Physical Characteristics

ORU Name	Mass (kg)	Dimensions (m)	Power (watts) Operating	Power (watts) Storage	Number Req'd SIRTF	Number Req'd Spares
MPS	182	1.65 x 0.725 x 0.725	62	TBD	2	2
TR	81	1.65 x 0.725 x 0.725	30	TBD	1	1
SA	332	6.59 x 0.88 x 0.88	0	0	2	2
FGSE*	128	0.45 x 0.6 x 0.6	30	TBD	1	1
SMCE*	25	0.2 x 0.4 x 0.4	30	TBD	1	1
CME*	32	0.25 x 0.4 x 0.4	301	TBD	1	1
BCE*	7.5	0.15 x 0.25 x 0.25	10	TBD	1	1
CE*	50	0.45 x 0.45 x 0.45	60	TBD	1	1
SE*	50	0.45 x 0.45 x 0.45	60	TBD	1	1
PE*	50	0.45 x 0.45 x 0.45	60	TBD	1	1
GN&C	116	1.65 x 0.725 x 0.725	193	TBD	1	1
CADH	107	1.65 x 0.725 x 0.725	243	TBD	2	1
HGA	TBD	2.0 (mast) x 1.0 dia	TBD	TBD	1	1
LGA	TBD	TBD	TBD	TBD	2	1
RWA	TBD	1.65 x 0.725 x 0.725	46**	TBD	3	1

* These SIRTF electronics systems will be packaged into 1 to 2 standard ORUs

** per module

9.3 SIRTF ORU Storage Requirements

- The storage temperature range for non-cryogenically cooled electronics and ORUs will be -23 to +27 degrees C; storage power requirements are TBD.

9.4 Other Environmental Requirements for SIRTF ORUs

- ORUs will be transported and stored in protective containers until required for changeout. During changeout, the telescope servicing environment requirements prevail.

10.0 SIRTF FLIGHT SUPPORT AND MISCELLANEOUS SERVICING EQUIPMENT

10.1 SIRTF Flight Support Equipment (FSE)

- Transfer umbilicals and cabling for cryogen replenishment*
- Protective covers for aperture shade, Sun and Earth sensors, and high-gain antenna
- Command/control console for cryogen replenishment operation (if adequate general-purpose power/signals interface is not otherwise provided by the Space Station)

(* These are integral parts of the SS-provided cryogen replenishment tanker and are not transported separately.)

10.2 SIRTF FSE Physical Characteristics

Mass (kg)	Dimensions (m)	Volume (m^3)
100	0.5 x 0.6 x 1.7	0.5

10.3 SIRTF FSE Storage Requirements

No information available.

10.4 SIRTF Miscellaneous Servicing Equipment

No information available.

11.0 SIRTF SERVICING CONSUMABLES AND CONTAINERS

11.1 Description and Purpose

The SIRTF onboard cryogen dewar will have a maximum capacity of 4,000 liters (580 kg) of liquid helium to maintain the telescope optics at ~2 degrees K to minimize spurious thermal infrared radiation emitted by the telescope itself. SIRTF will be launched onboard the STS in the cold state to reduce initial on-orbit cryogen demands and is expected to vent gaseous cryogen at a rate of 6.4 mg/sec in order to maintain the liquid helium in its superfluid state at ~2 degrees K. Due to uncertainties in SIRTF's operational and orbital environments, the first cryogen replenishment will occur 18 months after launch; subsequent cryogen replenishment servicings are planned at 27-month intervals. Cryogen replenishment will be accomplished by transfer from a storage tanker (CRTR) via an insulated umbilical.

The preliminary cryogen replenishment tanker characteristics are shown in Figure SIRTF-5. Since approximately 850 liters of cryogen are assumed to be wasted during replenishment of SIRTF's cold onboard dewar to account for cooling down the transfer umbilical (75 liters) and the venting loss encountered during transfer into the dewar (775 liters), it is projected that 4,850 liters (703 kg) of cryogen will be expended from the CRTR in order to transfer a net 4,000 liters (580 kg) into the SIRTF onboard dewar.

11.2 Physical Characteristics

a. Cryogens

Element	Mass (kg)	Dimensions (m)	Volume (m^3)	No. Used
Liquid He	703 to 1,740	N.A.	4.8 to 12	N.A.
Liquid He Tank	3,400	2.4 x 4.3 dia.	30.55	1

b. Others

No information available.

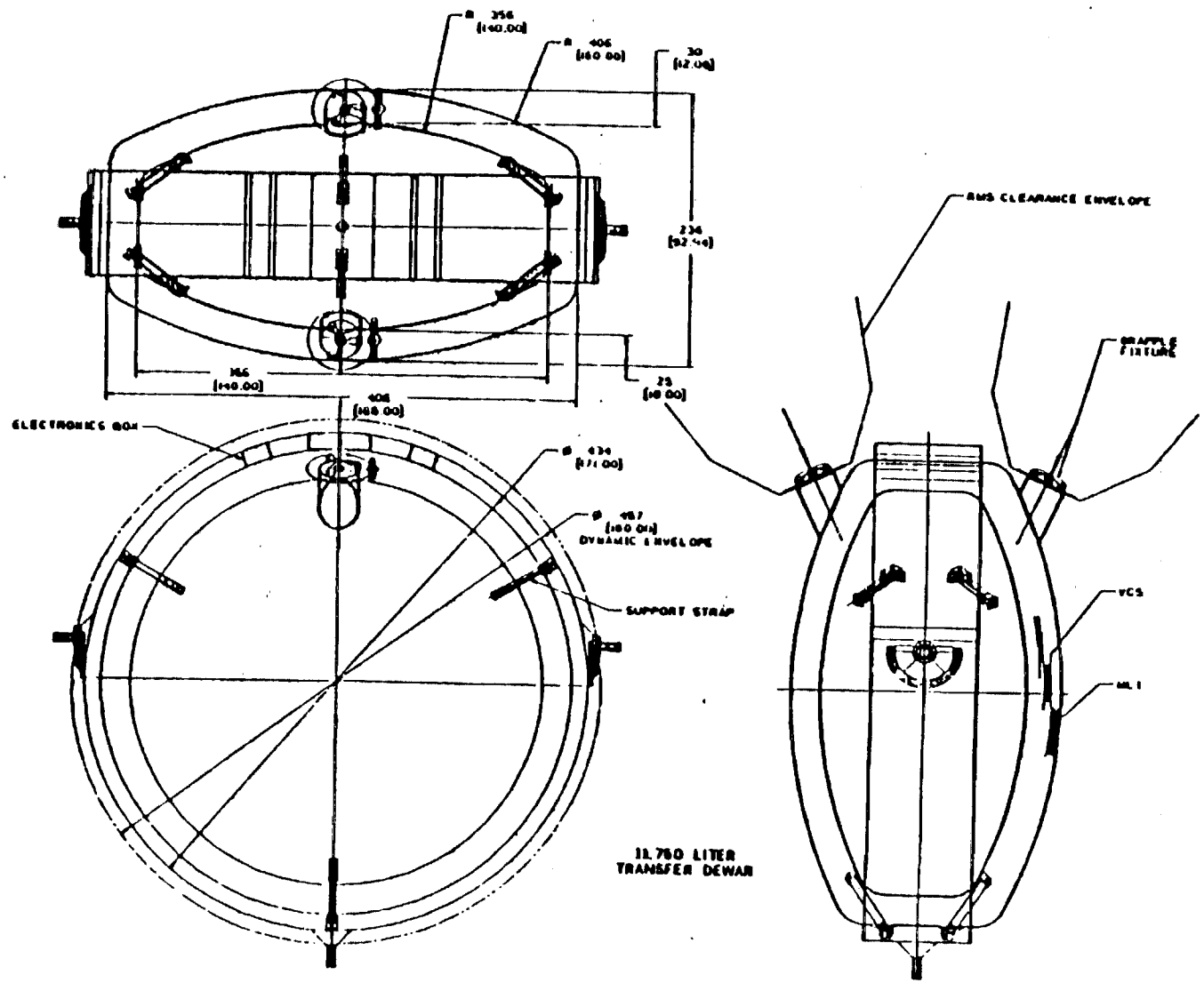

Figure SIRTF-5. SIRTF Liquid Helium Cryogen Replenishment Tanker (CRTR) Configuration Concept

11.3 Storage Requirements

Element	Storage Temperature Range (deg. C)	Storage Power Range (watts)
CRTR	TBD to +27	TBD to TBD

12.0 CARRIERS FOR SIRTF SERVICING MATERIALS

12.1 Description of Carriers

It is assumed that SIRTF will require special carriers for transport of the ORUs, servicing equipment, and consumables listed in sections 9.0, 10.0, and 11.0, respectively. However, details related to these carriers (e.g., mass, dimensions, volume, and storage requirements aboard the Space Station) are TBD. Such carriers will probably be unpressurized and may be provided by the Space Station (e.g., the Logistics Module for the ORUs and FSE and the CRTR for the cryogen replenishment tanker).

12.2 STS and SS Carrier Interfaces

Specific arrangements for interfacing carriers for SIRTF ORUs, servicing equipment, and consumables with the STS Orbiter and with the Space Station (e.g., whether via trunnions, RMS grapple fixtures, umbilicals, or hard mounts and whether they remain in the Orbiter payload bay or are either temporarily or permanently stored at the Space Station) are TBD. The replacement module ORUs and cryogen replenishment tanker and associated carriers should be protected from solar exposure and contamination during any storage periods required. If stored in an SS bay, the cryogen replenishment tanker should be exposed only to low-emissivity surfaces whose temperatures are 300 degrees K or less. Power and communication interfaces would be necessary to enable health and status monitoring and functional checkout of the equipment in these carriers.

12.3 Servicing Materials/Carrier Interfaces

Specific arrangements for how, when, and where the servicing materials are to be removed from and returned to their carriers are TBD.

13.0 SIRTF ORBITAL SERVICING ACTIVITIES TIME ESTIMATES

13.1 Mission Servicing Ground Rules and Constraints

Specific information concerning ground rules and constraints inherent in on-orbit servicing for SIRTF are presented in the following sections of this report: 2.1, 2.3, 3.5, 3.6, 3.7, 4.2, 5.5, 6.1, 6.2, and 7.4.

13.2 Preparatory Servicing Time Estimates

Activity	Elapsed Time (hr:min)	IVA Time (crew-hr:min)	EVA Time (crew-hr:min)	Robotics Time (hr:min)
1. Unloading Servicing Material from STS to SS SIRTF	4:00	4:00	0:00	4:00
2. SIRTF Berthing-Related Activities at SS SF	3:30	3:30	3:00	2:00

13.3 Principal Servicing Time Estimates

Activity	Elapsed Time (hr:min)	IVA Time (crew-hr:min)	EVA Time (crew-hr:min)	Robotics Time (hr:min)
1. ORU Changeout*	2:00/6:00	2:00/6:00	4:00/12:00	0:00/0:00
2. Liquid Helium Cryogen Replenishment**	9:20/11:00	9:20/11:00	4:00/4:00	0:00/0:00

*The initial value is for changeout of two power module ORUs; the second value is for changeout of one low-capacity tape recorder ORU and two solar array panel ORUs.

**The initial value is for an initial servicing 18 months after launch; the second value is for subsequent servicing at 27-month intervals.

13.4 Close-Out Servicing Time Estimates

Activity	Elapsed Time (hr:min)	IVA Time (crew-hr:min)	EVA Time (crew-hr:min)	Robotics Time (hr:min)
1. SIRTF Deberthing-Related Activities at SS SF	5:30	5:30	3:00	3:00
2. Loading of Servicing Material from SS to STS	4:00	4:00	0:00	4:00

14.0 SIRTF STRAWMAN SERVICING SCENARIOS

14.1 SIRTF Strawman Servicing Missions

The following three strawman servicing missions address typical, representative, planned servicing scenarios of average complexity for SIRTF. Unplanned, highly complex, contingency situations are not included.

The Type A strawman servicing mission consists of replenishing the liquid helium cryogen onboard SIRTF; this activity does not include the attendant requisite on-orbit operations for unloading the filled cryogen containers and their carrier from the STS Orbiter and subsequently reloading the emptied containers and their carrier back aboard the Orbiter for return to Earth, as per the ground rules presented in Chapter I of this data book. The Types B and C strawman servicing missions consist of the activity in the Type A mission plus an additional principal servicing activity selected from Section 13.3: replacing two power module ORUs (for Type B) and replacing two solar array panel ORUs and one low-capacity tape recorder ORU (for Type C).

All three Types A, B, and C servicing missions involve:

- attaching cryogen transfer lines from the CRTR to the SIRTF dewar

- checking cryogen transfer lines for leaks
- cooling down the cryogen transfer lines by input of liquid helium
- transferring superfluid liquid helium from the CRTR into the SIRTF onboard cryogen dewar via cooled cryogen transfer lines
- performing a final checkout of the SIRTF dewar upon cryogen transfer completion
- removing cryogen transfer lines from the SIRTF dewar

The Types B and C missions further require:

- unloading replacement ORUs with their carrier from the Orbiter payload bay
- short-term storage of the ORUs in their carrier at the Space Station
- translating the ORUs to the SS Servicing Facility
- changeout of the current ORUs with the replacement ORUs
- returning the replaced ORUs to temporary storage in the Logistics Module Carrier at the Space Station
- reloading the replaced ORUs and their carrier into the Orbiter

For Types A, B, and C servicing missions, IVA crew support is required to monitor all EVA operations; transfer ORUs, FSE, and consumables with attendant carriers via the Space Station MRMS; and command/control the transfer of cryogen from the CRTR into the SIRTF dewar. EVA crew support is required to transfer servicing materials between the Orbiter and the Space Station; to connect/disconnect the cryogen transfer lines; and to accomplish the changeout of power module, tape recorder, and solar array ORUs.

14.2 SIRTF Description

The strawman servicing configuration of the overall SIRTF facility for Types A, B, and C missions is the same as that presented in Section 2.2.

14.3 Strawman Servicing Materials

a. ORUs

ORUs	Mass (kg)	Dimensions (m)	Volume (m^3)	Avg. Storage Power (watts)	No. Used
Power Module (Type B mission)	182	1.65 x 0.725 x 0.725	0.867	TBD	2
Tape Recorder (Type C mission)	81	1.65 x 0.725 x 0.725	0.867	TBD	1
Solar Array (Type C mission)	332	6.59 x 0.88 x 0.88	5.10	0	2

b. FSE and Miscellaneous Equipment

FSE	Mass (kg)	Dimensions (m)	Volume (m^3)	Avg. Storage Power (watts)	No. Used
Protective covers for aperture shade, Sun & Earth sensors, and high-gain antenna (Types A, B, & C missions)	100	0.5 x 0.6 x1.7	0.5	0	TBD

c. Consumables and Containers

- Consumable Cryogens: 469 kg superfluid liquid helium (Type A mission); 703 kg (Types B and C missions)
- Cryogen Container: liquid helium is assumed to be available from an SS-provided portable cryogen replenishment tanker (CRTR)
- No Consumable Propellants
- No Consumable Liquids
- No Consumable Gases
- No "Other Consumables"

d. Carriers

Carriers for SIRTF ORUs, FSE, and consumables are currently TBD (see section 12.0); therefore, BDM has postulated the following carrier configurations:

(1) For the Type A mission and for the cryogen replenishment portion of the Types B and C missions, any carriers necessary for accomplishing the cryogen replenishment activities are assumed to be provided by the Space Station and hence are not chargeable to the SIRTF payload program (see ground rules listed in Chapter I, Section J of this databook).

(2) For the Types B and C missions, it is assumed that the Space Station will use its Logistics Module carrier (unpressurized portion) for transporting SIRTF ORUs to and from the Space Station onboard the STS Orbiter.

14.4 Estimated Up/Down Mass on STS to Support SIRTF Strawman Mission Types A, B, and C Servicing*

SERVICING MATERIAL	MASS, UNPRESSURIZED TRANSPORT (kg)	MASS, PRESSURIZED TRANSPORT (kg)	MASS, TOTAL (kg)
Equipment			
SI(s)	0/ 0/ 0	0/0/0	0/ 0/ 0
ORU(s)	0/364/745	0/0/0	0/364/745
Unique FSE	100/100/100	0/0/0	100/100/100
Misc. Equipment	0/ 0/ 0	0/0/0	0/ 0/ 0
Equipment Subtotal	100/464/845	0/0/0	100/464/845
Equipment Carrier(s)**	0/ 0/ 0	0/0/0	0/ 0/ 0
Subtotal, Equipment Mass Up	100/464/845	0/0/0	100/464/845
Subtotal, Equipment Mass Down	100/464/845	0/0/0	100/464/845
Consumables			
Consumables	0/ 0/ 0	0/0/0	0/ 0/ 0
Consumables Containers	0/ 0/ 0	0/0/0	0/ 0/ 0
Consumables Containers' Carriers	0/ 0/ 0	0/0/0	0/ 0/ 0
Subtotal, Consumables Mass Up	0/ 0/ 0	0/0/0	0/ 0/ 0
Subtotal, Consumables Mass Down	0/ 0/ 0	0/0/0	0/ 0/ 0
Total Mass Up	100/464/845	0/0/0	100/464/845
Total Mass Down	100/464/845	0/0/0	100/464/845

* Values for Strawman Mission Types A, B, and C are separated by slashes and are presented in the order A/B/C.

** Assumes usage of the SS-provided Logistics Module as the carrier.

14.5 Estimated Up/Down Volume on STS to Support SIRTF Strawman Mission Types A, B, and C Servicing*

SERVICING MATERIAL	VOLUME, UNPRESSURIZED TRANSPORT (m^3)	VOLUME, PRESSURIZED TRANSPORT (m^3)	VOLUME, TOTAL (m^3)
Equipment			
SI(s)	0/0/0	0/0/0	0/0/0
ORU(s)	0/1.734/11.077	0/0/0	0/1.734/11.077
Unique FSE	0.5/0.5/0.5	0/0/0	0.5/0.5/0.5
Misc. Equipment	0/0/0	0/0/0	0/0/0
Equipment Subtotal	0.5/2.234/11.577	0/0/0	0.5/2.234/11.577
Equipment Carriers*	0/0/0	0/0/0	0/0/0
Equipment and Carriers Subtotal	0.5/2.234/11.577	0/0/0	0.5/2.234/11.577
Consumables			
Consumables in Containers	0/0/0	0/0/0	0/0/0
Consumables, Containers, and Carriers	0/0/0	0/0/0	0/0/0
Total Volume Up	0.5/2.234/11.577	0/0/0	0.5/2.234/11.577
Total Volume Down	0.5/2.234/11.577	0/0/0	0.5/2.234/11.577

* Assumes usage of the SS-provided Logistics Module as the carrier.

14.6 Storage on Space Station Required to Support SIRTF Strawman Mission Types A, B, and C Servicing*

Continuous Storage	Unpressurized	Pressurized	Total
Mass (kg)	0/0/0	0/0/0	0/0/0
Volume (m^3)	0/0/0	0/0/0	0/0/0
Average Power (watts)	0/0/0	0/0/0	0/0/0
Temperature Range (^oC)	-/-/-	-/-/-	-/-/-
Temporary Storage			
Mass (kg)	100/464/845	0/0/0	100/464/845
Volume (m^3)	0.5/2.234/11.577	0/0/0	0.5/2.234/11.577
Average Power (watts)	0/0/0	0/0/0	0/0/0
Temperature Range (^oC)	TBD/-23 to +27/ -23 to +27	-/-/-	-/-/-

* Values for Strawman Mission Types A, B, and C are separated by slashes and are presented in the order A/B/C.

14.7 SIRTF Strawman Mission Types A, B, and C Servicing Power Estimates*

	Operational** Mode (watts)		Servicing Mode (watts)	
	AVG	MAX	AVG	MAX
SIRTF Facility (Bus + Instruments)	1,670	TBD	400/400/400	TBD/TBD/TBD

*Values for Strawman Mission Types A, B, and C are separated by slashes and are presented in the order A/B/C.

**Operational values shown for reference purposes.

14.8 SIRTF Strawman Mission Types A, B, and C Servicing Times

a. Strawman Type A

Activity	Elapsed Time (hr:min)	IVA Time (crew-hr:min)	EVA Time (crew-hr:min)	Robotics Time (hr:min)
*1. STS Brings Servicing Materials from Earth to SS	0:00	0:00	0:00	0:00
**2. Unload Servicing Materials from STS to SS SF	4:00	4:00	0:00	4:00
*3. OMV Brings SIRTF from Orbit to SS	0:00	0:00	0:00	0:00
4. SIRTF Berthing-Related Activities at SS SF	3:30	3:30	3:00	2:00
5. Replenish Liquid Helium Cryogen	9:20	9:20	4:00	0:00
6. SIRTF Deberthing-Related Activities at SS SF	5:30	5:30	3:00	3:00
*7. OMV Deploys SIRTF from SS to Orbit	0:00	0:00	0:00	0:00
**8. Load Servicing Materials from SS SF to STS	4:00	4:00	0:00	4:00
*9. STS Returns Servicing Materials from SS to Earth	0:00	0:00	0:00	0:00
TOTALS	26:20	26:20	10:00	13:00

*Although these Orbital Servicing Activities occur during this Strawman Mission Type, all servicing time values are zero because of ground rules presented in Chapter I of this databook.

**Since the cryogen is assumed to be provided by the SS (and hence not chargeable to the SIRTF project), these values are for the associated FSE (e.g., aperture covers) required for all servicing activities.

b. Strawman Type B

Activity	Elapsed Time (hr:min)	IVA Time (crew-hr:min)	EVA Time (crew-hr:min)	Robotics Time (hr:min)
*1. STS Brings Servicing Materials from Earth to SS	0:00	0:00	0:00	0:00
2. Unload Servicing Materials from STS to SS SF	4:00	4:00	0:00	4:00
*3. OMV Brings SIRTF from Orbit to SS	0:00	0:00	0:00	0:00
4. SIRTF Berthing-Related Activities at SS SF	3:30	3:30	3:00	2:00
5. Changeout Two Power Module ORUs	2:00	2:00	4:00	0:00
6. Replenish Liquid Helium Cryogen	11:00	11:00	4:00	0:00
7. SIRTF Deberthing-Related Activities at SS SF	5:30	5:30	3:00	3:00
*8. OMV Deploys SIRTF from SS to Orbit	0:00	0:00	0:00	0:00
9. Load Servicing Materials from SS SF to STS	4:00	4:00	0:00	4:00
*10. STS Returns Servicing Materials from SS to Earth	0:00	0:00	0:00	0:00
TOTALS	30:00	30:00	14:00	13:00

*Although these Orbital Servicing Activities occur during this Strawman Mission Type, all servicing time values are zero because of ground rules presented in Chapter I of this databook.

c. Strawman Type C

Activity	Elapsed Time (hr:min)	IVA Time (crew-hr:min)	EVA Time (crew-hr:min)	Robotics Time (hr:min)
*1. STS Brings Servicing Materials from Earth to SS	0:00	0:00	0:00	0:00
2. Unload Servicing Materials from STS to SS SF	4:00	4:00	0:00	4:00
*3. OMV Brings SIRTF from Orbit to SS	0:00	0:00	0:00	0:00
4. SIRTF Berthing-Related Activities at SS SF	3:30	3:30	3:00	2:00
5. Changeout One Tape Recorder & Two Solar Array Panel ORUs	6:00	6:00	12:00	0:00
6. Replenish Liquid Helium Cryogen	11:00	11:00	4:00	0:00
7. SIRTF Deberthing-Related Activities at SS SF	5:30	5:30	3:00	3:00
*8. OMV Deploys SIRTF from SS to Orbit	0:00	0:00	0:00	0:00
9. Load Servicing Materials from SS SF to STS	4:00	4:00	0:00	4:00
*10. STS Returns Servicing Materials from SS to Earth	0:00	0:00	0:00	0:00
TOTALS	34:00	34:00	22:00	13:00

*Although these Orbital Servicing Activities occur during this Strawman Mission Type, all servicing time values are zero because of ground rules presented in Chapter I of this databook.

14.9 OMV Flights in Support of Each SIRTF Strawman Type A, B, and C Servicing Mission

Strawman Mission Type	Purpose of Flight	Number of Flights
A	Retrieval	1
A	Redeployment	1
B	Retrieval	1
B	Redeployment	1
C	Retrieval	1
C	Redeployment	1

15.0 OVERALL REQUIREMENTS SUMMARY FOR SS SERVICING OF SIRTF

15.1 SIRTF Milestone and Servicing Schedule

Event	Location	Date	Comments
SIRTF Launch	STS-ETR	4th quarter, 1996	
1st Servicing	SS	2nd quarter, 1998	Type A
2nd Servicing	SS	3rd quarter, 2000	Type B
3rd Servicing	SS	4th quarter, 2002	Type C
4th Servicing	SS	1st quarter, 2005	Type B
SIRTF Mission Termination	STS-ETR	4th quarter, 2006	

15.2 Summary of SIRTF Mass Considerations

a. SIRTF in Operational/Servicing Configurations

Oper. SIRTF Mass (dry):	5,720 kg	Servicing SIRTF Mass (dry):	5,720 kg
Oper. Consumables Mass:	580 kg*	Servicing Consumables Mass:	703 kg**
Oper. SIRTF Mass (total):	6,300 kg	Servicing SIRTF Mass(total):	6,423 kg

* The SIRTF "Operational" consumables mass is based upon the assumption of a completely filled onboard cryogen dewar immediately following cryogen replenishment servicing.

** The SIRTF "Servicing" consumables mass is based upon the assumption that 123 kg (850 liters) of cryogen is wasted during replenishment of SIRTF's cold onboard dewar in the process of cooling down the transfer umbilical (11 kg) and venting loss encountered during cyrogen transfer into the dewar (112 kg). Therefore, 703 kg will be expended from the CRTR in order to transfer a net 580 kg into the SIRTF onboard dewar.

b. SIRTF Servicing Mass Up and Down in STS*

Event	Quarter, CY	Mass Up (kg)	Mass Down (kg)	Quarter, CY
SIRTF Launch	4th, 1996	6,400	100	4th, 1996
1st Servicing	2nd, 1998	100	100	3rd, 1998
2nd Servicing	3rd, 2000	464	464	4th, 2000
3rd Servicing	4th, 2002	845	845	1st, 2003
4th Servicing	1st, 2005	464	464	2nd, 2005
SIRTF Mission Termination	4th, 2006	100	5,949**	4th, 2006
Totals		8,373	7,922	
Servicing Totals***		1,873	1,873	

* STS Flights will normally occur prior to and following each payload servicing. The table indicates "mass up" required for the servicing and "mass down" resulting from the servicing.

** Assumes onboard cryogen dewar retains 22% of maximum capacity (i.e., 129 kg).

*** Excludes initial payload launch mass and mission termination flight mass. These are chargeable to payload operations.

c. SIRTF Servicing Storage Mass* on Space Station

Calendar Year	96	97	98	99	00	01	02	03	04	05
Storage Mass (kg)										
Unpressurized	0	0	100	0	464	0	845	0	0	464
Pressurized	0	0	0	0	0	0	0	0	0	0
Total	0	0	100	0	464	0	845	0	0	464

* The tabulated servicing storage mass addresses temporary storage between successive STS flights of the servicing materials involved in replenishing cryogen and replacing ORUs. No permanent storage of SIRTF servicing materials onboard the Space Station occurs during these years.

15.3 Summary of SIRTF Volume Considerations

a. SIRTF Facility Volume

Operational Configuration:	2,960 m^3
Servicing Configuration:	145.3 m^3
Storage/Transportation Configuration:	145.3 m^3

b. SIRTF Servicing Material Volumes* Up and Down in STS **

Event	Quarter, CY	Volume Up (m^3)	Volume Down (m^3)	Quarter, CY
SIRTF Launch	4th, 1996	145.8	0.5	4th, 1996
1st Servicing	2nd, 1998	0.5	0.5	3rd, 1998
2nd Servicing	3rd, 2000	2.234	2.234	4th, 2000
3rd Servicing	4th, 2002	11.577	11.577	1st, 2003
4th Servicing	1st, 2005	2.234	2.234	2nd, 2005
SIRTF Mission Termination	4th, 2006	0.5	145.8	4th, 2006
Totals		162.345	162.345	
Servicing Totals***		16.545	16.545	

* Volumes exclude carrier volume, assumed to be comprised of the Logistics Module and the CRTR (provided by the Space Station).

** STS Flights will normally occur prior to and following each payload servicing. The table indicates "volume up" required for the servicing and "volume down" resulting from the servicing.

*** Excludes initial payload launch volume and mission termination flight volume. These are chargeable to payload operations.

c. SIRTF Servicing Temporary Storage Volume on Space Station

Calendar Year	96	97	98	99	00	01	02	03	04	05
Storage Volume (m^3)										
Unpressurized	0	0	0.5	0	2.234	0	11.577	0	0	2.234
Pressurized	0	0	0	0	0	0	0	0	0	0
Total	0	0	0.5	0	2.234	0	11.577	0	0	2.234

15.4 Summary of SIRTF Power Considerations

	AVG	MAX
Operational Power (watts)	1,670	TBD
Servicing Power (watts)	400	TBD
Storage Power, Servicing Materials (watts)	0	TBD

15.5 Summary of SIRTF Servicing Times

Calendar Year	98	99	00	01	02	03	04	05	Total
Elapsed Time (hr:min)	26:20	0	30:00	0	34:00	0	0	30:00	120:20
IVA Time (crew-hr:min)	26:20	0	30:00	0	34:00	0	0	30:00	120:20
EVA Time (crew-hr:min)	10:00	0	14:00	0	22:00	0	0	14:00	60:00
Total Crew Time (crew-hr:min)	36:20	0	44:00	0	56:00	0	0	44:00	180:20
Robotics Time (hr:min)	13:00	0	13:00	0	13:00	0	0	13:00	52:00

15.6 Summary of OMV Flights in Support of SIRTF Servicing

Calendar Year	98	99	00	01	02	03	04	05	TOTAL
Number of OMV Flights	2	0	2	0	2	0	0	2	8

REFERENCES

1. OSSA Space Station Servicing Data Book, The BDM Corporation, November 6, 1985.

2. Operations Scenarios: ASTROMAG, AXAF, HRSO, SIRTF, HST, and GRO (Draft), The BDM Corporation, November 1986.

3. "Servicing Operations for the SIRTF Observatory at the Space Station", Report to the American Institute of Aeronautics and Astronautics 25th Aerospace Sciences Meeting, AIAA-87-0504, Christopher B. Wiltsee and Larry A. Manning, January 12-15, 1987.

4. Mission Requirements Data Base (MRDB), NASA/JSC, January 17, 1987.

5. Interviews with Christopher B. Wiltsee, SIRTF Systems Engineering Manager, on June 3, July 14, July 15, August 6, and October 6, 1987.

SEARCH AND RESCUE INSTRUMENTS (SRI)

1.0 SRI PROGRAM AND OPERATIONS INFORMATION

1.1 SRI Points of Contact

Mr. Wayne Hembree
NASA/GSFC
Greenbelt, Maryland
(301) 286-5294

Mr. Fred Flatow
NASA/GSFC
Greenbelt, Maryland
(301) 286-8332

1.2 SRI Objectives

The two search and rescue instruments currently under consideration by the Space Station Program are a Search and Rescue Interferometer and a Search and Rescue Synthetic Aperature Radar.

The Search and Rescue Interferometer receives distress signals from planes and ships and enhances the capability of detecting and locating existing distress beacons operating at an uplink frequency of 406 MHz. The instrument now under development will provide a first order ambiguity resolution. This interferometer (see the MRDB, entry NOAA0004) is an instrument aboard the Eos platform. If placed on the Space Station, it will be there as a test instrument and may be returned (later) to polar orbit.

The Search and Rescue Synthetic Aperture Radar will provide location information without the need for a beacon. This instrument is at a very preliminary concept stage in its design; no further information is currently available.

Sections 1.3 through 15.6

All information about SRI as attached payloads is TBD. For information about the Search and Rescue Interferometer as an Eos instrument, see the Eos description in this report.

REFERENCES

1. Telephone conversations with Mr. Wayne Hembree (September/November, 1987)

2. Mission Requirements Database (MRDB), entry NOAA0004.

SPACE STATION SPARTAN (3S): MISSION CODE SAAX0022

1.0 3S PROGRAM AND OPERATIONS INFORMATION

1.1 3S Points of Contact

John R. Holtz
Spartan Program Manager
Code EZ, NASA/HQ
Washington, D.C. 20546
(202) 453-1450

Scott Lambros
3S Study Manager
Code 742, NASA/GSFC
Greenbelt, MD 20771
(301) 286-2794

1.2 3S Objectives

Provide a relatively low cost astrophysics research system based at SS which will allow scientists to perform free-flight investigations or test new instruments while placing only moderate demands on SS and SS crew. The 3S is an outgrowth of the current STS Spartan Program, and is intended to allow scientific missions of much greater duration (up to 3 months) compared to the current Spartan (nominally 40 hours).

1.3 3S Milestones and Servicing Schedule

Launch Date: 2nd quarter, 1996.

First Space Station Service: 2nd quarter, 1996.

Servicing Interval: 2 times per year, 1996 through 1998;
3 times per year, starting in 1999.

Operational Lifetime: TBD; possibly up to 10 years with subsystem replacements.

1.4 3S Orbital Parameters

Co-orbiting position 370 to 1850 km (230 to 1150 statute miles) behind SS. Line-of-sight command and data link through SS (bent pipe mode) to Earth is required.

2.0 3S PHYSICAL CHARACTERISTICS

2.1 3S Payload/Bus Description

a. General Comments

The 3S system (Figures 1, 2, and 3) employs modular subsystems and components wherever possible. 3S will usually carry one science instrument or experiment at a time but is also capable of supporting a cluster of smaller coaligned instruments. 3S will have a standardized mechanical and electrical payload interface which all science instruments will be designed to meet. Mission durations will be up to 3 months with science instruments changed out at SS between missions. Spare 3S subsystem modules stored in a carrier at SS will be used to replace malfunctioning modules where necessary. Replacement instruments will be brought to SS by STS on a space-available basis and stored for future use. Initial 3S payloads are expected to be celestial and solar pointers and will engage in research in astrophysics, solar physics, X-ray astronomy and cometary phenomena.

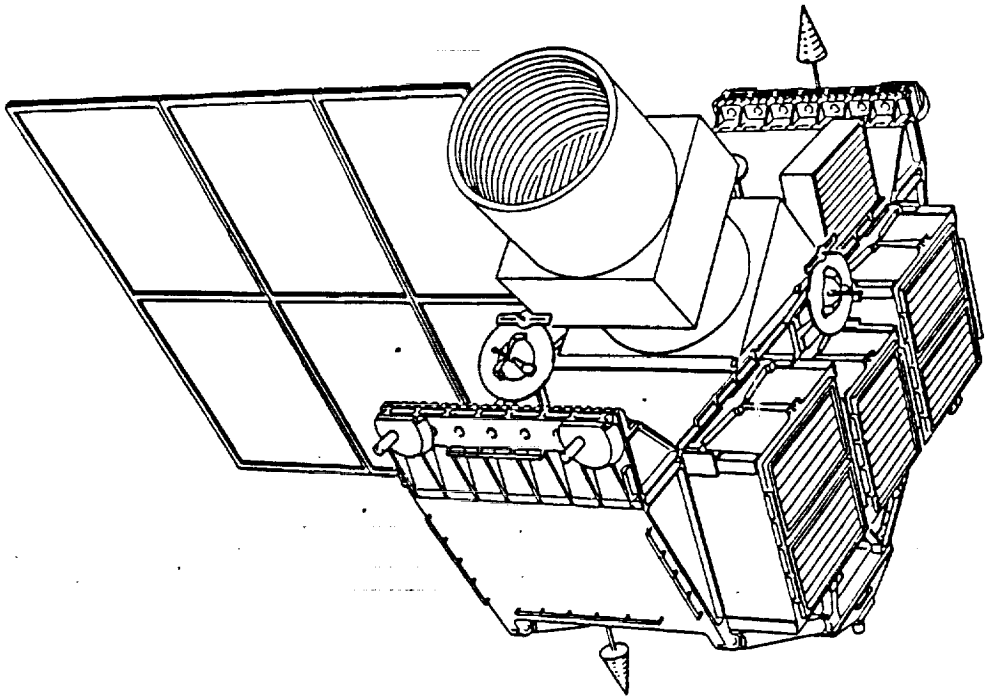

Figure 3S-1. Space Station Spartan,

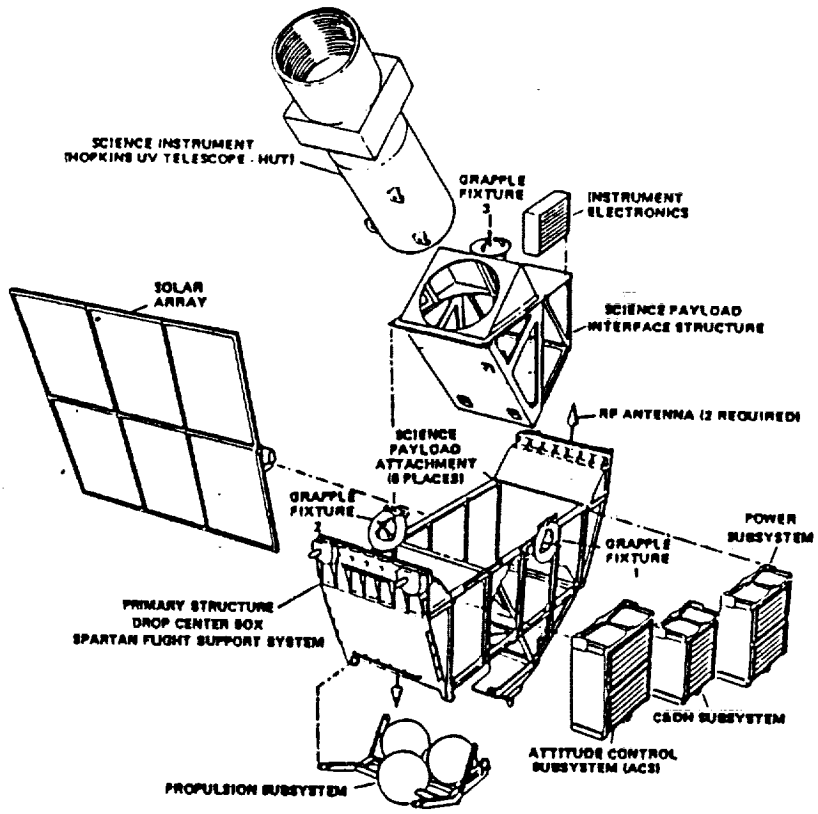

Figure 3S-2. Space Station Spartan, Expanded View

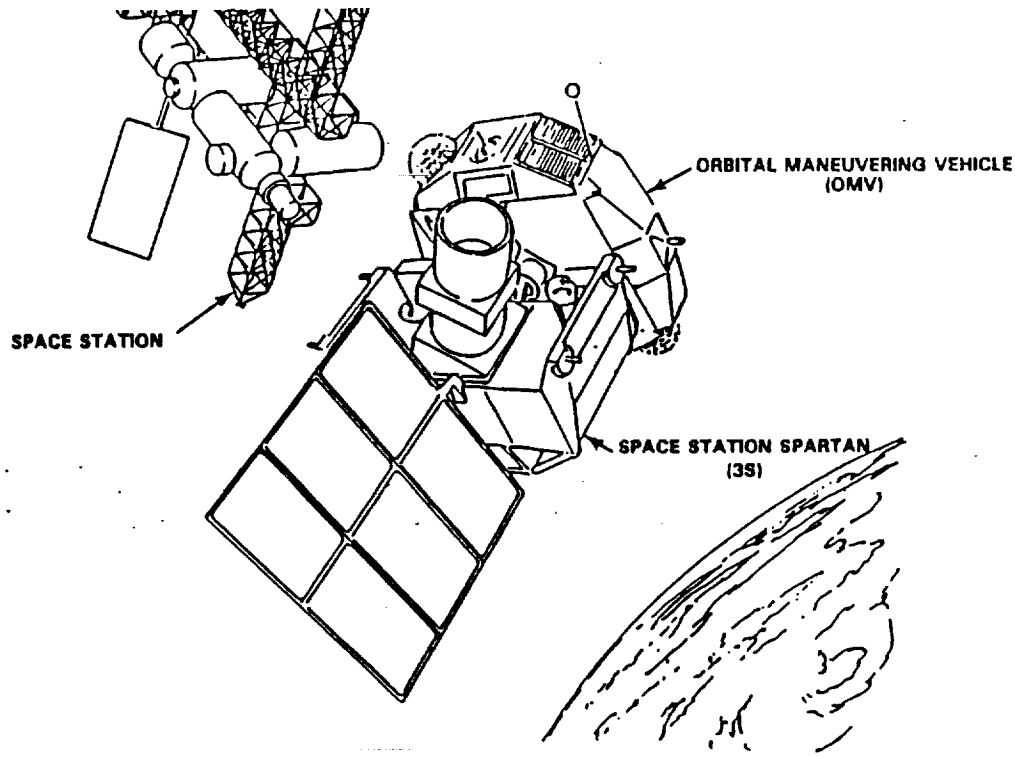

Figure 3S-3. Space Station Spartan and OMV in Proximity of Space Station

b. 3S Structure

The 3S is built around a semimonocoque "drop center box" primary structure which will interface to STS and SS and support the 3S instrument and subsystems modules. The instrument interface structure will attach to the 3S carrier via a six-point mechanical attachment mount; electrical interface will be provided by one integral connector which blind-mates when the instrument is inserted into the carrier.

c. 3S Attitude Control Subsystem (ACS)

3S will accommodate any one of three ACS versions each having different capabilities. The ACS flown will be matched to science mission requirements. The basic ACS, powered by cold gas, will be similar to that employed on the current STS/Spartan and will be capable of missions of a few weeks in duration. This version of the ACS will fulfill the needs of current STS/Spartan instruments which can benefit from missions longer than 48 hours. An intermediate ACS will employ reaction wheels to decrease jitter and will accommodate payloads requiring higher resolution pointing. An enhanced ACS similar to the MMS ACS will be used to accommodate high resolution payloads with narrow fields of view. Each version of the ACS will have an identical interface to the 3S carrier; this will allow upgrading the basic pointing capability of the 3S without major modifications to the rest of the system.

d. 3S Communications and Data Handling (CADH) Subsystem

The 3S CADH subsystem is expected to be a derivative of the MMS CADH subsystem. It will receive data from the 3S instrument and subsystems and transmit science and engineering information (via a Low Gain Antenna) through SS to the ground on a real-time basis. The baseline 3S CADH Subsystem will not have a tape recorder to store data; 3S thus requires a continuous RF communications link through SS for data downlink and command uplink.

e. 3S Power Subsystem

The 3S electrical power subsystem will consist of a replaceable power module and a two-position solar array. A direct energy transfer system with a main power bus operating at +28 VDC and a load capability of around 700 watts (orbital average) will be provided. Three 20 A-hr rechargeable NiCd batteries will be utilized.

f. 3S Propulsion Subsystem

The 3S will employ a hydrazine propulsion system. For maximum duration missions the 3S propulsion module will contain up to 380 kg of hydrazine. The 3S propulsion subsystem will be modular and will be designed for on-orbit resupply or changeout; it will be used for stationkeeping with SS and in some applications to assist in 3S attitude control. It may also be used to assist in 3S deployment from and return to the SS if safety regulations permit.

g. 3S Subsystem Reliability

The complexity of the 3S will be minimized by requesting appropriate services and resources from SS. 3S redundancy will be minimal except as required for safety and to assure retrieval.

2.2 3S Physical Characteristics

a. Mass

- 3S Bus Dry:	1710 kg
- 3S Bus Wet:	2090 kg*
- Strawman Science Instruments:	870 kg
- Operational with Strawman Instruments:	2960 kg*
- Estimated Maximum Operational Mass:	4545 kg*

* With maximum hydrazine mass of 380 kg which is used, for conservatism, throughout this report.

b. Dimensions

- 3S Carrier with Instrument and Subsystems (Envelope, SA folded): 2.5 x 4.6 dia m
- Strawman Instrument and interface adapter (max. dimensions) = 3.8 x 2.3 x 1.3 m
- Solar Array (1 only): 3.25 x 4.15 m
- High Gain Antenna System: None

c. Envelope (Overall 3S System)

- with SA folded: 2.5 x 4.6 dia m
- with SA Deployed: 6.6 x 4.6 dia m

2.3 3S Moving Parts and Special Features

a. Solar Array (SA)

Normally folded during transportation on STS and during storage on SS. Unfolded (deployed) to a fixed position during servicing in preparation for free-flight missions. Array contains 6 panels each 1.37 x 1.60m. The 3S SA is normally deployed and retracted via EVA. It is designed so that it may be moved to one of two angular positions, one to maximize power for celestial pointing missions and the other to do the same for solar pointing missions.

2.4 3S Consumables and Limited Life Components

a. Consumables

- Hydrazine (380 kg maximum) for propulsion.
- Cold Gas (TBD kg maximum) in basic version of ACS.

b. Limited Life Components

- Rechargable Batteries.
- Solar Array Components.
- Others TBD.

3.0 3S SERVICING INFORMATION

3.1 General Description of 3S Servicing

3S will be designed for on-orbit servicing in the SS Servicing Facility. Upon completion of a free-flight science mission, 3S will fly to within 20 miles of the SS. The OMV will then be used to retrieve the 3S and return it to SS. 3S will remain at SS for servicing; during this time, science instruments will be exchanged, the propulsion subsystem will be refueled (or replaced if necessary), and any malfunctioning subsystems modules will be replaced. Following verification of satisfactory 3S and instrument operation, the OMV will be used to place the 3S about 20 miles from the SS and the 3S will return to a co-orbiting position behind the SS using its propulsion sub-system.

3.2 3S Background

3S is an extension of the current STS Spartan program and is intended to take advantage of the operational and servicing support capabilities of SS, while providing a relatively low-cost free-flyer with flexible response to the needs of the science community.

3.3 Primary Role of Space Station in Servicing 3S

Servicing will provide exchange of science instruments and re-supply of propellants on a scheduled basis (nominally, 3 times per year), and contingency replacement of 3S subsystems modules. SS will provide EVA support for some 3S servicing operations. Current expectations are for ORU replacement operations only; 3S has baselined replacement rather than repair operations to correct subsystems malfunctions.

3.4 Primary Space Station Facilities Required for Servicing 3S

- Trunnion sill and keel fittings for 3S berthing in service/-storage area (i.e., SS Servicing Facility).
- Sun shield or shroud for thermal control.

- Standard EVA tool kit and MMS Module Service Tool (MST).
- Temperature-controlled unpressurized storage for complete set of 3S subsystems modules and one science instrument mounted on a "3S Storage Carrier".
- Station to ground video and voice for servicing.
- Hydrazine refueling for 3S propulsion sub-system.
- Cold gas replenishment if needed for 3S ACS.

3.5 Space Station Personnel Required for Servicing 3S

Current expectations are that all 3S servicing will be performed by crew payload servicing personnel advised by 3S system specialists on the ground.

3.6 Servicing Precautions for 3S

- Install protective covers on instrument apertures, star trackers, etc. during servicing; remove prior to 3S deployment.
- Install protective covers on subsystem thermal louver assemblies; remove before 3S deployment.
- Others, TBD.

3.7 Orbital Maneuvering Vehicle (OMV) Flight Profiles in Support of 3S

a. OMV Usage

OMV is used to deploy 3S to approximately 20 miles from SS and to retrieve 3S from same distance. Two OMV round trips are, thus, required for each servicing of the 3S at the SS. It is anticipated that the Short Range Vehicle (SRV) version of the OMV will be adequate because of the "proximity operations" nature of the required 3S deployments and retrievals. For the 3S Nominal Mission Model there are 4 OMV flights per year required in 1996 through 1998 and 6 OMV flights per year required starting in 1999. If the 3S or

its science payload is not functioning properly following deployment from the SS, it is desirable that OMV provide a "contingency return" to the Station.

b. Alternate Means of Deploying/Retrieving 3S

A "mini-OMV", if available, is considered a possible alternate means for deploying/retrieving 3S. A catapult launcher is a possible alternate means for deploying 3S.

4.0 3S SERVICING SAFETY CONSIDERATIONS

4.1 Hazardous 3S Subsystems and Components

- Hydrazine Propulsion Subsystem.
- Possible sharp edges on thermal louvers and other components.

4.2 3S Servicing Safety Precautions

- Monitor for Hydrazine leakage; avoid EVA as necessary.
- Install protective covers on thermal louver assemblies and other sharp surfaces prior to EVA servicing.

5.0 3S SERVICING INTERFACES AND RESOURCE REQUIREMENTS

5.1 3S Crew Convenience Features

- Handrails and/or handholds will be provided on the 3S carrier, science instrument interface structure, and along the sides of the 3S subsystems modules.
- Tether rings and foot restraint sockets will be provided.

5.2 3S Mechanical Interfaces

- 3 MRMS grapple fixtures; 2 on the 3S carrier and 1 on the science instrument interface structure.
- 4 STS sill trunnions.
- 1 STS keel trunnion.
- OMV interface to 3S probably via one of the carrier-mounted grapple fixtures.

5.3 3S Umbilical Interfaces

a. Power

- 28 VDC +/- 2%.
- 0.5 kW during servicing or storage (maximum).
- 0.7 kW during 3S checkout.
- Planned connector will be identical or similar to the STS Standard Umbilical Retractor System (SURS). One connector will be employed for both signals and power.

b. Data

- 0.125, 1, and 2 kbps command rate.
- 500 kbps data rate.

c. Fluids

If available, 3S will employ the NASA standard refueling interface for refueling the hydrazine propulsion subsystem. The refueling method (ullage recompression) generates heat in the tank pressurant as it is recompressed by the incoming fuel; this heat buildup limits the speed with which refueling can be accomplished and requires close monitoring of pressurant temperature and pressure during refueling. Note: It is assumed that hydrazine for the 3S propulsion subsystem will be provided by the SS.

5.4 3S RF Communication Interface

a. Forward Link (SS to 3S)

- 3S employs fixed, omnidirectional antennas.
- Command rates are 0.125, 1, 2 kbps, from ground to 3S via SS.

b. Return Link (3S to SS)

- 3S employs fixed, omnidirectional antennas.
- 5 watts, 500 kbps science and engineering data flow from 3S to ground via SS.

c. SS Antenna Configuration Required for 3S Communications

- 20 deg x 20 deg fixed beam allows communications between 3S and SS at 500 kbps for a nominal separation distance of 250 nautical miles (287 stat miles, 463 km).
- The SS operates as a "bent pipe"; no data processing or storage is required on SS.

5.5 3S Thermal Interface

- 3S employs passive thermal control augmented by heaters.
- 3S temperature must be maintained between +7 and +50 degrees C during servicing and storage.
- When the 3S is mounted on the OMV, the 3S modules must be powered-down because the OMV blocks the module radiators and prevents heat dissipation to space.

6.0 3S SERVICING ENVIRONMENT

6.1 3S Pointing/Orientation Constraints

Precautions may be necessary during 3S retrieval and deployment when covers to star trackers and instrument apertures are removed to prevent possible damage from direct sunlight.

6.2 3S Contamination Concerns

Mission and instrument dependent; TBD.

6.3 3S Radiation Concerns

- None during 3S inoperative periods (servicing, storage).
- Acceptable exposure to RF radiation during 3S checkout is TBD.

7.0 MISSION SERVICING ACCOMMODATIONS

7.1 3S Equipment Access

- All 3S subsystems and instruments are of modular design and are designed for access (and change-out). Access to 3S harnessing is TBD.

7.2 3S Modularity

- See paragraph 7.1 above.

7.3 Mission Automated Servicing

Possible options for robotic servicing etc., are TBD. Automation is considered desirable to reduce EVA crew time.

7.4 3S Servicing In The SS Pressurized Modules

- 3S subsystem replacement is normal method of repair.
- 3S subsystem are of MMS configuration and should physically fit through ports to SS pressurized modules if subsystem repair were to be elected.
- The 3S propulsion subsystem would be excluded from pressurized SS modules due to safety consideration.

8.0 3S SERVICING MATERIALS CHECKLIST

Servicing Equipment	Required (Yes or No)	SS Provided (Yes or No)	Comments	Ref. Section
ORUs (including SIs)	yes	no	spare 3S sub-system modules	9.0
Flight Support Equipment	yes	TBD	tools to change-out SIs and other ORUs	10.0
Other Equipment	TBD	TBD		10.0
Servicing Equipment Carrier(s)*	yes	no	3S Storage Carrier 3S Transport Carrier	12.0
Servicing Consumables				
Propellant(s)	yes	yes	hydrazine	11.0
container(s)	yes	yes	SS system or portable refueling tanker	11.0
Cryogen(s)	no	N.A.		11.0
container(s)	no	N.A.		11.0
Liquid(s)	no	N.A.		11.0
container(s)	no	N.A.		11.0
Gas(es)	yes	no	possible cold gas for ACS**	11.0
container(s)	yes	no		11.0
Other(s)	no	N.A.		11.0
container(s)	no	N.A.		11.0
Servicing Consumables Carrier(s)*	no	N.A.		12.0

* Carriers for servicing materials are typically used during transportation in STS Orbiter and/or during storage on SS.

** If ACS cold gas is required, it will be transported in pressurized tanks in the servicing equipment carriers.

9.0 3S ORBITAL REPLACEABLE UNITS (ORU's)

9.1 Servicing of 3S ORUs

a. Primary

- Science Instruments and their Interface Structures will be changed out at every servicing. SI/IS

b. Secondary

- Solar Array :SA
- Propulsion Module :PM
- Power Subsystem Module :PWR
- Attitude Control Subsystem Module :ACS
- Communications and Data Handling Subsystem Module :CADH

9.2 3S ORU Physical Characteristics

ORU Required			Power (Watts)			Number
Name	Mass (kg)	DIMENSIONS (m)	Check-Out	Storage	3S	SPARES(b)
SI/IS	(a)	3.8 x 2.3 x 1.3	200 - 400	150	1	1
SA (c)	115	0.46 x 1.40 x 1.60	N.A.	0	1	1
PM (d)	540	0.75 x 1.40 x 1.50	50	50	1	1
PWR	115	0.46 x 1.22 x 1.22	58	50	1	1
ACS	91	0.46 x 1.22 x 1.22	160	30	1	1
CADH	45	0.46 x 0.75 x 1.22	80	30	1	1

(a) 870 kg Strawman science instrument/180 kg interface structure. 2455 kg maximum mass for science instruments.

(b) A substitute science instrument and spare 3S sub-system ORUs will be mounted on the 3S Storage Carrier on the SS.

(c) Stowed dimensions.

(d) Wet mass.

9.3 3S ORU Storage Requirements

- Storage temperature for all electronics modules is typically -5 to +50 degrees C. The power module containing rechargeable storage batteries must be kept cool during storage. A temperature near 0 degrees C is desirable.
- Storage temperature for fueled propulsion module is +7 to +50 degrees C.
- Storage may be unpressurized.

9.4 Other Environmental Requirements for 3S ORUs

No information available.

10.0 3S FLIGHT SUPPORT AND MISCELLANEOUS SERVICING EQUIPMENT

10.1 3S Flight Support Equipment (FSE)

3S FSE is expected to be minimal. If an MMS Module Servicing Tool (MST) is not available at SS, it will have to be included in 3S servicing FSE. Other anticipated FSE will be sensor and thermal louver assembly covers; there should be little or no mission-unique tooling or cabling.

10.2 3S FSE Physical Characteristics

TBD.

10.3 3S FSE Storage Requirements

TBD.

10.4 Miscellaneous Servicing Equipment

TBD.

11.0 3S SERVICING CONSUMABLES AND CONTAINERS

11.1 Description and Purpose

a. Hydrazine for Propulsion Subsystem

Hydrazine normally would be replenished during each servicing at SS (between free-flight missions). It is assumed that hydrazine will be obtained from a SS provided refueling system, probably a portable tanker. Up to 380 kg of hydrazine may be required 2 or 3 times per year.

b. Cold gas for ACS if basic version is utilized

Cold gas would be replenished during servicing at SS as required. Cold gas would be obtained from SS system if available. Alternate method of replenishing cold gas is TBD but could involve change-out of modular cold gas tanks. As much as TBD kg of cold gas could be required up to 2 or 3 times per year.

11.2 Physical Characteristics

a. Hydrazine

Assumed to be available from SS hydrazine supply system or portable tanker. Hydrazine is toxic and corrosive.

b. Cold Gas

Needed if basic version of 3S ACS is used. Tankage would be "man rated". Cold gas is non-toxic and non-corrosive.

11.3 Storage Requirements

a. Hydrazine would be pumped directly from the SS supply system or portable tanker into the 3S propulsion tankage. Hydrazine should be maintained at a temperature of 7° C or higher.

b. Cold gas storage volumes, pressures, and temperatures are TBD.

12.0 CARRIERS FOR 3S SERVICING MATERIALS

12.1 Description and Purpose

The 3S program will employ three unpressurized, structurally similar 3S carriers on and around SS. The first, designated as the 3S operational carrier, holds science instruments during mission operations and is actually deployed from SS. The second, the 3S storage carrier, is used only for the storage of replacement science instruments and spare 3S subsystem on the SS. It contains the power and signal interfaces necessary to monitor and control these items. The third 3S carrier, the 3S transport carrier, is used in the STS payload bay to bring new instruments and spare modules from the ground and to return flown instruments and/or malfunctioning subsystem modules to the ground. This carrier is not removed from the STS payload bay at the SS and functions only to hold instruments and modules during transit. All three carriers described here would be provided by the 3S Program. The last two described could be replaced by suitable SS provided unpressurized transport and storage carriers.

a. Physical Characteristics of Carriers

- The Operational 3S Carrier equipped with a strawman science payload (870 kg) and fully loaded with hydrazine (380 kg) has a total mass of about 2965 kg. Its packaged envelope dimensions during STS transit and SS storage are 4.6 m diameter and 2.5 m length. Its corresponding packaged envelope volume is about 42 m^3. The actual volume of the operational 3S Carrier plus the protruding portion of the strawman science instrument is about 19 m^3.
- The 3S Storage Carrier equipped with a typical replacement science instrument (870 kg), spare subsystems, and no propellant, would have a mass of about 2300 kg. Its packaged envelope dimensions and volume and its actual volume would be the same as those of the operational 3S Carrier.
- The 3S Transport Carrier (which remains in the STS orbiter bay) when carrying a replacement science instrument (870 kg) would have a total mass of about 1790 kg. Its envelope dimensions are 4.6 m in diameter and about 1.5 m in length and its envelope volume is about 25 m^3. The actual volume of the 3S Transport Carrier plus the protruding portion of the strawman science instrument is about 15 m^3.

12.2 STS and SS Carrier Interfaces

All three types of 3S Carriers are supported in the STS Orbiter with the use of trunnions (at the sill) and with a keel fitting. STS power/signals etc., are provided through a standard electrical connector. The Operational 3S Carrier and the 3S Storage Carrier are supported on the SS using some or all of the sill and keel fittings. Electrical connectors are similar to those used in the Orbiter.

The 3S Storage Carrier is considered to occupy "permanent storage" space on the SS. The Operational 3S Carrier is temporarily stored at the SS between free-flyer science missions.

12.3 Servicing Materials/Carrier Interfaces

Very large ORUs such as replacement science instruments would be removed from, and returned to, the carriers using the RMS, MRMS, or Servicing Facility Manipulator and a grapple fixture located on the ORU. Smaller ORUs such as a 3S sub-system module could be handled in a similar manner or by an astronaut during EVA. These activities would take place in, or near, the SS Servicing Facility as part of 3S servicing or during STS orbiter unloading/loading.

13.0 3S ORBITAL SERVICING ACTIVITIES TIME ESTIMATES

13.1 Mission Servicing Ground Rules and Constraints

It was assumed in the initial 3S Study (NASA TM 86215, July 1985) that servicing would be carried out using SS crew IVA and EVA activities which make use of the RMS, MRMS, and special tools derived from the Multi-Mission Spacecraft (MMS) Project. Only very preliminary timelines were devised as part of the initial study. Recent estimates of various parameters associated with 3S on-orbit servicing missions are presented below and in Sections 14 and 15 of this Chapter.

13.2 Preparatory Servicing Time Estimates

Activity	Elapsed Time (hr:min)	IVA Time (Crew-hr:min)	EVA Time (Crew-hr:min)	Robotics Time (hr:min)
1. Unloading of Servicing Materials from STS Orbiter Bay to SS	0:30^	0:30^	0:00^	0:30^
2. Payload Berthing Related	3:30^	3:30^	3:00^	2:00^

13.3 Principal Servicing Time Estimates

Activity	Elapsed Time (hr:min)	IVA Time (Crew-hr:min)	EVA Time (Crew-hr:min)	Robotics Time (hr:min)
1. ORU Changeout (S.I.)	6:48^	10:12^	13:36^	3:24^
2. ORU Changeout (3S subsystem)	1:16^	1:54^	2:32^	0:38^
3. Hydrazine Replenishment (380 kg)	1:42^	1:42^	3:24^	0:00^

13.4 Close-Out Servicing Time Estimates

Activity	Elapsed Time (hr:min)	IVA Time (Crew-hr:min)	EVA Time (Crew-hr:min)	Robotics Time (hr:min)
1. Payload Deberthing Related	5:30^	5:30^	3:00^	3:00^
2. Loading of Servicing Materials from SS SF to STS	0:30^	0:30^	0:00^	0:30^

14.0 3S STRAWMAN SERVICING SCENARIO

14.1 3S Strawman Servicing Mission

Four different types of 3S strawman servicing missions have been defined. The first, designated Type A, occurs directly following the STS flight and unloading activity (considered "operational activities") that initially deliver 3S to the Space Station. The Type A strawman, which occurs only once, consists of deberthing 3S from the Station, one deploying OMV flight, a subsequent retrieving OMV flight (following free-flight science data collection) and, finally, berthing of 3S back at the Station. No 3S principal servicing activities are included since it is assumed that when the STS delivers 3S to the Station, it already carries a science instrument and a full supply of hydrazine propellant.

The Type B strawman servicing mission consists of preparatory activities (as described in Section 13.2), change-out of the science instrument, replenishment of hydrazine, and close-out activities (as described in Section 13.4).

The Type C strawman servicing mission is similar to Type B, but also includes the change-out of a 3S sub-system module (for example, ACS or CADH).

Strawman servicing mission Type D (somewhat of an anomoly) consists only of the provision of temporary storage that the 3S requires from the SS during the periods (calendar year quarters) when it is not away from the Station on a free-flying science mission.

14.2 3S Description

The 3S payload (ie., the 3S Carrier with science instrument) is located in the SS Servicing Facility during principal servicing. The 3S solar array will in general, be extended but can be folded when desirable. The 3S typical dry mass with strawman science instrument would be about 2580 kg. The 3S envelope diameter is 4.6 m. Its length is about 2.5 m with the solar array folded and about 6.6 m with the array extended. The corresponding 3S envelope volumes are 42 m^3 (array folded) and 110 m^3 (array extended).

14.3 Strawman Servicing Materials

a. ORUs

Type A Mission

- None required.

Type B Mission

- Replacement Science Instrument, One, 873 kg.

Type C Servicing

- Replacement Science Instrument, One, 873 kg
- Spare Sub-System module, One, 100 kg

Type D Mission

- None required.

b. Flight Support Equipment

Tools and special test equipment (mission Types B and C) are required for the changeout of the science instrument and sub-system module.

c. Consumables and containers

A hydrazine mass of up to 380 kg (mission Types B and C) is transferred into the 3S propulsion system. Hydrazine is assumed to be available from a SS system or a portable refueling tanker. No Payload-provided containers are required.

d. Carriers

The flown science instrument and a 3S subsystem module (if defective) are taken from the operational 3S Carrier and changed-out with the replacement instrument and module that are removed from the 3S Storage Carrier. The replaced instrument and module will be returned to Earth via a 3S Transport Carrier at a later date.

14.4 Estimated Up/Down Mass on STS to Support 3S Strawman Servicing

SERVICING MATERIAL	MASS UNPRESSURIZED TRANSPORT (kg) * **	MASS PRESSURIZED TRANSPORT (kg)	MASS TOTAL (kg) * **
Equipment			
SI(s)	1055/1055	-	1055/1055
ORU(s)	509/0	-	509/0
Unique FSE	0/0	-	0/0
Misc. Equipment	0/0	-	0/0
Equipment Subtotal	1564/1055	-	1564/1055
Equipment Carrier	736/736	-	736/736
Subtotal, Equipment Mass Up	2300/1791	-	2300/1791
Subtotal, Equipment Mass Down	0/1791	-	0/1791
Consumables***			
Consumables	N.A.	N.A.	N.A.
Consumables Containers	N.A.	N.A.	N.A.
Consumables Containers Carriers	N.A.	N.A.	N.A.
Subtotal, Consumables Mass Up	N.A.	N.A.	N.A.
Subtotal, Consumables Mass Down	N.A.	N.A.	N.A.
Total Mass Up	2300/1791	N/A	2300/1791
Total Mass Down	0/1791	N/A	0/1791

*This column indicates the mass of the loaded 3S Storage Carrier which arrives at the SS in 4th quarter CY 1996 and is placed in permanent storage. It contains a replacement science instrument (with interface structure) and five different spare 3S subsystems (ORUs). Note that mass down is zero.

** This column indicates the mass of the loaded 3S Transport Carrier which arrives at the SS prior to each 3S servicing mission with a replacement science instrument (with interface structure). The instrument is unloaded onto the SS while the Transport Carrier remains in the Orbiter bay. After 3S servicing (instrument change-out) the previously used science instrument is stored at the SS until the next orbiter (carrying the 3S Transport Carrier) returns it to earth.

*** Transport and storage of hydrazine which is required for refueling the 3S propulsion subsystem is considered a SS-provided service. Cold gas which could be required for one version of the 3S ACS is not considered part of the selected strawman servicing missions.

14.5 Estimated STS Up/Down Volume to Support 3S Strawman Servicing

SERVICING MATERIAL	VOLUME UNPRESSURIZED TRANSPORT (m^3) * **	VOLUME PRESSURIZED TRANSPORT (m^3)	VOLUME, TOTAL (m^3) * **
Equipment			
SI(s)	6.4/6.4	0/0	6.4/6.4
ORU(s)	5/0	0/0	5/0
Unique FSE	0/0	0/0	0/0
Misc. Equipment	0/0	0/0	0/0
Equipment Subtotal	11.4/6.4	0/0	11.4/6.4
Equipment and Carriers Subtotal	19/15	0/0	19/15
Consumables* **			
Consumables in Containers	N/A	N/A	N/A
Consumables, Containers and Carriers	N/A	N/A	N/A
Total Volume Up	19/15	N/A	19/15
Total Volume Down	0/15	N/A	0/15

*This column is volume for loaded 3S Storage Carrier. See Footnote on Estimated Up/Down Mass Table.

**This column is volume for loaded 3S Transport Carrier. See Footnote on Estimated Up/Down Mass Table.

***See Footnote regarding consumables on Estimated Up/Down Mass Table.

14.6 Storage on Space Station Required to Support Strawman Servicing

Continuous Storage*	Unpressurized	Pressurized	Total
Mass (kg)	2300	0	2300
Volume (m^3)	19	0	19
Average Power (watts)	310	N.A.	310
Temperature Range (^oC)	+7 to +50	N.A.	
Temporary Storage**			
Mass (kg)	2582	0	2582
Volume (m^3)	19	0	19
Average Power (watts)	310	N.A.	310
Temperature Range (^oC)	+7 to +50	N.A.	

* Continuous ("permanent") storage is required for the 3S Storage Carrier starting in 4th Quarter 1996.

** Temporary storage is required for the Operational 3S Carrier when it is not on a free-flying science mission (and not being serviced). Based on the nominal 3S mission model, temporary storage is required for the following quarters of the calendar year indicated:

CY 1996:	3rd
CY 1997,1998:	1st and 3rd
CY 1999 through 2005:	1st

14.7 3S Strawman Servicing Power Estimates

	Operational* Mode (watts)		Servicing Mode(watts)	
	AVG	MAX	AVG	MAX
Payload (Bus + Instruments)	650	800	TBD	750

Note: *Operational Values shown for reference purposes.

14.8 3S Strawman Servicing Times^

Servicing Type A

Activity	Elapsed Time (hr:min)	IVA Time (Crew-hr:min)	EVA Time (Crew-hr:min)	Robotics Time (hr:min)
1. Deberthing Related	5:30	5:30	3:00	3:00
2. OMV Deploys 3S	0:00	0:00	0:00	0:00
3. OMV Retrieves 3S	0:00	0:00	0:00	0:00
4. Berthing Relating	3:30	3:30	3:00	2:00
Totals	9:00	9:00	6:00	5:00

Servicing Type B

Activity	Elapsed Time (hr:min)	IVA Time (Crew-hr:min)	EVA Time (Crew-hr:min)	Robotics Time (hr:min)
1. STS Brings Materials Up	0:00	0:0	0:00	0:00
2. Unload Materials	0:30	0:30	0:00	0:30
3. Change-Out S.I.	6:48	10:12	13:36	3:24
4. Replenish Hydrazine	1:42	1:42	3:24	0:00
5. Deberthing Related	5:30	5:30	3:00	3:00
6. OMV Deploys 3S	0:00	0:00	0:00	0:00
7. OMV Retrieves 3S	0:00	0:00	0:00	0:00
8. Berthing Related	3:30	3:30	3:00	2:00
9. Load Materials	0:30	0:30	0:00	0:30
10. STS Takes Materials Down	0:00	0:00	0:00	0:00
Totals	18:30	21:54	23:00	9:24

Servicing Type C

Activity	Elapsed Time (hr:min)	IVA Time (Crew-hr:min)	EVA Time (Crew-hr:min)	Robotics Time (hr:min)
1. STS Brings Materials Up	0:00	0:0	0:00	0:00
2. Unload Materials	0:30	0:30	0:00	0:30
3. Change-Out S.I.& Sub-system	7:31	11:17	15:02	3:45
4. Replenish Hydrazine	1:42	1:42	3:24	0:00
5. Deberthing Related	5:30	5:30	3:00	3:00
6. OMV Deploys 3S	0:00	0:00	0:00	0:00
7. OMV Retrieves 3S	0:00	0:00	0:00	0:00
8. Berthing Related	3:30	3:30	3:00	2:00
9. Load Materials	0:30	0:30	0:00	0:30
10. STS Takes Materials Down	0:00	0:00	0:00	0:00
Totals	19:13	22:59	24:26	9:45

Servicing Type D

No servicing times. Type D provides temporary storage only for 3S between free-flying science missions.

14.9 OMV Flights* in Support of 3S Strawman Servicing Missions

Strawman Mission	Purpose of Flight	Number of Flights
Strawman A	deployment	1
Strawman A	retrieval	1
Strawman B	deployment	1
Strawman B	retrieval	1
Strawman C	deployment	1
Strawman C	retrieval	1

*It is believed that the Short Range Vehicle (SRV) version of the OMV may be adequate for 3S deployment/retrieval.

15.0 OVERALL REQUIREMENTS SUMMARY FOR SS SERVICING OF 3S

15.1 3S Milestone and Servicing Schedule

Event	Location	Date (CY Quarter)	Comments
Payload Launch	STS/ETR	1996, 2nd Quarter	
1st Servicing	SS	1996, 2nd	Type A
2nd Servicing	SS	1996, 4th	Type B
3rd Servicing	SS	1997, 2nd	Type C
4th Servicing	SS	1997, 4th	Type B
5th Servicing	SS	1998, 2nd	Type B
6th Servicing	SS	1998, 4th	Type C
7th Servicing	SS	1999, 2nd	Type B
8th Servicing	SS	1999, 3rd	Type B
9th Servicing	SS	1999, 4th	Type C
10th Servicing	SS	2000, 2nd	Type B
11th Servicing	SS	2000, 3rd	Type B
12th Servicing	SS	2000, 4th	Type C

NOTES: The servicing pattern shown in servicing events 10, 11, 12, ie., Type B, Type B, Type C, is repeated in Calendar Years 2001 through 2005 (where CY 2005 is the last year covered by this study).

The four different types of 3S strawman servicing missions are defined in paragraph 14.1.

15.2 Summary of 3S Mass Considerations

a. 3S in Operational/Servicing Configurations

3S Mass (dry):	2582 kg
Consumables Mass:	380 kg
3S Mass (total):	2962 kg

b. 3S Servicing Material*

Event	Quarter CY	Mass Up (kg)	Mass Down (kg)	Quarter CY
Launch	2nd 1996	2962		
1st Servicing	2nd 1996	0	0	3rd 1996
2nd Servicing	4th 1996	2300	1791	1st 1997
3rd Servicing	2nd 1997	1791	1791	3rd 1997
4th Servicing	4th 1997	1791	1791	1st 1998
5th Servicing	2nd 1998	1791	1791	3rd 1998
6th Servicing	4th 1998	1791	1791	1st 1999
7th Servicing	2nd 1999	1791	1791	3rd 1999
8th Servicing	3rd 1999	1791	1791	4th 1999
9th Servicing	4th 1999	1791	1791	1st 2000
Payload Mission Termination			***	
Totals		50,037	44,775	
Servicing Totals** Through CY 2005		47,075	44,775	

* Mass up/down pattern continues through at least CY-2005. STS Flights will normally occur prior to and following payload servicing. Table indicates mass up required for the servicing and mass down resulting from the servicing.

** Excludes initial payload launch mass and mission termination flight mass. These are chargeable to payload operations.

*** Payload Mission Termination is assumed to occur after CY 2005. Not included in this study.

c. 3S Servicing Storage Mass on Space Station

Calendar Year	96	97	98	99	00	01	02	03	04	05
Storage + Mass (kg)										
Unpressurized	2300/2582	2300/2582	2300/2582	2300/2582	2300/2582	2300/2582	2300/2582	2300/2582	2300/2582	2300/2582
Pressurized	0	0	0	0	0	0	0	0	0	0
Total	2300/2582	2300/2582	2300/2582	2300/2582	2300/2582	2300/2582	2300/2582	2300/2582	2300/2582	2300/2582

+ There are 2300 kg of permanent storage mass required starting in 1996, 4th quarter. Temporary storage mass of 2582 kg is required for the operational 3S when it is not on a free-flying science mission.

Temporary storage is required for the following CY quarter:
CY 1996, 3rd; CY 1997, 1998, 1st and 3rd quarter;
CY 1999 through CY 2005, 1st quarter.

15.3 Summary of 3S Volume Considerations

a. Payload Volume Envelope (Cylindrical)

Operational Configuration*:	110 m^3
Servicing Configuration*:	110 m^3
Storage/Transportation Configuration*:	42 m^3

* 3S solar array is deployed during operations and servicing. Solar array is folded during storage and transportation.

b. 3S Servicing Volumes Up and Down in STS**

Event	Volume Up (m^3)	Volume Down (m^3)
Launch	19	
1st Servicing	0	0
2nd Servicing	19	15
3rd Servicing	15	15
4th Servicing	15	15
5th Servicing	15	15
Nth Servicing	15	15
Payload Mission Termination		***
Totals	413	375
Servicing Totals	394	375

** Excludes initial payload launch volume and mission termination flight volume. These are chargeable to payload operations.

*** Assumed to occur after CY 2005. Not included in this study.

c. 3S Servicing Storage Volume on Space Station

Calendar Year	95	96	97	98	99	00	01	02	03	04	05
Storage Volume (m^3)											
Unpressurized+	0/0	19/19	19/19	19/19	19/19	19/19	19/19	19/19	19/19	19/19	19/19
Pressurized	0	0	0	0	0	0	0	0	0	0	0
Total +	0/0	19/19	19/19	19/19	19/19	19/19	19/19	19/19	19/19	19/19	19/19

+ 3S permanent storage (19 m^3) begins in 4th quarter 1996 when the 3S Storage Carrier arrives at the SS. Another 19 m^3 of storage volume is required when the Operational 3S is not on a free-flyer science mission. See footnote on Table of Section 15.2 for schedule of when 3S will be back at SS.

15.4 Summary of 3S Power Considerations

	AVG	MAX
Operational Power (watts)	650	800
Servicing Power (watts)	TBD	750
Storage Power, Servicing Materials* (watts)	310	N.A.

* Required for materials in 3S Storage Carrier that is permanent storage on SS starting in 4th quarter of CY 1996. A similar value of power is required for the 3S Operational Carrier when it is at the SS between free-flying science missions and is not being serviced.

15.5 Summary of 3S Servicing Time Estimates^

Calendar Year	94	95	96	97	98	99	00	01	02	03	04	05	TOTALS
Elapsed Time (hr:min)	0	0	27:30	37:43	37:43	60:04	60:04	60:04	60:04	60:04	37:43	60:04	523.24
IVA Time (Crew-hr:min)	0	0	30:54	44:53	44:53	66:47	66:47	66:47	66:47	66:47	66:47	66:47	588:09
EVA Time (Crew-hr:min)	0	0	29:00	47:26	47:26	70:26	70:26	70:26	70:26	70:26	70:26	70:26	616:54
Total Crew Time	0	0	87.24	130:02	130:02	137:17	137:17	137:17	137:17	137:17	137:17	137:17	1708:27
Robotics Time (hr:min)	0	0	14:24	19:09	19:09	28:33	28:33	28:33	28:33	28:33	28:33	28:33	252:33

15.6 Summary of OMV Flights in Support of 3S Servicing

Calendar Year	96	97	98	99	00	01	02	03	04	05	TOTALS
Number of OMV* Flights	4	4	4	6	6	6	6	6	6	6	54

* Short Range Vehicle (RSV) version of OMV may be adequate. One half of the OMV flights are used to deploy 3S from the SS and to provide contingency return if necessary. The other half are used for retrieval of 3S. Deployments and retrievals will normally occur within 90 days of each other since this is the normal 3S science mission maximum duration. See schedule in Paragraph 15.1.

REFERENCES

1. Space Station Spartan Study Final Report, NASA TM 86215, July, 1985 (John H. Lane, Joseph R. Shulman, Werner M. Newport, et.al.).

SOLAR TERRESTRIAL OBSERVATORY/PLASMA INSTRUMENT GROUP (STO/PIG)
MISSION CODE TBD

1.0 STO/PIG PROGRAM AND OPERATIONS INFORMATION

1.1 STO/PIG Points of Contact

Dr. Stan Shawhan
NASA/HQ
Washington, DC
(202) 453-1676

Mr. William Roberts
NASA/MSFC
Huntsville, Alabama
(205) 544-0621

Mr. Jack Kropp
TRW
Redondo Beach, Calif
(213) 535-3451

1.2 STO/PIG Objectives

The STO/PIG objective is to study the physical processes that couple the atmosphere, magnetosphere, and the sun through observation and active experimentation.

1.3 STO/PIG Milestone and Servicing Schedule

Launch Dates:	3rd quarter, 1994
First Space Station Service:	4th quarter, 1994
Servicing Interval:	quarterly
Operational Lifetime:	4 years

The STO/PIG payload has various servicing requirements that result in quarterly and yearly servicing activities. The Retrievable Plasma Diagnostics Package (RPDP) is a free-flying subsatellite which is a detachable part of the PIG instrument carrier. The RPDP requires servicing on a quarterly basis. This will require an OMV retrieval and deployment of RPDP for every servicing mission. The other PIG instruments require yearly servicing.

1.4 STO/PIG Orbital Parameters

STO/PIG is a Space Station (SS) attached payload and, thus, has the same orbital parameters as the Space Station. Even the RPDP, the free-flying sub-satellite, has effectively the same orbital parameters because it is never so far away that there would be a significant difference.

2.0 STO/PIG PHYSICAL CHARACTERISTICS

2.1 STO/PIG Description

The STO/PIG payload consists of three instruments designed to study the Earth's magnetosphere by controlled perturbations of the environment for investigation of cause and effect mechanisms. These STO/PIG instruments and their support equipment are mounted to a carrier which provides the payload's structural and mechanical interface to both the STS and space station. For on-orbit control, STO/PIG will use the space station's multi-purpose control and display consoles, configurable by user software, which are located in the pressurized modules or nodes. Table STO/PIG-1 provides a brief description of each instrument while Figure STO/PIG-1 shows the STO/PIG payload configuration.

2.2 STO/PIG Physical Characteristics

Table STO/PIG-2 contains the estimates of STO/PIG instrument masses and dimensions. These are preliminary estimates provided by the STO Project for planning purposes; they are not final values and will be updated as new information becomes available.

2.3 STO/PIG Moving Parts and Special Features

The RPDP is a deployable/retrievable free-flyer package. It mounts to the PIG carrier using the MSFC Release Mechanism (REM).

2.4 STO/PIG Consumables

The SEPAC instrument will require resupply of its pressurant. The pressurant will be either argon or xenon.

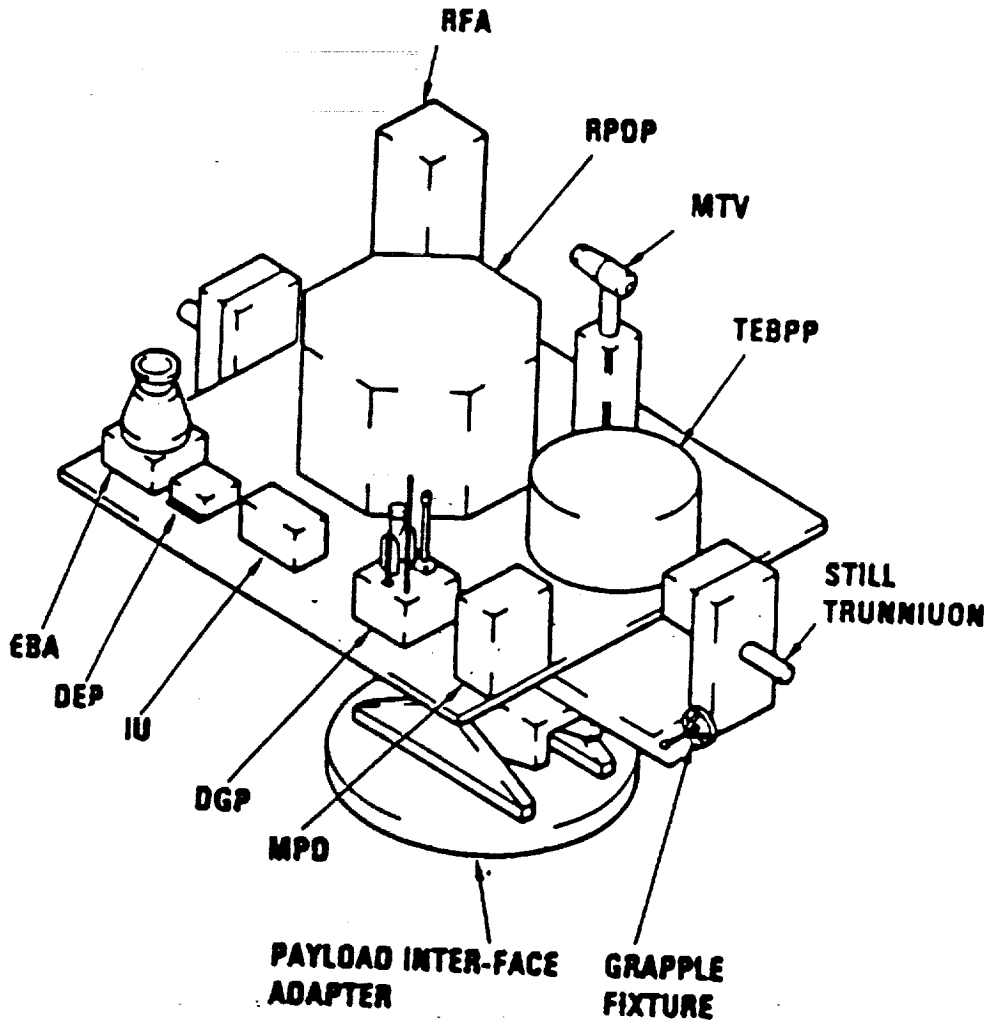

Figure STO/PIG-1. STO/PIG Payload Configuration

Table STO/PIG-1. STO/PIG Instrument Descriptions

Instrument	Name	Description
RPDP	Recoverable Plasma Diagnostics Package	Package is an ejectable and recoverable unit with flight and ground support systems allowing three modes of operation: 1) attached to SS MRMS: 2) Tethered to SS; 3) as an SS Subsatellite with a 100-200 km communications range. Instrumentation includes a magnetometer, an electric field probe, and an Ion/neutral particle ratio analyzer. Has (retractable) sensor and RF communications antennas.
SEPAC	Space Experiments with Particle Accelerators	Consists of an electron gun and magnetodynamic arcjet to generate particle beams, associated diagnostic and control equipment, and a rack mounted control panel.
TEBPP	Theoretical Experiment by Plasma Processes	Consists of a pulsed plasma probe, a sweeping plasma receiver, an energic particle spectrometer, a neutral density detector, and a visible light photometer.

Table STO/PIG-2. STO/PIG Instrument Characteristics

Instrument	Mass (kg)	Volume (m^3)	Comments/Features
RPDP	750	4	This is a deployable/retrievable free-flyer. Requires OMV support. Utilizes a Release Mechanism (REM) to latch to the STO/SS PIG carrier
SEPAC	454	5.0	Requires argon or xenon replenishment (yearly)
TEBPP	36	1.0	Requires MSC operational support. It is detachable so that it can be maneuvered near and into the SEPAC electronic beam by the Space Station's RMS

Note: The PIG carrier weight is not included in this table.

3.0 STO/PIG SERVICING INFORMATION

3.1 General Description for Servicing STO/PIG

STO/PIG instruments will be serviced on the space station at their attached payload location. Servicing may include instrument repair, consumables resupply, battery recharging or replacement, instrument or electronics ORU changeout and instrument replacement. Wherever practical, STO/PIG equipment will be designed to be robotically serviced in order to minimize or eliminate the need for EVA support. Servicing items, including gas resupply, will be packaged for ORU changeout. Feasibility will depend upon the capabilities of the station's Remote Manipulator System (RMS) and Flight Telerobotic Servicer (FTS). Table STO/PIG-3 summarizes the STO/PIG servicing requirements.

3.2 STO/PIG Instrument Background

The STO/PIG instruments have either flown before or are expected to fly prior to their use on space station. The instruments will be modified or redesigned to increase their serviceability for the space station. The individual instrument backgrounds are as follows:

RPDP - Early version have flown on OSS-1 and Spacelab 2. Planned for inclusion in Space Plasma Laboratory 1 and 2.

SEPAC - Heritage is instrument flown of Spacelab 1 in 1983. SEPAC is scheduled to fly on Spacelab flights as part of the ATLAS-1 and Space Plasma Laboratory (SPL) missions in 1990 and 1992. These dates are entirely dependant on NSTS program schedules.

TEBPP - Derives from an instrument package being designed for the Space Plasma Laboratory.

3.3 Primary Role of SS in Servicing STO/PIG

The space station is the planned servicing site for the STO/PIG instruments. Servicing of the instruments will be done at their attached payload accommodations site. This includes the RPDP

Table STO/PIG-3. STO/PIG Servicing Requirements

Experiment	Servicing Interval (months)	Servicing Activity
SEPAC	12	replenish pressurants (Ar, N_2), replace filaments, batteries
TEBPP	12	clean probe
RPDP	3	recharge or replace batteries, inspect optical windows

which requires OMV retrieval for servicing at the station. Maintenance and repairs and will be implemented on an ORU basis. Post-servicing checkout of the instruments will be accomplished at the space station from the control/display consoles in the pressurized modules.

3.4 Primary SS Features Required for Servicing STO/PIG

The following facilities are required:

- Mobile Servicing Center (MSC).
- Logistics Module.
- Orbital Maneuvering Vehicle (OMV).
- Flight Telerobotic Servicer (FTS).
- Station Remote Manipulator System (RMS).

3.5 Space Station Personnel Required for Servicing STO/PIG

Servicing will require station crew specialists to implement servicing using the MSC and/or FTS station capabilities with support from an STO specialist resident at the space station. Servicing and checkout activities will be supported by science instrument and subsystem specialists on the ground.

3.6 Servicing Precautions for STO/PIG

Instruments will be powered down. Careful service planning will be required to minimize contamination to the instruments and to protect the instrument alignments.

3.7 OMV Flight Profile Support of STO/PIG Servicing

OMV support is required only for the RPDP. At three month intervals the OMV is required to retrieve the RPDP so that it can be serviced at the station. The OMV would then redeploy the RPDP and wait for confirmation of RPDP's operational status before returning to the station.

4.0 STO/PIG SERVICING SAFETY CONSIDERATIONS

4.1 STO/PIG Hazardous Systems

- Batteries.
- Pressurized gas systems.

4.2 Servicing Safety Precautions for STO/PIG

TBD.

5.0 STO/PIG SERVICING INTERFACES

5.1 STO/PIG Crew Convenience Features

No information available.

5.2 STO/PIG Mechanical Interfaces

The PIG carrier will interface to the station using the Attached Payloads Accommodation Equipment's (APAE) Payload Interface Adapter (PIA). The PIA provides the structural/mechanical utilities interface to the station. The PIG carrier will also have grapple fixtures for the RMS. Payload ORU's will have the appropriate fittings/grapples to allow RMS/robotic servicing.

5.3 STO/PIG Umbilical Interfaces

The APAE Systems Support Module (SSM) provides for the control and distribution of power, thermal, data and communications resources to the payload. An SSM would be mounted (pre-flight) on the PIG carrier. The SSM interface passes through the PIA which provides the latching hardware and connectors necessary to mate the carrier/SSM/PIA with the core station resources. The PIG instruments' power and data requirements are summarized in Table STO/PIG-4.

5.4 STO/PIG RF Communication Interface

Data and communications are handled through the Space Station's RF communications system.

Table STO/PIG-4. STO/PIG Power and Data Requirements

	Power Requirements (kW)				Data Rate Requirement (Kbits/sec)			
	Operational		Servicing		Operational		Servicing	
Instrument	Peak	Nominal	Peak	Nominal	Peak	Nominal	Peak	Nominal
SEPAC		1.0				0.512		
TEBPP		0.070				4000		
RPDP		0.200-Free Flyer 0.800-RMS				1250		

Notes: The 200 watts is the operational power required at the station for communication equipment to receive RPDP data.

5.5 STO/PIG Thermal Interface

STO/PIG requires hook-up to the station thermal control system. This interface is provided by the station's Attached Payload Accomodation Equipment (APAE).

6.0 STO/PIG SERVICING ENVIRONMENT

6.1 STO/PIG Pointing/Orientation Concerns

None identified

6.2 STO/PIG Contamination Concerns

The STO/PIG instruments are susceptible to contamination from gases or particles that would scatter or absorb sunlight, or cause deposition on optics. SEPAC requires 10^{-6} torr or better to avoid cathode "poisoning of its electron gun. TEBPP is sensitive to magnetic fields.

6.3 STO/PIG Radiation Concerns

SUSIM is sensitive to the increased radiation environment associated with the South Atlantic Anomaly (SAA) and may need to avoid observations or shut-off during SAA passage. EMI at the station is of general concern.

7.0 STO/PIG SERVICING ACCOMMODATIONS

7.1 STO/PIG Equipment Access

Although the STO/PIG instruments were not originally designed for on-orbit servicing, they generally have good access, including the RPDP. Modifications are being planned to make them more servicable. Electronics boxes will be modified to be replaceable as ORU's as will instruments or instrument subassemblies.

7.2 STO/PIG Modularity

STO/PIG instruments, their subassemblies and supporting subsystems will be designed as modular units to the maximum extent practical.

7.3 STO/PIG Automated Servicing

The PIG carrier, instruments and their serviceable equipment will be designed to be compatible with the various space station effectors, as required.

7.4 STO/PIG Servicing in the Space Station Pressurized Modules

STO/PIG requires no pressurized Space Station servicing.

8.0 STO/PIG SERVICING MATERIALS CHECKLIST

Servicing Equipment	Required	SS Provided	Ref. Section
ORUs (including SIs)	Yes	No	9.0
Flight Support Equipment	Yes	No	10.0
Other Equipment	No	No	10.0
Servicing Equipment Carrier(s)	Yes	Yes	12.0
Servicing Consumables			
Propellant(s)	No	No	11.0
container(s)	No	No	11.0
Cryogen(s)	No	No	11.0
container(s)	No	No	11.0
Liquid(s)	No	No	11.0
container(s)	No	No	11.0
Gas(es)	Yes	No	11.0
container(s)	Yes	No	11.0
Other(s)	No	No	11.0
container(s)	No	No	11.0
Servicing Consumables Carrier(s)	Yes	Yes	12.0

9.0 STO/PIG ORBITAL REPLACEABLE UNITS (ORUs)

9.1 Servicing of STO/PIG ORUs

a. Primary

Those ORUs which are planned to be serviced on a regular basis include those replacing consumables (i.e., gas bottles) and those with predictable service lives such as calibration lamps and power supplies.

b. Secondary

Items which can be expected to fail on a random basis, such as electronic boxes and sensors, will be replaced on the next scheduled STO/PIG servicing mission.

9.2 STO/PIG ORU Physical Characteristics

TBD

9.3 STO/PIG ORU Storage Requirements

Specific ORU values are not available at this time. However, the storage requirements in general can be expected to be -10 to +40 degrees Celsius for items such as gas bottles and power supplies, and +/-40 degrees Celsius for most other ORU's.

9.4 Other Environmental Requirements for STO/PIG ORUs

No information available.

10.0 STO/PIG FLIGHT SUPPORT AND MISCELLANEOUS SERVICING EQUIPMENT

10.1 STO/PIG Flight Support Equipment (FSE)

TBD.

10.2 STO/PIG FSE Physical Characteristics

TBD. However, an overhead of 20% over the PIG ORU mass estimates was included to account for FSE (see section 12.3).

10.3 STO/PIG FSE Storage Requirements

TBD.

10.4 Miscellaneous Servicing Equipment

TBD.

11.0 STO/PIG SERVICING CONSUMABLES AND CONTAINERS

11.1 Description and Purpose

The Space Experiments with Particle Accelerator (SEPAC) experiment will require either argon or xenon replenishment. The replenishment will be by gas bottle (ORU) changeout on a yearly basis. The unpressurized logsitics module will be used for transport.

11.2 Physical Characteristics

The SEPAC estimated requirements for argon or xenon gas and its containers are:

	Argon	or	Xenon
Mass of gas:	0.25 kg		1.9 kg
Mass of container:	7.0 kg		9.0 kg
Volume of container:	0.005 m^3		0.010 m^3
Operating pressure:	417 psia		474 psia
Total mass:	7.25 kg		10.9 kg

11.3 Storage Requirements

TBD.

12.0 CARRIERS FOR STO/PIG SERVICING MATERIALS

12.1 Description of Carriers

STO/PIG plans on utilizing the logistics carriers which are a planned part of the Space Station Program. PIG servicing materials will probably be transported in the Unpressurized Logistics Carrier (ULC). Use of these carriers will be in accordance with Space Station Program planning.

12.2 STS and SS Carrier Interfaces

The interface between the STO/PIG servicing equipment and the station's logistics carriers is unknown at this time. The interfaces between the logistics carriers and the STS or the SS are a Space Station Program responsibility.

12.3 Servicing Materials/Carrier Interfaces

No information available. However, an overhead of 20% was added to the STO/PIG ORU mass estimates to account for the structural/mechanical interface with the logistics carrier.

13.0 STO/PIG ORBITAL SERVICING ACTIVITIES TIME ESTIMATES

13.1 Mission Servicing Ground Rules and Constraints

Servicing will require station crew specialists to implement servicing with support from an STO specialist resident at the station. Servicing of the science instrument and support subsystems will be done at the attached payload location on the truss. STO/PIG's intent is to design the servicing equipment such that nominal servicing activities will not require EVA support. EVA support will be dependent upon the actual capabilities of the remote manipulator and robotics of the station. Specific servicing activities, such as battery replacement for the RPDP, if needed, may require EVA support. The RPDP will require OMV support for deployment and retrieval. The RPDP will be returned and mated to the PIG carrier for its servicing activities. All STO/PIG servicing materials will be transported to and from the station in the Space Station logistics carriers.

13.2 Preparatory Servicing Time Estimates

Activity	Elapsed Time (hr:min)	IVA Time (Crew-hr:min)	EVA Time (Crew-hr:min)	Robotic Time (hr:min)
1. RPDP berthing related activities	3:30	3:30	0:00	2:00
2. Loading of MSC with servicing materials from logistics carriers	TBD	TBD	0:00	TBD

13.3 Principal Servicing Time Estimates

Activity	Elapsed Time (hr:min)	IVA Time (Crew-hr:min)	EVA Time (Crew-hr:min)	Robotic Time (hr:min)
1. Electronics ORU changeout	TBD	TBD	0:00	TBD
2. SEPAC gas ORU changeout	TBD	TBD	0:00	TBD
3. RPDP battery charging or replacement	TBD	TBD	TBD	TBD

13.4 Close-Out Servicing Time Estimates

Activity	Elapsed Time (hr:min)	IVA Time (Crew-hr:min)	EVA Time (Crew-hr:min)	Robotic Time (hr:min)
1. RPDP deberthing	5:30	5:30	0:00	3:30
2. Offloading of servicing materials from MSC to logistics carrier.	TBD	TBD	0:00	TBD

14.0 STO/PIG STRAWMAN SERVICING SCENARIO

14.1 STO/PIG Strawman Servicing Mission

The STO/PIG instruments have servicing requirements that result in quarterly and yearly servicing activities. The quarterly servicing activities define strawman servicing mission Type A. Every fourth quarter the yearly servicing activities along with the quarterly activities are required and these define strawman servicing mission Type B. In other words, Type B servicing includes both Type A activities and the yearly servicing activities. Every three Type A servicing missions will be followed by a Type B mission in the fourth quarter.

The Type A servicing mission consists of RPDP servicing. The RPDP is a free flying subsatellite which is a detachable part of the PIG instrument carrier. It requires the OMV to both deploy and retrieve it from its station-keeping orbit near the space station. RPDP servicing requires its return to the PIG carrier so that its flight batteries can be recharged or replaced.

The Type B servicing mission adds to this the SEPAC instrument's gas replenishment and a generic electronics box ORU replacement. Both servicing mission types require the MSC to transport servicing materials to the attached payload location of the STO/PIG carrier.

Servicing mission Type A requires two MSC round trips to the lower boom to support the RPDP servicing activities. The first MSC trip supports the RPDP's retrieval by the OMV and returns the RPDP to the OMV for its redeployment as a subsatellite. The Type B mission also requires two MSC round trips in support of RPDP servicing. The second MSC trip would support, in addition to RPDP servicing, the PIG carrier and instrument yearly servicing requirements. It is assumed that the RPDP must be retrieved for servicing by the OMV and returned to the PIG carrier before the STS arrives at the station. This to avoid operational conflicts during the STS stay time. Also, RPDP redeployment by the OMV would not occur until after the STS leaves the station and the station completes its subsequent orbital reboost maneuver.

14.2 STO/PIG Servicing Payload Description

The strawman Type A servicing mission is for RPDP servicing. If the RPDP requires battery replacement, then the servicing payload would consist of the replacement batteries and requisite FSE. The mass and volume of a battery ORU is TBD. The interface requirements (both functional and physical) to the logistics carrier are TBD. IF the RPDP does not require battery replacement, then there is no servicing payload as such for the Type A mission.

The servicing payload for strawman mission Type B would include, in addition to any Type A payload requirements, a gas resupply ORU for the SEPAC instrument and an electronics box ORU (generic) for STO/PIG maintenance or repair. Exact masses and volumes for these ORUs are TBD. However, estimated masses for the gas resupply ORU and the generic electronics box ORU are provided in the next section. This servicing material will also be transported in the space station's logistics carriers.

14.3 Strawman Servicing Materials

a. ORUs

Type A Mission: May require a replacement battery ORU for RPDP. Mass and volume are TBD.

Type B Mission: In addition to any Type A mission equipment, the Type B mission includes an electronics box ORU conservatively estimated to weight 100 kilograms. Total ORU mass for a Type B service mission is estimated as approximately 100 kilograms plus TBD kilograms for any battery ORU requirements.

b. FSE

Type A Mission: FSE is estimated to be about 20% of the ORU mass. FSE mass estimate is TBD kilograms.

Type B Mission: FSE is estimated to be about 20% of the ORU mass. FSE is estimated to be 22 kilograms (including allowance for consumables ORU in 14.3.c) plus TBD kilograms for any battery ORU.

c. Consumables and Containers

Type A Mission: No consumables

Type B Mission: A gas resupply ORU for SEPAC is required. For this strawman mission, the gas is assumed to be xenon. The estimated mass of the gas is 1.9 kilograms with 4.0 kilograms estimated for the pressure vessel and 5.0 kilograms for the mate/demate hardware. The total ORU mass is estimated to be about 11 kilograms.

d. Carriers

The STO/PIG servicing materials will utilize the space station logistics carriers. All servicing materials will utilize the Unpressurized Logistics Carrier (ULC).

14.4 Estimated STS Up/Down Mass to Support STO/PIG Strawman Servicing

a. Strawman Servicing Mission Type A

Servicing Material	Mass, Unpressurized Transport (kg)	Mass, Pressurized Transport (kg)	Mass Total (kg)
Equipment			
SIs	0	0	0
ORU's	TBD	0	TBD
Unique FSE	TBD	0	TBD
Misc. Equipment	0	0	0
Equipment Subtotal	TBD	0	TBD
Equipment Carrier(s)	0	0	0
Subtotal, Equipment mass up	TBD	0	TBD
Subtotal, Equipment mass down	TBD	0	TBD
Consumables			
Consumables	0	0	0
Consumables Containers	0	0	0
Consumables Container Carriers	0	0	0
Subtotal, Consumables Mass Up	0	0	0
Subtotal, Consumables Mass Down	0	0	0
Total Mass Up	TBD	0	TBD
Total Mass Down	TBD	0	TBD

14.4 Estimated STS Up/Down Mass to Support STO/PIG Strawman Servicing

b. Strawman Servicing Mission Type B

Servicing Material	Mass, Unpressurized Transport (kg)	Mass, Pressurized Transport (kg)	Mass Total (kg)
Equipment			
SIs	TBD	0	TBD
ORU's	100	0	100
Unique FSE	22	0	22
Misc. Equipment	0	0	0
Equipment Subtotal	122	0	122
Equipment Carrier(s)	0	0	0
Subtotal, Equipment mass up	122	0	122
Subtotal, Equipment mass down	122	0	122
Consumables			
Consumables	2.0	0	2.0
Consumables Containers	9.0	0	9.0
Consumables Container Carriers	0	0	0
Subtotal, Consumables Mass Up	11.0	0	11.0
Subtotal, Consumables Mass Down	9.0	0	9.0
Total Mass Up	133	0	133
Total Mass Down	131	0	131

Note: Totals and Subtotals do not account for the data which is TBD.

14.5 Estimated STS Up/Down Volume to Support STO/PIG Strawman Servicing

a. Strawman Servicing Mission Type A

Servicing Material	Volume, Unpressurized Transport (m^3)	Volume, Pressurized Transport (m^3)	Volume Total (m^3)
Equipment			
SIs	0	0	0
ORU's	TBD	0	TBD
Unique FSE	TBD	0	TBD
Misc. Equipment	0	0	0
Equipment Subtotal	TBD	0	TBD
Equipment Carrier	0	0	0
Subtotal	TBD	0	TBD
Consumables			
Consumables in Containers	0	0	0
Consumables, Containers, Carriers	0	0	0
Total Volume Up	TBD	0	TBD
Total Volume Down	TBD	0	TBD

b. Strawman Servicing Mission Type B

Servicing Material	Volume, Unpressurized Transport (m^3)	Volume, Pressurized Transport (m^3)	Volume Total (m^3)
Equipment			
SIs	TBD	0	TBD
ORU's	0.5	0	0.5
Unique FSE	0.1	0	0.1
Misc. Equipment	0	0	0
Equipment Subtotal	0.6	0	0.6
Equipment Carrier(s) Subtotal	0.6	0	0.6
Consumables			
Consumables in Containers	0.06	0	0.06
Consumables, Containers, and Carriers	0.06	0	0.06
Total Volume Up	0.66	0	0.66
Total Volume Down	0.66	0	0.66

Note: Volumes shown are based on an assumed average payload density of approximately 200 kg/m^3.
Totals and subtotals do not account for the data which is TBD. Logistics Carrier is assumed to transport the servicing materials.

14.6 Space Station Storage Required to Support STO/PIG Strawman Servicing

a. Strawman Servicing Mission Type A

Continuous Storage	Unpressurized	Pressurized	Total
Mass (kg)	0	0	0
Volume (m^3)	0	0	0
Average Power (watts)	0	0	0
Temperature Range (C)	-	-	-
Temporary Storage*			
Mass	TBD	0	TBD
Volume (m^3)	TBD	0	TBD
Average Power (watts)	TBD	0	TBD
Temperature Range (C)	TBD	-	TBD

* Storage is in Station supplied Unpressurized Logistics Carrier (ULC). Storage duration is approximately 3 months per servicing mission.

14.6 Space Station Storage Required to Support STO/PIG Strawman Servicing (Continued)

b. Strawman Servicing Mission Type B

Continuous Storage	Unpressurized	Pressurized	Total
Mass (kg)	0	0	0
Volume (m^3)	0	0	0
Average Power (watts)	0	0	0
Temperature Range (C)	-	-	-
Temporary Storage *			
Mass (kg)	133	0	133
Volume (m^3)	0.66	0	0.66
Average Power (watts)	TBD	0	TBD
Temperature Range (C)	TBD	-	TBD

* Storage is in Station supplied Unpressurized Logistics Carrier (ULC). Storage duration is approximately 3 months per servicing mission.
Note: Temporary Storage mass and volume do not account for previous data defined as TBD.

14.7 STO/PIG Strawman Servicing Power Estimates

	Operational Mode (watts)		Servicing Mode (watts)	
	AVG	MAX	AVG	MAX
Payload (bus + instruments)	TBD	TBD	TBD	TBD

14.8 STO/PIG Strawman Servicing Time Estimates

a. Strawman Servicing Mission Type A

Activity	Elapsed Time (hr:min)	IVA Time (Crew-hr:min)	EVA Time (Crew-hr:min)	Robotic Time (hr:min)
1. OMV retrieves RDPD	0:00	0:00	0:00	0:00
2. RDPD berthing activities	3:30	3:30	0:00	2:00
3. MRMS transports RPDP to PIG (1)	2:55	2:55	0:00	2:55
4. RPDP battery ORU changeout or battery charging	TBD	TBD	TBD	TBD
5. MRMS transports RPDP to OMV (1)	2:55	2:55	0:00	2:55
6. RPDP deberthing activities	5:30	5:30	0:00	3:00
7. OMV deploys RPDP	0:00	0:00	0:00	0:00
TOTALS (2)	14:50	14:50	TBD	10:50

NOTE: (1): MRMS times are for a round trip.
(2): Totals do not account for the values which are TBD.

b. Strawman Servicing Mission Type B

Activity	Elapsed Time (hr:min)	IVA Time (Crew-hr:min)	EVA Time (Crew-hr:min)	Robotic Time (hr:min)
1. OMV retrieves RDPD	0:00	0:00	0:00	0:00
2. RDPD berthing activities	3:30	3:30	0:00	2:00
3. MRMS transports RPDP to PIG (1)	2:55	2:55	0:00	2:55
4. RPDP battery ORU changeout or battery charging	TBD	TBD	TBD	TBD
5. Electronics ORU changeout	1:20	1:20	0:00	1:20
6. Gas bottle ORU changeout	0:38	0:38	0:00	0:38
7. MRMS transports RPDP to OMV (1)	2:55	2:55	0:00	2:55
8. RPDP deberthing activities	5:30	5:30	0:00	3:00
9. OMV deploys RPDP	0:00	0:00	0:00	0:00
TOTALS (2)	16:48	16:48	TBD	12:48

NOTE: (1): MRMS times are for a round trip.
(2): Totals do not account for the values which are TBD.

14.9 OMV Flights in Support of STO/SIG Strawman Servicing

OMV flights are required for the deployment and retrieval of the STO/PIG's RPDP. The RPDP is a small "sub-satellite" that is to fly near the space station in a station-keeping orbit. On a 90 day cycle the RPDP needs to be returned to the station for servicing. Consequently, two OMV flights are needed per servicing mission - a retrieval and a re-deployment. This OMV support is required for both the Type A and B servicing scenarios. Since STO/PIG has a four year mission duration with quarterly servicing requirements, a total of 32 OMV flights will be required. Of these 32 flights, the first flight is the initial operational deployment of the RPDP and the last flight is the final retrieval of the RPDP at the curtailment of the STO/PIG mission.

15.0 SUMMARY OF REQUIREMENTS FOR STO/PIG SERVICING

15.1 STO/PIG Milestones and Servicing Schedule

Event	Location	Date	Comment
STO/PIG Launch	STS/ETR	3rd quarter, 1994	
1st Servicing	SS at Attached P/L	4th quarter, 1994	Type A Servicing
2nd Servicing	SS at Attached P/L	1st quarter, 1995	Type A servicing
3rd Servicing	SS at Attached P/L	2nd quarter, 1995	Type A servicing
4th Servicing	SS at Attached P/L	3rd quarter, 1995	Type B servicing
5th Servicing	SS at Attached P/L	4th quarter, 1995	Type A servicing
6th Servicing	SS at Attached P/L	1st quarter, 1996	Type A servicing
7th Servicing	SS at Attached P/L	2nd quarter, 1996	Type A servicing
8th Servicing	SS at Attached P/L	3rd quarter, 1996	Type B servicing
9th Servicing	SS at Attached P/L	4th quarter, 1996	Type A servicing
10th Servicing	SS at Attached P/L	1st quarter, 1997	Type A servicing
11th Servicing	SS at Attached P/L	2nd quarter, 1997	Type A servicing
12th Servicing	SS at Attached P/L	3rd quarter, 1997	Type B servicing
13th Servicing	SS at Attached P/L	4th quarter, 1997	Type A servicing
14th Servicing	SS at Attached P/L	1st quarter, 1998	Type A servicing
15th Servicing	SS at Attached P/L	2nd quarter, 1998	Type A servicing
STO/PIG Return	STS/ETR	3rd quarter, 1998	

15.2 Summary of STO/PIG Mass Considerations

a. STO/PIG in Operational/Servicing Configurations

1. Operational Payload

Payload Mass (dry)	:	TBD
Consumables Mass	:	1.9 kg
Total Operational Payload Mass	:	TBD

2. Type A Servicing Materials

Servicing Mass (dry)	:	TBD kg
Consumables Mass	:	0 kg
Total Type A Servicing Mass	:	TBD kg

3. Type B Servicing Materials

Servicing Mass (dry)	:	131 kg
Consumables Mass	:	1.9 kg
Total Type B Servicing Mass	:	133 kg

b. STO/PIG Servicing Material

Event	Mass Up (kg)	Mass Down (kg)
Launch	TBD	
1st Servicing	TBD	TBD
2nd Servicing	TBD	TBD
3rd Servicing	TBD	TBD
4th Servicing	133	131
5th Servicing	TBD	TBD
6th Servicing	TBD	TBD
7th Servicing	TBD	TBD
8th Servicing	133	131
9th Servicing	TBD	TBD
10th Servicing	TBD	TBD
11th Servicing	TBD	TBD
12th Servicing	133	131
13th Servicing	TBD	TBD
14th Servicing	TBD	TBD
15th Servicing	TBD	TBD
Mission Termination		TBD
Mission Totals	399	393
Servicing Totals*	399	393

* Servicing total does not include initial payload launch mass or mission termination return mass. These are charged to payload operations.

Note: These totals do not reflect the large number of TBDs in the table.

c. STO/PIG Servicing Materials Storage Mass on Space Station

Calendar Year	95	95	96	97	98
Storage Mass (kg)					
Unpressurized	TBD	131	131	131	TBD
Pressurized	0	0	0	0	0
Total Storage Mass (kg)	TBD	131	131	131	TBD

Note: These totals do not account for all of the TBDs in the supporting data.

15.3 Summary of STO/PIG Volume Considerations

a. STO/PIG Volume Summary

Payload Volume, Operational Configuration	:	TBD m^3
Payload Volume, Servicing Configuration	:	TBD m^3
Payload Volume, Storage/Transportation Configuration	:	TBD m^3

b. STO/PIG Servicing Materials Volume Up and Down in STS

Event	Volume Up (m^3)	Volume Down (m^3)
Launch	TBD	
1st Servicing	TBD	TBD
2nd Servicing	TBD	TBD
3rd Servicing	TBD	TBD
4th Servicing	0.66	0.66
5th Servicing	TBD	TBD
6th Servicing	TBD	TBD
7th Servicing	TBD	TBD
8th Servicing	0.66	0.66
9th Servicing	TBD	TBD
10th Servicing	TBD	TBD
11th Servicing	TBD	TBD
12th Servicing	0.66	0.66
13th Servicing	TBD	TBD
14th Servicing	TBD	TBD
15th Servicing	TBD	TBD
Mission Termination		TBD
Mission Totals	2.0	2.0
Servicing Totals*	2.0	2.0

* Servicing total does not include initial payload launch volume or mission termination return volume. These are charged to payload operations.

Note: These totals do not account for all of the TBD's in the supporting data.

c. STO/PIG Servicing Materials Storage Volume on Space Station

Calendar Year	94	95	96	97	98
Storage Volume (m^3)					
Unpressurized	TBD	0.66	0.66	0.66	TBD
Pressurized	0	0	0	0	0
Total Storage Volume (m^3)	TBD	0.66	0.66	0.66	TBD

Note: All storage is temporary and yearly requirements are segmented by the STS logistics cycle. All storage is assumed to be in the station's Unpressurized Logistics Carrier (ULC).

Note: These totals do not account for all of the TBD's in the supporting data.

15.4 Summary of STO/PIG Power Considerations

	Average (watts)	Maximum (watts)
Payload Operational Power:	TBD	TBD
Payload Servicing Power:	TBD	TBD
Payload Storage/Transportation Power	TBD	TBD

15.5 Summary of STO/PIG Servicing Time Estimates

Calendar Year	94	95	96	97	98	Total
Elapsed Time (hours)	14:50	61:18	61:18	61:18	25:40	224:24
IVA Time (crew-hours)	14:50	61:18	61:18	61:18	25:40	224:24
EVA Time (crew-hours)	TBD	TBD	TBD	TBD	TBD	TBD
Total Crew Time (crew-hrs)	14:50	61:18	61:18	61:18	25:40	224:24
Robotic Time (hours)	10:05	45:18	45:18	45:18	21:40	167:39

Note: These totals do not account for all of the TBD's in the supporting data.

15.6 Summary of OMV Flights in Support of STO/PIG SS Servicing

Calender Year	94	95	96	97	98	Total
Number of OMV Flights	3	8	8	8	3	30

Note: This table shows a total of 30 OMV servicing flights. Not included in this table are the 1st OMV deployment mission in '94 and the last OMV retrieval mission in '98 since those two flights are considered to be operational flights.

REFERENCES

1. Telephone interviews with Mr. William Roberts, NASA/MSFC, during August and September 1987.

2. Telephone interviews with Mr. Jack Kropp, TRW during August and September 1987.

SOLAR TERRESTRIAL OBSERVATORY POLAR ORBITING PLATFORM (STO/POP): MISSION CODE SAAX0225

1.0 STO/POP PROGRAM AND OPERATIONS INFORMATION

1.1 STO/POP Points of Contact

Dr. Stan Shawhan
NASA/HQ
Washington, D.C. 20546
(202) 453-1676

Mr. William Roberts
NASA/MFSC
Huntsville, AL 35812
(205) 544-0621

Mr. Jack Kropp
TRW
Redondo Beach, CA
(213) 535-3451

1.2 STO/POP Objectives

To obtain knowledge about solar activity and to study the physical processes that couple the Earth's atmosphere and magnetosphere with solar radiation.

1.3 STO/POP Milestone and Servicing Schedule

Launch:	STO/POP (Phase 1)	4th quarter, 1994
	STO/POP (Phase 2)	3rd quarter, 1999
First Space Station Service:		
	STO/POP (Phase 1)	4th quarter, 1995
	STO/POP (Phase 2)	3rd quarter, 2000
Servicing Interval:	1 year	
Operational Lifetime:	(Phase 1)	4 years
	(Phase 2)	4-6 years

The STO program has defined two operational phases for its polar platform. The first phase lasts 4 years and runs concurrently with the STO Space Station attached mission (STO/SS), allowing experiment interaction between the instruments on STO/POP and

STO/SS. STO/POP will then be returned to Earth for refurbishment and for addition of the STO/SS plasma instruments (i.e., SEPAC, WISP, RPDP, and TSS). Launch of the larger, reconfigured STO/POP will begin Phase 2 of the mission.

1.4 STO/POP Orbital Parameters

- Non-Sun-synchronous polar orbits (orbit should see all local times)
- Altitude : 500 km circular

2.0 STO/POP PHYSICAL CHARACTERISTICS

2.1 STO/POP Description

The STO/POP will use the Space Station Program's Polar Orbiting Platform as the spacecraft bus to which the STO/POP instruments and carriers will be integrated. The STO/POP Phase 1 payload consists of 5 separate instruments. There are three atmospheric monitoring instruments:

- Atmospheric Emissions Photometric Imaging (AEPI)
- Imaging Spectrometric Observatory (ISO)
- Wide Angle Michelson Doppler Imaging Interferometer (WAMDII)

Also, there are two active plasma experiments:

- Vehicle charging and Potential (VCAP)
- Magnetospheric Multiprobes (MMP/CHEMSAT)

STO/POP Phase 2 will add the following instruments which will be transferred from the STO/SS:

- Space Experiments with Particle Accelerators (SEPAC)
- Waves in Space Plasmas (WISP)
- Recoverable Plasma Diagnostics Package (RPDP)
- Tethered Satellite System (TSS)

A conceptual drawing of the STO/POP (Phase 1) is shown in Figure STO/POP-1.

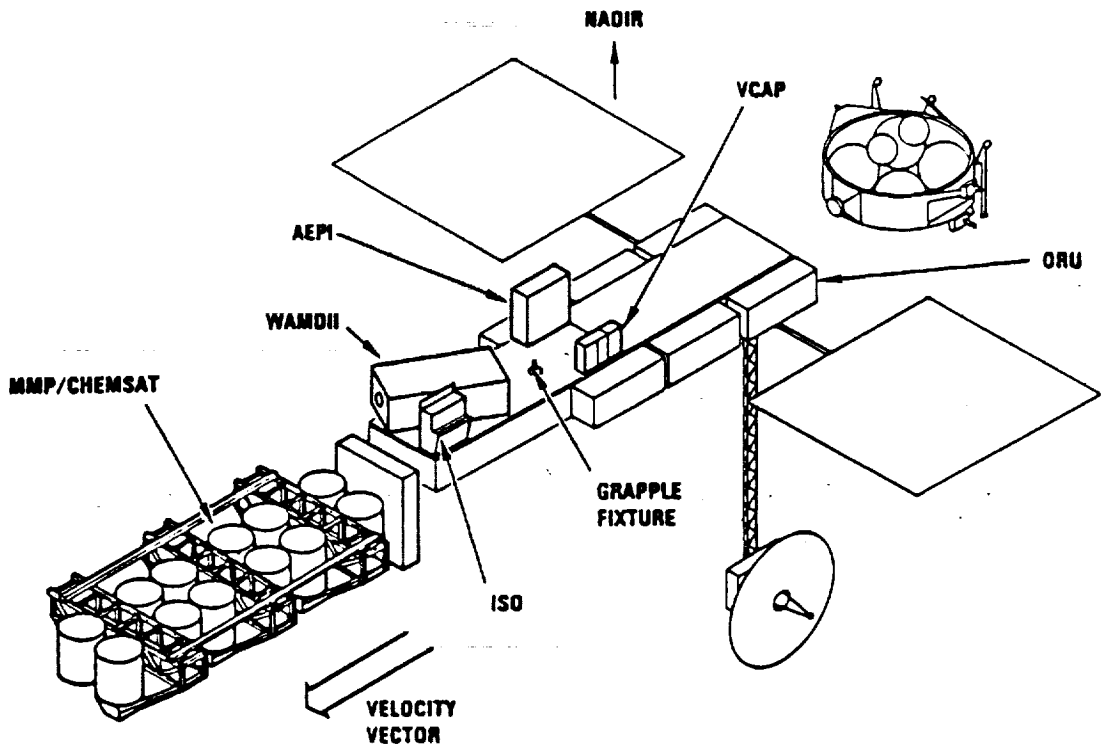

Figure STO/POP-1. Solar Terrestrial Observatory/POLAR Observing Platform

2.2 STO/POP Physical Characteristics

Table STO/POP-1 contains estimates of the STO/POP instrument masses and dimensions. Details of the Space Station Polar Platform configuration for support of the STO mission are TBD.

2.3 STO/POP Moving Parts and Special Features

a. MMP/CHEMSAT: Has six ejectable sensor probes and six ejectable chemical release packages. Uses twelve spin-up ejection cannisters for commanded deployment.

b. RPDP: A deployable/retrievable free flyer package.

c. WISP: Deploys a 300 meter tip-to-tip dipole antenna. It is retractable.

o TSS: A subsatellite which is deployed/retrieved on a tether of up to TBD kilometers in length.

2.4 STO/POP Consumables

The STO/POP MMP/CHEMSAT instrument includes six multiprobe and six chemical release cannisters. These dozen cannisters are ejected from the platform in support of active plasma experiments and need to be replaced as part of the servicing of the STO/POP.VCAP requires pressurant for its accelerator. SEPEC requires nitrogen or argon gases.

3.0 STO/POP SERVICING INFORMATION

3.1 General Description of STO/POP Servicing

STO/POP servicing will take place in-situ in polar orbit. An STS-launched Orbital Maneuvering Vehicle/Flight Telerobotic Servicer (OMV/FTS) combination will be required for servicing. Currently, in-situ servicing activities are to include preventive maintenance, calibration, component changeout, and consumables replenishment. The Space Station is not a consideration in polar platform servicing.

TABLE STO/POP-1. STO/POP INSTRUMENT DESCRIPTIONS

Mission Code	Instrument	Dimensions (m)	Mass (kg)	Description
SAAX 225A	VCAP	2.4 x 0.4 x 0.3	114	Has two charge and current probes, a spherical retarding potential analyzer/langmuir probe, and a fast pulse electron gun (FPEG) which provides 1 kV electron emission at pulse rates varying from 600 nsec to 107 seconds.
SAAX 225B	AEPI	1.5 x 0.5 x 1.4	219	Consists of TV system boresighted with a photon-counting multichannel imaging array, two parallel detector systems, and associated optics and data handling electronics.
SAAX 225C	ISO	1.05 x 0.72 x 1.2	250	Designed for high-speed operation as an imaging device. Composed of five identical spectrometers, each restricted to a given spectral range within the 20 to 1200 nm region. Imaging by use of an area array detector. A scan mirror is used.
SAAX 225D	WAMDII	1.5 x 1.0 x 3.0	400	Imaging Interferometer is a tabular unit approx. 160 cm long and 35 cm in diameter. Contains a baffle assembly.
SAAX 225E	MMP/CHEMSAT	4.4 x 3.3 x 1.3	6000	Consists of: six multiprobe and six chemsats; twelve spin-up ejection cannisters; Two mounting frames with holdown fixtures; a pallet-mounted omnidirectional receiving antenna and six data receivers; a command/tone-ranging transmitter; a command interface; data decoding, probe tracking needs rendezvous radar. Coordination with STO/SS is desired.
SAAX 207F	SEPAC	2.5 x 2.0 x 1.0	454	Consists of an electron gun and magnetodynamic arcjet to generate particle beams, associated diagnostic and control equipment.

TABLE STO/POP-1. STO/POP INSTRUMENT DESCRIPTION (CONT'D)

Mission Code	Instrument	Dimensions (m)	Mass (kg)	Description
SAAX 207G	WISP	3.0 x 2.0 x 1.0	750	Spacelab pallet-mounted hardware containing plasma wave transmitters, antennas, receivers, and associated diagnostic and support instruments. Includes a dipole antenna extendable up to 300 meters tip-to-tip.
SAAX 207I	TSS	TBD	2400	Consists of two basic elements: The deployer and the satellite. The satellite consists of a service, propulsion, and payload module. The deployer consists of structural, mechanical, electrical, power, thermal, and communications and data management subsystems. The deployer also contains the tether reel mechanism.
SAAX 207J	RPDP	TBD	750	Package is an ejectable and recoverable unit with flight and ground support systems. Instrumentation includes a magnetometer, an electric field probe, and an Ion/neutral particle ratio analyzer. Has (retractable) sensor and RF communications antennas.

3.2 STO/POP Background

Most of the STO/POP instruments have flown before or are planning an STS flight prior to their deployment on the STO/POP (excluding the planned Space Station attached payload deployment of the STO/POP Phase 2 instruments). The instrument backgrounds are as follows:

a. Phase 1 Instruments:
   - VCAP: originally flown on OSS-1 and Spacelab 2
   - AEPI: Flown on Spacelab 1. Scheduled for ATLAS-1 and Space Plasma Laboratory SPL 1 and 2 (flight dates are TBD).
   - ISO: Flown on Spacelab 1 and scheduled for ATLAS-1.
   - WAMDII: planned as a Spacelab payload
   - MMP/CHEMSAT: new instrument

b. Phase 2 Instruments:
   - SEPAC: Flown on Spacelab 1. Scheduled to fly on the ATLAS-1 and SPL in 1990 and 1992. Actual dates are entirely dependent on the NSTS program schedule.
   - WISP: Was scheduled to fly on the SPL in 1990 and 1992. Schedule is entirely dependent on NSTS scheduling.
   - RPDP: Early versions have flown on OSS-1 and Spacelab 2. Planned for inclusion on SPL-1 and SPL-2.
   - TSS: Early versions are scheduled to fly on the STS in the late 1980s.

3.3 Primary Role of Space Station in Servicing STO/POP

None. Platform is in polar orbit.

3.4 Primary Space Station Facilities Required for Servicing STO/POP

None. Platform is in polar orbit.

3.5 Space Station Personnel Required for Servicing STO/POP

None. The OMV/FTS will most likely be operated from the ground.

3.6 Servicing Precautions for STO/POP

All experiments will be powered down or off for servicing. Ordnance for MMP/CHEMSAT will be safed. Appendages can be stowed for servicing.

3.7 Orbital Maneuvering Vehicle (OMV) Flight Profile Support of STO/POP

The OMV is required for in-situ servicing of the STO/POP payload. The OMV servicing payload will include an FTS, the servicing materials, and carriers. The OMV will be deployed from the Orbiter, boost itself to the STO/POP orbital altitude, and rendezvous with the STO/POP. After servicing operations are completed, the OMV will separate from the STO/POP to a safe stand-off position to await the results of post-servicing operational checks by STO/POP. The OMV will then deboost and return to the Orbiter.

4.0 STO/POP SERVICING SAFETY CONSIDERATIONS

4.1 STO/POP Hazardous Systems

- Explosives in MMP/CHEMSAT
- Batteries
- Pressurized Gas Systems
- AEPI contains radioactive calibration source (of minimal activity)

4.2 STO/POP Servicing Safety Precautions

TBD.

5.0 STO/POP SERVICING INTERFACES AND RESOURCE REQUIREMENTS

5.1 STO/POP Crew Convenience Features

TBD.

5.2 STO/POP Mechanical Interfaces

Instruments attach either directly to the polar orbiting platform spacecraft bus structures or to modular payload carriers which interface to the spacecraft bus. The platform will have the appropriate interface(s) to accommodate OMV/FTS docking and servicing. Instruments/ORUs will have the appropriate interfaces to be compatible with FTS servicing tools and manipulators.

5.3 STO/POP Umbilical Interfaces

The polar platform spacecraft bus provides all of the power and data interfaces for the instruments, subsystems, and carriers (see Table STO/POP-2). Servicing interfaces (OMV/FTS) would be to the spacecraft bus.

5.4 STO/POP RF Communication Interface

All RF communications for servicing and operations will be through the platform RF communications system.

5.5 STO/POP Thermal Interface

Active operational thermal control will be required by some STO instruments. This is integrated into the platform system. The thermal interface to servicing equipment (OMV/FTS) is TBD.

6.0 STO/POP SERVICING ENVIRONMENT

6.1 STO/POP Pointing/Orientation Constraints

None identified.

6.2 STO/POP Contamination Concerns

- AEPI: Susceptible to magnetic or RF disturbance; deposition on optics
- ISO: Susceptible to optical radiation in range of 20 to 1200 nm; scattered light; high-energy radiation (10 K Rad)
- WAMDII: Susceptible to deposition on optical surfaces, environmental contaminants in FOV
- MMP/CHEMSAT: Sensitive to hydrocarbons; RF in the 401-402 MHZ range

TABLE 2. STO/POP INSTRUMENT POWER AND DATA REQUIREMENTS

Instrument	Power Requirements		Data Rate Requirements	
	Operational	Servicing	Operational	Servicing
	(Avg/Peak Watts)		(AVG/Peak Kbits)	
VCAP	70/220	TBD/TBD	56/TBD	TBD/TBD
AEPI	390/600	TBD/TBD	300*/TBD	TBD/TBD
ISO	220/240	TBD/TBD	2000/TBD	TBD/TBD
WAMDII	500/750	TBD/TBD	100/TBD	TBD/TBD
MMP/CHEMSAT	180/380	TBD/TBD	400/TBD	TBD/TBD
SEPAC	1000/TBD	TBD/TBD	512/TBD	TBD/TBD
WISP	2600/TBD	TBD/TBD	4000/TBD	TBD/TBD
RPDP	200	TBD/TBD	1250/TBD	TBD/TBD
TSS	1600	TBD/TBD	80/TBD	TBD/TBD

* AEPI has one Video channel at 6 Mbps

- SEPAC: requires 10^6 torr or better to avoid cathode "poisoning" of election gun
- WISP: gaseous or vapor releases could cause corona
- RPDP: EMI-sensitive
- TSS: EMI-sensitive

6.3 STO/POP Radiation Concerns

None identified.

7.0 STO/POP SERVICING ACCOMMODATIONS

7.1 STO/POP Equipment Access

Will be designed for access. No further information is available.

7.2 STO/POP Modularity

TBD.

7.3 STO/POP Automated Servicing

STO/POP will require in-situ servicing in polar orbit. STO/POP servicing is planned to be compatible with the capabilities of the OMV/FTS. Servicing is expected to be on an ORU basis. Specific details are TBD.

7.4 STO/POP Servicing in the Space Station Pressurized Modules

Not applicable.

8.0 STO/POP SERVICING MATERIALS CHECKLIST

Servicing Equipment	Required	SS-Provided	Comments	Ref. Section
ORUs (including SIs)	yes	no		9.0
Flight Support Equipment	yes	TBD		10.0
Other Equipment	TBD	TBD		10.0
Servicing Equipment Carrier(s)	yes	yes		12.0
Servicing Consumables				
Propellant(s)	yes	yes	platform propulsion	11.0
container(s)	yes	yes		11.0
Cryogen(s)	no	no		11.0
container(s)	no	no		11.0
Liquid(s)	no	no		11.0
container(s)	no	no		11.0
Gas(es)	yes	no		11.0
container(s)	yes	no		11.0
Other(s)	yes	no	chemical release	11.0
container(s)	yes	no		11.0
Servicing Consumables Carrier(s)	yes	TBD	MMP/CHEMSAT	12.0

9.0 STO/POP ORBITAL REPLACEABLE UNITS (ORUs)

9.1 Servicing of STO/POP ORUs

a. Primary

Those items with predictable service lives such as cathodes, tape recorders, gas bottles, etc. will be replaced or serviced on a regular basis. Information defining specific ORUs is not yet available.

b. Secondary

Items which fail on a random basis (such as electronic subassemblies and sensors) will be replaced or repaired on a contingency servicing basis on the next scheduled servicing mission.

9.2 STO/POP ORU Physical Characteristics

TBD.

9.3 STO/POP ORU Storage Requirements

STO/POP has no storage requirements on the Space Station.

9.4 Other Environmental Requirements for STO/POP ORUs

TBD.

10.0 STO/POP FLIGHT SUPPORT AND MISCELLANEOUS SERVICING EQUIPMENT

10.1 STO/POP Flight Support Equipment (FSE)

No information available.

10.2 STO/POP FSE Physical Characteristics

No information available.

10.3 STO/POP FSE Storage Requirements

STO/POP has no storage requirements on Space Station.

10.4 STO/POP Miscellaneous Servicing Equipment

No information available.

11.0 STO/POP SERVICING CONSUMABLES AND CONTAINERS

11.1 Description and Purpose

STO/POP consumables include argon, xenon, and nitrogen gases, ejectable sensor probes, and ejectable chemical release cannisters. The usages of these consumables, by instrument, are:

a. MMP/CHEMSAT (STO/POP Phase 1)

Requires replacement on a yearly basis of twelve ejectable cannisters. Six of the cannisters are multiprobes containing sensors and transmitters and the other six are chemical-release cannisters.

b. VCAP (STO/POP Phase 1)

TBD.

c. SEPAC (STO/POP Phase 2)

Utilize argon or xenon. The replenishment will be by gas bottle (ORU) changeout on a yearly basis.

d. TSS (STO/POP phase 2)

Utilize nitrogen as a cold gas propellant for the tethered satellite. Servicing is on a one-year interval by ORU replacement of the pressure vessel.

11.2 Physical Characteristics

TBD.

11.3 Storage Requirements

STO/POP has no storage requirements on the Space Station.

12.0 CARRIERS FOR STO/POP SERVICING MATERIALS

12.1 Description of Carriers

TBD.

12.2 STS and SS Carrier Interfaces

There are no interfaces to the SS. Interfaces between the STS and carriers are TBD.

12.3 Servicing Materials/Carrier Interfaces

TBD.

13.0 STO/POP ORBITAL SERVICING ACTIVITIES TIME ESTIMATES

13.1 Mission Servicing Ground Rules and Constraints

TBD.

13.2 Preparatory Servicing Time Estimates

TBD.

13.3 Principal Servicing Time Estimates

TBD.

13.4 Close-out Servicing Time Estimates

TBD.

14.0 STO/POP STRAWMAN SERVICING SCENARIOS

14.1 STO/POP Strawman Servicing Mission

Two strawman servicing mission types are defined. Type A defines the STO/POP Phase 1 nominal servicing mission and Type B defines the Phase 2 nominal servicing mission. All STO/POP servicing is in polar orbit. Servicing is in-situ by an OMV/FTS deployed by an Orbiter launched from the Western Test Range (WTR).

a. Strawman Servicing Mission Type A: This includes servicing of the instruments and the spacecraft bus. The spacecraft bus servicing consists of ORU replacement of subsystem equipment and possibly the replacement of the spacecraft propulsion module. Instrument servicing mainly consists of replacing the twelve ejectable cannisters for MMP/CHEMSAT. VCAP requires replenishment of pressurant for its accelerator.

b. Strawman Servicing Mission Type B: This includes all the servicing requirements of Type A and adds the requirements of the additional instruments to be flown in STO/POP phase 2. These requirements include the gas replenishment for SEPAC and TSS.

Both Strawman A and Strawman B will include some level of ORU replacement of instrument electronics, cathodes, tape recorders, etc. Detailed information is not available.

14.2 STO/POP Description

No information available.

14.3 Strawman Servicing Materials

TBD.

14.4 Estimated Up/Down Mass on STS to Support STO/POP Strawman Servicing

TBD.

14.5 Estimated Up/Down Volume on STS to Support STO/POP Strawman Servicing

TBD.

14.6 Storage on Space Station Required to Support STO/POP Strawman Servicing

Not Applicable. STO/POP is in polar orbit.

14.7 STO/POP Strawman Servicing Power Estimates

TBD.

14.8 STO/POP Strawman Servicing Times

TBD.

14.9 OMV Flights in Support of STO/POP Strawman Servicing Missions

Strawman Mission	Purpose of Flight	Number of Flights
Strawman A	Type A Servicing	1
Strawman B	Type B Servicing	1

STO/POP may continue operations beyond the 4th year of Phase 2 in which case servicing missions would continue.

15.0 OVERALL REQUIREMENTS SUMMARY FOR SS SERVICING OF STO/POP

15.1 STO/POP Milestone and Servicing Schedule

Event	Location	Date	Comments
STO/POP Launch	STS/WTR	4th quarter, 1994	Start Phase 1
1st Servicing	In-Situ	4th quarter, 1995	
2nd Servicing	"	4th quarter, 1996	
3rd Servicing	"	4th quarter, 1997	
STO/POP Return	STS/WTR	4th quarter, 1998	End Phase 1
STO/POP Launch	STS/WTR	3rd quarter, 1999	Start Phase 2
1st Servicing	In-Situ	3rd quarter, 2000	
2nd Servicing	"	3rd quarter, 2001	
3rd Servicing	"	3rd quarter, 2002	
STO/POP Return	STS/WTR	3rd quarter, 2003	End Phase 2

15.2 Summary of STO/POP Mass Considerations

TBD.

15.3 Summary of STO/POP Volume Considerations

TBD.

15.4 Summary of STO/POP Power Considerations

TBD.

15.5 Summary of STO/POP Servicing Times

TBD.

15.6 Summary of OMV Flights in Support of STO/POP Servicing

Calendar Year	94	95	96	97	98	99	00	01	02	03
Number of OMV Flights	0	1	1	1	0	0	1	1	1	0

REFERENCES

1. Telephone interviews with Mr. William Roberts, NASA/MSFC, August and September, 1987.
2. Telephone interview with Mr. Jack Kropp, TRW, Redondo Beach, August and September, 1987.

SOLAR TERRESTRIAL OBSERVATORY/SOLAR INSTRUMENT GROUP (STO/SIG)
MISSION CODE TBD

1.0 STO/SIG PROGRAM AND OPERATIONS INFORMATION

1.1 STO/SIG Points of Contact

Dr. Stan Shawhan
NASA/HQ
Washington, DC
(202) 453-1676

Mr. William Roberts
NASA/MSFC
Huntsville, Alabama
(202) 544-0621

Mr. Jack Kropp
TRW
Redondo Beach, Calif
(213) 535-3451

1.2 STO/SIG Objectives

The STO/SIG objective is to obtain knowledge about solar activity and to study through observations the physical processes that couple the solar-terrestrial system.

1.3 STO/SIG Milestone and Servicing Schedule

Launch Dates:	:	3rd quarter, 1994
First Space Station Service	:	4th quarter, 1994
Servicing Interval	:	Quarterly
Operational Lifetime	:	4 years

The STO/SIG payload has various servicing requirements that result in monthly and yearly servicing activities. Two of the SIG instruments require a monthly changeout of film cannisters while the rest of the instruments and their support electronics will be serviced on a yearly basis. Because this Servicing Data Book treats servicing on a quarterly basis, the monthly servicing activities will be summarized on a quarterly basis.

1.4 STO/SIG Orbital Parameters

STO/SIG is a Space Station (SS) attached payload and, thus, has the same orbital parameters as the Space Station.

2.0 STO/SIG PHYSICAL CHARACTERISTICS

2.1 STO/SIG Description

The STO/SIG payload consists of six solar viewing instruments and their support electronics mounted to a carrier. The SIG requires use of the space station's Payload Pointing System (PPS) to which the carrier would be mounted. The carrier would also incorporate an auxiliary pointing system to meet the SIG pointing requirements which are tighter than the PPS alone can provide. The carrier is also the SIG payload's structural/mechanical interface to the STS. STO/SIG will use the space station's multi-purpose control and display consoles, configurable by user software, which are located in the pressurized modules or nodes. Table STO/SIG-1 provides a brief description of each instrument while Figure STO/SIG-1 shows the STO/SIG payload configuration.

2.2 STO/SIG Physical Characteristics

Table STO/SIG-2 contains the estimates of STO/SIG instrument masses and dimensions. These are preliminary estimates provided by the STO Project for planning purposes; they are not final values and will be updated as new information becomes available.

2.3 STO/SIG Moving Parts and Special Features

STO/SIG incorporates an auxiliary pointing system and is also mounted to the station's PPS.

2.4 STO/SIG Consumables

The White Light Coronograph (WLC) requires a purge gas for its optics. This gas will be either nitrogen or argon.

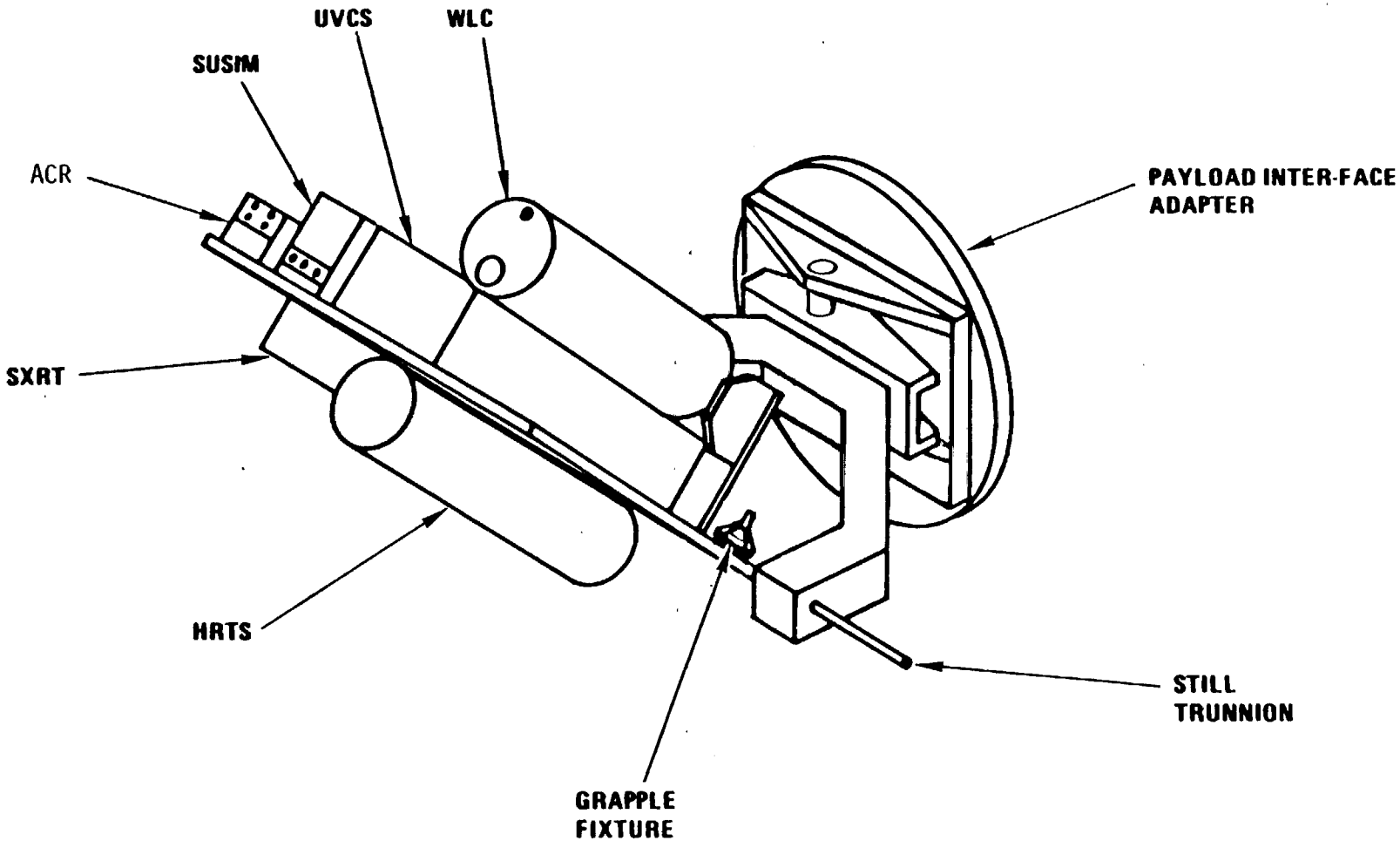

Figure STO/SIG-1. STO/SIG Payload Configuration

Table STO/SIG-1. STO/SIG Instrument Descriptions

Solar Instrument Group (SIG)

Instrument	Name	Description
ACR	Active Cavity Radiometer	Utilizes three type V active cavity radiometer detectors. Detectors are electronically self-calibrated with separate shutters on each detector.
SUSIM	Solar UV Spectral Intensity Monitor	Consists of two identical double-dispersion scanning spectrometers, seven detectors and a UV calibration light source. They are sealed in a cannister filled with 1.1 atmospheres of Argon to eliminate effects of high vacuum outgassing.
WLC	White-Light Chronograph	An occulting disk camera with a CCD detector.
UVCS	Ultra Violet Coronal Spectrometer	A UV telescope with external and internal occultation and a high resolution spectrometer.
HRTS	High Resolution Telescope and Spectrograph	Consists of a 30-cm Gregorian Telescope of 90-cm focal length, a UV spectrograph, 160 nanometer broadband spectroheliograph, and an H-alpha split display system.
SXRT	Soft X-Ray Telescope	A grazing incidence telescope coupled with either a normal incidence or collimated Bragg crystal spectrometer.

Table STO/SIG-2. STO/SIG Instrument Characteristics

Instrument	Mass (kg)	Volume (m^3)	Comments/Features
ACR	20	0.03	
SUSIM	135	0.20	Sealed cannister with 1.1 atmos of argon
WLC	160	1.10	Requires nitrogen replenishment (yearly)
UVCS	175	2.10	
HRTS	330	1.0	Requires monthly change-out of film cannister
SXRT	524	2.5	Requires monthly change-out of film cannister

Note: The SIG carrier weight is not included in this table.

3.0 STO/SIG SERVICING INFORMATION

3.1 General Description of STO/SIG Servicing

STO/SIG instruments will be serviced on the Space Station at their attached payload location. Servicing may include instrument repair, consumables resupply, instrument or electronics ORU changeout and instrument replacement. Wherever practical, STO/SIG equipment will be designed to be robotically serviced in order to minimize or eliminate the need for EVA support. Servicing items, including film changeout and gas resupply, will be packaged for ORU changeout. Feasibility will depend upon the capabilities of the station's Remote Manipulator System (RMS) and Flight Telerobotic Servicer (FTS). Table STO/SIG-3 summarizes the STO/SIG servicing requirements.

3.2 STO/SIG Instrument Background

The STO/SIG instruments, or an earlier version thereof, have flown before. The instruments will be modified or redesigned to increase their serviceability for the Space Station. The individual instrument backgrounds are as follows:

ACR	-	Has flown on SMM and Spacelab-1.
SXRT	-	Early versions have flown as sounding rocket payloads. Improved versions are planned for SPARTAN prior to Space Station deployment.
HRTS	-	Early versions have flown as sounding rocket payloads. Improved versions have flown on Spacelab 2 and are planned for Sunlab prior to space station deployment.
WLC and UVCS	-	Early versions have flown on sounding rockets. Improved versions are planned for SPARTAN and SOHO flights prior to Space Station deployment.
SUSIM	-	Has flown on Spacelab 2 and is planned to fly on Sunlab prior to Space Station deployment.

Table STO/SIG-3. STO/SIG Servicing Requirements

Experiment	Servicing Interval (months)	Servicing Activity
ACR	12	calibration
SUSIM	12	replace calibration lamp
WLC	12	replace purge gas
UVCS	12	TBD
HRTS	1	replace film
SXRT	1	replace film

3.3 Primary Role of SS in STO/SIG Servicing

The Space Station is the planned servicing site for the STO/SIG instruments. Servicing of the instruments will be done at their attached payload accommodation site. Maintenance and repairs will be implemented on an ORU basis. Post-servicing checkout of the instruments will be accomplished at the Space Station from the control/display consoles in the pressurized modules.

3.4 Primary SS Facilities Required for Servicing STO/SIG

The following facilities are required:

- Mobile Servicing Center (MSC).
- Logistics Module.
- Flight Telerobotic Servicer (FTS).
- Station Remote Manipulator System (RMS).

3.5 Space Station Personnel Required for STO/SIG Servicing

Servicing will require station crew specialists to implement servicing using the MSC and/or FTS station capabilities with support from a STO specialist resident at the Space Station. Servicing and checkout activities will be supported by science instrument and subsystem specialists on the ground.

3.6 Servicing Precaution for STO/SIG

Instruments will be powered down. Careful service planning will be required to minimize contamination to the instruments and to protect the instruments alignments.

3.7 OMV Flight Profile Support of STO/SIG Servicing

STO/SIG requires no OMV support.

4.0 STO/SIG SERVICING SAFETY CONSIDERATIONS

4.1 STO/SIG Hazardous Systems

STO/SIG presents no identifiable servicing safety hazards to Space Station personnel.

4.2 Servicing Safety Precautions for STO/SIG

TBD.

5.0 STO/SIG SERVICING INTERFACES AND RESOURCES REQUIREMENTS

5.1 STO/SIG Crew Convenience Features

No information available.

5.2 STO/SIG Mechanical Interfaces

The SIG carrier's interface to the station is through the station's PPS. The SIG carrier is mounted to the PPS which in turn interfaces to the station using the Payload Interface Adapter (PIA). The PPS and PIA are part of the Attached Payload Accommodation Equipment (APAE) provided by the space station. The SIG carrier will have grapple fixtures for the RMS. Payload ORU's will have the appropriate fittings/grapples to allow RMS/robotic servicing.

5.3 STO/SIG Umbilical Interfaces

The APAE Systems Support Module (SSM) provides for the control and distribution of power, thermal, data and communications resources to the payload. An SSM would be mounted (pre-flight) on the SIG carrier. The SSM interface passes through the PPS to the PIA which provides the latching hardware and connectors necessary to mate carrier/PPS/PIA with the core station resources. The SIG instruments' operational power and data requirements are summarized in Table STO/SIG-4.

5.4 STO/SIG RF Communication Interface

Data and communications are handled through the Space Station's RF communications system.

5.5 STO/SIG Thermal Interface

STO/SIG requires an interface to the station thermal control system at its interface to the PPS. The nature of this interface is TBD.

Table STO/SIG-4. STO/SIG Power and Data Requirements

	Power Requirements (kW)				Data Rate Requirement (Kbits/sec)			
	Operational		Servicing		Operational		Servicing	
Instrument	Peak	Nominal	Peak	Nominal	Peak	Nominal	Peak	Nominal
ACR	.030	.015				1.0		
SUSIM		0.15				0.54		
WLC		.02				4000		
UVCS		.08				5		
HRTS	0.62	0.435				3.7		
SXRT		0.50				525		

6.0 STO/SIG SERVICING ENVIRONMENT

6.1 STO/SIG Pointing/Orientation Concerns

None identified

6.2 STO/SIG Contamination Concerns

STO/SIG instruments are susceptible to contamination from gases or particles that would scatter or absorb sunlight, or cause deposition on optics.

6.3 STO/SIG Radiation Concerns

SUSIM, HRTS, and SXRT are sensitive to the increased radiation environment associated with the South Atlantic Anomaly (SAA). SXRT and SUSIM may need to avoid observations or shut-off during SAA passage.

7.0 STO/SIG SERVICING ACCOMMODATIONS

7.1 STO/SIG Equipment Access

STO/SIG instruments were not originally designed for on-orbit servicing. Modifications are being planned to make them more servicable. Electronics boxes will be modified to be replaceable as ORU's as will instruments or instrument subassemblies.

7.2 STO/SIG Modularity

STO/SIG instruments, their subassemblies and supporting subsystems will be designed as modular units to the maximum extent practical.

7.3 STO/SIG Automated Servicing

The SIG carrier, instruments and their servicable equipment will be designed to be compatible with the various Space Station effectors, as required.

7.4 STO/SIG Servicing in the Space Station Pressurized Modules

STO/SIG requires no pressurized Space Station service.

8.0 STO/SIG SERVICING MATERIALS CHECKLIST

Servicing Equipment	Required	SS Provided	Ref. Section
ORUs (Including SIs)	Yes	No	9.0
Flight Support Equipment	Yes	No	10.0
Other Equipment	No	No	10.0
Servicing Equipment Carrier(s)	Yes	Yes	12.0
Servicing Consumables			
Propellant(s)	No	No	11.0
container(s)	No	No	11.0
Cryogen(s)	No	No	11.0
container(s)	No	No	11.0
Liquid(s)	No	No	11.0
container(s)	No	No	11.0
Gas(es)	Yes	No	11.0
container(s)	Yes	No	11.0
Other(s)	No	No	11.0
container(s)	No	No	11.0
Servicing Consumables Carrier(s)	Yes	Yes	12.0

9.0 STO/SIG ORBITAL REPLACEABLE UNITS (ORUs)

9.1 Servicing of STO/SIG ORUs

a. Primary

Those ORU's which are planned to be serviced on a regular basis include those replacing consumables (i.e., gas bottles), film cannisters, and those with predictable service lives such as calibration lamps and power supplies.

b. Secondary

Items which can be expected to fail on a random basis, such as electronics boxes and sensors, will be replaced on the next scheduled STO/SIG servicing mission.

9.2 STO/SIG ORU Physical Characteristics

TBD.

9.3 STO/SIG ORU Storage Requirements

Specific ORU values are not available at this time. However, the storage requirements in general can be expected to be -10 to +40 degrees Celsius for items such as gas bottles and power supplies, and +/-40 degrees Celsius for most other ORU's.

9.4 Other Environmental Requirements for STO/SIG ORUs

No other information available.

10.0 STO/SIG FLIGHT SUPPORT AND MISCELLANEOUS SERVICING EQUIPMENT

10.1 STO/SIG Flight Support Equipment (FSE)

TBD.

10.2 STO/SIG FSE Physical Characteristics

TBD. However, an overhead of 20% over the SIG ORU mass estimates was included to account for FSE (see section 12.3).

10.3 STO/SIG FSE Storage Requirements

TBD.

10.4 Miscellaneous Servicing Equipment

TBD.

11.0 STO/SIG SERVICING CONSUMABLES AND CONTAINERS

11.1 Description and Purpose

The White Light Coronograph (WLC) utilizes nitrogen (may change to argon) for purging the instrument optics. The replenishment will be by gas bottle (ORU) changeout on a yearly basis. The unpressurized logistics module will be used for transport.

11.2 Physical Characteristics

The WLC's estimated requirements for nitrogen gas and its container are:

Mass of gas	:	0.4 kg
Mass of container	:	9.0 kg
Volume of container	:	0.01 m^3
Operating pressure	:	500 psia
Total mass	:	9.4 kg

11.3 Storage Requirements

TBD.

12.0 CARRIERS FOR STO/SIG SERVICING MATERIALS

12.1 Description of Carriers

STO/SIG plans on utilizing the logistics carriers which are a planned part of the Space Station Program. SIG servicing materials will probably be transported in the Unpressurized Logistics Carrier (ULC). A possible exception to this are the film cannisters for SXRT and HRTS which may require the comforts of the Pressurized Logistics Carrier. Use of these

carriers will be in accordance with Space Station Program planning.

12.2 STS and SS Carrier Interfaces

The interface between the STO/SIG servicing equipment and the station's logistics carriers is unknown at this time. The interfaces between the logistics carriers and the STS or the SS are a Space Station Program responsibility.

12.3 Servicing Materials/Carrier Interfaces

No information available. However, an overhead of 20% was added to the STO/SIG ORU mass estimates to account for the structural/mechanical interface with the logistics carrier.

13.0 STO/SIG ORBITAL SERVICING ACTIVITIES TIME ESTIMATES

13.1 Mission Servicing Ground Rules and Constraints

Servicing will require station crew specialists to implement servicing with support from a STO specialist resident at the station. Servicing of the science instruments and support subsystems will be done at the attached payload location on the truss. Nominal servicing activities will not require EVA support. EVA support will be dependent upon the actual capabilities of the remote manipulator and robotics of the station. Film cannister replacement, for example, may require EVA.

13.2 Preparatory Servicing Time Estimates

Activity	Elapsed Time (hr:min)	IVA Time (Crew-hr:min)	EVA Time (Crew-hr:min)	Robotic Time (hr:min)
1. Loading of MSC with servicing materials from logistics carriers	TBD	TBD	0:00	TBD

13.3 Principal Servicing Time Estimates

Activity	Elapsed Time (hr:min)	IVA Time (Crew-hr:min)	EVA Time (Crew-hr:min)	Robotic Time (hr:min)
1. Electronics ORU changeout	TBD	TBD	0:00	TBD
2. Film ORU changeout-SXRT	TBD	TBD	TBD	TBD
3. Film ORU Changeout-HRTS	TBD	TBD	TBD	TBD

13.4 Close-Out Servicing Time Estimates

Activity	Elapsed Time (hr:min)	IVA Time (Crew-hr:min)	EVA Time (Crew-hr:min)	Robotic Time (hr:min)
1. Offloading of servicing materials from MSC to logistics carrier.	TBD	TBD	0:00	TBD

14.0 STO/SIG STRAWMAN SERVICING SCENARIO

14.1 STO/SIG Strawman Servicing Mission

The STO/SIG instruments have servicing requirements that result in monthly and yearly servicing activities. Since this document reports servicing requirements on a quarterly basis, monthly activities are aggregated into a quarterly requirement to define SIG's strawman servicing mission Type A. Every fourth quarter the yearly servicing activities, along with the monthly activities, are required and these define strawman servicing mission Type B. In other words, Type B servicing includes both the Type A activities and the yearly servicing activities. Every three Type A servicing missions will be followed by a Type B mission in the fourth quarter.

The Type A servicing mission consists of the monthly film cannister replacement for both the SXRT and HRTS instruments. The Type B servicing mission adds to this the WLC instrument's

gas replenishment and a generic electronics box ORU replacement. Both servicing mission types require the MSC to transport servicing materials to the attached payload location of the STO/SIG pallet.

Servicing mission Type A requires three round trips to the upper boom for the MSC to support the monthly film changeout activities. Servicing mission Type B also requires three MSC round trips to the upper boom. The first two are film cannister changeouts identical to the Type A activities. The third trip, in addition to the film cannister replacement, includes the requisite ORUs to replenish the WLC gas supply and to perform an additional ORU changeout.

14.2 STO/SIG Description

The payload for strawman Type A consists of a three months supply of film cannisters for the SXRT and HRTS instruments. The cannisters will be transported to orbit and stored in the space station's logistics carrier. Dimensions and volumes for the film cannisters are TBD. However, mass estimates for the cannisters are included in the next section. The interface requirements (both functional and physical) to the logistics carrier are TBD.

The payload for strawman mission Type B includes the film cannisters mentioned above along with a gas resupply ORU for the WLC instrument and an electronics box ORU (generic) for STO/SIG maintenance or repair. Exact masses and volumes for these ORUs also are TBD. Estimated masses for the gas resupply ORU and the generic electronics box ORU are provided in the next section. This servicing material will also be transported in the space station provided logistics carriers.

14.3 Strawman Servicing Materials

a. ORUs

Type A Mission: Requires six film cannister ORUs. Dimensions are TBD. Estimated mass is 10 kilograms for each cannister for a total of 60 kilograms.

Type B Mission. Requires six film cannisters as in Type A

for a cannister total of 60 kilograms. Also requires an electronics ORU conservatively estimated to weigh 100 kilograms. Total ORU mass for a Type B service mission is estimated as approximately 160 kilograms.

b. FSE

Type A Mission: FSE is estimated to be about 20% of the ORU mass. FSE mass estimate is 15 kilograms.

Type B Mission: FSE is estimated to be about 20% of the ORU mass. FSE is estimated to be 34 kilograms (including allowance for consumables ORU in 14.3.c)

c. Consumables and Containers

Type A Mission: No consumables

Type B Mission: Purge gas for the WLC is the only consumable. It is estimated that 10 liters at 500 psia are required annually.

Estimated mass for the gas is 0.4 kilograms, 4.0 kilograms for the pressure vessel and 5.0 kilograms for the mate/demate hardware for a total of 9.4 kilograms.

d. Carriers

The STO/SIG servicing materials will utilize the space station logistics carriers. All servicing materials, with the possible exception of the film cannisters, will utilize the Unpressurized Logistics Carrier (ULC). The film cannisters may require transport in the Pressurized Logistics Carrier (PLC).

14.4 Estimated STS Up/Down Mass to Support STO/SIG Strawman Servicing

a. Strawman Servicing Mission Type A

Servicing Material	Mass, Unpressurized Transport (kg)	Mass, Pressurized Transport (kg)	Mass Total (kg)
Equipment			
SIs	0	0	0
ORU's	60	0	60
Unique FSE	15	0	15
Misc. Equipment	0	0	0
Equipment Subtotal	75	0	75
Equipment Carrier(s)	0	0	0
Subtotal, Equipment mass up	75	0	75
Subtotal, Equipment mass down	75	0	75
Consumables			
Consumables	0	0	0
Consumables Containers	0	0	0
Consumables Container Carriers	0	0	0
Subtotal, Consumables Mass Up	0	0	0
Subtotal, Consumables Mass Down	0	0	0
Total Mass Up	75	0	75
Total Mass Down	75	0	75

Note: Type A servicing equipment consists of film cannisters which may end up requiring pressurized transport accommodations.

14.4 Estimated STS Up/Down Mass to Support STO/SIG Strawman Servicing

b. Strawman Servicing Mission Type B

Servicing Material	Mass, Unpressurized Transport (kg)	Mass, Pressurized Transport (kg)	Mass Total (kg)
Equipment			
SIs	TBD	0	TBD
ORU's	160	0	160
Unique FSE	32	0	32
Misc. Equipment	0	0	0
Equipment Subtotal	192	0	192
Equipment Carrier(s)	0	0	0
Subtotal, Equipment mass up	192	0	192
Subtotal, Equipment mass down	192	0	192
Consumables			
Consumables	0.4	0	0.4
Consumables Containers	9.0	0	9.0
Consumables Container Carriers	0	0	0
Subtotal, Consumables Mass Up	9.4	0	0
Subtotal, Consumables Mass Down	9.0	0	9.0
Total Mass Up	202	0	202
Total Mass Down	201	0	201

Note: Type B servicing equipment includes film cannisters which may end up requiring pressurized transport accommodations.

Note: Totals and Subtotals do not account for the data which is TBD.

14.5 Estimated STS Up/Down Volume to Support STO/SIG Strawman Servicing

a. Strawman Servicing Mission Type A

Servicing Material	Volume, Unpressurized Transport (m^3)	Volume, Pressurized Transport (m^3)	Volume Total (m^3)
Equipment			
SIs	0	0	0
ORU's	0.3	0	0.3
Unique FSE	0.1	0	0.1
Misc. Equipment	0	0	0
Equipment Subtotal	0.4	0	0.4
Equipment Carrier	0	0	0
Equipment and Carrier Subtotal	0.4	0	0.4
Consumables			
Consumables in Containers	0	0	0
Consumables, Containers, and Carriers	0	0	0
Total Mass Up	0.4	0	0.4
Total Mass Down	0.4	0	0.4

Note: Volumes shown are based on an assumed Assumes average payload density of approximately 200 kg/m^3. Use of a SS Logistics Carrier is assumed to transport the servicing materials.

b. Strawman Servicing Mission Type B

Servicing Material	Volume, Unpressurized Transport (m^3)	Volume, Pressurized Transport (m^3)	Volume Total (m^3)
Equipment			
SIs	TBD	0	TBD
ORU's	0.8	0	0.8
Unique FSE	0.2	0	0.2
Misc. Equipment	0	0	0
Equipment Subtotal	1.0	0	1.0
Equipment Carrier	0	0	0
Equipment and Carrier Subtotal	1.0	0	1.0
Consumables			
Consumables in Containers	0.05	0	0.05
Consumables, Containers, and Carriers	0.05	0	0.05
Total Mass Up	1.05	0	1.05
Total Mass Down	1.05	0	1.05

Note: Volumes shown are based on average payload density of approximately 200 kg/m^3.
Note: Totals and subtotals do not account for the data which is TBD.

14.6 Space Station Storage Required to Support STO/SIG Strawman Servicing

a. Strawman Servicing Mission Type A

Continuous Storage	Unpressurized	Pressurized	Total
Mass (kg)	0	0	0
Volume (m^3)	0	0	0
Average Power (watts)	0	0	0
Temperature Range (C)	-	-	-
Temporary Storage*			
Mass	75	0	75
Volume (m^3)	0.4	0	0.4
Average Power (watts)	TBD	0	TBD
Temperature Range (C)	TBD	-	TBD

* Storage is in Station supplied Unpressurized Logistics Carrier (ULC). Storage duration is approximately 3 months per servicing mission.

14.6 Space Station Storage Required to Support STO/SIG Strawman Servicing (Continued)

b. Strawman Servicing Mission Type B

Continuous Storage	Unpressurized	Pressurized	Total
Mass (kg)	0	0	0
Volume (m^3)	0	0	0
Average Power (watts)	0	0	0
Temperature Range (C)	-	-	-
Temporary Storage *			
Mass (kg)	202	0	202
Volume (m^3)	1.05	0	1.05
Average Power (watts)	TBD	0	TBD
Temperature Range (C)	TBD	-	TBD

* Storage is in Station supplied Unpressurized Logistics Carrier (ULC). Storage duration is approximately 3 months per servicing mission.
Note: Temporary Storage mass and volume do not account for previous data defined as TBD.

14.7 STO/SIG Strawman Servicing Power Estimates

	Operational Mode (watts)		Servicing Mode (watts)	
	AVG	MAX	AVG	MAX
Payload (bus + instruments)	TBD	TBD	TBD	TBD

14.8 STO/SIG Strawman Servicing Time Estimates

a. Strawman Servicing Mission Type A

Activity	Elapsed Time (hr:min)	IVA Time (Crew-hr:min)	EVA Time (Crew-hr:min)	Robotic Time (hr:min)
1. MRMS transports service materials to SIG	9:00	18:00	TBD	9:00
2. ORU changeout at SIG	2:05	3:05	TBD	2:05
TOTALS	11:05	21:05	TBD	11:05

b. Strawman Servicing Mission Type B

Activity	Elapsed Time (hr:min)	IVA Time (Crew-hr:min)	EVA Time (Crew-hr:min)	Robotic Time (hr:min)
1. MRMS transports service materials to SIG	9:00	18:00	TBD	9:00
2. ORU changeout	3:05	4:40	TBD	3:05
TOTALS	12:05	22:40	TBD	12:05

NOTE: Time estimates reflect three servicing missions per quarter due to SXRT and HRTS monthly film cannister replacement.

14.9 OMV Flights in Support of STO/SIG Strawman Servicing

STO/SIG requires no OMV support.

15.0 SUMMARY OF REQUIREMENTS FOR STO/SIG SERVICING

15.1 STO/SIG Milestones and Servicing Schedule

Event	Location	Date	Comment
STO/SIG Launch	STS/ETR	3rd quarter, 1994	
1st Servicing	SS at Attached P/L	4th quarter, 1994	Type A Servicing
2nd Servicing	SS at Attached P/L	1st quarter, 1995	Type A servicing
3rd Servicing	SS at Attached P/L	2nd quarter, 1995	Type A servicing
4th Servicing	SS at Attached P/L	3rd quarter, 1995	Type B servicing
5th Servicing	SS at Attached P/L	4th quarter, 1995	Type A servicing
6th Servicing	SS at Attached P/L	1st quarter, 1996	Type A servicing
7th Servicing	SS at Attached P/L	2nd quarter, 1996	Type A servicing
8th Servicing	SS at Attached P/L	3rd quarter, 1996	Type B servicing
9th Servicing	SS at Attached P/L	4th quarter, 1996	Type A servicing
10th Servicing	SS at Attached P/L	1st quarter, 1997	Type A servicing
11th Servicing	SS at Attached P/L	2nd quarter, 1997	Type A servicing
12th Servicing	SS at Attached P/L	3rd quarter, 1997	Type B servicing
13th Servicing	SS at Attached P/L	4th quarter, 1997	Type A servicing
14th Servicing	SS at Attached P/L	1st quarter, 1998	Type A servicing
15th Servicing	SS at Attached P/L	2nd quarter, 1998	Type A servicing
STO/SIG Return	STS/ETR	3rd quarter, 1998	

15.2 Summary of STO/SIG Mass Considerations

15.2.1 STO/SIG Mass Considerations

a. Operational Payload

Payload Mass (dry)	:	TBD
Consumables Mass	:	0.4 kg
Total Operational Payload Mass	:	TBD

b. Type A Servicing Materials

Servicing Mass (dry)	:	75 kg
Consumables Mass	:	0 kg
Total Type A Servicing Mass	:	75 kg

c. Type B Servicing Materials

Servicing Mass (dry)	:	201 kg
Consumables Mass	:	0.4 kg
Total Type B Servicing Mass	:	202 kg

15.2.2 STO/SIG Servicing Materials Mass Up and Down in STS

Event	Mass Up (kg)	Mass Down (kg)
Launch	TBD	
1st Servicing	75	75
2nd Servicing	75	75
3rd Servicing	75	75
4th Servicing	202	201
5th Servicing	75	75
6th Servicing	75	75
7th Servicing	75	75
8th Servicing	202	201
9th Servicing	75	75
10th Servicing	75	75
11th Servicing	75	75
12th Servicing	202	201
13th Servicing	75	75
14th Servicing	75	75
15th Servicing	75	75
Mission Termination		TBD
Mission Totals	TBD	TBD
Servicing Totals*	1506	1503

* Servicing total does not include initial payload launch mass or mission termination return mass. These are charged to payload operations.

Note: Servicing totals do not account for previous data defined as TBD.

15.2.3 STO/SIG Servicing Materials Storage Mass on Space Station

Calendar Year	95	95	96	97	98
Storage Mass (kg)					
Unpressurized	75	427	427	427	150
Pressurized	0	0	0	0	0
Total Storage Mass (kg)	75	427	427	427	150

Note: These totals do not account for all of the TBD's in the supporting data.

15.3 Summary of STO/SIG Volume Considerations

15.3.1 STO/SIG Volume Summary

Payload Volume, Operational Configuration : TBD m^3
Payload Volume, Servicing Configuration : TBD m^3
Payload Volume, Storage/Transportation Configuration : TBD m^3

15.3.2 STO/SIG Servicing Materials Volume Up and Down in STS

Event	Volume Up (m^3)	Volume Down (m^3)
Launch	TBD	
1st Servicing	0.4	0.4
2nd Servicing	0.4	0.4
3rd Servicing	0.4	0.4
4th Servicing	1.05	1.05
5th Servicing	0.4	0.4
6th Servicing	0.4	0.4
7th Servicing	0.4	0.4
8th Servicing	1.05	1.05
9th Servicing	0.4	0.4
10th Servicing	0.4	0.4
11th Servicing	0.4	0.4
12th Servicing	1.05	1.05
13th Servicing	0.4	0.4
14th Servicing	0.4	0.4
15th Servicing	0.4	0.4
Mission Termination		TBD
Mission Totals	TBD	TBD
Servicing Totals*	7.95	7.95

* Servicing total does not include initial payload launch volume or mission termination return volume. These are charged to payload operations.

Note: These totals do not account for all of the TBD's in the supporting data.

15.3.3 STO/SIG Servicing Materials Storage Volume on Space Station

Calendar Year	94	95	96	97	98
Storage Volume (m^3)					
Unpressurized	0.4	2.25	2.25	2.25	0.8
Pressurized	0	0	0	0	0
Total Storage Volume (m^3)	0.4	2.25	2.25	2.25	0.8

Note: All storage is temporary and yearly requirements are segmented by the STS logistics cycle. All storage is assumed to be in the station's Unpressurized Logistics Carrier (ULC).

Note: These totals do not account for all of the TBD's in the supporting data.

15.4 Summary of STO/SIG Power Considerations

	Average (watts)	Maximum (watts)
• Payload Operational Power:	TBD	TBD
Payload Servicing Power:	TBD	TBD
Payload Storage/Transportation Power	TBD	TBD

15.5 Summary of STO/SIG Servicing Time Estimates

Calendar Year	94	95	96	97	98	Total
Elapsed Time (hours)	11:05	45:20	45:20	45:20	22:10	169:15
IVA Time (crew-hours)	21:05	85:55	85:55	85:55	42:10	321:00
EVA Time (crew-hours)	TBD	TBD	TBD	TBD	TBD	TBD
Total Crew Time (crew-hrs)	21:05	85:55	85:55	85:55	42:10	321:00
Robotic Time (hours)	11:05	45:20	45:20	45:20	22:10	169:15

Note: These totals do not account for all of the TBD's in the supporting data.

15.6 Summary of OMV Flights in Support of STO/SIG SS Servicing

None required.

REFERENCES

1. Telephone interviews with Mr. william Roberts, NASA/MSFC, during August and September 1987.

2. Telephone interviews with Mr. Jack Kropp, TRW, during August and September 1987.

SOLAR TERRESTRIAL OBSERVATORY/SPACE STATION ATTACHED (STO/SS): MISSION CODE SAAX 0207

1.0 STO/SS PROGRAM AND OPERATIONS INFORMATION

1.1 STO/SS Points of Contact

Dr. Stan Shawhan
NASA/HQ
Washington, DC
(202) 453-1676

Mr. William Roberts
NASA/MSFC
Huntsville, Alabama
(205) 544-0621

Mr. Jack Kropp
TRW
Redondo Beach, Calif
(213) 535-3451

1.2 STO/SS Objectives

To obtain knowledge about solar activity and to study the physical processes that couple the atmosphere, magnetosphere, and sun through observation and active experimentation.

1.3 STO/SS Milestone and Servicing Schedule

Launch Date:	3rd Quarter, 1994
First Space Station Service:	4th Quarter, 1994
Servicing Interval:	Quarterly (see text)
Operational Lifetime:	4 years

The STO/SS instruments have various servicing requirements that result in monthly, quarterly, and yearly servicing activities. While the bulk of the STO/SS servicing is done on a yearly basis, the STO's Retrievable Plasma Diagnostics Package (RPDP) is a station based free-flying sub-satellite requiring servicing at the station every three months. This will require an OMV retrieval and deployment for every RPDP servicing mission. The monthly servicing activity is a film cannister changeout for two of the STO/SS instruments.

The STO/SS launch date is keyed to the initial availability of attached payload accomodations on the Space Station. The Space Station phased program revised baseline assembly sequence shows the third assembly launch as the earliest payload accomodation. This places the STO/SS launch date in the third quarter of 1994.

1.4 STO/SS Orbital Parameters

The STO/SS is an attached payload and as such shares the space station's orbital parameters. Even the STO's free-flying sub-satellite, the RPDP, has effectively the same orbital parameters because it is never so far away that there would be a significant difference.

2.0 STO/SS PHYSICAL CHARACTERISTICS

The STO Program consists of missions which require instruments placed both in polar orbits and in the Space Station's low inclination orbit. This chapter deals with the STO mission requiring Space Station attached payload accomodations, STO/SS. The STO polar platform mission, STO/POP, has the mission code SAAX0225 and is described in the preceding chapter.

2.1 Payload Description

The STO/SS payload consists of a set of instruments to simultaneously study solar irradience and the magnetosphere. Active instruments/experiments are included which permit controlled perturbation of the environment for investigations of cause and effect mechanisms. The STO/SS instruments are packaged on four external carriers/pallets requiring attached payload accomodations. Other STO instruments will fly simultaneously on the polar platform (STO/POP-SAAX0225). The four STO/SS instrument packages are the Solar Instrument Group (SIG), the Plasma Instrument Group (PIG), the Waves in Spaces Plasmas (WISP) package and the Tethered Satellite System (TSS). The SIG and PIG instruments are mounted to two especially designed carriers while WISP and TSS are mounted on Spacelab pallets. The SIG requires use of the

station's Payload Pointing System (PPS) in addition to its own auxilliary pointing system. STO/SS will use the Space Station Program provided multi-purpose control and display consoles (configurable by user software) located in the pressurized modules or nodes. Table STO/SS-1 summarizes the STO/SS instrument groupings and provides a brief instrument description. The SIG, PIG, WISP and TSS are shown in Figures STO/SS-1 thru STO/SS-4, respectively.

2.2 STO/SS Physical Characteristics

Table STO/SS-2 contains the estimates of STO/SS instrument masses and dimensions. These are preliminary estimates provided by the STO Program for planning purposes; they are not final values and will be updated as new information becomes available.

2.3 STO/SS Moving Parts and Special Features

Specific features concerning vents, covers, doors, appendages, etc are included in the Table STO/SS-2 descriptions. Of special note are: RPDP, WISP, and the TSS. RPDP is a deployable/retrievable free-flyer package. WISP has a 300 meter tip to tip retractable antenna. TSS is a subsatellite which is deployed/retrieved on a tether of up to 20 kilometers in length.

2.4 STO/SS Consumables

Consummables consist of inert gases as follows:

- SEPAC: argon or xenon
- WLC: purge gas for optics (either Ar or N_2)
- TSS: N_2 propellant for the tethered Satellite

3.0 STO/SS SERVICING INFORMATION

3.1 General Description of STO/SS Servicing

STO/SS instruments will be serviced on the Space Station at their attached payload locations. The instruments are packaged on four

Table STO/SS-1. STO/SS Instrument Descriptions

Solar Instrument Group (SIG)

Instrument	Name	Description
ACR	Active Cavity Radiometer	Utilizes three type V active cavity radiometer detectors. Detectors are electronically self-calibrated with separate shutters on each detector.
SUSIM	Solar UV Spectral Intensity Monitor	Consists of two identical double-dispersion scanning spectrometers, seven detectors and a UV calibration light source. They are sealed in a cannister filled with 1.1 atmospheres of Argon to eliminate effects of high vacuum outgassing.
WLC	White-Light Chronograph	An occulting disk camera with a CCD detector.
UVCS	Ultra Violet Coronal Spectrometer	A UV telescope with external and internal occultation and a high resolution spectrometer.
HRTS	High Resolution Telescope and Spectrograph	Consists of a 30-cm Gregorian Telescope of 90-cm focal length, a UV spectrograph, 160 nanometer broadband spectroheliograph, and an H-alpha split display system.
SXRT	Soft X-Ray Telescope	A grazing incidence telescope coupled with either a normal incidence or collimated Bragg crystal spectrometer.

Plasma Instrument Group (PIG)

SEPAC	Space Experiemnts with Particle Accelerators	Consists of an electron gun and magnetodynamic arcjet to generate particle beams, associated diagnostic and control equipment, and a rack mounted control panel.
TEBPP	Theoretical Experiment by Plasma Processes	Consists of a pulsed plasma probe, a sweeping plasma receiver, an energic particle spectrometer, a neutral density detector, and a visible light photometer.

Table STO/SS-1. STO/SS Instrument Descriptions (Continued)

Plasma Instrument Group (Continued)

Instrument	Name	Description
RPDP	Recoverable Plasma Diagnostics Package	Package is an ejectable and recoverable unit with flight and ground support systems allowing three modes of operation: 1) attached to SS MRMS: 2) Tethered to SS; 3) as an SS Subsatellite with a 100-200 km communications range. Instrumentation includes a magnetometer, an electric field probe, and an Ion/neutral particle ratio analyzer. Has (retractable) sensor and RF communications antennas.
Wave-Particle Interactions		
WISP	Waves in Space Plasmas	Spacelab pallet mounted hardware containing plasma wave transmitters, antennas, receivers, and associated diagnostic and support instruments. Includes a dipole antenna extendable up to 300 meters tip to tip.
Direct Observation of Magnetosphere		
TSS	Tethered Satellite System	Consists of two basic elements: the deployer and the satellite. The satellite consists of a service, propulsion and payload module. The deployer consists of structural, mechanical, electrical, power, thermal, and communications and data management subsystems. The deployer also contains the tether reel mechanism.

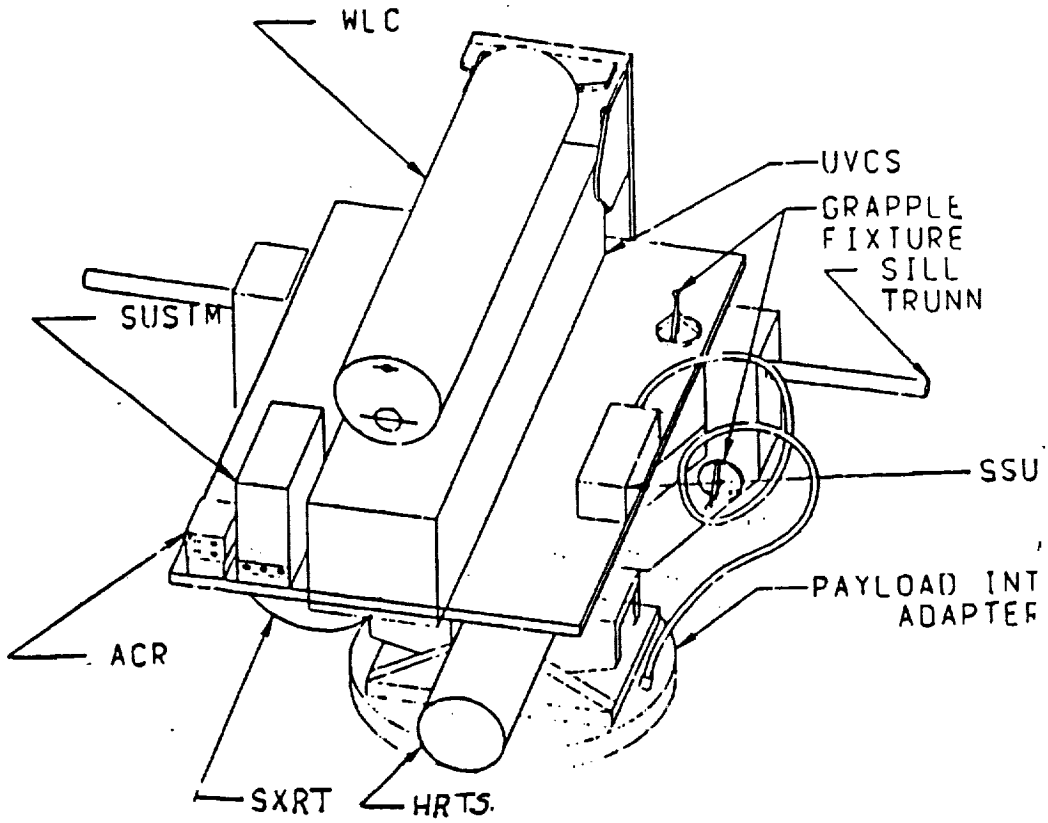

Figure STO/SS-1. STO/SS Solar Instrument Group (SIG)

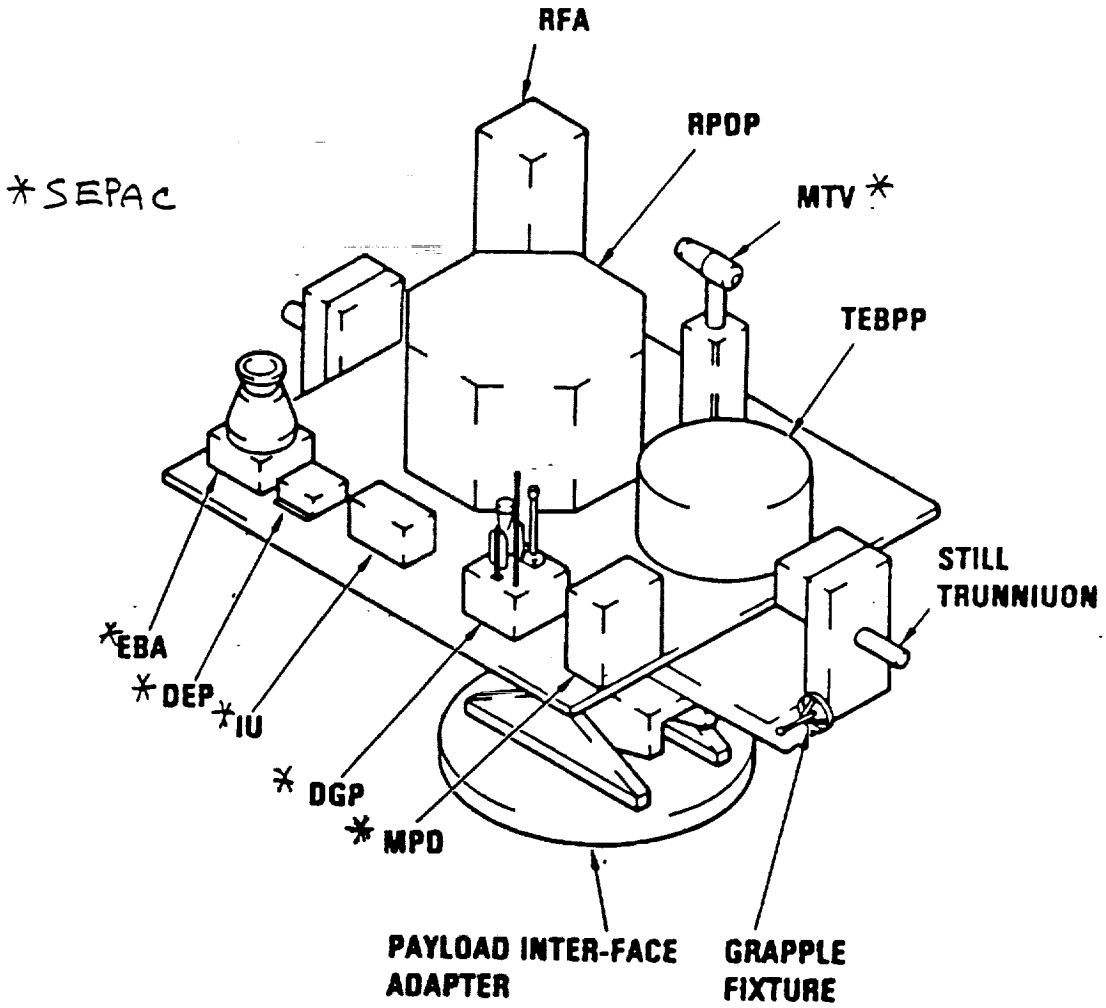

Figure STO/SS-2. STO/SS Plasma Instruments Group (PIG).

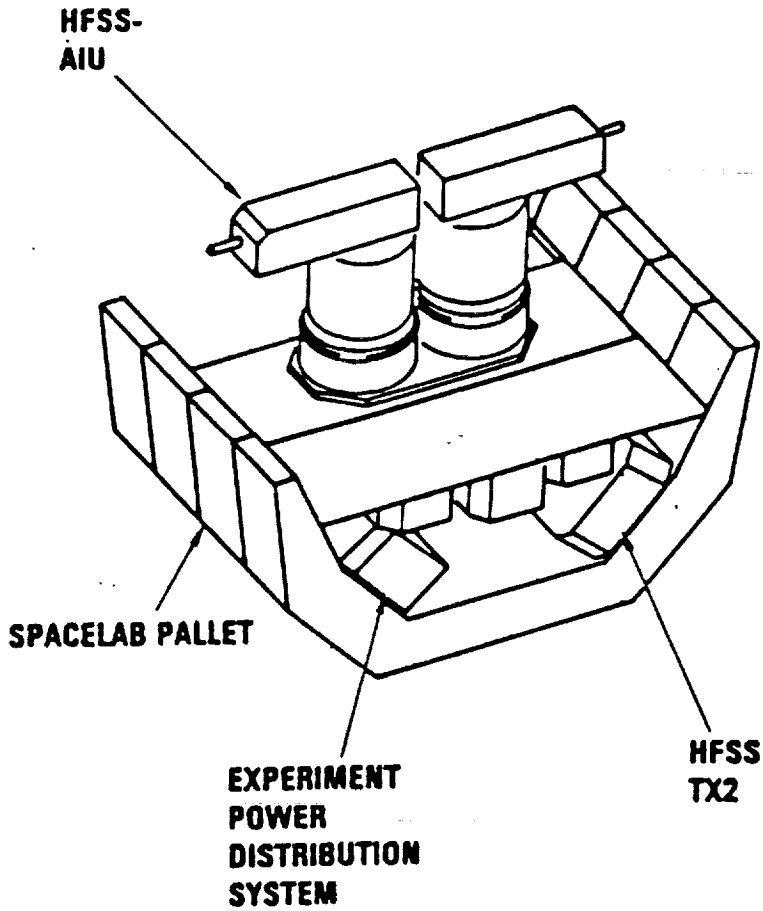

Figure STO/SS-3. STO/SS Waves in Space Plasma (WISP)

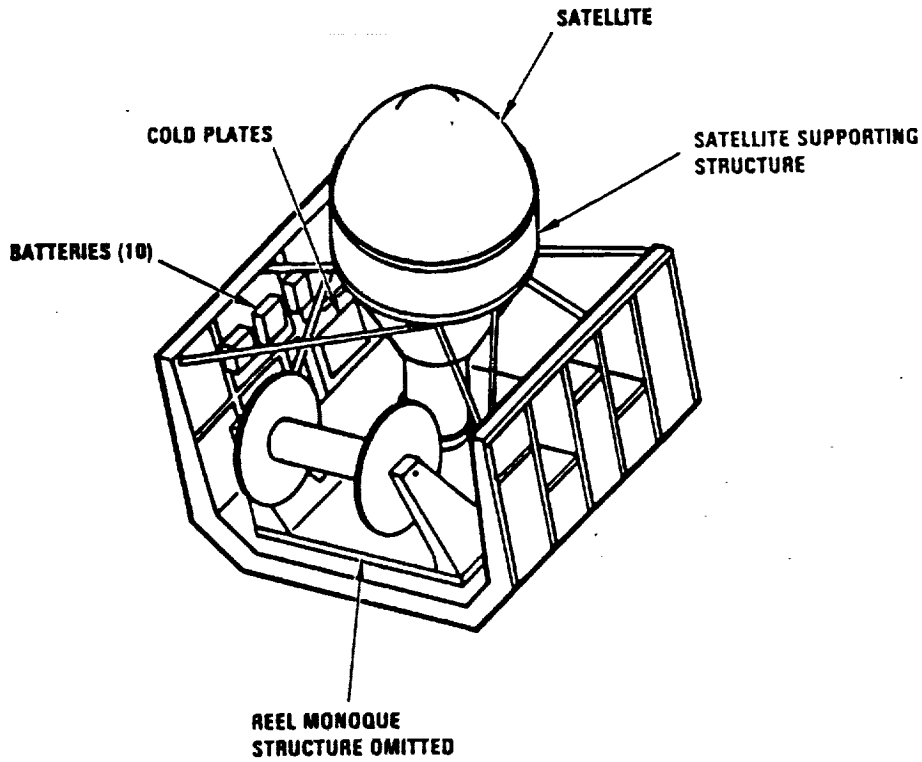

Figure STO/SS-4. STO/SS Tethered Satellite System (TSS)

Table STO/SS-2. STO/SS Instrument Characteristics

Instrument	Mass (kg)	Volume (m^3)	Comments/Features
ACR	20	0.03	
SUSIM	135	0.20	Sealed cannister with 1.1 atmos of argon
WLC	160	1.10	Requires nitrogen replenishment (yearly)
UVCS	175	2.10	
HRTS	330	1.0	Requires monthly change-out of film cannister
SXRT	524	2.5	Requires monthly change-out of film cannister
SEPAC	454	5.0	Requires argon or xenon replenishment (yearly)
TEBPP	36	1.0	Requires MSC operational support. It is detachable so that it can be maneuvered near and into the SEPAC electronic beam by the Space Station's RMS
RPDP	750	4	This is a deployable/retrievable free-flyer. Requires OMV support. Utilizes a Release Mechanism (REM) to latch to the STO/SS PIG carrier
WISP	1200	6	Deploys a dipole antenna from two cannisters, extends up to 300 meters tip to tip
TSS	2400	6	Deploys a conducting tether up to 20 Km in length with a 500 Kg, 1.6 m^3 payload. Motorized reel with 12 meter boom attached to station

Note: SIG and PIG carrier weights are not included in this table. WISP and TSS weights include weight of their pallets (carriers).

carriers. Two of the carriers - the Solar Instrument Group (SIG) and the TSS - are mounted on the zenith face of the truss while the Plasma Instrument Group (PIG) and WISP are on the Nadir face. Servicing requirements are for instrument repair, consumables resupply, instrument ORU changeout and instrument replacement. Wherever practical, STO/SS equipment will be designed or modified to be robotically serviced in order to minimize or eliminate the need for EVA support. Servicing items, including film changeout and gas resupply, will be packaged for ORU changeout. Feasibility will depend upon the capabilities of the Station's Remote Manipulator System (RMS) and Flight Telerobotic Servicer (FTS).

The RPDP will require retrieval by the OMV to return it to the Space Station for servicing. It will be serviced from its attachment on the PIG carrier. Following servicing, it will require re-deployment by the OMV. Table STO/SS-3 summarizes the STO/SS servicing requirements.

3.2 STO/SS Instrument Background

Most of the STO/SS instruments have flown before or are planning an STS flight prior to deployment on the Space Station. The instruments will be modified or designed to increase their servicability on the Space Station. Servicability of existing instruments requiring modification may be dependant upon the capabilities of the Station's Flight Telerobotic Servicer or EVA. The STO instrument's backgrounds are as follows:

SEPAC - Heritage is instrument flown on Spacelab 1 in 1983. SEPAC is scheduled to fly prior to its Space Station appearance on Spacelab flights as part of the ATLAS-1 and Space Plasma Laboratory (SPL) in 1990, and 1992. These dates are entirely dependant on NSTS program schedules.

Table STO/SS-3. STO/SS Servicing Requirements

Experiment	Servicing Interval (months)	Servicing Activity
ACR	12	calibration
SUSIM	12	replace calibration lamp
WLC	12	replace purge gas
UVCS	12	TBD
HRTS	1	replace film
SXRT	1	replace film
SEPAC	12	replenish pressurants (Ar, N_2), replace filaments, batteries
TEBPP	12	clean probe
RPDP	3	recharge or replace batteries, inspect optical windows
WISP	12	none identified
TSS	12	replenish N_2 propellant

WISP	-	Was scheduled to fly in 1990 and 1992 on SPL-1 and SPL-2 prior to Space Station deployment. Is entirely dependent on NSTS scheduling.
ACR	-	Has flown on SMM and Spacelab 1.
SUSIM	-	Has flown on Spacelab 2 and is planned to fly on Sunlab prior to Space Station deployment.
WLC and UCVS	-	Early versions have flown on sounding rockets. Improved versions are planned for SPARTAN and SOHO flights prior to Space Station deployment.
HRTS	-	Early versions have flown as sounding rocket payloads. Improved versions have flown on Spacelab 2 and are planned for Sunlab prior to SS deployment.
SXRT	-	Early versions have flown as sounding rocket payloads. Improved versions are planned for SPARTAN prior to SS deployment.
TSS	-	Early versions are schedule to fly on STS in the late 1980's.
TEBPP	-	Derives from instrumnet package being designed for inclusion in Space Plasma Laboratory.
RPDP	-	Early versions have flown on OSS-1 and Spacelab 2. Planned for inclusion in Space Plasma Laboratory 1 and 2.

3.3 Primary Role of Space Station in Servicing STO/SS

The Space Station is the planned servicing site for the STO/SS instruments. This includes the RPDP which requires OMV retrieval

for servicing at the station. Post-servicing checkout of the instruments will be accomplished at the station from control/display panels in the pressurized modules. Servicing of the instruments will be done at their attached payload accomodation sites. Maintenance and repairs will be implemented on an ORU basis.

3.4 Primary Space Station Facilities Required for Servicing

- Mobile Servicing Center (MSC).
- Logistics Module.
- Flight Telerobotic Servicer (FTS).
- OMV.
- Station Remote Manipulator System (RMS).

3.5 Space Station Personnel Required for Servicing

Servicing will require station crew specialists to implement servicing using the MSC and/or FTS station capabilities with support from an STO specialist resident at the SS. Servicing and checkout activities will be supported by science instrument and subsystem specialists on the ground.

3.6 Servicing Precautions for STO/SS

- Instruments will be powered down.
- Servicing activities should minimize contamination at instruments.
- Protection of instrument alignments by careful service planning.

3.7 Orbital Maneuvering Vehicle (OMV) Flight Profile Support of STO/SS

OMV support is required only for the RPDP. At three month intervals the OMV is required to retieve the RPDP so that it can be serviced at the Station, and then re-deploy the RPDP. The OMV would wait for confirmation of RPDP's operational status before returning to the station.

4.0 STO/SS SERVICING SAFETY CONSIDERATIONS

4.1 STO/SS Hazardous Systems

- Batteries.
- Pressurized gas systems.

4.2 STO/SS Servicing Safety Precautions

TBD.

5.0 STO/SS SERVICING INTERFACES

5.1 STO/SS Crew Convenience Features

No information available.

5.2 STO/SS Mechanical Interfaces

The STO/SS instruments are mounted on four seperate carriers--the SIG, PIG, WISP and TSS. Three of the carriers - the PIG, WISP and TSS, will interface to the station using the Attached Payloads Accomodation Equipment (APAE) Payload Interface Adapter (PIA). The PIA provides the structural/mechanical utilities interface to the station. The SIG interface to the station is through the station's Payload Pointing System (PPS). The SIG will be mounted to the PPS which in turn is interfaced to the station using a PIA. All of the carriers will also have grapple fixtures to allow the Shuttle Remote Manipulator System (RMS) and the Space Station RMS to handle the payload. The four carriers will have longeron and keel trumions to interface to the shuttle. The instrument ORU's will have the appropriate fittings/grapples to allow RMS/robotic servicing.

5.3 STO/SS Umbilical Interfaces

The Space Station's Systems Support Module (SSM) provides the control and distribution of power, thermal, data, and communications resources to payloads. Each STO/SS carrier would interface with an SSM which would need to be mounted on the payload's carrier. The PIA would provide the latching hardware and connectors necessary to mate the carrier/PIA with the core station resources. The STO/SS goal for instrument fluid servicing (i.e., replenishment of Ar, GN_2) is to use ORU replacement rather than fluid transfer. The STO/SS power and data requirements are summarized in Table STO/SS-4. Instrument fluid requirements are discussed in Section 11.

Table STO/SS-4. STO/SS Power and Data Requirements

	Power Requirements (kW)				Data Rate Requirement (Kbits/sec)			
	Operational		Servicing		Operational		Servicing	
Instrument	Peak	Nominal	Peak	Nominal	Peak	Nominal	Peak	Nominal
ACR	.030	.015				1.0		
SUSIM		0.15				0.54		
WLC		.02				4000		
UVCS		.08				5		
HRTS	0.62	0.435				3.7		
SXRT		0.50				525		
SEPAC		1.0				0.512		
TEBPP		0.070				4000		
RPDP		0.200-Free Flyer 0.800-RMS				1250		
WISP		2.60				4000		
TSS		1.60				80		

Notes: The 200 watts is the operational power required at the station of communication equipment to receive RPDP data.

5.4 STO/SS RF Communications Interface

All STO/SS data/communications are handled through the Space Station RF communications system.

5.5 STO/SS Thermal Interface

The STO/SS carriers require connection to the Space Station thermal control system. This interface is provided by the attached payloads accommodation equipment (APAE). The STO/SS thermal interface requirements are summarized in Table STO/SS-5.

6.0 STO/SS SERVICING ENVIRONMENT

6.1 STO/SS Pointing/Orientation Constraints

There are no pointing requirements during servicing.

6.2 STO/SS Contamination Concerns

STO/SS instruments are susceptible to contamination from gases or particles that would scatter or absorb sunlight or UV, or cause deposition on optics. Gaseous or vapor releases (e.g., H_2O) could cause corona for WISP. SEPAC requires 10^{-6} torr or better to avoid cathode "poisoning" of its electron gun. TEBPP is sensitive to magnetic fields, and most instruments are concerned about EMI.

6.3 STO/SS Radiation Concerns

SUSIM, HRTS and SXRT are sensitive to the increased radiation environment associated with the South Atlantic Anomaly (SAA). SXRT and SUSIM may need to avoid observations or shut-off during SAA passage.

7.0 STO/SS SERVICING ACCOMMODATIONS

7.1 STO/SS Equipment Access

STO instruments that had flow previously are not particularly servicable. They were not originally designed for on-orbit

Table STO/SS-5. STO/SS Temperature Requirements

Instrument	Temperature Range (°C) Operational (°C)	Servicing (°C)
ACR	15 - 40	TBD
SUSIM	0 - 40	TBD
WLC	17 - 23	TBD
UVCS	TBD	TBD
HRTS	TBD	TBD
SXRT	17 - 23	TBD
SEPAC	10 - 40	TBD
TEBPP	TBD	TBD
RPDP	TBD	TBD
WISP	20 - 40	TBD
TSS	TBD	TBD

servicing. However, instrument modifications are being planned to make them more servicable. Electronics boxes will be modified or designed to be replaceable at the ORU level. Access to the plasma instrument ORU's, including the RPDP's servicable equipment, is good.

7.2 STO/SS Modularity

At the highest level of modularity, the STO/SS instruments are divided among four seperate carriers, two of which (WISP and TSS) are Spacelab type pallets. The instruments and their subsystems will be designed for servicing by ORU replacement. This includes the gas bottles for fluid resupply of the various instruments and the film cannisters for the SIG instruments.

7.3 STO/SS Automated Servicing

Servicing is planned to be automated. The carriers, instruments and their servicable equipment will be designed or modified to be compatible with the various space station effectors, as required. This includes the STS RMS, the space station RMS, the servicing facility RMS, the end effectors those RMS's could employ, the Flight Telerobotic Servicer (FTS) and its end effectors.

7.4 STO/SS Servicing in the Space Station Pressurized Modules

No STO servicing is planned for the pressurized modules as a nominal servicing activity.

8.0 STO/SS SERVICING MATERIALS CHECKLIST

Servicing Equipment	Required	SS Provided	Comments	Ref. Section
ORUs (including SIs)	yes	no	includes film cannisters	9.0
Flight Support Equipment	yes	no		10.0
Other Equipment	no	no		10.0
Servicing Equipment Carrier(s)	yes	yes		12.0
Servicing Consumables				
Propellant(s) container(s)	no	no		11.0 11.0
Cryogen(s) container(s)	no	no		11.0 11.0
Liquid(s) container(s)	no	no		11.0 11.0
Gas(es) container(s)	yes	no		11.0 11.0
Other(s) container(s)	no	no		11.0 11.0
Servicing Consumables Carrier(s)	yes	yes		12.0

9.0 STO/SS ORBITAL REPLACEABLE UNITS (ORUs)

9.1 Servicing of STO/SS ORUs

a. Primary

Those ORUs which are planned to be replaced or serviced on a regular basis include those replacing consumables (e.g., gas bottles), film cannisters and those with predictable service lives such as cathodes, power supplies, tape recorders, batteries, and possibly the TSS Tether.

b. Secondary

Items which fail on a random basis, such as instrument or subsystem electronics boxes and sensors, will be replaced or repaired on a contingency servicing basis on the next scheduled STO/SS servicing mission.

9.2 STO/SS ORU Physical Characteristics

The physical characteristics of some STO/SS ORUs are shown in Table STO/SS-6. This is a list of typical ORUs and not a complete listing. There does not exist sufficient information to compile a complete list at this time.

9.3 STO/SS ORU Storage Requirement

Specific ORU values are not available at this time. However, the storage requirements in general are:

Storage Temp:	-10 to +40° C for gas bottles, power supplies, and batteries.
	-40 to +40° C all other ORU's.
Storage Power:	TBD
Storage Volume:	TBD
Storage Mass:	TBD

9.4 Other Environmental Requirements for STO/SS ORUs

No information available.

Table STO/SS-6. STO/SS ORU Physical Characteristics

ORU	Mass (kg)	Dimensions (m)
Gas Bottle	100	0.25 x 0.25 x 0.5
SEPAC Cathode	10	0.25 x 0.25 dia
Power Supply A	100	0.1 x 0.5 x 0.5
Power Supply B	20	0.3 x 0.3 x 0.5
Power Amplifier	100	0.1 x 0.1 x 0.1
Tape Recorder	10	0.25 x 0.25 x 0.25
Tether Reel	100	
Tether Satellite Battery	20	0.3 x 0.3 x 0.5
Instrument Electronics Box	100	0.3 x 0.3 x 1.0
Sensor Box	50	0.3 x 0.3 x 0.5

Note: This table describes typical ORUs and is not a complete list

10.0 STO/SS FLIGHT SUPPORT AND MISCELLANEOUS SERVICING EQUIPMENT

10.1 STO/SS Flight Support Equipment (FSE)

TBD

11.0 STO/SS SERVICING CONSUMABLES AND CONTAINERS

11.1 Description and Purpose

STO/SS consumables include argon, xenon and nitrogen. The usage of these consumables by instrument are:

a. WLC

Utilizes nitrogen (may change to argon) for purging the instrument optics. The replenishment will be by gas bottle (ORU) changeout on a yearly basis. The unpressurized logistics module will be used for transport.

b. SEPAC

Utilizes argon or xenon. The replenishment will be by gas bottle (ORU) changeout on a yearly basis. The unpressurized logistics module will be used for transport.

c. TSS

Utilizes nitrogen as a cold gas propellant for the tethered satellite. Servicing is on a one year interval by ORU replacement of the pressure vessel. The unpressurized logistics module will be used for transport.

11.2 Physical Characteristics

Table STO/SS-7 summarizes the physical characteristics and storage requirements for the consummables.

11.3 Storage Requirements

Table STO/SS-7 summarizes the physical characteristics and storage requirements for the consummables.

12.0 CARRIERS FOR STO/SS SERVICING MATERIALS

12.1 Description of Carriers

STO/SS plans on utilizing the logistics carriers which are planned to be a part of the Space Station Program. STO/SS servicing materials will probably be transported in the Unpressurized Logistics Carrier (ULC). A possible exception to this are the film cannisters for SXRT and HRTS which may require the comforts of the Pressurized Logistics Carrier (PLC). Use of these carriers will be in accordance with Space Station Program planning.

12.2 STS/SS/ Carrier Interfaces

The interface between STO/SS servicing equipment and the station's logistics carriers is unknown at this time. The interfaces between the logistics carriers and the STS or SS are a Space Station Program responsibility. Space Station program Interface Requirements Documents (IRD's) JSC-30435 and JSC-30436 define the interface requirements between the PLC and ULC to the core space station.

12.3 Servicing Materials/Carrier Interfaces

No information available. However, an overhead of 20% was added to the STO/SS service materials mass estimates to account for the structural/mechanical interface hardware which will be required.

Table 7. STO/SS Consumables and Containers Requirements

Instrument	Consumable Container Type	Mass of Consumable (kg)	Volume of Consumable (m^3)	Mass of Container (kg)	Volume of Container (m^3)	Total Mass (kg)	Operating Pressure (psia)	Storage Temp. (^oC)	Storage Power (KW)
WLC	Nitrogen/ Gas bottle	0.4	0.010	9	0.01	9.4	500	TBD	TBD
SEPAC	Argon/ Gas bottle	0.25	0.005	7	0.005	7.25	417	TBD	TBD
	Xenon/ Gas bottle	1.9	0.010	9	0.010	10.9	474	TBD	TBD
TSS	Nitrogen/ Gas bottle	4.5	0.110	37.5	0.110	42	500	TBD	TBD

13.0 STO/SS ORBITAL SERVICING ACTIVITIES TIME ESTIMATES

13.1 Mission Servicing Ground Rules and Constraints

Servicing will require station crew specialists to implement servicing with support from an STO specialist resident at the station. Servicing of the science instruments and support subsystems will be done at the attached payload locations on the truss. Nominal servicing activities will not require EVA support. This is dependent upon the remote manipulator/robotics capabilities of the station and on the successful modification/design of instruments for serviceability by ORU replacement. SXRT and HRTS film cannisters and RPDP battery replacement, for example, may end up requiring EVA support. The RPDP will require OMV support for deployment and retrieval. The RPDP will be returned and mated to the PIG for its servicing activities. All STO/SS servicing materials will be transported to and from the station in the space station logistics carriers.

13.2 Preparatory Servicing Time Estimates.

Activity	Elapsed Time (hr:min)	IVA Time (Crew-hr:min)	EVA Time (Crew-hr:min)	Robotic Time (hr:min)
1. RPDP Berthing related Activites	3:30	3:30	0:00	2:00
2. Loading of MSC with Servicing Materials from Logistics Carriers	TBD	TBD	0:00	TBD

13.3 Principal Servicing Time Estimates.

Activity	Elapsed Time (hr:min)	IVA Time (Crew-hr:min)	EVA Time (Crew-hr:min)	Robotic Time (hr:min)
1. ORU Changeout (SIG)	TBD	TBD	0:00	TBD
2. ORU Film Changeout (SIG)	TBD	TBD	TBD	TBD
3. ORU Changeout (TSS)	TBD	TBD	0:00	TBD
4. ORU Changeout (PIG)	TBD	TBD	0:00	TBD
5. ORU Changeout (WISP)	TBD	TBD	0:00	TBD
6. RPDP battery charging or replacement	TBD	TBD	TBD	TBD

13.4 Close-Out Servicing Time Estimates.

Activity	Elapsed Time (hr:min)	IVA Time (Crew-hr:min)	EVA Time (Crew-hr:min)	Robotic Time (hr:min)
1. RPDP Deberthing related Activities	5:30	5:30	0:00	3:00
2. Offloading of Servicing Materials from MSC to Logistics carriers	TBD	TBD	0:00	TBD

14.0 STO/SS STRAWMAN SERVICING SCENARIO

14.1 STO/SS Strawman Servicing Missions

The STO/SS instruments have servicing requirements that result in monthly, quarterly, and yearly servicing activities. Since this document reports servicing requirements on a quarterly basis, the monthly requirements are lumped together with the quarterly requirement to define strawman servicing mission Type A. Every fourth quarter, the yearly servicing activities, along with the quarterly and monthly are required and these define strawman servicing mission Type B. In other words, Type B servicing includes both the Type A activities and the yearly servicing activities. Every three Type A servicing missions will be followed by a Type B mission in the fourth quarter.

The Type A servicing mission consists of the monthly film cannister replacement requirement for two of the SIG carrier solar instruments and of the quarterly servicing required by the RPDP. The RPDP is a free-flying subsatellite which is a detachable part of the PIG instrument carrier. It requires the OMV to both deploy and retrieve it from its station-keeping orbit near the space station. RPDP servicing requires its return to the PIG carrier so that its flight batteries can be recharged.

The Type B servicing mission includes the activities of the Type A mission plus the yearly servicing requirements of the other science instruments. These instruments are variously located on the SIG, TSS, PIG or WISP carriers. The yearly servicing activities include the replenishment of consumables (by ORU changeout) for instruments located on the SIG, TSS and PIG and the replacement of various ORU's located on each of the four carriers.

Servicing missions Type A and B both require the MSC to transport servicing materials to the attached payload locations of the STO/SS pallets. The SIG and TSS are to be located on the upper beam of the station while the PIG and WISP will be located on the

lower beam. The strawman Type A missiion requires a total of five MSC trips--three to the upper beam for the SIG instrument film replacements and two to the lower beam in support of RPDP servicing. The first MSC trip in support of RPDP is to retrieve it from the OMV and transport it to the PIG carrier where it will recharge its batteries. The second trip is to return the RPDP to the OMV for its redeployment. The strawman Type B mission also requires five MSC trips. The first two MSC trips to the upper beam are identical to the Type A mission. The third trip to the upper beam, in addition to the film cannister exchange, will include the requisite ORUs to service the other instruments on the SIG and TSS. For the MSC trips to the lower beam, the first one is the same as for the Type A mission while the second trip will include the requisite ORUs for servicing the PIG and WISP instruments and will return the RPDP to the OMV location.

The above scenarios assume that the RPDP must be retrieved for servicing by the OMV and returned to the PIG carrier before the STS arrives at the station. This is to avoid operational conflicts during the STS stay time. Also, RPDP redeployment would not occur until after the STS leaves the station and the station completes its subsequent orbital re-boost.

14.2 Servicing Payload Description

The payload for strawman Type A consists only of a three months supply of film cannisters for the SXRT and HRTS instruments. The cannisters will be transported and stored in the space station's logistics carrier. Dimensions and volume for the film cannisters are TBD. The cannisters are estimated to weigh about 10 kg each. The estimated mass for a service payload of six cannisters, including a 20% margin to allow for FSE, is 75 kilograms. The interface requirements (both functional and physical) to the carrier are TBD. The servicing for RPDP is activity based and has no payload requirements for servicing materials until the Type B servicing activity.

The payload for strawman Type B includes the requirements of Type A above and a number of additional ORUs to support consumables replenishment, science instrument repair, and subsystem repair activities. These ORUs are also planned to be transported and stored in the station's logistics carrier. Typical ORU dimensions and masses are shown in Table STO/SS-6. The estimated mass of the type B servicing payload is 816 kilograms (includes 20% margin to allow for FSE). Again, the interface requirement to the logistics carrier are TBD.

14.3 Strawman Servicing Materials

a. ORU's

Type A Mission: Requires six film cannister ORUs. Dimensions are TBD. Estimated mass is 10 kg each for a total of 60 kilograms.

Type B Mission: Requires six film cannister ORUs. Dimensions are TBD. Estimated mass is 10 kg each for a total of 60 kilograms. Requires additional ORUs for scheduled maintenance of science instrument electronics, sensors, cathodes, power supplies, etc. Total Volume is TBD. Total mass (including the film cannisters) is estimated to be 610 kilograms.

b. FSE

Type A Mission: FSE is estimated to be 20% of service mass. FSE mass estimate is 15 kilograms.

Type B Mission: FSE is estimated to be 20% of the service mass. FSE mass estimate is 136 kilograms.

c. Consumables and Containers

Type A Mission: No consumables

Type B Mission: Gases are the only consumables. They are all contained in pressure vessels and are ORU replaceable.

The gases are: argon for SEPAC, xenon for SEPAC, nitrogen for the WLC, and nitrogen for the TSS tether satellite. See Section 11 for characteristics of the consumables and their containers.

d. Carriers

The STO/SS servicing materials will utilize the space station logistics carriers. With the exception of the film cannisters, all servicing materials will most likely utilize the Unpressurized Logistics Carrier (ULC). The film cannisters may require transport in the Pressurized Logistics Carrier (PLC).

14.4 Estimated Up/Down Mass on STS to Support STO/SS Strawman Servicing

a. Strawman Servicing Mission Type A

SERVICING MATERIAL	MASS, UNPRESSURIZED TRANSPORT (kg)	MASS, PRESSURIZED TRANSPORT (kg)	MASS, TOTAL (kg)
Equipment			
SI(s)	0	0	0
ORU(s)	60	0	60
Unique FSE	15	0	15
Misc. Equipment	0	0	0
Equipment Subtotal	75	0	75
Equipment Carrier(s)	0	0	0
Subtotal, Equipment Mass Up	75	0	75
Subtotal, Equipment Mass Down	75	0	75
Consumables			
Consumables	0	0	0
Consumables Containers	0	0	0
Consumables Containers Carriers	0	0	0
Subtotal, Consumables Mass Up	0	0	0
Subtotal, Consumables Mass Down	0	0	0
Total Mass Up	75	0	75
Total Mass Down	75	0	75

Note: Type A servicing equipment consists of film canisters which may end up requiring pressurized transport accommodations.

14.4 Estimated Up/Down Mass on STS to Support STO/SS Strawman Servicing (continued)

b. Strawman Servicing Mission Type B

SERVICING MATERIAL	MASS, UNPRESSURIZED TRANSPORT (kg)	MASS, PRESSURIZED TRANSPORT (kg)	MASS, TOTAL (kg)
Equipment			
SI(s)	TBD	0	TBD
ORU(s)	610	0	610
Unique FSE	136	0	136
Misc. Equipment	0	0	0
Equipment Subtotal	0	0	0
Equipment Carrier(s)	0	0	0
Subtotal, Equipment Mass Up	746	0	746
Subtotal, Equipment Mass Down	746	0	746
Consumables			
Consumables	7(U)	0	7
Consumables Containers	63(U/D)	0	63
Consumables Containers Carriers	0	0	0
Subtotal, Consumables Mass Up	70	0	70
Subtotal, Consumables Mass Down	63	0	63
Total Mass Up	816	0	816
Total Mass Down	809	0	809

Note: The Unique FSE also includes the equipment necessary to interface the consumables containers to the station's unpressurized logistics carrier.

Note: The totals and subtotals do not account for the data which is TBD.

14.5 Estimated Up/Down Volume on STS to Support STO/SS Strawman Servicing

a. Strawman Servicing Mission Type A

SERVICING MATERIAL	VOLUME, UNPRESSURIZED TRANSPORT (m^3)	VOLUME, PRESSURIZED TRANSPORT (m^3)	VOLUME, TOTAL (m^3)
Equipment			
SI(s)	0	0	0
ORU(s)	0.3	0	0.3
Unique FSE	0.1	0	0.1
Misc. Equipment	0	0	0
Equipment Subtotal	0	0	0
Equipment and Carriers Subtotal	0.4	0	0.4
Consumables			
Consumables Containers	0	0	0
Consumables Containers Carriers	0	0	0
Total Volume Up	0.4	0	0.4
Total Volume Down	0.4	0	0.4

Note: Assumes average payload density of 200 kg/m^3

b. Strawman Servicing Mission Type B

SERVICING MATERIAL	VOLUME, UNPRESSURIZED TRANSPORT (m^3)	VOLUME, PRESSURIZED TRANSPORT (m^3)	VOLUME, TOTAL (m^3)
Equipment			
SI(s)	TBD	0	TBD
ORU(s)	3.1	0	3.1
Unique FSE	0.7	0	0.7
Misc. Equipment	0	0	0
Equipment Subtotal	3.8	0	3.8
Equipment and Carriers Subtotal	3.8(U/D)	0	3.8
Consumables			
Consumables Containers	0.4	0	0.4
Consumables Containers Carriers	0.4(U/D)	0	0.4
Total Volume Up	4.2	0	4.2
Total Volume Down	4.2	0	4.2

Note: Assumes average payload density of 200 kg/m^3. For consumables this is equipment envelope, not tank volumes.
Note: The totals and subtotals do not account for the data which is TBD.

14.6 Storage on Space Station Required to Support Strawman STO/SS Servicing

a. Strawman Servicing Mission Type A

Continuous Storage	Unpressurized	Pressurized	Total
Mass (kg)	0	0	0
Volume (m^3)	0	0	0
Average Power (watts)	0	0	0
Temperature Range (^oC)	-	-	-
Temporary Storage*			
Mass (kg)	75	0	75
Volume (m^3)	0.4	0	0.4
Average Power (watts)	TBD	0	TBD
Temperature Range (^oC)	TBD	0	TBD

*Storage is in Station supplied Unpressurized Logistics Carrier (ULC). Storage duration is approximately 3 months per servicing mission.

b. Strawman Servicing Mission Type B

Continuous Storage	Unpressurized	Pressurized	Total
Mass (kg)	0	0	0
Volume (m^3)	0	0	0
Average Power (watts)	0	0	0
Temperature Range (^oC)	-	-	-
Temporary Storage*			
Mass (kg)	816	0	816
Volume (m^3)	4.2	0	4.2
Average Power (watts)	TBD	0	TBD
Temperature Range (^oC)	0-40**	0	

*Storage is in station supplied Unpressurized Logistics Carrier (ULC). Storage duration is approximately three months per servicing mission.

**Individual ORUs may have tighter requirements within this envelope.

Note: Temporary Storage Mass and volume do not account for previous data defined as TBD.

14.7 STO/SS Strawman Servicing Power Estimates

	Operational Mode (watts)		Servicing Mode (watts)	
	AVG	MAX	AVG	MAX
Payload (Bus + Instruments)	TBD	TBD	TBD	TBD

14.8 STO/SS Strawmen Servicing Times

a. Strawman Servicing Mission Type A

Activity	Elapsed Time (hr:min)	IVA Time (Crew-hr:min)	EVA Time (Crew-hr:min)	Robotic Time (hr:min)
1. OMV retrieves RPDP	0:00	0:00	0:00	0:00
2. RPDP berthing activities	3:30	3:30	0:00	2:00
3. MRMS transports RPDP to PIG (1)	2:55	2:55	0:00	2:55
4. STS Logistics Flight Arrival	0:00	0:00	0:00	0:00
5. MRMS transports material to SIG (2)	8:45	8:45	0:00	8:45
6. ORU changeout at SIG (1)	2:02	2:02	TBD	2:02
7. STS Logistics flight departure	0:00	0:00	0:00	0:00
8. MRMS transports RPDP to OMV	2:55	2:55	0:00	2:55
9. RPDP deberthing activities	5:30	5:30	0:00	3:00
10. OMV deploys RPDP	0:00	0:00	0:00	0:00
Totals	25:37	25:37	TBD	21:37

Notes:
(1) MRMS transport trips are round trip totals.
(2) Monthly activities included in Quarterly total.

14.8 STO/SS Strawmen Servicing Times (continued)

b. Strawman Servicing Mission Type B

Activity	Elapsed Time (hr:min)	IVA Time (Crew-hr:min)	EVA Time (Crew-hr:min)	Robotic Time (hr:min)
1. OMV retrieves RPDP	0:00	0:00	0:00	0:00
2. RPDP berthing activities	3:30	3:30	0:00	2:00
3. MRMS transports RPDP to PIG (1)	2:55	2:55	0:00	2:55
4. STS Logistics Flight Arrival	0:00	0:00	0:00	0:00
5. STS Logistics Flight Departs	0:00	0:00	0:00	0:00
6. MRMS transports materials to PIG/WISP	2:55	2:55	0:00	2:55
7. ORU Changeout	2:03	2:03	0:00	2:03
8. Consumables changeout	0:53	0:53	0:00	0:53
9. MRMS transports materials to SIG/TSS (2)	8:45	8:45	0:00	8:45
10. ORU changeout (2)	2:39	2:39	TBD	2:39
11. Consumables changeout	0:40	0:40	0:00	0:40
12. MRMS transports RPDP to OMV (3)	0:00	0:00	0:00	0:00
13. RPDP deberthing activities	5:30	5:30	0:00	3:00
14. OMV redeploys RPDP	0:00	0:00	0:00	0:00
Totals	29:50	29:50	TBD	25:50

Notes:

(1) All MRMS transport times shown are for round trip.

(2) Portion of this activity includes the film changeout which occurs three times quarterly. Assumption is that 1st monthly servicing trip to SIG/TSS incorporates film and other ORU changeouts. Next two trips are film changeout only.

(3) No time allocated - assumption is that this function is performed on the MRMS return trip of activity 6.

14.9 OMV Flights in Support of STO/SS Strawman Serving Missions

OMV flights are required for the deployment and retrieval of the STO/SS Recoverable Plasma Diagnostics Package (RPDP). The RPDP is a small "sub-satellite" that is to fly near the space station in a station-keeping orbit. On a 90 day cycle the RPDP needs to be returned to the station for servicing. Consequently, two OMV flights are needed per servicing mission - a retrieval and a deployment. This OMV support is required for both the type A and B servicing scenarios. Since STO/SS has a four year mission duration with quarterly service requirements for the RPDP, a total of 32 flights will be required. Of the 32 flights, the first flight will be the initial operational deployment of the RPDP, and the last flight will be the final retrieval of the RPDP at the curtailment of the STO/SS mission.

15.0 OVERALL REQUIREMENTS SUMMARY FOR SS SERVICING OF STO/SS

15.1 STO/SS Milestones and Servicing Schedule (Nominal Mission Model)

Event	Location	Date	Comment
STO/SS Launch	STS/ETR	3rd quarter 1994	
1st Servicing	SS at Attached P/L	4th quarter 1994	Type A Servicing
2nd Servicing	SS at Attached P/L	1st quarter 1995	Type A Servicing
3rd Servicing	SS at Attached P/L	2nd quarter 1995	Type A Servicing
4th Servicing	SS at Attached P/L	3rd quarter 1995	Type B Servicing
5th Servicing	SS at Attached P/L	4th quarter 1995	Type A Servicing
6th Servicing	SS at Attached P/L	1st quarter 1996	Type A Servicing
7th Servicing	SS at Attached P/L	2nd quarter 1996	Type A Servicing
8th Servicing	SS at Attached P/L	3rd quarter 1996	Type B Servicing
9th Servicing	SS at Attached P/L	4th quarter 1996	Type A Servicing
10th Servicing	SS at Attached P/L	1st quarter 1997	Type A Servicing
11th Servicing	SS at Attached P/L	2nd quarter 1997	Type A Servicing
12th Servicing	SS at Attached P/L	3rd quarter 1997	Type B Servicing
13th Servicing	SS at Attached P/L	4th quarter 1997	Type A Servicing
14th Servicing	SS at Attached P/L	1st quarter 1998	Type A Servicing
15th Servicing	SS at Attached P/L	2nd quarter 1998	Type A Servicing
STO/SS Return	STS/ETR	3rd quarter, 1998	

15.2 Summary of STO/SS Mass Considerations

a. STO/SS Mass Summary

(1) Payload in Operational/Servicing Configuration

Payload Mass (dry)	:	7936 kg
Consumables Mass	:	7 kg
Total Operational Payload Mass	:	7943 kg

(2) Type A Servicing Materials

Servicing Payload Mass (dry)	:	75 kg
Consumables Mass	:	0 kg
Type A Servicing Payload Mass	:	75 kg

(3) Type B Servicing Materials

Servicing Payload Mass (dry)	:	809 kg
Consumables Mass	:	7 kg
Type B Servicing Payload Mass	:	816 kg

b. STO/SS Servicing Materials Mass Up and Down in STS

EVENT	MASS UP (Kg)	MASS DOWN (Kg)
Launch	7973	
1st Servicing	75	75
2nd Servicing	75	75
3rd Servicing	75	75
4th Servicing	816	809
5th Servicing	75	75
6th Servicing	75	75
7th Servicing	75	75
8th Servicing	816	809
9th Servicing	75	75
10th Servicing	75	75
11th Servicing	75	75
12th Servicing	816	809
13th Servicing	75	75
14th Servicing	75	75
15th Servicing	75	75
Mission Termination		7936
Totals	11321	11263
Servicing Totals*	3348	3327

*Servicing total does not include initial payload launch mass or mission termination return mass. These are changed to payload operations.

Note: The totals do not account for all of the TBDs in the supporting data.

15.2.3 STO/SS Servicing Storage Mass on Space Station

Calendar Year	93	94	95	96	97	98	99
Storage Mass (Kg)							
Unpressurized	0	75	1034	1034	1034	150	0
Pressurized	0	0	0	0	0	0	0
Total	0	75	1034	1034	1034	150	0

Note: All storage is temporary and yearly requirements are segmented by the STS logistics cycle. All storage is assumed to be in the station's Unpressurized Logistics Carrier.

Data represents summations of the quarterly requirements for Type A and Type B servicing missions for the given year.

Totals do not account for the TBDs in the supporting data

15.3 Summary of STO/SS Volume Considerations

15.3.1 STO/SS Volume

Payload Volume, Operational Configuration:	TBD m^3
Payload Volume, Servicing Configuration:	TBD m^3
Payload Volume, Storage/Transportation Configuration:	TBD m^3

15.3.2 STO/SS Servicing Volumes Up and Down in STS

EVENT	VOLUME UP (m^3)	VOLUME DOWN (m^3)
Launch	TBD	
1st Servicing	0.4	0.4
2nd Servicing	0.4	0.4
3rd Servicing	0.4	0.4
4th Servicing	4.2	4.2
5th Servicing	0.4	0.4
6th Servicing	0.4	0.4
7th Servicing	0.4	0.4
8th Servicing	4.2	4.2
9th Servicing	0.4	0.4
10th Servicing	0.4	0.4
11th Servicing	0.4	0.4
12th Servicing	4.2	4.2
13th Servicing	0.4	0.4
14th Servicing	0.4	0.4
15th Servicing	0.4	0.4
Mission Termination		TBD
Totals	TBD	TBD
Servicing Totals*	17.4	17.4

*Servicing totals exlcude the initial payload launch volume and the mission termination flight volume. These are chargeable to payload operations.

Note: Servicing totals do not account for all of the TBDs in the supporting data.

15.3.3 STO/SS Servicing Storage Volume on Space Station

Calendar Year	93	94	95	96	97	98	99
Storage Volume (m^3)							
Unpressurized	0	0.4	5.4	5.4	5.4	0.8	0
Pressurized	0	0	0	0	0	0	0
Total	0	0.4	5.4	5.4	5.4	0.8	0

Note: All storage is temporary and yearly requirements are segmented by the STS logistics cycle. All storage is assumed to be in the station's Unpressurized Logistics Carrier (UCL).

Data represents summations of the quarterly requirements for Type A and Type B servicing missions for the given year.

Totals do not account for all of the TBDs in the supporting data.

15.4 Summary of STO/SS Power Considerations

	Average (watts)	Maximum (watts)
Payload Operational Power:	6700	TBD
Payload Servicing Power:	TBD	TBD
Payload Storage/Transportation Power:	TBD	N/A

15.5 Summary of STO/SS Servicing Times

Calendar Year	93	94	95	96	97	98	99	Total
Elapsed Time (Hours)	0	25.6	106.7	106.7	106.7	51.2	0	396.9
IVA Time (Crew-Hours)	0	25.6	106.7	106.7	106.7	51.2	0	396.9
EVA Time (Crew-Hours)	0	TBD	TBD	TBD	TBD	TBD	0	TBD
Total Crew Time (Crew-Hours)	0	25.6	106.7	106.7	106.7	51.2	0	396.9
Robotic Time (Hours)	0	21.6	90.7	90.7	90.7	43.2	0	336.9

Note: Totals do not account for all of the TBDs in the supporting data.

15.6 Summary of OMV Flights in Support of STO/SS Servicing

Calendar Year	93	94	95	96	97	98	99	TOTAL
Number of OMV Flights	0	2	8	8	8	4	0	30

Note: This table shows a total of 30 OMV servicing flights. Not included in this table are the 1st OMV deployment mission in '94 and the last OMV retrieval mission in '98 since those two flights are considered to be operational flights.

REFERENCES

1. Telephone interviews with Mr. William Roberts, NASA, MSPC, August and September, 1987.

2. Telephone interviews with Mr. Jack Kropp, TRW, Redondo Beach, August and September, 1987.

TROPICAL REGIONS IMAGING SPECTROMETER (TRIS): MISSION CODE TBD

1.0 TRIS PROGRAM AND OPERATIONS INFORMATION

1.1 TRIS Points of Contact

M. J. Donohoe
NASA/GSFC 415
Greenbelt, Maryland 20771
(301) 286-6820

1.2 TRIS Objectives

TRIS will study the biological and physical processes of the tropical regions. Clouds, ocean color, land color and state, plant stress and surface temperature will be studied.

1.3 TRIS Milestone and Servicing Schedule

Launch Date: 1st quarter, 1995.
First Space Station Service: 1st quarter, 1998.
Servicing Interval: 3 years.
Operational Lifetime: TBD

1.4 TRIS Orbital Parameters

TRIS is a Space Station (SS) attached payload and thus has the same orbital parameters as the Space Station.

2.0 TRIS PHYSICAL CHARACTERISTICS

2.1 TRIS Description

The SS-based TRIS will consist of two instruments, MODIS-N and MODIS-T, containing two telescopes, detectors, moving optics/scanner, support structure and electronics.

2.2 TRIS Physical Characteristics

Mass: 360 kg

Stowed Volume: 1.1 m^3

MODIS-N:	Length:	0.80 m	MODIS-T:	Length:	0.25 m
	Width:	1.60 m		Width:	0.30 m
	Height:	2.6 m		Height:	0.65 m

Deployed Volume: 1.1 m^3

MODIS-N:	Length:	0.80 m	MODIS-T:	Length:	0.25 m
	Width:	1.60 m		Width:	0.30 m
	Height:	2.6 m		Height:	0.65 m

2.3 TRIS Moving Parts and Special Features

TRIS includes two scanners which are articulated via a scanner motor.

2.4 TRIS Consumables

None required.

3.0 TRIS SERVICING INFORMATION

3.1 General Description of TRIS Servicing

The main concern for Space Station servicing of TRIS is the replacement of the mechanical cooler every three years. Other ORUs may be identified in the future. Section 9 discusses this ORU in more detail. IF the TRIS attached payload location field of view allows it, TRIS may be able to use a passive radiant cooler thus eliminating the need for a mechanical cooler and its associated servicing requirements. In this case TRIS servicing would consist of science instrument replacement.

3.2 TRIS Background

The MODIS-N and MODIS-T instrument heritage is based on the CZCS and AVHRR instruments, both of which are operational, and on SISEX which is in phase A instrument development.

3.3 Primary Role of SS in Servicing TRIS

The Space Station will be used to support the replacement of TRIS ORU(s). A temporary storage environment is required to maintain ORU survival temperatures until actual servicing of TRIS takes place.

3.4 Primary SS Facilities Required for Servicing TRIS

TRIS ORU(s) must be maintained in an environment conducive to survival for these components.

3.5 Space Station Personnel Required for Servicing TRIS

Two EVA and one IVA astronauts will be required to replace TRIS ORU(s).

3.6 Servicing Precautions for TRIS

TRIS optics are moderately sensitive to deposited contaminants.

3.7 OMV Flight Profile Support of TRIS Servicing

TRIS requires no OMV support.

4.0 TRIS SERVICING SAFETY CONSIDERATIONS

4.1 TRIS Hazardous Systems

TRIS presents no identifiable servicing safety hazards to Space Station personnel.

4.2 Servicing Safety Precautions for TRIS

None identified.

5.0 TRIS SERVICING INTERFACES AND RESOURCE REQUIREMENTS

5.1 TRIS Crew Convenience Features

No servicing convenience features are identified.

5.2 TRIS Mechanical Interfaces

TBD.

5.3 TRIS Umbilical Interfaces

TRIS requires power and data transmission/reception lines to the Space Station. TRIS does not require attachment to the Space Station thermal fluid cooling loop.

5.4 TRIS RF Communication Interface

TRIS will require Space Station facilities for the data transmission of approximately 9500 kbps through the TDRSS network. In addition, on-board storage of approximately 0.4 Mbit is required.

5.5 TRIS Thermal Interface

TRIS does not require attachment to the Space Station thermal fluid loop.

6.0 TRIS SERVICING ENVIRONMENT

6.1 TRIS Pointing/Orientation Constraints

Intra-instrument pointing requirements are TBD.

6.2 TRIS Contamination Concerns

TRIS is sensitive to deposited contamination.

6.3 TRIS Radiation Concerns

TBD.

7.0 TRIS SERVICING ACCOMMODATIONS

7.1 TRIS Equipment Access

TBD.

7.2 TRIS Modularity

TBD.

7.3 TRIS Automated Servicing

The potential for automated servicing is TBD.

7.4 TRIS Servicing in the Space Station Pressurized Modules

TRIS requires no pressurized Space Station service.

8.0 TRIS SERVICING MATERIALS CHECKLIST

Servicing Equipment	Required	SS Provided	Ref.Section
ORUs (including SIs)	Yes	No	9.0
Flight Support Equipment	TBD	TBD	10.0
Other Equipment	No	No	10.0
Servicing Equipment			
Carrier(s)	Yes	TBD	12.0
Servicing Consumables			
Propellant(s)	No	No	11.0
container(s)	No	No	11.0
Cryogen(s)	No	No	11.0
container(s)	No	No	11.0
Liquids(s)	No	No	11.0
container(s)	No	No	11.0
Gas(es)	No	No	11.0
container(s)	No	No	11.0
Other(s)	No	No	11.0
container(s)	No	No	11.0
Servicing Consumables			
Carrier(s)	No	No	12.0

9.0 TRIS ORBITAL REPLACEABLE UNITS (ORUs)

9.1 Servicing of TRIS ORUs

One TRIS ORU has been tentatively identified, the mechanical cooler for MODIS-N if a radiant cooler is not feasible. The exact design of this ORU is not yet defined. The mass, dimensions, etc., specified in this document for this mechanical cooler ORU are estimates.

9.2 TRIS ORU Physical Characteristics

Mechanical Cooler ORU:	Mass:	100 kg
	Volume:	0.3 m^3

9.3 TRIS ORU Storage Requirements

TBD.

9.4 Other Environmental Requirements for TRIS ORUs

None specified.

10.0 TRIS FLIGHT SUPPORT AND MISCELLANEOUS SERVICING EQUIPMENT

10.1 TRIS Flight Support Equipment (FSE)

No unique flight support equipment is identified for the replacement of TRIS ORU(s). It is assumed that the SS-provided tools will be adequate.

10.2 TRIS FSE Physical Characteristics

No unique FSE is identified.

10.3 TRIS FSE Storage Requirements

Not applicable.

10.4 Miscellaneous Servicing Equipment

None identified.

11.0 TRIS SERVICING CONSUMABLES AND CONTAINERS

11.1 Description and Purpose

TRIS requires no consumables replenishment.

11.2 Physical Characteristics

Not applicable.

11.3 Storage Requirements

Not applicable.

12.0 CARRIERS FOR TRIS SERVICING MATERIALS

12.1 Description of Carriers

The carrier required to transport the TRIS ORU(s) from the earth to the Space Station is TBD.

12.2 STS and SS Carrier Interfaces

TBD.

12.3 Servicing Materials/Carrier Interfaces

TBD.

13.0 TRIS ORBITAL SERVICING ACTIVITIES TIME ESTIMATES

13.1 Mission Servicing Ground Rules and Constraints

This databook does not address contingency operations. Assumptions are made that the servicing time(s) required to replace TRIS ORU(s) are roughly equivalent to those required by other payloads as a function of ORU mass. Thus, the complexity and the accessibility of TRIS ORU(s) is assumed to be similar to that of HST and others.

13.2 Preparatory Servicing Time Estimates

Activity	Elapsed Time (hr:min)	IVA Time (Crew-hr:min)	EVA Time (Crew-hr:min)	Robotics Time (hr:min)
1) Unload Servicing Materials from Orbiter	0:30^	0:30^	0:00^	0:30^
2) Transport ORU(s) to TRIS at SS attachment point	1:30^	3:00^	3:00^	1:30^

13.3 Principal Servicing Time Estimates

ORU Replacement	Elapsed Time (hr:min)	IVA Time (Crew-hr:min)	EVA Time (Crew-hr:min)	Robotics Time (hr:min)
Mechanical Cooler	1:16^	1:54^	2:32^	0:38^

13.4 Close-out Servicing Time Estimates

Activity	Elapsed Time (hr:min)	IVA Time (Crew-hr:min)	EVA Time (Crew-hr:min)	Robotics Time (hr:min)
1) Transport ORU(s) from TRIS to SS service facility	1:30^	3:00^	3:00^	1:30^
2) Load Service Materials onto Orbiter	0:30^	0:30^	0:00^	0:30^

14.0 TRIS STRAWMAN SERVICING SCENARIO

14.1 TRIS Strawman Servicing Mission

This servicing strawman represents the activities associated with the mechanical cooling system ORU changeout required after three years of TRIS operation. (No contingency servicing is addressed.) Servicing materials will be brought from the Earth via the Orbiter to the SS service facility. They will then be unloaded and stored temporarily in unpressurized storage. The

servicing materials will be transported from the storage facility to the SS-attached TRIS. Then servicing (ORU replacement) will take place. The changed-out ORU and any other servicing materials will be transported back to the unpressurized storage facility before loaded back onto the Orbiter for transport to the ground.

14.2 TRIS Description

TRIS is an Earth-viewing SS-attached payload. Its physical characteristics are defined in Section 2.2.

14.3 Strawman Servicing Materials

ORU	Quantity	Mass	Volume
Mechanical Cooling System	1	100 kg	0.3 m^3

14.4 Estimated STS Up/Down Mass to Support TRIS Strawman Servicing

SERVICING MATERIAL	MASS, UNPRESSURIZED TRANSPORT (kg)	MASS, PRESSURIZED TRANSPORT (kg)	MASS, TOTAL (kg)
Equipment			
SI(s)	0	0	0
ORU(s)	100	0	100
Unique FSE	0	0	0
Misc. Equipment	0	0	0
Equipment Subtotal	100	0	100
Equipment Carrier(s)	57^	0	57^
Subtotal, Equipment Mass Up	157^	0	157^
Subtotal, Equipment Mass Down	157^	0	157^
Consumables			
Consumables	0	0	0
Consumables Containers	0	0	0
Consumables Containers' Carriers	0	0	0
Subtotal, Consumables Mass Up	0	0	0
Subtotal, Consumables Mass Down	0	0	0
Total Mass Up	157^	0	157^
Total Mass Down	157^	0	157^

14.5 Estimated STS Up/Down Volume to Support TRIS Strawman Servicing

SERVICING MATERIAL	VOLUME, UNPRESSURIZED TRANSPORT (m^3)	VOLUME, PRESSURIZED TRANSPORT (m^3)	VOLUME, TOTAL (m^3)
Equipment			
SI(s)	0	0	0
ORU(s)	0.3	0	0.3
Unique FSE	0	0	0
Misc. Equipment	0	0	0
Equipment Subtotal	0.3	0	0.3
Carrier	0.35^	0	0.35^
Equipment and Carriers Subtotal	0.65^	0	0.65^
Consumables			
Consumables in Containers	0	0	0
Consumables, Containers, and Carriers	0	0	0
Total Volume Up	0.65^	0	0.65^
Total Volume Down	0.65^	0	0.65^

14.6 Space Station Storage Required to Support TRIS Strawman Servicing

Continuous Storage	Unpressurized	Pressurized	Total
Mass (kg)	0	0	0
Volume (m^3)	0	0	0
Average Power (watts)	0	0	0
Temperature Range (^oC)	-	-	-
Temporary Storage			
Mass (kg)	157^	0	157^
Volume (m^3)	0.65^	0	0.65^
Average Power (watts)	TBD	0	TBD
Temperature Range (^oC)	TBD	-	TBD

14.7 TRIS Strawman Servicing Power Estimates

	Operational Mode (Watts)		Servicing Mode (Watts)		
	AVG	MAX	AVG	MAX	
TRIS	700	TBD	TBD	TBD	14.8

14.8 TRIS Strawman Servicing Time Estimates

Servicing Activity	Elapsed Time (hr:min)	IVA Time (Crew-hr:min)	EVA Time (Crew-hr:min)	Robotics Time (hr:min)
1) Unload Orbiter	0:30^	0:30^	0:00^	0:30^
2) Transport Parts	3:00^	6:00^	6:00^	3:00^
3) Replace Cooler	1:16^	1:54^	2:32^	0:38^
4) Load Orbiter	0:30^	0:30^	0:00^	0:30^
TOTALS	5:16	8:54	8:32	4:38

Note: Transport times reflect round trip times.

14.9 OMV Flights in Support of TRIS Strawman Servicing

TRIS requires no OMV support.

15.0 OVERALL REQUIREMENTS SUMMARY FOR SS SERVICING TRIS

15.1 TRIS Milestones and Servicing Schedule

Event	Location	Date
Launch	KSC	1st quarter, 1995
1st SS Service	SS Lower Boom	1st quarter, 1998
2nd SS Service	SS Lower Boom	1st quarter, 2001
3rd SS Service	SS Lower Boom	1st quarter, 2004
Termination		TBD

15.2 Summary of TRIS Mass Considerations

a. TRIS Mass

Servicing and Operational Mass: 360 kg

b. TRIS Mass Up and Down in STS

Event	Mass Up (kg)	Mass Down (kg)
Launch	360	0
1st SS Service	157^	157^
2nd SS Service	157^	157^
3rd SS Service	157^	157^
Termination	0	360
Totals	831^	831^
Servicing Totals	471^	471^

c. TRIS Servicing Storage Mass on SS

Calendar Year	Storage Mass (kg) Unpressurized	Pressurized	Total
1995	0	0	0
1996	0	0	0
1997	0	0	0
1998*	157^	0	157^
1999	0	0	0
2000	0	0	0
2001*	157^	0	157^
2002	0	0	0
2003	0	0	0
2004*	157^	0	157^
2005	0	0	0

*1st quarter

15.3 Summary of TRIS Volume Considerations

a. TRIS Volume

Servicing and Operational Volume: 1.1 m^3

b. TRIS Volume Up and Down in STS

Event	Volume Up (m^3)	Volume Down (m^3)
Launch	1.1	0
1st SS Service	0.65^	0.65^
2nd SS Service	0.65^	0.65^
3rd SS Service	0.65^	0.65^
Termination	0	1.1
Totals	3.05^	3.05^
Servicing Totals	1.95^	1.95^

c. TRIS Servicing Storage Volume on SS

Calendar Year	Storage Volume (m^3) Unpressurized	Pressurized	Total
1995	0	0	0
1996	0	0	0
1997	0	0	0
1998*	0.65^	0	0.65^
1999	0	0	0
2000	0	0	0
2001*	0.65^	0	0.65^
2002	0	0	0
2003	0	0	0
2004*	0.65^	0	0.65^
2005	0	0	0

*1st quarter

15.4 Summary of TRIS Power Considerations

	AVG	MAX
TRIS Operational Power (watts)	700	TBD
TRIS Servicing Power (watts)	TBD	TBD
Storage Power, Servicing Materials (watts)	TBD	TBD

15.5 Summary of TRIS Servicing Time Estimates

Calendar Year	Elapsed Time (hr:min)	IVA Time (Crew-hr:min)	EVA Time (Crew-hr:min)	Robotics Time (hr:min)
1995	0:00	0:00	0:00	0:00
1996	0:00	0:00	0:00	0:00
1997	0:00	0:00	0:00	0:00
1998*	5:16	8:54	8:32	4:38
1999	0:00	0:00	0:00	0:00
2000	0:00	0:00	0:00	0:00
2001*	5:16	8:54	8:32	4:38
2002	0:00	0:00	0:00	0:00
2003	0:00	0:00	0:00	0:00
2004*	5:16	8:54	8:32	4:38
2005	0:00	0:00	0:00	0:00

*1st quarter

15.6 Summary of OMV Flights in Support of TRIS SS Servicing

None required.

REFERENCES

1. Discussions with Mr. M. Donohoe (September, October 1987)

TROPICAL RAINFALL MEASUREMENT MISSION (TRMM): MISSION CODE SAAX 0251

1.0 TRMM PROGRAM AND OPERATIONS INFORMATION

1.1 TRMM Points of Contact

Dr. John Theon
TRMM Program Manager
NASA/HQ
Washington, D.C. 20546
(202) 453-1680

Mr. Tom Keating
NASA/GSFC
Greenbelt, Maryland 20771
(301) 286-8817

1.2 TRMM Objectives

The overall objective of TRMM is to measure rainfall in the tropics in order to increase our understanding of the energetic and hydrologic processes in the tropics, especially as they pertain to the general circulation of the atmosphere and oceans. The following six specific mission objectives have been identified:

(1) Obtain a minimum 3-year data set of monthly averaged estimated rainfall-rate probabilities, averaged over grid boxes of the order of 600 km on a side with sampling errors of a few percent.

(2) Develop new techniques for measuring rainfall by combining the measurements from several instruments to reduce statistical biases and to learn how to combine measurements from other satellite and ground instruments to ensure that major storms are not missed between visits by the satellite track.

(3) Develop data sets for studies of diabatic initialization of weather forecast models. These impact studies require different data reduction algorithms for selected time segments during the mission.

(4) Validate General Circulation Models (GCMs) and climate models.

(5) Develop a comprehensive ground truth program to be conducted both before and after launch through international collaboration, in particular, overlapping with the goals of the Tropical Oceans and Global Atmosphere (TOGA) program.

(6) Develop techniques for studying and removing the diurnal cycle from temporally and spatially smoothed rainfall data obtained by using a non-Sun-synchronous orbit.

1.3 TRMM Milestone and Servicing Schedule

- Launch Date: TBD (attached), 1994 (earliest Free-flyer)
- First Space Station Service: Not applicable.
- Servicing Interval: Not applicable.
- Operational Lifetime: 3 years

1.4 TRMM Orbital Parameters

TRMM is treated as an SS attached payload for the purposes of this study. The program is in Phase A and a free-flyer mode is still an option.

2.0 TRMM PHYSICAL CHARACTERISTICS

2.1 TRMM Description

TRMM consists of three primary instruments aboard an appropriate carrier assembly. If a free-flyer mode were to be selected, a spacecraft bus would have to be part of the system. The primary instruments are:

(1) a multichannel scanning passive microwave radiometer with about 4 km resolution in key channels,

(2) a multichannel visible/infrared radiometer with better than 0.5 km resolution, and

(3) a dual-frequency microwave precipitation radar.

The Advanced Very High Resolution Radiometer (AVHRR) is regarded as the prototype visible/infrared radiometer with a provision for a nighttime visible channel. The precipitation radar and the TRMM Microwave Radiometer (TMR) are new instruments with no corresponding prototypes.

AVHRR is capable of measuring cloud-top temperatures and other cloud parameters relevant to rain rates. AVHRR provides a base rainfall predictor which can be improved upon by the passive and active microwave techniques. The proposed dual frequency precipitation radar has the capability of estimating rain column height over land and sea; the resulting climate-height climatology is needed in the interpretation of TRM results and may be a good estimator of rain rate itself. In addition, the radar should be capable of estimating rain rate by backscattered power at two frequencies.

Figure TRMM-1 shows a proposed SS attached configuration of TRMM, using a genetric Payload Positioning System (PPS). The TRMM instruments are connected through a standard Payload Interface Adapter and Station Interface Adapter. Pointing accuracy is achieved through the Center of Gravity Pointing System (CGPS), a two-axis positioning mount.

2.2 TRMM Instrument Physical Characteristics

a. Mass

Dry or Wet Mass 596 kg

b. Dimensions

3.5 x 2 x 1 m

c. Envelope

3.5 x 2 x 2 m

2.3 TRMM Moving Parts and Special Features

- Internal AVHRR rotating mirror
- TMR spinning antenna

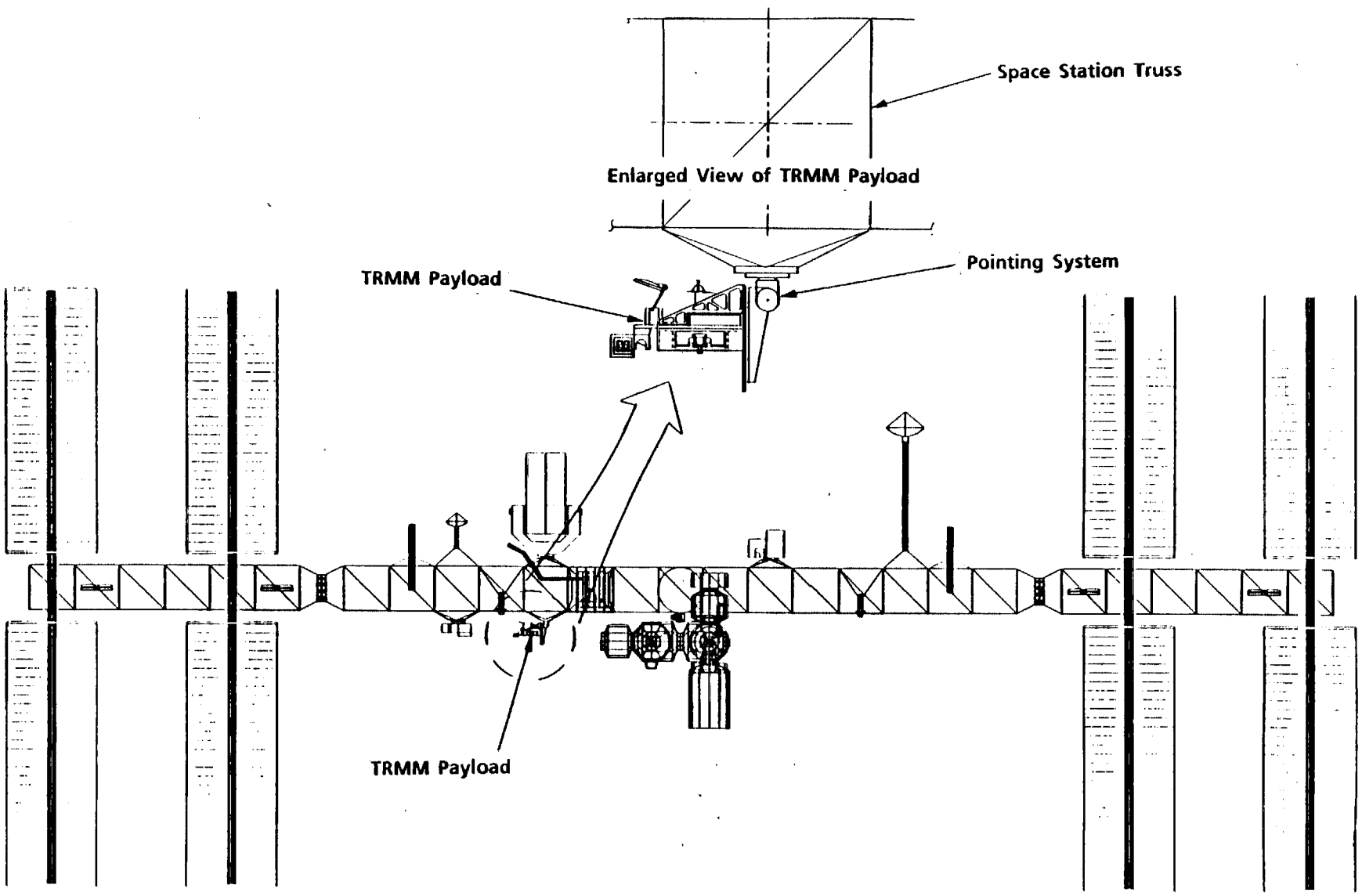

Figure TRMM-1. Space Station Concept

2.4 TRMM Consumables and Limited Life Components

a. Consumables

None required. (If free-flyer mode is chosen, propellant will be needed.)

b. Limited Life Parts.

None identified.

3.0 TRMM SERVICING INFORMATION

3.1 General Description of TRMM Servicing

TRMM is a generally passive payload, and has been conceptually designed to provide a service-free three year lifetime. Calibration will be done each year if possible in addition to pre-launch calibration. Contingency servicing may include scan motor replacement/repair, on-board processor repair, and AVHRR mirror cleaning.

In general no planned servicing will be required during the 3-year operational period. If TRMM were to stay for an extended period (>3 years), upgrade of a science instrument (the precipitation radar) would be considered.

3.2 TRMM Background

AVHRR is still flying on the National Oceanic and Atmospheric Administration (NOAA) weather satellites. The precipitation radar has not flown on any previous free-flyer missions. It is being developed jointly by the U.S. and Japan.

3.3 Primary Role of Space Station in Servicing TRMM

The Space Station will provide operational support.

3.4 Primary Space Station Facilities Required for Servicing TRMM

In case of contingency servicing, SS will provide power, temporary storage for ORUs which are changed out, and the standard EVA tool kit.

3.5 Space Station Personnel Required for Servicing TRMM

Trained technicians on Space Station are required.

3.6 Servicing Precautions for TRMM

None identified.

3.7 Orbital Maneuvering Vehicle (OMV) Flight Profile Support of TRMM

Not applicable. TRMM is viewed here as an attached payload. If, however, the TRMM instruments are carried on a free-flyer, the OMV will be used to capture the free-flyer and bring it to SS if needed.

4.0 TRMM SERVICING SAFETY CONSIDERATIONS

4.1 TRMM Hazardous Systems

None identified.

4.2 TRMM Servicing Safety Precautions

None identified.

5.0 TRMM SERVICING INTERFACES AND RESOURCE REQUIREMENTS

5.1 TRMM Crew Convenience Features

TBD.

5.2 TRMM Mechanical Interfaces

The TRMM carrier assembly will have a Payload Interface Adapter which will be attached to a Station Interface Adapter assembly.

5.3 TRMM Umbilical Interfaces

a. Power

- 28 VDC.
- TBD kW during servicing and storage.
- 0.507 kW during operation.

b. Data

Contingency servicing requirements are TBD. Operationally, 8 Gbits on-board storage are required.

c. Fluid

None identified.

5.4 TRMM RF Communications Interface

Contingency servicing requirements are TBD. For operations/checkout there is a 370 kbps data rate station to ground, and a 1 kbps rate ground to station.

5.5 TRMM Thermal Interface

- Thermal interface in attached mode is TBD.
- Servicing requirement is TBD.
- Operational requirement is to maintain temperature stable to within .5 degrees C consistent calibration.

6.0 TRMM SERVICING ENVIRONMENT

6.1 TRMM Pointing/Orientation Requirements

a. Exposure to Light

None identified for servicing.

b. Thermal Control

None identified for servicing.

6.2 TRMM Contamination Concerns

Contamination concerns (such as AVHRR mirror contamination) are TBD.

6.3 TRMM Radiation Concerns

TBD.

7.0 TRMM SERVICING ACCOMMODATIONS

7.1 TRMM Equipment Access

TRMM has not been specifically designed for on-orbit servicing, but considerations for instrument changeout, access to mirrors, access to the processor, and ease of calibration will be included in subsequent design phases.

7.2 TRMM Modularity

Scientific instruments will be modular. Other modularity is TBD.

7.3 TRMM Automated Servicing

TBD.

7.4 TRMM Servicing in the Space Station Pressurized Modules

Refurbishment of the instruments after 3 years as a free flyer may occur in the pressurized modules.

8.0 TRMM SERVICING MATERIALS CHECKLIST*

Servicing Equipment	Required	SS Provided	Ref.Section
ORUs (including SIs)	No	No	9.0
Flight Support Equipment	No	No	10.0
Other Equipment	No	No	10.0
Servicing Equipment			
Carrier(s)	No	No	12.0
Servicing Consumables			
Propellant(s)	No	No	11.0
container(s)	No	No	11.0
Cryogen(s)	No	No	11.0
container(s)	No	No	11.0
Liquids(s)	No	No	11.0
container(s)	No	No	11.0
Gas(es)	No	No	11.0
container(s)	No	No	11.0
Other(s)	No	No	11.0
container(s)	No	No	11.0
Servicing Consumables			
Carrier(s)	No	No	12.0

*No carriers or servicing equipment are listed because there is no planned servicing for TRMM. If instruments are refurbished between the free flyer and attached portions of the TRMM lifetime, or if contingency servicing is performed, SIs, ORUs, and carriers may be needed.

9.0 TRMM ORBITAL REPLACEABLE UNITS (ORUs)

9.1 Servicing of TRMM ORUs

a. Primary

There are no ORUs in planned servicing missions.

b. Secondary

On a contingency basis, the following ORUs may be replaced or repaired:

- TRMM Microwave Radiometer (TMR)
- Advanced Very High Resolution Radiometer (AVHRR)
- Precipitation Radar
- Computer Processor
- AVHRR Mirror Unit

9.2 TRMM ORU Physical Characteristics

TRMM ORU characteristics are shown in Table TRMM-1.

9.3 TRMM ORU Storage Requirements

TBD.

9.4 Other Environmental Requirements for TRMM ORUs

TBD.

10.0 TRMM FLIGHT SUPPORT AND MISCELLANEOUS SERVICING EQUIPMENT

10.1 TRMM Flight Support Equipment (FSE)

Tools required to attach and detach TRMM to/from the SS are assumed to be provided by the Space Station. Other FSE equipment is TBD.

TABLE TRMM-1. TRMM ORU PHYSICAL CHARACTERISTICS

ORU NAME	MASS (kg)	DIMENSIONS (m)	OPERATING POWER (watts)	STORAGE POWER (watts)	TREP	NUMBER SPARES
TMR*	85	1.0 x 1.4 x 1.0	90	0	1	1
AVHRR*	40	1.18 x 0.54 x 0.97	30	0	1	1
RADAR*	283	3.5 x 2.3 x 0.45	284	0	1	1
COMPUTER	2	0.1 x 0.1 x 0.3	5	0	1	0
AVHRR MIRROR	5	0.25 x 0.25 x 0.1	5	0	1	0

*These ORUs are science instruments.

10.2 TRMM FSE Physical Characteristics

TBD.

10.3 TRMM FSE Storage Requirements

TBD.

10.4 Miscellaneous Servicing Equipment

TBD.

11.0 TRMM SERVICING CONSUMABLES AND CONTAINERS

11.1 Description and Purpose

When configured as an attached payload, TRMM will require no consumables.

11.2 Physical Characteristics .

Not applicable.

11.3 Storage Requirements

Not applicable.

12.0 CARRIERS FOR TRMM SERVICING MATERIALS

12.1 Description of Carrier

Description of a carrier for contingency servicing (e.g., replacement of the precipitation radar) is TBD.

12.2 STS and SS Carrier Interfaces

TBD.

12.3 Servicing Materials/Carrier Interfaces

TBD.

13.0 TRMM ORBITAL SERVICING ACTIVITIES TIME ESTIMATES

13.1 Mission Servicing Ground Rules and Constraints

No contingency servicing missions are considered in this document.

13.2 Preparatory Servicing Time Estimates

Not applicable.

13.3 Principal Servicing Time Estimates

Not applicable.

13.4 Close-Out Servicing Time Estimate

Not applicable.

14.0 TRMM STRAWMAN SERVICING SCENARIO

14.1 TRMM Strawman Servicing Mission

For its 3-year lifetime as an attached payload, no servicing is planned for TRMM. While contingency servicing is not precluded, the strawman servicing mission entails no servicing activities.

14.2 TRMM Instrument Description

TRMM has a mass of 596 kg, a volume of 7 m^3, and dimensions of 3.5 x 2 x 1 m.

14.3 Strawman Servicing Materials

a. ORUs

TRMM's strawman has no ORUs.

b. FSE and Miscellaneous Equipment

None required.

c. Consumables and Containers

Not applicable.

d. Carriers

None required.

14.4 Estimated Up/Down Mass on STS to Support TRMM Strawman Servicing

Not applicable.

14.5 Estimated Up/Down Volume on STS to Support TRMM Strawman Servicing

Not applicable.

14.6 Storage on Space Station Required to Support Strawman TRMM Servicing

Not applicable.

14.7 TRMM Strawman Servicing Power Estimate

Not applicable.

14.8 TRMM Strawman Servicing Times

Not applicable.

14.9 OMV Flights in Support of TRMM Strawman Servicing Mission

Not applicable, except as noted in 3.7.

15.0 OVERALL REQUIREMENTS SUMMARY FOR SPACE STATION SERVICING OF TRMM

15.1 TRMM Milestones and Servicing Schedule

Event	Location	Date	Comments
(Free-Flyer Option)			
TRMM Launch (ELV)	H-II Japan	3Q 1994	
TRMM Free-Flyer Mission Termination		3Q 1997	
(Free-Flyer to SS Option)			
TRMM Launch (ELV)	H-II Japan	3Q 1994	
TRMM Free-Flyer Mission Termination		3Q 1997	
TRMM Launch		3Q 1997	(OMV Transport)
(SS Option)			
TRMM Launch	TBD	TBD	
TRMM Mission Termination		TBD	

15.2 Summary of TRMM Mass Considerations

a. TRMM in Operational/Servicing Configurations

	Operational	At Servicing
TRMM (dry)	596 kg	596 kg
Consumables	0 kg	0 kg
Total	596 kg	596 kg

b. TRMM Servicing Mass Up and Down in STS

Event	Mass Up	Mass Down
Launch	596 kg	
Termination		596 kg
Totals	596 kg	596 kg
Servicing Totals	0 kg	0 kg

c. TRMM Servicing Storage Mass on Space Station
Not applicable.

15.3 Summary of TRMM Volume Considerations

a. TRMM Volume

Operational Configuration:	7 m^3
Servicing Configuration:	7 m^3
Storage/Transportation Configuration:	7 m^3

b. TRMM Servicing Volumes Up and Down in STS

Event	Volume Up	Volume Down
Launch	7 m^3	
Termination		7 m^3
Totals	7 m^3	7 m^3
Servicing Totals	0 m^3	0 m^3

c. TRMM Servicing Storage Volume on Space Station
Not applicable.

15.4 Summary of TRMM Power Considerations

	Average	Maximum
TRMM Operational Power (W)	507	TBD
TRMM Servicing Power (W)	TBD	TBD
Storage Power, Servicing Materials (W)	TBD	TBD

15.5 Summary of TRMM Servicing Time Estimates
Not applicable.

15.6 Summary of OMV Flights in Support of TRMM Servicing
Not applicable, except as noted in 3.7.

REFERENCES

1. Interview with Dr. John Theon, NASA/HQ (July 24, 1987)

2. NASA Reference Publication 1183, "On Requirements for a Satellite Mission to Measure Tropical Rainfall", April 1987

3. Mission Requirements Database (MRDB), January, 1987

4. Discussions with Mr. Tom Keating, NASA/GSFC (September/October /November, 1987)

EXPERIMENTAL GEO PLATFORM (XGP): MISSION CODE SAAX0501

1.0 XGP PROGRAM AND OPERATIONS INFORMATION

1.1 XGP Points of Contact

Mr. James R. Ramler, NASA/LeRC
Chief, Space Communications Division
21000 Brookpark Road
Cleveland, OH 44135
(216) 433-3475

1.2 XGP Objectives

XGP will demonstrate potential capabilities of future large geostationary satellites and platforms as providers of scientific/commercial services (e.g., Earth resources sensing, weather monitoring, etc.) by developing and demonstrating enabling instrumentation and associated operational methodologies. XGP will establish technologies related to large space structure checkout at LEO and transportation to GEO.

1.3 XGP Servicing Schedule

Launch Date: 4th quarter, 1998.

First Service: 4th quarter, 1998.

Servicing Interval: 3 years.

Operational Lifetime: 20 years.

1.4 XGP Orbital Parameters

XGP is a free-flyer which will operate at an altitude of 34740 km and an inclination of 0 degrees.

2.0 XGP PHYSICAL CHARACTERISTICS

2.1 XGP Description

The XGP will be transported to the SS in one or possibly two Orbiters for unfurling, testing, and possibly assembly. Testing will be accomplished on the Space Based Antenna Range (SBAR). Subsequently, the XGP will be deployed to GEO. Figure 1 shows XGP in operation.

2.2 XGP Physical Characteristics

a. Mass

- Dry: 9000 kg
- Wet: (1000 kg hydrazine) 10000 kg

b. Dimensions

- Stowed: 18 m x 4 m dia
- Assembled and deployed: 50 x 50 x50 m

c. Envelope

- Stowed: 230 m^3
- Assembled and deployed: 125000 m^3

2.3 XGP Moving Parts and Special Features

XGP will carry a rotatable HGA with a diameter of 50 meters.

2.4 XGP Consumables

XGP will require the replenishment of 1000 kg hydrazine every three years while in GEO.

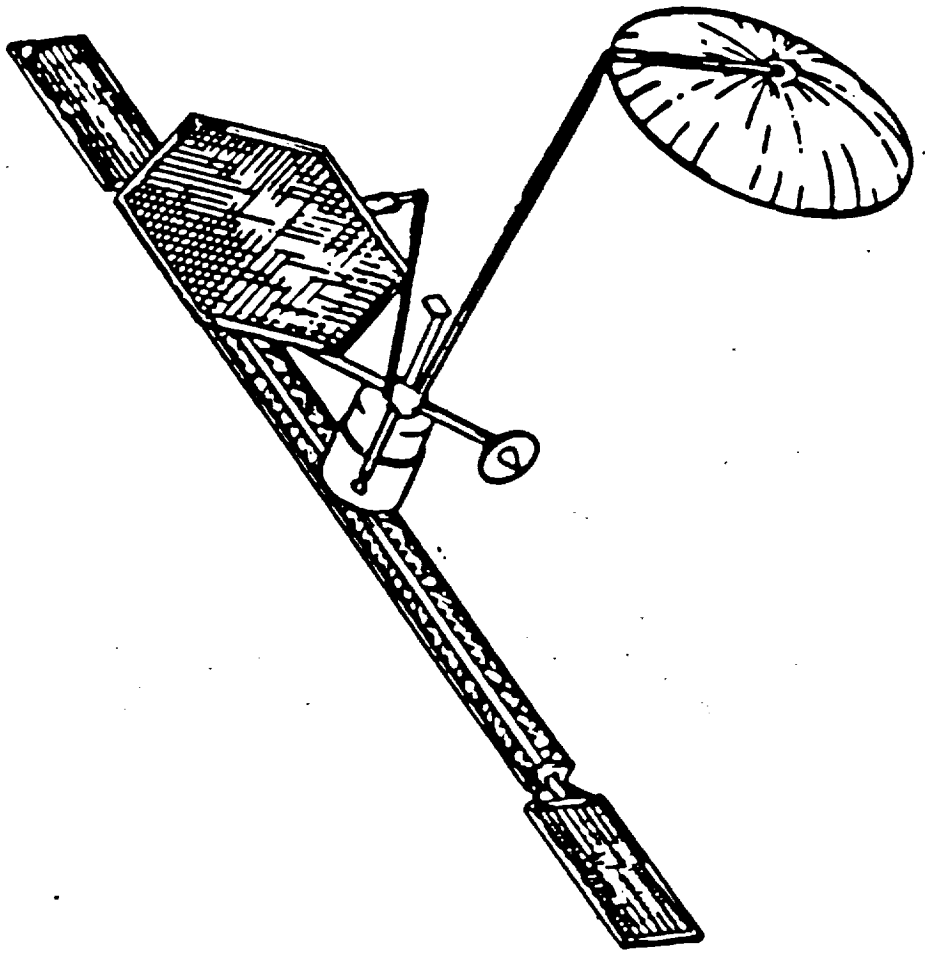

Figure XGP-1. The Experimental GEO Platform

3.0 XGP SERVICING INFORMATION

3.1 General Description of XGP Servicing

The XGP will be unfurled and tested at the Space Station prior to its deployment to geostationary orbit. If XGP requires two shuttle flights to be delivered to the SS, then it will also require assembly at the SS. The OTV will be used to transport the XGP to GEO. Once in GEO, the XGP will require battery replacement and hydrazine replenishment every three years.

3.2 XGP Background

None.

3.3 Primary Role of Space Station in Servicing XGP

The Space Station is utilized by XGP for initial unfurling and for testing before deployment. If XGP requires two Orbiters for transportation to the Station, then initial assembly will also be required. Once in GEO, XGP servicing will require the Space Station based OTV/OMV/FTS to deliver the servicing materials and to perform the servicing activities.

3.4 Primary Space Station Facilities Required for Servicing XGP

- MRMS
- SBAR for predeployment testing.
- SS attachment point for unfurling (and possibly assembly).
- OTV/OMV/FTS.
- Unpressurized storage facility.

3.5 Space Station Personnel Required for Servicing XGP

- Task: Unfurl, checkout, and mate to OTV operations require two EVA and one IVA astronauts.
- Task: Antenna testing requires one IVA technician.
- Task: Once in GEO, the replacement of batteries and the hydrazine tank will be automated. Whether this activity is supported by SS or ground based personnel is TBD.

3.6 Servicing Precautions for XGP

- XGP must be attached to the SS during unfurling and testing, it cannot be free floating.
- No precautions have been identified for GEO servicing.

3.7 OMV Flight Profile for Support of XGP

- A combination OMV-OTV is required to transport XGP to GEO.
- GEO servicing will require, in addition to the OMV-OTV combination transport, the Flight Telerobotic Servicer (FTS) for automated in-situ servicing.

4.0 XGP SERVICING SAFETY CONSIDERATIONS

4.1 XGP Hazardous Systems

- The propulsion subsystem can present safety hazards.
- Transmitted RF could also pose danger to astronauts during Space Station checkout, or to the OTV/OMV/FTS during in-situ servicing.

4.2 XGP Servicing Safety Precautions

No safety precautions have been identified to protect personnel from potential safety hazards.

5.0 XGP SERVICING INTERFACES AND RESOURCE REQUIREMENTS

5.1 XGP Crew Convenience Features

No information available.

5.2 XGP Mechanical Interfaces

No information available.

5.3 XGP Umbilical Interfaces

a. Power

1 kW AC power of TBD voltage and TBD frequency during checkout/test (prior to deployment) at the SS. Requirements for GEO servicing are TBD.

b. Data

- servicing rates TBD.
- 64 kbps operational digital data rate.
- 22000 kbps operational video data rate.

c. Fluid

No information available.

5.4 XGP RF Communication Interface

Intermittent video and voice communications through SS-provided communication equipment is required during the period in which XGP is resident at the Station. Digital data transmission/reception is required only during 1 day of checkout while at the Station.

5.5 XGP Thermal Interface

No information available.

6.0 XGP SERVICING ENVIRONMENT

6.1 XGP Pointing/Orientation Requirements

No exact orientation requirements have been identified. Operationally, however, XGP points towards the earth.

6.2 XGP Contamination Concerns

None specified.

6.3 XGP Radiation Concerns

None specified.

7.0 XGP SERVICING ACCOMMODATIONS

7.1 XGP Equipment Access

Propulsion system and battery replacement access are not yet specified.

7.2 XGP Modularity

The batteries are designed modularly for ease of replacement.

7.3 Automated Servicing

Automated servicing will most likely not be feasible for unfurlment, testing and OTV mating. Automated servicing in GEO is required.

7.4 XGP Servicing in the Space Station Pressurized Modules

SBAR facilities used during testing on the SS are contained within the SS pressurized modules. XGP itself will, however, not be contained within pressurized SS modules.

8.0 XGP SERVICING MATERIALS CHECKLIST

Servicing Equipment	Required	SS Provided	Ref. Section
ORUs (including SIs)	Yes	No	9.0
Flight Support Equipment	Yes	Yes (but not all)	10.0
Other Equipment	No	No	10.0
Servicing Equipment Carrier(s)	Yes	TBD	12.0
Servicing Consumables			
Propellant(s)	Yes	TBD	11.0
container(s)	Yes	TBD	11.0
Cryogen(s)	No	No	11.0
container(s)	No	No	11.0
Liquid(s)	No	No	11.0
container(s)	No	No	11.0
Gas(es)	No	No	11.0
container(s)	No	No	11.0
Other(s)	No	No	11.0
container(s)	No	No	11.0
Servicing Consumables Carrier(s)	TBD	TBD	12.0

9.0 XGP ORBITAL REPLACEABLE UNITS (ORUs)

9.1 Servicing of XGP ORUs

XGP requires the replacement of batteries and hydrazine every three years as it operates in GEO.

9.2 XGP ORU Physical Characteristics

a. Batteries

- Quantity : 1
- Mass (per) : 300^ kg
- Dimensions : 0.55^ x 0.55^x 0.55^m
- Envelope : 0.17^ m^3

b. Hydrazine Tank

- Quantity :1
- Mass (per) :1110^ (1000 kg hydrazine + 110^ kg tank)
- Volume : 1 m^3

9.3 XGP ORU Storage Requirements

None specified.

9.4 Other Environmental Requirements for XGP ORUs

None specified.

10.0 XGP FLIGHT SUPPORT AND MISCELLANEOUS SERVICING EQUIPMENT

10.1 XGP Flight Support Equipment (FSE)

XGP will require tools for SS-based assembly, if assembly is required. These presently unspecified tools may be standard tools provided by the Space Station. The FSE required to support GEO servicing is TBD.

10.2 XGP FSE Physical Characteristics

TBD.

10.3 XGP FSE Storage Requirements

TBD.

10.4 Miscellaneous Servicing Equipment

TBD.

11.0 XGP SERVICING CONSUMABLES AND CONTAINERS

11.1 Description and Purpose

XGP requires 1000 kg of hydrazine every three years while in GEO. The method of replacement (either hydrazine tank changeout or the refilling of tanks) has not been determined. This document's strawman in Section 14, however, assumes that an OTV with a Flight Telerobotic Servicer will changeout the battery ORU and hydrazine tank. In this case, hydrazine replenishment is treated as an ORU changeout. See Section 9.2.

11.2 Storage Requirements

TBD.

12.0 CARRIERS FOR XGP SERVICING MATERIALS

12.1 Description of Carriers

XGP requires servicing at the SS only for its initial unfurlment and testing. No servicing carriers are required for this SS-based servicing mission since the tools needed for assembly are assumed to be provided by the SS. GEO servicing will require material carriers, which are currently undefined.

12.2 STS and SS Carrier Interfaces

- Carrier interfaces for SS-based servicing are not applicable.
- Carrier interfaces for GEO-based servicing are TBD.

12.3 Servicing Materials/Carrier Interfaces

- Carrier interfaces for SS-based servicing are not applicable.
- Carrier interfaces for GEO-based servicing are TBD.

13.0 XGP ORBITAL SERVICING ACTIVITIES TIME ESTIMATES

13.1 XGP Servicing Ground Rules and Constraints

This data book addresses no contingency servicing operations.

An assumption is made that XGP's replenishment hydrazine is changed out with its tank rather than transferred .

An assumption is made that XGP arrives in one Orbiter and, therefore, requires no assembly.

The SS attachment point is assumed to be on the lower boom.

13.2 Preparatory Servicing Time Estimates

a. SS-Based Servicing

Activity	Elapsed Time (hr:min)	IVA Time (Crew-hr:min)	EVA Time (Crew-hr:min)	Robotics Time (hr:min)
1. Transport and attach XGP to its SS-based attachment point	1:30^	3:00^	3:00^	1:30^

b. GEO-based Servicing

1. Unload Servicing Materials from Orbiter	0:30^	0:30^	0:00^	0:30^
2. Load OMV-OTV with Servicing Materials	0:30^	0:30^	0:00^	0:30^

13.3 Principal Servicing Time Estimates

a. SS-Based Servicing

Activity	Elapsed Time (hr:min)	IVA Time (Crew-hr:min)	EVA Time (Crew-hr:min)	Robotics Time (hr:min)
1. Unfurl XGP	TBD	TBD	TBD	TBD
2. Test XGP using SBAR	TBD	TBD	TBD	TBD
3. Mate XGP to OTV/OMV	TBD	TBD	TBD	TBD

b. GEO-Based Servicing

Activity	Elapsed Time (hr:min)	IVA Time (Crew-hr:min)	EVA Time (Crew-hr:min)	Robotics Time (hr:min)
1. Replace Battery ORU	TBD	TBD	TBD	TBD
2. Replace Hydrazine ORU	TBD	TBD	TBD	TBD

13.4 Close-Out Servicing Time Estimates

a. SS-based Servicing

Activity	Elapsed Time (hr:min)	IVA Time (Crew-hr:min)	EVA Time (Crew-hr:min)	Robotics Time (hr:min)
1. Detach and return XGP from its SS-based attachment point to the SS service bay	1:30^	3:00^	3:00^	1:30^

b. GEO-Based Servicing

1. Unload Servicing Materials from OMV-OTV	0:30^	0:30^	0:00^	0:30^
2. Load Servicing Materials into Orbiter	0:30^	0:30^	0:00^	0:30^

14.0 XGP STRAWMAN SERVICING SCENARIO

14.1 XGP Strawman Servicing Mission

Two scenarios typify the servicing requirements of XGP. The first strawman involves the robotics transport of XGP from the service bay to the SS attachment location (assumed to be the lowerboom), the unfurlment and testing of XGP, its return to the service bay, and XGP's attachment to the OTV. This mission, strawman servicing mission Type A, is the only XGP servicing which occurs at the Space Station. This strawman also assumes that XGP arrives at the SS with a full hydrazine tank. No SS-based hydrazine transfer is required. The other strawman addresses servicing in GEO. This mission, strawman Type B, occurs every three years and involves not only the replacement of 1000 kg hydrazine but also the replacement of XGP batteries.

14.2 XGP Description

XGP is a 10000 kg (wet) platform which occupies 230 m^3 in the stowed configuration and 125000 m^3 in the unfurled operational mode.

14.3 Strawman Servicing Materials

a. ORUs

- Type A Mission:

  XGP SS-servicing requires no ORUs

- Type B Mission:
- Batteries:
  - Mass : 300^ kg
  - Dimensions : 0.55^ m x 0.55^m x 0.55^ m
  - Volume : 0.17 m^3
  - Storage Requirements: TBD
- Hydrazine Tank
  - Mass (full) : 1100^ kg
  - Dimensions : 0.3^ m dia
  - Volume : 1^m^3
  - Storage Requirements: TBD

b. FSE and Miscellaneous Equipment

- Type A Mission:

  It is assumed that the SS provides all FSE necessary to attach XGP to the SS and to test it using SBAR. Unfurlment is assumed to require only SS-provided tools.

- Type B Mission:

  FSE for GEO-based servicing is TBD.

c. Consumables and Containers

- Type A Mission:

  No consumables are required for SS-based servicing.

- Type B Mission:

  The hydrazine tank is described as an ORU in Section 14.3.a.

d. Carriers

- Type A Mission:

  No carrier is required for servicing materials.

- Type B Mission:

  A carrier of TBD kg and TBD m^3 will be required to transport the XGP-servicing materials and FSE from the Earth to the SS.

14.4 Estimated Up/Down Mass to Support XGP Strawman B Servicing

a. Strawman Servicing Mission Type A

There is no servicing mass up/down requirement for Type A Servicing.

b. Strawman Servicing Mission type B

SERVICING MATERIAL	MASS, UNPRESSURIZED TRANSPORT (kg)	MASS, PRESSURIZED TRANSPORT (kg)	MASS, TOTAL (kg)
Equipment			
SI(s)	0	0	0
ORU(s)	300^	0	300^
Unique FSE	TBD	0	TBD
Misc. Equipment	0	0	0
Equipment Subtotal*	300^	0	300^
Equipment Carrier(s)	TBD	0	TBD
Subtotal, Equipment* Mass Up	300^	0	300^
Subtotal, Equipment* Mass Down	300^	0	300^
Consumables			
Consumables	1000	0	1000
Consumables Containers	110^	0	110^
Consumables Containers' Carriers	TBD	0	TBD
Subtotal, Consumables Mass Up	0	0	0
Subtotal, Consumables Mass Down	0	0	0
Total Mass Up	1410^	0	1410^
Total Mass Down	410^	0	410^

*Totals and Subtotals do not reflect the values which are TBD.

14.5 Estimated Up/Down Volume to Support XGP Strawman Servicing

a. Strawman Servicing Mission Type A

There is no servicing mass volume up/down required for Type A servicing.

b. Strawman Servicing Mission Type B

SERVICING MATERIAL	VOLUME, UNPRESSURIZED TRANSPORT (m^3)	VOLUME, PRESSURIZED TRANSPORT (m^3)	VOLUME, TOTAL (m^3)
Equipment			
SI(s)	0	0	0
ORU(s)	0.2^	0	0.2^
Unique FSE	TBD	0	TBD
Misc. Equipment	0	0	0
Equipment Subtotal*	0.2^	0	0.2^
Equipment and Carriers* Subtotal	0.2^	0	0.2^
Consumables			
Consumables in Containers	1.0^	0	1.0^
Consumables, Containers, and Carriers	TBD	0	TBD
Total Volume Up*	1.2^	0	1.2^
Total Volume Down*	1.2^	0	1.2^

*Totals and Subtotals do not reflect the values that are TBD.

14.6 SS Storage Required to Support Strawman XGP Servicing

TBD.

14.7 XGP Strawman Servicing Power Estimates

	Operational Mode (W)		Servicing Mode (W)	
	AVG	MAX	AVG	MAX
XGP (Bus & Instruments)	1000	TBD	1000	TBD

14.8 XGP Strawman Servicing Time Estimates

a. Servicing Mission Type A

SERVICING ACTIVITY	Elapsed Time (hr:min)	IVA Time (Crew-hr:min)	EVA Time (Crew-hr:min)	Robotics Time (hr:min)
1. Unloading XGP from Orbiter and transfer to Storage area	0:30^	0:30^	0:00^	0:30^
2. Transport XGP to lower boom and attach it	1:30^	3:00^	3:00^	1:30^
3. Unfurl XGP	TBD	TBD	TBD	TBD
4. Test XGP using SBAR	TBD	TBD	TBD	TBD
5. Transport XGP from lower boom to service facility	1:30^	3:00^	3:00^	1:30^
6. Mate XGP to OTV/OMV	TBD	TBD	TBD	TBD
Total*	3:30	6:30^	6:30^	3:30^

*Total does not reflect values which are TBD.

b. Servicing Mission Type B

	Elapsed Time (hr:min)	IVA Time (Crew-hr:min)	EVA Time (Crew-hr:min)	Robotics Time (hr:min)
1. Unload Orbiter	0:30^	0:30^	0:00^	0:30^
2. Load OMV-OTV	0:30^	0:30^	0:00^	0:30^
3. Replace Battery ORU	TBD	TBD	0:00	TBD
4. Replace Hydrazine ORU	TBD	TBD	0:00	TBD
5. Unload OMV-OTV	0:30^	0:30^	0:00^	0:30^
6. Load Orbiter	0:30^	0:30^	0:00^	0:30^
Total*	2:00^	2:00^	0:00^	2:00^

*Total does not reflect values which are TBD.

14.9 OMV Flights in Support of XGP Strawman B Servicing Mission

The OMV will be required in conjunction with the OTV. The OTV/OMV will be required to deploy XGP to GEO after initial SS servicing and to service XGP in-situ every 3 years.

15.0 OVERALL REQUIREMENTS SUMMARY FOR SS SERVICING OF XGP

15.1 XGP Milestones and Servicing Schedule (Nominal Mission Model)

Note: This data book tabulates servicing requirements only through the year 2005.

Event	Location	Date
Launch	KSC	4th quarter, 1998
1st SS Service	SS-attached	4th quarter, 1998
Deployment		1st quarter, 1999
1st GEO Service	GEO-In-situ	4th quarter, 2001
2nd GEO Service	GEO-In-situ	4th quarter, 2004
Termination	------	2018

15.2 Summary of XGP Mass Considerations

a. XGP Mass Summary

Servicing/Operational XGP Mass (dry):	9000 kg
Servicing/Operational Consumables Mass:	1000 kg
Servicing/Operational XGP Mass (wet):	10000 kg

b. XGP Servicing Mass Up and Down in STS

Event	Mass Up (kg)	Mass Down (kg)
Launch	10000	0
1st SS Servicing	0	0
1st GEO Service*	1400	400
2nd GEO Service*	1400	400
Termination	0	9000
Totals*	12800	9800
Servicing Totals*	2800	800

* These values do not reflect the data which are TBD.

c. XGP Servicing Storage Mass on Space Station

Calendar Year	95	96	97	98	99	00	01*	02	03	04*	05
Storage Mass (kg)											
Unpressurized	0	0	0	0	0	0	1400	0	0	1400	0
Pressurized	0	0	0	0	0	0	0	0	0	0	0
Total**	0	0	0	0	0	0	1400	0	0	0	0

* 4th quarter.
**Values do not reflect the data which are TBD.

15.3 Summary of XGP Volume Considerations

a. XGP Volume

XGP Volume, Operational Configuration: 125000 m^3
XGP Volume, Servicing Configuration: 125000 m^3
XGP Volume, Storage/Transportation Configuration: 230 m^3

b. XGP Servicing Volumes Up and Down in STS

Event	Volume Up (m^3)	Volume Down (m^3)
Launch	230	0
1st SS Servicing	0	0
1st GEO Servicing	1.2	1.2
2nd GEO Servicing	1.2	1.2
Termination	0	230
Totals	230	230
Servicing Totals*	2.4	2.4

*Servicing Totals do not reflect the data which are TBD.

c. XGP Servicing Storage Volume on Space Station

Calendar Year	95	96	97	98	99	00	01	02	03	04	05
Storage Volume (m^3)											
Unpressurized	0	0	0	0	0	0	1.2*	0	0	1.2*	0
Pressurized	0	0	0	0	0	0	0	0	0	0	0
Total**	0	0	0	0	0	0	1.2*	0	0	1.2*	0

* 4th quarter.
** Values do not reflect the data which are TBD.

15.4 Summary of XGP Power Considerations

	AVG	MAX
XGP Operational Power (W)	1000	TBD
XGP Servicing Power (W)	1000	TBD
Storage Power, Servicing Materials (W)	TBD	TBD

15.5 Summary of XGP Servicing Time Estimates*

Calendar Year	95	96	97	98	99	00	01	02	03	04	05	Total
Elapsed Time (hr:min)	0:00	0:00	0:00	3:30^	0:00	0:00	2:00^	0:00	0:00	2:00	0:00^	TBD
IVA Time (Crew-hr:min)	0:00	0:00	0:00	6:30^	0:00	0:00	2:00^	0:00	0:00	2:00	0:00^	TBD
EVA Time (Crew-hr:min)	0:00	0:00	0:00	6:30^	0:00	0:00	0:00^	0:00	0:00	0:00	0:00^	TBD
Total Crew Time (hr:min)	0:00	0:00	0:00	13:00^	0:00	0:00	2:00^	0:00	0:00	2:00	0:00^	TBD
Robotics Time (hr:min)	0:00	0:00	0:00	3:30^	0:00	0:00	2:00^	0:00	0:00	2:00	0:00^	TBD

*Time estimates do not refect the values which are TBD for some activities.

15.6 Summary of OMV Flights in Support of XGP Servicing

Calendar Year	95	96	97	98	99*	00	01**	02	03	04**	05	TOTAL
Number of OMV/OTV Flights	0	0	0	0	1	0	1	0	0	1	0	3

* 1st quarter
** 4th quarter

REFERENCES

1. Telephone conversation with Mr. Louis Cuccia, NASA/HQ, July 2, 1987.

2. Telephone conversation with Mr. Steve Stevenson, NASA/Lewis RC, Mailstop 501-4, (216) 433-3466, August 25, 1987.

3. Mission Requirements Database, January, 1987, NASA/JSC.

APPENDIX A

ABBREVIATIONS AND ACRONYMS

		Related Program
3A	3-axis Recording Accelerometer Unit	MMPF
3S	Space Station Spartan	3S
A	Ampere(s)	
AAS	Aspect and Alignment System	POF
AC	Aspect Camera	AXAF
AC	Alternating Current	
ACE	Actuator Control Electronics	HST
ACR	Active Cavity Radiometer	STO/SS
ACS	Attitude Control System (Module)	
ACTS	Advanced Communications Technology Satellite	LASERCOM
AD	Aperture Door	HST
AEPI	Atmospheric Emissions Photometric Imaging	STO/POP
AFD	Aft Flight Deck	
AFF	Autoignition Furnace Facility	MMPF
ALF	Acoustic Levitator Facility	MMPF
ALT	Radar Altimeter	Eos
AMF	Atmospheric Microphysics Facility	MMPF
AMIR	Advanced Microwave Imaging Radar	Eos
AMRIR	Advanced Medium Resolution Infrared Radiometer	Eos
AMS	Accelerometer Measurement System	LSRF
AMSR	Advanced Microwave Scanning Radiometer	Eos
AMSU	Advanced Microwave Sounding Unit	Eos
amu	Atomic Mass Unit	
AMU	AVHRR Mirror Unit	TRMM
AO	Ampoule Cutting/Opening Device	MMPF
AP	Automated Cutting/Polishing Unit	MMPF
APAE	Attached Payload Accommodation Equipment	
APMS	Animal Physiological Monitoring System	LSRF
ARC	Ames Research Center	
ARGOS+	Data Collection System (French)	Eos

ABBREVIATIONS AND ACRONYMS (CONT'D)

		Related Program
AS	Atomic Spectrometer	LSRF
ASF	Alloy Solidification Facility	MMPF
ASO	Advanced Solar Observatory	HRSO, POF
ASTROMAG	The Particle Astrophysics Magnet Facility	ASTROMAG
ATF	Astrometric Telescope Facility	ATF
ATLID	Atmospheric LIDAR	Eos
atm	Atmosphere(s) (Pressure)	
ATSR+	Along Track Scanning Radiometer	Eos
avg	average	
AVHRR	Advanced Very High Resolution Radiometer	TRMM
AXAF	Advanced X-ray Astrophysics Facility	AXAF
BAT	Battery	HST
BAT	Modular Power Subsystem Batteries	EP
BATSE	Burst and Transient Source Experiment	GRO
BC	Battery Charger	MMPF
BCE	Beamsp/Feter Control Electronics	SIRTF
BCF	Bulk Crystal Facility	MMPF
BCS	Bragg Crystal Spectrometer	AXAF
BD	Body Densitometer	LSRF
BDM	Boom Drive Motor	POF
BGA	Blood Gas Analyzer	LSRF
BK	Blood Kit	LSRF
BIF	Bioreactor/Incubator Facility	MMPF
bps	Bits per Second	
BMMS	Body Mass Measurement Device	LSRF
BOS	Bright Object Sensor	AXAF
Btu	British Thermal Unit(s)	
C	Centrigrade (Celsius)	
CADH	Command and Data Handling (Module)	

ABBREVIATIONS AND ACRONYMS (CONT'D)

		Related Program
CAT	SEPAC Cathode	STO/SS
CAXDE	Coded-Aperture X-ray Detector Electronics	POF
CC	Clinical Chemistry	LSRF
CCC	Charge Current Controller	HST
CCD	Charge-Coupled Device (or Detector)	
CCS	Cage Cleaning System	LSRF
CCTV	Closed-Circuit Television	ASTROMAG
CCW	Control Center/Workbench	LSRF
CDCE	Cosmic Dust Collection Experiment	CDCE
C&DH	Communications and Data Handling	
CE	Camera Electronics	SIRTF
CE	Cleaning Equipment	MMPF
CE	Coronagraph Electronics	POF
CEEX	CELSS Experiment	LSRF
CF	Centrifuge	MMPF
CFA	Centrifugal Fast Analyzer	LSRF
CFEF	Continuous Flow Electrophoresis Facility	MMPF
C.G.	Center of Gravity	
CGPS	Center of Gravity Ponting System	TRMM
CH	Clinical Hematology	LSRF
char	Characterization	
CIAS	Cell Image Analysis System	LSRF
CIP	Coordinate Instrument Package	ARSO
CL	Camera Locker	MMPF
cm	Centimeter	
CMD	Command	
CME	Cryogen Management Electronics	SIRTF
CMG	Control Moment Gyros	LDR

ABBREVIATIONS AND ACRONYMS (CONT'D)

		Related Program
COMPTEL	Imaging Compton Telescope	GRO
COP	Co-Orbiting Platform	SIRTF
CP	Computer Processor	TRMM
CPD	Cruciform Power Distributor	Astro
CPPF	Critical Point Phenomena Facility	MMPF
CR	Correlation Radiometer	Eos
CRIS	Cosmic Ray Isotape Spectrometer	ASTROMAG
CRNE	Cosmic Ray Nuclei Experiment	CRNE
CRTR	Cryogen Resupply Tanker	
CS	Chemical Supply Storage Facility	MMPF
CSR	Conically Scanning Radiometer	Eos
CSRD	Continuous Sweat Rate Device	LSRF
CSS	Coarse Sun Sensor	HST
CT	Cryofluids (Storage) Tank	MMPF
CU	Control Unit	LSRF
cu	Cubic	
CY	Calendar Year	
dB	Decibel	
DB	Direct Broadcast	Eos
DBA	Diode Box Assembly	HST
DBF	Droplet/Spray Burning Facility	MMPF
DC	Direct Current	
DCID	Dynamic Cardiac Imaging Device	LSRF
deg	Degree	
DEP	Dedicated Experiment Processor	HRSO
DF224	DF-224 Computer	HST
dia	Diameter	
DIU	Data Interface Unit	HST
DM	Digital Microscope	LSRF

ABBREVIATIONS AND ACRONYMS (CONT'D)

		Related Program
DM	Digital Multimeter	MMPF
DMS	Data Management System	ATF
DMU	Data Management Unit	HST
DP	Digital Pressure (Transducer)	MMPF
DP	Data Processor	LAWS
DR	Digital Recording (Oscilloscope)	MMPF
DT	Digital Thermometer	MMPF
ECG	EchoCardioGraph, (C/V)	LSRF
ECU	Electronics Control Unit	HST
EE	Etching Equipment	MMPF
EE	Exercise Equipment	LSRF
EF	Electroepitaxy Facility	MMPF
EGRET	Energetic Gamma Ray Experiment	GRO
EIU	Electronics Interface Unit	HST
ELEC	STO/SS Instrument Electronics	STO/SS
ELF	Electrostatic Levitator Facility	MMPF
ELR	Elisa Reader	LSRF
ELV	Expendable Launch Vehicle	
EM	Electro-Magnetic	
EM	EM-shielded Storage Locker	MMPF
EM	Environmental Monitor	LSRF
EMC	Electro-magnetic Compatibility	
EMI	Electro-magnetic Interference	
EMLF	EM Levitator Facility	MMPF
EMU	Extravehicular Mobility Unit	SIRTF
Eos	Earth Observing System (named for Greek Goddess of Dawn)	Eos
EP	Explorer Platform	EP
EPH	Electro-Phoresis for Hemoglobin	LSRF

ABBREVIATIONS AND ACRONYMS (CONT'D)

		Related Program
EPOP	European Polar Orbiting Platform	Eos
EP/TCE	Electrical Power/Thermal Conditioning Electronics	HST
equip	Equipment	
ERBE	Earth Radiation Budget Experiment	HH/ERBE
ERBI	Earth Radiation Budget Instrument	Eos
ES	Equipment Section	HST
ESD	Electrostatic Discharge	
ESMR	Electrically Scanning Microwave Radiometer	TRMM
ESTR	Engineering/Science Tape Recorder	HST
ETR	Eastern Test Range	
EVA	Extra-Vehicular Activity	
EW	Electronics Workbench	MMPF
FAS	Fine Attitude Sensor	POF
FC	Flow Cytometer	LSRF
FCS	Fecal Collection System	LRSF
FD	Freeze Dryer	LSRF
FFF	Free Float Facility	MMPF
FG	Fluids Glovebox	MMPF
FGE	Fine Guidance Electronics	HST
FGS	Fine Guidance Sensors	HST
FGSE	Fine Guidance Sensor Electronics	SIRTF
FH	Fluid Handling (Tools)	MMPF
FHST	Fixed Head Star Tracker	AXAF
FL	Film Locker	MMPF
FOC	Faint Object Camera	HST
FOS	Faint Object Spectrograph	HST
FOV	Field of View	
FP	Fuse Plug	HST

ABBREVIATIONS AND ACRONYMS (CONT'D)

		Related Program
FPF	Fluid Physics Facility	MMPF
F/P-INT	Fabry-Perot Interferometer	Eos
FPIP	Focal Plane Instrument Package	HRSO
fps	Feet per Second	
FR	Freezer	MMPF
freq	Frequency	
FSE	Flight Support Equipment	
FSS	Flight Support System	
FTXDE	Fourier Transform X-ray Detector Electronics	POF
FUSE	Far Ultraviolet Spectroscopic Explorer	EP
fwd	Forward	
FZCGF	Float Zone Crystal Growth Facility	MMPF
g	Grams	
g	Gravity Acceleration	
GAMS	Gas Analyzer/Mass Spectrometer	LSRF
GBits	Gigabits (One billion bits)	
GC	Gamma Counter	LSRF
GCM	General Circulation Model	TRMM
GEA	Gimbal Electronics Assembly	HST
GEO	Geosynchronous Earth Orbit	
GEV	Giga Electron Volts	
GLRS	Geodynamics Laser Ranging System	Eos
GM	Gax Mixing & Distribution System	MMPF
GN_2	Gaseous Nitrogen (Molecular)	SIRTF
GND	Ground	
GOMR	Global O-Zone Monitoring Radiometer	Eos
GP	General Purpose (Hand Tools)	MMPF
GP	Gregorian Pod (Telescope Facility)	HRSO

ABBREVIATIONS AND ACRONYMS (CONT'D)

		Related Program
GPWL	General Purpose Workbench (Large)	LSRF
grms	Gravity Acceleration Root-Mean-Square	
GRO	Gamma Ray Observatory	GRO
GS	Gas Sampling (Variable Draw Pumping System)	MMPF
GSE	Ground Support Equipment	
GSFC	Goddard Space Flight Center	
HEAO	High Energy Astronomy Observatory	ASTROMAG
HETGS	High Energy Transmission Grating Spectrometer	AXAF
HGA	High Gain Antenna	
HGAD	High Gain Antenna Drive (Assembly)	AXAF
HGAE	High Gain Antenna Electronics	AXAF
HGAS	High Gain Antenna Subsystem	EP
HH	Hitchhiker	HH/ERBE
HIRIS	High Resolution Imaging Spectrometer	Eos
HPLC	High Pressure Liquid Chromatograph	LSRF
hr	Hour	
HRC	High Resolution Camera	AXAF
HRS	High Resolution Spectrograph	HST
HRSO	High Resolution Solar Observatory	HRSO
HRTS	High Resolution Telescope and Spectrograph	STO/SS
HSP	High Speed Photometer	HST
HST	Hubble Space Telescope	HST
HTF	High Temperature Furnace	MMPF
HTR	Heater	HST
HUT	Hopkins Ultraviolet Telescope	Astro
HVPS	High Voltage Power Supply	POF
HW	Hand Washer	LSRF
Hz	Hertz	
ICD	Interface Control Document	
ICI	Ionized Calcium Instrument	LSRF

ABBREVIATIONS AND ACRONYMS (CONT'D)

		Related Program
ICU	Instrumentation and Control Unit	HST
IDU	Image Display Unit	HRSO
I/F	Interface	
IFD	Immunofluorescence Detector	LSRF
IFF	Isoelectric Focusing Facility	MMPF
IHPC	Isolated Heart Profusion Chamber	LSRF
IMCS	Image Motion Compensation System	Astro
in	Inch(es)	
INC	Incubator	LSRF
INCT	Incubator, Cell and Tissue (Holding Unit)	LSRF
INS	Instruments	AXAF
IOC	Initial Operational Capability	
IPC	Imaging Proportional Counter	LAMAR
IPCU	Interface Power Control Unit	HST
IPS	Instrument Pointing System	Astro
IR	Infrared	
IRAC	Infrared Array Camera	SIRTF
IRB	Initial Reference Base	AXAF
IRAS	Infrared Astronomical Satellite	SIRTF
IR-RAD	Infrared Radiometer	Eos
IRS	Infrared Spectrometer	SIRTF
ISO	Imaging Spectrometric Observatory	STO/POP
ITIR	Intermediate Thermal Infrared Radiometer	Eos
IU	Interface Unit	
IVA	Intra-Vehicular Activity	
JPL	Jet Propulsion Laboratory	
JPOP	Japanese Polar Orbiting Platform	Eos
JSC	Johnson Space Center	
K	Kelvin	SIRTF
KAPD	Kits (Animal/Plant Dissect, Fluids)	LSRF

ABBREVIATIONS AND ACRONYMS (CONT'D)

		Related Program
kbps	Kilobits per Second	
kg	Kilogram	
kHz	Kilohertz	
km	Kilometer	
KSC	Kennedy Space Center	
KUSP	Ku-Band Signal Processor	
kW	Kilowatt	
l	Liter(s)	
LAMAR	Large Area Modular Army of Reflectors	LAMAR
LASER	Light Amplification by Stimulated Emission of Radiation	
LASERCOM	Laser Communications Engineering Test	LASERCOM
LAWS	Laser Atmospheric Wind Sounder	Eos
lb	Pounds(s)	
LBCGF	Bridgman, Large	MMPF
LBNP	Lower Body Negative Pressure (Device)	LSRF
LC	Laboratory Centrifuge	LSRF
LDEF	Long Duration Exposure Facility	CDCE
LDR	Large Deployable Reflector	LDR
LETGS	Low Energy Transmission Grating Spectrometer	AXAF
LEO	Low-Earth Orbit	
LFB	Laminar Flow Bench	LSRF
LGA	Low-Gain Antenna	
LOS	Line of Sight	
LRF	Latex Reactor Facility	MMPF
LSRF	Life Sciences Research Facility	LSRF
M	Mask	POF
m	Meter(s)	
MA	TBD	EP
MACS	Modular Attitude Control Subsystem	
MAG	Magnetosphere Currents/Fields	Eos

ABBREVIATIONS AND ACRONYMS (CONT'D)

		Related Program
MAM	Mask Alignment Mechanism	POF
MAM	Mirror Attenuator Mosaic	HH/ERBE
MAP	Multichannel Astrometric Photometer	ATF
MAS	Matter-Antimatter Spectrometer	ASTROMAG
MAT	Multiple Access Transponder	HST
max	Maximum	
Mbps	Megabits per Second	
MByte	Mega Bytes	
MC	Master Computer	MMPF
MCDU	Master Control and Data Unit	HRSO
MCP	Microchannel Plate	AXAF
MCP	Microprocessor	LSRF
MCU	Mechanism Control Unit	HST
MERIS	Medium Resolution Imaging Spectrometer	Eos
mg	Milligram	
MFR	Manipulator Foot Restraint	HST
MHz	Megahertz	
MIC	Multiple Instrument Chamber	SIRTF
min	Minimum	
	Minute(s)	
MIPS	Multiband Imaging Photometer	SIRTF
MJ	Mega Joules	ASTROMAG
MLS	Microwave Limb Sounder	Eos
MMF	Metabolic Measurement Facility	LSRF
mm	Millimeter(s)	
MMP/ CHEMSAT	Magnetospheric Multiprobes/CHEMSAT	STO/POP
MMPF	Microgravity and Materials Processing Facility	MMPF
MMS	Multi-Mission Spacecraft	EP
MODIS-N	Moderate Resolution Imaging Spectrometer -Nadir	
MODIS-T	Moderate Resolution Imaging Spectrometer -Tilt	

ABBREVIATIONS AND ACRONYMS (CONT'D)

		Related Program
MP	Microscope Supplies	MMPF
MPD	Magnetosphere Particles Detector	Eos
MPE	Mission Provided Equipment	
MPF	Membrane Production Facility	MMPF
MPS	Modular Power Subsystem	
MRDB	Mission Requirements Data Base	
MRMS	Mobile Remote Manipulator System	
M@R SSE	Maintainance and Refurbishment Space Support Equipment	HST
MS	Microscope System	MMPF
MS	Mission Specialist	
MSC	Mobile Servicing Center	
MSFC	Marshall Space Flight Center	
MSK	Microscope and Staining Kit	LSRF
MSR	Muscle Strength and Range	LSRF
MSS	Magnetic Sensing System (Magnetometer)	HST
MST	Module Service Total	3S
MTB	Magnetic Torquer Bars	AXAF
MTS	Magnetic Torquer	HST
MWPC	Multi-Wire Proportional Counter	CRNE
N	Newton	
N.A.	Not Applicable	
N/A	Not Applicable	
No.	Number	
NASA	National Aeronautics and Space Administration	
NOAA	National Oceanic and Atmospheric Administration	
NPOP	NASA Polar Orbiting Platform	Eos
NSTS	National Space Transportation System	
OBC	On-Board Computer	
OCE	Optical Control Electronics	HST
OCTS	Ocean Color and Temperature Scanner	Eos
OFPF	Optical Fiber Pulling Facility	MMPF
OGE	Objective Grating Electronics	AXAF

ABBREVIATIONS AND ACRONYMS (CONT'D)

		Related Program
OMS	Orbiter Manuevering Subsystem	
OMV	Orbital Manuevering Vehicle	
OP	Optical Pyrometer	MMPF
OPCGF	Organic & Polymer Crystal Growth Facility	MMPF
oper	Operation(al)	
ORU	Orbital Replaceable Unit	
OSC	Oscillator	
OSMI	Oscilloscope (Minioscilloscope)	LSRF
OSSA	Office of Space Science and Applications	
OSSE	Oriented Scintillation Spectrometer Experiment	GRO
OSU	Orbital Serviceable Unit	
OTA	Optical Telescope Assembly	HST
OTV	Orbital Transfer Vehicle	
PA	Physiological Amplifier	LSRF
PA	WISP Power Amplifier	STO/SS
PB	Playback	
PCB	Printed Circuit Board	STO/SS
PCBD	PreCordial Bubble Detector	LSRF
PCBR	Personal Computer for Behavioral Research	LSRF
PCGF	Protein Crystal Growth Facility	MMPF
PCU	Polarization Calibration Unit	HRSO
PCU	Power Control Unit	HST
PD&CU	Power Distribution and Control Unit	HST
PDU	Power Distribution Unit	HST
PE	Photometer Electronics	SIRTF
PEA	Payload Electronics Assembly	HST
PED	Platform Equipment Deck	EP
PEM	Particle Environment Monitor	Eos
PET	Positron Emission Tomography	LSRF
PEU	Pallet Electronic Unit	HST
PF	Primate Food	LSRF
PFR	Portable Foot Restraint	HST

ABBREVIATIONS AND ACRONYMS (CONT'D)

		Related Program
PG	Particulate Glovebox	MMPF
PGC	Plant Growth Chamber	LSRF
PGCF	Premixed Gas Combustion Facility	MMPF
PH	PH Meter	MMPF
PHA	PH/Ion Analyzer (PH Meter)	LSRF
PHK	Primate Handling Kit	LSRF
PIA	Payload Interface Adapter	
PIMS	Plasma Interaction Monitoring System	PIMS
PIS	Photographic Imaging System	LSRF
P/L	Payload	
P/L-EXEC	Payload Executive	Eos
PLB	Payload Bay	
PLC	Pressurized Logistics Carrier	STO/SIG
PLR	Plethysmograph, Regional	LSRF
PM	Propulsion Module	3S
POCC	Payload Operations Control Center	
POF	Pinhole Occulter Facility	POF
ppm	Parts Per Million	
PPS	Payload Positioning System	
PPS-PODS	Precise Position System - Precise Orbit Determination System	Eos
PS	Portable UV Sterilization Source	MMPF
psi	Pounds per Square Inch	
psia	Pounds per Square Inch (Absolute)	
PSSA	Payload Support Strut Assembly	Astro
PSU	Power Switching Unit	EP
PTCU	Power and Thermal Control Unit	HRSO
Pw	Primate Water	LSRF
PWR	Power Module	3S
QD	Quick Disconnect	
QM	Quartz Microprobe	MMPF

ABBREVIATIONS AND ACRONYMS (CONT'D)

		Related Program
qtr	Quarter(s)	
qty	Quantity	
RADAR	Precipitation Radar	TRMM
RBA	ReBreathing Assembly	LSRF
RBF	Rodent Breeding Facility	LSRF
RD	Radiation Dosimeter	LSRF
REEL	Tether Reel	STO/SS
Ref	Reference	
REF	Refrigerator (Refrigerator/Freezer)	LSRF
REFC	Refrigerator/Centrifuge	LSRF
RF	Radio Frequency	
RF	Refrigerator	MMPF
RF1	Rodent Food #1	LSRF
RF2	Rodent Food #2	LSRF
RF3	Rodent Food #3	LSRF
RFCS	RF Circulator Switch	HST
RFM	RF Multiplexer	HST
RFS	RF Switch	HST
RFTS	RF Transfer Switch	HST
RGP	Rate Gyro Package	AXAF
RIAE	RadioImmunoAssay Equipment	LSRF
RIS	RadioIsotope Stowage	LSRF
RM	Radar Magnetrons	TRMM
RMS	Remote Manipulator System	
rms	Root Mean Square	
RPDP	Recoverable Plasma Diagnostics Package	STO/SS
RPHF	Restrained Primate Holding Facility	LSRF
RPM	Revolutions Per Minute	
RPS	RPDP Power Supply	STO/SS
RSCF	Rotating Spherical Convection Facility	MMPF

ABBREVIATIONS AND ACRONYMS (CONT'D)

		Related Program
RSM	Radar Scan Motor	TRMM
RSU	Rate Sensor Unit	HST
RT	Real Time	
RW1	Rodent Water #1	LSRF
RW2	Rodent Water #2	LSRF
RW3	Rodent Water #3	LSRF
RWA	Reaction Wheel Assembly	
RWAM	Reaction Wheel Assembly Module	AXAF
SA	Solar Array	
SAA	South Atlantic Anomaly	
SAAD	SAA Detectors	AXAF
SAAX	Science and Applications Mission	
SADE	Solar Array Drive Electronics	HST
SAHF	Small Animal Holding Facility	LSRF
SAR	Synthetic Aperture Radar	Eos
SARO	Solar Active Region Observation	HRSO
SAROS	Solar Active Region Observation System	HRSO
SAT	Single Access Transmitter	HST
SBAR	Space-Based Antenna Range	SBAR
SBCGF	Bridgman, Small	MMPF
SC	Specimen Containers	MMPF
SCATT	Radar Scatterometer	Eos
SC/CU	Signal Conditioning and Control Unit (Science Instrument Support Electronics)	AXAF
SCF	Solution Crystal Facility	MMPF
SCR	Strip Chart Recorder	LSRF
SD	Sputtering Deposition (Unit)	MMPF
SE	Soldering Equipment	MMPF
SE	Spectrometer Electronics	POF
SEC	Second	
SEC	Support Electronics Component	ASTROMAG

ABBREVIATIONS AND ACRONYMS (CONT'D)

		Related Program
SEN	STO/SS Instrument Sensor	STO/SS
SEM	Space Environment Monitor	Eos
SEM	Support Electronics Module	ASTROMAG
SEPAC	Space Experiments with Particle Accelerators	STO/SS
SEUTS	Solar Extreme Ultraviolet Telescope and Spectrograph	HRSO
SEUTSE	Solar Extreme Ultraviolet Telescope and Spectrograph Electronics (Package)	HRSO
SEUTSF	Solar Extreme Ultraviolet Telescope and Spectrograph Focal Plane (Package)	HRSO
SF	Service Facility	
SFM	Service Facility Manipulator	
SHEAL	Shuttle High Energy Astrophysics Laboratory	LAMAR
SI	Science Instrument	
SIA	Station Interface Adapter	
SIC&DH	Science Instrument Control and Data Handling	HST
SI/IS	Science Instrument/Interface Structure	3S
SIPE	Science Instrument Protective Enclosure	HST
SIRTF	Space Infrared Telescope Facility	SIRTF
SLC	Space Launch Complex	
SLM	Scientific Laboratory Module	LSRF
SM	Scanning Electron Microscope	MMPF
SMCE	Secondary Mirror Control Electronics	SIRTF
SMM	Solar-Maximum Mission	
SMMD	Specimen Mass Measurement Device	LSRF
SMRM	Solar Maximum Rescue Mission	EP
SP	Space Platform	SIRTF
SP	Spectrophotometer	LSRF
SPS	Spacelab Pallet System	Astro
sq	Square	

ABBREVIATIONS AND ACRONYMS (CONT'D)

		Related Program
S&R	Search and Rescue	Eos
SRI	Search and Reserve Interferometer	SRI
SRV	Short Range Vehicle	3S
SPS	SEPAC Power System	STO/SS
SRS	Subject Restraint System	LSRF
SS	Space Station	
SS	Star Sensor	AXAF
SSBF	Solid Surface Burning Facility	MMPF
SSE	Star Sensor Electronics	AXAF
SSM	Support Systems Module	
SSMI	Special Sensor Microwave Imager	Eos
SSP	Space Station Program	
STE	Special Test Equipment	ASTROMAG
STO/POP	Solar Terrestrial Observatory/ Polar Orbiting Platform	STO/POP
STOR	Storage	LSRF
STO/SS	Solar Terrestrial Observatory/ Space Station	STO/SS
STOW	Stowage	LSRF
STP	Star Tracker Pair	POF
STS	Space Transportation System	
SUBMM	Submillimeter Spectrometer	Eos
SURS	Standard Umbilical Retractor System	
SUSIM	Solar Ultraviolet Spectral Irradiance Monitor	Eos
SUSIM	Solar Ultraviolet Spectral Intensity Monitor	STO/SS
SXRT	Soft X-ray Telescope	STO/SS
TAG	Two-Axis Gimbal	HST
TAPS	Two Axis Pointing System	LAMAR
TBD	To Be Determined	
TCS	Thermal Control Subsystem	HST
TDRSS	Tracking and Data Relay Satellite System	

ABBREVIATIONS AND ACRONYMS (CONT'D)

		Related Program
TEB	Telescope Electronics Box	HRSO
TEBPP	Theoretical Experiments by Plasma Processes	STO/SS
TETHER	Electrodynamics Tether and Satellite	STO/SS
TM	Technical Memorandum	
TMR	TRMM Microwave Radiometer	TRMM
TOGA	Tropical Oceans and Global Atmosphere	TRMM
TR	Tape Recorder	AXAF
TR	RPDP Tape Recorder	STO/SS
TR	Thermal Radiators	HRSO
TRD	Transition Radiation Detector	CRNE
TRIS	Tropical Regions Imaging Spectrometer	TRIS
TRMM	Tropical Rainfall Measurement Mission	TRMM
TS/BAT	Tether Satellite Battery	STO/SS
TSS	Tether Satellite System	STO/SS
UCS	Urine Collection System	LSRF
UDS	Umbilical Disconnect Mechanism	
UIS	Ultrasound Imaging System	LSRF
UIT	Ultraviolet Imaging Telescope	Astro
ULC	Unpressurized Logistics Carrier	STO/SIG
USL	U.S. Laboratory	MMPF
UV	Ultraviolet	
UVCS	UV Coronagraph/Spectrometer	POF
UVCS	UV Coronal Spectrometer	STO/SS
V	Volt(s)	
VAC	Volts Alternating Current	
VCAP	Vehicle Charging and Potential	STO/POP
VCGF	Vapor Crystal Growth Facility	MMPF
VDC	Volts Direct Current	
VFSGF	Variable Flow Shell Generator Facility	MMPF
VIA	Vacuum Interface Assembly	LSRF

ABBREVIATIONS AND ACRONYMS (CONT'D)

		Related Program
VIS/UV	Visible/Ultraviolet (Spectrometer)	Eos
VS	Vestibular Sled	LSRF
VTRC	Video Tape Recorder and Camera	LSRF
VTS	Vestibular Test Set	LSRF
VUVC	Visible/Ultraviolet Coronagraph	POF
W	Watt(s)	
WAMDII	Wide Angle Michelson Doppler Imaging Interferometer	STO/POP
WB	Work Bench	MMPF
WD	Water Deionizer/Depyrogenizer	MMPF
WFC	Wide Field Camera	HST
WF/PC	Wide Field/Planetary Camera	HST
WFS	Wave Front Sensor	HST
WISP	Waves in Space Plasmas	STO/SS
WLC	White Light Coronagraph	STO/SS
WLCE	Lyman-Alpha White Light Coronagraph Electronics (Package)	HRSO
WLCFP	Lyman-Alpha White Light Coronagraph Focal Plane (Package)	HRSO
WS	Waste Disposal System	MMPF
WTR	Western Test Range	
WUPPE	Wisconson Ultraviolet Photo Polarimeter Experiment	Astro
XGP	Experimental Geosynchronous Earth Orbit Platform	XGP
XR	X-ray Facility - General Purpose	MMPF
XRS	X-ray Spectrometer	AXAF
XTE	X-ray Timing Explorer	EP
yr	Year	

APPENDIX B

PAYLOAD INFORMATION FORMAT

FOR

SPACE STATION SERVICING DATA BOOK

BOOK NUMBER TWO

APPENDIX B

PAYLOAD TITLE AND SAAX NO.

1.0 PAYLOAD* PROGRAM AND OPERATIONS INFORMATION

1.1 Payload Points of Contact

Provides names, codes, centers, and phone numbers of the Program Manager, Project Manager, Principal Investigators (PIs), and other special contributors (such as contractor Project Managers or Engineers).

1.2 Payload Objectives

Provides a brief description of mission purpose and science objectives.

1.3 Payload Milestones and Servicing Schedule**

Launch Date:

First Space Station Service:

Servicing Interval:

Estimated Operational Lifetime:

1.4 Payload Orbital Parameters

Provides nominal altitude (apogee and perigee), inclination, and any other special orbital parameters (sun-sync parameters; elliptical extrema, etc.).

* For Purposes of this Report the "Payload" is considered to consist of the following parts: Basic Bus (or Spacecraft), Orbital Serviceable Units (OSU's, such as subsystems), Science Instruments (SI's, a special category of OSU,s), Miscellaneous (other) parts, and Consumables.

** A more detailed Payload Milestone and Servicing Schedule should be provided in paragraph 15.1.

2.0 PAYLOAD PHYSICAL CHARACTERISTICS

2.1 Payload Description

Provides overview description of payload including diagrams and drawings taken from project documentation.

2.2 Payload Physical Characteristics

Describes payload total mass, overall dimensions, and envelope characteristics with attention to servicing impacts.

2.3 Payload Moving Parts and Special Features

Describes appendages and special features which would be of concern for servicing, such as: booms, doors, high gain antennas protruding from the spacecraft, extended solar arrays, rotating dishes, etc. Discuss positioning and status of appendages during servicing; note absence or presence of remote command/control capability and manual backups.

2.4 Payload Consumables and Limited Life Components

Briefly, describes payload consumables (fuel, cryogens, inert gases, food, water, etc.). More detailed information should be listed in paragraph 11.0.

3.0 PAYLOAD SERVICING INFORMATION

3.1 General Description of Payload Servicing

Describes overall servicing activities including locations* of servicing, activities to be performed, (change-out, repair, calibration, or checkout of OSU's, or SI, replenishment of consumables, etc) and method of accomplishment.

3.2 Payload Background

Describes whether or not any parts of the payload (i.e., of the instruments or spacecraft) have flown previously. have been serviced on-orbit previously. or have been designed for servicing on-orbit.

3.3 Primary Role of Space Station in Servicing Payload

Describes the role of the Space Station (i.e., assembly site, check-out site, planned and/or contingency servicing site, etc.).

3.4 Primary Space Station Facilities Required for Servicing Payload

Describes briefly what SS Facilities will be needed and what resources the Space Station will be expected to provide (i.e., mechanical and electrical interfaces, storage, data, power, etc.).

3.5 Space Station Personnel Required for Servicing Payload

Describes briefly the role that SS Personnel (Crew Members) will play in servicing of the payload. If estimates are available, describes the number of crew-hours (IVA and EVA) and specialized skills required. Indicates if additional support must be provided from the ground during servicing at the Space Station.

3.6 Servicing Precautions for Payload

Discusses fragile or sensitive parts of the spacecraft which must be protected from possible damage or contamination during servicing. These include sensors, thermal control services, optics, etc. which must be covered or fragile assemblies such as solar arrays and High Gain Antennas which must be avoided if not retracted.

3.7 Orbital Maneuvering Vehicle (OMV) Flight Profiles in Support of Payload

Describes nominal OMV activities necessary to support Payload servicing (for example, retrieval, deployment, boost, contingency return, in situ servicing, etc.).

*Possible payload servicing locations are in the SS Servicing Facility, on the SS at the attached payload, or in-situ (i.e. at the remote location of a free-flying payload).

NOTE: In-situ servicing is defined here as servicing which occurs at the orbit of a free-flying payload.

4.0 PAYLOAD SERVICING SAFETY CONSIDERATIONS

4.1 Payload Hazardous Subsystems and Components

Discusses all materials which may be hazardous to personnel, such as: protruding or moving parts, toxic or corrosive materials, new or unqualified designs, extreme temperatures, pressures, or voltages, pyrotechnics, radiation sources, etc.

4.2 Payload Servicing Safety Precautions

Discusses any known or considered precautions, procedures, or requirements for ensuring crew safety during mission servicing.

5.0 PAYLOAD SERVICING INTERFACES AND RESOURCE REQUIREMENTS

5.1 Payload Crew Convenience Features

Describes existing or designed payload features which facilitate EVA servicing, such as tether rings, handholds, rounded edges, etc.

5.2 Payload Mechanical Interfaces

Identifies mechanical interfaces to Space Station (existing or designed). Includes hard mounts, trunnions, RMS grapple fixtures, telerobotic or full robotic manipulation fittings, etc.

5.3 Payload Umbilical Interfaces

Describes umbilical interfaces between payload and SS during servicing and storage. The data are presented under the categories of power, data, and fluids, operational and servicing rates (watts, bits/sec, etc.) and are discussed where applicable. If possible, both average and peak rates are included.

5.4 Payload RF Communication Interface

Describes briefly how the payload command and data handling system are employed during servicing. Provides required command and data rates. Indicates how the payload is controlled during servicing (from SS, STS, or Earth).

5.5 Payload Thermal Interface

For free-flyers and attached payloads, lists non-operational and operational temperature ranges. For attached payloads, provides heat rejection requirements, if known, and indicates whether or not the payload will need support from the Space Station thermal control subsystem.

6.0 PAYLOAD SERVICING ENVIRONMENT

6.1 Payload Pointing/Orientation Constraints

Identifies any pointing constraints during a typical servicing mission. These constraints would apply primarily to thermal control and/or instrument/sensor protection.

6.2 Payload Contamination Concerns

Provides as much information as possible on the molecular, particulate, and equivalent clean-room contamination requirements/specifications for the entire system, and for each individual component to be serviced. If component outgassing is of concern, it is discussed in this section.

6.3 Payload Radiation Concerns

Discusses the sensitivity of the spacecraft, instruments, and/or OSU's to the on-orbit radiation environment.

7.0 PAYLOAD SERVICING ACCOMMODATIONS

7.1 Payload Equipment Access

Describes principal features of access and indicates whether spacecraft has been designed or will be designed for access (for example, SIRTF scientific instruments cannot be accessed, and GRO SIs are almost impossible to access).

7.2 Payload Modularity

Describes design and/or planned design for modularity and commonality with other serviceable items.

7.3 Payload Automated Servicing

Indicates if automated servicing is planned and describes the servicing where applicable. Indicates if serviceable units and systems are compatible with automated manipulators such as the Orbiter RMS, Space Station MRMS, OMV smart front end, telerobotic servicer, and robotics in general. If automatic servicing is under consideration, discusses and indicates in a qualitative way how requirements on the SS could be effected. (e.g., reduction of EVA and IVA crew-hours, reduction of safety hazards, etc.).

7.4 Payload Servicing in the Space Station Pressurized Modules

Describes all components of the spacecraft and payload which may be candidates for IVA workbench servicing, and indicates whether or not these components can be easily brought into the pressurized Space Station modules (i.e., considers size, hazard, survival, etc.)

8.0 PAYLOAD SERVICING MATERIALS CHECKLIST

Indicates, using the provided check list, which types of payload servicing materials are required and, where applicable, if the Space Station Program (rather than the Payload Program) is expected to provide the materials.

For purposes of this report servicing materials are considered to consist of both servicing equipment and servicing consumables.

PAYLOAD SERVICING MATERIALS CHECKLIST

Servicing Equip.	Required (Yes or No)	SS Provided (Yes or No)	Comments	Ref. Section
ORUs (including SIs)	_____	_____	_____	9.0
Flight Support Equipment	_____	_____	_____	10.0
Other Equip.	_____	_____	_____	10.0
Servicing Equipment Carrier(s)	_____	_____	_____	12.0
Servicing Consumables				
Propellant(s)	_____	_____	_____	11.0
container(s)	_____	_____	_____	11.0
Cryogen(s)	_____	_____	_____	11.0
container(s)	_____	_____	_____	11.0
Liquid(s)	_____	_____	_____	11.0
container(s)	_____	_____	_____	11.0
Gas(es)	_____	_____	_____	11.0
container(s)	_____	_____	_____	11.0
Other(s)	_____	_____	_____	11.0
container(s)	_____	_____	_____	11.0
Servicing Consumables Carrier(s)	_____	_____	_____	12.0

*Carriers for servicing materials are typically used during transportation in STS Orbiter and/or during storage on SS. A single carrier may be used.

9.0 PAYLOAD ORBITAL REPLACEABLE UNITS (ORUs)

9.1 Servicing of Payload ORUs

a. Primary

Indicates which ORUs are to be replaced or serviced on a planned basis (e.g., batteries) and which ORUs have low reliability and are thus the most likely candidates for on-orbit replacement or servicing.

b. Secondary

Indicates which ORUs are replaced or repaired on an unplanned basis (i.e., only when malfunction or deterioration have occurred).

9.2 Payload ORU Physical Characteristics

Normally tabular. Lists mass, dimensions, and number of all ORUs associated with payload servicing. Science Instruments (S.I.'s) are treated as a type of ORU. Indicates, with footnotes, which (if any) ORUs are S.I.'s.

9.3 Payload ORU Storage Requirements

Normally tabular. Lists, for each ORU, the storage mass, volume, temperature range and storage power requirements if available. Also lists other storage requirements (e.g., pressure, humidity, flux, etc.) as appropriate.

9.4 Other Environmental Requirements for Payload ORUs

Normally tabular. If available, lists, for each ORU, the storage, servicing, and check-out values (peak, average, and minimum) for any environmental parameters (e.g., radiation, vibration, EM/RF exposure, humidity, contamination, etc) for which control may be required.

10.0 PAYLOAD FLIGHT SUPPORT AND MISCELLANEOUS SERVICING EQUIPMENT

10.1 Payload Flight Support Equipment (FSE)

Describes all required FSE. This may include Special Test Equipment, (STE), mission-unique servicing cabling and umbilicals, tools, jigs, guides, crew support fixtures, covers, shades, cleaning or purge supplies and equipment, etc. Indicates whether tools are in English or Metric units, or both.

10.2 Payload FSE Physical Characteristics

Normally tabular. If available, lists mass, dimensions, and number used to support servicing mission.

10.3 Payload FSE Storage Requirements

Normally tabular. If available, lists storage mass, volume, temperature range and storage power requirements.

10.4 Miscellaneous Servicing Equipment

Describes any other required servicing equipment that has not been previously defined and indicates storage requirements.

11.0 PAYLOAD SERVICING CONSUMABLES AND CONTAINERS

11.1 Description and Purpose

Lists all planned consumables and briefly indicates the reason for use of each one. Includes the nominal time intervals between consumable replenishment and the expected volume/mass required. Describes resupply containers (pressure vessels, tanks, etc) and describes the resupply process (tank/bottle changeout, fluid transfer from SS via umbilical). Indicates if the resupply tank interfaces directly to the STS or whether a carrier or additional support structure is required.

11.2 Physical Characteristics

Tabulates consumables mass, volume, storage pressure and tank or pressure vessel mass and dimensions. The consumables are listed under five categories: propellants, cryogens, liquids, gases, and others.

11.3 Storage Requirements

Tabulates tank, pressure vessel, etc., storage temperature range and storage power requirements.

12.0 CARRIERS FOR PAYLOAD SERVICING MATERIALS

12.1 Description and Purpose of Carriers

Describes briefly what carrier or carriers are used for the payload servicing materials (ie., for servicing equipment and/or servicing consumables). Provides the known or estimated mass, overall dimensions, and volume of these carriers, and indicates if they are to be used during STS transportation and/or SS storage. Also indicates if the carriers are pressurized or unpressurized and if they are provided by the Payload Program or are assumed to be provided by the SS Program.

12.2 STS and SS Carrier Interfaces

Indicates how the carriers for payload servicing materials interface with the STS orbiter and/or the SS (e.g., through trunnions, RMS grapple fixtures, unbilicals, hard mounts, etc.). Explains if the carrier (a) remains in the orbiter bay and is unloaded, (b) is temporarily stored on the SS, or (c) is "permanently" stored at the SS.

12.3 Servicing Materials/Carrier Interfaces

If the servicing materials are removed from and/or returned to their carrier, indicates how, when, and where this is accomplished.

13.0 PAYLOAD ORBITAL SERVICING ACTIVITIES TIME ESTIMATES

13.1 Mission Servicing Ground Rules and Constraints

If known, lists ground rules and constraints for payload servicing.

13.2 Preparatory Servicing Time Estimates

Lists the on-orbit servicing activities and time estimates necessary to prepare for preparatory servicing activities.

13.3 Principal Servicing Time Estimates

Lists the on-orbit principal servicing activities and time estimates.

13.4 Close-Out Servicing Time Estimates

Lists the on-orbit servicing activities needed to end the servicing activities and resume operational status.

14.0 PAYLOAD STRAWMAN SERVICING SCENARIO

14.1 Payload Strawman Servicing Mission

Describes a selected strawman servicing mission (a typical planned mission of average complexity for the payload). Discusses servicing location, required materials (equipment and consumables), procedures (IVA, EVA), and ground rules. Where information is not available, explains the estimates used to justify the set of derived numbers that appear in the subsequent paragraphs. Lists unique assumptions. More than one strawman servicing mission may be defined. If two are defined, for example, they are designated Type A and Type B.

14.2 Payload Description

Describes the payload in its strawman servicing configuration including overall dimensions, volume, and mass.

14.3 Strawman Servicing Materials

a. ORUs

Tabulates the strawman servicing mission's ORUs including SI(s), if applicable. Includes number of each piece of equipment used. Provides a concise, simple tabulation which can be used to compute total estimated mass, volume, and power necessary to support the strawman servicing mission. See Section 9.0 for ORU information.

b. FSE

Lists Flight Support Equipment (FSE) required. Includes tools, covers, STE, etc. See Section 10.0 for FSE information.

c. Consumables and Containers

Lists the consumables and containers required for the proposed strawman servicing.

(a) Consumable Propellants

(b) Consumable Cryogens

(c) Consumable Liquids

(d) Consumable Gases

(e) Other Consumables

See Section 11.0 for characteristics of the consumables and their containers.

d. Carriers

Indicates if and how equipment carriers and consumable carriers are used during the strawman servicing mission.

14.4 Estimated Up/Down Mass on STS to Support Payload Strawman Servicing

SERVICING MATERIAL	MASS, UNPRESSURIZED TRANSPORT (kg)	MASS, PRESSURIZED TRANSPORT (kg)	MASS, TOTAL (kg)
Equipment			
SI(s)	____	____	____
ORU(s)	____	____	____
Unique FSE	____	____	____
Misc. Equipment	____	____	____
Equipment Subtotal	____	____	____
Equipment Carrier(s)	____	____	____
Subtotal, Equipment Mass Up	____	____	____
Subtotal, Equipment Mass Down	____	____	____
Consumables			
Consumables	____	____	____
Consumables Containers	____	____	____
Consumables Containers Carriers	____	____	____
Subtotal, Consumables Mass Up	____	____	____
Subtotal, Consumables Mass Down	____	____	____
Total Mass Up	____	____	____
Total Mass Down	____	____	____

NOTES:

- After each entry, indicates whether value is mass up (U), mass down (D), or both up and down (U/D). Consumables (see Section 11.0), for example, are normally mass up only (U).
- Indicates, with footnotes, source of values used in table (Payload Office reference report, BDM estimate based on material contained in Appendix C, etc.).
- In some cases, containers (for consumables) and carriers (for consumable containers and equipment) may not be considered chargable to the payload. Indicates, with footnote, where this is assumed to be true. (The pressurized logistics module is a possible example of such a carrier).

14.5 Estimated Up/Down Volume on STS to Support Payload Strawman Servicing

SERVICING MATERIAL	VOLUME, UNPRESSURIZED TRANSPORT (m^3)	VOLUME, PRESSURIZED TRANSPORT (m^3)	VOLUME, TOTAL (m^3)
Equipment			
SI(s)	_____	_____	_____
ORU(s)	_____	_____	_____
Unique FSE	_____	_____	_____
Misc. Equipment	_____	_____	_____
Equipment Subtotal	_____	_____	_____
Equipment Carrier	_____	_____	_____
Equipment and Carriers Subtotal	_____	_____	_____
Consumables			
Consumables Containers*	_____	_____	_____
Consumables Containers Carriers	_____	_____	_____
Total Volume Up	_____	_____	_____
Total Volume Down	_____	_____	_____

NOTES:

- After each entry, indicates whether value is mass up (U), volume down (D), or both up and down (U/D).
- Indicates, with footnotes, source of values used in tables (Payload office reference report, BDM estimate based on appendix material, etc).
- Note that "Equipment and Carriers" and "Consumables, Containers and Carriers" are, in general, not determined by direct addition of the contents of the carriers.

14.6 Storage on Space Station Required to Support Payload Strawman Servicing

Continuous Storage	Unpressurized	Pressurized	Total
Mass (kg)	____	____	____
Volume (m^3)	____	____	____
Average Power (watts)	____	____	____
Temperature Range (^oC)	____	____	____
Temporary Storage			
Mass (kg)	____	____	____
Volume (m^3)	____	____	____
Average Power (watts)	____	____	____
Temperature Range (^oC)	____	____	____

* Indicates, with footnotes, how long the storage on SS is required (in months). Normally the Temporary Storage Duration can be indicated as 3 months, the assumed interval between STS orbiter supply visits to the SS.

14.7 Payload Strawman Servicing Power Estimates

	Operational Mode* (watts)		Servicing Mode (watts)	
	AVG	MAX	AVG	MAX
a. Payload (Bus + Instruments)	____	____	____	____

NOTES:

* Operational Values shown for reference purposes.

14.8 Payload Strawman Servicing Times

SERVICING ACTIVITY	Elapsed Time (hr:min)	IVA Time (crew-hr:min)	EVA Time (crew-hr:min)	Robotics Time (hr:min)
1				
2				
3				
4				
5				
.				
.				
.				
Nth				
TOTALS				

NOTE: This table is repeated to cover each type (A,B,C,...) of Payload strawman servicing mission.

14.9 OMV Flights in Support of Payload Strawman Servicing Mission

Strawman Mission	Purpose of Flight	Number of Flights*
A		
B		
C		

* Indicates number of round trip flights in support of the indicated strawman mission.

15.0 OVERALL REQUIREMENTS SUMMARY FOR SS SERVICING OF PAYLOAD

15.1 Payload Milestones and Servicing Schedule (Nominal Mission Model)

EVENT	LOCATION*	DATE**	COMMENT***
Payload Launch			
1st Servicing			
2nd Servicing			
3rd Servicing			
.			
.			
Nth Servicing			
Payload Mission Termination			

* For Launch, specifies "STS" or "ELV" and "ETR" or "WTR". For Servicing, specifies "at SS", "at STS", or "In-Situ". If at SS, specifies "in Service Facility", "at Attached Payload", or "Inside Pressurized Module".

** Gives CY quarter.

*** e.g., specifies Servicing Type A, B, C,... if more than one payload strawman servicing mission was defined in Section 14.1.

15.2 Summary of Payload Mass Considerations

a. Payload Mass (Operational Payload and Payload During Servicing)

Oper. Payload Mass (dry): ___kg Serv. Payload Mass (dry): ___kg

Oper. Consumables Mass ___kg Serv. Consumables Mass: ___kg

Oper. Payload Mass (total)___kg Serv. Payload Mass: ___kg

b. Payload Servicing Mass Up and Down in STS*

Event	Mass Up (kg)	Mass Down (kg)
Launch	_____	_____
1st Servicing	_____	_____
2nd Servicing	_____	_____
3rd Servicing	_____	_____
4th Servicing	_____	_____
5th Servicing	_____	_____
6th Servicing	_____	_____
7th Servicing	_____	_____
8th Servicing	_____	_____
9th Servicing	_____	_____
Payload Mission Termination	_____	_____
Totals	_____	_____
Servicing Totals*	_____	_____

* STS Flights will normally occur prior to and following payload servicing. Table indicates mass up required for the servicing and mass down resulting from the servicing.

** Normally excludes initial payload launch mass and mission termination flight mass. These are chargable to payload operations.

c. Payload Servicing Storage Mass on Space Station

Calendar Year	94	95	96	97	98	99	00	01	02	03	04	05
Storage Mass (kg)												
Unpressurized	—	—	—	—	—	—	—	—	—	—	—	—
Pressurized	—	—	—	—	—	—	—	—	—	—	—	—
Total	—	—	—	—	—	—	—	—	—	—	—	—

Specifies CY Quarter with footnotes. For example, "The mass shown under CY 1997 must be stored during 2nd and 4th quarter of that year". Note that this table is consistant with the Payload Servicing Storage Volume table contained in Section 15.3.c.

15.3 Summary of Payload Volume Considerations

a. Payload Volume

Operational Configuration*: _____ m3

Servicing Configuration*: _____ m3

Storage/Transportation Configuration*: _____ m3

b. Payload Servicing Volumes up and down in STS*

Event	Volume Up (m3)	Volume Down (m3)
Launch	_____	_____
1st Servicing	_____	_____
2nd Servicing	_____	_____
3rd Servicing	_____	_____
4th Servicing	_____	_____
5th Servicing	_____	_____
.		
Nth Servicing	_____	_____
Payload Mission Termination		
Totals	_____	_____
Servicing Totals**	_____	_____

* Uses footnote to explain difference in configurations (eg. deployment/retraction of solar array, etc).

** Normally excludes initial payload launch volume and mission termination flight volume. These are chargable to payload operations.

c. Payload Servicing Storage Volume on Space Station

Calendar Year	94	95	96	97	98	99	00	01	02	03	04	05
Storage Volume (m^3)												
Unpressurized	—	—	—	—	—	—	—	—	—	—	—	—
Pressurized	—	—	—	—	—	—	—	—	—	—	—	—
Total	—	—	—	—	—	—	—	—	—	—	—	—

Specifies CY Quarter with footnotes. For example, "The volume shown under CY 1997 must be stored during 2nd and 4th quarter of that year". Note that this table is consistant with the Payload Servicing Storage mass table contained in Section 15.2.c.

15.4 Summary of Payload Power Considerations

	AVG	MAX
Payload Operational Power (watts)	___	___
Payload Servicing Power (watts)	___	___
Storage Power, Servicing Materials (watts)	___	N.A.

15.5 Summary of Payload Servicing Time Estimates

Calendar Year	94	95	96	97	98	99	00	01	02	03	04	05	Total
Elapsed time (hr:min)													
IVA Time (Crew-hr:min)													
EVA Time (Crew-hr:min)													
Total Crew Time (hr:min)													
Robotics Time (hr:min)													

15.6 Summary of OMV Flights in Support of P/L Servicing

Calendar Year	94	95	96	97	98	99	00	01	02	03	04	05	Total
Number of OMV Flights													

* Indicates, with footnotes, the purpose of the OMV flights (e.g., ____ for retrieval; ____ for deployment, boost, and contingency return, etc.). Also indicates in which quarter of the CY the OMV flight is required.

16.0 Payload Composite On-Orbit Servicing Estimates

Provides copy of standardized computer printout (see next page) which contains "composite" estimate of servicing times (elapsed, IVA, EVA, total crew, robotics) by servicing activity (1 through 14) for each type of servicing (A,B,C,...) that applies to the payload. Requirements pertaining to mass/volume/power, OMV/OTV+OMV flights, and payload consumables are also presented.

The composite servicing estimate combines Payload Office-provided estimates (used where available) with those generated using BDM Algorithms.

APPENDIX C

BDM ALGORITHMS FOR ON-ORBIT PAYLOAD SERVICING

I. INTRODUCTION

When BDM algorithms were formulated for use in this report, it was assumed that almost all payload servicing activities would be carried out during the period of interest (1994 through 2005) using, as in the past, a mixture of manned efforts, including EVA, and robotic operations. Interviews with the Project Offices developing the OSSA payloads indicated that this assumption was, in general, valid. There was, of course, the obvious exception where certain servicing activities were to be carried out in-situ (at the location of a remote free-flyer payload) and EVA was automatically excluded. There were also a few cases where the Payload Development Office specified that EVA should be excluded even though servicing was to be carried out at the STS Orbiter or at the Space Station. The BDM algorithms, as presented and discussed in Section II of this Appendix, were formulated based on the assumption of "mixed" servicing.

It was planned initially that for the relatively few payloads were EVA was excluded, BDM estimates of all servicing elapsed times, IVA crew-times, and robotic times would be specified as TBD. Further consideration indicated, however, that the "mixed servicing" algorithms (sometimes with modifications) would be applicable to certain activities that were already all-robotic i.e., where EVA was never necessary or could be considered as incidental. The activities of unloading/loading of payload servicing materials from/to the STS orbiter and transporting such materials on the Station (using MRMS or MSC) fall into this category. A version of the BDM algorithms compatible with the all-robotic (EVA excluded) assumption are presented and discussed in Section III of this Appendix. It will be noted, here, that servicing time estimates for certain activities (including ORU changeout and consumables replenishment) are still estimated as TBD. Development of appropriate algorithms to cover these ac-

tivities in an all-robotic manner were considered to be beyond the scope of the current task, but are felt to be a worthwhile subject for future consideration.

The application of the BDM algorithms of Sections II and III to the estimates of on-orbit servicing is discussed in Section IV. Finally, the results of the servicing estimates are discussed briefly in Section V.

Some of the servicing equations presented here are based on "similarity," that is, the assumption that an activity on one payload (ORU changeout, for example) will require a similar or proportional effort to that on another payload. Predictions of other activities are based on design values of the servicing system (the MRMS, for example) as described by its development personnel.

It should be pointed out that the current servicing estimates were made at the major activity level (see Chapter 1 discussion). While these activities inherently contain many smaller servicing steps (e.g., removing door screws, unlatching access door, removing door, unsnapping electrical connectors, etc.), detailed analysis and integration of these steps were not explicitly treated in obtaining the algorithms. Also, the assignment of complexity factors to each payload's servicing activities was considered to be beyond the scope of this initial effort to obtain an approximate top level estimate for the servicing of a large number of payloads over an extended period of time. Thus, the relatively simple action of changing out a Multi-Mission Spacecraft (MMS) module is not treated differently in the algorithms (except for ORU mass differences) from the more complex action of changing out an ORU in another, less serviceable payload. Where a Payload Office provided its own estimates, those estimates are always used in lieu of the BDM algorithms to form the "composite" results. In such cases, the lack of a complexity factor to improve the BDM estimate is of no consequence. The complexity factor approach would be most useful in situations where there is a wide variation in the serviceability of payloads and the Payload Offices provide no credible servicing estimates.

The algorithms presented in this Appendix were developed to be consistent with the General Guidelines presented in paragraph 4 of Section C (WHAT IS ON-ORBIT SERVICING?) in Chapter I of this report. The major assumptions and constraints associated with the algorithms are outlined in Section I (ASSUMPTIONS/CONSTRAINTS) of Chapter I.

II. DESCRIPTION AND DISCUSSION OF BDM ALGORITHMS DEVELOPED FOR USE WITH A MIXED-SERVICING SCENARIO

BDM servicing algorithms described in this section were developed based on the assumption that indicated servicing activities would be carried out using a mixture of manned efforts, including EVA, and robotic operations.

Algorithms are presented for each of fourteen servicing activities. The use of the algorithms, their derivation (or basis), apparent suitability, and associated recommended actions are also discussed.

Activity 1, STS Brings Payload Servicing Materials From Earth:

A. Information to be recorded: It is necessary to indicate whether the materials are brought to SS or whether the materials are brought to another servicing orbit (e.g. polar orbit). The date (CY quarter) of STS arrival should also be recorded.

B. Parameter to be calculated: Mass of Servicing Materials Up.
Algorithm (with all masses in kilograms):

Mass of Servicing Material Up =
1.57 [Mass of P/L ORU's + P/L Office Consumables + P/L Office FSE]

Use of algorithm: Provides estimate of total mass of servicing materials that the STS must transfer from Earth prior to servicing. The factor 1.57 provides an allowance for carrier mass needed to transport servicing equipment and consumables in the Orbiter cargo bay in cases where these items are considered the responsibility of the Payload Office.

Basis for algorithm: A statistical analysis was used to derive the BDM Mass Up Algorithm using available Payload Office estimates for six mass up cases as shown in Table C-1. The algorithm constant (1.57) for the mass up to servicing mass ratio was obtained by first combining the two available data points for 3S and then averaging this answer with the mass ratio for the other four payloads. As seen in the right hand column of Table C-1, the BDM Algorithm yields mass up values that vary from 77% to 111% of the Payload Office estimates.

Suitability of algorithm: Appears adequate for the present exercise.

Recommended action: Consider transport of Payload Office-supplied servicing materials in SS-provided logistics carriers which may be more efficient from a mass and volume standpoint.

TABLE C-1. EVALUATION OF BDM MASS UP ALGORITHM

PAYLOAD	SERVICING MATERIAL MASS UP (kg) BDM CALCULATION	PAYLOAD OFFICE ESTIMATE	RATIO = BDM CALCULATION / PAYLOAD OFFICE ESTIMATE
ATF	942	850	1.11
HST	1955	1865	1.05
LDR	785	840	0.93
POF	330	300	1.10
3S (B)	1371	1791	0.77
3S (C)	1528	1791	0.85
Average (6 cases)			0.97
Average (with the two 3S cases combined)			1.00

C. Parameter to be calculated: Volume of Servicing Materials Up.
Algorithm (with all volumes in m^3):

Volume of Servicing Materials Up =
2.16 [Volume of ORU's + P/L Office Consumables + P/L Office FSE]

Use of algorithm: Provides estimate of total volume that the STS must transfer from Earth. The factor 2.16 should provide a reasonable allowance for the structural volume of the carrier and packaging materials that are needed to protect servicing materials from Orbiter lift-off and landing loads. The factor is not intended to yield the cylindrical "slice" of an Orbiter bay that might be used on an STS flight dedicated to service only one payload.

Basis for algorithm: The constant in the BDM Volume Up Algorithm (2.16) was derived through statistical analysis of available Payload Office estimates for five volume-up cases as shown in Table C-2. The two 3S data points were combined (as in the mass-up treatment) and, more significantly, the HST data point was eliminated from the analysis, since it appears to represent an uncharacteristically high ratio of Volume Up to servicing material volume. This phenomenon is believed to be due, in part, to the fact that the HST ORU Carrier assumed to be used for SS servicing, was taken to have the same characteristics as the lightly loaded carrier planned for use in the early dedicated servicing missions of HST using the STS Orbiter. As seen in the right hand column of Table C-2, with the HST data point eliminated, the BDM volume up estimate varies from 91% (3S, Type B) to 1.08% (LDR) of the Payload Office value.

Suitability of algorithm: The BDM Volume Up Algorithm with a constant of 2.16 is considered adequate for the current exercise.

Recommended action: Consider transport of Payload Office-supplied servicing material in SS-suppied logistics carriers which may be more efficient from a mass and volume standpoint.

TABLE C-2. EVALUATION OF BDM VOLUME UP ALGORITHM

PAYLOAD	SERVICING MATERIAL VOLUME UP: BDM CALCULATION (m^3)	SERVICING MATERIAL VOLUME UP: PAYLOAD OFFICE ESTIMATE (m^3)	RATIO = $\frac{\text{BDM CALCULATION}}{\text{PAYLOAD OFFICE ESTIMATE}}$
ATF	7.93	8.5	0.93
HST	7.93	47 (typical)	0.17
LDR	8.64	8	1.08
3S (B)	13.7	15	0.91
3S (C)	15.8	15	1.05
Average (5 cases)			0.83
Average (with the two 3S cases combined)			0.79
Average (3S cases combined; HST case omitted)			1.00

Activity 2, Robot Unloads Servicing Material (In Carrier) From STS Orbiter Bay to SS Servicing Facility

A. Parameters to be calculated: Servicing Times (elapsed time, IVA time, EVA time, robotic time).

Algorithms:

elapsed time = 30 minutes
IVA time = 30 crew-minutes
EVA time = 0 crew-minutes
robotic time = 30 minutes

Use of algorithms: Provides estimate for transfer of Payload Office-provided servicing materials in carrier from STS Orbiter bay to SS Servicing Facility. This action would normally be the function of the Servicing Facility Manipulator (SFM), but probably could be accomplished by the SS Mobile RMS (MRMS) on the Mobile Servicing Center (MSC).

Basis for algorithms: The characteristics of the SFM were considered sensitive information by the NASA/GSFC SS Office, so information on the MSC/MRMS was obtained from NASA/JSC (Messiers David Homan and Charles Gott, Mission Planning and Analysis Division). The MRMS end effector's translational and rotational speeds (0.1 ft/sec and 0.5 deg/sec, respectively) and the MSC carriage speed on the SS truss (0.05 ft/sec) were used to derive an approximate elapsed time of 30 minutes. IVA and robotic time were taken as equal to elapsed time. EVA was considered to be unnecessary. In this first-order estimate, the servicing time is assumed to be independent of the mass or volume of the materials being unloaded.

Suitability of algorithms: Considered adequate for current exercise. No Payload Office estimate has been located which predicts servicing times for unloading of STS Orbiter bay.

Recommended action: Consider characteristics of SS Servicing Facility Manipulator when information becomes available. Discuss with NASA/GSFC Code 400.6.

B. Parameters to be calculated: Temporary Storage Mass and Storage Volume of payload servicing materials on SS.

Algorithms (with masses in kg and volumes in m^3):

Temporary Storage Mass on SS =
Mass of Servicing Materials Up

Temporary Storage Volume on SS =
Volume of Servicing Materials Up

Basis for algorithms: Servicing material carried from Earth to SS is assumed to go into temporary storage for a period of about 90 days, the interval between STS Orbiter visits to SS.

Suitability of algorithms: Considered adequate based on the assumption that all of the Payload Office-provided servicing materials are brought to the SS shortly before servicing and remain there until shortly after servicing is completed.

Recommended action: Discuss SS storage options with NASA/GSFC Code 400.6.

C. Parameter to be calculated: "Permanent Storage" at Space Station.

Algorithms:

Permanent Storage Mass = N.A.
Permanent Storage Volume = N.A.

Basis for algorithms: No requirement for permanent storage is identified by BDM for any payload unless specified by the Payload Office.

Note: The 3S Payload has a unique requirement for permanent storage. A 3S storage carrier, which houses a replacement science instrument and a full set of spare spacecraft subsystem modules, is brought to the SS early in the 3S operational program.

Suitability of algorithms: Considered adequate.

Activity 3, OMV or OTV + OMV Brings Payload From Orbit

Note: Applies to many free-flyer payloads. Does not apply if servicing is in-situ. Does not apply to certain free-flyer payloads (Eos NPOP-1 and 2, for example) where a polar platform using its propulsion subsystem and an STS Orbiter affect rendezvous. Does not apply to SS attached payloads unless there is a free-flying component such as RPDP on STO/SS.

Information to be recorded: It is necessary to indicate whether the Payload is brought to the SS or to an STS Orbiter. Also, it is necessary to specify whether an OMV is required or an OTV + OMV is required. (The OTV +OMV combination is necessary if the payload is to be retrieved from geosynchronous orbit.)

Number of OMV or OTV + OMV flights (0 or 1) _____.

Major purpose of flight: Retrieval of Payload.

Flight Date (CY Quarter) _____.

Algorithm:

No Calculation Required

Basis for algorithm: Requirements for OMV or OTV + OMV support (Number, Purpose, Date) are recorded. Transportation, servicing, control, etc., of OMV or OTV + OMV are not considered chargeable to Payload Office servicing. Mass/ volume up/down, storage, and time estimates relative to these OMV activities are, therefore, not provided.

Activity 4, Payload Berthing-Related Activities at SS or STS

Note: Applies to free-flyer payloads. Does not apply if servicing is in-situ. Does not apply to attached payloads unless there is a free-flying component.

Parameters to be calculated: Servicing Times.

Algorithms:

elapsed time = 3 hr 30 min
IVA crew time = 3 hr 30 min
EVA crew time = 3 hr 0 min*
robotic time = 2 hr 0 min
***2 astronauts X 1 hr 30 min**

Use of algorithms: This activity encompasses a variety of free-flyer berthing-related activities. They include demating the payload from the OMV (using robotic arm or arms), moving the payload to and mounting it in the SF (also using robotic), and preparing the payload for servicing, for example, by installing aperture shades and sensor covers and attaching electrical umbilicals (using EVA).

Basis for algorithms: The servicing estimates presented above are a variation of the timeline presented in "Servicing Operations for the SIRTF Observatory at the Space Station", C.B. Wiltsee and L. A. Manning, NASA/ARC, AIAA paper of January 1987. Activities pertaining solely to handling, control, and servicing of the retrieving OMV have been omitted as discussed above under activity 3.

Suitability of algorithms: The algorithms are considered adequate. As stated, they are based on servicing predictions by the SIRTF Payload Office. Also, they are in reasonable agreement with HST estimates (BDM estimates for Elapsed/IVA/EVA/robotic times are all 1.2 times the HST Payload Office Estimates).

Recommended action: None at this time, but complexity factors may need to be considered as an extension of the current effort since some small free-flyers may be considerably easier to berth than SIRTF.

Activity 5. Transport of Servicing Materials From SS Servicing Facility to Payload and Back Using MRMS Robot and MSC

Note: Applies only to SS Attached External Payloads.

Parameters to be calculated: Servicing Times.

Algorithms: [distance to payload from SF (along SS truss) is in meters; elapsed time and robotic time are in minutes; IVA and EVA times are in crew-minutes.]

$$\text{elapsed time} = \frac{\text{distance to payload}}{80} \times 180$$

$$\text{IVA time} = 2 \times \text{elapsed time}$$

$$\text{EVA time} = 2 \times \text{elapsed time}$$

$$\text{robotic time} = \text{elapsed time}$$

Use of algorithms: It is implied here that servicing of the attached payload takes place at the Station Interface Adapter (SIA) and that the EVA astronauts, as well as the servicing materials, ride from the SF to the SIA and back on the MRMS platform, i.e., on the MSC carriage. See suitability of algorithms, below.

Basis for algorithms: Design information on the MSC was obtained from the NASA/JSC Mission Planning and Analysis Division as indicated under Activity 2. Using the supplied MSC carriage transport speed (0.05 ft/sec) and twice the distance from the SF to the midpoint of the SS zenith horizontal boom (2 x 80 meters), the round trip was determined to take about 180 minutes. If the actual (expected) distance to the attached payload is used, the elapsed time will be proportionally different. It is assumed that during the servicing interval (the elapsed time), one IVA astronaut operates the MRMS and a second monitors the two EVA astronauts.

Suitability of algorithms: It is anticipated that some attached payloads will be brought to the SF for servicing. This would require detachment/reattachment of the payload and two round trips of the MRMS. Principal servicing might, however, be accomplished more effectively because of the availability of thermal and contamination control at the SF and the proximity to storage of tools and equipment. Some payloads, however, because of their large size and/or alignment requirements might be limited to servicing at the SIA.

Recommended action: Preparation of algorithms to cover servicing of attached payloads at both locations, i.e., SIA as well as SF, should be considered as part of a possible extension to the current exercise.

Activity 6, ORU Changeout

Parameters to be calculated: Servicing Times.
Algorithms (where M_{ORU} is mass of ORU's in Kg):

If $M_{ORU} = 0$, elapsed time = 0.

If $0 < M_{ORU} \leq 2200$ Kg,
elapsed time = $33 + 0.43 \times M_{ORU}$ where
elapsed time is in minutes.

If $M_{ORU} > 2200$ kg,
elapsed time = 979 minutes

IVA time = 1.5 X elapsed time (crew-minutes)
EVA time = 2 X elapsed time (crew-minutes)
robotic time = 0.5 X elapsed time (minutes)

Use of algorithms: To estimate the times required to change out an ORU such as a science instrument or a subsystem module.

Basis for algorithms: A preliminary elapsed time vs ORU mass relationship was devised based directly on information from the HST Payload office which includes the results of neutral buoyancy tests at NASA/MSFC and NASA/JSC. (Reference: HST Maintenance Mission Timeline Profile Analysis, ST/MR-03, Section E, Lockheed Missiles and Space Company, Inc., D974126D, March 28, 1986.) These data were plotted by BDM and fitted with a three-segment line which breaks at ORU masses of 300 and 1200 kg. A revised elapsed time vs mass relationship (the algorithm provided above) was later developed by considering ORU changeout estimates from the EXP and SIRTF Payload Offices as well as the HST data. Both elapsed time algorithms and the supporting data points are plotted in Figure C-1. The revised algorithm was obtained by making a least-square

fit of equally weighted "strawman" data points from HST, EXP, and SIRTF. A linear relationship was assumed with the straight line constrained to pass through the coordinates, ORU changeout mass = 0, elapsed time = 33 minutes. This constraint was adopted based primarily on the supporting data for the changeout of single HST ORU's.

Two EVA astronauts are considered necessary to carry out the ORU changeout and robotic support is assumed to be necessary for half of the elapsed servicing time. One IVA astronaut is considered necessary to monitor the two EVA astronauts while a second is needed (for half of the elapsed time) to operate the robotic manipulator.

Suitability of algorithms: The revised BDM algorithm for elapsed time of ORU changeout is evaluated in Table C-3 against representative data points from HST, EXP, and SIRTF. As seen in the right hand column of this table, the BDM algorithm predicts between 62% (for HST) and 128% (for EXP) of the Payload Office estimates. The revised algorithm, though clearly an oversimplified treatment of ORU changeout, is considered adequate for the current study.

Recommended action: It is desirable to continue the evaluation of ORU changeout as more servicing data become available. Because of significant differences in the servicability of payloads, the addition of a complexity factor to the BDM algorithms for ORU changeout should be considered as a possible extension of the current exercise. The number of ORU's changed out (as well as their mass) and the method of ORU attachment would, undoubtedly, need to be considered.

Servicing Elapsed Time for ORU Changeout

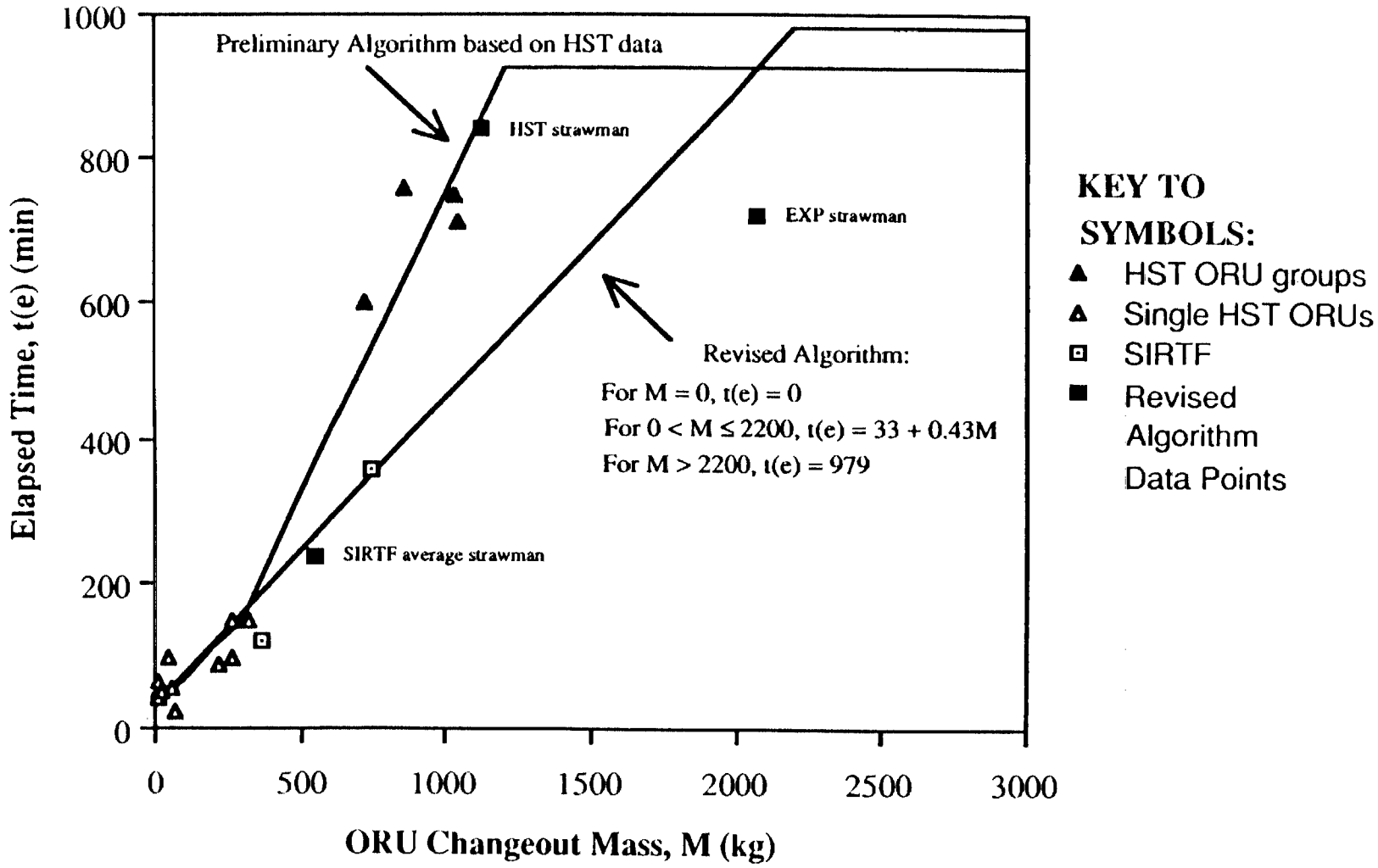

Figure C-1. Data Points and Algorithms for ORU Changeout Elapsed Time.

TABLE C-3. EVALUATION OF BDM ALGORITHM FOR ELAPSED TIME OF ORU CHANGEOUT

PAYLOAD/ CASE	ORU MASS (kg)	ELAPSED TIME (MIN) BDM*	ELAPSED TIME (MIN) P/L OFFICE	RATIO = BDM CALCULATION / PAYLOAD OFFICE ESTIMATE
EXP/A	2073	924	720	1.28
HST/A	1125	517	840	0.62
SIRTF/B	364	190	120	
/C	745	353	360	
/AVG.	554	271	240	1.13
Average				1.01

* for $0 < M_{ORU} \leq 2200$ kg, $t(e) = 33 + 0.43\ M_{ORU}$

for $M_{ORU} > 2200$ kg, $t(e) = 979$ minutes.

Activity 7, Replenishment of Consumables

A. Space Station-provided consumables: Hydrazine, Water, and Superfluid Helium.

1. Quantities to be recorded: Required amounts of consumables (quantities transferred) and helium dewar capacity.

2. Quantities to be calculated: Servicing Times and amount of helium expended.

Algorithms (if consumables tankers are used and EVA is involved):

for Hydrazine,
elapsed time = 60 + 0.11 X hydrazine mass transferred,
where elapsed time is in minutes and hydrazine mass is in kilograms,

and, IVA time = elapsed time (crew - minutes)
EVA time = 2 X elapsed time (crew - minutes)
robotic time = 0

also,
hydrazine mass expended = hydrazine mass transferred

for Water,

elapsed time = 30 + 0.059 X water mass transferred,

where elapsed time is in minutes and water mass is in kilograms,

and, IVA time = elapsed time (crew-minutes)

EVA time = 2 X elapsed time (crew-minutes)

robotic time = 0

also, water mass expended = water mass transferred

for Helium, if payload dewar is cool,

elapsed time = 120 + 0.09 X helium volume transferred

for Helium, if payload dewar is warm,

elapsed time = 120 + 0.44 X dewar capacity + 0.26 X helium volume transferred

where time is in minutes and volumes are in liters

Also for helium,

IVA time = elapsed time (crew - minutes)

EVA time = 240 crew - minutes

robotic time = 0

and, if dewar is cool,

volume expended = volume transferred

if dewar is warm,

Helium volume wasted = 1.10 X dewar capacity

+ 0.42 X helium transferred

and, Volume expended = volume transferred + volume wasted.

Use of algorithms: Provides finite servicing estimates when it is assumed that hydrazine, water, or superfluid helium are pumped into payload from a consumables tanker (or SS tank farm system) and EVA is used to attach/detach umbilicals and perform leak checks (constant term in elapsed time equations). Suitable equations have not been developed to cover situations where robotic only (i.e., no EVA) is used. In these cases, elapsed, IVA, and robotic time are TBD and EVA time is zero. This robotic-only situation applies for in-situ servicing and by Payload Office/Platform Office choice for servicing Eos NPOP-1 and NPOP-2 at the STS Orbiter.

Note that for helium replenishment with a warm payload dewar, a large amount of helium is "wasted" in cooling the dewar so that continuous liquid flow is possible. When the dewar is initially warm, the total elapsed servicing time is long and it is assumed that the EVA astronauts can be assigned to other external SS duties. Therefore, the EVA time is taken as only 240 crew-minutes (2 men working 60 minutes for umbilical attachment and 60 minutes for umbilical detachment) regardless of whether the dewar is cool or warm.

Basis for algorithms: Design information on consumables tanker pumping rates, estimated connect/disconnect times, and test result data were obtained from Mr. William Boyd of the Propulsion and Power Division at the NASA/JSC. Test data on helium transfer with both cool and warm payload dewars was provided for transfer volumes between 3000 and 4000 liters. These data were utilized by BDM to prepare the helium transfer algorithms shown above.

It was necessary to introduce a term involving tank capacity into the equations so that the results would be suitable for small as well as large values of transferred helium volume.

Suitability of algorithms: No Payload Office servicing estimates are available to permit a comparison for hydrazine or water transfer. SIRTF has made an estimate for superfluid helium servicing with 4000 liters transferred. Even though they assume the payload dewar is empty, they treat it as still being cool. A comparison of estimated helium servicing times (cool dewar) using the BDM algorithms with values obtained from SIRTF studies are shown in Table C-4.

TABLE C-4. HELIUM TRANSFER COMPARISON

	Helium Transferred (Liters)	Helium Expended (Liters)	Elapsed Time (Minutes)	IVA Time (Crew-Minutes)	EVA Time (Crew-Minutes)	Robotic Time (Minutes)
SIRTF OFFICE	4000	4850	660	660	240	0
BDM ALGORITHMS	4000	4000	480	480	240	0
BDM/SIRTF RATIO	1.0	0.82	0.73	0.73	1.0	--

Based on this one-point comparison, the BDM results are less conservative than those of the SIRTF Office. Because of the limited basis for comparison, it is believed that the BDM algorithms are adequate for the current exercise.

Recommended action: Inquiries should be made with other personnel who are known to be working with on-orbit transfer of consumables. These personnel include Dr. Walter Brooks at NASA/ARC and Dr. Stephen Castles at NASA/GSFC.

B. Payload Office-supplied consumables

Parameters to be calculated: Servicing Times required for replenishment of Payload Office-supplied consumables that are changed out in tanks (liquids/gasses) or containers (solids).

Algorithms (where M is mass of consumable including tank/container):

If $M = 0$, elapsed time = 0
If $0 < M \leq 2200$ kg,
elapsed time = $33 + 0.43\,M$
If $M = > 2200$ kg, elapsed time = 979
where elapsed time is in minutes

In each case, IVA time = 1.5 X elapsed time (crew-minutes)
EVA time = 2 X elapsed time (crew-minutes)
robotic time = 0.5 X elapsed time (minutes)

Note: If a pressurized liquid or gas is to be replenished but the mass of its tank is unknown, the following formulas may be used.

$$\text{mass of tank} = \frac{\text{pressure of contents X volume of tank}}{23{,}500}$$

where, mass of tank is in kg

pressure, P, is in N/m^2

volume, V, is in m^3

and,

changeout mass = consumable mass + tank mass

The basic algorithm, mass of tank = constant X P X V applies to a uniform spherical tank. The constant was determined based on information on titanium tanks which was provided by Mr. William Woodruff, Code 713.2, NASA/GSFC.

Use of algorithms: To estimate the times required to replenish a consumable using a changeout of tank/container method. The method may be applicable to tanks of gases alone or even to a complete propulsion subsystem module.

Basis for algorithms: Same as Activity 6, ORU Changeout.

Suitability of algorithms: See discussion for Activity 6.

Recommended action: See discussion of Activity 6.

Activity 8. Payload Deberthing-Related Activities at SS or STS

Note: Applies to free-flyer payloads. Does not apply if servicing is in-situ. Does not apply to attached payload (unless there is a free-flying component such as RPDP on STO/SS).

Parameters to be calculated: Servicing Times.

Algorithms:

elapsed time = 5 hr:30 min
IVA crew time = 5 hr:30 min
EVA crew time = 3 hr:0 min *
robotic time = 3 hr:0 min
*** 2 astronauts x 1 hr:30 min**

Use of algorithms: This function encompasses a variety of free-flyer deberthing-related activities. They include checking out payload, removing electrical umbilicals (EVA), removing payload aperture shade and/or sensor covers (EVA), transferring payload to OMV (using robotic), mating payload to OMV and deploying from SS (also using robotic).

Basis for algorithms: The servicing estimates presented above are a variation of the timeline presented in the report, "Servicing Operations for the SIRTF Observatory at the Space Station" (see Activity 4). Activities pertaining solely to handling, control, and servicing of the deploying OMV have been omitted as discussed above under Activity 3.

Suitability of algorithms: The algorithms are considered adequate for the current exercise. As stated above, they are based on servicing predictions by the SIRTF Payload Office. The algorithms, when applied to deberthing of HST, yield servicing times that are higher (by 50%) than those predicted by the HST Payload Office. No other Payload Offices have provided estimates for deberthing so further comparisons are not available at this time. There is concern that some of the smaller, simpler free-flyers such as EXP, 3S, and RPDP may require considerably less time for deberthing than indicated by the BDM algorithms.

Recommended action: Use of complexity factors should be considered as a possible future activity for improving predictions for deberthing and berthing-related activities.

Activity 9, OMV or OTV + OMV Deploys Payload From SS or STS Orbiter Bay

Note: Applies to many free-flyer payloads. Does not apply where the payload propulsion subsystem is used to carry the payload from the STS servicing orbit to operational science orbit (Eos NPOP-1 and 2, for example) or if servicing is in-situ. Does not apply to SS attached payloads unless there is a free-flyer component.

Information to be recorded: It is necessary to indicate whether the payload is deployed from the SS or the payload is deployed from an STS orbiter. It is also necessary to specify whether an OMV is required or whether an OTV + OMV is required.

Number of OMV (or OTV + OMV) flights (0 or 1) _____.

Major purpose of flight: Deployment of Payload.

Flight date (CY Quarter): _____.

Algorithm:

No Calculation Required

Basis for algorithm: Requirements for OMV (or OTV + OMV) support (Number, Purpose, Date) are recorded. Transportation, servicing, control, etc., of OMV or OTV + OMV is not considered chargeable to Payload Office servicing. Mass/volume up/down, storage, and time estimates relative to these OMV activities are, therefore, not provided.

Activity 10. Robot Loads Servicing Materials (In Carrier) From SS Servicing Facility into STS Orbiter Bay

Parameters to be calculated: Servicing Times.

Algorithms:

elapsed time = 30 minutes
IVA time = 30 crew-minutes
EVA time = 0 crew-minutes
robotic time = 30 minutes

Use of algorithms: Provides estimate for transfer of payload-provided servicing materials in their carrier (following servicing) from SS Servicing Facility into STS Orbiter cargo bay. This action would normally be the function of the Servicing Facility Manipulator (SFM), but probably could be accomplished by the SS Mobile RMS (MRMS) on the Mobile Servicing Center (MSC).

Basis for algorithms: Same as for Activity 2.

Suitability of algorithms: Considered adequate for current exercise. No Payload Office estimate has been located which predicts servicing times for loading of STS Orbiter bay from SS.

Recommended action: Consider characteristics of SS Servicing Facility Manipulator when information becomes available. Discuss with NASA/GSFC Code 400.6.

Activity 11. STS Takes Residual Payload Servicing Materials in Carrier to Earth

A. Information to be recorded: It is necessary to indicate whether the STS departs from the SS or the STS departs from another servicing orbit (e.g., polar orbit). The date of departure (CY Quarter) also should be recorded.

B. Information to be calculated: Mass of Servicing Materials Down, Volume of Servicing Materials Down.

Algorithms (with all masses in kg and all volumes in m^3):

mass of servicing materials down = mass of servicing materials up - mass of Payload Office-provided consumables expended.

volume of servicing materials down = volume of servicing materials up

Basis for algorithms: It is assumed that the mass of servicing materials down is the mass up reduced only by Payload Office provided consumables that have been expended. Volume down is considered the same as volume up. These equations imply that during ORU changeout servicing, there are equal masses and volumes involved and that any FSE brought up is returned to Earth following servicing.

Suitability of algorithms: These algorithms are considered adequate if normal changeout servicing is involved. They would need to be modified somewhat to cover the possible case where materials are added to the payload, but none, or significantly different amounts, are removed. This kind of information should be included in the Payload Office servicing estimates and, therefore, would be incorporated in the composite servicing estimates.

Activity 12, Pressurized Module Servicing

Note: This activity applies only to attached payloads located in the SS pressurized modules.

Parameters to be calculated: Servicing Times associated with changing out a number of equipment racks in a pressurized module.

Algorithms (with total changeout mass of racks in kg):

elapsed time = 90 X number of racks
+ 0.03 X mass of equipment,
where time is in minutes.

IVA time = 2 X elapsed time (crew-minutes)
EVA time = 0 crew-minutes
robotic time = 0 minutes

Use of algorithms: Used to estimate servicing times for changeout of equipment racks where replaced racks will be returned to Earth for analysis and replacement racks will be used for new data collection. Two astronauts work together to affect the changeout. No EVA or robotic are considered necessary.

Basis for algorithms: The estimates are based on inputs from the MMPF Payload Office. The estimates were also discussed with personnel from the LSRF Payload Office who agreed that the algorithms appeared reasonable.

Suitability of algorithms: Considered adequate.

Recommended action: None at this time.

Activity 13, In-Situ Servicing

Note: In-Situ Servicing is defined herein as servicing of a free-flyer payload at its operational orbit, remote from either SS or STS Orbiter bay. It, therefore, will involve an OMV or OTV + OMV that is based either on the SS or on an STS Orbiter and, most likely, a Flight Telerobotic Servicer (FTS) or equivalent manipulator on the OMV.

A. Information to be recorded: It is necessary to indicate whether the in-situ servicing will take place in low earth orbit (OMV required) or in geosynchronous orbit (OTV + OMV required). It also is necessary to indicate whether the OMV or OTV + OMV is based on the SS or on the STS orbiter.

B. Special assumptions:

(1) For OMV/OTV + OMV based on SS, the following servicing activities apply:

Activity 1: STS brings payload servicing materials from Earth to SS but mass/volume of OMV/OTV is not included in calculations (since not chargeable to payload servicing).

Activity 2: Unloading servicing materials from STS to SS.

Activity 10: Loading servicing materials from SS to STS.

Activity 11: STS takes payload servicing materials from SS to Earth.

Activity 13: Loading of Materials from SS to OMV before servicing and from OMV to SS following servicing. One (1) in-situ OMV or OTV + OMV flight is required.

The following servicing activities may also apply depending on the strawman scenario, but BDM algorithm time estimates are TBD (except EVA = 0):

Activity 6: ORU changeout.

Activity 7: Consumable replenishment.

Activity 14: On-orbit assembly.

(2) For OMV/OTV + OMV based on STS Orbiter, the following activities apply:

Activity 1: STS brings payload servicing materials from Earth to STS orbit (no SS involvement) but mass/volume of OMV/OTV is not included in calculations (since not chargeable to payload servicing).

Activity 11: STS takes payload servicing materials from STS Orbit to Earth (no SS involvement).

Activity 13: One (1) in-situ OMV or OTV + OMV flight is required but no loading or unloading from/to STS or OMV is required.

The following activities may also apply depending on strawman scenario, but BDM servicing time estimates are TBD (except EVA = 0):

Activity 6: ORU changeout

Activity 7: Consumable replenishment

Activity 14: On-orbit assembly.

C. Parameters to be estimated only for SS-based OMV or OTV + OMV: Servicing Times associated with loading servicing materials from SS to OMV before servicing, and from OMV to SS following servicing.

Algorithms:

SS to OMV Loading:
elapsed time = 30 minutes
IVA time = 30 crew-minutes
EVA time = 0 crew-minutes
robotic time = 30 minutes

OMV to SS Loading:
elapsed time = 30 minutes
IVA time = 30 crew-minutes
EVA time = 0 crew-minutes
robotic time = 30 minutes

Use of algorithms: As indicated, but only when OMV or OTV + OMV is based at SS. If the OMV or OTV + OMV is based at the STS Orbiter Bay, it is assumed that the OMV's servicing package is already in place on its front end.

Basis for algorithms: The two OMV loading/unloading activities are assumed to be similar in effort to the STS to SS and SS to STS activities described, respectively, under Activities 2 and 10.

Suitability of algorithms: Considered adequate.

Recommended action: Consider characteristics of SS Servicing Facility Manipulator when information becomes available. This facility will probably be used to load the servicing package onto and off of the OMV.

Activity 14, On-Orbit Payload Assembly

Note: Five of the candidate OSSA payloads require on-orbit assembly. No single algorithm was considered suitable for estimating servicing time because of the very large variations from payload to payload in the nature, complexity, and amount of assembly required. A brief description of the required activity, and, where possible, an estimate of the effort required is presented below.

A. Payload: Large Deployable Reflector (LDR)
Source of estimate: Dr. Paul Swanson, LDR Study Office, NASA/JPL.
Assembly estimate from project office:

IVA time = 261 crew-hours
EVA time = 450 crew-hours
total crew-time = 711 crew-hours
robotic time = TBD

Other information/assumptions provided:
Mass of operational (wet) payload: 30,000 kg
Volume of total retracted (packaged) payload: 300 m^3
Assumed payload mass and volume on each of two STS Orbiter launches: mass = 15,000 kg; volume = 150 m^3
Interval between launches: 6 months
Location of Assembly: at SS, exact location TBD
Number of assembly operations: two; first starting immediately after first launch; assembly continues following second launch.
BDM-developed algorithm based on LDR inputs
Assumptions: Assembly elapsed time (total) = IVA time = 260 hours. Elapsed time proportional to payload mass where K is the constant of proportionality.

$$K = \frac{260 \text{ hours}}{30{,}000 \text{ kg}} = \frac{0.0087 \text{ hours}}{\text{kg}} = \frac{0.52 \text{ minutes}}{\text{kg}}$$

$$\frac{\text{EVA time}}{\text{elapsed time}} = \frac{450}{260} = 1.73$$

robotic time = 0.25 EVA time

Resulting BDM algorithms based on LDR inputs:

elapsed time = 0.52 X total mass of wet payload, where time is in minutes and mass in kg

IVA time = elapsed time (crew-minutes)
robotic time = 0.25 X EVA time (minutes)

Note: If Payload is launched in more than one STS Orbiter flight, and if assembly takes place immediately after each flight, then servicing times will be distributed in appropriate CY Quarters in proportion to masses carried to orbit.

B. Payload: Astrometric Telescope Facility (ATF)

Nature of assembly: Three portions of ATF are launched in one STS orbiter. Total Mass is 5105 kg. Portions of payload are transported to SS upper boom where assembly is assumed to take place.

Estimate of ATF assembly time: Estimates were made by BDM using the algorithms developed from LDR. The following results (below) were approved by Mr. K. Nisioka, NASA/ARC:

elapsed time = 44 hours
IVA time = 44 crew-hours
EVA time = 76 crew-hours
robotic time = 19 hours

C. Payload: Partical Astrophysics Magnet Facility (ASTROMAG)

Nature of assembly: ASTROMAG is carried to the SS on a single STS Orbiter flight. In the cargo bay, it is separated into three bodies having the following masses:

1. 1000 kg
2. 3600 kg
3. 1000 kg.

During assembly, masses 1 and 3 were rotated 90° from their transported positions in the Orbiter and attached to mass 2.

Method of estimating ASTROMAG assembly time: No assembly estimate was provided by the Payload Office. BDM assumed that the attachment of masses 1 and 3 to mass 2 would be simpler than ORU changeout of two similar bodies (with a combined mass of 2000 kg). Elapsed time was, therefore, estimated to be one half of that required for an ORU changeout as defined in the algorithms of Activity 6.

Estimates of ASTROMAG assembly time:

elapsed time = 446 minutes = 7.4 hours
IVA time = 669 crew-minutes = 11.2 crew-hours
EVA time = 892 crew-minutes = 14.9 crew-hours
robotic time = 223 minutes = 3.7 hours

D. Payload: Experimental Geosynchronous Platform (XGP)

Nature of assembly: Unfolding and unfurling of very large payload (50 m X 50 m) at SS. Details are TBD.

Estimate of XGP assembly time: TBD

E. Payload: SBAR

Nature of on-orbit assembly: TBD

Estimate of SBAR assembly time: TBD

III. DESCRIPTION AND DISCUSSION OF BDM ALGORITHMS DEVELOPED FOR USE WITH AN ALL-ROBOTIC SERVICING SCENARIO

BDM servicing algorithms described in this section were developed based on the assumption that the indicated servicing activities would be carried out in an all-robotic manner with EVA excluded.

Activity 1, STS Brings Payload Servicing Materials from Earth (All-Robotic)

A. Information to be recorded: It is necessary to indicate whether the materials are brought to SS or whether the materials are brought to another servicing orbit (e.g. polar orbit). The date (CY quarter) of STS arrival should also be recorded.

B. Parameters to be calculated: Mass of Servicing Materials Up (kg).

Algorithm (with all masses in kilograms):

Mass of Servicing Material Up =
1.57 [Mass of P/L ORU's + P/L Office Consumables + P/L Office FSE]

C. Parameter to be calculated: Volume of Servicing Materials Up.
Algorithm (with all volumes in m^3):

Volume of Servicing Materials Up =
2.16 [Volume of ORU's + P/L Office Consumables + P/L Office FSE]

Discussion: Algorithm is unchanged. EVA is not a factor.

Activity 2. Robot Unloads Servicing Material (In Carrier) from STS Orbiter Bay to SS Servicing Facility (All-robotic)

A. Parameters to be calculated: Servicing Times.
Algorithms:

elapsed time = 30 minutes
IVA time = 30 crew-minutes
EVA time = 0 crew-minutes
robotic time = 30 minutes

Discussion: No change. STS unloading was already considered all-robotic in the mixed-servicing scenario.

B. Parameters to be calculated: Temporary Storage Mass and Storage Volume of Payload Servicing Materials on SS.
Algorithms:

Temporary Storage Mass on SS = Mass of Servicing Materials Up
Temporary Storage Volume on SS = Volume of Servicing Materials Up

Discussion: Temporary storage requirements are unchanged from those in the mixed-servicing scenario.

C. Parameters to be calculated: "Permanent Storage" at Space Station.

Algorithms:

Permanent Storage Mass = N.A. Permanent Storage Volume = N.A.

Discussion: Permanent storage requirements are unchanged from the mixed-servicing scenario. No requirement for permanent storage is identified by BDM for any payload unless specified by the Payload Office.

Activity 3, OMV or OTV + OMV Brings Payload from Orbit (All-robotic)

Information to be recorded: It is necessary to indicate whether the Payload is brought to the SS or to an STS Orbiter. Also, it is necessary to specify whether an OMV is required or an OTV + OMV is required. (The OTV + OMV combination is necessary if the payload is to be retrieved from geosynchronous orbit.)

Number of OMV or OTV + OMV flights (0 or 1) _____.

Major purpose of flight: retrieval of payload.

Flight Date (CY Quarter) _____.

Algorithm:

No Calculation Required

Discussion: No change from mixed-servicing scenario. OMV flight time and servicing times are not chargeable to payload.

Activity 4, Payload Berthing-related Activities at SS or STS (All-robotic)

Parameters to be calculated: Servicing Times.

Algorithms:

elapsed time = TBD
IVA crew-time = TBD
EVA crew-time = 0
robotic time = TBD

Discussion: BDM algorithms for mixed servicing are not considered suitable for all-robotic payload berthing-related activities.

Activity 5. Transport of Servicing Materials from SS Servicing Materials from SS Servicing Facility to Payload and Back Using MRMS Robot and MSC (All-robotic)

Note: Applied only to SS-attached external payloads.

Parameters to be calculated: Servicing Times.

Algorithms [distance to payload from SF (along SS truss) is in meters; elapsed time and robotic time are in minutes; IVA time is in crew-minutes]:

$$\text{elapsed time} = \frac{\text{distance to payload}}{80} \times 180$$

$$\text{IVA time} = \text{elapsed time}$$

$$\text{EVA time} = 0$$

$$\text{robotic time} = \text{elapsed time}$$

Discussion: IVA time is reduced from 2X to 1X elapsed time since there is no EVA to monitor in the all-robotic servicing scenario.

Activity 6. ORU Changeout (All-robotic)

Parameters to be calculated: Servicing Times.

Algorithms:

elapsed time = TBD
IVA time = TBD
EVA time = 0
robotic time = TBD

Discussion: BDM algorithms for mixed-servicing ORU changeout are not considered suitable for all-robotic ORU changeout.

Activity 7. Replenishment of Consumables (All-robotic, In-situ)

A. Space Station-provided consumables: Hydrazine, water, superfluid helium.

Quantities to be calculated: Servicing Times, etc.

Algorithms:

elapsed time = TBD
IVA time = TBD
EVA time = 0
robotic time = TBD

Discussion: BDM algorithms for mixed-servicing consumables replenishment are not considered suitable for in-situ or all-robotic servicing. (EVA astronauts are used in mixed-servicing scenario to perform leak checks and attach/detach umbilicals.)

B. Payload Office-supplied Consumables

Parameters to be calculated: Servicing Times.

Algorithms:

elapsed time = TBD
IVA time = TBD
EVA time = 0
robotic time = TBD

Discussion: BDM mixed-servicing algorithms are not considered suitable.

Activity 8, Payload Deberthing-related Activities at SS or STS (All-robotic)

Parameters to be calculated: Servicing Times.

Algorithms:

elapsed time = TBD
IVA time = TBD
EVA time = 0
robotic time = TBD

Discussion: BDM algorithms for mixed-servicing payload deberthing-related activities are not considered suitable.

Activity 9, OMV or OTV + OMV Deploys Payload from SS or STS Orbiter Bay (All-robotic)

Information to be recorded: It is necessary to indicate whether the payload is deployed from the SS or the payload is deployed from an STS orbiter. It is also necessary to specify whether an OMV is required or whether an OTV + OMV is required.

Number of OMV (or OTV + OMV) flights (0 or 1) _____.

Major purpose of flight: Deployment of Payload.

Flight date (CY Quarter): _____.

Algorithm:

No Calculation Required

Discussion: No change from mixed-servicing scenario. OMV flight times and servicing times are not chargeable to payload.

Activity 10, Robot Loads Servicing Materials (In Carrier) from SS Servicing Facility into STS Orbiter Bay (All-robotic)

Parameters to be calculated: Servicing Times.

Algorithms:

elapsed time = 30 minutes
IVA time = 30 crew-minutes
EVA time = 0 crew-minutes
robotic time = 30 minutes

Discussion: No change. STS loading was already considered all-robotic in mixed-servicing scenario.

Activity 11. STS Takes Residual Payload Servicing Materials in Carrier to Earth (All-robotic)

A. Information to be recorded: It is necessary to indicate whether the STS departs from the SS or the STS departs from another servicing orbit (e.g., polar orbit). The date of departure (CY Quarter) also should be recorded.

B. Information to be calculated: Mass of Servicing Materials Down, Volume of Servicing Materials Down.

Algorithms:

mass of servicing materials down = mass of servicing materials up - mass of Payload Office-provided consumables expended.

volume of servicing materials down = volume of servicing materials up

Discussion: Algorithms are unchanged from mixed-servicing scenario.

Activity 12, Pressurized Module Servicing (All-robotic)

Note: Neither EVA or the use of a robot was considered necessary for pressurized module (equipment rack changeout) in the mixed-servicing scenario.

Algorithms:

elapsed time = TBD
IVA time = TBD
EVA time = 0
robotic time = TBD

Discussion: Introduction of robotics to change out equipment racks is assumed. Servicing times are TBD for this type of operation.

Activity 13, In-situ Servicing (All-robotic)

Note: All information, assumptions, and algorithms indicated in Section II, Activity 13, are applicable. EVA was already excluded from in-situ servicing of payload by definition.

Activity 14, On-orbit Payload Assembly (All-robotic)

Note: In Section II, Activity 14, on-orbit servicing time estimates are provided for three payloads, LDR, ATF, and ASTROMAG. All three estimates contain significant EVA servicing. With EVA excluded, elapsed time, IVA time, and robotic time must be considered TBD.

IV. APPLICATION OF BDM ALGORITHMS TO ON-ORBIT SERVICING ESTIMATES

On-orbit servicing, where required, has been estimated for approximately thirty OSSA payloads which are candidates for operations under the Space Station Program. These estimates have been carried out using a new BDM Servicing Computation Spreadsheet System which was generated on a Macintosh Plus computer using Microsoft Excel. Microsoft Excel is a complete spreadsheet program with business graphics and data base functions. The BDM system is designed to sum servicing parameters for all servicing missions which occur during the life of a given payload program. (It will also sum servicing parameters for all servicing missions that occur during any calendar year quarter for a specified group of payloads.)

A payload may have different types of servicing missions throughout its lifetime (e.g., assembly shortly following launch, helium replenishment every year, and science instrument changeout every two years). These different types of servicing missions for any given payload have been designated by the letters A, B, C, etc. Each type of servicing mission consists of one or more (usually several) of the 14 servicing activities described above in Sections II and III. In carrying out the computations of estimated servicing, the BDM spreadsheet system will always utilize Payload Office estimates if these are available. If such estimates are not available, the BDM algorithms described above will be used.

V. RESULTS OF PAYLOAD ON-ORBIT SERVICING ESTIMATES

A. Servicing Estimates for Each Candidate OSSA Payload

The on-orbit servicing estimates for each OSSA payload are presented in the last four sections of the updated Payload Servicing Information Writeups that constitute Chapter 3 of this report. The following information is incorporated:

Payload Writeup Section 13: A menu of servicing activities that apply to the payload are presented with corresponding estimates of elapsed time, IVA time, EVA time, and robotic time. The activities, with corresponding time estimates, are divided into the following three categories:

1. Preparatory Servicing (Section 13.2),
2. Principal Servicing (Section 13.3), and
3. Close-Out Servicing (Section 13.4).

Payload Writeup Section 14: Payload strawman servicing scenarios are presented with one to four types of servicing (A, B, C, D) defined for each payload. Estimates are then provided of the following strawman servicing requirements for each type of payload servicing:

1. Up/down Mass on STS,
2. Up/down Volume on STS,
3. Storage on SS,
4. Servicing Times (elapsed, IVA, EVA, robotic), and
5. OMV Flights.

Payload Writeup Section 15: An overall servicing requirements summary is presented which corresponds to the assumed milestone and servicing schedule for the payload through CY 2005. The servicing parameters treated here are the same as those covered in Section 14.

B. Summary of Required Servicing Support for the Different Candidate Payloads

A summary of required servicing for the different OSSA Payloads is presented in Tables II-1 through II-5 of Chapter II of this Report.

PAYLOAD NAME: _____ PAYLOAD TYPE: _____
PAYLOAD STRAWMAN SERVICING TYPE: _____ INTERVIEW DATE: _____

PERSON INTERVIEWED: _____
BDM INTERVIEWER: _____

LAUNCH DATE (CY QUARTER): _____
TERMINATION DATE (CY QUARTER): _____

I. PAYLOAD SERVICING MISSION SCHEDULE:

MISSION NUMBER	SERVICING LOCATION (*)	SERVICING DATE (**) (CY QUARTER)	COMMENTS (***)
1.			
2.			
3.			
4.			
5.			
6.			
7.			
8.			
9.			
10.			
11.			
12.			

NOTE: PAYLOAD AS DEFINED HERE CONSISTS OF BOTH SCIENTIFIC INSTRUMENTS AND THE SUPPORTING ENGINEERING SYSTEMS (BUS, SPACECRAFT PLATFORM, ETC.)

(*) AT STS ORBITER, AT SS ATTACHED PAYLOAD LOCATION, IN SS SERVICING FACILITY, OR IN-SITU.

(**) OR SERVICING INTERVAL FROM LAUNCH DATE

(***) INDICATE SERVICING MISSION TYPE (A, B, ...). TRY TO LIMIT TO ONE OR TWO TYPES. PROVIDE BRIEF WORD DESCRIPTION OF EACH TYPE OF MISSION (E. G., A: ORU CHANGE-OUT, B: REPLENISH CRYOGEN, ETC.).

PAYLOAD NAME: _____

PAYLOAD STRAWMAN SERVICING TYPE: _____

II. DETERMINATION OF KEY QUANTITIES (*):

NOTE: UPPER CASE ENTRIES IN SECTION II INDICATE PAYLOAD OFFICE SUPPLIED VALUES. LOWER CASE ENTRIES INDICATE BDM ALGORITHMS THAT MAY BE USED IN CONNECTION WITH THE PAYLOAD OFFICE KEY VALUES.

A. ORU'S CHANGED OUT ON SERVICING MISSION
(SCIENCE INSTRUMENTS, SCIENCE AND SPACECRAFT MODULES, ETC.)

1. MASS OF ORUs CHANGED OUT ON SERVICING MISSION: _____ KG
2. VOLUME OF ORUs CHANGED OUT ON SERVICING MISSION: _____ M**3

B. CONSUMABLES PROVIDED FROM SS SUPPLY SYSTEM: HYDRAZINE, WATER, SUPERFLUID HELIUM (MASS/VOL EXPENDED = MASS/VOL TRANSFERRED + MASS/VOL WASTED)

VOLUME	EXPENDED (LITERS)	TRANSFERRED (LITERS)	WASTED (LITERS)
1. HYDRAZINE			
2. WATER			
3. HELIUM (**)			

MASS	EXPENDED (KG)	TRANSFERRED (KG)	WASTED (KG)
1. HYDRAZINE			
2. WATER			
3. HELIUM (**)			

4. HELIUM DEWAR CAPACITY _____ L
5. DEWAR CONDITION PRIOR TO HELIUM TRANSFER: WARM (EMPTY) _____
   (check one) COOL (PARTIALLY FULL) _____

(*) Key Quantities are required for estimating servicing activities using the BDM algorithms described in Section III of this data sheet.

(**) If complete helium information is not provided by the science office, use:
If dewar warm then
Volume wasted = 1.10 x (dewar capacity) + 0.424 x (helium transferred)
Volume expended = volume transferred + volume wasted
Mass expended = 0.145 kg/liter x volume expended

PAYLOAD NAME: _____

PAYLOAD STRAWMAN SERVICING TYPE: _____

II. DETERMINATION OF KEY QUANTITIES (continued):

If dewar is cool, use
Volume expended = volume transferred
Volume wasted = 0

C. CONSUMABLES PROVIDED BY PAYLOAD OFFICE (if applicable)

LIQUID/GAS IN TANK TO BE CHANGED OUT DURING SERVICING:

1. TYPE OF LIQUID/GAS (describe): _____
2. MASS OF LIQUID/GAS AND ITS TANK (*) _____ KG
3. MASS OF LIQUID/GAS EXPENDED _____ KG
4. VOLUME OF TANK _____ M**3

(*) If complete information is not provided by the payload office, use:

mass of liquid/gas (m)	_____	kg
volume of liquid/gas (v)	_____	m**3
maximum absolute pressure of tank (p)	_____	N/m**2
mass of tank (if known)	_____	kg
then mass of liquid/gas and tank = m + [(p x v) / 23500]	_____	kg

D. OTHER CONSUMABLES PROVIDED BY PAYLOAD OFFICE

DESCRIBE CONSUMABLE, AMOUNT, METHOD OF SERVICING, ETC.: _____

_____

_____

E. FLIGHT SUPPORT EQUIPMENT (FSE) PROVIDED BY PAYLOAD OFFICE AND TRANSPORTED TO AND FROM SS FOR SERVICING.

DESCRIBE FSE: _____

_____

_____

MASS OF FSE =	_____	KG
mass of fse =	0	kg
VOLUME OF FSE =	_____	M**3
volume of fse =	0	m**3

PAYLOAD NAME: _____

PAYLOAD STRAWMAN SERVICING TYPE: _____

III. SPECIFIC SERVICING INFORMATION:

NOTE: UPPER CASE ENTRIES IN SECTION III INDICATE PAYLOAD OFFICE ESTIMATES. LOWER CASE ENTRIES INDICATE ESTIMATES USING BDM ALGORITHMS. ALL SERVICING ACTIVITIES ARE IN THE SAME CY QUARTER AS INDICATED IN THE SECTION I PAYLOAD SERVICING SCHEDULE EXCEPT ACTIVITIES 11 AND 12, WHICH ARE IN THE SUBSEQUENT QUARTER.

ACTIVITY 1. STS BRINGS SERVICING MATERIALS FROM EARTH TO: (check one)

SPACE STATION _____

SERVICING ORBIT (NO SS INVOLVEMENT) _____

SERVICING ARRIVAL DATES (CY QUARTER): _____

_____

_____

_____

_____

MASS OF SERVICING MATERIALS UP
(INCLUDES ORU's, P/L OFFICE PROVIDED CONSUMABLES WITH TANKS, FSE, AND CARRIERS AS NEEDED): _____ KG

mass of servicing materials up = 1.57 x [mass of oru's + p/l office consumables/tanks + p/l office fse] = _____ kg

VOLUME OF SERVICING MATERIALS UP: _____ M**3

volume of servicing materials up = 2.16 x [volume of oru's + p/l office consumables/tanks + p/l office fse] = _____ m**3

PAYLOAD NAME: _____

PAYLOAD STRAWMAN SERVICING TYPE: _____

ACTIVITY 2. ROBOT UNLOADS SERVICING MATERIAL (IN CARRIER) FROM STS ORBITER BAY TO SS SERVICING FACILITY

ELAPSED TIME =	_____	MIN
elapsed time =	30	min
IVA TIME =	_____	CREW-MIN
iva time =	30	crew-min
EVA TIME =	_____	CREW-MIN
eva time =	0	crew-min
ROBOTICS TIME =	_____	MIN
robotics time =	30	min

NOTE: TEMPORARY STORAGE IS NORMALLY FOR ABOUT 90 DAYS BETWEEN STS ORBITER VISITS TO SS.

TEMPORARY STORAGE MASS OF SERVICING MATERIALS = _____ KG
temporary storage mass on ss = mass of servicing materials up = _____ kg

TEMPORARY STORAGE VOLUME OF SERVICING MATERIALS = _____ M**3
temporary storage volume on ss = volume of materials up = _____ m**3

ARE THERE PERMANENT STORAGE REQUIREMENTS ON SS? _____
IF YES, WHEN DO THESE REQUIREMENTS BEGIN? (CY QTR) _____
WHEN DO THESE REQUIREMENTS END? (CY QTR) _____
PRESSURIZED OR UNPRESSURIZED ? _____

PERMANENT STORAGE MASS =	_____	KG
permanent storage mass =	n/a	kg
PERMANENT STORAGE VOLUME =	_____	M**3
permanent storage volume =	n/a	kg

PAYLOAD NAME: _____

PAYLOAD STRAWMAN SERVICING TYPE: _____

ACTIVITY 3. OMV OR OTV + OMV BRINGS PAYLOAD FROM ORBIT TO (check one)

SS SERVICE FACILITY _____

STS ORBITER BAY _____

SERVICED BY (check one)

OMV _____

OTV + OMV _____

******* APPLIES TO FREE FLYER PAYLOAD *******

******* DOES NOT APPLY IF SERVICING IS IN-SITU *******

******* DOES NOT APPLY TO ATTACHED PAYLOAD *******

NUMBER OF FLIGHTS (0 OR 1): _____

MAJOR PURPOSE OF FLIGHT: RETRIEVAL OF PAYLOAD

FLIGHT DATES (CY QUARTER): _____

_____

_____

_____

_____

_____

PAYLOAD NAME: _____

PAYLOAD STRAWMAN SERVICING TYPE: _____

ACTIVITY 4. PAYLOAD BERTHING RELATED ACTIVITIES AT SS OR STS

******* APPLIES TO FREE FLYER PAYLOAD *******
******* DOES NOT APPLY IF SERVICING IS IN-SITU *******
******* DOES NOT APPLY TO ATTACHED PAYLOAD *******

THIS ACTIVITY (check one)

REQUIRES SOME EVA _____
IS ALL ROBOTIC (EVA EXCLUDED) _____

ELAPSED TIME =	_____	MIN
elapsed time (if eva) =	210	min
(if all robotic) =	tbd	min
IVA TIME =	_____	CREW-MIN
iva time (if eva) =	210	crew-min
(if all robotic) =	tbd	crew-min
EVA TIME =	_____	CREW-MIN
eva time (if eva) =	180	crew-min
(if all robotic) =	0	crew-min
ROBOTICS TIME =	_____	MIN
robotics time (if eva) =	120	min
(if all robotic) =	tbd	min

PAYLOAD NAME: _____

PAYLOAD STRAWMAN SERVICING TYPE: _____

ACTIVITY 5. TRANSPORT SERVICING MATERIAL FROM SS SERVICE FACILITY TO PAYLOAD AND BACK (USING THE MOBILE RMS ROBOT)

******* APPLIES ONLY TO SS ATTACHED EXTERNAL PAYLOADS *******

THIS ACTIVITY (check one)

REQUIRES SOME EVA _____

IS ALL ROBOTIC (EVA EXCLUDED) _____

DISTANCE ALONG TRUSS FROM SF TO PAYLOAD =	_____	METERS
distance from sf to payload =	80	meters
ELAPSED TIME =	_____	MIN
elapsed time t(e) = (distance to payload/80) x 180 =	_____	min
IVA TIME =	_____	CREW-MIN
iva time (if eva) = 2 x t(e) =	_____	crew-min
(if all robotic) = t(e) =	_____	crew-min
EVA TIME =	_____	CREW-MIN
eva time (if eva) = 2 x t(e) =	_____	crew-min
(if all robotic) =	0	crew-min
ROBOTICS TIME =	_____	MIN
robotics time = t(e) =	_____	min

PAYLOAD NAME: _____

PAYLOAD STRAWMAN SERVICING TYPE: _____

ACTIVITY 6. ORU CHANGEOUT

THIS ACTIVITY (check one)

REQUIRES SOME EVA _____

IS ALL ROBOTIC (EVA EXCLUDED) _____

ELAPSED TIME = _____ MIN

If mass of ORU = 0 KG, then elapsed time = 0
If 0 < mass of ORU ≤ 2200 KG, then elapsed time = 33 + 0.43 x mass of ORU
If mass of ORU > 2200 KG, then elapsed time = 979

elapsed time (if eva) = t(e) =	_____	min
(if all robotic) =	tbd	min
IVA TIME =	_____	CREW-MIN
iva time (if eva) = 1.5 x t(e) =	_____	crew-min
(if all robotic) =	tbd	crew-min
EVA TIME =	_____	CREW-MIN
eva time (if eva) = 2 x t(e) =	_____	crew-min
(if all robotic) =	0	crew-min
ROBOTICS TIME =	_____	MIN
robotics time (if eva) = 0.5 x t(e) =	_____	min
(if all robotic) =	tbd	min

PAYLOAD NAME: _____

PAYLOAD STRAWMAN SERVICING TYPE: _____

ACTIVITY 7. REPLENISHING CONSUMABLES

THIS ACTIVITY (check one)

REQUIRES SOME EVA _____

IS IN-SITU OR ALL ROBOTIC (EVA EXCLUDED) _____

A. SS PROVIDED CONSUMABLES

HYDRAZINE

HYDRAZINE MASS TRANSFERRED (from pg 2) =	_____	KG
ELAPSED TIME =	_____	MIN
t(e) = 60 + (hydrazine mass transferred) x 0.11 =	_____	min
(if in-situ) =	tbd	min
IVA TIME =	_____	CREW-MIN
iva time = t(e) =	_____	crew-min
(if in-situ) =	tbd	crew-min
EVA TIME =	_____	CREW-MIN
eva time = 2 x t(e) =	_____	crew-min
(if in-situ) =	0	crew-min
ROBOTICS TIME =	_____	MIN
robotics time =	0	min
(if in-situ) =	tbd	min

WATER

WATER MASS TRANSFERRED (from pg 2) =	_____	KG
ELAPSED TIME =	_____	MIN
t(e) = 30 + (water mass transferred) x 0.059 =	_____	min
(if in-situ) =	tbd	min
IVA TIME =	_____	CREW-MIN
iva time = t(e) =	_____	crew-min
(if in-situ) =	tbd	crew-min
EVA TIME =	_____	CREW-MIN
eva time = 2 x t(e) =	_____	crew-min
(if in-situ) =	0	crew-min

PAYLOAD NAME: _____

PAYLOAD STRAWMAN SERVICING TYPE: _____

ACTIVITY 7. REPLENISHING CONSUMABLES (continued)

A. SS PROVIDED CONSUMABLES (continued)

WATER

ROBOTICS TIME =	_____	MIN
robotics time =	0	min
(if in-situ) =	tbd	min

HELIUM

HELIUM DEWAR CAPACITY (from pg 2) =	_____	LITERS
HELIUM VOLUME TRANSFERRED (from pg 2) =	_____	LITERS
ELAPSED TIME =	_____	MIN

If dewar is cool, t(e) = 0.09 x helium <u>volume</u> transferred + 120
If dewar is warm, t(e) = 0.44 x dewar capacity +
0.26 x helium <u>volume</u> transferred + 120

elapsed time = t(e) =	_____	min
(if in-situ) =	tbd	min
IVA TIME =	_____	CREW-MIN
iva time = t(e) =	_____	crew-min
(if in-situ) =	tbd	crew-min
EVA TIME =	_____	CREW-MIN
eva time =	240	crew-min
(if in-situ) =	0	crew-min
ROBOTICS TIME =	_____	MIN
robotics time =	0	min
(if in-situ) =min	tbd	min

PAYLOAD NAME: _____

PAYLOAD STRAWMAN SERVICING TYPE: _____

ACTIVITY 7. REPLENISHING CONSUMABLES (continued)

B. PAYLOAD OFFICE SUPPLIED CONSUMABLES
(LIQUID/GAS IN TANK TO BE CHANGED OUT)

THIS ACTIVITY (check one)

REQUIRES SOME EVA _____

IS ALL ROBOTIC (EVA EXCLUDED) _____

MASS OF CONSUMABLE AND TANK (from pg 3) = _____ KG

ELAPSED TIME = _____ MIN

If mass of consumable/tank = 0 KG, then elapsed time = 0
If 0 < mass ≤ 2200 KG, then elapsed time = 33 + 0.43 x (mass of consumable/tank)
If mass > 2200 KG, then elapsed time = 979

elapsed time (if eva) = t(e) =	_____	min
(if all robotic) =	tbd	min
IVA TIME =	_____	CREW-MIN
iva time (if eva) = 1.5 x t(e) =	_____	crew-min
(if all robotic) =	tbd	crew-min
EVA TIME =	_____	CREW-MIN
eva time (if eva) = 2 x t(e) =	_____	crew-min
(if all robotic) =	0	crew-min
ROBOTICS TIME =	_____	MIN
robotics time (if eva) = 1/2 x t(e) =	_____	min
(if all robotic) =	tbd	min

PAYLOAD NAME: _____

PAYLOAD STRAWMAN SERVICING TYPE: _____

ACTIVITY 8. PAYLOAD DEBERTHING RELATED ACTIVITIES AT SS OR STS

******* APPLIES TO FREE FLYER PAYLOAD *******
******* DOES NOT APPLY IF SERVICING IS IN-SITU *******
******* DOES NOT APPLY TO ATTACHED PAYLOAD *******

THIS ACTIVITY (check one)

REQUIRES SOME EVA _____
IS ALL ROBOTIC (EVA EXCLUDED) _____

ELAPSED TIME =	_____	MIN
elapsed time (if eva) =	330	min
(if all robotic) =	tbd	min
IVA TIME =	_____	CREW-MIN
iva time (if eva) =	330	crew-min
(if all robotic) =	tbd	crew-min
EVA TIME =	_____	CREW-MIN
eva time (if eva) =	180	crew-min
(if all robotic) =	0	crew-min
ROBOTICS TIME =	_____	MIN
robotics time (if eva) =	180	min
(if all robotic) =	tbd	min

PAYLOAD NAME: _____

PAYLOAD STRAWMAN SERVICING TYPE: _____

ACTIVITY 9. PAYLOAD DEPLOYMENT FROM OMV OR OTV + OMV

OMV OR OTV + OMV DEPLOYS PAYLOAD FROM (check one)

SS SERVICE FACILITY _____

STS ORBITER BAY _____

SERVICED BY (check one)

OMV _____

OTV + OMV _____

******* APPLIES TO FREE FLYER PAYLOAD *******

******* DOES NOT APPLY IF SERVICING IS IN-SITU *******

******* DOES NOT APPLY TO ATTACHED PAYLOAD *******

NUMBER OF FLIGHTS (0 OR 1) : _____

MAJOR PURPOSE OF FLIGHT: DEPLOYMENT OF PAYLOAD _____

FLIGHT DATES (CY QUARTER): _____

_____

_____

_____

_____

_____

PAYLOAD NAME: _____

PAYLOAD STRAWMAN SERVICING TYPE: _____

ACTIVITY 10. ROBOT LOADS SERVICING MATERIALS (IN CARRIER) FROM SS SERVICING FACILITY INTO STS ORBITER BAY

ELAPSED TIME =	_____	MIN
elapsed time =	30	min
IVA TIME =	_____	CREW-MIN
iva time =	30	crew-min
EVA TIME =	_____	CREW-MIN
eva time =	0	crew-min
ROBOTICS TIME =	_____	MIN
robotics time =	30	min

PAYLOAD NAME: _____

PAYLOAD STRAWMAN SERVICING TYPE: _____

ACTIVITY 11. STS TAKES RESIDUAL PAYLOAD MATERIALS TO EARTH

(check one)

FROM SPACE STATION _____

FROM SERVICING ORBIT (NO SS INVOLVEMENT) _____

STS DATE OF DEPARTURES (CY QUARTER): _____

_____

_____

_____

_____

_____

MASS OF P/L OFFICE PROVIDED
CONSUMABLES EXPENDED (from pg 3): _____ KG

MASS OF SERVICING MATERIALS DOWN: _____ KG
mass of materials down = mass of materials up
- mass of p/l office consumables expended = _____ kg

VOLUME OF SERVICING MATERIALS DOWN: _____ M**3
volume of materials down = volume of materials up = _____ m**3

PAYLOAD NAME: _____

PAYLOAD STRAWMAN SERVICING TYPE: _____

ACTIVITY 12. RACK CHANGEOUT OF PRESSURIZED MODULE PAYLOAD

******* APPLIES ONLY TO PAYLOAD IN PRESSURIZED MODULE *******

NUMBER OF RACKS CHANGED OUT	_____	
MASS OF EQUIPMENT CHANGED OUT	_____	KG
ELAPSED TIME =	_____	MIN
t(e) = 90 x number of racks + 0.03 x mass of equipment =	_____	min
IVA TIME =	_____	CREW-MIN
iva time = 2 x t(e) =	_____	crew-min
EVA TIME =	_____	CREW-MIN
eva time =	0	crew-min
ROBOTICS TIME =	_____	MIN
robotics time =	0	min

PAYLOAD NAME: _____

PAYLOAD STRAWMAN SERVICING TYPE: _____

ACTIVITY 13. SPECIAL CASE:IN-SITU SERVICING

IN-SITU SERVICING IS DEFINED AS SERVICING OF A FREE FLYER PAYLOAD AT ITS OPERATIONAL ORBIT AWAY FROM EITHER SS OR THE STS ORBITER BAY AND AS SUCH, MUST USE OMV OR OTV+OMV BASED ON SS OR ON THE STS ORBITER.

SPECIFY (check appropriate ones):

LOW EARTH ORBIT SERVICING (OMV) _____

GEOSYNCRONOUS ORBIT SERVICING (OTV+OMV) _____

OMV/OTV BASED ON SS _____

OMV/OTV BASED ON STS ORBITER _____

ASSUMPTIONS:

FOR OMV/OTV BASED AT SS THE FOLLOWING ACTIVITIES APPLY:

ACTIVITY 1, STS BRINGS MATERIALS FROM EARTH TO SS NOT TO INCLUDE MASS/VOLUME OF OMV/OTV OR EQUIPMENT/CONSUMABLES RELATED TO HYDRAZINE, WATER, OR HELIUM REPLENISHMENT UNLESS CONSUMABLE MODULAR CHANGEOUT METHOD IS USED

ACTIVITY 2, ROBOT UNLOADS MATERIALS FROM STS TO SS

ACTIVITY 10, ROBOT LOADS MATERIALS FROM SS TO STS

ACTIVITY 11, STS TAKES MATERIALS FROM SS TO EARTH

ACTIVITY 13, ROBOT LOADS MATERIALS FROM SS TO OMV, FROM OMV TO SS, AND 1 IN-SITU OMV OR OTV+OMV FLIGHT IS REQUIRED

THE FOLLOWING ACTIVITIES MAY ALSO APPLY DEPENDING ON STRAWMAN SCENARIO BUT BDM SERVICING TIME ESTIMATES ARE TBD (EXCEPT EVA = 0)

ACTIVITY 6, ORU CHANGEOUT

ACTIVITY 7, CONSUMABLES REPLENISHMENT. SPECIFY AMOUNTS REQUIRED

ACTIVITY 14, ON ORBIT ASSEMBLY

FOR OMV/OTV BASED ON STS ORBITER THE FOLLOWING ACTIVITIES APPLY:

ACTIVITY 1, STS BRINGS MATERIALS FROM EARTH TO SERVICING ORBIT (NO SS INVOLVEMENT) NOT TO INCLUDE MASS/VOLUME OF OMV/OTV OR EQUIPMENT/CONSUMABLES RELATED TO HYDRAZINE, WATER, OR HELIUM REPLENISHMENT UNLESS CONSUMABLE MODULAR CHANGEOUT METHOD IS USED

ACTIVITY 11, STS TAKES MATERIALS FROM SERVICING ORBIT TO EARTH (NO SS INVOLVEMENT)

ACTIVITY 13, 1 IN-SITU OMV OR OTV+OMV FLIGHT IS REQUIRED BUT NO LOADING OR UNLOADING SS INVOLVEMENT

ADDITIONAL ACTIVITIES 6, 7, 14 MAY APPLY AS WITH SS-BASED OMV/OTV.

PAYLOAD NAME: _____

PAYLOAD STRAWMAN SERVICING TYPE: _____

ACTIVITY 13. SPECIAL CASE: IN SITU SERVICING (continued)

******* APPLIES ONLY TO SS BASED OMV OR OTV+OMV*******
*******(FIRST ASSUMPTION ON PAGE 18)*******

ACTIVITY 13A. SS-TO-OMV LOADING

ELAPSED TIME =	_____	MIN
elapsed time =	30	min
IVA TIME =	_____	CREW-MIN
iva time =	30	crew-min
EVA TIME =	_____	CREW-MIN
eva time =	0	crew-min
ROBOTICS TIME =	_____	MIN
robotics time =	30	min

ACTIVITY 13B. OMV-TO-SS UNLOADING

ELAPSED TIME =	_____	MIN
elapsed time =	30	min
IVA TIME =	_____	CREW-MIN
iva time =	30	crew-min
EVA TIME =	_____	CREW-MIN
eva time =	0	crew-min
ROBOTICS TIME =	_____	MIN
robotics time =	30	min

*******APPLIES TO BOTH SS BASED AND STS BASED OMV OR OTV+OMV*******

NUMBER OF FLIGHTS (0 OR 1) = _____

MAJOR PURPOSE OF FLIGHT: IN-SITU SERVICING _____

FLIGHT DATES (CY QUARTER) _____

_____

_____

_____

_____

_____

PAYLOAD NAME: _____

PAYLOAD STRAWMAN SERVICING TYPE: _____

ACTIVITY 14. ON-ORBIT PAYLOAD ASSEMBLY

NOTE: BDM CALCULATED FIGURES WILL BE PROVIDED FOR EACH INDIVIDUAL PAYLOAD, NOT CALCULATED FROM A GENERAL ALGORITHM.

ELAPSED TIME =	_____	MIN
elapsed time =	_____	min
IVA TIME =	_____	CREW-MIN
iva time =	_____	crew-min
EVA TIME =	_____	CREW-MIN
eva time =	_____	crew-min
ROBOTICS TIME =	_____	MIN
robotics time =	_____	min

APPENDIX E

ABBREVIATED PAYLOAD INFORMATION

APPENDIX E

ABBREVIATED PAYLOAD INFORMATION

This appendix presents summary data for each payload strawman in the form of composite sheets produced from a spreadsheet-based (EXCEL) database containing servicing information both from the payload offices and from the BDM estimating equations discussed in Appendix C. The term composite indicates that each summary sheet is a mixture of both payload office and BDM values, with payload office values taking precedence when they are available. Each summary sheet contains information on EVA/IVA/Robotics times (for each defined activity), mass/volume, OMV/OTV Flights, and consumables. The information shown is discussed in more detail in the individual payload writeups.

In addition to these summary sheets, graphical representations of SS storage quantities (mass/volume transported up/down via STS, and average storage) and on-orbit servicing times (elapsed, EVA, IVA, and robotics) are presented in the last ten pages of this appendix. For these graphs the payload strawmen have been grouped primarily by similarity of parameter range, and within each of these groups they appear alphabetically. Note that the difference in scale from one graph to the next is sometimes a significant change. Not all payload strawmen have graphic representations of storage or servicing times. Some strawmen require no servicing, while others have values which are still TBD.

To assist in locating a composite sheet, a storage graph (if it exists) or a time graph (if there is one) for a given payload, the next four pages provide a table of contents for information on each payload strawman.

APPENDIX E

TABLE OF CONTENTS

PAYLOAD	SCENARIO	TYPE	PAGE
ASTRO	A	COMPOSITE DATA	7
ASTROMAG	A	COMPOSITE DATA	8
ASTROMAG	B	COMPOSITE DATA	9
ASTROMAG	B	SERVICING TIMES	57
ASTROMAG	B	TRANSPORT AND STORAGE	55
ATF	A	COMPOSITE DATA	10
ATF	A	SERVICING TIMES	62
ATF	B	COMPOSITE DATA	11
ATF	B	SERVICING TIMES	57
ATF	B	TRANSPORT AND STORAGE	53
AXAF	A	COMPOSITE DATA	12
AXAF	A	SERVICING TIMES	59
AXAF	A	TRANSPORT AND STORAGE	55
CDCE	A	COMPOSITE DATA	13
CDCE	A	SERVICING TIMES	57
CDCE	A	TRANSPORT AND STORAGE	53
CRNE	A	COMPOSITE DATA	14
Eos NPOP-1	A	COMPOSITE DATA	15
Eos NPOP-1	A	TRANSPORT AND STORAGE	55
Eos NPOP-2	A	COMPOSITE DATA	16
Eos NPOP-2	A	TRANSPORT AND STORAGE	55
EP	A	COMPOSITE DATA	17
EP	A	SERVICING TIMES	59
EP	A	TRANSPORT AND STORAGE	55
GRO	A	COMPOSITE DATA	18
GRO	A	SERVICING TIMES	57
HH/ERBE	A	COMPOSITE DATA	19
HRSO	A	COMPOSITE DATA	20
HRSO	A	SERVICING TIMES	57
HRSO	A	TRANSPORT AND STORAGE	53

PAGE 2 INTENTIONALLY BLANK

PRECEDING PAGE BLANK NOT FILMED

PAYLOAD	SCENARIO	TYPE	PAGE
HST	A	COMPOSITE DATA	21
HST	A	SERVICING TIMES	59
HST	A	TRANSPORT AND STORAGE	55
LAMAR	A	COMPOSITE DATA	22
LAMAR	A	SERVICING TIMES	59
LAMAR	A	TRANSPORT AND STORAGE	56
LASERCOM	A	COMPOSITE DATA	23
LAWS	A	COMPOSITE DATA	24
LAWS	A	SERVICING TIMES	58
LAWS	A	TRANSPORT AND STORAGE	53
LDR	A	COMPOSITE DATA	25
LDR	A	SERVICING TIMES	62
LDR	B	COMPOSITE DATA	26
LDR	B	SERVICING TIMES	62
LDR	C	COMPOSITE DATA	27
LDR	C	SERVICING TIMES	58
LDR	C	TRANSPORT AND STORAGE	53
LSRF	A	COMPOSITE DATA	28
LSRF	A	SERVICING TIMES	59
LSRF	A	TRANSPORT AND STORAGE	56
MMPF	A	COMPOSITE DATA	29
MMPF	A	SERVICING TIMES	60
MMPF	A	TRANSPORT AND STORAGE	56
PIMS	A	COMPOSITE DATA	30
POF	A	COMPOSITE DATA	31
POF	A	SERVICING TIMES	58
POF	A	TRANSPORT AND STORAGE	53
SBAR	B	COMPOSITE DATA	32
SBAR	B	SERVICING TIMES	60
SBAR	B	TRANSPORT AND STORAGE	56
SBAR	C	COMPOSITE DATA	33
SBAR	C	SERVICING TIMES	60
SBAR	C	TRANSPORT AND STORAGE	56
SIRTF	A	COMPOSITE DATA	34
SIRTF	A	SERVICING TIMES	60
SIRTF	A	TRANSPORT AND STORAGE	54

PAYLOAD	SCENARIO	TYPE	PAGE
SIRTF	B	COMPOSITE DATA	35
SIRTF	B	SERVICING TIMES	60
SIRTF	B	TRANSPORT AND STORAGE	54
SIRTF	C	COMPOSITE DATA	36
SIRTF	C	SERVICING TIMES	60
SIRTF	C	TRANSPORT AND STORAGE	54
3S	A	COMPOSITE DATA	37
3S	A	SERVICING TIMES	57
3S	B	COMPOSITE DATA	38
3S	B	SERVICING TIMES	59
3S	B	TRANSPORT AND STORAGE	55
3S	C	COMPOSITE DATA	39
3S	C	SERVICING TIMES	59
3S	C	TRANSPORT AND STORAGE	55
3S	D	COMPOSITE DATA	40
3S	D	TRANSPORT AND STORAGE	53
SRI	A	COMPOSITE DATA	41
STO/PIG	A	COMPOSITE DATA	42
STO/PIG	A	SERVICING TIMES	61
STO/PIG	B	COMPOSITE DATA	43
STO/PIG	B	SERVICING TIMES	61
STO/POP-1	A	COMPOSITE DATA	44
STO/SIG	A	COMPOSITE DATA	45
STO/SIG	A	SERVICING TIMES	61
STO/SIG	A	TRANSPORT AND STORAGE	54
STO/SIG	B	COMPOSITE DATA	46
STO/SIG	B	SERVICING TIMES	61
STO/SIG	B	TRANSPORT AND STORAGE	54
STO/SS	A	COMPOSITE DATA	47
STO/SS	A	SERVICING TIMES	61
STO/SS	A	TRANSPORT AND STORAGE	54
STO/SS	B	COMPOSITE DATA	48
STO/SS	B	SERVICING TIMES	61
STO/SS	B	TRANSPORT AND STORAGE	54
TRIS	A	COMPOSITE DATA	49
TRIS	A	SERVICING TIMES	58
TRIS	A	TRANSPORT AND STORAGE	54
TRMM	A	COMPOSITE DATA	50

PAYLOAD	SCENARIO	TYPE	PAGE
XGP	A	COMPOSITE DATA	51
XGP	A	SERVICING TIMES	58
XGP	B	COMPOSITE DATA	52
XGP	B	SERVICING TIMES	58
XGP	B	TRANSPORT AND STORAGE	54

COMPOSITE ON-ORBIT SERVICING ESTIMATE

PAYLOAD: ASTRO **P/L TYPE:** ATTACHED EXTERNAL
STRAWMAN SERVICING TYPE: A **LOCATION:** SS-ATTACHED
AS OF: 24-Nov-87 **DESCRIPTION:** NO SERVICING REQUIRED

TIME SUMMARY

SERVICING ACTIVITY	ELAPSED TIME (MIN)	IVA TIME (CREW MIN)	EVA TIME (CREW MIN)	TOTAL CREW TIME (CREW MIN)	ROBOTICS TIME (MIN)
1. STS BRINGS MATERIALS FROM EARTH	////////	////////	////////	////////	////////
2. UNLOAD MATERIALS FROM STS TO SS	N/A	N/A	N/A	N/A	N/A
3. OMV RETRIEVES PAYLOAD	////////	////////	////////	////////	////////
4. BERTH PAYLOAD AT SS OR STS	N/A	N/A	N/A	N/A	N/A
5. TRANSPORT MATERIALS TO PAYLOAD	N/A	N/A	N/A	N/A	N/A
6. ORU CHANGEOUT	N/A	N/A	N/A	N/A	N/A
7. REPLENISH CONSUMABLES					
a. HYDRAZINE *	N/A	N/A	N/A	N/A	N/A
b. WATER *	N/A	N/A	N/A	N/A	N/A
c. SUPERFLUID HELIUM *	N/A	N/A	N/A	N/A	N/A
d. OTHER **	N/A	N/A	N/A	N/A	N/A
8. DEBERTH PAYLOAD FROM SS OR STS	N/A	N/A	N/A	N/A	N/A
9. OMV DEPLOYS PAYLOAD	////////	////////	////////	////////	////////
10. LOAD MATERIALS INTO STS	N/A	N/A	N/A	N/A	N/A
11. STS TAKES MATERIALS TO EARTH	////////	////////	////////	////////	////////
12. PRESSURIZED SERVICING ON SS	N/A	N/A	N/A	N/A	N/A
13. IN-SITU SERVICING					
a. SS-TO-OMV LOADING	N/A	N/A	N/A	N/A	N/A
b. OMV-TO-SS UNLOADING	N/A	N/A	N/A	N/A	N/A
14. ASSEMBLY ON ORBIT	N/A	N/A	N/A	N/A	N/A
TOTAL FOR SCENARIO:	**N/A**	**N/A**	**N/A**	**N/A**	**N/A**

MASS/VOLUME SUMMARY

	MASS (KG)	VOLUME (M**3)
TRANSPORTED UP TO SS OR ORBIT	0	0
TEMPORARY STORAGE AT SS	0	0
TRANSPORTED DOWN FROM SS OR ORBIT	0	0

OMV/OTV FLIGHT SUMMARY

FLIGHT PURPOSE	OMV FLIGHTS NEEDED	OTV FLIGHTS NEEDED
RETRIEVAL	N/A	N/A
DEPLOYMENT	N/A	N/A
IN-SITU SERVICING	N/A	N/A
TOTAL FLIGHTS	**N/A**	**N/A**

CONSUMABLES SUMMARY

CONSUMABLE	AMOUNT TRANSFERRED	AMOUNT EXPENDED
a. HYDRAZINE (KG) *	N/A	////////
b. WATER (L) *	N/A	////////
c. SUPERFLUID HELIUM (L) *	N/A	N/A
d. OTHER (KG) **	N/A	////////

* Provided from SS supply system
** Not provided from SS supply system; mass includes tank/container

COMPOSITE ON-ORBIT SERVICING ESTIMATE

PAYLOAD:	ASTROMAG	**P/L TYPE:**	ATTACHED EXTERNAL
STRAWMAN SERVICING TYPE:	A	**LOCATION:**	SS-ATTACHED
AS OF:	2-Nov-87	**DESCRIPTION:**	ASSEMBLY

TIME SUMMARY

SERVICING ACTIVITY	ELAPSED TIME (MIN)	IVA TIME (CREW MIN)	EVA TIME (CREW MIN)	TOTAL CREW TIME (CREW MIN)	ROBOTICS TIME (MIN)
1. STS BRINGS MATERIALS FROM EARTH	////////	////////	////////	////////	////////
2. UNLOAD MATERIALS FROM STS TO SS	N/A	N/A	N/A	N/A	N/A
3. OMV RETRIEVES PAYLOAD	////////	////////	////////	////////	////////
4. BERTH PAYLOAD AT SS OR STS	N/A	N/A	N/A	N/A	N/A
5. TRANSPORT MATERIALS TO PAYLOAD	N/A	N/A	N/A	N/A	N/A
6. ORU CHANGEOUT	N/A	N/A	N/A	N/A	N/A
7. REPLENISH CONSUMABLES					
a. HYDRAZINE *	N/A	N/A	N/A	N/A	N/A
b. WATER *	N/A	N/A	N/A	N/A	N/A
c. SUPERFLUID HELIUM *	N/A	N/A	N/A	N/A	N/A
d. OTHER **	N/A	N/A	N/A	N/A	N/A
8. DEBERTH PAYLOAD FROM SS OR STS	N/A	N/A	N/A	N/A	N/A
9. OMV DEPLOYS PAYLOAD	////////	////////	////////	////////	////////
10. LOAD MATERIALS INTO STS	N/A	N/A	N/A	N/A	N/A
11. STS TAKES MATERIALS TO EARTH	////////	////////	////////	////////	////////
12. PRESSURIZED SERVICING ON SS	N/A	N/A	N/A	N/A	N/A
13. IN-SITU SERVICING					
a. SS-TO-OMV LOADING	N/A	N/A	N/A	N/A	N/A
b. OMV-TO-SS UNLOADING	N/A	N/A	N/A	N/A	N/A
14. ASSEMBLY ON ORBIT	TBD	TBD	0	TBD	TBD
TOTAL FOR SCENARIO:	**TBD**	**TBD**	**0**	**TBD**	**TBD**

MASS/VOLUME SUMMARY

	MASS (KG)	VOLUME (M**3)
TRANSPORTED UP TO SS OR ORBIT	0	0
TEMPORARY STORAGE AT SS	0	0
TRANSPORTED DOWN FROM SS OR ORBIT	0	0

OMV/OTV FLIGHT SUMMARY

FLIGHT PURPOSE	OMV FLIGHTS NEEDED	OTV FLIGHTS NEEDED
RETRIEVAL	N/A	N/A
DEPLOYMENT	N/A	N/A
IN-SITU SERVICING	N/A	N/A
TOTAL FLIGHTS	**N/A**	**N/A**

CONSUMABLES SUMMARY

CONSUMABLE	AMOUNT TRANSFERRED	AMOUNT EXPENDED
a. HYDRAZINE (KG) *	N/A	////////
b. WATER (L) *	N/A	////////
c. SUPERFLUID HELIUM (L) *	N/A	N/A
d. OTHER (KG) **	N/A	////////

* Provided from SS supply system

** Not provided from SS supply system; mass includes tank/container

COMPOSITE ON-ORBIT SERVICING ESTIMATE

PAYLOAD: ASTROMAG **P/L TYPE:** ATTACHED EXTERNAL
STRAWMAN SERVICING TYPE: B **LOCATION:** SS-ATTACHED
AS OF: 2-Nov-87 **DESCRIPTION:** REPLENISH CRYOGEN+SI ORU REPLACEMENT

TIME SUMMARY

SERVICING ACTIVITY	ELAPSED TIME (MIN)	IVA TIME (CREW MIN)	EVA TIME (CREW MIN)	TOTAL CREW TIME (CREW MIN)	ROBOTICS TIME (MIN)
1. STS BRINGS MATERIALS FROM EARTH	////////	////////	////////	////////	////////
2. UNLOAD MATERIALS FROM STS TO SS	30	30	0	30	30
3. OMV RETRIEVES PAYLOAD	////////	////////	////////	////////	////////
4. BERTH PAYLOAD AT SS OR STS	N/A	N/A	N/A	N/A	N/A
5. TRANSPORT MATERIALS TO PAYLOAD	180	180	0	180	180
6. ORU CHANGEOUT	TBD	TBD	0	TBD	TBD
7. REPLENISH CONSUMABLES					
a. HYDRAZINE *	N/A	N/A	N/A	N/A	N/A
b. WATER *	N/A	N/A	N/A	N/A	N/A
c. SUPERFLUID HELIUM *	TBD	TBD	0	TBD	TBD
d. OTHER **	N/A	N/A	N/A	N/A	N/A
8. DEBERTH PAYLOAD FROM SS OR STS	N/A	N/A	N/A	N/A	N/A
9. OMV DEPLOYS PAYLOAD	////////	////////	////////	////////	////////
10. LOAD MATERIALS INTO STS	30	30	0	30	30
11. STS TAKES MATERIALS TO EARTH	////////	////////	////////	////////	////////
12. PRESSURIZED SERVICING ON SS	N/A	N/A	N/A	N/A	N/A
13. IN-SITU SERVICING					
a. SS-TO-OMV LOADING	N/A	N/A	N/A	N/A	N/A
b. OMV-TO-SS UNLOADING	N/A	N/A	N/A	N/A	N/A
14. ASSEMBLY ON ORBIT	N/A	N/A	N/A	N/A	N/A
TOTAL FOR SCENARIO:	**240 + TBD**	**240 + TBD**	**0**	**240 + TBD**	**240 + TBD**

MASS/VOLUME SUMMARY

	MASS (KG)	VOLUME (M**3)
TRANSPORTED UP TO SS OR ORBIT	2355	41
TEMPORARY STORAGE AT SS	2355	41
TRANSPORTED DOWN FROM SS OR ORBIT	2355	41

OMV/OTV FLIGHT SUMMARY

FLIGHT PURPOSE	OMV FLIGHTS NEEDED	OTV FLIGHTS NEEDED
RETRIEVAL	N/A	N/A
DEPLOYMENT	N/A	N/A
IN-SITU SERVICING	N/A	N/A
TOTAL FLIGHTS	**N/A**	**N/A**

CONSUMABLES SUMMARY

CONSUMABLE	AMOUNT TRANSFERRED	AMOUNT EXPENDED
a. HYDRAZINE (KG) *	N/A	////////
b. WATER (L) *	N/A	////////
c. SUPERFLUID HELIUM (L) *	3103	3103
d. OTHER (KG) **	N/A	////////

* Provided from SS supply system
** Not provided from SS supply system; mass includes tank/container

COMPOSITE ON-ORBIT SERVICING ESTIMATE

PAYLOAD:	ATF	**P/L TYPE:**	ATTACHED EXTERNAL
STRAWMAN SERVICING TYPE:	A	**LOCATION:**	SS SERVICING FACILITY
AS OF:	2-Nov-87	**DESCRIPTION:**	ASSEMBLY

TIME SUMMARY

SERVICING ACTIVITY	ELAPSED TIME (MIN)	IVA TIME (CREW MIN)	EVA TIME (CREW MIN)	TOTAL CREW TIME (CREW MIN)	ROBOTICS TIME (MIN)
1. STS BRINGS MATERIALS FROM EARTH	////////////	////////////	////////////	////////////	////////////
2. UNLOAD MATERIALS FROM STS TO SS	N/A	N/A	N/A	N/A	N/A
3. OMV RETRIEVES PAYLOAD	////////////	////////////	////////////	////////////	////////////
4. BERTH PAYLOAD AT SS OR STS	N/A	N/A	N/A	N/A	N/A
5. TRANSPORT MATERIALS TO PAYLOAD	N/A	N/A	N/A	N/A	N/A
6. ORU CHANGEOUT	N/A	N/A	N/A	N/A	N/A
7. REPLENISH CONSUMABLES					
a. HYDRAZINE *	N/A	N/A	N/A	N/A	N/A
b. WATER *	N/A	N/A	N/A	N/A	N/A
c. SUPERFLUID HELIUM *	N/A	N/A	N/A	N/A	N/A
d. OTHER **	N/A	N/A	N/A	N/A	N/A
8. DEBERTH PAYLOAD FROM SS OR STS	N/A	N/A	N/A	N/A	N/A
9. OMV DEPLOYS PAYLOAD	////////////	////////////	////////////	////////////	////////////
10. LOAD MATERIALS INTO STS	N/A	N/A	N/A	N/A	N/A
11. STS TAKES MATERIALS TO EARTH	////////////	////////////	////////////	////////////	////////////
12. PRESSURIZED SERVICING ON SS	N/A	N/A	N/A	N/A	N/A
13. IN-SITU SERVICING					
a. SS-TO-OMV LOADING	N/A	N/A	N/A	N/A	N/A
b. OMV-TO-SS UNLOADING	N/A	N/A	N/A	N/A	N/A
14. ASSEMBLY ON ORBIT	2640	2640	4560	7200	1140
TOTAL FOR SCENARIO:	**2640**	**2640**	**4560**	**7200**	**1140**

MASS/VOLUME SUMMARY

	MASS (KG)	VOLUME (M**3)
TRANSPORTED UP TO SS OR ORBIT	0	0
TEMPORARY STORAGE AT SS	0	0
TRANSPORTED DOWN FROM SS OR ORBIT	0	0

OMV/OTV FLIGHT SUMMARY

FLIGHT PURPOSE	OMV FLIGHTS NEEDED	OTV FLIGHTS NEEDED
RETRIEVAL	N/A	N/A
DEPLOYMENT	N/A	N/A
IN-SITU SERVICING	N/A	N/A
TOTAL FLIGHTS	**N/A**	**N/A**

CONSUMABLES SUMMARY

CONSUMABLE	AMOUNT TRANSFERRED	AMOUNT EXPENDED
a. HYDRAZINE (KG) *	N/A	////////////
b. WATER (L) *	N/A	////////////
c. SUPERFLUID HELIUM (L) *	N/A	N/A
d. OTHER (KG) **	N/A	////////////

* Provided from SS supply system

** Not provided from SS supply system; mass includes tank/container

COMPOSITE ON-ORBIT SERVICING ESTIMATE

PAYLOAD:	ATF	**P/L TYPE:**	ATTACHED EXTERNAL
STRAWMAN SERVICING TYPE:	B	**LOCATION:**	SS SERVICING FACILITY
AS OF:	2-Nov-87	**DESCRIPTION:**	ORU CHANGEOUT

TIME SUMMARY

SERVICING ACTIVITY	ELAPSED TIME (MIN)	IVA TIME (CREW MIN)	EVA TIME (CREW MIN)	TOTAL CREW TIME (CREW MIN)	ROBOTICS TIME (MIN)
1. STS BRINGS MATERIALS FROM EARTH	////////////	////////////	////////////	////////////	////////////
2. UNLOAD MATERIALS FROM STS TO SS	30	30	0	30	30
3. OMV RETRIEVES PAYLOAD	////////////	////////////	////////////	////////////	////////////
4. BERTH PAYLOAD AT SS OR STS	N/A	N/A	N/A	N/A	N/A
5. TRANSPORT MATERIALS TO PAYLOAD	180	360	360	720	180
6. ORU CHANGEOUT	248	372	496	868	124
7. REPLENISH CONSUMABLES					
a. HYDRAZINE *	N/A	N/A	N/A	N/A	N/A
b. WATER *	N/A	N/A	N/A	N/A	N/A
c. SUPERFLUID HELIUM *	N/A	N/A	N/A	N/A	N/A
d. OTHER **	N/A	N/A	N/A	N/A	N/A
8. DEBERTH PAYLOAD FROM SS OR STS	N/A	N/A	N/A	N/A	N/A
9. OMV DEPLOYS PAYLOAD	////////////	////////////	////////////	////////////	////////////
10. LOAD MATERIALS INTO STS	30	30	0	30	30
11. STS TAKES MATERIALS TO EARTH	////////////	////////////	////////////	////////////	////////////
2. PRESSURIZED SERVICING ON SS	N/A	N/A	N/A	N/A	N/A
3. IN-SITU SERVICING					
a. SS-TO-OMV LOADING	N/A	N/A	N/A	N/A	N/A
b. OMV-TO-SS UNLOADING	N/A	N/A	N/A	N/A	N/A
4. ASSEMBLY ON ORBIT	N/A	N/A	N/A	N/A	N/A
TOTAL FOR SCENARIO:	**488**	**792**	**856**	**1648**	**364**

MASS/VOLUME SUMMARY

	MASS (KG)	VOLUME (M**3)
TRANSPORTED UP TO SS OR ORBIT	850	8.5
TEMPORARY STORAGE AT SS	850	8.5
TRANSPORTED DOWN FROM SS OR ORBIT	850	8.5

OMV/OTV FLIGHT SUMMARY

FLIGHT PURPOSE	OMV FLIGHTS NEEDED	OTV FLIGHTS NEEDED
RETRIEVAL	N/A	N/A
DEPLOYMENT	N/A	N/A
IN-SITU SERVICING	N/A	N/A
TOTAL FLIGHTS	**N/A**	**N/A**

CONSUMABLES SUMMARY

CONSUMABLE	AMOUNT TRANSFERRED	AMOUNT EXPENDED
a. HYDRAZINE (KG) *	N/A	////////////
b. WATER (L) *	N/A	////////////
c. SUPERFLUID HELIUM (L) *	N/A	N/A
d. OTHER (KG) **	N/A	////////////

Provided from SS supply system

** Not provided from SS supply system; mass includes tank/container

COMPOSITE ON-ORBIT SERVICING ESTIMATE

PAYLOAD: AXAF **P/L TYPE:** INDEPENDENT FREE FLYER
STRAWMAN SERVICING TYPE: A **LOCATION:** SS SERVICING FACILITY
AS OF: 15-Oct-87 **DESCRIPTION:** S.I. AND/OR ORU CHANGEOUT, REPLENISH HELIUM

TIME SUMMARY

SERVICING ACTIVITY	ELAPSED TIME (MIN)	IVA TIME (CREW MIN)	EVA TIME (CREW MIN)	TOTAL CREW TIME (CREW MIN)	ROBOTICS TIME (MIN)
1. STS BRINGS MATERIALS FROM EARTH	////////	////////	////////	////////	////////
2. UNLOAD MATERIALS FROM STS TO SS	30	30	0	30	30
3. OMV RETRIEVES PAYLOAD	////////	////////	////////	////////	////////
4. BERTH PAYLOAD AT SS OR STS	210	210	180	390	120
5. TRANSPORT MATERIALS TO PAYLOAD	N/A	N/A	N/A	N/A	N/A
6. ORU CHANGEOUT	463	695	926	1621	232
7. REPLENISH CONSUMABLES					
a. HYDRAZINE *	N/A	N/A	N/A	N/A	N/A
b. WATER *	N/A	N/A	N/A	N/A	N/A
c. SUPERFLUID HELIUM *	138	138	240	378	0
d. OTHER **	N/A	N/A	N/A	N/A	N/A
8. DEBERTH PAYLOAD FROM SS OR STS	330	330	180	510	180
9. OMV DEPLOYS PAYLOAD	////////	////////	////////	////////	////////
10. LOAD MATERIALS INTO STS	30	30	0	30	30
11. STS TAKES MATERIALS TO EARTH	////////	////////	////////	////////	////////
12. PRESSURIZED SERVICING ON SS	N/A	N/A	N/A	N/A	N/A
13. IN-SITU SERVICING					
a. SS-TO-OMV LOADING	N/A	N/A	N/A	N/A	N/A
b. OMV-TO-SS UNLOADING	N/A	N/A	N/A	N/A	N/A
14. ASSEMBLY ON ORBIT	N/A	N/A	N/A	N/A	N/A
TOTAL FOR SCENARIO:	**1201**	**1433**	**1526**	**2959**	**592**

MASS/VOLUME SUMMARY

	MASS (KG)	VOLUME (M**3)
TRANSPORTED UP TO SS OR ORBIT	1620	66
TEMPORARY STORAGE AT SS	1620	66
TRANSPORTED DOWN FROM SS OR ORBIT	1620	66

OMV/OTV FLIGHT SUMMARY

FLIGHT PURPOSE	OMV FLIGHTS NEEDED	OTV FLIGHTS NEEDED
RETRIEVAL	1	0
DEPLOYMENT	1	0
IN-SITU SERVICING	0	0
TOTAL FLIGHTS	**2**	**0**

CONSUMABLES SUMMARY

CONSUMABLE	AMOUNT TRANSFERRED	AMOUNT EXPENDED
a. HYDRAZINE (KG) *	N/A	////////
b. WATER (L) *	N/A	////////
c. SUPERFLUID HELIUM (L) *	200	TBD
d. OTHER (KG) **	N/A	////////

* Provided from SS supply system
** Not provided from SS supply system; mass includes tank/container

COMPOSITE ON-ORBIT SERVICING ESTIMATE

PAYLOAD: CDCE **P/L TYPE:** ATTACHED EXTERNAL
STRAWMAN SERVICING TYPE: A **LOCATION:** SS-ATTACHED
AS OF: 14-Oct-87 **DESCRIPTION:** TEST PANELS, PACKAGING/UNPACKAGING

TIME SUMMARY

SERVICING ACTIVITY	ELAPSED TIME (MIN)	IVA TIME (CREW MIN)	EVA TIME (CREW MIN)	TOTAL CREW TIME (CREW MIN)	ROBOTICS TIME (MIN)
1. STS BRINGS MATERIALS FROM EARTH	////////	////////	////////	////////	////////
2. UNLOAD MATERIALS FROM STS TO SS	N/A	N/A	N/A	N/A	N/A
3. OMV RETRIEVES PAYLOAD	////////	////////	////////	////////	////////
4. BERTH PAYLOAD AT SS OR STS	N/A	N/A	N/A	N/A	N/A
5. TRANSPORT MATERIALS TO PAYLOAD	180	360	360	720	180
6. ORU CHANGEOUT	50	75	100	175	25
7. REPLENISH CONSUMABLES					
a. HYDRAZINE *	N/A	N/A	N/A	N/A	N/A
b. WATER *	N/A	N/A	N/A	N/A	N/A
c. SUPERFLUID HELIUM *	N/A	N/A	N/A	N/A	N/A
d. OTHER **	N/A	N/A	N/A	N/A	N/A
8. DEBERTH PAYLOAD FROM SS OR STS	N/A	N/A	N/A	N/A	N/A
9. OMV DEPLOYS PAYLOAD	////////	////////	////////	////////	////////
10. LOAD MATERIALS INTO STS	N/A	N/A	N/A	N/A	N/A
11. STS TAKES MATERIALS TO EARTH	////////	////////	////////	////////	////////
12. PRESSURIZED SERVICING ON SS	N/A	N/A	N/A	N/A	N/A
13. IN-SITU SERVICING					
a. SS-TO-OMV LOADING	N/A	N/A	N/A	N/A	N/A
b. OMV-TO-SS UNLOADING	N/A	N/A	N/A	N/A	N/A
14. ASSEMBLY ON ORBIT	N/A	N/A	N/A	N/A	N/A
TOTAL FOR SCENARIO:	**230**	**435**	**460**	**895**	**205**

MASS/VOLUME SUMMARY

	MASS (KG)	VOLUME (M**3)
TRANSPORTED UP TO SS OR ORBIT	40	1
TEMPORARY STORAGE AT SS	40	1
TRANSPORTED DOWN FROM SS OR ORBIT	40	1

OMV/OTV FLIGHT SUMMARY

FLIGHT PURPOSE	OMV FLIGHTS NEEDED	OTV FLIGHTS NEEDED
RETRIEVAL	N/A	N/A
DEPLOYMENT	N/A	N/A
IN-SITU SERVICING	N/A	N/A
TOTAL FLIGHTS	**N/A**	**N/A**

CONSUMABLES SUMMARY

CONSUMABLE	AMOUNT TRANSFERRED	AMOUNT EXPENDED
a. HYDRAZINE (KG) *	N/A	////////
b. WATER (L) *	N/A	////////
c. SUPERFLUID HELIUM (L) *	N/A	N/A
d. OTHER (KG) **	N/A	////////

* Provided from SS supply system
** Not provided from SS supply system; mass includes tank/container

COMPOSITE ON-ORBIT SERVICING ESTIMATE

PAYLOAD:	CRNE	**P/L TYPE:**	ATTACHED EXTERNAL
STRAWMAN SERVICING TYPE:	A	**LOCATION:**	SS-ATTACHED
AS OF:	13-Oct-87	**DESCRIPTION:**	NO SERVICING REQUIRED

TIME SUMMARY

SERVICING ACTIVITY	ELAPSED TIME (MIN)	IVA TIME (CREW MIN)	EVA TIME (CREW MIN)	TOTAL CREW TIME (CREW MIN)	ROBOTICS TIME (MIN)
1. STS BRINGS MATERIALS FROM EARTH	////////////	////////////	////////////	////////////	////////////
2. UNLOAD MATERIALS FROM STS TO SS	N/A	N/A	N/A	N/A	N/A
3. OMV RETRIEVES PAYLOAD	////////////	////////////	////////////	////////////	////////////
4. BERTH PAYLOAD AT SS OR STS	N/A	N/A	N/A	N/A	N/A
5. TRANSPORT MATERIALS TO PAYLOAD	N/A	N/A	N/A	N/A	N/A
6. ORU CHANGEOUT	N/A	N/A	N/A	N/A	N/A
7. REPLENISH CONSUMABLES					
a. HYDRAZINE *	N/A	N/A	N/A	N/A	N/A
b. WATER *	N/A	N/A	N/A	N/A	N/A
c. SUPERFLUID HELIUM *	N/A	N/A	N/A	N/A	N/A
d. OTHER **	N/A	N/A	N/A	N/A	N/A
8. DEBERTH PAYLOAD FROM SS OR STS	N/A	N/A	N/A	N/A	N/A
9. OMV DEPLOYS PAYLOAD	////////////	////////////	////////////	////////////	////////////
10. LOAD MATERIALS INTO STS	N/A	N/A	N/A	N/A	N/A
11. STS TAKES MATERIALS TO EARTH	////////////	////////////	////////////	////////////	////////////
12. PRESSURIZED SERVICING ON SS	N/A	N/A	N/A	N/A	N/A
13. IN-SITU SERVICING					
a. SS-TO-OMV LOADING	N/A	N/A	N/A	N/A	N/A
b. OMV-TO-SS UNLOADING	N/A	N/A	N/A	N/A	N/A
14. ASSEMBLY ON ORBIT	N/A	N/A	N/A	N/A	N/A
TOTAL FOR SCENARIO:	**N/A**	**N/A**	**N/A**	**N/A**	**N/A**

MASS/VOLUME SUMMARY

	MASS (KG)	VOLUME (M**3)
TRANSPORTED UP TO SS OR ORBIT	0	0
TEMPORARY STORAGE AT SS	0	0
TRANSPORTED DOWN FROM SS OR ORBIT	0	0

OMV/OTV FLIGHT SUMMARY

FLIGHT PURPOSE	OMV FLIGHTS NEEDED	OTV FLIGHTS NEEDED
RETRIEVAL	N/A	N/A
DEPLOYMENT	N/A	N/A
IN-SITU SERVICING	N/A	N/A
TOTAL FLIGHTS	**N/A**	**N/A**

CONSUMABLES SUMMARY

CONSUMABLE	AMOUNT TRANSFERRED	AMOUNT EXPENDED
a. HYDRAZINE (KG) *	N/A	////////////
b. WATER (L) *	N/A	////////////
c. SUPERFLUID HELIUM (L) *	N/A	N/A
d. OTHER (KG) **	N/A	////////////

* Provided from SS supply system

** Not provided from SS supply system; mass includes tank/container

COMPOSITE ON-ORBIT SERVICING ESTIMATE

PAYLOAD: Eos NPOP-1 **P/L TYPE:** POLAR ORBITING PLATFORM
STRAWMAN SERVICING TYPE: A **LOCATION:** STS ORBITER
AS OF: 2-Nov-87 **DESCRIPTION:** ORU AND S.I. CHANGEOUT

TIME SUMMARY

SERVICING ACTIVITY	ELAPSED TIME (MIN)	IVA TIME (CREW MIN)	EVA TIME (CREW MIN)	TOTAL CREW TIME (CREW MIN)	ROBOTICS TIME (MIN)
1. STS BRINGS MATERIALS FROM EARTH	////////////	////////////	////////////	////////////	////////////
2. UNLOAD MATERIALS FROM STS TO SS	N/A	N/A	N/A	N/A	N/A
3. OMV RETRIEVES PAYLOAD	////////////	////////////	////////////	////////////	////////////
4. BERTH PAYLOAD AT SS OR STS	TBD	TBD	0	TBD	TBD
5. TRANSPORT MATERIALS TO PAYLOAD	N/A	N/A	N/A	N/A	N/A
6. ORU CHANGEOUT	TBD	TBD	0	TBD	TBD
7. REPLENISH CONSUMABLES					
a. HYDRAZINE *	N/A	N/A	N/A	N/A	N/A
b. WATER *	N/A	N/A	N/A	N/A	N/A
c. SUPERFLUID HELIUM *	N/A	N/A	N/A	N/A	N/A
d. OTHER **	TBD	TBD	0	TBD	TBD
8. DEBERTH PAYLOAD FROM SS OR STS	TBD	TBD	0	TBD	TBD
9. OMV DEPLOYS PAYLOAD	////////////	////////////	////////////	////////////	////////////
10. LOAD MATERIALS INTO STS	N/A	N/A	N/A	N/A	N/A
11. STS TAKES MATERIALS TO EARTH	////////////	////////////	////////////	////////////	////////////
12. PRESSURIZED SERVICING ON SS	N/A	N/A	N/A	N/A	N/A
13. IN-SITU SERVICING					
a. SS-TO-OMV LOADING	N/A	N/A	N/A	N/A	N/A
b. OMV-TO-SS UNLOADING	N/A	N/A	N/A	N/A	N/A
14. ASSEMBLY ON ORBIT	N/A	N/A	N/A	N/A	N/A
TOTAL FOR SCENARIO:	**TBD**	**TBD**	**0**	**TBD**	**TBD**

MASS/VOLUME SUMMARY

	MASS (KG)	VOLUME (M**3)
TRANSPORTED UP TO SS OR ORBIT	6800	65
TEMPORARY STORAGE AT SS	N/A	N/A
TRANSPORTED DOWN FROM SS OR ORBIT	3400	65

OMV/OTV FLIGHT SUMMARY

FLIGHT PURPOSE	OMV FLIGHTS NEEDED	OTV FLIGHTS NEEDED
RETRIEVAL	0	0
DEPLOYMENT	0	0
IN-SITU SERVICING	0	0
TOTAL FLIGHTS	**0**	**0**

CONSUMABLES SUMMARY

CONSUMABLE	AMOUNT TRANSFERRED	AMOUNT EXPENDED
a. HYDRAZINE (KG) *	N/A	////////////
b. WATER (L) *	N/A	////////////
c. SUPERFLUID HELIUM (L) *	N/A	N/A
d. OTHER (KG) **	3581	////////////

* Provided from SS supply system
** Not provided from SS supply system; mass includes tank/container

COMPOSITE ON-ORBIT SERVICING ESTIMATE

PAYLOAD: Eos NPOP-2 **P/L TYPE:** POLAR ORBITING PLATFORM
STRAWMAN SERVICING TYPE: A **LOCATION:** STS ORBITER
AS OF: 2-Nov-87 **DESCRIPTION:** ORU AND S.I. CHANGEOUT

TIME SUMMARY

SERVICING ACTIVITY	ELAPSED TIME (MIN)	IVA TIME (CREW MIN)	EVA TIME (CREW MIN)	TOTAL CREW TIME (CREW MIN)	ROBOTICS TIME (MIN)
1. STS BRINGS MATERIALS FROM EARTH	////////	////////	////////	////////	////////
2. UNLOAD MATERIALS FROM STS TO SS	N/A	N/A	N/A	N/A	N/A
3. OMV RETRIEVES PAYLOAD	////////	////////	////////	////////	////////
4. BERTH PAYLOAD AT SS OR STS	TBD	TBD	0	TBD	TBD
5. TRANSPORT MATERIALS TO PAYLOAD	N/A	N/A	N/A	N/A	N/A
6. ORU CHANGEOUT	TBD	TBD	0	TBD	TBD
7. REPLENISH CONSUMABLES					
a. HYDRAZINE *	N/A	N/A	N/A	N/A	N/A
b. WATER *	N/A	N/A	N/A	N/A	N/A
c. SUPERFLUID HELIUM *	N/A	N/A	N/A	N/A	N/A
d. OTHER **	TBD	TBD	0	TBD	TBD
8. DEBERTH PAYLOAD FROM SS OR STS	TBD	TBD	0	TBD	TBD
9. OMV DEPLOYS PAYLOAD	////////	////////	////////	////////	////////
10. LOAD MATERIALS INTO STS	N/A	N/A	N/A	N/A	N/A
11. STS TAKES MATERIALS TO EARTH	////////	////////	////////	////////	////////
12. PRESSURIZED SERVICING ON SS	N/A	N/A	N/A	N/A	N/A
13. IN-SITU SERVICING					
a. SS-TO-OMV LOADING	N/A	N/A	N/A	N/A	N/A
b. OMV-TO-SS UNLOADING	N/A	N/A	N/A	N/A	N/A
14. ASSEMBLY ON ORBIT	N/A	N/A	N/A	N/A	N/A
TOTAL FOR SCENARIO:	**TBD**	**TBD**	**0**	**TBD**	**TBD**

MASS/VOLUME SUMMARY

	MASS (KG)	VOLUME (M**3)
TRANSPORTED UP TO SS OR ORBIT	6800	65
TEMPORARY STORAGE AT SS	N/A	N/A
TRANSPORTED DOWN FROM SS OR ORBIT	3400	65

OMV/OTV FLIGHT SUMMARY

FLIGHT PURPOSE	OMV FLIGHTS NEEDED	OTV FLIGHTS NEEDED
RETRIEVAL	0	0
DEPLOYMENT	0	0
IN-SITU SERVICING	0	0
TOTAL FLIGHTS	**0**	**0**

CONSUMABLES SUMMARY

CONSUMABLE	AMOUNT TRANSFERRED	AMOUNT EXPENDED
a. HYDRAZINE (KG) *	N/A	////////
b. WATER (L) *	N/A	////////
c. SUPERFLUID HELIUM (L) *	N/A	N/A
d. OTHER (KG) **	3581	////////

* Provided from SS supply system
** Not provided from SS supply system; mass includes tank/container

COMPOSITE ON-ORBIT SERVICING ESTIMATE

PAYLOAD:	EP	P/L TYPE:	POLAR ORBITING PLATFORM
STRAWMAN SERVICING TYPE:	A	LOCATION:	SS SERVICING FACILITY
AS OF:	4-Nov-87	DESCRIPTION:	S.I. CHANGEOUT- 1st SWAP XTE FOR EUVE

IME SUMMARY

SERVICING ACTIVITY	ELAPSED TIME (MIN)	IVA TIME (CREW MIN)	EVA TIME (CREW MIN)	TOTAL CREW TIME (CREW MIN)	ROBOTICS TIME (MIN)
1. STS BRINGS MATERIALS FROM EARTH	////////	////////	////////	////////	////////
2. UNLOAD MATERIALS FROM STS TO SS	30	30	0	30	30
3. OMV RETRIEVES PAYLOAD	////////	////////	////////	////////	////////
4. BERTH PAYLOAD AT SS OR STS	210	210	180	390	120
5. TRANSPORT MATERIALS TO PAYLOAD	N/A	N/A	N/A	N/A	N/A
6. ORU CHANGEOUT	665	998	0	998	333
7. REPLENISH CONSUMABLES					
a. HYDRAZINE *	N/A	N/A	N/A	N/A	N/A
b. WATER *	N/A	N/A	N/A	N/A	N/A
c. SUPERFLUID HELIUM *	N/A	N/A	N/A	N/A	N/A
d. OTHER **	N/A	N/A	N/A	N/A	N/A
8. DEBERTH PAYLOAD FROM SS OR STS	330	330	180	510	180
9. OMV DEPLOYS PAYLOAD	////////	////////	////////	////////	////////
10. LOAD MATERIALS INTO STS	30	30	0	30	30
11. STS TAKES MATERIALS TO EARTH	////////	////////	////////	////////	////////
12. PRESSURIZED SERVICING ON SS	N/A	N/A	N/A	N/A	N/A
13. IN-SITU SERVICING					
a. SS-TO-OMV LOADING	N/A	N/A	N/A	N/A	N/A
b. OMV-TO-SS UNLOADING	N/A	N/A	N/A	N/A	N/A
14. ASSEMBLY ON ORBIT	N/A	N/A	N/A	N/A	N/A
TOTAL FOR SCENARIO:	**1265**	**1598**	**360**	**1958**	**693**

MASS/VOLUME SUMMARY

	MASS (KG)	VOLUME (M**3)
TRANSPORTED UP TO SS OR ORBIT	2308	16.4
TEMPORARY STORAGE AT SS	2308	16.4
TRANSPORTED DOWN FROM SS OR ORBIT	2308	16.4

OMV/OTV FLIGHT SUMMARY

FLIGHT PURPOSE	OMV FLIGHTS NEEDED	OTV FLIGHTS NEEDED
RETRIEVAL	1	0
DEPLOYMENT	1	0
IN-SITU SERVICING	0	0
TOTAL FLIGHTS	**2**	**0**

CONSUMABLES SUMMARY

CONSUMABLE	AMOUNT TRANSFERRED	AMOUNT EXPENDED
a. HYDRAZINE (KG) *	N/A	////////
b. WATER (L) *	N/A	////////
c. SUPERFLUID HELIUM (L) *	N/A	N/A
d. OTHER (KG) **	N/A	////////

* Provided from SS supply system
** Not provided from SS supply system; mass includes tank/container

COMPOSITE ON-ORBIT SERVICING ESTIMATE

PAYLOAD: GRO **P/L TYPE:** INDEPENDENT FREE FLYER
STRAWMAN SERVICING TYPE: A **LOCATION:** SS SERVICING FACILITY
AS OF: 13-Oct-87 **DESCRIPTION:** HYDRAZINE

TIME SUMMARY

SERVICING ACTIVITY	ELAPSED TIME (MIN)	IVA TIME (CREW MIN)	EVA TIME (CREW MIN)	TOTAL CREW TIME (CREW MIN)	ROBOTICS TIME (MIN)
1. STS BRINGS MATERIALS FROM EARTH	////////	////////	////////	////////	////////
2. UNLOAD MATERIALS FROM STS TO SS	N/A	N/A	N/A	N/A	N/A
3. OMV RETRIEVES PAYLOAD	////////	////////	////////	////////	////////
4. BERTH PAYLOAD AT SS OR STS	210	210	180	390	120
5. TRANSPORT MATERIALS TO PAYLOAD	N/A	N/A	N/A	N/A	N/A
6. ORU CHANGEOUT	N/A	N/A	N/A	N/A	N/A
7. REPLENISH CONSUMABLES					
a. HYDRAZINE *	170	170	340	510	0
b. WATER *	N/A	N/A	N/A	N/A	N/A
c. SUPERFLUID HELIUM *	N/A	N/A	N/A	N/A	N/A
d. OTHER **	N/A	N/A	N/A	N/A	N/A
8. DEBERTH PAYLOAD FROM SS OR STS	330	330	180	510	180
9. OMV DEPLOYS PAYLOAD	////////	////////	////////	////////	////////
10. LOAD MATERIALS INTO STS	N/A	N/A	N/A	N/A	N/A
11. STS TAKES MATERIALS TO EARTH	////////	////////	////////	////////	////////
12. PRESSURIZED SERVICING ON SS	N/A	N/A	N/A	N/A	N/A
13. IN-SITU SERVICING					
a. SS-TO-OMV LOADING	N/A	N/A	N/A	N/A	N/A
b. OMV-TO-SS UNLOADING	N/A	N/A	N/A	N/A	N/A
14. ASSEMBLY ON ORBIT	N/A	N/A	N/A	N/A	N/A
TOTAL FOR SCENARIO:	**710**	**710**	**700**	**1410**	**300**

MASS/VOLUME SUMMARY

	MASS (KG)	VOLUME (M**3)
TRANSPORTED UP TO SS OR ORBIT	0	0
TEMPORARY STORAGE AT SS	0	0
TRANSPORTED DOWN FROM SS OR ORBIT	0	0

OMV/OTV FLIGHT SUMMARY

FLIGHT PURPOSE	OMV FLIGHTS NEEDED	OTV FLIGHTS NEEDED
RETRIEVAL	1	0
DEPLOYMENT	1	0
IN-SITU SERVICING	0	0
TOTAL FLIGHTS	**2**	**0**

CONSUMABLES SUMMARY

CONSUMABLE	AMOUNT TRANSFERRED	AMOUNT EXPENDED
a. HYDRAZINE (KG) *	1000	////////
b. WATER (L) *	N/A	////////
c. SUPERFLUID HELIUM (L) *	N/A	N/A
d. OTHER (KG) **	N/A	////////

* Provided from SS supply system
** Not provided from SS supply system; mass includes tank/container

COMPOSITE ON-ORBIT SERVICING ESTIMATE

PAYLOAD:	HH/ERBE	**P/L TYPE:**	ATTACHED EXTERNAL
STRAWMAN SERVICING TYPE:	A	**LOCATION:**	SS-ATTACHED
AS OF:	13-Oct-87	**DESCRIPTION:**	NO SERVICING REQUIRED

TIME SUMMARY

SERVICING ACTIVITY	ELAPSED TIME (MIN)	IVA TIME (CREW MIN)	EVA TIME (CREW MIN)	TOTAL CREW TIME (CREW MIN)	ROBOTICS TIME (MIN)
1. STS BRINGS MATERIALS FROM EARTH	////////////	////////////	////////////	////////////	////////////
2. UNLOAD MATERIALS FROM STS TO SS	N/A	N/A	N/A	N/A	N/A
3. OMV RETRIEVES PAYLOAD	////////////	////////////	////////////	////////////	////////////
4. BERTH PAYLOAD AT SS OR STS	N/A	N/A	N/A	N/A	N/A
5. TRANSPORT MATERIALS TO PAYLOAD	N/A	N/A	N/A	N/A	N/A
6. ORU CHANGEOUT	N/A	N/A	N/A	N/A	N/A
7. REPLENISH CONSUMABLES					
a. HYDRAZINE *	N/A	N/A	N/A	N/A	N/A
b. WATER *	N/A	N/A	N/A	N/A	N/A
c. SUPERFLUID HELIUM *	N/A	N/A	N/A	N/A	N/A
d. OTHER **	N/A	N/A	N/A	N/A	N/A
8. DEBERTH PAYLOAD FROM SS OR STS	N/A	N/A	N/A	N/A	N/A
9. OMV DEPLOYS PAYLOAD	////////////	////////////	////////////	////////////	////////////
10. LOAD MATERIALS INTO STS	N/A	N/A	N/A	N/A	N/A
11. STS TAKES MATERIALS TO EARTH	////////////	////////////	////////////	////////////	////////////
12. PRESSURIZED SERVICING ON SS	N/A	N/A	N/A	N/A	N/A
13. IN-SITU SERVICING					
a. SS-TO-OMV LOADING	N/A	N/A	N/A	N/A	N/A
b. OMV-TO-SS UNLOADING	N/A	N/A	N/A	N/A	N/A
14. ASSEMBLY ON ORBIT	N/A	N/A	N/A	N/A	N/A
TOTAL FOR SCENARIO:	**N/A**	**N/A**	**N/A**	**N/A**	**N/A**

MASS/VOLUME SUMMARY

	MASS (KG)	VOLUME (M**3)
TRANSPORTED UP TO SS OR ORBIT	0	0
TEMPORARY STORAGE AT SS	0	0
TRANSPORTED DOWN FROM SS OR ORBIT	0	0

OMV/OTV FLIGHT SUMMARY

FLIGHT PURPOSE	OMV FLIGHTS NEEDED	OTV FLIGHTS NEEDED
RETRIEVAL	N/A	N/A
DEPLOYMENT	N/A	N/A
IN-SITU SERVICING	N/A	N/A
TOTAL FLIGHTS	**N/A**	**N/A**

CONSUMABLES SUMMARY

CONSUMABLE	AMOUNT TRANSFERRED	AMOUNT EXPENDED
a. HYDRAZINE (KG) *	N/A	////////////
b. WATER (L) *	N/A	////////////
c. SUPERFLUID HELIUM (L) *	N/A	N/A
d. OTHER (KG) **	N/A	////////////

* Provided from SS supply system
** Not provided from SS supply system; mass includes tank/container

COMPOSITE ON-ORBIT SERVICING ESTIMATE

PAYLOAD: HRSO **P/L TYPE:** ATTACHED EXTERNAL
STRAWMAN SERVICING TYPE: A **LOCATION:** SS-ATTACHED
AS OF: 15-Oct-87 **DESCRIPTION:** ORU (S.I.--CO-OBSERVER) CHANGEOUT

TIME SUMMARY

SERVICING ACTIVITY	ELAPSED TIME (MIN)	IVA TIME (CREW MIN)	EVA TIME (CREW MIN)	TOTAL CREW TIME (CREW MIN)	ROBOTICS TIME (MIN)
1. STS BRINGS MATERIALS FROM EARTH	////////////	////////////	////////////	////////////	////////////
2. UNLOAD MATERIALS FROM STS TO SS	30	30	0	30	30
3. OMV RETRIEVES PAYLOAD	////////////	////////////	////////////	////////////	////////////
4. BERTH PAYLOAD AT SS OR STS	N/A	N/A	N/A	N/A	N/A
5. TRANSPORT MATERIALS TO PAYLOAD	180	360	360	720	180
6. ORU CHANGEOUT	180	270	360	630	90
7. REPLENISH CONSUMABLES					
a. HYDRAZINE *	N/A	N/A	N/A	N/A	N/A
b. WATER *	N/A	N/A	N/A	N/A	N/A
c. SUPERFLUID HELIUM *	N/A	N/A	N/A	N/A	N/A
d. OTHER **	N/A	N/A	N/A	N/A	N/A
8. DEBERTH PAYLOAD FROM SS OR STS	N/A	N/A	N/A	N/A	N/A
9. OMV DEPLOYS PAYLOAD	////////////	////////////	////////////	////////////	////////////
10. LOAD MATERIALS INTO STS	30	30	0	30	30
11. STS TAKES MATERIALS TO EARTH	////////////	////////////	////////////	////////////	////////////
12. PRESSURIZED SERVICING ON SS	N/A	N/A	N/A	N/A	N/A
13. IN-SITU SERVICING					
a. SS-TO-OMV LOADING	N/A	N/A	N/A	N/A	N/A
b. OMV-TO-SS UNLOADING	N/A	N/A	N/A	N/A	N/A
14. ASSEMBLY ON ORBIT	N/A	N/A	N/A	N/A	N/A
TOTAL FOR SCENARIO:	**420**	**690**	**720**	**1410**	**330**

MASS/VOLUME SUMMARY

	MASS (KG)	VOLUME (M**3)
TRANSPORTED UP TO SS OR ORBIT	535	3.2
TEMPORARY STORAGE AT SS	535	3.2
TRANSPORTED DOWN FROM SS OR ORBIT	535	3.2

OMV/OTV FLIGHT SUMMARY

FLIGHT PURPOSE	OMV FLIGHTS NEEDED	OTV FLIGHTS NEEDED
RETRIEVAL	N/A	N/A
DEPLOYMENT	N/A	N/A
IN-SITU SERVICING	N/A	N/A
TOTAL FLIGHTS	**N/A**	**N/A**

CONSUMABLES SUMMARY

CONSUMABLE	AMOUNT TRANSFERRED	AMOUNT EXPENDED
a. HYDRAZINE (KG) *	N/A	////////////
b. WATER (L) *	N/A	////////////
c. SUPERFLUID HELIUM (L) *	N/A	N/A
d. OTHER (KG) **	N/A	////////////

* Provided from SS supply system
** Not provided from SS supply system; mass includes tank/container

COMPOSITE ON-ORBIT SERVICING ESTIMATE

PAYLOAD:	HST	**P/L TYPE:**	INDEPENDENT FREE FLYER
STRAWMAN SERVICING TYPE:	A	**LOCATION:**	SS SERVICING FACILITY
AS OF:	14-Oct-87	**DESCRIPTION:**	ORU CHANGEOUT

TIME SUMMARY

SERVICING ACTIVITY	ELAPSED TIME (MIN)	IVA TIME (CREW MIN)	EVA TIME (CREW MIN)	TOTAL CREW TIME (CREW MIN)	ROBOTICS TIME (MIN)
1. STS BRINGS MATERIALS FROM EARTH	////////	////////	////////	////////	////////
2. UNLOAD MATERIALS FROM STS TO SS	30	30	0	30	30
3. OMV RETRIEVES PAYLOAD	////////	////////	////////	////////	////////
4. BERTH PAYLOAD AT SS OR STS	180	180	180	390	180
5. TRANSPORT MATERIALS TO PAYLOAD	N/A	N/A	N/A	N/A	N/A
6. ORU CHANGEOUT	840	840	1695	2535	420
7. REPLENISH CONSUMABLES					
a. HYDRAZINE *	N/A	N/A	N/A	N/A	N/A
b. WATER *	N/A	N/A	N/A	N/A	N/A
c. SUPERFLUID HELIUM *	N/A	N/A	N/A	N/A	N/A
d. OTHER **	N/A	N/A	N/A	N/A	N/A
8. DEBERTH PAYLOAD FROM SS OR STS	270	270	180	450	270
9. OMV DEPLOYS PAYLOAD	////////	////////	////////	////////	////////
10. LOAD MATERIALS INTO STS	30	30	0	30	30
11. STS TAKES MATERIALS TO EARTH	////////	////////	////////	////////	////////
12. PRESSURIZED SERVICING ON SS	N/A	N/A	N/A	N/A	N/A
13. IN-SITU SERVICING					
a. SS-TO-OMV LOADING	N/A	N/A	N/A	N/A	N/A
b. OMV-TO-SS UNLOADING	N/A	N/A	N/A	N/A	N/A
14. ASSEMBLY ON ORBIT	N/A	N/A	N/A	N/A	N/A
TOTAL FOR SCENARIO:	**1350**	**1350**	**2055**	**3435**	**930**

MASS/VOLUME SUMMARY

	MASS (KG)	VOLUME (M**3)
TRANSPORTED UP TO SS OR ORBIT	1865	66
TEMPORARY STORAGE AT SS	1865	66
TRANSPORTED DOWN FROM SS OR ORBIT	1865	66

OMV/OTV FLIGHT SUMMARY

FLIGHT PURPOSE	OMV FLIGHTS NEEDED	OTV FLIGHTS NEEDED
RETRIEVAL	1	0
DEPLOYMENT	1	0
IN-SITU SERVICING	0	0
TOTAL FLIGHTS	**2**	**0**

CONSUMABLES SUMMARY

CONSUMABLE	AMOUNT TRANSFERRED	AMOUNT EXPENDED
a. HYDRAZINE (KG) *	N/A	////////
b. WATER (L) *	N/A	////////
c. SUPERFLUID HELIUM (L) *	N/A	N/A
d. OTHER (KG) **	N/A	////////

Provided from SS supply system

** Not provided from SS supply system; mass includes tank/container

COMPOSITE ON-ORBIT SERVICING ESTIMATE

PAYLOAD:	LAMAR	**P/L TYPE:**	ATTACHED EXTERNAL
STRAWMAN SERVICING TYPE:	A	**LOCATION:**	SS-ATTACHED
AS OF:	2-Nov-87	**DESCRIPTION:**	ORU (GASSES) CHANGEOUT

TIME SUMMARY

SERVICING ACTIVITY	ELAPSED TIME (MIN)	IVA TIME (CREW MIN)	EVA TIME (CREW MIN)	TOTAL CREW TIME (CREW MIN)	ROBOTICS TIME (MIN)
1. STS BRINGS MATERIALS FROM EARTH	////////	////////	////////	////////	////////
2. UNLOAD MATERIALS FROM STS TO SS	30	30	0	30	30
3. OMV RETRIEVES PAYLOAD	////////	////////	////////	////////	////////
4. BERTH PAYLOAD AT SS OR STS	N/A	N/A	N/A	N/A	N/A
5. TRANSPORT MATERIALS TO PAYLOAD	180	360	360	720	180
6. ORU CHANGEOUT	659	989	1318	2307	330
7. REPLENISH CONSUMABLES					
a. HYDRAZINE *	N/A	N/A	N/A	N/A	N/A
b. WATER *	N/A	N/A	N/A	N/A	N/A
c. SUPERFLUID HELIUM *	N/A	N/A	N/A	N/A	N/A
d. OTHER **	N/A	N/A	N/A	N/A	N/A
8. DEBERTH PAYLOAD FROM SS OR STS	N/A	N/A	N/A	N/A	N/A
9. OMV DEPLOYS PAYLOAD	////////	////////	////////	////////	////////
10. LOAD MATERIALS INTO STS	30	30	0	30	30
11. STS TAKES MATERIALS TO EARTH	////////	////////	////////	////////	////////
12. PRESSURIZED SERVICING ON SS	N/A	N/A	N/A	N/A	N/A
13. IN-SITU SERVICING					
a. SS-TO-OMV LOADING	N/A	N/A	N/A	N/A	N/A
b. OMV-TO-SS UNLOADING	N/A	N/A	N/A	N/A	N/A
14. ASSEMBLY ON ORBIT	N/A	N/A	N/A	N/A	N/A
TOTAL FOR SCENARIO:	**899**	**1409**	**1678**	**3087**	**570**

MASS/VOLUME SUMMARY

	MASS (KG)	VOLUME (M**3)
TRANSPORTED UP TO SS OR ORBIT	2405	8
TEMPORARY STORAGE AT SS	2405	8
TRANSPORTED DOWN FROM SS OR ORBIT	1682	8

OMV/OTV FLIGHT SUMMARY

FLIGHT PURPOSE	OMV FLIGHTS NEEDED	OTV FLIGHTS NEEDED
RETRIEVAL	N/A	N/A
DEPLOYMENT	N/A	N/A
IN-SITU SERVICING	N/A	N/A
TOTAL FLIGHTS	**N/A**	**N/A**

CONSUMABLES SUMMARY

CONSUMABLE	AMOUNT TRANSFERRED	AMOUNT EXPENDED
a. HYDRAZINE (KG) *	N/A	////////
b. WATER (L) *	N/A	////////
c. SUPERFLUID HELIUM (L) *	N/A	N/A
d. OTHER (KG) **	N/A	////////

* Provided from SS supply system

** Not provided from SS supply system; mass includes tank/container

COMPOSITE ON-ORBIT SERVICING ESTIMATE

PAYLOAD: LASERCOM **P/L TYPE:** ATTACHED EXTERNAL
STRAWMAN SERVICING TYPE: A **LOCATION:** SS-ATTACHED
AS OF: 15-Oct-87 **DESCRIPTION:** NO SERVICING REQUIRED

TIME SUMMARY

SERVICING ACTIVITY	ELAPSED TIME (MIN)	IVA TIME (CREW MIN)	EVA TIME (CREW MIN)	TOTAL CREW TIME (CREW MIN)	ROBOTICS TIME (MIN)
1. STS BRINGS MATERIALS FROM EARTH	////////////	////////////	////////////	////////////	////////////
2. UNLOAD MATERIALS FROM STS TO SS	N/A	N/A	N/A	N/A	N/A
3. OMV RETRIEVES PAYLOAD	////////////	////////////	////////////	////////////	////////////
4. BERTH PAYLOAD AT SS OR STS	N/A	N/A	N/A	N/A	N/A
5. TRANSPORT MATERIALS TO PAYLOAD	N/A	N/A	N/A	N/A	N/A
6. ORU CHANGEOUT	N/A	N/A	N/A	N/A	N/A
7. REPLENISH CONSUMABLES					
a. HYDRAZINE *	N/A	N/A	N/A	N/A	N/A
b. WATER *	N/A	N/A	N/A	N/A	N/A
c. SUPERFLUID HELIUM *	N/A	N/A	N/A	N/A	N/A
d. OTHER **	N/A	N/A	N/A	N/A	N/A
8. DEBERTH PAYLOAD FROM SS OR STS	N/A	N/A	N/A	N/A	N/A
9. OMV DEPLOYS PAYLOAD	////////////	////////////	////////////	////////////	////////////
10. LOAD MATERIALS INTO STS	N/A	N/A	N/A	N/A	N/A
1. STS TAKES MATERIALS TO EARTH	////////////	////////////	////////////	////////////	////////////
2. PRESSURIZED SERVICING ON SS	N/A	N/A	N/A	N/A	N/A
13. IN-SITU SERVICING					
a. SS-TO-OMV LOADING	N/A	N/A	N/A	N/A	N/A
b. OMV-TO-SS UNLOADING	N/A	N/A	N/A	N/A	N/A
4. ASSEMBLY ON ORBIT	N/A	N/A	N/A	N/A	N/A
TOTAL FOR SCENARIO:	**N/A**	**N/A**	**N/A**	**N/A**	**N/A**

MASS/VOLUME SUMMARY

	MASS (KG)	VOLUME (M**3)
TRANSPORTED UP TO SS OR ORBIT	0	0
TEMPORARY STORAGE AT SS	0	0
RANSPORTED DOWN FROM SS OR ORBIT	0	0

OMV/OTV FLIGHT SUMMARY

FLIGHT PURPOSE	OMV FLIGHTS NEEDED	OTV FLIGHTS NEEDED
RETRIEVAL	N/A	N/A
DEPLOYMENT	N/A	N/A
IN-SITU SERVICING	N/A	N/A
TOTAL FLIGHTS	**N/A**	**N/A**

ONSUMABLES SUMMARY

CONSUMABLE	AMOUNT TRANSFERRED	AMOUNT EXPENDED
a. HYDRAZINE (KG) *	N/A	////////////
b. WATER (L) *	N/A	////////////
c. SUPERFLUID HELIUM (L) *	N/A	N/A
d. OTHER (KG) **	N/A	////////////

* Provided from SS supply system
** Not provided from SS supply system; mass includes tank/container

COMPOSITE ON-ORBIT SERVICING ESTIMATE

PAYLOAD: LAWS **P/L TYPE:** ATTACHED EXTERNAL
STRAWMAN SERVICING TYPE: A **LOCATION:** SS-ATTACHED
AS OF: 5-Nov-87 **DESCRIPTION:** ORU CHANGEOUT - LASER HEAD + OTHERS

TIME SUMMARY

SERVICING ACTIVITY	ELAPSED TIME (MIN)	IVA TIME (CREW MIN)	EVA TIME (CREW MIN)	TOTAL CREW TIME (CREW MIN)	ROBOTICS TIME (MIN)
1. STS BRINGS MATERIALS FROM EARTH	////////////	////////////	////////////	////////////	////////////
2. UNLOAD MATERIALS FROM STS TO SS	30	30	0	30	30
3. OMV RETRIEVES PAYLOAD	////////////	////////////	////////////	////////////	////////////
4. BERTH PAYLOAD AT SS OR STS	N/A	N/A	N/A	N/A	N/A
5. TRANSPORT MATERIALS TO PAYLOAD	180	360	360	720	180
6. ORU CHANGEOUT	204	306	408	714	102
7. REPLENISH CONSUMABLES					
a. HYDRAZINE *	N/A	N/A	N/A	N/A	N/A
b. WATER *	N/A	N/A	N/A	N/A	N/A
c. SUPERFLUID HELIUM *	N/A	N/A	N/A	N/A	N/A
d. OTHER **	N/A	N/A	N/A	N/A	N/A
8. DEBERTH PAYLOAD FROM SS OR STS	N/A	N/A	N/A	N/A	N/A
9. OMV DEPLOYS PAYLOAD	////////////	////////////	////////////	////////////	////////////
10. LOAD MATERIALS INTO STS	30	30	0	30	30
11. STS TAKES MATERIALS TO EARTH	////////////	////////////	////////////	////////////	////////////
12. PRESSURIZED SERVICING ON SS	N/A	N/A	N/A	N/A	N/A
13. IN-SITU SERVICING					
a. SS-TO-OMV LOADING	N/A	N/A	N/A	N/A	N/A
b. OMV-TO-SS UNLOADING	N/A	N/A	N/A	N/A	N/A
14. ASSEMBLY ON ORBIT	N/A	N/A	N/A	N/A	N/A
TOTAL FOR SCENARIO:	**444**	**726**	**768**	**1494**	**342**

MASS/VOLUME SUMMARY

	MASS (KG)	VOLUME (M**3)
TRANSPORTED UP TO SS OR ORBIT	623	0.4
TEMPORARY STORAGE AT SS	623	0.4
TRANSPORTED DOWN FROM SS OR ORBIT	623	0.4

OMV/OTV FLIGHT SUMMARY

FLIGHT PURPOSE	OMV FLIGHTS NEEDED	OTV FLIGHTS NEEDED
RETRIEVAL	N/A	N/A
DEPLOYMENT	N/A	N/A
IN-SITU SERVICING	N/A	N/A
TOTAL FLIGHTS	**N/A**	**N/A**

CONSUMABLES SUMMARY

CONSUMABLE	AMOUNT TRANSFERRED	AMOUNT EXPENDED
a. HYDRAZINE (KG) *	N/A	////////////
b. WATER (L) *	N/A	////////////
c. SUPERFLUID HELIUM (L) *	N/A	N/A
d. OTHER (KG) **	N/A	////////////

* Provided from SS supply system
** Not provided from SS supply system; mass includes tank/container

COMPOSITE ON-ORBIT SERVICING ESTIMATE

PAYLOAD:	LDR	**P/L TYPE:**	INDEPENDENT FREE FLYER
STRAWMAN SERVICING TYPE:	A	**LOCATION:**	SS-ATTACHED
AS OF:	13-Oct-87	**DESCRIPTION:**	ASSEMBLY

TIME SUMMARY

SERVICING ACTIVITY	ELAPSED TIME (MIN)	IVA TIME (CREW MIN)	EVA TIME (CREW MIN)	TOTAL CREW TIME (CREW MIN)	ROBOTICS TIME (MIN)
1. STS BRINGS MATERIALS FROM EARTH	////////////	////////////	////////////	////////////	////////////
2. UNLOAD MATERIALS FROM STS TO SS	N/A	N/A	N/A	N/A	N/A
3. OMV RETRIEVES PAYLOAD	////////////	////////////	////////////	////////////	////////////
4. BERTH PAYLOAD AT SS OR STS	N/A	N/A	N/A	N/A	N/A
5. TRANSPORT MATERIALS TO PAYLOAD	N/A	N/A	N/A	N/A	N/A
6. ORU CHANGEOUT	N/A	N/A	N/A	N/A	N/A
7. REPLENISH CONSUMABLES					
a. HYDRAZINE *	N/A	N/A	N/A	N/A	N/A
b. WATER *	N/A	N/A	N/A	N/A	N/A
c. SUPERFLUID HELIUM *	N/A	N/A	N/A	N/A	N/A
d. OTHER **	N/A	N/A	N/A	N/A	N/A
8. DEBERTH PAYLOAD FROM SS OR STS	N/A	N/A	N/A	N/A	N/A
9. OMV DEPLOYS PAYLOAD	////////////	////////////	////////////	////////////	////////////
10. LOAD MATERIALS INTO STS	N/A	N/A	N/A	N/A	N/A
11. STS TAKES MATERIALS TO EARTH	////////////	////////////	////////////	////////////	////////////
12. PRESSURIZED SERVICING ON SS	N/A	N/A	N/A	N/A	N/A
13. IN-SITU SERVICING					
a. SS-TO-OMV LOADING	N/A	N/A	N/A	N/A	N/A
b. OMV-TO-SS UNLOADING	N/A	N/A	N/A	N/A	N/A
14. ASSEMBLY ON ORBIT	7800	7800	13500	21300	3375
TOTAL FOR SCENARIO:	**7800**	**7800**	**13500**	**21300**	**3375**

MASS/VOLUME SUMMARY

	MASS (KG)	VOLUME (M**3)
TRANSPORTED UP TO SS OR ORBIT	0	0
TEMPORARY STORAGE AT SS	0	0
TRANSPORTED DOWN FROM SS OR ORBIT	0	0

OMV/OTV FLIGHT SUMMARY

FLIGHT PURPOSE	OMV FLIGHTS NEEDED	OTV FLIGHTS NEEDED
RETRIEVAL	0	0
DEPLOYMENT	0	0
IN-SITU SERVICING	0	0
TOTAL FLIGHTS	**0**	**0**

CONSUMABLES SUMMARY

CONSUMABLE	AMOUNT TRANSFERRED	AMOUNT EXPENDED
a. HYDRAZINE (KG) *	N/A	////////////
b. WATER (L) *	N/A	////////////
c. SUPERFLUID HELIUM (L) *	N/A	N/A
d. OTHER (KG) **	N/A	////////////

* Provided from SS supply system
** Not provided from SS supply system; mass includes tank/container

COMPOSITE ON-ORBIT SERVICING ESTIMATE

PAYLOAD: LDR **P/L TYPE:** INDEPENDENT FREE FLYER
STRAWMAN SERVICING TYPE: B **LOCATION:** SS-ATTACHED
AS OF: 2-Nov-87 **DESCRIPTION:** ASSEMBLY/DEBERTHING

TIME SUMMARY

SERVICING ACTIVITY	ELAPSED TIME (MIN)	IVA TIME (CREW MIN)	EVA TIME (CREW MIN)	TOTAL CREW TIME (CREW MIN)	ROBOTICS TIME (MIN)
1. STS BRINGS MATERIALS FROM EARTH	////////////	////////////	////////////	////////////	////////////
2. UNLOAD MATERIALS FROM STS TO SS	N/A	N/A	N/A	N/A	N/A
3. OMV RETRIEVES PAYLOAD	////////////	////////////	////////////	////////////	////////////
4. BERTH PAYLOAD AT SS OR STS	N/A	N/A	N/A	N/A	N/A
5. TRANSPORT MATERIALS TO PAYLOAD	N/A	N/A	N/A	N/A	N/A
6. ORU CHANGEOUT	N/A	N/A	N/A	N/A	N/A
7. REPLENISH CONSUMABLES					
a. HYDRAZINE *	N/A	N/A	N/A	N/A	N/A
b. WATER *	N/A	N/A	N/A	N/A	N/A
c. SUPERFLUID HELIUM *	N/A	N/A	N/A	N/A	N/A
d. OTHER **	N/A	N/A	N/A	N/A	N/A
8. DEBERTH PAYLOAD FROM SS OR STS	60	60	0	60	30
9. OMV DEPLOYS PAYLOAD	////////////	////////////	////////////	////////////	////////////
10. LOAD MATERIALS INTO STS	N/A	N/A	N/A	N/A	N/A
11. STS TAKES MATERIALS TO EARTH	////////////	////////////	////////////	////////////	////////////
12. PRESSURIZED SERVICING ON SS	N/A	N/A	N/A	N/A	N/A
13. IN-SITU SERVICING					
a. SS-TO-OMV LOADING	N/A	N/A	N/A	N/A	N/A
b. OMV-TO-SS UNLOADING	N/A	N/A	N/A	N/A	N/A
14. ASSEMBLY ON ORBIT	7800	7800	13500	21300	3375
TOTAL FOR SCENARIO:	**7860**	**7860**	**13500**	**21360**	**3405**

MASS/VOLUME SUMMARY

	MASS (KG)	VOLUME (M**3)
TRANSPORTED UP TO SS OR ORBIT	0	0
TEMPORARY STORAGE AT SS	0	0
TRANSPORTED DOWN FROM SS OR ORBIT	0	0

OMV/OTV FLIGHT SUMMARY

FLIGHT PURPOSE	OMV FLIGHTS NEEDED	OTV FLIGHTS NEEDED
RETRIEVAL	0	0
DEPLOYMENT	1	0
IN-SITU SERVICING	0	0
TOTAL FLIGHTS	**1**	**0**

CONSUMABLES SUMMARY

CONSUMABLE	AMOUNT TRANSFERRED	AMOUNT EXPENDED
a. HYDRAZINE (KG) *	N/A	////////////
b. WATER (L) *	N/A	////////////
c. SUPERFLUID HELIUM (L) *	N/A	N/A
d. OTHER (KG) **	N/A	////////////

* Provided from SS supply system
** Not provided from SS supply system; mass includes tank/container

COMPOSITE ON-ORBIT SERVICING ESTIMATE

PAYLOAD: LDR **P/L TYPE:** INDEPENDENT FREE FLYER
STRAWMAN SERVICING TYPE: C **LOCATION:** IN SITU
AS OF: 15-Oct-87 **DESCRIPTION:** HELIUM/S.I. CHANGEOUT

TIME SUMMARY

SERVICING ACTIVITY	ELAPSED TIME (MIN)	IVA TIME (CREW MIN)	EVA TIME (CREW MIN)	TOTAL CREW TIME (CREW MIN)	ROBOTICS TIME (MIN)
1. STS BRINGS MATERIALS FROM EARTH	////////////	////////////	////////////	////////////	////////////
2. UNLOAD MATERIALS FROM STS TO SS	30	30	0	30	30
3. OMV RETRIEVES PAYLOAD	////////////	////////////	////////////	////////////	////////////
4. BERTH PAYLOAD AT SS OR STS	N/A	N/A	N/A	N/A	N/A
5. TRANSPORT MATERIALS TO PAYLOAD	N/A	N/A	N/A	N/A	N/A
6. ORU CHANGEOUT	TBD	TBD	0	TBD	TBD
7. REPLENISH CONSUMABLES					
a. HYDRAZINE *	N/A	N/A	N/A	N/A	N/A
b. WATER *	N/A	N/A	N/A	N/A	N/A
c. SUPERFLUID HELIUM *	TBD	TBD	0	TBD	TBD
d. OTHER **	N/A	N/A	N/A	N/A	N/A
8. DEBERTH PAYLOAD FROM SS OR STS	N/A	N/A	N/A	N/A	N/A
9. OMV DEPLOYS PAYLOAD	////////////	////////////	////////////	////////////	////////////
10. LOAD MATERIALS INTO STS	30	30	0	30	30
1. STS TAKES MATERIALS TO EARTH	////////////	////////////	////////////	////////////	////////////
2. PRESSURIZED SERVICING ON SS	N/A	N/A	N/A	N/A	N/A
13. IN-SITU SERVICING					
a. SS-TO-OMV LOADING	30	30	0	30	30
b. OMV-TO-SS UNLOADING	30	30	0	30	30
4. ASSEMBLY ON ORBIT	N/A	N/A	N/A	N/A	N/A
TOTAL FOR SCENARIO:	**120 + TBD**	**120 + TBD**	**0**	**120 + TBD**	**120 + TBD**

MASS/VOLUME SUMMARY

	MASS (KG)	VOLUME (M**3)
TRANSPORTED UP TO SS OR ORBIT	840	8
TEMPORARY STORAGE AT SS	840	8
RANSPORTED DOWN FROM SS OR ORBIT	840	8

OMV/OTV FLIGHT SUMMARY

FLIGHT PURPOSE	OMV FLIGHTS NEEDED	OTV FLIGHTS NEEDED
RETRIEVAL	0	0
DEPLOYMENT	0	0
IN-SITU SERVICING	1	0
TOTAL FLIGHTS	**1**	**0**

CONSUMABLES SUMMARY

CONSUMABLE	AMOUNT TRANSFERRED	AMOUNT EXPENDED
a. HYDRAZINE (KG) *	N/A	////////////
b. WATER (L) *	N/A	////////////
c. SUPERFLUID HELIUM (L) *	5000	5000
d. OTHER (KG) **	N/A	////////////

* Provided from SS supply system
** Not provided from SS supply system; mass includes tank/container

COMPOSITE ON-ORBIT SERVICING ESTIMATE

PAYLOAD:	LSRF	**P/L TYPE:**	ATTACHED INTERNAL
STRAWMAN SERVICING TYPE:	A	**LOCATION:**	SS-INTERNAL
AS OF:	3-Nov-87	**DESCRIPTION:**	QUARTERLY CONSUMABLES AND ORU CHANGEOUT

TIME SUMMARY

SERVICING ACTIVITY	ELAPSED TIME (MIN)	IVA TIME (CREW MIN)	EVA TIME (CREW MIN)	TOTAL CREW TIME (CREW MIN)	ROBOTICS TIME (MIN)
1. STS BRINGS MATERIALS FROM EARTH	////////	////////	////////	////////	////////
2. UNLOAD MATERIALS FROM STS TO SS	N/A	N/A	N/A	N/A	N/A
3. OMV RETRIEVES PAYLOAD	////////	////////	////////	////////	////////
4. BERTH PAYLOAD AT SS OR STS	N/A	N/A	N/A	N/A	N/A
5. TRANSPORT MATERIALS TO PAYLOAD	N/A	N/A	N/A	N/A	N/A
6. ORU CHANGEOUT	N/A	N/A	N/A	N/A	N/A
7. REPLENISH CONSUMABLES					
a. HYDRAZINE *	N/A	N/A	N/A	N/A	N/A
b. WATER *	N/A	N/A	N/A	N/A	N/A
c. SUPERFLUID HELIUM *	N/A	N/A	N/A	N/A	N/A
d. OTHER **	N/A	N/A	N/A	N/A	N/A
8. DEBERTH PAYLOAD FROM SS OR STS	N/A	N/A	N/A	N/A	N/A
9. OMV DEPLOYS PAYLOAD	////////	////////	////////	////////	////////
10. LOAD MATERIALS INTO STS	N/A	N/A	N/A	N/A	N/A
11. STS TAKES MATERIALS TO EARTH	////////	////////	////////	////////	////////
12. PRESSURIZED SERVICING ON SS	690	1380	0	1380	0
13. IN-SITU SERVICING					
a. SS-TO-OMV LOADING	N/A	N/A	N/A	N/A	N/A
b. OMV-TO-SS UNLOADING	N/A	N/A	N/A	N/A	N/A
14. ASSEMBLY ON ORBIT	N/A	N/A	N/A	N/A	N/A
TOTAL FOR SCENARIO:	**690**	**1380**	**0**	**1380**	**0**

MASS/VOLUME SUMMARY

	MASS (KG)	VOLUME (M**3)
TRANSPORTED UP TO SS OR ORBIT	8266	22.1
TEMPORARY STORAGE AT SS	0	0
TRANSPORTED DOWN FROM SS OR ORBIT	7999	23.3

OMV/OTV FLIGHT SUMMARY

FLIGHT PURPOSE	OMV FLIGHTS NEEDED	OTV FLIGHTS NEEDED
RETRIEVAL	0	0
DEPLOYMENT	0	0
IN-SITU SERVICING	0	0
TOTAL FLIGHTS	**0**	**0**

CONSUMABLES SUMMARY

CONSUMABLE	AMOUNT TRANSFERRED	AMOUNT EXPENDED
a. HYDRAZINE (KG) *	N/A	////////
b. WATER (L) *	N/A	////////
c. SUPERFLUID HELIUM (L) *	N/A	N/A
d. OTHER (KG) **	N/A	////////

* Provided from SS supply system

** Not provided from SS supply system; mass includes tank/container

COMPOSITE ON-ORBIT SERVICING ESTIMATE

PAYLOAD:	MMPF	**P/L TYPE:**	ATTACHED INTERNAL
STRAWMAN SERVICING TYPE:	A	**LOCATION:**	SS-INTERNAL
AS OF:	2-Nov-87	**DESCRIPTION:**	RACK CHANGEOUT & GASSES

TIME SUMMARY

SERVICING ACTIVITY	ELAPSED TIME (MIN)	IVA TIME (CREW MIN)	EVA TIME (CREW MIN)	TOTAL CREW TIME (CREW MIN)	ROBOTICS TIME (MIN)
1. STS BRINGS MATERIALS FROM EARTH	////////	////////	////////	////////	////////
2. UNLOAD MATERIALS FROM STS TO SS	30	30	0	30	30
3. OMV RETRIEVES PAYLOAD	////////	////////	////////	////////	////////
4. BERTH PAYLOAD AT SS OR STS	N/A	N/A	N/A	N/A	N/A
5. TRANSPORT MATERIALS TO PAYLOAD	N/A	N/A	N/A	N/A	N/A
6. ORU CHANGEOUT	N/A	N/A	N/A	N/A	N/A
7. REPLENISH CONSUMABLES					
a. HYDRAZINE *	N/A	N/A	N/A	N/A	N/A
b. WATER *	N/A	N/A	N/A	N/A	N/A
c. SUPERFLUID HELIUM *	N/A	N/A	N/A	N/A	N/A
d. OTHER **	N/A	N/A	N/A	N/A	N/A
8. DEBERTH PAYLOAD FROM SS OR STS	N/A	N/A	N/A	N/A	N/A
9. OMV DEPLOYS PAYLOAD	////////	////////	////////	////////	////////
10. LOAD MATERIALS INTO STS	30	30	0	30	30
11. STS TAKES MATERIALS TO EARTH	////////	////////	////////	////////	////////
12. PRESSURIZED SERVICING ON SS	815	1630	0	1630	0
13. IN-SITU SERVICING					
a. SS-TO-OMV LOADING	N/A	N/A	N/A	N/A	N/A
b. OMV-TO-SS UNLOADING	N/A	N/A	N/A	N/A	N/A
14. ASSEMBLY ON ORBIT	N/A	N/A	N/A	N/A	N/A
TOTAL FOR SCENARIO:	**875**	**1690**	**0**	**1690**	**60**

MASS/VOLUME SUMMARY

	MASS (KG)	VOLUME (M**3)
TRANSPORTED UP TO SS OR ORBIT	5000	140
TEMPORARY STORAGE AT SS	0	0
TRANSPORTED DOWN FROM SS OR ORBIT	3800	51

OMV/OTV FLIGHT SUMMARY

FLIGHT PURPOSE	OMV FLIGHTS NEEDED	OTV FLIGHTS NEEDED
RETRIEVAL	N/A	N/A
DEPLOYMENT	N/A	N/A
IN-SITU SERVICING	N/A	N/A
TOTAL FLIGHTS	**N/A**	**N/A**

CONSUMABLES SUMMARY

CONSUMABLE	AMOUNT TRANSFERRED	AMOUNT EXPENDED
a. HYDRAZINE (KG) *	N/A	////////
b. WATER (L) *	N/A	////////
c. SUPERFLUID HELIUM (L) *	N/A	N/A
d. OTHER (KG) **	N/A	////////

* Provided from SS supply system
** Not provided from SS supply system; mass includes tank/container

COMPOSITE ON-ORBIT SERVICING ESTIMATE

PAYLOAD:	PIMS	**P/L TYPE:**	ATTACHED EXTERNAL
STRAWMAN SERVICING TYPE:	A	**LOCATION:**	SS-ATTACHED
AS OF:	12-Nov-87	**DESCRIPTION:**	NO SERVICING REQUIRED

TIME SUMMARY

SERVICING ACTIVITY	ELAPSED TIME (MIN)	IVA TIME (CREW MIN)	EVA TIME (CREW MIN)	TOTAL CREW TIME (CREW MIN)	ROBOTICS TIME (MIN)
1. STS BRINGS MATERIALS FROM EARTH	////////////	////////////	////////////	////////////	////////////
2. UNLOAD MATERIALS FROM STS TO SS	N/A	N/A	N/A	N/A	N/A
3. OMV RETRIEVES PAYLOAD	////////////	////////////	////////////	////////////	////////////
4. BERTH PAYLOAD AT SS OR STS	N/A	N/A	N/A	N/A	N/A
5. TRANSPORT MATERIALS TO PAYLOAD	N/A	N/A	N/A	N/A	N/A
6. ORU CHANGEOUT	N/A	N/A	N/A	N/A	N/A
7. REPLENISH CONSUMABLES					
a. HYDRAZINE *	N/A	N/A	N/A	N/A	N/A
b. WATER *	N/A	N/A	N/A	N/A	N/A
c. SUPERFLUID HELIUM *	N/A	N/A	N/A	N/A	N/A
d. OTHER **	N/A	N/A	N/A	N/A	N/A
8. DEBERTH PAYLOAD FROM SS OR STS	N/A	N/A	N/A	N/A	N/A
9. OMV DEPLOYS PAYLOAD	////////////	////////////	////////////	////////////	////////////
10. LOAD MATERIALS INTO STS	N/A	N/A	N/A	N/A	N/A
11. STS TAKES MATERIALS TO EARTH	////////////	////////////	////////////	////////////	////////////
12. PRESSURIZED SERVICING ON SS	N/A	N/A	N/A	N/A	N/A
13. IN-SITU SERVICING					
a. SS-TO-OMV LOADING	N/A	N/A	N/A	N/A	N/A
b. OMV-TO-SS UNLOADING	N/A	N/A	N/A	N/A	N/A
14. ASSEMBLY ON ORBIT	N/A	N/A	N/A	N/A	N/A
TOTAL FOR SCENARIO:	**N/A**	**N/A**	**N/A**	**N/A**	**N/A**

MASS/VOLUME SUMMARY

	MASS (KG)	VOLUME (M**3)
TRANSPORTED UP TO SS OR ORBIT	0	0
TEMPORARY STORAGE AT SS	0	0
TRANSPORTED DOWN FROM SS OR ORBIT	0	0

OMV/OTV FLIGHT SUMMARY

FLIGHT PURPOSE	OMV FLIGHTS NEEDED	OTV FLIGHTS NEEDED
RETRIEVAL	N/A	N/A
DEPLOYMENT	N/A	N/A
IN-SITU SERVICING	N/A	N/A
TOTAL FLIGHTS	**N/A**	**N/A**

CONSUMABLES SUMMARY

CONSUMABLE	AMOUNT TRANSFERRED	AMOUNT EXPENDED
a. HYDRAZINE (KG) *	N/A	////////////
b. WATER (L) *	N/A	////////////
c. SUPERFLUID HELIUM (L) *	N/A	N/A
d. OTHER (KG) **	N/A	////////////

* Provided from SS supply system

** Not provided from SS supply system; mass includes tank/container

COMPOSITE ON-ORBIT SERVICING ESTIMATE

PAYLOAD:	POF	**P/L TYPE:**	ATTACHED EXTERNAL
STRAWMAN SERVICING TYPE:	A	**LOCATION:**	SS-ATTACHED
AS OF:	2-Nov-87	**DESCRIPTION:**	ORU CHANGEOUT

TIME SUMMARY

SERVICING ACTIVITY	ELAPSED TIME (MIN)	IVA TIME (CREW MIN)	EVA TIME (CREW MIN)	TOTAL CREW TIME (CREW MIN)	ROBOTICS TIME (MIN)
1. STS BRINGS MATERIALS FROM EARTH	////////////	////////////	////////////	////////////	////////////
2. UNLOAD MATERIALS FROM STS TO SS	30	30	0	30	30
3. OMV RETRIEVES PAYLOAD	////////////	////////////	////////////	////////////	////////////
4. BERTH PAYLOAD AT SS OR STS	N/A	N/A	N/A	N/A	N/A
5. TRANSPORT MATERIALS TO PAYLOAD	180	360	360	720	180
6. ORU CHANGEOUT	30	30	30	60	0
7. REPLENISH CONSUMABLES					
a. HYDRAZINE *	N/A	N/A	N/A	N/A	N/A
b. WATER *	N/A	N/A	N/A	N/A	N/A
c. SUPERFLUID HELIUM *	N/A	N/A	N/A	N/A	N/A
d. OTHER **	N/A	N/A	N/A	N/A	N/A
8. DEBERTH PAYLOAD FROM SS OR STS	N/A	N/A	N/A	N/A	N/A
9. OMV DEPLOYS PAYLOAD	////////////	////////////	////////////	////////////	////////////
10. LOAD MATERIALS INTO STS	30	30	0	30	30
1. STS TAKES MATERIALS TO EARTH	////////////	////////////	////////////	////////////	////////////
2. PRESSURIZED SERVICING ON SS	N/A	N/A	N/A	N/A	N/A
13. IN-SITU SERVICING					
a. SS-TO-OMV LOADING	N/A	N/A	N/A	N/A	N/A
b. OMV-TO-SS UNLOADING	N/A	N/A	N/A	N/A	N/A
4. ASSEMBLY ON ORBIT	N/A	N/A	N/A	N/A	N/A
TOTAL FOR SCENARIO:	**270**	**450**	**390**	**840**	**240**

MASS/VOLUME SUMMARY

	MASS (KG)	VOLUME (M**3)
TRANSPORTED UP TO SS OR ORBIT	300	3
TEMPORARY STORAGE AT SS	300	3
RANSPORTED DOWN FROM SS OR ORBIT	300	3

OMV/OTV FLIGHT SUMMARY

FLIGHT PURPOSE	OMV FLIGHTS NEEDED	OTV FLIGHTS NEEDED
RETRIEVAL	N/A	N/A
DEPLOYMENT	N/A	N/A
IN-SITU SERVICING	N/A	N/A
TOTAL FLIGHTS	**N/A**	**N/A**

CONSUMABLES SUMMARY

CONSUMABLE	AMOUNT TRANSFERRED	AMOUNT EXPENDED
a. HYDRAZINE (KG) *	N/A	////////////
b. WATER (L) *	N/A	////////////
c. SUPERFLUID HELIUM (L) *	N/A	N/A
d. OTHER (KG) **	N/A	////////////

* Provided from SS supply system
** Not provided from SS supply system; mass includes tank/container

COMPOSITE ON-ORBIT SERVICING ESTIMATE

PAYLOAD: SBAR **P/L TYPE:** INDEPENDENT FREE FLYER
STRAWMAN SERVICING TYPE: B **LOCATION:** SS SVC FAC + PRESS MOD
AS OF: 6-Nov-87 **DESCRIPTION:** SI, HYDRAZINE, RECORDING MEDIA

TIME SUMMARY

SERVICING ACTIVITY	ELAPSED TIME (MIN)	IVA TIME (CREW MIN)	EVA TIME (CREW MIN)	TOTAL CREW TIME (CREW MIN)	ROBOTICS TIME (MIN)
1. STS BRINGS MATERIALS FROM EARTH	////////	////////	////////	////////	////////
2. UNLOAD MATERIALS FROM STS TO SS	30	30	0	30	30
3. OMV RETRIEVES PAYLOAD	////////	////////	////////	////////	////////
4. BERTH PAYLOAD AT SS OR STS	210	210	180	390	120
5. TRANSPORT MATERIALS TO PAYLOAD	N/A	N/A	N/A	N/A	N/A
6. ORU CHANGEOUT	487	731	974	1705	244
7. REPLENISH CONSUMABLES					
a. HYDRAZINE *	102	102	204	306	0
b. WATER *	N/A	N/A	N/A	N/A	N/A
c. SUPERFLUID HELIUM *	N/A	N/A	N/A	N/A	N/A
d. OTHER **	40	60	0	60	0
8. DEBERTH PAYLOAD FROM SS OR STS	330	330	180	510	180
9. OMV DEPLOYS PAYLOAD	////////	////////	////////	////////	////////
10. LOAD MATERIALS INTO STS	30	30	0	30	30
11. STS TAKES MATERIALS TO EARTH	////////	////////	////////	////////	////////
12. PRESSURIZED SERVICING ON SS	0	0	0	0	0
13. IN-SITU SERVICING					
a. SS-TO-OMV LOADING	N/A	N/A	N/A	N/A	N/A
b. OMV-TO-SS UNLOADING	N/A	N/A	N/A	N/A	N/A
14. ASSEMBLY ON ORBIT	N/A	N/A	N/A	N/A	N/A
TOTAL FOR SCENARIO:	**1229**	**1493**	**1538**	**3031**	**604**

MASS/VOLUME SUMMARY

	MASS (KG)	VOLUME (M**3)
TRANSPORTED UP TO SS OR ORBIT	1800	15
TEMPORARY STORAGE AT SS	1065	5
TRANSPORTED DOWN FROM SS OR ORBIT	1800	15

OMV/OTV FLIGHT SUMMARY

FLIGHT PURPOSE	OMV FLIGHTS NEEDED	OTV FLIGHTS NEEDED
RETRIEVAL	1	0
DEPLOYMENT	1	0
IN-SITU SERVICING	0	0
TOTAL FLIGHTS	**2**	**0**

CONSUMABLES SUMMARY

CONSUMABLE	AMOUNT TRANSFERRED	AMOUNT EXPENDED
a. HYDRAZINE (KG) *	380	////////
b. WATER (L) *	N/A	////////
c. SUPERFLUID HELIUM (L) *	N/A	N/A
d. OTHER (KG) **	10	////////

* Provided from SS supply system
** Not provided from SS supply system; mass includes tank/container

COMPOSITE ON-ORBIT SERVICING ESTIMATE

PAYLOAD:	SBAR	**P/L TYPE:**	INDEPENDENT FREE FLYER
STRAWMAN SERVICING TYPE:	C	**LOCATION:**	SS SVC FAC + PRESS MOD
AS OF:	6-Nov-87	**DESCRIPTION:**	SI, HYDRAZINE, RECORDING MEDIA, ORUs

TIME SUMMARY

SERVICING ACTIVITY	ELAPSED TIME (MIN)	IVA TIME (CREW MIN)	EVA TIME (CREW MIN)	TOTAL CREW TIME (CREW MIN)	ROBOTICS TIME (MIN)
1. STS BRINGS MATERIALS FROM EARTH	////////////	////////////	////////////	////////////	////////////
2. UNLOAD MATERIALS FROM STS TO SS	30	30	0	30	30
3. OMV RETRIEVES PAYLOAD	////////////	////////////	////////////	////////////	////////////
4. BERTH PAYLOAD AT SS OR STS	210	210	180	390	120
5. TRANSPORT MATERIALS TO PAYLOAD	N/A	N/A	N/A	N/A	N/A
6. ORU CHANGEOUT	530	795	1060	1855	265
7. REPLENISH CONSUMABLES					
a. HYDRAZINE *	102	102	204	306	0
b. WATER *	N/A	N/A	N/A	N/A	N/A
c. SUPERFLUID HELIUM *	N/A	N/A	N/A	N/A	N/A
d. OTHER **	40	60	0	60	0
8. DEBERTH PAYLOAD FROM SS OR STS	330	330	180	510	180
9. OMV DEPLOYS PAYLOAD	////////////	////////////	////////////	////////////	////////////
10. LOAD MATERIALS INTO STS	30	30	0	30	30
11. STS TAKES MATERIALS TO EARTH	////////////	////////////	////////////	////////////	////////////
12. PRESSURIZED SERVICING ON SS	40	80	0	80	0
13. IN-SITU SERVICING					
a. SS-TO-OMV LOADING	N/A	N/A	N/A	N/A	N/A
b. OMV-TO-SS UNLOADING	N/A	N/A	N/A	N/A	N/A
14. ASSEMBLY ON ORBIT	N/A	N/A	N/A	N/A	N/A
TOTAL FOR SCENARIO:	**1312**	**1637**	**1624**	**3261**	**625**

MASS/VOLUME SUMMARY

	MASS (KG)	VOLUME (M**3)
TRANSPORTED UP TO SS OR ORBIT	1920	15
TEMPORARY STORAGE AT SS	1185	5
TRANSPORTED DOWN FROM SS OR ORBIT	1920	15

OMV/OTV FLIGHT SUMMARY

FLIGHT PURPOSE	OMV FLIGHTS NEEDED	OTV FLIGHTS NEEDED
RETRIEVAL	1	0
DEPLOYMENT	1	0
IN-SITU SERVICING	0	0
TOTAL FLIGHTS	**2**	**0**

CONSUMABLES SUMMARY

CONSUMABLE	AMOUNT TRANSFERRED	AMOUNT EXPENDED
a. HYDRAZINE (KG) *	380	////////////
b. WATER (L) *	N/A	////////////
c. SUPERFLUID HELIUM (L) *	N/A	N/A
d. OTHER (KG) **	10	////////////

* Provided from SS supply system
** Not provided from SS supply system; mass includes tank/container

COMPOSITE ON-ORBIT SERVICING ESTIMATE

PAYLOAD: SIRTF **P/L TYPE:** CO-ORBITING PLATFORM
STRAWMAN SERVICING TYPE: A **LOCATION:** SS SERVICING FACILITY
AS OF: 14-Oct-87 **DESCRIPTION:** HELIUM

TIME SUMMARY

SERVICING ACTIVITY	ELAPSED TIME (MIN)	IVA TIME (CREW MIN)	EVA TIME (CREW MIN)	TOTAL CREW TIME (CREW MIN)	ROBOTICS TIME (MIN)
1. STS BRINGS MATERIALS FROM EARTH	////////	////////	////////	////////	////////
2. UNLOAD MATERIALS FROM STS TO SS	240	240	0	240	240
3. OMV RETRIEVES PAYLOAD	////////	////////	////////	////////	////////
4. BERTH PAYLOAD AT SS OR STS	210	210	180	390	120
5. TRANSPORT MATERIALS TO PAYLOAD	N/A	N/A	N/A	N/A	N/A
6. ORU CHANGEOUT	N/A	N/A	N/A	N/A	N/A
7. REPLENISH CONSUMABLES					
a. HYDRAZINE *	N/A	N/A	N/A	N/A	N/A
b. WATER *	N/A	N/A	N/A	N/A	N/A
c. SUPERFLUID HELIUM *	560	560	240	800	0
d. OTHER **	N/A	N/A	N/A	N/A	N/A
8. DEBERTH PAYLOAD FROM SS OR STS	330	330	180	510	180
9. OMV DEPLOYS PAYLOAD	////////	////////	////////	////////	////////
10. LOAD MATERIALS INTO STS	240	240	0	240	240
11. STS TAKES MATERIALS TO EARTH	////////	////////	////////	////////	////////
12. PRESSURIZED SERVICING ON SS	N/A	N/A	N/A	N/A	N/A
13. IN-SITU SERVICING					
a. SS-TO-OMV LOADING	N/A	N/A	N/A	N/A	N/A
b. OMV-TO-SS UNLOADING	N/A	N/A	N/A	N/A	N/A
14. ASSEMBLY ON ORBIT	N/A	N/A	N/A	N/A	N/A
TOTAL FOR SCENARIO:	**1580**	**1580**	**600**	**2180**	**780**

MASS/VOLUME SUMMARY

	MASS (KG)	VOLUME (M**3)
TRANSPORTED UP TO SS OR ORBIT.	100	0.5
TEMPORARY STORAGE AT SS	100	0.5
TRANSPORTED DOWN FROM SS OR ORBIT	100	0.5

OMV/OTV FLIGHT SUMMARY

FLIGHT PURPOSE	OMV FLIGHTS NEEDED	OTV FLIGHTS NEEDED
RETRIEVAL	1	0
DEPLOYMENT	1	0
IN-SITU SERVICING	0	0
TOTAL FLIGHTS	**2**	**0**

CONSUMABLES SUMMARY

CONSUMABLE	AMOUNT TRANSFERRED	AMOUNT EXPENDED
a. HYDRAZINE (KG) *	N/A	////////
b. WATER (L) *	N/A	////////
c. SUPERFLUID HELIUM (L) *	2667	3234
d. OTHER (KG) **	N/A	////////

* Provided from SS supply system
** Not provided from SS supply system; mass includes tank/container

COMPOSITE ON-ORBIT SERVICING ESTIMATE

PAYLOAD: SIRTF **P/L TYPE:** CO-ORBITING PLATFORM
STRAWMAN SERVICING TYPE: B **LOCATION:** SS SERVICING FACILITY
AS OF: 14-Oct-87 **DESCRIPTION:** HELIUM & REPLACE 2 POWER MODULE ORUs

TIME SUMMARY

SERVICING ACTIVITY	ELAPSED TIME (MIN)	IVA TIME (CREW MIN)	EVA TIME (CREW MIN)	TOTAL CREW TIME (CREW MIN)	ROBOTICS TIME (MIN)
1. STS BRINGS MATERIALS FROM EARTH	////////	////////	////////	////////	////////
2. UNLOAD MATERIALS FROM STS TO SS	240	240	0	240	240
3. OMV RETRIEVES PAYLOAD	////////	////////	////////	////////	////////
4. BERTH PAYLOAD AT SS OR STS	210	210	180	390	120
5. TRANSPORT MATERIALS TO PAYLOAD	N/A	N/A	N/A	N/A	N/A
6. ORU CHANGEOUT	120	120	240	360	0
7. REPLENISH CONSUMABLES					
a. HYDRAZINE *	N/A	N/A	N/A	N/A	N/A
b. WATER *	N/A	N/A	N/A	N/A	N/A
c. SUPERFLUID HELIUM *	660	660	240	900	0
d. OTHER **	N/A	N/A	N/A	N/A	N/A
8. DEBERTH PAYLOAD FROM SS OR STS	330	330	180	510	180
9. OMV DEPLOYS PAYLOAD	////////	////////	////////	////////	////////
10. LOAD MATERIALS INTO STS	240	240	0	240	240
11. STS TAKES MATERIALS TO EARTH	////////	////////	////////	////////	////////
12. PRESSURIZED SERVICING ON SS	N/A	N/A	N/A	N/A	N/A
13. IN-SITU SERVICING					
a. SS-TO-OMV LOADING	N/A	N/A	N/A	N/A	N/A
b. OMV-TO-SS UNLOADING	N/A	N/A	N/A	N/A	N/A
14. ASSEMBLY ON ORBIT	N/A	N/A	N/A	N/A	N/A
TOTAL FOR SCENARIO:	**1800**	**1800**	**840**	**2640**	**780**

MASS/VOLUME SUMMARY

	MASS (KG)	VOLUME (M**3)
TRANSPORTED UP TO SS OR ORBIT	464	2.234
TEMPORARY STORAGE AT SS	464	2.234
TRANSPORTED DOWN FROM SS OR ORBIT	464	2.234

OMV/OTV FLIGHT SUMMARY

FLIGHT PURPOSE	OMV FLIGHTS NEEDED	OTV FLIGHTS NEEDED
RETRIEVAL	1	0
DEPLOYMENT	1	0
IN-SITU SERVICING	0	0
TOTAL FLIGHTS	**2**	**0**

CONSUMABLES SUMMARY

CONSUMABLE	AMOUNT TRANSFERRED	AMOUNT EXPENDED
a. HYDRAZINE (KG) *	N/A	////////
b. WATER (L) *	N/A	////////
c. SUPERFLUID HELIUM (L) *	4000	4850
d. OTHER (KG) **	N/A	////////

* Provided from SS supply system
** Not provided from SS supply system; mass includes tank/container

COMPOSITE ON-ORBIT SERVICING ESTIMATE

PAYLOAD: SIRTF **P/L TYPE:** CO-ORBITING PLATFORM
STRAWMAN SERVICING TYPE: C **LOCATION:** SS SERVICING FACILITY
AS OF: 14-Oct-87 **DESCRIPTION:** HELIUM,TAPE RECORDER,2 SOLAR ARRAY ORUs

TIME SUMMARY

SERVICING ACTIVITY	ELAPSED TIME (MIN)	IVA TIME (CREW MIN)	EVA TIME (CREW MIN)	TOTAL CREW TIME (CREW MIN)	ROBOTICS TIME (MIN)
1. STS BRINGS MATERIALS FROM EARTH	////////////	////////////	////////////	////////////	////////////
2. UNLOAD MATERIALS FROM STS TO SS	240	240	0	240	240
3. OMV RETRIEVES PAYLOAD	////////////	////////////	////////////	////////////	////////////
4. BERTH PAYLOAD AT SS OR STS	210	210	180	390	120
5. TRANSPORT MATERIALS TO PAYLOAD	N/A	N/A	N/A	N/A	N/A
6. ORU CHANGEOUT	360	360	720	1080	0
7. REPLENISH CONSUMABLES					
a. HYDRAZINE *	N/A	N/A	N/A	N/A	N/A
b. WATER *	N/A	N/A	N/A	N/A	N/A
c. SUPERFLUID HELIUM *	660	660	240	900	0
d. OTHER **	N/A	N/A	N/A	N/A	N/A
8. DEBERTH PAYLOAD FROM SS OR STS	330	330	180	510	180
9. OMV DEPLOYS PAYLOAD	////////////	////////////	////////////	////////////	////////////
10. LOAD MATERIALS INTO STS	240	240	0	240	240
11. STS TAKES MATERIALS TO EARTH	////////////	////////////	////////////	////////////	////////////
12. PRESSURIZED SERVICING ON SS	N/A	N/A	N/A	N/A	N/A
13. IN-SITU SERVICING					
a. SS-TO-OMV LOADING	N/A	N/A	N/A	N/A	N/A
b. OMV-TO-SS UNLOADING	N/A	N/A	N/A	N/A	N/A
14. ASSEMBLY ON ORBIT	N/A	N/A	N/A	N/A	N/A
TOTAL FOR SCENARIO:	**2040**	**2040**	**1320**	**3360**	**780**

MASS/VOLUME SUMMARY

	MASS (KG)	VOLUME (M**3)
TRANSPORTED UP TO SS OR ORBIT	845	11.577
TEMPORARY STORAGE AT SS	845	11.577
TRANSPORTED DOWN FROM SS OR ORBIT	845	11.577

OMV/OTV FLIGHT SUMMARY

FLIGHT PURPOSE	OMV FLIGHTS NEEDED	OTV FLIGHTS NEEDED
RETRIEVAL	1	0
DEPLOYMENT	1	0
IN-SITU SERVICING	0	0
TOTAL FLIGHTS	**2**	**0**

CONSUMABLES SUMMARY

CONSUMABLE	AMOUNT TRANSFERRED	AMOUNT EXPENDED
a. HYDRAZINE (KG) *	N/A	////////////
b. WATER (L) *	N/A	////////////
c. SUPERFLUID HELIUM (L) *	4000	4850
d. OTHER (KG) **	N/A	////////////

* Provided from SS supply system
** Not provided from SS supply system; mass includes tank/container

COMPOSITE ON-ORBIT SERVICING ESTIMATE

PAYLOAD: 3S **P/L TYPE:** INDEPENDENT FREE FLYER
STRAWMAN SERVICING TYPE: A **LOCATION:** SS SERVICING FACILITY
AS OF: 12-Oct-87 **DESCRIPTION:** DEBERTHING,DEPLOYMENT,RETRIEVAL,BERTHING

TIME SUMMARY

SERVICING ACTIVITY	ELAPSED TIME (MIN)	IVA TIME (CREW MIN)	EVA TIME (CREW MIN)	TOTAL CREW TIME (CREW MIN)	ROBOTICS TIME (MIN)
1. STS BRINGS MATERIALS FROM EARTH	////////	////////	////////	////////	////////
2. UNLOAD MATERIALS FROM STS TO SS	N/A	N/A	N/A	N/A	N/A
3. OMV RETRIEVES PAYLOAD	////////	////////	////////	////////	////////
4. BERTH PAYLOAD AT SS OR STS	210	210	180	390	120
5. TRANSPORT MATERIALS TO PAYLOAD	N/A	N/A	N/A	N/A	N/A
6. ORU CHANGEOUT	N/A	N/A	N/A	N/A	N/A
7. REPLENISH CONSUMABLES					
a. HYDRAZINE *	N/A	N/A	N/A	N/A	N/A
b. WATER *	N/A	N/A	N/A	N/A	N/A
c. SUPERFLUID HELIUM *	N/A	N/A	N/A	N/A	N/A
d. OTHER **	N/A	N/A	N/A	N/A	N/A
8. DEBERTH PAYLOAD FROM SS OR STS	330	330	180	510	180
9. OMV DEPLOYS PAYLOAD	////////	////////	////////	////////	////////
10. LOAD MATERIALS INTO STS	N/A	N/A	N/A	N/A	N/A
11. STS TAKES MATERIALS TO EARTH	////////	////////	////////	////////	////////
12. PRESSURIZED SERVICING ON SS	N/A	N/A	N/A	N/A	N/A
13. IN-SITU SERVICING					
a. SS-TO-OMV LOADING	N/A	N/A	N/A	N/A	N/A
b. OMV-TO-SS UNLOADING	N/A	N/A	N/A	N/A	N/A
14. ASSEMBLY ON ORBIT	N/A	N/A	N/A	N/A	N/A
TOTAL FOR SCENARIO:	**540**	**540**	**360**	**900**	**300**

MASS/VOLUME SUMMARY

	MASS (KG)	VOLUME (M**3)
TRANSPORTED UP TO SS OR ORBIT	0	0
TEMPORARY STORAGE AT SS	0	0
TRANSPORTED DOWN FROM SS OR ORBIT	0	0

OMV/OTV FLIGHT SUMMARY

FLIGHT PURPOSE	OMV FLIGHTS NEEDED	OTV FLIGHTS NEEDED
RETRIEVAL	1	0
DEPLOYMENT	1	0
IN-SITU SERVICING	0	0
TOTAL FLIGHTS	**2**	**0**

CONSUMABLES SUMMARY

CONSUMABLE	AMOUNT TRANSFERRED	AMOUNT EXPENDED
a. HYDRAZINE (KG) *	N/A	////////
b. WATER (L) *	N/A	////////
c. SUPERFLUID HELIUM (L) *	N/A	N/A
d. OTHER (KG) **	N/A	////////

* Provided from SS supply system
** Not provided from SS supply system; mass includes tank/container

COMPOSITE ON-ORBIT SERVICING ESTIMATE

PAYLOAD: 3S **P/L TYPE:** INDEPENDENT FREE FLYER
STRAWMAN SERVICING TYPE: B **LOCATION:** SS SERVICING FACILITY
AS OF: 12-Oct-87 **DESCRIPTION:** TYPE A PLUS S.I. CHANGEOUT, HYDRAZINE

TIME SUMMARY

SERVICING ACTIVITY	ELAPSED TIME (MIN)	IVA TIME (CREW MIN)	EVA TIME (CREW MIN)	TOTAL CREW TIME (CREW MIN)	ROBOTICS TIME (MIN)
1. STS BRINGS MATERIALS FROM EARTH	////////	////////	////////	////////	////////
2. UNLOAD MATERIALS FROM STS TO SS	30	30	0	30	30
3. OMV RETRIEVES PAYLOAD	////////	////////	////////	////////	////////
4. BERTH PAYLOAD AT SS OR STS	210	210	180	390	120
5. TRANSPORT MATERIALS TO PAYLOAD	N/A	N/A	N/A	N/A	N/A
6. ORU CHANGEOUT	408	612	816	1428	204
7. REPLENISH CONSUMABLES					
a. HYDRAZINE *	102	102	204	306	0
b. WATER *	N/A	N/A	N/A	N/A	N/A
c. SUPERFLUID HELIUM *	N/A	N/A	N/A	N/A	N/A
d. OTHER **	N/A	N/A	N/A	N/A	N/A
8. DEBERTH PAYLOAD FROM SS OR STS	330	330	180	510	180
9. OMV DEPLOYS PAYLOAD	////////	////////	////////	////////	////////
10. LOAD MATERIALS INTO STS	30	30	0	30	30
11. STS TAKES MATERIALS TO EARTH	////////	////////	////////	////////	////////
12. PRESSURIZED SERVICING ON SS	N/A	N/A	N/A	N/A	N/A
13. IN-SITU SERVICING					
a. SS-TO-OMV LOADING	N/A	N/A	N/A	N/A	N/A
b. OMV-TO-SS UNLOADING	N/A	N/A	N/A	N/A	N/A
14. ASSEMBLY ON ORBIT	N/A	N/A	N/A	N/A	N/A
TOTAL FOR SCENARIO:	**1110**	**1314**	**1380**	**2694**	**564**

MASS/VOLUME SUMMARY

	MASS (KG)	VOLUME (M**3)
TRANSPORTED UP TO SS OR ORBIT	1791	15
TEMPORARY STORAGE AT SS	0	0
TRANSPORTED DOWN FROM SS OR ORBIT	1791	15

OMV/OTV FLIGHT SUMMARY

FLIGHT PURPOSE	OMV FLIGHTS NEEDED	OTV FLIGHTS NEEDED
RETRIEVAL	1	0
DEPLOYMENT	1	0
IN-SITU SERVICING	0	0
TOTAL FLIGHTS	**2**	**0**

CONSUMABLES SUMMARY

CONSUMABLE	AMOUNT TRANSFERRED	AMOUNT EXPENDED
a. HYDRAZINE (KG) *	380	////////
b. WATER (L) *	N/A	////////
c. SUPERFLUID HELIUM (L) *	N/A	N/A
d. OTHER (KG) **	N/A	////////

* Provided from SS supply system
** Not provided from SS supply system; mass includes tank/container

COMPOSITE ON-ORBIT SERVICING ESTIMATE

PAYLOAD:	3S	**P/L TYPE:**	INDEPENDENT FREE FLYER
STRAWMAN SERVICING TYPE:	C	**LOCATION:**	SS SERVICING FACILITY
AS OF:	12-Oct-87	**DESCRIPTION:**	TYPE B PLUS SUBSYSTEM ORU CHANGEOUT

TIME SUMMARY

SERVICING ACTIVITY	ELAPSED TIME (MIN)	IVA TIME (CREW MIN)	EVA TIME (CREW MIN)	TOTAL CREW TIME (CREW MIN)	ROBOTICS TIME (MIN)
1. STS BRINGS MATERIALS FROM EARTH	////////	////////	////////	////////	////////
2. UNLOAD MATERIALS FROM STS TO SS	30	30	0	30	30
3. OMV RETRIEVES PAYLOAD	////////	////////	////////	////////	////////
4. BERTH PAYLOAD AT SS OR STS	210	210	180	390	120
5. TRANSPORT MATERIALS TO PAYLOAD	N/A	N/A	N/A	N/A	N/A
6. ORU CHANGEOUT	451	677	902	1579	226
7. REPLENISH CONSUMABLES					
a. HYDRAZINE *	102	102	204	306	0
b. WATER *	N/A	N/A	N/A	N/A	N/A
c. SUPERFLUID HELIUM *	N/A	N/A	N/A	N/A	N/A
d. OTHER **	N/A	N/A	N/A	N/A	N/A
8. DEBERTH PAYLOAD FROM SS OR STS	330	330	180	510	180
9. OMV DEPLOYS PAYLOAD	////////	////////	////////	////////	////////
10. LOAD MATERIALS INTO STS	30	30	0	30	30
11. STS TAKES MATERIALS TO EARTH	////////	////////	////////	////////	////////
12. PRESSURIZED SERVICING ON SS	N/A	N/A	N/A	N/A	N/A
13. IN-SITU SERVICING					
a. SS-TO-OMV LOADING	N/A	N/A	N/A	N/A	N/A
b. OMV-TO-SS UNLOADING	N/A	N/A	N/A	N/A	N/A
14. ASSEMBLY ON ORBIT	N/A	N/A	N/A	N/A	N/A
TOTAL FOR SCENARIO:	**1153**	**1379**	**1466**	**2845**	**586**

MASS/VOLUME SUMMARY

	MASS (KG)	VOLUME (M**3)
TRANSPORTED UP TO SS OR ORBIT	1791	15
TEMPORARY STORAGE AT SS	0	0
TRANSPORTED DOWN FROM SS OR ORBIT	1791	15

OMV/OTV FLIGHT SUMMARY

FLIGHT PURPOSE	OMV FLIGHTS NEEDED	OTV FLIGHTS NEEDED
RETRIEVAL	1	0
DEPLOYMENT	1	0
IN-SITU SERVICING	0	0
TOTAL FLIGHTS	**2**	**0**

CONSUMABLES SUMMARY

CONSUMABLE	AMOUNT TRANSFERRED	AMOUNT EXPENDED
a. HYDRAZINE (KG) *	380	////////
b. WATER (L) *	N/A	////////
c. SUPERFLUID HELIUM (L) *	N/A	N/A
d. OTHER (KG) **	N/A	////////

* Provided from SS supply system
** Not provided from SS supply system; mass includes tank/container

COMPOSITE ON-ORBIT SERVICING ESTIMATE

PAYLOAD: 3S **P/L TYPE:** INDEPENDENT FREE FLYER
STRAWMAN SERVICING TYPE: D **LOCATION:** SS SERVICING FACILITY
AS OF: 12-Oct-87 **DESCRIPTION:** TEMP STOR OF 3S BETWEEN SCIENCE MISSION

TIME SUMMARY

SERVICING ACTIVITY	ELAPSED TIME (MIN)	IVA TIME (CREW MIN)	EVA TIME (CREW MIN)	TOTAL CREW TIME (CREW MIN)	ROBOTICS TIME (MIN)
1. STS BRINGS MATERIALS FROM EARTH	////////////	////////////	////////////	////////////	////////////
2. UNLOAD MATERIALS FROM STS TO SS	N/A	N/A	N/A	N/A	N/A
3. OMV RETRIEVES PAYLOAD	////////////	////////////	////////////	////////////	////////////
4. BERTH PAYLOAD AT SS OR STS	N/A	N/A	N/A	N/A	N/A
5. TRANSPORT MATERIALS TO PAYLOAD	N/A	N/A	N/A	N/A	N/A
6. ORU CHANGEOUT	N/A	N/A	N/A	N/A	N/A
7. REPLENISH CONSUMABLES					
a. HYDRAZINE *	N/A	N/A	N/A	N/A	N/A
b. WATER *	N/A	N/A	N/A	N/A	N/A
c. SUPERFLUID HELIUM *	N/A	N/A	N/A	N/A	N/A
d. OTHER **	N/A	N/A	N/A	N/A	N/A
8. DEBERTH PAYLOAD FROM SS OR STS	N/A	N/A	N/A	N/A	N/A
9. OMV DEPLOYS PAYLOAD	////////////	////////////	////////////	////////////	////////////
10. LOAD MATERIALS INTO STS	N/A	N/A	N/A	N/A	N/A
11. STS TAKES MATERIALS TO EARTH	////////////	////////////	////////////	////////////	////////////
12. PRESSURIZED SERVICING ON SS	N/A	N/A	N/A	N/A	N/A
13. IN-SITU SERVICING					
a. SS-TO-OMV LOADING	N/A	N/A	N/A	N/A	N/A
b. OMV-TO-SS UNLOADING	N/A	N/A	N/A	N/A	N/A
14. ASSEMBLY ON ORBIT	N/A	N/A	N/A	N/A	N/A
TOTAL FOR SCENARIO:	**N/A**	**N/A**	**N/A**	**N/A**	**N/A**

MASS/VOLUME SUMMARY

	MASS (KG)	VOLUME (M**3)
TRANSPORTED UP TO SS OR ORBIT	0	0
TEMPORARY STORAGE AT SS	2580	19
TRANSPORTED DOWN FROM SS OR ORBIT	0	0

OMV/OTV FLIGHT SUMMARY

FLIGHT PURPOSE	OMV FLIGHTS NEEDED	OTV FLIGHTS NEEDED
RETRIEVAL	0	0
DEPLOYMENT	0	0
IN-SITU SERVICING	0	0
TOTAL FLIGHTS	**0**	**0**

CONSUMABLES SUMMARY

CONSUMABLE	AMOUNT TRANSFERRED	AMOUNT EXPENDED
a. HYDRAZINE (KG) *	N/A	////////////
b. WATER (L) *	N/A	////////////
c. SUPERFLUID HELIUM (L) *	N/A	N/A
d. OTHER (KG) **	N/A	////////////

* Provided from SS supply system
** Not provided from SS supply system; mass includes tank/container

COMPOSITE ON-ORBIT SERVICING ESTIMATE

PAYLOAD:	SRI	**P/L TYPE:**	ATTACHED EXTERNAL
STRAWMAN SERVICING TYPE:	A	**LOCATION:**	SS-ATTACHED
AS OF:	12-Nov-87	**DESCRIPTION:**	SERVICING TBD

TIME SUMMARY

SERVICING ACTIVITY	ELAPSED TIME (MIN)	IVA TIME (CREW MIN)	EVA TIME (CREW MIN)	TOTAL CREW TIME (CREW MIN)	ROBOTICS TIME (MIN)
1. STS BRINGS MATERIALS FROM EARTH	////////////	////////////	////////////	////////////	////////////
2. UNLOAD MATERIALS FROM STS TO SS	N/A	N/A	N/A	N/A	N/A
3. OMV RETRIEVES PAYLOAD	////////////	////////////	////////////	////////////	////////////
4. BERTH PAYLOAD AT SS OR STS	N/A	N/A	N/A	N/A	N/A
5. TRANSPORT MATERIALS TO PAYLOAD	N/A	N/A	N/A	N/A	N/A
6. ORU CHANGEOUT	N/A	N/A	N/A	N/A	N/A
7. REPLENISH CONSUMABLES					
a. HYDRAZINE *	N/A	N/A	N/A	N/A	N/A
b. WATER *	N/A	N/A	N/A	N/A	N/A
c. SUPERFLUID HELIUM *	N/A	N/A	N/A	N/A	N/A
d. OTHER **	N/A	N/A	N/A	N/A	N/A
8. DEBERTH PAYLOAD FROM SS OR STS	N/A	N/A	N/A	N/A	N/A
9. OMV DEPLOYS PAYLOAD	////////////	////////////	////////////	////////////	////////////
10. LOAD MATERIALS INTO STS	N/A	N/A	N/A	N/A	N/A
11. STS TAKES MATERIALS TO EARTH	////////////	////////////	////////////	////////////	////////////
2. PRESSURIZED SERVICING ON SS	N/A	N/A	N/A	N/A	N/A
3. IN-SITU SERVICING					
a. SS-TO-OMV LOADING	N/A	N/A	N/A	N/A	N/A
b. OMV-TO-SS UNLOADING	N/A	N/A	N/A	N/A	N/A
4. ASSEMBLY ON ORBIT	N/A	N/A	N/A	N/A	N/A
TOTAL FOR SCENARIO:	**N/A**	**N/A**	**N/A**	**N/A**	**N/A**

MASS/VOLUME SUMMARY

	MASS (KG)	VOLUME (M**3)
TRANSPORTED UP TO SS OR ORBIT	0	0
TEMPORARY STORAGE AT SS	0	0
TRANSPORTED DOWN FROM SS OR ORBIT	0	0

OMV/OTV FLIGHT SUMMARY

FLIGHT PURPOSE	OMV FLIGHTS NEEDED	OTV FLIGHTS NEEDED
RETRIEVAL	N/A	N/A
DEPLOYMENT	N/A	N/A
IN-SITU SERVICING	N/A	N/A
TOTAL FLIGHTS	**N/A**	**N/A**

CONSUMABLES SUMMARY

CONSUMABLE	AMOUNT TRANSFERRED	AMOUNT EXPENDED
a. HYDRAZINE (KG) *	N/A	////////////
b. WATER (L) *	N/A	////////////
c. SUPERFLUID HELIUM (L) *	N/A	N/A
d. OTHER (KG) **	N/A	////////////

* Provided from SS supply system

** Not provided from SS supply system; mass includes tank/container

COMPOSITE ON-ORBIT SERVICING ESTIMATE

PAYLOAD:	STO/PIG	**P/L TYPE:**	ATTACHED EXTERNAL
STRAWMAN SERVICING TYPE:	A	**LOCATION:**	SS-ATTACHED
AS OF:	5-Nov-87	**DESCRIPTION:**	RPDP: BATTERY RECHARGE OR REPLACEMENT

TIME SUMMARY

SERVICING ACTIVITY	ELAPSED TIME (MIN)	IVA TIME (CREW MIN)	EVA TIME (CREW MIN)	TOTAL CREW TIME (CREW MIN)	ROBOTICS TIME (MIN)
1. STS BRINGS MATERIALS FROM EARTH	////////////	////////////	////////////	////////////	////////////
2. UNLOAD MATERIALS FROM STS TO SS	30	30	0	30	30
3. OMV RETRIEVES PAYLOAD	////////////	////////////	////////////	////////////	////////////
4. BERTH PAYLOAD AT SS OR STS	210	210	0	210	120
5. TRANSPORT MATERIALS TO PAYLOAD	350	350	0	350	350
6. ORU CHANGEOUT	TBD	TBD	TBD	TBD	TBD
7. REPLENISH CONSUMABLES					
a. HYDRAZINE *	N/A	N/A	N/A	N/A	N/A
b. WATER *	N/A	N/A	N/A	N/A	N/A
c. SUPERFLUID HELIUM *	N/A	N/A	N/A	N/A	N/A
d. OTHER **	N/A	N/A	N/A	N/A	N/A
8. DEBERTH PAYLOAD FROM SS OR STS	330	330	0	330	180
9. OMV DEPLOYS PAYLOAD	////////////	////////////	////////////	////////////	////////////
10. LOAD MATERIALS INTO STS	30	30	0	30	30
11. STS TAKES MATERIALS TO EARTH	////////////	////////////	////////////	////////////	////////////
12. PRESSURIZED SERVICING ON SS	N/A	N/A	N/A	N/A	N/A
13. IN-SITU SERVICING					
a. SS-TO-OMV LOADING	N/A	N/A	N/A	N/A	N/A
b. OMV-TO-SS UNLOADING	N/A	N/A	N/A	N/A	N/A
14. ASSEMBLY ON ORBIT	N/A	N/A	N/A	N/A	N/A
TOTAL FOR SCENARIO:	**950 + TBD**	**950 + TBD**	**TBD**	**950 + TBD**	**710 + TBD**

MASS/VOLUME SUMMARY

	MASS (KG)	VOLUME (M**3)
TRANSPORTED UP TO SS OR ORBIT	TBD	TBD
TEMPORARY STORAGE AT SS	TBD	TBD
TRANSPORTED DOWN FROM SS OR ORBIT	TBD	TBD

OMV/OTV FLIGHT SUMMARY

FLIGHT PURPOSE	OMV FLIGHTS NEEDED	OTV FLIGHTS NEEDED
RETRIEVAL	1	N/A
DEPLOYMENT	1	N/A
IN-SITU SERVICING	0	N/A
TOTAL FLIGHTS	**2**	**N/A**

CONSUMABLES SUMMARY

CONSUMABLE	AMOUNT TRANSFERRED	AMOUNT EXPENDED
a. HYDRAZINE (KG) *	N/A	////////////
b. WATER (L) *	N/A	////////////
c. SUPERFLUID HELIUM (L) *	N/A	N/A
d. OTHER (KG) **	N/A	////////////

* Provided from SS supply system
** Not provided from SS supply system; mass includes tank/container

COMPOSITE ON-ORBIT SERVICING ESTIMATE

PAYLOAD:	STO/PIG	**P/L TYPE:**	ATTACHED EXTERNAL
STRAWMAN SERVICING TYPE:	B	**LOCATION:**	SS-ATTACHED
AS OF:	5-Nov-87	**DESCRIPTION:**	A + ELECTRONIC BOXES, CONSUMABLES

TIME SUMMARY

SERVICING ACTIVITY	ELAPSED TIME (MIN)	IVA TIME (CREW MIN)	EVA TIME (CREW MIN)	TOTAL CREW TIME (CREW MIN)	ROBOTICS TIME (MIN)
1. STS BRINGS MATERIALS FROM EARTH	////////	////////	////////	////////	////////
2. UNLOAD MATERIALS FROM STS TO SS	30	30	0	30	30
3. OMV RETRIEVES PAYLOAD	////////	////////	////////	////////	////////
4. BERTH PAYLOAD AT SS OR STS	210	210	0	210	120
5. TRANSPORT MATERIALS TO PAYLOAD	350	350	0	350	350
6. ORU CHANGEOUT	TBD	TBD	TBD	TBD	TBD
7. REPLENISH CONSUMABLES					
a. HYDRAZINE *	N/A	N/A	N/A	N/A	N/A
b. WATER *	N/A	N/A	N/A	N/A	N/A
c. SUPERFLUID HELIUM *	N/A	N/A	N/A	N/A	N/A
d. OTHER **	N/A	N/A	N/A	N/A	N/A
8. DEBERTH PAYLOAD FROM SS OR STS	330	330	0	330	180
9. OMV DEPLOYS PAYLOAD	////////	////////	////////	////////	////////
10. LOAD MATERIALS INTO STS	30	30	0	30	30
11. STS TAKES MATERIALS TO EARTH	////////	////////	////////	////////	////////
12. PRESSURIZED SERVICING ON SS	N/A	N/A	N/A	N/A	N/A
13. IN-SITU SERVICING					
a. SS-TO-OMV LOADING	N/A	N/A	N/A	N/A	N/A
b. OMV-TO-SS UNLOADING	N/A	N/A	N/A	N/A	N/A
14. ASSEMBLY ON ORBIT	N/A	N/A	N/A	N/A	N/A
TOTAL FOR SCENARIO:	**950 + TBD**	**950 + TBD**	**TBD**	**950 + TBD**	**710 + TBD**

MASS/VOLUME SUMMARY

	MASS (KG)	VOLUME (M**3)
TRANSPORTED UP TO SS OR ORBIT	TBD	TBD
TEMPORARY STORAGE AT SS	TBD	TBD
TRANSPORTED DOWN FROM SS OR ORBIT	TBD	TBD

OMV/OTV FLIGHT SUMMARY

FLIGHT PURPOSE	OMV FLIGHTS NEEDED	OTV FLIGHTS NEEDED
RETRIEVAL	1	N/A
DEPLOYMENT	1	N/A
IN-SITU SERVICING	0	N/A
TOTAL FLIGHTS	**2**	**N/A**

CONSUMABLES SUMMARY

CONSUMABLE	AMOUNT TRANSFERRED	AMOUNT EXPENDED
a. HYDRAZINE (KG) *	N/A	////////
b. WATER (L) *	N/A	////////
c. SUPERFLUID HELIUM (L) *	N/A	N/A
d. OTHER (KG) **	N/A	////////

* Provided from SS supply system
** Not provided from SS supply system; mass includes tank/container

COMPOSITE ON-ORBIT SERVICING ESTIMATE

PAYLOAD: STO/POP-1 **P/L TYPE:** POLAR ORBITING PLATFORM
STRAWMAN SERVICING TYPE: A **LOCATION:** IN SITU
AS OF: 15-Oct-87 **DESCRIPTION:** ORU CHANGEOUT (MMP/CHEMSAT),CONSUMABLES

TIME SUMMARY

SERVICING ACTIVITY	ELAPSED TIME (MIN)	IVA TIME (CREW MIN)	EVA TIME (CREW MIN)	TOTAL CREW TIME (CREW MIN)	ROBOTICS TIME (MIN)
1. STS BRINGS MATERIALS FROM EARTH	////////	////////	////////	////////	////////
2. UNLOAD MATERIALS FROM STS TO SS	N/A	N/A	N/A	N/A	N/A
3. OMV RETRIEVES PAYLOAD	////////	////////	////////	////////	////////
4. BERTH PAYLOAD AT SS OR STS	N/A	N/A	N/A	N/A	N/A
5. TRANSPORT MATERIALS TO PAYLOAD	N/A	N/A	N/A	N/A	N/A
6. ORU CHANGEOUT	TBD	TBD	0	TBD	TBD
7. REPLENISH CONSUMABLES					
a. HYDRAZINE *	N/A	N/A	N/A	N/A	N/A
b. WATER *	N/A	N/A	N/A	N/A	N/A
c. SUPERFLUID HELIUM *	N/A	N/A	N/A	N/A	N/A
d. OTHER **	TBD	TBD	0	TBD	TBD
8. DEBERTH PAYLOAD FROM SS OR STS	N/A	N/A	N/A	N/A	N/A
9. OMV DEPLOYS PAYLOAD	////////	////////	////////	////////	////////
10. LOAD MATERIALS INTO STS	N/A	N/A	N/A	N/A	N/A
11. STS TAKES MATERIALS TO EARTH	////////	////////	////////	////////	////////
12. PRESSURIZED SERVICING ON SS	N/A	N/A	N/A	N/A	N/A
13. IN-SITU SERVICING					
a. SS-TO-OMV LOADING	N/A	N/A	N/A	N/A	N/A
b. OMV-TO-SS UNLOADING	N/A	N/A	N/A	N/A	N/A
14. ASSEMBLY ON ORBIT	N/A	N/A	N/A	N/A	N/A
TOTAL FOR SCENARIO:	**TBD**	**TBD**	**0**	**TBD**	**TBD**

MASS/VOLUME SUMMARY

	MASS (KG)	VOLUME (M**3)
TRANSPORTED UP TO SS OR ORBIT	TBD	TBD
TEMPORARY STORAGE AT SS	N/A	N/A
TRANSPORTED DOWN FROM SS OR ORBIT	TBD	TBD

OMV/OTV FLIGHT SUMMARY

FLIGHT PURPOSE	OMV FLIGHTS NEEDED	OTV FLIGHTS NEEDED
RETRIEVAL	0	0
DEPLOYMENT	0	0
IN-SITU SERVICING	1	0
TOTAL FLIGHTS	**1**	**0**

CONSUMABLES SUMMARY

CONSUMABLE	AMOUNT TRANSFERRED	AMOUNT EXPENDED
a. HYDRAZINE (KG) *	N/A	////////
b. WATER (L) *	N/A	////////
c. SUPERFLUID HELIUM (L) *	N/A	N/A
d. OTHER (KG) **	TBD	////////

* Provided from SS supply system
** Not provided from SS supply system; mass includes tank/container

COMPOSITE ON-ORBIT SERVICING ESTIMATE

PAYLOAD: STO/SIG **P/L TYPE:** ATTACHED EXTERNAL
STRAWMAN SERVICING TYPE: A **LOCATION:** SS-ATTACHED
AS OF: 5-Nov-87 **DESCRIPTION:** FILM CANISTER REPLACEMENT

TIME SUMMARY

SERVICING ACTIVITY	ELAPSED TIME (MIN)	IVA TIME (CREW MIN)	EVA TIME (CREW MIN)	TOTAL CREW TIME (CREW MIN)	ROBOTICS TIME (MIN)
1. STS BRINGS MATERIALS FROM EARTH	////////////	////////////	////////////	////////////	////////////
2. UNLOAD MATERIALS FROM STS TO SS	30	30	0	30	30
3. OMV RETRIEVES PAYLOAD	////////////	////////////	////////////	////////////	////////////
4. BERTH PAYLOAD AT SS OR STS	N/A	N/A	N/A	N/A	N/A
5. TRANSPORT MATERIALS TO PAYLOAD	540	1080	1080	2160	540
6. ORU CHANGEOUT	125	185	118	207	125
7. REPLENISH CONSUMABLES					
a. HYDRAZINE *	N/A	N/A	N/A	N/A	N/A
b. WATER *	N/A	N/A	N/A	N/A	N/A
c. SUPERFLUID HELIUM *	N/A	N/A	N/A	N/A	N/A
d. OTHER **	N/A	N/A	N/A	N/A	N/A
8. DEBERTH PAYLOAD FROM SS OR STS	N/A	N/A	N/A	N/A	N/A
9. OMV DEPLOYS PAYLOAD	////////////	////////////	////////////	////////////	////////////
10. LOAD MATERIALS INTO STS	30	30	0	30	30
1. STS TAKES MATERIALS TO EARTH	////////////	////////////	////////////	////////////	////////////
2. PRESSURIZED SERVICING ON SS	N/A	N/A	N/A	N/A	N/A
13. IN-SITU SERVICING					
a. SS-TO-OMV LOADING	N/A	N/A	N/A	N/A	N/A
b. OMV-TO-SS UNLOADING	N/A	N/A	N/A	N/A	N/A
4. ASSEMBLY ON ORBIT	N/A	N/A	N/A	N/A	N/A
TOTAL FOR SCENARIO:	**725**	**1325**	**1198**	**2427**	**725**

MASS/VOLUME SUMMARY

	MASS (KG)	VOLUME (M**3)
TRANSPORTED UP TO SS OR ORBIT	75	0.4
TEMPORARY STORAGE AT SS	75	0.4
RANSPORTED DOWN FROM SS OR ORBIT	75	0.4

OMV/OTV FLIGHT SUMMARY

FLIGHT PURPOSE	OMV FLIGHTS NEEDED	OTV FLIGHTS NEEDED
RETRIEVAL	N/A	N/A
DEPLOYMENT	N/A	N/A
IN-SITU SERVICING	N/A	N/A
TOTAL FLIGHTS	**N/A**	**N/A**

CONSUMABLES SUMMARY

CONSUMABLE	AMOUNT TRANSFERRED	AMOUNT EXPENDED
a. HYDRAZINE (KG) *	N/A	////////////
b. WATER (L) *	N/A	////////////
c. SUPERFLUID HELIUM (L) *	N/A	N/A
d. OTHER (KG) **	N/A	////////////

Provided from SS supply system
** Not provided from SS supply system; mass includes tank/container

COMPOSITE ON-ORBIT SERVICING ESTIMATE

PAYLOAD: STO/SIG **P/L TYPE:** ATTACHED EXTERNAL
STRAWMAN SERVICING TYPE: B **LOCATION:** SS-ATTACHED
AS OF: 5-Nov-87 **DESCRIPTION:** A + ELECTRONIC BOXES, CONSUMABLES

TIME SUMMARY

SERVICING ACTIVITY	ELAPSED TIME (MIN)	IVA TIME (CREW MIN)	EVA TIME (CREW MIN)	TOTAL CREW TIME (CREW MIN)	ROBOTICS TIME (MIN)
1. STS BRINGS MATERIALS FROM EARTH	////////	////////	////////	////////	////////
2. UNLOAD MATERIALS FROM STS TO SS	30	30	0	30	30
3. OMV RETRIEVES PAYLOAD	////////	////////	////////	////////	////////
4. BERTH PAYLOAD AT SS OR STS	N/A	N/A	N/A	N/A	N/A
5. TRANSPORT MATERIALS TO PAYLOAD	540	1080	1080	2160	540
6. ORU CHANGEOUT	185	280	204	357	185
7. REPLENISH CONSUMABLES					
a. HYDRAZINE *	N/A	N/A	N/A	N/A	N/A
b. WATER *	N/A	N/A	N/A	N/A	N/A
c. SUPERFLUID HELIUM *	N/A	N/A	N/A	N/A	N/A
d. OTHER **	N/A	N/A	N/A	N/A	N/A
8. DEBERTH PAYLOAD FROM SS OR STS	N/A	N/A	N/A	N/A	N/A
9. OMV DEPLOYS PAYLOAD	////////	////////	////////	////////	////////
10. LOAD MATERIALS INTO STS	30	30	0	30	30
11. STS TAKES MATERIALS TO EARTH	////////	////////	////////	////////	////////
12. PRESSURIZED SERVICING ON SS	N/A	N/A	N/A	N/A	N/A
13. IN-SITU SERVICING					
a. SS-TO-OMV LOADING	N/A	N/A	N/A	N/A	N/A
b. OMV-TO-SS UNLOADING	N/A	N/A	N/A	N/A	N/A
14. ASSEMBLY ON ORBIT	N/A	N/A	N/A	N/A	N/A
TOTAL FOR SCENARIO:	**785**	**1420**	**1284**	**2577**	**785**

MASS/VOLUME SUMMARY

	MASS (KG)	VOLUME (M**3)
TRANSPORTED UP TO SS OR ORBIT	202	1.05
TEMPORARY STORAGE AT SS	202	1.05
TRANSPORTED DOWN FROM SS OR ORBIT	201	1.05

OMV/OTV FLIGHT SUMMARY

FLIGHT PURPOSE	OMV FLIGHTS NEEDED	OTV FLIGHTS NEEDED
RETRIEVAL	N/A	N/A
DEPLOYMENT	N/A	N/A
IN-SITU SERVICING	N/A	N/A
TOTAL FLIGHTS	**N/A**	**N/A**

CONSUMABLES SUMMARY

CONSUMABLE	AMOUNT TRANSFERRED	AMOUNT EXPENDED
a. HYDRAZINE (KG) *	N/A	////////
b. WATER (L) *	N/A	////////
c. SUPERFLUID HELIUM (L) *	N/A	N/A
d. OTHER (KG) **	N/A	////////

* Provided from SS supply system
** Not provided from SS supply system; mass includes tank/container

COMPOSITE ON-ORBIT SERVICING ESTIMATE

PAYLOAD: STO/SS **P/L TYPE:** ATTACHED EXTERNAL
STRAWMAN SERVICING TYPE: A **LOCATION:** SS-ATTACHED
AS OF: 15-Oct-87 **DESCRIPTION:** FILM REPLACEMENT, RPDP SERVICE

TIME SUMMARY

SERVICING ACTIVITY	ELAPSED TIME (MIN)	IVA TIME (CREW MIN)	EVA TIME (CREW MIN)	TOTAL CREW TIME (CREW MIN)	ROBOTICS TIME (MIN)
1. STS BRINGS MATERIALS FROM EARTH	////////	////////	////////	////////	////////
2. UNLOAD MATERIALS FROM STS TO SS	N/A	N/A	N/A	N/A	N/A
3. OMV RETRIEVES PAYLOAD	////////	////////	////////	////////	////////
4. BERTH PAYLOAD AT SS OR STS	210	210	0	210	120
5. TRANSPORT MATERIALS TO PAYLOAD	875	875	0	875	875
6. ORU CHANGEOUT	122	122	0	122	122
7. REPLENISH CONSUMABLES					
a. HYDRAZINE *	N/A	N/A	N/A	N/A	N/A
b. WATER *	N/A	N/A	N/A	N/A	N/A
c. SUPERFLUID HELIUM *	N/A	N/A	N/A	N/A	N/A
d. OTHER **	N/A	N/A	N/A	N/A	N/A
8. DEBERTH PAYLOAD FROM SS OR STS	330	330	0	330	180
9. OMV DEPLOYS PAYLOAD	////////	////////	////////	////////	////////
10. LOAD MATERIALS INTO STS	N/A	N/A	N/A	N/A	N/A
11. STS TAKES MATERIALS TO EARTH	////////	////////	////////	////////	////////
12. PRESSURIZED SERVICING ON SS	N/A	N/A	N/A	N/A	N/A
13. IN-SITU SERVICING					
a. SS-TO-OMV LOADING	N/A	N/A	N/A	N/A	N/A
b. OMV-TO-SS UNLOADING	N/A	N/A	N/A	N/A	N/A
14. ASSEMBLY ON ORBIT	N/A	N/A	N/A	N/A	N/A
TOTAL FOR SCENARIO:	**1537**	**1537**	**0**	**1537**	**1297**

MASS/VOLUME SUMMARY

	MASS (KG)	VOLUME (M**3)
TRANSPORTED UP TO SS OR ORBIT	75	0.4
TEMPORARY STORAGE AT SS	75	0.4
TRANSPORTED DOWN FROM SS OR ORBIT	75	0.4

OMV/OTV FLIGHT SUMMARY

FLIGHT PURPOSE	OMV FLIGHTS NEEDED	OTV FLIGHTS NEEDED
RETRIEVAL	1	N/A
DEPLOYMENT	1	N/A
IN-SITU SERVICING	0	N/A
TOTAL FLIGHTS	**2**	**N/A**

CONSUMABLES SUMMARY

CONSUMABLE	AMOUNT TRANSFERRED	AMOUNT EXPENDED
a. HYDRAZINE (KG) *	N/A	////////
b. WATER (L) *	N/A	////////
c. SUPERFLUID HELIUM (L) *	N/A	N/A
d. OTHER (KG) **	N/A	////////

* Provided from SS supply system
** Not provided from SS supply system; mass includes tank/container

COMPOSITE ON-ORBIT SERVICING ESTIMATE

PAYLOAD: STO/SS **P/L TYPE:** ATTACHED EXTERNAL
STRAWMAN SERVICING TYPE: B **LOCATION:** SS-ATTACHED
AS OF: 15-Oct-87 **DESCRIPTION:** TYPE A PLUS ALL REMAINING INSTRUMENTS

TIME SUMMARY

SERVICING ACTIVITY	ELAPSED TIME (MIN)	IVA TIME (CREW MIN)	EVA TIME (CREW MIN)	TOTAL CREW TIME (CREW MIN)	ROBOTICS TIME (MIN)
1. STS BRINGS MATERIALS FROM EARTH	////////////	////////////	////////////	////////////	////////////
2. UNLOAD MATERIALS FROM STS TO SS	N/A	N/A	N/A	N/A	N/A
3. OMV RETRIEVES PAYLOAD	////////////	////////////	////////////	////////////	////////////
4. BERTH PAYLOAD AT SS OR STS	210	210	0	210	120
5. TRANSPORT MATERIALS TO PAYLOAD	875	875	0	875	875
6. ORU CHANGEOUT	282	282	0	282	282
7. REPLENISH CONSUMABLES					
a. HYDRAZINE *	N/A	N/A	N/A	N/A	N/A
b. WATER *	N/A	N/A	N/A	N/A	N/A
c. SUPERFLUID HELIUM *	N/A	N/A	N/A	N/A	N/A
d. OTHER **	93	93	0	93	93
8. DEBERTH PAYLOAD FROM SS OR STS	330	330	0	330	180
9. OMV DEPLOYS PAYLOAD	////////////	////////////	////////////	////////////	////////////
10. LOAD MATERIALS INTO STS	N/A	N/A	N/A	N/A	N/A
11. STS TAKES MATERIALS TO EARTH	////////////	////////////	////////////	////////////	////////////
12. PRESSURIZED SERVICING ON SS	N/A	N/A	N/A	N/A	N/A
13. IN-SITU SERVICING					
a. SS-TO-OMV LOADING	N/A	N/A	N/A	N/A	N/A
b. OMV-TO-SS UNLOADING	N/A	N/A	N/A	N/A	N/A
14. ASSEMBLY ON ORBIT	N/A	N/A	N/A	N/A	N/A
TOTAL FOR SCENARIO:	**1790**	**1790**	**0**	**1790**	**1550**

MASS/VOLUME SUMMARY

	MASS (KG)	VOLUME (M**3)
TRANSPORTED UP TO SS OR ORBIT	816	4.1
TEMPORARY STORAGE AT SS	0	0
TRANSPORTED DOWN FROM SS OR ORBIT	809	4.1

OMV/OTV FLIGHT SUMMARY

FLIGHT PURPOSE	OMV FLIGHTS NEEDED	OTV FLIGHTS NEEDED
RETRIEVAL	1	N/A
DEPLOYMENT	1	N/A
IN-SITU SERVICING	0	N/A
TOTAL FLIGHTS	**2**	**N/A**

CONSUMABLES SUMMARY

CONSUMABLE	AMOUNT TRANSFERRED	AMOUNT EXPENDED
a. HYDRAZINE (KG) *	N/A	////////////
b. WATER (L) *	N/A	////////////
c. SUPERFLUID HELIUM (L) *	N/A	N/A
d. OTHER (KG) **	70	////////////

* Provided from SS supply system
** Not provided from SS supply system; mass includes tank/container

COMPOSITE ON-ORBIT SERVICING ESTIMATE

PAYLOAD:	TRIS	**P/L TYPE:**	ATTACHED EXTERNAL
STRAWMAN SERVICING TYPE:	A	**LOCATION:**	SS-ATTACHED
AS OF:	5-Nov-87	**DESCRIPTION:**	ORU CHANGEOUT - MECHANICAL COOLER

TIME SUMMARY

SERVICING ACTIVITY	ELAPSED TIME (MIN)	IVA TIME (CREW MIN)	EVA TIME (CREW MIN)	TOTAL CREW TIME (CREW MIN)	ROBOTICS TIME (MIN)
1. STS BRINGS MATERIALS FROM EARTH	////////////	////////////	////////////	////////////	////////////
2. UNLOAD MATERIALS FROM STS TO SS	30	30	0	30	30
3. OMV RETRIEVES PAYLOAD	////////////	////////////	////////////	////////////	////////////
4. BERTH PAYLOAD AT SS OR STS	N/A	N/A	N/A	N/A	N/A
5. TRANSPORT MATERIALS TO PAYLOAD	180	360	360	720	180
6. ORU CHANGEOUT	76	114	152	266	38
7. REPLENISH CONSUMABLES					
a. HYDRAZINE *	N/A	N/A	N/A	N/A	N/A
b. WATER *	N/A	N/A	N/A	N/A	N/A
c. SUPERFLUID HELIUM *	N/A	N/A	N/A	N/A	N/A
d. OTHER **	N/A	N/A	N/A	N/A	N/A
8. DEBERTH PAYLOAD FROM SS OR STS	N/A	N/A	N/A	N/A	N/A
9. OMV DEPLOYS PAYLOAD	////////////	////////////	////////////	////////////	////////////
10. LOAD MATERIALS INTO STS	30	30	0	30	30
11. STS TAKES MATERIALS TO EARTH	////////////	////////////	////////////	////////////	////////////
12. PRESSURIZED SERVICING ON SS	N/A	N/A	N/A	N/A	N/A
13. IN-SITU SERVICING					
a. SS-TO-OMV LOADING	N/A	N/A	N/A	N/A	N/A
b. OMV-TO-SS UNLOADING	N/A	N/A	N/A	N/A	N/A
14. ASSEMBLY ON ORBIT	N/A	N/A	N/A	N/A	N/A
TOTAL FOR SCENARIO:	**316**	**534**	**512**	**1046**	**278**

MASS/VOLUME SUMMARY

	MASS (KG)	VOLUME (M**3)
TRANSPORTED UP TO SS OR ORBIT	157	0.6
TEMPORARY STORAGE AT SS	157	0.6
TRANSPORTED DOWN FROM SS OR ORBIT	157	0.6

OMV/OTV FLIGHT SUMMARY

FLIGHT PURPOSE	OMV FLIGHTS NEEDED	OTV FLIGHTS NEEDED
RETRIEVAL	N/A	N/A
DEPLOYMENT	N/A	N/A
IN-SITU SERVICING	N/A	N/A
TOTAL FLIGHTS	**N/A**	**N/A**

CONSUMABLES SUMMARY

CONSUMABLE	AMOUNT TRANSFERRED	AMOUNT EXPENDED
a. HYDRAZINE (KG) *	N/A	////////////
b. WATER (L) *	N/A	////////////
c. SUPERFLUID HELIUM (L) *	N/A	N/A
d. OTHER (KG) **	N/A	////////////

* Provided from SS supply system

** Not provided from SS supply system; mass includes tank/container

COMPOSITE ON-ORBIT SERVICING ESTIMATE

PAYLOAD:	TRMM	**P/L TYPE:**	ATTACHED EXTERNAL
STRAWMAN SERVICING TYPE:	A	**LOCATION:**	SS-ATTACHED
AS OF:	14-Oct-87	**DESCRIPTION:**	NO SERVICING REQUIRED

TIME SUMMARY

SERVICING ACTIVITY	ELAPSED TIME (MIN)	IVA TIME (CREW MIN)	EVA TIME (CREW MIN)	TOTAL CREW TIME (CREW MIN)	ROBOTICS TIME (MIN)
1. STS BRINGS MATERIALS FROM EARTH	////////////	////////////	////////////	////////////	////////////
2. UNLOAD MATERIALS FROM STS TO SS	N/A	N/A	N/A	N/A	N/A
3. OMV RETRIEVES PAYLOAD	////////////	////////////	////////////	////////////	////////////
4. BERTH PAYLOAD AT SS OR STS	N/A	N/A	N/A	N/A	N/A
5. TRANSPORT MATERIALS TO PAYLOAD	N/A	N/A	N/A	N/A	N/A
6. ORU CHANGEOUT	N/A	N/A	N/A	N/A	N/A
7. REPLENISH CONSUMABLES					
a. HYDRAZINE *	N/A	N/A	N/A	N/A	N/A
b. WATER *	N/A	N/A	N/A	N/A	N/A
c. SUPERFLUID HELIUM *	N/A	N/A	N/A	N/A	N/A
d. OTHER **	N/A	N/A	N/A	N/A	N/A
8. DEBERTH PAYLOAD FROM SS OR STS	N/A	N/A	N/A	N/A	N/A
9. OMV DEPLOYS PAYLOAD	////////////	////////////	////////////	////////////	////////////
10. LOAD MATERIALS INTO STS	N/A	N/A	N/A	N/A	N/A
11. STS TAKES MATERIALS TO EARTH	////////////	////////////	////////////	////////////	////////////
12. PRESSURIZED SERVICING ON SS	N/A	N/A	N/A	N/A	N/A
13. IN-SITU SERVICING					
a. SS-TO-OMV LOADING	N/A	N/A	N/A	N/A	N/A
b. OMV-TO-SS UNLOADING	N/A	N/A	N/A	N/A	N/A
14. ASSEMBLY ON ORBIT	N/A	N/A	N/A	N/A	N/A
TOTAL FOR SCENARIO:	**N/A**	**N/A**	**N/A**	**N/A**	**N/A**

MASS/VOLUME SUMMARY

	MASS (KG)	VOLUME (M**3)
TRANSPORTED UP TO SS OR ORBIT	0	0
TEMPORARY STORAGE AT SS	0	0
TRANSPORTED DOWN FROM SS OR ORBIT	0	0

OMV/OTV FLIGHT SUMMARY

FLIGHT PURPOSE	OMV FLIGHTS NEEDED	OTV FLIGHTS NEEDED
RETRIEVAL	N/A	N/A
DEPLOYMENT	N/A	N/A
IN-SITU SERVICING	N/A	N/A
TOTAL FLIGHTS	**N/A**	**N/A**

CONSUMABLES SUMMARY

CONSUMABLE	AMOUNT TRANSFERRED	AMOUNT EXPENDED
a. HYDRAZINE (KG) *	N/A	////////////
b. WATER (L) *	N/A	////////////
c. SUPERFLUID HELIUM (L) *	N/A	N/A
d. OTHER (KG) **	N/A	////////////

* Provided from SS supply system
** Not provided from SS supply system; mass includes tank/container

COMPOSITE ON-ORBIT SERVICING ESTIMATE

PAYLOAD:	XGP	**P/L TYPE:**	INDEPENDENT FREE FLYER
STRAWMAN SERVICING TYPE:	A	**LOCATION:**	SS-ATTACHED
AS OF:	15-Oct-87	**DESCRIPTION:**	ASSEMBLY

TIME SUMMARY

SERVICING ACTIVITY	ELAPSED TIME (MIN)	IVA TIME (CREW MIN)	EVA TIME (CREW MIN)	TOTAL CREW TIME (CREW MIN)	ROBOTICS TIME (MIN)
1. STS BRINGS MATERIALS FROM EARTH	////////////	////////////	////////////	////////////	////////////
2. UNLOAD MATERIALS FROM STS TO SS	30	30	0	30	30
3. OMV RETRIEVES PAYLOAD	////////////	////////////	////////////	////////////	////////////
4. BERTH PAYLOAD AT SS OR STS	N/A	N/A	N/A	N/A	N/A
5. TRANSPORT MATERIALS TO PAYLOAD	90	180	180	360	90
6. ORU CHANGEOUT	N/A	N/A	N/A	N/A	N/A
7. REPLENISH CONSUMABLES					
a. HYDRAZINE *	N/A	N/A	N/A	N/A	N/A
b. WATER *	N/A	N/A	N/A	N/A	N/A
c. SUPERFLUID HELIUM *	N/A	N/A	N/A	N/A	N/A
d. OTHER **	N/A	N/A	N/A	N/A	N/A
8. DEBERTH PAYLOAD FROM SS OR STS	TBD	TBD	TBD	TBD	TBD
9. OMV DEPLOYS PAYLOAD	////////////	////////////	////////////	////////////	////////////
10. LOAD MATERIALS INTO STS	N/A	N/A	N/A	N/A	N/A
11. STS TAKES MATERIALS TO EARTH	////////////	////////////	////////////	////////////	////////////
12. PRESSURIZED SERVICING ON SS	N/A	N/A	N/A	N/A	N/A
13. IN-SITU SERVICING					
a. SS-TO-OMV LOADING	N/A	N/A	N/A	N/A	N/A
b. OMV-TO-SS UNLOADING	N/A	N/A	N/A	N/A	N/A
14. ASSEMBLY ON ORBIT	TBD	TBD	TBD	TBD	TBD
TOTAL FOR SCENARIO:	**120 + TBD**	**210 + TBD**	**180 + TBD**	**390 + TBD**	**120 + TBD**

MASS/VOLUME SUMMARY

	MASS (KG)	VOLUME (M**3)
TRANSPORTED UP TO SS OR ORBIT	0	0
TEMPORARY STORAGE AT SS	0	0
TRANSPORTED DOWN FROM SS OR ORBIT	0	0

OMV/OTV FLIGHT SUMMARY

FLIGHT PURPOSE	OMV FLIGHTS NEEDED	OTV FLIGHTS NEEDED
RETRIEVAL	0	0
DEPLOYMENT	1	1
IN-SITU SERVICING	0	0
TOTAL FLIGHTS	1	1

CONSUMABLES SUMMARY

CONSUMABLE	AMOUNT TRANSFERRED	AMOUNT EXPENDED
a. HYDRAZINE (KG) *	N/A	////////////
b. WATER (L) *	N/A	////////////
c. SUPERFLUID HELIUM (L) *	N/A	N/A
d. OTHER (KG) **	N/A	////////////

* Provided from SS supply system
** Not provided from SS supply system; mass includes tank/container

COMPOSITE ON-ORBIT SERVICING ESTIMATE

PAYLOAD:	XGP	**P/L TYPE:**	INDEPENDENT FREE FLYER
STRAWMAN SERVICING TYPE:	B	**LOCATION:**	IN SITU
AS OF:	15-Oct-87	**DESCRIPTION:**	ORU CHANGEOUT

TIME SUMMARY

SERVICING ACTIVITY	ELAPSED TIME (MIN)	IVA TIME (CREW MIN)	EVA TIME (CREW MIN)	TOTAL CREW TIME (CREW MIN)	ROBOTICS TIME (MIN)
1. STS BRINGS MATERIALS FROM EARTH	////////////	////////////	////////////	////////////	////////////
2. UNLOAD MATERIALS FROM STS TO SS	30	30	0	30	30
3. OMV RETRIEVES PAYLOAD	////////////	////////////	////////////	////////////	////////////
4. BERTH PAYLOAD AT SS OR STS	N/A	N/A	N/A	N/A	N/A
5. TRANSPORT MATERIALS TO PAYLOAD	N/A	N/A	N/A	N/A	N/A
6. ORU CHANGEOUT	TBD	TBD	0	TBD	TBD
7. REPLENISH CONSUMABLES					
a. HYDRAZINE *	N/A	N/A	N/A	N/A	N/A
b. WATER *	N/A	N/A	N/A	N/A	N/A
c. SUPERFLUID HELIUM *	N/A	N/A	N/A	N/A	N/A
d. OTHER **	N/A	N/A	N/A	N/A	N/A
8. DEBERTH PAYLOAD FROM SS OR STS	N/A	N/A	N/A	N/A	N/A
9. OMV DEPLOYS PAYLOAD	////////////	////////////	////////////	////////////	////////////
10. LOAD MATERIALS INTO STS	30	30	0	30	30
11. STS TAKES MATERIALS TO EARTH	////////////	////////////	////////////	////////////	////////////
12. PRESSURIZED SERVICING ON SS	N/A	N/A	N/A	N/A	N/A
13. IN-SITU SERVICING					
a. SS-TO-OMV LOADING	30	30	0	30	30
b. OMV-TO-SS UNLOADING	30	30	0	30	30
14. ASSEMBLY ON ORBIT	N/A	N/A	N/A	N/A	N/A
TOTAL FOR SCENARIO:	**120 + TBD**	**120 + TBD**	**0**	**120 + TBD**	**120 + TBD**

MASS/VOLUME SUMMARY

	MASS (KG)	VOLUME (M**3)
TRANSPORTED UP TO SS OR ORBIT	1410	1.2
TEMPORARY STORAGE AT SS	1410	1.2
TRANSPORTED DOWN FROM SS OR ORBIT	410	1.2

OMV/OTV FLIGHT SUMMARY

FLIGHT PURPOSE	OMV FLIGHTS NEEDED	OTV FLIGHTS NEEDED
RETRIEVAL	0	0
DEPLOYMENT	0	0
IN-SITU SERVICING	1	1
TOTAL FLIGHTS	**1**	**1**

CONSUMABLES SUMMARY

CONSUMABLE	AMOUNT TRANSFERRED	AMOUNT EXPENDED
a. HYDRAZINE (KG) *	N/A	////////////
b. WATER (L) *	N/A	////////////
c. SUPERFLUID HELIUM (L) *	N/A	N/A
d. OTHER (KG) **	N/A	////////////

* Provided from SS supply system
** Not provided from SS supply system; mass includes tank/container

STS TRANSPORT AND SS STORAGE OF MATERIALS FOR ON-ORBIT SERVICING OF OSSA CANDIDATE PAYLOADS

PAYLOAD	3S	ATF	CDCE	HRSO	LAWS	LDR	POF
SERVICING SCENARIO	D	B	A	A	A	C	A
NUMBER OF SERVICING MISSIONS THROUGH CY 2005	12	1	9	2	1	2	2

LEGEND: AVERAGE MASS UP AND MASS DOWN; AVERAGE VOLUME UP AND DOWN; AVERAGE TEMPORARY STORAGE VOLUME

STS TRANSPORT AND SS STORAGE OF MATERIALS FOR ON-ORBIT SERVICING OF OSSA CANDIDATE PAYLOADS

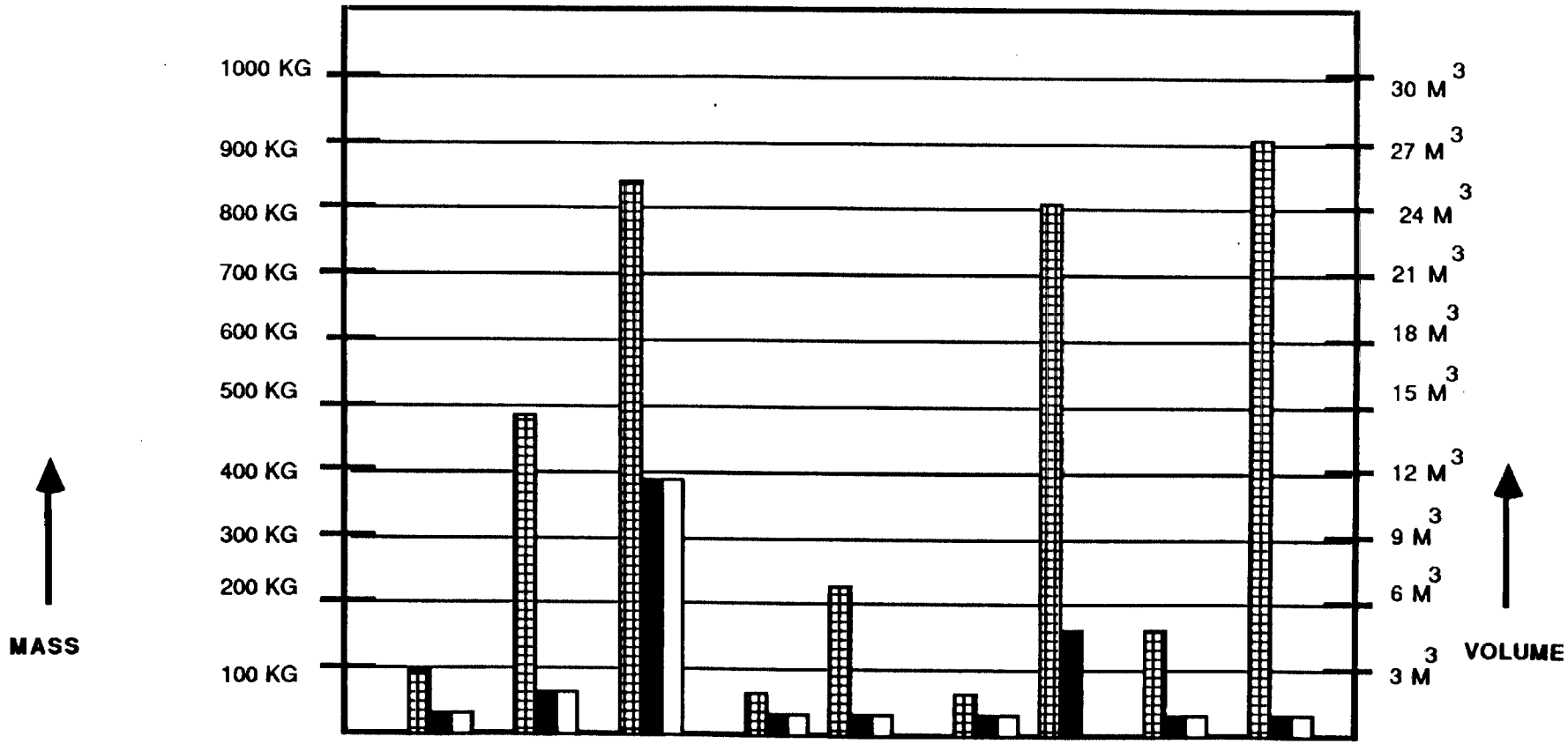

PAYLOAD	SIRTF			STO/SIG		STO/SS		TRIS	XGP
SCENARIO	A	B	C	A	B	A	B	A	B
NUMBER OF SERVICING MISSIONS THROUGH CY 2005	1	2	1	12	3	12	3	3	2

LEGEND: AVERAGE MASS UP AND MASS DOWN; AVERAGE VOLUME UP AND DOWN; AVERAGE TEMPORARY STORAGE VOLUME

STS TRANSPORT AND SS STORAGE OF MATERIALS FOR ON-ORBIT SERVICING OF OSSA CANDIDATE PAYLOADS

PAYLOAD	3S		Astromag	AXAF	Eos NPOP-1,-2		EP	HST
SERVICING SCENARIO	B	C	B	A	A	A	A	A
NUMBER OF SERVICING MISSIONS THROUGH CY 2005	17	9	6	3	3	2	3	3

LEGEND: AVERAGE MASS UP AND MASS DOWN; AVERAGE VOLUME UP AND DOWN; AVERAGE TEMPORARY STORAGE VOLUME

STS TRANSPORT AND SS STORAGE OF MATERIALS FOR ON-ORBIT SERVICING OF OSSA CANDIDATE PAYLOADS

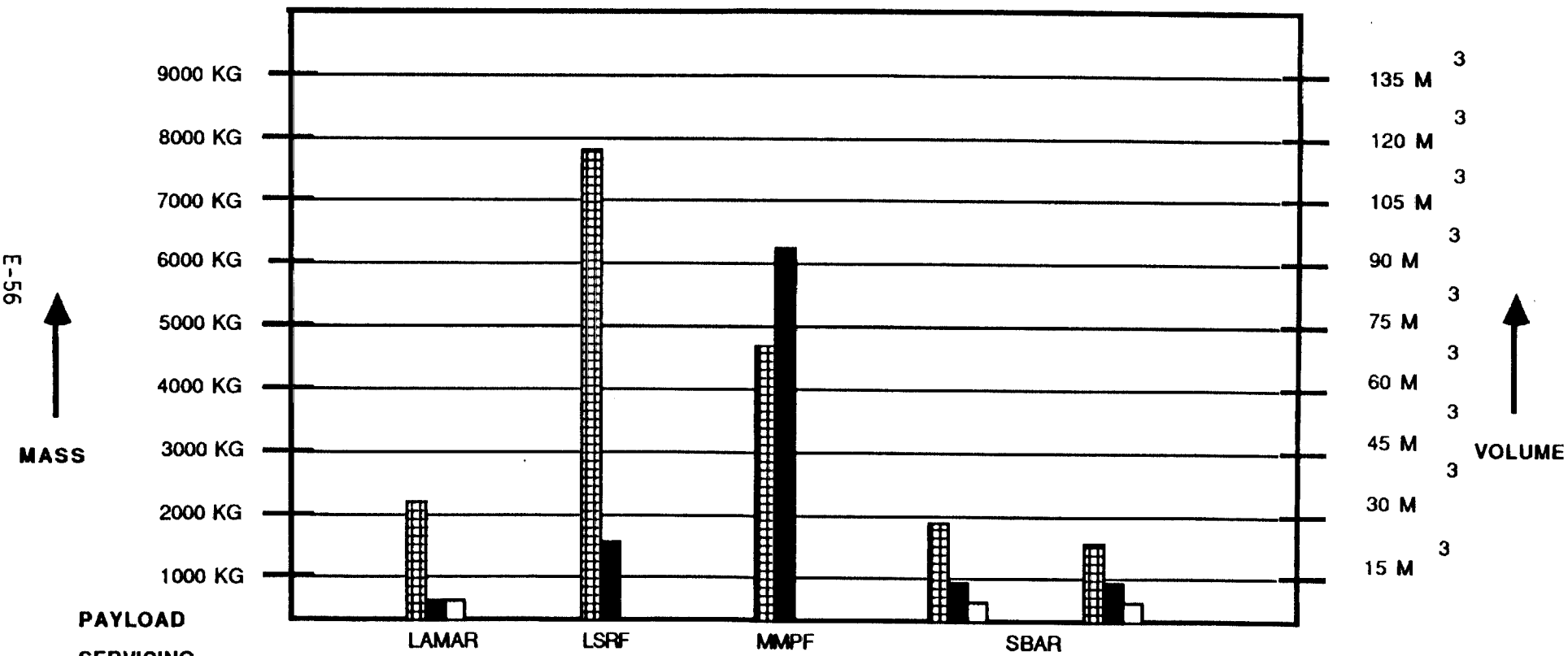

PAYLOAD	LAMAR	LSRF	MMPF	SBAR	
SERVICING SCENARIO	A	A	A	B	C
NUMBER OF SERVICING MISSIONS THROUGH CY 2005	TBD	44	44	9	9

LEGEND: AVERAGE MASS UP AND MASS DOWN; AVERAGE VOLUME UP AND DOWN; AVERAGE TEMPORARY STORAGE VOLUME

ON-ORBIT SERVICING TIMES FOR OSSA CANDIDATE PAYLOADS

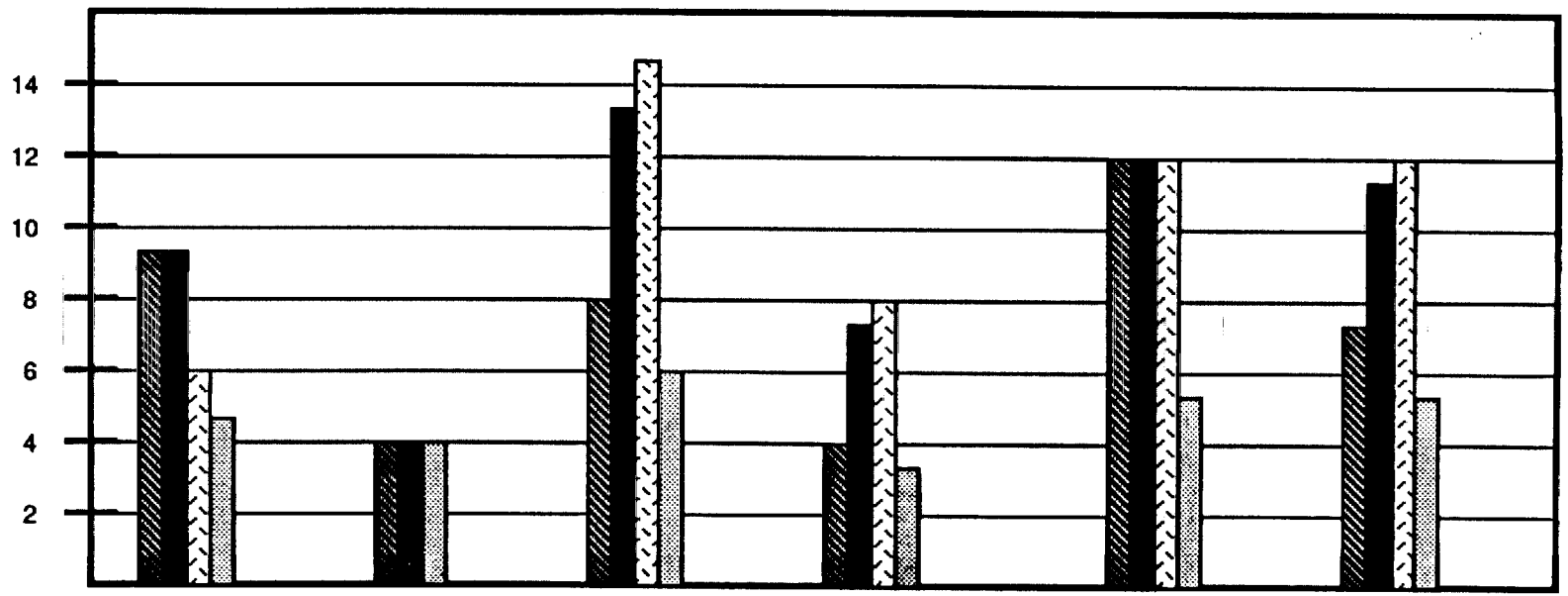

PAYLOAD	3S	Astromag	ATF	CDCE	GRO	HRSO
SERVICING SCENARIO	A	B	B	A	A	A
NUMBER OF SERVICING MISSIONS THROUGH CY 2005	1	6	1	9	1	2

LEGEND: ELAPSED TIME (HOURS) | IVA TIME (CREW-HOURS) | EVA TIME (CREW-HOURS) | ROBOTICS TIME (HOURS)

ON-ORBIT SERVICING TIMES FOR OSSA CANDIDATE PAYLOADS

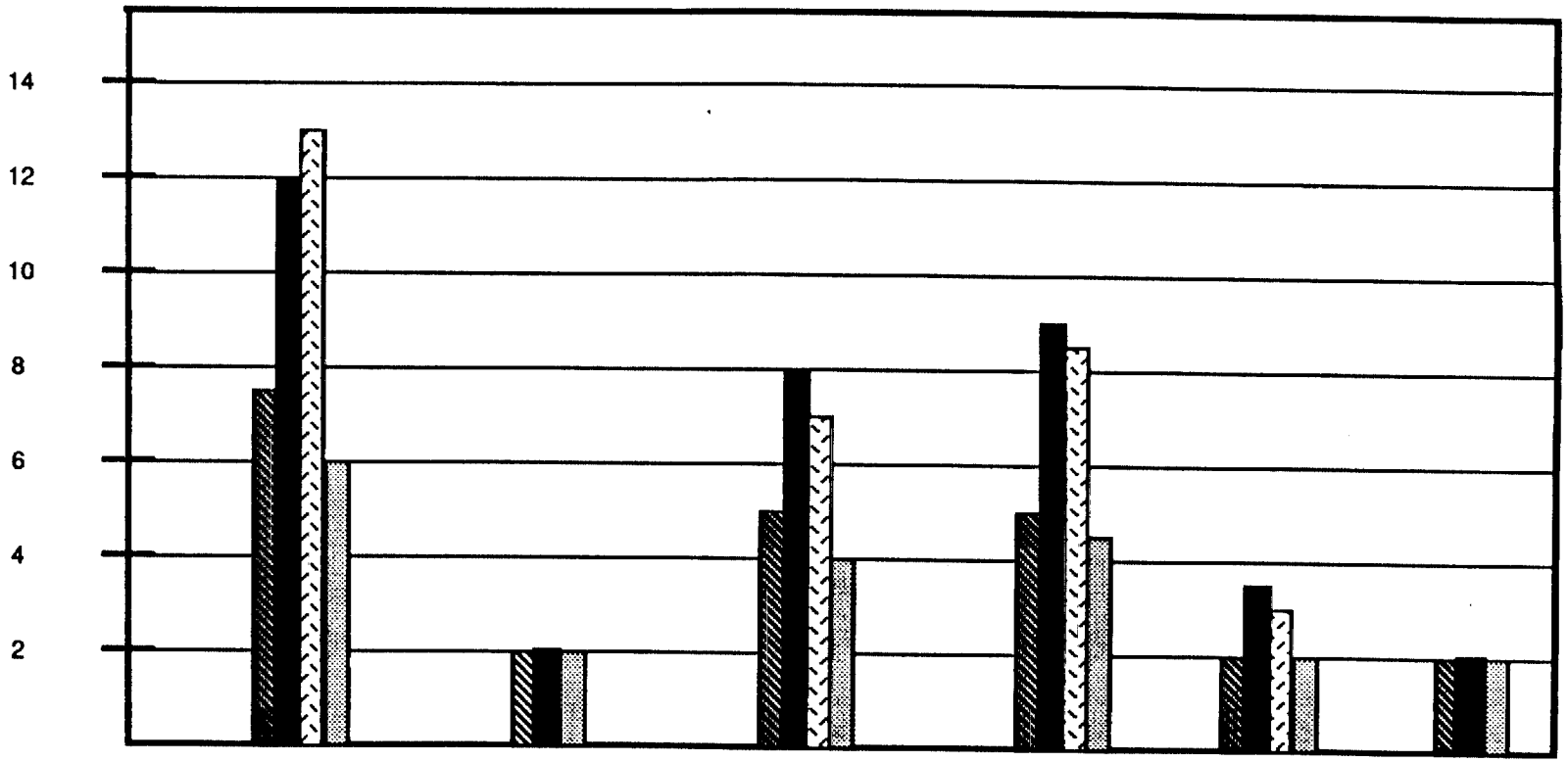

PAYLOAD	LAWS	LDR	POF	TRIS	XGP	XGP
SERVICING SCENARIO	A	C	A	A	A	B
NUMBER OF SERVICING MISSIONS THROUGH CY 2005	1	2	2	3	1	2

LEGEND: ELAPSED TIME (HOURS) | IVA TIME (CREW-HOURS) | EVA TIME (CREW-HOURS) | ROBOTICS TIME (HOURS)

ON-ORBIT SERVICING TIMES FOR OSSA CANDIDATE PAYLOADS

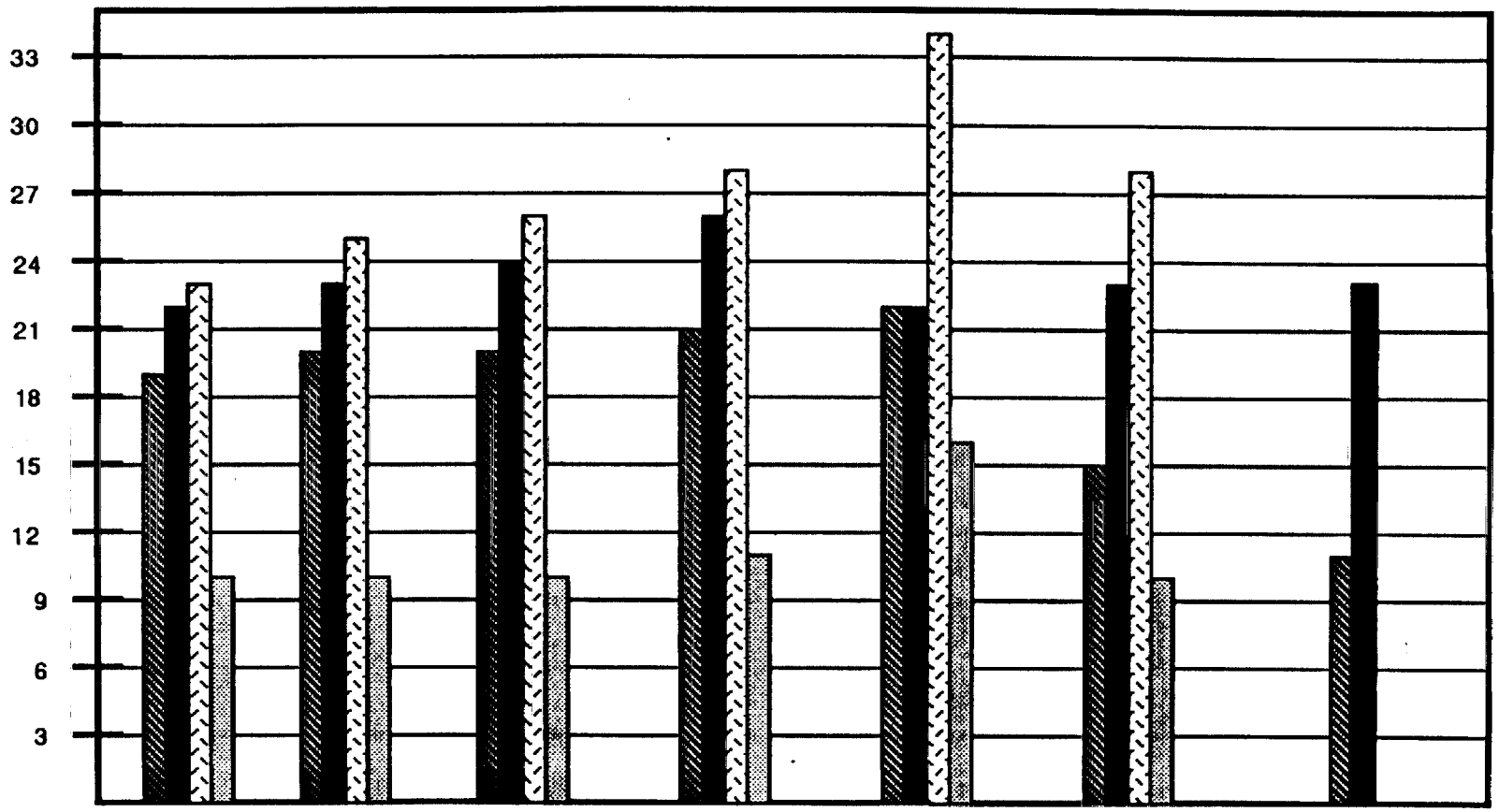

PAYLOAD	3S	3S	AXAF	EP	HST	LAMAR	LSRF
SERVICING SCENARIO	B	C	A	A	A	A	A
NUMBER OF SERVICING MISSIONS THROUGH CY 2005	17	9	3	3	3	TBD	44

LEGEND: ELAPSED TIME (HOURS) | IVA TIME (CREW-HOURS) | EVA TIME (CREW-HOURS) | ROBOTICS TIME (HOURS)

ON-ORBIT SERVICING TIMES FOR OSSA CANDIDATE PAYLOADS

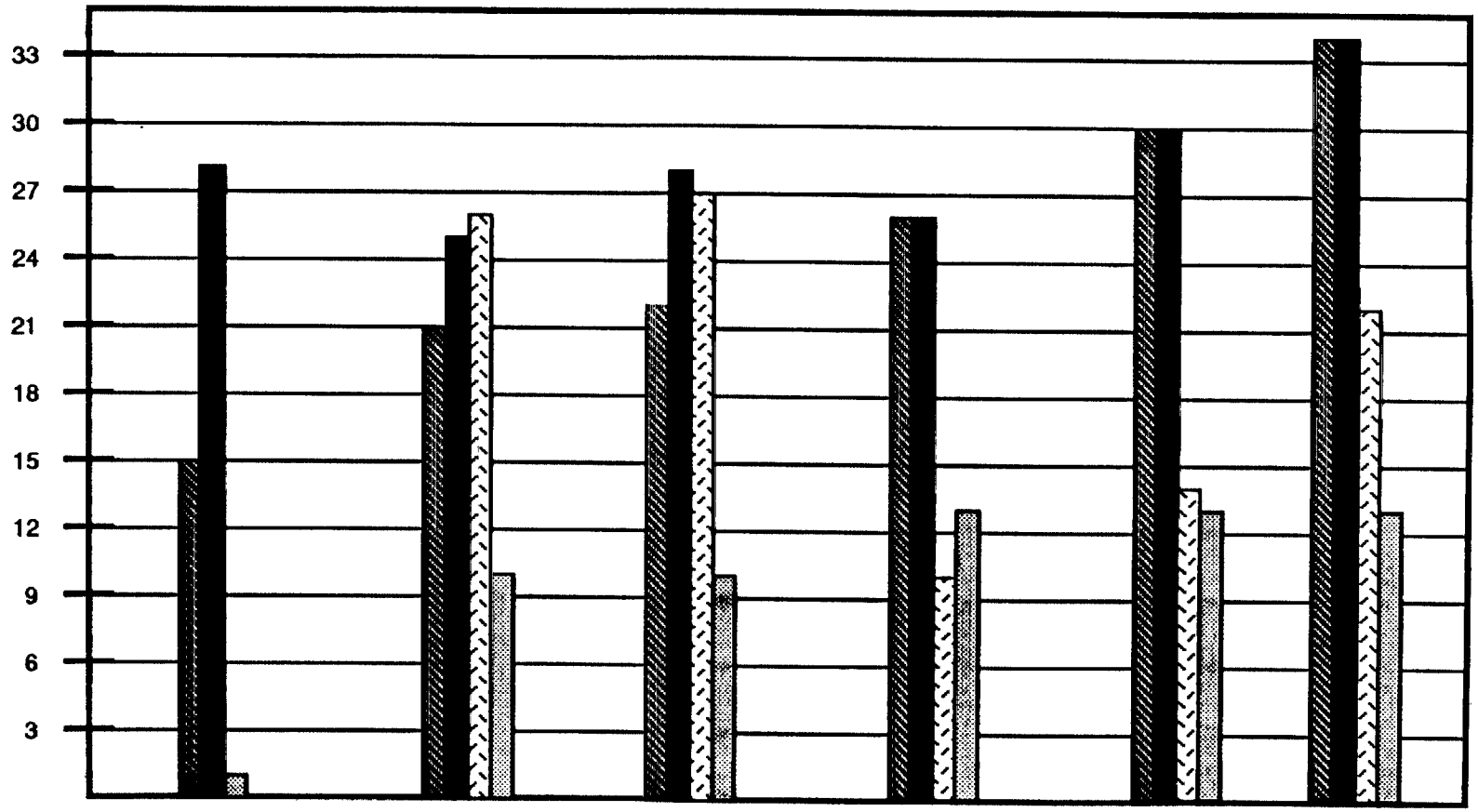

PAYLOAD	MMPF	SBAR	SBAR	SIRTF	SIRTF	SIRTF
SERVICING SCENARIO	A	B	C	A	B	C
NUMBER OF SERVICING MISSIONS THROUGH CY 2005	44	9	9	1	2	1

LEGEND: ELAPSED TIME (HOURS) | IVA TIME (CREW-HOURS) | EVA TIME (CREW-HOURS) | ROBOTICS TIME (HOURS)

ON-ORBIT SERVICING TIMES FOR OSSA CANDIDATE PAYLOADS

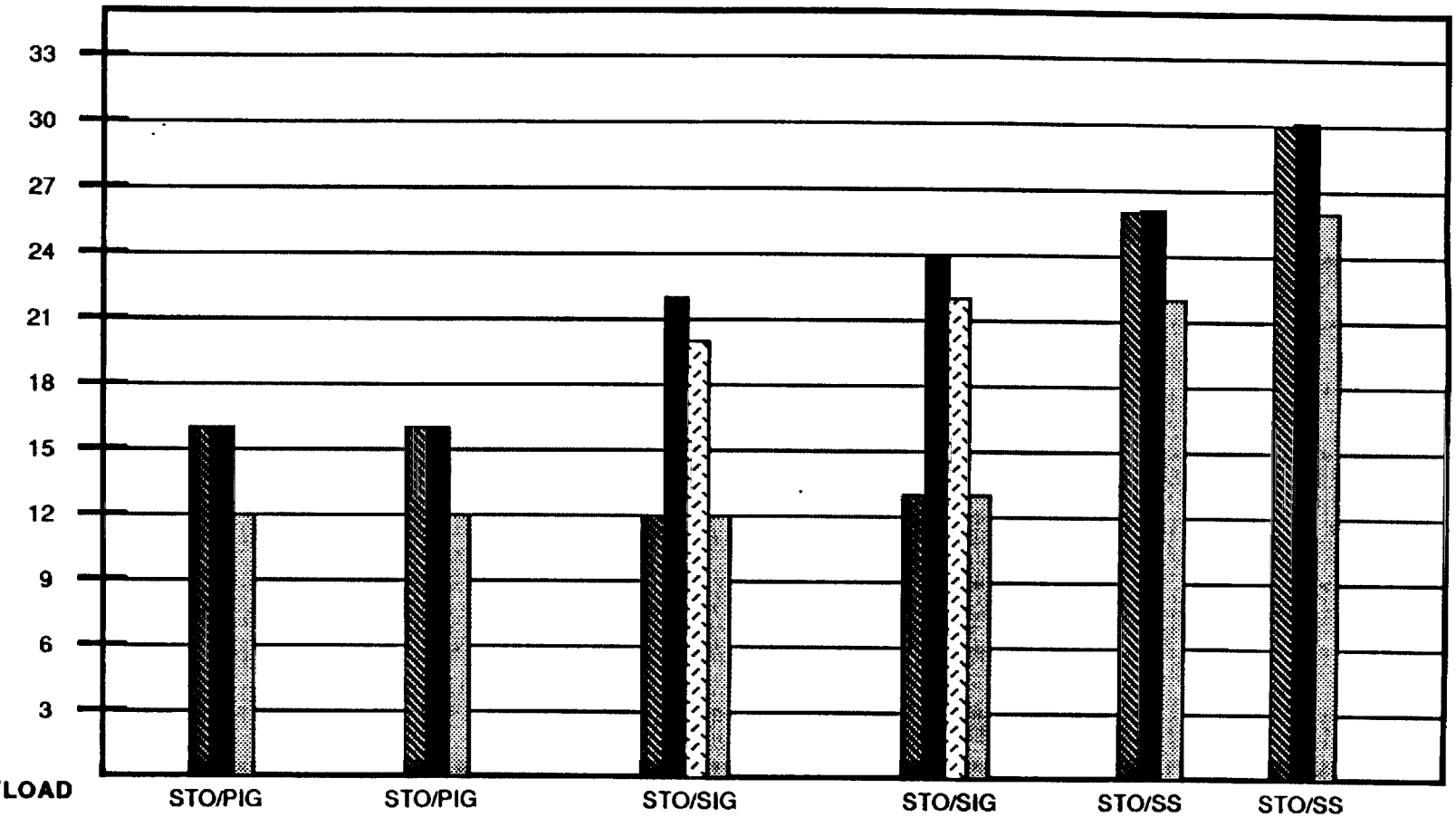

PAYLOAD	STO/PIG	STO/PIG	STO/SIG	STO/SIG	STO/SS	STO/SS
SERVICING SCENARIO	A	B	A	B	A	B
NUMBER OF SERVICING MISSIONS THROUGH CY 2005	12	3	12	3	12	3

ELAPSED TIME (HOURS) | IVA TIME (CREW-HOURS) | EVA TIME (CREW-HOURS) | ROBOTICS TIME (HOURS)

ON-ORBIT SERVICING TIMES FOR OSSA CANDIDATE PAYLOADS

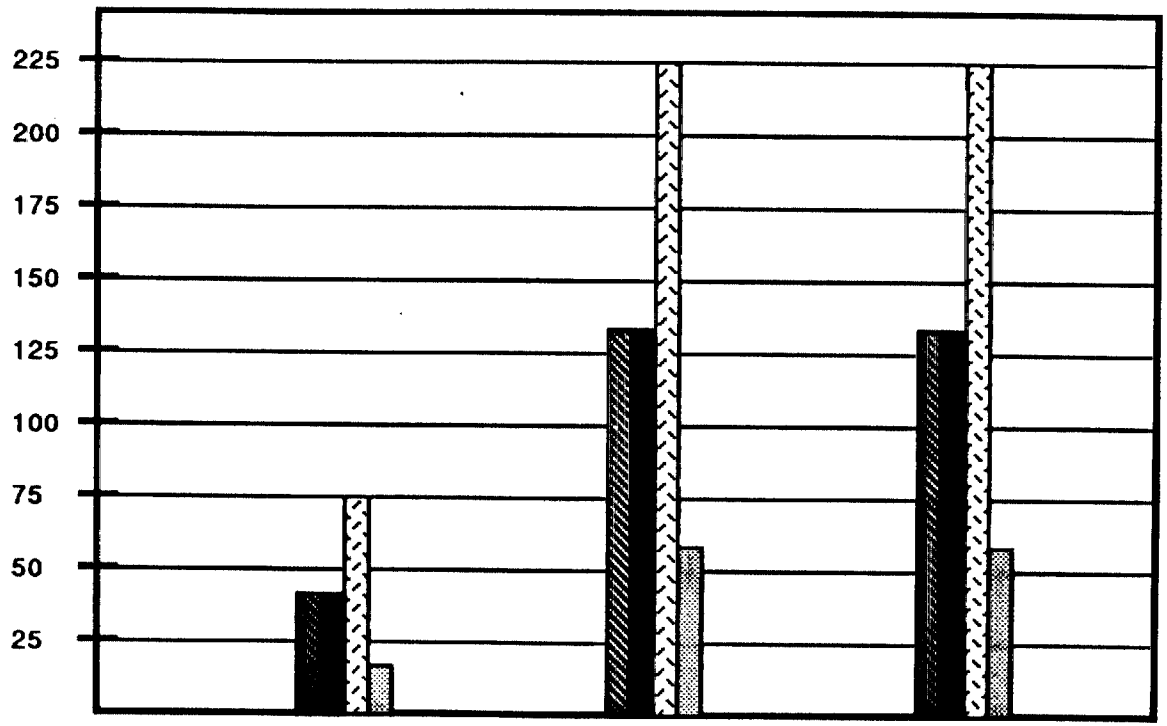

PAYLOAD	ATF	LDR	LDR
SERVICING SCENARIO	A	A	B
NUMBER OF SERVICING MISSIONS THROUGH CY 2005	1	1	1

LEGEND: ELAPSED TIME (HOURS) | IVA TIME (CREW-HOURS) | EVA TIME (CREW-HOURS) | ROBOTICS TIME (HOURS)