NASA-CR-192079

NASW-4435

P-184

Design of a Resistive Exercise Device for Use on the Space Shuttle

Submitted to:

Mr. Phil Mongan and Mr. Glen Klute
Johnson Space Center

National Aeronautics and Space Administration
Universities Space Research Association

(NASA-CR-192079) DESIGN OF A RESISTIVE EXERCISE DEVICE FOR USE ON THE SPACE SHUTTLE Final Report (Texas Univ.) 184 p
N93-17805
Unclas
G3/54 0141688

Prepared by:

Dennis L. Carlson (Team Leader)
Mohammed Durrani
Christi L. Redilla

Mechanical Engineering Design Projects Program
The University of Texas at Austin

Spring 1992

Acknowledgements

The design team would like to thank the National Aeronautics and Space Administration (NASA) and the Universities Space Research Association (USRA) for sponsoring this project. We thank Mr. Phil Mongan and Mr. Glen Klute, our NASA contact engineers, for their knowledge and assistance concerning this project.

We thank Dr. Robert Freeman, our faculty advisor, for his support and technical expertise on the project. We also recognize Dr. Davor Juricic and Dr. H. Grady Rylander for their design assistance. We thank Mr. Wendell Deen and Dr. Ron Barr for critiquing our drawings.

The design team expresses gratitude to Mr. Hank Kleespies, our teaching assistant, for his guidance and support throughout the semester. We thank Mr. Bert Herigstad for providing materials, assistance, and advice. We also recognize Mr. Hank Franklin for his advice on materials and machining details.

Finally, we would like to thank Dr. Steven Nichols for overseeing the Mechanical Engineering Design Projects Program and providing valuable assistance during the semester.

Table of Contents

Acknowledgements ii

Table of Contents iii

List of Figures vi

Executive Summary viii

I. Introduction 1

1.1 Sponsor Background 1

1.2 Problem Background 2

1.3 Requirements 3

1.4 Design Methodology 5

II. Alternative Designs 7

2.1 Methods of Supplying Force 7

2.1.1 Rejected Methods 8

2.1.2 Bending Rods 10

2.1.3 Constant Force Springs 12

2.1.4 Standard Springs 15

2.2 Methods of Adjusting Force 17

2.2.1 Direct Link 17

2.2.2 Concentric Springs 19

2.2.3 Gear Box 20

2.2.4 Belt Drive 21

2.2.5 Chain Drive 23

2.2.6 Cone Drive 24

2.2.7 Multiple Cams 26

2.3 Methods of Transmitting Force to User 27

2.3.1 No Structure 28

2.3.2 The Cube 30

2.3.3 Traditional 32

2.3.4 The Seat 34

2.3.5 Linkage Cam 35

2.3.6 Sliding Platform 36

III. Design Solution 38

3.1 Evaluation of Force Supply Alternative Designs 38

3.1.1 Decision Criteria for Force Supply 38

3.1.2 Decision Matix for Force Supply 39

3.2 Evaluation of Force Adjustment Alternative Designs 40

3.2.1 Decision Criteria for Force Adjustment 40

3.2.2 Decision Matrix for Force Adjustment 41

3.3 Structure 41

3.4 Design Configuration 41

3.5 Constant Force Springs 44

3.6 Design Development and Evaluation 46

3.6.1 Cable and Reels 48

3.6.2 Gears 49

3.6.3 Springs 49

3.6.4 Spring drums and spools 50

3.6.5 Pins 51

3.6.6 Shafts 52

3.6.7 Bearings 53

3.6.8 Housing 54

3.6.9 Weight and Cost 55

3.7 Exercise and Exercise Structure 55

3.7.1 Foot Restraints 56

3.7.2 Bench 56

3.7.3 Bar and Handles 57

IV. Conclusions and Recommendations 58

V. References 60

VI. Appendices 62

Appendix A Description of Exercises

Appendix B Specification List

Appendix C Middeck and Locker Drawings

Appendix D Percentile Data

Appendix E Sketches of Rejected Methods of Supplying Force
Appendix F Force Supply Weighting Factors and Decision Matrix
Appendix G Force Adjustment Weighting Factors and Decision Matrix
Appendix H Hunter Spring Catalog
Appendix I Development of System Equation
Appendix J Iterations and Spreadsheet
Appendix K Design Calculations
Appendix L RED Exercise Positioning
Appendix M Sketches of Restraints and Accessories

List of Figures

Figure 1. The bending rod alternative....11
Figure 2. The standard constant force spring....12
Figure 3 General force response for standard constant force spring....13
Figure 4. The double wound constant force spring....13
Figure 5. General force response for double wound constant force spring....14
Figure 6. The tension spring....15
Figure 7. The compression spring....15
Figure 8. The torsion spring....16
Figure 9. The direct link alternative using tension springs....18
Figure 10. The concentric spring alternative....19
Figure 11. The gear box alternative....21
Figure 12. The belt drive alternative....22
Figure 13. The chain drive alternative....23
Figure 14. The cone drive alternative....25
Figure 15. The multiple cams alternative....26
Figure 16. The modular pulley....28
Figure 17. The no structure alternative....29
Figure 18. Waist belt and foot straps for use with the no structure alternative....29
Figure 19. The cube alternative....31
Figure 20a. Side view of the traditional alternative....32
Figure 20b. The traditional alternative....33
Figure 21. The seat alternative....34
Figure 22. The linkage cam alternative....36
Figure 23. The sliding platform alternative....37
Figure 24. Final design configuration of the RED force unit....42
Figure 25. Sketch of the RED force unit....43
Figure 26. A double wound constant force spring....45
Figure 27. Geometry of a general double wound CFS....46
Figure 28. Cable and spool assembly....48

Figure 29. Sketch of spur gear pair 49
Figure 30. Sketch of a pin and the pin tool 51
Figure 31. Sketch of pin hole 52
Figure 32. A bearing and its split collar housing 54
Figure 33. Two halves of the cast housing 55

Executive Summary

The National Aeronautics and Space Administration in conjunction with the Universities Space Research Association sponsored the design of a Resistive Exercise Device (RED) for use on the Space Shuttle. The device must enable the astronauts to perform a number of exercises to prevent skeletal muscle atrophy and neuromuscular deconditioning in microgravity environments. The RED must fit the requirements for limited volume and weight and must provide a means of restraint during exercise.

The design team divided the functions of the device into three major groups: methods of supplying force, methods of adjusting force, and methods of transmitting the force to the user. After analyzing the three main functions of the RED and developing alternatives for each, the design team used a comparative decision process to choose the most feasible components for the overall design.

The design team selected the constant force spring alternative for further embodiment. The device consists of an array of different sized constant force springs which can be pinned in different combinations to produce the required output forces. The force is transmitted by means of a shaft and gear system.

The final report is divided into four sections. An introductory section discusses the sponsor background, problem background and requirements of the device. The second section covers the alternative designs for each of the main functions. The design solution and pertinent calculations comprises the third section. The final section contains design conclusions and recommendations including topics of future work.

ORIGINAL PAGE
COLOR PHOTOGRAPH

Introduction

This report presents the design of an exercise device for use on the Space Shuttle. The purpose and definition of the project, specifications, and design methodology are discussed. This report describes alternative designs and the decision process used to select a final design. A detailed discussion of the final design and its evaluation and recommendations for future work are also included.

1.1 Sponsor Background

The United States National Aeronautics and Space Administration (NASA) and the Universities Space Research Association (USRA) are sponsoring the design of an exercise device for use on the Space Shuttle. The device will be designed by a Mechanical Engineering Design Projects Team at The University of Texas at Austin. NASA is a government supported agency responsible for the design and development of spacecraft and spacecraft systems for spaceflight and conducting manned spaceflight missions [1]*. USRA sponsors design projects on behalf of NASA at universities nationwide and encourages the study of space related topics. The design team will be working directly with engineers at the Man-Systems Division of the Lyndon Baines Johnson (LBJ) Space Center in Houston, Texas.

* All references in this report refer to the numbered references on pp. 60-61.

1.2 Problem Background

The purpose of the Resistive Exercise Device (RED) is to prevent skeletal muscle atrophy and neuromuscular deconditioning in microgravity environments. The device provides a means of conditioning and maintaining all major muscle groups. The goal of the RED is to reproduce common weight lifting exercises in microgravity.

Muscle strength maintenance is crucial to the astronauts on the Shuttle because muscle deterioration occurs rapidly in the microgravity environment of space. Microgravity is assumed to be approximately zero for the purposes of this discussion, although some small gravitational pull affects the Space Shuttle. The force of gravity on Earth is defined as the force which causes a falling body to have an acceleration of 9.81 m/s^2. This force is often called 1-g. In the 1-g environment of Earth, a minimum level of muscle condition is maintained since most body movements use muscle force to oppose gravity. In microgravity, the muscles of the body atrophy quickly since they no longer work against gravity. Also, the heart muscle weakens as it no longer must pump blood against the hydrostatic forces caused by gravity. Therefore, it is important to have a device or devices that help maintain both cardiovascular fitness and muscle tone.

The fitness of the astronaut is important for the safety of the astronaut and success of the mission. An astronaut must be able to withstand the physical stresses of Shuttle reentry and landing, as well as perform effectively during an emergency. In-flight conditioning maintains muscle strength, improves post-flight health, and shortens recovery time after landing.

1.3 Requirements

The working environment of the Space Shuttle requires that any device carried on board operate efficiently in both limited space and time. The engineers at NASA requested that the team design a device capable of producing isometric, isotonic, and possibly isokinetic loads. Isometric exercises involve contracting a muscle against a static resistance. Isotonic exercise is performed when muscles work against a constant force. Weight lifting is an example of isotonic exercise. Isokinetic exercises are done by working the muscles at constant velocity [2]. The device will be used to perform the following resistance exercises:

Raises (forward, lateral, backward)
Shoulder Shrugs
Bench Press
Military Press
Flies
Biceps Curls
Triceps Curls
Wrist Curls
Squats
Deadlifts
Heel Raises
Upright Rows

These exercises are described in Appendix A. The motion of any exercise performed on the RED is described as positive or negative. Positive refers to any motion by the user originating from a no resistance resting position and using force to reach a secondary resting position under resistance. Negative refers to any motion from a resting position under resistance to a no resistance resting position.

The RED also must provide a means of body restraint for effective performance of the exercises. The device must allow easy reconfiguration

for each exercise in a maximum time of one minute. The device must be stowed or unstowed in less than five minutes. A provision for quickly terminating the workload and/or velocity in an emergency must be included in the design of the device. The RED must provide for the calibration of workload, velocity, and range of motion to fit a variety of users. The device must satisfy the space constraints of the middeck, where it will be used and stored. This includes consideration of the movements of the astronaut as he is using the device so that he may comfortably perform the exercises in the limited space of the middeck. A complete list of specifications can be found in Appendix B. A drawing of the Shuttle middeck is shown in Appendix C.

The RED is to be stowed within two standard middeck lockers, each with dimensions of 9 inches x 17 inches x 20 inches (22.86 cm x 43.18 cm x 50.8 cm). The two lockers may be configured on top of one another or side by side. The RED weight is limited to 108 lb. (49.0 kg), as there is a NASA prescribed limit of 54 lb. (24.5 kg) per locker. Standard stowage drawers are preferred for storing equipment in the middeck lockers. A middeck locker holds one large drawer or two small drawers. However, items may be stored in the locker without the drawers if there is a layer of isolator material between the locker walls and the contents. The isolator material must have a combined thickness and modulus of elasticity to provide a spring-rate of 22,000 lb./inch (3.85×10^6 N/m) or less. The RED may also be mounted directly to an adapter plate mounted in place of a locker. Again, the plates may be configured on top of each other or side by side. A double adapter plate, which allows the option of single plates on top each other in one unit, is also available. Appendix C contains drawings of a middeck

locker, stowage drawers, and adapter plates with dimensions and mounting holes.

The device is designed to provide effective and comfortable exercise for persons ranging from the fifth percentile (5%) female to the ninety-fifth percentile (95%) male. Percentile data indicates the relative size of a person. For example, a 5% female is characterized by a height of 4.9 ft. (148.9 cm) and an arm reach of 2.1 ft. (65.2 cm). A 95% male has a height of 6.2 ft. (190.1 cm) and an arm reach of 2.9 ft. (88.2 cm). Percentile data is exclusive; a person in the 50% does not necessarily have a 50% reach or joint movement. Percentile data can be found in Appendix D.

The RED will use minimal power from the Shuttle to produce loads. If the RED requires power from the Shuttle, it will have provisions for manual selection of the workload. The workloads available will be incremented by 10 lb. (44.5 N) for each side of the body (each arm or leg). The load parameters are:

Minimum load:	15 lb. (66.7 N)/side ± 10%
Minimum load increment:	10 lb. (44.5 N)/side ± 10%
Maximum load:	300 lb. (1334.5 N)/side ± 10%

1.4 Design Methodology

The team approached the problem following the Pahl and Beitz methodology. The methodology includes clarification of the task, conceptual design, embodiment design, and detail design [3].

Clarification of the task requires taking the information known about the design and developing a detailed list of specifications. The specification list is used to guide the development of the design. A

literature search is conducted to gain both background and technical information useful to the design of the RED. A patent search offers information on similar devices already available, and prevents the infringement of the RED design on any current patents.

Conceptual design begins with the brainstorming of ideas for possible design solutions. The ideas are then developed into a few feasible alternative designs. The alternative designs are evaluated against a set of criteria decided by the team. The best design alternative is chosen by using a decision matrix. The decision matrix compares each alternative design by use of a weighting factor that reflects the design's ability to meet the criteria.

Embodiment design requires the refinement of the selected design alternative. Each component of the overall design is specified and analyzed. All components are then integrated, and the device is examined as a whole. Preliminary drawings are made in this phase. Also, the economics of the design are considered.

In the detailed design stage, the final elements of the design are scrutinized. All analysis is completed and production drawings finalized. Manufacturing methods are also developed.

Alternative Designs

The design of the Resistive Exercise Device (RED) consists of three different functions: supply of force, adjustment of force, and transmission of force to the user. Supply of force includes any means of creating the resistive force needed to simulate weight lifting in the microgravity environment of space. Adjustment of force includes methods for achieving the required spectrum of force required of the RED. Transmission of force to the user includes the support structure of the RED including restraining devices, and any devices used to gain proper orientation of the user and the RED when performing exercise. Several design concepts were produced for each function as a result of team brainstorming sessions. Each concept was researched and evaluated. Those which the team felt were not feasible after some initial research were rejected.

2.1 Methods of Supplying Force

The design team developed several alternatives that would supply the force required of the RED. The methods considered were:

Pneumatic springs
Hydraulic
Magnetic
Elastic Bands
Clutches
Band Brakes
Bending Rods
Constant Force Springs
Standard Springs

2.1.1 Rejected Methods

Many of the methods of supplying force were rejected after initial consideration. The pneumatic, hydraulic, and magnetic methods were eliminated for reasons which will follow. Also, several of the mechanical concepts were initially rejected. The rejected concepts are illustrated in Appendix E. Three of the remaining mechanical concepts were chosen for further consideration.

The team first considered hydraulic and pneumatic methods for supplying the force necessary for the RED. The advantage of hydraulic and pneumatic methods is their ability to create large amounts of force [4]. However, these methods were rejected because of safety considerations. Leakage of hydraulic fluids or pneumatic gases may contaminate the Shuttle middeck and be a hazard to the astronauts and their equipment. Maintaining a constant force with a pneumatic or hydraulic piston setup requires additional devices such as pumps or large volume reservoirs. The design team wished to avoid the use of any Shuttle energy resources, ruling out pumps or motors. The addition of large reservoirs would prove cumbersome and will add unnecessary weight to the RED.

The team also considered the use of magnetic devices to supply the force. The use of a motor-type system would provide constant force and would allow for easy changing of the force through adjustment of the input voltage. The main disadvantage of a magnetic device is the possibility of the magnetic field interfering with instruments or radio transmissions [5]. This method also violates the wish of the group to have

the energy system for the RED independent of the Shuttle. The concept of magnetically generated force was rejected for these reasons.

Several mechanical devices were examined, and some were rejected after initial consideration. The first mechanical force alternative considered was the elastic band. The elastic band has the advantage of light weight. The elastic band also provides force through a wide range of motion. However, the elastic band was rejected since elastomers will not pass the flame test required of materials that fly in the Shuttle. The flame test requires the survival of the material after being burned in an enriched oxygen environment [6]. An elastic band will not pass the out gas test required of materials flown on the Shuttle. The out gas test measures the amount of particles released from a material. Also, an elastic band will exhibit hysteresis; the force required in the positive working stroke will not equal the force required in the negative stroke.

The second mechanical method was the clutch. Specifically, the team considered a centrifugal clutch. The centrifugal clutch consists of a pad unit which is spun about an axis. Centrifugal force then pushes the pads into a drum which encloses the pad unit. The pads rub on the drum causing resistance [7]. An advantage of the clutch is its compactness. However, it was rejected by the team for several reasons. The centrifugal clutch was primarily rejected due to the difficulty of controlling the force output. In the model examined, the force is dependent on how fast the pad unit is spun. The faster the user performs an exercise, the greater the resistance. This also means that the force is not constant within one exercise repetition. Another disadvantage is that the unit only supplies force in the positive exercise stroke. As the pads wear, they will generate a

powdery residue which may contaminate the middeck. Finally, the friction between the pads and the drum creates a considerable amount of heat which may be undesirable in the controlled climate of the middeck.

The third mechanical method of supplying force that the team considered and rejected was the band brake. The band brake uses a band to restrain the rotation of a wheel. The force or torque required to spin the wheel is dependent on the pressure created by the band [7]. The team rejected the band brake because it only provides force in the positive stroke. Also, the band brake would generate a powdery residue and heat.

The three force alternatives that the design team chose for further consideration are bending rods, constant force springs, and standard springs. Standard springs are further divided into tension springs, compression springs, and torsion springs.

2.1.2 Bending Rods

The bending rod alternative uses the force required to bend a solid metal bar to create the resistance needed for the RED. The deflection/force relationship of a bar is similar to that of a standard spring. The variation of rod length and/or diameter will also allow for variations in the resistance created upon deflection [8]. The rod will provide an approximately constant force if the actual deflection is very small. An illustration of the bending rod alternative is shown in Figure 1.

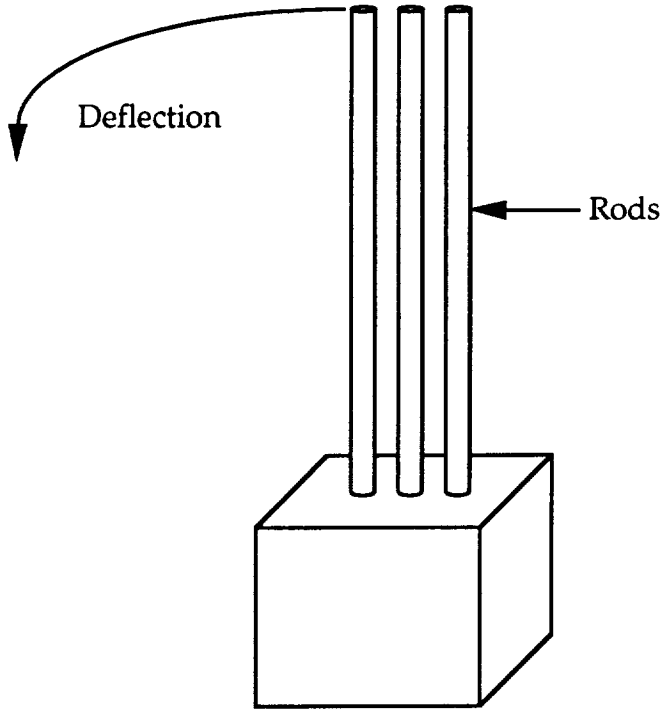

Figure 1. The bending rod alternative.

Advantages:

- The bending rod alternative will be easy to build.
- This alternative creates positive and negative force.
- The rods required for this design are readily available.
- It can be assumed that the rods have a long life.
- The rods can provide a wide range of force increments.

Disadvantages:

- This alternative will require a large number of rods to provide the maximum required force.
- The bending rod alternative may require an excessive working and storage volume.

2.1.3 Constant Force Springs

The constant force spring (CFS) is made by coiling a flat band of prestressed metal into a spool. A standard constant force spring is shown in Figure 2. The estimated force response for a standard CFS as a function of extension distance is shown in Figure 3. It can be seen that the full rated load of the spring is reached at an extension equal to 1.25 times its inner diameter (ID) [9]. The force response is then approximately constant. The at-rest extension of a CFS in the RED would be at least 1.25 times its inner diameter.

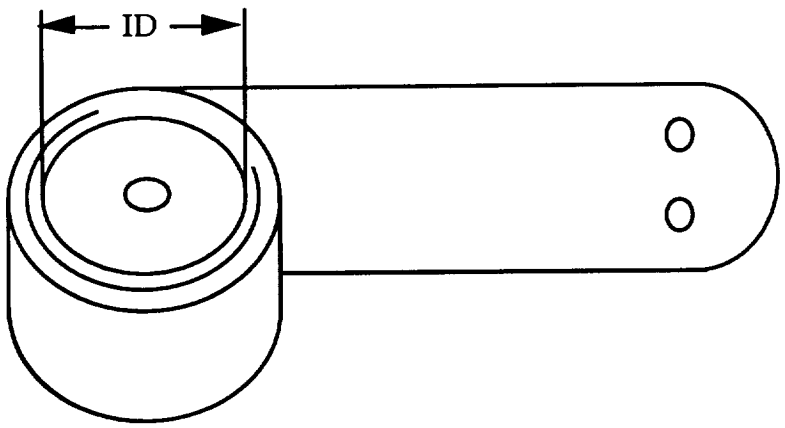

Figure 2. The standard constant force spring.

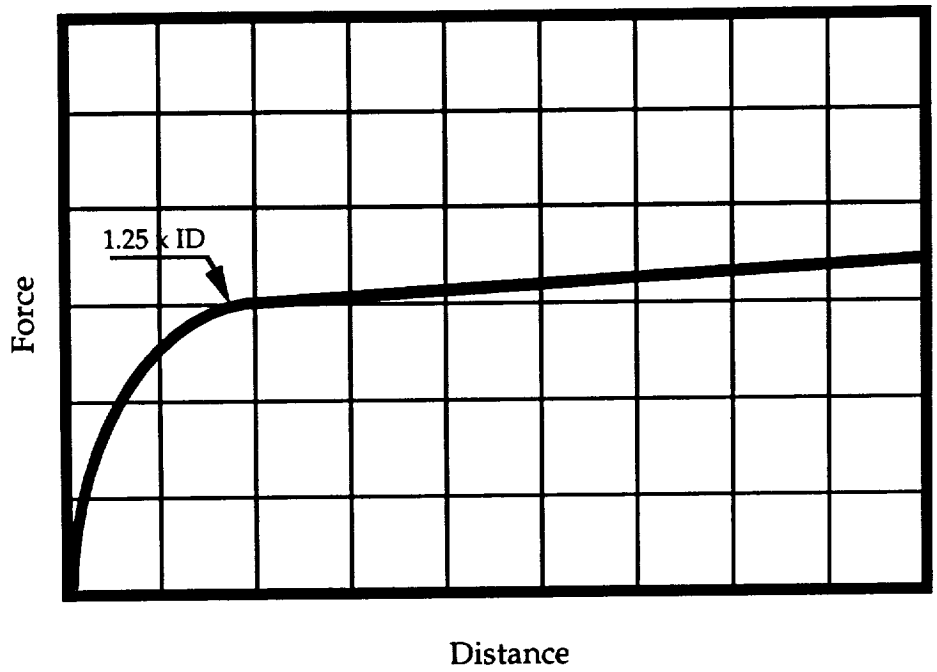

Figure 3. General force response for standard constant force spring [9].

The constant force spring can also be double wound as shown in Figure 4. Because the spring is always extended, the force response is almost constant as shown in Figure 5. A benefit of the double wound configuration is the conservation of required working space. Any friction effects in the spring are small enough to be neglected and can be assumed to be zero [10].

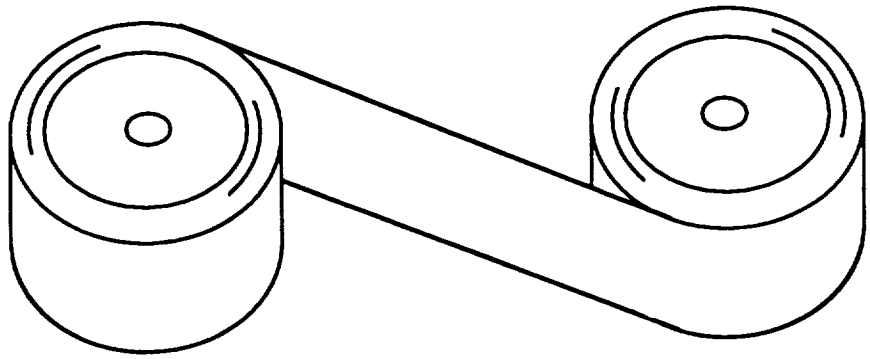

Figure 4. The double wound constant force spring.

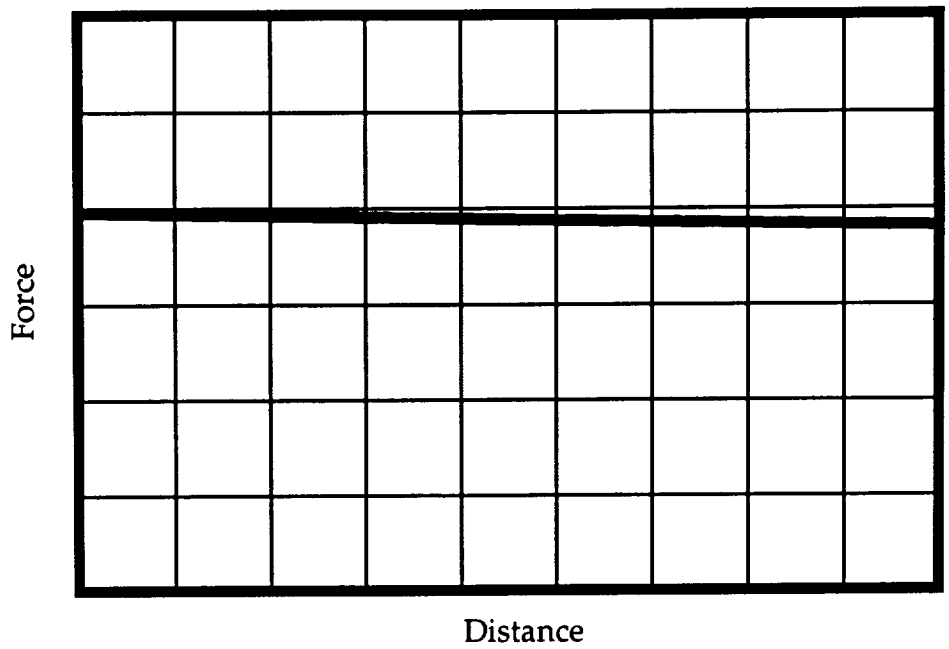

Figure 5. General force response for double wound constant force spring [11].

Advantages:

- The CFS provides constant force.
- The CFS provides positive and negative force.
- The CFS is small and lightweight.
- The CFS is low in cost.
- The CFS is readily available.
- The CFS will allow for long linear extensions in its standard form.
- The CFS will allow for conserved working space in its double wound form.
- The CFS can be easily integrated with force adjustment methods for the RED.

- CFS can be added in series or parallel.
- The CFS has a virtual absence of intercoil friction.

Disadvantages:

- The maximum force available for a single CFS is approximately 40 lb_f.
- The CFS has a limited fatigue life.

2.1.4 Standard Springs

The standard spring method for supplying force on the RED includes three configurations: tension springs, compression springs, and torsion springs. A tension spring, a compression spring, and torsion spring are shown in Figures 6, 7, and 8 respectively.

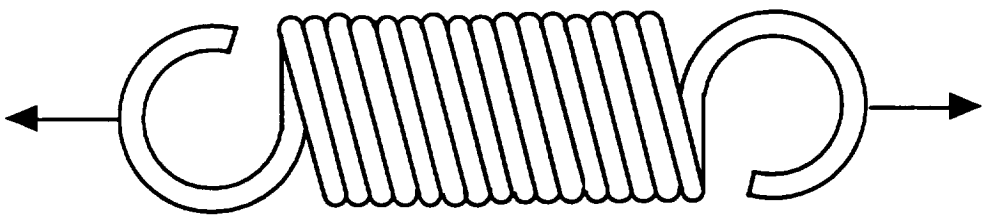

Figure 6. The tension spring.

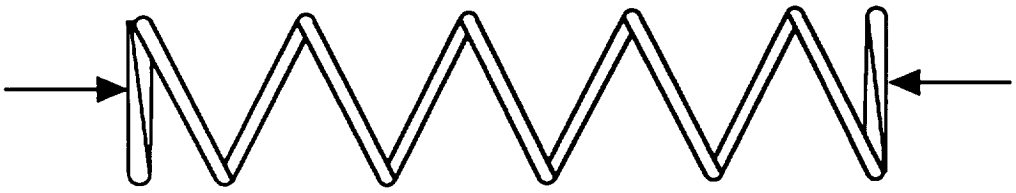

Figure 7. The compression spring.

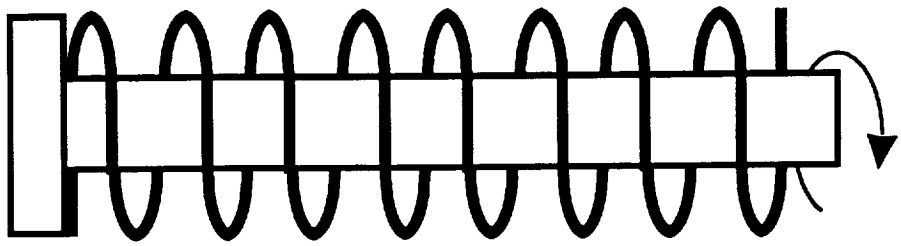

Figure 8. The torsion spring.

All of these spring configurations follow Hooke's law which states that the force required to elongate a spring (F) is equal to the distance the spring is displaced (x) multiplied by a spring constant (k) unique to the given spring [7]. The equation is then:

$$F(x) = kx$$

Therefore, the force response for Hooks law is linear and increasing.

The advantages and disadvantages of the three standard spring configurations are relatively identical and so only one list is presented.

Advantages:

- The force response of standard springs is linear over the working range.
- Standard springs are low in cost.
- Standard springs are readily available in a wide variety of sizes.
- The behavior of standard springs is predictable.
- Standard springs can be easily added in series or parallel.

Disadvantages:

- The weight of a standard spring becomes high for large force requirements.

- Fatigue life is a limiting factor for standard springs.
- Use of standard springs will require some means of converting linear force response into constant force.
- Standard springs may require damping to overcome resonance effects.

2.2 Methods of Adjusting Force

Several alternatives were developed by the design team to achieve the adjustment of the forces necessary for the RED. The wide range of forces for the RED, 15 lb. min. to 300 lb. max. (66.5 N min. to 1334.5 N max.), requires increments of 10 lb. (44.5 N). The methods considered were:

Direct Link
Concentric Springs
Gear Box
Belt Drive
Chain Drive
Cone Drive
Multiple Cams

These methods may be used alone or in combination. Also, these methods can be used with any of the methods of supplying force.

2.2.1 Direct Link

The first alternative for adjusting the force is the direct link. The direct link works by manually changing the connection to the force from the drive system. The direct link is capable of connecting force generating components in an additive fashion. A possible configuration of the direct link alternative is shown in Figure 9.

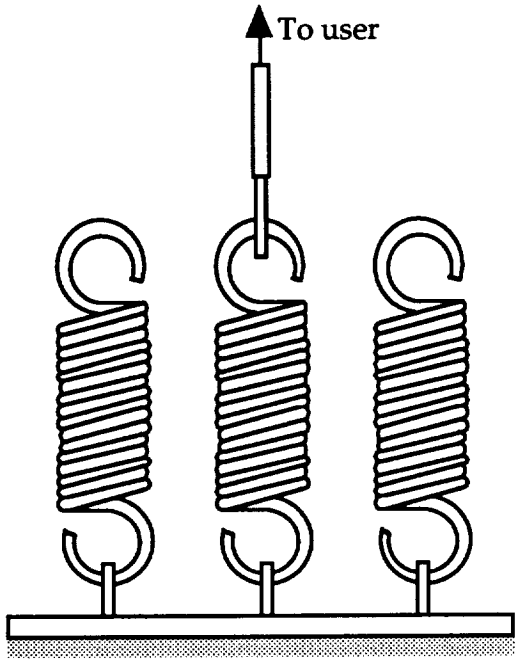

Figure 9. The direct link alternative using tension springs. Any combination of force supplying device may be used with the direct link alternative.

Advantages:

- The direct link method provides for simple adjustment of force.
- The direct link minimizes internal energy losses.
- The direct link minimizes size and weight of the adjustment system.
- The direct link adds no moving parts to the RED.

Disadvantages:

- The direct link requires a large array of force supplying components.
- The direct link may be cumbersome to operate.

- The direct link method may make accurate feedback of working force difficult.

2.2.2 Concentric Springs

The second alternative for adjusting the force is concentric springs. The concentric spring alternative is illustrated in Figure 10. The concentric spring alternative works by successive compression of springs so as to increase the resistance created by the device. The springs are compressed (or decompressed) using an adjustable collar. As the outer spring(s) are compressed, the collar comes into contact with the next inner spring, therefore increasing the overall spring constant of the system. When in use, the shaft moves through the collar compressing the springs between the collar and the base.

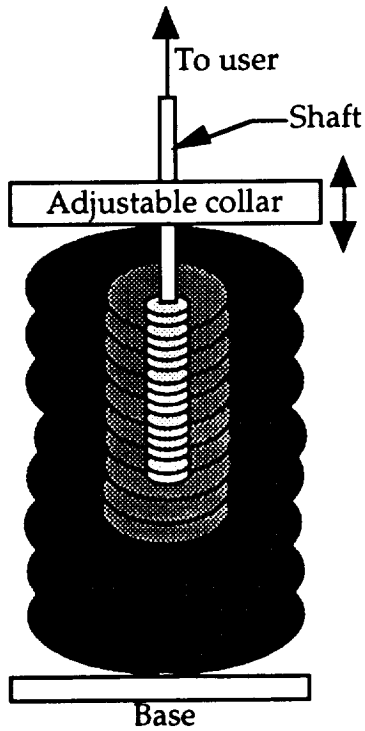

Figure 10. The concentric spring alternative.

Advantages:

- The concentric spring alternative offers a compact design.
- The concentric spring is simple to operate.
- The concentric spring reduces energy losses.

Disadvantages:

- The concentric spring may be difficult to adjust at high force ranges.
- The concentric spring method will make accurate force adjustment difficult.
- The concentric spring may require a special tool to adjust the collar.
- The range of working motion is greatly limited with the concentric spring device.
- The concentric spring will limit force step sizes.
- Concentric springs produce a linear increasing force/displacement response.

2.2.3 Gear Box

The third alternative for adjusting the force is the gear box. The gear box uses variation of gear ratio to alter the working force. The gearing is changed manually by the user. The gear box is illustrated in Figure 11.

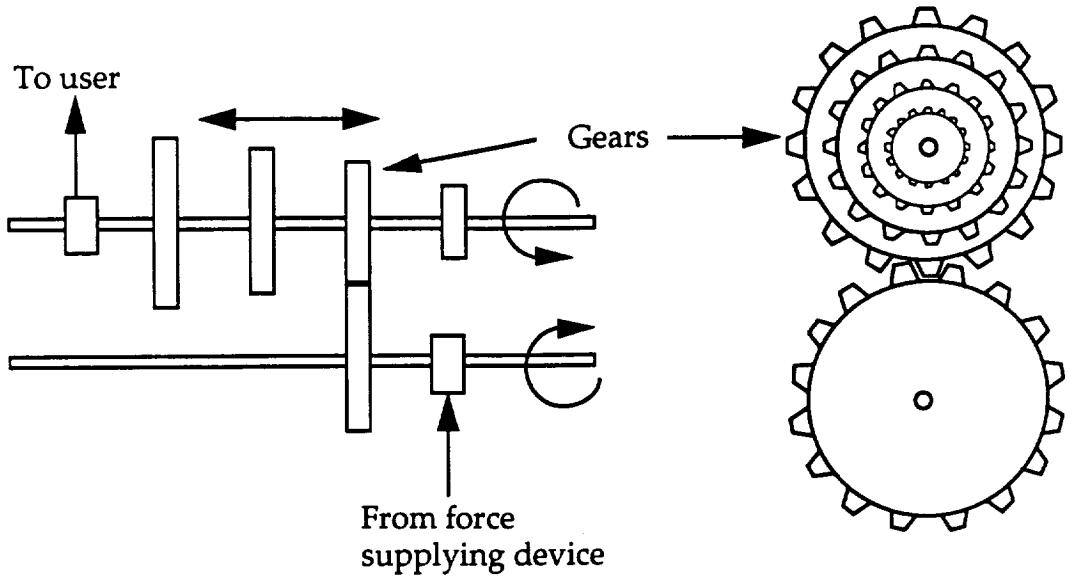

Figure 11. The gear box alternative.

Advantages:

- The gear box will allow a wide range of force increments.
- The gear box will minimize the number of force supplying devices.
- The gear box will provide accurate force adjustment.

Disadvantages:

- The gear box has many moving parts.
- The gear box will have mechanical losses.
- The gear box may operate noisily.
- The gear box may be of excessive weight.

2.2.4 Belt Drive

The fourth alternative considered for adjusting the force is the belt drive. The belt drive uses a friction belt running on two sets of stepped wheels. The force delivered to the user is adjusted by changing the ratio of

the wheels. Since the belt must always be perpendicular to the wheel axes, the wheel clusters must move along their axes to facilitate changing ratios. Either the clusters will be fixed on the shaft and the shaft will move, or the clusters will move on a fixed shaft. This method also requires a means for releasing the tension of the belt for ratio changing and then retensioning the belt once the change has been made. The belt drive alternative is illustrated in Figure 12.

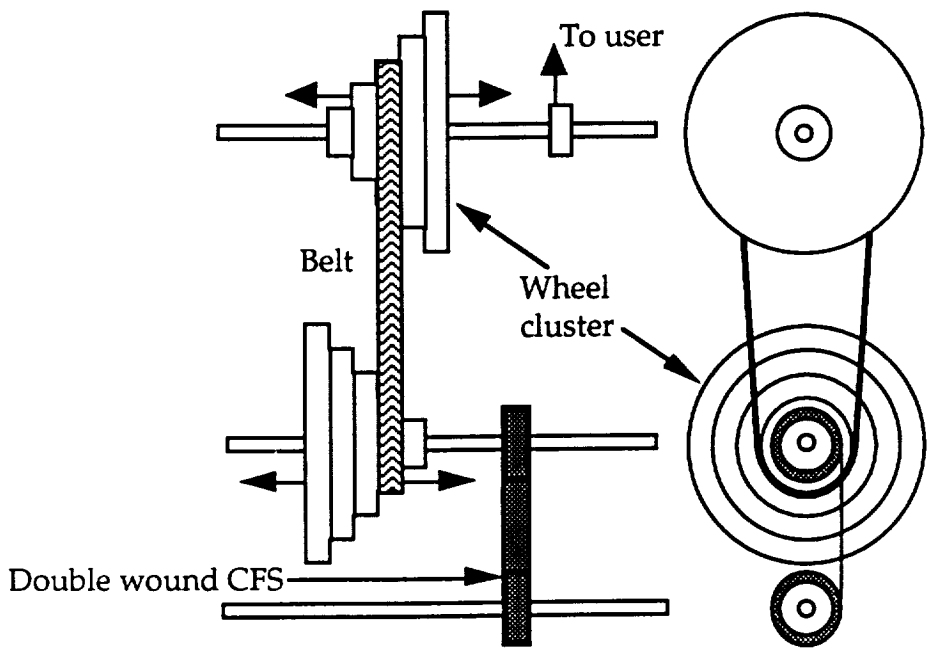

Figure 12. The belt drive alternative. The illustration shows the belt drive in combination with a double wound CFS.

Advantages:

- The belt drive will allow easy adjustment of the force.
- The belt drive will allow accurate force adjustment.
- The belt drive will minimize the number of force supplying devices required.

Disadvantages:

- The belt drive may experience slippage.
- The belt drive will have energy losses due to friction.
- The belt drive may require a large volume.

2.2.5 Chain Drive

The fifth alternative for adjusting the force is the chain drive. The chain drive operates in the same manner as the belt drive and resembles a bicycle drive train. The chain drive is illustrated in Figure 13.

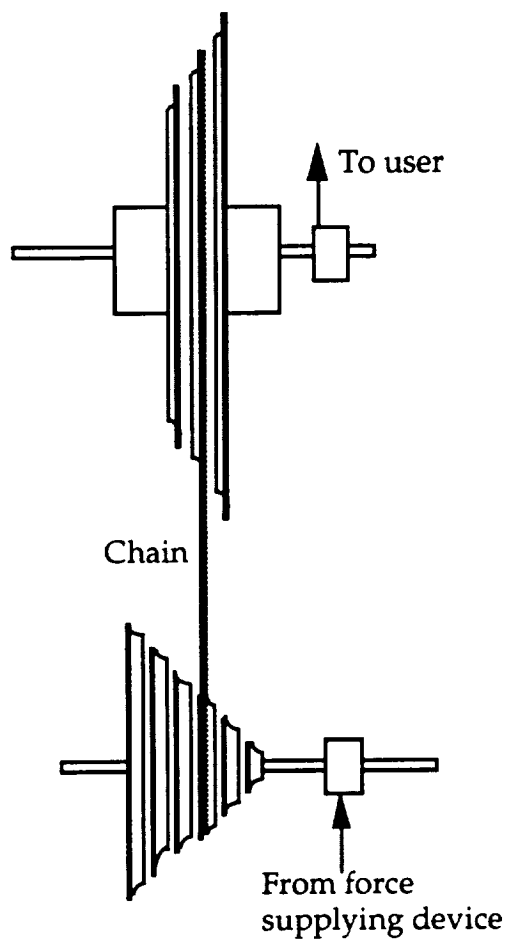

Figure 13. The chain drive alternative.

Advantages:

- The chain drive will allow easy adjustment of the force.
- The chain drive will allow accurate force adjustment.
- The chain drive will require a minimum number of force supplying devices.
- The chain drive will minimize energy losses.

Disadvantages:

- The chain drive will require lubrication.
- The chain drive may require large volume.
- The chain will skip if it is not properly aligned on the sprockets.

2.2.6 Cone Drive

The sixth force changing alternative is the cone drive. The cone drive is made up of two cones with parallel axes [12]. The distance between the surfaces is constant. A friction wheel is used to make contact with the two cones. The friction wheel is adjustable along the faces of the cones. By using the friction wheel to alter the diameter ratio of one cone to the other, the force transmitted can be changed. The cone drive is illustrated in Figure 14.

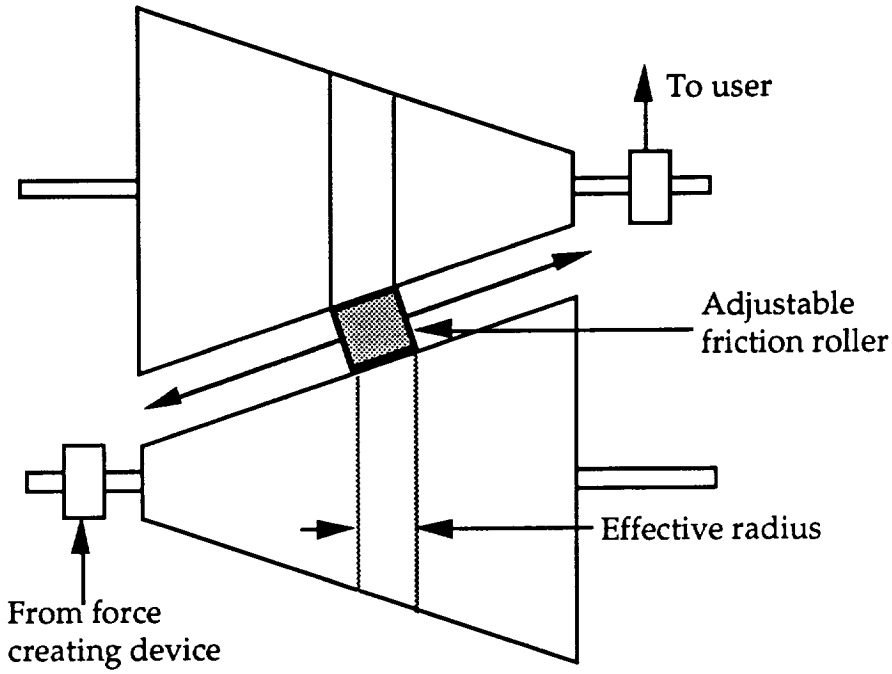

Figure 14. The cone drive alternative.

Advantages:

- The cone drive is compact.
- The cone drive offers the capability to fine tune the force ratio.
- The cone drive is easy to operate.
- The cone drive will require minimum force supplying devices.

Disadvantages:

- The cone drive will have energy losses due to friction.
- The cone drive may require large cones to achieve the required ratio.
- The cone drive may be difficult to build.
- The cone drive may experience slippage.

2.2.7 Multiple Cams

The final alternative for adjusting the force is multiple cams. The multiple cams design uses cams attached to force supplying devices placed in series. A sketch of the multiple cams design is shown in Figure 15. A benefit of the cams alternative is that the shape of the cams will allow constant force transmission from a non-constant force source. The cams would be manually adjusted with a shaft which would engage or disengage successive cams.

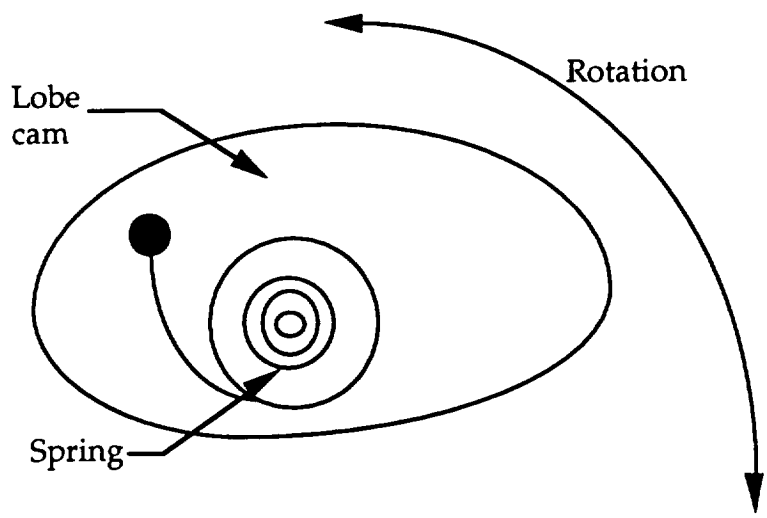

Figure 15. The multiple cams alternative.

Advantages:

- The multiple cam alternative provides a means of converting a non-constant force response into a constant one.
- The multiple cam alternative will be easy to operate.

Disadvantages:

- The multiple cams alternative may have excessive weight.
- This design may require large cams to achieve the stepping ratios desired.

2.3 Methods of Transmitting Force to User

The design team considered several alternatives for transmitting the force to a user of the RED. The alternatives were:

No Structure
Cube
Traditional
Seat
Linkage Cam
Sliding Platform

Each of the alternatives above is a configuration for positioning the user for the required exercises, including the restraint of the user for these exercises. Most of the devices use belts or straps to restrain the user. These belts will be of a woven fiber and covered by flame-retardant material (Nomex) as required by NASA. Methods for mounting the devices discussed here will not be addressed as the mounting hardware is standardized. NASA will apply the standard mounting to the final design configuration. Figures in this section will simply use a box called "force" to represent the force supplying and force adjusting methods as any of the force supplying alternatives discussed previously may be used. The alternatives in this section are not exclusive and may be combined with one another in the final design.

All of the alternatives will use cables to transmit force to the user. Some alternatives may also use pulleys. The pulleys will be modular and will snap in and out of ports on the structures. The modular pulley is shown in Figure 16.

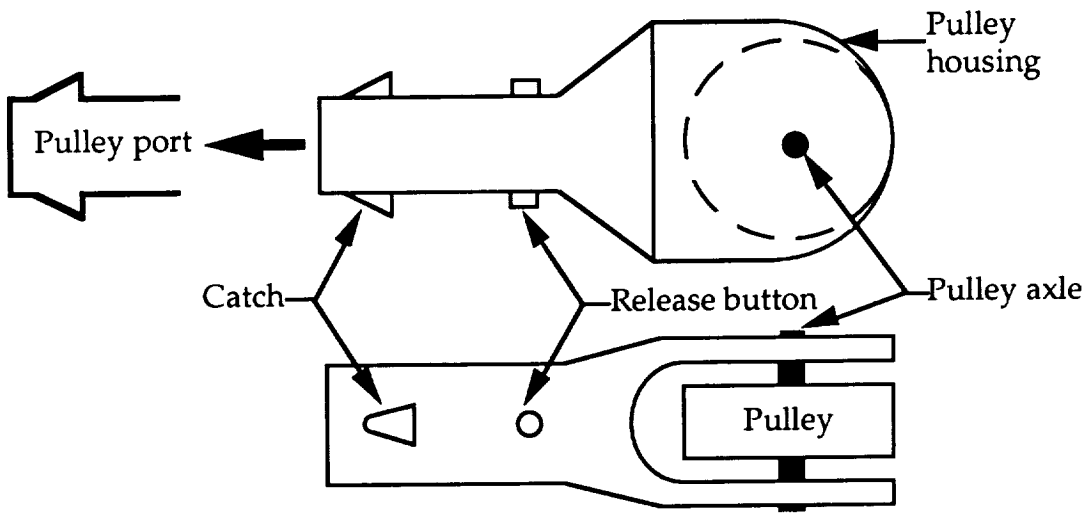

Figure 16. The modular pulley.

2.3.1 No Structure

The first alternative for transmitting the force to the user that was considered by the team is the no structure alternative. The no structure alternative involves the direct linkage of the user/user interface to the force supplying unit. A simple representation of the no structure alternative is shown in Figure 17. The device uses a pulley box attached to the force unit as shown. The handles are then used to perform the various required exercises. The handles may also be joined by a solid bar to perform some of the exercises. This configuration offers no other support structure for the performance of the exercises.

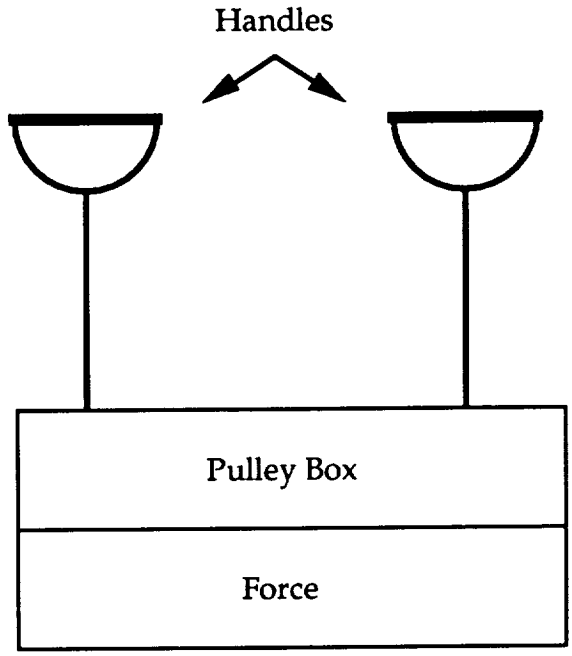

Figure 17. The no structure alternative.

Several of the exercises can be performed with the RED mounted onto the middeck floor with the user secured nearby. The user's feet are secured to the floor using straps, and a waist belt with three point anchoring would be used to counter any moments generated by performing the exercises. This waist belt is shown in Figure 18.

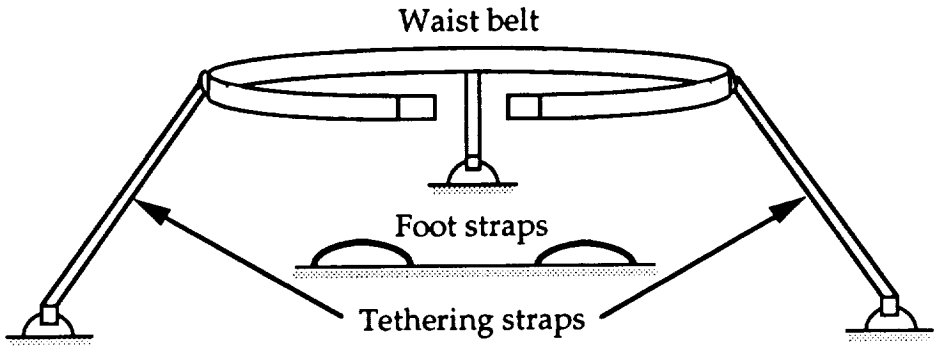

Figure 18. Waist belt and foot straps for use with the no structure alternative.

The following exercises can be performed from this position: Raises, shoulder shrugs, military press, biceps curls, wrist curls, squats, heel raises, upright rows, and deadlifts. The user will then reconfigure himself so that he is anchored with his feet on the wall of the middeck and facing away from the RED. From this position the user can perform the bench press, flies, and triceps curls.

Advantages:

- The no structure alternative requires little volume.
- The no structure alternative adds little weight to the RED.
- The no structure alternative can be stowed and unstowed quickly.
- The belt used for restraining the user can be used for station keeping during set up and force changing.

Disadvantages:

- The no structure alternative cannot offer optimum positioning for all exercises.
- The no structure alternative may be awkward to use.

2.3.2 The Cube

The second alternative for transmitting force to the user is the cube. The cube is a metal or plastic box. The different faces of the cube are used to achieve the configurations required by the various exercises. The cube configuration is shown in Figure 19. Each face of the cube has been numbered for clarity of discussion.

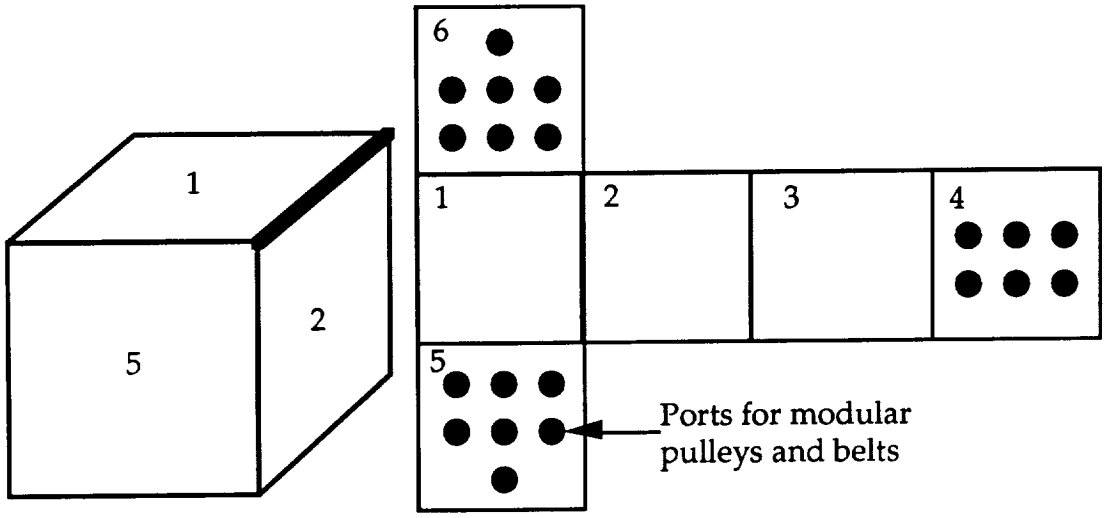

Figure 19. The cube alternative.

The cube is placed on or near the force creating device for the RED. This design makes use of modular pulleys to achieve the various exercises.

The user can first sit on face 1 and use the modular pulley ports available on faces 5 and 6. The exercises possible from this position are raises, military press, and shoulder shrugs. A hinge between faces 1 and 2 allows the configuration of a bench when face 2 is pulled up. The user can then lie on the bench and perform the bench press, flies, and triceps curls. The user can also lie across the cube to perform biceps and wrist curls. A restraining belt across faces 1 and 2 will be used as well as a stabilizing attachment to the floor.

Advantages:

- The cube alternative is compact.
- Exercise hardware can be stored inside the cube.

- The cube allows performance of all exercises.
- The cube requires no construction for set up.

Disadvantages:

- Reconfiguration may be complex.
- Proper restraint for each exercise may be difficult with the cube.
- The cube may be difficult to integrate with the force unit.

2.3.3 Traditional

The third method of transmitting the force to the user is the traditional method. The traditional alternative uses a bench configuration similar to the classic work out bench. The traditional alternative is illustrated in Figures 20a. and b.

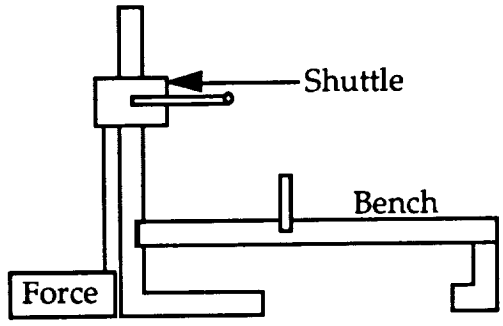

Figure 20a. Side view of the traditional alternative.

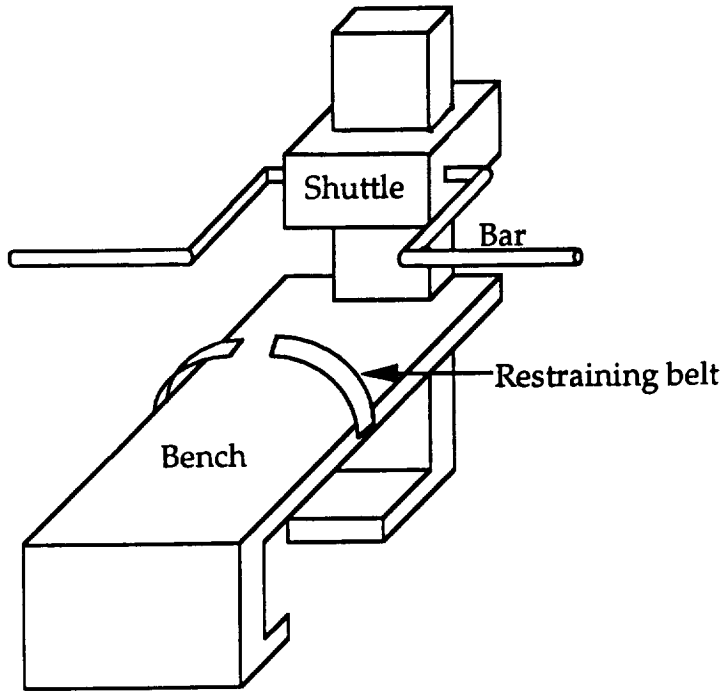

Figure 20b. The traditional alternative.

This alternative employs a modular bench which attaches to the working column. Attached to the working column is the shuttle and bar device. The shuttle and bar allow for linear motion along the column, similar to lifting freeweights. With the bench attached to the column and using the shuttle and bar, the user can perform the bench press, the military press, and squats. The device also uses modular pulleys so that flies may be performed from the bench. With the bench removed the user can perform biceps curls, squats, deadlifts, heel raises, upright rows, shoulder shrugs, and raises. Belt restraints will be available on the bench and foot restraints will be used when the bench is removed.

Advantages:

- This device is simple to reconfigure.

- The device has the look and feel of a classic exercise machine.
- The traditional configuration provides effective means of performing all exercises.

Disadvantages:

- The traditional device may have excessive weight.
- The traditional device may require too much working area.
- Stowing and unstowing may be cumbersome.

2.3.4 The Seat

The fourth method of transmitting the force to the user is the seat. The seat is made up of a chair placed onto of the force creating unit. The exercises are then done from the seat with the aid of modular pulleys and a slider unit. The seat alternative is shown in Figure 21.

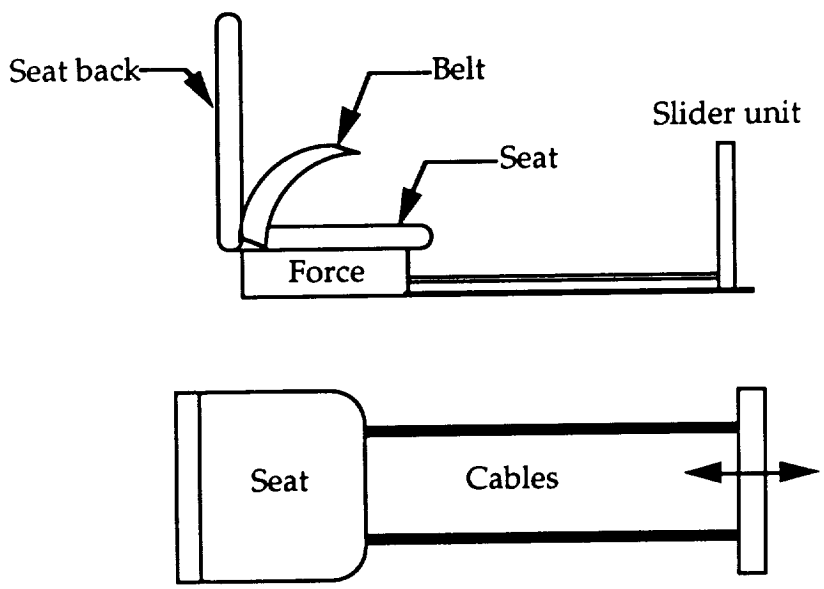

Figure 21. The seat alternative.

Seated normally, the user can use the slider unit to perform heel raises, rows, and squats. The user can also do raises, biceps curls and wrist curls with the use of pulleys. The user can then sit on the back of the seat to perform military presses using the slider. The user can also do the bench press, flies, and triceps curls from this position using pulleys. The seat will have a simple belt restraint.

Advantages:

- The seat configuration may use seat 5 on the middeck.
- The seat will provide good support for the user during exercise.

Disadvantages:

- The seat configuration may require a large volume.
- This configuration may be difficult to stow and unstow.
- Repositioning for some exercises may be cumbersome.

2.3.5 Linkage Cam

The linkage cam alternative is shown in Figure 22. This device uses a series of cams and linkages to transmit the force to the user. The cams attach to the force generating assembly, and the linkages translate the rotational motion of the cams to a linear motion for the user. A restraint system similar to the no structure alternative can be used with this alternative. Raises, shoulder shrugs, military press, squats, heel raises and deadlifts can be performed with this alternative.

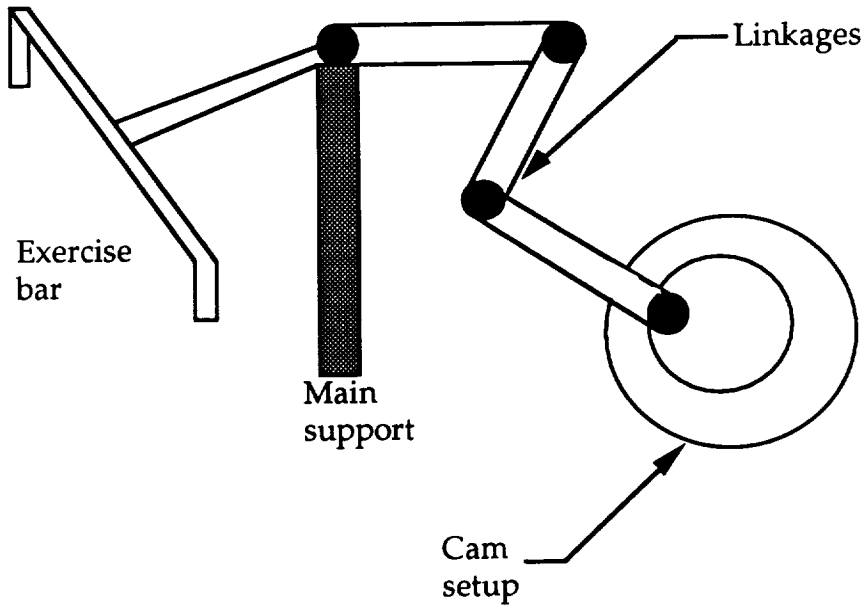

Figure 22. The linkage cam alternative.

Advantages:

- This alternative is easily stowable.
- The linkage cam is relatively compact.
- The linkage cam requires little set up.

Disadvantages:

- This alternative cannot be used to perform all the specified exercises.
- The linkage cam uses many moving parts.
- This alternative requires maintenance.

2.3.6 Sliding Platform

The sliding platform alternative requires use of a friction wheel rolling inside a rail. A fixed back support is placed on one end of this

platform. The sliding platform is shown in Figure 23. The user can either sit or lie down on this platform to perform various exercises using either legs or arms. The user is restrained with leg and waist straps. Exercises such as raises, military press, squats, and deadlifts can be performed.

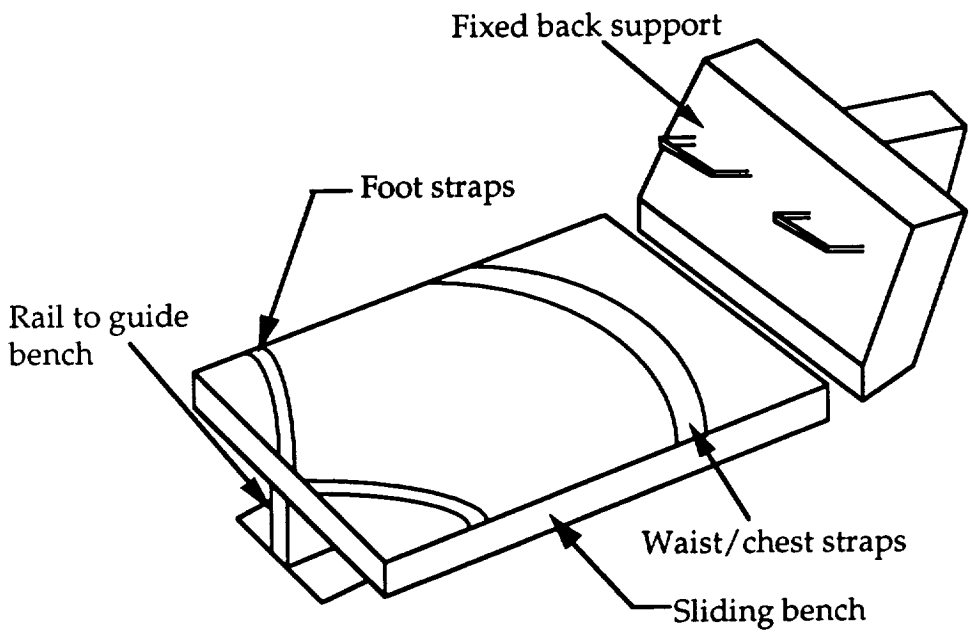

Figure 23. The sliding platform alternative.

Advantages:

- This alternative is easy to operate.
- The restraints on the sliding platform keep the user in place.

Disadvantages:

- This alternative occupies a large volume.
- All exercises cannot be performed on the sliding platform.
- This alternative requires regular maintenance.

Design Solution

This section presents the final design solution developed by the team as well as a discussion of the decision process used to choose a solution from the design alternatives. A description of the overall device and a detailed discussion of each design component is presented.

3.1 Evaluation of Force Supply Alternative Designs

Because the device consists of three main functions, and due to the large number of possible configurations among the function alternatives, the design team decided to use a decision matrix to determine the force supply alternative. Having established this choice, the team then selected the best alternatives for the other functions. The team chose the constant force spring alternative as the means of force supply for the device. The team also chose a single gear with multiple springs as the means of adjusting the force level of the device. A discussion of the decision process follows.

3.1.1 Decision Criteria for Force Supply

The design team decided on seven design criteria to be considered in determining the force supply solution. A brief explanation of these parameters is presented below.

1. Constant Force. The force supplied must be constant throughout the entire range of motion.
2. Increments. The method chosen must allow for all required

weight increments. These increments must be easily adjustible.

3. Load. The method must allow for indication of the load.
4. Weight. The weight of the device must be compatible with the NASA weight requirements.
5. Size. The overall size of the device must be compatible with the NASA storage requirements.
6. Safety. The device must allow for reasonable safety precautions as well as a means of stopping the force transmission.
7. Life. The device must have an operational life of at least one mission. Incomplete cycling is accounted for in this criterion.

3.1.2 Decision Matrix for Force Supply

The team constructed a decision matrix and determined the final design solution. To evaluate the alternative designs for force supply, a weighting value was given to each decision criterion by the "Method of Pairs" to establish relative importance [3]. Using this method, each criterion was compared with every other criterion. The more important criterion of the pair received a tally mark. The weighting factor was determined for each parameter by dividing the number of tally marks for the criterion by the total number of tally marks. The tally marks and weighting factors are shown in Appendix F.

Each force supply alternative was then evaluated using the seven criteria on a scale of one to ten. A score of ten is excellent, and a score of one is poor. The individual criterion scores were multiplied by their associated weighting factor. These scores were then summed and a total

score for each alternative was determined. The decision matrix is shown in Appendix F. The constant force springs alternative received the highest score, and the design team chose this alternative as the basis of the design solution.

3.2 Evaluation of Force Adjustment Alternative Designs

After the constant force spring decision was made, the design team examined the alternatives for adjusting the force to produce the required weight increments. The alternatives were evaluated in relation to their compatibility with constant force springs. The design team decided that a gear system would best suit the constant force spring concept. Three alternatives were developed using a gearing system. The first was a single gear with an array of springs in which the force was varied by combining springs of different loads. The second concept was a single constant force spring with multiple gears. The third alternative was a system with multiple springs and multiple gears.

3.2.1 Decision Criteria for Force Adjustment

Five decision criteria were developed for judging these three alternatives. A brief explanation of these parameters follows. The tally marks for the parameters are shown in Appendix G.

1. Ease of operation. The adjusting of the force levels must be performed easily and quickly.
2. Precision. The force increments must be within the specified range.

3. Traditional feel. The device must reproduce the feel of weight lifting exercises on earth.
4. Weight. The weight of the device must be compatible with NASA weight requirements.
5. Simplicity of construction. The device must be easy to assemble.

3.2.2 Decision Matrix for Force Adjustment

Again, the design team used a decision matrix to determine the best method for incrementing the force level. This decision matrix is shown in Appendix G. The concept of a single gear with multiple springs scored the highest in the matrix. The design team therefore chose this concept to be the method for adjusting the force level of the device.

3.3 Structure

After the design team drew some preliminary sketches of the design configuration, it was decided that a combination of the structure alternatives was required to produce the overall structure and transmission of force to the user. The final design solution is best described as a combination of the no structure and seat alternatives.

3.4 Design Configuration

The final design configuration of the force unit is shown in Figure 24. The resistance loads of the RED force unit are supplied by an array of double wound constant force springs. A gear pair is used to transfer the torque generated by the springs to the output shaft. The force is then transmitted to the user through the cable and spool assembly. The

gear pair reduces the number of springs that would otherwise be required to produce the range of required forces.

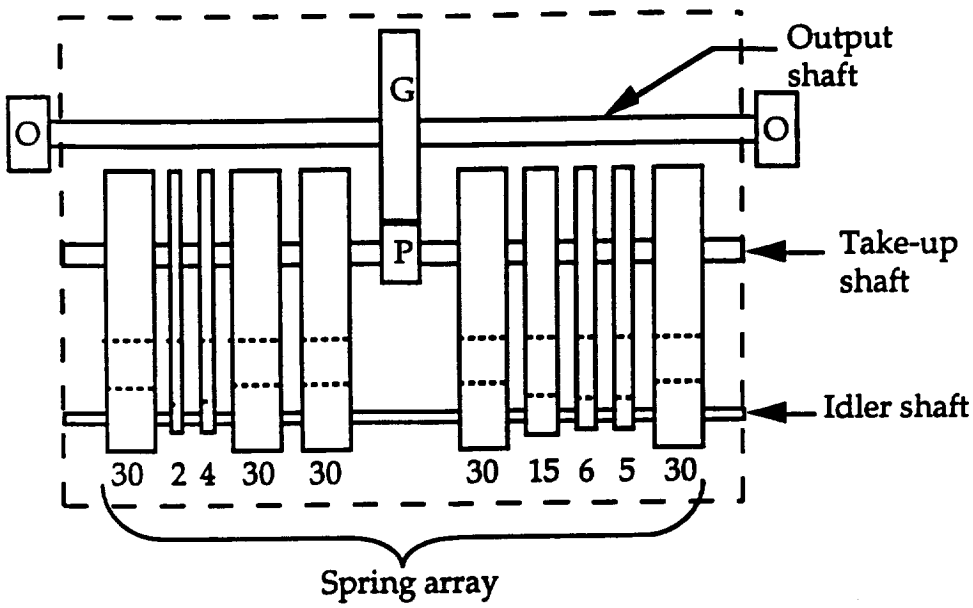

Figure 24. Final design configuration of the RED force unit. Numbers indicate the load rating (lb_f) for each corresponding spring. P is the pinion. G is the gear. O is the cable and spool assembly.

The force output is changed by engaging or disengaging various combinations of springs in the array. The engagement/disengagement of a spring is achieved by pinning the spring take-up spool to the take-up shaft causing the spool to spin with the shaft. The force unit is enclosed in a cast aluminum housing. A sketch of the force unit housing is shown in Figure 25. The force unit will be directly mounted to the middeck floor.

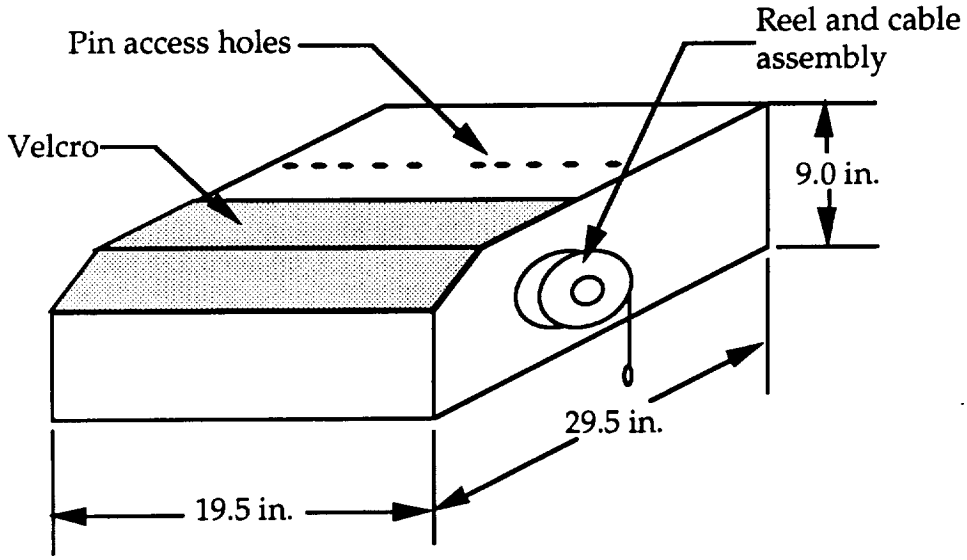

Figure 25. Sketch of the RED force unit.

Positioning for each exercise is achieved through the use of foot straps and a waist belt and tether. Also, an adjustable bench will be used to perform some of the exercises. Additional restraints are also necessary for efficient performance of some exercises.

The RED force unit simulates an earth bound workout well. The method of adjusting the force output is done by pinning which is similar to a traditional exercise machine. The inertia of the rotating gears and spools simulates the inertia of freeweight motion on earth. The device provides for working both sides of the body at the same time. Also, because the spool assemblies move simultaneously with the output shaft, the motion and weight will always be balanced.

The device will be stored using a double adapter plate. The RED will be anchored to the plate along its 9 in. x 15 in. (22.86 cm x 38.10 cm) side. At its present designed size, the force unit will stick out from the face of the lockers 10 in. (25.4 cm) if it is placed near them.

The RED will be directly anchored to the floor using standard anchoring devices which will be specified by NASA. The working position of the RED will be in the same area in which the treadmill is currently used on the Space Shuttle.

Because the RED force unit is a single, enclosed structure, mounting of the device for exercise is simplified. The team is confident that the device can be set up and ready for use in well under the five minute limit. Also, reconfiguration for each exercise is possible in under one minute. This includes time for adjustment and any necessary attachment of supporting devices.

3.5 Constant Force Springs

The resistive force of the RED is supplied by an array of double wound constant force springs. A constant force spring (CFS) is a strip of prestressed metal coiled so that the inner radius of the spring is approximately constant. The manner in which the CFS in the RED are wound constitutes a class A motor spring [13]. A double wound CFS is shown in Figure 26. The team decided to construct the double wound springs from standard constant force springs because available class A motor springs could not meet the torque requirements of the RED. The spring material is 301 stainless steel. The array for the RED is made up of springs arranged in parallel.

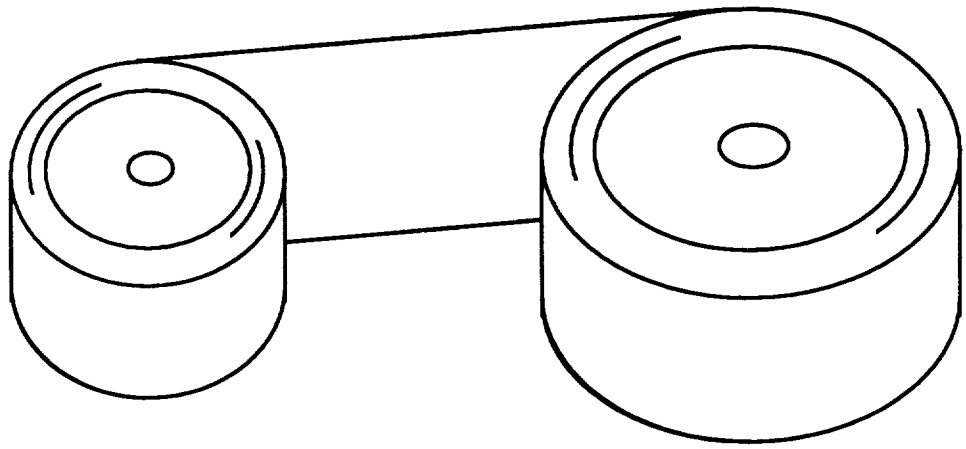

Figure 26. A double wound constant force spring.

The double wound CFS used in the RED are created by wrapping the springs around a take up spool that has a diameter greater than two times the drum diameter of the spring. The use of a larger take-up spool diameter is necessary to approximate linear extension of the constant force spring as closely as possible. The minimum working deflection of the CFS is equal to 1.25 times the diameter of its storage drum. The center to center distance of the idler shaft and the take-up shaft is determined by the minimum working deflection requirement for the largest spring in the array. The performance characteristics of the springs are dependent only on the material thickness and width. Because the length of the spring has little effect on the spring performance, the springs may have any length required by the rotation of the take-up shaft [14]. Information on CFS geometry was obtained from the Ametek-Hunter Springs catalog shown in Appendix H. Figure 27 shows the general geometry of a double wound CFS.

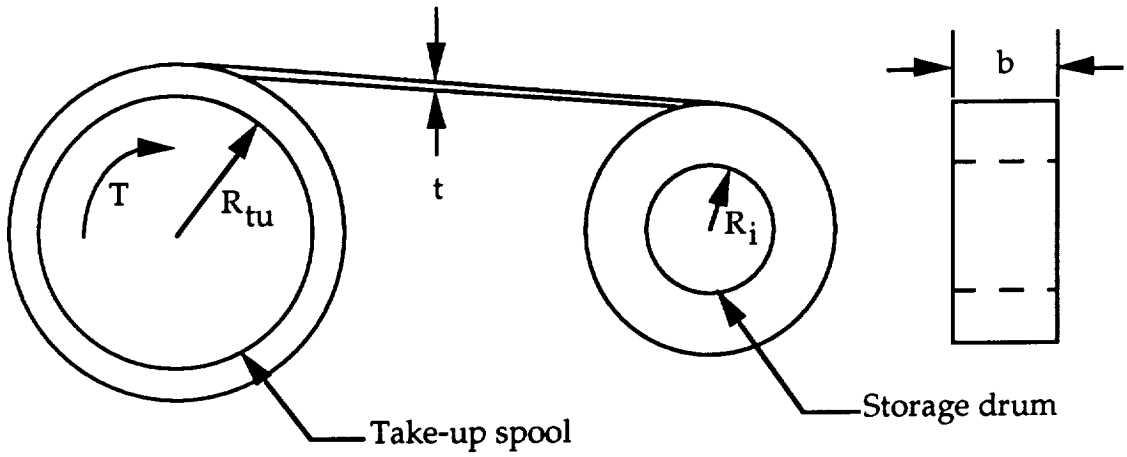

Figure 27. Geometry of a general double wound CFS.

The torque generated by any double wound spring is found from the spring-torque equation,

$$T = Ebt^3R_{tu}/2\,(1/R_i - 1/R_{tu})^2$$

where T is the resultant spring torque at the take-up shaft, E is the material modulus of elasticity, b is the material width, t is the material thickness, R_{tu} is the radius of the spring take up spool, and R_i is the radius of the spring storage drum [15]. The output torque is approximately constant over the working length of the CFS.

3.6 Design Development and Evaluation

The team developed the design of the RED force unit using an iterative procedure to find an optimum combination of gearing and springs. Knowing the force output required, the team calculated the torque required at the spring take-up shaft using the system equation

$$F_{out} = (\Sigma T/R_o)(R_g/R_p)$$

where F_{out} is the required working force, ΣT is the sum of the torques from the engaged springs, R_o is the radius of the cable spool, R_p is the radius of the pinion, R_g is the radius of the gear, and R_g/R_p is the gear ratio. Development of the system equation is shown in Appendix I. The sum of the torques is found from the spring-torque equation.

Initially, the decision was made to use a cable spool diameter of 3 in. (7.62 cm) (R_o = 1.5 in. (3.81 cm)). This decision was based on the judgment that this diameter would allow for easy coiling and uncoiling of the cable and because of the ready availability of pre-made cable and spool assemblies of this size.

The gear ratio and take-up spool diameters were found by iterating the system equation. A detailed explanation of this procedure and examples of the equations are found in Appendix J. The required gear ratio is 3 to 1 for the device.

The take-up diameter of seven inches appeared as a compromise between the need to maximize the take-up diameter and limit the size of the RED. A chart of the spring combinations required for each of the output forces is presented in Appendix J.

Once the torque and force requirements of the system were satisfied, each component of the force unit was designed. The following sections describe the components of the RED force unit and briefly discuss their design. Detailed design calculations and complete specifications for all RED components appear in Appendix K. Drawings of the force unit are found in Appendix K-9.

3.6.1 Cable and Reels

The cable for the RED will be standard steel wire rope wound around a reel 3 in. (7.62 cm) in diameter and 2 in. (5.08 cm) wide. The cable should be 0.25 in. (0.635 cm) in diameter to carry the maximum required output load of the RED. A sketch of the reel assembly is shown in Figure 28. One reel assembly is located on either side of the force unit. The cable end will have a standard round eye loop to allow connection of the exercise bar or handles. Equations for the cable and reel assembly are discussed in Appendix K-1.

Cable and reel assembly

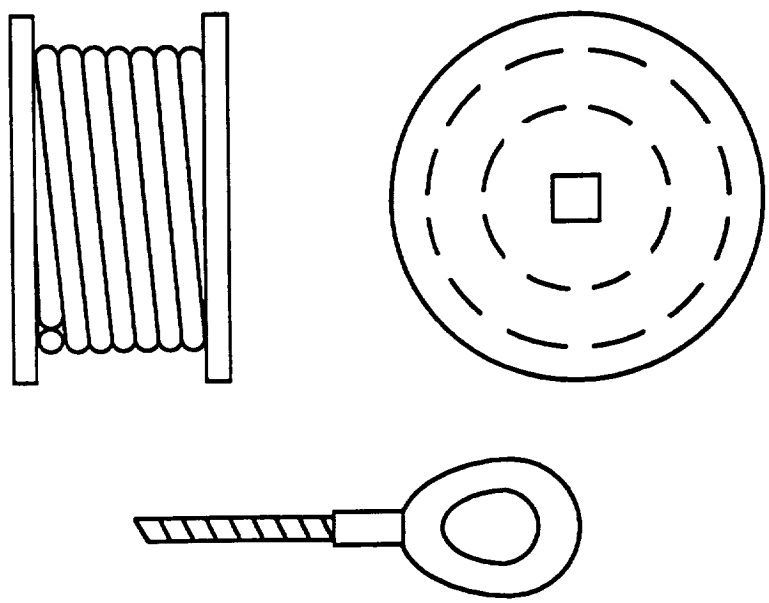

Cable end with eye loop

Figure 28. Cable and spool assembly.

The length of cable is specified as 60 in. (152.4 cm). This length was based on an estimation of the travel required by the working bar during exercise performed by a crew member of the 50%. The team is confident

that the specified cable diameter and spool dimensions will allow for easy operation of the RED.

3.6.2 Gears

Torque in the force unit is transferred from the take-up shaft to the output shaft through a pair of gears. The gears amplify the torque generated by the springs so that the required output forces can be achieved. The gears have a 3 to 1 ratio with the pinion being 2.5 in. (6.35 cm) and the gear being 7.5 in. (19.05 cm) in diameter. The gears are standard spur gears. Design equations and further specifications for the gears are presented in Appendix K-2. The pinion and the gear each have 15 and 45 teeth, respectively. A sketch of the gear pair is shown in Figure 29.

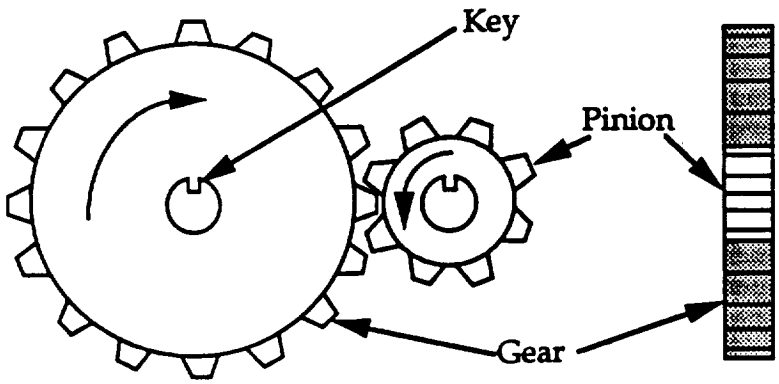

Figure 29. Sketch of spur gear pair.

3.6.3 Springs

The number of springs in the array and their output forces have already been discussed in the previous iterative design section and are listed in Appendix J. Knowing the gear ratio, the required length of the springs was calculated as shown in Appendix K-3. The required length of

the springs is 430 in. (10.92 m). This length allows for at least one coil of spring on the storage drum when the cable is fully extended. Discussion with engineers at Hunter Springs confirmed that springs of this length can be custom made [14]. It was also confirmed that this length will have a negligible effect on the constant force performance of the springs. The team recommends the use of Hunter Springs for the manufacture of the CFS used in the RED.

The spring ends will be riveted to the take-up spools. Also, the team recommends that the springs be riveted to their storage drums. This is recommended as a safety feature, although it is unlikely that a spring will come off of its storage drum as long as one coil of spring remains on the drum.

3.6.4 Spring drums and spools

The spring drums and spools will be constructed from Delrin. This material was chosen because of its resistance to wear, high strength, and toughness. Delrin also offers good machinability, and has a low coefficient of friction to allow spinning on the fixed rods supporting the drums. The spools have a collar which will hold and guide the pins used for engaging the springs. The spools will be assembled with flanges that will guide the motion of the spring as it coils and uncoils. Drum and spool dimensions are found on the spreadsheet contained in Appendix J. As the spring is wound from drum to spool and back, the amount of spring on each one changes. The device has been designed to allow for these changes in diameter. Column I of the spreadsheet shows the increase of the diameter as the spring rolls onto the spools for each load of spring.

3.6.5 Pins

Pins are used in the force unit to engage and disengage the spring spools to the take-up shaft. The pins will be set into the collar on the take-up spools so that they cannot become lost and are easily engaged/disengaged. The pins have a key tab that fits into grooves cut into the hole in the take-up shaft. The key tab locks the pin into either its engaged or disengaged position by twisting it into key ports. The pins are engaged using a tool which has an end that fits into the head of the pin. Spring bearings on the tool lock into the head of the pin to allow translational and rotational control of the pin. The material for the pins is 302 stainless steel. A pin and the pin tool are shown in Figure 30. Design equations for the pins are shown in Appendix K-4.

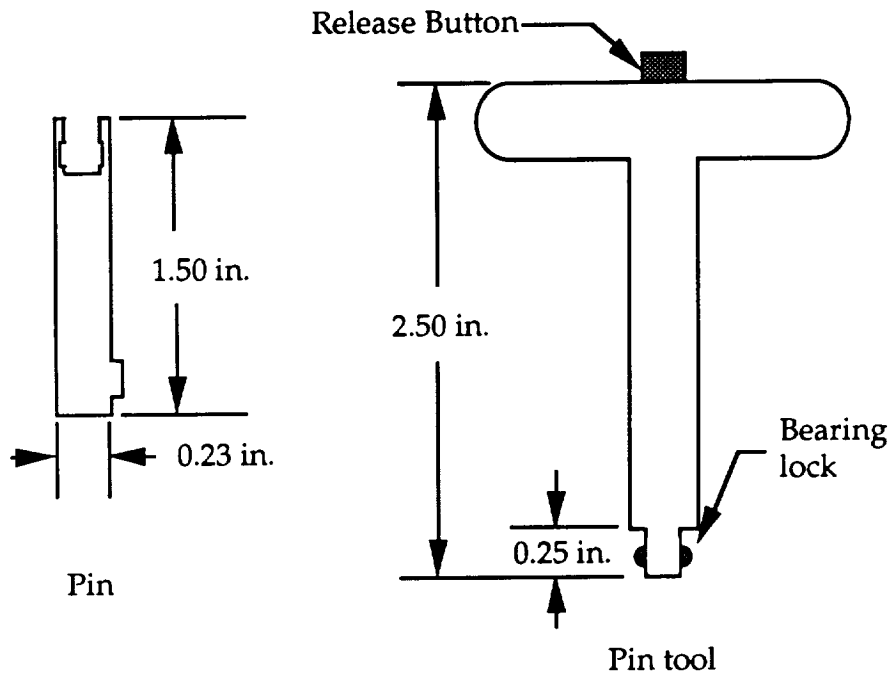

Figure 30. Sketch of a pin and the pin tool.

To engage the pin the user pushes the appropriate pin down into the shaft pin hole using the pin tool. The pin is then fixed into place by turning the pin counterclockwise to lock the key tab into the key slot. The pin is likewise fixed into place in its disengaged position. The pin hole in both the shaft and the take-up spool is illustrated in Figure 31.

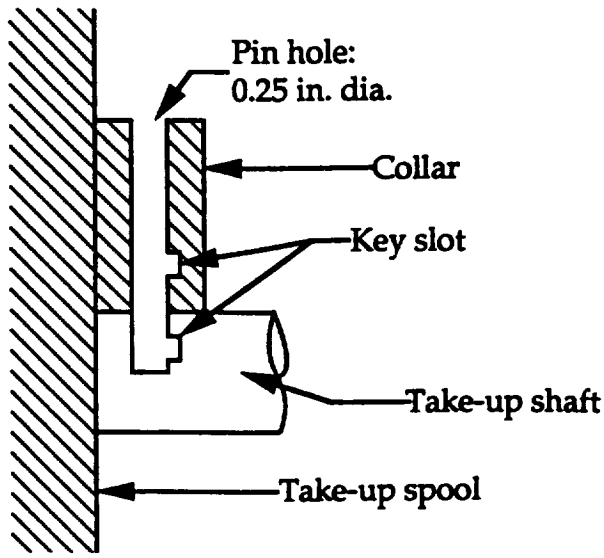

Figure 31. Sketch of pin hole.

3.6.6 Shafts

The force unit has three shafts: the idler shaft, the take-up shaft, and the output shaft. The idler shaft is the shaft that holds the spring storage drums. This shaft is fixed and the storage drums are free to rotate about its axis. The take-up shaft holds the spring take-up spools and the pinion. The take-up shaft also has radial holes to accept the pins used to engage the take-up spools. The output shaft holds the gear and the cable-reel assembly. All shafts are supported by the walls of the enclosure. The take-

up shaft and the output shaft both spin on bearings pressed into the enclosure walls.

The shaft material is 6061-T6 aluminum. This alloy was chosen for its high strength to weight ratio and ease of machinability. The design of the shafts and their specifications are presented in Appendix K-5.

3.6.7 Bearings

The take-up shaft and the output shaft spin on and are supported by bearings pressed into the walls of the housing. The bearings are standard roller bearings. Appendix K-6 shows the design calculations for the bearings and contains a list of bearing specifications. The bearings used in the RED are readily available. The bearings will be held in place by collars cast into the RED housing. The collars offer both axial and radial support. The collars will be split by the two halves of the housing and will come together to enclose the bearings which will already be mounted on the shafts. A bearing and a split collar are shown in Figure 32.

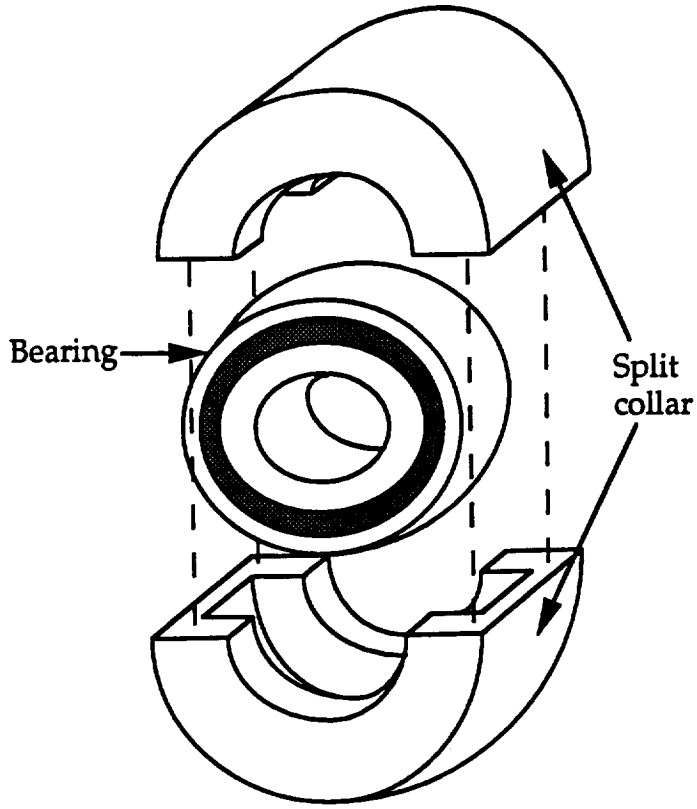

Figure 32. A bearing and its split collar housing.

3.6.8 Housing

The housing of the force unit will be constructed of A390-T6 aluminum. This alloy was chosen primarily for its high strength to weight ratio. This alloy also has good machinability. The housing is to be cast in two pieces as shown in Figure 33. The housing will be cast with ribs along the edges. The ribs serve to increase the corner strength and the overall structural integrity of the unit. The joint area of the two boxes has an increased thickness to account for stress concentrations in this area. The housing includes additional supports for the shafts. Details of the housing design appear in Appendix K-7.

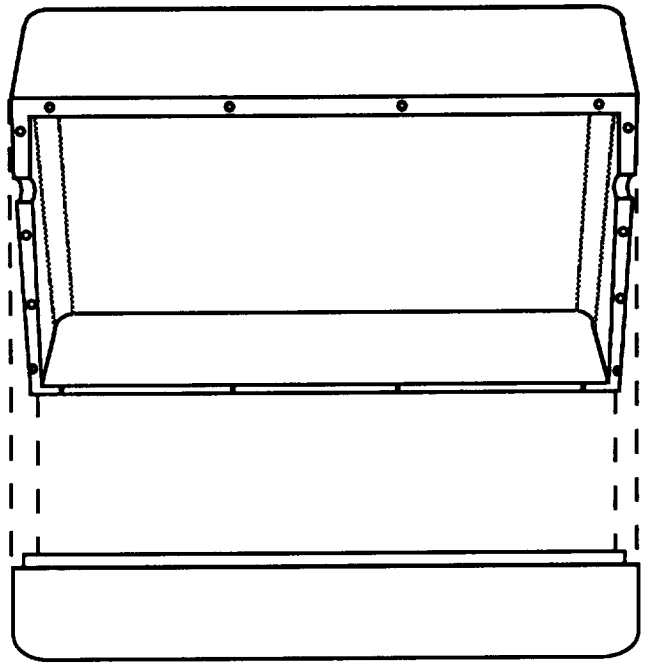

Figure 33. Two halves of the cast housing.

3.6.9 Weight and Cost

The weight of the RED force unit is approximately 100 lbs. The addition of a bench and restraints will increase the overall weight. The cost of the RED is approximately $ 1500.00. The cost analysis was based on current estimated market values. The actual cost of the RED will vary depending on the choice of supplier. Detailed information about the weight and cost of the RED can be found in Appendix K-8.

3.7 Exercise and Exercise Structure

The exercise structure for the RED is composed of foot restraints and a foldable bench. A belt and supplemental restraints will also be used to position the astronaut for exercise. The resistance from the force unit will be transmitted through the use of cables as discussed previously. The

cables will be attached to either a bar or handles for the performance of exercises. Performance of all the exercises requested by NASA are possible with the RED. The configuration of the user and restraints are listed in Appendix L for each exercise. As previously discussed, the springs are engaged (disengaged) by inserting the pin into the take-up shaft. The force output is changed by activating the desired combination of springs using the pinning tool. The pin holes will be clearly numbered (1 through 10) on the force unit. A chart of the required pinning combinations for each output force using these numbers will be fixed to the RED force unit.

3.7.1 Foot restraints

The foot restraints used by the astronauts during exercise will be form fitting sandals. The sandals will have a wide strap which wraps around the foot and will have an additional strap that wraps around the heel. The exercise sandal is shown in Appendix M. The heel strap helps to counter the torsional moment induced during the performance of some exercises. The sandals are anchored directly to the force unit using velcro. The force unit will be covered with velcro between the two take-up spools. This will allow for a wide variety of foot positions for the various exercises and accomodate users from the 5% to the 95%.

3.7.2 Bench

The team suggests the use of a bench for performance of some of the exercises. The bench is removable and foldable for storage. It will be constructed on an aluminum frame. The frame will support a pad of high

density foam covered in Nomex. A sketch of the bench is shown in Appendix M.

3.7.3 Bar and Handles

A bar will be used to perform some of the exercises. The bar is shown in Appendix M. The material for the bar is 6061-T6 aluminum. The surface will be knurled to provide a positive gripping surface for the user. Also, handles can be attached to the cable ends for some exercises. The handles are shown in Appendix M. Both the bar and the handles attach to the cables using simple snap hooks.

Conclusions and Recommendations

The design team was sponsored by NASA and USRA to design a resistive exercise device for use on the Space Shuttle. The team has accomplished this task and is confident that the device can be built and successfully employed on future Shuttle flights. The purpose of the device is to provide astronauts with a means of exercise while in microgravity. Exercise during missions is necessary to maintain muscle strength and improve recovery. The device designed by the team enables the performance of all exercises specified by NASA.

The design team divided the functions of the device into three major groups: methods of supplying force, methods of adjusting force, and methods of transmitting the force to the user. After analyzing the three main functions of the RED and developing alternatives for each, the design team used a comparative decision process to choose the most feasible components for the overall design.

The design team selected the constant force spring alternative for further embodiment. The final design consists of an array of different sized constant force springs which can be pinned in different combinations to produce the required output forces. The force is transmitted by means of a shaft and gear system. The design closely simulates weightlifting exercise on Earth through the use of constant force springs and inertia in the rotating springs and gears. The performance of the design was confirmed by analyzing the system equations of the device.

The final design does not comply with the NASA requirement for storage size and is close to the limit for weight. The team suggests the reconsideration of the maximum required force output. Since the purpose of the RED is the maintenance of muscle condition and not a primary muscle building machine, it seems reasonable to suggest a maximum required force output of 300 lb_f. The reduction of the maximum force will reduce the number of springs required in the array by two. Also, the springs required would be smaller therefore reducing the size and weight of the overall device.

The team feels that a more in-depth study into the physiology and kinesiology required to understand the requirements of positioning for the exercises will result in an improved exercise structure. This includes the detailed design of a bench. Additionally, the use of modular pulleys is recommended for greater directional flexibility of the output cables.

Though the development of the RED assumed that the operational frequencies of the RED were low, the team suggests research into the vibrational frequencies produced during exercise. The team recommends making the RED compatible with previously designed isolation devices if it is found that significant vibrations are imparted to the Shuttle during exercise.

Finally, to satisfy the safety requirement of the device, the design team suggests the use of a centrifugal brake similar to those found in seat belts. This mechanism stops the motion of the system if the system experiences a high acceleration as might occur if the user let go of the bar or handles when the cables are extended.

References

1. "Maps and General Information", Brochure (Houston: National Aeronautics and Space Administration, Johnson Space Center, 1991).

2. Brooks, G., Exercise Physiology: Human Bioenergetics and Its Applications, (New York: John Wiley & Sons, 1984).

3. Pahl, G. and Beitz, W., Engineering Design: A Systematic Approach, (London: The Design Council, 1988).

4. Brunell, R., Hydraulic and Pneumatic Cylinders, (Morden, Surrey, England: Trade & Technical Press Ltd., 197?).

5. Fitzgerald, A.E., et al, Electric Machinery, 5th ed. (New York: McGraw-Hill Publishing Company, 1990).

6. Mongan,P. and Klute, G., (Houston: National Aeronautics and Space Administration, Johnson Space Center), Personal Communication, January 29, 1992.

7. Orthwein, W. , Machine Component Design, (St. Paul: West Publishing Company, 1990).

8. Juvinall, R. C., Fundamentals of Machine Component Design, (New York: John Wiley & Sons, 1983).

9. Kern-Liebers USA, Inc., Spring Division, Brochure.

10. "Neg'ator constant force extension springs," Brochure (Sellersville, PA: Ametek, Hunter Spring Products, U. S. Gauge Div., 1990).

11. Sandvik Steel Company, Spring Products Division, Brochure.

12. Tesar, D., ME380 Mechanisms and Kinematics, Lecture notes.

13. Wahl, A., Mechanical Springs, 2nd ed., (New York: McGraw-Hill Publishing Company, 1963).

14. Rogers, A., (Ametek-Hunter Spring Division), Telephone Conversation, March 27, 1992.

15. Parmley, R., Mechanical Components Handbook, (New York: McGraw-Hill Publishing Company, 1985).

APPENDICES

APPENDIX A

Description of Exercises

Raises (forward, lateral, backward)

Arms straight down at sides.
Weight in hands.
Raise arms to shoulder level, keeping elbows straight.
Forward - arms to front.
Lateral - arms to sides.
Backward - arms to back.
Return to starting position.

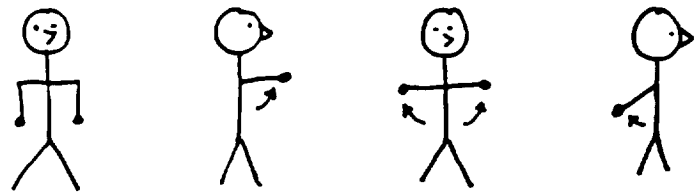

starting position | forward raise | lateral raise | backward raise

Shoulder Shrugs

Arms straight down at sides.
Weight in hands.
Raise shoulders then bring back down in a rolling motion.

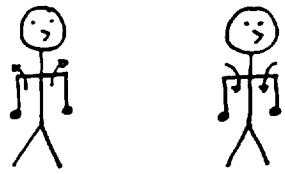

Bench Press

Arms out to sides with elbows bent forward.
Weight in hands is pushed forward away from body until arms are straight.
Return to starting position.

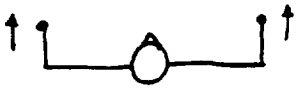

starting position

working position

Military Press

Arms out to sides with elbows bent up.
Weight in hands is pushed up until arms are straight.
Return to starting position.

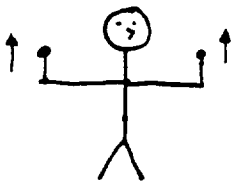

starting position

working position

Flies

Arms out to sides with elbows bent up at 90 degrees.
Arms are at a slight angle away from the body.
Weight in hands.
Bring hands together in front of body in pushing motion.
Return to starting posistion.

starting position

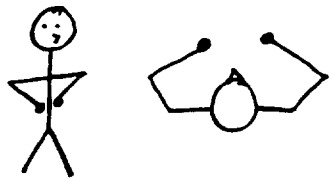

working position

Biceps Curls

Arms straight down at sides.
Weight in hands.
Bend elbows and bring weight up to shoulders.
Return to starting position.

starting position

working position

Triceps Curls

Arms straight up above head.
Weight in hands.
Bend elbows toward back.
Return to starting position.

starting position

working position

Wrist Curls

Arms straight down at sides.
Weight in hands.
Bend wrist up to raise weight.
Return to starting position.

starting position

working position

Squats

Arms bent up at elbows.
Weight in hands at shoulders.
Bend knees while keeping back straight.
Return to starting position.

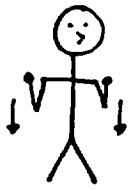

starting position

working position

Deadlifts

Weight in hands at feet with knees bent.
Straighten knees and bring weight to waist.
Return to starting position.

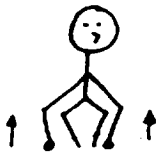

starting position

working position

Heel Raises

Arms and legs straight.
Weight in hands.
Raise heels off floor.
Return to starting position.

starting position

working position

Upright Rows

Arms and legs straight.
Weight in hands at feet.
Keeping back straight and horizontal, bring weight to shoulders in a pulling motion by bending elbows out to sides.
Return to starting position.

starting position

working position

APPENDIX B

Specification List

D = Demand W = Wish	Specification List for: Design of a Resistive Exercise Device (RED) for use on the Space Shuttle	Page: B1

D/W	Requirements
	Functional
D	1. Will produce isometric and/or isotonic loads
D	2. Will provide positive and negative load capabilities
W	3. Provide indication of range of motion and/or specific angle for exercise
D	4. Provide easy calibration of workload and/or velocity
D	5. Body restraint will be provided for each exercise
W	6. Will be adjustable for user from 5% female to 95% male
D	7. RED will provide the following exercises: Raises (forward, lateral, backward) Shoulder Shrugs Bench Press Military Press Flies Biceps Curls Triceps Curls Wrist Curls Squats Deadlifts Heel Raises Upright Rows
D	8. RED will be reconfigurable in less than 1 minute
D	9. RED will be stowed/unstowed in less than 5 minutes

D = Demand W = Wish	Specification List for: Design of a Resistive Exercise Device (RED) for use on the Space Shuttle	Page: B2

D/W	Requirements
	Constraints
D	1. Fit in two standard middeck lockers each 9" x 17" x 20" (or use adapter plates)
D	2. Maximum weight of 108 lb; 54 lb per locker
D	3. Must make use of drawers or adapter plates
	4. Loads
D	Minimum 15 lb./side
D	Minimum increment 10 lb./side
D	Maximum 300 lb./side
D	Load imbalance 1 lb./side
	5. Time
D	Reconfigure in less than 1 minute
D	Stowed/unstowed in less than 5 minutes
W	6. No small parts/pieces
	Geometry
D	1. Stored RED will take up no more than 4 cubic feet
W	2. Stored RED will not stick out of hatch
D	3. Will be used comfortably in environment of middeck
	Conditions
D	1. Design will account for force action/reaction in microgravity
D	2. Will be acceptable to human demands

D = Demand W = Wish	Specification List for: Design of a Resistive Exercise Device (RED) for use on the Space Shuttle	Page: B3

D/W	Requirements
	Safety
D	1. Will have provisions to terminate velocity and/or workload
W	2. Will meet all known and applicable NASA flight regulations -Flame test -Out gas test
D	3. No sharp edges
D	4. Tether all pieces
D	5. Factor of safety of 1.5
	Signals/Energy
D	1. Indication of load
W	2. Indication of number of repetitions
W	3. Use easily identifiable symbols for use/assembly, reconfiguration, safety devices
	Operation
D	1. Require no tools for assembly
D	2. No detailed instructions required
D	3. Easy to operate/user friendly
D	4. Comfortable restraints
W	5. Will not require power from Orbiter

APPENDIX C

Middeck and Locker Drawings

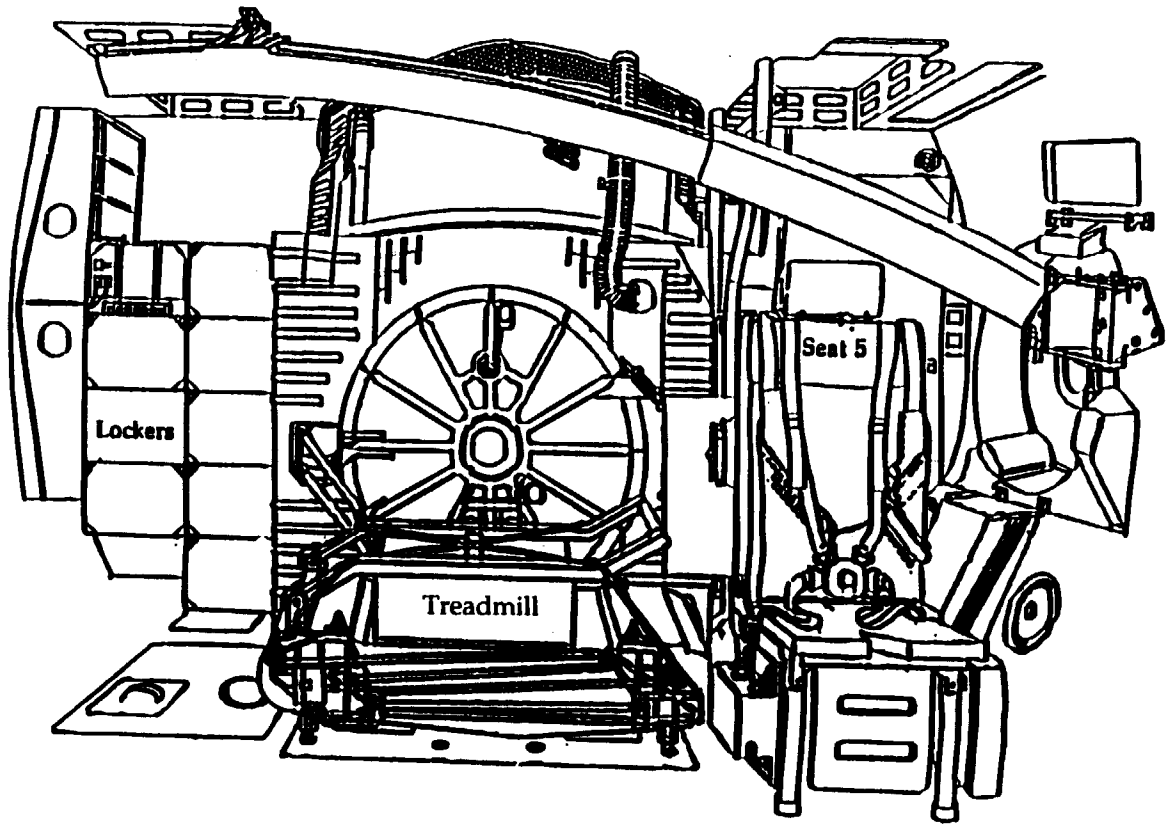

Figure C1: View of the Space Shuttle middeck facing aft (towards the rear of the ship) The figure shows a treadmill in the working position for the RED [1].

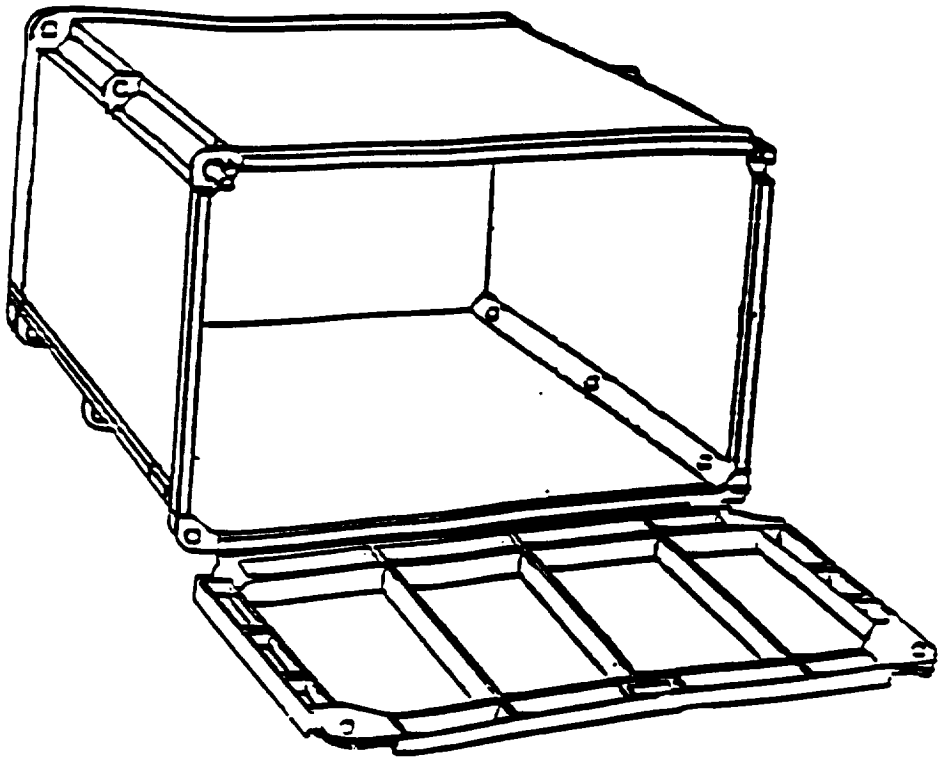

Figure C2: The middeck locker used on the Shuttle [1].

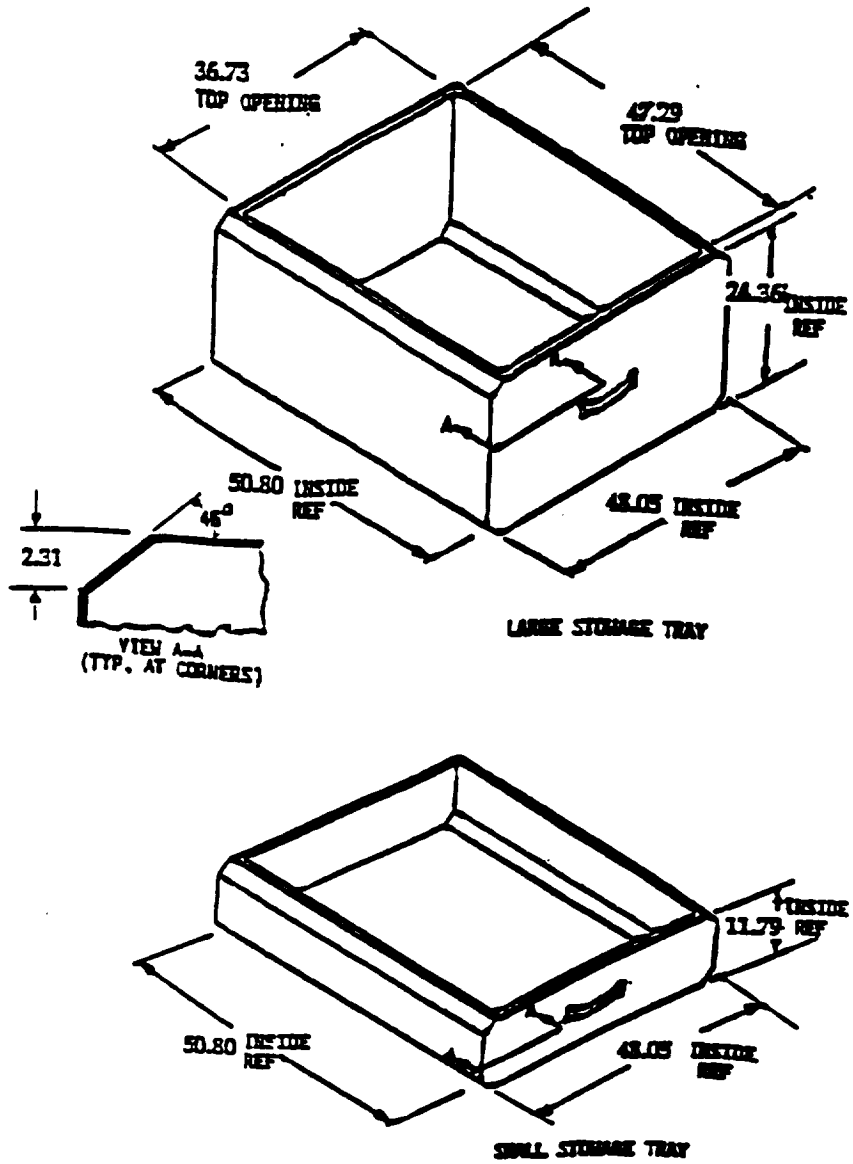

Figure C3: Standard stowage drawers for use in the middeck locker [1]. All dimensions are in cm.

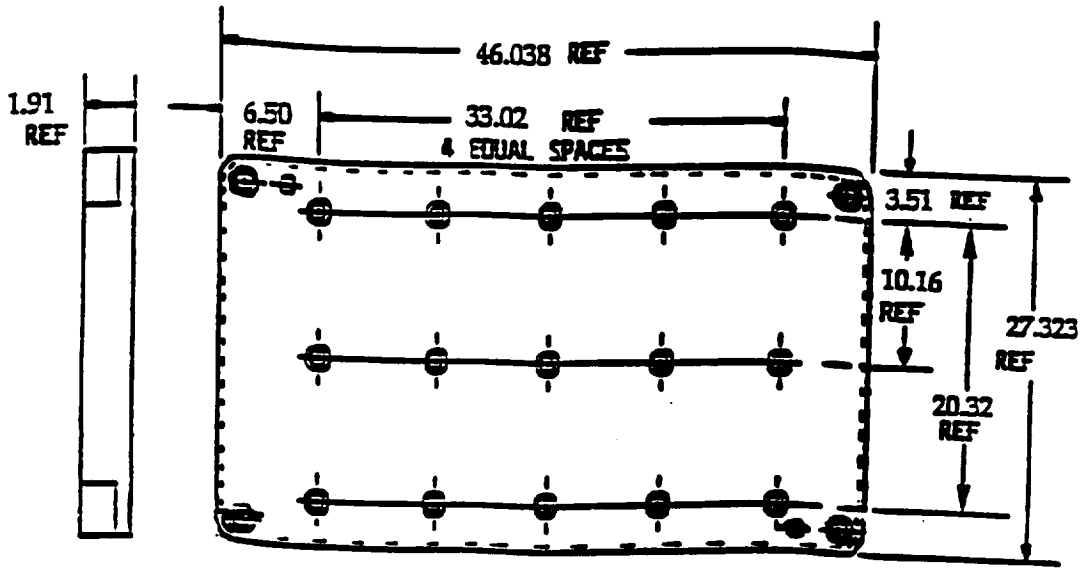

Figure C4: The single adapter plate [1]. All dimensions are in cm.

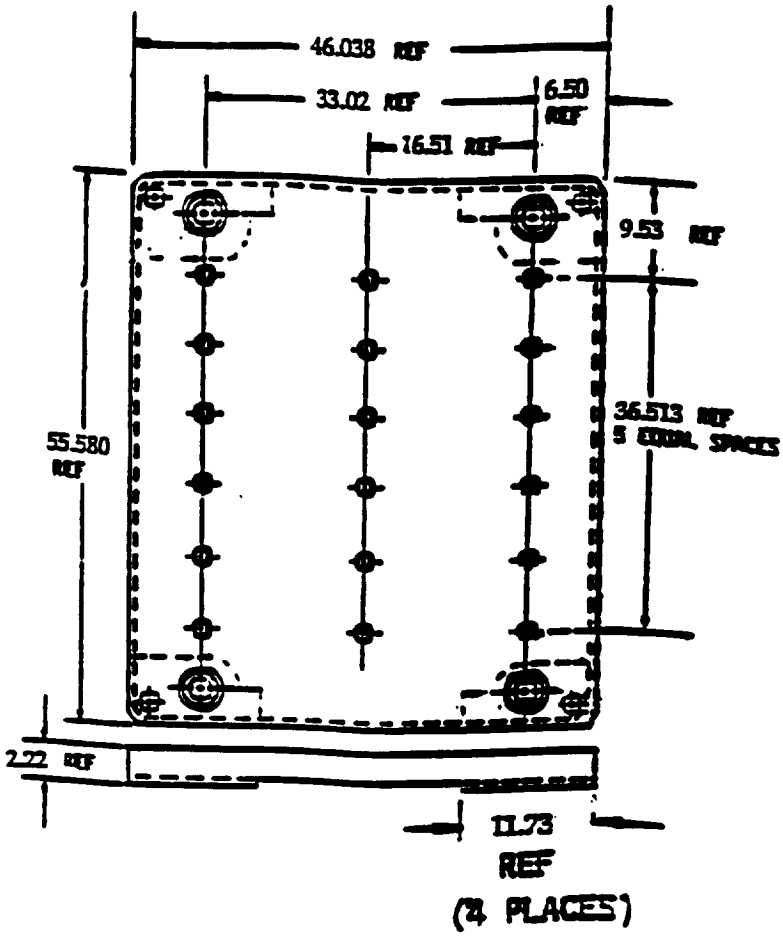

Figure C5: The double adapter plate [1]. All dimensions are in cm.

APPENDIX C: References

1. "Requirements for a Space Shuttle Resistive Exercise Device (RED)", KRUG Life Sciences, National Aeronautics and Space Administration, January 28, 1992.

APPENDIX D

Percentile Data

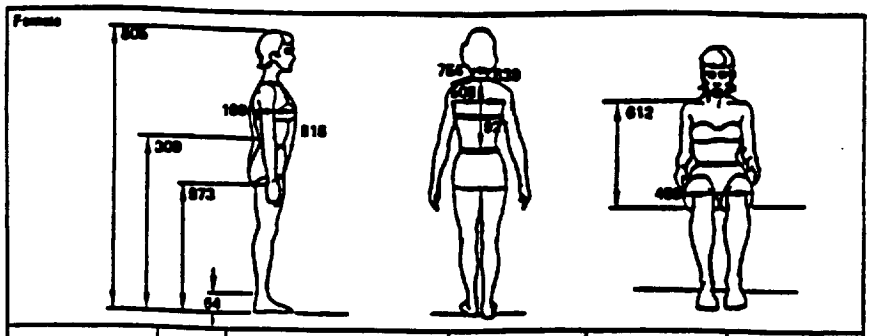

Microgravity notes	No.	Dimension	5th percentile	50th percentile	95th percentile
①	805	Stature	148.9 (58.6)	157.0 (61.8)	165.1 (65.0)
①	973	Wrist height	70.5 (27.8)	78.6 (30.9)	86.4 (32.4)
	64	Ankle height	5.2 (2.0)	6.1 (2.4)	7.0 (2.8)
①	309	Elbow height	92.5 (36.4)	98.4 (38.8)	104.1 (41.0)
	189	Bust depth	17.4 (6.9)	20.5 (8.1)	23.6 (9.3)
①	816	Vertical trunk circumference	136.9 (53.9)	146.8 (57.8)	156.2 (61.1)
② ①	612	Midshoulder height, sitting			
	459	Hip breadth, sitting	30.4 (12.0)	33.7 (13.3)	37.0 (14.6)
①	921	Waist back	35.2 (13.9)	38.1 (15.0)	41.0 (16.1)
	508	Interocular	32.4 (12.8)	35.7 (14.1)	39.0 (15.4)
	839	Neck circumference	34.6 (13.6)	37.1 (14.6)	39.7 (15.6)
	754	Shoulder length	11.3 (4.4)	13.1 (5.1)	14.8 (5.8)
					Values in cm with inches in parentheses

Notes:

a) Gravity conditions - the dimensions apply to a 1-G condition only. Dimension expected to change significatly due to microgravity are marked.

b) Measurement data - the numbers adjacent to each of the dimension are reference codes. The same codes are in Volume II of Reference 16. Reference 16, Volume II, provides additional data for these measurements plus an explanation of the measurement technique.

Notes for application of dimensions to microgravity conditions:

① Stature increases approximately 3% over the first 3 to 4 days in weightlessness (see Figure 3.2.3.1-2). Almost all of this change appear in the spinal column, and thus affects (increases) other related dimensions, such as sitting height (buttock-vertex), shoulder height -sitting, eye height, sitting, and all dimensions that include the spine.

② Sitting height would be better named as buttock-vertex in microgravity conditions, unless the crewmember were measured with a firm pressure on shoulders pressing him or her against a fixed, flat "sitting" support surface. All sitting dimensions (vertex, eye, shoulder, and elbow) increase in weightlessness by two changes:

a) Relief of pressure on the buttock surfaces (estimated increase of 1.3 to 2.0 cm (0.5 to 0.8 inches).

b) Extension of the spinal column as explained in note ① above (3% of stature on ground).

Reference: 274, page 121-128
308
351

Figure D1: Body size of the 40-year-old Japanese female for year 2000 in one gravity conditions.

ORIGINAL PAGE IS
OF POOR QUALITY

Female

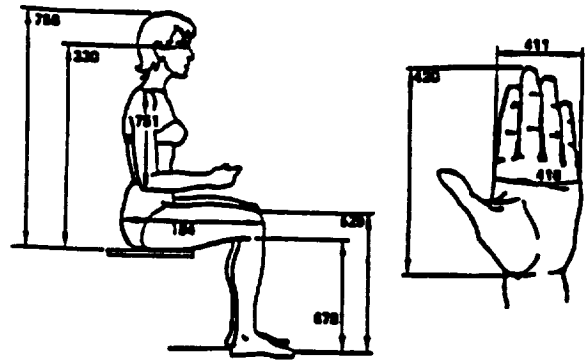

Microgravity notes	No.	Dimension	5th percentile	50th percentile	95th percentile
② ①	756	Sitting height	78.9 (30.8)	84.8 (33.4)	91.2 (35.9)
② ①	330	Eye height, sitting	68.1 (26.8)	73.8 (29.1)	79.8 (31.4)
④	520	Knee height, sitting	41.8 (16.4)	45.6 (17.9)	49.5 (19.5)
	678	Popliteal height	34.7 (13.6)	38.3 (15.1)	41.9 (16.5)
	751	Shoulder-elbow length	27.2 (10.7)	29.8 (11.7)	32.4 (12.8)
	184	Buttock-knee length	48.9 (19.3)	53.3 (21.0)	57.8 (22.7)
	430	Hand length	16.8 (6.6)	17.2 (6.8)	18.7 (7.3)
	411	Hand breadth	6.9 (2.7)	7.8 (3.1)	8.6 (3.4)
	416	Hand circumference	16.6 (6.5)	17.9 (7.0)	19.3 (7.6)

Values in cm with inches in parentheses

Notes:

a) Gravity conditions - the dimensions apply to a 1-G condition only. Dimension expected to change significatly due to microgravity are marked.

b) Measurement data - the numbers adjacent to each of the dimension are reference codes. The same codes are in Volume II of Reference 16. Reference 16, Volume II, provides additional data for these measurements plus an explanation of the measurement technique.

Notes for application of dimensions to microgravity conditions:

① Stature increases approximately 3% over the first 3 to 4 days in weightlessness (see Figure 3.2.3.1-2). Almost all of this change appear in the spinal column, and thus affects (increases) other related dimensions, such as sitting height (buttock-vertex), shoulder height-sitting, eye height, sitting, and all dimensions that include the spine.

② Sitting height would be better named as buttock-vertex in microgravity conditions, unless the crewmember were measured with a firm pressure on shoulders pressing him or her against a fixed, flat "sitting" support surface. All sitting dimensions (vertex, eye, shoulder, and elbow) increase in weightlessness by two changes:

a) Relief of pressure on the buttock surfaces (estimated increase of 1.3 to 2.0 cm (0.5 to 0.8 inches).

b) Extension of the spinal column as explained in note ① above (3% of stature on ground).

④ Knee height-sitting may increase slightly in microgravity due to relief of the pressure on the heel which it occurs when it measured on the ground. The increase is probably not more than 2 to 3 mm (0.1 inch).

Reference: 274, page 121-128
308
351

Figure D1: Body size of the 40-year-old Japanese female for year 2000 in one gravity conditions (continued).

ORIGINAL PAGE IS
OF POOR QUALITY

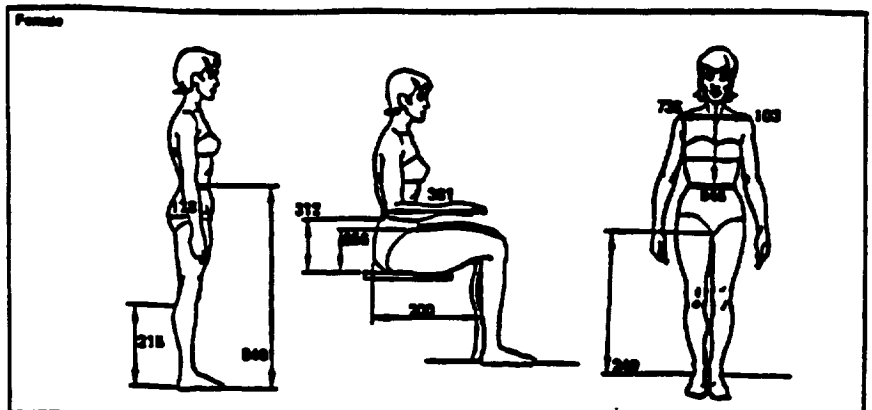

Microgravity notes	No.	Dimension	5th percentile	50th percentile	95th percentile
	840	Waist height	90.1 (35.5)	96.7 (38.1)	103.4 (40.7)
	240	Crotch height	65.2 (25.7)	70.6 (27.8)	76.1 (30.0)
	215	Calf height	25.5 (10.0)	29.0 (11.4)	32.5 (12.7)
	103	Biacromial breadth	32.4 (12.8)	35.7 (14.1)	39.0 (15.4)
①	840	Waist front			
	735	Bust circumference	32.5 (12.7)	36.1 (14.2)	39.6 (15.7)
	175	Buttock circumference	78.9 (31.0)	87.1 (34.3)	94.3 (37.1)
① ②	312	Elbow rest height	20.7 (8.2)	25.0 (9.8)	29.3 (11.5)
	555	Thigh clearance	11.2 (4.4)	12.9 (5.1)	14.5 (5.7)
	361	Forearm-hand length	37.3 (14.7)	41.7 (16.4)	44.0 (17.3)
	200	Buttock-popliteal length	37.3 (14.7)	41.7 (16.4)	45.5 (17.9)
		Values in cm with inches in parentheses			

Notes:

a) Gravity conditions - the dimensions apply to a 1-G condition only. Dimension expected to change significatly due to microgravity are marked.

b) Measurement data - the numbers adjacent to each of the dimension are reference codes. The same codes are in Volume II of Reference 16. Reference 16, Volume II, provides additional data for these measurements plus an explanation of the measurement technique.

Notes for application of dimensions to microgravity conditions:

① Stature increases approximately 3% over the first 3 to 4 days in weightlessness (see Figure 3.2.3.1-2). Almost all of this change appear in the spinal column, and thus affects (increases) other related dimensions, such as sitting height (buttock-vertex), shoulder height -sitting, eye height, sitting, and all dimensions that include the spine.

② Sitting height would be better named as buttock-vertex in microgravity conditions, unless the crewmember were measured with a firm pressure on shoulders pressing him or her against a fixed, flat "sitting" support surface. All sitting dimensions (vertex, eye, shoulder, and elbow) increase in weightlessness by two changes:

a) Relief of pressure on the buttock surfaces (estimated increase of 1.3 to 2.0 cm (0.5 to 0.8 inches).

b) Extension of the spinal column as explained in note ① above (3% of stature on ground).

Reference: 274, page 121-128 Fifth Updates
308
351

Figure D1: Body size of the 40-year-old Japanese female for year 2000 in one gravity conditions (continued).

ORIGINAL PAGE IS
OF POOR QUALITY

Female

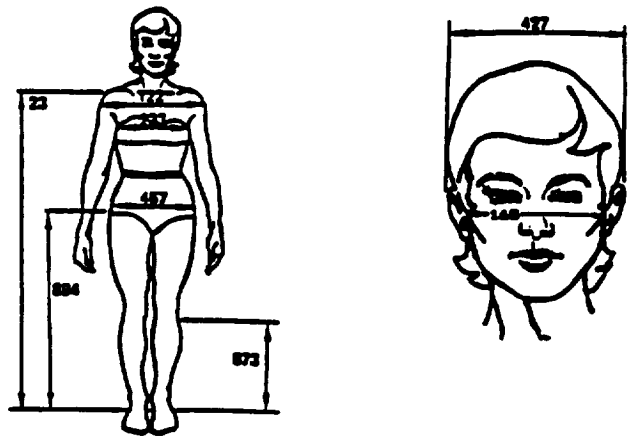

Microgravity notes	No.	Dimension	5th percentile	50th percentile	95th percentile
③ ①	23	Acromial (shoulder) height	119.6 (47.1)	127.1 (50.0)	134.5 (53.0)
	884	Trochanteric height	71.0 (28.0)	76.7 (30.2)	82.4 (32.5)
	873	Tibiale height	35.9 (14.1)	39.3 (15.5)	42.7 (16.8)
	122	Bideltoid (shoulder) breadth	35.6 (14.0)	38.9 (15.3)	42.1 (16.6)
	223	Chest breadth	24.5 (9.7)	28.6 (10.5)	29.0 (11.4)
	457	Hip breadth	30.5 (12.0)	32.9 (12.9)	35.3 (13.9)
	165	Bizygomatic (face) breadth	13.3 (5.2)	14.5 (5.7)	15.7 (6.2)
	427	Head breadth	14.4 (5.7)	15.5 (6.1)	16.8 (6.6)
					Values in cm with inches in parentheses

Notes:

a) Gravity conditions - the dimensions apply to a 1-G condition only. Dimension expected to change significatly due to microgravity are marked.

b) Measurement data - the numbers adjacent to each of the dimension are reference codes. The same codes are in Volume II of Reference 16. Reference 16, Volume II, provides additional data for these measurements plus an explanation of the measurement technique.

Notes for application of dimensions to microgravity conditions:

① Stature increases approximately 3% over the first 3 to 4 days in weightlessness (see Figure 3.2.3.1-2). Almost all of this change appear in the spinal column, and thus affects (increases) other related dimensions, such as sitting height (buttock-vertex), shoulder height-sitting, eye height, sitting, and all dimensions that include the spine.

③ Shoulder or acromial height, sitting or standing, increases during weightlessness due to two factors:

a) Removal of the gravitational pull on the arms

b) Extension of the spinal column as explained in note ① above (3% of stature on ground).

Reference: 274, page 121-128 With Updates
308
331

Figure D1: Body size of the 40-year-old Japanese female for year 2000 in one gravity conditions (continued).

Female

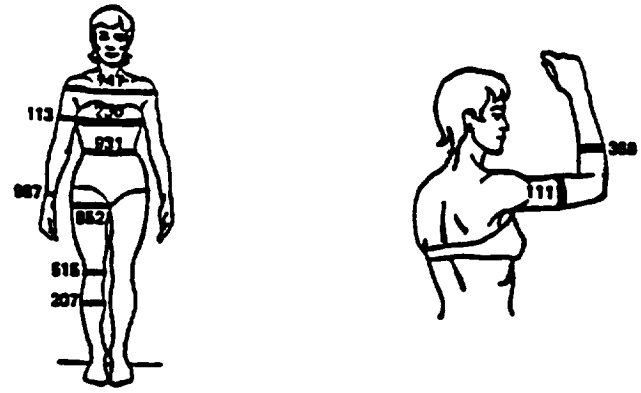

Microgravity notes	No.	Dimension	5th percentile	50th percentile	95th percentile
	747	Shoulder circumference			
	230	Chest circumference	73.2 (28.8)	82.1 (32.3)	90.9 (35.8)
⑥	931	Waist circumference	55.3 (21.8)	63.2 (24.9)	71.2 (28.0)
⑤	852	Thigh circumference	45.6 (17.9)	51.6 (20.3)	57.7 (22.7)
⑤	515	Knee circumference	31.0 (12.2)	34.6 (13.6)	38.2 (15.0)
⑤	207	Calf circumference	30.3 (11.9)	34.1 (13.4)	37.8 (14.9)
	113	Biceps circumference, relaxed	21.8 (8.6)	25.6 (10.1)	29.3 (11.5)
	987	Wrist circumference	13.7 (5.4)	15.0 (5.9)	16.2 (6.4)
	111	Biceps circumference, flexed			
	386	Forearm circumference, relaxed	18.9 (7.5)	22.0 (8.7)	24.1 (9.5)
				Values in cm with inches in parentheses	

Notes:

a) Gravity conditions - the dimensions apply to a 1-G condition only. Dimension expected to change significatly due to microgravity are marked.

b) Measurement data - the numbers adjacent to each of the dimension are reference codes. The same codes are in Volume II of Reference 16. Reference 16, Volume II, provides additional data for these measurements plus an explanation of the measurement technique.

Notes for application of dimensions to microgravity conditions:

⑤ Leg circumferences and diameters significantly decrease during the first day in microgravity. See Reference 16, Appendix C, for details and measurements of actual persons.

⑥ Waist circumference will decrease in microgravity due to fluid shifts to the upper torso. See Figure 3.2.3.1-2 for measurements on actual persons.

Reference: 274, page 121-128
308
251

Figure D1: Body size of the 40-year-old Japanese female for year 2000 in one gravity conditions (continued).

Female

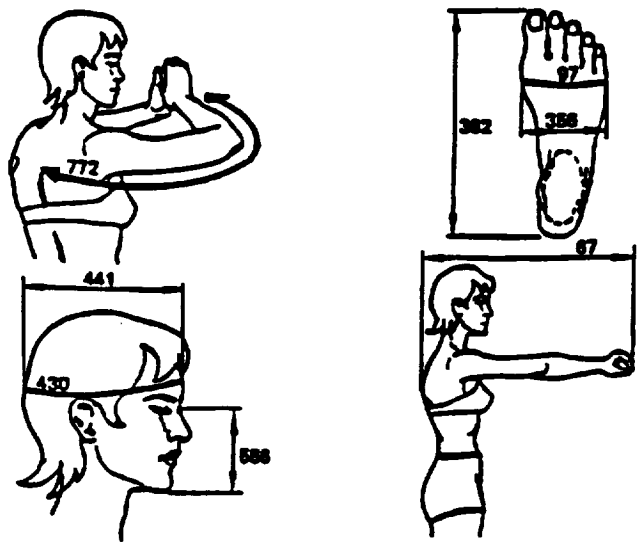

Microgravity notes	No.	Dimension	5th percentile	50th percentile	95th percentile
	67	Thumb-tip reach	65.2 (25.7)	71.6 (28.2)	78.0 (30.7)
	772	Sleeve length			
	441	Head length	16.7 (6.6)	18.2 (7.2)	19.6 (7.7)
	430	Head circumference	53.2 (20.9)	55.2 (21.7)	57.2 (22.5)
	588	Menton-sellion (face) length	9.0 (3.5)	10.8 (4.2)	12.6 (5.0)
	382	Foot length	21.3 (8.4)	22.9 (9.0)	24.4 (9.6)
	358	Foot breadth	8.6 (3.4)	9.3 (3.7)	10.0 (3.9)
	97	Ball of foot circumference	21.0 (8.3)	22.7 (8.9)	24.3 (9.6)
					Values in cm with inches in parentheses

Reference: 274, page 121-128 With Updates
308
351

Notes:

a. Gravity conditions — the dimensions apply to a 1-G condition only. Dimension expected to change significantly due to microgravity are marked.
b. Measurement data — the numbers adjacent to each of the dimensions are reference codes. The same codes are in Volume II of Reference 16. Reference 16, Volume II, provides additional data for these measurements plus an explanation of the measurement technique.

MSIS 268
11 of 13
Rev. A

Figure D1: Body size of the 40-year-old Japanese female for year 2000 in one gravity conditions (continued).

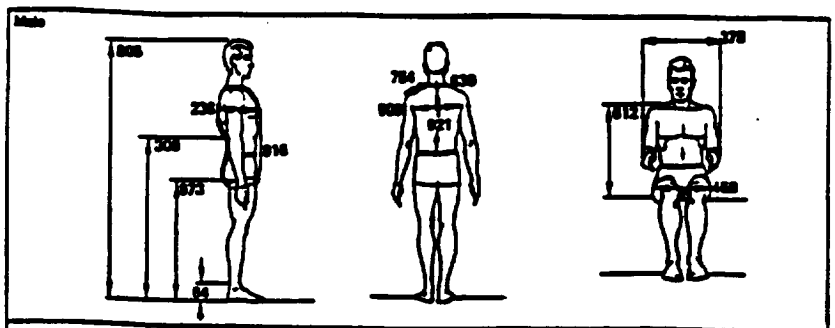

Microgravity notes	No.	Dimension	5th percentile	50th percentile	95th percentile
①	805	Stature	169.7 (66.8)	179.9 (70.8)	190.1 (74.8)
①	973	Waist height			
	84	Ankle height	12.0 (4.7)	13.9 (5.5)	15.8 (6.2)
①	308	Sitting height			
	230	Bust depth	21.8 (8.6)	25.0 (9.8)	28.2 (11.1)
①	916	Vertical trunk circumference	169.7 (66.8)	179.7 (67.3)	182.6 (71.9)
② ①,	612	Midshoulder height, sitting	69.8 (27.5)	69.4 (27.7)	70.0 (27.5)
	469	Hip breadth, sitting	34.6 (13.6)	38.4 (15.1)	42.3 (16.6)
①	921	Waist back	43.7 (17.2)	47.8 (18.8)	51.8 (20.3)
	506	Interocye	32.9 (13.0)	39.2 (15.4)	45.4 (17.9)
	638	Neck circumference	35.8 (14.0)	38.7 (15.2)	41.9 (16.5)
	754	Shoulder length	14.0 (5.5)	18.9 (6.7)	19.0 (7.5)
	378	Forearm-forearm breadth	48.8 (19.2)	55.1 (21.7)	61.5 (24.2)
				Values in cm with inches in parentheses	

Notes:

a) Gravity conditions - the dimensions apply to a 1-G condition only. Dimension expected to change significatly due to microgravity are marked.

b) Measurement data - the numbers adjacent to each of the dimension are reference codes. The same codes are in Volume II of Reference 16. Reference 16, Volume II, provides additional data for these measurements plus an explanation of the measurement technique.

Notes for application of dimensions to microgravity conditions:

① Stature increases approximately 3% over the first 3 to 4 days in weightlessness (see Figure 3.2.3.1-2). Almost all of this change appear in the spinal column, and thus affects (increases) other related dimensions, such as sitting height (buttock-vertex), shoulder height -sitting, eye height, sitting, and all dimensions that include the spine.

② Sitting height would be better named as buttock-vertex in microgravity conditions, unless the crewmember were measured with a firm pressure on shoulders pressing him or her against a fixed, flat "sitting" support surface. All sitting dimensions (vertex, eye, shoulder, and elbow) increase in weightlessness by two changes:

a) Relief of pressure on the buttock surfaces (estimated increase of 1.3 to 2.0 cm (0.5 to 0.8 inches).

b) Extension of the spinal column as explained in note ① above (3% of stature on ground).

Reference: 274, page 121-128
308
351

Figure D2: Body size of the 40-year-old American male for year 2000 in one gravity conditions.

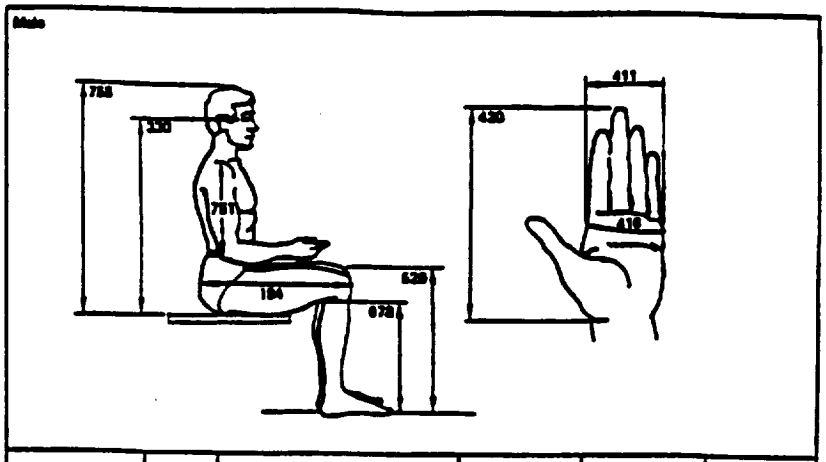

Microgravity notes	No.	Dimension	5th percentile	50th percentile	95th percentile
② ①	758	Sitting height	88.9 (35.0)	94.2 (37.1)	98.5 (38.8)
② ①	330	Eye height, sitting	78.8 (30.5)	81.9 (32.2)	86.9 (34.2)
④	528	Knee height, sitting	52.6 (20.7)	56.7 (22.3)	60.9 (24.0)
	678	Popliteal height	40.6 (16.0)	44.4 (17.5)	48.1 (19.0)
	751	Shoulder-elbow length	32.7 (12.9)	36.6 (14.4)	39.4 (15.5)
	194	Buttock-knee length	55.8 (22.0)	61.3 (24.1)	65.9 (25.9)
	420	Hand length	17.3 (7.0)	19.3 (7.6)	20.6 (8.1)
	411	Hand breadth	8.2 (3.2)	8.9 (3.5)	9.6 (3.8)
	416	Hand circumference	20.3 (8.0)	21.6 (8.5)	23.4 (9.2)
Volume in cm with inches in parentheses					

Notes:

a) Gravity conditions - the dimensions apply to a 1-G condition only. Dimension expected to change significatly due to microgravity are marked.

b) Measurement data - the numbers adjacent to each of the dimension are reference codes. The same codes are in Volume II of Reference 16. Reference 16, Volume II, provides additional data for these measurements plus an explanation of the measurement technique.

Notes for application of dimensions to microgravity conditions:

① Stature increases approximately 3% over the first 3 to 4 days in weightlessness (see Figure 3.2.3.1-2). Almost all of this change appear in the spinal column, and thus affects (increases) other related dimensions, such as sitting height (buttock-vertex), shoulder height-sitting, eye height, sitting, and all dimensions that include the spine.

② Sitting height would be better named as buttock-vertex in microgravity conditions, unless the crewmember were measured with a firm pressure on shoulders pressing him or her against a fixed, flat "sitting" support surface. All sitting dimensions (vertex, eye, shoulder, and elbow) increase in weightlessness by two changes:

a) Relief of pressure on the buttock surfaces (estimated increase of 1.3 to 2.0 cm (0.5 to 0.8 inches).

b) Extension of the spinal column as explained in note ① above (3% of stature on ground).

④ Knee height-sitting may increase slightly in microgravity due to relief of the pressure on the heel which it occurs when it measured on the ground. The increase is probably not more than 2 to 3 mm (0.1 inch).

Reference: 274, page 121-128
308
351

Figure D2: Body size of the 40-year-old American male for year 2000 in one gravity conditions (continued).

C-2

ORIGINAL PAGE IS
OF POOR QUALITY

Male

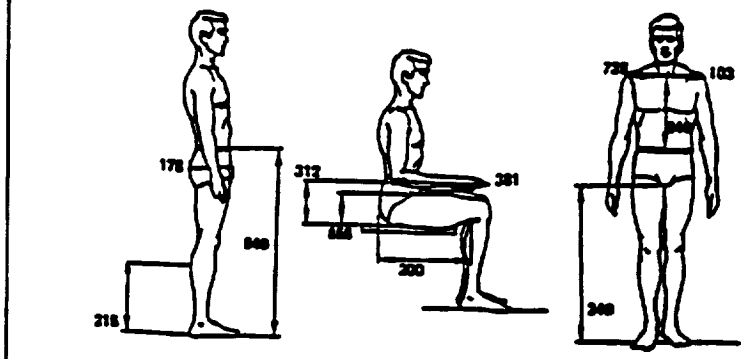

Microgravity notes	No.	Dimension	5th percentile	50th percentile	95th percentile
	948	Waist height	100.4 (39.5)	106.3 (42.0)	118.2 (46.7)
	249	Crotch height	78.4 (31.0)	88.4 (34.8)	93.3 (36.7)
	215	Calf height	32.5 (12.8)	36.2 (14.3)	40.0 (15.7)
	103	Biacromial breadth	37.3 (14.9)	44.1 (16.2)	44.3 (17.5)
①	946	Waist front	37.2 (14.6)	46.0 (18.1)	44.6 (17.5)
	736	Bust circumference	44.4 (17.5)	49.0 (19.3)	53.6 (21.1)
	178	Buttock circumference	91.0 (35.8)	100.2 (39.4)	109.4 (43.1)
① ②	312	Elbow rest height	21.1 (8.3)	25.4 (10.0)	29.7 (11.7)
	856	Thigh clearance	14.5 (5.7)	16.8 (6.6)	19.1 (7.5)
	381	Forearm-hand length			
	200	Buttock-popliteal length	46.9 (18.5)	51.2 (20.2)	55.5 (21.9)
			Volume in cm with inches in parentheses		

Notes:

a) Gravity conditions - the dimensions apply to a 1-G condition only. Dimension expected to change significatly due to microgravity are marked.

b) Measurement data - the numbers adjacent to each of the dimension are reference codes. The same codes are in Volume II of Reference 16. Reference 16, Volume II,provides additional data for these measurements plus an explanation of the measurement technique.

Notes for application of dimensions to microgravity conditions:

① Stature increases approximately 3% over the first 3 to 4 days in weightlessness (see Figure 3.2.3.1-2). Almost all of this change appear in the spinal column, and thus affects (increases) other related dimensions, such as sitting height (buttock-vertex), shoulder height -sitting, eye height, sitting, and all dimensions that include the spine.

② Sitting height would be better named as buttock-vertex in microgravity conditions, unless the crewmember were measured with a firm pressure on shoulders pressing him or her against a fixed, flat "sitting" support surface. All sitting dimensions (vertex, eye, shoulder, and elbow) increase in weightlessness by two changes:

a) Relief of pressure on the buttock surfaces (estimated increase of 1.3 to 2.0 cm (0.5 to 0.8 inches).

b) Extension of the spinal column as explained in note ① above (3% of stature on ground).

Reference: 274, page 121-128 Fifth Updates
308
351

Figure D2: Body size of the 40-year-old American male for year 2000 in one gravity conditions (continued).

ORIGINAL PAGE IS
OF POOR QUALITY

Male

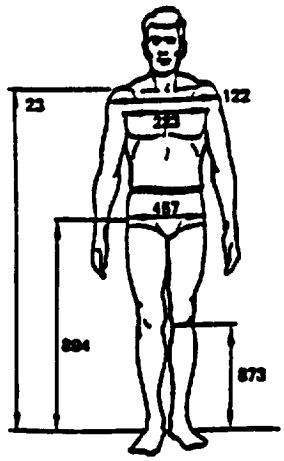

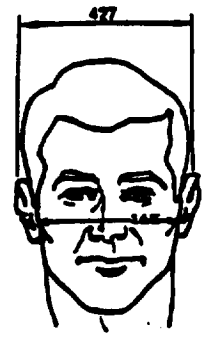

Microgravity notes	No.	Dimension	5th percentile	50th percentile	95th percentile
③ ①	23	Acromial (shoulder) height	138.0 (54.3)	147.6 (58.1)	157.3 (61.9)
	884	Trochanteric height	88.3 (34.8)	95.8 (37.8)	102.9 (40.5)
	873	Tibiale height			
	122	Bideltoid (shoulder) breadth	44.6 (17.6)	48.9 (19.3)	53.2 (20.9)
	223	Chest breadth	29.7 (11.7)	33.2 (13.1)	36.7 (14.4)
	457	Hip breadth	32.7 (12.9)	35.8 (14.1)	38.8 (15.4)
	165	Bizygomatic (face) breadth	13.4 (5.3)	14.9 (5.9)	16.1 (6.3)
	427	Head breadth	14.8 (5.8)	15.7 (6.2)	16.5 (6.5)
				Values in cm with inches in parentheses	

Notes:

a) Gravity conditions - the dimensions apply to a 1-G condition only. Dimension expected to change significatly due to microgravity are marked.

b) Measurement data - the numbers adjacent to each of the dimension are reference codes. The same codes are in Volume II of Reference 16. Reference 16, Volume II, provides additional data for these measurements plus an explanation of the measurement technique.

Notes for application of dimensions to microgravity conditions:

① Stature increases approximately 3% over the first 3 to 4 days in weightlessness (see Figure 3.2.3.1-2). Almost all of this change appear in the spinal column, and thus affects (increases) other related dimensions, such as sitting height (buttock-vertex), shoulder height-sitting, eye height, sitting, and all dimensions that include the spine.

③ Shoulder or acromial height, sitting or standing, increases during weightlessness due to two factors:

a) Removal of the gravitational pull on the arms

b) Extension of the spinal column as explained in note ① above (3% of stature on ground).

Reference: 274, page 121-128 With Updates
308
351

Figure D2: Body size of the 40-year-old American male for year 2000 in one gravity conditions (continued).

Male

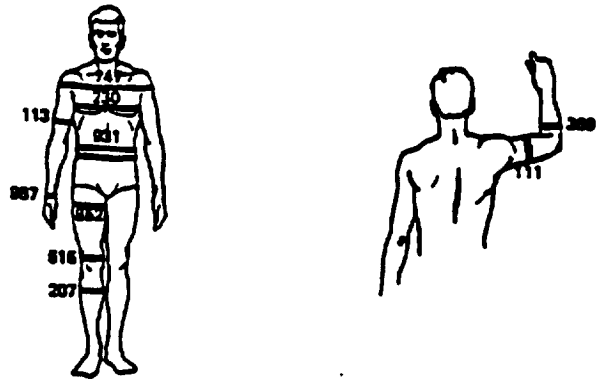

Microgravity notes	No.	Dimension	5th percentile	50th percentile	95th percentile
	747	Shoulder circumference	109.5 (43.1)	119.2 (46.9)	128.8 (50.7)
	230	Chest circumference	88.4 (35.2)	100.0 (39.4)	110.6 (43.5)
ⓐ	931	Waist circumference	77.1 (30.3)	88.6 (35.2)	101.9 (40.1)
ⓑ	852	Thigh circumference	52.5 (20.7)	60.0 (23.6)	67.4 (26.5)
ⓒ	516	Knee circumference	35.9 (14.1)	39.4 (15.5)	42.9 (16.9)
ⓓ	207	Calf circumference	33.9 (13.3)	37.5 (14.8)	41.4 (16.3)
	113	Biceps circumference, relaxed	27.3 (10.7)	31.2 (12.3)	35.1 (13.8)
	987	Wrist circumference	16.2 (6.4)	17.7 (7.0)	19.3 (7.6)
	111	Biceps circumference, flexed	28.4 (11.2)	33.2 (13.1)	36.9 (14.5)
	389	Forearm circumference, relaxed	27.4 (10.8)	30.1 (11.8)	32.7 (12.9)
					Values in cm with inches in parentheses

Notes:

a) Gravity conditions - the dimensions apply to a 1-G condition only. Dimension expected to change significatly due to microgravity are marked.

b) Measurement data - the numbers adjacent to each of the dimension are reference codes. The same codes are in Volume II of Reference 16. Reference 16, Volume II, provides additional data for these measurements plus an explanation of the measurement technique.

Notes for application of dimensions to microgravity conditions:

ⓒ Leg circumferences and diameters significantly decrease during the first day in microgravity. See Reference 16, Appendix C, for details and measurements of actual persons.

ⓓ Waist circumference will decrease in microgravity due to fluid shifts to the upper torso. See Figure 3.2.3.1-2 for measurements on actual persons.

Reference: 274, page 121-128
308
351

Figure D2: Body size of the 40-year-old American male for year 2000 in one gravity conditions (continued).

Male

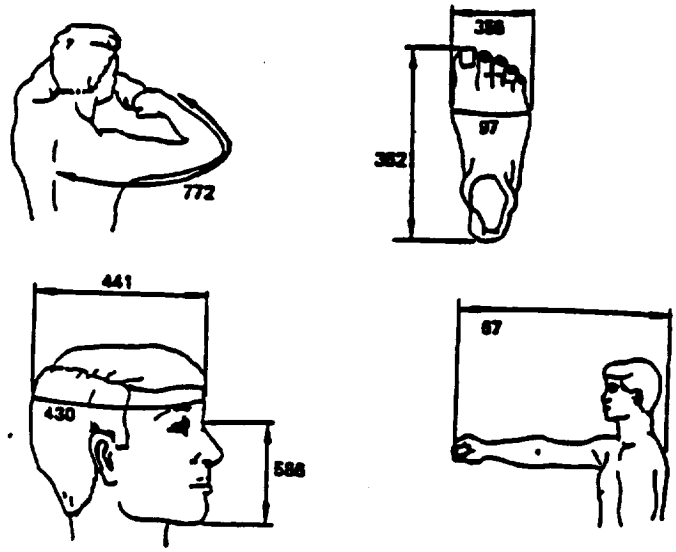

Microgravity notes	No.	Dimension	5th percentile	50th percentile	95th percentile
	67	Thumb-tip reach	74.9 (29.5)	81.6 (32.1)	88.2 (34.7)
	772	Sleeve length	86.2 (33.9)	92.0 (36.2)	97.9 (38.5)
	441	Head length	18.8 (7.4)	20.0 (7.9)	21.1 (8.3)
	430	Head circumference	55.5 (21.8)	57.8 (22.8)	60.2 (23.7)
	586	Menton-sellion (face) length	11.1 (4.4)	12.1 (4.8)	13.1 (5.2)
	382	Foot length	25.4 (10.0)	27.3 (10.8)	29.3 (11.5)
	356	Foot breadth	9.0 (3.5)	9.9 (3.9)	10.7 (4.2)
	97	Ball of foot circumference	23.1 (9.1)	25.1 (9.9)	27.2 (10.7)
					Values in cm with inches in parentheses

Reference: 274, page 121-128
308
351

Notes:

a. Gravity conditions — the dimensions apply to a 1-G condition only. Dimension expected to change significantly due to microgravity are marked.
b. Measurement data — the numbers adjacent to each of the dimensions are reference codes. The same codes are in Volume II of Reference 16. Reference 16, Volume II, provides additional data for these measurements plus an explanation of the measurement technique.

MSIS-268
12 of 13

Figure D2: Body size of the 40-year-old American male for year 2000 in one gravity conditions (continued).

APPENDIX D: References

1. "Requirements for a Space Shuttle Resistive Exercise Device (RED)", KRUG Life Sciences, National Aeronautics and Space Administration, January 28, 1992.

APPENDIX E

Sketches of Rejected Methods of Supplying Force

PNEUMATIC SPRINGS

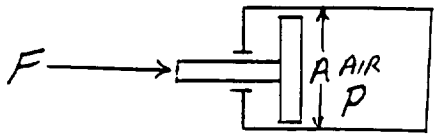

F = FORCE
A = PISTON AREA
P = INTERNAL PRESSURE

A CONSTANT FORCE RESPONSE MAY BE ACHIEVED BY ATTACHING A LARGE RESERVOIR TO THE PISTON CHAMBER.

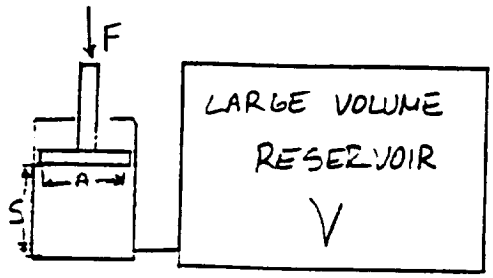

$V \gg As$

HYDRAULIC

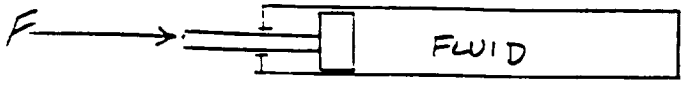

MAGNETIC

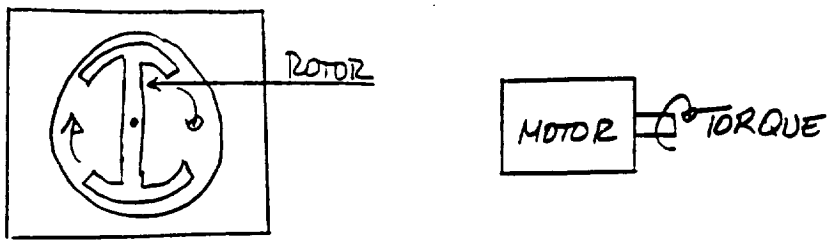

ELASTIC BANDS

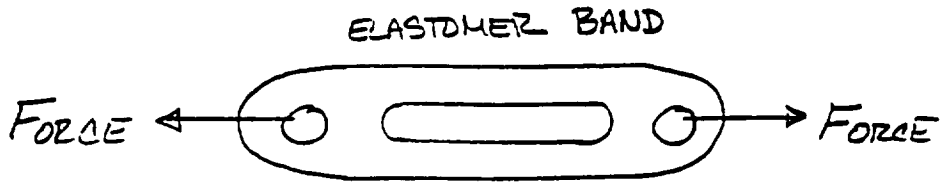

CLUTCH

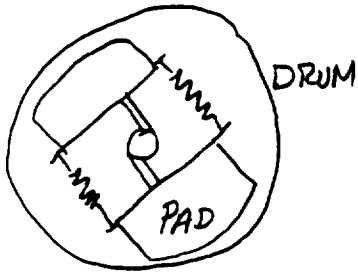

BAND BRAKES

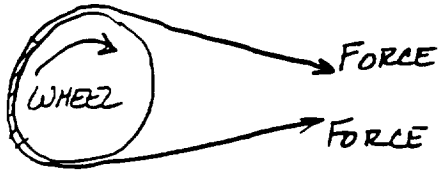

APPENDIX F

Force Supply Weighting Factors and Decision Matrix

Force Supply Weighting Factors

Parameter	Tally Marks	Weighting Factor
Constant force	•••••••	0.25
Increments	••••••	0.21
Load	•••••	0.18
Weight	••••	0.14
Size	•••	0.11
Safety	••	0.07
Life	•	0.04

Force Supply Decision Matrix

Parameters

Alternatives \ Factors	Constant Force	Incre-ments	Load	Weight	Size	Safety	Life	Total
	0.25	0.21	0.18	0.14	0.11	0.07	0.04	1.00
Rods	5 / 1.25	8 / 1.68	3 / 0.54	3 / 0.42	3 / 0.33	8 / 0.56	5 / 0.2	**4.98**
CFS	10 / 2.5	10 / 2.1	8 / 1.44	10 / 1.4	8 / 0.88	5 / 0.35	5 / 0.2	**8.87**
Standard Springs	3 / 0.75	8 / 1.68	3 / 0.54	5 / 0.7	5 / 0.55	5 / 0.35	5 / 0.2	**4.77**

APPENDIX G

Force Adjustment Weighting Factors and Decision Matrix

Force Adjustment Weighting Factors

Parameters	Tally Marks	Weighting Factor
Ease of operation	••••	0.4
Precision	•••	0.3
Traditional feel	•	0.1
Weight	•	0.1
Simplicity	•	0.1

Force Adjustment Decision Matrix

Parameters

Alternatives \ Factors	Ease of Operation	Precision	Trad. Feel	Weight	Simplicity	Total
	0.4	0.3	0.1	0.1	0.1	1.0
ΔG/ΔS	2 / 0.8	8 / 2.4	5 / 0.5	3 / 0.3	3 / 0.3	4.3
ΔG	3 / 1.2	7 / 2.1	5 / 0.5	3 / 0.3	3 / 0.3	4.4
ΔS	10 / 4.0	8 / 2.4	9 / 0.9	7 / 0.7	8 / 0.8	8.8

APPENDIX H

Hunter Spring Catalog

Stock spring products

Neg'ator extension springs

The NEG'ATOR constant force extension springs listed below are available from stock for immediate shipment from established distributors or directly from the factory (see price list SP-2 for ordering information). These springs can be used by designers to assist in the development of product prototypes or supplied in small production quantities.

Application of these springs is detailed on page 4 of this brochure. All stock extension springs are supplied in Type 301 stainless steel with hole punches in the free ends (see schematic below for fastening). The wide variety of sizes and load capacities available permit you to closely match a spring to your application at a considerable savings over a custom-designed spring (minor modifications can be made when required).

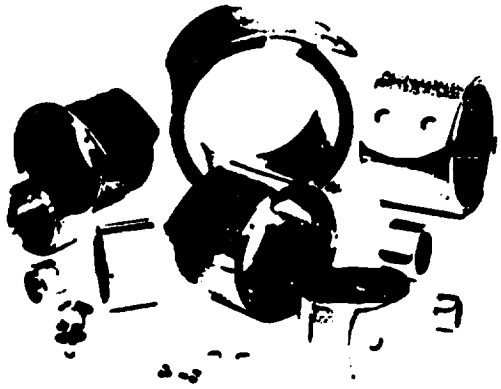

EXTENSION SPRING SELECTION TABLE

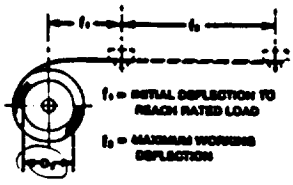

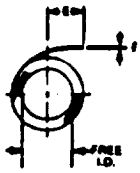

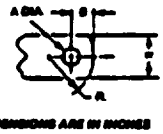

DIMENSIONS ARE IN INCHES

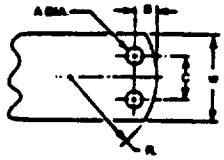

PART NUMBER	LOAD LBS ±10%	DRUM* DIA (Di)	FREE I.D. (REF)	f_i	f_o	(1) THICKNESS	(IN) WIDTH	BAND LENGTH	NO. OF HOLES	R	A DIA	B	C	E
FATIGUE LIFE—[illegible] CYCLES MINIMUM														
SH3C10	.37	.281	.210	.30	6	.003	.107	10	1	5/32	.005	.000	—	5/32
SH4C14	.40	.340	.291	5.35	12	.004	.107	14	1	5/32	.005	.000	—	5/32
SH4D14	.60	.340	.291	5.35	12	.004	.250	14	1	5/32	.131	.187	—	5/32
SH4E14	.83	.340	.291	5.35	12	.004	.312	14	1	5/32	.131	.187	—	5/32
SH6E15	1.03	.435	.383	.600	12	.006	.312	15	1	5/32	.131	.187	—	5/32
SH8F21	1.40	.523	.438	.700	18	.008	.375	21	1	1/4	.191	.344	—	1/4
SH8G21	1.97	.523	.438	.700	18	.008	.500	21	1	1/4	.191	.344	—	1/4
SH8G28	2.63	.807	.561	1.00	24	.008	.500	28	1	1/4	.191	.344	—	1/4
SH8J28	3.70	.807	.561	1.00	24	.008	.625	28	1	1/4	.191	.344	—	1/4
SH10J29	4.12	.873	.727	1.31	24	.010	.625	29	1	1/4	.191	.344	—	7/16
SH10K29	4.95	.873	.727	1.31	24	.010	.750	29	1	1/4	.191	.344	—	7/16
SH12K36	5.94	1.000	.873	1.56	30	.012	.750	36	1	1/4	.191	.344	—	1/2
SH12P36	7.92	1.000	.873	1.56	30	.012	1.000	36	1	1 3/16	.193	.375	—	3/4
SH16P36	10.00	1.400	1.160	2.1	30	.016	1.000	36	1	1 3/16	.193	.375	—	3/4
SH20R47	14.50	1.750	1.400	2.6	36	.020	1.250	47	1	1 3/16	.193	.375	—	3/4
SH20S47	19.00	1.750	1.400	2.63	36	.020	1.500	47	2	1 3/16	.250	.625	.750	3/4
SH25S48	24.00	2.100	1.630	3.27	36	.025	1.500	48	2	1 3/16	.250	.625	.750	1 1/4
SH25U48	33.00	2.100	1.630	3.27	36	.025	2.000	48	2	1 3/16	.250	.625	.750	1 1/4
SH31U56	40.00	2.710	2.200	4.0	42	.031	2.000	56	2	1 3/16	.250	.625	.750	1 1/4
FATIGUE LIFE—12,000 CYCLES MINIMUM														
SK4D19	.33	.533	.444	.80	12	.004	.250	19	1	7/32	.131	.187	—	1/4
SK4E19	.40	.533	.444	.80	12	.004	.312	19	1	7/32	.131	.187	—	1/4
SK5E19	.40	.666	.555	1.00	12	.005	.312	19	1	7/32	.131	.187	—	9/16
SK6F23	.71	.799	.666	1.20	18	.006	.375	23	1	1/4	.191	.344	—	1/2
SK6G23	.95	.799	.666	1.20	18	.006	.500	23	1	1/4	.191	.344	—	1/2
SK8G30	1.30	1.06	.888	1.60	24	.008	.500	30	1	1/4	.191	.344	—	1/2
SK8J30	1.90	1.06	.888	1.60	24	.008	.625	30	1	1/4	.191	.344	—	1/2
SK10J32	1.95	1.33	1.11	2.00	24	.010	.625	32	1	1/4	.191	.344	—	9/16
SK10K32	2.37	1.33	1.11	2.00	24	.010	.750	32	1	1/4	.191	.344	—	9/16
SK12K40	2.84	1.59	1.33	2.30	30	.012	.750	40	1	1/4	.191	.344	—	5/8
SK12P40	3.79	1.59	1.33	2.30	30	.012	1.000	40	1	1 3/16	.193	.375	—	5/8
SK15P42	4.76	1.99	1.66	2.90	30	.015	1.00	42	1	1 3/16	.193	.375	—	1
SK18P47	5.60	2.40	2.00	3.60	32	.018	1.500	47	1	1 3/16	.193	.375	—	1 1/8
SK20S52	9.40	2.66	2.22	3.97	36	.020	1.500	52	2	1 3/16	.250	.625	.750	1 1/4
SK25S57	11.9	3.33	2.78	5.00	36	.025	1.500	57	2	1 3/16	.250	.625	.750	1 1/2
SK25U57	15.8	3.33	2.78	5.00	36	.025	2.000	57	2	1 3/16	.250	.625	.750	1 1/2
SK31U66	19.6	4.12	3.44	6.18	42	.031	2.000	66	2	1 3/16	.250	.625	.750	2

APPENDIX I

Development of System Equation

DEVELOPMENT OF THE SYSTEM EQUATION

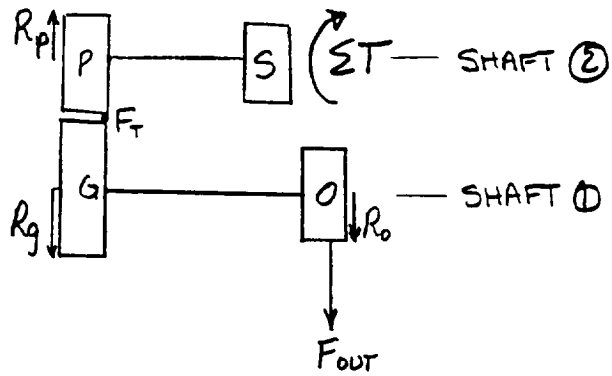

ΣT - SUM OF SPRING TORQUES

P - PINION

G - GEAR

O - OUTPUT SPOOL

F_{out} - OUTPUT FORCE

F_T - FORCE BETWEEN GEARS

$$\Sigma T = T_{②} \qquad F_{OUT} R_o = T_{①}$$

AND

$$T_{②} = R_p F_T \qquad T_{①} = F_T R_g$$

$$F_T = T_{②}/R_p \qquad F_T = T_{①}/R_g$$

$$F_T = F_T$$

SO

$$\frac{\Sigma T}{R_p} = \frac{T_{①}}{R_g} = \frac{F_{OUT} R_o}{R_g}$$

$$\underline{\underline{F_{OUT} = \left(\frac{\Sigma T}{R_o}\right)\left(\frac{R_g}{R_p}\right)}}$$

APPENDIX J

Iterations and Spreadsheet

Simplified drawing of system:

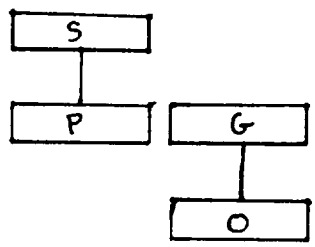

System equation as developed in Appendix I:

$$F_o R_o = \Sigma T_2 (R_g/R_p)$$

$$F_o R_o/(R_g/R_p) = \Sigma T_2$$

Using the chosen value of R_o = 1.5 in., for several values of R_g/R_p, ΣT_2 was calculated for the entire range of F_o.

This number, ΣT_2 (in lb), is the REQ TORQ 2 on the spreadsheet.

Also, R_{tu} must be greater than twice R_i, and R_{tu} will be constant for all spring sizes.

For each R_i (spring size), the team calculated the torque produced at the take-up spool for various values of R_{tu}.

This value is TQ TU 7IN on the spreadsheet (torque per spring with a take-up diameter of 7 in).

Torque equation:

$$T = (Ebt^3 R_{tu}/24)(1/R_i - 1/R_{tu})^2$$

For example, from spreadsheet for a gear ratio of 3:1 and take-up diameter equal to 7 in:

F_o	ΣT_2	
30 lb	15 in lb	springs of 2 lb and 4 lb are required 2 lb spring produces 5.52 in lb torque 4 lb spring produces 10.26 in lb torque total of 15.78 in lb when 15 in lb was desired
210 lb	105 in lb	springs of 4, 6, 15, 30 lb ar required 4 lb spring produces 10.26 in lb torque 6 lb spring produces 13.87 in lb torque 15 lb spring produces 30.0 in lb torque 30 lb spring produces 50.92 in lb torque total of 105.05 in lb when 105 in lb was desired

This procedure was repeated for all values of ΣT_2 with gear ratio of 3:1 and take-up diameter of 7 in.

This data is given at the end of this appendix.

The same procedure was repeated for other values of the gear ratio and take-up diameters.

After determining which springs were required for each ΣT_2, the total number of springs and their sizes were recorded.

The gear ratio of 3:1 and take-up diameter of 7 in is the optimal solution for minimizing the number and sizes of springs required to produce the necessary ΣT_2.

This combination requires a system of 10 springs as follows:

1	2 lb
1	4 lb
1	6 lb
1	15 lb
5	30 lb

Spring Data for Gear Ratio 3:1
Take-up Diameter of 7 in

Required Torque (in lb)	Spring Sizes (lb)						Actual Torque (in lb)
15	4	2					15.78
25	6	5					26.18
35	15	2					35.52
45	14	4	2				45.78
55	30	2					56.44
65	30	4	2				66.7
75	30	6	4				75.05
85	30	15	2				86.44
95	30	15	4	2			96.7
105	30	15	6	4			105.05
115	30(2)	6					115.71
125	30(2)	6	4				125.97
135	30(2)	6	5	2			133.54
145	30(2)	15	6				145.71
155	30(2)	15	6	4			155.97
165	30(2)	15	6	5	2		163.54
175	30(3)	5	4				175.33
185	30(3)	6	5	2			184.46
195	30(3)	6	5	4	2		194.72
205	30(3)	15	5	4			205.33
215	30(3)	15	6	5	2		214.46
225	30(3)	15	6	5	4	2	224.72
235	30(4)	15					233.68
245	30(4)	15	5				245.99
255	30(4)	15	5	4			256.25
265	30(4)	15	6	5	2		265.38
275	30(4)	15	6	5	4	2	275.64
285	30(5)	15					284.6
295	30(5)	15	4				294.86
300	30(5)	15	4	2			300.38

	A	B	C	D	E	F	G	H	I	J
1										
2						EQN 1		EQN 2		EQN 3
3										THICKNESS OF
4	EST LOAD LB	ACT LOAD LB	DRUM DIA IN	THICKNESS IN	WIDTH IN	TQ TU 7IN	TU DIAM IN	NEW RAD IN.	NEW DIAM IN.	SPRING IN.
5	2	1.97	0.523	0.006	0.5	5.52137084	7	0.94319799	1.88639598	0.68169799
6	4	4.12	0.873	0.01	0.625	10.2618588	7	1.2487057	2.49741139	0.8122057
7	5	4.95	0.873	0.01	0.75	12.3142306	7	1.2487057	2.49741139	0.8122057
8	6	5.94	1.05	0.012	0.75	13.872	7	1.38495682	2.76991364	0.85995682
9	15	16.5	1.75	0.02	1.25	30	7	1.87165497	3.74330994	0.99665497
10	30	33	2.18	0.025	2	50.9225163	7	2.14707572	4.29415145	1.05707572
11										
12										
13	EQN 4			EQN 5						
14										
15	REQ TORQ 2	ACT TORQ 2	REQ F OUT	ACT F OUT	10 % DIFF	ACT % DIFF	ACT LB DIFF	RG/RP	RO	
16	15	15.78	30	31.56	3	5.2	1.56	3	1.5	
17	25	26.18	50	52.36	5	4.72	2.36	3	1.5	
18	35	35.52	70	71.04	7	1.48571429	1.04	3	1.5	
19	45	45.78	90	91.56	9	1.73333333	1.56	3	1.5	
20	55	56.44	110	112.88	11	2.61818182	2.88	3	1.5	
21	65	66.7	130	133.4	13	2.61538462	3.4	3	1.5	
22	75	75.05	150	150.1	15	0.06666667	0.1	3	1.5	
23	85	86.44	170	172.88	17	1.69411765	2.88	3	1.5	
24	95	96.7	190	193.4	19	1.78947368	3.4	3	1.5	
25	105	105.5	210	211	21	0.47619048	1	3	1.5	
26	115	115.71	230	231.42	23	0.6173913	1.42	3	1.5	
27	125	125.97	250	251.94	25	0.776	1.94	3	1.5	
28	135	133.54	270	267.08	27	1.08148148	2.92	3	1.5	
29	145	145.71	290	291.42	29	0.48965517	1.42	3	1.5	
30	155	155.97	310	311.94	31	0.62580645	1.94	3	1.5	
31	165	163.54	330	327.08	33	0.88484848	2.92	3	1.5	
32	175	175.33	350	350.66	35	0.18857143	0.66	3	1.5	
33	185	184.46	370	368.92	37	0.29189189	1.08	3	1.5	
34	195	194.72	390	389.44	39	0.14358974	0.56	3	1.5	
35	205	205.33	410	410.66	41	0.16097561	0.66	3	1.5	
36	215	214.46	430	428.92	43	0.25116279	1.08	3	1.5	
37	225	224.72	450	449.44	45	0.12444444	0.56	3	1.5	
38	235	233.68	470	467.36	47	0.56170213	2.64	3	1.5	
39	245	245.99	490	491.98	49	0.40408163	1.98	3	1.5	
40	255	256.25	510	512.5	51	0.49019608	2.5	3	1.5	
41	265	265.38	530	530.76	53	0.14339623	0.76	3	1.5	
42	275	275.64	550	551.28	55	0.23272727	1.28	3	1.5	
43	285	284.6	570	569.2	57	0.14035088	0.8	3	1.5	
44	295	294.86	590	589.72	59	0.04745763	0.28	3	1.5	
45	300	300.38	600	600.76	60	0.12666667	0.76	3	1.5	

Spreadsheet Equations

EQN 1

$$\frac{G}{2}\left(\frac{1}{24}\right)\left(28 \times 10^6 * E * D^3\right)\left(\frac{1}{C/2} - \frac{1}{G/2}\right)^2$$

EQN 2

$$\text{SQRT}\left[\left(\frac{430 * D}{\pi}\right) + \frac{C^2}{4}\right]$$

where 430 = length of spring

EQN 3

$$H - \frac{C}{2}$$

EQN 4

$$\frac{C * I}{H}$$

Note: all letters refer to column headings

EQN 5

$$\frac{B * H}{I}$$

APPENDIX K

Design Calculations

APPENDIX K-1

Cable and Reels

APPENDIX K-2

Gears

From Mechanical Engineering Design by Shigley and Mischke.

The minimum number of Tooth to avoid interference with Normal Pressure angle $\phi = 20^\circ$ is 15 for m_G (gear ratio) to be 3:1 and the diameter to be 2.5 for Pinion.

Hence, N_p (Number of Pinion teeth) = 15

N_G (Number of Gear Teeth) = 45

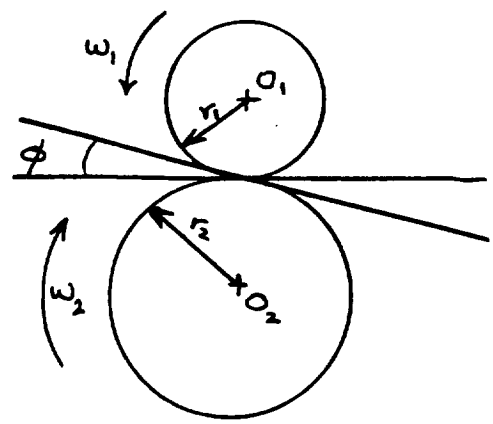

For a better meshing of the two gears and low speeds (max ω = 80rev/min). Diametral Pitch is 6 teeth/inch. The velocity ratio of -3 is needed to attain diffrent loads.

$$\frac{r_g}{r_p} = -\text{velocity ratio} = -(-3)$$

$\because$ r_p of 1.25 inch is needed

$$r_g = 3(1.25) = 3.75 \text{ in}$$

or $d_p = \underline{\underline{2.5 \text{ in}}}$, $d_g = \underline{\underline{7.5 \text{ in}}}$

$$P = \frac{N_p}{d_p}$$, $P = 6$ teeth/in of d_p

$d_p = 2.5$ in

$$6 = \frac{N_p}{2.5}$$

$N_p = \underline{\underline{15}}$ which is exactly the number of teeth needed to prevent Interference.

$$P = \frac{N_g}{d_g}$$

$$d_g = 6(7.5) = \underline{\underline{45}}$$

From iterations, addenda of $a_g = 0.06$ in & $a_p = 0.29$ in is good. For further safety concerns the pressure angle could be increase to 25° which would eliminate any back lash present.

Using the equation from Fundamentals of Machine Component Design by Juvinall and Marshek.

$$CR = \frac{\sqrt{r_{ap}^2 - r_{bp}^2} + \sqrt{r_{ag}^2 - r_{bg}^2} - c \sin\phi}{P_b}$$

we get a Contact Ratio of 1.39. which is more than sufficient to achieve any Interference

To Calculate the width of gear, AISI 1020 Steel was used due to its yield strength value of 30 kpsi. For further Safety $n = \underline{\underline{3}}$

$$V = \frac{\pi d n}{12} = \frac{\pi(2)(240)}{12} = 126 \text{ ft/min}$$

$$K_v = \frac{1200}{1200+V} = \frac{1200}{1200+126} = 0.905$$

from Table 14-2 from Shigley and Mischke

$y = 0.296$.

$$w_t = \frac{K_v F \sigma_{all}}{P}$$

$$F = \frac{w_t P}{K_v \sigma_{all}} = \frac{600(8)}{(0.905)(6\times10^3)(2)}$$

$$F = \underline{\underline{1.49 \text{ in}}}$$

Therefore a face width of 1.5 inch is more than sufficient to provide a gearing to handle 600 lbs.

APPENDIX K-3

Spring Length

Spring Length Calculation:

Diameter of Takeup Spool = 7 in $\quad \frac{r_p}{r_a} = 3$ in

Rotation on Shaft 3 = 6.366 revs

$\therefore$ Rotation on Shaft 2 = 19.098 rev

$\therefore$ Length of Spring = $\pi D \omega = \pi(7)(19.098)$

$= 419.98$ in

$\therefore$ Length of Spring = <u>420 inches</u>

APPENDIX K-4

Pins

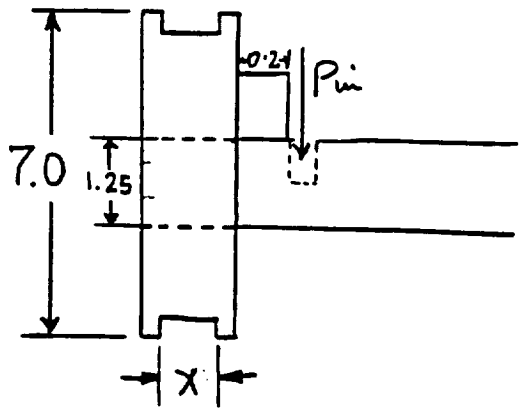

Depending on the Spring Used, X varies from 0.5 inch to 2 inch

Torque exerted by the Spring onto the Shaft is 50.925 in-lb from SpreadSheet. See Apendix J

$$T = F \cdot \perp d$$

$$50.925 \text{ in-lb} = F \cdot (0.2 \text{ in})$$

$$F = 254.625 \text{ lb.}$$

$$S = \frac{F}{A}$$

material Selected SS 301

$$S = 90 \text{ Ksi}$$

Taking a factor of Safety of 2

$$A = \frac{F}{S} = \frac{254.625}{45}$$

$$\frac{\pi d^2}{4} = 5.658 \times 10^{-3}$$

$$d^2 = 8.2 \times 10^{-3}$$

$$d = \underline{\underline{0.09 in}}$$

for Safety Concerns and the fact that such a Pin would be hard to manufacture, we decided to go with a Pin diameter of $\underline{\underline{0.23 in}}$

$$\therefore d_{Pin} = \underline{\underline{0.23 in}}$$

This value was also double checked by using the following formula from Machinery Handbook.

$$d_{Pin} = 1.13 \sqrt{\frac{T}{DS}}$$

where,

T = Torque

D = Major diameter of Shaft.

S = Shear force.

$$d_{Pin} = \underline{\underline{0.09 in}}$$

APPENDIX K-5

Shafts

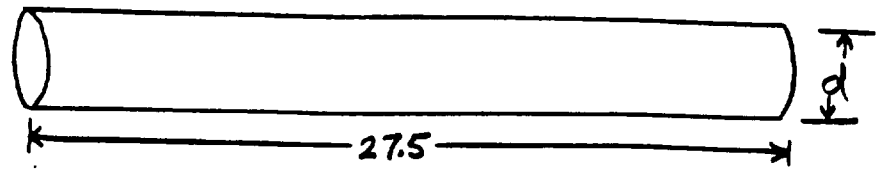

Analysis on Shaft 1.

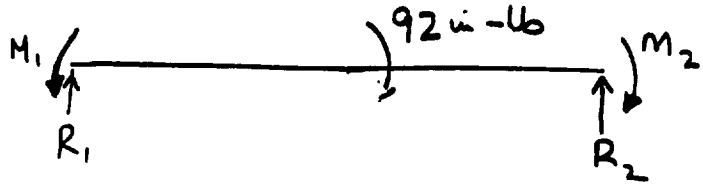

$$R_1 = -R_2 = \frac{92}{27.5} = 3.345 \text{ lb}$$

$$V = 3.345 \text{ lbs}$$

$$M_1 = \frac{92x}{27.5}$$

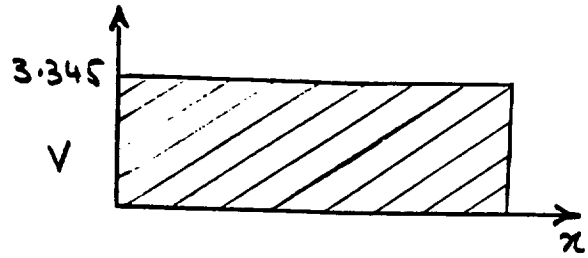

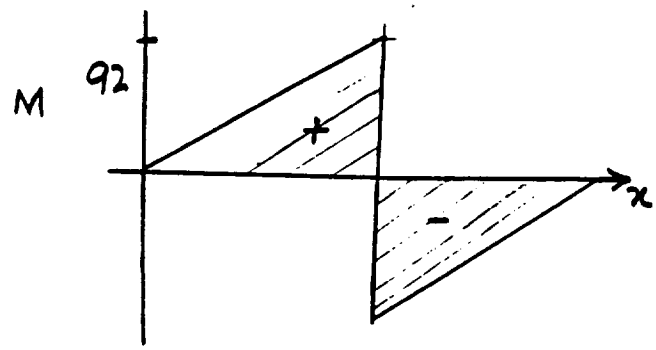

Therefore, the Supports much be able to absorb a force of 3.345 lb / side.

$$\sigma_y = 40 Ksi \quad , n = 2$$

$$\sigma_y = \frac{F}{A}$$

$$A = \frac{3.345}{20 \times 10^3} = 1.6725 \times 10^{-4} \text{ in}^2$$

If, the Support is Circular

$$\frac{\pi d^2}{4} = 1.6725 \times 10^{-4}$$

$$d^2 = 2.129 \times 10^{-4}$$

$$d = \underline{\underline{0.015 \text{ in}}}$$

After further Consideration, we decided to go with fixed Supports having and outer diameter of $\underline{\underline{0.75 \text{ in}}}$ and an inner diameter of $\underline{\underline{0.5 \text{ in.}}}$

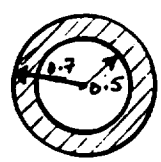

These Supports are Casted into the Overall Configuration.

Torsional Analysis on Shaft 1.

$$\sigma = \frac{16M}{\pi d^3} \qquad \tau = \frac{16T}{\pi d^3}$$

Maximum Torque = 92 - in - lb , $n = 2$. $\sigma = \frac{40\times10^3}{2} = 20\times10^3$ lb/in²

$$20\times10^3 = \frac{16(92)}{\pi d^3}$$

$$d^3 = \frac{16(92)}{20\times10^3}$$

$$d = 0.419 \text{ in}$$

∴ a Shaft diameter of 0.5 in is resonable.

If under pure Torsion, then

$$\tau = \frac{16T}{\pi d^3}$$

$$d^3 = \frac{16(92)}{\pi(8100)}$$

$$d = 0.38 \text{ in}$$

∴ Shaft will hold pure Torsion.

we can now apply the distortion-energy theory

$$\sigma_x = \frac{32M}{\pi d^3} = \frac{32(92)}{\pi(0.5)^3} = 1215.28 \text{ psi}$$

$$\tau_{xz} = \frac{16T}{\pi d^3} = \frac{16(92)}{\pi(0.5)^3} = 607.64 \text{ psi}$$

Using Von Mises Stress:

$$\sigma' = (\sigma_x^2 + 3\tau_{xz}^2)^{1/2}$$

$$\sigma' = ((1215.28)^2 + 3(607.64)^2)^{1/2}$$

$$\sigma' = 1607.66 \text{ psi}$$

$$F = \frac{\sigma_y}{\sigma'} = \frac{40\times10^3}{1607.66} = \underline{\underline{24.88 \text{ lb.}}}$$

$$\text{Since } 24.88 \text{ lb}(4.36 \text{ in}) = \underline{\underline{108.48 \text{ in-lb} < 92 \text{ in-lb}}}$$

The shaft will be strong enough to withstand a torque of 92 in-lb.

Analysis on Shaft 2

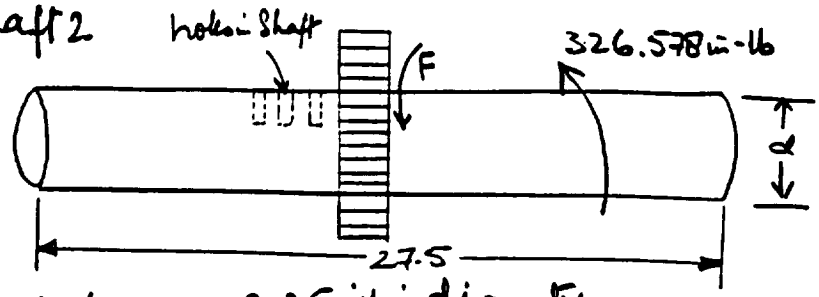

These holes are 0.25 inch in diameter.

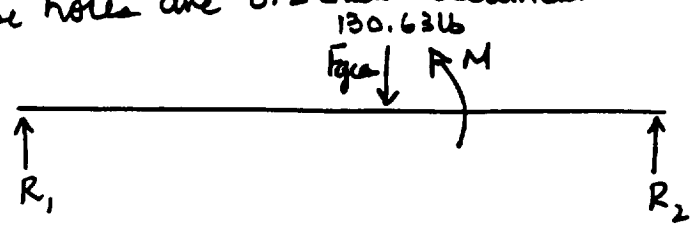

$\Sigma F_y = 0 \qquad R_1 + R_2 = 130.63$

Since, the gear is placed mid-way between the shaft

$R_1 = R_2 \qquad 2R_1 = 130.63$

$R_2 = R_1 = 65.31 \text{ lb}$

$V = 65.31 \text{ lb}$

$M_{max} = 1796.16 \text{ in-lb}$

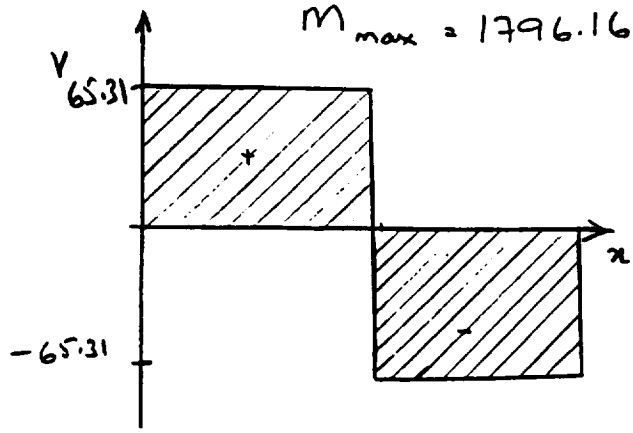

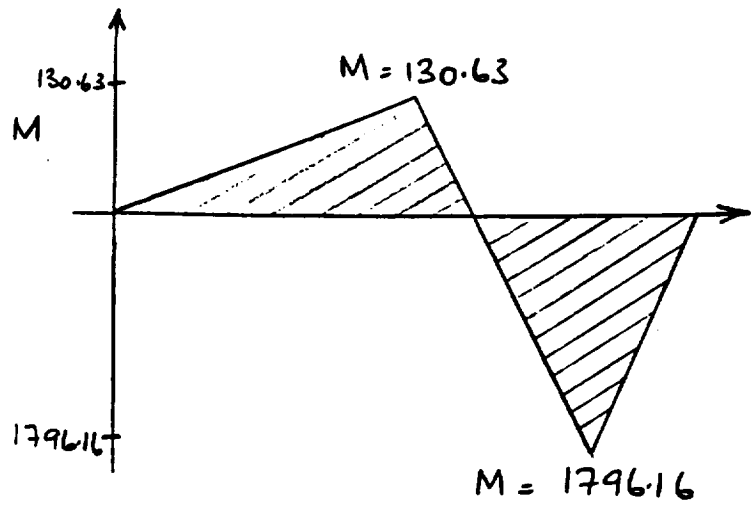

Therefore, the Supports holding this shaft must be able to handle a shear force of 65.31 lb and Torques of 130.63 and 1796.16 close to the centre.

$$\sigma = \frac{M}{I/c} \qquad I/c = \frac{\pi}{32} d^3$$

$$20 \times 10^3 = \frac{1796.16}{\frac{\pi}{32} d^3}$$

$$d = 0.97 \text{ in}$$

Therefore, we decided to go with a Shaft of diameter 1.25 inch.

Now, the Supports must be such that they provide both axial + shear loading.

$$\sigma = \frac{F}{A}$$

$$A = \frac{6531}{20\times10^{3}}$$

$$A = 3.265\times10^{-3}\ in^{2}$$

$$\frac{\pi d^{2}}{4} = 3.265\times10^{-3}$$

$$d = 0.06\ inch$$

we decided to go with Two Supports at the ends and Two Supports near the gear. None of them being fixed to the Shaft. See Bearing Calculations for further Analysis on Supports

As Can be Seen from the Moment diagram, maximum Moment occurs near the Centre and towards one end. Therefore 4 supports is a good idea

Torsional Analysis on Shaft 2.

$$\sigma = \frac{16M}{\pi d^3} \quad , \quad \tau = \frac{16T}{\pi d^3}$$

$T_{max} = 326.58$ in-lb. $n = 2$, $\sigma = 40 \times 10^3$

$$\tau = \frac{16T}{\pi d^3}$$

$$8100 = \frac{16(326.58)}{\pi d^3}$$

$$d^3 = 0.4107$$

$$d = 0.743 \text{ in}$$

Since, a hole is drilled Transversely of 0.25 inch in diameter, It is Sufficient to keep the Shaft diameter to 1.25 inch.

Analysis on the drilled holes in Shaft 2.

Check for fatigue and static failures.

$S_{ut} = 45$ Ksi $\quad S_{yt} = 40$ Ksi

Endurance Limit: $S_e' = 0.504\, S_{ut}$ if $S_{ut} \leq 200$ Kpsi

$$S_e' = 0.504(45) = 22.68 \text{ Ksi}$$

Surface Factor K_a: Since it is ground from Table 7-4

$$K_a = a\, S_{ut}^{b}$$

$$K_a = (1.34)(45)^{-0.085}$$

$$K_a = 0.96$$

Size Factor K_b:

$$K_b = \left(\frac{d}{0.3}\right)^{-0.1133}$$

$$K_b = \left(\frac{1.25}{0.3}\right)^{-0.1133}$$

$$K_b = 0.85$$

The remaining Marin factors are all unity.

$$S_e = (0.96)(0.85)(22.68)$$

$$S_e = 18.5 \text{ Ksi}$$

From Table A-15-11 (Shigley and Mischke)

$$\frac{d}{D} = \frac{0.25}{1.25} = 0.2$$

$$A = 0.68 \quad , K_t = 2.07$$

for Bending:

$$Z_{net} = \frac{\pi A}{32 D}(D^4 - d^4)$$

$$Z_{net} = \frac{\pi (0.68)}{32(1.25)}\left[(1.25)^4 - (0.25)^4\right]$$

$$Z_{net} = 0.078 \text{ in}^3$$

From fig 5-16 (Shigley & Mischke)

the notch sensitivity $q = 0.55$

$\therefore$ fatigue Stress-Concentration factor K_f

$$K_f = 1 + q(K_t - 1)$$

$$K_f = 1 + 0.55(2.07 - 1) = 1.588$$

$$K_{fs} = 1 + 0.73(1.454 - 1) = 1.33$$

$$\sigma_x = K_f \frac{M}{Z_{net}}$$

$$\sigma_x = \frac{(1.588)(1796.16)}{0.078}$$

$$\sigma_x = 36579.48 \text{ psi}$$

for Torsion, $J_{net} = \frac{\pi A}{32}(D^4 - d^4)$

$$J_{net} = \frac{\pi(0.77)}{32}\left((1.25)^4 - (0.25)^4\right)$$

$$J_{net} = 0.11 \text{ in}^4$$

$$\tau_{xy} = K_{fs} \frac{TD}{2J_{net}}$$

$$\tau_{xy} = \frac{(1.33)(326.58)(1.25)}{2(0.11)}$$

$$\tau_{xy} = 2467.9 \text{ psi}$$

$$\sigma_A, \sigma_B = \frac{\sigma_x}{2} \pm \left[\left(\frac{\sigma_x}{2}\right)^2 + \tau_{xy}^2 \right]^{1/2}$$

$$\sigma_A, \sigma_B = \frac{36579.48}{2} \pm \left[\left(\frac{36579.48}{2}\right)^2 + (2467.9)^2 \right]^{1/2}$$

$$\sigma_A, \sigma_B = 18289.74 \pm 18455.49 = -0.165 \text{ Ksi}$$

or 3.674 Ksi

Using Von Misco Stress

$$\sigma' = (\sigma_A^2 - \sigma_A \sigma_B + \sigma_B^2)^{1/2}$$

$$\sigma' = ((3.674)^2 - (3.674)(-0.165) + (-0.165)^2)^{1/2}$$

$$\sigma' = 3.6823 \text{ Ksi}$$

$$\therefore n = \frac{S_e}{\sigma'} = \frac{18.5}{3.6823} = \underline{\underline{5.024}}$$

$\therefore$ factor of safety of 5 is guarding against a fatigue failure.

Hence, we dont have to worry about fatigue

Analysis on Shaft 3.

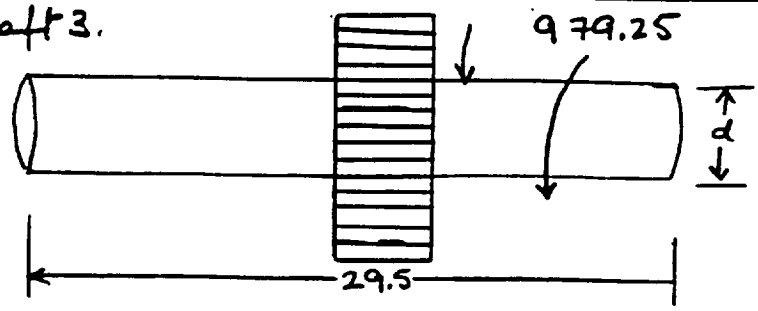

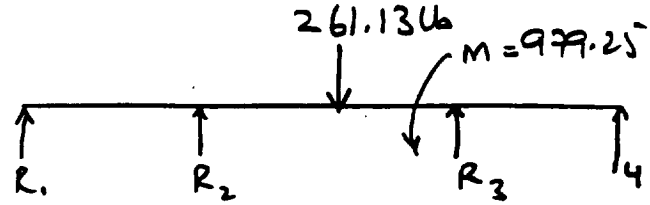

$\Sigma F_y = 0 \quad R_1 + R_2 + R_3 + R_4 = 261.13$

Since the gear is placed midway between the shaft $R_1 = R_2 = R_3 = R_4$

$4R_1 = 261.13$

$R_1 = 65.23$ lb/support

$V = 65.23$ lb.

$M_{max} = 3851.6675$ lb-in

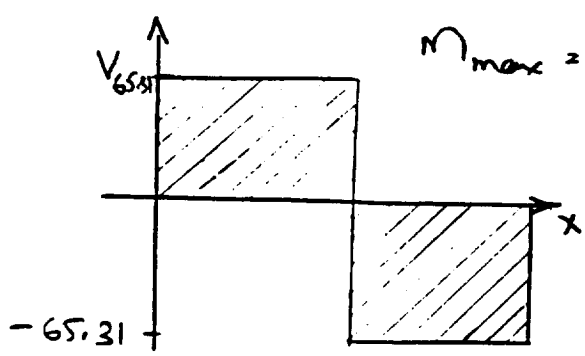

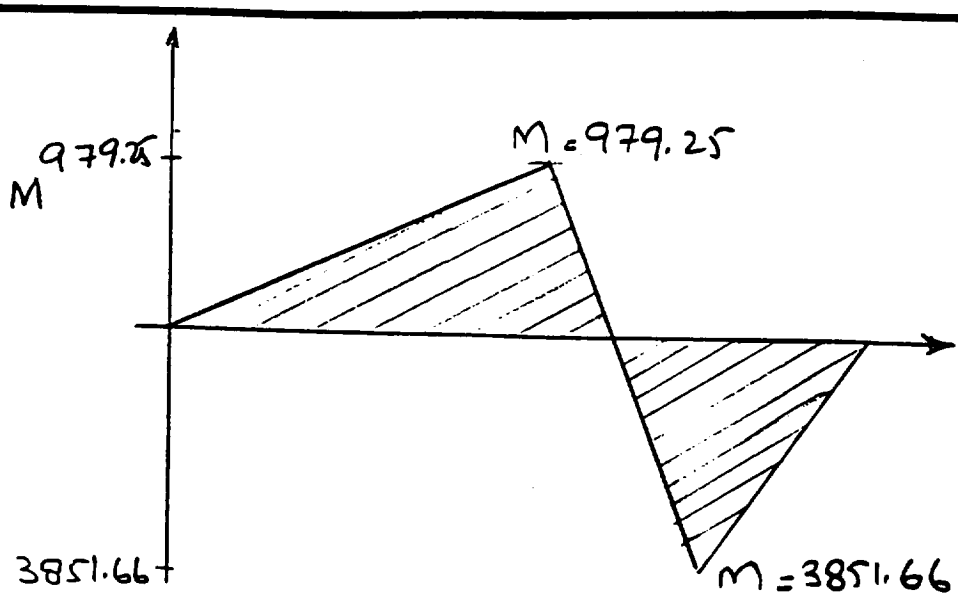

$$\sigma = \frac{M}{I/c} \qquad n = 2$$

$$20 \times 10^3 = \frac{3851.66}{\frac{\pi}{32} d^3}$$

$$d = 1.25$$

Therefore the shaft diameter of 1.25 inch is sufficient.

$$\sigma = \frac{F}{A}$$

$$\frac{\pi d^2}{4} = \frac{65.23}{20 \times 10^3}$$

$$d = 0.06 \text{ inch.}$$

Therefore A Support with bearings placed in the middle we used to make sure that supports donot fail.

Taking weight into account, Circular Supports were chosen due to their geometry for Axial Torsional Capabilities.

As Can be Seen from the Moment diagram, Maximum Moment occurs near the gear, therefore we opted to go with 2 Supports near the Centre

Torsional Analysis.

$$\tau = \frac{16T}{\pi d^3}$$

$$8100 = \frac{16(979.25)}{\pi d^3}$$

$$d = 0.85 in$$

with $n = 2$, $d = 1.07 in$

Deflection of Shaft $\theta = \frac{32TL}{\pi G D^4}$

$$\theta = \frac{(32)(979.4)(29.5)}{\pi(3.9\times10^6 psi)(1.25)^4}$$

$$\theta = 0.00073 rad$$

$$\therefore \theta = 0.045 degrees.$$

Therefore it is safe to use $d = 1.25 in$ shaft as an output shaft to handle 979.25 in-lb of Torque

APPENDIX K-6

Bearings

Bearing Selection:-

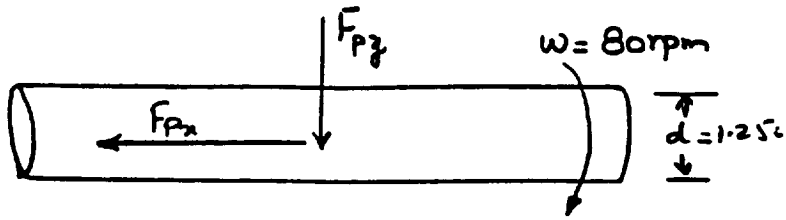

From Previous Calculation from Appendix

$F_{py} = 130.63$ lbf.

$F_{px} = 179.56$ lbf

$$F_e = F_r \left[1 + 1.115 \left(\frac{F_r}{F_r} - 0.35 \right) \right]$$

$$F_e = 179.56 \left[1 + 1.115 \left(\frac{130.63}{179.56} - 0.35 \right) \right]$$

$$F_e = \underline{\underline{255.14}} \text{ lbf}$$

Consider Light Impact on bearings, every time the shaft rotates. The Application factor $\underline{\underline{K_a = 1.3}}$ also, Consider the Bearing to have a life of $\underline{\underline{500}}$ hour life

Assuming a reliability of 90% ($K_r = 1$)

$$L_R = 90 \times 10^6 \text{ rev.}$$

$$C_{req} = F_e K_a \left(L / K_r L_R \right)^{0.3}$$

$$C_{req} = (255.14)(1.3)\left[2.4\times10^6 / 90\times10^6 \right]^{0.3}$$

$$C_{req} = 111.82 \text{ lbf.}$$

For our geometry, The Bore must be 32mm.

From Hyatt Bearing Catalog

we Choose, Roller 1000x1t

Note: These bearings are overdesigned for Our Purposes, for we require a max force that is 40% of the bearings Capacity. Custom built bearings would be a much better way to go for they would save us alot of weight.

The Dimension of Bearing 1000x1t are

OD = 55mm, w = 10mm, radius of roller = 0.64mm

APPENDIX K-7

Housing

ANALYSIS ON BOX :

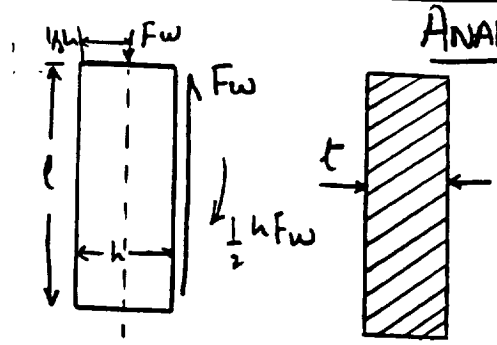

Looking at Section along y - Axis

$$I = \frac{bh^3}{12}$$

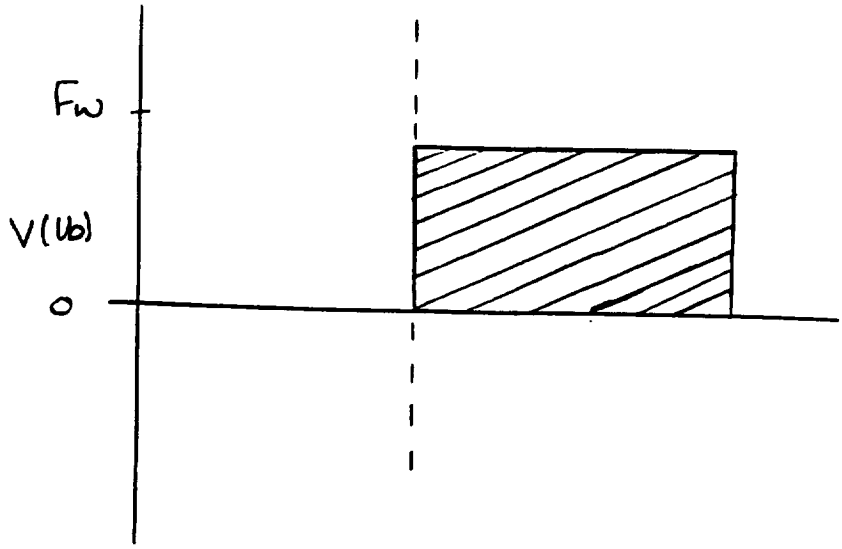

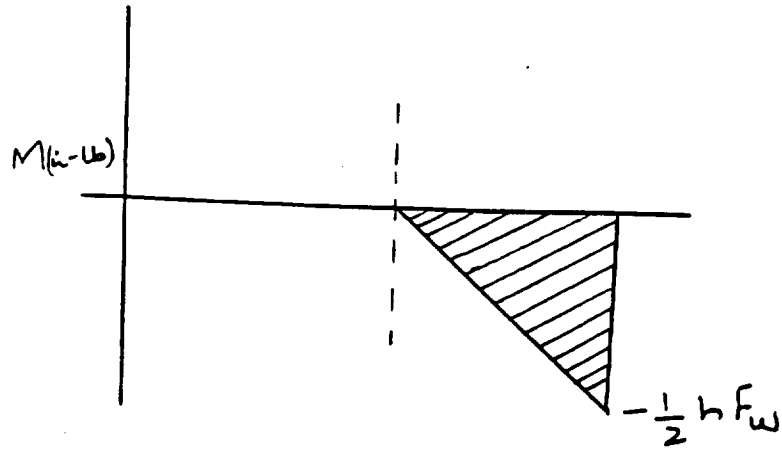

$0 < x < \frac{1}{2} h$

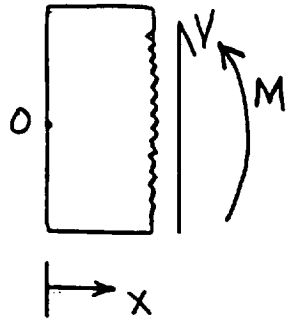

$\Sigma F_y = 0 \qquad \underline{V = 0}$

$\Sigma M = 0 \qquad \underline{M = 0}$

$\frac{1}{2} < x < h$

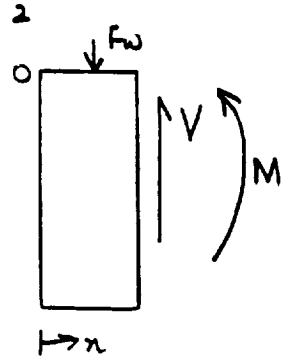

$\Sigma F_y = 0 \;,\; V = F_w$

$\Sigma M_o = 0 \quad M = -F_w x + \frac{1}{2} h F_w$

$\therefore$ maximum Shear $= F_w$

maxim Bending Moment $= \frac{1}{2} h F_w$

$\therefore$ max Shear Stress

$$\tau_{max_y} = \frac{F_w}{(\ell \cdot t)}$$

Material Selected was Aluminum A 390-T6

$$l \cdot t = \frac{F_w}{\tau_{max_y}} \qquad n = 2$$

$$t = \frac{(600\ lb)(2)}{(9)(8000)}$$

$$t = 0.016\ in$$

$\therefore$ thickness of 0.25 in is fine along the Y-axis

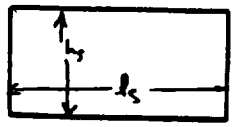

looking at Section along X-axis

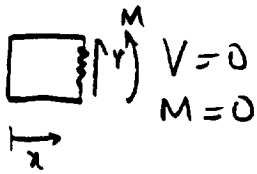

$V = 0$

$M = 0$

$\tau_{max} = 0$

$\sigma_{max} = 0$

Hence a weight $F_w = 600$ lbs will not affect the plate along the X-axis.

For the Stresses on the side of the Box,

Consider the rectangular plate (29.5 in x 17.5 in)

with factor of Safety of 2.

$$P = \frac{1200}{(29.5)(17.5)} = 2.324 \text{ psi}$$

$$t = ab\sqrt{\frac{P}{2S(a^2+b^2)}}$$

$$t = (29.5)(17.5)\sqrt{\frac{2.324}{2(8000)((29.5)^2+(17.5)^2)}}$$

$$t = 0.18 \text{ inch}$$

Therefore a thickness of 0.25 inch

will be Sufficient for a factor of

Safety of 2.

Similarly for the rectangular Plate (17.5 x 9 in)

$$P = \frac{1200}{(17.5)(9)} = 7.62 \text{ psi}$$

$$t = (17.5)(9)\sqrt{\frac{7.62}{2(8000)\left[(17.5)^2+9^2\right]}}$$

$$t = 0.175 \text{ inch}$$

Therefore a thickness of 0.25 is Sufficient for a factor of safety of 2.

For the rectangular plate (9×27.5) in

$$P = \frac{1200}{(27.5)(9)} = 4.85 \text{ psi}$$

$$t = (9)(27.5)\sqrt{\frac{4.85}{2(8000)\left[(27.5)^2+(9)^2\right]}}$$

$$t = 0.148 \text{ inch}$$

$\therefore$ thickness of 0.25 inch is sufficient with a factor of safety of 2

APPENDIX K-8

Weight and Cost

Manufacturing and Machining Cost Estimate

This manufacturing cost estimate is based on a cost of $27.50 per hour.

Manufacturing Process Description	Time	Cost
Casting of box	20 min.	$ 9.17
Face surface mach.	10 min.	$ 4.58
Bearing area mach.	60 min.	$ 27.50
Bushing support mach.	10 min.	$ 4.58
Drilling holes in shaft	20 min.	$ 9.17
Fastener notches	10 min.	$ 4.58
Cut rods (3)	15 min.	$ 6.88
Surface polish rods	15 min.	$ 6.88
Press fit rods to fixed support	15 min.	$ 6.88
Total Cost		$ 80.22

Parts List

Part #	Part Description	Quantity	Total Mass (lb.)	Total Material Cost
1	Shaft (1.25D x 29.5)in 6061T6	1	3.6	$11.00
2	Shaft (1.25D x 27.5)in 6061T6	1	3.4	$10.00
3	Shaft (0.5D x 27.5)in 6061T6	1	3.2	$10.00
4	Cable reel spool	2	1.0	$5.00
5	Roller bearing	4	4.0	$20.00
6	Cable	16 ft.	1.5	$6.00
7	Spur gear, P=6,OD=7.5in	1	15	$159.00
8	Spur gear, P=6,OD=2.5in	1	1.5	$67.00
9	1.97 lbf CFS	1	0.4	$50.00
10	4.12 lbf CFS	1	0.8	$50.00
11	4.95 lbf CFS	1	0.9	$75.00
12	5.94 lbf CFS	1	1.1	$80.00
13	16.5 lbf CFS	1	3.2	$100.00
14	33 lbf CFS	5	31.5	$500.00
15	Delrin (10 spools ,10 drums)	N/A	2.0	$60.00
16	Delrin bushing	2	0.1	$14.00
17	Roller bearing	2	2.0	$10.00
18	Fastener	28	2.6	$5.00
19	Cast housing A390-T6	1	23	$138.00
	Totals		100.8	$1370.00

APPENDIX K-9

Drawings

FOLDOUT FRAME 1

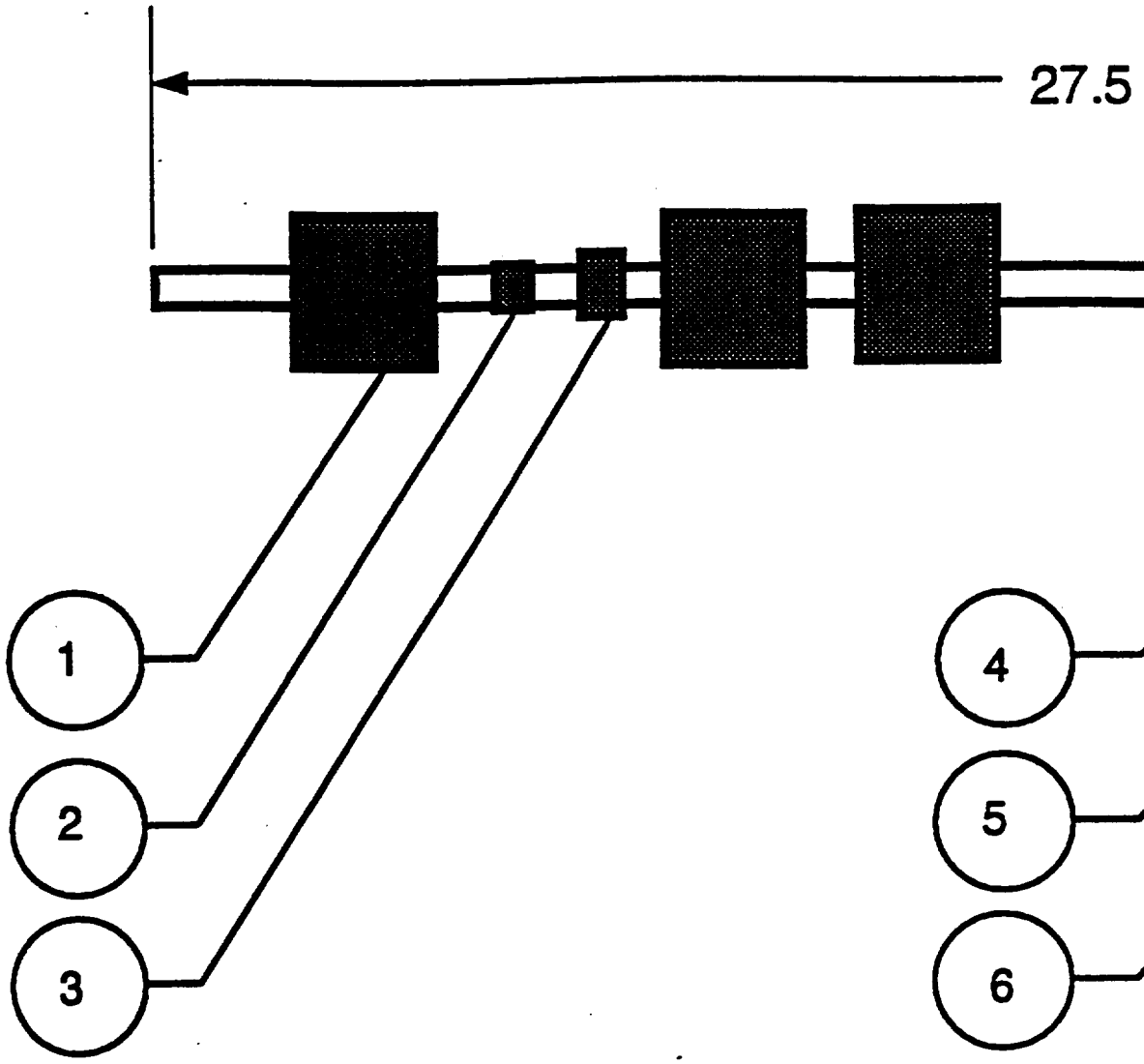

ITEM NO.	NO. REQD	DESCRIPTION	MATERIAL OR NOTE
1	5	Drum (2.18D x 2.00)in	Delrin
2	1	Drum (0.523D x 0.50)in	Delrin
3	1	Drum (0.873D x 0.625)in	Delrin
4	1	Drum (1.75D x 1.25)in	Delrin
5	1	Drum (1.05D x 0.75)in	Delrin
6	1	Drum (0.873D x 0.75)in	Delrin
7	1	Shaft (0.5D x 27.5)in	Al 6061-T6 Machined

FOLDOUT FRAME 2

R. B.

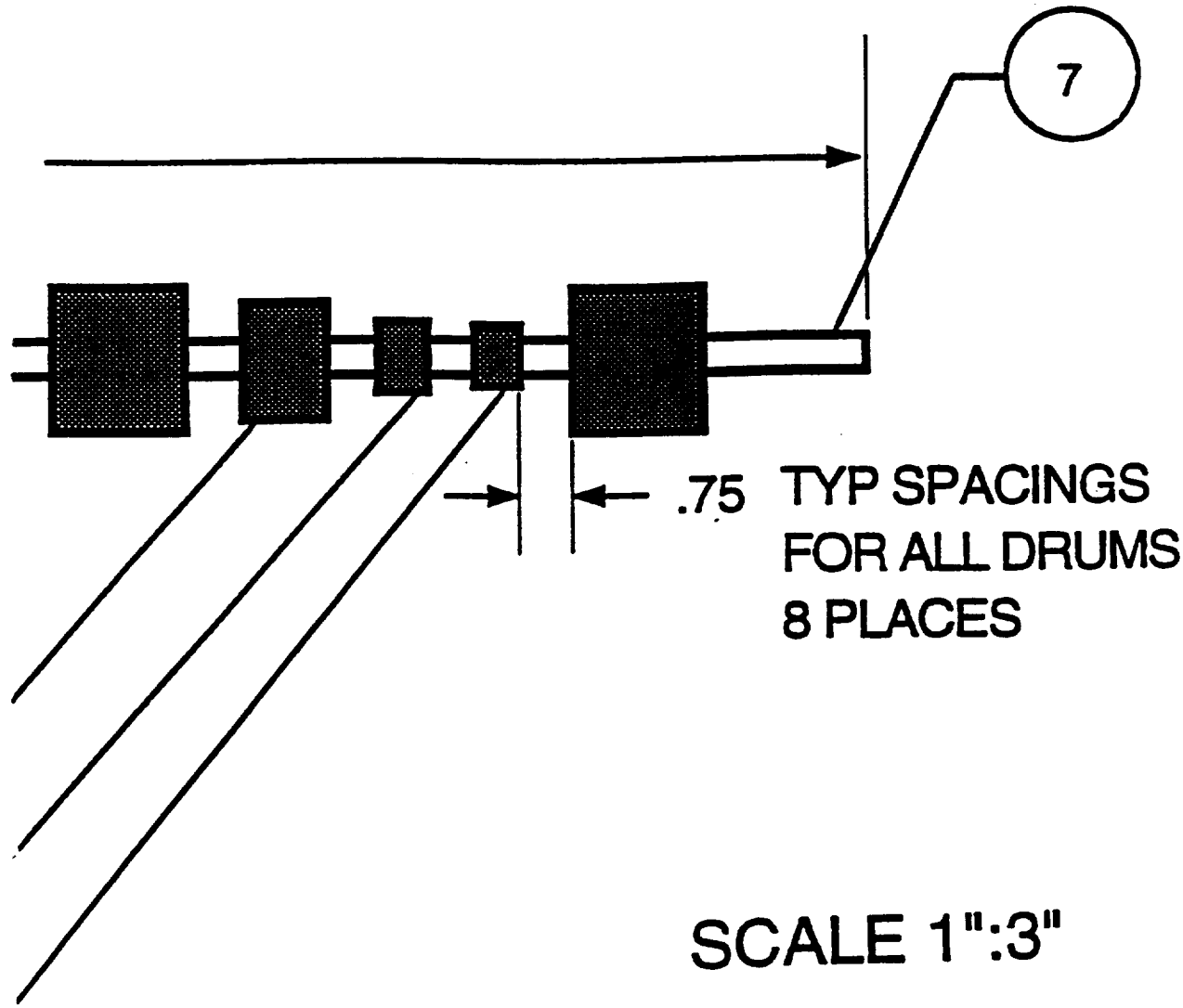

SCALE 1":3"

NASA/USRA RED		
SHAFT 1		
DWN	M.D	4-10-92

K36

FOLDOUT FRAME 1

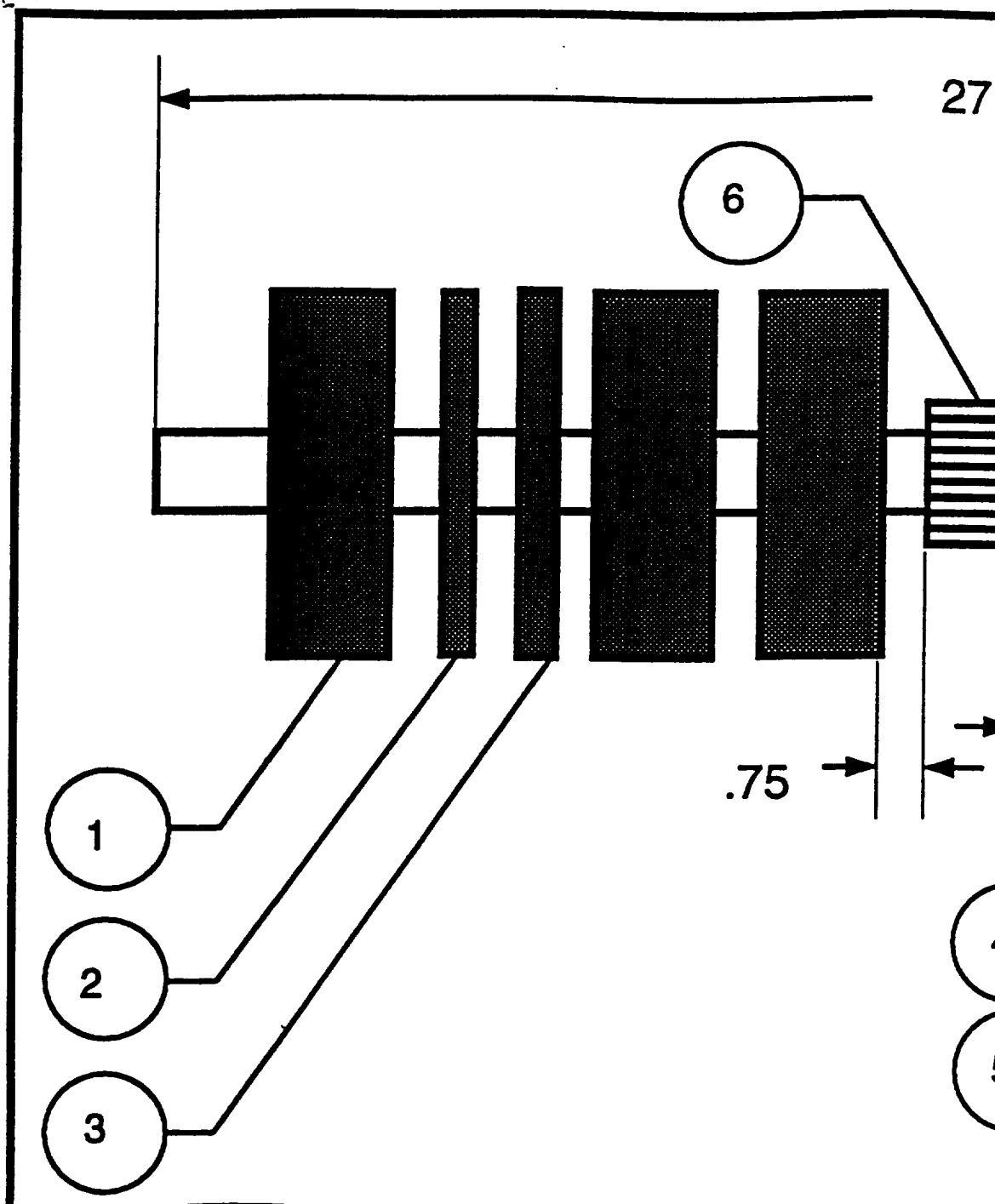

ITEM NO.	NO. REQD	DESCRIPTION	MATERIAL OR NOTE
1	5	Spool (7D x 2.00)in	Delrin
4	1	Spool (7D x 1.25)in	Delrin
5	2	Spool (7D x 0.75)in	Delrin
3	1	Spool (7D x 0.625)in	Delrin
2	1	Spool (7D x 0.50)in	Delrin
6	1	Spur gear (2.5D x 1.5)in	1020 Steel
7	1	Shaft (1.25D x 27.5)in	Al 6061-T6 Machined

FOLDOUT FRAME 2

R.B.

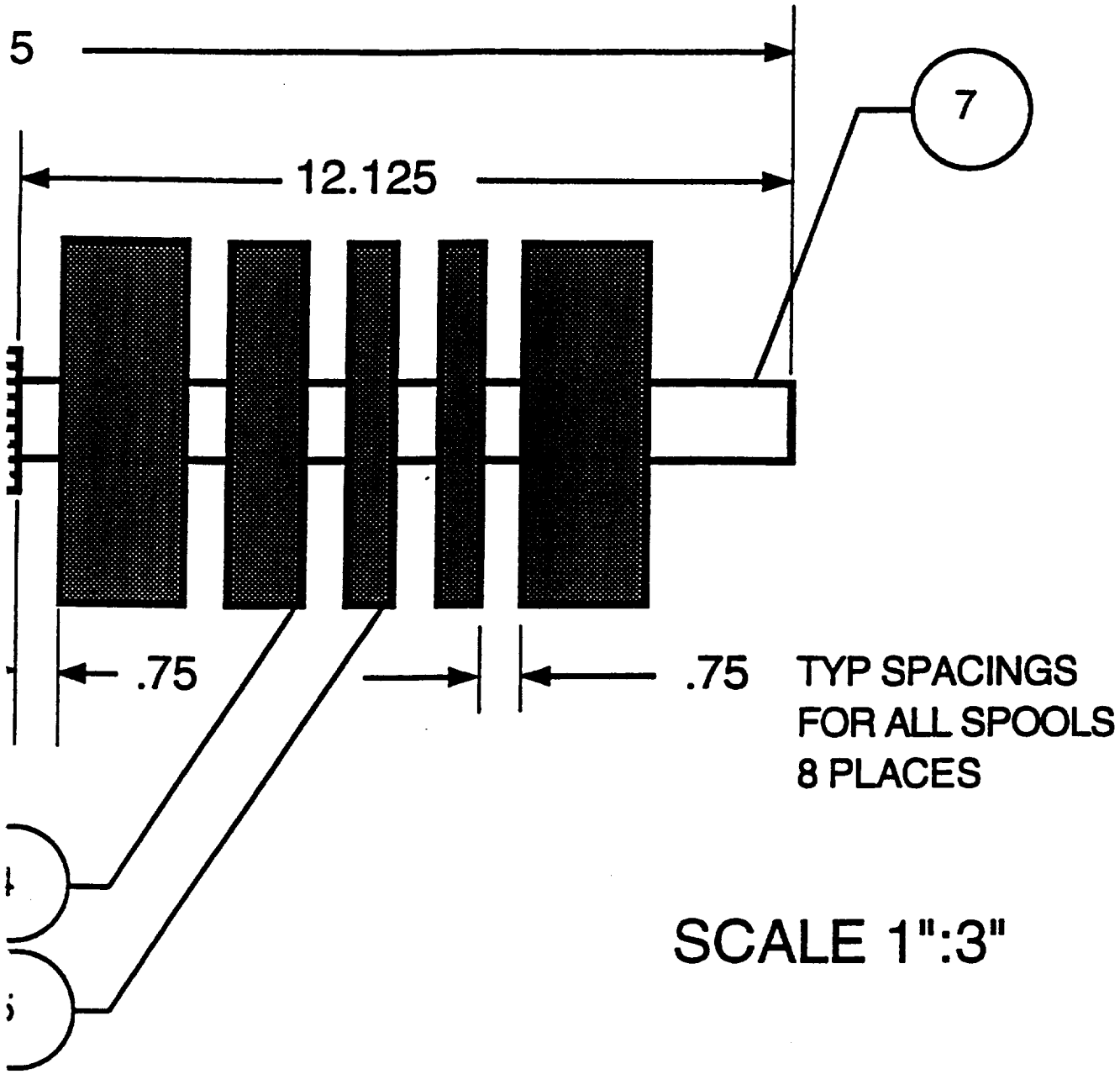

NASA/USRA RED		
SHAFT 2		
DWN	M.D	4-10-92

K37

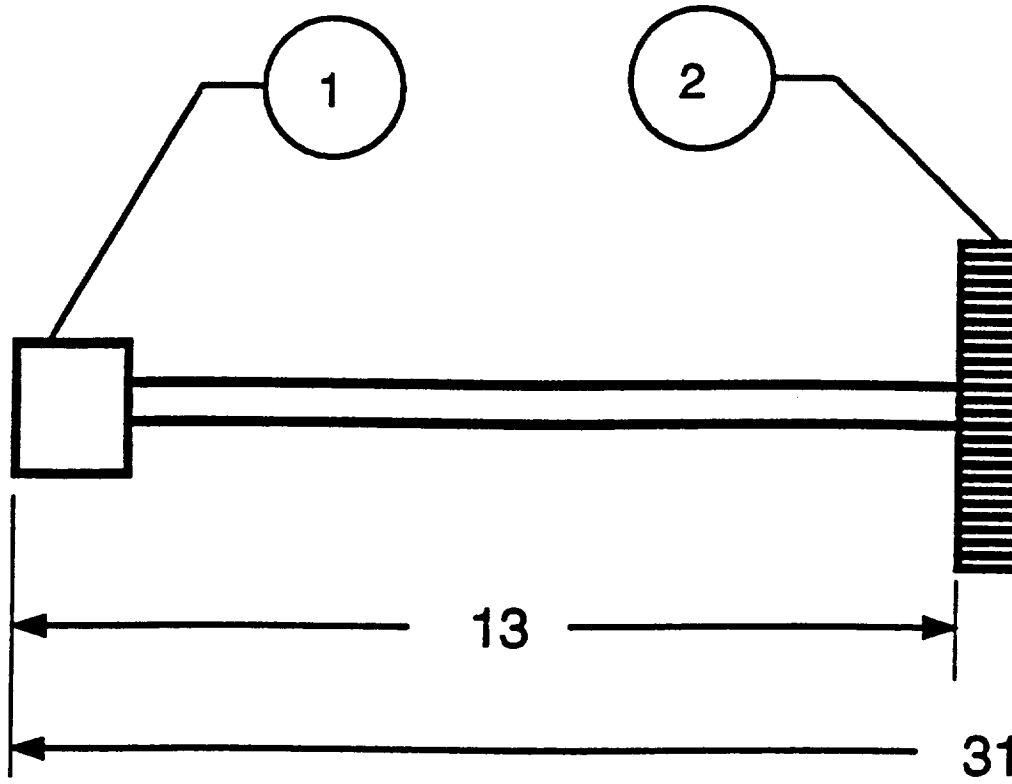

ITEM NO.	NO. REQD	DESCRIPTION	MATERIA
1	2	Reel Spool(3D x 2) in	Delrin
2	1	Spur Gear(7.5D x 1.5) in	1020 Ste
3	1	Shaft(1.25D x 29.5) in	Al 6061-T

FOLD OUT FRAME 2

R.B.

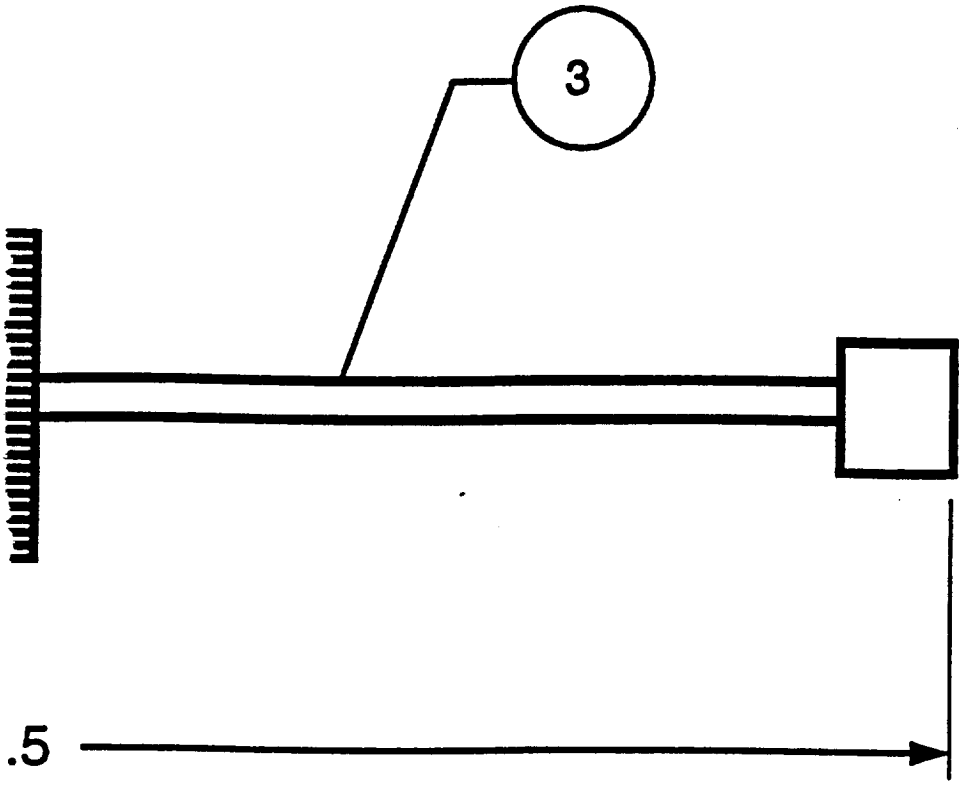

SCALE 1":3"

NASA/USRA RED		
SHAFT 3		
DWN	M.D	4-10-92

K38

FOLDOUT FRAME 1.

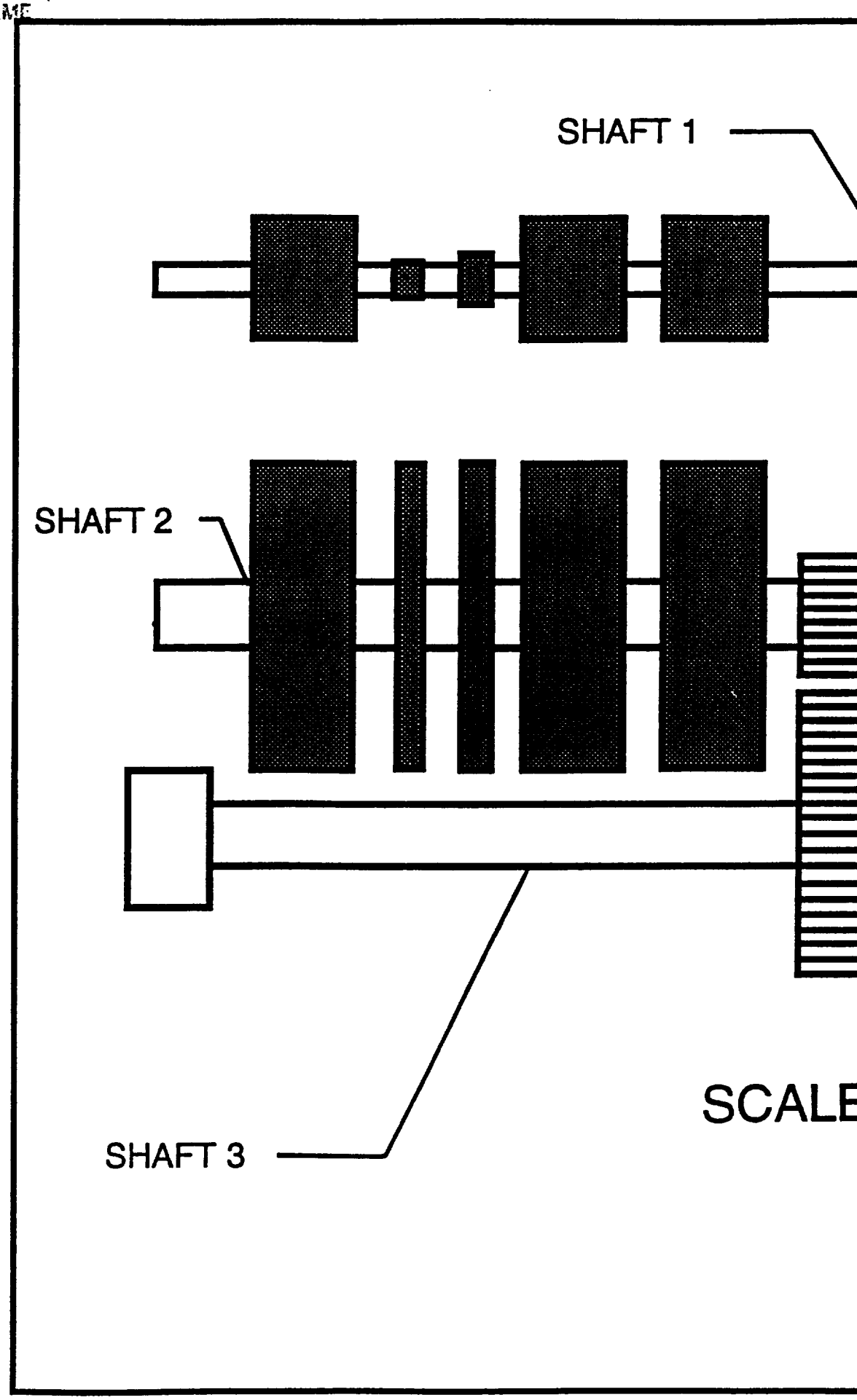

FOLDOUT FRAME 2.

R. B.

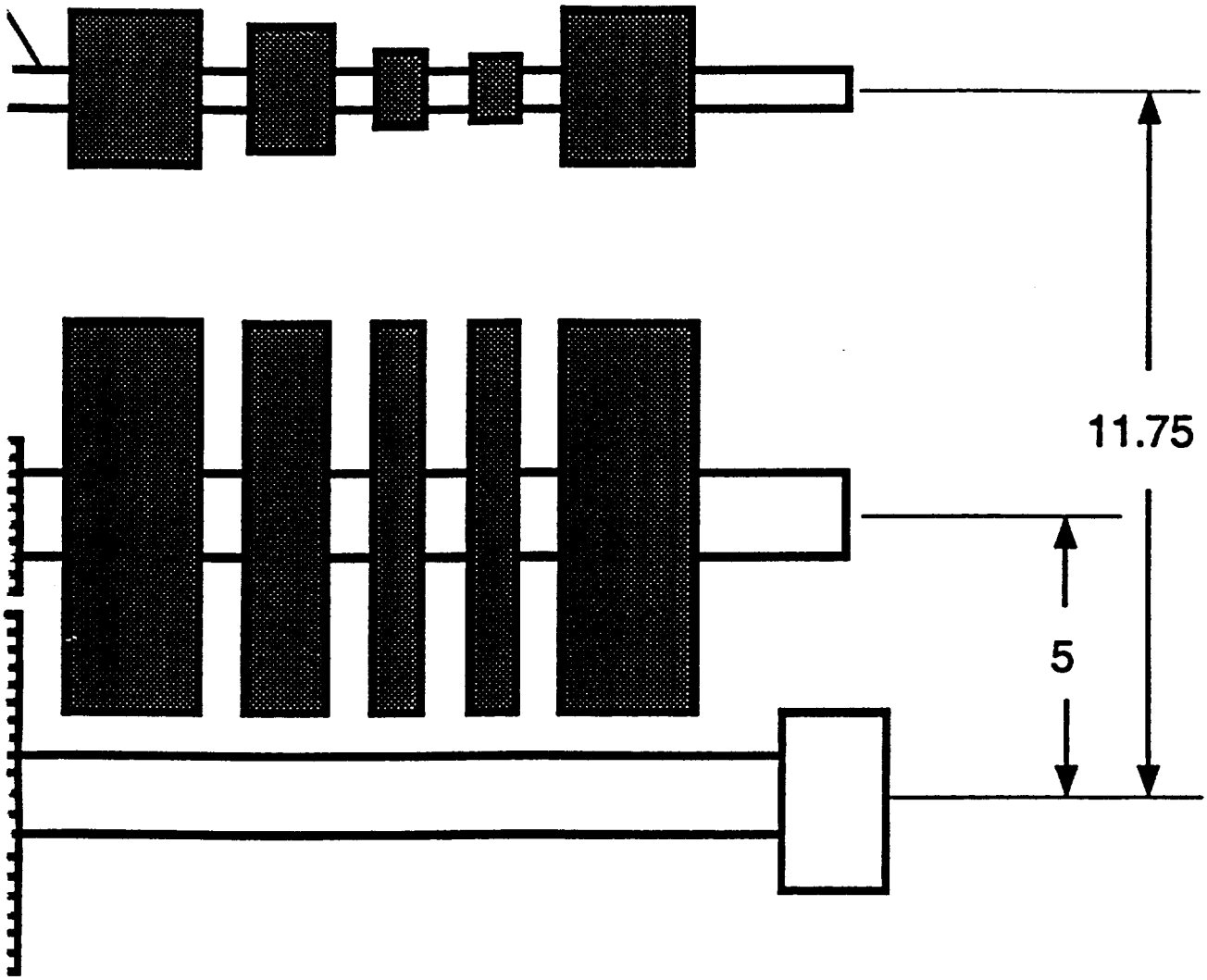

1":3"

NASA/USRA RED		
FINAL LAYOUT		
DWN	M.D	4-10-92

K39

Appendix K: References

1. McMaster Carr Supply Company, Brochure.

2. Shigley, J. and Mischke, C., Mechanical Engineering Design, 5th ed., (New York: McGraw-Hill Publishing Company, 1989).

3. Juvinall, R. and Marshek, K., Fundamentals of Machine Component Design, 2nd ed., (New York: John Wiley & Sons, 1991).

4. Oberg, E. et al, Machinery's Handbook, 23rd ed., (New York: Industrial Press Inc., 1988).

5. Hyatt Bearings, Brochure.

APPENDIX L

RED Exercise Positioning

All exercises should be performed so that the body center of gravity is in line with the output shaft and the cable reels to prevent rocking.

Raises

Stand on box with feet attached

Hold handles in hands

Use weight restraint to keep body vertical

Use of modular pulleys would allow better direction on laterals

Shoulder Shrugs

Stand on box with feet attached

Bar or handles in hands

Use waist restraint to keep body vertical

Bench Press

Lie on bench using chest and/or waist restraint

Hold bar in hands

Military Press

Sit on bench using chest and/or waist restraint

Hold bar in hands

Flies

Sit on inclined bench or lie on flat bench

Use chest and/or waist restraint

Hold handles in hands

Biceps Curls

Stand on box

Hold bar in hands

Use waist restraint to keep body vertical

Triceps Curls

Sit on bench

Hold bar or handles in hands

Use waist restraint to keep body vertical

Wrist Curls

Stand on box

Hold bar or handles in hands

Use waist restraint to keep body vertical

Squats

Stand on box

Hold bar in hands

Use waist restraint to keep body vertical

Deadlifts

Stand on box

Hold bar in hands

Use waist restraint to keep body vertical

Heel Raises

Stand on diagonal edge of box

Hold bar in hands

Use waist restraint to keep body in line

Rows

Stand on box

Hold bar in hands

Use waist restraint to keep body vertical

APPENDIX M

Sketches of Restraints and Accessories

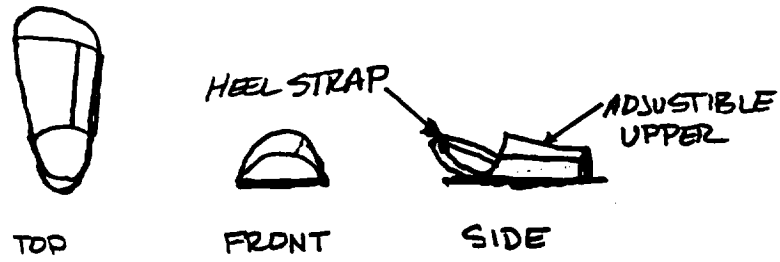

FOOT RESTRAINT (RIGHT)

THE FOOT RESTRAINTS FOR USE WITH THE RED ARE SANDALS. THE SANDALS HAVE AN ADJUSTIBLE UPPER WHICH CAN BE TIGHTENED AROUND THE FOOT AND IS SECURED WITH VELCRO. A HEEL STRAP IS ANCHORED TO THE SOLE OF THE SANDAL AND IS ALSO ADJUSTABLE AND SECURED USING VELCRO. THE SOLE OF THE SANDAL IS SEMI-RIGID. THE SOLE OF THE SANDAL HAS VELCRO ON IT TO MATE WITH THE VELCRO COVERING THE TOP OF THE RED FORCE UNIT.

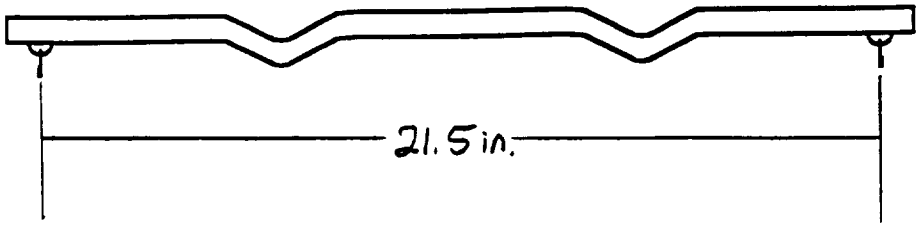

THE EXERCISE BAR

THE EXERCISE BAR FOR THE RED WILL HAVE TWO CURVED SECTIONS. THESE SECTIONS PROVIDE ERGONOMIC HAND POSITIONING FOR EXERCISES SUCH AS THE CURL. THE BAR WILL BE ATTACHED TO THE RED CABLES USING SNAP HOOKS.

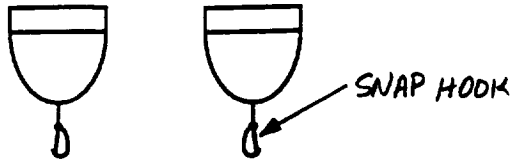

EXERCISE HANDLES

SOME EXERCISES ON THE RED CAN BE PERFORMED USING SEPARATE HANDLES. THE HANDLES WILL ATTACH TO THE RED CABLES USING SNAP HOOKS

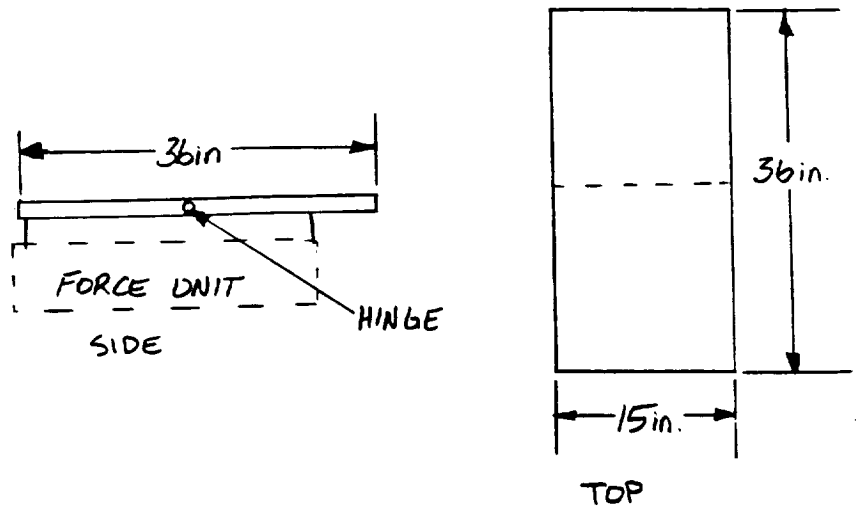

THE EXERCISE BENCH

THE EXERCISE BENCH USED WITH THE RED WILL BE HINGED. THE HINGE WILL ALLOW THE BENCH TO BE CONFIGURED AS A SEAT. THE HINGE ALSO ALLOWS FOR COMPACT STOWING.

Errata Sheet

Page	Error
1	section 1.1, second line-'are sponsoring' should read 'have sponsored'.
1	section 1.1, fourth line-'will be' should read 'was'.
1	section 1.1, tenth line-'will be working' should read 'has worked'.
6	third line-there should be no comma after available.
16	Hooks should be Hooke's.
34	section 2.3.4, second line-'placed onto of the' should read 'placed onto the'.
39	second line-adjustible should be adjustable
46	equation should read $T = (Ebt^3R_{tu}/24)(1/R_i - 1/R_{tu})^2$.
50	section 3.6.4, third line-there should be no comma after machinability.
59	seventh line-should read 'reduce by a factor of two the number of springs required in the array.'
60	Reference 2.-underline book title-Exercise Physiology: Human Bioernergetics and Its Applications.