NASA
Technical
Paper
3290

1993

Second Generation Integrated Composite Analyzer (ICAN) Computer Code

Pappu L. N. Murthy,
Carol A. Ginty,
and Jose G. Sanfeliz
Lewis Research Center
Cleveland, Ohio

NASA
National Aeronautics and
Space Administration
Office of Management
Scientific and Technical
Information Program

Table of Contents

	Page
Summary	1
Introduction	1
Scope	2
Coordinate Axes	3
Units	3
New Features/Enhancements	4
Input Data	4
Card Group I: Title Card	8
Card Group II: Booleans	9
Card Group III: Laminate Configuration	10
Card Group IV: Material Systems	10
Card Group V: Loads	11
Card Group VI: Cyclic Loads	12
Card Group VII: Output Options	13
Dedicated Data Bank	14
Fiber Material Properties	14
Matrix Material Properties	15
Compiling and Running	16
Output: Printing Options	16
Demonstration Problems	19
Special Considerations	22
Summary	22
Future Plans	22
Appendixes	
A-Dedicated Data Bank	23
B-EXEC Files to Run ICAN	26
C-Complete Printed Output for Sample Problem	27
D-Micromechanics Equations	78
References	89

PAGE ii INTENTIONALLY BLANK

PRECEDING PAGE BLANK NOT FILMED

Summary

This manual updates the original 1986 NASA TP-2515, "Integrated Composite Analyzer (ICAN) Users and Programmers Manual." The various enhancements and newly added features are described to enable the user to prepare the appropriate input data to run this updated version of the ICAN code. For reference, the micromechanics equations are provided in an appendix and should be compared to those in the original manual for modifications. A complete output for a sample case is also provided in a separate appendix. The input to the code includes constituent material properties, factors reflecting the fabrication process, and laminate configuration. The code performs micromechanics, macromechanics, and laminate analyses, including the hygrothermal response of polymer-matrix-based fiber composites. The output includes the various ply and composite properties, the composite structural response, and the composite stress analysis results with details on failure. The code is written in FORTRAN 77 and can be used efficiently as a self-contained package (or as a module) in complex structural analysis programs. The input-output format has changed considerably from the original version of ICAN and is described extensively through the use of a sample problem.

Introduction

The most cost effective way to analyze/design fiber composite structures is through the use of computer codes. Over the last two decades at NASA Lewis Research Center, the research in composite micromechanics and macromechanics, which includes the effects of temperature and moisture, has resulted in the development of several computer codes for composite mechanics and structural analysis. The primary intention of the research was to develop composite mechanics theories and analysis methods from the level of micromechanics to global structural analysis. These theories and analysis methods account for environmental effects and are applicable to intraply hybrid composites, interply hybrid composites, and combinations thereof. Most of these theories are represented by simplified equations that have been corroborated by experimental results and finite-element analysis. The composite mechanics theories with their respective simplified equations constitute a structured theory (fig. 1) which is (1) "upward integrated" (synthesis) from material behavior space to structural analysis and (2) "top-down traced" (decomposition) from structural response to material behavior space. This structured theory has been incorporated into the computer code ICAN (ref. 1). The computer software and documentation are available through the Computer Software Management and Information Center (COSMIC), Suite 112, Barrow Hall, Athens, GA 30602.

The purpose of the present manual is to document all of the changes made to the code during the last 6 years since its initial release. These changes not only reflect "fixes to bugs" that have surfaced over this period but also improvements to the micromechanical equations and some added features and enhancements. Many of the changes were incorporated as a result of considerable interaction with current industry and university users; therefore, an engineer's/analyst's point of view is often reflected. To illustrate these enhancements, this manual will discuss features of the code on a line-by-line basis, primarily with regard to the input dataset. This new version of ICAN is about 40 percent larger than its predecessor yet it is still manageable and more user friendly.

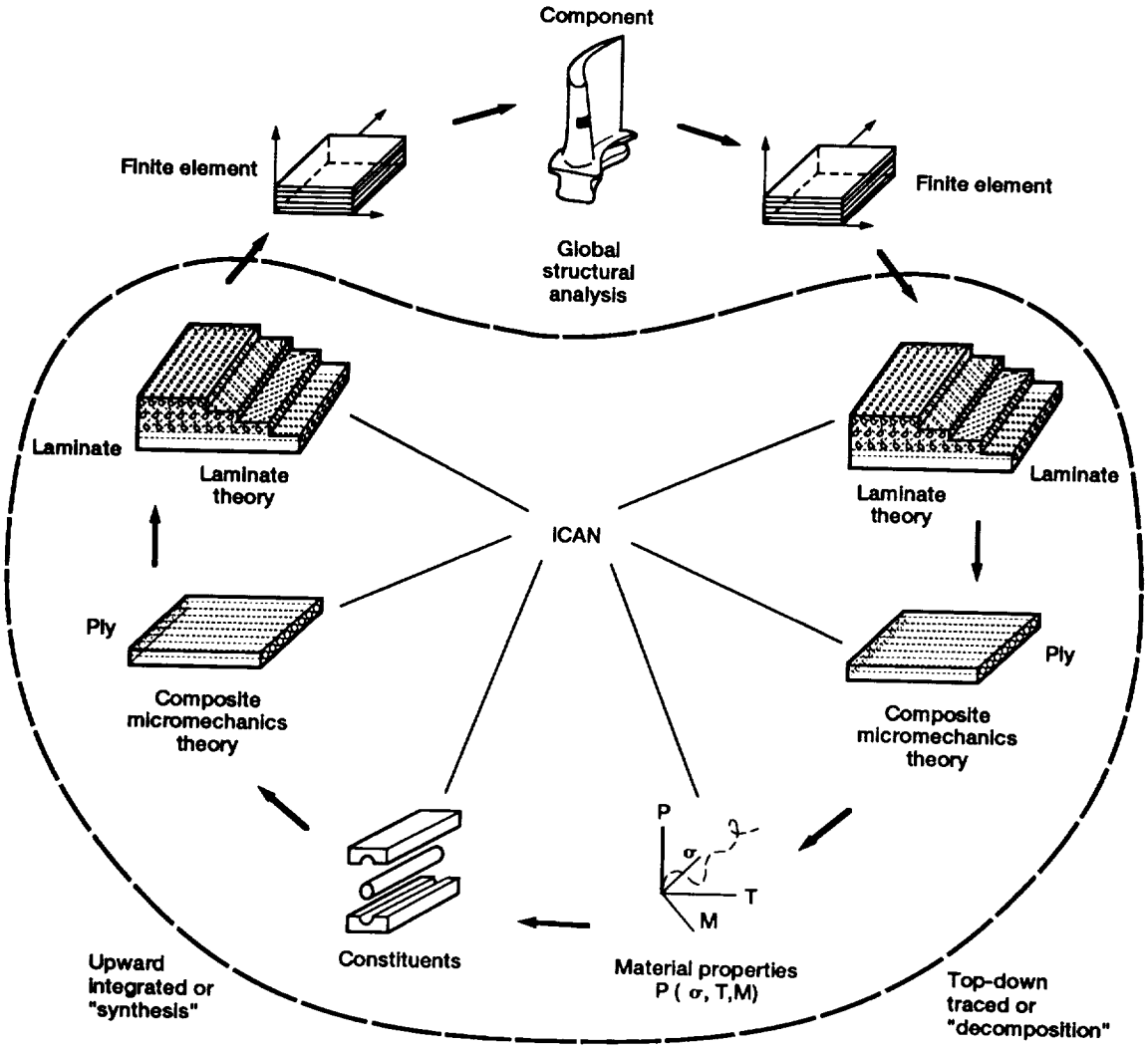

Figure 1.—Upward-integrated and top-down traced structured theory for polymer-matrix composites.

Scope

ICAN was primarily designed to analyze the hygrothermomechanical response and properties of fiber-reinforced, resin-matrix layered composites, given the local membrane loads and bending moments. Three types of layers (fig. 2) are recognized by the program: (1) the standard composite system that consists entirely of a primary composite made of one type of fiber and matrix; (2) the intraply hybrid composite system that consists of a primary composite and a secondary composite arranged in a prescribed manner within a layer (For purposes of identification, the primary composite in the hybrid is the one that constitutes the largest volume ratio.); and (3) the interply layer that consists of the matrix. Note that in figure 2 a realistic situation is depicted where two different fibers (open and solid circles) are shown embedded in one matrix to exemplify an intraply hybrid composite system. In addition, ICAN recognizes moisture or temperature gradients or both through the thickness. However, within each ply the temperature or moisture is assumed to be constant. The limitations of the original version on the number of layers, material systems, and different loading conditions have been removed in this version through a dynamic dimensioning scheme of the various internal variables.

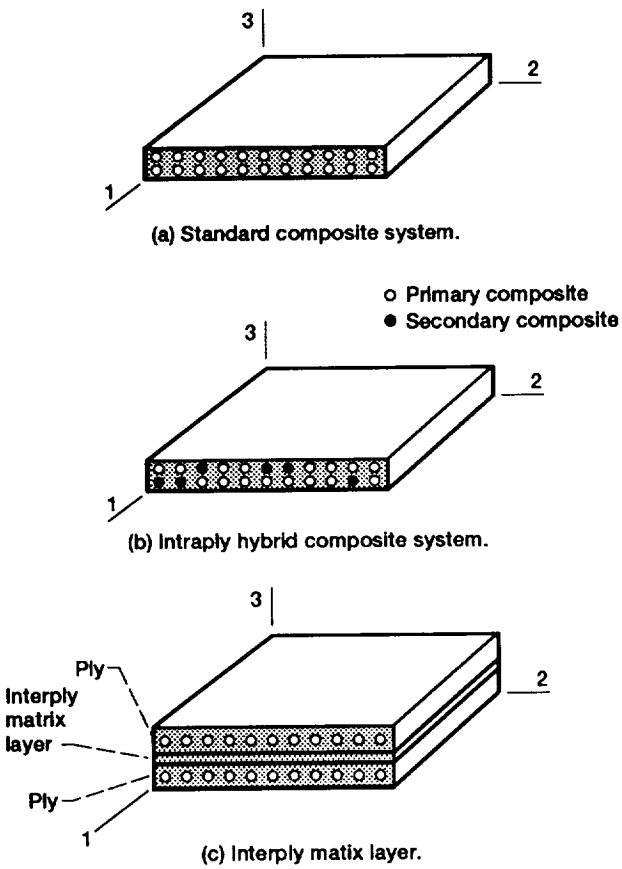

Figure 2.—Three types of fiber-reinforced, resin-matrix layered composites.

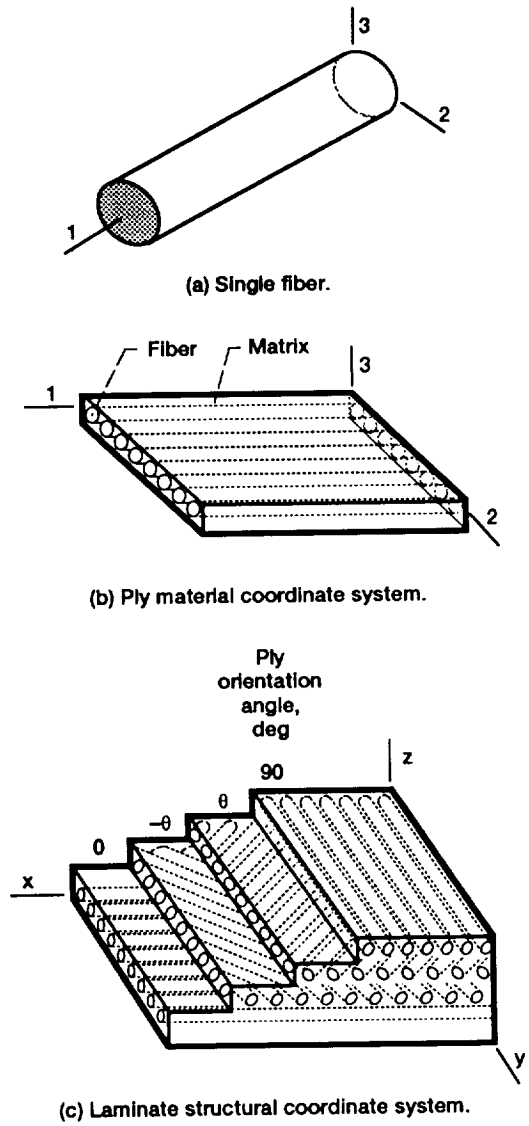

Figure 3.—Different coordinate systems used in ICAN.

Coordinate Axes

ICAN adopts two sets of cartesian coordinate axes for presenting the results. They are the material axes and the structural axes as shown in figure 3. The material axes are defined with respect to fiber orientation. The direction along the fiber is denoted as 1-1, or 11, and the directions transverse to the fiber are denoted 2-2 (22) and 3-3 (33), respectively. All the ply level properties and responses are expressed with respect to the material axes system. The global/laminate level properties and responses are given in the structural axes system. They are denoted by x, y, and z. Any quantity with a normal orientation is represented by the subscripts xx, yy, and zz. The shear orientations are indicated by subscripts xy, yz, and zx. Also, the coordinate axes definitions are printed as a part of the output for easier interpretation.

Units

The primary units chosen in ICAN are the British system of units. All of the constituent properties in the resident data bank are expressed accordingly: inches (for length), pounds (for forces), degrees Fahrenheit (for temperatures), BTU's (for heat), seconds/hours (for time), and psi/ksi/Mpsi (for stress-and stiffness-related quantities). A table of units (table I) is provided (by default as one of the output options) at the

beginning of the ICAN output for easy reference. Also, the units are indicated next to each constituent property in the resident data bank (appendix A). Any user wishing to employ another system of units may do so by updating the data bank properties into the preferred system. The output will then reflect the appropriate unit system chosen. The user should nevertheless exercise some caution as there may have been some hard-wired conversions of units within the source code (e.g., conversions of psi to ksi or Mpsi are done by dividing with 1000 or 1 000 000 within the code in order to print some of the variables in the most appropriate and concise format).

New Features/Enhancements

New features/enhancements include:

(1) The output can now be tailored to specific needs by choosing the appropriate options.

(2) Several modules have been added to perform durability/fatigue type analyses for thermal as well as mechanical cyclic loads. The code can currently assess degradation due to mechanical and thermal cyclic loads with or without a defect.

(3) A completely redesigned dedicated data bank of constituent material properties is now available. The details of the data bank are given in a later section. An important feature of the current data bank is a complete description of the property, its symbol and units, along with its value.

Input Data

The ICAN input data are designed to be user friendly and versatile for various applications. The input data are supplied through seven different card groups of information. The sequence of this information, which must be maintained by the user, is illustrated in figure 4. Details for preparing these input data cards are summarized in table II.

To illustrate the versatility of the code, a sample dataset is given in table III. This sample will analyze a composite made of two different material systems. The 0° plies are an AS graphite fiber/intermediate-modulus, low-strength epoxy matrix composite. The 90° plies are a hybrid composite of which the primary composite is S-Glass/high-modulus, high-strength epoxy and the secondary composite is AS graphite/intermediate-modulus, high-strength epoxy. The laminate is subjected to an in-plane membrane loading of 1000 lb/in. There are no bending or transverse loads applied.

As can be seen from table III, the seven groups of input data cards are identified by a mnemonic to indicate the card group it belongs to. Each physical card is divided into fields of eight columns with one entry per field allowed. The mnemonic is entered in format A8 and the integers in format I8. The real numbers may be entered anywhere in the appropriate field. Furthermore, a $ in the first column indicates a comment line which the user may utilize for any comments or description of the data that follows. The user may insert as many comments as desired to improve the readability of the input. The sequence of the groups must be maintained, however. Also, it must be noted that, with the exception of the cyclic loads card group (group VI), all the remaining card groups must be present. Following is a brief description of each card group together with examples taken from table III.

TABLE I.—ICAN OUTPUT FOR TABLE OF UNITS

ICAN UNITS FOR CONSTITUENT,

PLY AND LAMINATE PROPERTIES

Property	Symbol	Unit
ELASTIC MODULUS	E	psi
SHEAR MODULUS	G	psi
POISSONS RATIO	NU	non-dim
THERM. EXP. COEFF.	CTE	in/in/F
DENSITY	RHO	lb/in**3
FIBER DIAMETER	DIF	in
HEAT CAPACITY	C	BTU/lb/F
HEAT CONDUCTIVITY	K	BTU-in/hr/in**2/F
STRENGTH	S	psi
MOISTURE EXP. COEFF.	BTA	in/in/1% moisture
MOISTURE DIFFUSIVITY	DP	in**2/sec
THICKNESS	T	in
DISTANCE TO MIDPLANE	Z	in
ANGLE TO AXES	TH	degrees
TEMPERATURE	TEMP	F
STRAIN	EPS	in/in
STRESS	SIG	psi
MEMBRANE LOADS	N	lb/in
BENDING LOADS	M	lb in/in
MOISTURE	MPC	% by wt
FIBER VOLUME RATIO	Kf	non-dim
FIBER VOID RATIO	Kv	non-dim
PLY RELATIVE ROTATION	DELFI	radians

TABLE II.—SUMMARY OF DETAILS FOR PREPARING INPUT DATA CARDS

Card group	Iden-tification	Code symbol	Number of entries	List of entries	Card field columns	format	Comments
1	Title Card	TITLE	80	Alphabetic Characters	1 to 80	(10A8)	-----
2	Booleans	COMSAT	2		1 - 16	(A8,L8)	T(true) if laminate analysis is desired; otherwise F(false)
		CSANB	2		"		T(true) if symmetry exists; otherwise F(false)
		BIDE	2		"		T(true) if interply contributions are desired; otherwise F(false)
		RINDV	2		"		T(true) if disps. are input; otherwise F(false)
		NONUDF	2		"		T(true) if Poisson's Ratio differences chart is not desired; otherwise F(false)
		DEFECT	2		"		T(true) if durability analysis with defect is desired; otherwise F(false)
3	PLY (ply desired)	INP1,IP1,TU,TCU,DELM,TETA,THCKNS	7	$i,j,T_u,T_{cu},\Delta M,\theta_1,t_1$	1 to 64	(A8,2I8,5F8.3)	Ply layup and temp. and moisture conditions
4	MATCRD (Material)	IP1,CODES(1,1,J),CODES(1,2,J),VFP,VVP,CODES(2,1,J),CODES(2,2,J),VFS,VVS,VSC	8	Primary composite code names for fiber and matrix, k_f,k_v; Secondary composite code names for fiber and matrix, k_{sc},k_f,k_v;	1 to 72	(A8,I8,2A4,2E8.2,2A4,3E8.2)	Description of the material systems to be used
5	PMEMB	NX,NY,NXY,THCS	4	$N_x,N_y,N_{xy},\theta_{cs}$	1 to 40	(A8,4E8.4)	Membrane loads and angle to structural axis
	PBEND	MX,MY,MXY	3	M_x,M_y,M_{xy}	1 to 32	"	Bending loads
	PTRAN	DMX,DMY,PU,PL	4	Q_{xz},Q_{yz},P_u,P_l	1 to 40	"	Transverse loads
6	Cyclic loads cards	CNXX,CNYY,CNXY,CMXX,CMYY,CMXY	4	Upper limit, lower limit, No. cyc., and β_1	1 to 40	(A8,4E8.4)	Description of cyclic loads
7	PRINT (output Option cards)	IDECHO,INPTSUM,- - - - - - ALL	2		1 to 16	(2A8)	Select output items

TABLE III.—AN ICAN SAMPLE INPUT DATA SET

```
$
$     Title Card    --- Card group I
CHECK ON NEW ICAN
$
$ --- Boolean Card Group--- Card group II
$
  COMSAT        T
   CSANB        F
    BIDE        F
   RINDV        F
  NONUDF        T
  DEFECT        F
$  ----- Laminate Configuration Card Group. --- Card group III
$  The following is the PLY card group. The laminate configuration is
$  specified here.
     PLY        1        1   70.0   70.0  .0000     0.0    0.010
     PLY        2        2   70.0   70.0  .0000    90.0    0.005
     PLY        3        2   70.0   70.0  .0000    90.0    0.005
     PLY        4        1   70.0   70.0  .0000     0.0    0.010
$  ----- Material Data Card Group  --- Card group IV
$  The details of the Materials to be used in the analysis are described
$   in this card group.
  MATCRD        1AS--EPOX   .55    .02   AS--IMLS  0.00   .57   0.03
  MATCRD        2SGLAHMHS   .55    .01   AS--IMHS  0.40   .57   0.01
$ ---- Loads Card Group ---- Card group V
$   Specify in-plane loading here.
   PMEMB  1000.   0.0     0.0    0.0            NX,NY,NXY,THCS
   PBEND    0.0   0.0     0.0                   MX,MY,MXY
   PTRAN    0.0   0.0                           QXZ,QYZ,PU,PL
$   Cyclic or Fatigue Load Data Group  --- Card group VI
$   specify loading for fatigue analysis. Mechanical/Thermal fatigue.
$   CNXX  200.   100.    100.    0.1
$   CNYY  -50.   -100.   10.    0.1
$   CNXY  20.     10.    100.    0.2
$   CMXX  10.      5.     10.    0.01
$   CMYY   4.      2.     1000.   0.15
$   CMXY   2.      1.     100.    0.01
$   ---- Output Selection Data Group. ---- Card group VII
$  You can tailor the output. 0 is for complete output
$  Output requests.
$  PRINT  IDECHO  Output request for input data echo          (Option 3)
$  PRINT INPTSUM  Output request for summary of input data    (Option 4)
$  PRINT FIBMATP  Output request for constituent/ ply props.  (Option 5)
$  PRINT STRSTRN  Output request for stress/strain law.       (Option 6)
$  PRINT PROPCOM  Output request for composite properties.    (Option 7)
$  PRINT  CONSTI  Output request for constitutive relation.   (OPTION 8)
$  PRINT REDSTIF  Output request for Reduced D&A Stiffness.   (Option 9)
$  PRINT FEMDATA  Output request for F.E.A. Data              (Option 10)
$  PRINT DISPFOR  Output request for Force/Disp relations.    (Option 11)
$  PRINT PLYRESP  Output request for Ply Response/Prop.       (Option 12)
$  PRINT  NUMISM  Output request for Poisson"s Ratio mismatch(Option 13)
$  PRINT FREESTR  Output request for free edge stresses.      (Option 14)
$  PRINT   MICRO  Output request for Microstresses/inf. coefs(Option 15)
$  PRINT  STRCON  Output request for stress conc. factors.    (Option 16)
$  PRINT  DELAMI  Output request for delamination around hole(Option 17)
$  PRINT STRSINF  Output request for Stress/Strain In. coef.  (Option 18)
$  PRINT FAILDET  Output request for Fail. Anal. Details.     (Option 19)
$  PRINT FAILSUM  Output request for Fail. Anal. Summary.     (option 20)
$  PRINT  DURAAN  Output request for durability results       (Option 21)
$  PRINT DURADET  Output request for durability details       (Option 22)
$  PRINT DURASUM  Output request for durability summary       (Option 23)
$  PRINT DURADEF  Output request for dura. with defect        (Option 24)
$  PRINT DURDEFS  Output request for dura/defect summary      (Option 25)
   PRINT     ALL  Output request for complete results         (OPTION 0)
$  PRINT    NONE  No Output is requested.                      (Option 99)
```

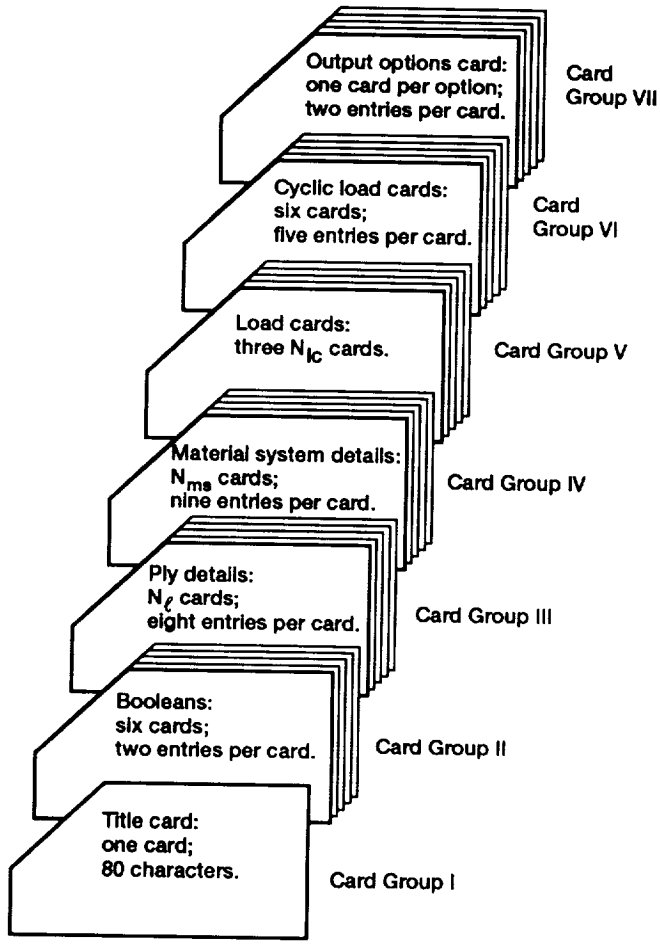

Figure 4.—Sequence of input data cards.

Card Group I: Title Card

As shown, any title of length up to 80 characters including blanks may be supplied on this card. The user, however, should not start the title with $ as it is reserved for the purpose of inserting comments throughout the input dataset. Also, the title should not start with any of the predefined mnemonics.

```
-1-      -2-      -3-      -4-      -5-      -6-      -7-      -8-      -9-
-------|-------|-------|-------|-------|-------|-------|-------|-------|
CHECK ON NEW ICAN
```

Card Group II: Booleans

A set of Booleans, COMSAT, CSANB, BIDE, RINDV, NONUDF, and DEFECT is defined (one card per Boolean) through these cards. There are six cards, one per each logical variable. The format is (8X,L8).

Boolean	Value
-1-	-2- -3-
COMSAT	T
CSANB	F
BIDE	F
RINDV	F
NONUDF	T
DEFECT	T

The variables have the following functions:

(a) COMSAT.—If COMSAT is chosen as TRUE (indicated by the letter T), then a complete laminate response analysis is performed. The user should choose this option if there are applied loads or thermal gradients and the response at the laminate/ply level is wanted. On the other hand, if COMSAT is FALSE (indicated by the letter F), the program is terminated after the end of the micromechanics and macromechanics computations. For example, the user will generally select this option as T if he/she is interested in the ply or laminate properties.

(b) CSANB.—The letter T is entered if the composite has both membrane and bending symmetry; otherwise, the letter F is entered.

(c) BIDE.—The letter T is entered if the interply layer contributions on the composite are desired; otherwise, the letter F is entered.

(d) RINDV.—Whether or not the laminate is subjected to "displacement loading" or "force loading" is determined by this Boolean card. The letter T is entered if displacement (strains) loading is input. The letter F is entered if the applied loads are generalized forces (membrane and bending force resultants).

(e) NONUDF.—The letter T is entered if the detailed Poisson's ratio differences chart is to be suppressed. These details pertain to the intermediate calculations necessary to compute the most probable delamination sites along the edge of a circular hole in an infinite plate. The letter F will let the details be printed in the output.

(f) DEFECT.—This is a new added feature. The code performs a fatigue/durability analysis for a laminate with a defect (the defect is assumed to be a circular hole in an infinite plate) if this Boolean is TRUE. The letter F is entered if no such analysis is desired.

Note: Of these variables, the Booleans CSANB and BIDE are always chosen to be FALSE, and the Boolean NONUDF is chosen to be TRUE. These three Booleans are rather obsolete and will be phased out in future versions.

Card Group III: Laminate Configuration

Information regarding the plies in the laminate, such as ply orientation, material system identification, the use and cure temperatures, and the amount of moisture, is input in this card group. All the cards in this group have a mnemonic PLY. There are N_l number of cards (where N_l is the number of plies in the laminate) with eight entries on each card. The first card from the sample data set is shown here for illustration:

The first entry of the group III card is the mnemonic PLY. The second and third entries are identification numbers for the ply and the material system, respectively. The fourth and fifth entries are the use temperature and the cure temperature, respectively. The sixth entry is the percentage of moisture content by weight. The seventh and the eighth entries are the orientation angle θ_l (fig.3) and the thickness t_l of the ply, respectively. A default value of 0.005 in. is taken for the thickness if this entry is missing. The remaining entries on this card are mandatory. The ply identification numbers should be in sequential order starting from the bottom ply (ply no. 1) and working up. The material system identification number could be any integer. Thus, if all the plies are made with the same composite system, they should have the same identification number. Different material systems, for example in the case of an interply hybrid composite system, can be identified with unique numbers. A word of caution is in order here. If the use temperature and/or moisture are different (e.g., to simulate a gradient) in each of the plies, then they should be given unique material identification numbers since the code treats them as if they consist of different material systems. The reason for this is that the degradation of material properties due to temperature and/or moisture effects is different in each ply as the use temperature and the amount of moisture vary in each ply.

mnemonic	ply id i	Mat. id j	T_{use} T_u	T_{cure} T_{cu}	Moisture ΔM	θ_l	thickness t_l
-1-	-2-	-3-	-4-	-5-	-6-	-7-	-8-
PLY	1	1	70.0	70.0	0.0	0.0	0.010

Card Group IV: Material Systems

Details regarding the choice of materials, such as fiber and matrix constituents, fiber volume ratio (f.v.r), void volume ratio (v.v.r), and regular or hybrid composite, are provided within this card group. There are N_{ms} (number of material systems) number of cards, one card representing each material system and each card containing nine entries. The following card is an example taken from the sample data set in table III:

Mnemonic	id.	Fiber/ Matrix	f.v.r k_f	v.v.r k_v	Fiber/ Matrix	V_{sc}	f.v.r k_f	v.v.r k_v
-1-	-2-	-3-	-4-	-5-	-6-	-7-	-8-	-9-
MATCRD		1AS--IMLS	.55	.02	AS--IMLS	0.0	0.57	0.03
MATCRD		2SGLAHMHS	.55	.01	AS--IMHS	0.4	0.57	0.01

All the cards in this group have the mnemonic MATCRD which is the first entry of the card. The second entry is the material system identification number which should be the same as the one entered on the PLY card. The third and fourth entries are coded words for fiber and matrix materials of the primary composite. The code words are entered in format 2A4. For example, the code for an AS fiber is AS-- and epoxy matrix is EPOX. Note that, even though there are two entries for the primary matrix composite system, they occupy only one field on the data card as shown under field -3- in this example. A complete list of the code names for the fibers and matrices along with their properties is provided in appendix A. The user may choose any combination of fiber and matrix for a composite system. The fourth and fifth entries pertain to the details of the primary composite system: they are the primary fiber volume ratio and the primary void volume ratio, respectively. The next entry refers to the secondary composite system because it is applicable for the case of a hybrid composite ply (if a standard composite system is being analyzed, then field -6- should have the same entries as field -3-). Note that this is the case with the first material system chosen in this example. The second material system chosen in the sample is an intraply hybrid composite system. The seventh entry, therefore, is the secondary composite system volume ratio (i.e., the percentage of the ply consisting of the secondary system). This ratio is zero for standard composite systems. The eighth and ninth entries are the fiber volume ratio and the void volume ratio for the secondary composite system, respectively. The last two values need to be entered only when applicable. Thus, in the sample, material number 2 is a hybrid composite consisting of a primary composite system of SGLA/HMHS at 55 percent f.v.r. and 1 percent v.v.r.; 40 percent of that ply consists of the secondary composite AS/IMHS with 57 percent f.v.r. and 1 percent v.v.r.

Card Group V: Loads

The applied loads consist of a combination of in-plane membrane loads, in-plane bending loads, and transverse force resultants. Each such combination constitutes a set of loading conditions, each of which consists of three cards and there are three times N_{lc} cards in total within this group. N_{lc} is the number of loading conditions. The example problem in table III has one set of loading conditions and is reproduced here for illustration.

Mnemonic	N_x	N_y	N_{xy}	T_{bcs}
-1-	-2-	-3-	-4-	-5-
PMEMB	1000.0	0.0	0.0	0.0

The membrane loads and the orientation with respect to the structural axes are specified on this card. The first entry is the mnemonic PMEMB although the older mnemonic PLOAD is also allowed. The four entries that follow the mnemonic are N_x, N_y, N_{xy}, and θ_{cs}. The first three are the in-plane membrane force resultants defined in the structural coordinate system. The last entry, θ_{cs}, is the orientation of the loads with respect to the structural axes. For this example, a load of 1000 lb/in. is applied along the x-direction.

Mnemonic	M_x	M_y	M_{xy}
-1-	-2-	-3-	-4-
PBEND	0.0	0.0	0.0

The mnemonic for the next card in this group is PBEND. The in-plane bending force resultants M_x, M_y, and M_{xy} are specified (in lb-in./in.) on the card. The older PLOAD for the mnemonic is also valid. Note that for this problem no bending loads are specified. The user may completely default all three fields (by leaving blanks) following the first entry; however, the first entry is mandatory.

Mnemonic	Q_{xz}	Q_{yz}	P_u	P_l
-1-	-2-	-3-	-4-	-5-
PTRAN	0.0	0.0	0.0	0.0

The last card in this group is for specifying the transverse force resultants. They are Q_{xz}, Q_{yz} (defined in lb/in.) for the transverse shear stress resultants, and P_u, P_l (in psi) for the applied transverse pressures on the laminate upper (top) and lower (bottom) surfaces. The mnemonic for this card is PTRAN and the older PLOAD is still valid. Note that, if the analysis is for more than one set of loading conditions, the user simply needs to stack up sets of three cards for each different loading condition.

Card Group VI: Cyclic Loads

This is a new feature in ICAN. A set of modules has been added to ICAN so that the user can assess the durability/life of the composite under thermal and mechanical loads. The theoretical background and the simplified models are discussed in reference 2. Basically, the type of input needed is the lower and upper limits of the cyclic load, the number of cycles, and the cyclic degradation coefficient β_l. The program uses this information and computes a complete failure strength analysis based on the first-ply failure. The failure criteria are the maximum stress criteria. The types of cyclic loads allowed are either in-plane membrane or in-plane bending. Even though there is no request for durability analysis in this example, a detailed discussion is provided herein for information.

Mnemonic	Upper	Lower	cycles	β_l
-1-	-2-	-3-	-4-	-5-
CNXX	200.	100.	100000.	0.01
CNYY	-50.	-100.	5000.	0.02
CNXY				
CMXX				
CMYY				
CMXY				

There are six cards in this group. The first three are for in-plane membrane cyclic loads with mnemonics CNXX, CNYY, and CNXY. The last three are for in-plane bending cyclic loads with mnemonics CMXX, CMYY, and CMXY. Four entries follow the mnemonic on each card. Entries one and two are the upper and the lower cyclic load limits. The third entry is the total number of cycles to be applied. The fourth is the cyclic degradation coefficient β_l. This coefficient is usually in the range of 0.005 to 0.1 and must be obtained from actual experimental data. Note that, in the example shown in table III, all of these cards are commented out.

Card Group VII: Output Options

This card group is also new in this updated version and allows the user to tailor the output to specific needs. Accordingly, several keywords signifying a particular analysis or a piece of information are provided so that the user can then specify only the keywords pertinent to the analysis desired. Therefore, the complete output need not be printed. Following is the list of all the options currently available from the sample problem in table III:

Mnemonic keyword

```
  -1-     -2-     -3-     -4-     -5-     -6-     -7-     -8-    -9-
-------|-------|-------|-------|-------|-------|-------|-------|------
$  PRINT  IDECHO  Output request for input data echo          (Option 3)
$  PRINT INPTSUM  Output request for summary of input data    (Option 4)
$  PRINT FIBMATP  Output request for constituent/ ply props.  (Option 5)
$  PRINT STRSTRN  Output request for stress/strain law.       (Option 6)
$  PRINT PROPCOM  Output request for composite properties.    (Option 7)
$  PRINT  CONSTI  Output request for constitutive relation.   (OPTION 8)
$  PRINT REDSTIF  Output request for Reduced D&A Stiffness.   (Option 9)
$  PRINT FEMDATA  Output request for F.E.A. Data              (Option 10)
$  PRINT DISPFOR  Output request for Force/Disp relations.    (Option 11)
$  PRINT PLYRESP  Output request for Ply Response/Prop.       (Option 12)
$  PRINT  NUMISM  Output request for Poisson"s Ratio mismatch(Option 13)
$  PRINT FREESTR  Output request for free edge stresses.      (Option 14)
$  PRINT   MICRO  Output request for Microstresses/inf. coefs(Option 15)
$  PRINT  STRCON  Output request for stress conc. factors.    (Option 16)
$  PRINT  DELAMI  Output request for delamination around hole(Option 17)
$  PRINT STRSINF  Output request for Stress/Strain In. coef.  (Option 18)
$  PRINT FAILDET  Output request for Fail. Anal. Details.     (Option 19)
$  PRINT FAILSUM  Output request for Fail. Anal. Summary.     (option 20)
$  PRINT  DURAAN  Output request for durability results       (Option 21)
$  PRINT DURADET  Output request for durability details       (Option 22)
$  PRINT DURASUM  Output request for durability summary       (Option 23)
$  PRINT DURADEF  Output request for dura. with defect        (Option 24)
$  PRINT DURDEFS  Output request for dura/defect summary      (Option 25)
   PRINT     ALL  Output request for complete results         (Option 0)
$  PRINT    NONE  No Output is requested.                      (Option 99)
```

Note that only the first two fields on the input card are read by the code. The first entry is the mnemonic PRINT, and the second entry is the keyword signifying the type of information to be printed. All currently available keywords are listed here with a brief explanation. The explanation itself is optional and is only included to provide further information. (A more detailed description of each of the options is provided in the section Printing Options.) The explanation may be omitted in the actual input data set. Note that for this particular example all the requests are commented out except for the one that has the keyword ALL, which results in the complete output being printed.

Dedicated Data Bank

The data base of constituent properties is a unique feature of the ICAN computer code. In this updated version, the data base has been thoroughly revised to render it more user friendly and readable. The sole purpose of the dedicated data bank is to reduce the burden of preparing the necessary data for the constituent properties. The user only needs to specify the coded names for the fiber and matrix materials in the input data file. Based on this information, ICAN retrieves the corresponding blocks of data (constituent properties) from the resident data bank. The format of the data base of material properties is explained in this section so that the user can add the properties of new materials as they become available or can modify existing entries as appropriate to his/her needs. Data for four fibers and four matrices are provided in the present package (appendix A). The data base is divided into two sections: fiber material properties and matrix material properties. Each section is now described.

Fiber Material Properties

Fiber material properties is the first section of data. It begins with the title card FIBER PROPERTIES, starting from column number one. This title card is followed by several groups/blocks of cards. Each block corresponds to a set of required properties (e.g., thermal) for each fiber material. This means that these cards must remain in the same format and location as presented. The first entry of the "block" of fiber properties contains a four-character code name of a fiber in format A4, followed by a short description of the fiber material. The code name must start from the first column, but the description is optional. The next three cards are reserved for any comments that the user might want to include. These cards are denoted with a $ as their first entry. The 3 comment cards are followed by 16 cards, each of which starts with a short description of a fiber property, its symbol, a value, and the units in which the value is given. The first of these cards contains the property "number of fibers per end" which should be entered as an integer in format I5. The remaining values are real numbers in format E9.3. All values must start from column 42 so that the program can interpret them correctly. Overall, the total number of cards in the fiber properties block is 20. A representative example of these fiber properties is shown in table IV.

TABLE IV.—FIBER ENTRY IN DATA BANK

```
Description                    Symbol       Value          Units

  -1-    -2-      -3-     -4-     -5-     -6-     -7-     -8-
-------|-------|-------|-------|-------|-*-----|-------|-------|
AS--   GRAPHITE FIBER.
$
$
$
Number of fibers per end       Nf          10000          number
Filament equivalent diameter   df          0.300E-03      inches
Weight density                 Rhof        0.630E-01      lb/in**3
Normal moduli (11)             Ef11        0.310E+08      psi
Normal moduli (22)             Ef22        0.200E+07      psi
Poisson's ratio (12)           Nuf12       0.200E+00      non-dim
Poisson's ratio (23)           Nuf23       0.250E+00      non-dim
Shear moduli (12)              Gf12        0.200E+07      psi
Shear moduli (23)              Gf23        0.100E+07      psi
Thermal expansion coef. (11)   Alfaf11     -.550E-06      in/in/F
Thermal expansion coef. (22)   Alfaf22     0.560E-05      in/in/F
Heat conductivity (11)         Kf11        0.403E+01      BTU-in/hr/in**2/F
Heat conductivity (22)         Kf22        0.403E+00      BTU-in/hr/in**2/F
Heat capacity                  Cf          0.170E+00      BTU/lb/F
Fiber tensile strength         SfT         0.400E+06      psi
Fiber compressive strength     SfC         0.400E+06      psi
```

At the end of the fiber properties section, the words OVER END OF FIBER PROPERTIES are placed on a card where OVER is the four-character coded name reserved to denote the end of the fiber property section. The program looks for this coded name to stop the search for a fiber.

Matrix Material Properties

The second section of the data base contains the matrix material properties. The start of this section is denoted by the title card MATRIX PROPERTIES. This card follows the line OVER END OF FIBER PROPERTIES. The title card is followed by several blocks, each representing a set of material properties for a different matrix. These cards are in the same format as the fiber properties, except for the very first card which has no integer value. The total number of cards in this block of matrix properties is 19. A representative example of these matrix properties is shown in table V.

TABLE V.—MATRIX ENTRY IN DATA BANK

```
Description                    Symbol       Value          Units

  -1-    -2-      -3-     -4-     -5-     -6-     -7-     -8-
-------|-------|-------|-------|-------|-*-----|-------|-------|
IMHS  INTERMEDIATE MODULUS HIGH STRENGTH MATRIX
$
$
$
Weight density                 Rhom       0.440E-01      lb/in**3
Normal modulus                 Em         0.500E+06      psi
Poisson's ratio                Num        0.350E+00      non-dim
Thermal expansion coef.        Alfa m     0.360E-04      in/in/F
Matrix heat conductivity       Km         0.104E+00      BTU-in/hr/in**2/F
Heat capacity                  Cm         0.250E+00      BTU/lb/F
Matrix tensile strength        SmT        0.150E+05      psi
Matrix compressive strength    SmC        0.350E+05      psi
Matrix shear strength          SmS        0.130E+05      psi
Allowable tensile strain       eps mT     0.200E-01      in/in
Allowable compr. strain        eps mC     0.500E-01      in/in
Allowable shear strain         eps mS     0.350E-01      in/in
Allowable torsional strain     eps mTOR   0.350E-01      in/in
Void heat conductivity         kv         0.225E+00      BTU-in/hr/in**2/F
Glass transition temperature   Tgdr       0.420E+03      F
```

The end of the matrix material properties section is indicated by the card OVER END OF MATRIX PROPERTIES.

A significant feature of the updated data base is that the user can identify each individual material property, on a line-by-line basis, corresponding to the fiber or matrix of interest. Thus the user can change numerical values without any confusion or hesitation. Also, each of the blocks of fiber/matrix material properties is separated from the others by two spaces. Even if the user adds or deletes these spaces between each block of values, the program still searches for the required properties. Again, the only restrictions are keeping the same format of the values available in the blocks of material properties.

Compiling and Running

The process of compiling is usually a machine-dependent procedure and requires a knowledge of the Job Control Language (JCL) specific to the operating system under which a particular computer is running. ICAN is primarily run on the VM operating system residing in the AMDAHL mainframe computer at the NASA Lewis Research Center. Two "Exec" files required for compiling and running the sample data set are provided in appendix B for information purposes. These files should also guide the user in developing similar JCL files for other operating systems as well. The most common difficulty experienced in converting this code to other systems is attributed to the different conventions followed in allocating the various OPEN statements (I/O units) under individual operating systems. The ICAN code has been tested at NASA Lewis on a variety of mainframes operating under different operating systems: VAX/VMS, CRAY/UNICOS, ALLIANT, IBM/TSS, and UNIVAC. A version of ICAN for unix-based work stations is under development. Among the PC's, ICAN has been tested on an IBM compatible 286/386 using a MICROSOFT FORTRAN 5.0 compiler. A separate version for PC's is also under development and will be made available at a later date.

Output: Printing Options

The output for ICAN is divided into 25 different sections which can be requested optionally by specifying the appropriate options in the output card group of the input dataset. Each item is denoted by a keyword. The complete output for the sample problem in table III is given in appendix C. Each of the 25 options is briefly described in the following sections. However, it should be noted that this manual is no substitute for a textbook on composites and, therefore, some knowledge of composite mechanics is required of the user. The user may refer to any good textbook on composites, such as reference 3, for further understanding. Also, it is strongly advised that the previous version of the ICAN manual (ref. 1) be used as a supplement to this present manual for additional information.

Options 1 and 2. These options pertain to the ICAN logo, units, and coordinate systems. They are always printed at the beginning of the output, and no choice is given to the user.

Option 3 (IDECHO). An exact replica of the input data set is printed and is generally used to check for typographical errors.

Option 4 (INPTSUM). A concise summary of the input as interpreted by the program is given. With this information, the user can further verify his/her data for consistency and accuracy.

Option 5 (FIBMATP). In this section of output, a complete list of fiber and matrix properties as retrieved from the data bank is printed. Also, the ply properties as calculated by the micromechanics modules are output. Note that the equations programmed in the micromechanics modules are updated as compared to the original version of ICAN. They are provided in appendix D and should be referred to and compared with the previous version (ref. 1) for any changes.

Option 6 (STRSTRN). This option prints the stress/strain relations for the composite (Hooke's law).

Option 7 (PROPCOM). The 2- and 3-D composite properties about the laminate structural axes are printed.

Option 8 (CONSTI). Constitutive relations, that is, the relations between the generalized force resultants (in-plane membrane and bending forces) and the generalized displacements (strains and curvatures), are printed as a result of this option.

Option 9 (REDSTIF). The stiffness matrix of a generally orthotropic material is usually expressed in terms of three partitioned matrices: [A] for extensional stiffness, [B] for bending extension coupling stiffness, and [D] for bending stiffness. The effect of coupling between bending and extensional forces can be integrated into [A] and [D] to give rise to the so-called reduced stiffnesses which are printed under this option. This information can be employed in finite-element analyses using elements with orthotropic material properties to account for the coupling effects. However, most modern finite-element programs provide for inputting separate material cards for extensional, coupling, and bending stiffnesses, a provision which then makes this option obsolete.

Option 10 (FEMDATA). Some useful information for finite-element analysis is provided if this option is invoked. For example, the MAT9 card can be directly used in MSC/NASTRAN (ref. 4) bulk data cards.

Option 11 (DISPFOR). The relations between the strains and curvatures of a laminate as a result of membrane and bending loads or the equivalent loads as a result of applied strains and curvatures are printed in this block of output.

Option 12 (PLYRESP). The complete list of ply properties, responses, and failure details is printed for each ply in the laminate.

Option 13 (NUMISM). The amount of mismatch in Poisson's ratio between the plies and the laminate is given in a table. Sometimes this is useful information for deciding qualitatively the delamination-prone sites.

Option 14 (FREESTR). The stresses near a free-edge region are printed out. Care must be exercised in interpreting the results. They are based on approximate engineering theories and give good qualitative information regarding the relative magnitudes of the peaks in the individual plies. This printout is suppressed in the case of combined loading.

Option 15 (MICRO). The microstresses in each ply are printed if this option is chosen. Two regions of interest are considered for the computations. The first region (A) is between the fibers and is composed entirely of matrix. The second region (B) consists of fibers as well as matrix. Figure 5 is a schematic depicting regions A and B. The relevant theoretical details regarding the development of the appropriate equations for microstresses are provided in reference 5. Also, printed in this option is the list of microstress influence coefficients for unit applied stresses, unit temperature differences, and unit moisture content. This table can be used to compute microstresses resulting from any type of combined loading by using superposition.

Option 16 (STRCON). Stress concentration factors around a circular hole in an infinite plate due to in-plane loads (N_{xx}, N_{yy}, and N_{xy}) are computed and printed out if this option is chosen. The concentration factors are computed at 5° intervals for each of these loadings. Stress concentrations under combined loading can be computed by superposition. This information is particularly useful in estimating the static strength of laminates with defects. All the necessary equations required for this analysis are taken from reference 6.

Option 17 (DELAMI). The most probable locations of delamination around a circular hole in an infinite plate are estimated and printed. The Poisson's ratio differences between the adjacent plies and the composite are computed around a circular hole at 5° intervals. The products of the differences and the corresponding stress concentration factors provide an insight into the probable delamination locations. It is assumed that the onset of delamination is likely to occur at the locations for which the products of Poisson's ratio mismatch with the corresponding stress concentration factors are a maximum. A summary of results is provided with the most likely locations of delamination sites given at the end. All the intermediate details of the calculations are printed optionally if the Boolean group card NONUDF is chosen as FALSE.

Option 18 (STRSINF). In this option, a table of influence coefficients is printed out for unit membrane loads, unit bending loads, unit temperature, and unit moisture content. This information is extremely useful in that the table can be utilized for computing the response under any type of combined loading without additional analyses being conducted.

Options 19 and 20 (FAILDET and FAILSUM). These options provide information regarding laminate failure stress analysis. The complete details are provided if the option FAILDET is chosen. The second of these options, FAILSUM, provides a concise summary of the analysis. The failure criteria are based

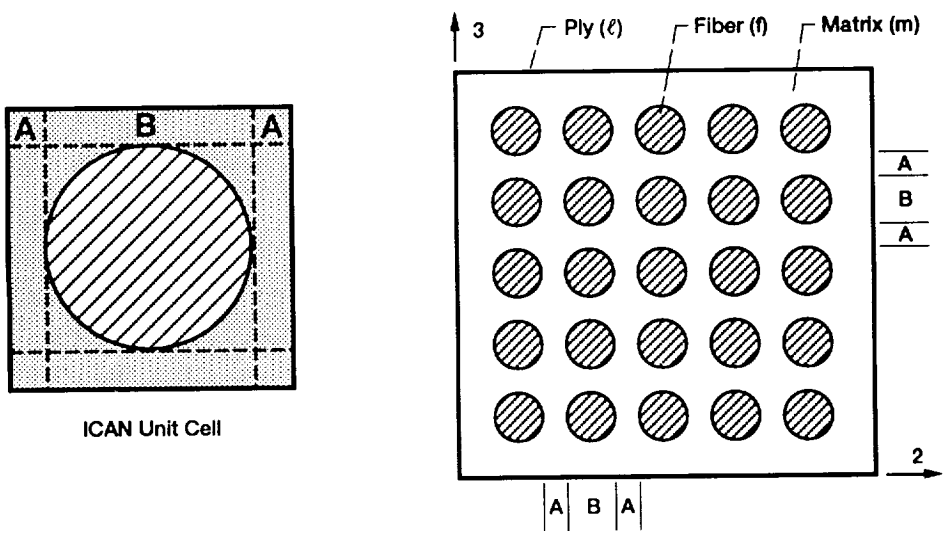

Figure 5.—Definitions of regions for ply microstress calculations.

on maximum strength criteria. Details regarding both the first-ply failure (lower bound) and fiber fracture (upper bound) are given. Failures based on combined strength criteria (Hoffman's and Modified Distortion Energy) are provided as a part of the ply response analysis and therefore option 12 (PLYRESP), discussed earlier, must be selected if needed.

Option 21 (DURAAN). Options 21 to 25 are completely new in this version of ICAN. They are concerned with the durability and fatigue of composites with and without defects. Composite life is determined on the basis of a combination of maximum stress-based, first-ply failure criteria. The theoretical details can be found in reference 2. The keyword DURANN, if chosen, implies that a fatigue and durability analysis request was made by the user. This request should be part of the input if the results from the fatigue and durability analysis modules are to be printed. The exact nature of the output request will be determined by the keywords that follow DURAAN.

Option 22 (DURADET). The keyword DURADET, if chosen, causes the code to print the complete ply-by-ply details of a durability analysis.

Option 23 (DURASUM). This keyword requests a summary of the durability analysis under a given set of cyclic loads and a given number of applied cycles. The printed values indicate the most likely ply to fail first from fatigue degradation.

Option 24 (DURADEF). This option is similar to option 22 but pertains to an analysis with defects. The stress concentration effects due to the presence of defects are included in the analysis. The Boolean card DEFECT must be chosen to be TRUE.

Option 25 (DURADEFS). This option is identical to option 23 with the exception that it pertains to the analysis with the effects of defects included.

Options 0 and 99 (ALL and NONE). If a complete output from ICAN is desired, then option 0 (ALL) is selected. All other options must be turned off or commented out. If no output is desired, option 99 (NONE) must be specified as the output choice. This choice is useful if ICAN is embedded in a structural analysis program as a subroutine and all the printed output may not be desired at every step of the structural analysis.

Demonstration Problems

In order to familiarize the user with the code, its various features are illustrated in three demonstration problems presented in this section.

Problem 1

A quasi-isotropic, eight-ply laminate $([0/45/-45/90])_s$ is cured from 350 to 70 °F (room temperature). The composite consists of T-300 (T300) fiber and an intermediate-modulus, high-strength matrix (IMHS) with a fiber volume ratio of 0.55. There are no additional applied loads. We are interested mainly in the residual stresses due to curing. The following input dataset results:

```
$
$ Demonstration Problem No. 1
$ This is a test problem to show how to incorporate residual stresses
$ due to curing from 350 F to Room Temperature.
$
This is ICAN_Demo1
  COMSAT        T
   CSANB        F
    BIDE        F
   RINDV        F
  NONUDF        T
  DEFECT        F
$  Eight Ply Quasi-Isotropic Laminate.
     PLY        1        1   70.0  350.0  0.000     0.0    .005
     PLY        2        1   70.0  350.0  0.000    45.0    .005
     PLY        3        1   70.0  350.0  0.000   -45.0    .005
     PLY        4        1   70.0  350.0  0.000    90.0    .005
     PLY        5        1   70.0  350.0  0.000    90.0    .005
     PLY        6        1   70.0  350.0  0.000   -45.0    .005
     PLY        7        1   70.0  350.0  0.000    45.0    .005
     PLY        8        1   70.0  350.0  0.000     0.0    .005
$  T300 fiber in Intermediate Modulus High Strength Matrix.
  MATCRD        1T300IMHS    .55     .00   T300IMHS  0.00    .54    0.00
$  No loads
   PMEMB      0.0    0.0      0.0     0.0
   PBEND      0.0    0.0      0.0     0.0
   PTRAN      0.0    0.0
$  Complete Output is Requested.
   PRINT      ALL
```

Problem 2.

This problem illustrates how to account for the degradation due to hygrothermal conditioning. The use temperature is taken as 200 °F and the amount of moisture present in the composite is 1 percent by weight. Furthermore, the laminate is made of an interply hybrid type of composite. The middle two plies are made of S-Glass fiber (SGLA) in an intermediate-modulus, low-strength epoxy (IMLS). There are no loads applied because we are only interested in looking at the properties. The input for this problem is

```
$
$ Demonstration Problem No. 2
$ This is a test problem to show how to account for Hygrothermal
$ Environment Degradation.  Each ply has a use temperature 200 F and
$ 1% Moisture.  The laminate is made of Interply Hybrid composite.
$ No loads are applied.  The Boolean "COMSAT" is set to "FALSE" as we
$ are only interested in looking at the properties.
$
This is ICAN_Demo2 problem
  COMSAT        F
   CSANB        F
    BIDE        F
   RINDV        F
  NONUDF        T
  DEFECT        F
$  Eight Ply Quasi-Isotropic Laminate.
     PLY        1        1  200.0  350.0  1.000     0.0   .005
     PLY        2        1  200.0  350.0  1.000    45.0   .005
     PLY        3        1  200.0  350.0  1.000   -45.0   .005
     PLY        4        2  200.0  350.0  1.000    90.0   .005
     PLY        5        2  200.0  350.0  1.000    90.0   .005
     PLY        6        1  200.0  350.0  1.000   -45.0   .005
     PLY        7        1  200.0  350.0  1.000    45.0   .005
     PLY        8        1  200.0  350.0  1.000     0.0   .005
$  T300 fiber in Intermediate Modulus High Strength Matrix. (outer plies
$  SGLA fiber in Intermediate Modulus Low Strength Matrix.  (90 plies)
  MATCRD        1T300IMHS    .55     .00   T300IMHS  0.00   .54   0.00
  MATCRD        2SGLAIMLS    .55     .00   SGLAIMLS  0.00   .54   0.00
$  No loads
   PMEMB     0.0    0.0     0.0     0.0
   PBEND     0.0    0.0     0.0     0.0
   PTRAN     0.0    0.0
$  Complete Output is Requested.
   PRINT     ALL
```

Problem 3

This problem illustrates how to apply cyclic loads and perform a durability analysis. The laminate consists of 16 plies. Only output pertaining to the durability analysis is requested by using the selective output options. The laminate is subjected to in-plane static loads and tension-tension cyclic load. The cyclic degradation coefficient is taken as 0.01 and the number of cycles is 10 million. The input dataset is

```
$
$  Demonstration Problem No. 3
$  A quasi-isotropic laminate made of 16 plies is subjected to hygro-
$  thermal conditioning and cyclic loads.  Durability analysis results
$  requested optionally.
$
This is ICAN_Demo3 problem
  COMSAT        T
   CSANB        F
    BIDE        F
   RINDV        F
  NONUDF        T
  DEFECT        F
     PLY        1        1  160.0  350.0  0.500     0.0   .005
     PLY        2        1  160.0  350.0  0.500    45.0   .005
     PLY        3        1  160.0  350.0  0.500   -45.0   .005
     PLY        4        1  160.0  350.0  0.500    90.0   .005
     PLY        5        1  160.0  350.0  0.500     0.0   .005
     PLY        6        1  160.0  350.0  0.500    45.0   .005
     PLY        7        1  160.0  350.0  0.500   -45.0   .005
     PLY        8        1  160.0  350.0  0.500    90.0   .005
     PLY        9        1  160.0  350.0  0.500    90.0   .005
     PLY       10        1  160.0  350.0  0.500   -45.0   .005
     PLY       11        1  160.0  350.0  0.500    45.0   .005
     PLY       12        1  160.0  350.0  0.500     0.0   .005
     PLY       13        1  160.0  350.0  0.500    90.0   .005
     PLY       14        1  160.0  350.0  0.500   -45.0   .005
     PLY       15        1  160.0  350.0  0.500    45.0   .005
     PLY       16        1  160.0  350.0  0.500     0.0   .005
  MATCRD        1T300IMHS   .55    .00   T300IMHS  0.00   .54   0.00
$ Static Loads
   PMEMB   100.0  50.0     0.0    0.0
   PBEND     0.0   0.0     0.0    0.0
   PTRAN     0.0   0.0
$ Cyclic Loads. (tension - tension)
    CNXX  200.     0.0    1.E+07   0.01
    CNYY    0.     0.0    1.E+00   0.01
    CNXY    0.     0.0    1.E+00   0.01
    CMXX    0.     0.0    1.E+00   0.01
    CMYY    0.     0.0    1.E+00   0.01
    CMXY    0.     0.0    1.E+00   0.01
$ Only the durability analysis results are requested.
   PRINT  DURAAN  OUTPUT REQUEST FOR DURABILITY RESULTS      (OPTION 21)
   PRINT DURADET  OUTPUT REQUEST FOR DURABILITY DETAILS      (OPTION 22)
   PRINT DURASUM  OUTPUT REQUEST FOR DURABILITY SUMMARY      (OPTION 23)
$  PRINT     ALL
```

Parts of output taken from demonstration problem 3 are included in appendix C to show the new features of this updated ICAN version. These features pertain to the output requests for the durability analysis, an application for which can be found in reference 7.

Special Considerations

There may arise many occasions where one has to simulate a nonstandard layer or ply. Reference 8 provides examples of the versatility of ICAN in simulating a variety of problem situations. Of the interesting examples discussed in this section, one is simulating the problem of a thin layer of adhesive. This simulation can be achieved by the following steps:

(1) Create a fiber with the properties of the adhesive in the resident data bank by copying an existing block of fiber properties and editing them to reflect the adhesive properties. The fiber can then be named with a unique four-character code name, such as ADHF.

(2) Create a matrix card set with the properties of the adhesive along the same lines as above and name it, for example, ADHM.

(3) Choose a very low fiber volume ratio (e.g., 0.01) for the adhesive layer.

(4) Specify the appropriate thickness for the adhesive on the PLY card.

Note that this procedure can be used to simulate any layer made of an isotropic material. It can also be used to model interply layers (thin resin-rich layers between adjacent plies of the order of the fiber diameter).

Another example of simulation for a nonstandard composite is a woven (textile) composite system. The steps involved in creating the input dataset are the following:

(1) Divide the woven layer into two plies, 0° and 90°, assigning half of the woven layer thickness to each ply.

(2) Determine the fiber volume ratios in each, based on the warp and fill direction information, and use this information on the MATCRD card to define the material system (ref. 8).

Summary

An updated version of the computer program ICAN (Integrated Composite Analyzer) is described in detail from a user's point of view. The program aids in all the essential aspects of analysis and design of multilayered fiber composites. It is modular, open ended, and user friendly. It can handle a variety of composite systems having one type of fiber and one matrix as constituents as well as intraply and interply hybrid composite systems. It can also simulate isotropic layers by considering a primary composite system with negligible fiber volume content. This feature is specifically useful in modeling thin interply matrix layers. The program can account for hygrothermal conditions and various combinations of in-plane and bending loads. A sample input and its generated output illustrate how to use the code. Three sample problems are provided to illustrate the various capabilities of the code. Some of the key analysis capabilities of the code are stress concentration factors around a circular hole, locations of probable delamination, a summary of the laminate failure stress analysis, free-edge stresses, microstresses, ply stress-strain influence coefficients, and durability/fatigue analysis with and without defects. These features make this second-generation ICAN an even more powerful, cost-effective tool for analyzing/designing polymer-matrix-based fiber composite structures and components.

Future Plans

Versions of ICAN for UNIX-based work stations and for MICROSOFT Windows running on IBM PC's are in the planning stages. Theoretical developments to include damping in the analysis are complete and will be incorporated in the code shortly. Analyses for long-term, time-exposure effects (degradation due to aging, creep, etc.) need to be developed and incorporated in the code.

Lewis Research Center
National Aeronautics and Space Administration
Cleveland, Ohio, April 28, 1992

Appendix A
Dedicated Data Bank (DATABK DATA A)

```
FIBER PROPERTIES
T300  GRAPHITE FIBER.
$
$
$
Number of fibers per end        Nf          3000        number
Filament equivalent diameter    df        0.300E-03     inches
Weight density                  Rhof      0.640E-01     lb/in**3
Normal moduli (11)              Ef11      0.320E+08     psi
Normal moduli (22)              Ef22      0.200E+07     psi
Poisson"s ratio (12)            Nuf12     0.200E+00     non-dim
Poisson"s ratio (23)            Nuf23     0.250E+00     non-dim
Shear moduli (12)               Gf12      0.130E+07     psi
Shear moduli (23)               Gf23      0.700E+06     psi
Thermal expansion coef. (11)    Alfaf11   -.550E-06     in/in/F
Thermal expansion coef. (22)    Alfaf22   0.560E-05     in/in/F
Heat conductivity (11)          Kf11      0.403E+01     BTU-in/hr/in**2/F
Heat conductivity (22)          Kf22      0.403E+00     BTU-in/hr/in**2/F
Heat capacity                   Cf        0.170E+00     BTU/lb/F
Fiber tensile strength          SfT       0.350E+06     psi
Fiber compressive strength      SfC       0.300E+06     psi

AS--  GRAPHITE FIBER.
$
$
$
Number of fibers per end        Nf        10000         number
Filament equivalent diameter    df        0.300E-03     inches
Weight density                  Rhof      0.630E-01     lb/in**3
Normal moduli (11)              Ef11      0.310E+08     psi
Normal moduli (22)              Ef22      0.200E+07     psi
Poisson"s ratio (12)            Nuf12     0.200E+00     non-dim
Poisson"s ratio (23)            Nuf23     0.250E+00     non-dim
Shear moduli (12)               Gf12      0.200E+07     psi
Shear moduli (23)               Gf23      0.100E+07     psi
Thermal expansion coef. (11)    Alfaf11   -.550E-06     in/in/F
Thermal expansion coef. (22)    Alfaf22   0.560E-05     in/in/F
Heat conductivity (11)          Kf11      0.403E+01     BTU-in/hr/in**2/F
Heat conductivity (22)          Kf22      0.403E+00     BTU-in/hr/in**2/F
Heat capacity                   Cf        0.170E+00     BTU/lb/F
Fiber tensile strength          SfT       0.400E+06     psi
Fiber compressive strength      SfC       0.400E+06     psi

SGLA   S- GLASS FIBER.
$
$
$
Number of fibers per end        Nf          204         number
Filament equivalent diameter    df        0.360E-03     inches
Weight density                  Rhof      0.900E-01     lb/in**3
Normal moduli (11)              Ef11      0.124E+08     psi
Normal moduli (22)              Ef22      0.124E+08     psi
Poisson"s ratio (12)            Nuf12     0.200E+00     non-dim
Poisson"s ratio (23)            Nuf23     0.200E+00     non-dim
Shear moduli (12)               Gf12      0.517E+07     psi
Shear moduli (23)               Gf23      0.517E+07     psi
Thermal expansion coef. (11)    Alfaf11   0.280E-05     in/in/F
Thermal expansion coef. (22)    Alfaf22   0.280E-05     in/in/F
Heat conductivity (11)          Kf11      5.208E-02     BTU-in/hr/in**2/F
```

Heat conductivity (22)	Kf22	5.208E-02	BTU-in/hr/in**2/F
Heat capacity	Cf	0.170E+00	BTU/lb/F
Fiber tensile strength	SfT	0.360E+06	psi
Fiber compressive strength	SfC	0.300E+06	psi

HMSF HIGH MODULUS SURFACE TREATED FIBER.
$
$
$

Number of fibers per end	Nf	10000	number
Filament equivalent diameter	df	0.300E-03	inches
Weight density	Rhof	0.703E-01	lb/in**3
Normal moduli (11)	Ef11	0.550E+08	psi
Normal moduli (22)	Ef22	0.900E+06	psi
Poisson"s ratio (12)	Nuf12	0.200E+00	non-dim
Poisson"s ratio (23)	Nuf23	0.250E+00	non-dim
Shear moduli (12)	Gf12	0.110E+07	psi
Shear moduli (23)	Gf23	0.700E+06	psi
Thermal expansion coef. (11)	Alfaf11	-.550E-06	in/in/F
Thermal expansion coef. (22)	Alfaf22	0.560E-05	in/in/F
Heat conductivity (11)	Kf11	0.403E+01	BTU-in/hr/in**2/F
Heat conductivity (22)	Kf22	0.403E+00	BTU-in/hr/in**2/F
Heat capacity	Cf	0.170E+00	BTU/lb/F
Fiber tensile strength	SfT	0.280E+06	psi
Fiber compressive strength	SfC	0.200E+06	psi

OVER END OF FIBER PROPERTIES

MATRIX PROPERTIES
IMLS INTERMEDIATE MODULUS LOW STRENGTH MATRIX.
$
$
$

Weight density	Rhom	0.460E-01	lb/in**3
Normal modulus	Em	0.500E+06	psi
Poisson"s ratio	Num	0.410E+00	non-dim
Thermal expansion coef.	Alfa m	0.570E-04	in/in/F
Matrix heat conductivity	Km	8.681E-03	BTU-in/hr/in**2/F
Heat capacity	Cm	0.250E+00	BTU/lb/F
Matrix tensile strength	SmT	0.700E+04	psi
Matrix compressive strength	SmC	0.210E+05	psi
Matrix shear strength	SmS	0.700E+04	psi
Allowable tensile strain	eps mT	0.140E-01	in/in
Allowable compr. strain	eps mC	0.420E-01	in/in
Allowable shear strain	eps mS	0.320E-01	in/in
Allowable torsional strain	eps mTOR	0.320E-01	in/in
Void heat conductivity	kv	0.225E+00	BTU-in/hr/in**2/F
Glass transition temperature	Tgdr	0.420E+03	F

IMHS INTERMEDIATE MODULUS HIGH STRENGTH MATRIX.
$
$
$

Weight density	Rhom	0.440E-01	lb/in**3
Normal modulus	Em	0.500E+06	psi
Poisson"s ratio	Num	0.350E+00	non-dim
Thermal expansion coef.	Alfa m	0.360E-04	in/in/F
Matrix heat conductivity	Km	8.681E-03	BTU-in/hr/in**2/F
Heat capacity	Cm	0.250E+00	BTU/lb/F
Matrix tensile strength	SmT	0.150E+05	psi

Matrix compressive strength	SmC	0.350E+05	psi
Matrix shear strength	SmS	0.130E+05	psi
Allowable tensile strain	eps mT	0.200E-01	in/in
Allowable compr. strain	eps mC	0.500E-01	in/in
Allowable shear strain	eps mS	0.350E-01	in/in
Allowable torsional strain	eps mTOR	0.350E-01	in/in
Void heat conductivity	kv	0.225E+00	BTU-in/hr/in**2/F
Glass transition temperature	Tgdr	0.420E+03	F

HMHS HIGH MODULUS HIGH STRENGTH MATRIX.
$
$
$

Weight density	Rhom	0.450E-01	lb/in**3
Normal modulus	Em	0.750E+06	psi
Poisson"s ratio	Num	0.350E+00	non-dim
Thermal expansion coef.	Alfa m	0.400E-04	in/in/F
Matrix heat conductivity	Km	8.681E-03	BTU-in/hr/in**2/F
Heat capacity	Cm	0.250E+00	BTU/lb/F
Matrix tensile strength	SmT	0.200E+05	psi
Matrix compressive strength	SmC	0.500E+05	psi
Matrix shear strength	SmS	0.150E+05	psi
Allowable tensile strain	eps mT	0.200E-01	in/in
Allowable compr. strain	eps mC	0.500E-01	in/in
Allowable shear strain	eps mS	0.400E-01	in/in
Allowable torsional strain	eps mTOR	0.400E-01	in/in
Void heat conductivity	kv	0.225E+00	BTU-in/hr/in**2/F
Glass transition temperature	Tgdr	0.420E+03	F

EPOX IMHS INTERMEDIATE MODULUS HIGH STRENGTH MATRIX.
$
$
$

Weight density	Rhom	.443E-01	lb/in**3
Normal modulus	Em	.500E+06	psi
Poisson"s ratio	Num	.350E+00	non-dim
Thermal expansion coef.	Alfa m	.428E-04	in/in/F
Matrix heat conductivity	Km	8.681E-03	BTU-in/hr/in**2/F
Heat capacity	Cm	.250E+00	BTU/lb/F
Matrix tensile strength	SmT	.150E+05	psi
Matrix compressive strength	SmC	.350E+05	psi
Matrix shear strength	SmS	.130E+05	psi
Allowable tensile strain	eps mT	.200E-01	in/in
Allowable compr. strain	eps mC	.500E-01	in/in
Allowable shear strain	eps mS	.450E-01	in/in
Allowable torsional strain	eps mTOR	.450E-01	in/in
Void heat conductivity	kv	.225E+00	BTU-in/hr/in**2/F
Glass transition temperature	Tgdr	.420E+03	F

OVER END OF MATRIX PROPERTIES

Appendix B
EXEC Files to Run ICAN

An EXEC File for Compiling ICAN Under VM Operating System

```
/* COMPILE EXEC */
ARG phylen phytyp phymod junk
''set cmstype ht''
FORTVS2 phylen ''(MAP FLAG (E) opt(2) NOPRINT''
rcode = rc
if rcode = 4 then rcode = 0
''set cmstype rt''
load phylen ''(clear''
genmod phylen
erase phylen text phymod
exit rcode
```

Notes:
The command ''FORTVS2'' is VM specific and is invoked to compile the source code. The commands ''Load'' and ''Genmod'' are used to link and generate the executable file or ''module''

An EXEC file for running ICAN on a sample dataset

```
/*   X ------------------------------------------------------------X   */
/*   X                                                            X   */
/*   X              ican    EXEC                                  X   */
/*   X                                                            X   */
/*   X    This is a REXX EXEC file to run NewIcan                 X   */
/*   X    File unit 5 is for input.                               X   */
/*   X    File unit 8 is for Databank.                            X   */
/*   X                                                            X   */
/*   X ------------------------------------------------------------X   */
parse arg fn fm ft fout.
if fout = '''' then fout = ''newout''
''FILEDEF FT05F001 DISK ''fn'' DATA A1''
''FILEDEF FT06F001 DISK ''fout'' LISTING A1''
''FILEDEF FT07F001 DISK JUNK DAT A1 (lrecl 132 xtent 9999''
''ican''
''fil * clear''
''erase junk dat a1''
exit rc
```

Notes:
In the above exec, the command FILEDEF assigns the physical I/O units to the appropriate files. Thus, the main input file is attached to unit 5 (FT05F001) and the output is attached to unit 6 (FT06F001). The unit 7 (FT07F001) is used for intermediate operations and is scratched at the end of the run. The resident data bank is attached to unit 8 internally through open statement.

For any additional information regarding the VM commands, the user should refer to VM reference and Fortran manuals.

Appendix C

Complete Printed Output For Sample Problem in Table III and Partial Output for Demonstration Problem 3 (Output Option 22)

```
*************************************************************************
*************************************************************************
**                                                                     **
**                                                                     **
**                                                                     **
**                                                                     **
**                                                                     **
**      IIIIIIIIII     CCCCCCCCC      AAAAAAAA     NNN       NNN      **
**     IIIIIIIIIIII   CCCCCCCCCCC    AAAAAAAAAA    NNNN      NNN      **
**         IIII       CCC           AAA      AAA  NNNNN     NNN      **
**         IIII       CCC           AAA      AAA  NNNNNN    NNN      **
**         IIII       CCC           AAA      AAA  NNNNNNN   NNN      **
**         IIII       CCC           AAA      AAA  NNN NNN   NNN      **
**         IIII       CCC           AAA      AAA  NNN NNN   NNN      **
**         IIII       CCC           AAA      AAA  NNN NNN   NNN      **
**         IIII       CCC           AAA      AAA  NNN  NNN  NNN      **
**         IIII       CCC           AAAAAAAAAAAA  NNN  NNN  NNN      **
**         IIII       CCC           AAAAAAAAAAAA  NNN  NNN  NNN      **
**         IIII       CCC           AAA      AAA  NNN  NNN  NNN      **
**         IIII       CCC           AAA      AAA  NNN   NNN NNN      **
**         IIII       CCC           AAA      AAA  NNN   NNN NNN      **
**         IIII       CCC           AAA      AAA  NNN   NNN NNN      **
**         IIII       CCC           AAA      AAA  NNN    NNNNNN      **
**         IIII       CCC           AAA      AAA  NNN    NNNNNN      **
**         IIII       CCC           AAA      AAA  NNN     NNNNN      **
**     IIIIIIIIIIII   CCCCCCCCCCC    AAA      AAA  NNN      NNNN      **
**      IIIIIIIIII     CCCCCCCCC     AAA      AAA  NNN       NNN      **
**                                                                     **
**                                                                     **
**       INTEGRATED COMPOSITES ANALYZER     BY  P.L.N. MURTHY         **
**                                          NASA LERC.CLEVELAND        **
**                                          DECEMBER    1991           **
**                                                                     **
**                                                                     **
**                                                                     **
*************************************************************************
*************************************************************************
```

I C A N: COORDINATE SYSTEMS

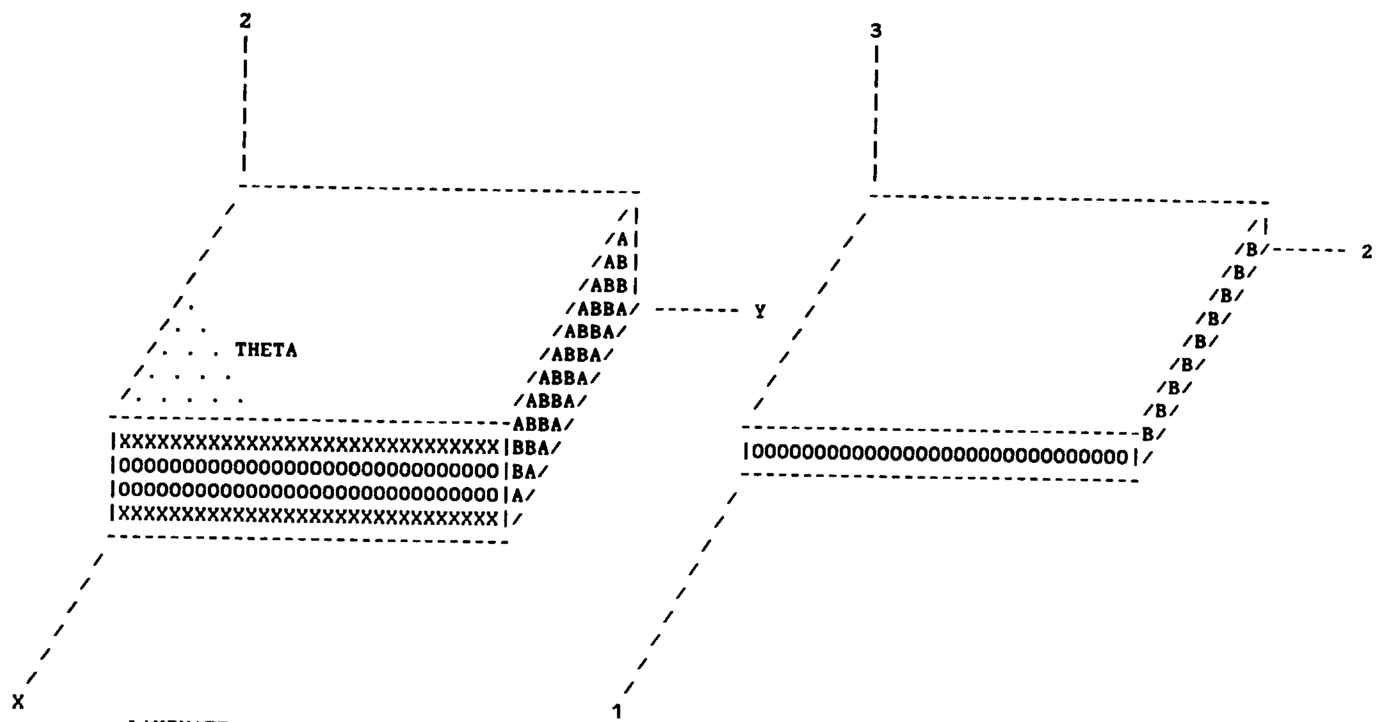

LAMINATE STRUCTURAL AXES

PLY MATERIAL AXES

COMPONENT

GLOBAL
STRUCTURAL
ANALYSIS

GLOBAL
STRUCTURAL
ANALYSIS

LAMINATE

LAMINATE

LAMINATE THEORY

LAMINATE THEORY

```
                 ------------------------------
                /                             /|
               /                             /B/
PLY           /                             /B/
             /                             /B/
            /                             /B/
           /                             /B/
          /                             /B/
         /                             /B/
        /                             /B/
       /                             /B/
      ------------------------------B/
      |0000000000000000000000000000000|/
      ------------------------------/
```

```
COMPOSITE          *
MICROMECHANICS     ***
THEORY             *****
                      *
                       *
                        *
```

```
                 ------------------------------
                /                             /|
               /                             /B/
PLY           /                             /B/
             /                             /B/
            /                             /B/
           /                             /B/
          /                             /B/
         /                             /B/
        /                             /B/
       /                             /B/
      ------------------------------B/
      |0000000000000000000000000000000|/
      ------------------------------/
```

```
                  *     COMPOSITE
                 *      MICROMECHANICS
                *       THEORY
             *****
             ***
             *
```

```
XXXXXXXXXXXXXXXXXXXXX
XXXXXXXXXX XXXXXXXXXX
XXXXXXXX     XXXXXXXX
XXXXXXX       XXXXXXX
         000
        00000
       0000000
        00000
         000
XXXXXXX       XXXXXXX
XXXXXXXX     XXXXXXXX
XXXXXXXXXX XXXXXXXXXX
XXXXXXXXXXXXXXXXXXXXX
```

CONSTITUENTS

```
NONLINEAR
MATERIAL
MODEL

  *
 *
********
 *
  *
```

```
P  |
   |
   |
   |      S
   |    /
   |  /
   | /
   |/______________ T
     .
      .
       .
        .
         . M
```

MATERIAL PROPERTIES

P = P (S,T,M)

ICAN UNITS FOR CONSTITUENT,
PLY AND LAMINATE PROPERTIES

Property	Symbol	Unit
ELASTIC MODULUS	E	psi
SHEAR MODULUS	G	psi
POISSONS RATIO	NU	non-dim
THERM. EXP. COEFF.	CTE	in/in/F
DENSITY	RHO	lb/in**3
FIBER DIAMETER	DIF	in
HEAT CAPACITY	C	BTU/lb/F
HEAT CONDUCTIVITY	K	BTU-in/hr/in**2/F
STRENGTH	S	psi
MOISTURE EXP. COEFF.	BTA	in/in/1% moisture
MOISTURE DIFFUSIVITY	DP	in**2/sec
THICKNESS	T	in
DISTANCE TO MIDPLANE	Z	in
ANGLE TO AXES	TH	degrees
TEMPERATURE	TEMP	F
STRAIN	EPS	in/in
STRESS	SIG	psi
MEMBRANE LOADS	N	lb/in
BENDING LOADS	M	lb in/in
MOISTURE	MPC	% by wt
FIBER VOLUME RATIO	Kf	non-dim
FIBER VOID RATIO	Kv	non-dim
PLY RELATIVE ROTATION	DELFI	radians

```
                    I C A N
          I N P U T  D A T A  E C H O

$     Note $ is for comment card
$ --- This is an example
$     Title Card    --- Card group I
CHECK ON NEW ICAN
$
$ --- Boolean Card Group--- Card group II
$
  COMSAT        T
   CSANB        F
    BIDE        F
   RINDV        F
  NONUDF        T
  DEFECT        F
$  ----- Laminate Configuration Card Group. --- Card group III
$  The following is the PLY card group. The laminate configuration is
$  specified here.
     PLY        1        1   70.0   70.0  .0000     0.0    0.010
     PLY        2        2   70.0   70.0  .0000    90.0    0.005
     PLY        3        2   70.0   70.0  .0000    90.0    0.005
     PLY        4        1   70.0   70.0  .0000     0.0    0.010
$  ----- Material Data Card Group  --- Card group IV
$  The details of the Materials to be used in the analysis are described
$   in this card group.
  MATCRD        1AS--IMLS   .55    .02   AS--IMLS  0.00   .57   0.03
  MATCRD        2SGLAHMHS   .55    .01   AS--IMHS  0.40   .57   0.01
$ ---- Loads Card Group ---- Card group V
$   Specify inplane loading here.
   PMEMB  1000.    0.0    0.0    0.0
$   Specify inplane bending loads here.
   PBEND    0.0   0.0     0.0
$   Specify transverse loads here.
   PTRAN    0.0   0.0
$   Cyclic or Fatigue Load Data Group  --- Card group VI
$   specify loading for fatique analysis. Mechanical/Thermal fatigue.
$   CNXX  200.   100.    100.    0.1
$   CNYY  -50.   -100.   10.    0.1
$   CNXY  20.     10.    100.    0.2
$   CMXX  10.      5.     10.    0.01
$   CMYY   4.      2.     1000.   0.15
$   CMXY   2.      1.     100.    0.01
$   ---- Output Selection Data Group. ---- Card group VII
$  You can tailor the output. 0 is for complete output
$  Output requests.
$  PRINT  IDECHO  Output request for input data echo         (Option 3)
$  PRINT INPTSUM  Output request for summary of input data   (Option 4)
$  PRINT FIBMATP  Output request for constituent/ ply props. (Option 5)
$  PRINT STRSTRN  Output request for stress/strain law.      (Option 6)
$  PRINT PROPCOM  Output request for composite properties.   (Option 7)
```

```
$  PRINT  CONSTI  Outpuy request for constitutive relation.  (OPTION 8)
$  PRINT REDSTIF  Output request for Reduced D&A Stiffness.  (Option 9)
$  PRINT FEMDATA  Output request for F.E.A. Data             (Option 10)
$  PRINT DISPFOR  Output request for Force/Disp relations.   (Option 11)
$  PRINT PLYRESP  Output request for Ply Response/Prop.      (Option 12)
$  PRINT  NUMISM  Output request for Poisson"s Ratio mismatch(Option 13)
$  PRINT FREESTR  Output request for free edge stresses.     (Option 14)
$  PRINT   MICRO  Output request for Microstresses/inf. coefs(Option 15)
$  PRINT  STRCON  Output request for stress conc. factors.   (Option 16)
$  PRINT  DELAMI  Output request for delamination aroun hole (Option 17)
$  PRINT STRSINF  Output request for Stress/Strain In. coef. (Option 18)
$  PRINT FAILDET  Output request for Fail. Anal. Details.    (Option 19)
$  PRINT FAILSUM  Output request for Fail. Anal. Summary.    (option 20)
$  PRINT  DURAAN  Output request for durability results      (Option 21)
$  PRINT DURADET  Output request for durability details      (Option 22)
$  PRINT DURASUM  Output request for durability summary      (Option 23)
$  PRINT DURADEF  Output request for dura. with defect       (Option 24)
$  PRINT DURDEFS  Output request for dura/defect summary     (Option 25)
   PRINT     ALL  Output request for complete results        (OPTION 0)
$  PRINT    NONE  No Output is requested.                    (Option 99)
```

S U M M A R Y O F I N P U T D A T A

CHECK ON NEW ICAN

```
- - -     CASE   CONTROL   DECK      - - -
NUMBER OF LAYERS              NL  =    4
NUMBER OF LOADING CONDITIONS NLC =    1
NUMBER OF MATERIAL SYSTEMS   NMS =    2

  COMSAT    CSANB    BIDE     RINDV    NONUDF   DEFECT
    T        F        F        F        T        F

- - -    LAMINATE   CONFIGURATION    - - -

-------------------------------------------------------
    PLY   NO      MID    DELTAT  DELTAM  THETA   T-NESS
-------------------------------------------------------
    PLY    1       1     0.000   0.0%    0.0     0.010
    PLY    2       2     0.000   0.0%   90.0     0.005
    PLY    3       2     0.000   0.0%   90.0     0.005
    PLY    4       1     0.000   0.0%    0.0     0.010
-------------------------------------------------------

- - -   COMPOSITE MATERIAL SYSTEMS   - - -

-------------------------------------------------------------------
 MATCRD   MID  PRIMARY   VFP     VVP  SECONDARY  VSC      VFS     VVS

 MATCRD     1 AS--IMLS  0.55    0.02  AS--IMLS  0.00    0.57    0.03
 MATCRD     2 SGLAHMHS  0.55    0.01  AS--IMHS  0.40    0.57    0.01
-------------------------------------------------------------------

- - -    LOADING CONDITIONS   - - -

PRESCRIBED LOADS FOR THE LOAD CONDITION  1
INPLANE LOADS          NX        =    1000.0000 lb/in
                       NY        =       0.0000 lb/in
                       NXY       =       0.0000 lb/in
BENDING LOADS          MX        =       0.0000 lb.in/in
                       MY        =       0.0000 lb.in/in
                       MXY       =       0.0000 lb.in/in
TRANSVERSE LOADS       DMX/QX    =       0.0000 lb/ln
                       DMY/QY    =       0.0000 lb/in
TRANSVERSE PRESSURE    PU        =       0.0000 psi
TRANSVERSE PRESSURE    PL        =       0.0000 psi

-----> OUTPUT OPTIONS SELECTED <------
```

```
OPTION     ALL --> COMPLETE OUTPUT IS REQUESTED <---
```

--> CONSTITUENT PROPERTIES: ECHO FROM DATA BANK. <--

PRIMARY FIBER PROPERTIES;AS-- FIBER

1	ELASTIC MODULI	EFP1	0.3100E+08
2		EFP2	0.2000E+07
3	SHEAR MODULI	GFP12	0.2000E+07
4		GFP23	0.1000E+07
5	POISSON"S RATIO	NUFP12	0.2000E+00
6		NUFP23	0.2500E+00
7	THERM. EXP. COEF.	CTEFP1	-0.5500E-06
8		CTEFP2	0.5600E-05
9	DENSITY	RHOFP	0.6300E-01
10	NO. OF FIBERS/END	NFP	0.1000E+05
11	FIBER DIAMETER	DIFP	0.3000E-03
12	HEAT CAPACITY	CFPC	0.1700E+00
13	HEAT CONDUCTIVITY	KFP1	0.4030E+01
14		KFP2	0.4030E+00
15		KFP3	0.4030E+00
16	STRENGTHS	SFPT	0.4000E+06
17		SFPC	0.4000E+06

PRIMARY MATRIX PROPERTIES;IMLS MATRIX. DRY RT. PROPERTIES.

1	ELASTIC MODULUS	EMP	0.5000E+06
2	SHEAR MODULUS	GMP	0.1773E+06
3	POISSON"S RATIO	NUMP	0.4100E+00
4	THERM. EXP. COEF.	CTEMP	0.5700E-04
5	DENSITY	RHOMP	0.4600E-01
6	HEAT CAPACITY	CMPC	0.2500E+00
7	HEAT CONDUCTIVITY	KMP	0.8681E-02
8	STRENGTHS	SMPT	0.7000E+04
9		SMPC	0.2100E+05
10		SMPS	0.7000E+04
11	MOISTURE COEF	BTAMP	0.4000E-02
12	DIFFUSIVITY	DIFMP	0.2000E-03

PRIMARY COMPOSITE PROPERTIES;AS--/IMLS

BASED ON MICROMECHANICS OF INTRAPLY HYBRID COMPOSITES: ELASTIC AND THERMAL PROPERTIES.

FIBER VOLUME RATIO - 0.539 MATRIX VOLUME RATIO - 0.421 VOID VOLUME RATIO - 0.020
VOID CONDUCTIVITY - 0.22500002E+00

1	ELASTIC MODULI	EPC1	0.1692E+08
2		EPC2	0.1113E+07
3		EPC3	0.1113E+07
4	SHEAR MODULI	GPC12	0.5358E+06
5		GPC23	0.3186E+06
6		GPC13	0.5358E+06
7	POISSON"S RATIO	NUPC12	0.2968E+00
8		NUPC23	0.4721E+00
9		NUPC13	0.2968E+00
10	THERM. EXP. COEF.	CTEPC1	0.1182E-06
11		CTEPC2	0.2988E-04
12		CTEPC3	0.2988E-04
13	DENSITY	RHOPC	0.5334E-01
14	HEAT CAPACITY	CPC	0.1991E+00
15	HEAT CONDUCTIVITY	KPC1	0.2220E+01
16		KPC2	0.2625E-01
17		KPC3	0.2625E-01
18	STRENGTHS	SPC1T	0.2156E+06
19		SPC1C	0.5737E+05
20		SPC2T	0.4568E+04
21		SPC2C	0.1370E+05
22		SPC12	0.4403E+04
23	MOIST. DIFFUSIVITY	DPC1	0.8428E-04
24		DPC2	0.5317E-04
25		DPC3	0.5317E-04
26	MOIST. EXP. COEF.	BTAPC1	0.4981E-04
27		BTAPC2	0.1494E-02
28		BTAPC3	0.1494E-02
29	FLEXURAL MODULI	EPC1F	0.1692E+08
30		EPC2F	0.1113E+07
31	STRENGTHS	SPC23	0.3796E+04
32		SPC1F	0.1133E+06
33		SPC2F	0.8565E+04
34		SPCSB	0.6605E+04
35	PLY THICKNESS	TPC	0.5000E-02
36	INTERPLY THICKNESS	PLPC	0.6214E-04
37	INTERFIBER SPACING	PLPCS	0.6214E-04

--> CONSTITUENT PROPERTIES: ECHO FROM DATA BANK. <--

PRIMARY FIBER PROPERTIES;SGLA FIBER

1	ELASTIC MODULI	EFP1	0.1240E+08
2		EFP2	0.1240E+08
3	SHEAR MODULI	GFP12	0.5170E+07
4		GFP23	0.5170E+07
5	POISSON"S RATIO	NUFP12	0.2000E+00
6		NUFP23	0.2000E+00
7	THERM. EXP. COEF.	CTEFP1	0.2800E-05
8		CTEFP2	0.2800E-05
9	DENSITY	RHOFP	0.9000E-01
10	NO. OF FIBERS/END	NFP	0.2040E+03
11	FIBER DIAMETER	DIFP	0.3600E-03
12	HEAT CAPACITY	CFPC	0.1700E+00
13	HEAT CONDUCTIVITY	KFP1	0.5208E-01
14		KFP2	0.5208E-01
15		KFP3	0.5208E-01
16	STRENGTHS	SFPT	0.3600E+06
17		SFPC	0.3000E+06

PRIMARY MATRIX PROPERTIES;HMHS MATRIX. DRY RT. PROPERTIES.

1	ELASTIC MODULUS	EMP	0.7500E+06
2	SHEAR MODULUS	GMP	0.2778E+06
3	POISSON"S RATIO	NUMP	0.3500E+00
4	THERM. EXP. COEF.	CTEMP	0.4000E-04
5	DENSITY	RHOMP	0.4500E-01
6	HEAT CAPACITY	CMPC	0.2500E+00
7	HEAT CONDUCTIVITY	KMP	0.8681E-02
8	STRENGTHS	SMPT	0.2000E+05
9		SMPC	0.5000E+05
10		SMPS	0.1500E+05
11	MOISTURE COEF	BTAMP	0.4000E-02
12	DIFFUSIVITY	DIFMP	0.2000E-03

PRIMARY COMPOSITE PROPERTIES;SGLA/HMHS

BASED ON MICROMECHANICS OF INTRAPLY HYBRID COMPOSITES: ELASTIC AND THERMAL PROPERTIES.

FIBER VOLUME RATIO - 0.544 MATRIX VOLUME RATIO - 0.436 VOID VOLUME RATIO - 0.010
VOID CONDUCTIVITY - 0.22500002E+00

1	ELASTIC MODULI	EPC1	0.7078E+07
2		EPC2	0.2445E+07
3		EPC3	0.2445E+07
4	SHEAR MODULI	GPC12	0.9206E+06
5		GPC23	0.5730E+06
6		GPC13	0.9206E+06
7	POISSON"S RATIO	NUPC12	0.2683E+00
8		NUPC23	0.3734E+00
9		NUPC13	0.2683E+00
10	THERM. EXP. COEF	CTEPC1	0.4459E-05
11		CTEPC2	0.1819E-04
12		CTEPC3	0.1819E-04
13	DENSITY	RHOPC	0.6861E-01
14	HEAT CAPACITY	CPC	0.1929E+00
15	HEAT CONDUCTIVITY	KPC1	0.3250E-01
16		KPC2	0.1924E-01
17		KPC3	0.1924E-01
18	STRENGTHS	SPC1T	0.1960E+06
19		SPC1C	0.1437E+06
20		SPC2T	0.1364E+05
21		SPC2C	0.3410E+05
22		SPC12	0.1021E+05
23	MOIST. DIFFUSIVITY	DPC1	0.8712E-04
24		DPC2	0.5242E-04
25		DPC3	0.5242E-04
26	MOIST. EXP. COEF.	BTAPC1	0.1846E-03
27		BTAPC2	0.1398E-02
28		BTAPC3	0.1398E-02
29	FLEXURAL MODULI	EPC1F	0.7078E+07
30		EPC2F	0.2445E+07
31	STRENGTHS	SPC23	0.7766E+04
32		SPC1F	0.2073E+06
33		SPC2F	0.2436E+05
34		SPCSB	0.1532E+05
35	PLY THICKNESS	TPC	0.5000E-02
36	INTERPLY THICKNESS	PLPC	0.7236E-04
37	INTERFIBER SPACING	PLPCS	0.7236E-04

--> CONSTITUENT PROPERTIES: ECHO FROM DATA BANK. <--

SECONDARY FIBER PROPERTIES;AS-- FIBER

1	ELASTIC MODULI	EFS1	0.3100E+08
2		EFS2	0.2000E+07
3	SHEAR MODULI	GFS12	0.2000E+07
4		GFS23	0.1000E+07
5	POISSON"S RATIO	NUFS12	0.2000E+00
6		NUFS23	0.2500E+00
7	THERM. EXP. COEF.	CTEFS1	-0.5500E-06
8		CTEFS2	0.5600E-05
9	DENSITY	RHOFS	0.6300E-01
10	NO. OF FIBERS/END	NFS	0.1000E+05
11	FIBER DIAMETER	DIFS	0.3000E-03
12	HEAT CAPACITY	CFSC	0.1700E+00
13	HEAT CONDUCTIVITY	KFS1	0.4030E+01
14		KFS2	0.4030E+00
15		KFS3	0.4030E+00
16	STRENGTHS	SFST	0.4000E+06
17		SFSC	0.4000E+06

SECONDARY MATRIX PROPERTIES;IMHS MATRIX. DRY RT. PROPERITES.

1	ELASTIC MODULUS	EMS	0.5000E+06
2	SHEAR MODULUS	GMS	0.1852E+06
3	POISSON"S RATIO	NUMS	0.3500E+00
4	THERM. EXP. COEF.	CTEMS	0.3600E-04
5	DENSITY	RHOMS	0.4400E-01
6	HEAT CAPACITY	CMSC	0.2500E+00
7	HEAT CONDUCTIVITY	KMS	0.8681E-02
8	STRENGTHS	SMST	0.1500E+05
9		SMSC	0.3500E+05
10		SMSS	0.1300E+05
11	MOISTURE COEF	BTAMS	0.4000E-02
12	DIFFUSIVITY	DIFMS	0.2000E-03

SECONDARY COMPOSITE PROPERTIES;AS--/IMHS

BASED ON MICROMECHANICS OF INTRAPLY HYBRID COMPOSITES: ELASTIC AND THERMAL PROPERTIES.

FIBER VOLUME RATIO - 0.564 MATRIX VOLUME RATIO - 0.416 VOID VOLUME RATIO - 0.010
VOID CONDUCTIVITY - 0.22500002E+00

1	ELASTIC MODULI	ESC1	0.1770E+08
2		ESC2	0.1145E+07
3		ESC3	0.1145E+07
4	SHEAR MODULI	GSC12	0.5817E+06
5		GSC23	0.3428E+06
6		GSC13	0.5817E+06
7	POISSON"S RATIO	NUSC12	0.2654E+00
8		NUSC23	0.4250E+00
9		NUSC13	0.2654E+00
10	THERM. EXP. COEF.	CTESC1	-0.1352E-06
11		CTESC2	0.1880E-04
12		CTESC3	0.1880E-04
13	DENSITY	RHOSC	0.5385E-01
14	HEAT CAPACITY	CSC	0.1972E+00
15	HEAT CONDUCTIVITY	KSC1	0.2301E+01
16		KSC2	0.2748E-01
17		KSC3	0.2748E-01
18	STRENGTHS	SSC1T	0.2257E+06
19		SSC1C	0.1206E+06
20		SSC2T	0.1070E+05
21		SSC2C	0.2496E+05
22		SSC12	0.8956E+04
23	MOIST. DIFFUSIVITY	DSC1	0.8316E-04
24		DSC2	0.4976E-04
25		DSC3	0.4976E-04
26	MOIST. EXP. COEF.	BTASC1	0.4698E-04
27		BTASC2	0.1339E-02
28		BTASC3	0.1339E-02
29	FLEXURAL MODULI	ESC1F	0.1770E+08
30		ESC2F	0.1145E+07
31	STRENGTHS	SSC23	0.7729E+04
32		SSC1F	0.1965E+06
33		SSC2F	0.1872E+05
34		SSCSB	0.1343E+05
35	PLY THICKNESS	TSC	0.5000E-02
36	INTERPLY THICKNESS	PLSC	0.5392E-04
37	INTERFIBER SPACING	PLSCS	0.5392E-04

HYBRID COMPOSITE PROPERTIES;SGLA/HMHS AS--/IMHS
BASED ON MICROMECHANICS OF INTRAPLY HYBRID COMPOSITES: ELASTIC AND THERMAL PROPERTIES.

PRIMARY COMPOSITE VOLUME RATIO - 0.600 SECONDARY COMPOSITE VOLUME RATIO - 0.400

1	ELASTIC MODULI	EHC1	0.1133E+08
2		EHC2	0.1682E+07
3		EHC3	0.1925E+07
4	SHEAR MODULI	GHC12	0.7466E+06
5		GHC23	0.4517E+06
6		GHC13	0.7850E+06
7	POISSON"S RATIO	NUHC12	0.2671E+00
8		NUHC23	0.3442E+00
9		NUHC13	0.2697E+00
10	THERM. EXP. COEF.	CTEHC1	0.1587E-05
11		CTEHC2	0.1951E-04
12		CTEHC3	0.1881E-04
13	DENSITY	RHOHC	0.6270E-01
14	HEAT CAPACITY	CHC	0.1943E+00
15	HEAT CONDUCTIVITY	KHC1	0.9398E+00
16		KHC2	0.1642E-01
17		KHC3	0.2254E-01
18	STRENGTHS	SHC1T	0.2079E+06
19		SHC1C	0.1345E+06
20		SHC2T	0.1070E+05
21		SHC2C	0.2496E+05
22		SHC12	0.8956E+04
23	MOIST. DIFFUSIVITY	DHC1	0.8649E-04
24		DHC2	0.5193E-04
25		DPC3	0.5193E-04
26	MOIST. EXP. COEF.	BTAHC1	0.9858E-04
27		BTAHC2	0.1374E-02
28		BTAHC3	0.1384E-02
29	FLEXURAL MODULI	EHC1F	0.1133E+08
30		EHC2F	0.1682E+07
31	STRENGTHS	SHC23	0.7729E+04
32		SHC1F	0.1258E+06
33		SHC2F	0.1872E+05
34		SHCSB	0.1307E+05
35	PLY THICKNESS	THC	0.5000E-02
36	INTERPLY THICKNESS	PLHC	0.5392E-04
37	INTERFIBER SPACING	PLHCS	0.5392E-04
38	FIBER VOL. RATIO	VFH	0.5524E+00
39	MOISTURE CONTENT	M	0.0000E+00
40	MATRIX VOL. RATIO	VMH	0.4277E+00

3-D COMPOSITE STRAIN STRESS TEMPERATURE MOISTURE RELATIONS - STRUCTURAL AXES

	-1-	-2-	-3-	-4-	-5-	-6-	-DT-	-DM-
1	0.8415E-07	-0.6940E-08	-0.3101E-07	0.0000E+00	0.0000E+00	0.3149E-13	0.1448E-05	0.1311E-03
2	-0.6940E-08	0.2195E-06	-0.9157E-07	0.0000E+00	0.0000E+00	-0.1453E-11	0.6931E-05	0.3669E-03
3	-0.3101E-07	-0.9157E-07	0.6291E-06	0.0000E+00	0.0000E+00	0.6056E-12	0.3285E-04	0.1882E-02
4	0.0000E+00	0.0000E+00	0.0000E+00	0.2109E-05	0.5851E-12	0.0000E+00	0.0000E+00	0.0000E+00
5	0.0000E+00	0.0000E+00	0.0000E+00	0.5851E-12	0.1969E-05	0.0000E+00	0.0000E+00	0.0000E+00
6	0.3149E-13	-0.1453E-11	0.6056E-12	0.0000E+00	0.0000E+00	0.1650E-05	-0.5104E-10	-0.2892E-08

3-D COMPOSITE STRESS STRAIN RELATIONS - STRUCTURAL AXES

	-1-	-2-	-3-	-4-	-5-	-6-
1	0.1220E+08	0.6777E+06	0.6998E+06	0.0000E+00	0.0000E+00	0.1070E+00
2	0.6777E+06	0.4888E+07	0.7449E+06	0.0000E+00	0.0000E+00	0.4017E+01
3	0.6998E+06	0.7449E+06	0.1732E+07	0.0000E+00	0.0000E+00	0.6561E-02
4	0.0000E+00	0.0000E+00	0.0000E+00	0.4741E+06	-0.1408E+00	0.0000E+00
5	0.0000E+00	0.0000E+00	0.0000E+00	-0.1408E+00	0.5078E+06	0.0000E+00
6	0.1070E+00	0.4017E+01	0.6561E-02	0.0000E+00	0.0000E+00	0.6061E+06

F I N I T E E L E M E N T A N A L Y S I S M A T E R I A L C A R D S. (MAT9 IN N A S T R A N)

MAT9 CARD FOR MSC/NASTRAN SOLID ELEMENTS AND 3-D ANISOTROPIC PROPERTIES FOR MARC
G11,G12,G13,G14,G15,G16,G22,G23,G24,G25,G26,G33,G34,G35,G36,G44,G45,G46,G55,G56,G66

```
 0.12197523E+08 0.67767281E+06 0.69981394E+06 0.10696942E+00 0.00000000E+00 0.00000000E+00 0.48883530E+07 0.74494387E+06
 0.40171270E+01 0.00000000E+00 0.00000000E+00 0.17324810E+07 0.65612756E-02 0.00000000E+00 0.00000000E+00 0.60606081E+06
 0.00000000E+00 0.00000000E+00 0.47405237E+06-0.14084172E+00 0.50775981E+06
```

NOTE: MAT9 CARD FOR SINGLE FIELD FORMAT

```
MAT9      MID           0.1220E+08  0.6777E+06  0.6998E+06  0.1070E+00  0.0000E+00  0.0000E+00  0.4888E+07+MAT1
+MAT1       0.7449E+06  0.4017E+01  0.0000E+00  0.0000E+00  0.1732E+07  0.6561E-02  0.0000E+00  0.0000E+00+MAT2
+MAT2       0.6061E+06  0.0000E+00  0.0000E+00  0.4741E+06 -0.1408E+00  0.5078E+06  0.5646E-01  0.0000E+00+MAT3
+MAT3       0.0000E+00  0.0000E+00
```

NOTE: THIS MATERIAL CARD IS FOR DOUBLE FIELD FORMAT

```
MAT9*    MID. NO.            0.1220E+08      0.6777E+06      0.6998E+06*MAT1
*MAT1         0.1070E+00     0.0000E+00      0.0000E+00      0.4888E+07*MAT2
*MAT2         0.7449E+06     0.4017E+01      0.0000E+00      0.0000E+00*MAT3
*MAT3         0.1732E+07     0.6561E-02      0.0000E+00      0.0000E+00*MAT4
*MAT4         0.6061E+06     0.0000E+00      0.0000E+00      0.4741E+06*MAT5
*MAT5        -0.1408E+00     0.5078E+06      0.5646E-01      0.0000E+00*MAT6
*MAT6         0.0000E+00     0.0000E+00
```

MAT2 CARD FOR MSC/NASTRAN PLATE ELEMENTS FOR TRANSVERSE SHEAR (MID3 ON "PSHELL")
G11,G12,G22

```
 0.50775981E+06-0.14084172E+00 0.47405237E+06
```

C O M P O S I T E P R O P E R T I E S

COMPOSITE PROPERTIES - VALID ONLY FOR CONSTANT TEMPERATURE THROUGH THICKNESS
LINES 1 TO 31 3-D COMPOSITE PROPERTIES ABOUT MATERIAL AXES
LINES 33 TO 62 2-D COMPOSITE PROPERTIES ABOUT STRUCTURAL AXES

1	RHOC	0.5646E-01	32	B2DEC	0.0000E+00
2	TC	0.3000E-01	33	CC11	0.1191E+08
3	CC11	0.1220E+08	34	CC12	0.3728E+06
4	CC12	0.6777E+06	35	CC13	0.1046E+00
5	CC13	0.6998E+06	36	CC22	0.4562E+07
6	CC22	0.4888E+07	37	CC23	0.4015E+01
7	CC23	0.7449E+06	38	CC33	0.6061E+06
8	CC33	0.1732E+07	39	EC11	0.1188E+08
9	CC44	0.4741E+06	40	EC22	0.4551E+07
10	CC55	0.5078E+06	41	EC12	0.6061E+06
11	CC66	0.6061E+06	42	NUC12	0.8171E-01
12	CTE11	0.1448E-05	43	NUC21	0.3130E-01
13	CTE22	0.6931E-05	44	CSN13	-0.3687E-06
14	CTE33	0.3285E-04	45	CSN31	-0.1880E-07
15	HK11	0.1486E+01	46	CSN23	0.6619E-05
16	HK22	0.3308E+00	47	CSN32	0.8815E-06
17	HK33	0.2488E-01	48	CTE11	0.1448E-05
18	HHC	0.1975E+00	49	CTE22	0.6931E-05
19	EC11	0.1188E+08	50	CTE12	-0.5104E-10
20	EC22	0.4556E+07	51	HK11	0.1486E+01
21	EC33	0.1590E+07	52	HK22	0.3308E+00
22	EC23	0.4741E+06	53	HK12	-0.3902E-06
23	EC31	0.5078E+06	54	HHC	0.1975E+00
24	EC12	0.6061E+06	55	DPC11	0.7350E-04
25	NUC12	0.8248E-01	56	DPC22	0.6427E-04
26	NUC21	0.3162E-01	57	DPC33	0.5275E-04
27	NUC13	0.3685E+00	58	DPC12	0.0000E+00
28	NUC31	0.4929E-01	59	BTAC11	0.1311E-03
29	NUC23	0.4172E+00	60	BTAC22	0.3669E-03
30	NUC32	0.1456E+00	61	BTAC33	0.1882E-02
31	ZCGC	0.1500E-01	62	BTAC12	-0.2892E-08

FORCES	FORCE DISPLACEMENT RELATIONS						DISPL	T-FORCES	M-FORCES
NX	0.3574E+06	0.1118E+05	0.3138E-02	0.9766E-03	0.1526E-04	-0.6366E-11	UX	0.0000E+00	0.0000E+00
NY	0.1118E+05	0.1369E+06	0.1204E+00	0.1526E-04	-0.1984E-03	-0.2619E-09	VY	0.0000E+00	0.0000E+00
NXY	0.3138E-02	0.1204E+00	0.1818E+05	-0.6366E-11	-0.2619E-09	0.3052E-04	VXPUY	0.0000E+00	0.0000E+00
MX	0.9766E-03	0.1526E-04	-0.6366E-11	0.3701E+02	0.7575E+00	0.2615E-07	WXX	0.0000E+00	0.0000E+00
MY	0.1526E-04	-0.1984E-03	-0.2619E-09	0.7575E+00	0.3379E+01	0.1004E-05	WYY	0.0000E+00	0.0000E+00
MXY	-0.6366E-11	-0.2619E-09	0.3052E-04	0.2615E-07	0.1004E-05	0.1223E+01	WXY	0.0000E+00	0.0000E+00

REDUCED STIFFNESS MATRIX

0.35736E+06	0.11184E+05	0.31385E-02
0.11184E+05	0.13687E+06	0.12044E+00
0.31385E-02	0.12044E+00	0.18182E+05

REDUCED BENDING RIGIDITIES

0.37015E+02	0.75754E+00	0.26154E-07
0.75754E+00	0.33789E+01	0.10037E-05
0.26154E-07	0.10037E-05	0.12231E+01

U S E F U L D A T A F O R "MSC/NASTRAN PSHELL CARD"
USE THIS DATA FOR "MID4" ON PSHELL TO INCLUDE MEMBRANE/BENDING COUPLING ON A MAT2 CARD
G11,G12,G13,G22,G23,G33

0.10851E+01 0.16954E-01 -0.70738E-08 -0.22040E+00 -0.29104E-06 0.33908E-01

S O M E U S E F U L D A T A F O R F.E. A N A L Y S I S

COMPOSITE THICKNESS FOR F.E. ANALYSIS = 0.30000E-01

PROPERTIES FOR F.E. ANALYSIS E11,E12,E13,E22,E23,E33 PROPERTIES SCALED BY 10**-6
0.84164E-01 -0.68770E-02 -0.31027E-07 0.21975E+00 0.14545E-05 0.16500E+01

BENDING EQUIVALENT PROPERTIES NUCXY, NCYX, ECXX, ECYY, GCXY
0.22420E+00 0.20466E-01 0.16375E+08 0.14948E+07 0.54360E+06

NASTRAN MEMBRANE EQUIVALENT ELASTIC COEFFICIENTS G11,G12,G13,G22,G23,G33
0.11912E+08 0.37279E+06 0.10462E+00 0.45624E+07 0.40147E+01 0.60606E+06

NASTRAN BENDING EQUIVALENT ELASTIC COEFFICIENTS G11,G12,G13,G22,G23,G33
0.16451E+08 0.33668E+06 0.11624E-01 0.15017E+07 0.44608E+00 0.54360E+06

DISP.		DISPLACEMENT FORCE RELATIONS						COMBINED FORCES
		-1-	-2-	-3-	-4-	-5-	-6-	
1	0.2805E-02	0.2805E-05	-0.2292E-06	0.1034E-11	-0.7373E-10	-0.9598E-11	-0.5084E-16	0.1000E+04
2	-0.2292E-03	-0.2292E-06	0.7325E-05	-0.4848E-10	-0.5820E-11	0.4324E-09	0.2422E-14	0.0000E+00
3	0.1034E-08	0.1034E-11	-0.4848E-10	0.5500E-04	-0.3428E-16	0.1828E-14	-0.1372E-08	0.0000E+00
4	-0.7373E-07	-0.7373E-10	-0.5820E-11	-0.3428E-16	0.2714E-01	-0.6085E-02	0.4413E-08	0.0000E+00
5	-0.9598E-08	-0.9598E-11	0.4324E-09	0.1828E-14	-0.6085E-02	0.2973E+00	-0.2439E-06	0.0000E+00
6	-0.5084E-13	-0.5084E-16	0.2422E-14	-0.1372E-08	0.4413E-08	-0.2439E-06	0.8176E+00	0.0000E+00

NOTE: THE DISPLACEMENTS ARE REFERENCE PLANE MEMBRANE STRAINS (UX , VY , VXPUY) AND CURVATURES (WXX , WYY , WXY)

P L Y H Y G R O T H E R M O M E C H A N I C A L P R O P E R T I E S / R E S P O N S E

FOR LOAD CONDITIONS
MEMBRANE LOADS NBS(X,Y,XY-M) ARE 1000.000 0.000 0.000
BENDING LOADS MBS(X,Y,XY-M) ARE 0.000 0.000 0.000
QXZ,QYZ AND APPLIED PRESSURES ARE 0.000 0.000 0.000 0.000
Note : No Moisture or Temperature

LAYER PROPERTIES, ROWS-PROPERTY, COLUMNS-LAYER

PLY NUMBER		1	2	3	4
MATERIAL SYSTEM		AS--/IMLS /	SGLA/HMHS AS--/IMHS	SGLA/HMHS AS--/IMHS	AS--/IMLS /
ORIENTATION		0.0	90.0	90.0	0.0
1	KV	0.2000E-01	0.1990E-01	0.1990E-01	0.2000E-01
2	KF	0.5500E+00	0.5524E+00	0.5524E+00	0.5500E+00
3	KFB	0.5390E+00	0.5414E+00	0.5414E+00	0.5390E+00
4	KM	0.4300E+00	0.4277E+00	0.4277E+00	0.4300E+00
5	KMB	0.4214E+00	0.4192E+00	0.4192E+00	0.4214E+00
6	RHOL	0.5334E-01	0.6270E-01	0.6270E-01	0.5334E-01
7	TL	0.1000E-01	0.5000E-02	0.5000E-02	0.1000E-01
8	DELTA	0.6214E-04	0.5392E-04	0.5392E-04	0.6214E-04
9	ILDC	0.0000E+00	0.0000E+00	0.0000E+00	0.0000E+00
10	ZB	0.5000E-02	0.1250E-01	0.1750E-01	0.2500E-01
11	ZGC	-0.1000E-01	-0.2500E-02	0.2500E-02	0.1000E-01
12	THCS	0.0000E+00	0.0000E+00	0.0000E+00	0.0000E+00
13	THLC	0.0000E+00	0.1571E+01	0.1571E+01	0.0000E+00
14	THLS	0.0000E+00	0.1571E+01	0.1571E+01	0.0000E+00
15	SC11	0.1730E+08	0.1175E+08	0.1175E+08	0.1730E+08
16	SC12	0.6396E+06	0.7538E+06	0.7538E+06	0.6396E+06
17	SC13	0.6396E+06	0.8358E+06	0.8358E+06	0.6396E+06
18	SC22	0.1455E+07	0.1994E+07	0.1994E+07	0.1455E+07
19	SC23	0.6995E+06	0.8203E+06	0.8203E+06	0.6995E+06
20	SC33	0.1455E+07	0.2287E+07	0.2287E+07	0.1455E+07
21	SC44	0.3186E+06	0.4517E+06	0.4517E+06	0.3186E+06
22	SC55	0.5358E+06	0.7850E+06	0.7850E+06	0.5358E+06
23	SC66	0.5358E+06	0.7466E+06	0.7466E+06	0.5358E+06
24	CTE11	0.1182E-06	0.1587E-05	0.1587E-05	0.1182E-06
25	CTE22	0.2988E-04	0.1951E-04	0.1951E-04	0.2988E-04
26	CTE33	0.2988E-04	0.1881E-04	0.1881E-04	0.2988E-04
27	HK11	0.2220E+01	0.9398E+00	0.9398E+00	0.2220E+01
28	HK22	0.2625E-01	0.1642E-01	0.1642E-01	0.2625E-01
29	HK33	0.2625E-01	0.2254E-01	0.2254E-01	0.2625E-01
30	HCL	0.1991E+00	0.1943E+00	0.1943E+00	0.1991E+00
31	EL11	0.1692E+08	0.1133E+08	0.1133E+08	0.1692E+08
32	EL22	0.1113E+07	0.1682E+07	0.1682E+07	0.1113E+07
33	EL33	0.1113E+07	0.1925E+07	0.1925E+07	0.1113E+07

34	GL23	0.3186E+06	0.4517E+06	0.4517E+06	0.3186E+06
35	GL13	0.5358E+06	0.7850E+06	0.7850E+06	0.5358E+06
36	GL12	0.5358E+06	0.7466E+06	0.7466E+06	0.5358E+06
37	NUL12	0.2968E+00	0.2671E+00	0.2671E+00	0.2968E+00
38	NUL21	0.1952E-01	0.3966E-01	0.3966E-01	0.1952E-01
39	NUL13	0.2968E+00	0.2697E+00	0.2697E+00	0.2968E+00
40	NUL31	0.1952E-01	0.4583E-01	0.4583E-01	0.1952E-01
41	NUL23	0.4721E+00	0.3442E+00	0.3442E+00	0.4721E+00
42	NUL32	0.4721E+00	0.3941E+00	0.3941E+00	0.4721E+00
43	DPL1	0.8428E-04	0.8649E-04	0.8649E-04	0.8428E-04
44	DPL2	0.5317E-04	0.5193E-04	0.5193E-04	0.5317E-04
45	DPL3	0.5317E-04	0.5193E-04	0.5193E-04	0.5317E-04
46	BTAL1	0.4981E-04	0.9858E-04	0.9858E-04	0.4981E-04
47	BTAL2	0.1494E-02	0.1374E-02	0.1374E-02	0.1494E-02
48	BTAL3	0.1494E-02	0.1384E-02	0.1384E-02	0.1494E-02
49	ILMFC	0.0000E+00	0.8013E+02	0.8623E+02	0.8013E+02
50	TEMPD	0.0000E+00	0.0000E+00	0.0000E+00	0.0000E+00
51	LSC11T	0.2156E+06	0.2079E+06	0.2079E+06	0.2156E+06
52	LSC11C	0.5737E+05	0.1345E+06	0.1345E+06	0.5737E+05
53	LSC11D	0.5737E+05	0.1345E+06	0.1345E+06	0.5737E+05
54	LSC22T	0.4568E+04	0.1070E+05	0.1070E+05	0.4568E+04
55	LSC22C	0.1370E+05	0.2496E+05	0.2496E+05	0.1370E+05
56	LSC12	0.4403E+04	0.8956E+04	0.8956E+04	0.4403E+04
57	LSC23	0.3796E+04	0.7729E+04	0.7729E+04	0.3796E+04
58	LSCC23	0.0000E+00	0.6203E+05	0.1405E+06	0.4339E+05
59	LSCC13	0.0000E+00	0.7424E+05	0.8066E+05	0.5139E+05
60	LSCDF	0.0000E+00	0.4368E-03	0.4059E-03	0.4368E-03
61	KL12AB	0.1001E+01	0.9745E+00	0.9745E+00	0.1001E+01
62	MDEIE	0.9620E+00	0.8055E+00	0.8055E+00	0.9620E+00
63	RELROT	0.0000E+00	0.1000E+01	0.1000E+01	0.1000E+01
64	EPS11	0.2805E-02	-0.2292E-03	-0.2292E-03	0.2805E-02
65	EPS22	-0.2292E-03	0.2805E-02	0.2805E-02	-0.2292E-03
66	EPS12	0.1034E-08	-0.8728E-08	-0.8728E-08	0.1034E-08
67	SIG11	0.4767E+05	-0.1351E+04	-0.1351E+04	0.4767E+05
68	SIG22	0.6753E+03	0.4664E+04	0.4664E+04	0.6753E+03
69	SIG12	0.5541E-03	-0.6516E-02	-0.6516E-02	0.5541E-03
70	DELFI	0.0000E+00	-0.4881E-08	0.0000E+00	0.4881E-08
71	HFC	0.1323E+01	0.6655E+00	0.6655E+00	0.1323E+01
72	MPCTGE	0.0000E+00	0.0000E+00	0.0000E+00	0.0000E+00
73	SIG13	0.0000E+00	0.0000E+00	0.0000E+00	0.0000E+00
74	SIG23	0.0000E+00	0.0000E+00	0.0000E+00	0.0000E+00
75	SIG33	0.0000E+00	0.0000E+00	0.0000E+00	0.0000E+00

D E T A I L S O F P O I S S O N R A T I O M I S M A T C H

POISSON"S RATIOS OF THE COMPOSITE
ANUCXY = 0.0817
ANUCYX = 0.0313
ANUCSX = 0.0000
ANUCSY = 0.0000

NO.	THETA	ANULXY	ANULSX	ANULSY	POIDFN	POIDFS
1	0.0	0.2968	0.0000	0.0000	0.2151	0.0000
2	90.0	0.0397	0.0000	0.0000	-0.0421	0.0000
3	90.0	0.0397	0.0000	0.0000	-0.0421	0.0000
4	0.0	0.2968	0.0000	0.0000	0.2151	0.0000

1	0.538999975	0.199999996E-01
2	0.544499993	0.100000016E-01
2	0.544499993	0.100000016E-01
1	0.538999975	0.199999996E-01

F R E E E D G E S T R E S S E S

PLY	THETA	SIGXX	SIGYY	SIGXY	YDCAY LENGTH	SIGZY	SIGZZ	SIGZX
1	0.0	0.143E+01	0.203E-01	0.166E-07	0.122E+00	0.115E-01	0.327E-02	0.410E-08
1	0.0	0.143E+01	0.203E-01	0.166E-07	0.000E+00	0.115E-01	0.327E-02	0.410E-08
2	90.0	0.140E+00	-0.405E-01	-0.332E-07	0.301E+00	-0.167E-08	0.800E-03	0.245E-08
2	90.0	0.140E+00	-0.405E-01	-0.332E-07	0.349E+00	-0.144E-08	0.198E-03	0.245E-08
3	90.0	0.140E+00	-0.405E-01	-0.332E-07	0.301E+00	-0.869E-08	0.800E-03	0.245E-08
3	90.0	0.140E+00	-0.405E-01	-0.332E-07	0.349E+00	-0.749E-08	0.198E-03	0.245E-08
4	0.0	0.143E+01	0.203E-01	0.166E-07	0.122E+00	0.115E-01	0.327E-02	0.410E-08
4	0.0	0.143E+01	0.203E-01	0.166E-07	0.000E+00	0.115E-01	0.327E-02	0.410E-08

NOTE: THE INTERLAMINAR STRESSES ARE BETWEEN PLIES (I-1) AND (I).
NOTE: IF THE PLY NO IS REPEATED THEN THE SECOND ONE INDICATES STRESSES IN THE SECONDARY COMPOSITE.
NOTE: FOR ANGLE PLY LAMINATES SIGYY IS 0. CONSEQUENTLY SIGZY AN D SIGZZ ARE COMPUTED AS ZERO.
TO OBTAIN NONTRIVIAL SIGZY AND SIGZZ, ONE MUST SPECIFY A THIN INTERPLY LAYER.
THE INTERPLY LAYER THICKNESS MAY BE OBTAINED FROM THE PLY PROPERTY TABLE.

M I C R O S T R E S S E S

FOR LOAD CONDITIONS
MEMBRANE LOADS NBS(X,Y,XY-M) ARE 1000. 0. 0.
BENDING LOADS MBS(X,Y,XY-M) ARE 0. 0. 0.
QXZ,QYZ AND APPLIED PRESSURES ARE 0. 0. 0. 0.
NOTE : NO MOISTURE OR TEMPERATURE

(NOTE: ROWS-PROPERTY, COLUMNS-LAYER)

PLY NUMBER		1	2	3	4
MATERIAL SYSTEM		AS--/IMLS /	SGLA/HMHS AS--/IMHS	SGLA/HMHS AS--/IMHS	AS--/IMLS /
ORIENTATION		0.0	90.0	90.0	0.0
1	SM1L	0.1409E+04	-0.8943E+02	-0.8943E+02	0.1409E+04
1	SM1L	0.0000E+00	-0.5962E+02	-0.5962E+02	0.0000E+00
2	SM1T	0.7793E+01	0.9584E+02	0.9584E+02	0.7793E+01
2	SM1T	0.0000E+00	0.6389E+02	0.6389E+02	0.0000E+00
3	SF1L	0.8734E+05	-0.1479E+04	-0.1479E+04	0.8734E+05
3	SF1L	0.0000E+00	-0.3696E+04	-0.3696E+04	0.0000E+00
4	SF1T	-0.8186E+01	0.8187E+03	0.8187E+03	-0.8185E+01
4	SF1T	0.0000E+00	-0.3415E+03	-0.3415E+03	0.0000E+00
5	SM2AL	0.1594E+03	-0.7410E+01	-0.7410E+01	0.1594E+03
5	SM2AL	0.0000E+00	-0.4940E+01	-0.4940E+01	0.0000E+00
6	SM2AT	0.3555E+03	0.1748E+04	0.1748E+04	0.3555E+03
6	SM2AT	0.0000E+00	0.2368E+04	0.2368E+04	0.0000E+00
7	SM2BL	-0.5773E+02	0.2632E+01	0.2632E+01	-0.5773E+02
7	SM2BL	0.0000E+00	0.1636E+01	0.1636E+01	0.0000E+00
8	SM2BT	0.7912E+03	0.3920E+04	0.3920E+04	0.7912E+03
8	SM2BT	0.0000E+00	0.7965E+04	0.7965E+04	0.0000E+00
9	SF2BL	-0.5773E+02	0.2632E+01	0.2632E+01	-0.5773E+02
9	SF2BL	0.0000E+00	0.1636E+01	0.1636E+01	0.0000E+00
10	SF2BT	0.7912E+03	0.3920E+04	0.3920E+04	0.7912E+03
10	SF2BT	0.0000E+00	0.7965E+04	0.7965E+04	0.0000E+00
11	SM3AL	0.1594E+03	-0.7410E+01	-0.7410E+01	0.1594E+03
11	SM3AL	0.0000E+00	-0.4940E+01	-0.4940E+01	0.0000E+00
12	SM3AT	-0.1884E+02	0.1204E+02	0.1204E+02	-0.1884E+02
12	SM3AT	0.0000E+00	0.8027E+01	0.8027E+01	0.0000E+00
13	SM3BL	-0.5773E+02	0.2632E+01	0.2632E+01	-0.5773E+02
13	SM3BL	0.0000E+00	0.1636E+01	0.1636E+01	0.0000E+00
14	SM3BT	0.6821E+01	-0.4277E+01	-0.4277E+01	0.6821E+01
14	SM3BT	0.0000E+00	-0.2659E+01	-0.2659E+01	0.0000E+00
15	SF3BL	-0.5773E+02	0.2632E+01	0.2632E+01	-0.5773E+02
15	SF3BL	0.0000E+00	0.1636E+01	0.1636E+01	0.0000E+00
16	SF3BT	0.6821E+01	-0.4277E+01	-0.4277E+01	0.6821E+01
16	SF3BT	0.0000E+00	-0.2659E+01	-0.2659E+01	0.0000E+00
17	SM12A	0.2230E-03	-0.2407E-02	-0.2407E-02	0.2230E-03
17	SM12A	0.0000E+00	-0.2498E-02	-0.2498E-02	0.0000E+00

18	SM12B	0.6740E-03	-0.6468E-02	-0.6468E-02	0.6740E-03
18	SM12B	0.0000E+00	-0.1007E-01	-0.1007E-01	0.0000E+00
19	SF12B	0.6740E-03	-0.6468E-02	-0.6468E-02	0.6740E-03
19	SF12B	0.0000E+00	-0.1007E-01	-0.1007E-01	0.0000E+00
20	SM13A	0.0000E+00	0.0000E+00	0.0000E+00	0.0000E+00
20	SM13A	0.0000E+00	0.0000E+00	0.0000E+00	0.0000E+00
21	SM13B	0.0000E+00	0.0000E+00	0.0000E+00	0.0000E+00
21	SM13B	0.0000E+00	0.0000E+00	0.0000E+00	0.0000E+00
22	SF13B	0.0000E+00	0.0000E+00	0.0000E+00	0.0000E+00
22	SF13B	0.0000E+00	0.0000E+00	0.0000E+00	0.0000E+00
23	SM23A	0.0000E+00	0.0000E+00	0.0000E+00	0.0000E+00
23	SM23A	0.0000E+00	0.0000E+00	0.0000E+00	0.0000E+00
24	SM23B	0.0000E+00	0.0000E+00	0.0000E+00	0.0000E+00
24	SM23B	0.0000E+00	0.0000E+00	0.0000E+00	0.0000E+00
25	SF23B	0.0000E+00	0.0000E+00	0.0000E+00	0.0000E+00
25	SF23B	0.0000E+00	0.0000E+00	0.0000E+00	0.0000E+00
42	SI22B	0.7334E+03	0.3923E+04	0.3923E+04	0.7334E+03
42	SI22B	0.0000E+00	0.7967E+04	0.7967E+04	0.0000E+00
43	SI33B	-0.5091E+02	-0.1645E+01	-0.1645E+01	-0.5091E+02
43	SI33B	0.0000E+00	-0.1022E+01	-0.1022E+01	0.0000E+00
44	SI12B	0.6740E-03	-0.6468E-02	-0.6468E-02	0.6740E-03
44	SI12B	0.0000E+00	-0.1007E-01	-0.1007E-01	0.0000E+00
45	SINC	0.6690E+03	0.2833E+04	0.2833E+04	0.6690E+03
45	SINC	0.0000E+00	0.5166E+04	0.5166E+04	0.0000E+00
46	SISC	-0.5793E+03	-0.2830E+04	-0.2830E+04	-0.5793E+03
46	SISC	0.0000E+00	-0.5164E+04	-0.5164E+04	0.0000E+00

```
NOTATION: S --- STRESS (SIGMA)
          M --- MATRIX ,   F --- FIBER AND I --- INTERFACE
        1,2,3 --- DIRECTIONS FOR STRESSES - PLY MATERIAL AXES
          L,T --- DIRECTIONS OF PLY STRESSES
            A --- REGION CONTAINING NO FIBERS
            B --- REGION CONTAINING FIBERS AND MATRIX
EXAMPLE:  SM2AL STANDS FOR TRANSVERSE NORMAL STRESS
          IN REGION A DUE TO A LOAD IN THE LOGITUDINAL
          DIRECTION
```

M I C R O S T R E S S I N F L U E N C E C O E F F I C I E N T S

THE FOLLOWING ARE THE MICROSTRESS INFLUENCE COEFFICIENTS FOR THE PRIMARY COMPOSITE AS--/IMLS SYSTEM

INF. COEF.	SIGMA11 lbs/sq.in	SIGMA22 lbs/sq.in	SIGMA12 lbs/sq.in	SIGMA13 lbs/sq.in	SIGMA23 lbs/sq.in	DELTA T 1 deg F	DELTA M 1%
1 SM11	0.0296	0.4012	0.0000	0.0000	0.0000	-28.4409	-1975.09
2 SM22A	0.0033	0.5264	0.0000	0.0000	0.0000	-13.5616	-1253.06
3 SM22B	-0.0012	1.1715	0.0000	0.0000	0.0000	4.9105	453.72
4 SM12A	0.0000	0.0000	0.4025	0.0000	0.0000	0.0000	0.00
5 SM12B	0.0000	0.0000	1.2163	0.0000	0.0000	0.0000	0.00
6 SM13A	0.0000	0.0000	0.0000	0.4025	0.0000	0.0000	0.00
7 SM13B	0.0000	0.0000	0.0000	1.2163	0.0000	0.0000	0.00
8 SM23A	0.0000	0.0000	0.0000	0.0000	0.5566	0.0000	0.00
9 SM23B	0.0000	0.0000	0.0000	0.0000	1.4055	0.0000	0.00
10 SM33A	0.0033	-0.0279	0.0000	0.0000	0.0000	-13.5616	-1253.06
11 SM33B	-0.0012	-0.0101	0.0000	0.0000	0.0000	4.9105	453.72
12 SF11	1.8322	-0.3438	0.0000	0.0000	0.0000	20.7138	1544.16
13 SF22B	-0.0012	1.1715	0.0000	0.0000	0.0000	4.9105	453.72
14 SF33B	-0.0012	-0.0101	0.0000	0.0000	0.0000	4.9105	453.72
15 SF12	0.0000	0.0000	1.2163	0.0000	0.0000	0.0000	0.00
16 SF13	0.0000	0.0000	0.0000	1.2163	0.0000	0.0000	0.00
17 SF23B	0.0000	0.0000	0.0000	0.0000	1.4055	0.0000	0.00

NOTE: TO OBTAIN THE ABSOLUTE VALUE OF THE MICROSTRESSES THE INF. COEF. SHOULD BE MULTIPLIED BY THE APPROPRIATE STRESSES OR THE TEMPERATURE GRADIENT OR THE MOISTURE CONTENT.

EXPLANATION: SM22B ,FOR EXAMPLE, STANDS FOR TRANSVERSE NORMAL STRESS INFLUENCE COEFFICIENT IN REGION B

M I C R O S T R E S S I N F L U E N C E C O E F F I C I E N T S

THE FOLLOWING ARE THE MICROSTRESS INFLUENCE COEFFICIENTS FOR THE PRIMARY COMPOSITE SGLA/HMHS SYSTEM

INF. COEF.	SIGMA11 lbs/sq.in	SIGMA22 lbs/sq.in	SIGMA12 lbs/sq.in	SIGMA13 lbs/sq.in	SIGMA23 lbs/sq.in	DELTA T 1 deg F	DELTA M 1%
1 SM11	0.0662	0.3323	0.0000	0.0000	0.0000	-28.8094	-2926.06
2 SM22A	0.0055	0.3748	0.0000	0.0000	0.0000	-15.3693	-1969.72
3 SM22B	-0.0019	0.8404	0.0000	0.0000	0.0000	5.4591	699.63
4 SM12A	0.0000	0.0000	0.3693	0.0000	0.0000	0.0000	0.00
5 SM12B	0.0000	0.0000	0.9927	0.0000	0.0000	0.0000	0.00
6 SM13A	0.0000	0.0000	0.0000	0.3693	0.0000	0.0000	0.00
7 SM13B	0.0000	0.0000	0.0000	0.9927	0.0000	0.0000	0.00
8 SM23A	0.0000	0.0000	0.0000	0.0000	0.6150	0.0000	0.00
9 SM23B	0.0000	0.0000	0.0000	0.0000	2.0381	0.0000	0.00
10 SM33A	0.0055	0.0026	0.0000	0.0000	0.0000	-15.3693	-1969.72
11 SM33B	-0.0019	0.0009	0.0000	0.0000	0.0000	5.4591	699.63
12 SF11	1.0947	-0.0924	0.0000	0.0000	0.0000	-15.0366	1222.44
13 SF22B	-0.0019	0.8404	0.0000	0.0000	0.0000	5.4591	699.63
14 SF33B	-0.0019	0.0009	0.0000	0.0000	0.0000	5.4591	699.63
15 SF12	0.0000	0.0000	0.9927	0.0000	0.0000	0.0000	0.00
16 SF13	0.0000	0.0000	0.0000	0.9927	0.0000	0.0000	0.00
17 SF23B	0.0000	0.0000	0.0000	0.0000	2.0381	0.0000	0.00

NOTE: TO OBTAIN THE ABSOLUTE VALUE OF THE MICROSTRESSES THE INF. COEF. SHOULD BE MULTIPLIED BY THE APPROPRIATE STRESSES OR THE TEMPERATURE GRADIENT OR THE MOISTURE CONTENT.

EXPLANATION: SM22B ,FOR EXAMPLE, STANDS FOR TRANSVERSE NORMAL STRESS INFLUENCE COEFFICIENT IN REGION B

M I C R O S T R E S S I N F L U E N C E C O E F F I C I E N T S

THE FOLLOWING ARE THE MICROSTRESS INFLUENCE COEFFICIENTS FOR THE SECONDARY COMPOSITE AS--/IMHS SYSTEM

INF. COEF.	SIGMA11 lbs/sq.in	SIGMA22 lbs/sq.in	SIGMA12 lbs/sq.in	SIGMA13 lbs/sq.in	SIGMA23 lbs/sq.in	DELTA T 1 deg F	DELTA M 1%
1 SM11	0.0441	0.3382	0.0000	0.0000	0.0000	-17.2063	-1950.71
2 SM22A	0.0037	0.5078	0.0000	0.0000	0.0000	-8.2462	-1313.15
3 SM22B	-0.0012	1.7078	0.0000	0.0000	0.0000	2.7312	434.92
4 SM12A	0.0000	0.0000	0.3834	0.0000	0.0000	0.0000	0.00
5 SM12B	0.0000	0.0000	1.5456	0.0000	0.0000	0.0000	0.00
6 SM13A	0.0000	0.0000	0.0000	0.3834	0.0000	0.0000	0.00
7 SM13B	0.0000	0.0000	0.0000	1.5456	0.0000	0.0000	0.00
8 SM23A	0.0000	0.0000	0.0000	0.0000	0.4100	0.0000	0.00
9 SM23B	0.0000	0.0000	0.0000	0.0000	1.0569	0.0000	0.00
10 SM33A	0.0037	0.0017	0.0000	0.0000	0.0000	-8.2462	-1313.15
11 SM33B	-0.0012	0.0006	0.0000	0.0000	0.0000	2.7312	434.92
12 SF11	2.7367	-0.5311	0.0000	0.0000	0.0000	66.2585	3056.11
13 SF22B	-0.0012	1.7078	0.0000	0.0000	0.0000	2.7312	434.92
14 SF33B	-0.0012	0.0006	0.0000	0.0000	0.0000	2.7312	434.92
15 SF12	0.0000	0.0000	1.5456	0.0000	0.0000	0.0000	0.00
16 SF13	0.0000	0.0000	0.0000	1.5456	0.0000	0.0000	0.00
17 SF23B	0.0000	0.0000	0.0000	0.0000	1.0569	0.0000	0.00

NOTE: TO OBTAIN THE ABSOLUTE VALUE OF THE MICROSTRESSES THE INF. COEF. SHOULD BE MULTIPLIED BY THE APPROPRIATE STRESSES OR THE TEMPERATURE GRADIENT OR THE MOISTURE CONTENT.

EXPLANATION: SM22B ,FOR EXAMPLE, STANDS FOR TRANSVERSE NORMAL STRESS INFLUENCE COEFFICIENT IN REGION B

S T R E S S C O N C E N T R A T I O N F A C T O R S
(AROUND A CIRCULAR HOLE)

NOTE: K1XX --> STRESS CONCENTRATION FACTOR DUE TO SIGMA XX
K1YY --> STRESS CONCENTRATION FACTOR DUE TO SIGMA YY
K1XY --> STRESS CONCENTRATION FACTOR DUE TO SIGMA XY
LAYUP --> 0 90 90 0

THETA	K1XX	K1YY	K1XY	THETA	K1XX	K1YY	K1XY
0.0	-0.6189	3.8657	0.0000	180.0	-0.6189	3.8657	0.0002
5.0	-0.5733	3.6807	-1.2028	185.0	-0.5733	3.6806	-1.2026
10.0	-0.4585	3.2196	-2.1284	190.0	-0.4586	3.2195	-2.1283
15.0	-0.3172	2.6655	-2.6954	195.0	-0.3173	2.6654	-2.6953
20.0	-0.1796	2.1500	-2.9824	200.0	-0.1797	2.1499	-2.9824
25.0	-0.0563	1.7225	-3.1045	205.0	-0.0563	1.7225	-3.1045
30.0	0.0540	1.3844	-3.1498	210.0	0.0540	1.3843	-3.1498
35.0	0.1576	1.1194	-3.1730	215.0	0.1576	1.1193	-3.1730
40.0	0.2623	0.9087	-3.2058	220.0	0.2623	0.9087	-3.2058
45.0	0.3774	0.7355	-3.2668	225.0	0.3774	0.7355	-3.2668
50.0	0.5148	0.5854	-3.3687	230.0	0.5148	0.5854	-3.3687
55.0	0.6910	0.4451	-3.5210	235.0	0.6909	0.4451	-3.5209
60.0	0.9313	0.3001	-3.7302	240.0	0.9313	0.3000	-3.7302
65.0	1.2775	0.1318	-3.9949	245.0	1.2774	0.1317	-3.9949
70.0	1.7988	-0.0871	-4.2859	250.0	1.7987	-0.0872	-4.2858
75.0	2.6025	-0.3963	-4.4884	255.0	2.6023	-0.3964	-4.4883
80.0	3.7958	-0.8353	-4.2601	260.0	3.7956	-0.8354	-4.2602
85.0	5.2215	-1.3492	-2.8892	265.0	5.2213	-1.3493	-2.8896
90.0	5.9662	-1.6158	-0.0001	270.0	5.9662	-1.6158	-0.0008
95.0	5.2216	-1.3494	2.8890	275.0	5.2219	-1.3494	2.8886
100.0	3.7960	-0.8354	4.2600	280.0	3.7962	-0.8355	4.2599
105.0	2.6026	-0.3965	4.4884	285.0	2.6028	-0.3965	4.4884
110.0	1.7989	-0.0872	4.2859	290.0	1.7990	-0.0872	4.2860
115.0	1.2775	0.1317	3.9950	295.0	1.2776	0.1317	3.9950
120.0	0.9313	0.3000	3.7303	300.0	0.9314	0.3000	3.7303
125.0	0.6910	0.4451	3.5210	305.0	0.6910	0.4450	3.5210
130.0	0.5148	0.5854	3.3687	310.0	0.5149	0.5854	3.3688
135.0	0.3774	0.7355	3.2668	315.0	0.3775	0.7354	3.2669
140.0	0.2623	0.9086	3.2058	320.0	0.2623	0.9086	3.2058
145.0	0.1576	1.1193	3.1730	325.0	0.1576	1.1193	3.1730
150.0	0.0540	1.3843	3.1498	330.0	0.0541	1.3843	3.1498
155.0	-0.0563	1.7224	3.1045	335.0	-0.0563	1.7224	3.1045
160.0	-0.1796	2.1498	2.9825	340.0	-0.1796	2.1497	2.9825
165.0	-0.3172	2.6654	2.6954	345.0	-0.3172	2.6653	2.6955
170.0	-0.4585	3.2195	2.1285	350.0	-0.4585	3.2194	2.1287
175.0	-0.5733	3.6806	1.2029	355.0	-0.5733	3.6805	1.2032

L O C A T I O N S O F P R O B A B L E D E L A M I N A T I O N

RESULTS FOR PLY NO. 1 ORIENTATION 0.0 MATERIAL AS--IMLS

CRITERION	RANGE	VALUE	LOCATION *
MAX OF K1XX*(NUCRT-NULRT)	0.0-- 90.0	0.589	75.0
MAX OF K1YY*(NUCRT-NULRT)	0.0-- 90.0	0.832	0.0
MAX OF K1XY*(NUCRT-NULRT)	0.0-- 90.0	1.405	60.0
MAX OF K1XX*(NUCRT-NULRT)	90.0-- 180.0	0.589	105.0
MAX OF K1YY*(NUCRT-NULRT)	90.0-- 180.0	0.832	180.0
MAX OF K1XY*(NUCRT-NULRT)	90.0-- 180.0	1.405	120.0
MAX OF K1XX*(NUCRT-NULRT)	180.0-- 270.0	0.589	255.0
MAX OF K1YY*(NUCRT-NULRT)	180.0-- 270.0	0.832	180.0
MAX OF K1XY*(NUCRT-NULRT)	180.0-- 270.0	1.405	240.0
MAX OF K1XX*(NUCRT-NULRT)	270.0-- 0.0	0.589	285.0
MAX OF K1YY*(NUCRT-NULRT)	270.0-- 0.0	0.832	0.0
MAX OF K1XY*(NUCRT-NULRT)	270.0-- 0.0	1.405	300.0

RESULTS FOR PLY NO. 2 ORIENTATION 90.0 MATERIAL SGLAHMHS AS--IMHS

CRITERION	RANGE	VALUE	LOCATION *
MAX OF K1XX*(NUCRT-NULRT)	0.0-- 90.0	1.407	90.0
MAX OF K1YY*(NUCRT-NULRT)	0.0-- 90.0	1.087	15.0
MAX OF K1XY*(NUCRT-NULRT)	0.0-- 90.0	1.477	25.0
MAX OF K1XX*(NUCRT-NULRT)	90.0-- 180.0	1.407	90.0
MAX OF K1YY*(NUCRT-NULRT)	90.0-- 180.0	1.087	165.0
MAX OF K1XY*(NUCRT-NULRT)	90.0-- 180.0	1.477	155.0
MAX OF K1XX*(NUCRT-NULRT)	180.0-- 270.0	1.407	270.0
MAX OF K1YY*(NUCRT-NULRT)	180.0-- 270.0	1.087	195.0
MAX OF K1XY*(NUCRT-NULRT)	180.0-- 270.0	1.477	205.0
MAX OF K1XX*(NUCRT-NULRT)	270.0-- 0.0	1.407	270.0
MAX OF K1YY*(NUCRT-NULRT)	270.0-- 0.0	1.087	345.0
MAX OF K1XY*(NUCRT-NULRT)	270.0-- 0.0	1.477	335.0

RESULTS FOR PLY NO. 3 ORIENTATION 90.0 MATERIAL SGLAHMHS AS--IMHS

CRITERION	RANGE	VALUE	LOCATION *
MAX OF K1XX*(NUCRT-NULRT)	0.0-- 90.0	1.407	90.0
MAX OF K1YY*(NUCRT-NULRT)	0.0-- 90.0	1.087	15.0
MAX OF K1XY*(NUCRT-NULRT)	0.0-- 90.0	1.477	25.0
MAX OF K1XX*(NUCRT-NULRT)	90.0-- 180.0	1.407	90.0
MAX OF K1YY*(NUCRT-NULRT)	90.0-- 180.0	1.087	165.0
MAX OF K1XY*(NUCRT-NULRT)	90.0-- 180.0	1.477	155.0
MAX OF K1XX*(NUCRT-NULRT)	180.0-- 270.0	1.407	270.0

MAX OF K1YY*(NUCRT-NULRT)	180.0--	270.0	1.087	195.0
MAX OF K1XY*(NUCRT-NULRT)	180.0--	270.0	1.477	205.0
MAX OF K1XX*(NUCRT-NULRT)	270.0--	0.0	1.407	270.0
MAX OF K1YY*(NUCRT-NULRT)	270.0--	0.0	1.087	345.0
MAX OF K1XY*(NUCRT-NULRT)	270.0--	0.0	1.477	335.0

L O C A T I O N S O F P R O B A B L E D E L A M I N A T I O N

RESULTS FOR PLY NO. 4 ORIENTATION 0.0 MATERIAL AS--IMLS

CRITERION	RANGE	VALUE	LOCATION *
MAX OF K1XX*(NUCRT-NULRT)	0.0-- 90.0	0.589	75.0
MAX OF K1YY*(NUCRT-NULRT)	0.0-- 90.0	0.832	0.0
MAX OF K1XY*(NUCRT-NULRT)	0.0-- 90.0	1.405	60.0
MAX OF K1XX*(NUCRT-NULRT)	90.0-- 180.0	0.589	105.0
MAX OF K1YY*(NUCRT-NULRT)	90.0-- 180.0	0.832	180.0
MAX OF K1XY*(NUCRT-NULRT)	90.0-- 180.0	1.405	120.0
MAX OF K1XX*(NUCRT-NULRT)	180.0-- 270.0	0.589	255.0
MAX OF K1YY*(NUCRT-NULRT)	180.0-- 270.0	0.832	180.0
MAX OF K1XY*(NUCRT-NULRT)	180.0-- 270.0	1.405	240.0
MAX OF K1XX*(NUCRT-NULRT)	270.0-- 0.0	0.589	285.0
MAX OF K1YY*(NUCRT-NULRT)	270.0-- 0.0	0.832	0.0
MAX OF K1XY*(NUCRT-NULRT)	270.0-- 0.0	1.405	300.0

NOTES: K1XX --> STRESS CONCENTRATION FACTOR DUE TO SIGMA XX
K1YY --> STRESS CONCENTRATION FACTOR DUE TO SIGMA YY
K1XY --> STRESS CONCENTRATION FACTOR DUE TO SIGMA XY
NULRT --> PLY POISSON RATIO IN R AND T AXES
NUCRT --> COMPOSITE POISSON RATIO IN R AND T AXES
(R AND T ARE THE RADIAL AND THE TANGENTIAL DIRECTIONS)
* ONLY 5 DEG. INTERVALS ARE CONSIDERED. THE ACTUAL VALUE IS EXPECTED TO BE WITHIN 5 DEG. OF THE PRINTED RESULT.

LAYUP --> 0 90 90 0

LAMINATE FAILURE STRESS ANALYSIS - (NO TEMPERATURE OR MOISTURE STRESSES)
(BASED UPON FIRST PLY FAILURE)

LAMINATE FAILURE STRESSES BASED UPON FIRST PLY FAILURE CRITERIA (NO TEMPERATURE OR MOISTURE STRESSES)

PLY NO. = 1 THETA = 0.00 MATERIAL SYSTEM = AS--IMLS

LOADS	SL11T	SL11C	SL22T	SL22C	SL12S	FAIL. LOAD	MODE
	215.5999	57.3689	4.5681	13.7044	4.4032		
	ksi	ksi	ksi	ksi	ksi	ksi	
SCXXT MIN (	150.765	-40.117	225.470	-676.409	0.000)	150.765	SL11T
SCXXC MIN (	-150.765	40.117	-225.470	676.409	0.000)	40.117	SL11C
SCYYT MIN (	-4895.340	1302.599	18.749	-56.248	0.000)	18.749	SL22T
SCYYC MIN (	4895.340	-1302.599	-18.749	56.248	0.000)	56.248	SL22C
SCXYS MIN (	0.000	0.000	**********	**********	4.981)	4.981	SL12S

LAMINATE FAILURE STRESS ANALYSIS - (NO TEMPERATURE OR MOISTURE STRESSES)
(BASED UPON FIRST PLY FAILURE)

LAMINATE FAILURE STRESSES BASED UPON FIRST PLY FAILURE CRITERIA (NO TEMPERATURE OR MOISTURE STRESSES)

PLY NO. = 2 THETA = 90.00 MATERIAL SYSTEM = SGLAHMHS AS--IMHS

LOADS	SL11T	SL11C	SL22T	SL22C	SL12S	FAIL. LOAD	MODE
	207.8999	134.4850	10.6959	24.9571	8.9564		
	ksi	ksi	ksi	ksi	ksi	ksi	
SCXXT MIN (	-5130.676	3318.900	76.440	-178.361	0.000)	76.440	SL22T
SCXXC MIN (	5130.676	-3318.900	-76.440	178.361	0.000)	178.361	SL22C
SCYYT MIN (	82.739	-53.522	121.429	-283.334	**********)	82.739	SL11T
SCYYC MIN (	-82.739	53.522	-121.429	283.334	**********)	53.522	SL11C
SCXYS MIN (	**********	**********	**********	**********	7.270)	7.270	SL12S

Notes: "**********" implies -"Not Applicable"-
If any of the allowable strengths -- SL11T,SL11C,SL22T,SL22C, or SL12S -- is "0.0", it implies that the particular ply has failed due to a combination of residual stresses / moisture induced stresses under no mechanical loads. Failure stress analysis based on first ply failure criteria therefore indicates the corresponding mode as failure mode

LAYUP --> 0 90 90 0

LAMINATE FAILURE STRESS ANALYSIS - (NO TEMPERATURE OR MOISTURE STRESSES)
(BASED UPON FIRST PLY FAILURE)

LAMINATE FAILURE STRESSES BASED UPON FIRST PLY FAILURE CRITERIA (NO TEMPERATURE OR MOISTURE STRESSES)

PLY NO. = 3 THETA = 90.00 MATERIAL SYSTEM = SGLAHMHS AS--I.:HS

LOADS	SL11T	SL11C	SL22T	SL22C	SL12S	FAIL. LOAD	MODE
	207.8999	134.4850	10.6959	24.9571	8.9564		
	ksi	ksi	ksi	ksi	ksi	ksi	
SCXXT MIN (	-5130.668	3318.895	76.440	-178.361	0.000)	76.440	SL22T
SCXXC MIN (	5130.668	-3318.895	-76.440	178.361	0.000)	178.361	SL22C
SCYYT MIN (	82.739	-53.522	121.429	-283.333	**********)	82.739	SL11T
SCYYC MIN (	-82.739	53.522	-121.429	283.333	**********)	53.522	SL11C
SCXYS MIN (	**********	**********	**********	**********	7.270)	7.270	SL12S

LAMINATE FAILURE STRESS ANALYSIS - (NO TEMPERATURE OR MOISTURE STRESSES)
(BASED UPON FIRST PLY FAILURE)

LAMINATE FAILURE STRESSES BASED UPON FIRST PLY FAILURE CRITERIA (NO TEMPERATURE OR MOISTURE STRESSES)

PLY NO. = 4 THETA = 0.00 MATERIAL SYSTEM = AS--IMLS

LOADS	SL11T	SL11C	SL22T	SL22C	SL12S	FAIL. LOAD	MODE
	215.5999	57.3689	4.5681	13.7044	4.4032		
	ksi	ksi	ksi	ksi	ksi	ksi	
SCXXT MIN (	150.765	-40.117	225.470	-676.410	0.000)	150.765	SL11T
SCXXC MIN (	-150.765	40.117	-225.470	676.410	0.000)	40.117	SL11C
SCYYT MIN (	-4895.344	1302.600	18.749	-56.248	0.000)	18.749	SL22T
SCYYC MIN (	4895.344	-1302.600	-18.749	56.248	0.000)	56.248	SL22C
SCXYS MIN (	0.000	0.000	**********	**********	4.981)	4.981	SL12S

Notes: "**********" implies -"Not Applicable"-
If any of the allowable strengths -- SL11T,SL11C,SL22T,SL22C, or SL12S -- is "0.0", it implies that the particular ply has failed due to a combination of residual stresses / moisture induced stresses under no mechanical loads. Failure stress analysis based on first ply failure criteria therefore indicates the corresponding mode as failure mode

S U M M A R Y

LAMINATE FAILURE STRESS ANALYSIS - (NO TEMPERATURE OR MOISTURE STRESSES)
(BASED UPON FIRST PLY FAILURE)

LOAD TYPE	STRESS (ksi)	FAILURE MODE	PLY NO.	THETA	MATERIAL SYSTEM
SCXXT	76.440	SL22T	2	90.0	SGLAHMHS AS--IMHS
SCXXC	40.117	SL11C	1	0.0	AS--IMLS
SCYYT	18.749	SL22T	4	0.0	AS--IMLS
SCYYC	53.522	SL11C	3	90.0	SGLAHMHS AS--IMHS
SCXYS	4.981	SL12S	4	0.0	AS--IMLS

LAMINATE FAILURE STRESS ANALYSIS - (NO TEMPERATURE OR MOISTURE STRESSES)
(BASED UPON FIBER FAILURE)

LOAD TYPE	STRESS (ksi)	FAILURE MODE	PLY NO.	THETA	MATERIAL SYSTEM
SCXXT	150.765	SL11T	1	0.0	AS--IMLS
SCXXC	40.117	SL11C	1	0.0	AS--IMLS
SCYYT	82.739	SL11T	3	90.0	SGLAHMHS AS--IMHS
SCYYC	53.522	SL11C	3	90.0	SGLAHMHS AS--IMHS
SCXYS	*********	N/A			

NOTE: IF THERE IS NO ANGLE PLY "SCXYS" BASED UPON FIBER FAILURE IS NOT PREDICTED.

P L Y S T R E S S A N D S T R A I N I N F L U E N C E C O E F F I C I E N T S A R R A Y S

PLY NO.	MATERIAL SYSTEM	THETA	RESPONSE	NX (Unit load ...	NY	NXY lb./inch)	MX (Unit moment...	MY	MXY lb.in/inch)	DELTAT (1 Deg F)	DELTAM (1 %)
1	AS--/IMLS	0.0									
			EPS11	2.8055	-0.2292	0.0000	-271.4092	60.8498	0.0000	1.4046	130.4061
			EPS22	-0.2292	7.3249	0.0000	60.8498	-2973.2124	0.0024	6.7516	364.0884
			EPS12	0.0000	0.0000	54.9999	0.0000	0.0024	-8175.9102	0.0000	-0.0029
			SIG11	47.6679	-1.4681	0.0000	-4598.7031	47.9429	0.0001	14.2117	996.2961
			SIG22	0.6753	8.1214	-0.0001	-22.0551	-3307.2253	0.0027	-25.4529	-1237.6147
			SIG12	0.0000	0.0000	29.4687	0.0000	0.0013	-4380.6133	0.0000	-0.0015
2	SGLA/HMHS AS--/IMHS	90.0									
			EPS11	-0.2292	7.3249	0.0000	15.2125	-743.3030	-0.0020	6.7517	364.0886
			EPS22	2.8055	-0.2292	-0.0001	-67.8524	15.2125	0.0026	1.4046	130.4061
			EPS12	0.0000	0.0001	-54.9999	0.0002	-0.0025	2043.9810	0.0001	0.0035
			SIG11	-1.3507	83.7573	0.0002	143.3582	-8503.0664	-0.0215	50.9059	2475.2271
			SIG22	4.6642	2.9361	-0.0001	-108.4169	-311.6289	0.0035	-28.4234	-1992.5925
			SIG12	0.0000	0.0001	-41.0627	0.0002	-0.0019	1526.0251	0.0000	0.0026
3	SGLA/HMHS AS--/IMHS	90.0									
			EPS11	-0.2292	7.3249	0.0000	-15.2125	743.3027	0.0020	6.7517	364.0889
			EPS22	2.8055	-0.2292	-0.0001	67.8522	-15.2125	-0.0026	1.4046	130.4061
			EPS12	0.0000	0.0001	-54.9999	-0.0002	0.0025	-2043.9753	0.0001	0.0035
			SIG11	-1.3507	83.7574	0.0002	-143.3582	8503.0625	0.0215	50.9059	2475.2297
			SIG22	4.6642	2.9361	-0.0001	108.4165	311.6287	-0.0035	-28.4234	-1992.5925
			SIG12	0.0000	0.0001	-41.0627	-0.0002	0.0019	-1526.0210	0.0000	0.0026
4	AS--/IMLS	0.0									
			EPS11	2.8055	-0.2292	0.0000	271.4089	-60.8499	0.0000	1.4046	130.4061
			EPS22	-0.2292	7.3249	0.0000	-60.8499	2973.2144	-0.0024	6.7517	364.0891
			EPS12	0.0000	0.0000	54.9999	0.0000	-0.0024	8175.9102	0.0000	-0.0029
			SIG11	47.6679	-1.4681	0.0000	4598.6992	-47.9431	-0.0001	14.2117	996.2957
			SIG22	0.6753	8.1214	-0.0001	22.0549	3307.2275	-0.0027	-25.4529	-1237.6138
			SIG12	0.0000	0.0000	29.4687	0.0000	-0.0013	4380.6133	0.0000	-0.0015

NOTE: Strains are in Micro inch/inch.
Stresses are in psi.

Explanation of the influence coefficients

Nx,Ny and Nxy are unit loads in lb/in. Mx,My and Mxy are unit moments in lb.in/in . DELTAT is a unit temp. diff. and DELTAM is a unit percentage of moisture content. To obtain response (R) for a general applied load vector F use the following equation:

$$(R) = (\ AINF\ )\ X\ (F)$$

Note: R is a 6X1 column vector defined by

$$(R) = (EPS11\ EPS22\ EPS12\ SIG11\ SIG12\ SIG12)^T$$

F is a 8X1 column vector defined by

$$(F) = (Nx\ Ny\ Nxy\ Mx\ My\ Mxy\ DELTAT\ DELTAM)^T$$

AINF is a (6X8) matrix containing the influence coefficients arrays.

P L Y S T R E S S I N F L U E N C E C O E F F I C I E N T S A R R A Y S

PLY NO.	MATERIAL SYSTEM	THETA	RESPONSE	NX (Unit load ... lb./inch) Scale Factor = 33.333 (1/TC)	NY	NXY	MX (Unit moment...lb.in/inch) Scale Factor = 6666.664 (6/TC**2)	MY	MXY	DELTAT (1 Deg F) 17.207	DELTAM (1 %) 1557.591
1	AS--/IMLS	0.0									
			SIG11	1.4300	-0.0440	0.0000	-0.6898	0.0072	0.0000	0.8259	0.6396
			SIG22	0.0203	0.2436	0.0000	-0.0033	-0.4961	0.0000	-1.4792	-0.7946
			SIG12	0.0000	0.0000	0.8841	0.0000	0.0000	-0.6571	0.0000	0.0000
2	SGLA/HMHS AS--/IMHS	90.0									
			SIG11	-0.0405	2.5127	0.0000	0.0215	-1.2755	0.0000	2.9585	1.5891
			SIG22	0.1399	0.0881	0.0000	-0.0163	-0.0467	0.0000	-1.6519	-1.2793
			SIG12	0.0000	0.0000	-1.2319	0.0000	0.0000	0.2289	0.0000	0.0000
3	SGLA/HMHS AS--/IMHS	90.0									
			SIG11	-0.0405	2.5127	0.0000	-0.0215	1.2755	0.0000	2.9585	1.5891
			SIG22	0.1399	0.0881	0.0000	0.0163	0.0467	0.0000	-1.6519	-1.2793
			SIG12	0.0000	0.0000	-1.2319	0.0000	0.0000	-0.2289	0.0000	0.0000
4	AS--/IMLS	0.0									
			SIG11	1.4300	-0.0440	0.0000	0.6898	-0.0072	0.0000	0.8259	0.6396
			SIG22	0.0203	0.2436	0.0000	0.0033	0.4961	0.0000	-1.4792	-0.7946
			SIG12	0.0000	0.0000	0.8841	0.0000	0.0000	0.6571	0.0000	0.0000

Note: The membrane stresses are normalized w.r.t the average stress due to unit load in an equivalent homogeneous section. The bending stresses are normalized w.r.t the maximum stress due to unit moment. The temperature and moisture stresses are normalized w.r.t the average stresses due to unit temperature difference and unit percentage of moisture. To obtain the absolute values of the stresses the influence coefficients should be multiplied by the indicated scale factors. These should be multiplied by the corresponding loads to obtain stresses in the plies.

Output Option 22 (DURADET)

D U R A B I L I T Y A N A L Y S I S : INPUT DATA

- - - STATIC LOAD DETAILS - - -

```
MEMBRANE LOADS  Nxx,Nyy AND Nxy in lb/in      100.000      50.000       0.000
BENDING  LOADS  Mxx,Myy AND Mxy in lb.in.in     0.000       0.000       0.000

THERMAL LOADS  DELTA T (PLY. NO., TEMP. DIFFERENCE.)

   1  -190.0     2  -190.0     3  -190.0     4  -190.0     5  -190.0     6  -190.0     7  -190.0     8  -190.0

   9  -190.0    10  -190.0    11  -190.0    12  -190.0    13  -190.0    14  -190.0    15  -190.0    16  -190.0

HYGRAL  LOADS  DELTA M (PLY. NO., MOISTURE...)

   1     0.5     2     0.5     3     0.5     4     0.5     5     0.5     6     0.5     7     0.5     8     0.5

   9     0.5    10     0.5    11     0.5    12     0.5    13     0.5    14     0.5    15     0.5    16     0.5
```

- - - CYCLIC LOAD DETAILS - - -

```
MEMBRANE LOADS    Nxx (Max)    =    200.000 lb/in
                  Nxx (Min)    =      0.000 lb/in
           NUMBER OF CYCLES    = 100000000. cycles
                     Beta L    =      0.010

                  Nyy (Max)    =      0.000 lb/in
                  Nyy (Min)    =      0.000 lb/in
           NUMBER OF CYCLES    =         1. cycles
                     Beta L    =      0.010

                  Nxy (Max)    =      0.000 lb/in
                  Nxy (Min)    =      0.000 lb/in
           NUMBER OF CYCLES    =         1. cycles
                     Beta L    =      0.010

BENDING  LOADS    Mxx (Max)    =      0.000 lb.in/in
                  Mxx (Min)    =      0.000 lb.in/in
           NUMBER OF CYCLES    =         1. cycles
                     Beta L    =      0.010

                  Myy (Max)    =      0.000 lb.in/in
                  Myy (Min)    =      0.000 lb.in/in
           NUMBER OF CYCLES    =         1. cycles
```

```
          Beta L    =      0.010

       Mxy (Max)    =      0.000 lb.in/in
       Mxy (Min)    =      0.000 lb.in/in
NUMBER OF CYCLES    =         1. cycles
          Beta L    =      0.010
```

Output Option 22 (DURADET)

D U R A B I L I T Y A N A L Y S I S : PLY BY PLY DETAILS

THE ALLOWABLE STRENGTHS FOR THE PLY NO. 1 ARE

STATIC STRENGTH ALLOWABLES		CYCLIC LOAD STRENGTH ALLOWABLES					
		CNXX	CNYY	CNXY	CMXX	CMYY	CMXY
	(CYCLES)	100000000.	1.	1.	1.	1.	1.
	(BETA L)	0.010	0.010	0.010	0.010	0.010	0.010
SL11T (ksi)	192.500	177.100	192.500	192.500	192.500	192.500	192.500
SL11C (ksi)	120.387	110.756	120.387	120.387	120.387	120.387	120.387
SL22T (ksi)	10.523	9.681	10.523	10.523	10.523	10.523	10.523
SL22C (ksi)	24.553	22.589	24.553	24.553	24.553	24.553	24.553
SL12S (ksi)	8.936	8.222	8.936	8.936	8.936	8.936	8.936

NO.	STATIC LOAD	CYCLIC LOAD RATIOS. RNXX	RNYY	RNXY	RMXX	RMYY	RMXY	SUM	MARGIN	
1	0.000	0.038	0.000	0.000	0.000	0.000	0.000	0.038	0.962	(UPPER: SIG. 11 (6.776) /SL.)
	0.272	-0.001	0.000	0.000	0.000	0.000	0.000	0.271	0.729	(UPPER: SIG. 22 (2.839) /SL.)
	0.000	0.000	0.000	0.000	0.000	0.000	0.000	0.000	1.000	(UPPER: SIG. 12 (0.000) /SL.)
	0.000	0.000	0.000	0.000	0.000	0.000	0.000	0.000	1.000	(LOWER: SIG. 11 (0.065) /SL.)
	0.272	0.000	0.000	0.000	0.000	0.000	0.000	0.272	0.728	(LOWER: SIG. 22 (2.858) /SL.)
	0.000	0.000	0.000	0.000	0.000	0.000	0.000	0.000	1.000	(LOWER: SIG. 12 (0.000) /SL.)

THE ALLOWABLE STRENGTHS FOR THE PLY NO. 2 ARE

STATIC STRENGTH ALLOWABLES		CYCLIC LOAD STRENGTH ALLOWABLES					
		CNXX	CNYY	CNXY	CMXX	CMYY	CMXY
	(CYCLES)	100000000.	1.	1.	1.	1.	1.
	(BETA L)	0.010	0.010	0.010	0.010	0.010	0.010
SL11T (ksi)	192.500	177.100	192.500	192.500	192.500	192.500	192.500
SL11C (ksi)	120.387	110.756	120.387	120.387	120.387	120.387	120.387
SL22T (ksi)	10.523	9.681	10.523	10.523	10.523	10.523	10.523
SL22C (ksi)	24.553	22.589	24.553	24.553	24.553	24.553	24.553
SL12S (ksi)	8.936	8.222	8.936	8.936	8.936	8.936	8.936

NO.	STATIC LOAD	CYCLIC LOAD RATIOS. RNXX	RNYY	RNXY	RMXX	RMYY	RMXY	SUM	MARGIN	
2	-0.009	0.013	0.000	0.000	0.000	0.000	0.000	0.005	0.995	(UPPER: SIG. 11 (1.307) /SL.)
	0.276	0.017	0.000	0.000	0.000	0.000	0.000	0.293	0.707	(UPPER: SIG. 22 (3.068) /SL.)
	-0.006	-0.027	0.000	0.000	0.000	0.000	0.000	-0.033	0.967	(UPPER: SIG. 12 (-0.276) /SL.)
	-0.009	0.000	0.000	0.000	0.000	0.000	0.000	-0.009	0.991	(LOWER: SIG. 11 (-1.029) /SL.)
	0.276	0.000	0.000	0.000	0.000	0.000	0.000	0.276	0.724	(LOWER: SIG. 22 (2.904) /SL.)
	-0.006	0.000	0.000	0.000	0.000	0.000	0.000	-0.006	0.994	(LOWER: SIG. 12 (-0.055) /SL.)

THE ALLOWABLE STRENGTHS FOR THE PLY NO. 3 ARE

STATIC STRENGTH ALLOWABLES — CYCLIC LOAD STRENGTH ALLOWABLES

	CNXX	CNYY	CNXY	CMXX	CMYY	CMXY
(CYCLES)	100000000.	1.	1.	1.	1.	1.
(BETA L)	0.010	0.010	0.010	0.010	0.010	0.010
SL11T (ksi)	192.500	177.100	192.500	192.500	192.500	192.500	192.500
SL11C (ksi)	120.387	110.756	120.387	120.387	120.387	120.387	120.387
SL22T (ksi)	10.523	9.681	10.523	10.523	10.523	10.523	10.523
SL22C (ksi)	24.553	22.589	24.553	24.553	24.553	24.553	24.553
SL12S (ksi)	8.936	8.222	8.936	8.936	8.936	8.936	8.936

NO. STATIC LOAD — CYCLIC LOAD RATIOS.

	RNXX	RNYY	RNXY	RMXX	RMYY	RMXY	SUM	MARGIN	
3 -0.009	0.013	0.000	0.000	0.000	0.000	0.000	0.005	0.995	(UPPER: SIG. 11 (1.307) /SL.)
0.276	0.017	0.000	0.000	0.000	0.000	0.000	0.293	0.707	(UPPER: SIG. 22 (3.068) /SL.)
0.006	0.027	0.000	0.000	0.000	0.000	0.000	0.033	0.967	(UPPER: SIG. 12 (0.276) /SL.)
-0.009	0.000	0.000	0.000	0.000	0.000	0.000	-0.009	0.991	(LOWER: SIG. 11 (-1.029) /SL.)
0.276	0.000	0.000	0.000	0.000	0.000	0.000	0.276	0.724	(LOWER: SIG. 22 (2.904) /SL.)
0.006	0.000	0.000	0.000	0.000	0.000	0.000	0.006	0.994	(LOWER: SIG. 12 (0.055) /SL.)

THE ALLOWABLE STRENGTHS FOR THE PLY NO. 4 ARE

STATIC STRENGTH ALLOWABLES — CYCLIC LOAD STRENGTH ALLOWABLES

	CNXX	CNYY	CNXY	CMXX	CMYY	CMXY
(CYCLES)	100000000.	1.	1.	1.	1.	1.
(BETA L)	0.010	0.010	0.010	0.010	0.010	0.010
SL11T (ksi)	192.500	177.100	192.500	192.500	192.500	192.500	192.500
SL11C (ksi)	120.387	110.756	120.387	120.387	120.387	120.387	120.387
SL22T (ksi)	10.523	9.681	10.523	10.523	10.523	10.523	10.523
SL22C (ksi)	24.553	22.589	24.553	24.553	24.553	24.553	24.553
SL12S (ksi)	8.936	8.222	8.936	8.936	8.936	8.936	8.936

NO. STATIC LOAD — CYCLIC LOAD RATIOS.

	RNXX	RNYY	RNXY	RMXX	RMYY	RMXY	SUM	MARGIN	
4 -0.018	-0.018	0.000	0.000	0.000	0.000	0.000	-0.036	0.964	(UPPER: SIG. 11 (-4.162) /SL.)
0.280	0.036	0.000	0.000	0.000	0.000	0.000	0.316	0.684	(UPPER: SIG. 22 (3.298) /SL.)
0.000	0.000	0.000	0.000	0.000	0.000	0.000	0.000	1.000	(UPPER: SIG. 12 (0.000) /SL.)
-0.018	0.000	0.000	0.000	0.000	0.000	0.000	-0.018	0.982	(LOWER: SIG. 11 (-2.122) /SL.)
0.280	0.000	0.000	0.000	0.000	0.000	0.000	0.280	0.720	(LOWER: SIG. 22 (2.950) /SL.)
0.000	0.000	0.000	0.000	0.000	0.000	0.000	0.000	1.000	(LOWER: SIG. 12 (0.000) /SL.)

THE ALLOWABLE STRENGTHS FOR THE PLY NO. 5 ARE

STATIC STRENGTH ALLOWABLES — CYCLIC LOAD STRENGTH ALLOWABLES

	CNXX	CNYY	CNXY	CMXX	CMYY	CMXY
(CYCLES)	100000000.	1.	1.	1.	1.	1.
(BETA L)	0.010	0.010	0.010	0.010	0.010	0.010

SL11T (ksi)	192.500	177.100	192.500	192.500	192.500	192.500	192.500
SL11C (ksi)	120.387	110.756	120.387	120.387	120.387	120.387	120.387
SL22T (ksi)	10.523	9.681	10.523	10.523	10.523	10.523	10.523
SL22C (ksi)	24.553	22.589	24.553	24.553	24.553	24.553	24.553
SL12S (ksi)	8.936	8.222	8.936	8.936	8.936	8.936	8.936

NO. STATIC LOAD CYCLIC LOAD RATIOS.

		RNXX	RNYY	RNXY	RMXX	RMYY	RMXY	SUM	MARGIN	
5	0.000	0.038	0.000	0.000	0.000	0.000	0.000	0.038	0.962	(UPPER: SIG. 11 (6.776) /SL.)
	0.272	-0.001	0.000	0.000	0.000	0.000	0.000	0.271	0.729	(UPPER: SIG. 22 (2.839) /SL.)
	0.000	0.000	0.000	0.000	0.000	0.000	0.000	0.000	1.000	(UPPER: SIG. 12 (0.000) /SL.)
	0.000	0.000	0.000	0.000	0.000	0.000	0.000	0.000	1.000	(LOWER: SIG. 11 (0.065) /SL.)
	0.272	0.000	0.000	0.000	0.000	0.000	0.000	0.272	0.728	(LOWER: SIG. 22 (2.858) /SL.)
	0.000	0.000	0.000	0.000	0.000	0.000	0.000	0.000	1.000	(LOWER: SIG. 12 (0.000) /SL.)

THE ALLOWABLE STRENGTHS FOR THE PLY NO. 6 ARE

STATIC STRENGTH ALLOWABLES CYCLIC LOAD STRENGTH ALLOWABLES

	CNXX	CNYY	CNXY	CMXX	CMYY	CMXY
(CYCLES)	100000000.	1.	1.	1.	1.	1.
(BETA L)	0.010	0.010	0.010	0.010	0.010	0.010
SL11T (ksi)	192.500	177.100	192.500	192.500	192.500	192.500
SL11C (ksi)	120.387	110.756	120.387	120.387	120.387	120.387
SL22T (ksi)	10.523	9.681	10.523	10.523	10.523	10.523
SL22C (ksi)	24.553	22.589	24.553	24.553	24.553	24.553
SL12S (ksi)	8.936	8.222	8.936	8.936	8.936	8.936

NO. STATIC LOAD CYCLIC LOAD RATIOS.

		RNXX	RNYY	RNXY	RMXX	RMYY	RMXY	SUM	MARGIN	
6	-0.009	0.013	0.000	0.000	0.000	0.000	0.000	0.005	0.995	(UPPER: SIG. 11 (1.307) /SL.)
	0.276	0.017	0.000	0.000	0.000	0.000	0.000	0.293	0.707	(UPPER: SIG. 22 (3.068) /SL.)
	-0.006	-0.027	0.000	0.000	0.000	0.000	0.000	-0.033	0.967	(UPPER: SIG. 12 (-0.276) /SL.)
	-0.009	0.000	0.000	0.000	0.000	0.000	0.000	-0.009	0.991	(LOWER: SIG. 11 (-1.029) /SL.)
	0.276	0.000	0.000	0.000	0.000	0.000	0.000	0.276	0.724	(LOWER: SIG. 22 (2.904) /SL.)
	-0.006	0.000	0.000	0.000	0.000	0.000	0.000	-0.006	0.994	(LOWER: SIG. 12 (-0.055) /SL.)

THE ALLOWABLE STRENGTHS FOR THE PLY NO. 7 ARE

STATIC STRENGTH ALLOWABLES CYCLIC LOAD STRENGTH ALLOWABLES

	CNXX	CNYY	CNXY	CMXX	CMYY	CMXY
(CYCLES)	100000000.	1.	1.	1.	1.	1.
(BETA L)	0.010	0.010	0.010	0.010	0.010	0.010
SL11T (ksi)	192.500	177.100	192.500	192.500	192.500	192.500
SL11C (ksi)	120.387	110.756	120.387	120.387	120.387	120.387
SL22T (ksi)	10.523	9.681	10.523	10.523	10.523	10.523
SL22C (ksi)	24.553	22.589	24.553	24.553	24.553	24.553
SL12S (ksi)	8.936	8.222	8.936	8.936	8.936	8.936

NO.	STATIC LOAD	CYCLIC LOAD RATIOS. RNXX	RNYY	RNXY	RMXX	RMYY	RMXY	SUM	MARGIN	
7	-0.009	0.013	0.000	0.000	0.000	0.000	0.000	0.005	0.995	(UPPER: SIG. 11 (1.307) /SL.)
	0.276	0.017	0.000	0.000	0.000	0.000	0.000	0.293	0.707	(UPPER: SIG. 22 (3.068) /SL.)
	0.006	0.027	0.000	0.000	0.000	0.000	0.000	0.033	0.967	(UPPER: SIG. 12 (0.276) /SL.)
	-0.009	0.000	0.000	0.000	0.000	0.000	0.000	-0.009	0.991	(LOWER: SIG. 11 (-1.029) /SL.)
	0.276	0.000	0.000	0.000	0.000	0.000	0.000	0.276	0.724	(LOWER: SIG. 22 (2.904) /SL.)
	0.006	0.000	0.000	0.000	0.000	0.000	0.000	0.006	0.994	(LOWER: SIG. 12 (0.055) /SL.)

THE ALLOWABLE STRENGTHS FOR THE PLY NO. 8 ARE

STATIC STRENGTH ALLOWABLES		CYCLIC LOAD STRENGTH ALLOWABLES					
		CNXX	CNYY	CNXY	CMXX	CMYY	CMXY
	(CYCLES)	100000000.	1.	1.	1.	1.	1.
	(BETA L)	0.010	0.010	0.010	0.010	0.010	0.010
SL11T (ksi)	192.500	177.100	192.500	192.500	192.500	192.500	192.500
SL11C (ksi)	120.387	110.756	120.387	120.387	120.387	120.387	120.387
SL22T (ksi)	10.523	9.681	10.523	10.523	10.523	10.523	10.523
SL22C (ksi)	24.553	22.589	24.553	24.553	24.553	24.553	24.553
SL12S (ksi)	8.936	8.222	8.936	8.936	8.936	8.936	8.936

NO.	STATIC LOAD	CYCLIC LOAD RATIOS. RNXX	RNYY	RNXY	RMXX	RMYY	RMXY	SUM	MARGIN	
8	-0.018	-0.018	0.000	0.000	0.000	0.000	0.000	-0.036	0.964	(UPPER: SIG. 11 (-4.162) /SL.)
	0.280	0.036	0.000	0.000	0.000	0.000	0.000	0.316	0.684	(UPPER: SIG. 22 (3.298) /SL.)
	0.000	0.000	0.000	0.000	0.000	0.000	0.000	0.000	1.000	(UPPER: SIG. 12 (0.000) /SL.)
	-0.018	0.000	0.000	0.000	0.000	0.000	0.000	-0.018	0.982	(LOWER: SIG. 11 (-2.122) /SL.)
	0.280	0.000	0.000	0.000	0.000	0.000	0.000	0.280	0.720	(LOWER: SIG. 22 (2.950) /SL.)
	0.000	0.000	0.000	0.000	0.000	0.000	0.000	0.000	1.000	(LOWER: SIG. 12 (0.000) /SL.)

THE ALLOWABLE STRENGTHS FOR THE PLY NO. 9 ARE

STATIC STRENGTH ALLOWABLES		CYCLIC LOAD STRENGTH ALLOWABLES					
		CNXX	CNYY	CNXY	CMXX	CMYY	CMXY
	(CYCLES)	100000000.	1.	1.	1.	1.	1.
	(BETA L)	0.010	0.010	0.010	0.010	0.010	0.010
SL11T (ksi)	192.500	177.100	192.500	192.500	192.500	192.500	192.500
SL11C (ksi)	120.387	110.756	120.387	120.387	120.387	120.387	120.387
SL22T (ksi)	10.523	9.681	10.523	10.523	10.523	10.523	10.523
SL22C (ksi)	24.553	22.589	24.553	24.553	24.553	24.553	24.553
SL12S (ksi)	8.936	8.222	8.936	8.936	8.936	8.936	8.936

NO.	STATIC LOAD	CYCLIC LOAD RATIOS. RNXX	RNYY	RNXY	RMXX	RMYY	RMXY	SUM	MARGIN	
9	-0.018	-0.018	0.000	0.000	0.000	0.000	0.000	-0.036	0.964	(UPPER: SIG. 11 (-4.162) /SL.)
	0.280	0.036	0.000	0.000	0.000	0.000	0.000	0.316	0.684	(UPPER: SIG. 22 (3.298) /SL.)
	0.000	0.000	0.000	0.000	0.000	0.000	0.000	0.000	1.000	(UPPER: SIG. 12 (0.000) /SL.)

-0.018	0.000	0.000	0.000	0.000	0.000	0.000	-0.018	0.982	(LOWER: SIG. 11 (-2.122) /SL.)
0.280	0.000	0.000	0.000	0.000	0.000	0.000	0.280	0.720	(LOWER: SIG. 22 (2.950) /SL.)
0.000	0.000	0.000	0.000	0.000	0.000	0.000	0.000	1.000	(LOWER: SIG. 12 (0.000) /SL.)

THE ALLOWABLE STRENGTHS FOR THE PLY NO. 10 ARE

STATIC STRENGTH ALLOWABLES — CYCLIC LOAD STRENGTH ALLOWABLES

	CNXX	CNYY	CNXY	CMXX	CMYY	CMXY
(CYCLES)	100000000.	1.	1.	1.	1.	1.
(BETA L)	0.010	0.010	0.010	0.010	0.010	0.010
SL11T (ksi)	192.500	177.100	192.500	192.500	192.500	192.500	192.500
SL11C (ksi)	120.387	110.756	120.387	120.387	120.387	120.387	120.387
SL22T (ksi)	10.523	9.681	10.523	10.523	10.523	10.523	10.523
SL22C (ksi)	24.553	22.589	24.553	24.553	24.553	24.553	24.553
SL12S (ksi)	8.936	8.222	8.936	8.936	8.936	8.936	8.936

NO. STATIC LOAD — CYCLIC LOAD RATIOS.

		RNXX	RNYY	RNXY	RMXX	RMYY	RMXY	SUM	MARGIN	
10	-0.009	0.013	0.000	0.000	0.000	0.000	0.000	0.005	0.995	(UPPER: SIG. 11 (1.307) /SL.)
	0.276	0.017	0.000	0.000	0.000	0.000	0.000	0.293	0.707	(UPPER: SIG. 22 (3.068) /SL.)
	0.006	0.027	0.000	0.000	0.000	0.000	0.000	0.033	0.967	(UPPER: SIG. 12 (0.276) /SL.)
	-0.009	0.000	0.000	0.000	0.000	0.000	0.000	-0.009	0.991	(LOWER: SIG. 11 (-1.029) /SL.)
	0.276	0.000	0.000	0.000	0.000	0.000	0.000	0.276	0.724	(LOWER: SIG. 22 (2.904) /SL.)
	0.006	0.000	0.000	0.000	0.000	0.000	0.000	0.006	0.994	(LOWER: SIG. 12 (0.055) /SL.)

THE ALLOWABLE STRENGTHS FOR THE PLY NO. 11 ARE

STATIC STRENGTH ALLOWABLES — CYCLIC LOAD STRENGTH ALLOWABLES

	CNXX	CNYY	CNXY	CMXX	CMYY	CMXY
(CYCLES)	100000000.	1.	1.	1.	1.	1.
(BETA L)	0.010	0.010	0.010	0.010	0.010	0.010
SL11T (ksi)	192.500	177.100	192.500	192.500	192.500	192.500	192.500
SL11C (ksi)	120.387	110.756	120.387	120.387	120.387	120.387	120.387
SL22T (ksi)	10.523	9.681	10.523	10.523	10.523	10.523	10.523
SL22C (ksi)	24.553	22.589	24.553	24.553	24.553	24.553	24.553
SL12S (ksi)	8.936	8.222	8.936	8.936	8.936	8.936	8.936

NO. STATIC LOAD — CYCLIC LOAD RATIOS.

		RNXX	RNYY	RNXY	RMXX	RMYY	RMXY	SUM	MARGIN	
11	-0.009	0.013	0.000	0.000	0.000	0.000	0.000	0.005	0.995	(UPPER: SIG. 11 (1.307) /SL.)
	0.276	0.017	0.000	0.000	0.000	0.000	0.000	0.293	0.707	(UPPER: SIG. 22 (3.068) /SL.)
	-0.006	-0.027	0.000	0.000	0.000	0.000	0.000	-0.033	0.967	(UPPER: SIG. 12 (-0.276) /SL.)
	-0.009	0.000	0.000	0.000	0.000	0.000	0.000	-0.009	0.991	(LOWER: SIG. 11 (-1.029) /SL.)
	0.276	0.000	0.000	0.000	0.000	0.000	0.000	0.276	0.724	(LOWER: SIG. 22 (2.904) /SL.)
	-0.006	0.000	0.000	0.000	0.000	0.000	0.000	-0.006	0.994	(LOWER: SIG. 12 (-0.055) /SL.)

THE ALLOWABLE STRENGTHS FOR THE PLY NO. 12 ARE

STATIC STRENGTH ALLOWABLES — CYCLIC LOAD STRENGTH ALLOWABLES

	CNXX	CNYY	CNXY	CMXX	CMYY	CMXY
(CYCLES)	100000000.	1.	1.	1.	1.	1.
(BETA L)	0.010	0.010	0.010	0.010	0.010	0.010
SL11T (ksi)	192.500	177.100	192.500	192.500	192.500	192.500	192.500
SL11C (ksi)	120.387	110.756	120.387	120.387	120.387	120.387	120.387
SL22T (ksi)	10.523	9.681	10.523	10.523	10.523	10.523	10.523
SL22C (ksi)	24.553	22.589	24.553	24.553	24.553	24.553	24.553
SL12S (ksi)	8.936	8.222	8.936	8.936	8.936	8.936	8.936

NO. STATIC LOAD — CYCLIC LOAD RATIOS.

		RNXX	RNYY	RNXY	RMXX	RMYY	RMXY	SUM	MARGIN	
12	0.000	0.038	0.000	0.000	0.000	0.000	0.000	0.038	0.962	(UPPER: SIG. 11 (6.776) /SL.)
	0.272	-0.001	0.000	0.000	0.000	0.000	0.000	0.271	0.729	(UPPER: SIG. 22 (2.839) /SL.)
	0.000	0.000	0.000	0.000	0.000	0.000	0.000	0.000	1.000	(UPPER: SIG. 12 (0.000) /SL.)
	0.000	0.000	0.000	0.000	0.000	0.000	0.000	0.000	1.000	(LOWER: SIG. 11 (0.065) /SL.)
	0.272	0.000	0.000	0.000	0.000	0.000	0.000	0.272	0.728	(LOWER: SIG. 22 (2.858) /SL.)
	0.000	0.000	0.000	0.000	0.000	0.000	0.000	0.000	1.000	(LOWER: SIG. 12 (0.000) /SL.)

THE ALLOWABLE STRENGTHS FOR THE PLY NO. 13 ARE

STATIC STRENGTH ALLOWABLES — CYCLIC LOAD STRENGTH ALLOWABLES

	CNXX	CNYY	CNXY	CMXX	CMYY	CMXY
(CYCLES)	100000000.	1.	1.	1.	1.	1.
(BETA L)	0.010	0.010	0.010	0.010	0.010	0.010
SL11T (ksi)	192.500	177.100	192.500	192.500	192.500	192.500	192.500
SL11C (ksi)	120.387	110.756	120.387	120.387	120.387	120.387	120.387
SL22T (ksi)	10.523	9.681	10.523	10.523	10.523	10.523	10.523
SL22C (ksi)	24.553	22.589	24.553	24.553	24.553	24.553	24.553
SL12S (ksi)	8.936	8.222	8.936	8.936	8.936	8.936	8.936

NO. STATIC LOAD — CYCLIC LOAD RATIOS.

		RNXX	RNYY	RNXY	RMXX	RMYY	RMXY	SUM	MARGIN	
13	-0.018	-0.018	0.000	0.000	0.000	0.000	0.000	-0.036	0.964	(UPPER: SIG. 11 (-4.162) /SL.)
	0.280	0.036	0.000	0.000	0.000	0.000	0.000	0.316	0.684	(UPPER: SIG. 22 (3.298) /SL.)
	0.000	0.000	0.000	0.000	0.000	0.000	0.000	0.000	1.000	(UPPER: SIG. 12 (0.000) /SL.)
	-0.018	0.000	0.000	0.000	0.000	0.000	0.000	-0.018	0.982	(LOWER: SIG. 11 (-2.122) /SL.)
	0.280	0.000	0.000	0.000	0.000	0.000	0.000	0.280	0.720	(LOWER: SIG. 22 (2.950) /SL.)
	0.000	0.000	0.000	0.000	0.000	0.000	0.000	0.000	1.000	(LOWER: SIG. 12 (0.000) /SL.)

THE ALLOWABLE STRENGTHS FOR THE PLY NO. 14 ARE

STATIC STRENGTH ALLOWABLES — CYCLIC LOAD STRENGTH ALLOWABLES

	CNXX	CNYY	CNXY	CMXX	CMYY	CMXY
(CYCLES)	100000000.	1.	1.	1.	1.	1.
(BETA L)	0.010	0.010	0.010	0.010	0.010	0.010
SL11T (ksi)	192.500	177.100	192.500	192.500	192.500	192.500	192.500

SL11C (ksi)	120.387	110.756	120.387	120.387	120.387	120.387	120.387
SL22T (ksi)	10.523	9.681	10.523	10.523	10.523	10.523	10.523
SL22C (ksi)	24.553	22.589	24.553	24.553	24.553	24.553	24.553
SL12S (ksi)	8.936	8.222	8.936	8.936	8.936	8.936	8.936

NO.	STATIC LOAD	CYCLIC LOAD RATIOS. RNXX	RNYY	RNXY	RMXX	RMYY	RMXY	SUM	MARGIN	
14	-0.009	0.013	0.000	0.000	0.000	0.000	0.000	0.005	0.995	(UPPER: SIG. 11 (1.307) /SL.)
	0.276	0.017	0.000	0.000	0.000	0.000	0.000	0.293	0.707	(UPPER: SIG. 22 (3.068) /SL.)
	0.006	0.027	0.000	0.000	0.000	0.000	0.000	0.033	0.967	(UPPER: SIG. 12 (0.276) /SL.)
	-0.009	0.000	0.000	0.000	0.000	0.000	0.000	-0.009	0.991	(LOWER: SIG. 11 (-1.029) /SL.)
	0.276	0.000	0.000	0.000	0.000	0.000	0.000	0.276	0.724	(LOWER: SIG. 22 (2.904) /SL.)
	0.006	0.000	0.000	0.000	0.000	0.000	0.000	0.006	0.994	(LOWER: SIG. 12 (0.055) /SL.)

THE ALLOWABLE STRENGTHS FOR THE PLY NO. 15 ARE

STATIC STRENGTH ALLOWABLES — CYCLIC LOAD STRENGTH ALLOWABLES

	CNXX	CNYY	CNXY	CMXX	CMYY	CMXY
(CYCLES)	100000000.	1.	1.	1.	1.	1.
(BETA L)	0.010	0.010	0.010	0.010	0.010	0.010
SL11T (ksi)	192.500	177.100	192.500	192.500	192.500	192.500	192.500
SL11C (ksi)	120.387	110.756	120.387	120.387	120.387	120.387	120.387
SL22T (ksi)	10.523	9.681	10.523	10.523	10.523	10.523	10.523
SL22C (ksi)	24.553	22.589	24.553	24.553	24.553	24.553	24.553
SL12S (ksi)	8.936	8.222	8.936	8.936	8.936	8.936	8.936

NO.	STATIC LOAD	CYCLIC LOAD RATIOS. RNXX	RNYY	RNXY	RMXX	RMYY	RMXY	SUM	MARGIN	
15	-0.009	0.013	0.000	0.000	0.000	0.000	0.000	0.005	0.995	(UPPER: SIG. 11 (1.307) /SL.)
	0.276	0.017	0.000	0.000	0.000	0.000	0.000	0.293	0.707	(UPPER: SIG. 22 (3.068) /SL.)
	-0.006	-0.027	0.000	0.000	0.000	0.000	0.000	-0.033	0.967	(UPPER: SIG. 12 (-0.276) /SL.)
	-0.009	0.000	0.000	0.000	0.000	0.000	0.000	-0.009	0.991	(LOWER: SIG. 11 (-1.029) /SL.)
	0.276	0.000	0.000	0.000	0.000	0.000	0.000	0.276	0.724	(LOWER: SIG. 22 (2.904) /SL.)
	-0.006	0.000	0.000	0.000	0.000	0.000	0.000	-0.006	0.994	(LOWER: SIG. 12 (-0.055) /SL.)

THE ALLOWABLE STRENGTHS FOR THE PLY NO. 16 ARE

STATIC STRENGTH ALLOWABLES — CYCLIC LOAD STRENGTH ALLOWABLES

	CNXX	CNYY	CNXY	CMXX	CMYY	CMXY
(CYCLES)	100000000.	1.	1.	1.	1.	1.
(BETA L)	0.010	0.010	0.010	0.010	0.010	0.010
SL11T (ksi)	192.500	177.100	192.500	192.500	192.500	192.500	192.500
SL11C (ksi)	120.387	110.756	120.387	120.387	120.387	120.387	120.387
SL22T (ksi)	10.523	9.681	10.523	10.523	10.523	10.523	10.523
SL22C (ksi)	24.553	22.589	24.553	24.553	24.553	24.553	24.553
SL12S (ksi)	8.936	8.222	8.936	8.936	8.936	8.936	8.936

NO. STATIC LOAD CYCLIC LOAD RATIOS.

		RNXX	RNYY	RNXY	RMXX	RMYY	RMXY	SUM	MARGIN	
16	0.000	0.038	0.000	0.000	0.000	0.000	0.000	0.038	0.962	(UPPER: SIG. 11 (6.776) /SL.)
	0.272	-0.001	0.000	0.000	0.000	0.000	0.000	0.271	0.729	(UPPER: SIG. 22 (2.839) /SL.)
	0.000	0.000	0.000	0.000	0.000	0.000	0.000	0.000	1.000	(UPPER: SIG. 12 (0.000) /SL.)
	0.000	0.000	0.000	0.000	0.000	0.000	0.000	0.000	1.000	(LOWER: SIG. 11 (0.065) /SL.)
	0.272	0.000	0.000	0.000	0.000	0.000	0.000	0.272	0.728	(LOWER: SIG. 22 (2.858) /SL.)
	0.000	0.000	0.000	0.000	0.000	0.000	0.000	0.000	1.000	(LOWER: SIG. 12 (0.000) /SL.)

Output Option 23 (DURASUM)

D U R A B I L I T Y A N A L Y S I S : PLY BY PLY S U M M A R Y

PLY	ANGLE	MATERIAL SYSTEM		M11	U/L	M22	U/L	M12	U/L
1	0	T300/IMHS	/	0.962	U	0.728	L	1.000	U
2	45	T300/IMHS	/	0.991	L	0.707	U	0.967	U
3	-45	T300/IMHS	/	0.991	L	0.707	U	0.967	U
4	90	T300/IMHS	/	0.964	U	0.684	U	1.000	U
5	0	T300/IMHS	/	0.962	U	0.728	L	1.000	U
6	45	T300/IMHS	/	0.991	L	0.707	U	0.967	U
7	-45	T300/IMHS	/	0.991	L	0.707	U	0.967	U
8	90	T300/IMHS	/	0.964	U	0.684	U	1.000	U
9	90	T300/IMHS	/	0.964	U	0.684	U	1.000	U
10	-45	T300/IMHS	/	0.991	L	0.707	U	0.967	U
11	45	T300/IMHS	/	0.991	L	0.707	U	0.967	U
12	0	T300/IMHS	/	0.962	U	0.728	L	1.000	U
13	90	T300/IMHS	/	0.964	U	0.684	U	1.000	U
14	-45	T300/IMHS	/	0.991	L	0.707	U	0.967	U
15	45	T300/IMHS	/	0.991	L	0.707	U	0.967	U
16	0	T300/IMHS	/	0.962	U	0.728	L	1.000	U

Note: M11,M22 and M12 are safety margins
M11 = 1 - R11
M22 = 1 - R22
M12 = 1 - R12 where R11,R22 and R12 are
R11 = SIGMA 11 / (SL11T or SL11C)
R22 = SIGMA 22 / (SL22T or SL22C)
R12 = SIGMA 12 / SL12S
U/L = U For CYCLIC Load upper limit
L For CYCLIC Load lower limit

Appendix D
Micromechanics Equations

Symbols

C	heat capacity
D	moisture diffusivity
d	diameter
E	Young's modulus (normal)
G	shear modulus
K	thermal conductivity
k	volume fraction
M	moisture
S	strength
T	temperature
ΔT	temperature difference
α	coefficient of thermal expansion
β	coefficient of moisture expansion
ν	Poisson's ratio
ρ	density
σ	stress

Subscripts:

C	compressive
F	flexural
f	fiber
H	hybrid composite system
ℓ	ply or slice (subply)
m	matrix
P	primary composite system
S	secondary composite system or shear strength
T	tensile
v	voids
1	material axis, along the fiber
2,3	material axis, transverse to the fiber

Micromechanics Equations for Polymer Composites

I. Mechanical properties (from subroutines FIBMT, HTM and COMPP of ICAN):

Note: Correction for voids:
If the void volume ratio is k_v, then the apparent f.v.r and m.v.r must be updated to obtain the actual f.v.r and m.v.r, respectively, as defined below where the barred variables are the actual values:

$$\bar{k}_f = (1 - k_v)\ k_f$$

and

$$\bar{k}_m = (1 - k_v) k_m$$

Note that in the following equations the 'bars' are omitted.

Density:

$$\rho_{\ell 11} = k_f \rho_f + k_m \rho_m$$

Moduli:

$$E_{\ell 11} = k_f E_f + k_m E_m$$

$$E_{\ell 22} = \frac{E_m}{1 - \sqrt{k_f}\left\{1 - \dfrac{E_m}{E_{f22}}\right\}}$$

$$E_{\ell 33} = E_{\ell 22}$$

$$G_{\ell 12} = \frac{G_m}{1 - \sqrt{k_f}\left\{1 - \dfrac{G_m}{G_{f12}}\right\}}$$

$$G_{\ell 23} = \frac{G_m}{1 - k_f\left\{1 - \dfrac{G_m}{G_{f23}}\right\}}$$

$$G_{\ell 13} = G_{\ell 12}$$

Poisson's ratios:

$$\nu_{\ell 12} = \nu_m + k_f \{\nu_{f12} - \nu_m\}$$

$$\nu_{\ell 13} = \nu_{\ell 12}$$

$$\nu_{\ell 23} = k_f \nu_{f23} + k_m \left(2\nu_m - \frac{E_{\ell 22}}{E_{\ell 11}} \nu_{\ell 12}\right)$$

II. Thermal Properties:

Thermal expansion coefficients:

$$\alpha_{\ell 11} = \frac{\{\alpha_{f11} k_f E_{f11} + \alpha_m k_m E_m\}}{E_{\ell 11}}$$

$$\alpha_{\ell 22} = \alpha_{f22} \sqrt{k_f} + (1 - \sqrt{k_f}) \left(1 + \frac{k_f \nu_m E_{f11}}{E_{\ell 11}}\right) \alpha_m$$

$$\alpha_{\ell 33} = \alpha_{\ell 22}$$

Thermal conductivities:

Modify the conductivity of the matrix if there are voids.

$$K_m = (1 - \sqrt{k_v})K_m + \frac{\sqrt{k_v}\, K_m}{1 - \sqrt{k_f}\left(1 - \dfrac{K_m}{K_v}\right)}$$

$$K_{\ell 11} = k_f K_f + k_m K_m$$

$$K_{\ell 22} = (1 - \sqrt{k_f})K_m + \frac{\sqrt{k_f}\, K_m}{1 - \sqrt{k_f}\left\{1 - \dfrac{K_m}{K_{f22}}\right\}}$$

$$K_{\ell 33} = K_{\ell 22}$$

Thermal capacity:

$$C_\ell = \frac{k_f C_f \rho_f + k_m \rho_m C_m}{\rho_\ell}$$

III. Hygral properties:

Moisture diffusivities:

$$D_{\ell 11} = k_m D_m$$

$$D_{\ell 22} = (1 - \sqrt{k_f})D_m$$

$$D_{\ell 33} = D_{\ell 22}$$

Moisture expansion coefficients:

$$\beta_{\ell 11} = \frac{\beta_m k_m E_m}{E_{\ell 11}}$$

$$\beta_{\ell 22} = \beta_m(1 - \sqrt{k_f})\left(1 + \frac{k_f \nu_m E_{f11}}{E_{\ell 11}}\right)$$

IV. Strengths:

Ply strengths:

Longitudinal tensile strength ($S_{\ell 11T}$):

$$S_{\ell 11T} = S_{f11T}\left(k_f + k_m \frac{E_m}{E_{f11}}\right) \text{ (same in all routines)}$$

or

$$S_{\ell 11T} = k_f S_{f11T} \quad \text{(This is a simplified equation).}$$

Longitudinal compressive strength ($S_{\ell 11C}$):

Fiber crushing mode:

$$S_{FC11C} = S_{f11C}\left(k_f + k_m \frac{E_m}{E_{f11}}\right)$$

or

$$S_{FC11C} = S_{f11C} \cdot k_f$$

Delamination mode:

$$S_{DL11C} = 10\ S_{\ell 12S} + 2.5\ S_{mT}\left[1 - \sqrt{\frac{4k_v}{\pi(1 - k_f)}}\right]$$

Microbuckling mode:

$$S_{FM11C} = \frac{G_m\left[1 - \sqrt{\dfrac{4k_v}{\pi(1 - k_f)}}\right]}{1 - k_f\left(1 - \dfrac{G_m\left[1 - \sqrt{\dfrac{4k_v}{\pi(1 - k_f)}}\right]}{G_{f12}}\right)}$$

$$S_{\ell 11C} = \text{min.}\ (S_{FC11C},\ S_{DL11C},\ S_{FM11C})$$

Transverse tensile strength ($S_{\ell 22T}$):

$$S_{\ell 22T} = \left\{1 - \left(\sqrt{k_f} - k_f\right)\left(1 - \frac{E_m}{E_{f22}}\right)\right\} S_{mT}\left\{1 - \sqrt{\frac{4\ k_v}{\pi(1 - k_f)}}\right\}$$

Transverse compressive strength ($S_{\ell 22C}$):

$$S_{\ell 22C} = \left\{1 - \left(\sqrt{k_f} - k_f\right)\left(1 - \frac{E_m}{E_{f22}}\right)\right\}$$

$$\times\ S_{mC}\left\{1 - \sqrt{\frac{4k_v}{\pi(1 - k_f)}}\right\}$$

In-plane shear strength ($S_{\ell 12S}$):

$$S_{\ell 12S} = \left\{1 - \left(\sqrt{k_f} - k_f\right)\left(1 - \frac{G_m}{G_{f12}}\right)\right\}$$

$$\times\ S_{mS}\left\{1 - \sqrt{\frac{4k_v}{\pi(1 - k_f)}}\right\}$$

Flexural strengths:

Through-the-thickness shear strength ($S_{\ell 23S}$):

$$S_{\ell 23S} = \left\{ \frac{1 - \sqrt{k_f}\left(1 - \dfrac{G_m}{G_{f23}}\right)}{1 - k_f\left(1 - \dfrac{G_m}{G_{f23}}\right)} \right\} S_{mS}$$

Short-beam shear strength ($S_{\ell SB}$):

$$S_{\ell SB}(S_{\ell 13S}) = 1.5\ S_{\ell 12S}$$

Longitudinal and transverse flexural strengths:

Note: The following flexural strengths are based on parabolic stress distribution through beam depth. These strengths are calculated in the subroutine FLEXX of ICAN.

Parabolic solution (default output)

Longitudinal flexural strength ($S_{\ell 11F}$):

$$S_{\ell 11F} = \frac{2.5\ S_{\ell 11T}}{1 + \dfrac{S_{\ell 11T}}{S_{\ell 11C}}}$$

Transverse flexural strength ($S_{\ell 22F}$):

$$S_{\ell 22F} = \frac{2.5\ S_{\ell 22T}}{1 + \dfrac{S_{\ell 22T}}{S_{\ell 22C}}}$$ (This is the equation currently programmed in ICAN).

Micromechanics Equations For Intraply Hybrids

I. Mechanical properties (from subroutine COMPP):

Density:

$$\rho_{\ell H} = (1 - k_H)\rho_{\ell P} + k\rho_{\ell S}$$

Moduli:

$$E_{\ell 11H} = (1 - k_H)E_{\ell 11P} + k_H E_{\ell 11S}$$

$$E_{\ell 22H} = \frac{E_{\ell 22P}}{1 + k_H\left(\dfrac{E_{\ell 22P}}{E_{\ell 22S}} - 1\right)}$$

$$E_{\ell 33H} = (1 - k_H)E_{\ell 33P} + k_H E_{\ell 33S}$$

$$G_{\ell 12H} = \frac{G_{\ell 12P}}{1 + k_H\left(\frac{G_{\ell 22P}}{G_{\ell 22S}} - 1\right)}$$

$$G_{\ell 23H} = \frac{G_{\ell 23P}}{1 + k_H\left(\frac{G_{\ell 23P}}{G_{\ell 23S}} - 1\right)}$$

$$G_{\ell 13H} = (1 - k_H)G_{\ell 13P} + k_H G_{\ell 13S}$$

Poisson's Ratios:

$$\nu_{\ell 12H} = (1 - k_H)\ \nu_{\ell 12P} + k_H \nu_{\ell 12S}$$

$$\nu_{\ell 32H} = (1 - k_H)\ \nu_{\ell 32P} + k_H \nu_{\ell 32S}$$

$$\nu_{\ell 23H} = \nu_{\ell 32H}\frac{E_{\ell 22H}}{E_{\ell 33H}}$$

$$\nu_{\ell 13H} = \nu_{\ell 13P} + k_H \frac{\nu_{\ell 13P} - \nu_{\ell 13S}}{\left[(1 - k_H)\frac{E_{\ell 33P}}{E_{\ell 33S}} - k_H\right]}$$

***II. Thermal properties*:**

$$\alpha_{\ell 11H} = \frac{\left[\alpha_{\ell 11P} + k_H\left(\alpha_{\ell 11S}\frac{E_{\ell 11S}}{E_{\ell 11P}} - \alpha_{\ell 11P}\right)\right]}{\left[1 + k_H\left(\frac{E_{\ell 11S}}{E_{\ell 11P}} - 1\right)\right]}$$

$$\alpha_{\ell 22H} = (1 - k_H)\left[\alpha_{\ell 22P}\left(1 + \nu_{\ell 23P}\right) + \nu_{\ell 12P}\alpha_{\ell 11P}\right] + k_H\left[\alpha_{\ell 22S}\left(1 + \nu_{\ell 23S}\right) + \nu_{\ell 12S}\alpha_{\ell 11S}\right] - \nu_{\ell 12H}\alpha_{\ell 11H} - \nu_{\ell 23H}\alpha_{\ell 33H}$$

$$\alpha_{\ell 33H} = \frac{1}{E_{\ell 33H}}\left[-\nu_{\ell 13H}E_{\ell 33H}\alpha_{\ell 11H} + (1 - k_H)E_{\ell 33P}\left(\alpha_{\ell 22P} + \nu_{\ell 13P}\alpha_{\ell 11P}\right) + k_H E_{\ell 33S}\left(\alpha_{\ell 22S} + \nu_{\ell 13S}\alpha_{\ell 11S}\right)\right]$$

Thermal conductivities:

$$K_{\ell 11H} = (1 - k_H)K_{\ell 11P} + k_H K_{\ell 11S}$$

$$K_{\ell 22H} = \frac{K_{\ell 22P}}{\left[1 - k_H\left(1 - \frac{K_{\ell 22S}}{K_{\ell 22P}}\right)\right]}$$

$$K_{\ell 33H} = (1 - k_H)K_{\ell 33P} + k_H K_{\ell 33S}$$

***III. Hygral properties*:**

Moisture diffusivities:

$$D_{\ell 11H} = (1 - k_H)k_{mP}D_{mP} + k_H k_{mS}D_{mS}$$

$$D_{\ell 22H} = (1 - k_H)(1 - \sqrt{k_{fP}})D_{mP} + k_H(1 - \sqrt{k_{fS}})D_{mS}$$

$$D_{\ell 33H} = D_{\ell 22H}$$

Moisture expansion coefficients:

$$\beta_{\ell 11H} = \frac{1}{E_{\ell 11H}}\left|(1 - k_H)k_{mP}\beta_{mP}E_{mP} + k_H k_{mS}\beta_{mS}E_{mS}\right|$$

$$\beta_{\ell 33H} = \frac{1}{E_{\ell 33H}}\left\{\left|\beta_{\ell 33P} + (\nu_{\ell 13P} - \nu_{\ell 13H})(\beta_{\ell 11P} - \beta_{\ell 11H})\right| E_{\ell 33P}k_P + \left|\beta_{\ell 33S} + (\nu_{\ell 13S} - \nu_{\ell 13H})(\beta_{\ell 11S} - \beta_{\ell 11H})\right| E_{\ell 33S}k_S\right\}$$

$$\beta_{\ell 22H} = k_P\left|\beta_{\ell 22P} + (\nu_{\ell 12P} - \nu_{H12})(\beta_{\ell 11P} - \beta_{\ell 11H}) + (\nu_{\ell 23P} - \nu_{H23})(\beta_{\ell 33P} - \beta_{\ell 33H})\right| + k_P\left|\beta_{\ell 22S} + (\nu_{\ell 12S} - \nu_{H12})(\beta_{\ell 11S} - \beta_{\ell 11H}) + (\nu_{\ell 23S} - \nu_{H23})(\beta_{\ell 33S} - \beta_{\ell 33H})\right|$$

where k_P and k_S are the primary and the secondary composite volume ratios, respectively, and are given by

$$k_P = (1 - k_H) \text{ and } k_S = k_H$$

***IV. Strengths*:**

In-plane strengths:

$$S_{H11T} = k_P S_{\ell 11TP} + k_S S_{\ell 11TS}$$

$$S_{H11C} = k_P S_{\ell 11CP} + k_S S_{\ell 11CS}$$

$$S_{H22T} = \min.\ (S_{\ell 22TP},\ S_{\ell 22TS})$$

$$S_{H22C} = \min.\ (S_{\ell 22CP},\ S_{\ell 22CS})$$

$$S_{H12S} = \min.\ (S_{\ell 12SP},\ S_{\ell 12SS})$$

Flexural strengths:

$$S_{H23S} = \text{min.}\ (S_{\ell 23SP},\ S_{\ell 23SS})$$

$$S_{H13S} = \text{min.}\left[S_{\ell 13SP}\left(k_P + k_S \frac{G_{\ell 13S}}{G_{\ell 13P}}\right),\ S_{\ell 13SS}\left(k_S + k_P \frac{G_{\ell 13P}}{G_{\ell 13S}}\right)\right]$$

$$S_{H11F} = \text{min.}\left[S_{\ell 11FP}\left(k_P + k_S \frac{E_{\ell 11S}}{E_{\ell 11P}}\right),\ S_{\ell 11FS}\left(k_S + k_P \frac{E_{\ell 11P}}{E_{\ell 11S}}\right)\right]$$

$$S_{H22F} = \text{min.}\ (S_{\ell 22FP},\ S_{\ell 22FS})$$

Equations for Microstresses

***Primary composite system*:**

The following are a few intermediate ply quantities that are needed in the calculation of microstresses:

The transverse modulus E_2 is given by

$$E_{22} = (1 - \sqrt{k_f})\ E_m + \sqrt{k_f}\ \frac{E_m}{1 - \sqrt{k_f}\left(1 - \dfrac{E_m}{E_{f22}}\right)}$$

The transverse shear modulus G_{12} is given by

$$G_{12} = (1 - \sqrt{k_f})G_m + \sqrt{k_f}\ \frac{G_m}{1 - \sqrt{k_f}\left(1 - \dfrac{G_m}{G_{f12}}\right)}$$

The transverse shear modulus G_{23} is given by

$$G_{23} = \frac{G_m}{1 - \sqrt{k_f}\left(1 - \dfrac{G_m}{G_{f23}}\right)}$$

Microstresses due to mechanical loads:

Ply microstresses due to a longitudinal stress $\sigma_{\ell 11}$ are given by

$$\sigma_{m11} = \frac{E_m}{E_{\ell 11}}\ \sigma_{\ell 11}$$

$$\sigma_{f11} = \frac{E_f}{E_{\ell 11}}\ \sigma_{\ell 11}$$

$$\sigma_{m22A} = (\nu_m - \nu_{\ell 12})\ \sigma_{m11}$$

$$\sigma_{m22B} = -\frac{(1 - \sqrt{k_f})}{\sqrt{k_f}} \times \sigma_{m22A}$$

$$\sigma_{f22} = \sigma_{m22B}$$

$$\sigma_{m33A} = \sigma_{m22A}$$

$$\sigma_{m33B} = \sigma_{m22B}$$

$$\sigma_{f33} = \sigma_{f22}$$

Ply microstresses due to a transverse stress σ_{l22} are given by

$$\sigma_{m11} = (\nu_m - \nu_{\ell 12}) \frac{E_m}{E_{\ell 11}} \sigma_{\ell 22}$$

$$\sigma_{f11} = (\nu_{f12} - \nu_{\ell 12}) \frac{E_{f11}}{E_{\ell 11}} \sigma_{\ell 22}$$

$$\sigma_{m22A} = \frac{E_m}{E_{22}} \sigma_{\ell 22}$$

$$\sigma_{m22B} = \frac{E_{\ell 22}}{E_{22}} \sigma_{\ell 22}$$

$$\sigma_{f22} = \sigma_{m22B}$$

$$\sigma_{m33A} = (\nu_m - \nu_{\ell 23}) \frac{E_m}{E_{\ell 22}} \sigma_{\ell 22}$$

$$\sigma_{m33B} = -\frac{(1 - \sqrt{k_f})}{\sqrt{k_f}} \sigma_{m33A}$$

$$\sigma_{f33} = \sigma_{m33B}$$

Ply microstresses due to in-plane shear stress σ_{l12} are given by

$$\sigma_{m12A} = \frac{G_m}{G_{12}} \sigma_{\ell 12}$$

$$\sigma_{m12B} = \frac{G_{l12}}{G_{12}} \sigma_{\ell 12}$$

$$\sigma_{f12} = \sigma_{m\ell 2B}$$

Ply microstresses due to in-plane shear stress σ_{l13} are given by

$$\sigma_{m13A} = \frac{G_m}{G_{12}} \sigma_{\ell 13}$$

$$\sigma_{m13B} = \frac{G_{\ell 12}}{G_{12}} \sigma_{\ell 13}$$

$$\sigma_{f13} = \sigma_{m13B}$$

Ply microstresses due to in-plane shear stress $\sigma_{\ell 23}$ are given by

$$\sigma_{m23A} = \frac{G_m}{G_{\ell 23}} \sigma_{\ell 23}$$

$$\sigma_{m23B} = \frac{G_{23}}{G_{\ell 23}} \sigma_{\ell 23}$$

$$\sigma_{f23} = \sigma_{m23B}$$

Microstresses due to thermal loads:

Ply microstresses due to a temperature gradient ΔT_l are given by

$$\sigma_{m11} = (\alpha_{\ell 11} - \alpha_m)\ \Delta T_\ell E_m$$

$$\sigma_{f11} = (\alpha_{\ell 11} - \alpha_{f11})\ \Delta T_\ell E_{f11}$$

$$\sigma_{m22A} = (\alpha_{\ell 22} - \alpha_m)\ \Delta T_\ell E_m$$

$$\sigma_{m22B} = -\frac{(1 - \sqrt{k_f})}{\sqrt{k_f}} \sigma_{m22A}$$

$$\sigma_{f22} = \sigma_{22B}$$

$$\sigma_{m33A} = \sigma_{22A}$$

$$\sigma_{m33B} = \sigma_{22B}$$

$$\sigma_{f33} = \sigma_{22B}$$

Microstresses due to moisture loads:

Ply microstresses due to a moisture M_1 are given by

$$\sigma_{m11} = (\beta_{\ell 11} - \beta_m)\ M_\ell E_m$$

$$\sigma_{f11} = (\beta_{\ell 11} - \beta_{f11})\ M_\ell E_{f11}$$

$$\sigma_{m22A} = (\beta_{\ell 22} - \beta_m) M_\ell E_m$$

$$\sigma_{m22B} = -\frac{(1 - \sqrt{k_f})}{\sqrt{k_f}} \sigma_{m22A}$$

$$\sigma_{f22} = \sigma_{22B}$$

$$\sigma_{m33A} = \sigma_{22A}$$

$$\sigma_{m33B} = \sigma_{22B}$$

$$\sigma_{f33} = \sigma_{22B}$$

***Secondary composite system*:**

The microstress equations for the secondary composite system are similar to those for the primary composite system. The constituent and ply properties for the primary composite system should be replaced by the corresponding quantities for the secondary composite system.

References

1. Murthy, P.L.N.; and Chamis, C.C.: Integrated Composite Analyzer (ICAN): Users and Programmers Manual. NASA TP-2515, 1986.
2. Chamis, C.C.; and Ginty, C.A.: Fiber Composite Structural Durability and Damage Tolerance: Simplified Predictive Methods. NASA TM-100179, 1987.
3. Jones, R.M.: Mechanics of Composite Materials. Hemisphere, 1975.
4. MSC/NASTRAN: Users Manual. Version 64, Vols. I and II. The MacNeal Schwendler Corp., Los Angeles, CA, 1982.
5. Chamis, C.C.: Simplified Composite Micromechanics for Predicting Microstresses. NASA TM-87295, 1986.
6. Lekhnitskii, S.G. (P. Fern, transl.): Theory of Elasticity of an Anisotropic Elastic Body. Holden-Day, San Francisco, CA, 1963.
7. Singhal, S.N., et al.: Computational Simulation of Acoustic Fatigue for Hot Composite Structures. NASA TM-104379, 1991.
8. Ginty, C.A.; and Chamis, C.C.: ICAN: A Versatile Code for Predicting Composite Properties. NASA TM-87334, 1986.

REPORT DOCUMENTATION PAGE

Form Approved
OMB No. 0704-0188

Public reporting burden for this collection of information is estimated to average 1 hour per response, including the time for reviewing instructions, searching existing data sources, gathering and maintaining the data needed, and completing and reviewing the collection of information. Send comments regarding this burden estimate or any other aspect of this collection of information, including suggestions for reducing this burden, to Washington Headquarters Services, Directorate for Information Operations and Reports, 1215 Jefferson Davis Highway, Suite 1204, Arlington, VA 22202-4302, and to the Office of Management and Budget, Paperwork Reduction Project (0704-0188), Washington, DC 20503.

1. AGENCY USE ONLY (*Leave blank*)

2. REPORT DATE
January 1993

3. REPORT TYPE AND DATES COVERED
Technical Paper

4. TITLE AND SUBTITLE
Second Generation Integrated Composite Analyzer (ICAN) Computer Code

5. FUNDING NUMBERS
WU-505-63-5B

6. AUTHOR(S)
Pappu L.N. Murthy, Carol A. Ginty, and Jose G. Sanfeliz

7. PERFORMING ORGANIZATION NAME(S) AND ADDRESS(ES)
National Aeronautics and Space Administration
Lewis Research Center
Cleveland, Ohio 44135-3191

8. PERFORMING ORGANIZATION REPORT NUMBER
E-6831

9. SPONSORING/MONITORING AGENCY NAMES(S) AND ADDRESS(ES)
National Aeronautics and Space Administration
Washington, D.C. 20546-0001

10. SPONSORING/MONITORING AGENCY REPORT NUMBER
NASA TP-3290

11. SUPPLEMENTARY NOTES
Responsible person, Pappu L.N. Murthy, (216) 433-3332.

12a. DISTRIBUTION/AVAILABILITY STATEMENT
Unclassified - Unlimited
Subject Category 24

12b. DISTRIBUTION CODE

13. ABSTRACT ***(Maximum 200 words)***

This manual updates the original 1986 NASA TP-2515, "Integrated Composite Analyzer (ICAN) Users and Programmers Manual." The various enhancements and newly added features are described to enable the user to prepare the appropriate input data to run this updated version of the ICAN code. For reference, the micromechanics equations are provided in an appendix and should be compared to those in the original manual for modifications. A complete output for a sample case is also provided in a seperate appendix. The input to the code includes constituent material properties, factors reflecting the fabrication process, and laminate configuration. The code performs micromechanics, macromechanics, and laminate analyses, including the hygrothermal response of polymer-matrix-based fiber composites. The output includes the various ply and composite properties, the composite structural response, and the composite stress analysis results with details on failure. The code is written in FORTRAN 77 and can be used efficiently as a self-contained package (or as a module) in complex structural analysis programs. The input-output format has changed considerably from the original version of ICAN and is described extensively through the use of a sample problem.

14. SUBJECT TERMS
Composite mechanics; Hygrothermal; Failure criteria; Environmental effects; Mechanical properties; Thermal properties; Laminate theory; Intraply hybrid; Interply layer; Data bank

15. NUMBER OF PAGES
92

16. PRICE CODE
A05

17. SECURITY CLASSIFICATION OF REPORT
Unclassified

18. SECURITY CLASSIFICATION OF THIS PAGE
Unclassified

19. SECURITY CLASSIFICATION OF ABSTRACT
Unclassified

20. LIMITATION OF ABSTRACT

NSN 7540-01-280-5500

Standard Form 298 (Rev. 2-89)
Prescribed by ANSI Std. Z39-18
298-102

NASA-Langley, 1993