IN-09
157897
p-55

NASA Technical Memorandum 105771

NASA Lewis 8- By 6-Foot Supersonic Wind Tunnel User Manual

Ronald H. Soeder
Lewis Research Center
Cleveland, Ohio

February 1993

(NASA-TM-105771) NASA LEWIS 8- BY 6-FOOT SUPERSONIC WIND TUNNEL USER MANUAL (NASA) 55 p

N93-25080

Unclas

G3/09 0157897

NASA

Trade names or manufacturers' names are used in this report for identification only. This usage does not constitute an official endorsement, either expressed or implied, by the National Aeronautics and Space Administration.

CONTENTS

Page

1.0 INTRODUCTION 1

2.0 DESCRIPTION OF 8- BY 6-FOOT SWT 1
2.1 General 1
2.2 Tunnel Aerodynamic Performance 2
2.3 Test Section Description 2
2.4 Tunnel Components 3
2.5 Control Room 3

3.0 GENERAL SUPPORT SYSTEMS 4
3.1 Air Systems 4
3.1.1 High pressure air 4
3.1.2 Service air 5
3.1.3 Combustion air 5
3.2 Hydraulic System 5
3.3 Gaseous Hydrogen System 5
3.4 Model Cooling 5
3.5 Infrared System 5
3.6 Laser System 6
3.7 Flow Visualization (Laser Sheet) System 7
3.8 Force Balance System 7
3.9 Model Supports 7
3.9.1 Ceiling strut assembly 7
3.9.2 Transonic strut 7
3.9.3 Supersonic strut 8
3.9.4 Jet exit strut 8
3.9.5 Jet exit rig 8
3.9.6 Wall mounting 8
3.10 Photographic System 8
3.11 Schlieren System 9
3.12 Electrical Systems 9
3.13 Model Preparation Building 9
3.14 Shop Equipment 10

4.0 INSTRUMENTATION 11
4.1 Thermocouples 11
4.2 Angle-of-Attack Indicators 11
4.3 Actuators and Position Indicators 12

5.0 DATA ACQUISITION AND PROCESSING 12
5.1 Electronically Scanned Pressure System 12
5.2 Escort D Plus System 12
5.2.1 Real-time displays 13
5.2.2 Data collection 13

PRECEDING PAGE BLANK NOT FILMED

Page

5.3 Dynamic Data Acquisition 13
5.3.1 Facility tape recorders 13
5.3.2 Central analog recorder 14
5.3.3 TRADAR-3 14
5.3.4 Transient data acquisition system 14
5.4 Model Checkout Cart 14

6.0 PRETEST REQUIREMENTS 15
6.1 Pretest Meetings 15
6.1.1 Test objectives 15
6.1.2 Instrumentation 16
6.1.3 Hardware 16
6.1.4 Data requirements 16
6.2 Deliverables 16
6.3 Model and Equipment 16

7.0 RISK ASSESSMENT OF WIND TUNNEL MODEL AND TEST HARDWARE 17
7.1 Model Size 17
7.2 Model Design Criteria 17
7.2.1 Steady-state loads and allowable stresses 17
7.2.2 Supersonic starting loads 17
7.2.3 Model stress analysis 18
7.2.4 Material selection 18
7.2.5 Structural joints 18
7.2.6 Pressure systems 19
7.2.7 Pressure piping 19
7.2.8 Electrical equipment components 20
7.3 Model Fabrication Requirements 20
7.4 Quality Assurance 20

8.0 GENERAL INFORMATION 20
8.1 Support 20
8.1.1 Model buildup 20
8.1.2 User responsibility 21
8.1.3 Operation of government equipment 21
8.1.4 Tunnel safety 21
8.1.5 Support during tests 21
8.2 Operations 21
8.2.1 Normal operating days and shift hours 21
8.2.2 Off-shift coverage 21
8.3 Planning 21
8.3.1 Pre-run safety meeting 21
8.3.2 Test time 21
8.3.3 NASA debriefing 22
8.4 Security 22

APPENDIX A 24

Page

APPENDIX B 25

APPENDIX C 27

APPENDIX D 28

REFERENCES 30

FIGURES 31

NASA LEWIS 8- BY 6-FOOT SUPERSONIC WIND TUNNEL USER MANUAL

Ronald H. Soeder
National Aeronautics and Space Administration
Lewis Research Center
Cleveland, Ohio 44135

ABSTRACT

The 8- by 6-Foot Supersonic Wind Tunnel (SWT) at Lewis Research Center is available for use by qualified researchers. This manual contains tunnel performance maps which show the range of total temperature, total pressure, static pressure, dynamic pressure, altitude, Reynolds number, and mass flow as a function of test section Mach number. These maps are applicable for both the aerodynamic and propulsion cycle. The 8- by 6-Foot Supersonic Wind Tunnel is an atmospheric facility with a test section Mach number range from 0.36 to 2.0. General support systems (air systems, hydraulic system, hydrogen system, infrared system, laser system, laser sheet system, and schlieren system are also described as are instrumentation and data processing and acquisition systems. Pretest meeting formats are outlined. Tunnel user responsibility and personal safety requirements are also stated.

1.0 INTRODUCTION

The 8- by 6-Foot Supersonic Wind Tunnel (SWT), located adjacent to Cleveland Hopkins International Airport at NASA Lewis Research Center in Cleveland, Ohio (fig. 1) is available for use by qualified researchers. This manual describes the facility and details procedures for its use. The Aeropropulsion Facilities and Experiments Division (AFED) manages and operates the facility.

The 8- by 6-Foot SWT attains test section flow in the Mach number range of 0.36 to 2.0. It runs in either an aerodynamic cycle (closed loop) or a propulsion cycle (open loop). The full Mach number range can be achieved in either cycle. The cross section dimensions at the test section entrance are 8 ft high by 6 ft wide. The test section length is 23 ft 6 in. The tunnel altitude varies from sea level to 36,300 ft as the Mach number varies from 0.36 to 2.0.

Contact the facility manager to schedule tests or to inquire into SWT operations (appendix A).

2.0 DESCRIPTION OF 8- BY 6-FOOT SWT

2.1 General

The NASA Lewis Research Center 8- by 6-Foot SWT is located in Cleveland, Ohio. The tunnel's Mach number range is 0.36 to 2.0 and operates throughout the range on either an aerodynamic cycle (closed loop) or propulsion cycle (open loop).

The facility operates on the aerodynamic cycle (closed loop) by drawing air through the dryer and recirculating it around the tunnel loop. A cooler in the return leg removes the heat of compression, which allows continuous tunnel operation. This cycle is used primarily for aerodynamic flow studies where contaminants are not introduced into the air-stream (fig. 2(a)). A 9- by 15-Foot Low Speed Wind Tunnel (LSWT) test section is housed in the return leg of the facility.

In the propulsion cycle the tunnel operates as an open system. It continuously draws air through an inlet door, into the air dryer, and exhausts it into the atmosphere upstream of the cooler (fig. 2(b)). The propulsion cycle is used to test models which generate combustion products. The tunnel operates in this cycle during both subsonic and supersonic runs.

2.2 Tunnel Aerodynamic Performance

Figure 3 shows test section total temperature, total pressure, static pressure, dynamic pressure, altitude, Reynolds number, and mass flow as a function of test section Mach number over the tunnel operating range.

2.3 Test Section Description

The test section is 8 ft high and 6 ft wide with parallel side walls. Its total length is 23 ft 6 in. The tunnel side walls diverge from 6 ft to 6 ft 4 in. over a tunnel length which extends from the test section exit to a plane 2 ft 3 in. downstream of the test section exit (fig. 4). This tunnel side wall divergence compensates for the blockage of the transonic strut. The top and bottom plates are parallel. The side walls and top and bottom plates are made of 1 in. thick stainless steel.

The test section consists of a solid wall supersonic flow region 9 ft 1 in. long (fig. 5) followed by a perforated wall transonic region that is 14 ft 5 in. long (fig. 6). The transonic test section is perforated on four sides with 1-in. diameter holes inclined forward at 60° and arranged in a herringbone pattern. Five different transonic test section configurations are available based on the test section porosity and model position. Plugging the holes in the porous walls varies the test section porosity. The test section configuration depends upon the length of the test section used for model experiments. The transonic test section lengths are 8 ft and 14 ft 5 in.; the 8 ft length is the aft section of the 14 ft 5 in. test section. The five transonic test section configurations are:

14 ft, 5.8 percent porosity

8 ft, 6.2 percent porosity

8 ft, 3.1 percent porosity

8 ft, 6.2 percent porosity modified

8 ft, 3.1 percent porosity modified

The AFED project engineer can discuss test section porosities in detail at one of the pretest meetings. The interaction of the standard tunnel models with the test section perforated walls is discussed in references 1 and 2. Models are installed through an access door in the bottom of the tunnel diffuser downstream of the test section. The opening is 16 ft long and 6 ft wide. There are two 2-ton overhead cranes, in the ceiling of the diffuser section. Models, on special dollies, are lifted into the diffuser section and rolled to the test section for installation. Typical experiments run in the tunnel test section are described in references 3 to 8.

Top and bottom plates of the test section can be removed to install small model supports and auxiliary apparatus (fig. 4). The tunnel insert plates cannot be altered, therefore new inserts are required, at additional cost, if modifications are necessary.

A personnel access door (7 ft high by 2 ft 4 in. wide) is located at the downstream end of the test section (fig. 5).

2.4 Tunnel Components

There are six major components of the NASA Lewis 8- by 6-Foot SWT (fig. 7).

Air dryer.—The air dryer removes moisture from atmospheric air prior to its introduction into the tunnel. It contains 1250 tons of activated alumina in a bed 2 ft thick which has a total area of 23,520 ft^2. The air dryer passes 2200 lb_m/sec of air. Air enters at a dry bulb air temperature of 73 °F, a dew point temperature (at inlet conditions) of 67 °F and a dew point temperature (at outlet conditions) of -20 °F for an operating period of 56 min. To determine air dryer operating periods for conditions other than at the design point, see figure 8 and table IV. See appendix B for a procedure to compute the dryer bed operating time. Reactivation of the activated alumina beds requires 4 hr heating and 2 to 4 hr for cooling.

Compressor.—The tunnel air is driven by a seven-stage axial flow compressor, rated at an air volumetric flow rate of 56,600 ft^3/sec at a pressure ratio of 1.8. It is driven by three wound-rotor motors having a total power capacity of 87,000 hp.

Flexible-wall nozzle.—The flexible-wall nozzle produces supersonic flow through the test section; it consists of two flexible side walls of stainless steel which are 8 ft high, 35 ft 6 in. long and 1 in. thick. The flexible side walls are actuated by hydraulically operated screwjacks. The top and bottom plates are fixed.

Test section.—The test section is 8 ft high, 6 ft wide and 23 ft 6 in. long. It is made of 1 in. thick stainless steel plates. (See section 2.3 for a detailed description.)

Acoustic muffler.—The acoustic muffler is used to quiet the discharge air of the tunnel when it operates on either the aerodynamic or the propulsion cycle.

Cooler.—The cooler is a finned-tube water-type heat exchanger used to cool the air entering the air dryer during the aerodynamic cycle operation. It is designed to cool the air to 85 °F by removing the heat of compression.

2.5 Control Room

The control room is located on the first floor passageway which connects the 8- by 6-Foot SWT office building with the facility (fig. 2). A photograph of the control room used to operate the 8- by 6-Foot SWT and the 9- by 15-Foot LSWT is presented in figure 9. The consoles located at the front of the control room are used by tunnel and model operators. The consoles located in the middle of the control room are reserved for the research engineer (tunnel user) and the AFED project engineer. Each console has the appropriate controls and readouts for the respective operator's use. The tunnel is operated from an interactive color graphics, distributive control system referred to as the Westinghouse Distributed Processing Family (WDPF). The tunnel operator's console has the controls necessary to set tunnel conditions (such as flexible wall position, shock door position, balance chamber pressure and so forth). Model conditions are set from the model operator's console. Monitors located in the control room allow remote viewing of a test section model.

The control room also contains the NASA Lewis data acquisition system, identified as ESCORT D Plus and the electronic scanning pressure system (ESP) available for model instrumentation. The ESCORT D Plus system is interactive (push button) and can collect, process, display, and record data as accumulated during a test. Refer to Data Acquisition and Processing (section 5.1) for further details on the ESCORT and ESP systems.

The control room can be completely secured for classified test programs. This can be discussed with the 8- by 6-Foot SWT facility manager and the AFED project engineer during one of the pretest meetings held at Lewis Research Center.

3.0 GENERAL SUPPORT SYSTEMS

The following table presents pertinent information on facility support systems.

TABLE I.—FACILITY SUPPORT SYSTEMS

System	Weight or volumetric flow rate	Pressure	Volume, ft^3	Temperature, °F
High pressure air	Variable	14.7 psia to 2600 psig	135,000 to 759	
Service air	2.0 lb_m/sec	125 psig		
Combustion air	30 lb_m/sec 30 lb_m/sec 30 lb_m/sec	40 psig 125 psig 450 psig		ambient ambient ambient
Combustion air heater	15 lb_m/sec	450 psig		700 (maximum)
Hydraulic	15 gpm	3000 psig (maximum)		
Gaseous hydrogen	1 lb_m/sec	1200 psig		ambient
Altitude exhaust (16 in. line)	16 lb_m/sec 5.5 lb_m/sec	20 in. Hg[a] 26 in. Hg[a]		

[a]Other vacuum pressures are available. Consult with AFED project engineer.

Sections 3.1 to 3.3 describe several of the support systems noted above in greater detail.

3.1 Air Systems

3.1.1 High pressure air.—A storage facility is available with a capacity of 135,000 ft^3 of standard dry air (for instance 759 ft^3 at 2600 psig) for use at the 8- by 6-Foot SWT. Two other storage facilities are interconnected with it. These are a 216,000 ft^3 system located at the 10- by 10-Foot SWT and a 600,000 ft^3 system located at the 9- by 15-Foot test section (return leg of the 8 by 6). These three facilities together provide 951,000 ft^3 of standard dry air for use at the 8- by 6-Foot SWT. They are charged by a single compressor having a capacity of 1120 ft^3/min of standard air. Total charging time from atmospheric pressure to 2600 psig is approximately 14 hr for the combined systems. The high pressure air flow from the three storage facilities can be regulated (variable run time) for model use. This point can be discussed with the AFED project engineer at one of the pretest meetings.

3.1.2 Service air.—Service air with a capacity of 2.0 lb_m/sec is available at 125 psig.

3.1.3 Combustion air.—A central combustion air system of 40, 125, or 450 psig has a capacity of 30 lb_m/sec. A facility heater with a capacity of 2,700,000 BTU's is available with this system and is capable of heating air to 700 °F. The heater cannot be used for more than 50 hr of continuous service or exceed 500 hr of use in a period of 1 year.

3.2 Hydraulic System

A hydraulic system actuates or positions a model or its components. The system consists of a constant volume pump delivering 15 gpm. The model hydraulic pressure is determined by the requirements of each particular model to be tested and is reset prior to each run. The maximum pressure that can be obtained to operate the model system is 3000 psig.

3.3 Gaseous Hydrogen System

Gaseous hydrogen is delivered to a burning model for propulsion testing at a maximum flowrate of 1.0 lb_m/sec at 1200 psig and ambient temperature. Up to three gaseous hydrogen trailers, each with a capacity of 70,000 standard cubic feet (464.6 ft^3 per trailer at 2200 psig) can be simultaneously connected to the system. A flow measuring station measures the flow in the individual model supply lines. The main supply line (1-1/2 in. schedule-80s stainless steel pipe) is divided into three model supply lines (1-1/2 in., 1-in., and 3/4-in. stainless steel tubing), each having a flow control valve and venturi flow meter. Regulators in the main supply line control pressure upstream of the flow control valves.

A gaseous hydrogen detector system was installed throughout the wind tunnel facility to monitor any gaseous hydrogen accumulations. Thirteen sensors are monitored centrally in the tunnel control room.

A gaseous nitrogen system is used for pressure control, valve actuation, and purging. The gaseous hydrogen piping and model supply lines are purged before and after tunnel test runs. A single gaseous nitrogen trailer supplies the required nitrogen.

3.4 Model Cooling

A temporary water cooling system is available to cool a model or a model component. The tunnel user can discuss project cooling requirements with the AFED project engineer at one of the pretest meetings.

3.5 Infrared System

The infrared system or thermal image management system (TIMS) is composed of a personal computer with keyboard, mouse, system monitor for display of menus, and an input device (either an imager with view finder or a VCR with infrared images previously recorded). TIMS is capable of temperature measurement for various analysis menus.

The single point temperature menu permits the operator to measure the temperature of any point on the image. At startup, the crosspoint is at the center of the image. The cross-point can be moved with a mouse.

The multiple point temperature menu allows the user to select up to 12 cross points for temperature measurement on the image. During this menu selection and with emissivity correction enabled, each cross point can have its own emissivity value.

The multiple temperature menu selection allows the user to measure the mean, minimum, and maximum temperature within a rectangular area of interest. Just as with multiple cross points, a maximum of 12 areas of interest can be defined by the user for one image. When emissivity correction is enabled, each area of interest can have a different emissivity value.

The temperature distribution within any selected rectangular area may be displayed with the histogram feature. The size of the area selected is determined by the user. The temperature range is plotted on the rectangular axis and the relative frequency of occurrence is represented on the vertical axis. The results are normalized to present greater detail.

Additional features of the TIMS include irregular histograms plus isotherm and thermal contours. Infrared system requirements should be specified by the tunnel user during a pretest meeting with the AFED project engineer and the facility electrical engineer.

3.6 Laser System

The 8- by 6-Foot facility has a laser system that has been used for a variety of purposes. One past application was measurement of the velocity field in several planes normal to the centerline of a turboprop counterrotation model. The laser system has also been used to determine blade deflection of turbomachinery rotors such as propellers, propfans, and unducted fans.

A laser-Doppler velocimetry (LDV) system is installed in the balance chamber of the Lewis 8- by 6-Foot SWT. The laser system is a 15-W argon ion four-beam, two-color optics system. The laser system is elevated to the test section level by a structural steel stand mounted to the floor of the balance chamber. The stand is 14 ft high, 3-1/2 ft wide and 9 ft long (fig. 10). The stand isolates the laser system from tunnel vibration. A motor-actuated platform capable of traversing 28 in. along the wind tunnel axis and 36 in. in the vertical axis is fixed to the stand (fig. 11). D.C. motors with encoders position the table to an accuracy of 0.002 in. of a desired location. Two sets of controls allow operation of the platform from the balance chamber or the wind tunnel control room. A detailed discussion of the LDV system is presented in reference 9.

Flow field velocities are measured by determining the fringe-crossing frequency of seed particles embedded in the flow field as they traverse the interference pattern created at the intersection point of two laser beams of like color. The optical system probe volume is ellipsoidal and has a diameter of 0.012 by 0.28 in. long. Photomultiplier tubes convert light scattered from a particle passing through the probe volume into an electrical signal. The frequency of this signal is equivalent to the fringe crossing frequency. High-speed counter processors measure this frequency. The spacing between the fringes of the interference pattern is a known function of the crossing angle formed by two intersecting laser beams and the wavelength of the laser light. The particle velocity component lying in the plane of two laser beams, and perpendicular to the bisector of the two beams, is computed by multiplying the fringe spacing by the frequency determined by the counter processors. The use of an LDV system to measure test section flow field is discussed in reference 10.

3.7 Flow Visualization (Laser Sheet) System

Laser sheet technology in the facility test section exists through the use of a pulsating 15-W copper vapor laser or a continuous 15-W argon ion laser coupled to a fiber optic cable used to deliver the laser beam to the test section. An optic head houses the lenses and is coupled to the fiber optic cable at the test section end. The fiber optic cable and the optic head are not placed inside the tunnel test section because of the hostile environment, rather they are placed inside the balance chamber. To produce a sheet of light from the test section ceiling, the required number of stainless steel ceiling panels are removed and replaced with lucite panels. The fiber optic cable and optic head are then installed above the test section ceiling and a sheet of light is beamed into the test section. A laser sheet can also be produced through the tunnel test section side wall by placing the fiber optic cable and optic head adjacent to the schlieren windows. It is not practical to remove tunnel test section side wall panels because of the test section structural steel bracing members.

The flow field may be recorded and viewed through the use of a high-speed video camera (1000 full frames/sec), a standard video camera (30 full frames/sec) or still photographs (35 or 70 mm). The placement of the cameras can be discussed with the AFED project engineer and the facility electrical engineer at one of the pretest meetings.

3.8 Force Balance System

Provisions can be made to record model force data. All balances and load cells are to be supplied by the tunnel user. The data can be recorded on either a user supplied data system or the facility data system. This point can be discussed with the AFED project engineer at one of the pretest meetings.

3.9 Model Supports

3.9.1 Ceiling strut assembly.—A ceiling strut assembly with a typical model installed is shown in figure 12. This assembly consists of the strut proper to which the model is attached and the anchoring structure and angle-of-attack mechanism which is outside the test section.

Strut thickness may vary up to 3 inches and the chord length up to 5 ft 11 in. The maximum chord is determined by the angle-of-attack requirement.

Angle-of-attack of the model is controlled by an electrical mechanism which rotates the strut around a 2 in. diameter pin located 4 in. above the inside surface of the tunnel top plate. The angle-of-attack range is between -5° to +15°.

The center of rotation of the strut may be positioned along the top of the test section in 4-1/2 in. increments (between 3 ft 11.3 in. and 7 ft 8.3 in.) from the downstream end of the test section. Allowable strut moments are stated in figure 12.

3.9.2 Transonic strut.—Sting mounted models, for transonic operation, are mounted to the strut shown in figure 13. This strut is extended through the tunnel floor when supporting a model and when not in use is retracted below the tunnel floor. The strut centerline is at a fixed location, 4 ft 4-1/2 in. downstream of the test section.

The strut can be rotated in the vertical plane about a pin located 1 ft 4-1/2 in. below the test section floor. The angle-of-attack can be remotely varied from 0° to +15°. The maximum radius of rotation is 6 ft 4-1/2 in. and the minimum radius is determined by interference of the strut socket with the tunnel floor.

A terminal panel is located in the top of the strut for all electrical and pressure connections from the model. This panel is accessible by removing the fairings from the sting socket.

Details of the sting end that mates with the strut and allowable sting loads are shown in figure 13.

3.9.3 Supersonic sting mount strut.—The supersonic strut for sting mounted models is presented in figure 14. The angle-of-attack can be remotely varied from -5° to +20°. The maximum allowable loads at the model-sting joint are listed in the figure. The aft position of the strut is 3 ft 2-3/8 in. from the end of the test section and can be translated forward 5 ft 10 in. in 7-in. increments. The strut blade can be retracted below the floor of the tunnel for storage. Details of the sting end that mates with the strut are shown in figure 14. The length of the sting is determined by the model size.

3.9.4 Jet exit strut.—The 8-1/2 in. jet exit strut is a ceiling mounted unit designed for testing exhaust nozzles requiring high pressure air flow. The strut contains ducts for a primary air flow of 70 lb_m/sec at 1000 psi and a secondary air flow of 2 lb_m/sec at 100 psi.

This strut has a thrust measuring system with a capacity of 5000 lb_f and an alternate thrust/drag measuring system with a capacity of 2000 lb_f. The strut has no angle-of-attack capability.

The strut assembly with a typical nozzle model attached is shown in figure 15. Allowable strut loads are also indicated in this figure.

3.9.5 Jet exit rig.—The jet exit rig consists of a ceiling-mounted strut used to attach the rig to the tunnel ceiling mounting support (fig. 16). The rig is used for testing exhaust nozzles which require high-pressure, hot or cold airflows. When elevated temperature airflows are required a gaseous hydrogen/air combustor is incorporated into the rig to produce hot gases which can attain a maximum temperature of 3500 °F at a stagnation pressure of 100 psia. A schematic of the rig, combustor, and nozzle is presented in figure 17. The rig can also provide a six-component force balance with three through-flow combustion gas supply ports (two independent air lines and one hydrogen fuel supply line). A transition unit (fig. 17) is used to transform the rectangular cross-sectional geometry of the jet exit rig to a standard circular configuration to accommodate standard nozzles. The jet exit rig (with the appropriate transition sections) has also been used to test 2-D and 3-D nozzles. The AFED project engineer is available to discuss various options with the tunnel user at one of the pretest meetings.

3.9.6 Wall mounting.—Models too large or unusual in shape to be mounted on a sting or strut may be mounted to a wall of the test section. An example of a model attached to the tunnel wall is shown in figure 18.

3.10 Photographic System

Photographic and television coverage of test section events may be obtained from several locations. Window assemblies used for side wall coverage are installed in the perforated segment of the test section. A schematic of the window assemblies is presented in figure 19. These windows are used to increase test section illumination for cameras to photograph test section activity. The window assemblies are available

only in the tunnel side wall containing the personnel access door. However, slots exist in the other tunnel side wall where user supplied window assemblies could be installed.

A typical camera and lighting arrangement used in the test section floor is shown in figure 20. The window assembly replaces a floor hatch at the downstream end of the test section. A similar arrangement can be made in the ceiling of the test section.

A model may also be photographed from a location downstream of the test section. A typical camera and light installation is presented in figure 21.

High speed cameras (100 to 4000 frames/sec) are available for use at the above locations. Because of the loss of perforated wall area, window assemblies may adversely affect aerodynamic data.

3.11 Schlieren System

The tunnel is equipped with a schlieren system which may be located at either an upstream set of test section windows in the supersonic flow region of the test section or at a downstream set of windows located in the transonic flow region of the test section (fig. 5). The system is capable of viewing the flow through all possible locations of the 26.5-in. diameter windows whose centers may be positioned about an 8.00-in. radius. The plan view of the system is shown in figure 22.

Schlieren images are viewed using a remote optical system and photographs of the images are taken by an aircraft camera. A total of 250 photographs (35 mm) may be taken without reloading the camera. In addition, a Fastex 16 mm high-speed motion picture camera is capable of taking 100 to 4000 frames/sec of any image shown through the remote optical system.

3.12 Electrical System

At the tunnel test section the following types of electrical power are available:

440 V, 60 cycle, 3 phase, a.c.

208 V, 60 cycle, 3 phase, a.c.

120 V, 60 cycle, 1 phase, a.c.

120 V, 400 cycle, 1 phase, a.c.

28 V, d.c.

3.13 Model Preparation Building

A model preparation building is adjacent to the 8- by 6-Foot facility (fig. 23). This model buildup area contains separate bays to allow the buildup of four 8- by 6-Foot SWT models and two 9- by 15-Foot LSWT models concurrently.

The model preparation area dedicated to 8- by 6-Foot SWT models has two transonic model test stands, one ceiling supported model test stand, and one supersonic model test stand.

Standard services are also available at each model preparation stand. These services include 125 psig service air, a hydraulic system capable of delivering 5 gpm and operating at 2000 psig, a 3-in. line delivering 450 psig air at either ambient temperature or at elevated temperature up to 500 °F, and a 16-in. line capable of delivering altitude exhaust. A vacuum pump station will provide vacuum at each model test stand.

Strut instrumentation available at the different types of test stands is presented in table II.

TABLE II.—REQUIRED STRUT INSTRUMENTATION

Instrumentation type	8 by 6 Transonic	8 by 6 Supersonic	8 by 6 Ceiling
Pressure tubing	512	512	512
Accelerometer	6	10	10
Cables (low noise) heater/motor wires #16	4	8	8
Hydraulic lines 1/2 in.	4	4	4
Pressure tubing 1/4 in.	10	20	10
ESP cables	3	3	3
Thermocouples CuC	24	24	48
Thermocouples CA		24	48
4C/SH, #22 AWG cables	113	113	113

Instrumentation cables between the 8 by 6 control room and the model preparation building are terminated at the interface panel (fig. 23). The instrumentation cables available from 8 by 6 Control Room to 8 by 6 Model Preparation Building are listed below.

1. (5) 27 pair individual shielded cables #22 AWG
2. (25) RG58 COAX cables
3. (4) 37 Conductor #16 AWG
4. (1) 6 fiber; fiber optic cable

The electrical power available at the individual model test stands and at the facility test section are the same (refer to section 3.12).

3.14 8- by 6-Foot SWT Shop

The facility shop contains a collection of machine tools including an engine lathe, a Do-All vertical band saw, a horizontal band saw, two drill presses (one is heavy duty), one milling machine, two pedestal grinders, one box-brake bender (16 ga. soft steel and 14 ga. soft aluminum), one 3-ft light bending brake (16 ga. soft steel and 14 ga. soft aluminum) and one arbor press. Various size surface plates are available for setup and layout work. There are also several types of hand trucks.

Standard oxy-acetylene, electric, and heliarc welding equipment is available. A portable tungsten-wire feed machine may also be used with the welding equipment. All other tools and equipment that may be required and not discussed above should be user supplied.

4.0 INSTRUMENTATION

Model and tunnel instrumentation may consist of pressure modules, individual pressure transducers, thermocouples, attitude indicators, strain gauges, and potentiometers. Measurements by this instrumentation can be monitored and recorded by the facility data acquisition system (ESCORT D Plus see section 5.2) or a tunnel-user-supplied data acquisition system.

The output of facility instrumentation used to operate the tunnel is displayed on the Westinghouse Distributed Processing Family (WDPF) system graphics. The WDPF system is a supervisory control and data acquisition system with the capability to execute high speed control algorithms. The WDPF system contains a universal programmable controller which is interfaced to numerous facility subsystems (compressor drive controls, air dryer, flexible wall, high pressure air system and 450 air system, etc.). In addition, the WDPF system can also perform data acquisition functions such as data scanning and processing, alarm monitoring and reporting, data collection, data storage, data retrieval and numerical calculations. The facility is primarily monitored by the tunnel operator. Hard copies of the WDPF displays are available to the tunnel user upon request. Most of the facility instrumentation output is duplicated on the ESCORT D Plus data acquisition system. Hard copies of the ESCORT D Plus CRT displays can be obtained in the control room. An additional 240 analog channels are reserved on the ESCORT D Plus system for tunnel-user-defined model instrumentation.

4.1 Temperature Measurements

All model thermocouples should be made of high temperature heavy gauge thermocouple wire. Leads extending from the model should be long enough to reach the appropriate sting strut or ceiling strut terminal panel. Information on the length of the thermocouple leads will be supplied to the tunnel user by the AFED project engineer at one of the pretest meetings. Alloy wiring is used from jacks on the upper and lower strut terminal panels to thermocouple junction reference units. The temperature of the wire junctions within these reference units is held at room temperature to ±0.05 °F. Cables are run from the reference units to patch boards in the tunnel control room.

The following table lists the type and number of thermocouple circuits available at each strut terminal panel.

TABLE III.—THERMOCOUPLE CIRCUITS AVAILABLE

Quantity	Wire type (ISA)	
48	Iron/constantan	Type J
48	Chromel/alumel	Type K
48	Copper/constantan	Type T
24	Tungsten, 26% Rhenium/tungsten	Type G
24	Chromel/constantan	Type E

4.2 Angle-of-Attack Indicator

A model angle-of-attack indicator system is available to determine true model attitude. This makes it possible to correct for sting and balance system deflections. The system consists of an angle-of-attack transducer (fig. 24) installed in the model and a signal conditioner in the control room. The angle-of-attack indicator range is −45° to +45°. The wiring provided in the model for the transducer should be

four-conductor shielded, high-temperature wire of the size no. 22 or no. 24. Installation and calibration of this indicator will be performed at NASA Lewis. A mockup unit is available for fit checks and shop assembly of the model.

4.3 Actuators and Position Indicators

Screwjacks and hydraulic cylinders are commonly used to remotely position wind tunnel model components. Electrically driven screwjacks should be provided by the tunnel user with limit switches to protect the model and the mechanism from damage caused by overtravel. Hydraulic cylinders should be sized so their travel cannot exceed safe limits and they should be of the cushioned type if they are to move rapidly. The hydraulic system capacity is noted in section 3.2.

Remote position indication is often provided by a linear or rotary potentiometer.

All actuators and position transducers must be capable of withstanding tunnel test section operating conditions.

5.0 DATA ACQUISITION AND PROCESSING

5.1 Electronically Scanned Pressure System (ESP)

The 8 by 6 ESP system provides high accuracy measurement of steady-state model and facility pressures at a high data rate. The system utilizes plug-in modules each containing 32 individual transducers which are addressed and scanned at a rate of 10,000 ports/sec.

A total of 16 modules with transducer ranges from ± 2.5 psi to $+500$ psi may be used to provide a total of 512 pressure channels. Reference and check pressures are obtained from remotely controlled regulators.

An on-line calibration of all transducers is normally performed every 20 min by the operation of a pneumatic valve in each module which switches the system into a calibrate mode. Three calibration pressures, measured with precision digital quartz transducers, are applied in up to three ranges to assure overall system errors not greater than ± 0.1 percent of full scale.

5.2 ESCORT D Plus

The NASA Lewis ESCORT D Plus system (described in ESCORT D Plus Users Manual, R.J. Blaha, NASA Lewis Research Center, Cleveland, Ohio, May, 1991. Available from the facility electrical engineer.) supported by the NASA Lewis Computer Services Division, is a mini-computer-based, real-time, data acquisition, display, and recording system generally applicable to steady-state tests. Analog data from the experiments are digitized and then acquired by a MICROVAX 3500 computer located in the 8 by 6 data room which is next to the control room. Recorded data are transmitted through a network link (for unclassified projects) to a mainframe computer in the Research Analysis Center (RAC) for later processing if desired. Data from sensitive projects are stored on the removable disks of a facility computer. Batch processing of sensitive data are also performed on a facility computer as test runs are completed. In addition, sensitive data may be transferred to tape for later processing on other secured computer systems. Real-time processing tasks include acquiring data, converting raw counts to engineering

units, performing on-line calculations, updating facility display devices (both alphanumeric and graphical) and transmitting data for archival recording on a data collector. A schematic which shows the flow of information between the facility computer and the RAC computers is presented in figure 25 (see ESCORT D Plus Users Manual for additional information). A detailed block diagram of the facility computer is given in figure 26 and the ESCORT D Plus Users Manual. Update time for a standard program is 1 sec. Data can be acquired and processed using standard data software modules along with software specifically designed and programmed for a particular test.

5.2.1 Real time displays.—A customized ESCORT D Plus output program displays all data channels and computations selected for a given test program in an alphanumeric format. This output can be displayed on a variety of control-room CRT's. A detailed description of the CRT displays is presented in appendix C. Up to eight alphanumeric color CRT's can be supported on the system and provide a means of monitoring progress of a test and display data sets. The model operator has his own CRT. Three CRT's are available to the tunnel users. Each CRT can show any display page at any time. A laser line printer is provided to produce a hard copy of the data being displayed on the CRT.

On-line plots may be defined through a graphics specification language. The initial graphics specification is done by the ESCORT programmer, but changes can be made at the facility through an interactive editor. Plot pages and alphanumeric pages displayed on the CRT's are changed by entering their page number on a number entry panel.

Individual data displays (IDD's) are provided to highlight specific test parameters defined by the user during a run. Each IDD is individually addressable and has one 40-alphanumeric-character line. The characters are 0.375-in. high. Cursor addressing allows data labels to be fixed and the data updated every second. Special function buttons are provided with each CRT to allow the user to control display functions such as subsets of test parameters, data in different units (for instance engineering units, millivolts, or counts), and a printed copy of the data being displayed on the CRT. The tunnel user should have his request for customized output program displays available for review at least 8 weeks prior to the start of the program.

5.2.2 Data collection.—When a customized data software module is installed on the ESCORT D Plus system and the data record button is activated, all data channels are scanned once, saved on the data collector, and assigned a unique reading number. Real time data processing is available when requests include the calculation of ratios or simple engineering parameters. Extremely rigorous computing or across-scan computing should be performed off-line using the Center's central mainframe computers to obtain the desired output; this is to ensure a 1-sec update rate. The user can press the data record button as often as required to collect a new sample of data. If multiple high-speed scan cycles are needed to define a test condition, a different customized data software module than previously noted must be created and used on the ESCORT D Plus system. Activating the data record button would then result in automatic multicyclic scanning per reading as defined in the customized module. Multicyclic data are usually applicable to "slow" transient type tests or moving probe hardware.

5.3 Dynamic Data Acquisition

5.3.1 Facility tape recorder.—There are four tape recorders available in the control room to record data. Each tape recorder contains 14 channels to record model or facility data. Two of the tape recorders are used to record data about user specifications and the other two tape recorders are used to monitor safety requirements of the model (such as vibration amplitudes, strain gauge levels, bearing temperatures and so forth). Data recorded on tape can be converted to a digital tape at a later date by using the analog

FM demultiplexer equipment in the Research Analysis Center (RAC) building. This procedure can be discussed with the AFED project engineer at one of the pretest meetings.

5.3.2 Central analog system.—The NASA Lewis Central Analog FM Multiplex System can record up to 180 channels of dynamic data from the 8 by 6 using trunk lines which can extend from the facility to the RAC building. Each data channel has an 8-kHz analog bandwidth. The Central Analog FM Multiplex System has the capability to simultaneously record and play back 45 channels of analog data. Since only 45 channels of data can be digitized at any one time, the usual procedure requires multiple passes of the analog tape through the analog FM demultiplexer equipment to convert the data from analog to digital signals. A digital merge program is used to merge all digital information into a matrix and onto one tape before final processing occurs.

5.3.3 TRADAR-3.—The Transient Data Acquisition and Reduction System (TRADAR-3) located in the RAC building permits the recording of dynamic data during unclassified experiments and to post-process these data at a later date using various digital signal processing and data analysis software. The main components of the system are a Concurrent/Masscomp 6700 host computer with data acquisition and front-end signal conditioning hardware (fig. 27). TRADAR-3 can also be used in conjunction with the Central Analog Record and Playback System.

TRADAR-3 receives input from 180 shielded analog lines which run between the 8 by 6 facility and the RAC building. Electrical engineers at the facility can connect outputs from accelerometers, pressure transducers, and other equipment to these lines and send the signals to TRADAR-3. In addition to the 180 analog lines which are fed into TRADAR-3, it also receives 45 lines of input from the Central Analog Playback equipment (fig. 27). Data recorded by the Central Analog FM Multiplex Record System, other analog FM, or direct instrumentation tape recorders can be played back and digitized by TRADAR-3. Aggregate digitizing rates of over 600K samples per second are attainable with this system. Tunnel users can discuss the utility of the system with the AFED project engineer, the facility electrical engineer, and the RAC engineers at one of the pretest meetings.

5.3.4 Transient data acquisition system.—A transient data acquisition and reduction system is located in the facility control room. This system permits the recording of the dynamic data on a digital computer during sensitive or unclassified experiments. The main components of the system are a Concurrent Computer Corp. 7500 host computer with data acquisition and front-end signal conditioning hardware. This system can receive inputs from 96 shielded analog lines that run from the model or various points in the facility to the transient data acquisition system. The outputs of measuring devices such as high-response pressure transducers, high-response thermocouples, strain gauges, accelerometers, vibration and speed pickups can be sent through these shielded analog lines to the data acquisition system. Data recorded during an experiment are stored on disk and can be processed at the facility or post-processed at the RAC building at a later date. Sampling rates of 2 MHz/sec (aggregate divisible by the number of channels) will be stored on 1.5 Gbytes of disk storage.

5.4 Model Checkout Cart

The model checkout cart (fig. 28) is a mobile instrumentation, control, and data system used to set up and check the model before it is installed in the test section. It interfaces to the model through an interconnect rack (which also includes a T/C oven) and is similar to the panels at the test section. The cart is composed of four distinct parts: instrumentation signal conditioning, model controls, an ESP pressure measurement system, and an ESCORT D data system. These systems are tied into a patch board for configuration purposes. The signal conditioning and model controls can be configured for the specific

model requirements. The ESP system has 256 channels and incorporates pneumatic quick-disconnects to checkout up to 512 pressures. The ESCORT D data system has 128 analog input channels to monitor signals during checkout. The cart is moved adjacent to the sting-mounted or strut-mounted model stand located in the model preparation building (see Section 3.13). The AFED project engineer and the facility electrical engineer can discuss details of the cart use with the tunnel user.

6.0 PRETEST REQUIREMENTS

The 8- by 6-Foot SWT is scheduled for continuous testing throughout the year. It is advisable to contact the facility manager (see appendix A) at least 1 year in advance of the desired test time. Early notification will allow the facility manager and the appropriate AFED personnel to review the proposed model design and to ensure model compatibility with the tunnel test section. A formal request for tunnel use should be sent to the director of aeronautics at NASA Lewis (for non-NASA requestors only). Pertinent information regarding the formal letter of request can be obtained from the facility manager.

Upon receipt of a formal request for tunnel test time by the director of aeronautics the project is reviewed with the facility manager. If the project is accepted, a test agreement will be prepared and sent to the requestor for signature (for non-NASA requestors only). The test agreement outlines the legal responsibilities of NASA Lewis and the tunnel users during the time the project is at the Center (model arrival, test time, model return and so forth). The tunnel user is requested to sign the test agreement and return it to NASA Lewis.

The four types of Test Agreements are:

(1) NASA test program

(2) NASA/industry cooperative program (nonreimbursable Space Act agreement)

(3) Other U.S. Government agency programs (reimbursable or nonreimbursable interagency agreement)

(4) Industry proprietary or noncooperative program (reimbursable Space Act agreement)

The tunnel user is also requested to prepare a research requirements document and make it available to the facility manager and the AFED project engineer at the first pretest meeting held at NASA Lewis. The facility manager will inform the tunnel user as to the topics that should be addressed in this document. The procedure to obtain tunnel test time is contained in appendix D.

6.1 Pretest Meetings

A series of pretest meetings is held at NASA Lewis to discuss the test plan, instrumentation, tunnel hardware, and data requirements. The number of pretest meetings held at Lewis is usually a function of the complexity of the test. The attendees are the requestor and his key personnel, the facility manager, appropriate AFED branch chiefs, key AFED personnel, and the AFED project engineer.

6.1.1 Test objectives.—The requestor should provide a statement indicating the test objectives and goals. Any special test procedures should be thoroughly explained. A prioritized run schedule compatible with the available test window should be provided.

6.1.2.Instrumentation.—The tunnel user should provide a list of requested instrumentation to the AFED project engineer. The tunnel user shall adapt his instrumentation to the 8- by 6-Foot SWT data system (see sections 4.0 and 5.0) unless the user chooses to use his own data system. This point should be discussed with the AFED project engineer and the facility electrical engineer at one of the pretest meetings.

6.1.3 Hardware.—The tunnel user is required to provide drawings of the model installation in the test section. The AFED project engineer is responsible for providing detailed drawings of ceiling mounted struts or floor mounted sting-strut assemblies to assist the tunnel user.

6.1.4 Data requirements.—Data reduction information consisting of data inputs, data outputs, and equations in engineering language must be provided for cases where NASA Lewis performs data reduction activities. The tunnel user should present these requirements to the AFED project engineer who in turn will contact the appropriate personnel in the Research Analysis Center (RAC). The AFED project engineer will also arrange any necessary meetings between tunnel users and RAC engineers.

The tunnel users may choose to bring their own self-contained computer system to perform data processing work. This point can be discussed at one of the pretest meetings.

6.2 Deliverables

The tunnel user is required to provide the following information to the AFED project engineer 8 weeks before the scheduled test.

1. Test envelope for model
2. Loading on the model as related to Mach number, dynamic pressure, and model attitude
3. Stress analysis based on maximum loads that are anticipated on all sections of the model, per criteria in section 7.2.4
4. Detail drawings of the cross-sectional area distribution of the model to allow blockage and air load calculations
5. Drawings which show model installation and model support systems
6. All model calibration information is to be supplied by the tunnel user
7. A list of all tunnel-user-supplied equipment plus block diagrams and wiring schematics
8. When the tunnel user and NASA Lewis agree that the data are mutually beneficial the tunnel user may be asked to supply selected model drawings and/or photographs for reproduction in NASA technical papers

6.3 Model and Equipment

All models, instrumentation, and support hardware should be sent to NASA Lewis and to the attention of the AFED project engineer (the facility manager will supply the name of this engineer to the tunnel user). All model parts, model internal instrumentation, and tunnel user support hardware should be assembled prior to shipment to NASA Lewis to reduce installation delays. Large shipping crates are required to have 4- by 4-ft skids so they can be handled by forklift trucks. The delivery date of equipment and models prior to testing will vary according to the complexity of the model installation and the

amount of instrumentation to be hooked up to the data-recording system. The tunnel user and the AFED project engineer should agree to an appropriate delivery time.

7.0 RISK ASSESSMENT OF THE WIND TUNNEL MODEL AND TEST HARDWARE

The following sections discuss permissible model blockage in the tunnel test section, model design criteria pertaining to loads and allowable stresses, model fabrication, and quality assurance requirements.

7.1 Model Size

The maximum projected frontal blockage area (model plus support strut) shall not exceed 4.5 percent of the test section area. Since the limiting model size is influenced by such factors as model shape and the location in the test section, each model proposal must be evaluated independently.

7.2 Model Design Criteria

Tunnel test models should be designed for the following applicable load and stress conditions.

7.2.1 Steady-state loads and allowable stresses.—The model steady-state loads and stresses must be established and submitted to the AFED project engineer 8 weeks before the scheduled test.

Allowable stresses for the maximum loading condition are limited to the smaller of one-fifth of the ultimate stress or one-third of the yield stress of the material at test conditions. The maximum shear theory of failure (for example, elastic failure is defined to occur when the maximum shear stress equals one-half of the yield stress or elastic limit) will be used when allowable levels for combined stresses are calculated. In cases where the shear stress of the material is not known, the maximum allowable shear stresses shall be taken as one-sixth of the tensile yield stress of the material. Thermal stresses that may occur on the model should be added to the load stresses before determining the factor of safety. The allowable stresses shall be the value at the operating temperature. The material properties that are used in the calculations should be the expected minimum values. The allowable stress in the model support columns as well as in the shroud coverings for the model should not exceed one-third of the Euler critical buckling stress.

Model safety factors discussed above can be reduced provided that model calculations and material allowable stresses are based on the rules stated in the latest edition of the ASME Boiler and Pressure Vessel Code, Section VIII, Division 1 and/or Division 2 Manuals.

7.2.2 Supersonic starting loads.—The following conditions should be included when establishing the loading the model must withstand. An additional 10° flow angle should be added to the desired model angle-of-attack when establishing the model design loads. The dynamic pressure used should be the maximum tunnel dynamic pressure as given by figure 3(d). When using this criteria the allowable stresses should not exceed one-half of the yield stress. All auxiliary parts of the model exposed to the air stream and nominally at zero degree angle-of-attack should be evaluated at a 10° angle-of-attack for steady-state and starting loads. This technique for considering starting loads is given as a general guide. Therefore models unusual in size, shape, or operation may require special analysis.

7.2.3 Model stress analysis.—The tunnel user must submit a stress analysis to the AFED project engineer 8 weeks prior to the start of testing. The stress analysis should include dynamic factors which may result from flow separation, thermal stresses on the model, stress concentration factors, wind tunnel steady-state and starting loads, and design factors of safety for both types of loading. The previous calculations should show that allowable stresses are not exceeded for the worst load case.

Each section of the model that is analyzed should show a sketch with the forces and moments acting on that section. The analysis of each section should list approximations, assumptions, model section properties, and heat treat condition of the material. All general equations should be listed before substitution of numerical values. Shear and moment diagrams should be given for a worst case distribution. A sufficient number of model sections should be analyzed to determine allowable shear, axial load, bending, and torsion to facilitate a check on the location of the critical model section.

The stress analysis report should show that the model, mounting points, and restraints are statically and dynamically stable within the model test envelope. The effects of Reynolds number, Mach number, surface conditions, and so forth in the development of equations noted in the analysis should be discussed. Also, note the range of mass and inertia parameters plus stiffness coefficients used in the analysis.

7.2.4 Material selection.—Where applicable, material for the model and support structures are to be selected using mechanical properties described in one of the following standards:

1. American Society for Testing Materials (ASTM)
2. American National Standards Institute (ANSI)
3. American Institute for Steel Construction (AISC)
4. American Welding Society (AWS)
5. American Society of Mechanical Engineers (ASME)
6. National Electric Code (NEC)
7. Society of Automotive Engineers (SAE)
8. National Bureau of Standards (NBS)
9. Aerospace Structural Metals Handbook
10. Military Handbook #5

All material properties should be suitably corrected for temperature.

7.2.5 Structural joints.—All counterbores, spotfaces, and countersinks in the model and support structures must be properly aligned so that the fasteners are not bent by torquing.

The minimum safety factor for bolted joints that clamp a model, sting, model auxiliary structure, or model equipment shall be 4.0 based on yield stress and 5.0 based on ultimate stress for heat treated hardened bolts. The safety factors are based on bolt cross sectional area and not the tightened or proof load (i.e., the maximum load that can be applied to a bolt without obtaining a permanent set or permanent stretch). The cross sectional area of the bolts is determined by first calculating the model or model support system mating parts flange or joint load for a predetermined hydrostatic, or most severe test condition and at a room temperature bolting-up condition. The flange or joint load is then divided by the allowable stress (obtained from bolt strength of material tables) at the temperature condition determined as outlined above. Allowable stress is defined as the smaller value of either the yield stress or the ultimate

stress divided by the appropriate safety factor. If the allowable stress is used from tables such as those found in the Pressure Vessel Code, then the appropriate safety factor is being used in the calculations and further safety factors do not need to be added. Before the yield or ultimate stress values are used, they are divided by the appropriate safety factor to obtain the allowable stress value. The division of the flange or joint load by the allowable stress defines the total cross sectional area for the bolts. This calculation does not define the tightness or tension required on the bolts. Current engineering practice requires tightening bolts from 75 to 90 percent of proof load. The individual bolts will have a safety factor of 1.35 to 1.50 (based on ultimate stress divided by the proof stress of the material) but the flange or joint will have a much higher safety factor based on the required area. Then the bolt load will only increase an incremental amount with a large external load when the bolt is properly pretensioned. An example for a nongasketed flat face joint is, if the bolts have a high preload of 90 percent of proof load and then an external load of up to 100 percent of the preload is applied to the bolts, the bolt tension will only increase a small amount, approximately 10 percent (initial joint compressive stress is nearly cancelled by external tensile stress (ref. 11)). The exact amount depends on the relative stiffness between the flange or joint and the bolts and the compression area. The bolt flange or joint is designed for a safety factor of 3.0 to 5.0 (based on the yield or ultimate stress as the controlling factor). Based on these safety factors the actual bolt stresses will be equal to 1/3 to 1/5 of the allowable stresses. Since bolt stresses and loads are proportional, the bolt loads will vary from 33 to 20 percent of the allowable loads while the bolt preload is 90 percent of the proof load. Therefore if the bolt does not fail during tightening, it will not likely fail under static loading conditions. The cyclic, tensile, and thermal loads would still have to be considered.

Shear loads should be transmitted through the use of keys and pins. Provision should be made that the pins and keys are properly retained.

Welded joints should be designed in accordance with the code of the American Welding Society. All critical joints whose failure would result in the loss of the model components or damage to the facility must be x-rayed.

7.2.6 Pressure systems.—Models, support and test equipment using hydraulic, pneumatic, or other systems with operating pressures above 15 psig shall be designed, fabricated, inspected, tested, and installed in accordance with the ASME Boiler and Pressure Vessel Code (Section VIII), the ASA codes of the ASME, and Department of Transportation (DOT) Regulations. Pressure vessels are defined as all shells, chambers, tanks, or components used in the transmission of a gas where pressures exceed 15 psig. The welding of pressure vessels shall be in accordance with the ASME Boiler and Pressure Vessel Code (Section IX for welding qualifications and Section V for nondestructive inspection).

Pressure relief devices may be required in a hydraulic or pneumatic system but not necessarily in the model. These devices should be capable of relieving the overpressure by discharging sufficient flow from the pressure source under the conditions causing the malfunctions.

The following information on all components of a pressure system should be available to the facility manager and the AFED project engineer: volume capacity, temperature range, working pressure, and proof test pressure. It is suggested that all components of a pressure system be stored in a clean, dry, and sealed condition after proof testing and prior to delivery to the 8 by 6 facility.

7.2.7 Pressure piping.—All piping shall be designed, fabricated, inspected, tested, and installed in compliance with the latest edition of the ANSI/ASME Standard Piping Code. Powered models have internal piping which falls under the above noted code. Pressure vessels which are constructed from standard pipe fittings and standard flanges are also considered pressure piping and use the ANSI/ASME Piping Code.

The welding of pressure piping will follow the procedure outlined in Section IX of the ASME Boiler and Pressure Vessel Code plus the ANSI Piping Code.

All service lines into and out of the model should be properly identified as to working pressures, flow direction, and the fluid or gas being carried.

7.2.8 Electrical equipment components.—The supersonic flow environment in the facility test section mandates that only qualified hardware, equipment, and material conforming to the National Electrical Code (NEC) should be used. All pressure transducers, strain gauges, vibration pickups, and other low-voltage devices should have each set of wires shielded. Details regarding user supplied control panels or control boxes plus the associated wiring to the facility control room are explained in the Test Agreement. The format for user supplied electrical schematics, wiring diagrams, and connectors at interfaces located at control panels, control boxes or at the model should be discussed with the AFED project engineer and the facility electrical engineer at one of the pretest meetings.

7.3 Model Fabrication Requirements

Models should be completely assembled at the manufacturer's plant and discrepancies corrected. All model parts are to be inspected to ensure proper fit and certified for the required loads and deflections during testing. All remote control model functions should be checked out and position indicators should be calibrated prior to shipment to NASA Lewis. After the model is installed in the NASA Lewis tunnel test section, a final model calibration (end-to-end checks) is undertaken to ensure continuity.

All electrical leads and pressure lines from the model should be clearly identified. In addition, the pressure lines should be cleaned and free of oil and debris and leak-checked at operating pressures. End-to-end checks are required for both the model electrical and pneumatic systems.

7.4 Quality Assurance Requirements

Procedures for model assembly, installation, and configuration changes in the 8 by 6 test section are required. These procedures should be submitted to the AFED project engineer at least eight weeks prior to tunnel entry. These procedures should include the sequential steps that are to be taken to install the model in the test section. Bolt torquing values to fasten the model to the sting and other support structures should be given. The assembly, installation, and checkout of user supplied hardware should also be addressed. The model installation procedures should be supplemented with the necessary drawings and/or sketches.

8.0 GENERAL INFORMATION

The following information is provided to familiarize the tunnel user with the services available and standard operating procedures.

8.1 Support

8.1.1 Model buildup.—Most models tested in the 8- by 6-Foot SWT are complex and therefore model buildup in the 8 by 6 model preparation building plus tunnel test section installation time varies greatly.

It is suggested that the tunnel user discuss the appropriate arrival time for the model plus any other auxiliary equipment that is user supplied, with the facility manager.

8.1.2 User responsibility.—If the model installation is complex the tunnel users should use their own mechanics to assist with model installation in the tunnel. All tools, spare parts, special equipment, and supplies necessary to perform work on the model are to be supplied by the tunnel users. A user-assigned test engineer familiar with the model and the test objectives must be available on-site during the test.

8.1.3 Operation of government equipment.—Tunnel user personnel should not operate government-furnished equipment or make connections to this equipment without the approval of NASA Lewis personnel.

8.1.4 Tunnel safety.—All personnel entering the tunnel for an extended period of time to examine the model or auxiliary equipment in the tunnel test section should be accompanied by NASA Lewis personnel. Care should be exercised to avert injury from sharp edges on the model or from instrumentation probes or rakes that may be positioned in the tunnel test section. Guards or shields are to be provided for all exposed rakes and model sharp edges, spikes, tips, and so forth.

8.1.5 Support during tests.—All requests for manpower assistance, shop, or facility services should be made by the tunnel user to the AFED project engineer.

8.2 Operations

8.2.1 Normal operating days and shift hours.—Tests are usually run at the 8- by 6-Foot SWT from 4:00 pm to 11:00 pm Monday through Friday. This test window can be expanded for an ambitious test schedule. Tunnel users should discuss expanding the test time each week with the facility manager if required.

8.2.2 Off-shift coverage.—Access to the 8- by 6-Foot SWT for times other than operating shifts must be coordinated with the AFED project engineer.

8.3 Planning

8.3.1 Pre-run safety meeting.—The AFED project engineer will prepare a safety permit request which describes the test. This document discusses the safety aspects of the tests as well as test objectives, run schedule, instrumentation, and hardware, and is sent through the facility manager to the Center's Environmental Compliance Office and the Facility Safety Committee for their review and approval. The safety permit request should be written and available for review at least eight weeks prior to the start of testing.

The following is a list of conditions that would require special action to be taken by the 8- by 6-Foot SWT Facility Safety Committee.

1. Experiments using radioactive materials or gases
2. High-speed rotating model parts without suitable shrouds
3. Ejection of material or gases into the tunnel circuit which may cause an explosion
4. Use of toxic materials (Material Safety Data Sheet must be provided.)

8.3.2 Test time.—The tunnel test time charged to an experiment (non-NASA users) includes the total time that the facility is available to the user. This time includes model and instrumentation installation,

model removal, experiment time, and returning the tunnel and associated areas to its pretest condition. The time required to crate the user's model and equipment for shipment must also be included. Extensions to a test window may be granted. This point is negotiable between the tunnel user's lead engineer and the 8- by 6-Foot SWT facility manager. Discussions with NASA personnel who have experience with the facility should assist the tunnel user to make a fairly accurate estimate of the time required to complete the test program.

8.3.3 NASA Debriefing.—Prior to completion of the test program the tunnel user's lead engineer will meet with the 8- by 6-Foot SWT facility manager. The purpose of the meeting is to evaluate the test support received by the tunnel user during the test program. The facility manager will make arrangements for the meeting.

8.4 Security

The advance notice required to obtain access to the 8- by 6-Foot SWT at NASA Lewis Research Center is dependent upon the classification of the test program and the category of the non-NASA visitor.

During nonclassified test programs the AFED project engineer will notify the NASA Lewis Visitor Control Center at least three days prior to the arrival of a non-NASA visitor who is a U.S. citizen. The information required is name of the person, place of employment, and date and purpose of the visit. A non-U.S. citizen should make arrangements with their embassy in Washington D.C. prior to their intended visit to NASA Lewis. The appropriate embassy should work with NASA Headquarters in Washington D.C. to establish the necessary clearances. A classified test program at NASA Lewis requires that the proper security clearance be in place prior to the arrival at Lewis of a non-NASA visitor who is a U.S. citizen. The NASA Lewis Security Office requires the reception of a Visit Notification Letter from the Visitor's Company. This letter is to include the following information for each visitor.

(1) Social Security number

(2) Full name

(3) Date and place of birth

(4) Security clearance level

(5) Date clearance was granted

(6) Who granted the clearance

(7) Date and duration of visit

(8) NASA contact

Visit notification letters are to be sent to the following address:

NASA Lewis Research Center
ATTN: Security Office M.S. 21-5
21000 Brookpark Road
Cleveland, Ohio 44135
Phone: (216) 433-3062
FAX: (216) 433-6664

The AFED project engineer will notify the NASA Lewis Security Office and the Visitor Control Center three days prior to the arrival of non-NASA visitors who wish to participate in a classified test program at the Center.

APPENDIX A

The following individual is the key contact person at the 8- by 6-Foot SWT facility. Mail correspondence can be addressed as follows:

NASA Lewis Research Center
Attn: 8- by 6-Foot SWT Facility Manager*
Mail Stop: 6-8
21000 Brookpark Road
Cleveland, Ohio 44135

*The name of the 8- by 6-Foot SWT facility manager can be obtained from a NASA Lewis telephone directory. This information is presented in the organizational listing under Aeropropulsion Facilities and Experiments Division, Facilities Management Branch (organizational code 2810). In the absence of a directory call: (216) 433-4000 (NASA Lewis switchboard operator) and ask the operator to supply the name of the facility manager.

APPENDIX B

To determine the operating time of the dryer bed during open loop operation use figure 8 and table IV in the following manner. The Mach number desired in the test section is known from the tunnel user test plan. The test section flow rate required is obtained from the steady-state equation:

$$w = p_s \cdot A \cdot M \cdot c \cdot (\gamma \cdot g_c/(R \cdot T_s))^{0.5}, \tag{1}$$

where:

w air flow rate, lb_m/sec

p_s static pressure, psia

A tunnel cross-sectional area, 48 ft^2

M Mach number, dimensionless

c area conversion constant, 144 in^2/ft^2

γ specific heat ratio for air, 1.4

g_c gravitational constant, 32.2 $(ft\text{-}lb_m)/(lb_f\text{-}sec^2)$

R gas constant for air, 53.3 $(ft\text{-}lb_f)/(lb_m\text{-}°R)$

T_s static temperature, °R

Substitution of the above constants into equation (1) yields the following expression:

$$w = K \cdot p_s \cdot M \cdot 1/\ (T_s)^{\ 1/2}, \tag{2}$$

where:

$$K = 6356.7\ [lb_m\text{-}(°R)^{1/2}\text{-}in^2]/(sec\text{-}lb_f)$$

All other parameters in equation (2) are defined under equation (1). Example: Assume that it is desired to test at a Mach = 2.0 condition for a period of 40 min. Tunnel calibration data for the 8- by 6-Foot SWT test section yields:

$$p_s = 3.313 \text{ psia and } T_s = 366.9\ °R$$

Substitution of these values into equation (2) results in:

$$w = 2198.9\ lb_m/sec$$

The mass of air that flows through the dryer bed during the assumed test time is given by:

$$m_{air} = 2198.9\ lb_m/sec \times 40\ min \times 60\ sec/min$$

$$m_{air} = 5{,}277{,}360\ lb_m$$

$$m_{alumina} = 2{,}500{,}000\ lb_m \text{ (from air dryer specifications)}$$

$$m_{ratio} = m_{alumina}/m_{air},$$

$$m_{ratio} = 0.474 \tag{3}$$

Assume that the dry bulb air temperature is equal to 75 °F and the dew point temperature is equal to 60 °F. Enter table IV with a dew point temperature of 60 °F and obtain:

specific humidity = 79 grains/lb_m of dry air

Enter figure 8 with the following information:

dry bulb air temperature = 75 °F

specific humidity = 79 grains/lb_m of dry air

Enter figure 8 along the right ordinate and locate the specific humidity noted above. Then proceed along a horizontal path (see dashed line on figure 8) until the 75 °F dry bulb temperature curve is intersected. At this point proceed vertically downward until the operating time curve is intersected. Then proceed along a horizontal path until the air dryer operation time ordinate is intersected. This procedure yields an operating time of 35.2 min.

Another approach to determine air dryer operating time is to use the mass ratio parameter (m_{ratio}). Recall from equation (3) that m_{ratio} equals 0.474 for our hypothetical test case. The next step is to enter the abscissa of figure 8 at this value of m_{ratio} and proceed along a vertical dashed line (fig. 8) until the intersection of the operating time line occurs. Then proceed along a horizontal dashed line until the air dryer operation time axis is intersected. The results of this graphical approach yield an air dryer operation time of 36.5 min. The two graphical techniques employed lead to approximately the same result and tell us that it is not possible to test for 40 min on a given evening for the conditions listed. We would need two test evenings to accomplish this goal.

APPENDIX C

Real Time Display Details

The following discussion describes in detail the format for the control room CRT displays. Page one of the CRT display is the page directory. The other output pages are designed by the tunnel user to meet their test plan objectives. A display can contain two sizes of characters: a matrix of 24 normal size characters or a matrix of 48 reduced size characters by 80 columns wide. Row 1 is reserved when normal size characters are used. Rows 1 and 2 are reserved when reduced sized characters are used. These rows always contain standard identification information (facility name, program number, last reading taken, current time, barometer, and ESP calibration countdown time). Data channels may also be displayed in an unlabelled block format (a two-dimensional array of 20 rows by 5 columns). These are preprogrammed, off-the-shelf displays.

APPENDIX D

Summary of process to obtain 8- by 6-Foot SWT test time.

1. Contact the 8- by 6-Foot SWT facility manager at least 1 year prior to the test (more advance notice is usually required).

2. The 8- by 6-Foot SWT facility manager and appropriate Aeropropulsion Facilities and Experiments Division personnel review the request.

3. Tunnel user submits a formal letter of request to the director of aeronautics at NASA Lewis (for non-NASA requestors).

4. If the project is accepted a test agreement is prepared and signed (for non-NASA requestors only).

5. A series of pretest meetings are held to discuss the test plan, instrumentation, tunnel hardware, and data requirements. Attendees are the requestor and his key personnel, the facility manager, appropriate AFED branch chiefs, key AFED personnel, and the AFED project engineer.

TABLE IV.—DEW POINT TEMPERATURE OF AIR IN °F AT SEA LEVEL STATIC CONDITIONS WITH CORRESPONDING SPECIFIC HUMIDITY IN grains/lb_m OF DRY AIR

Dew point temperature, °F	Specific humidity, grains/lb_m of dry air	Dew point temperature, °F	Specific humidity, grains/lb_m of dry air	Dew point temperature, °F	Specific humidity, grains/lb_m of dry air
−14	3	25	20	64	92
−13	3	26	20	65	95
−12	3	27	22	66	98
−11	3	28	23	67	101
−10	3	29	24	68	105
−9	4	30	25	69	109
−8	4	31	26	70	113
−7	4	32	27	71	117
−6	4	33	28	72	121
−5	4	34	29	73	125
−4	5	35	31	74	130
−3	5	36	32	75	135
−2	5	37	33	76	140
−1	5	38	34	77	145
0	6	39	36	78	150
1	6	40	37	79	155
2	6	41	39	80	160
3	7	42	40	81	166
4	7	43	42	82	172
5	7	44	43	83	178
6	8	45	45	84	184
7	8	46	47	85	190
8	8	47	49	86	196
9	9	48	51	87	203
10	10	49	53	88	210
11	10	50	54	89	217
12	10	51	56	90	224
13	11	52	59	91	232
14	12	53	61	92	240
15	12	54	63	93	248
16	13	55	66	94	256
17	13	56	68	95	264
18	14	57	71	96	273
19	15	58	73	97	282
20	15	59	76	98	291
21	16	60	79	99	302
22	17	61	82	100	312
23	18	62	85		
24	19	63	88		

REFERENCES

1. Mitchell, G.A.: Blockage Effects of Cone-Cylinder Bodies on Perforated Wind Tunnel Wall Interference. NASA TMX–1655, 1968.

2. Mitchell, G.A.: Effect of Model Forebody Shape on Perforated Tunnel Wall Interference. NASA TMX–1656, 1968.

3. Blaha, B.J.; and Bresnahan, D.L.: Wind Tunnel Installation Effects on Isolated Afterbodies at Mach Numbers from 0.56 to 1.5. NASA TMX–52581, 1969.

4. Steffen, F.W.; and Jones, J.R.: Performance of a Wind Tunnel Model of an Aerodynamically-Positioned Variable Flap Ejector at Mach Numbers From 0 to 2.0. NASA TMX–1639, 1968.

5. Bresnahan, D.L.: Experimental Investigation of a 10° Conical Turbojet Plug Nozzle With Iris Primary and Translating Shroud at Mach Numbers From 0 to 2.0. NASA TMX–1709, 1968.

6. Harrington, D.E.: Jet Effects on Boattail Pressure Drag of Isolated Ejector Nozzles at Mach Numbers From 0.60 to 1.47. NASA TMX–1785, 1969.

7. Shrewsbury, G.D.: Effect of a Simulated Wing on the Pressure-Drag Coefficients of Various 15° Boattails at Mach Numbers From 0.56 to 1.00. NASA TMX–1662, 1968.

8. Blaha, B.J.; and Mikkelson, D.C.: Wind Tunnel Investigation of Airframe Installation Effects on Underwing Engine Nacelles at Mach Numbers From 0.56 to 1.46. NASA TMX–1683, 1968.

9. Freedman, R.J.; and Greissing, J.P.: Development and Utilization of a Laser Velocimeter System for a Large Transonic Wind Tunnel. NASA TM–82886, 1982.

10. Podboy, G.G.: and Krupar, M.J.: Laser Velocimeter Measurements of the Flow Field Generated by an Advanced Counterrotating Propeller. NASA TM–101437, 1989.

11. Shigley, J.E.: Mechanical Engineering Design. Third ed. McGraw-Hill Co., New York, 1977.

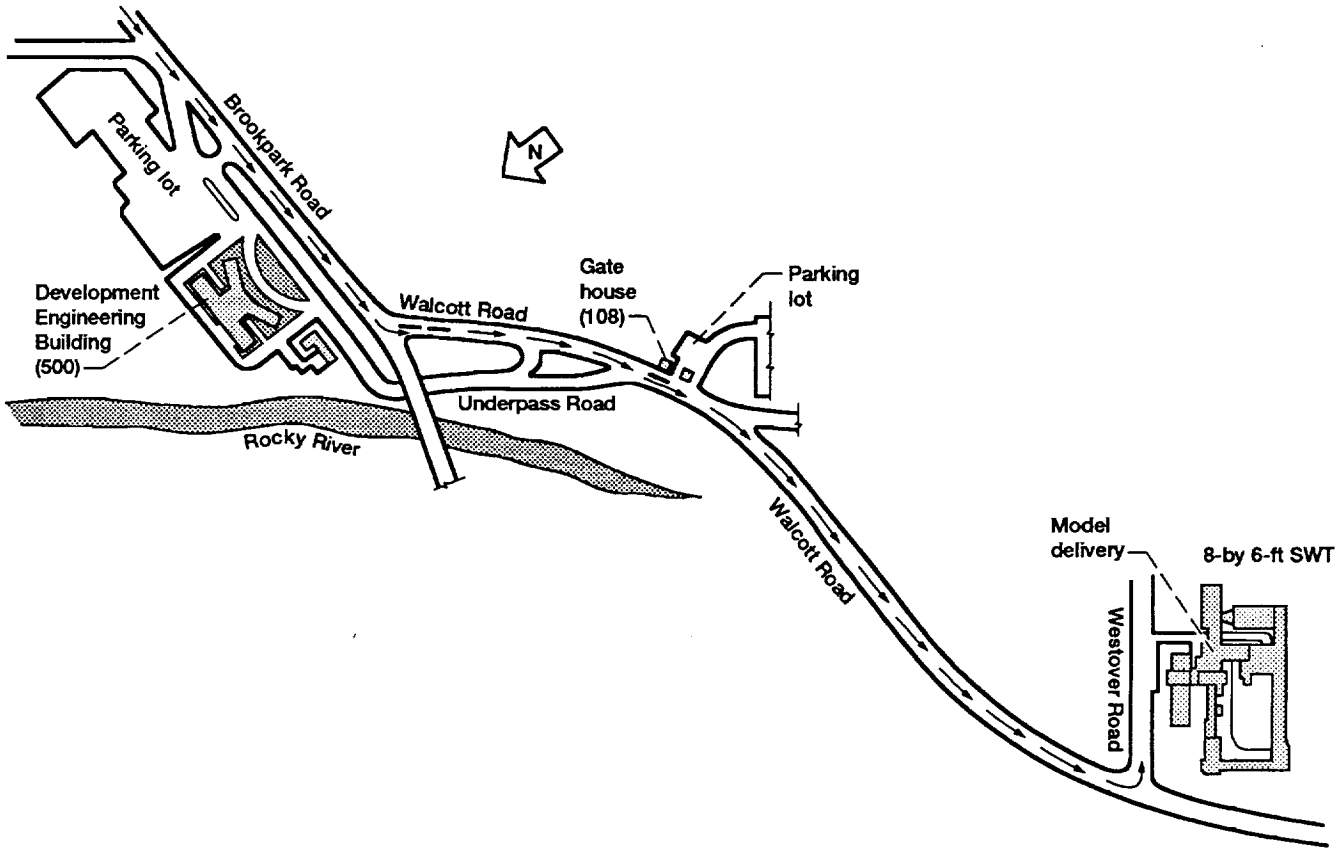

Figure 1.—Directions to 8- by 6-Foot Supersonic Wind Tunnel Facility. Note: Underpass road is an alternate entrance to NASA Lewis, but large trucks have a height restriction passing beneath Brookpark Road.

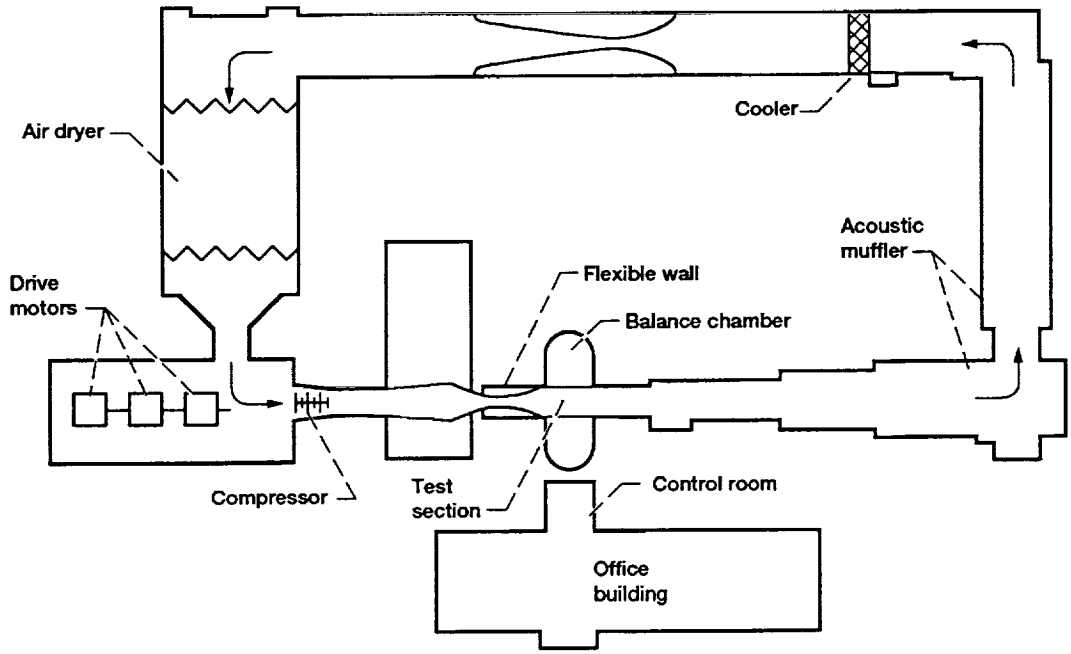

(a) Aerodynamic cycle.

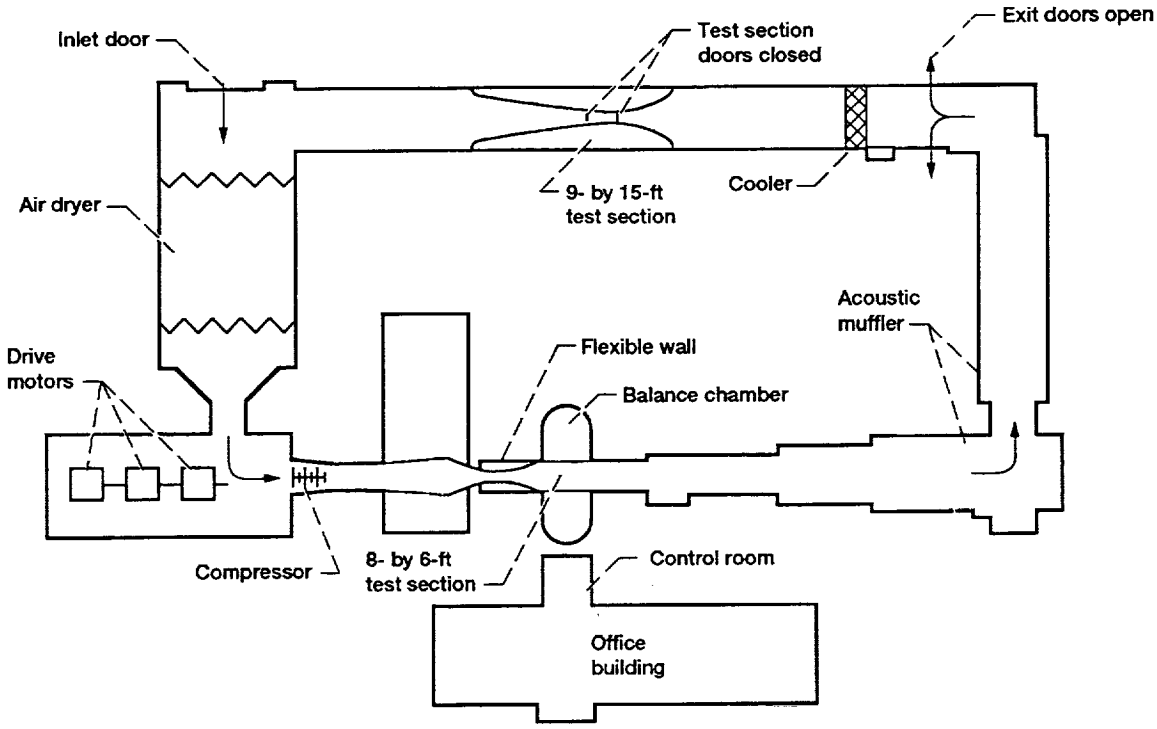

(b) Propulsion cycle.

Figure 2.—Schematic of 8- by 6-Foot Supersonic Wind Tunnel Facility.

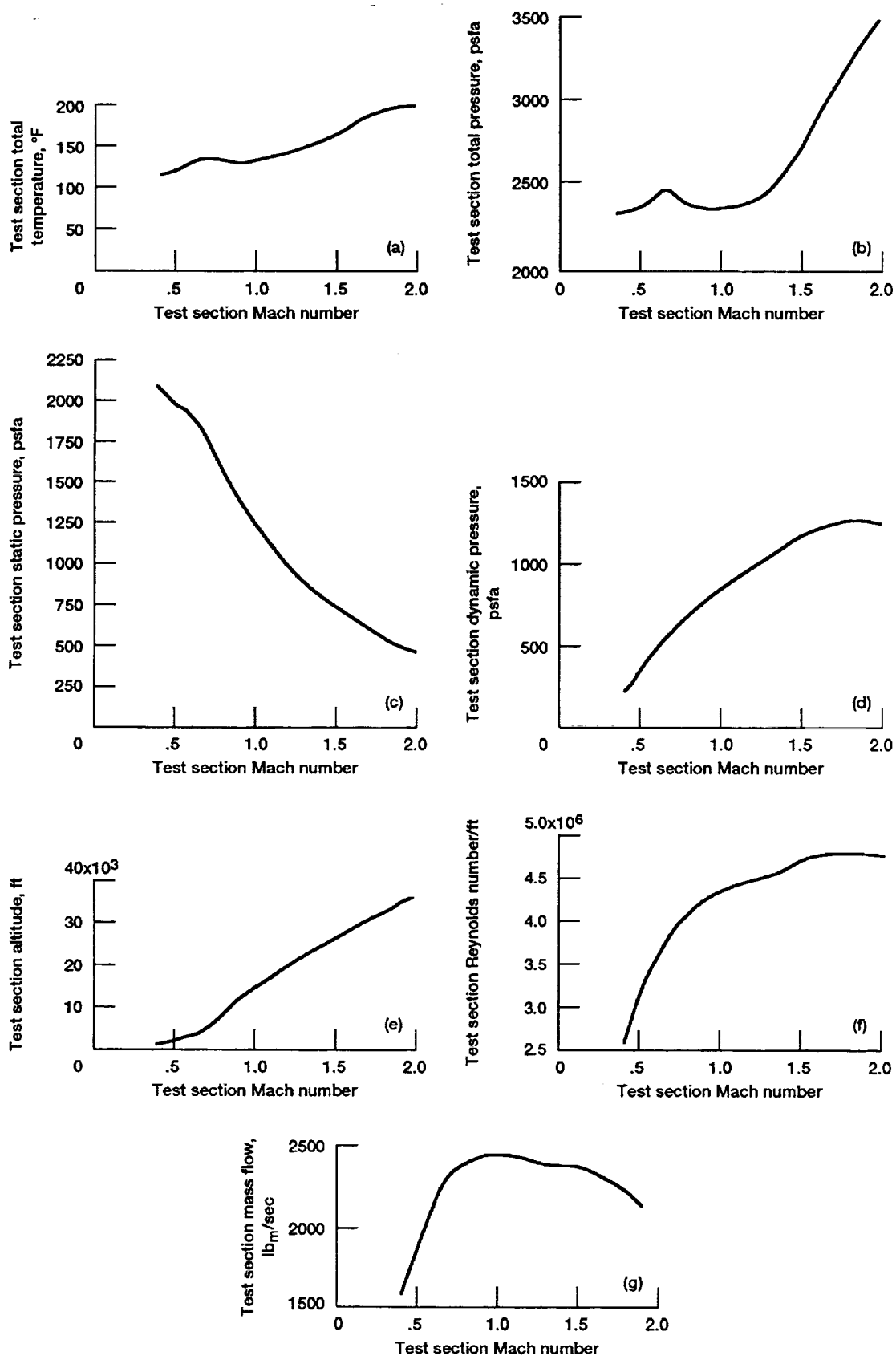

Figure 3.—8- by 6-Foot Supersonic Wind Tunnel performance curves.

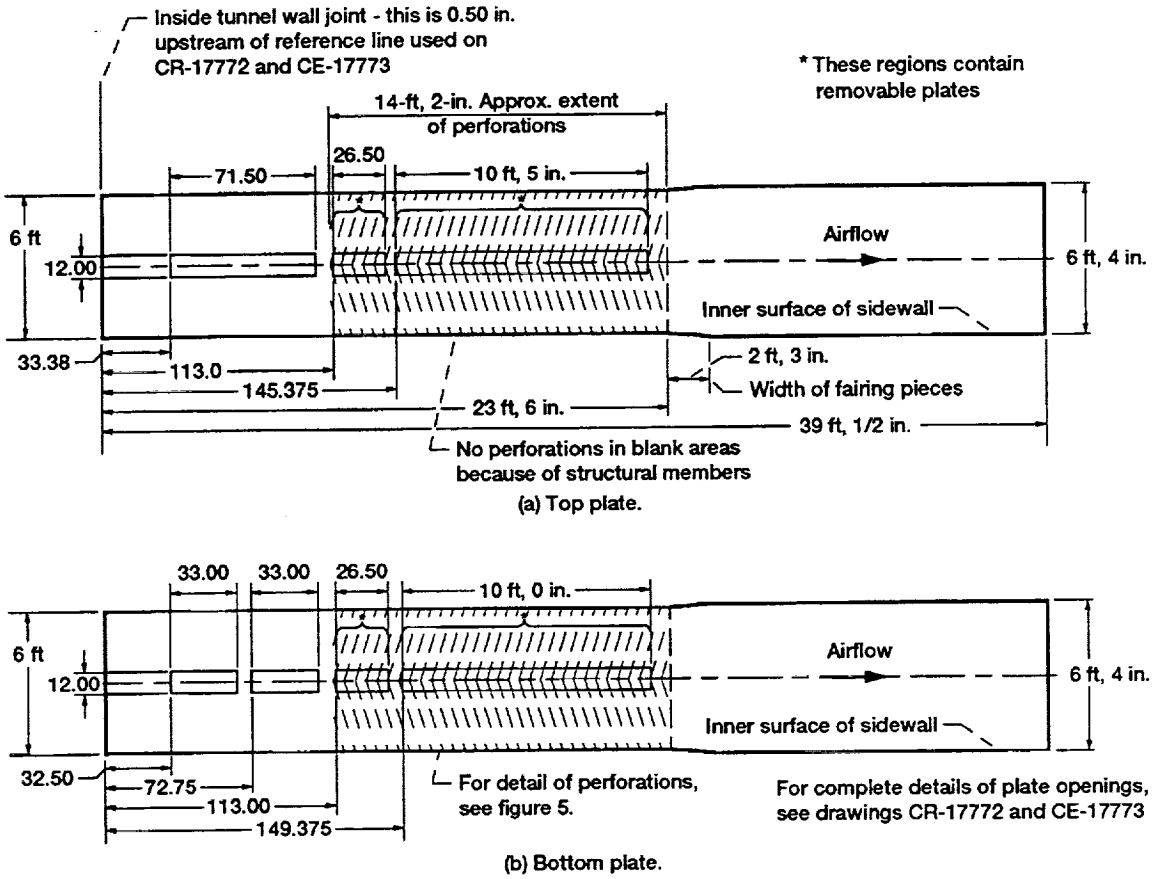

Figure 4.—8- by 6-Foot test section plan view. Dimensions in inches unless otherwise noted.

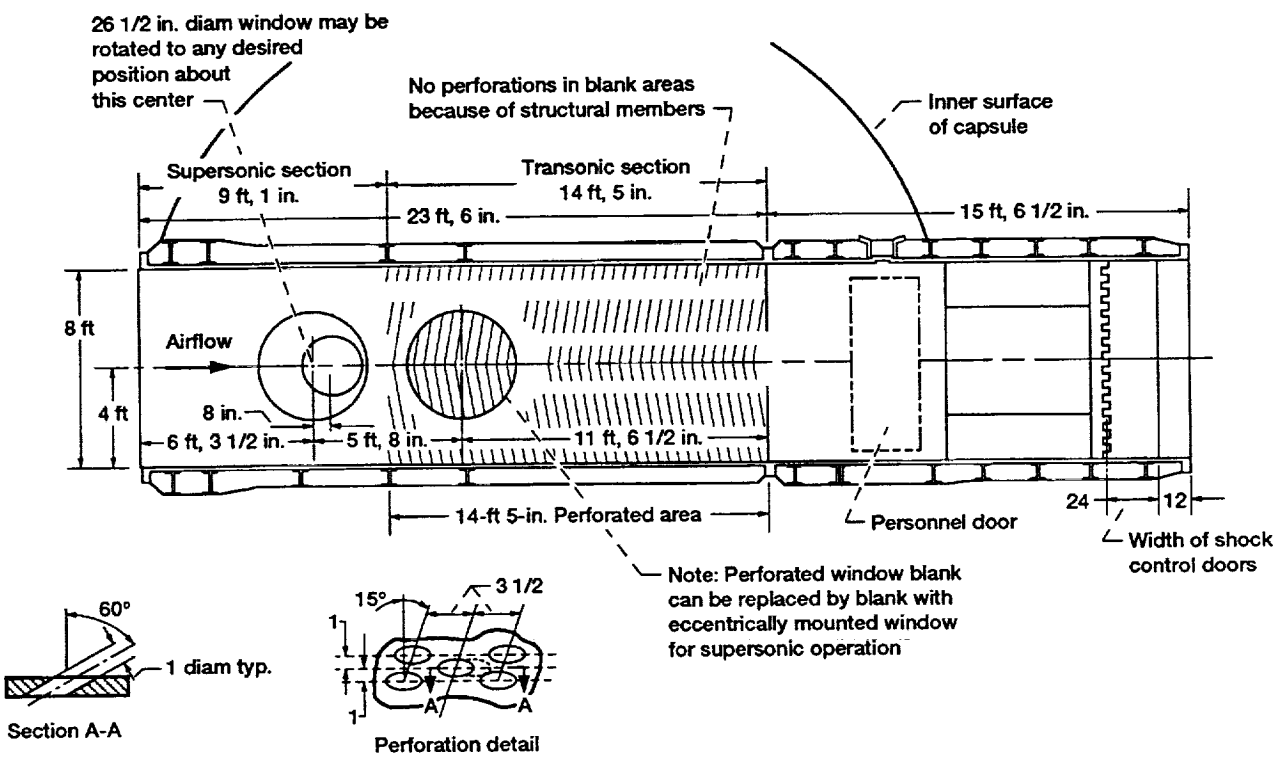

Figure 5.—8- by 6-Foot test section elevation view. Dimensions in inches unless otherwise noted.

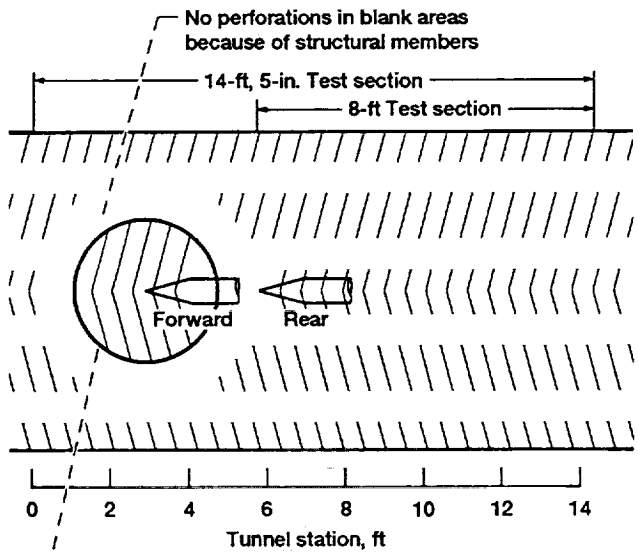

Note: Perforated window blank can be replaced by blank with eccentrically mounted window for supersonic operation. See supersonic test section of fig. 5 for window arrangement.

Figure 6.—The 8- by 6-Foot SWT transonic test section showing side wall perforations.

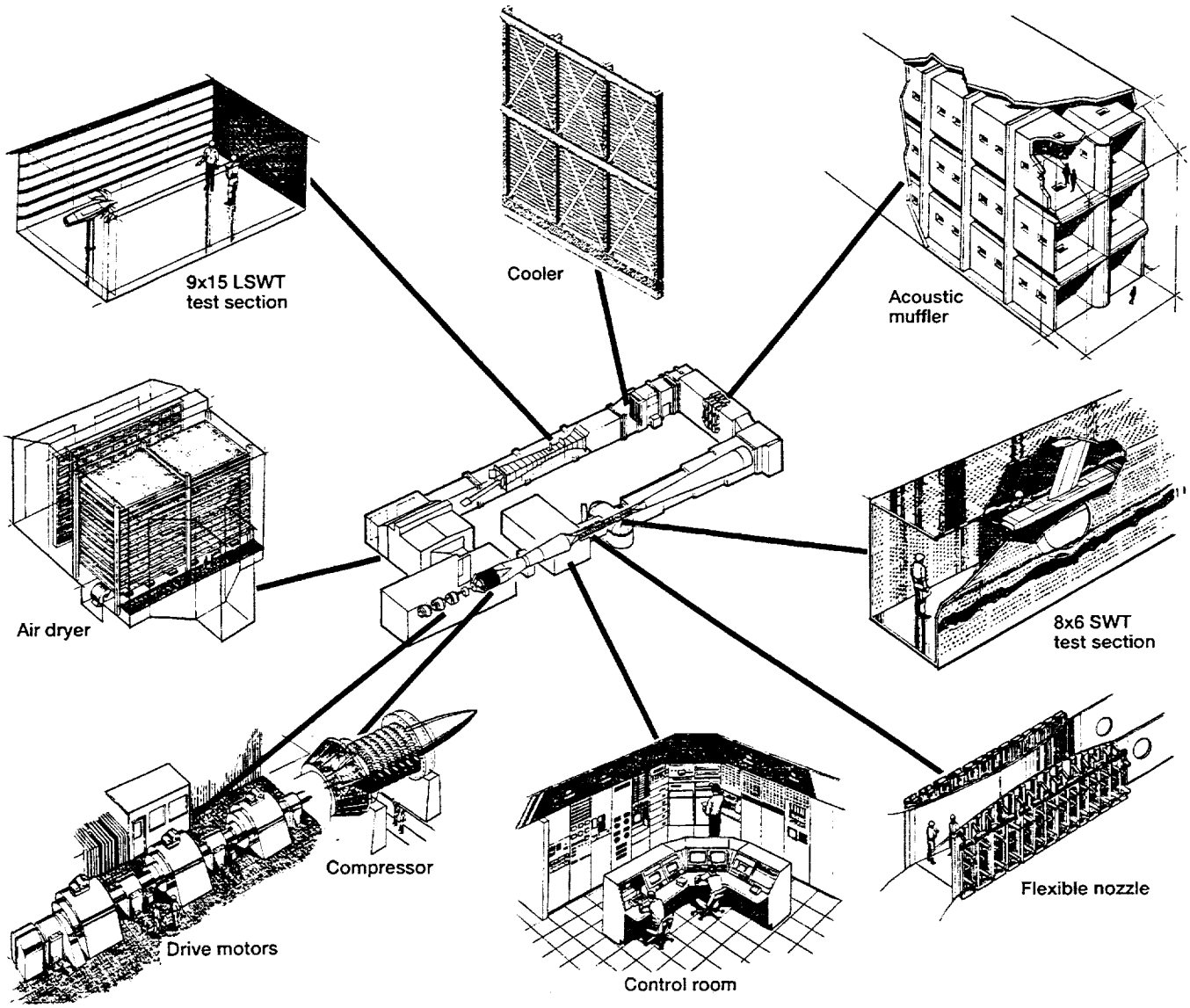

Figure 7.—8x6 SWT/9x15 LSWT Complex.

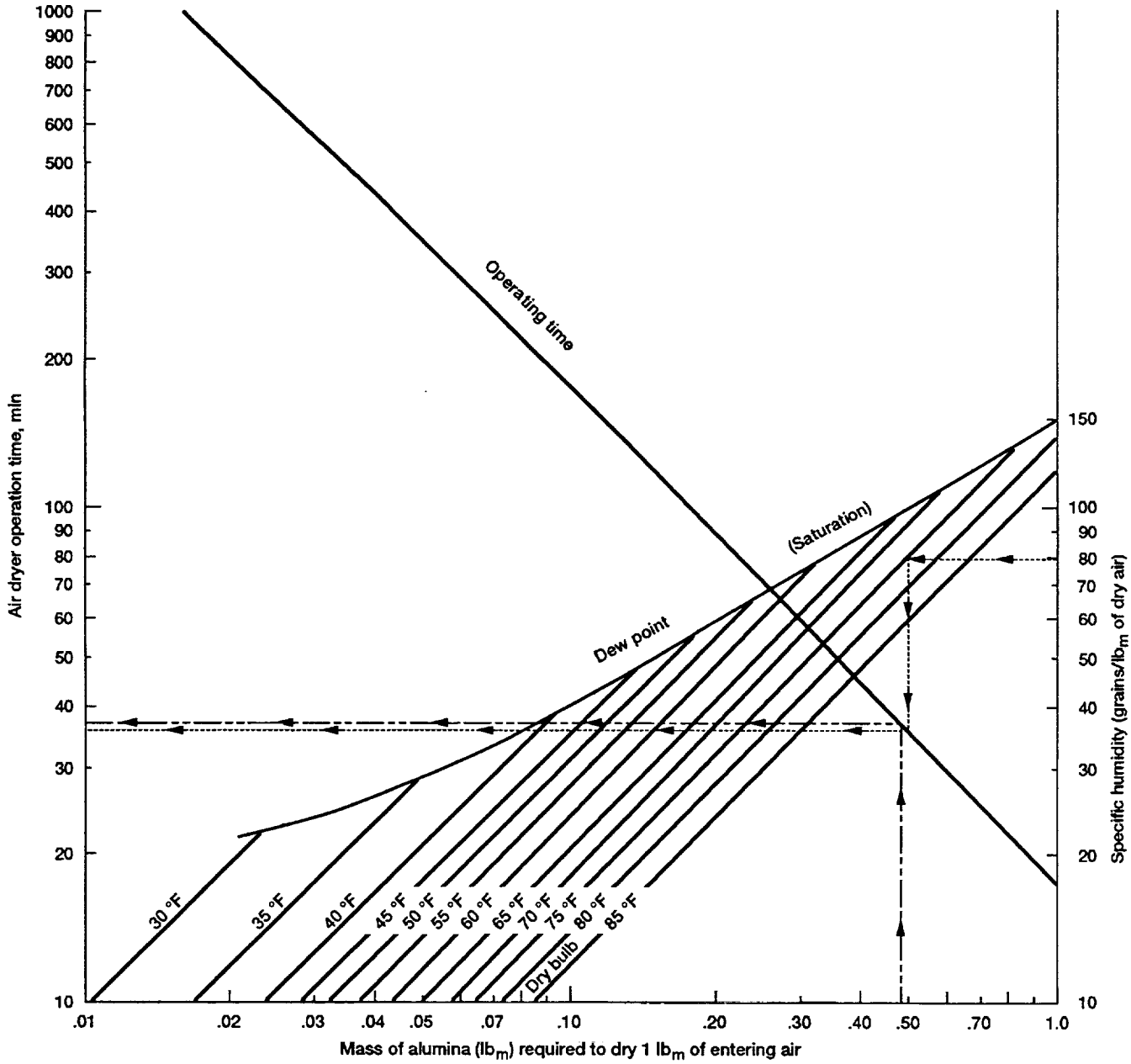

Figure 8.—Air dryer operating time during tunnel open loop configuration.

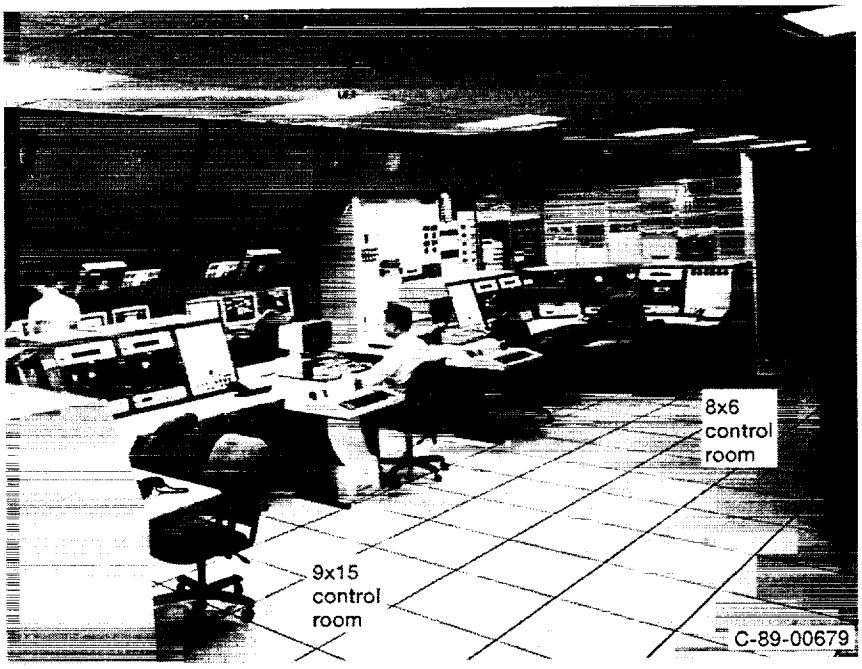

Figure 9.—8- by 6-Foot SWT and 9- by 15-Foot LSWT control room.

Figure 10.—Laser support structure.

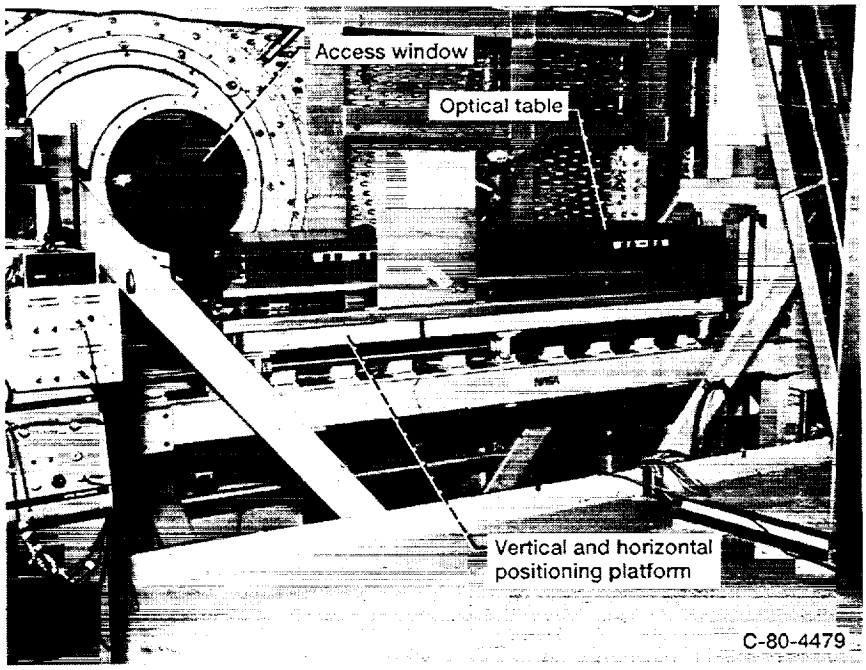

Figure 11.—Optics table isolation and support structure.

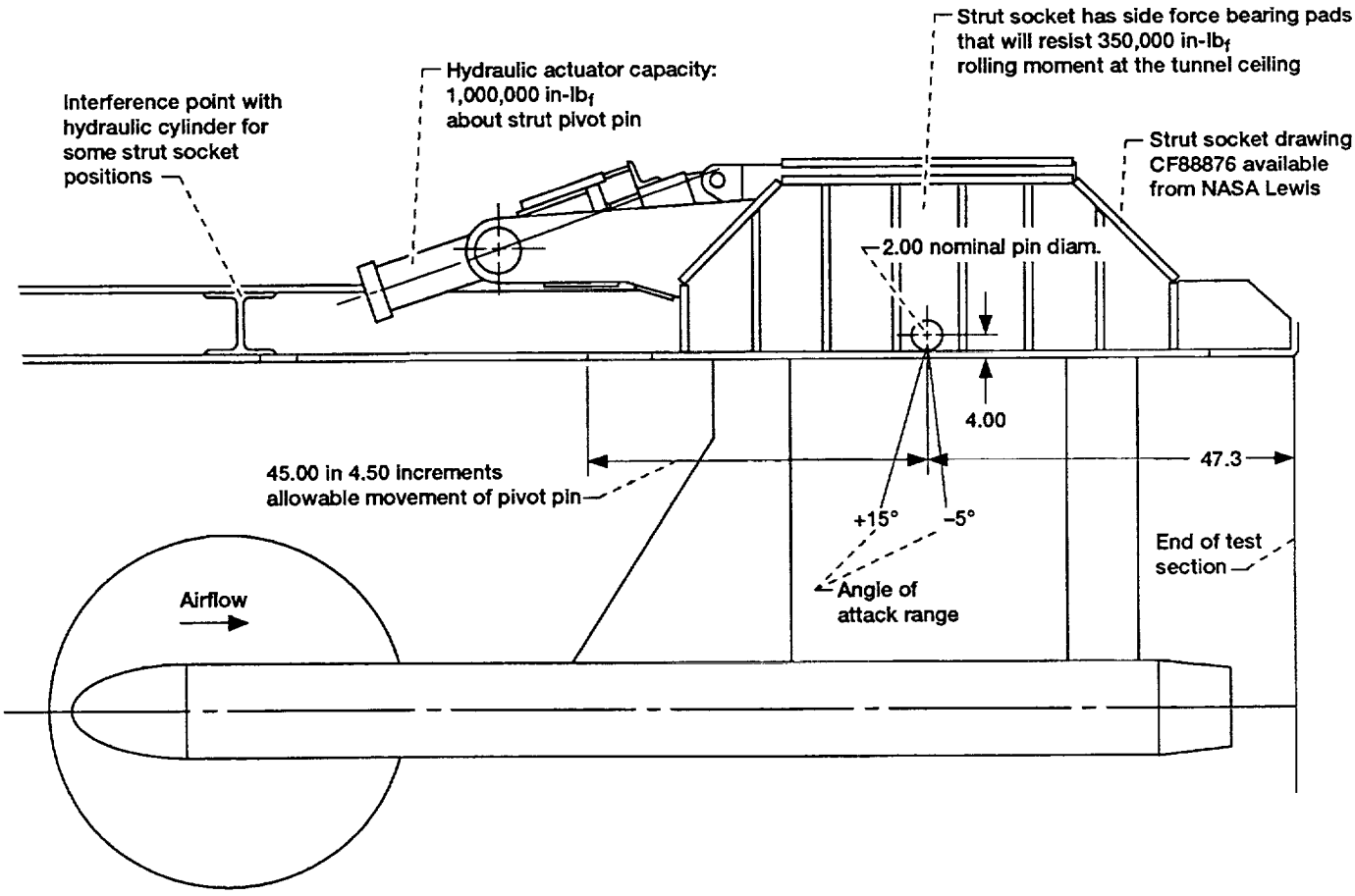

Figure 12. —Ceiling strut socket and actuator. Dimensions in inches unless otherwise noted.

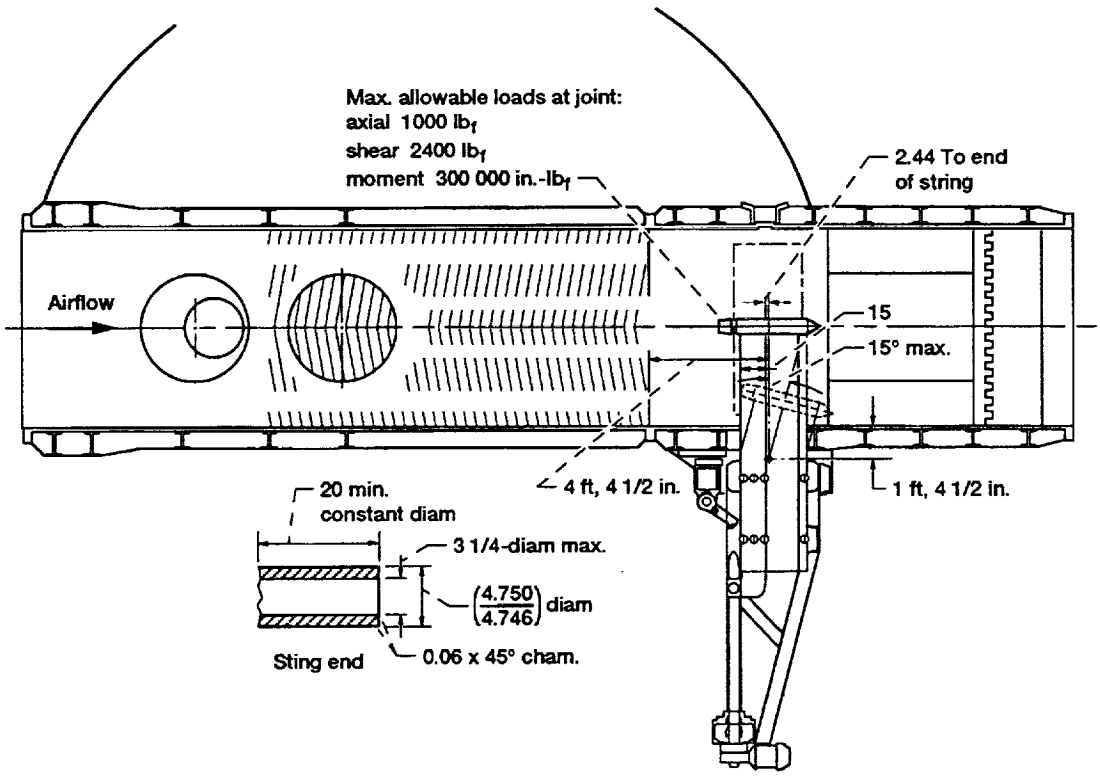

Figure 13.—Transonic strut for sting-mounted models. Dimensions in inches unless otherwise noted.

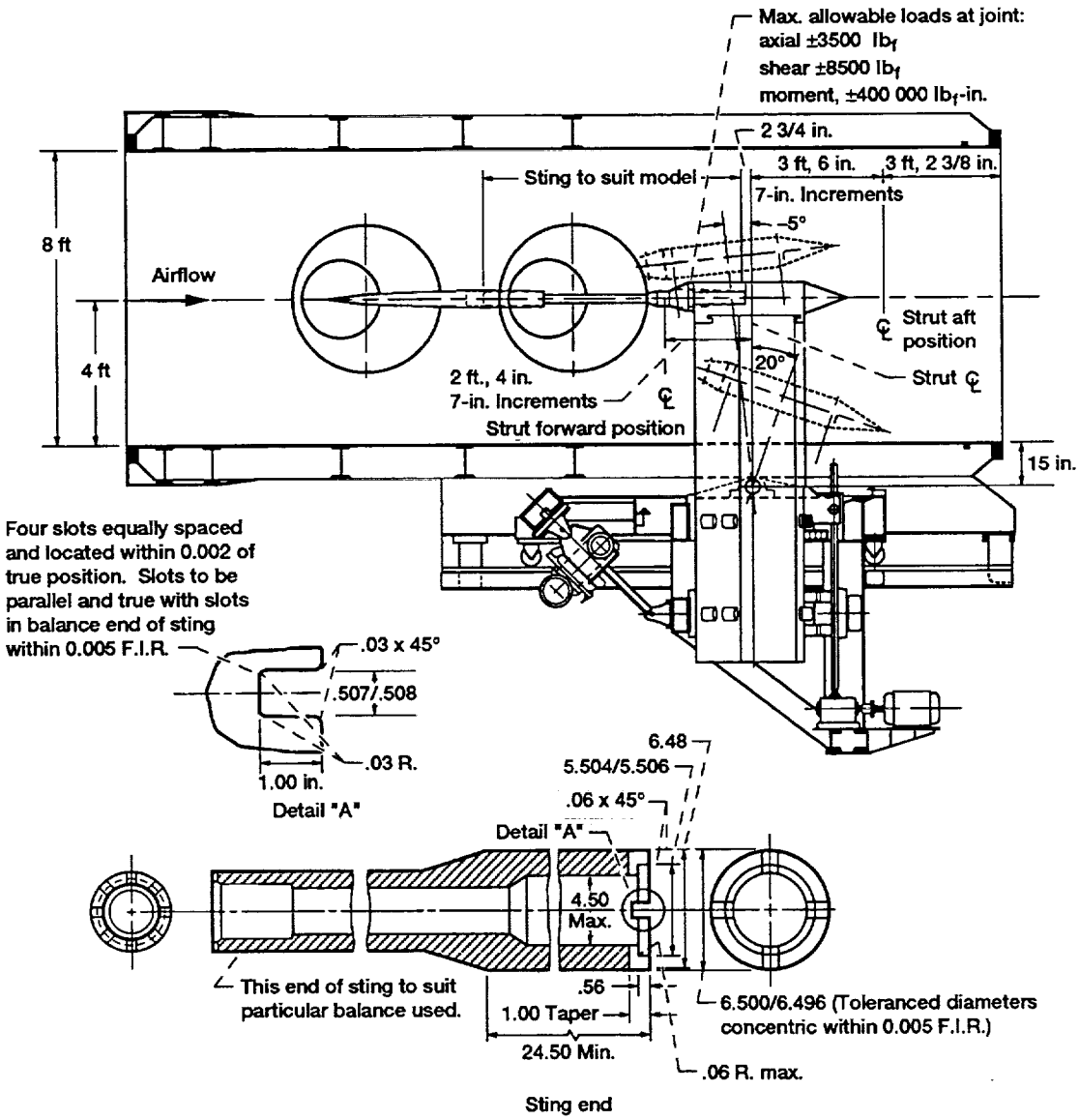

Figure 14.—Supersonic strut for sting-mounted models.

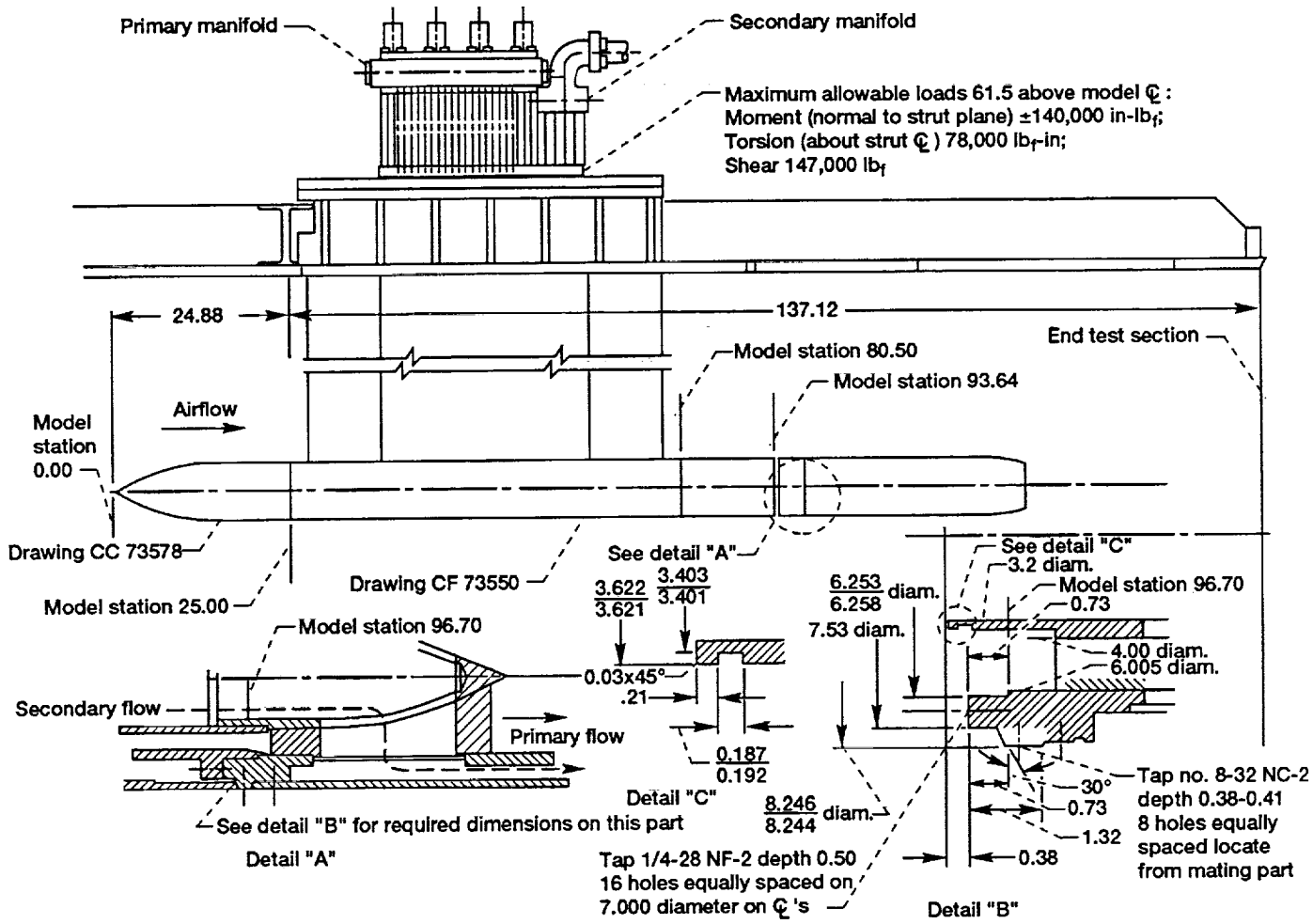

Figure 15.—8-1/2 inch jet exit model. Dimensions in inches unless otherwise noted.

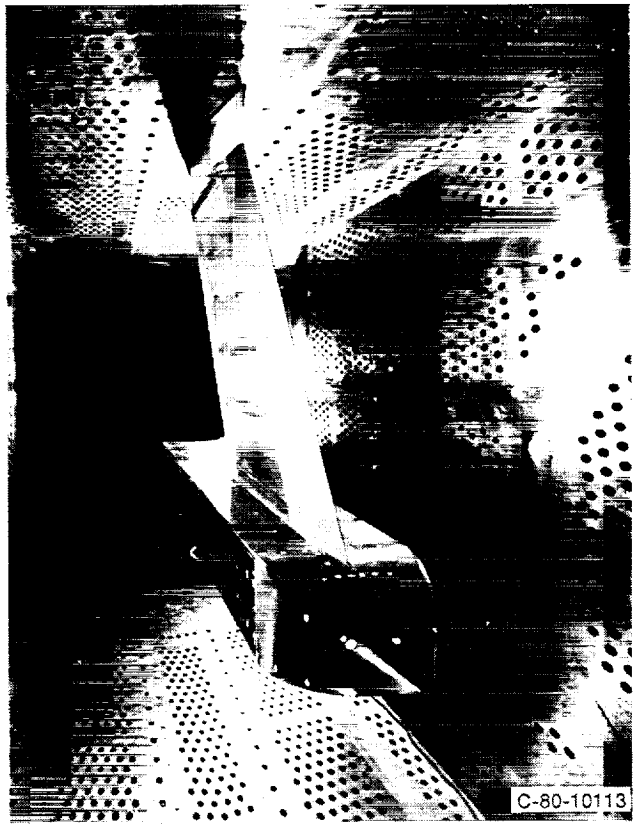

Figure 16.—Jet exit rig installed in the 8 by 6 test section.

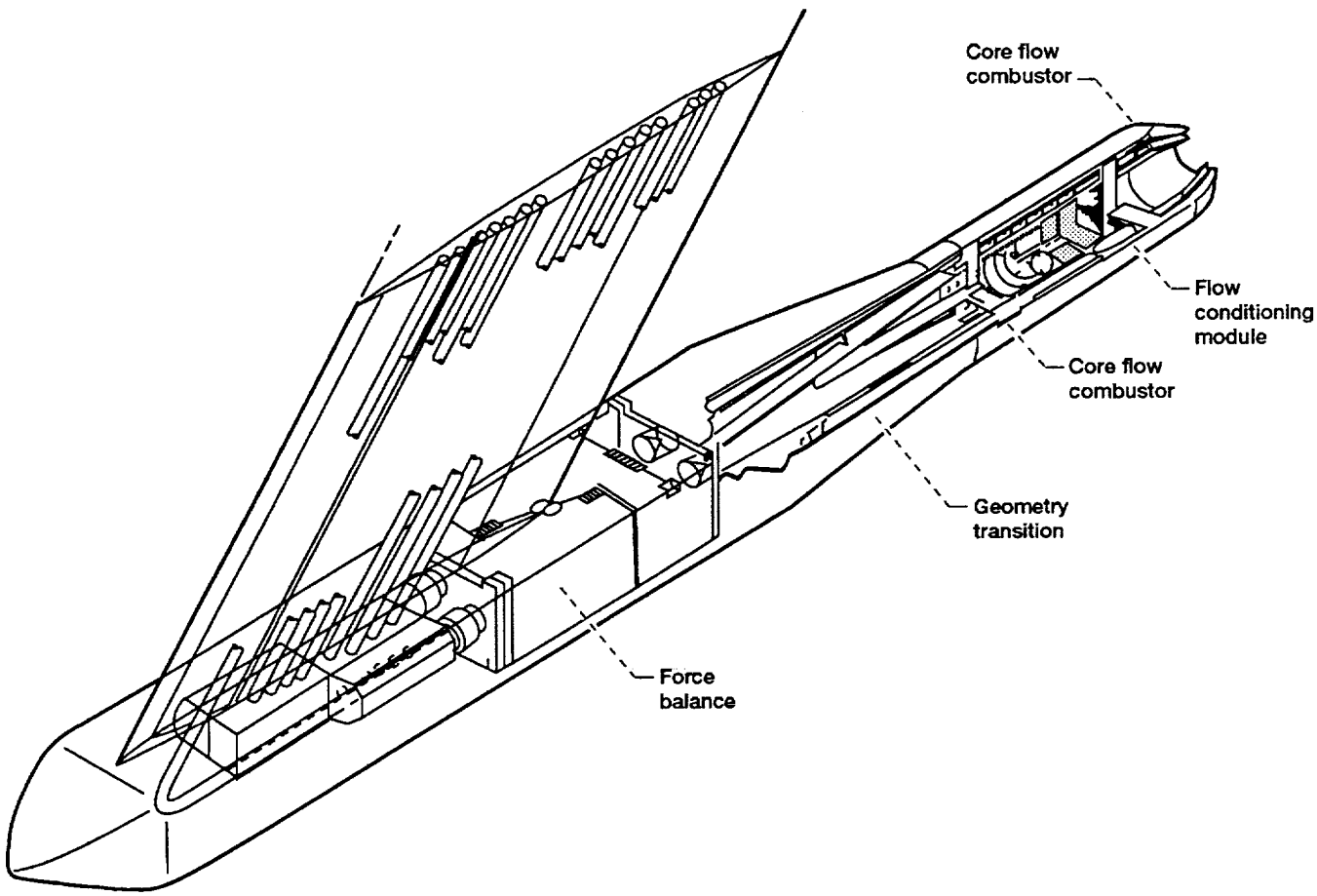

Figure 17.— Jet exit rig for rectangular or co-angular axisymmetric model geometrics.

ORIGINAL PAGE
BLACK AND WHITE PHOTOGRAPH

Figure 18.—Wall-mounted model.

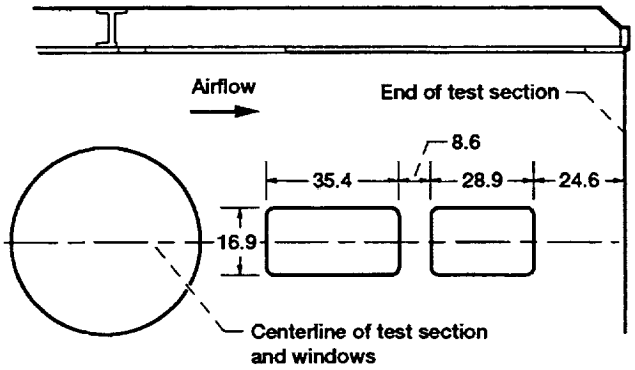

Figure 19.—Photographic window assemblies. All dimensions are in inches.

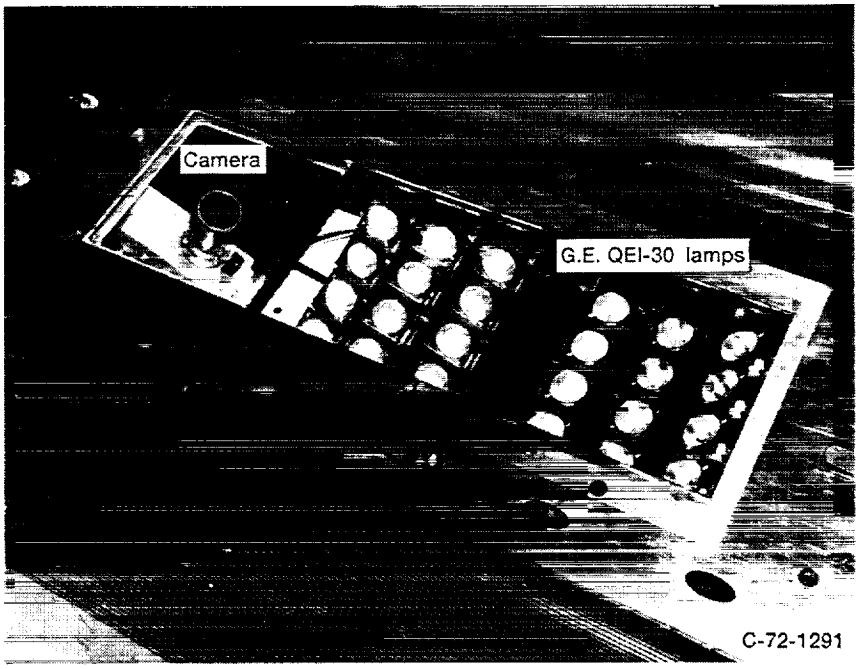

Figure 20.—Floor mounted camera and light system.

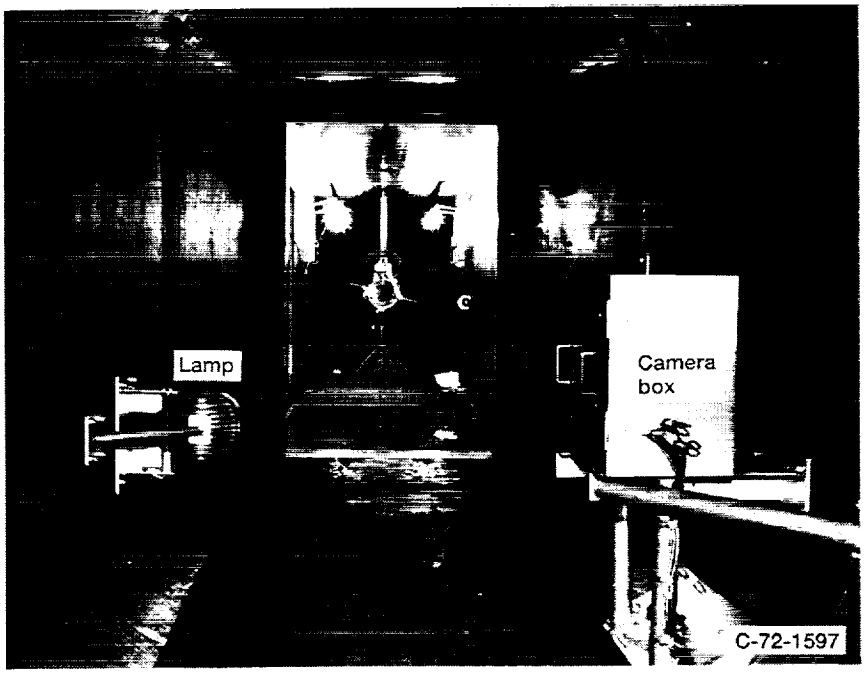

Figure 21.—Downstream camera and light system.

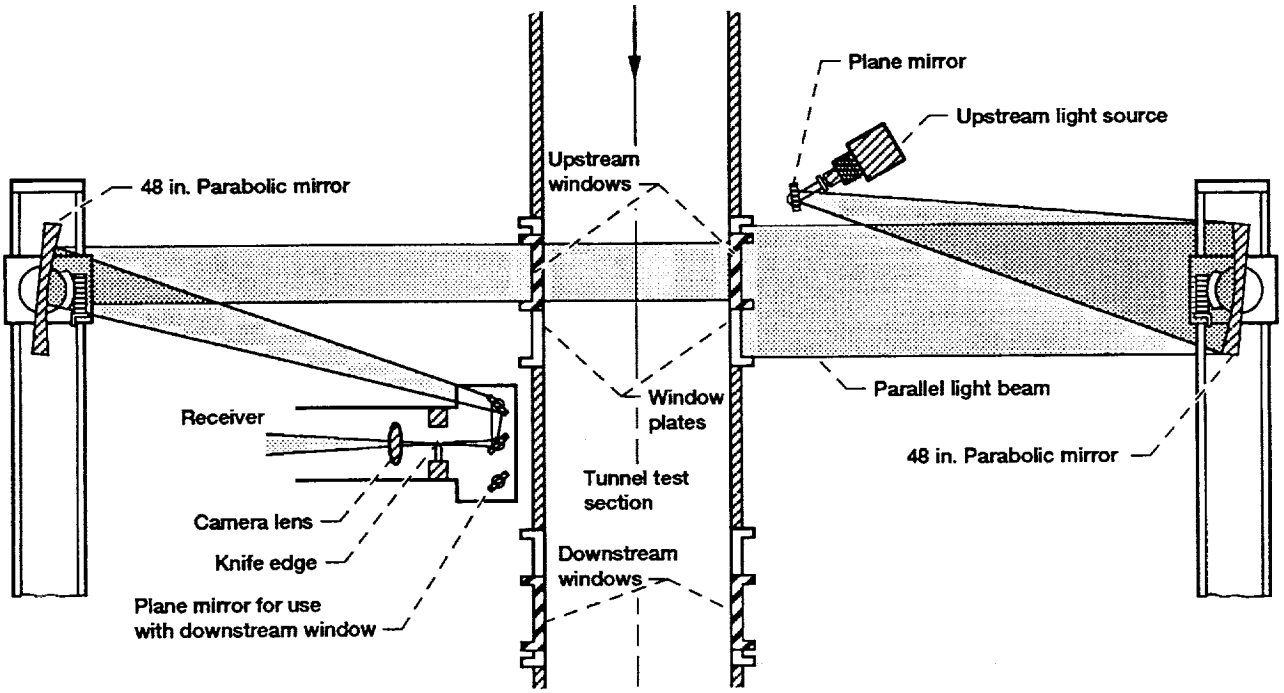

Plan view of Schlieren viewing system

Figure 22.—Supersonic Schlieren.

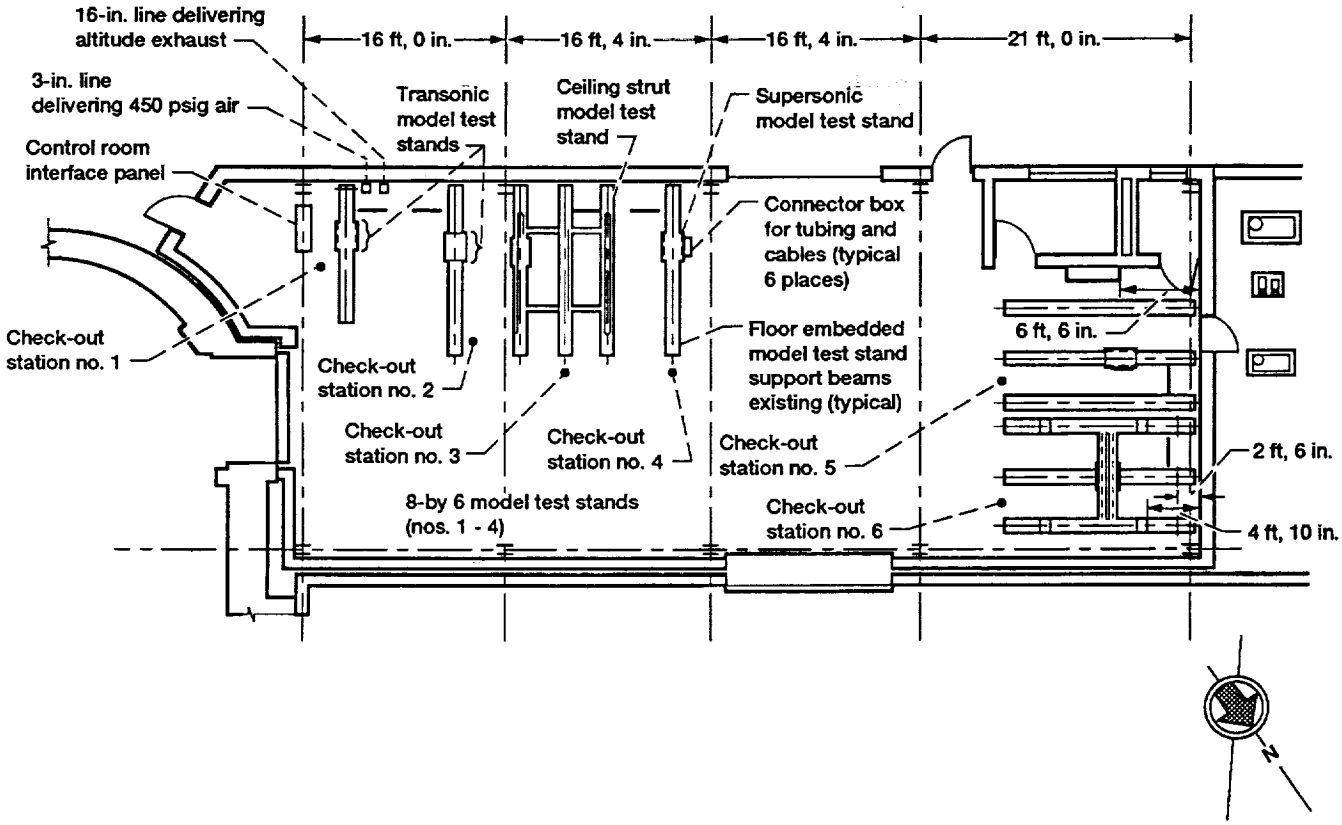

Figure 23.—Model preparation building (floor plan).

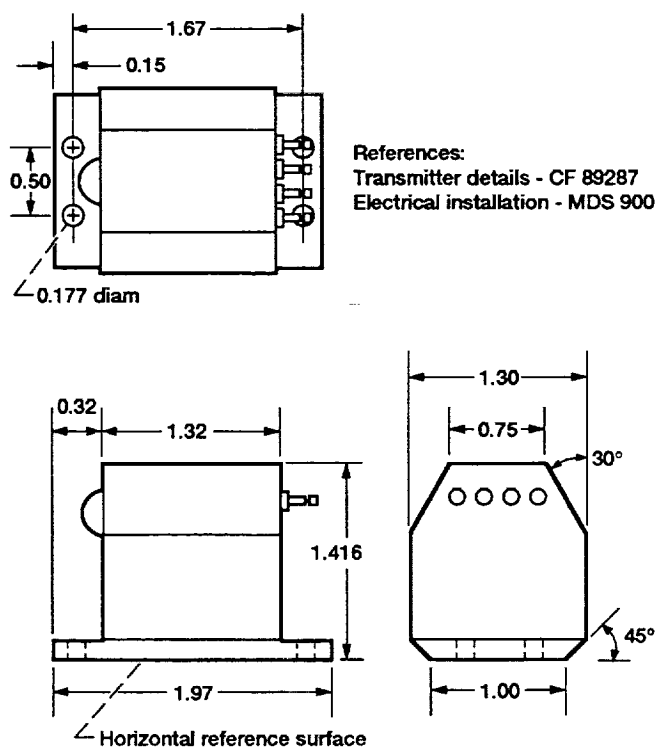

Figure 24.—Angle-of-attack transmitter. Dimensions are in inches.

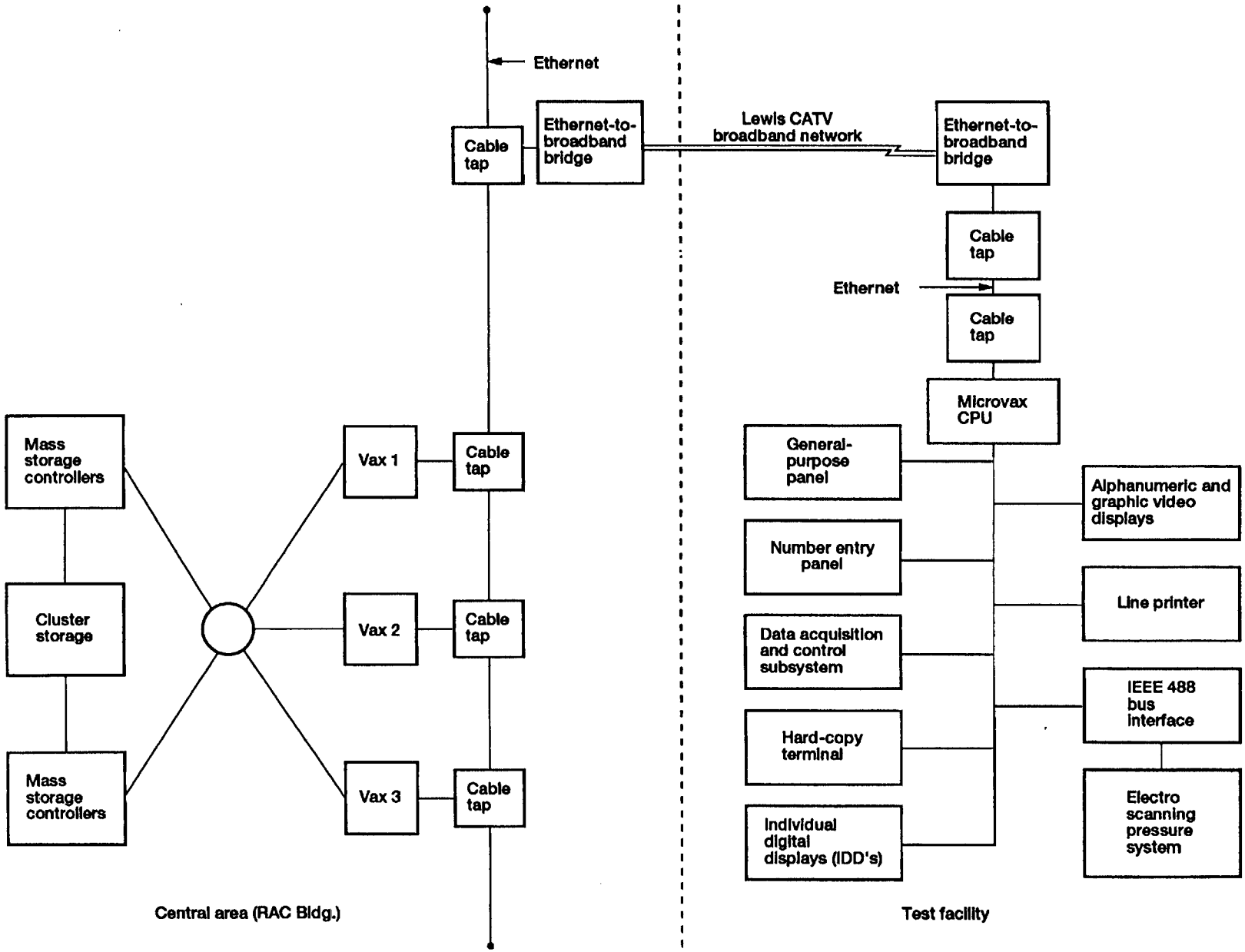

Figure 25. - Overall configuration for Escort D Plus system.

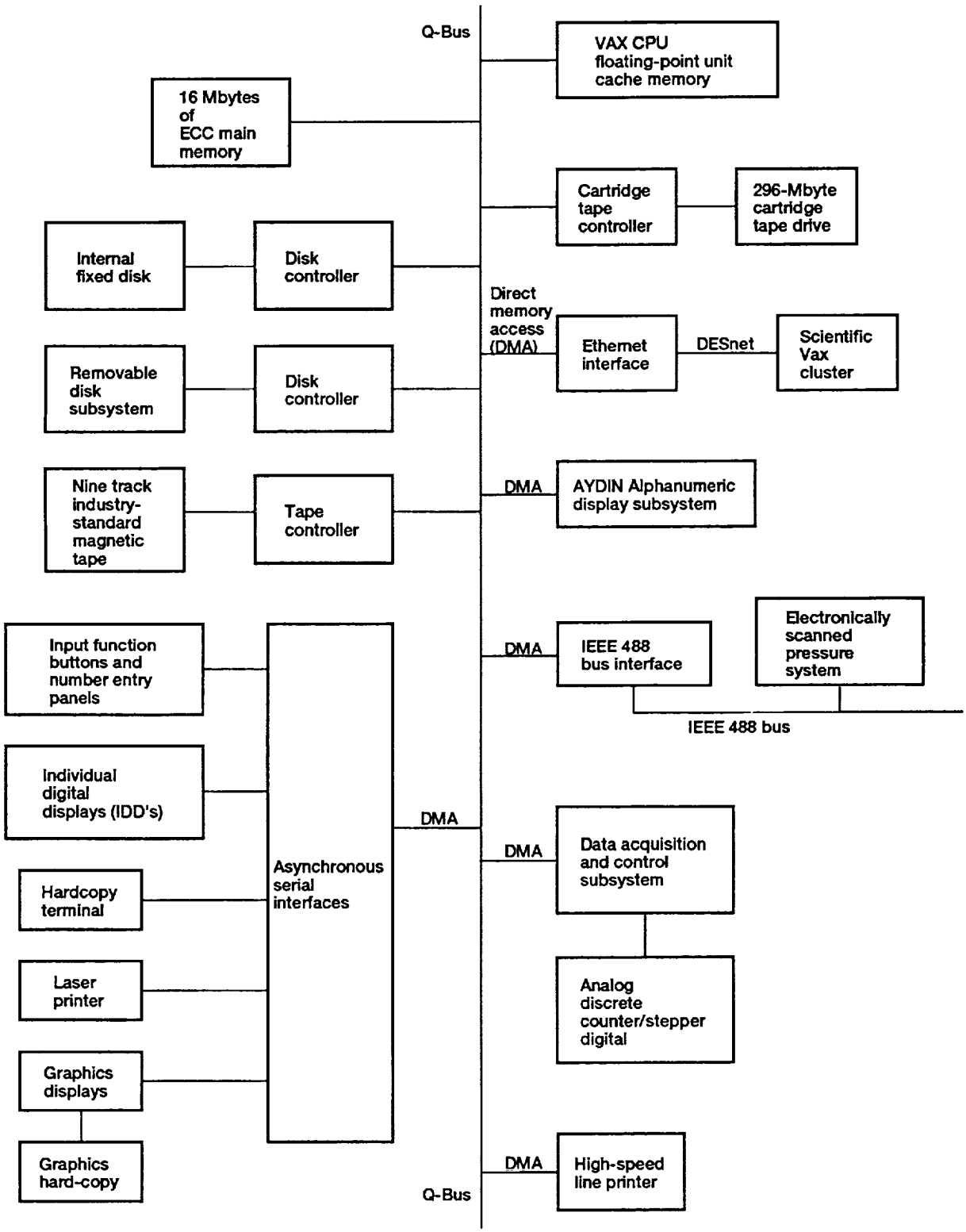

Figure 26.—Facility computer configuration.

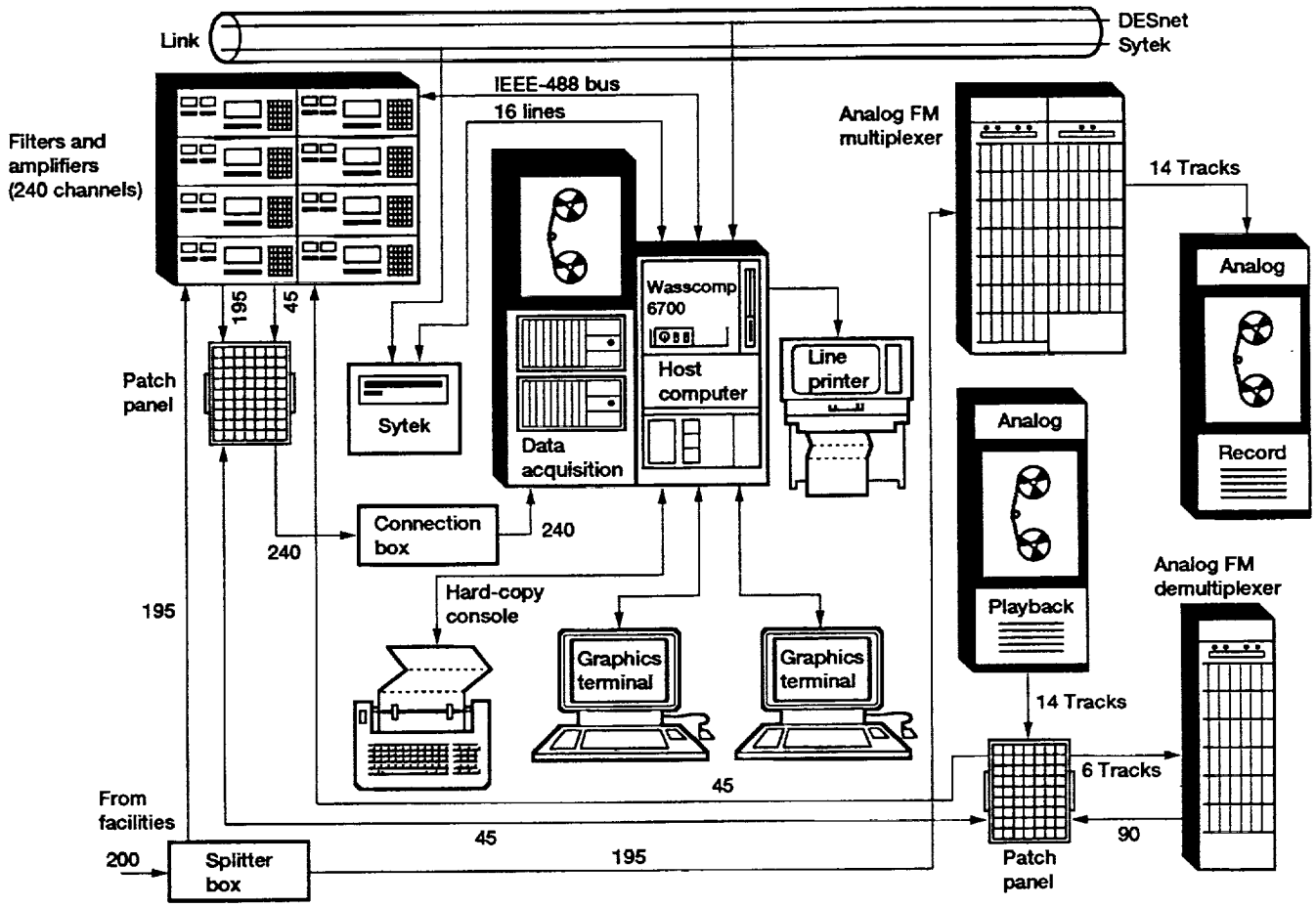

Figure 27.—TRADAR-3 and central analog dynamic data systems.

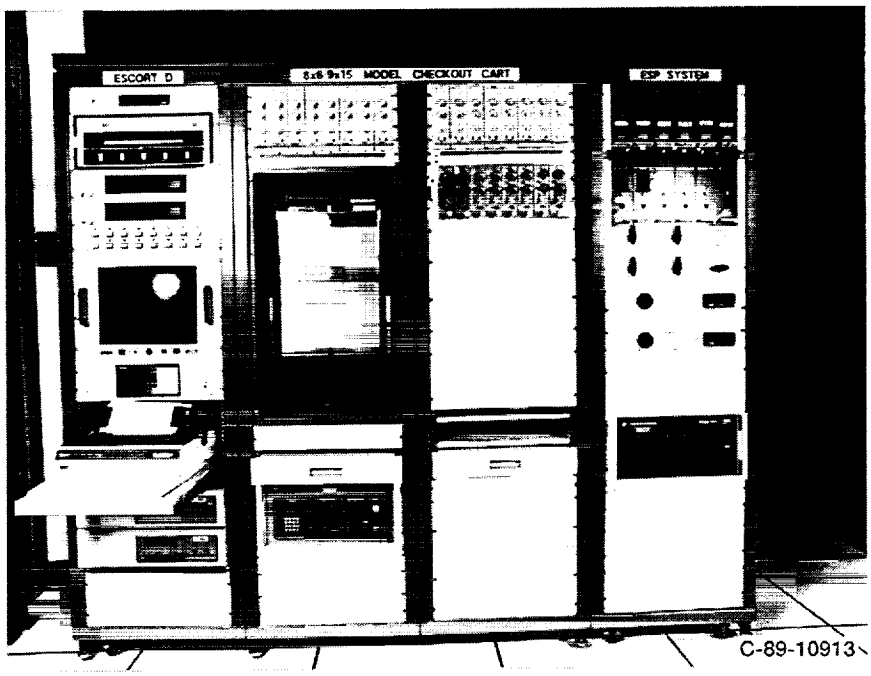

Figure 28.—Model checkout cart.

REPORT DOCUMENTATION PAGE

Form Approved
OMB No. 0704-0188

Public reporting burden for this collection of information is estimated to average 1 hour per response, including the time for reviewing instructions, searching existing data sources, gathering and maintaining the data needed, and completing and reviewing the collection of information. Send comments regarding this burden estimate or any other aspect of this collection of information, including suggestions for reducing this burden, to Washington Headquarters Services, Directorate for information Operations and Reports, 1215 Jefferson Davis Highway, Suite 1204, Arlington, VA 22202-4302, and to the Office of Management and Budget, Paperwork Reduction Project (0704-0188), Washington, DC 20503.

1. AGENCY USE ONLY (*Leave blank*)

2. REPORT DATE
February 1993

3. REPORT TYPE AND DATES COVERED
Technical Memorandum

4. TITLE AND SUBTITLE
NASA Lewis 8- By 6-Foot Supersonic Wind Tunnel User Manual

5. FUNDING NUMBERS
WU-505-62-84

6. AUTHOR(S)
Ronald H. Soeder

7. PERFORMING ORGANIZATION NAME(S) AND ADDRESS(ES)
National Aeronautics and Space Administration
Lewis Research Center
Cleveland, Ohio 44135-3191

8. PERFORMING ORGANIZATION REPORT NUMBER
E-7196

9. SPONSORING/MONITORING AGENCY NAMES(S) AND ADDRESS(ES)
National Aeronautics and Space Administration
Washington, D.C. 20546-0001

10. SPONSORING/MONITORING AGENCY REPORT NUMBER
NASA TM-105771

11. SUPPLEMENTARY NOTES
Responsible person, Ronald H. Soeder, (216) 433-5713.

12a. DISTRIBUTION/AVAILABILITY STATEMENT
Unclassified - Unlimited
Subject Category 09

12b. DISTRIBUTION CODE

13. ABSTRACT ***(Maximum 200 words)***

The 8- by 6-Foot Supersonic Wind Tunnel (SWT) at Lewis Research Center is available for use by qualified researchers. This manual contains tunnel performance maps which show the range of total temperature, total pressure, static pressure, dynamic pressure, altitude, Reynolds number, and mass flow as a function of test section Mach number. These maps are applicable for both the aerodynamic and propulsion cycle. The 8- by 6-Foot Supersonic Wind Tunnel is an atmospheric facility with a test section Mach number range from 0.36 to 2.0. General support systems (air systems, hydraulic system, hydrogen system, infrared system, laser system, laser sheet system, and schlieren system are also described as are instrumentation and data processing and acquisition systems. Pretest meeting formats are outlined. Tunnel user responsibility and personal safety requirements are also stated.

14. SUBJECT TERMS
Supersonic wind tunnel; Transonic wind tunnel

15. NUMBER OF PAGES
52

16. PRICE CODE
A04

17. SECURITY CLASSIFICATION OF REPORT
Unclassified

18. SECURITY CLASSIFICATION OF THIS PAGE
Unclassified

19. SECURITY CLASSIFICATION OF ABSTRACT
Unclassified

20. LIMITATION OF ABSTRACT