GENCORP
AEROJET

STBE Thrust Chamber Technology Large Scale Injector

Contract NAS 8-37470
Final Report
February 1993

Prepared for:
National Aeronautics and Space Administration
George C. Marshall Space Flight Center
Marshall Space Flight Center, AL 38512

(NASA-CR-192531) SPACE TRANSPORTATION BOOSTER ENGINE THRUST CHAMBER TECHNOLOGY, LARGE SCALE INJECTOR Final Report (GenCorp Aerojet) 456 p

N93-26557

Unclas

G3/20 0166357

Propulsion Division

February 1993

ORIGINAL CONTAINS
COLOR ILLUSTRATIONS

Space Transportation Booster Engine Thrust Chamber Technology, Large Scale Injector

Contract NAS 8-37470

Final Report

ORIGINAL CONTAINS
COLOR ILLUSTRATIONS

Prepared For

NASA/George C. Marshall Space Flight Center
Huntsville, Alabama 35812

Prepared By:

J.A. Schneider
Project Engineer

Approved By:

C. Faulkner
Program Manager

Aerojet Propulsion Division
P.O. Box 13222
Sacramento, California 95813

RPT/D0023.8-FM

TABLE OF CONTENTS

	Page
1.0 Introduction	1
1.1 Summary	1
1.2 Background	2
1.2.1 Programmatic	2
1.2.2 Technical	3
2.0 Scope of Work	4
2.1 Specific Tasks	4
3.0 Full Scale Injector	6
3.1 Background	6
3.2 Detail Design	7
3.2.1 Overall Assembly	7
3.2.2 Supporting Thermal and Structural Analysis	10
3.3 Major Subassemblies	11
3.3.1 Spacer and Thrust Mount	11
3.3.2 Oxidizer Cover Assembly and Oxidizer Distribution Plate	11
3.3.3 Fuel Manifold	12
3.3.4 Injector Body Assembly	13
3.3.4.1 Face Plate Assembly	14
3.3.4.2 Baffle Assembly (Optional)	15
3.3.4.3 Fuel Distribution Plate	15
3.3.4.4 Bomb Assembly	16
3.3.5 Igniter	16
3.3.6 Instrumentation	17
3.4 Cleaning and Final Assembly	17
3.5 Injector Hardware Delivery	18
3.6 Test Recommendations	18
3.7 Pretest Predictions	19
3.7.1 Combustion Chamber Heat Transfer	19
3.7.2 Performance	20

TABLE OF CONTENTS (CONT.)

	Page
3.7.3 Combustion Stability	21
3.7.3.1 Low Frequency Combustion Stability	21
3.7.3.2 High Frequency Combustion Stability	22
4.0 Subscale Hardware	24
4.1 Introduction	24
4.2 2D Subscale Hardware Detail Design	25
4.2.1 Supporting Analysis	27
4.2.2 Major Subassemblies	27
4.2.2.1 Oxidizer Dome	27
4.2.2.2 Fuel Manifold/Injector Body	28
4.2.2.2.1 Fuel Distribution Plate	28
4.2.2.2.2 Face Plate/Baffle Assembly	28
4.2.2.3 Chamber Assembly	29
4.2.2.4 Igniter	29
4.2.2.5 Bomb Assembly	30
4.2.2.6 Instrumentation	30
4.2.2.7 Recommended Test Matrix	30
4.3 3D (100K) Reduced Size Injector Detail Design	30
4.3.1 Overall Assembly	30
4.3.2 Supporting Thermal and Structural Analysis	32
4.3.3 Major Subassemblies	33
4.3.3.1 Oxidizer Inlet	33
4.3.3.2 Injector Body/Fuel Manifold	33
4.3.3.2.1 Fuel Distribution Plate	34
4.3.3.2.2 Face Plate Assembly	35
4.3.3.2.3 Fuel Film Coolant (FFC)	35
4.3.3.3 Resonator Ring	36
4.3.3.4 Combustion Chamber	37
4.3.3.5 Igniter	37
4.3.3.6 Bomb Assembly	37
4.3.3.7 Instrumentation	38
4.3.3.8 Cleaning and Final Assembly	39

TABLE OF CONTENTS (CONT.)

	Page
4.4 Subscale Testing	39
4.4.1 40K Injector Testing at NASA-MSFC	39
4.4.2 3D (100K lbf) Testing at APD	41
4.4.2.1 APD's Test Area Description	41
4.4.2.2 Start Sequence	42
4.4.2.3 Test Matrix	42
4.4.2.4 Test Description	43
4.4.2.4.1 Test Series 0	43
4.4.2.4.2 Test Series 1	43
4.4.2.4.3 Test Series 2	45
4.4.2.5 Investigation of Test 019	45
4.4.2.6 Injector Rework	47
4.4.4 Data Evaluation	48
4.4.4.1 Combustion Stability	48
4.4.4.1.1 Statistical (Operating) High Frequency Stability	48
4.4.4.1.2 Dynamic (Bomb) High Frequency Stability	49
4.4.4.1.3 Low Frequency Stability	50
4.4.4.2 Combustion Performance	51
5.0 Conclusions and Recommendations	54
5.1 Conclusions	54
5.2 Recommendations	55

TABLE LIST

Table		Page
3-1	LSI Flow Split and Mixture Ratio Comparison for LOX/H_2	60
3-2	LOX/H_2 LSI Operating Range Will Cover ALS Baseline Conditions	61
3-3	Full Scale LSI Port Numbers	62
3-4	LSI Swirl Coax Element Design Features	63
3-5	Component Materials	64
3-6	LSI Component Structural Analysis	65
3-7	Chilldown Transient Results After 5 Seconds	65
3-8	Design Criteria Factors of Safety	66
3-9	LSI Component Structural Analysis Summary	67

TABLE LIST (CONT.)

Table		Page
3-10	Injector Hydraulic Schedule (at Nominal Design Point)	68
3-11	Injector Face Cooling Modifications	69
3-12	A Two-Fin Model Was Used to Analyze the Igniter Tip	69
3-13	LSI Igniter Tip Analysis	70
3-14	APD LSI FS Instrumentation	71
3-15	APD LSI FS Hardware	72
3-16	APD LSI FS Igniter TEA/TEB Conditions (Based on Initial Flow Low Level LOX Flow)	73
3-17	APD LSI FS Injector CDA Values (Scaled From Subscale Flow Data)	74
3-18	APD LSI Full Scale Testing GN_2 Purge Levels	74
3-19	APD LSI FS LOX Circuit	75
3-20	APD LSI FS Hydrogen Fuel Circuit	75
3-21	LSI Fullscale Injector Fuel Flow Splits	76
4-1	Comparison of Operating Conditions	77
4-2	Design Requirements	78
4-3	Maximum Expected Operating Pressures	79
4-4	Loads and Environment	80
4-5	2D Subscale Maximum Gap at Seal	81
4-6	Summary of Minimum Margins of Safety for 2D Subscale Injector and Chamber	82
4-7	Summary of Cycle Life Predictions	85
4-8	2D Subscale Drawing Numbers	86
4-9	2D Subscale Instrumentation	87
4-10	Loads and Environment	88
4-11	Loads and Environment	88
4-12	Summary of Minimum Margins of Safety for 3D Subscale Injector	89
4-13	3D Subscale Injector Components	92
4-14	Resonator Ring Operating Characteristics With 160 R Hydrogen	93
4-15	Bomb Assembly Components	93
4-16	3D Subscale Instrumentation	94
4-17	Test Conditions and Results	95
4-18	Igniter Operating Conditions	96
4-19	Test Kill Parameters and Limits	97
4-20	Subscale Testing Hardware Configuration	98

TABLE LIST (CONT.)

Table		Page
4-21	LSI Subscale Injector Test Matrix	99
4-22	Test 019 Anomaly Sequence	100
4-23	Recommended Changes to LSI Test Procedure	101
4-24	LSI 3D Subscale Ablative Test Summary	102
4-25	LSI 3D Subscale Injector Pressure Drop Appropriations	103
4-26	Acoustic Resonator Thermal Measurements and Calculations	104
4-27	Combustion and Manifold Oscillation Frequencies Identified in PSD	105
4-28	All LSI 3D Subscale Tests Have Been Operationally Stable	106
4-29	All Responses to Perturbations Were Stable	107

FIGURE LIST

Figure		Page
1-1	Newly Constructed NASA/MSFC Test Stand 116 750K Position With Aerojet Injector and Rocketdyne Chamber	108
2-1	STBE Injector Technology Intermediate Schedule	109
3-1	ALS ADP TCA Full Scale Injector	110
3-2	Large Scale Injector - Side View	111
3-3	Large Scale Injector - End View	112
3-4	Stand Interfaces - Test Stand 116 South Elevation	113
3-5	Stand Interfaces - Test Stand 116 East Elevation	114
3-6	Rocketdyne LSI Instrumentation Ring Schematic	115
3-7	Fuel and Oxidizer Circuits	116
3-8	Fuel Manifold Can Be Modified to Include Acoustic Resonator Cavity	117
3-9	Injector Assembly Sequence	118
3-10	Fuel Film Cooling Injection Method is Applicable to Baseline Design As Well as Design With Cavities	119
3-11	Full Scale Injector Face Pattern	120
3-12	Injector Assembly-Finite Element Model	121
3-13	Injector Assembly-Proof and Leak Test	122
3-14	Propellant Line Allowable Diagrams	123
3-15	Facility Load Limits	124
3-16	LSI Thruster Assembly (PN 1206466)	125
3-17	Thrust Mount Assembly (PN 1206467)	126
3-18	Spacer	127

FIGURE LIST (CONT.)

Figure		Page
3-19	Oxidizer Inlet Assembly	128
3-20	1206469 - Oxidizer Cover Assembly Fabrication Flow Plan	129
3-21	Oxidizer Manifold Housing Prior to Final Inlet Weld (PN 1206469-1)	133
3-22	Oxidizer Distribution Plate Prior to Final Machining (PN 1206470-9)	134
3-23	Interior of Ox Dome	135
3-24	Welded Oxidizer Manifold Assembly	136
3-25	Tooling of the Oxidizer Dome for a High Pressure Proof Check	137
3-26	Oxidizer Manifold Assembly - Proof and Leak Test	138
3-27	Fuel Inlet Manifold Assembly	139
3-28	1206486 - Fuel Inlet Manifold Assembly Fabrication Flow Plan	140
3-29	Outer Ring Fuel Manifold	144
3-30	Inner Ring - Fuel Manifold	145
3-31	Two Piece Flow Splitter	146
3-32	Inlet Flow Diverter	147
3-33	Welded Fuel Manifold Prior to Proof Check	148
3-34	Fuel Manifold-Injector Interface	149
3-35	Fuel Manifold-Chamber Interface	150
3-36	Injector Body Assembly	151
3-37	Injector Body, First Machine (PN 1206491-1) Fabrication Flow Logic	152
3-38	1206489 - Injector (Braze) Subassembly Fabrication Flow Plan	153
3-39	Completed Injector Body - 1st Machined	155
3-40	Assembly of Oxidizer Posts and Bomb Tubes	156
3-41	Closeup of Oxidizer Post Installation	157
3-42	Installation of Oxidizer Posts Prior to Brazine	158
3-43	Injector Installed in Vacuum Furnace	159
3-44	LSI APDR Injector Braze Leak Tests	160
3-45	Final Machining of Injector Braze Assy	161
3-46	Injector Element Components	162
3-47	Oxidizer Circuit Assembly Sequence	163
3-48	Installation of Oxidizer Swirler Inserts	164
3-49	Assembly of Fuel Circuit - Part 1	165
3-50	Assembly of Fuel Distribution Plate	166
3-51	Installation of Couplers	167

FIGURE LIST (CONT.)

Figure		Page
3-52	Assembly of Fuel Circuit - Part II	168
3-53	Final Torquing of Face Nuts	169
3-54	Completed Injector Body Assembly	170
3-55	LSI APDR Faceplate Assembly	171
3-56	Face Plate/Ring Assembly	172
3-57	Regeneratively Cooled Faceplate	173
3-58	Fixturing of Face Platelet Stock in RAM Loaded Vacuum Furnace	174
3-59	As-Bonded Face Platelet Assembly	175
3-60	Face Platelet Assembly Loaded on HIP Furnace	176
3-61	ZrCu Platelet Modifications	177
3-62	ZrCu Platelet-1 Modifications	178
3-63	Full Scale Injector Face Pattern	179
3-64	Baffle (Optional)	180
3-65	Fuel Distribution Plate	181
3-66	Rocketdyne Bomb Design	182
3-67	Face Bomb Locations	183
3-68	Bomb Port	184
3-69	Cooled Face Nut	185
3-70	Deformed Bomb Port	186
3-71	Igniter	187
3-72	Igniter Adapter	188
3-73	Side View - Thruster Assembly (1206466) Instrumentation Location	189
3-74	AS 4119 Pressure Transducer Adapter	190
3-75	Forward View - Thrust Assembly (1206466) Instrumentation Location	191
3-76	Oxidizer Manifold - Injector Core Instrumentation	192
3-77	Fuel Manifold, Instrumentation	193
3-78	APD Pre-Chilling of Hardware Thrust Mount Precautions (PN 1206467)	194
3-79	Instrumentation Ring Transducer Locations	195
3-80	Static PC Face Plug	196
3-81	Assembly Sequence for Thruster Assembly (PN 1206466)	197
3-82	Fuel Manifold Prior to Final Assembly	198
3-83	Assembly of Injector Assembly Into Fuel Manifold	199
3-84	Injector/Fuel Manifold Assembly Prior to Oxidizer Cover Attachment	200

FIGURE LIST (CONT.)

Figure		Page
3-85	Assembly 1206466 - Tool for Cleaning: Fuel and Oxidizer Circuits Back Flush Fuel	201
3-86	Completed Thruster Assembly Prior to Shipping to NASA-MSFC	202
3-87	Shipping Crates for LSI Hardware	203
3-88	Top View of Shipping Crate With Thruster Assembly	204
3-89	Cross Section View of Shipping Crate With Thruster Assembly	205
3-90	ADP Maximum Predicted Heat Flux With LSI Injector	206
3-91	Hot Gas Wall Temperature Profiles (for RD Chamber)	207
3-92	LSI Fullscale Injector Analyses Performance - Low Pc* = 1750 psia, O/F = 6.20	208
3-93	LSI Fullscale Injector Analyses Performance - Low Pc* = 1750 psia, O/F = 6.20	209
3-94	LSI Fullscale Injector Analyses Performance - Low Pc* = 1750 psia, O/F = 6.20	210
3-95	LSI Fullscale Injector Analyses Performance - Nominal Pc* = 2250 psia, O/F = 7.10	211
3-96	LSI Fullscale Injector Analyses Performance - Nominal Pc* = 2250 psia, O/F = 7.10	212
3-97	LSI Fullscale Injector Analyses Performance - Nominal Pc* = 2250 psia, O/F = 7.10	213
3-98	LSI Fullscale Injector Analyses Chamber Pressure Versus Mixture Ratio - Chug Prediction	214
3-99	LSI Fullscale Injector Analyses High Frequency Stability - Low Pc* = 1750 psia, F/F = 6.20	215
3-100	LSI Fullscale Injector Analyses High Frequency Stability - Low Pc* = 1750 psia, F/F = 6.20	216
3-101	LSI Fullscale Injector Analyses High Frequency Stability - Low Pc* = 1750 psia, F/F = 6.20	217
3-102	LSI Fullscale Injector Analyses High Frequency Stability - Low Pc* = 1750 psia, F/F = 6.20	218
3-103	LSI Fullscale Injector Analyses High Frequency Stability - Low Pc* = 1750 psia, F/F = 6.20	219
3-104	LSI Fullscale Injector Analyses High Frequency Stability - Low Pc* = 1750 psia, F/F = 6.20	220
3-105	LSI Fullscale Injector Analyses High Frequency Stability - Nominal Pc* = 2250 psia, F/F = 7.10	221
3-106	LSI Fullscale Injector Analyses High Frequency Stability - Nominal Pc* = 2250 psia, F/F = 7.10	222
3-107	LSI Fullscale Injector Analyses High Frequency Stability -	223

FIGURE LIST (CONT.)

Figure		Page
	Nominal Pc* = 2250 psia, F/F = 7.10	
3-108	LSI Fullscale Injector Analyses High Frequency Stability - Nominal Pc* = 2250 psia, F/F = 7.10	224
3-109	LSI Fullscale Injector Analyses High Frequency Stability - Nominal Pc* = 2250 psia, F/F = 7.10	225
3-110	LSI Fullscale Injector Analyses High Frequency Stability - Nominal Pc* = 2250 psia, F/F = 7.10	226
3-111	LSI Fullscale Injector Analyses High Frequency Stability - Nominal Pc* = 2250 psia, F/F = 7.10	227
3-112	LSI Fullscale Injector Analyses High Frequency Stability - Nominal Pc* = 2250 psia, F/F = 7.10	228
4-1	Examples of Baffled Thrust Chambers	229
4-2	Stability Measurements Key to Scaling	230
4-3	2D Subscale Assembly	231
4-4	2D Subscale Injector Assembly	232
4-5	2D Chamber Assembly	233
4-6	Flow Passage and Component Summary	234
4-7	2D Injector Element Configuration With Baffle Assembly	235
4-8	Oxidizer Dome PN 1204151	236
4-9	Injector Proof Plate/Cover Plate	237
4-10	Fuel Body	238
4-11	Injector Body	239
4-12	Seal Groove Design	240
4-13	Face Plate	241
4-14	2D Baffle Verifies Full Scale Design	242
4-15	Minimal Handling Increases Thermocouple Reliability	243
4-16	Baffle Thermocouples Provide Thermal Profile	244
4-17	2D Ablative Liner	245
4-18	2D Shell	246
4-19	2D Retainer Plate	247
4-20	Resonator Tuning Blocks Accommodate Variable Wall Gap	248
4-21	2D Resonator Tuning Blocks	249
4-22	Liner and Shell Assembly Procedures	250
4-23	2D Igniter	251
4-24	2D Bomb	252

FIGURE LIST (CONT.)

Figure		Page
4-25	2D Chamber Instrumentation	253
4-26	Proposed LSI 2D Subscale Test Matrix	254
4-27	Completed LSI Subscale Hardware and Design Team	255
4-28	Aerojet Supplied Chambers Ensure a Complete Hot Fire Data Base	256
4-29	3D Hardware Configurations	257
4-30	Flow Circuit Schematic of the LSI 3D Subscale Injector	258
4-31	Swirl Coaxial Element Components	259
4-32	Pressure Loading for Revision C Model	260
4-33	3D Subscale - Location of Items Covered in Summary	261
4-34	3D Subscale Injector Assembly (With Cooled Resonator Ring) (PN 1204128	262
4-35	LSI 3D Injector Oxidizer Inlet (Drawing 1204130)	263
4-36	Oxidizer Distribution Plate Assembly Sub-Components	264
4-37	Diffusion Bonded Oxidizer Distribution Plate EB Welded to Oxidizer Inlet	265
4-38	LSI 3D Injector Oxidizer Inlet (Drawing 1204130) Detailed Fabrication Schedule	266
4-39	Completed LSI 3D Injector Oxidizer Inlet (Drawing Number 1204130-9)	267
4-40	LSI 3D Injector Body (Drawing 1204132)	268
4-41	Final Assembly - Drawing 1204132-19 Injector Body	269
4-42	LSI 3D Injector Body (Drawing 1204132) Detailed Fabrication Schedule	270
4-43	LSI 3D Injector Body (Drawing 1204132) Sub-Components	271
4-44	Injector Core Prior to Assembly	272
4-45	Modified Braze Procedure for Oxidizer Injection Posts to Injector Body Assembly (PN 1204132)	273
4-46	Tooling to Position Oxidizer Posts During Braze Operation	274
4-47	Injector Core in Vacuum Furnace	275
4-48	Brazed Oxidizer Core	276
4-49	Top View of Injector Body and Fuel Distribution Plate	277
4-50	Side View of Injector Body, Washer, Fuel Distribution Plate, Retainer Ring, and Coupler	278
4-51	Assembly of Face Plate Ring and Face Nuts	279
4-52	Injector Body - Chamber Side	280
4-53	Injector Body - Oxidizer Inlet Side	281
4-54	Fuel Distribution/Filter Platelets (PN 1204176)	282

FIGURE LIST (CONT.)

Figure		Page
4-55	Fuel Distribution and Filter Plate	283
4-56	Face Plate Assy Prior to Final Weldment to Injector Body	284
4-57	Face Platelet Assembly (PN 1204144) Detailed Fabrication Schedule	285
4-58	Cross Section of Fuel Flow Path for Injector Face Cooling Platelets (Drawing 1204136)	286
4-59	Face Cooling Platelets (PN 1204136)	287
4-60	Fuel Film Cooling Injection Method Utilized on 3D Subscale Design	288
4-61	LSI 3D Injector Resonator Ring (Drawing 1204139)	289
4-62	LSI 3D Injector Resonator Ring (Drawing 1204139) Detailed Fabrication Schedule	290
4-63	Resonator Ring Components	291
4-64	Brazed Resonator Ring	292
4-65	Completed LSI 3D Injector Resonator Ring (Drawing 1204139-9)	293
4-66	Acoustic Cavity Blocks for 3D Hardware	294
4-67	Resonator Ring Plumbing	295
4-68	ADP Ablative Chamber	296
4-69	ADP Ablative Chamber Assembly	297
4-70	Bomb Port Assembly	298
4-71	LSI Injector Instrumentation (PN 1204129-9)	299
4-72	ADP Ablative Chamber Instrumentation (Install w/o Resonator Ring) (PN 1206060)	300
4-73	Shock Tube Response - Model 615M106 Kistler With 0.1 x 0.3 Inch Inlet	301
4-74	LSI 3D Subscale Hardware Assembly	302
4-75	40K lbf Injector Face After Completion of LOX/CH_4 Testing	303
4-76	Comparison of Measured 40K LOX/CH_4 Heat Flux Profile With Predicted Heat Flux From Boundary Layer Model	304
4-77	Comparison of Predicted (Reactive) and Measured Mixture Ratio Trends for LOX/H_2	305
4-78	40K - Heat Flux Comparison	306
4-79	Aerojet 40K LOX/H_2 Testing	307
4-80	40K LOX/Hydrogen Hot Fire Data Heat Flux Versus Momentum Angle	308
4-81	40K LOX/Methane and LOX/Hydrogen Hot Fire Data C-Star Efficiency Versus Chamber Pressure	309
4-82	Swirl Coax Performance is a Function of O/F Momentum Independent of Fuel	310
4-83	Swirl Coax Performance is Not a Strong Function of F/O Velocity Ratio	311

FIGURE LIST (CONT.)

Figure		Page
4-84	Aerojet Test Stand (E-6, E-5, and E-4)	312
4-85	LSI 3D Subscale Injector and ADP Ablative Chamber on Test Stand E-6	313
4-86	LOX Run System	314
4-87	Fuel Run System	315
4-88	LSI Subscale Injector Program Sequence	316
4-89	Chamber Pressure for Two Step (Level I to S.S.) Operation	317
4-90	LSI 100K Subscale Injector Test Program Operating Sequence	318
4-91	Chamber Pressure for Single-Step Operational Sequence	319
4-92	These Subscale Test Recommendations Result in a Minimum of 16 Tests Using Ablative Liners for the Swirl Coaxial Element Subscale Injector	320
4-93	Injector and Chamber Prior to Test	321
4-94	Injector Face Condition, Pretest 004	322
4-95	Ablative Chamber Condition, Pretest 004	323
4-96	Ablation Rate	324
4-97	Injector Condition, Pretest 012	325
4-98	Barrel End of Ablative Chamber, Posttest 013	326
4-99	Staking of Face Nuts Prior to Test Series #2	327
4-100	LSI 3D Subscale Injector Test Valve Signals and Manifold High Frequency Pressures	328
4-101	Fuel Manifold Temperatures	329
4-102	Hardware Condition Posttest 019	330
4-103	Injector Condition, Posttest 019	331
4-104	Ablative Chamber Condition, Posttest 019	332
4-105	LOX Leak Path Into Fuel Manifold	333
4-106	Visual Inspection of Injector	334
4-107	Close Up of Injector Damage	335
4-108	LSI 3D Injector Posttest 019 Condition	336
4-109	Side View of Damaged Oxidizer Injector Posts	337
4-110	LSI 3D Injector Element Posttest 019 Condition	338
4-111	SEM Evaluation of Sample #38	339
4-112	Proposed Failure Mechanism of Oxidizer Post Tip	340
4-113	LSI - 3D Subscale Injector Repair P/N 1204132-19	341
4-114	Repaired Subscale Injector	342

FIGURE LIST (CONT.)

Figure		Page
4-115	LSI 3D Subscale Injector Tests Resonator Cavity Temperature vs Mixture Ratio	343
4-116	Test KEW3-D01-1J-012	344
4-117	Test KEW3-D01-1J-012	345
4-118	Test KEW3-D01-1J-012	346
4-119	Test KEW3-D01-1J-012	347
4-120	Test KEW3-D01-1J-012	348
4-121	Test KEW3-D01-1J-012	349
4-122	Test KEW3-D01-1J-012	350
4-123	Test KEW3-D01-1J-012	351
4-124	Test KEW3-D01-1J-012	352
4-125	Test KEW3-D01-1J-012	353
4-126	Test KEW3-D01-1J-012	354
4-127	Test KEW3-D01-1J-012	355
4-128	LSI 3D Subscale Injector Tests Spectrum Amplitude Versus Chamber Face Pressure	356
4-129	LSI 3D Subscale Injector Tests Spectrum Amplitude Versus Injected O/F Mixture Ratio	357
4-130	LSI 3D Subscale Injector Tests Spectrum Amplitude Versus Oxidizer Circuit Pressure Drop	358
4-131	LSI 3D Subscale Injector Tests Spectrum Amplitude Versus Fuel Circuit Pressure Drop	359
4-132	Test 018 - Combustion Response to Bomb Perturbation Was Stable	360
4-133	Traveling Waves in the Fuel Torus Were Supersonic - Indicating Detonation	361
4-134	LSI 3D Subscale Injector Tests Low Frequency Chug Stability Data and Model Calibration	362
4-135	LSI 3D Subscale Injector Tests Normalized Injector Element Pressure Drop Cross Plot	363
4-136	LSI 3D Subscale Combustion Performance Efficiency Versus Chamber Face Pressure and Injected Mixture Ratio	364
4-137	LSI 3D Subscale Combustion Performance Efficiency Versus Momentum Angle	364

FIGURE LIST (CONT.)

Figure		Page
4-138	40K LOX/Methane and 40K and LSI LOX/Hydrogen data Combustion Performance Efficiency Versus Momentum Angle	365
4-139	40K LOX/Methane and 40K and LSI LOX/Hydrogen Data Combustion Performance Efficiency Versus F/O Velocity Ratio	366
5-1	Injector Development Logic Diagram	367

APPENDICES

Appendix		
A	Design Methodology	368
B	21 in. Diameter Full Scale Injector Drawings	377

LIST OF ABBREVIATIONS

ADP	Advanced Development Program
APD	Aerojet Propulsion Division
ALS	Advanced Launch System
C*	Characteristic Exhaust Velocity (CSTAR)
CH_4	Methane
CFD	Computational Fluid Dynamics
DP	Delta Pressure
EBW	Electron Beam Weld
EDM	Electron Discharge Machining
ERE	Energy Release Efficiency
FFC	Fuel Film Cooling
FS	Full Scale
GN_2	Gaseous Nitrogen
H_2	Hydrogen
HIP	Hot Isostatic Press
Hz	Hertz
ICD	Interface Control Document
IR&D	Internal Research and Development
Kw	Hydraulic Emittance $\left(\dot{\omega}/\sqrt{\Delta P}\right)$
K	kilo, 1000 times
LO_2	Liquid Oxygen
LOX	Liquid Oxygen
LSI	Large Scale Injector
PC	Chamber Pressure
P&W	Pratt & Whitney
MR	Mixture Ratio
NLS	National Launch System, follow on to ALS
OFHC Cu	Oxygen Free High Conductivity Copper
RD	Rocketdyne
PSD	Power Spectral Density
psia	Pressure = Pounds per Square Inch, Absolute
psid	Pressure = Pounds per Square Inch, Differential
psig	Pressure = Pounds per Square Inch, Gauge
ROCCID	Rocket Combustor Interactive Design

LIST OF ABBREVIATIONS (CONT.)

STAS	Space Transportation Architecture Study
STBE	Space Transportation Booster Engine
STME	Space Transportation Main Engine
SSME	Space Shuttle Main Engine
TCA	Thrust Chamber Assembly
ZrCu	Zirconium Copper
2-D	2 Dimensional Analysis
2D	Subscale Rectangular TCA
3D	Subscale Axisymmetric TCA (100K lbf Thrust)

1.0 INTRODUCTION

1.1 SUMMARY

The objective of the Large Scale Injector (LSI) program was to deliver a 21 inch diameter, 600,000 lbf thrust class injector to NASA/MSFC for hot fire testing. The hot fire test program would demonstrate the feasibility and integrity of the full scale injector, including combustion stability, chamber wall compatibility (thermal management), and injector performance. The 21 inch diameter injector was delivered in September of 1991 and is shown in Figure 1-1 mounted on the newly constructed LOX/hydrogen test stand at NASA/MSFC.

The 21 inch injector design was supported with a combination of strategic reduced size (subscale) hot fire testing and state of the art analysis techniques anchored with the subscale test data. An injector characterization methodology developed by Aerojet (Ref. 1) and described in Appendix A, was used to engineer the size of the subscale hardware based on acoustic modes of the full scale thrust chamber.

LOX/hydrogen tests with the oxidizer-swirled coaxial element subscale injector at a 100,000 (100K) lbf thrust level were conducted in October 1990. Chamber pressures ranging from 700 psia to 2500 psia and mixture ratios from 3 to 9 were tested in a 9.2 inch diameter ablative lined chamber. Operation with hydrogen injection temperatures down to 90 Rankine was stable. Amplitudes of discrete combustion chamber and manifold oscillations were less than 1% of chamber pressure. Nondirectional bombs located in the chamber wall near the injector face generated overpressures from 2 to 15% of chamber pressure and all combustion oscillations damped within 3 milliseconds. Chug-free throttle was demonstrated to 65% of the nominal chamber pressure. Combustion efficiency from both thrust and face pressure measurements averaged 97% in the ablative chamber.

These subscale test results were used to anchor the analytical models in the ROCCID methodology (Ref. 2), and subsequently generate the 21 inch full scale injector. Unbombed operation is predicted to be stable. Dynamic stability margins, although not fully anchored by subscale testing, are predicted to be satisfactory. The full scale injector was fabricated without stability aids, but retained the capability for including them later if required. C-star combustion efficiency at nominal conditions is predicted to be 97%. Chug free throttle is predicted down to 45% of nominal conditions. Injector face temperatures are predicted to be about 700 degrees Fahrenheit, which successfully maintains faceplate integrity. Wall temperatures of 990°F

and heat flux of 76 Btu/in.^{2}-sec at the throat, which include element streak factors, are predicted at nominal operation for the hydrogen-cooled calorimetric chamber.

1.2 BACKGROUND

1.2.1 Programmatic

Phase A Space Transportation Booster Engine (STBE) and Space Transportation Main Engine (STME) studies were initiated by NASA/MSFC in 1986 to support the Space Transportation Architecture Studies (STAS) and later the Advanced Launch System (ALS) vehicle. These studies targeted the need for a low cost, reliable engine, and selected the gas-generator engine cycle for increased engine reliability and lower development cost. LOX/methane propellants were selected for the STBE and LOX/hydrogen for the STME. As both engine and vehicle studies progressed, the two separate engines evolved to a common engine design to reduce development costs. Hydrogen was ultimately selected for both engines to further reduce development costs.

The LSI program originally focused on LOX/methane propellants where an overriding concern was combustion stability. The LSI design was later oriented to maintain commonality between the STBE and STME engines so the full scale injector could be used to test other components of the STBE/STME TCA as they became available through parallel ADP programs. To ensure compatibility with the STBE/STME design, design modularity and use of subscale hardware was pursued to respond to changes in design requirements or upgrades to enhance operation. Replaceable injector element components were included to accommodate potential changes in the element hydraulics and spray characteristics. Workhorse injector and chamber designs used bolt on flanges for ease of assembly during test. After methane was deleted from the development program, both the subscale injector and the 21 inch diameter full-scale injector designs focused on hydrogen.

LSI design requirements were subsequently defined as:

(1) Provide stable operation over the operating range of chamber pressures, mixture ratios, and fuel temperatures.

(2) Provide a thermally compatible environment with the injector face and chamber wall

1.2 Background (Cont)

(3) Provide required combustion efficiency

(4) Operate with low fuel pressure drop for improved cycle performance

1.2.2 Technical

Hollow-cone, oxidizer-swirled coaxial injection elements were selected for the LSI injectors. The injection element design was based on the 40K lbf thrust platelet injector, successfully tested at NASA/MSFC with LOX/methane propellants (Ref. 3). Stable operation and high injector performance were demonstrated with fuel-to-oxidizer velocity ratios as low as 1:1. Low chamber wall heat fluxes and evenly distributed heat at the throat were measured in cooled calorimetric hardware. This 40K platelet injector was later successfully tested with LOX/hydrogen at NASA/MSFC without hardware modifications (Ref. 4).

The injector characterization methodology applied to the LSI design was derived from a previously developed program at Aerojet (Ref. 1), which is described in more detail in Appendix A. Use of strategic subscale hardware testing and anchored analytical modeling on this program reduced the risk and cost associated with the first time testing of the 21 inch diameter full-scale injector, an important feature since the facilities required for testing the full-scale injector are limited and their operation expensive. Validating the full-scale design prior to full scale testing with an injector characterization methodology also reduced the number of full-scale tests required and the probability of major hardware iterations. Major hardware iterations should be pursued on subscale, because more test stands are available in the range of 40 to 250K lbf thrust, and the turn around time for hardware modifications is faster and the expense lower should problems arise.

The ROCCID computer model (Ref. 2) was used on the LSI program to predict the injector performance and combustion stability characteristics of the full-scale injector. Hot fire data from the 100K subscale and NASA/MSFC 40K platelet injector testing were used along with cold flow data to anchor the ROCCID model, which was specifically designed for straightforward anchoring of combustion parameters. Combustion chamber heat transfer was predicted with a reactive boundary layer model derived from the 40K platelet injector LOX/methane testing.

2.0 SCOPE OF WORK

Culmination of activities under this contract resulted in the delivery of one 580K lbf thrust (full scale) injector to NASA/MSFC for hot fire testing with LOX/hydrogen propellants. Subscale injector design and test data were used for fabrication experience and to anchor the analytical predictions for full scale testing.

2.1 SPECIFIC TASKS

The overall program plan is illustrated in Figure 2-1. The scope of work for this contract was accomplished in accordance with the specific tasks discussed below. Work on these tasks was performed in accordance with the Program Plan for Contract NAS8-37480 entitled inchSpace Transportation Booster Engine Thrust Chamber Technology Program inch, submitted in 1988 and revised on July 30, 1990 (Ref. 5).

Task 1.0 Validation Plan

The scope of this task included the preparation, release, and periodic revision of the program plan (Ref. 5). Additional documents prepared include the Space Transportation Booster Engine Injector Technology Interface Control Document (Ref. 6).

Task 2.0 21 Inch Diameter Full-Scale Injector Task

Task 2.0 included the design, analysis, fabrication, and delivery of a large scale injector to NASA/MSFC for testing. The design and supporting analyses for this hardware are described in Section 3.0.

SubTask 2.1 Full-Scale Injector Design

This subtask resulted in the release of the full scale injector drawing package in September 1990. This design package did not include stability aids. However, the design contained provisions for later addition of acoustic cavities and baffles should testing indicate a need.

SubTask 2.2 Full-Scale Injector Fabrication

This subtask resulted in the fabrication and delivery of the full scale injector assembly (PN 1206466-19) to NASA/MSFC in September 1991.

2.1. Specific Tasks (Cont)

Task 3.0 Subscale Injector Task

This task was used to acquire subscale combustion stability, injector performance, and heat transfer test data for anchoring of analytical models used to characterize full scale operation. Data was obtained from testing of the 40K and 100K lbf subscale injectors. The design and supporting analytical analyses of these injectors are discussed in Section 4.0.

SubTask 3.1 40K Subscale Injector

This subtask consisted of test planning and test support for LOX/hydrogen testing at NASA/MSFC in October 1990 of the existing 40K lbf thrust injector previously tested with LOX/methane.

SubTask 3.2 2D (rectangular) Subscale Injector

Design and supporting analysis of the 2D subscale injector was completed under this subtask. Limited funding on this program prevented this hardware from being fabricated.

SubTask 3.3 3D (100K lbf) Subscale Injector

This subtask consisted of the design, analysis, and fabrication of a 100K lbf thrust injector. Hot fire testing of this injector at Aerojet's test facility completed this subtask in October 1991.

Task 4.0 Model Anchoring - Test Planning and Data Analysis

Subscale test results were used to anchor the inputs in the ROCCID computer model (Ref. 7). Operational characteristics of the full scale injector were then predicted with the anchored model to complete this task. These analyses are described in Sections 4.4 and 3.7, respectively.

Task 5.0 Program Management

This task provided the coordination of the design, fabrication, and tests identified in the previous tasks. This task will be completed with the submittal of this final report.

3.0 FULL SCALE INJECTOR

3.1 BACKGROUND

At the start of the LSI program, the propellants to be tested were oxygen and methane. The conceptual design of the full scale deliverable LOX/methane injector was initiated following the definition of requirements from STBE Phase A and Phase A' studies. This conceptual layout design was used to:

1) establish the baseline for the subscale injector

2) provide the APD injector/RD thrust chamber interface, and

3) provide the APD injector/NASA-MSFC test stand interface.

Detailed discussion of the subscale task is contained in Section 4.0. Consistency was maintained between the baseline injection element design and pattern layout for the subscale and the preliminary full scale layout design. The subscale hardware did not scale the element geometry, but rather the number of elements so that flowrate per element could be maintained constant between full scale and subscale. The subscale chamber diameter was sized so that the frequency of its first tangential (1T) mode was made equal to the frequency of the third tangential (3T) mode of the full scale chamber. In this fashion a strategic portion of the full scale combustion stability could be investigated with subscale hardware.

The program plan included a break between the preliminary and final design phases of the full scale hardware to allow the subscale hardware detail design, fabrication, and test experiences to be included. Validation of the stability, performance, and compatibility characteristics would be obtained, including data on element hydraulics, resonator environment, effect of resonator inlet configuration, and effect of wall gap dimensions between the chamber wall and outer row of active elements.

Initially, the STBE Phase A TCA required a thrust of 750K lbf at a chamber pressure of 3600 psia using oxygen and methane propellants. As the vehicle studies evolved, the design point moved to a delivered thrust of 608K lbf at a chamber pressure of 2250 psia with colder methane fuel and a potential common hardware design with the oxygen/hydrogen STME. Methane fuel was eliminated in the next iteration in favor of hydrogen, and the TCA design point became 580K lbf thrust and 2250 psia chamber pressure. The request for conversion to hydrogen

fuel was received shortly after the completion of the final design review and drawing release for the subscale LOX/CH_4 injector.

At this time, the preliminary full scale design was reviewed to assess the impact of the fuel change to hydrogen on the existing design. Of primary concern was re-establishing the correct flow splits between the elements, the face cooling, and the resonator cooling. The operating conditions of the injection element with lower density hydrogen fuel was also reviewed as input to the design requirements for both the full and subscale hardware.

Table 3-1 compares the flow splits and mixture ratios established at the start of the LOX/H_2 full scale design. Due to chamber hardware constraints, the LSI full scale and projected ALS flight TCA throat diameters were different, resulting in slightly different chamber pressures with the same flowrate. Chamber pressures for the 3D subscale were higher than the full scale due to maintaining a constant pattern layout while also maintaining a constant flowrate per element and contraction ratio. The two columns listed for the 3-D subscale injector show two fuel film coolant flow splits; for column (A) the same full scale flow per linear inch on the face is maintained, and for column (B) the equivalent full scale face cooling flow split is provided.

Once the new preliminary design and conversion to hydrogen fuel of the full scale injector were complete in September of 1989, the full scale subtask became dormant to allow the detailed designs for the 3D and 2D injectors to be completed and the 3D injector to be fabricated. A preliminary baseline design for the flight type ADP injector was also completed at this time as illustrated in Figure 3-1.

When the full scale task was reopened in April 1990, the large scale injector preliminary design concept was updated based on the 100K (3D) fabrication experience and new features of the ADP flight design. Further refinements were made to flowsplits listed in Table 3-1 to maintain the LSI design consistent with the NLS/STME operating range, as reflected in Table 3-2.

3.2 DETAIL DESIGN

3.2.1 Overall Assembly

The injector subcomponents and drawing numbers for the injector assembly are listed in Table 3-3. The overall injector assembly is shown in Figures 3-2 and 3-3. The

assembly was designed to interface with the NASA-MSFC test stand dimensions shown in Figures 3-4 and 3-5, and the RD instrumentation ring dimensions shown in Figure 3-6. Appendix B contains the release drawing package.

The injector assembly consists of 5 major subassemblies: thrust mount, oxidizer cover, fuel manifold assembly, injector body assembly, and TEAL/TEB igniter. Each will be discussed individually in the following sections. To accommodate testing of the flight prototype hardware from the ADP programs, consistent interfaces were maintained for the ADP LOX/H_2 igniter and the ADP flight combustion chamber. Figure 3-7 illustrates the injector assembly components, showing the relation of the propellant flow passages.

Based on test stand interface requirements from NASA-MSFC, two oxidizer inlet ports were included. Two 6 inch Greyloc hubs were welded to the oxidizer housing, forming the primary oxidizer manifold upstream of the oxidizer distribution plate. This housing bolts to the injector body, using a RACO seal, and forms a secondary oxidizer manifold between the oxidizer distribution plate and a recessed area on the injector body. Removable inserts located within this manifold control the entrance of liquid oxygen into the oxidizer injection posts. Oxidizer enters tangentially through 9 orifices in 3 off-centered rows, creating the hollow cone oxidizer swirl. The posts were brazed into the interpropellant injector body and pass through the primary fuel manifold.

A single inlet fuel manifold bolts to the chamber side of the injector body and includes a RACO seal interface. A single 6-inch Greyloc hub was welded to the outer diameter and directs the fuel flow into an annular torus. Twist drilled crossfeeds channel the flow into the primary fuel manifold, where it encounters the forest of oxidizer tubes. A fuel distribution plate, fabricated from diffusion bonded platelets, registers on the shoulders of the oxidizer injection posts. A secondary fuel manifold is located downstream of the fuel distribution plate and upstream of the removable face platelet assembly. The fuel manifold was sized based on potential acoustic resonator cavity dimensions, illustrated by the dashed line in Figure 3-8, and potential flight engine hydrogen mixer dimensions.

Threaded couplers join the outer diameter of the oxidizer post to the face nut, and direct the fuel flow from the secondary manifold into each element fuel annulus through 6 holes. The injector element fuel annulus is formed between the outer diameter of the oxidizer post and the inner diameter of the face nut. Figure 3-9 illustrates the assembly of the injector element components.

3.2. Detail Design (Cont)

The removable face plate assembly consists of a diffusion bonded platelet assembly bonded to a backing plate and welded to a ring. This forms the secondary fuel manifold when assembled with the fuel manifold assembly. Raco seals are provided at this interface to prevent fuel leakage into the chamber. As part of the fuel distribution platelet assembly, one platelet in the stackup retains a larger diameter. This thin (0.010 inch) extension acts as a wiper seal to minimize the fuel flow around the distribution plate into the secondary manifold. Removable face nuts maintain the position of the faceplate assembly and register flat with the chamber side face platelet surface.

The platelet injector face is regeneratively cooled by hydrogen which is then bled from the face into the combustion chamber. The platelets also inject fuel to impinge at a 19 degree angle on the chamber wall for film cooling. The fuel film coolant (FFC) scheme was selected to accommodate configurations with and without resonator cavities. Figure 3-10 illustrates the canted tangential angle of the fuel off the injector face. Without a resonator cavity, this stream would impinge on the wall. With a resonator cavity present, the fuel film constant stream will be injected into the cavity, similar to the cavity cooling method utilized on the subscale design. However, the chamber wall fuel film cooling effectiveness will be degraded.

Instrumentation ports are located in the primary oxidizer and fuel manifold assemblies to monitor high frequency pressure oscillations, static pressure, and temperature. These instrumentation ports are upstream of the distribution plates.

The elements were packaged in three segments for a total of 546 elements on a 21.9 inch face diameter, as illustrated in Figure 3-11. Face coolant is active out to the edge of the injector at a 21.9 inch diameter. A 21.0 inch chamber diameter will create a wall gap of 0.450 inch from the centerline of the outer row of elements. This layout allows later addition of 3 radial baffle blades, if required for dynamic combustion, without changing the element pattern.

Injection element geometry was maintained consistent with the 3D (100K lbf) subscale injector and is summarized in Table 3-4. The lone difference is that the length of the oxidizer port is 0.73 inch longer on the full-scale to accommodate all design features. The liquid oxygen is ejected as a hollow cone with a total included free angle of 46 degrees, which is fixed by the swirl cap geometry. The oxidizer post is recessed 0.107 inch from the injector face.

3.2.2 Supporting Thermal & Structural Analysis

Thermal analyses (Ref. 8) were conducted in conjunction with structural analysis (Ref. 9) for the baseline design efforts. Table 3-5 lists the component materials, and Table 3-6 lists the components analyzed.

To verify adequate bolt loading, the chilldown of the injector assembly was modeled. Due to the short firing durations, complete chilldown of the LOX dome was not expected. Predictions for various outer surface temperatures are presented in Table 3-7.

Structural adequacy of the design was evaluated by a 2-D finite element analysis which modeled the operational and proof cases for the injector assembly and major components. Figure 3-12 illustrates this model which includes the major subcomponents of the injector assembly. Since an axisymmetric model was used, it did not model holes such as those in the thrust mount. In addition to defining structural adequacy, the model also defined bolt preloads and checked both the proof test configuration and the steady state loads at the operational atmospheric thrust load of 440K lbf.

In addition to the overall thruster assembly model, each component was also analyzed separately. The design criteria are listed in Table 3-8, and the resulting margins of safety for each component design are summarized in Table 3-9.

To verify the injector assembly integrity, various proof and leak checks were incorporated into the fabrication cycle. The injector assembly was proofed as one unit, using the proof plate attachment illustrated in Figure 3-13, to verify the seals and assembly bolts. Individual proof checking of the LOX dome and fuel manifolds to verify welds were conducted separately. Maximum operational pressure drop allowable across the interpropellant plate is 1500 psi.

Structural information was supplied to NASA-MSFC to assist in defining test stand allowable interface loads. An inlet piping stress analysis was performed for the propellant lines, and an allowable force-moment diagram developed as illustrated in Figure 3-14. In addition, chamber struts were recommended to be placed as illustrated in Figure 3-15 to support the side loading during hot fire testing.

Interfaces between the Aerojet injector and the RD chamber are maintained as defined in the September 1991, LSI NASA-MSFC Interface Control Document (Ref. 10).

Hydraulic analyses of the injector circuits were conducted, some elements of which were calibrated with subscale testing. The velocities and pressure drops are summarized in Table 3-10.

3.3 MAJOR SUBASSEMBLIES

An expanded view of the thruster assembly is shown in Figure 16. Applicable design, analysis, and fabrication information is supplied in the following sections on each major subassembly.

3.3.1 Spacer and Thrust Mount

The thrust mount was designed to interface between the oxidizer cover assembly and the thrust stand interface. Access to the oxidizer cover assembly was provided through two circular openings in the cone shaped thrust mount shown in Figure 3-17. To accommodate the final stackup tolerances of the test stand, thruster assembly, and combustion chamber assembly, a spacer ring, illustrated in Figure 3-18, was fabricated. This ring was intended to be machined to the final required thickness necessary to meet the overall test stand horizontal interfaces. After the ring is machined to the final dimensions, splitting it into two pieces is recommended for ease of installation on the test stand.

3.3.2 Oxidizer Cover Assembly and Oxidizer Distribution Plate

The assembly of the oxidizer cover is presented in Figure 3-19. Design features include dual inlet Greyloc ports and a distribution plate. The fabrication sequence for producing the completed oxidizer cover is summarized in Figure 3-20.

The initial machined CRES 304L housing is shown prior to welding of the hub inlets and elbows in Figure 3-21. The distribution plate was fabricated in parallel with the housing and consists of a diffusion screen brazed to a strongback plate. The strongback plate is 3/4 inch thick, perforated with 3/4 inch diameter holes as shown in Figure 3-22. A 22 gauge CRES 304L diffusion screen was brazed to the surface of the perforated plate using a 0.0015

inch thick copper braze foil. The interior of the oxidizer housing is shown in Figure 3-23. Next the diffusion plate is welded to the oxidizer cover as shown in Figure 3-24. The final machined oxidizer assembly is shown in Figure 3-25 bolted to the proof plate.

One modification incurred during fabrication was to include additional machining of the weld beam between the oxidizer cover and distribution plate to prepare the part for dye penetrant inspection. The original design allowed a recess of the oxidizer distribution plate below the oxidizer cover flange surface to accommodate any bowing of the distribution plate during the welding operation. A final face cut of this flange surface did not sufficiently blend the electron beam (EB) weld bead. The rough condition of the weld bead prevented valid dye penetrant inspection results. The additional machining alleviated this problem.

Proof checking of the LOX dome was conducted to verify the welds. The oxidizer manifold was hydrostatically tested at 5100 to 5200 psi using Greyloc blind hubs to seal the inlet ports and a proof plate with center shaft to close out the manifold area, as illustrated in Figure 3-26. The proof plate was machined from a 4 inch thick CRES 304L plate and the shaft from high strength 4130 steel. Two of the center nuts fabricated for the final assembly were used with the shaft to secure the proof plate during the proof test.

3.3.3 Fuel Manifold

A sketch of the fuel manifold is presented in Figure 3-27. The fabrication sequence for producing the completed fuel manifold assembly is summarized in Figure 3-28.

The design consists of an outer ring with a Greyloc inlet port, shown in Figure 3-29, and an inner ring, shown in Figure 3-30. A two piece flow splitter was welded into each ring as shown in Figure 3-31. The splitter is located 180 degree from the inlet and was installed to prevent flow transient unsteadiness problems during startup. A flow diverter, shown in Figure 3-32, was welded to the inner ring opposite the fuel inlet for better fuel distribution of the incoming fuel in the annular manifold.

The welded assembly of the inner and outer rings is shown in Figure 3-33. After the weld and prior to final machining of the manifold, a hydrostatic proof check of 4300 to 4400 psi was performed to verify the weld joints.

After proof checking of the welded assembly, 50 cross-over holes are drilled to supply hydrogen to the secondary fuel manifold formed when the injector assembly is bolted to the fuel assembly. The completed fuel manifold is shown in Figures 3-34 and 3-35.

3.3.4 Injector Body Assembly

The injector body assembly, illustrated in Figure 3-36, consists of the injection element components, the fuel distribution plate assembly, the faceplate assembly, and the bomb assembly. Logic for the fabrication and assembly sequences of the injector body 1st machined and braze assembly are presented in Figures 3-37 and 3-38. The core of the injector body is shown in its final machined state in Figure 3-39. The core was machined integral with a center post which provided a center anchoring point for the oxidizer cover and houses the igniter assembly.

After final machining of the injector core, the hardware was cleaned and prepared for brazing of the 544 oxidizer injection posts and 2 bomb tubes. These components are shown being installed in Figure 3-40 with a closeup of the oxidizer post alignment shoulder in Figure 3-41. Machined grooves in the injector body contain an OFHC copper braze sleeve. Figure 3-42 shows the injector body just prior to the furnace braze operation and Figure 3-43 shows the installation in the vacuum furnace.

After completion of the braze cycle, a low pressure nitrogen leak check was made to verify the integrity of the braze joints. Figure 3-44 illustrates the design of the leak check fixture, which is an aluminum cover plate bolted to the injector core. A rubber gasket provided a seal between the tip of the oxidizer post and the leak check fixture.

Gaseous nitrogen was introduced at approximately 50 psig through a swageloc fitting installed in the fixture. Water was poured into the secondary oxidizer manifold area to enable visualization of leaks through the braze joints.

After completion of the braze process, the final machining processes for the injector core were completed. Figure 3-45 shows the secondary oxidizer manifold area in which holes were drilled and tapped for the oxidizer insert interface. The injector core was then returned to Aerojet for final cleaning and assembly of the remainder of the components. During shipping, the oxidizer posts were protected by the leak check fixture serving as a protective cover.

Final assembly of the injector involved installation of the injection element components, which are shown laid out in Figure 3-46. Figure 3-47 illustrates the assembly procedure for the oxidizer circuit components. The oxidizer inserts were installed first to allow boroscopic inspection of the interface between the insert and the shoulder of the oxidizer post. Final torquing of the oxidizer swirl inserts is shown in Figure 3-48.

After the oxidizer components are installed, the fuel circuit components were installed as illustrated in Figure 3-49. Spring washers were placed on the shoulders of the oxidizer posts to accommodate any variation in dimensions between the fuel distribution plate and the post height. Installation of the fuel distribution plate is shown in Figure 3-50. The couplers were then threaded onto the oxidizer posts and torqued to maintain the position of the fuel distribution plate, as shown in Figure 3-51.

After installation of the fuel distribution plate, the remainder of the fuel circuit components were installed as illustrated in Figure 3-52. The face plate assembly registers on the couplers. Face nuts were installed and torqued to maintain the position of the face platelet assembly. Figure 3-53 shows the final torquing process for the face nuts. The completed injector body assembly is shown in Figure 3-54.

3.3.4.1 Face Plate Assembly

The face plate assembly consists of a stack of ZrCu platelets diffusion bonded to a CRES 304L backing plate. This plate was welded to an outer ring and inner tube as illustrated in Figure 3-55. The backing plate has through-holes drilled for inlets for the platelet stack face cooling and fuel film coolant injection. Figure 3-56 shows the completed assembly.

The platelet design for regen cooling of the injector face was based on the 3-D subscale design and is illustrated in Figure 3-57. This design was originally intended for operation with methane fuel which posed a more difficult cooling problem. Predicted operation with 5% H_2 fuel cooling indicated excessively low operational temperatures were expected (184 degrees Fahrenheit). Since the 3D subscale design was complete, it was not modified. However, the full scale injector face design platelet geometry was simplified by reducing the number of coolant passages. Table 3-11 lists the differences between the two designs. Predicted operational temperatures for the ZrCu injector face on the full scale injector design are approximately 700 degrees Fahrenheit, still well within the acceptable range for ZrCu operation.

Fabrication of the face platelets included some concerns due to the 22 inches diameter size. Although within the dimensional range of existing facilities at Aerojet, they would be the largest diameter platelet parts fabricated at Aerojet. New tooling was required for proper loading of the platelet stack during the the furnace bonding operation, as shown in Figure 3-58. The bonded platelet stack is shown in Figure 3-59.

A secondary furnace run included a HIP process to densify the bond areas. The bonded face plate stack is shown being loaded in the HIP furnace in Figure 3-60. No problems were encountered with the fabrication of this 22 inch diameter platelet part. After completion of the bonding process, a wire EDM process cut the bonded stack to final dimensions to minimize stress on the part and to avoid contamination with machining oil.

During fabrication, modifications were made to two of the platelets, illustrated in Figures 3-61 and 3-62. These modifications were necessary to accommodate a mismatch between the backing plate and the platelet stack. This mismatch was discovered after the backing plate was complete, but before the platelets were bonded.

3.3.4.2 Baffle Assembly (Optional)

Although the design of the baffles was not completed on this contract, faceplate layouts were studied to ensure baffles could readily be included should hot fire test results indicate a need. The resulting element pattern divided the elements into three segments separated by three lanes empty of injection elements, as shown in Figure 3-63. When testing without the baffles, these lanes would be hydrogen bleed cooled with about 0.6% of the hydrogen. Installing the baffles would require machining open the areas in the lanes. Figure 3-64 illustrates the baffle assembly which would be installed and welded to the faceplate backside. Hydrogen would be feed from the secondary fuel manifold into a center CRES 304 strongback. Cross drilled feed holes would direct the hydrogen flow to the coolant channels etched into ZrCu faceplates diffusion bonded to the two sides of the strongback.

3.3.4.3 Fuel Distribution Plate

The fuel distribution plate is comprised of a stack of CRES 304L platelets containing chemically etched flow passages. The completed assembly is shown in Figure 3-65. A thin 0.010 inch thick platelet protrudes outside the stack diameter and is intended to serve as a wiper seal in the injector assembly.

The subscale design incorporated features for both distribution and filtering of the fuel in this subassembly. However, subscale injector test results indicated that the fuel circuit pressure drop was higher than predicted (160 psid actual versus 30 psid design). This increased pressure drop is attributed to the filtering feature of the distribution plate. To not penalize the full scale injector design with the added pressure drop, the filtering feature was disabled on the fuel distribution platelet stack by altering the stacking sequence. Filters in the test stand fuel circuit will be required to prevent blockage in the injector circuits. This requirement is consistent with the NASA-MSFC test stand design.

3.3.4.4 Bomb Assembly

The RD bomb design utilized on the LSI full scale testing is illustrated in Figure 3-66. Two bomb ports were incorporated in the locations illustrated on the injector face in Figure 3-67. The bomb tube design replaces two active injector elements and provides the space for routing of the bomb detonator wires outside the injector, as illustrated in Figure 3-68. A bomb is installed by threading from the injector face side into the tube assembly. A specially sized face nut (PN 1206473) fills the gap between the bomb and the coupler. When a bomb is not installed, a modified face nut, shown in Figure 3-69, is used to control the hydrogen flow.

During assembly of the injector body, one of the bomb port tubes was slightly twisted as shown in Figure 3-70. Leak tightness of the damaged tube was verified using nitrogen gas. Since it is uncertain whether the bomb wires will pass through the tube, this bomb port may not be functional.

3.3.5 Igniter

The interface on the thruster assembly was designed consistent with the ADP torch igniter (Dwg# 1204738, ADP Contract NAS-8-38080). However, to satisfy the NASA-MSFC test stand interface requirements, a TEAL/TEB igniter was designed and fabricated under this task. The igniter design, shown in Figure 3-71, is a straight tube design with a 3 hole button brazed at the exit tip. This design is intended to spray the TEAL/TEB into the three segments of an injector configured with baffles. To enable a common interface for both igniters, an adapter, shown in Figure 3-72, is used with the TEAL/TEB igniter.

Table 3-12 summarizes the predicted operating temperatures for an all stainless igniter tube and tip versus a stainless tube with a ZrCu tip. Further structural analysis

chose the ZrCu material for the igniter tip. This analysis was performed for steady state operation with a 0.81 lbm/sec H_2 purge. The analysis was later expanded to offer the flexibility for the purge fluid to be either H_2 or N_2 gas based on test stand availability. Table 3-13 lists the operational parameters for the two purge fluids.

3.3.6 Instrumentation

Instrumentation ports provided on the hardware are summarized in Table 3-14. Locations of the high frequency pressure transducers in the oxidizer and fuel manifolds are illustrated in Figure 3-73. A special adapter, illustrated in Figure 3-74, is required for installation of the pressure transducers. To protect the hardware prior to testing, adapter blanks seal off the two ports. These blanks can be machined to accommodate the interface with the high frequency pressure transducers.

The locations of the static pressure and thermocouple ports are shown in Figure 3-75. Multiple readings at the same locations require a union tee as illustrated in Figure 3-76 for the oxidizer circuit instrumentation and Figure 3-77 for the fuel circuit instrumentation.

Temperature measurements on the thrust mount are recommended for early indication of oxidizer cover leakage. Locations are illustrated in Figure 3-78.

Provision for high frequency instrumentation for monitoring chamber combustion stability is provided by the acoustic ring which is being supplied by RD. Locations of the pressure transducers on this component are illustrated in Figure 3-79.

After completion and delivery of the hardware, the design was reviewed for incorporation of a face PC static pressure port for improved comparison of chamber pressure between injectors. Use of one of the two existing bomb ports was determined to be suitable. The face nut plug used in the bomb port when the bomb is not installed was redesigned to accommodate the pressure measurement. Details of this plug are illustrated in Figure 3-80.

3.4 CLEANING AND FINAL ASSEMBLY

The final assembly is illustrated in Figure 3-81. After the major assemblies were complete, the fuel manifold, shown in Figure 3-82, was assembled with the injector body, as shown in Figure 3-83. The completed assembly is shown in Figure 3-84 prior to final cleaning.

3.4. Cleaning and Final Assembly (Cont)

To allow back and forward flushing of the fuel circuit, the proof plate and blind hubs were installed as illustrated in Figure 3-85. The hardware was certified to Aerojet's cleaning specification, ATC-STD-4940. The oxidizer and fuel manifold was certified clean to Level 200. These levels are determined by the smallest feature size in the propellant circuit to prevent clogging. Both circuits were certified to Level A for non-volatile residue and Level K for hydrocarbons.

After cleaning and certifying, the oxidizer cover was installed, as shown in Figure 3-86. At this time the thruster assembly was proof and leak checked to 1500 psia using filtered GN_2. The seals that were installed in the final assembly have a two year installation life. These seals will be valid for testing conducted through July 1993. For testing after this date, replacing the seals and repeating the leak check procedure is required.

3.5 INJECTOR HARDWARE DELIVERY

The thruster assembly was shipped in two crates illustrated in Figure 3-87. The framework of the crates was composed of 4 x 4 inch wooded posts and constructed on a pallet suitable for lifting with a forklift. The injector and manifold assembly weighed approximately 3600 lbm as assembled with the protective covers. A top view of this assembly within the shipping crate is illustrated in Figure 3-88. Figure 3-89 illustrates a cross sectional view of the shipping crate. Each subassembly has three lifting lugs, individually rated at 4000 lbm. However, for safe handling of the hardware use of all three lugs is recommended.

Installation of all seals and torquing of all bolts was completed at Aerojet and verified by the final proof check prior to shipping. The assembly bolts (PN MS21250-16032) for the thrust mount to oxidizer cover, shipped as part of the assembly, were to be replaced with high strength bolts shipped separately. Table 3-15 lists the components of the shipped assembly.

3.6 TEST RECOMMENDATIONS

A review was made of the proposed operating parameters for the full scale injector. These recommendations are based on operation of the 3D (100K lbf) subscale injector tested at Aerojet. Table 3-16 lists the operational parameters recommended for the TEAL/TEB igniter. The values listed assume a two step startup sequence in which the injector is ignited at low pressure conditions after a LOX lead, and is ramped up to the steady-state high pressure operating conditions.

3.6. Test Recommendations (Cont)

Injector admittance values are listed in Table 3-17 and can be used to establish the set parameters for the desired flow conditions.

Recommended GN_2 purge levels are summarized in Table 3-18 and included conditions for startup and shutdown. Between tests, a low level trickle purge is recommended at all times to prevent internal contamination.

Pressure and flowrate parameters for steady state and purge flow operation are summarized in Table 3-19 for the oxidizer circuit, and Table 3-20 for the fuel circuit.

3.7 PRE-TEST PREDICTIONS

3.7.1 Combustion Chamber Heat Transfer

LSI full scale testing utilizes the Aerojet injector and the Rocketdyne hydrogen-cooled combustion chamber. Gas side heat fluxes were based an reactive boundary layer model derived from the Aerojet swirl coax 40K injector data (Ref. 11). This model also closely approximates the P&W 40K swirl coax data. Resulting heat fluxes in the barrel and throat region are significantly lower than with the SSME shear coax model. Figure 3-90 presents the heat flux profile for an average LSI full scale chamber channel. As a result, the average channel wall temperatures for the LSI chamber, which was designed based on the SSME subscale data, are predicted to be under 900 Fahrenhait. This is well within the design limits of the RD chamber as illustrated in Figure 3-91.

Local wall temperatures depend on the circumferential nonuniformity of an injector. The circumferential variations measured for the Aerojet 40K injector indicate a peak/average heat flux of 1.10 . The full scale injector elements are designed closer to the wall (0.45 inch) than the 40K elements (0.75 inch), which may increase the circumferential variation. Therefore a streak factor of 1.2 is considered appropriate for this injector, and this factor was applied to the boundary layer correlation coefficients to define the hot channel.

Three different operating conditions were studied. The nominal case was a chamber pressure of 2300 psia and mixture ratio of 7.1. A high mixture case was defined as a mixture ratio of 7.8 and a chamber pressure of 2300 psia. A chamber pressure of 2500 psia and mixture ratio of 7.1 defined the high pressure case. The maximum predicted hot channel

temperatures are 991 F, 1031 F, and 1058 F for the nominal high mixture ratio, and high chamber pressure cases, respectively. The maximum predicted average channel temperatures are 814 F, 846 F, and 873 F for the nominal, high mixture ratio, and high chamber pressure cases, respectively.

3.7.2 Performance

Full scale injector combustion performance was predicted with the ROCCID computer code (Ref. 12) anchored with 100K (3D) subscale data. Two operating conditions were analyzed, a low pressure, low mixture ratio condition, and the nominal operating point. Calculated injector flowrate splits used in the analyses are listed in Table 3-21.

Overall injector performance at 1800 psia chamber pressure and 6.2 mixture ratio is predicted to be 96.7% C-STAR and 96.0% ERE, with a vaporization efficiency of 100% and an Isp-based mixing efficiency (at 45:1 expansion) of 96.0%. Barrier streamtube and inchbaffle alley inch striation losses are 0.47 and 0.01 percentage points, respectively, calculated from the assumption that half of the outer row and baffle alley row element flowrate mixes with the streamtube coolant. Note that striation losses due to the baffle alley are predicted to be extremely small with this method.

The anchored spray combustion model parameters from subscale modeling, described in Section 4.4, were zero atomization length, 320 Mm oxygen mass median droplet diameter, 1.54 oxygen droplet distribution geometric standard deviation, and an 82.4 percent Rupe mixing efficiency.

The C-STAR efficiency (combustion rate), oxygen vaporization, and vapor mixture ratio profile predictions are shown in Figures 3-92 to 3-94, respectively. Figure 3-92 shows that at the convergent nozzle section entrance the combustion is predicted to be about 93 percent complete. Figure 3-93 shows that 91 percent of the oxygen liquid is predicted to have been vaporized at the end of the 5.83 inch cylindrical chamber (barrel) section, which implies that up to 9 percent of the liquid mass is unvaporized at the entrance to the nozzle and may affect the nozzle convergence wall compatibility.

Overall performance at the nominal operating condition of 2300 psia chamber pressure and 7.1 mixture ratio is predicted to be 96.9% C-STAR and 94.9% ERE, with a vaporization efficiency of 100% and an Isp-based mixing efficiency (at 45:1 expansion) of

94.9%. Barrier streamtube and inchbaffle alley inch striation losses are 0.54 and 0.00 percentage points, respectively, calculated from the assumption that half of the outer row and baffle alley row element flowrate mixes with the streamtube coolant.

Note that striation losses due to the baffle alley are predicted to be extremely small with this method. The anchored spray combustion model parameters from subscale modeling, described in Section 4.4, were zero atomization length, 350 Mm oxygen mass median droplet diameter, 1.54 oxygen droplet distribution geometric standard deviation, and an 82.4 percent Rupe mixing efficiency.

The C-STAR efficiency (combustion rate), oxygen vaporization, and vapor mixture ratio profile predictions are shown in Figures 3-95 to 3-97, respectively. Figure 3-95 shows that at the convergent nozzle section entrance the combustion is predicted to be about 91 percent complete. Figure 3-96 shows that about 91 percent of the oxygen liquid is predicted to have been vaporized at the end of the 5.83 inch cylindrical chamber (barrel) section, which implies that up to 9 percent of the liquid mass is unvaporized at the entrance to the nozzle and may also affect the nozzle convergence wall compatibility.

3.7.3 Combustion Stability

3.7.3.1 Low frequency Combustion Stability

Low frequency combustion stability of the full scale LSI was predicted with the LFCS computer model (Ref. 13) that was anchored to chug instability data and actual injector element operating characteristics from the 100K (3D) subscale testing. LFCS is a lumped parameter, double combustion time lag model based on Szuch and Wenzel (Ref. 14). The neutral chug stability for the full scale injector is shown in Figure 3-98. Comparison with the subscale chug analysis in Section 4.4 shows that the chug characteristics between full scale and subscale are almost identical, which would be expected based on the similarity of the injection orifices between the subscale and the full scale. Figure 3-98 shows that chug instability at the nominal LSI mixture ratio of 7.1 is predicted to occur at a chamber pressure of 1120 psia, or a throttle to 48 percent from the nominal chamber pressure of 2320 psia.

3.7.3.2 High Frequency Combustion Stability

High frequency combustion stability of the full scale LSI was predicted with the ROCCID Computer Model (Ref. 12) for two operating points, 1800 psia and 6.2 O/F, and the nominal operating point test, 2300 psia and 7.1 O/F. Both tests used hydrogen injection temperatures of 190 Rankine. The stability was calculated with anchored versions of two ROCCID submodels, LEINJ and a multiple-circuit version of INJ.

Results of the stability analyses for 1800 psia chamber pressure and 6.2 mixture ratio test are shown in Figures 3-99 to 3-104. The intrinsic or burning response was calculated with the ROCCID submodel CRP. Intrinsic instability was found not to be the dominating instability mechanism at low frequencies, even with the larger than originally anticipated droplet sizes. Figures 3-99 through 101 show the predicted response and gain functions from the combination of ROCCID submodels CRP and a 3-circuit INJ for total combustion response and HIFI for chamber response. Figure 3-100 predicts regions of positive gain at the 1T, 2T, 1R and 3T modes, but comparison to Figure 3-101 shows the system is phase stable according to Nyquist stability criteria. Positive gain with no coupling indicates the driving energy for instability exceeds the available damping but is out of phase. Phase margins for these regions of positive gain, which may be an indicator of dynamic stability margin, are all greater than 60 degrees, which is considered satisfactory for most control systems.

Figures 3-102 through 3-104 show the predicted response using LEINJ as the injection-coupled submodel instead of INJ, with the admittance magnitude reduced to 30 percent of the originally calculated value, as described in the subscale test calibrations in Section 4.4. Figure 3-103 shows regions of positive gain at the 1T mode calculated with LEINJ, but comparison to Figure 3-104 again shows the system is phase stable according to Nyquist stability criteria. The phase margin is 75 degrees.

Results of the stability analyses for the nominal chamber pressure and mixture ratio test (2300 psia chamber pressure and 7.1 mixture ratio) are shown in Figures 3-105 to 3-112. Figures 3-105 through 3-107 show the predicted response and gain functions from the combination of ROCCID submodels CRP and a 3-circuit INJ for total combustion response and HIFI for chamber response. Figure 3-106 shows regions of positive gain at the 1T, 2T, 1R and 3T modes. The 1T mode gain magnitude has been reduced from Figure 100 because of the increase in relative pressure drop for the oxidizer circuit (i.e., DP/Pc); the higher modes appear to

be less affected. Comparison of Figures 3-106 and 3-107 show the system is phase stable according to Nyquist stability criteria. Phase margins for these regions of positive gain are all greater than 55 degrees.

Figures 3-108 through 3-112 show the predicted response using LEINJ instead of INJ, with the admittance magnitude reduced to 30 percent of the originally calculated value, as described in the subscale test calibrations in Section 4.4. Figure 3-111 shows a narrow region of positive gain around 5400 Hz at the 4T and 1T1R modes. Comparison with Figure 3-112 shows the system is predicted to be unstable according to Nyquist stability criteria. The growth coefficients calculated by ROCCID for these potential instabilities are 0 and +22 1/sec, which imply neutral stability since they are so small.

4.0 SUBSCALE HARDWARE:

4.1 INTRODUCTION

The LSI program adopted an approach to reduce the cost of full scale development by investigating combustion stability, injector performance, and thrust chamber compatibility in reduced-size hardware. Appendix A discusses the reduced-size injector characterization methodology in more detail. This methodology defines the size of the subscale hardware from the acoustic modes of the full scale hardware. Two subscale injector configurations were originally baselined on the LSI program, a rectangular (2D) and an axisymmetric (3D), which are illustrated in Figure 4-1. The rectangular (2D) injector was sized so that the frequency of its first width (1W) mode was made equal to the frequency of the first tangential (1T) mode of the fullscale. This hardware can then investigate the lower frequency modes of the full scale injector. The axisymmetric (3D) injector was sized so that the frequency of its first tangential (1T) mode was made equal to the frequency of the third tangential (3T) mode of the fullscale chamber. This hardware can then investigate the higher frequency modes of the fullscale chamber. In addition, the 3T=1T size is a strategic cutoff in the injection characterization methodology: stability at this scale with no damping devices provides a measure of acceptable stability of the injector element. Instability at the 3T=1T scale implies the requirement of damping devices in the full scale hardware that may be beyond what is feasible.

The relationships of the subscale and full-scale frequencies are illustrated in Figure 4-2. Since the same injector element design is used in all injectors, the subscale hardware addresses representative fullscale stability characteristics before fullscale development is begun.

Initial design requirements for the subscale injectors were based on the STBE Phase A requirements for LOX/CH_4 operation. These conditions are summarized in Table 4-1. Although the full scale operational requirements were constantly changing during the LSI program, the modular design approach accommodated operational changes up to the point of final assembly of the injector. General design requirements are summarized in Table 4-2. Table 4-3 lists the operational requirements for the designs of the subscale hardware for LOX/CH_4 propellants.

4.2 2D SUBSCALE HARDWARE DETAIL DESIGN

There were three main objectives of the 2D thruster design. The first was to investigate 1T acoustic mode stability of the full scale injector design with this hardware, as described in Section 4.1. The second was to simulate two different element centerline to chamber wall gaps of interest for the final full scale design. Since the 2D chamber used ablative liners, varying chamber wall compatibility features was simpler and incurred less hardware risk than with cooled combustion chambers. The third objective was to characterize baffle integrity and performance, should baffles be required on the fullscale to damp lower acoustic modes. The 2D subscale provides a simplified means of investigating the baffle design issues.

Although the 2D detailed design activities were completed, the hardware was never built due to funding constraints. Modeling and 3D subscale testing were substituted to account for the added program risk.

The 2D design utilized a workhorse approach with bolt on flanges and manifolds for ease of assembly for testing. To allow testing with different fuels, all materials used in the fabrication of the hardware were compatible with either CH_4 or H_2.

The 2D engine assembly, illustrated in Figure 4-3, consists of two major subassemblies, the injector subassembly shown in Figure 4-4 and the thrust chamber subassembly shown in Figure 4-5. Major components of the injector subassembly include the oxidizer inlet housing, oxidizer distribution plate, fuel manifold, injector body, injector element components, fuel distribution plate, face plate assembly, and baffle assembly.

The thrust chamber subassembly consists of a structural shell, an ablative liner, and a retainer plate. An acoustic resonator cavity is formed between the interface of the chamber head end and the injector face. Provisions were included in the design to enable adjustment of tuning blocks to vary the cavity dampening frequency. The acoustic resonator cavity can also be blocked off to accommodate testing without cavities. Tuning blocks were designed to adjust the cavity depth as desired or block off the cavity completely.

The ablative lined rectangular chamber was designed for short duration, nondirectional explosive bomb tests for investigation of combustion stability. A side mounted bomb assembly is installed in the chamber. Ten high frequency pressure transducers are mounted in the chamber to measure combustion response. Static pressure transducers are

mounted along the chamber wall to measure the axial combustion chamber pressure profile up to the convergence section of the nozzle.

Propellant flow passages for the 2D injector are shown in Figure 4-6. The primary oxidizer manifold is formed by a Greyloc hub centrally welded to a rectangular housing. A secondary oxidizer manifold is formed between the oxidizer distribution plate and a recessed cavity in the injector core body. Replaceable inserts located within this manifold control the entrance of liquid oxygen into the oxidizer injection posts. Oxidizer enters tangentially through 9 orifices in 3 off-centered rows, creating the hollow cone oxidizer swirl. The posts are brazed into the interpropellant injector body and pass through the primary fuel manifold.

The rectangular injector core contains the fuel inlet, fuel manifolding, and injection element components. A Greyloc hub is welded to an inlet housing that forms the fuel manifold which is welded to the side of the injector body. Five drilled crossfeeds between the bolts direct the fuel flow into a rectangular primary fuel manifold, where it encounters the forest of oxidizer tubes. A fuel distribution and filter plate, fabricated from diffusion bonded platelets, registers on the shoulders of the oxidizer injection posts. A secondary fuel manifold is located downstream of the fuel distribution plate and upstream of the face platelet assembly.

As in the other injector designs, threaded couplers join the outer diameter of the oxidizer post to the face nut, and direct the fuel flow from the secondary manifold into each element fuel annulus through 6 holes. The injector element fuel annulus is formed between the outer diameter of the oxidizer post and the inner diameter of the face nut.

The faceplate assembly consists of a diffusion bonded platelet assembly bonded to a backing plate. The removable face nuts are installed after the faceplate assembly is attached. The face nuts register flat with the chamber side face platelet surface. The oxidizer post tips are recessed approximately 0.107 inch below the surface of the face plate within the fuel annulus area.

The injector face consists of 88 elements packaged on the 17.9 by 3.077 inch rectangular injector face. Space for a baffle was left in the center of the injector face, which divided the rectangular chamber into two compartments each with 44 elements. A 4 inch long baffle was designed for installation approximately 0.24 inch off the center line of the injector, as illustrated in Figure 4-7. This provided two different gaps between the element centerline and

the baffle wall for investigation of heat flux profiles. Hydrogen supplied from the secondary fuel manifold regeneratively cools the baffle and is dumped off the baffle tip into the combustion zone. The coolant passages are designed with platelets and thermocouples within the baffle assembly are provided.

4.2.1 Supporting Analysis

To validate the design of the 2D engine assembly , supporting heat transfer, hydraulic, and structural analysis were conducted (Ref. 15). Table 4-4 lists the operating loads and environment assumed for the engine assembly design. A structural analysis was performed for the injector assembly, chamber assembly, and test stand interface. Heat transfer predictions determined the operating temperatures for selection of material properties. Hydraulic analyses predicted pressure drops within the assembly to determine maximum expected manifold pressures.

The injector was modeled with a 2-D plane strain model. The faceplate region around a typical facenut was modeled with a 2-D axisymmetric model. This model assumed plastic strain based on the predicted thermal and pressure loading. A 3-D model of the overall assembly was created to verify the seal gaps, which are summarized in Table 4-5. Predicted margins of safety for each component are summarized in Table V-6, and the resulting cycle life predictions are summarized in Table 4-7.

4.2.2 Major Subassemblies

Table 4-8 lists the component drawings associated with the 2D subscale hardware. The following sections contain a description of the major subassemblies.

4.2.2.1 Oxidizer Dome

The oxidizer dome shown in Figure 4-8 consists of a 6 inch Greyloc flange and adapter welded to a CRES 304L housing. A distribution plate is welded to the injector side of the housing. The distribution plate is a 0.7 inch thick CRES 304L structural plate perforated with 1 inch diameter holes. A 18 guage CRES sheet is diffusion bonded to the upstream side of the structural plate. Acceptance testing for the oxidizer dome required a hydrostatic proof check at 6375 psia using the proof plate shown in Figure 4-9.

4.2.2.2 Fuel Manifold/Injector Body

The fuel inlet manifold, illustrated in Figure 4-10, is side mounted to the injector body. The inlet manifold consists of a 4 inch Greyloc flange welded centrally to a housing which in turn is welded to the side of the injector body. Five drilled crossovers between the overall assembly bolt pattern connect the fuel inlet manifold to the primary fuel manifold within the injector body.

The injector body, shown in Figure 4-11, contains the injection elements which are threaded and brazed into position. The oxidizer inserts are threaded into the secondary oxidizer manifold formed between the oxidizer inlet housing and a recessed area in the injector body. The forest of oxidizer posts extend through the secondary fuel manifold. This manifold is closed off with the weldment of the face plate assembly to the injector body.

Seals are contained in the grooves located on both sides of the injector body and seal against the mating flanges of the oxidizer inlet and the ablative chamber. The seal groove is designed in the race track configuration illustrated in Figure 4-12 which provides a uniform distance from the bolt circle.

4.2.2.2.1 Fuel Distribution Plate

The fuel distribution plate is comprised of a stack of diffusion bonded CRES 304 and 347 platelets. This design, identical in concept to the 3D subscale injector, was configured to serve a dual purpose of filtering and distributing the fuel.

4.2.2.2.2 Face Plate/Baffle Assembly

The face plate assembly is comprised of a stack of ZrCu platelets diffusion bonded to a CRES 304 backing plate, as illustrated in Figure 4-13. Drilled holes in the backing plate provide the fuel inlet for the platelet features. The coolant features include regenerative cooling passages and uniform transpiration dump cooling into the combustion zone.

The baffle design is identical in concept to the baffles recommended for the full scale design. Figure 4-14 illustrates the welded fastening of the baffle to the face plate assembly. The baffle design consists of a CRES 304L structural plate diffusion bonded on both sides to ZrCu platelets. Etched features in the ZrCu platelets provide the regeneratively cooled

passages for the fuel which is dumped off the tip of the baffle into the combustion zone. Passages are machined into the CRES core for installation of thermocouples as shown in Figure 4-15. The thermocouple wires exit through the fuel manifold of the assembled injector core as shown in Figure 4-16.

4.2.2.3 Chamber Assembly

The chamber assembly consists of an ablative liner (Figure 4-17), a structural housing (Figure 4-18), and a retaining ring (Figure 4-19). Resonator cavities, illustrated in Figure 4-20, are formed at the interface between the chamber and the injector face plate. The cavities can be blocked off as illustrated in Figure 4-21. Grafoil is used to provide a high temperature seal between the injector face plate and the chamber cavity.

The chamber liner is constructed of 3 inch wide silica phenolic ablative tape, wrapped at a 45 degree angle. The combustion chamber contour is provided by the ablative liner which also insulates the structural shell from the combustion gases. The chamber is designed so that the liner can be replaced as the material erodes in a hot fire test series. A slight tapering of the shell and liner ensure containment during testing.

The structural shell is made from 17-4 PH and provides structural integrity up to 4500 psi. The assembly of the replaceable liner into the structural shell is illustrated in Figure 4-22. The two parts are pressed together using a layer of RTV to ensure no gap exists. A retainer plate bolts to the structural housing downstream of the throat after installation of the ablative liner to ensure the liner is properly retained.

The chamber assembly has provisions for side mounting of the igniter, bomb assembly, static pressure transducers and high frequency transducers. Swivel lug bolts are provided for moving the hardware.

4.2.2.4 Igniter

The 2D and 3D subscale injector igniter was designed for commonality. The igniter was designed for TEAL/TEB injected into the combustion chamber for LOX ignition. For the 2D igniter, 2 igniter ports were provided as illustrated in Figure 4-23. The indented tube exit illustrated was later removed from the 3D subscale design.

4.2.2.5 Bomb Assembly

The two subscale injector bomb assemblies were also designed for commonality. The bomb concept, illustrated in Figure 4-24, is side mounted in the chamber wall. An A286 sleeve contains the detonation to prevent damage to the chamber wall. A carbon phenolic end plate protects the charge from premature thermal detonation during the hot fire test.

4.2.2.6 Instrumentation

Instrumentation ports for static pressure and temperature were included on the fuel and oxidizer manifolds. The combustion chamber contained instrumentation ports for static pressure, temperature, and high frequency pressure transduces, as illustrated in Figure 4-25. Table 4-9 contains a summarized list of the recommended instrumentation.

4.2.2.7 Recommended Test Matrix

The ranges of chamber pressure and mixture ratio (MR) conditions that were to be tested are illustrated in Figure 4-26. These conditions were intended to expand the LOX/CH_4 40K lbf thrust injector tests at NASA-MSFC which are discussed in Section 4.4.1. One test point was recommended at the same conditions as the 40K lbf injector for comparison. The 15 test series recommended included a survey of fuel temperatures, explosive bomb tests, baffled and non baffled tests, and tests with and without cavities.

4.3 3D (100K) REDUCED SIZE INJECTOR DETAIL DESIGN

4.3.1 Overall Assembly

The 3D injector hardware is shown in Figure 4-27 and consists of the oxidizer inlet, injector body/fuel manifold, and the resonator ring. Bolt on flanges are incorporated into this workhorse design for ease of assembly during the test series. Although no combustion chambers were designed as part of this contract, the injector to chamber interface was designed common with several existing chambers which are shown in Figure 4-28. Figure 4-29 summarizes the possible configurations with the available hardware.

Combustion stability was evaluated with tests using the ADP ablative chamber. An acoustic resonator cavity was configured between the injector core face and the ablative chamber. This cavity was blocked off during the testing for rigorous 3T=1T combustion

stability assessment. The ablative chamber included provisions for a side mounted bomb assembly and six high frequency pressure transducers. An array of static pressure transducers were installed to measure the axial combustion chamber pressure profile between 0.2 and 4.3 inches downstream of the injector face.

Longer duration injector performance and chamber compatibility tests were planned with either of the two APD IR&D water cooled chambers. These assemblies require the use of a cooled resonator ring to interface between the injector and the chamber. When the resonator ring is assembled with the injector core, a dogleg acoustic cavity is formed between the two components. As with the ablative chamber, the cavity length can be adjusted or completely blocked according to test requirements.

The two cooled combustion chambers differ by the orientation of the coolant channels. One cooled combustion chamber has circumferential coolant channels for measuring the axial heat flux profile. Two circumferentially cooled barrel spool pieces, 4 and 8 inch in length, are used to vary the chamber lengths L'. The second cooled chamber has a fixed length L' with axial coolant channels. The axial channels are plumbed in common so there is no provision for measuring individual element streaking. An ablative lined ring provides the capability to install a bomb assembly and high frequency instrumentation for perturbation and monitoring of the combustion response while using the cooled combustion chamber.

Propellant flow passages for the 3D injector are shown in Figure 4-30. The primary oxidizer manifold was formed by a Greyloc hub welded to a flange containing a distribution plate. A secondary oxidizer manifold was formed between the oxidizer distribution plate and a recessed area in the injector core body. Removable inserts located within this manifold controlled the entrance of liquid oxygen into the oxidizer injection posts. Oxidizer enters tangentially through 9 orifices in 3 off-centered rows, creating the hollow cone oxidizer swirl. The posts were brazed into the interpropellant injector body and pass through the primary fuel manifold.

The injector core contains the fuel inlet, fuel manifolding, and injection element components. A Greyloc hub was welded to the outer diameter of the injector body and directs the fuel flow into an annular torus. Drilled crossfeeds between attachment bolts channel the flow into the primary fuel manifold, where it encounters the forest of oxidizer tubes. A fuel distribution and filter plate, fabricated from diffusion bonded platelets, registers on the shoulders

of the oxidizer injection posts. A secondary fuel manifold is located downstream of the fuel distribution plate and upstream of the face platelet assembly.

Threaded couplers join the outer diameter of the oxidizer post to the face nut, and direct the fuel flow from the secondary manifold into each element fuel annulus through 6 holes. The injector element fuel annulus is formed between the outer diameter of the oxidizer post and the inner diameter of the face nut. Figure 4-31 illustrates the injector element assembly.

The faceplate assembly consists of a diffusion bonded platelet assembly bonded to a backing plate. The removable face nuts were installed after the faceplate assembly was attached. The face nuts register flat with the chamber side face platelet surface. A copper seal ring provides a compliant interface between the fuel distribution plate and the face ring.

The platelet injector face was regeneratively cooled by hydrogen which is then bled from the face into the combustion chamber. The platelets also inject fuel coolant axially and radially into the acoustic resonator.

A circular pattern of 108 elements is packaged on the 9.9 inch injector face diameter for testing in a 9.2 inch diameter chamber. The liquid oxygen is ejected as a hollow cone with a included free angle of 46 degrees, which is fixed by the swirl cap geometry. As assembled, the oxidizer post is recessed 0.107 inches from the injector face.

4.3.2 Supporting Thermal & Structural Analysis

Thermal analyses (Ref. 16 and 17) were conducted in conjunction with structural analysis (Ref. 18) to support the design efforts. To verify the structural adequacy of the design, operational and proof loads were analyzed with a 2-D, finite element, axisymmetric model. Analytical models were made of the injector body, the resonator ring, and the faceplate region around a typical facenut. The injector body was subjected to an elastic analysis with pressure loading only. Hand calculations were made for connectors, bolts, injector element components, and instrumentation holes. Figure 4-32 illustrates the model constructed for the injector body assembly. In addition to defining structural adequacy, the model also defined bolt preloads and checked both the proof test configuration and the steady state loads at the sea level thrust conditions of 80K lbf. Design criteria are listed in Table 4-10 and the operational conditions listed in Table 4-11.

The areas analyzed are noted in Figure 4-33 with the results of the analyses presented in Table 4-12. Positive structural margins and an acceptable cycle life were predicted for all design components.

4.3.3 Major Subassemblies

Figure 4-34 illustrates the 3 major subassemblies of the 3D subscale injector which are discussed in detail in the following sections. Drawings numbers are listed in Table 4-13 for each of the components.

4.3.3.1 Oxidizer Inlet

A 6 inch diameter Greloc hub welded to a housing formed the primary oxidizer manifold, as illustrated in Figure 4-35. All materials were CRES 304L. A distribution plate assembly was welded to the inlet housing at the injector core interface. The distribution plate assembly components are shown in Figure 4-36. The assembly consisted of a 0.675 inch thick plate perforated with 0.5 inch diameter holes. An 18 gauge screen was diffusion bonded to the structural plate. The oxidizer housing is shown in Figure 4-37 prior to final welding to the Greyloc hub.

Fabrication flow logic for the oxidizer manifold is presented in Figure 4-38, which lists the processes and sequencing required to produce the completed subassembly. The completed hardware is shown in Figure 4-39.

4.3.3.2 Injector Body/Fuel Manifold

The integral injector and fuel manifold assembly is illustrated in Figure 4-40. This assembly packages the injector element, the injector core, and the fuel annular manifold. Details of the injector element assembly are illustrated in Figure 4-41. A summary of the fabrication flow logic for the injector body/fuel manifold oxidizer manifold is presented in Figure 4-42. This lists the processes and sequencing required to produce the completed subassembly.

The major components of the injector assembly include the as-machined injector core, the as-machined fuel manifold, and the cavity ring, which are shown in Figure 4-43.

The welded assembly prior to installation of the injection elements is shown in Figure 4-44. Figure 4-45 shows the sequence of assembly for the installation of the oxidizer posts. Figure 4-46 shows the tooling used in the brazing process. To minimize risk to the hardware, the oxidizer posts were fixed to maintain position of the exit nozzle. The controlling dimension for the height of the oxidizer post was indexed at the shoulder of the oxidizer post. A plate was bolted to the flange with standoffs and thru holes for the oxidizer posts. The plate registered on the oxidizer tube shoulder with the oxidizer tube height adjusted accordingly.

The subscale brazing operation verified the ability to maintain dimensional positioning of the oxidizer exit nozzle. Once the tubes were correctly positioned, no movement of the oxidizer posts was experienced either in loading the injector into the furnace or in the subsequent thermal cycling of the braze cycle. Based on this experience, the tooling requirement for the large scale injector was eliminated. Improved indexing of the oxidizer post height was also incorporated into the revised oxidizer post for the large scale injector, which involved changing the dimensional datums and including a step on the oxidizer post. Figure 4-47 shows the injector core in the vacuum furnace.

The injector is shown in Figure 4-48 following the vacuum braze operation, ready for the final assembly of the fuel distribution plate, element couplers, and the face plate assembly. Figure 4-49 shows the installation of these components with a side view in Figure 4-50. The face plate assembly was installed and positioned by the face nuts, as shown in Figure 4-51. A final weld of the face plate assembly to the injector core seals the fuel manifold areas.

Following the weldment of the face plate assembly to close out the fuel circuit, the oxidizer swirlers were threaded into the oxidizer manifold at the entrance of each oxidizer post and staked into place. The completed injector body is shown in Figure 4-52 for the chamber side and Figure 4-53 for the oxidizer inlet side.

4.3.3.2.1 Fuel Distribution Plate

The fuel distribution plate assembly consists of a diffusion bonded stack of CRES 304 and 347 platelets. The features in the platelets serve a dual purpose of filtering and

distributing the fuel. Figure 4-54 shows the platelets prior to the diffusion bonding cycle. After the diffusion bonding process, a groove was machined on the outer diameter for the installation of a metal seal in the final assembly. The completed bonded part is shown in Figure 4-55.

4.3.3.2.2 Face Plate Assembly

The face plate assembly consists of a series of ZrCu platelets diffusion bonded to a CRES 304L backing plate which is welded to a CRES 304L ring. The backing plate contains the drilled inlet orifices to feed the features in the platelet stack. This assembly is shown in Figure 4-56 just prior to the final weldment to the injector body. A summary of the fabrication sequence is summarized in Figure 4-57.

Dimensions of the platelet features were designed for operation with methane fuel. The flow passages and face bleed cooling orifice dimensions were sized to control the coolant flow to maintain the face temperature at roughly 900 degrees Fahrenheit. When the program was redirected to use hydrogen fuel, the steady state thermal analysis was repeated for the existing platelet feature sizes using hydrogen properties. The 3-D model included the first 9 platelets back from the face cooled by 5% of the hydrogen flowrate. The bulk hydrogen temperatures used in the model were known a'priori by scaling the results of a 2-D thermal analysis from the 40K LOX/CH_4 injector design. The scaled bulk temperature rise for the hydrogen was then 106.8°F. The projected steady state operating temperatures of the worst thermal environment, at the face nut, were 184 degrees Fahrenheit. Although the platelet feature sizes for this overcooled face were not changed on the subscale injector, these features were resized in the full scale injector to simplify the design.

Figure 4-58 presents a cross section of the platelet coolant geometry where the regenerative coolant features are illustrated. The fuel is bled out from the surface of the face at location 1. The platelets are shown in Figure 4-59 before bonding.

4.3.3.2.3 Fuel Film Coolant (FFC)

Fuel is injected into the resonator cavity to cool the cavity and the combustion chamber wall, as illustrated in Figure 4-60. Radial passages in the platelet stack direct 1.5% of the fuel flow radially into the cavity. An additional 0.75%, which is simply face bleed outboard of the outer row of elements, is directed axially across the resonator opening. A changeable orifice in the fuel torus opposite the inlet provides the capability to vary the amount of hydrogen injected into the resonator cavity.

4.3.3.3 Resonator Ring

For longer duration tests which would use the IR&D water-cooled hardware, a cooled resonator ring was required for the assembly. The resonator ring is illustrated in Figure 4-61. The fabrication sequences for producing the completed resonator ring are summarized in Figure 4-62

The cooled resonator ring consists of a 304L stainless steel outer housing with a zirconium copper liner brazed in place. These components are shown prior to braze in Figure 4-63. Coolant channels are machined into the copper liner. The two mating component surfaces were plated with a braze alloy, and the copper liner shrink fitted into the structural housing. Intimate contact of the braze surfaces was maintained during the furnace cycle by use of a RAM loaded vacuum furnace. The brazed assembly is shown in Figure 4-64.

Figure 4-65 shows the part after final machining. The assembly has 4 inlet and 4 exit ports for the coolant flow. Access ports are provide in this hardware for the TEAL/TEB igniter and two high frequency pressure transducers.

The resonator ring was designed to form an acoustic cavity when installed with the injector core. Blocks, illustrated in Figure 4-66, can be used to adjust the cavity height for different tunes or to completely block off the cavity according to test requirements.

The assembly design had originally intended for the resonator ring coolant passages to be fed from the injector body fuel manifold via 3/4 inch lines. Conversion of the fuel to hydrogen and a reduction of the nominal chamber pressure resulted in an imbalance in the required pressure for the resonator ring coolant circuits and the injector fuel inlet manifold. To correct this pressure differential, the resonator ring circuits supply would be tapped off the main fuel line instead of the injector body, as illustrated in Figure 4-67. An orifice is now placed at the injector fuel manifold inlet downstream of the tapoff to provide higher pressure to the resonator ring coolant circuits. At nominal steady state conditions the orifice pressure drop would be about 600 psi. The higher inlet pressure for the resonator ring coolant circuits is required to ensure the coolant channels operate at pressure greater to or slightly higher than the chamber pressure.

Prior to use of the resonator ring in hot fire testing, the coolant circuits are to be flowed with ambient, gaseous nitrogen. All four inlet channels are to be plumbed separately with provision for monitoring inlet pressure and temperature and including a backpressure valve at the exit. Flow conditions can be calculated from pressure and temperature

measurements made upstream of the orifice at the coolant channel exit. The expected flow rates and pressure drops for each coolant circuit are listed in Table 4-14.

4.3.3.4 Combustion Chamber

All testing on this program utilized an ablative lined chamber which was designed and built under ADP Contract NAS-8-38080. The chamber, illustrated in Figure 4-68, consists of a stainless steel shell containing a composite liner. Fiberite MX2600 silica phenolic was used in the composite for thermal insulation, and Fiberite MXB7707/181 glass epoxy for structural retention of the silica phenolic. The liner was also retained by a ring which bolts to the chamber housing. The chamber length from injector face to throat was 15 inches, and the nominal contraction ratio was 2.82.

An acoustic resonator was formed at the chamber to injector interface. Tuning blocks were available to fill the resonator space to allow testing with and without the resonator. Gas temperatures within the acoustic resonator were measured with thermocouples installed through the chamber wall.

4.3.3.5 Igniter

The stainless steel housing has access ports for two bomb assemblies and an igniter, as shown in Figure 4-69.

Ignition was achieved with TEAL/TEB injected axially into the combustion chamber. The igniter consisted of a 1/4 inch diameter copper tube brazed to a Swageloc fitting. The assembly threads into the structural chamber housing.

4.3.3.6 Bomb Assembly

Two bomb ports were located 180 degrees apart, 2.7 inches downstream from the injector face, and perpendicular to the combustion flow stream. Figure 4-70 illustrates the bomb assembly design. The stainless steel plug threads into the structural shell of the chamber, and positions the outer sleeve and end plate flush with the ablative chamber inner diameter. The bomb assembly was originally designed for use with high pressure (3600 psia) ablative-lined chambers. The design intended to minimize the detonation damage to the bomb port that had been experienced on other programs. The bomb port design utilized a high strength steel sleeve to direct the explosion inward and away from the ablative edge. A carbon phenolic heat shield protected the bomb from combustion heat and premature ignition. The assembly was

designed to allow 6.5 to 13 grains of RDX explosive. Commonality of this design between other NLS/STME ADP and APD IR&D programs are reflected in the cross listing of parts in Table 4-15.

4.3.3.7 Instrumentation

Table 4-16 summarizes the instrumentation ports that were provided on the hardware. Instrumentation access ports in the propellant manifolds and resonator ring are located in Figure 4-71. Static pressure, temperature, and high frequency pressure can be measured in both manifolds although upstream of the distribution plates. Static and high frequency pressure can be measured in the combustion chamber through the cooled resonator ring. Static pressure transducers located along the ablative chamber wall, as illustrated in Figure 4-72, can be used to measure the axial chamber pressure profile.

High frequency oscillation pressures were measured with Model 615M106 helium-bleed Kistlers at six locations in the combustion chamber. Access holes 0.3 inch long and 0.1 inch in diameter were drilled in the ablative liner to interface with the chamber Kistlers. Shock tube tests of this inlet configuration were conducted at Aerojet to confirm the Kistler response. A typical response is shown in Figure 4-73.

The resonance frequency of a chamber Kistler with 0.1 x 0.3 inch inlet (with nitrogen as the shock medium) occurs around 17,000 HZ, and a gain of 1.2 (amplification of 20 percent) occurs at about 6500 Hz, as Figure 4-73 shows. To measure 3D subscale 2T mode frequencies (5800 - 6500 Hz) without significant amplification and loss of calibration, the 20 percent gain was required at a frequency no lower than 6000 Hz. Resonance frequencies of the Kistler inlet in oxygen/hydrogen combustion are expected to be about 25% higher than measured in the shock tube, because of the differences between the helium/nitrogen and helium/combustion acoustic interfaces.

Ablative chamber combustion measurements included static and high frequency pressure.

4.3.3.8 Cleaning and Final Assembly

After the three major subassemblies were complete, each underwent a final cleaning. The oxidizer dome was attached to the injector body to facilitate flushing of the system. Blank Greyloc hubs with fittings were placed on the inlet ports.

The hardware was certified to Aerojet's cleaning specification, ATC-STD-4940. The oxidizer circuit was certified clean to Level 400 and the fuel circuit to Level 200. These levels correspond to the filtration of all particles larger than 200 to 400 microns, respectively. These levels were determined by the smallest feature size in the propellant circuit to prevent clogging. Both circuits were certified to Level A for non-volatile residue and Level K for hydrocarbons.

After certification of the cleanliness level, the parts were dehydrated. All ports were then capped off and the hardware shown in Figure 4-74 was delivered to the test area.

4.4 SUBSCALE TESTING

4.4.1 40K Injector Testing at NASA-MSFC

In 1987, a test series using LOX/CH_4 propellants was conducted at NASA-MSFC with a 60 element 40K lbf thrust swirl coaxial platelet injector designed and built at Aerojet. Data from the Lox/Methane Testing With This Injector is Documented in Reference 20. This injector was tested again in 1990 with LOX/H_2 propellants without change of injector hardware. Test results for the 40K LOX/H_2 testing from Reference 4 are presented in Table 4-17.

Injector performance and combustion chamber thermal data from both LOX/CH_4 and LOX/H_2 40K injector test series were evaluated on the LSI program. The injector condition at the completion of the methane test series is shown in Figure 4-75. A nonconcentricity of the element fuel annulus was noted on the outer row of elements, such that the smaller dimension was located nearest the chamber wall. These nonconformities are believed to affect both injector performance and chamber wall heat flux.

The heat flux data obtained from testing the Aerojet 40K swirl coax injector with LOX/CH_4 and LOX/H_2 propellants were used to develop a reactive integral boundary layer model for each propellant combination. The integral boundary layer is based on solving the integral energy equation and is described in Reference 22. With the boundary layer model, the heat flux is specified at a certain location and the model calculates heat fluxes downstream of that point based on input correlation coefficients. For chamber analyses the heat flux is usually specified at either the end of the injector-affected region or the end of the cylindrical section. Figure 4-76 presents a comparison of heat flux data to the boundary layer model for LOX/CH_4. The model accurately predicts the maximum barrel region heat flux but slightly overpredicts the throat region maximum heat flux. Heat flux data generated from a reactive model is shown to accurately predict both the maximum barrel region and throat region heat fluxes over a range of mixture ratios in Figure 4-77.

Chamber wall heat loads with LOX/H_2 operation were correlated with current analytical models. Figure 4-78 compares heat flux profiles from the RD SSME 40K, P&W 40K from test #27, and the APD 40K injector. P&W test #27 was conducted after removal of all the chamber wall compatibility features including fuel film cooling, oxidizer tip scarfing, and the outer row MR bias features. The RD 40K injector used SSME type shear coaxial elements. Both the APD and P&W injectors used swirl coaxial elements and were tested on the NASA-MSFC Test Stand 116. The contraction ratio for the P&W 40K testing was larger than for the APD 40K testing, although these differences were compensated in the heat flux profile analyses.

Axial calorimetric LOX/H_2 heat load was measured with the APD 40K injector (Ref. 4). Significant nonconcentricity of the fuel gap on the outer row of elements had been observed. Higher heat fluxes were observed to fall in line with decreased fuel gap on all tests. Figure 4-79 plots the axial heat flux versus the outer row element outboard fuel gap. This localized higher heat flux may be due to localized fuel starvation around the element, and a resulting increase in spray momentum angle. Test data indicate that heat flux was increased approximately 10% in areas corresponding to a 25% reduction in fuel annulus gap. However, the 25% reduction in wall gap also corresponded to a 10% increase in momentum angle. This correlation between momentum angle and heat flux for the 40K hydrogen tests is documented in Figure 4-80.

Injector performance of the MSFC/APD 40K swirl coaxial platelet injector with hydrogen fuel and methane fuel were compared. Figure 4-81 illustrates the C* efficiency achieved as a function of chamber pressure. The LOX/H_2 testing achieved similar C-star efficiencies at the same chamber pressures as the LOX/CH_4 testing.

For the hollow cone swirl coax elements, the momentum angle, the resulting angle of the momentum exchange between the liquid oxidizer cone and the concentric axial gaseous fuel sheath, may be an influential parameter in the injector performance because of its importance in intraelement atomization and mixing. The element momentum angle is a function of the element propellant flowrates, velocities, and oxidizer free swirl angle, which in turn is a function of the geometry of the swirl inlet and not the oxidizer flowrate. The effect of calculated momentum angle on the C* efficiency is shown in Figure 4-82. Similar injector performance was achieved with similar momentum angles with two different fuels which suggests an important influence. Similar injector performance occurred with a wide range of velocity ratios, as shown in Figure 4-83, indicating this parameter has less effect. Increasing the velocity ratio reduced injector performance because of reduced momentum angle. These relationships clearly show that shearing mechanisms are secondary to momentum exchange mechanisms for hollow cone swirl coax operation.

4.4.2 3D (100K lbf) Injector Testing at APD

The test requirements for the 3D subscale injector tests are described in the Test Requirements Document (Ref. 21). This document provides the test objectives, test hardware description, facilities descriptions, instrumentation requirements, test matrix, data requirements, photographic requirements, cleanliness requirements, and proof, leak, and flow procedures.

4.4.2.1 APD's Test Area Description

All testing was conducted on Test Stand E-6 at Aerojet Propulsion Division (APD) shown in Figure 4-84. This facility had been recently renovated to test LOX/H_2 thrust chamber assemblies up to 300,000 lbf thrust. The LSI subscale hardware is shown on the test stand in Figure 4-85.

Figure 4-86 illustrates the oxygen run system. Liquid oxygen was supplied from a 300 gallon, 5600 psig capacity run tank through a 6 inch diameter line. Flowrate was measured by two FlowTec turbine flowmeters. The flowrate was controlled by a 6 inch Valtek position-programmable thrust chamber valve.

A schematic representation of the fuel run system is presented in Figure 4-87. Liquid hydrogen was supplied through a 4 inch diameter vacuum-jacketed line from a vacuum-jacketed 600 gallon, 5600 psig capacity run tank pressurized by a servo-controlled gaseous hydrogen supply. Gaseous hydrogen was supplied from a 6800 psig 1300 cubic foot cascade. Liquid and gaseous hydrogen were combined in a mixer to generate the required injector fuel temperature. A thermocouple rake downstream of the mixer recorded radial fuel temperature variations found to be 10 to 30 Rankine for all tests. The flowrate was controlled by the mixer inlet valves. Flowrate was measured by two FlowTec turbine flowmeters downstream of the mixer.

4.4.2.2 Start Sequence

All tests were initiated with an oxidizer lead into the combustion chamber to prechill the oxidizer runline and injector manifold. Hydrogen flow through a dump valve prechilled the fuel runline. The liquid oxygen lead was ignited with a mixture of 15% TriEthylALuminum/85% TriEthylBorane (TEAL/TEB), a hypergol with oxygen. Combustion and flow parameters for the ignition are listed in Table 4-18. After detection of the LOX/TEAL/TEB ignition, hydrogen was injected into the combustion chamber and the flowrates ramped up to mainstage conditions. The TEAL/TEB was injected only for ignition and not during main stage operation.

The initial start sequence, illustrated in Figure 4-88, included a Level I operation at a lower chamber pressure than the steady-state main stage. A chamber pressure trace of this two-step operation is shown in Figure 4-89. The Level I provided time to temperature-condition the propellant manifolds at lower throat ablation rates so that propellant manifolds would be fully chilled during steady state operation when throat ablation would be highest. Low frequency combustion instability, or chugging, was noted during Level I operation. Level I sequencing was removed from the operational sequence after Test 009 when propellant manifold chill and fill times and throat ablation rates were suitably characterized. Figure 4-90 illustrates the final operational sequence used in the test series. Figure 4-91 shows a single step chamber pressure trace.

Table 4-19 lists the kill parameters used for hardware protection.

4.4.2.3 Test Matrix

The purpose of the 3D subscale test program was to evaluate the full scale 3T mode combustion stability, injector hydraulics and performance, face compatibility, and the

combustion chamber heat flux profile. Table 4-20 summarizes the hardware configurations required for demonstration of the various test objectives.

The pre-test matrix for the 3D hot fire testing is shown in Table 4-21. The tests were designed to operate the hardware over a range of chamber pressures and mixture ratios surrounding the nominal design operating point as illustrated in Figure 4-92. Four series of tests were planned for a total of 25 tests. The initial test series was designed to verify the valve sequencing and ignition. The next three test series used the ablative chamber to determine the stability threshold over a chamber pressure and mixture ratio survey, utilizing nondirectional bombs mounted in the chamber wall.

For the last two series of tests, the cooled calorimetric chamber was to have been installed to obtain heat flux data. Unfortunately, because of funding constraints no testing was conducted with the 3D subscale cooled combustion chamber hardware under this contract.

4.4.2.4 Test Description

4.4.2.4.1 Test Series 0

Test Series 0 included tests 001 thru 005. The test objectives were to verify ignition and start sequences, establish event timers, set kill limits, and verify propellant manifold chill times and fill times. The acoustic cavity configuration for this test series was a monotuned 1T. Leakage of the LOX valve required a replacement of the piston seals prior to test 004. Figure 4-93 shows a closeup of the injector and chamber prior to testing. The injector face prior to test 004 is shown in Figure 4-94, and the chamber in Figure 4-95.

4.4.2.4.2 Test Series 1

The hardware configuration remained unchanged for Test Series 1 which included tests 006-013. The test objective was to conduct bomb tests at steady state conditions over the PC/MR envelope of interest. An acoustic resonator cavity was included to damp the fundamental mode for conservatism and to provide combustion stability data for undamped higher harmonic modes.

Based on the measured cavity temperature, the monotune 1T cavity significantly damped the fundamental transverse acoustic mode at 4000 Hz. Modes identified

from PSD analyses included the 1L (2200 Hz), the suppressed 1T (ranging from 2700 to 3300 Hz), and the 2T (6600 Hz). Peak-to-peak amplitudes at steady state were less than 1% of PC.

Ablation of the chamber throat during Test Series 1 is presented in Figure 4-96 The throat diameter increased by approximately 0.09 inch during each test. This rate did not appear to be a strong function of either PC, MR, or test duration.

Figure 4-97 shows the condition of the injector face and the chamber barrel at the completion of Test Series 1. Upon disassembly of the injector from the chamber, the copper ring bolted to the chamber to form the side of the tuning cavity was found to be deformed, as shown in Figure 4-98. The deformation was attributed to the ignition of LOX which pooled in the chamber and acoustic cavity during the long LOX lead, igniting when TEAL/TEB or hydrogen was injected into the chamber.

During the test series, the face nuts were found to have loosened, which was attributed to Level I chugging. To eliminate the need to retorque between tests, the face nuts were staked in place as shown in Figure 4-99.

At the end of test series 1, an assessment of test success was made. Three areas of concern were identified: fuel manifold chilldown, fuel flowrate measurement, and dynamic perturbation of the combustion processes.

Initial test data indicated chilling of the fuel manifold required extensively longer than the 300 ms calculation. The difference was traced to use of slow-responding thermocouples which were replaced prior to test 013. Data affected by these temperature measurements from previous tests were corrected.

The fuel flowmeter calibration curves provided by the supplier did not provide data over the entire range of the LSI hydrogen run conditions. After all testing ended, one flowmeter was removed from the test stand and replaced with a square edge orifice, and flow tests with hydrogen conducted. The flowmeter measured more flowrate than the orifice in nearly all tests. Consequently, a constant reduction of fuel flowrate by 96.63% of the flowmeter measurement was used to correct all fuel flowrates.

The third concern after Test Series 1 was the inability to provide a significant overpressurization with the 6.5 grain bomb. Overpressures, if distinguishable, were

approximately 7% zero-to-peak, where 15% to 20% was recommended (Ref. 23). Early detonation of the bomb was also experienced, presumably thermally. Significant expansion of the bomb sleeve indicated that the bombs were detonating rather than firing by erosive burning. For test 014, the bomb size was upgraded to 13 grains, and additional thermal insulation was provided during the assembly.

4.4.2.4.3 Test Series #2

Prior to Test Series 2, the ablative liner was changed and the acoustic cavity was blocked with a copper ring. About 95% of the resonator area was sealed, leaving a 0.030 inch gap adjacent to the injector core for passage of resonator fuel coolant into the combustion chamber.

Test Series 2 included tests 014 to 019. The objectives of this test series were to investigate the dynamic stability of the undamped fundamental mode (1T). Normal, full duration operation was obtained on tests 017 through 019. Bomb detonation was controlled just prior to shutdown on tests 017 and 018. On test 018, the bomb overpressurization was 15%, adequate but still small. Although 13 grain bombs were used, the shelf life and storage conditions were questionable.

4.4.2.5 Investigation of Test 019

A manifold explosion on test 019 created a large overpressure during the start transient. The overpressurization was not long enough to trigger an abort and the test ran full duration with normal shutdown. Figure 4-100 is a copy of the oscillograph trace which records the valve movement and manifold pressures. Approximately 40 ms after the fuel valve (LFTCV) starts to open, a pressure spike was observed in the fuel manifold (PFJ). Figure 4-101 shows the corresponding temperature response data (TFJ). Of the four thermocouples present in the fuel manifold, only two registered during the test.

Inspection of the face revealed an area at the 7 o'clock position where 18 LOX post tips were missing, shown in Figure 4-102. Testing was terminated at this time. Figure 4-103 shows the injector after removal from the test stand. The chamber was undamaged and is shown in Figure 4-104.

Neither the test procedure, injector kw's, nor the operational sequences had changed prior to the incident. Differences between test 019 and previous tests included colder hardware temperature, a LOX valve leakage, and a 6-hour time delay between tests 018 and 019. With the LOX valve leaking, the hardware was very well chilled between the two tests. A liquid, possibly LOX, was observed dripping from the ends of the oxidizer tubes into the chamber between tests. Since the injector was mounted horizontally, the recessed LOX post may have enabled LOX to pool in the fuel manifold as illustrated in Figure 4-105. In addition, nitrogen purges, normally on the manifolds at all times, were turned off when personnel are working directly on the chamber between tests. Backlighting of the LOX/H_2 mixture from the chamber could have occurred during the startup transient.

The hardware condition is documented in Reference 24, the review of the test data in Reference 25, and metallurgical examination of the hardware in Reference 26.

Prior to machining open the injector to allow access to the oxidizer posts, a boroscope was used to internally inspect the fuel manifold areas illustrated in Figure 4-106. The outer wall of the fuel inlet torus showed evidence of scorching opposite the damaged area on the injector face. The remainder of the fuel manifold was clean. Some scorch marks were noted exiting the fuel crossovers between the bolt holes. The oxidizer posts brazed into the injector body looked to be intact. Braze joints and the backside of the fuel distribution plate looked intact, with no evidence of scorching.

The face plate was intact and level, and the only damage noted was one erosion area near an element as shown in Figure 4-107. The couplers that connect the face nut to the oxidizer post and allow entry of the fuel into the face nut annuli were intact. The backside of the FFC bleed holes and the FFC cavity was clean and intact. Blackened areas were noted on the FFC orifice that feeds fuel coolant into the cavity.

Figure 4-108 summarizes the damage to the injector assembly, Figure 4-109 shows a side view of the oxidizer posts, and Figure 4-110 summarizes the damage to the injection element assembly. Minor heat erosion was also noted on the oxidizer swirler inserts. Whether this was due to normal operation of a hollow oxidizer cone swirler or related to the anomaly is unknown. The internal surfaces of the LOX posts were clean, with machining marks still evident.

No leaks were detected during a GN_2 low pressure check to verify the integrity of the oxidizer braze joints.

Based on pressure and temperature traces, combustion due to detonation of LOX/H_2 in the fuel torus was quickly extinguished and caused negligible damage. The LOX/H_2 ignition behind the face plate resulted in localized damage to one or more oxidizer posts. Figure 4-111 shows a severely eroded oxidizer tip and notes the inspection results. The proposed failure mechanism of this and the surrounding oxidizer posts is presented in Figure 4-112. Damage to the oxidizer posts is speculated to have occurred during the start as the detonation in the secondary fuel manifold ignited the fuel flowing through the coupler, directing a blowtorch toward the oxidizer post. During steady-state conditions, the element operated normally with the full pressure fuel flow containing the oxidizer cone. During shutdown, additional melting could have occurred due to reduction of fuel pressure and resulting oxidizer spraying into the fuel manifold.

The erosion seen on the tubes and corresponding injector components is felt to have occurred during startup and shutdown transients. The damage was consistent with melting due to high temperatures. A summary of the test anomaly sequence is presented in Table 4-22. Recommendations for future testing are summarized in Table 4-23.

4.4.2.6 Injector Rework

Figure 4-113 summarizes the fabrication flow logic followed for repair of the injector body. Damage was moderate and the design allowed straightforward rework of the injector elements. After the face plate assembly was removed, the threaded injector elements were disassembled. Damaged oxidizer posts were machined out of the interpropellant plate to allow new posts to be brazed in place. To ensure all of the old oxidizer posts had been removed, the replacement oxidizer posts used oversized threads at the point of assembly into the injector body.

The braze operation and final assembly of the injector followed the same processes as discussed in Section 4.3.3.2 for the initial fabrication sequence. Following completion of the repair, the injector body and oxidizer inlet were LOX cleaned and bagged. The repaired injector is shown in Figure 4-114.

4.4.4 Data Evaluation

Nineteen tests were conducted with the LSI subscale hardware. Table 4-24 lists the operating conditions for the 11 tests which obtained reasonable run times. All these tests were conducted using ablative lined chambers.

The inlet injector pressure drops listed in Table 4-25 were measured from the inlet line for the oxidizer circuit and the torus for the fuel circuit. The injector element pressure drops were not measured but derived from cold flows of distribution plate coupons and hydraulic analyses of the manifolding. These pressure drops represent the difference in pressure downstream of the distribution plates to the measured face pressure. The fuel distribution plate accounts for about 25% of the fuel circuit pressure drop from the inlet..

4.4.4.1 Combustion Stability

A radial dogleg 1/4 wave acoustic resonator at the head end of the combustion chamber was included in tests 004 through 012. The effective resonator length was 3.3 inches from the chamber diameter to the back of the cavity. Gas temperatures measured in the cavity, 0.9 inch from the entrance, ranged from 500 to 1400 Rankine, and are listed in Table 4-26. The cavity temperatures are shown in Figure 4-115 to be a function of injected mixture ratio. Calculations of the resonator sound speed indicated the resonator was operating at a 1/4 wave frequency of the first tangential (1T) mode of the subscale combustion chamber. In tests 014 thru 019, 95% of the resonator area was sealed with a block, leaving a small gap adjacent to the injector core for the passage of the resonator fuel coolant into the combustion chamber.

4.4.4.1.1 Statistical (Operating) High Frequency Stability

The operating or statistical high frequency stability of the 3D subscale injector was examined by two means, the peak-to-peak amplitudes of discrete combustion and manifold oscillations identified by power spectral density (PSD) analyses, and the peak-to-peak amplitudes of unorganized combustion and manifold oscillations.

All discrete peak-to-peak oscillation amplitudes - identified in PSD analyses of every high frequency transducer in the combustion chamber and manifolds - were

less than 1% of chamber pressure. Unstable combustion is usually denoted as discrete peak-to-peak oscillations greater than 10% (Ref. 23), so these tests can be considered stable. No measurable differences in discrete oscillations amplitudes were observed between tests with and without the acoustic resonator. All discrete high frequencies and peak-to-peak amplitudes which were identified in PSD analyses are listed in Table 4-27. Examples of PSD plots from test 012 are shown in Figures 4-116 to 4-119, and from test 018 before the bomb event in Figures 4-120 to 4-123, and after in Figures 4-124 to 4-127. Further identification of acoustic modes in the 3D subscale tests with phase analyses was not pursued because the amplitudes of the oscillations at all frequencies were less than 1% of chamber pressure, not significantly above the noise levels to warrant correlation.

The operating roughness of the swirl coaxial combustion was assessed with the peak-to-peak amplitudes from analog high frequency pressure oscillographs. Table 4-28 lists the unorganized peak-to-peak oscillations amplitudes in the combustion chamber and the oxidizer manifold. In all tests the unorganized peak-to-peak oscillations were less than 9% of the chamber pressure. Rough combustion is usually defined as unorganized peak-to-peak oscillations greater than 10% (Ref. 23), so these tests can be considered quiet.

The peak-to-peak amplitudes of the unorganized combustion and manifold oscillations are plotted versus PC and MR on Figures 4-128 and 4-129, respectively. The spectrum amplitudes are generally constant except for the oxidizer manifold oscillations, which appear to decrease at higher mixture ratios. The normalized spectrum amplitudes are shown in Figures 4-130 and 4-131 versus the normalized oxidizer and fuel injector circuit pressure drops, respectively. The normalized spectrum amplitudes are clearly reduced as the normalized pressure drop increases. This reduction is characteristic of injection coupling systems such as coaxial injectors. A reduction in the spectrum amplitude may increase the stability margin of an injector, since the unorganized spectrum is an energy source for the growth of linear instabilities.

4.4.4.1.2 Dynamic (Bomb) High Frequency Stability

The primary objective of the 3D subscale ablative chamber testing was to investigate the dynamic stability of a LOX swirled coaxial element injector. Nondirectional bombs located within the ablative chamber wall 2.7 inches downstream of the injector face were detonated in an effort to perturbate the combustion processes. The dynamic response was

measured by 6 high frequency pressure transducers within the combustion chamber near the bomb port.

Bombs with 6.5 and 13 grains of RDX explosive were discharged on 7 tests; the resulting overpressures and the injector operating conditions at the overpressures are shown in Table 4-29. Only one bomb generated an overpressure greater than 10% of chamber pressure. The other bombs, at least two of which exploded prematurely, generated overpressures less than 6% of chamber pressure. Reference 23 suggests a minimum of 10 to 20% overpressure for a valid dynamic stability test. Dynamic stability of the LSI element cannot be considered well characterized with the results of these tests.

Although bomb overpressures were generally small, combustion oscillations damped in 3 milliseconds or less from all of the artificial perturbations. Combustion responses to the bomb overpressures for test 018 is shown in Figure 4-132.

A manifold explosion on Test 019 created a large overpressure (>100% of PC) during the start transient which is shown in Figure 4-133 The explosion was due to a pretest accumulation of liquid oxygen in the fuel manifold, and damaged 18 injector elements as described in Section 4.4.2.5. The explosion induced a chug oscillation which damped in 50 ms and high frequency oscillations in the fuel torus which damped in 10 ms. The following full duration (0.75 second) test was stable.

4.4.4.1.3 Low Frequency Stability

Low frequency combustion instability, a nonacoustic, feed-coupled chugging, occurred on tests 004 and the three Level I tests 006-I, 007-I, and 009-I. The chug oscillations were very nearly spatially and temporally uniform throughout the combustion chamber. Chug frequencies varied between 235 and 280 Hz, depending upon the chamber pressure and mixture ratio, as shown in Figure 4-134, and also the hydrogen injection temperature. The phase of the oxidizer manifold oscillation lagged the chamber oscillation between 40 and 90 degrees, as shown in Figure 4-134. In deeper chug instability, or throttle further from neutral stability, the chug frequencies are lower and the phase lag larger.

Chug stable operation was demonstrated down to 1520 psia chamber face pressure on test 007-II, a throttle of 62 percent from the nominal face chamber pressure of 2470 psia. Chug stable operation was also demonstrated down to 1750 psia on test 016, a throttle of

71 percent from the nominal face chamber pressure of 2470 psia and the nominal mixture ratio of about 7.2.

Normalized element pressure drops are plotted on Figure 4-135. These data show the characteristic liquid oxidizer/gaseous fuel chug relationship described in Reference 23 where increasing liquid oxidizer pressure drop is stabilizing.

The chug data were used to calibrate an internal chug stability computer model (Ref. 27), a lumped parameter, double combustion time lag analysis based on Wenzel and Szuch (Ref. 28). Combustion time lags were computed from the ratios of calculated combustion distances and injection velocities. The combustion plane was calculated to occur after intact core breakup and suitable vaporization of the mass median droplet size. Mixing and combustion kinetics were assumed to be infinitely fast. The total injection timelag of the fuel circuit (for gaseous injection to the combustion plane) was computed from the product of the oxidizer total timelag and the ratio of oxidizer to fuel injection velocities.

The prediction of chug stability threshold (or neutral stability) using the 3D subscale test data is shown as the upper curve in Figure 4-134. Frequencies between 200 and 300 Hz were observed in PSD analyses of test 016, although oscillation amplitudes were only 12 psi peak-to-peak (0.7% of chamber pressure). The lower curve on Figure 4-134 is the calibration used to model chug instabilities that occurred during LOX/CH_4 testing of the 40K platelet injector (Ref. 20). The smaller timelags resulted in slightly improved margin and still acceptable modeling. Forcing the model to predict neutral stability at test 009-I, however, forced the predicted chug frequencies greater than 400 Hz, which was greater than the observed 280 Hz. The two curves shown in Figure 4-134 are thus the best chug stability predictions.

The calibrated chug-free throttle prediction at the nominal mixture ratio of 7.18 shown on Figure 4-134 is between 1050 and 1150 psia, or a throttle to 43% to 47% from the subscale nominal chamber face pressure of 2470 psia.

4.4.4.2 Combustion Performance

Characteristic exhaust velocity efficiency and energy release efficiency were calculated for the sustained high pressure ablative chamber tests. All data were calculated from a 0.100 second interval just prior to shutdown. The barrel, throat, and nozzle exit diameters of the ablative chamber used for calculation were those measured after each test. Nitrogen purge

gas injected from the igniter port was added to the injected flowrate as a very small adjustment (less than 0.1%). Parasitic fuel flows, listed in Table 4-24, ranged from 5 to 8% for face bleed, and 2 to 3% for acoustic resonator (chamber periphery) injection.

Characteristic exhaust velocity efficiencies were estimated by assuming one-dimensional Raleigh total pressure losses to the throat plane. Combustion chamber barrel static pressure was measured in the acoustic resonator 0.2 inches downstream of the injector faceThe Raleigh loss ranged from 2.5 to 4 % and was dependent on post test contraction ratio and the specific heat ratio of combustion gases.

The energy release efficiency (ERE), the ratio of delivered specific impulse to calculated perfect-injector specific impulse, was calculated from thrust measurements with a 2.2:1 expansion ablative nozzle. The perfect injector specific impulses were calculated with the JANNAF-standard TDK computer program (Ref. 29). Kinetic, divergence, and boundary layer losses were calculated for each test as a function of propellant enthalpy and varying ablative chamber contraction and expansion ratios. A thrust bias of about 1.5 % was determined by static thrust stand load cell calibration. No adjustments were made to the thrust measurements due to base pressure effects since base pressures were not measured.

All performance efficiencies are shown in Figure 4-136 as functions of chamber pressure and mixture ratio. Characteristic exhaust velocity efficiencies were generally higher than energy release efficiencies, although the agreement between efficiencies improved at higher chamber pressures.

Analyses of the MSFC/APD 40K platelet injector tests (discussed in Section 4.4.1) found that the momentum angle, the resulting angle of the momentum exchange between the liquid oxidizer cone and the concentric axial gaseous fuel sheath, is an influential parameter in the performance of hollow-cone LOX-swirl coaxial element injectors. The element momentum angle is a function of the element propellant flowrates and velocities, and the oxidizer free swirl angle, which in turn is a function of the geometry of the swirl inlet and not the oxidizer flowrate.

The LSI 3D subscale injector performance, however, did not appear to be influenced by the momentum angle, as shown in Figure 4-137. Yet comparison with the LOX/CH_4 and LOX/H_2 performance data from the MSFC/APD 40K swirl coaxial injector,

shown in Figure 4-138, shows that similar combustion performance was achieved with similar resulting momentum angles. Higher injector performance was achieved only with higher resulting momentum angles.

The dependence of injector performance on the fuel-to-oxidizer velocity ratio is shown in Figure 4-139. Reducing the velocity ratio at these nominally low values increases the injector performance of hollow cone swirl coax element injectors, since the momentum angle has been increased. This result is in contrast with injector performance characteristics of non-swirled or shear coax element injectors, which rely on high injected fuel-to-oxidizer velocity ratios or relative velocities to obtain high performance because of the dependence of the atomization and interelement mixing on the shearing rate. At very high velocity ratios, the performance of the hollow cone swirl injectors may eventually increase since the hollow cone will have collapsed and the shearing effects become dominant.

Since similar performance was obtained between the 3D (100K) and the 40K injectors over a wide range of velocity ratios, and in all cases increasing the velocity ratio reduced performance, pure shearing of the oxidizer cone cannot be a primary mechanism for atomization and mixing of hollow cone oxidizer swirl coaxial elements. This implies that self atomization of the oxidizer stream with its own conical injection is an important mechanism in the atomization, and the forced radial motion is important for mixing. These concepts point to the importance of a parameter like the momentum angle for intraelement and interelement performance.

Recent analyses applying regression techniques (Ref. 30) identified the importance of fuel velocity alone on injector performance. In these studies, the fuel velocity term V_f^2 was identified as the dominant parameter contributing to the spread in injector performance for three hollow-cone oxidizer-swirl coaxial injectors with varying swirl features. Reducing the fuel-to-oxidizer velocity ratio had been found to consistently increase injector performance, as shown in Figure 4-139. In Reference 30, however, the mixing characteristics of hollow cone swirl coaxial elements were attributed to the fuel velocity term alone rather than to momentum exchange parameters such as the momentum or velocity ratio or the momentum angle.

5.0 CONCLUSIONS AND RECOMMENDATIONS

5.1 CONCLUSIONS

A 21.9 inch diameter full scale injector was delivered to NASA/MSFC in September of 1991, per contractual requirements, and is awaiting testing. This injector was designed to operate with liquid oxygen and gaseous hydrogen propellants at flowrates equivalent to 580K lbf thrust. The injector was designed to interface with a Rocketdyne-supplied, hydrogen cooled, combustion chamber.

The 580K lbf thrust full scale LSI injector is representative of the combustion device technology required to develop a 640K lbf LOX/hydrogen STME engine. It can provide invaluable early high frequency combustion stability, injector performance efficiency, injector and chamber thermal durability, and throttleability/chug stability data for STME development.

Preliminary evaluation of the full scale injector operating characteristics was provided by strategic sized, subscale testing using an injector with unscaled injector elements. The stable operation in the undamped 3T=1T subscale testing showed that the injector element stability was acceptable for further fullscale development. Actual full scale operating characteristics were predicted with the ROCCID computer model anchored with data from the subscale testing.

The full scale injector is predicted to operate stably and quietly without damping devices at nominal conditions. Combustion response to a thrust chamber bomb, although not fully anchored by subscale testing, is predicted to be stable. Throttling of the full scale injector at nominal mixture ratio is predicted to be chug free down to 48% of nominal chamber pressure.

Characteristic exhaust velocity (C-star) efficiency is predicted to be 97% at nominal conditions. Most of the performance inefficiency is attributed to non-optimum single element mixing. Parallel effort on NLS development has predicted that higher injector performance (> 99% C-Star efficiency) can be achieved with this coarse pattern (546 element) injector with element geometry modifications.

Full scale combustion chamber heat flux was predicted with an integral boundary layer model anchored with calorimetric heat load measurements in 40K subscale testing. About 4.5% fuel film coolant is used for chamber wall thermal control, which, along with approximately 0.4% fuel face coolant, creates an injected mixture ratio of about 4.5 outboard of the centerline of the outer row of elements.

5.1. Conclusions (Cont)

Maximum wall temperature at nominal test conditions in the hydrogen-cooled, dual width, axially slotted Rocketdyne chamber is predicted to be 990 degrees Fahrenheit just upstream of the throat, with heat flux of 76 Btu/in.^{2}-sec. These predictions included a streak factor of 1.2 to account for potential injector circumferential nonuniformities.

The testing of this injector is an important feature of the STME development plan, presented in Figure 5-1. Demonstration of a stable, compatible injector early in component testing reduces risk to other hardware during subsequent early engine development testing. The development plan shown in Figure 5-1 also includes parallel plans for optimizing the injector element performance based on continued single and subscale multielement testing.

5.2 RECOMMENDATIONS

Testing the full scale injector is highly recommended to provide early thrust chamber stability, performance, and compatibility demonstration. Testing prior to any modifications is recommended to validate the pre-test predictions. Validation of these predictions will increase the confidence in subsequent hardware improvements and demonstrate the effectiveness of strategic subscale testing and injector characterization.

Design changes are recommended to simultaneously improve the injector performance and reduce the fuel injector propellant circuit pressure drop. These two factors are directly related in hollow-cone oxidizer-swirled coaxial element operation. Increasing the coaxial element fuel injection area by increasing facenut open area (inner diameter) is predicted to increase injector performance and reduce fuel pressure drop. This is a simple option since the facenuts are removable. Swirl coaxial element injectors have been stable and high performing with lower fuel pressure drop in smaller size hardware, although they were not bombed to demonstrate dynamic stability margin.

Increasing the free oxidizer swirl angle with swirl caps redesigned for less inlet area is also predicted to increase injector performance. This is also a simple design change since the swirl caps are removable. Higher oxidizer inlet pressure would be required, however, unless the oxidizer tube bore diameter were also increased.

All changes to increase injector performance would also improve the chug-free throttle margin of the design.

5.2. Recommendations (Cont)

The availability of the 580K lbf thrust injector and combustion chamber early in the STME development plan can provide valuable data that will assist in the success of the ultimate STME engine testing. The 580K lbf thrust injector design also provides flexibility to accommodate future testing of operational enhancement features.

REFERENCES

1) Pieper, J.L., "Oxygen/Hydrocarbon Injector Characterization,", Contract FO4611-85-C-0100, Final Report PL-TR-91-3029, May 1991.

2) Muss, J.A., T.V. Nguyen, C.W. Johnson, "Users Manual for the Rocket Combustor Interactive Design (ROCCID) and Analysis Computer Program," NASA CR-187109, Contact NAS3-25556, May 1991.

3) Bailey, C.R., "Test Evaluation of Oxygen-Methane Main Injectors,", CPIA 480, Volume V, 1987 JANNAF Propulsion Meeting, San Diego, CA, December 1987.

4) Elam, S.K., "Subscale LOX/Hydrogen Testing with a Modular Chamber and a Swirl Coaxial Injector," AIAA-91-1874, 27th Joint Propulsion Conference, June 24-26, 1991, Sacramento, California.

5) Schneider, J.A., "Space Transportation Booster Engine Thrust Chamber Technology Program," Program Plan, Revision A for Contract NAS8-37470, July 30, 1990.

6) Schneider, J.A., "Space Transportation Booster Engine Injector Technology Program," Contact NAS8-37470, Preliminary Interface Control Document, October 17, 1990.

7) Muss, J.A., T.V. Nguyen, C.W. Johnson, "Users Manual for the Rocket Combustor Interactive Design (ROCCID) and Analysis Computer Program," NASA CR-187109, Contact NAS3-25556, May 1991.

8) Ewen, R.L., "Thermal Analysis for LSI Full Scale Design," Engineering Analysis Report #9985-0387, August 29, 1990.

9) Bush, L.W., "LSI Full Scale Injector Preliminary Stress Analysis," Report #LWB,gg:9982:4514, September 13, 1990.

10) Dexter, C.E., Best, P., Lobitz, J., Faulkner, C., Joyce, J., "Space Transportation Engine Thrust Chamber Technology Injector, MSFC Test Stand 116 750K Position Interface Control Document (ICD)," Revised September 30, 1991.

11) Ewen, R.L., " Analysis of Heat Flux Data from MSFC Testing of the LOX/CH4 Swirl Coax Injector with Hydrogen and Comparison with Other Datas ", Engineering Analysis Report 5246:0657 , 8 October 1991

12) Muss, J.A., T.V. Nguyen, C.W. Johnson, "Users Manual for the Rocket Combustor Interactive Design (ROCCID) and Analysis Computer Program," NASA CR-187109, Contact NAS3-25556, May 1991.

13) Van Kleek, J.A., Hulka, J., "Software User's Manual for the ATC AFRPL Low-Frequency Combustion Stability computer Program (LFCS)," Thermodynamic Analysis Report No. 9980:1801, Engineering and Development, Aerojet TechSystems Company, January 1987.

14) Wenzel, L.M., Szuch, J.R., "Analysis of chugging the Liquid-Bipropellant Rocket Engines Using Propellant with Different Vaporization Rates," NASA TN D-3080, October 1965.

15) Shearly, R.N., "Structural Analysis of LSI 2D Subscale Injector, Chamber, and Ablative Liner," Engineering Analysis Report #RNS:gg:9982:4041, June 7, 1989.

16) Ewen, R.L., "Thermal Analysis for the Full Scale Design," Engineering Analysis Report #9985:0387, August 29, 1990.

17) Ewen, R.L., "Full Scale LSI Injector Face Temperature Update," Engineering Analysis Report #5246:0708, March 23, 1992.

18) Shearly, R.N., "Structural Analysis of LSI 3D Subscale Injector," Engineering Analysis Report #RNS:gg:9982:4042, June 7, 1989.

19) Valler, H.W., "Design, Fabrication, and Delivery of a High Pressure LOX-Methane Injector," Aerojet Liquid rocket Company, NASA MSFC Report 33205F, November 15, 1979.

20) Bailey, C.R., "Test Evaluation of Oxygen-Methane Main Injectors," CPIA 480, Volume V, 1987 JANNAF Propulsion Meeting, San Diego, CA, December 1987.

21) Schneider, J.A., Dunn, G.M., Veith, E.M., "STBE Thrust Chamber Technology, Large Scale Injector Program, 3D Subscale Test Plan," Report #KEW5-TP-1, Contract #NAS8-37470, August 8, 1990.

22) Ewen, R.L. " Incorporation of an Integral Boundary Layer Model in the SCALE Regenerative Cooling Program ", Engineering Analysis Report 9980:2031, 14 September 1987

23) Reardon, F.H., "Guidelines for Combustion Stability Specifications and Verification Procedures for Liquid Propellant Rocket Engines," CPIA Publication 247, October 1973.

24) Schneider, J.A., "Description of Hardware Conditions, LSI 3D Subscale Injector, Post Test KEW3-DO1-1J-019," Internal Memo JS 5/07/91 01, March 1991.

25) Hulka, J., "Combustion Analysis of LSI 3D Subscale Test KEW3-DO1-1J-019," Engineering Analysis Report #5246:0150g, February 21, 1991.

26) Schneider, J.A., Inonye, F.T., "Description of Hardware Conditions, Mechanical and Metallurgical Analysis of LSI 3D Subscale Injector, Post Test KEW3-DO1-1J-019," Aerojet Report #MA-91-105, April 15, 1991.

27) VanKleek, J.A. and J. Hulka. "Software User's Manual for the ATC/AFRPL Low-Frequency Combustion Stability Computer Program (LFCS)," Thermodynamic Analysis Report No. 9980:1801, Engineering and Development, Aerojet TechSystems Company, January 1987.

28) Wenzel, L.M., and J.R. Szuch, "Analysis of Chugging in Liquid-Bipropellant Rocket Engines Using Propellant with Different Vaporization Rates," NASA TN D-3080, October, 1965.

29) Nickerson, G.R., L.D. Dang, and D.E. Coats, "Two-dimensional Kinetic Reference Computer Program, Final Report," Contract NAS 8-35931, April, 1985.

30) Petersen, E.L., R. Rozelle, P.J. Borgel, "Characterization and Wall Compatibiliity Testing of a 40K Pound Thrust Class Swirl-Coaxial Injector and Calorimeter Combustion Chamber," 27th Joint Propulsion Conference, AIAA 91-1873, June 24-26, 1991, Sacramento, CA.

TABLE 3-1

LSI FLOW SPLIT AND MIXTURE RATIO COMPARISON FOR LOX/H2

0.981	Full	(A) 3-D	(B) 3-D	ALS	Units
Cstar	7345.7	7311.5	7149.0	7345.7	ft/sec
MR	6.700	6.834	7.462	6.700	–
Dthroat	12.500	5.480	5.480	12.812	Inches
CR	2.82	2.82	2.82	2.69	–
Total Flow	1270.500	250.712	248.018	1270.500	lbm/sec
Oxid Flow	1105.700	218.710	218.710	1105.700	lbm/sec
Fuel Flow	165.030	32.002	29.308	165.030	lbm/sec
Fuel Temp	147	147	147	147	Rankine
$Pcface_{static}$ *	2429	2534	2476	2317	psia
$Pcnoz_{stagnation}$ *	2356	2446	2388	2249.9	psia
%FFC (H_2)	8.00%	10.50%	2.27%	8.00%	%
%Face (H_2)	6.28%	6.40%	6.99%	6.28%	%
%Baffle (H_2)	4.26%	0.00%	0.00%	4.26%	%
%Elem (H_2)	81.47%	83.10%	90.74%	81.47%	%
FFC	13.202	3.360	0.666	13.202	lbm/sec
Face	10.359	2.049	2.049	10.359	lbm/sec
Baffle	7.025	0.000	0.000	7.025	lbm/sec
Elems	134.443	245.303	245.303	134.443	lbm/sec
No. Elem	546	108	108	546	–
Flow Elem	2.271	2.271	2.271	2.271	lbm/sec
Oxid Flow	2.025	2.025	2.025	2.025	lbm/sec
Fuel Flow	0.246	0.246	0.246	0.246	lbm/sec
Elem MR	8.224	8.224	8.224	8.224	–

*Updated

TABLE 3-2

LOX/H_2 LSI OPERATING RANGE WILL COVER ALS BASELINE CONDITIONS

		ALS Baseline (Coax)	Large Scale Injector Program	
			Full Scale w/ Baffle	Full Scale w/o Baffle
TCA Parameters	Cstar (ft/sec)	7416	7379	7304
	MR (Delivered)	6.80	6.85	7.13
	Dthroat (Inches)	12.874	12.500	12.500
	# Elements	546	546	546
Flow Rates (lb/s)	Total	1295	1267.20	1260.78
	Oxidizer at 175°R	1128	1105.70	1105.70
	Fuel at 160°R	167	161.50	155.08
Pressures (psia)	Pcface	2319.5	2441.5	2404.4
	Pcnozzle	2250.0	2368.2	2332.3
Fuel Flow Split	%FFC	4.50%	4.30%	4.47%
	• Face	4.15%	3.92%	4.08%
	• Border	.35%	.38%	.39%
	%Face	3.85%	3.96%	4.13%
	%Baffle	0%	4.35%	0.39%
	%Element	91.65%	86.88%	90.48%
Fuel Flow Split (LB/s)	FFC	7.43	6.94	6.94
	Face	6.85	6.33	6.33
	Border	.58	.61	.61
	Face	6.35	6.40	6.40
	Baffle	0	7.03	0.61
	Igniter Purge	—	.81	0.81
	Elements	151.23	140.32	140.32
Element Flows (lb/s)	Total	2.288	2.282	2.282
	Oxidizer	2.025	2.025	2.025
	Fuel	0.277	0.257	0.257
Element Mixture Ratio		7.31	7.886	7.886
Core (Elements + Face + Baffle)	MR	7.02	7.17	7.46

TABLE 3-3.

FULL SCALE LSI PORT NUMBERS

DRAWING NUMBER	DRAWING TITLE
1204134	Face Nut
1204145	Insert
1206466	Thruster Assembly
1206467	Thrust Mount
1206468	Igniter
1206469	Oxidizer Cover Assembly
1206470	Oxidizer Distribution Plate
1206471	Injector body Assembly
1206472	Oxidizer Injection Tube
1206473	Bomb Face Nut
1206477	Coupler
1206479	Face Plate Assembly
1206481	Backing Plate
1206482	Cover Plate, Injector Leak
1206484	Nut, Ox Cover
1206485	Igniter Adapter
1206486	Fuel manifold Assembly
1206487	Proof Plate, Ox Cover
1206488	Thrust Mount Spacer
1206489	Injector Braze Assembly
1206490	Bomb, Tube Assembly
1206491	Injector, First Machine
1206516	Layout
1206518	Stud, Injector Ox Inlet
1206519	Proof Plate, Thruster
1206520	Cooled Face Nut
1206521	Injector Cover Plate
1206522	Fuel Distribution Plate, Machined

TABLE 3-4

LSI SWIRL COAX ELEMENT DESIGN FEATURES

Injector Elements		Full Scale	3-D	Units
Number of Elements		546	108	–
Oxidizer Inner Diameter		0.214	0.214	Inches
Oxidizer Tube Wall Thickness (PN 1204133)		0.020	0.020	Inches
Oxidizer Post Length		6.82	6.09	Inches
Fuel Gap Width		0.024	0.024	Inches
Face Nut – (PN 1204145)	ID	0.302	0.302	Inches
	OD	0.516	0.516	Inches
Oxidizer Swirl Angle (Total Included)		46	46	Degrees
Cup Recess		0.107	0.107	Inches

TABLE 3-5

COMPONENT MATERIALS

Thrust Mount Spacer Plate:		6061-T6
Thrust Mount:		
Igniter:	Top:	304L
	Tube:	304L
	Tip:	Zr .15 Cu
	Adapter:	304L
LOX Dome:	Dome:	CRES 304L
	Dist. Plate:	304L
	LOX Filter:	304L
Injector Body:		304L
Operation Shaft:		304L
Fuel Manifold:		304L
LOX Tubes:		347
Face Extension Ring:		304L
Couplers:		Nitronic 60
Face Nuts:		Glidcop FR AL-15
Face Plate:		Zr .15 Cu
LOX Feed Tubes:		304L
Fuel Feed Tubes:		304L
Proof Shaft:		4130
LOX Dome Proof Plate:		A36 Steel
Injector Proof Plate:		A36
LOX Dome Nut:		Nitronic 60
Fuel Distribution Plate:		304L
Fuel Diffuser:		304L
Igniter Conduit:		304L
LOX Swirler Caps:		304L
Injector Shaft:		304L
Bolts:		A-286

TABLE 3-6.

LSI COMPONENT STRUCTURAL ANALYSIS

Component Analyses

- 2D Model (Operation)
  - Thrust Mount
  - LOX Dome
  - Injector Body
  - Fuel Manifold
- Proof Models
  - Face Extension Ring
  - LOX Tubes
  - Couplers
- Face Nuts
- Face Plate
- LOX Feed Tube
- Fuel Feed Tube
- Igniter
- Bolts

TABLE 3-7.

CHILLDOWN TRANSIENT RESULTS AFTER 5 SECONDS

Component	Surface Temperature °F	Penetration Distance, in.	Maximum Temperature °F
Oxidizer Distribution Plate	-285		-278
Oxidizer Dome	-264	0.55	
Face Extension Ring	-281		-94
Fuel Cover at Inlet	-297	0.50	

TABLE 3-8.

DESIGN CRITERIA FACTORS OF SAFETY

LOAD	PRESSURE & MECHANICAL	THERMAL
YIELD	1.2	LIFE
ULTIMATE	1.5	1.0

LIFE

Nf/4 BASED ON LCF TEST DATA

or Nf/10 BASED ON MANSON-HALFORD

PROOF FACTORS

PROOF PRESSURE = 1.2 X MEOP X TEMPERATURE FACTOR

PROOF F.S. YIELD = 1.0

F.S. ULTIMATE = 1.25

ON TRANSIENT LOADS i.e. 1500 PSI ΔP USE PROOF FACTORS.

TABLE 3-9.

LSI COMPONENT STRUCTURAL ANALYSIS SUMMARY

Component	Critical Load	Stress Peak/Nominal (psi)	Yield Allowable (psi)	Ultimate Allowable (psi)	M.S.* Yield	M.S.** Ultimate
A-36 Steel Thrust Mount	Steady State	29305 / 13310	36000	58000	+0.02 / +1.25	+0.32 / +1.91
LOX Cover	Steady State	83056 / 19962	25000	70000	Yields / +0.05	-0.44 / +1.34
Injector Body	Steady State	45794 / 28879	25000	70000	Yields / Yields	+0.02 / +0.62
Fuel Manifold	Steady State	75664 / 20034	25000	70000	Yields / +0.04	-0.38 / +1.33
Distribution Plate	Steady State	19607 / 7336	25000	70000	+0.06 / +1.83	+1.38 / +5.36
Extension Ring	Steady State	15157 / 12149	25000	70000	+0.37 / +0.71	+2.07 / +2.84
Adapter Ring	Steady State	38308 / 20908	25000	70000	Yields / -0.004	+0.22 / +1.23
Injector Face Plate	Steady State	13349 / 3155	25000	70000	+0.56 / +5.60	+2.50 / +13.79

* Factor of safety on yield is 1.2 (operating) 1.0 (proof)
** Factor of safety on ultimate is 1.5 (operating) 1.25 (proof)
Mat'l. Prop Ref:
304L Report No. MA-89-136 Preliminary Materials Design Allowables, dtd 19 Oct. 1989
A-36 ATC Memo 9935:836, dtd 29 Nov. 1988

TABLE 3-10

INJECTOR HYDRAULIC SCHEDULE (AT NOMINAL DESIGN POINT)

Pcface = 2320 psia
O/F = 7.10
TFJ = 190°R

	Oxidizer	Fuel
Velocity of Inlet Line, ft/sec	60	530
Velocity at Orifice Exit, ft/sec	185*	1100
(a) ΔP Inlet to Distribution Plate, psi	35	200
(b) ΔP Distribution Plate, psi	20	30
(c) ΔP Manifolding to Orifice Exit, psi	200	60
(d) ΔP Exit Dynamic Head, psi	260	285
(e) ΔP Through Cup, psi	100	100
Total Injector ΔP, psi (a + b + c + d + e)	615	675

*Total Velocity::
Axial Velocity = 170 ft/sec
Tangential Velocity = 75 ft/sec

TABLE 3-11.

INJECTOR FACE COOLING MODIFICATIONS

	Subscale Design	Full Scale Design
No. Radial Channels Per Element	48	20
No. Bleed Holes Per Element	48	24
Coolant Flow, % Fuel	5.0	4.1
Maximum Face Temperature, °F	184	700

TABLE 3-12.

A TWO-FIN MODEL WAS USED TO ANALYZE THE IGNITER TIP

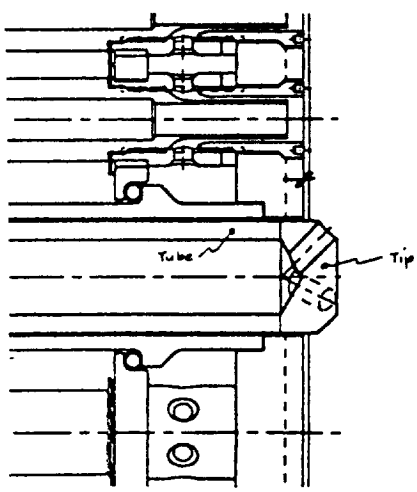

Tube Material	Axial Location	Temperature, °F	
		Hole Surface	Maximum
CRES	SURFACE	247	953
	TIP BASE	-246	30
ZRCU	SURFACE	227	919
	TIP BASE	-260	-42

2.8.0.24

TABLE 3-13.

LSI IGNITER TIP ANALYSIS

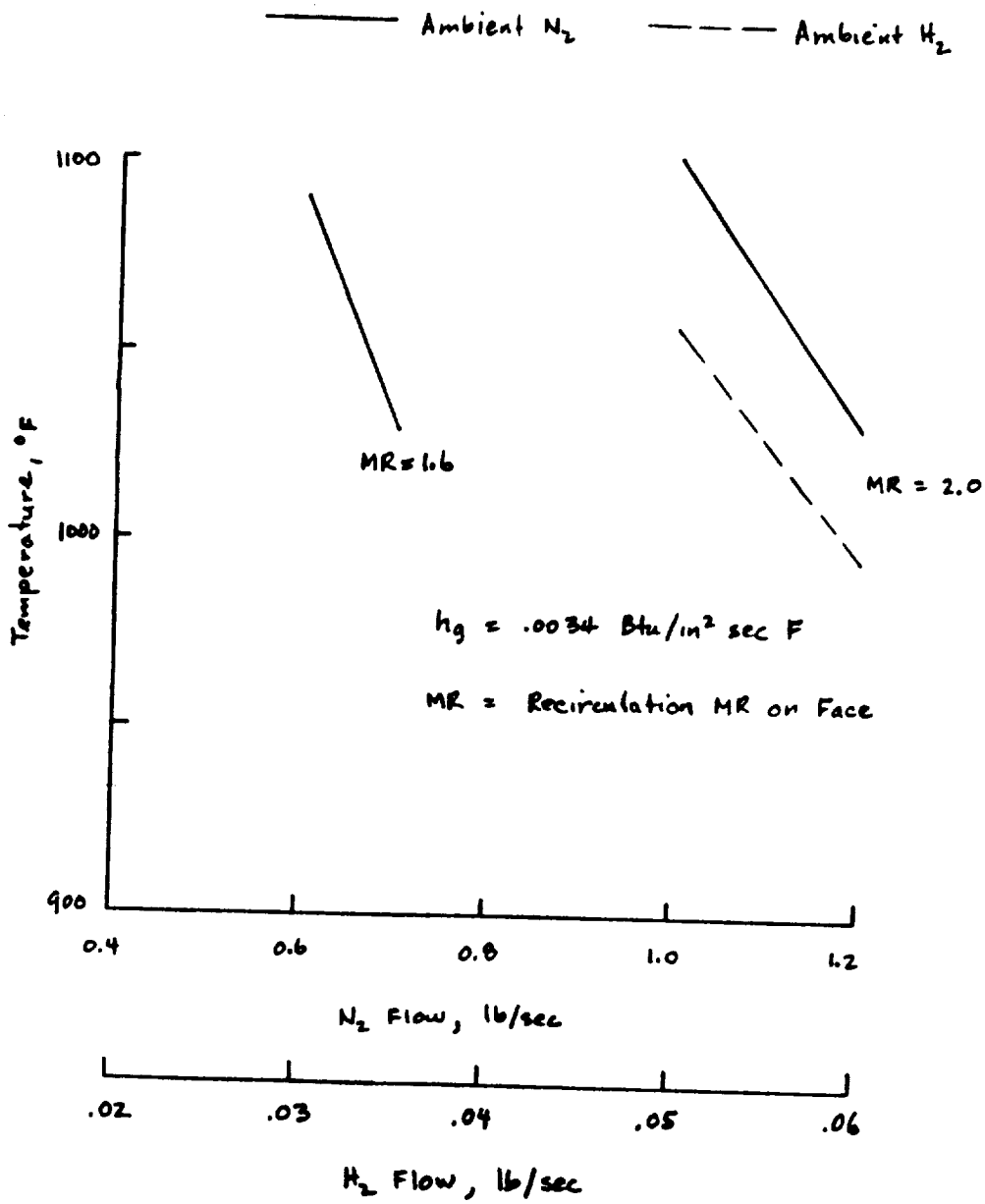

TABLE 3-14

APD LSI FS INSTRUMENTATION

	Transducer Type	Transducer Range	Operating Range	Uncertainty
Pressure				
2 ea. LOX Dome Press 1	Taber*	0 to 5000 psi	0 to 4000 psi	±1%
2 ea. LOX Dome Press 2	Taber*	0 to 5000 psi	0 to 4000 psi	±1%
	Taber*	0 to 5000 psi	0 to 3500 psi	±1%
	Taber*	0 to 5000 psi	0 to 3500 psi	±1%
Temperature				
2 ea. LOX Dome Temp 1	T/C*	+100 to -300°F	Amb to -285°F	±5°F
2 ea. Fuel Dome Temp 1	T/C*	+100 to -400°F	Amb to -300°F	±5°F
2 ea. Thrust Mount***	T/C*	+100 to -300°F	Amb to 0°F	±20°F
High Freq. Pressure				
1 ea. LOX Dome High Freq. 1	PCB or Kistler*	0-10 ksi P-P	500 to 3000 psi P-P	±10%
1 ea. Fuel Dome High Frq. 1	PCB or Kistler*	0-10 ksi P-P	500 to 3000 psi P-P	±10%
Accelerometers**				
OX Dome Accelerometer* –Axial		0-1000 G P-P		±10%
– Radial		0-1000 G P-P		±10%
- Tangential		0-1000 G P-P		±10%
Fuel Dome Accelerometer* _ Axial		0-1000 G P-P		±10%
_ Radial		0-1000 G P-P		±10%
_ Tangential		0-1000 G P-P		±10%

* NASA/MSFC Supplied
** Externally Mounted
*** Ref. Section 6.8 for Location

TABLE 3-15.

APD LSI FS HARDWARE

1206466 Thruster Assembly

Part No.	Component	Seal	Bolt Qty.	Bolts	Torque ft/lbs	Weight (lbm)
NASA/MSFC*	Test Stand*	—	8 ea.	(.750-16 UNF)*	( )*	
1206488-1	Spacer	—	—	—	—	68
1206467-9	Thrust Mount	—	8 ea.	72990-16H-22	600-700	556
1206469-9	Oxidizer Cover	—	44 ea.	EWB-0420-12H-35	410-430	824
1206471-9	Injector Assy	380002642	50 ea.	EWB-0420-12H-44	410-430	676
1206486-19	Fuel Inlet Manifold	380002643	—	—	—	1241
1206519-9	Proof Plate	AS568-473	60 ea.	.625-18 UNJF-3A x 5 LG	180-190	650
6GR52	Greyloc Blind Hub & Flange	Provided	—	—		~100 ea.

*MSFC Supplied

TABLE 3-16.

APD LSI FS IGNITER TEA/TEB CONDITIONS (BASED ON INITIAL LOW LEVEL LOX FLOW)

Start Conditions

$\dot{W}_{LOX}$	= 450 lbm/sec
$\dot{W}_{TEAL/TEB}$	= 6 lbm/sec
$\Delta P_{TEAL/TEB\,Circuit}$	≈ 1200 psi
$P_{CLOX/TEAL/TEB}$	= 100 psi

TEA/TEB Conditions

Interface Pressure (psia)	= 3500
Interface Temperature (°F)	= Ambient
Absolute Filtration (micron)	= 500
Interface Type	= AN815-8 fitting

TABLE 3-17.

APD LSI FS INJECTOR CDA VALUES (SCALED FROM SUBSCALE FLOW DATA)

	Oxidizer		Fuel		Units	
	kw*	CdA	kw*	CdA	kw*	CdA
Cold Flow	48	9.1	39	7.4	$\frac{lbm/sec}{\sqrt{lbf/in^2}}$	in^2
Hot Flow	43	8.1	34	6.4		

$$* \; kw = \frac{\dot{W}}{\sqrt{\Delta P \frac{\rho}{\rho_{H_2O}}}} = 5.28 \; CdA$$

TABLE 3-18.

APD LSI FULL SCALE TESTING GN2 PURGE LEVELS

CIRCUIT	CONDITION	Supply Pressure (psia)	Flowrate (lbm/sec)	Minimum Line Dia. (inches)	Minimum Orifice Size (inches)
LOX	Start-Up	1700	5		0.47
	Shutdown*	1700	25	2.0	1.04
	Trickle **	50	—		0.47
Fuel	Start-Up	1700	14		0.78
	Shutdown*	1700	14	2.0	0.78
	Trickle **	50	—		0.78
TEAL/TEB	S.S	3500	1.5	0.75	0.2

Interface Temperature — Ambient
Absolute Filtration (microns) — 400

* Check Valve Operated
** Between Test Purges

TABLE 3-19.

APD LSI FS LOX CIRCUIT

	Minimum	Nominal	Maximum
Flowrate (lbm/sec)	755	1106	1300
Interface Pressure (psia)	2050	3205	4000
Interface Temperature(°F)	TBD	-285	TBD
Ablosute Filtration (micron)	—	400	—

N_2 Purge

	Trickle (Between Tests)	Start-Up	Shutdown
Flowrate (lbm/sec)	—	5	25
Supply Pressure (psia)	50	1700	1700
Minimum Orifice Size (inches)	—	0.47	1.04
Minimum Line Diameter (inches)	—	2.0	2.0
		Nominal	
Interface Temperature	—	Ambient	—
Absolute Filtration	—	400	—

TABLE 3-20.

APD LSI FS HYDROGEN FUEL CIRCUIT

	Minimum	Nominal	Maximum
Flowrate (lbm/sec)	115	165	205
Interface Pressure (psia)	2050	3111	3500
Interface Temperature(°F)	TBD	-300	TBD
Ablosute Filtration (microns)	—	400	—

N_2 Purge

	Trickle (Between Tests)	Start-Up	Shutdown
Flowrate (lbm/sec)	—	14	14
Supply Pressure (psia)	50	1700	1700
Minimum Orifice Size (inches)	—	0.78	0.78
Minimum Line Diameter (inches)	—	2.0	2.0
		Nominal	
Interface Temperature	—	Ambient	—
Absolute Filtration	—	400	—

TABLE 3-21.
LSI FULL-SCALE INJECTOR FUEL FLOW SPLITS

TOTAL FLOW

COMPONENT	% SPLIT OF TOTAL FUEL FLOW
(1) Elements	91.092
(2) Face Coolant	
- surrounding elements	4.105
- baffle alleys	0.306
- axial underlip	0.287
(3) Discrete FFC	4.210
(4) Igniter	0.000
	100.000

CORE FLOW (inside CL of outer row)

COMPONENT	% SPLIT OF TOTAL FUEL FLOW
(1) Elements	84.562
(2) Face Coolant	
- surrounding elements	3.721
- baffle alleys	0.283
- axial underlip	0.000
(3) Discrete FFC	0.000
(4) Igniter	0.000
	88.566

BARRIER FLOW (outside CL of outer row)

COMPONENT	% SPLIT OF TOTAL FUEL FLOW
(1) Elements	6.530
(2) Face Coolant	
- surrounding elements	0.384
- baffle alleys	0.023
- axial underlip	0.287
(3) Discrete FFC	4.210
(4) Igniter	0.000
	11.434

TABLE 4-1.

COMPARISON OF OPERATING CONDITIONS

Parameters Nominal	LSI Injectors (@ EPL)		
	FULL	3-D	2-D
Thrust, K lbf	~691 @ 5:1	~133 @ 5:1	~97 @ 2.7:1
Chamber Pressure, psia	3547	3559/3522	3546
Engine Mixture Ratio	3.6	3.72/3.82	3.45
Oxidizer Flowrate, lbm/sec	1764	344.4	268.8
Fuel Flowrate, lbm/sec	490	92.7/90.3 + 12.0	78.0
% Fuel Film Coolant	2 & (3 *)	4.6/2.0 (8 Max.)	8.0
% Fuel Face Coolant	10	11	10
% Fuel Baffle Coolant	4.6 + 1.5 FFC	N.A.	2.6 + 0.9 FFC
% Fuel Element	82	84.6/86.9	78.5
Oxidizer Inlet Temp., Deg R	185	185	185
Fuel Inlet Temp., Deg R	370	370	370
Oxidizer Inj. Delta P, psid	790	790	790
Fuel Inj. Delta P, psid	1000	1000	1000
Fuel Inj. Density, lbm/cu.ft	20.1	20.1	20.1
No. Element	630	123	96
Element Type	Swirl Coax	Swirl Coax	Swirl Coax
Stability Aids	Cavity & Baffle	Cavity	Cavity & Baffle
Chamber Diameter, inches	21.0	9.2	17.9 X 2.95
Contraction Ratio	2.8	2.8	2.8
Chamber Length, inches	18.3	15.0/19.8 & 15.0/9.7	15.0
Cylindrical Length, inches	6.7	7.3/12.1 & 10.3/5.0	4.2

* NOTE: ADDITIONAL FFC MAY BE INJECTED FROM RESONATOR OR AXIAL HOLES MACHINED IN FACE

TABLE 4-2.

DESIGN REQUIREMENTS

TYPE OF LOADING	SAFETY FACTORS
Proof Loads (1.25 x MEOP)	1.0 on yield 1.4 on ultimate
Operating Loads	1.1 on yield 1.5 on ultimate
Cycle Life	4.0 (requires 200 cycles)
Total Duration	250 seconds

Maintain commonality with STME/STBE studies for features affecting stability, compatibility, or performance.

Maintain hydrogen and methane compatibility.

Use low risk structural design and method of fabrication.

Consider hardware flexibility to facilitate reasonable modifications.

Static temperature, and static and high frequency pressure instrumentation per test requirement document.

TABLE 4-3.

MAXIMUM EXPECTED OPERATING PRESSURES

EXPECTED OPERATING EXTREMES	
CHAMBER PRESSURE:	3600 psia
MIXTURE RATIO:	3.2 - 4.0

RESULTING MAXIMUM EXPECTED OPERATING PRESSURES	
OXIDIZER MANIFOLD:	5100 psia
FUEL MANIFOLD:	5100 psia
OXID TO FUEL MANIFOLD DELTA:	1500 psi
FUEL INJECTION DELTA:	1500 psi

RESULTING INJECTOR PROOF PRESSURE: 6375 psia

C-3

TABLE 4-4

LOADS AND ENVIRONMENT

Operation	
P_c	= 3600 psi
P_{ox} Manifold	= 4800 psi
P_{fuel} Manifold	= 5100 psi
Temperature Max.	= 1040°F
Test (Proof)	
$P_{Chamber}$	= 4500 psi
$P_{Injector}$	= 6375 psi

TABLE 4-5.

2D SUBSCALE MAXIMUM GAP AT SEAL

Seal Location	Chamber Proof P = 4500 psi	Injector Proof P = 6357 psi
Ox Manifold/ Injector Body	0.0015 in.	0.0053 in.
Injector Body/Chamber	0.0003	0.0014
Chamber/Retainer Plate	0	—
Retainer Plate/Proof Plate	0	—

TABLE 4-6.

SUMMARY OF MINIMUM MARGINS OF SAFETY FOR 2 D SUBSCALE INJECTOR AND CHAMBER, PAGE 1 OF 3

Loc	Component	Matl.	Loading Condition	Stress Dir.	Calc. Stres (ksi)	Allow. Yld/Ult (ksi)	Criteria F.S. Yld/Ult	M.S. Yld/Ult	Ref. Page
A	Bolt 1.25-12 UNF3A Injct/ Proof pl. Mil-Std-8879	A286	Install Trq 1360 - 1500 ft-lbs	Eff.	116.8	160/120	1.0/1.25	.37/.37	18
A	Bolt 1.25-12 UNF3A Injct/ Proof pl. Mil-Std-8879	A286	Proof P= 6375 psi	Axial	131.9	160/200	1.0/1.4 (1)	.31/.29	19
A	Tapped Thread in chamber Mil-Std-8879	HY140	Operation Pc = 4800 psi	Shear	28.5	---/82.5	---/1.4 (1)	---/1.28	19
B	Bolt 1.25-12 UNF3A proof pl/chmb Mil-Std-8879	A286	Install Trq 995 - 1090 ft-lbs	Eff.	84.9	160/200	1.0/1.25	.88/.88	25
B	Bolt 1.25-12 UNF3A proof pl/chmb Mil-Std-8879	A286	Proof P= 4500 psi	Axial	85.3	160/200	1.0/1.4 (1)	.87/.84	26
C	Coupler Oxid Tube	Nitrnic 60 CRES 347	Install Trq 65-70 inlbs	Eff.	21.3	30/75	1.0/1.25	.42/1.84	39
C	Coupler Oxid Tube	Nitrnic 60 CRES 347	Operation dlta P = 1500 psi	Axial	28.4	30/75	1.1/1.5 (1)	.02/.98	34 / / / 39

Notes: (1) For Applied Loads

TABLE 4-6.

SUMMARY OF MINIMUM MARGINS OF SAFETY FOR 2 D SUBSCALE INJECTOR AND CHAMBER, PAGE 2 OF 3

Loc	Component	Matl.	Loading Condition	Stress Dir.	Calc. Stres (ksi)	Allow. Yld/Ult (ksi)	Criteria F.S. Yld/Ult	M.S. Yld/Ult	Ref. Page
D	Facenut - Coupler	Glidcop Al15 CRES 347	Install Trq 55-60 inlbs	Eff.	24.0	46/49	1.0/1.25	.92/.63	40
D	Facenut - Coupler	Glidcop Al15 CRES 347	Operation Dlta P = 1500 psi	Axial	26.9	46/49	1.1/1.5 (1)	.68/.40	40
E	Fuel/Ox Divider	CRES 304L	Proof P = 6375 psi	Eff.	24	25/70	1.0/1.4	.04/1.08	47
F	Faceplate	CRES 304L	Operation Po=4800 psi Pf=5100 psi Pc=3600 psi	Eff.	23.2/ (2)/ /41.6	25/70	1.1/1.5	.02/.12	46
G	Fuel Pipe	CRES 304L	Proof P=6375 psi	Hoop	18.7	25/70	1.0/1.4	.34/1.68	58
H	Ox Pipe	CRES 304L	Proof P=6375 psi	Hoop	21.7	25/70	1.0/1.4	.15/1.30	60
I	Baffle	Cres 347	Steady State + Bomb	Bending	33.8	--/56	---/1.5	----/0.10	71

Notes: (1) For Applied Loads
(2) Average thru the thickness load

TABLE 4-6.

SUMMARY OF MINIMUM MARGINS OF SAFETY FOR 2 D SUBSCALE INJECTOR AND CHAMBER, PAGE 3 OF 3

Loc	Component	Matl.	Loading Condition	Stress Dir.	Calc. Stres (ksi)	Allow. Yld/Ult (ksi)	Criteria F.S. Yld/Ult	M.S. Yld/Ult	Ref. Page
I	Baffle	Zr Cu	Steady State	Tensile	3.5	7.15/11	1.1/1.5	.85/1.09	68
J	Fuel Dist. Plate	Cres 304L	Steady State	Tensile	12.9	25/70	1.1/1.5	.75/2.60	79
J'	Ox Distrib. Plate	EB weld CRES 304L	Operation dlta P = 200 psi	Bending	18.6	23/56	1.1/1.5	.12/1.01	81
K	Chamber Shell	HY140	Proof P=4500 psi	Eff.	98.5	140/150	1.0/1.4	.42/.09	88c
L	Proof Plate	HY140	Proof P=4500 psi	Bending	97.0	140/150	1.0/1.4	.44/0.10	91
M	Retention Plate	HY140	Operation Pc=3600 psi	Bending	58.5	140/150	1.1/1.5	1.17/.70	95
N	Kistler Install. in Ox Dome	CRES 304L	Proof P=6375 psi	Bending	27.9	Fby=/ 36 /Fbu= / 82	1.0/1.4	.29/1.10	101
O	Bolt 1.25-12-3A Mil-Std-8879	A286	Test Stand Attachment Wght + Rbnd	Axial	54.2 klbs	188.2 klb/209.1 klb	1.5/2.0	1.31/.93	142
P	Tapped Thread in Ox Dome	CRES 304L	Test Stand Attachment Wght + Rbnd	Shear	8.2	--/50	---/2	----/2.05	142
Q	Faceplate/ Facenut	Glidcop Al-15	Operation Po=4800 psi Pf=5100 psi Pc=3600 psi	Eff.	31.9	46.4/49.6	1.1/1.5	.32/.03	137

TABLE 4-7.

SUMMARY OF CYCLE LIFE PREDICTIONS

Loc	Component		Sigma e (ksi)	Delta E (%)	Cycles/ Hold Time (min)	Useful Cycle Life	Ref Page
I	Baffle	Zr Cu	---	1.819	900/0	225	64
		Cres 347	---	1.141	2250/0	503	64
N	Faceplate/ Facenut	Zr Cu	---	.747	>10000/0	>2500	137
		Glidcop	---	.187	---/		
		Cres 304L	---	.062	>10000/0	>2500	137

TABLE 4-8.

2D SUBSCALE DRAWING #'S

2D (Rectangular) Injector and Chamber Drawing List

Drawing Number	Component
1204150	Engine Assembly
1204151	Inlet Housing Assembly, Oxidizer
1204152	Distribution Plate, Oxidizer
1204153	Injector Body Assembly
1204155	Distribution Plate, Fuel
1204156	Baffle, Assembly
1204157	Injector Assembly
1204160	Bomb Assembly
1204158	Thrust Chamber Assembly
1204159	Tuning Block
1204160	Bomb Assembly
1204161	Retainer Plate
1204162	Proof Plate, Chamber
1204163	Cover Plate/Proof Plate, Injector
1204164	Detonator Assembly
1204166	Faceplate Assembly
1204167	Backing Plate, Baffle
1204169	Liner, Chamber
1204170	Shell, Chamber
1204172	Thermocouple Assy
1204173	Adapter, Transducer
1204174	Backing Plate, Face

TABLE 4-9

2 D SUBSCALE INSTRUMENTATION

AREA	INSTRUMENTATION	PURPOSE
HYDRAULICS	1 TABER IN OXID MANIFOLD 1 TABER IN FUEL MANIFOLD 1 TC IN OXID MANIFOLD 1 TC IN FUEL INLET LINE	PROPELLANT DENSITIES. INJECTOR PRESSURE DROPS.
PERFORMANCE	10 TABERS IN CHAMBER	AXIAL ENERGY RELEASE
STABILITY	9 KISTLERS IN CHAMBER 1 KISTLER IN CAVITY 1 KISTLER IN OXID MANIFOLD 1 KISTLER IN FUEL INLET LINE 2 TC IN ACOUSTIC CAVITY	FREQUENCY, AMPLITUDE, PHASE, & TYPE OF INSTABILITY. INSTABILITY GROWTH/DAMP RATES CAVITY SOUND SPEED.
COMPATIBILITY	28 TC'S IN BAFFLE TBD TC'S IN INJECTOR FACE	HEAT FLUXES

TABLE 4-10

LOADS AND ENVIRONMENT

Design Criteria		
Strength		
Proof*	1.0	On Yield
	1.4	On Ultimate
Operation	1.1	On Yield
	1.5	On Ultimate
Test Stand Attachment	1.5	On Yield
	2.0	On Ultimate
Life		
Cycle Life	4.0	
Total Duration	250	Seconds

*Proof Pressure = (1.25) MEOP

TABLE 4-11.

LOADS AND ENVIRONMENT

Operation	
P_c	= 3600 psi
P_{ox} Manifold	= 4800 psi
P_{fuel} Manifold	= 5100 psi
Temperature Max.(2)	= 1166°F
Test (Proof)	
$P_{Chamber}$	= 4500 psi
$P_{Injector}$	= 6375 psi

(2) Resonator Ring

TABLE 4-12.

SUMMARY OF MINIMUM MARGINS OF SAFETY FOR 3 D SUBSCALE INJECTOR, PAGE 1 OF 3

Loc	Component	Matl.	Loading Condition	Stress Dir.	Calc. Stres (ksi)	Allow. Yld/Ult (ksi)	Criteria F.S. Yld/Ult	M.S. Yld/Ult	Ref. Page
A	Connectors 1-12 UNF-3A Mil-Std-8879	MP35N	Install Trq 770-890 ft-lbs	Eff.	139.3	230/260	1.0/1.25	0.65/0.49	17
A	Connectors 1-12 UNF-3A Mil-Std-8879	MP35N	Operation Pc = 3600 psi	Axial	148.7	230/260	1.1/1.5 (1)	0.51/0.35	18
A	Connectors 1-12 UNF-3A Mil-Std-8879	MP35N	Operation + Bomb Effect	Axial	152.0	230/260	1.0/1.0	0.51/0.71	19
A'	Connectors 1.25-12 UNF3A Mil-Std-8879	A286	Install Trq 1460-1650 ft-lbs	Eff.	128.5	160/200	1.0/1.25	0.24/0.24	21
A'	Connectors 1.25-12 UNF3A Mil-Std-8879	A286	Proof P = 6375 psi	Axial	154.9	160/200	1.0/1.4 (1)	0.03/0.00	22
B	Bolts Ox/Inj 5/8-18 UNF3A Mil-Std-8879	A286	Install Trq 200-220 ft-lbs	Eff.	141.0	160/200	1.0/1.25	0.13/0.13	24
B	Bolts Ox/Inj 5/8-18 UNF3A Mil-Std-8879	A286	Proof P = 6375 psi	Axial	153.2	160/200	1.0/1.4 (1)	0.04/0.02	25

Notes: (1) For applied loads

TABLE 4-12.

SUMMARY OF MINIMUM MARGINS OF SAFETY FOR 3 D SUBSCALE INJECTOR, PAGE 2 OF 3

Loc	Component	Matl.	Loading Condition	Stress Dir.	Calc. Stres (ksi)	Allow. Yld/Ult (ksi)	Criteria F.S. Yld/Ult	M.S. Yld/Ult	Ref. Page
C	Coupler - Oxid Tube	Nitrnic 60 CRES 347	Install Trq 65-70 in-lb	Eff.	21.1	30/75	1.0/1.25	0.42/1.84	33
C	Coupler - Oxid Tube	Nitrnic 60 CRES 347	Operation dlta P=1500 psi	Axial	25.4	30/75	1.1/1.5 (1)	0.15/1.25	31
C'	Facenut - Coupler	Glidcop AL15 Nitrnic 60	Install Trq 55-60 in-lb	Eff.	24.0	46/49	1.0/1.25	0.92/0.63	34
C'	Facenut - Coupler	Glidcop AL15 Nitrnic 60	Operation dlta P=1500 psi	Axial	25.4	46/49	1.1/1.5 (1)	0.79/0.50	34
D	Oxidizer Manifold	CRES 304L	Proof P=6375 psi	Eff.	33.6	Fby = 36/70	1.0/1.4	0.07/0.49	44
E	At Hole In Fuel Manifld	CRES 304L	Proof P=6375 psi	Eff.	46.2	25/70	1.0/1.4	(3)/0.08 (2)	60
F	Instrum.Holes in Ox Manifld	CRES 304L	Proof P=6375 psi	Eff.	47.5	25/70	1.0/1.4	(3)/0.05 (2)	69

Notes: (1) For applied loads
(2) See life cycles on ref. page 7
(3) Yields

TABLE 4-12.

SUMMARY OF MINIMUM MARGINS OF SAFETY FOR 3 D SUBSCALE INJECTOR, PAGE 3 OF 3

Loc	Component	Matl.	Loading Condition	Stress Dir.	Calc. Stres (ksi)	Allow. Yld/Ult (ksi)	Criteria F.S. Yld/Ult	M.S. Yld/Ult	Ref. Page
G	Hole in Ox Manifold for Lifting Lug	CRES 304L	Proof P=6375 psi	Eff.	45.1	25/70	1.0/1.4	(2)/0.11 (1)	71
H	Resonator Cooling Lines 3/4 in Tube	CRES 304L	Proof P=6375 psi	Hoop	17.3	25/70	1.0/1.4	0.44/1.88	112
I	Hole in Resonator Close to Aft Wall	CRES 304L	Proof P=6375 psi	Eff.	18.1	25/70	1.0/1.4	0.38/1.76	113
J	Bolt 1-12 Mil-Std-8879	A286	Test Stand Attachment Weght + Rbnd	Axial	55.6 klbs	113.7 klb / 126.3 klb	1.5/2.0	0.36/0.13	129
K	Stand Off Tubes	17-4PH	Test Stand Wt, Thrust & Side Loads	Comprsv	44.3	90/112.5	1.5/2.0	0.35/0.27	131
L	Faceplate/ Facenut	Glidcop Al15	Operating dlta P=1500 psi; T<179F	Eff.	31.9	46.4/49.6	1.1/1.5	0.32/0.03	124

Notes: (1) See life cycles on ref. page 7
(2) Yields

TABLE 4-13.

3-D SUBSCALE INJECTOR COMPONENTS

Component	Part No.
Injector Assembly	1204 128
Injector Subassembly	1204 129
Oxidizer Inlet	1204 130
Dist. Plate, Ox	1204 131
Injector Body	1204 132
Ox Tube	1204 133
Ox Flow Control	1204 134
Coupler	1204 135
Dist. Plate, Fuel	1204 137
Tuning Block	1204 138
Resonator Ring	1204 139
Proof Plate	1204 141
Cover Plate	1204 142
Cavity FFC Orifice	1204 143
Face Plate	1204 144
Face Nut	1204 145
Seal	1204 146
Mounting Ring	1204 147
Washer	1204 148
Igniter Tube	1204 165
Backing Plate, Face	1204 177
Platelet Assy. Faceplate	1204 136
Platelet Assy, Fuel Dist.	1204 176

TABLE 4-14.

RESONATOR RING OPERATING CHARACTERISTICS WITH 160 R HYDROGEN

Circuit Number	Flowrate (lbm/sec)	Pressure Drop (psi)	Bulk Temperature Rise (deg F)
1	0.32	206-90	90
2	0.24	182-145	78
3	1.36	1036-961	80
4	1.36	1020-950	74

TABLE 4-15.

BOMB ASSEMBLY COMPONENTS

Component	Dwg #1202717 DashNo.	Dwg #1204726 DashNo.
Locknut	-7	-10
Shim	-10,-11,-12	-5,-6,-7
Cap (TFE)	-14	-8
Outer Sleeve (Carbon Phenolic)	-15	-2
End Plate (Carbon Phenolic)	-16	-1
Plug	-20	-3
Inner Sleeve (A-286)	-21	-4
Seal (AR 10103-025-AH)	-31	
Backup Ring (AR190154-025-A)	-33	
Detonator Assembly	1202980	1202980

TABLE 4-16.

3D SUBSCALE INSTRUMENTATION

AREA	INSTRUMENTATION	PURPOSE
HYDRAULICS	1 TABER IN OXID MANIFOLD 1 TABER IN FUEL MANIFOLD 1 TC IN OXID MANIFOLD 1 TC IN FUEL MANIFOLD	PROPELLANT DENSITIES. INJECTOR PRESSURE DROPS.
PERFORMANCE	2 TABERS IN CAVITY 7 TABERS IN CHAMBER (WORKHORSE ONLY)	C* CALCULATION AXIAL ENERGY RELEASE.
STABILITY	2 KISTLERS IN CAVITY 4 KISTLERS IN CHAMBER (WORKHORSE ONLY) 1 KISTLER IN OXID MANIFOLD 1 KISTLER IN FUEL MANIFOLD	FREQUENCY, AMPLITUDE, PHASE, & TYPE OF INSTABILITY. INSTABILITY GROWTH/DAMP RATES
	2 TC'S IN CAVITY	CAVITY SOUNDSPEED

TABLE 4-17

TEST CONDITIONS AND RESULTS

Test #	P_c (psia)	mo (lb_m/s)	r_h (lb_m/s)	T_f (°R)	MR	η_{c*}	Q/A, Max (Btu/in^2-s)
Configuration #1							
2	1483	52.2	9.61	200	5.43	97.4	45.1
3a	1644	60.0	9.61	191	6.24	98.2	54.0
3b	1679	60.0	10.29	174	5.83	98.1	55.4
4a	1639	62.1	9.01	192	6.90	98.1	54.2
4b	1678	62.1	9.58	174	6.49	98.2	56.6
Configuration #2							
8	1638	58.5	9.97	180	5.88	98.4	51.9
9	1586	59.2	8.89	184	6.65	98.4	**
Configuration #3							
11	1495	51.6	9.85	189	5.24	98.4	45.5
12	1570	59.4	8.65	188	6.86	98.0	51.7
13	1656	59.8	9.73	179	6.15	98.4	52.1
Configuration #4							
14	1490	54.3	8.56	190	6.34	98.5	50.2

**Thermal Data Not Stabilized

TABLE 4-18.

IGNITER OPERATING CONDITIONS

	A	B*	C
LOX Flow (Level I)			
W_{LOX}	92	75	60
P_c	40	33	26
LOX + TEAL/TEB Flow			
W_{LOX} (lbm/sec)	92	75	60
$W_{TEAL/TEB}$ (lbm/sec)	1.22	1.0	0.8
P_C (psia)	185	150	120
LOX and GH2 Flow (Level I)			
W_{LOX} (lbm/sec)	92	75	60
W_f (lbm/sec)	22.6	12.0	10.0
MR (O/F)	4.1	6.0	6.0
P_c (psia)	1100	800	640

*Recommended

TABLE 4-19.

TEST KILL PARAMETERS AND LIMITS

Parameter	Kill Limit	Effectivity
PHEK - Helium Bottle Pressure	< ~~4000~~ 5000 psia	FS-1 to FS-2
POT - Oxygen Tank Pressure	Low* < TBD psia	FS-1 to FS-2
	High >TBD psia	FS-1 to FS-2
PFT - Fuel Tank Pressure	Low* < TBD psia	FS-1 to FS-2
	High > TBD psia	FS-1 to FS-2
POJ - Oxygen Injector Manifold Pressure	High > 3700 psia	FS-1 to End of Timer I
PFJ - Fuel Injector Manifold Pressure	High > 3500 psia	FS-1 to End of Timer II
	Low* < 2000 psia	End of Timer III to FS-2
Pc - Static Chamber Pressure	Low < 150 psia	Start of Timer I to Startof Timer II
	Low < 700 psia	Start of Timer II to Start of Timer III
	Low* < 2000 psia	Start of Timer III to FS -2
	High > 3000 psia	FS-1 to FS-2
CSM	~~3980~~ 2200 Hz @ ± 200 psia for 30 msec	End of Timer II to FS-2

* May be adjusted for low Pc tests

TABLE 4-20.

SUBSCALE TESTING HARDWARE CONFIGURATION

Test Series	Test Objective	Test Configuration
0-3	• Validate Stable Operating Conditions	• 1202129-19 LSI Injector, 1206060-9 Ablative Chamber With and Without Cavity Blocks (P/N 1204138)
	• Ability to Damp Full Scale 3T and Higher Frequency Modes	
	• Anchor Existing Combustion Stability and Perjformance Models	
	• Evaluate Damping Capability of Sharp Edged Acoustic Cavity Inlet	
	• Determine Cavity Temperature/Speed of Sound	
	• Determine Chug Stability Margin as a Function of Chamber Pressure	
	• Validate Circumferential Heat Flux Uniformity (Streaking)	
4	• Establish Axial Heat Flux Profile of Injector Elements	• 1204129-9 LSI Injector, 1201581-9 Calorimeter Chamber
5	• Establish Axial Heat Flux Profile With Baseline L' Section	• 1204129-9 LSI Injector, 1201581-9 Calorimeter Chamber, 1201580-9 L' Section
TBD	• Longer Duration Performance Testing. Backup Chamber for Bombed Stability Tests (Test Matrix Has No Provision to Use at This Time)	• 1204129-9 LSI Injector 1202717-39 Stability Ring 1202716-9 Protection Ring 1202715-29 Cooled Workhorse Chamber

TABLE 4-21.

LSI SUBSCALE INJECTOR TEST MATRIX

Series	Test No.	Duration (sec)	Chamber	PC (psia)	MR	$\dot{W}_{ox}$	$\dot{W}_f$	Fuel Temp (°R)	Ox Temp (°R)	Bomb	Cavity	FFC (%)	Remarks
0	1-5	TBD sec	Ablative Chamber	100-TBD				160	175	No	1T	2	Checkout and Ignition Tests
1	6	0.5 sec	Ablative Chamber	1700	6.0	146.0	24.3	160	175	No	1T	2	PC/MR Survey
	7			1700	7.2	155.8	21.7	160	175	Yes	1T	2	
	8			2400	7.2	218.7	30.5	160	175	Yes	1T	2	
	9a			1350	7.2	125.3	17.5	160	175	No	1T	2	Determine Chug Threshold
	9b			1000	7.2	94.1	13.1	160	175	No	1T	2	b' cond TBD (PC = 1900)
	9c			500	7.2	47.9	6.7	160	175	No	1T	2	c' cond TBD (PC = 800)
	10			2750	7.2	250.8	34.9	160	175	Yes	1T	2	
2	11	0.5 sec	Change Liner In Ablative Chamber	1700	6.0	146.0	24.3	160	175	Yes	None	2	
	12			1700	8.0	162.6	20.3	160	175	Yes	None	2	
	13			2400	7.2	218.7	30.5	160	175	Yes	None	2	PC/MR Survey
	14			2750	6.0	235.3	39.2	160	175	Yes	None	2	
	15			2750	8.0	261.8	32.7	160	175	Yes	None	2	
3	16	0.5 sec	Change Liner	2400	5.0	194.0	38.8	150	175	Yes	None	2	
	17			2400	6.0	205.2	34.2	150	175	Yes	None	2	
	18			2400	7.2	218.7	30.5	200	175	Yes	None	2	Fuel Temperature Survey
	19			2400	7.2	218.7	30.5	120	175	Yes	None	2	
	20			2400	7.2	218.7	30.5	90	175	Yes	None	2	
	21			2400	8.0	228.3	28.5	160	175	No	None	2	
4	22	4.9 sec	Long L' Calorimetric Chamber	1700	7.2	155.8	21.7	160	175	No	None	2	PC/MR vs Heat Flux
	23			2400	6.0	205.2	34.2	160	175	No	None	2	FFC vs Heat Flux
	24			2400	7.2	218.7	30.5	160	175	No	None	2	Fixed Cavity Length
	25			2400	8.0	228.3	28.5	160	175	No	None	2	Fuel Temperature, and % FFC
5	26	4.9 sec	Short L' Calorimetric Chamber & Change FFC Orifice	1700	TBD	TBD	TBD	160	175	No	None	TBD	PC/MR vs Heat Flux
	27			2400	TBD	TBD	TBD	160	175	No	None	TBD	w/Effects of % FFC
	28			2400	TBD	TBD	TBD	160	175	No	None	TBD	Fixed Cavity Length,
	29			2400	TBD	TBD	TBD	160	175	No	None	TBD	Fuel Temperature,
	30			2750	TBD	TBD	TBD	160	175	No	None	TBD	and Vary % FFC

TABLE 4-22.

TEST 019 ANOMALY SEQUENCE

1) LOX INTRUDED INTO FUEL MANIFOLD(S) PRIOR TO FS-1

2) TEST 019 INITIATED WITH LOX-TEAL/TEB IGNITION

3) FUEL VALVE OPENED, TEST PROCEEDED TO SS CONDITIONS

4) 40 MS AFTER ITEM 3, LOX/H2 DETONATED IN THE FUEL TORUS AND BURNED (OR DETONATED) IN THE SECONDARY FUEL MANIFOLD

5) INJECTOR ELEMENTS (OX POSTS) WERE DAMAGED DURING ITEM 4

6) TEST AND SHUTDOWN SEQUENCING WERE NORMAL

7) ADDITIONAL BURNING IN THE SECONDARY FUEL MANIFOLD SUSPECTED DURING 1 SEC SHUTDOWN TRANSIENT.

TABLE 4-23.

RECOMMENDED CHANGES TO LSI TEST PROCEDURE

1) Do Not Test If LOX Valve (LOTCV) Is Leaking
   Monitor Prior To Test:

TOJ (@ 90°)	- Greater Than 0° F
TFJ (@ 210°)	- Greater Than 0° F
Video/Camera	- No Visual LOX Cloud

2) Increase Start Transient Fuel Purge (GN_2) - TBD

3) Incorporate Flush (5 To 10 Cycles) Purge Prior To Arm Switch

4) Install Two Manifold Thermocouples (Top And Bottom Locations) In Fuel Manifold For All Tests

5) Use Sheathed 1/16" Thermocouples For All Manifold Temperature Measurements

6) Signal-To-Open LFTCV 50 ms Before LOTCV In Start Sequence

TABLE 4-24

LSI 3D SUBSCALE ABLATIVE TEST SUMMARY

Test No.	Minimum Time of Data From FS-1 (sec)	Averaged Data Sample Time (sec)	SS Run Time at Time of Data Sample (sec)	Post Test Throat Diameter (inches)	Ch. Face Pressure (psia)	Injected O/F Total	Oxidizer Flowrate (lbm/sec)	Fuel Flowrate: Total (lbm/sec)	Fuel Flowrate: Face (lbm/sec)	Fuel Flowrate: Cavity Injection (lbm/sec)	Fuel Temp (°R)	Injected O/F Barrier[4]	Injected O/F Core	Inlet: ΔPOX/Pc (%)	Inlet: ΔPFU/Pc (%)	Element[5]: ΔPOX/Pc (%)	Element[5]: ΔPFU/Pc (%)	ηc^* (%)	ERE_{ISP} (%)
4	3.01	.02	0.34[1]	5.50	704	4.12	54.9	13.3	0.7	0.3	170[2]	3.95	4.21	13.2	31.6	13.1	19.9	—	—
6-I	3.75	.20	0.68	—	716	5.53	63.8	11.5	0.7	0.3	85[2]	5.27	5.67	8.0	11.1	7.8	7.3	—	—
7-I	2.19	.20	0.53	—	921	3.21	69.9	21.8	1.1	0.4	230[2]	3.08	3.27	14.2	61.8	14.0	37.7	—	—
7-II	2.95	.10	0.48	5.69	1519	8.79	163.7	18.6	1.1	0.4	240[2]	8.37	9.01	23.6	27.8	22.8	19.0	95.5	92.0
9-I	2.14	.10	0.59	—	1401	4.34	120.2	27.7	1.4	0.5	95[2]	4.16	4.43	13.2	20.7	12.8	12.1	—	—
10	2.25	.10	0.61	5.80	1652	7.67	168.3	22.0	1.5	0.6	95[2]	7.24	7.89	19.9	16.7	19.2	12.3	99.3	97.1
11	2.70	.10	0.92	5.90	2260	6.72	232.9	34.6	2.6	1.0	90[2]	6.32	6.94	31.5	28.9	30.6	22.2	96.3	95.9
12	2.95	.10	1.12	6.10	2514	6.58	269.9	41.0	3.0	1.1	95[2]	6.20	6.79	40.6	34.6	39.5	26.3	97.4	97.3
16	1.95	.10	0.13[1]	5.52	1752	4.92	140.9	28.7	1.6	0.6[3]	93	4.70	5.03	12.7	18.7	12.2	11.9	98.4	96.9
17	2.50	.10	0.62	5.56	1767	5.16	145.8	28.3	1.5	0.6[3]	102	4.94	5.27	12.9	18.5	12.5	11.5	98.7	96.8
18	2.43	.10	0.63	5.61	1719	7.54	166.6	22.1	1.2	0.5[3]	185	7.19	7.72	17.9	22.7	17.2	14.8	97.3	97.4
19	2.37	.10	0.63	5.79	2162	7.66	223.5	29.2	3.0[2]	1.3[2][3]	192	6.98[2]	8.13[2]	35.0	35.5	34.1	29.7[2]	97.0	97.8

(1) Tests 4 and 16 were in transient (Run times less than .5 sec)
(2) Estimated data
(3) Cavity blocked except for small gap
(4) Includes flow of outer row, cavity coolant, and associated face coolant
(5) Downstream of distribution plates (includes cup pressure drop)

TABLE 4-25

LSI 3D SUBSCALE INJECTOR PRESSURE DROP APPROPRIATIONS

Test Number	PC8 (psia)	Injd O/F	(Measured) Oxid Total (psi)	(Measured) Fuel Total (psi)	ΔP* Dist. Plate (psi)	ΔP* Mani. Feed (psi)	ΔP* Dist. Plate (psi)	ΔP* Elem. Feed (psi)
004	704	4.12	93	231	1	20	71	33
006-I	716	5.53	57	80	2	6	21	9
007-I	921	3.21	131	569	2	49	173	85
007-II	1519	8.79	358	422	13	30	104	46
009-I	1401	4.34	185	291	6	27	94	41
010	1652	7.67	329	276	11	16	56	23
011	2260	6.72	713	653	22	34	118	47
012	2514	6.58	1020	870	28	46	163	65
016	1752	4.92	222	327	8	26	92	39
017	1767	5.16	228	327	8	27	96	41
018	1719	7.54	307	390	11	30	105	46
019	2162	7.66	756	767	19	42	82**	30**

Test Number	ΔPcup (psi)	Element ΔP*** (Including ΔPcup) Oxid (psi)	Element ΔP*** (Including ΔPcup) Fuel (psi)	Element ΔP*** (Not Including ΔPcup) Oxid (psi)	Element ΔP*** (Not Including ΔPcup) Fuel (psi)
004	60	92	140	32	80
006-I	14	56	53	42	39
007-I	71	129	348	58	277
007-II	34	346	288	311	254
009-I	34	179	170	147	138
010	32	317	204	286	172
011	134	691	502	557	368
012	284	992	661	708	377
016	12	214	209	202	197
017	11	220	204	210	193
018	22	296	254	274	232
019	251	737	643	486	392

* Calculated ** Estimated

*** Includes ΔP From Secondary Manifold to Face (Element Losses)

TABLE 4-26.

ACOUSTIC RESONATOR THERMAL MEASUREMENTS AND CALCULATIONS

Test Number	Time of Data From FS-1 (Seconds)	PC8 (psia)	Injd O/F	Tfj* (R)	TCAV (R)
004	3.01-3.03	704	4.12	170	755
006-I	3.75-3.95	716	5.53	85	500
007-I	2.19-2.39	921	3.21	230	935
007-II	2.95-3.05	1519	8.79	240	1355
009-I	2.14-2.24	1401	4.34	95	505
010	2.25-2.35	1652	7.67	95	845
011	2.70-2.80	2260	6.72	90	1085
012	2.95-3.05	2514	6.58	95	1190

*Estimated

TABLE 4-27.

COMBUSTION AND MANIFOLD OSCILLATION FREQUENCIES IDENTIFIED IN PSD

Test Number	PC8 (psia)	Injd O/F	Observed Oscillations Combustion Chamber Freq (Hz)	Observed Oscillations Combustion Chamber Pk-Pk (psi)	Observed Oscillations Oxidizer Manifold Freq (Hz)	Observed Oscillations Oxidizer Manifold Pk-Pk (psi)	Observed Oscillations Fuel Torus Freq (Hz)	Observed Oscillations Fuel Torus Pk-Pk (psi)
004	704	4.12	2750	3	3550	5		
007-II	1519	8.79	3350	5	3330	2		
			4970	5				
			8940	9				
010	1652	7.67	2190	5	2090	3		
			2860	4	6920	3		
			4330	6				
			6500	4				
			9030	6				
011	2260	6.72	2160	6	2300	4		
			2910	4	6980	7		
			6400	5				
			7610	18				
			8500	8				
012	2514	6.58	2600	5	2250	3		
			4600	6	2590	2		
			7850	11	5680	3		
					7840	6		
016	1752	4.92	2330	5	2250	4		
			3850	4	6720	5		
			4320	11				
017	1767	5.16	2590	6	2550	4		
			3700	7	3880	4		
			4810	8	7430	8		
			6300	6				
			7100	11				
018	1719	7.54	2210	5	2500	4	1740	17
			3640	9	4400	3		
			4510	7	7390	4		
			7120	13				
019	2162	7.66	2250	9	2250	4	1980	22
			3590	8	2560	4		
			4570	7	4280	4		
			5960	9	5150	3		
			7040	12	7650	4		

TABLE 4-28.

ALL LSI 3D SUBSCALE TESTS HAVE BEEN OPERATIONALLY STABLE

Test No.	Combustion Spectrum Amplitude pkpk/Pc	Oxidizer Manifold Spectrum Amplitude pkpk/Pc
7*	6	4
10*	9	3 1/2
11*	5	3
12*	4	3
16	8	8
17	4 1/2	5
18	3 1/2	4 1/2
19	2 1/2	3

* 1/4 wave radial dogleg cavity present

- Combustion Was Stable

→ All Discrete (PSD) Amplitudes < 1% of Chamber Pressure (CPIA 247 Defines Instability as ≥ 10% pkpk/Pc Oscillations Sustained for ≥ $1.25/\sqrt{f}$ seconds)

- Combustion Was Quiet

→ All Unorganized (Oscillograph) Amplitudes ≤ 9% of Chamber Pressure (CPIA 247 Designs Rough Combustion as ≥ 10% pkpk/Pc Unorganized Oscillations)

TABLE 4-29.

ALL RESPONSES TO PERTURBATIONS WERE STABLE

Test No.	Bomb Size (Grains)	Bomb Location (Degrees)	Bomb Time Seconds from FS-1	Chamber Pressure at Bomb Time (psia)	Maximum Overpressure Measured in Chamber Zero to pk/pc	Combustion Response to Bomb
7-II	6.5	330	3.03	1520	6%	Damped Instantly
9-II	6.5	330	Unknown-Aborted Test	—	—	—
11	6.5	330	2.77	2265	6	Damped in 0.002 Seconds
12	6.5	150	3.03	2515	4	Damped in 0.002 Seconds
17	13	330	2.57	1770	6	Damped Instantly
18	13	330	2.50	1715	15	Damped in 0.002 Seconds
19	13	330	2.13	2175	2	Damped in 0.001 Seconds
Overpressure in Fuel Manifold During Start Transient						
19	—	—	1.600	440	>100	Induced Chug; Damped Within 0.050 Seconds

ORIGINAL PAGE
BLACK AND WHITE PHOTOGRAPH

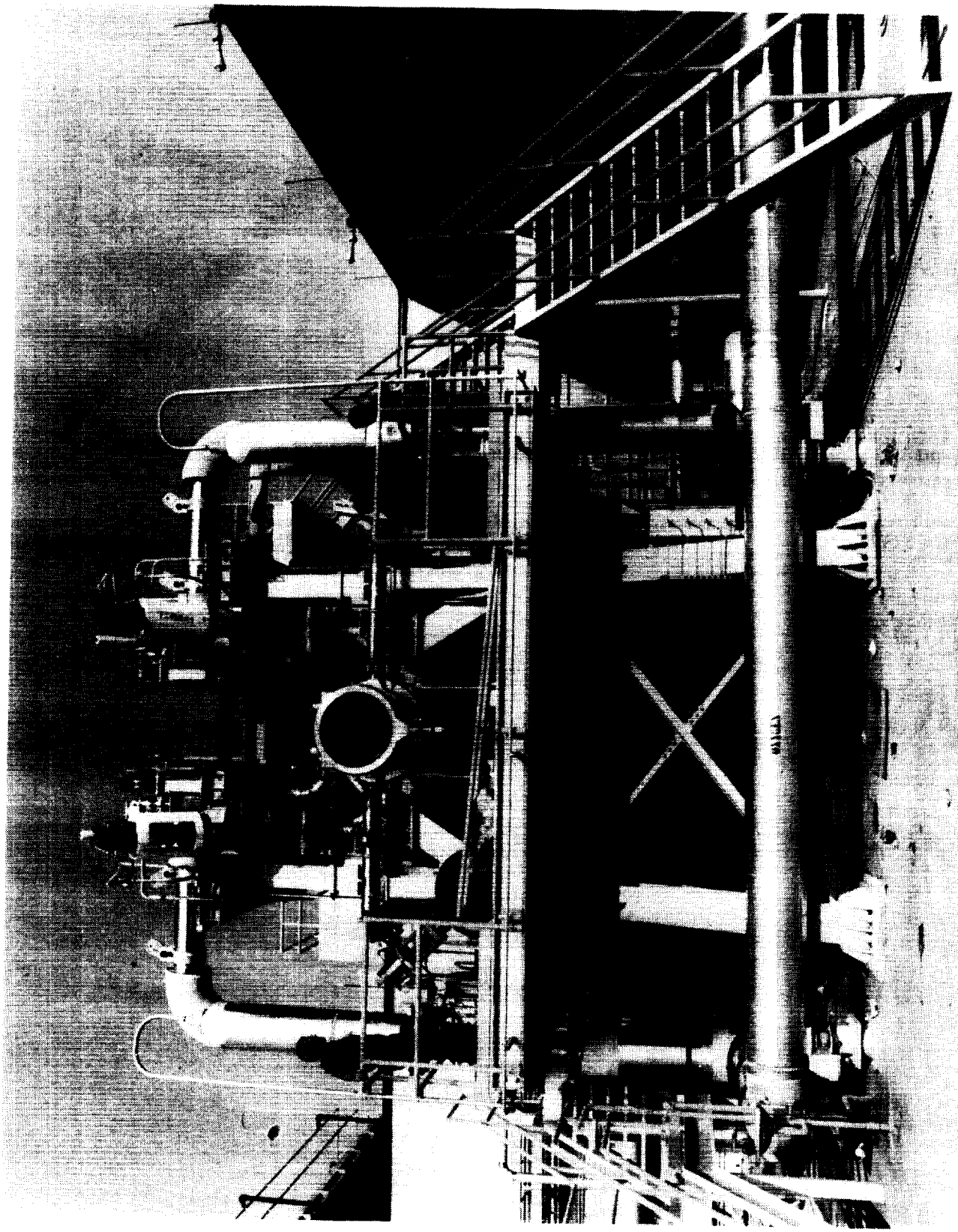

Figure 1-1 Newly Constructed NASA/MSFC Test Stand 116 750K Position With Aerojet Injector and Rocketdyne Chamber

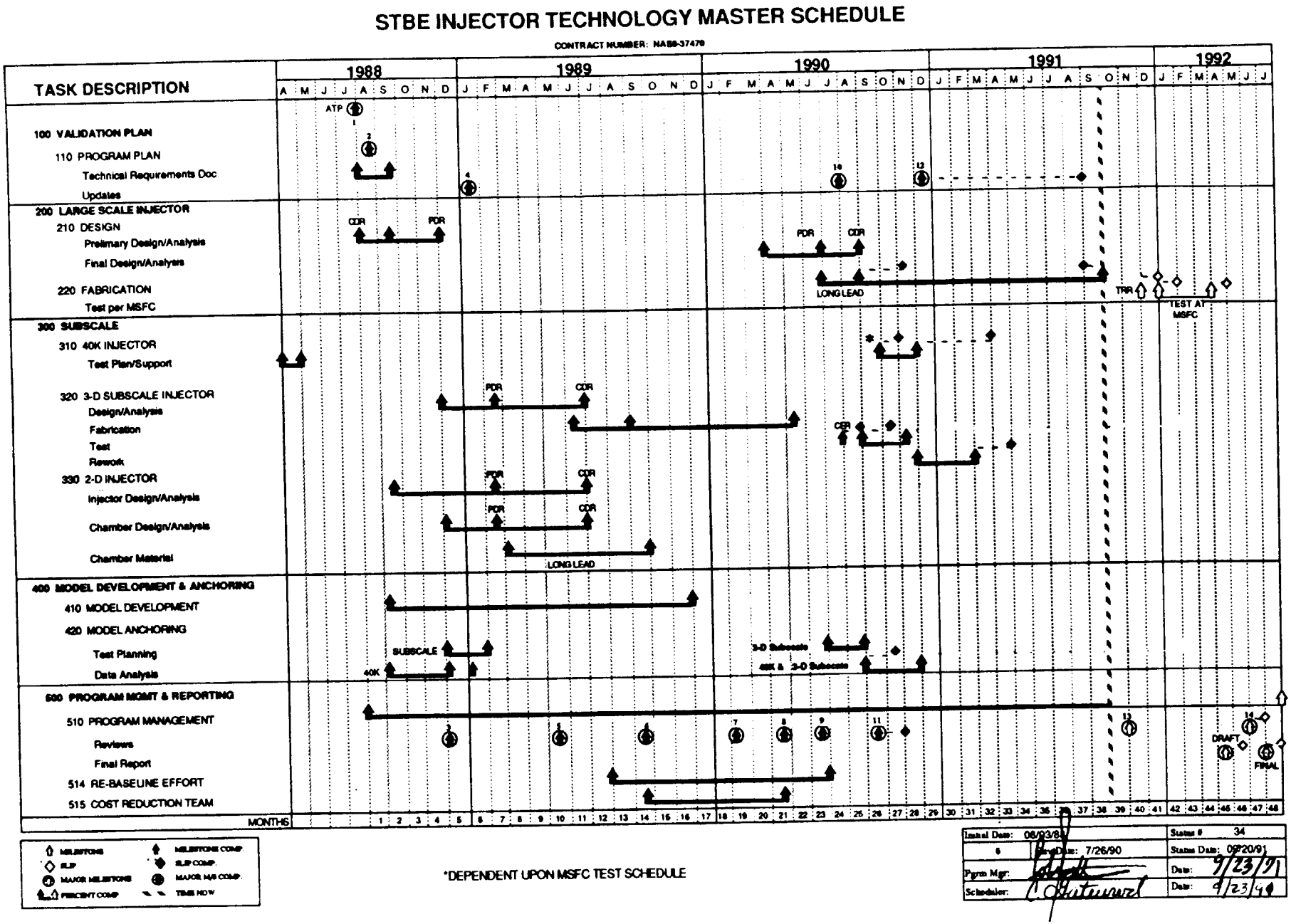

Figure 2-1. STBE Injector Technology Intermediate Schedule

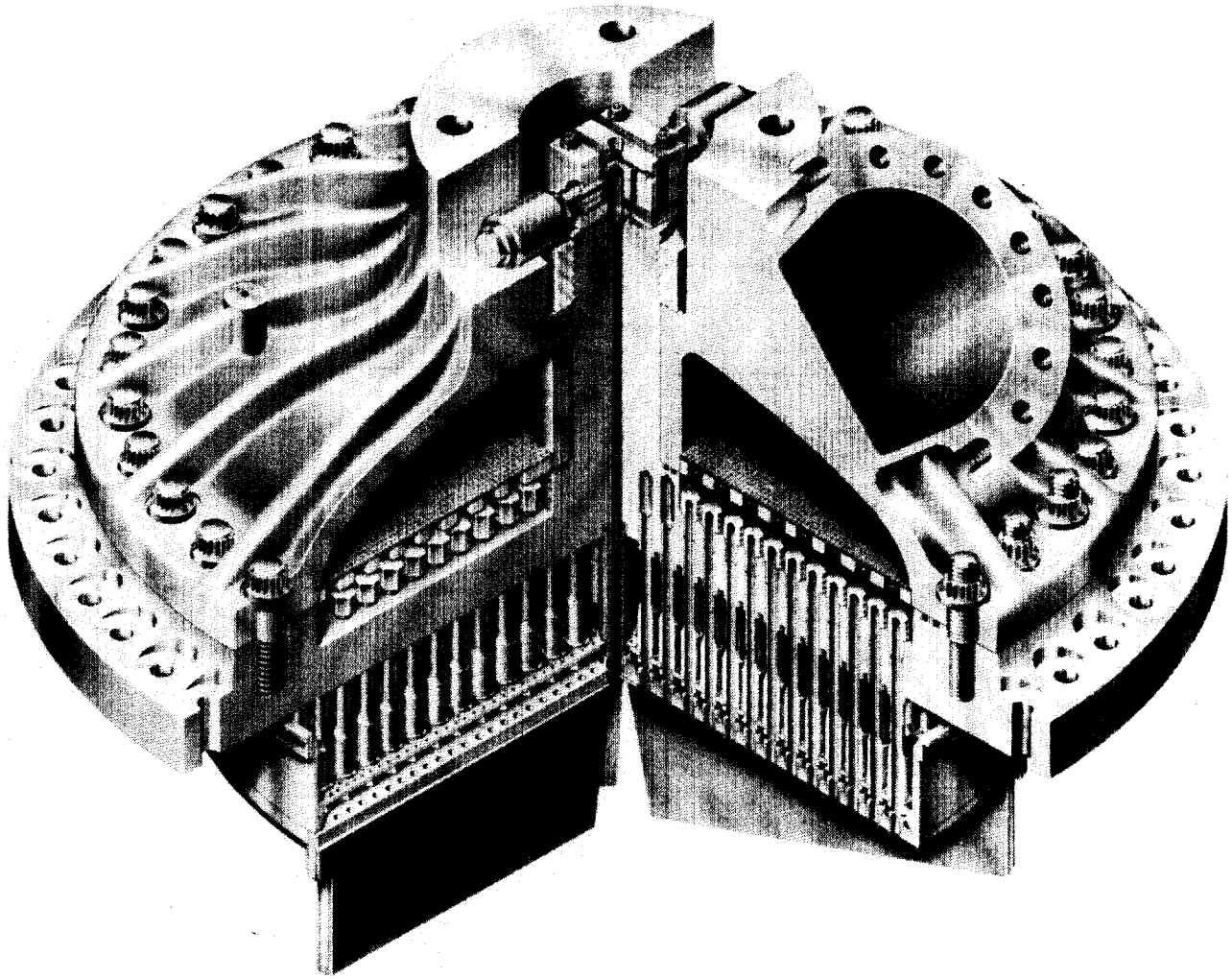

Figure 3-1. ALS ADP TCA Full Scale Injector

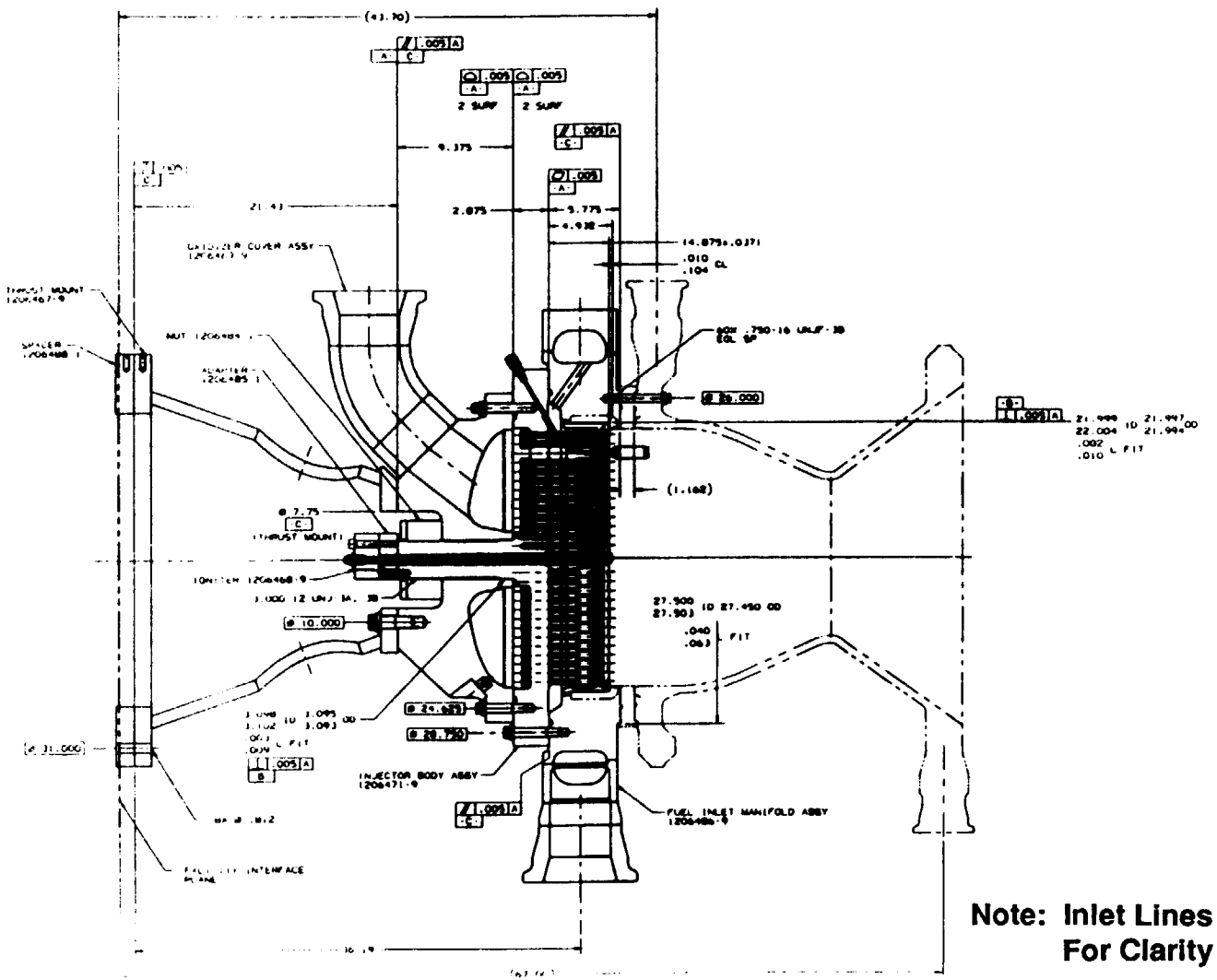

Note: Inlet Lines Rotated For Clarity

Figure 3-2. Large Scale Injector – Side View

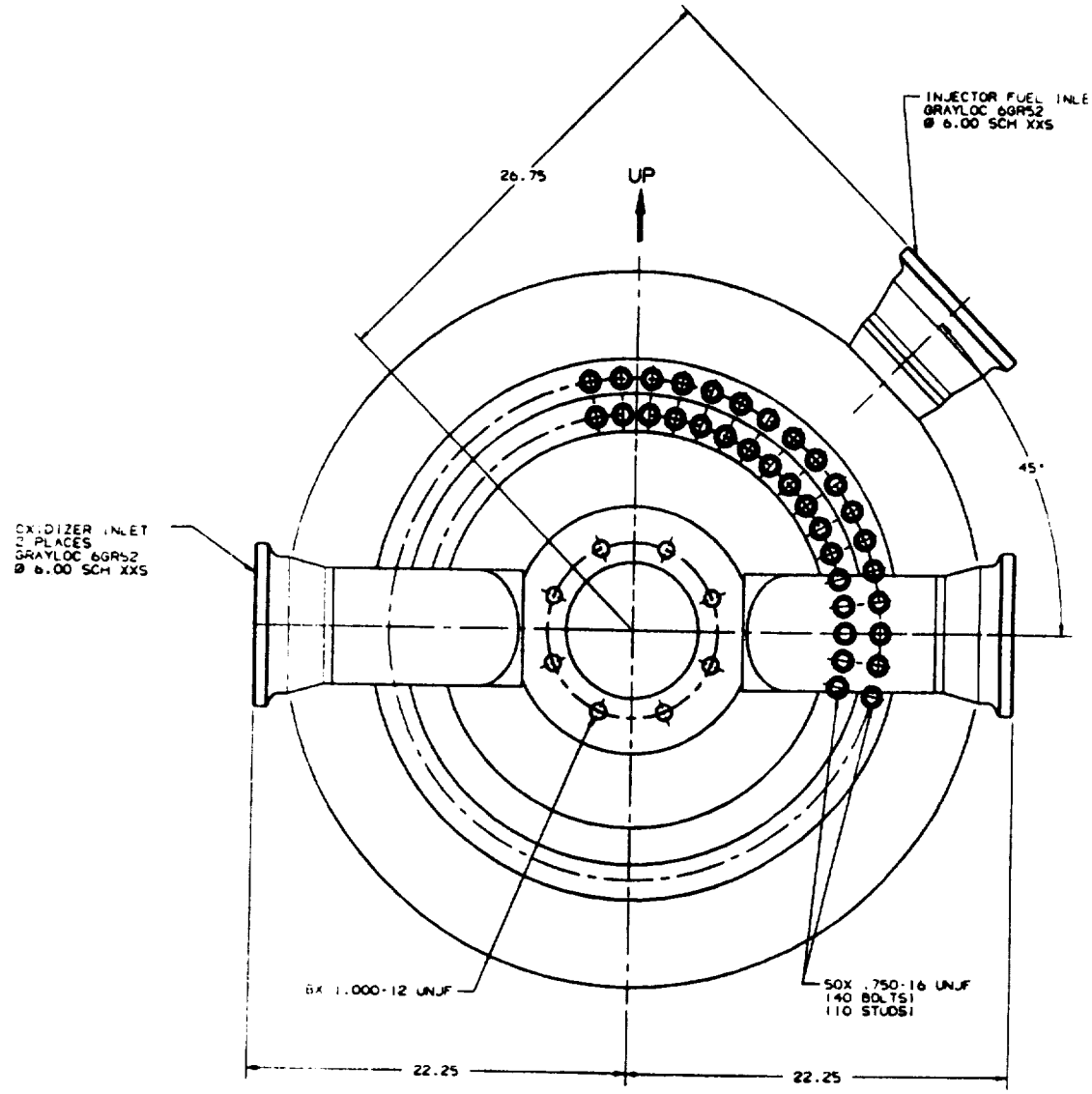

Figure 3-3. Large Scale Injector – End View

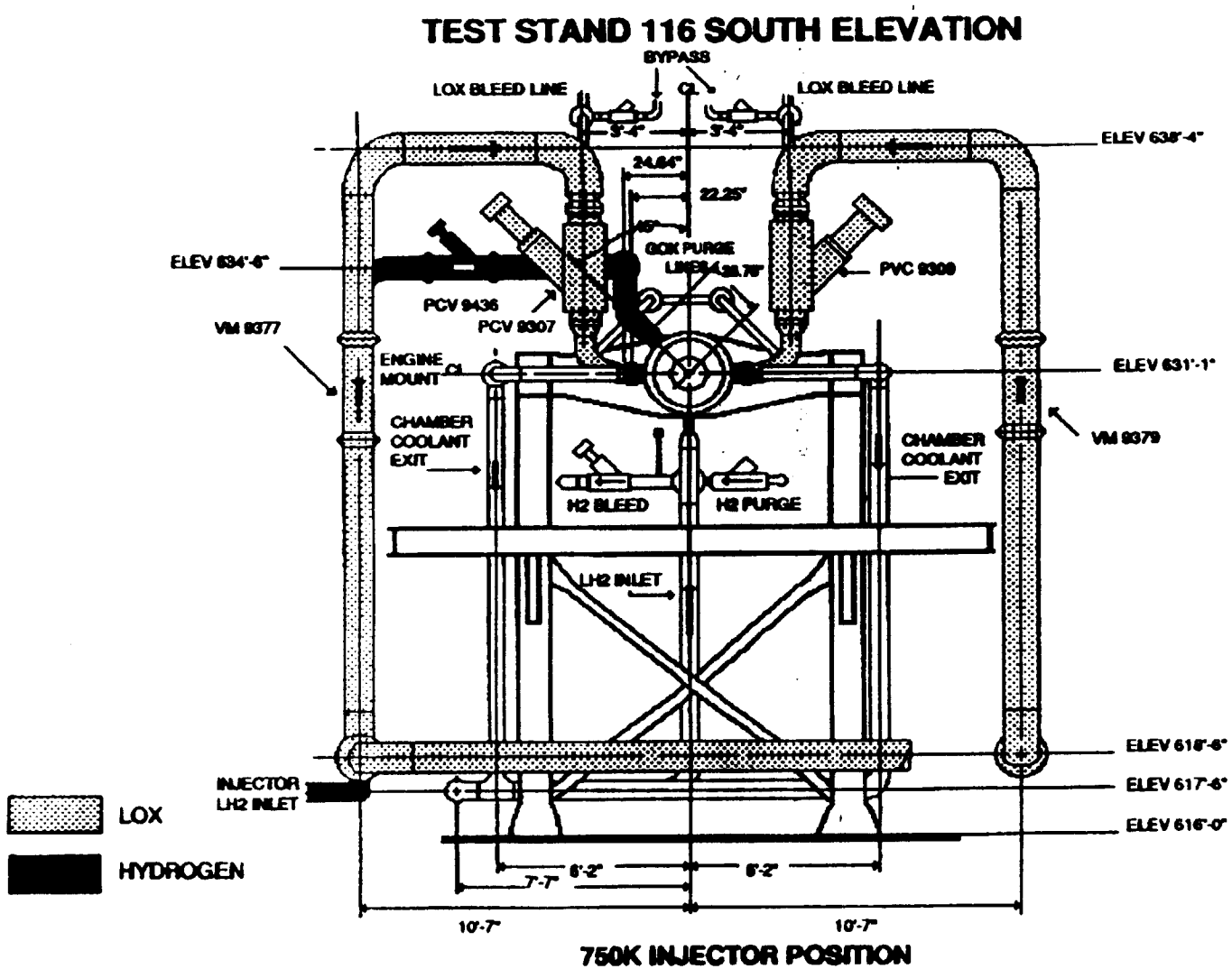

Figure 3-4. Stand Interfaces - Test Stand 116 South Elevation

Test Stand 116 East Elevation

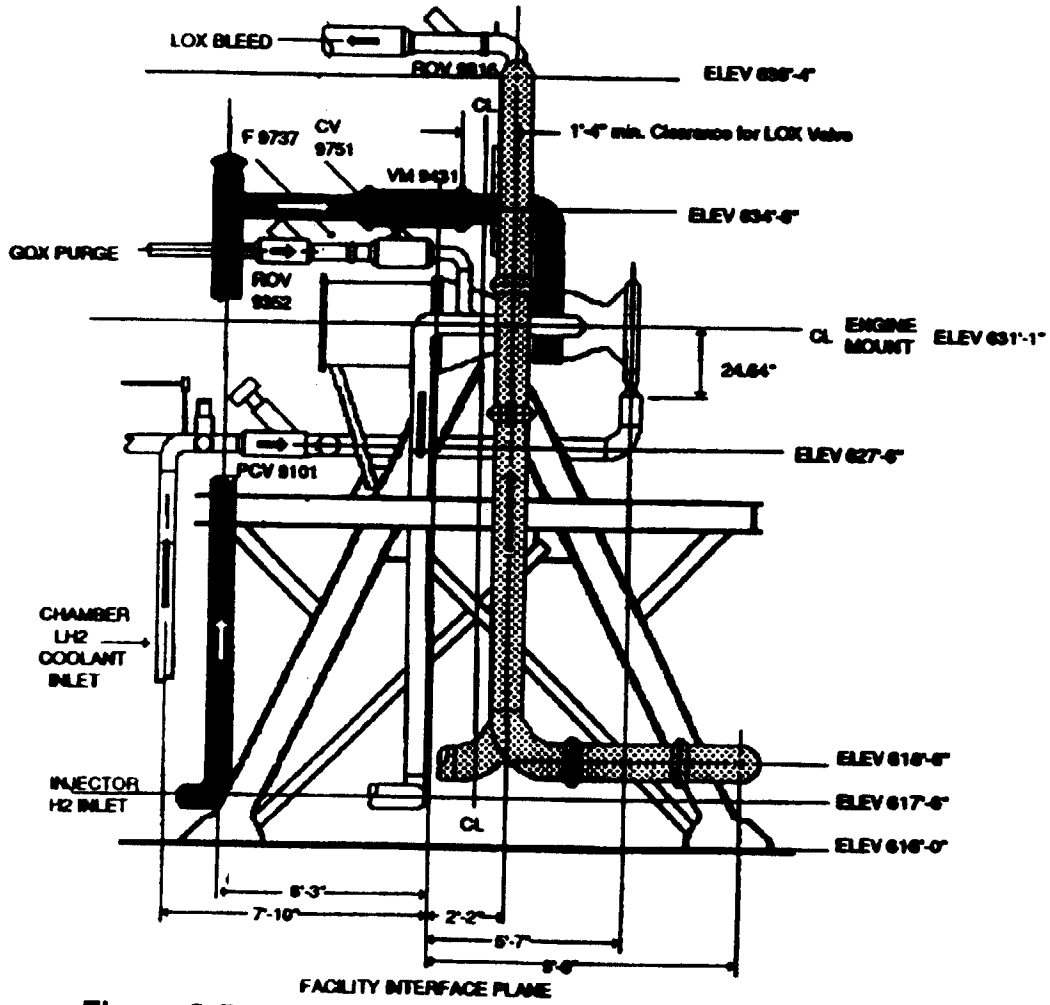

Figure 3-5. Stand Interfaces - Test Stand 116 East Elevation

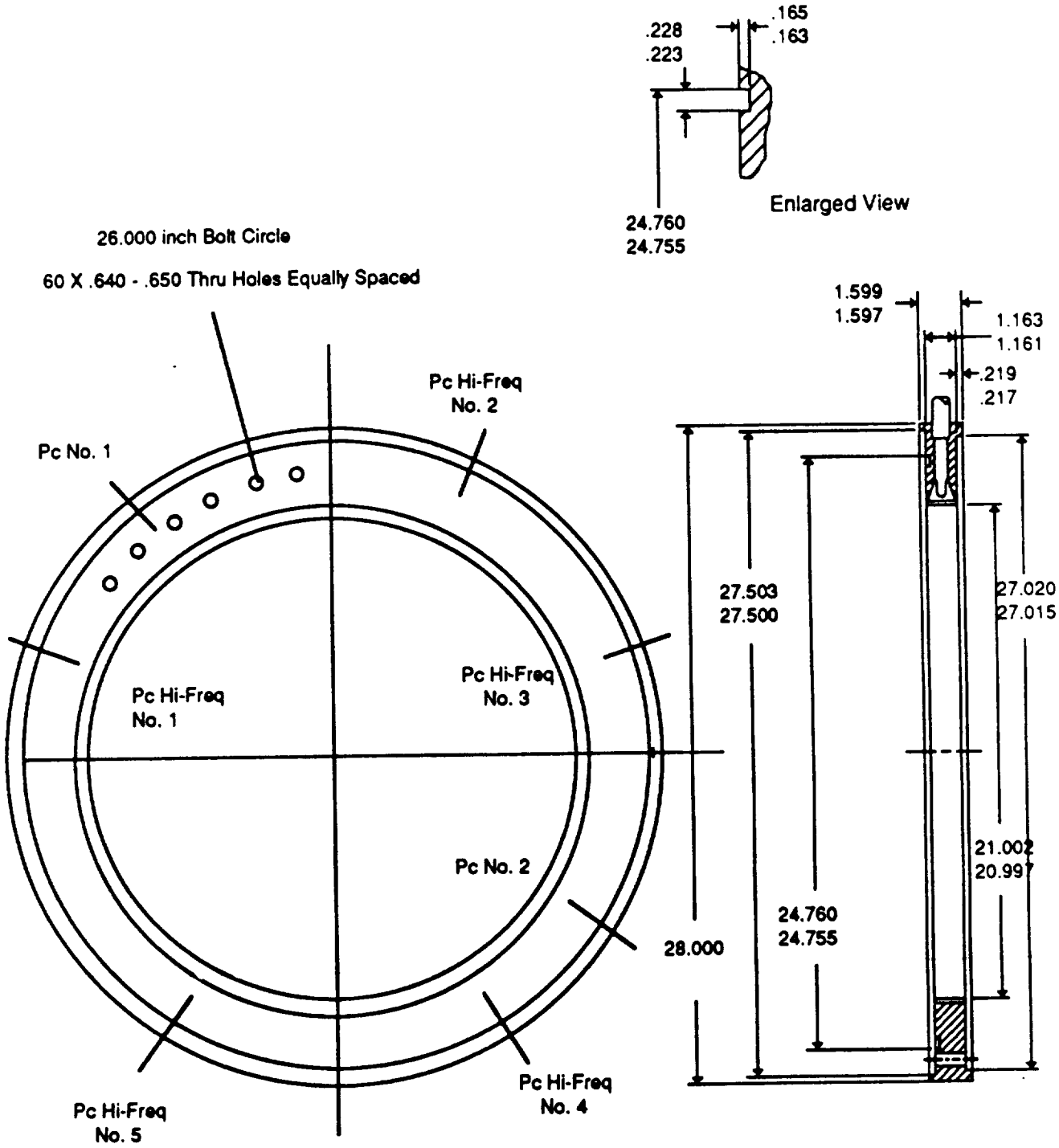

Figure 3-6. Rocketdyne LSI Instrumentation Ring Schematic

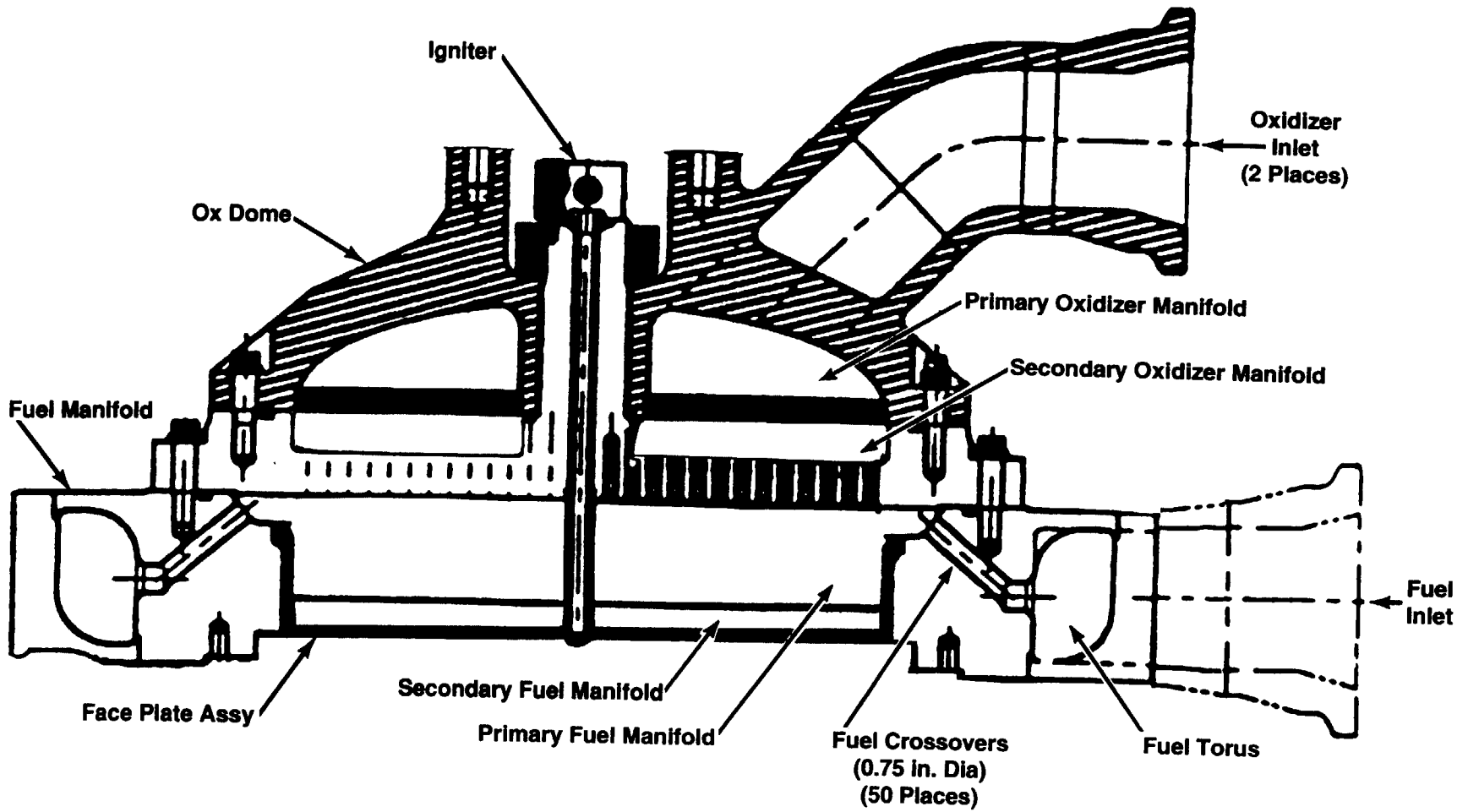

Figure 3-7. Fuel and Oxidizer Circuits

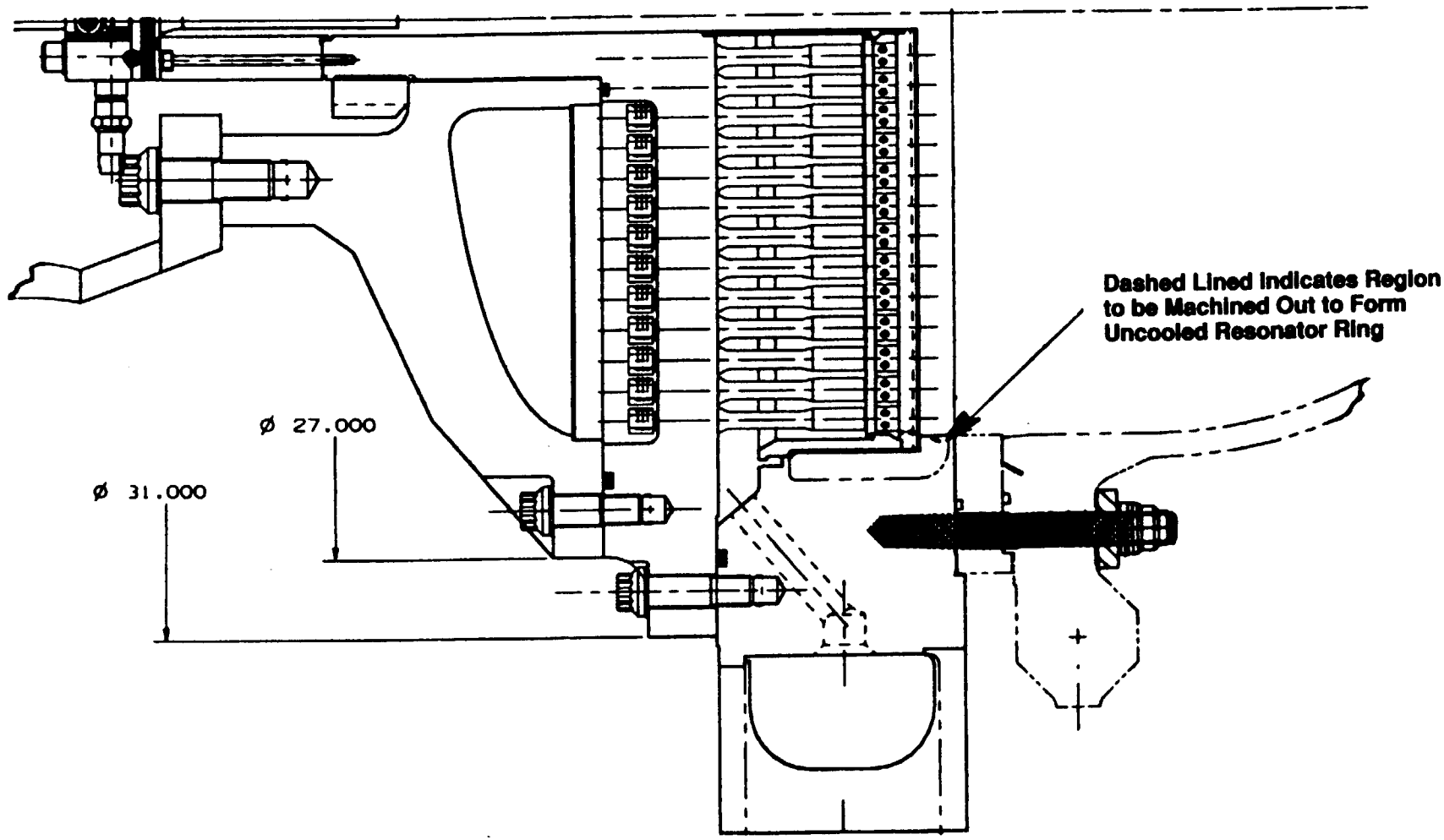

Figure 3-8. Fuel Manifold Can Be Modified to Include Acoustic Resonator Cavity

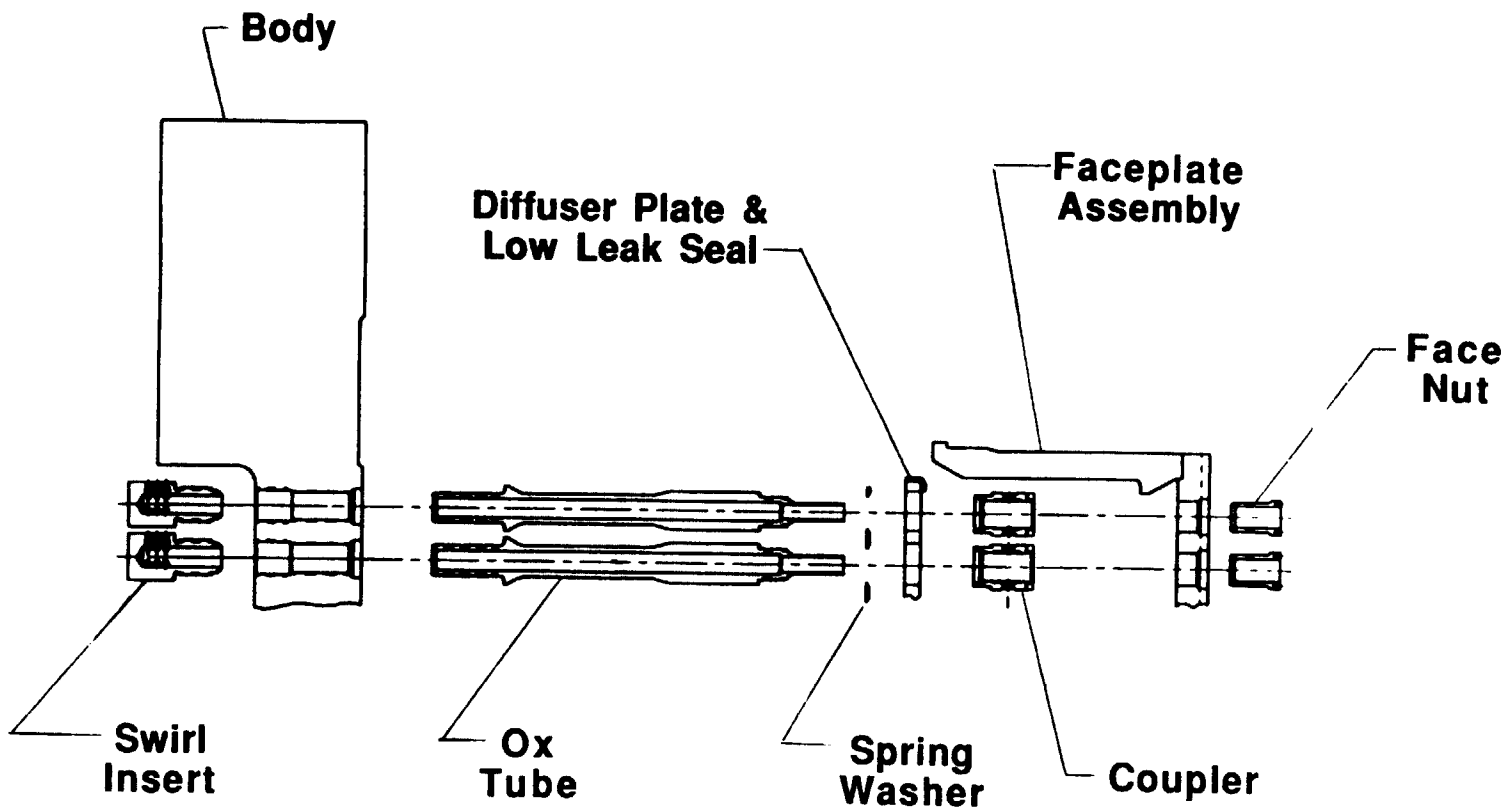

Figure 3-9. Injector Assembly Sequence

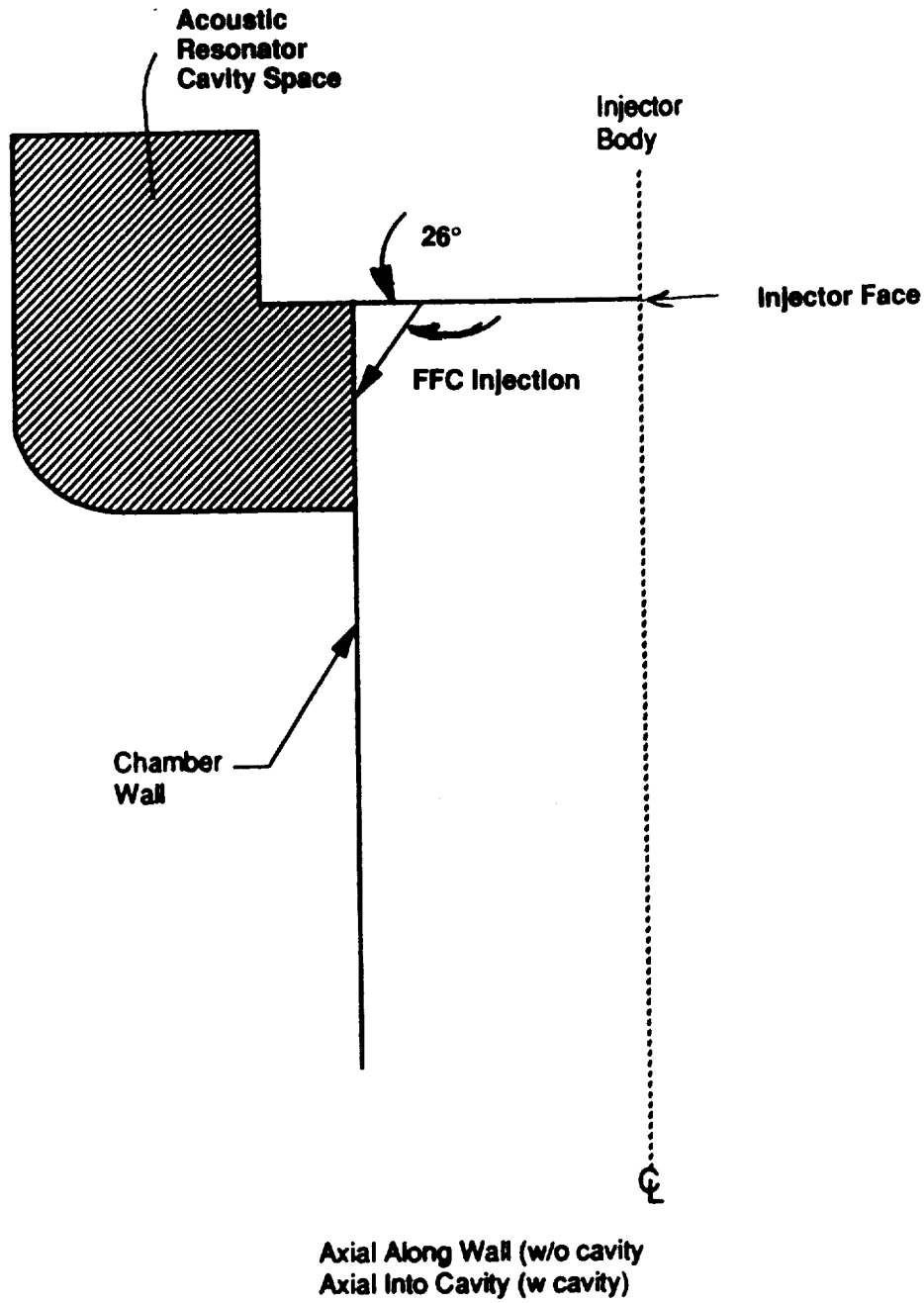

Figure 3-10. Fuel Film Cooling Injection Method is Applicable to Baseline Design as Well as Design With Cavities

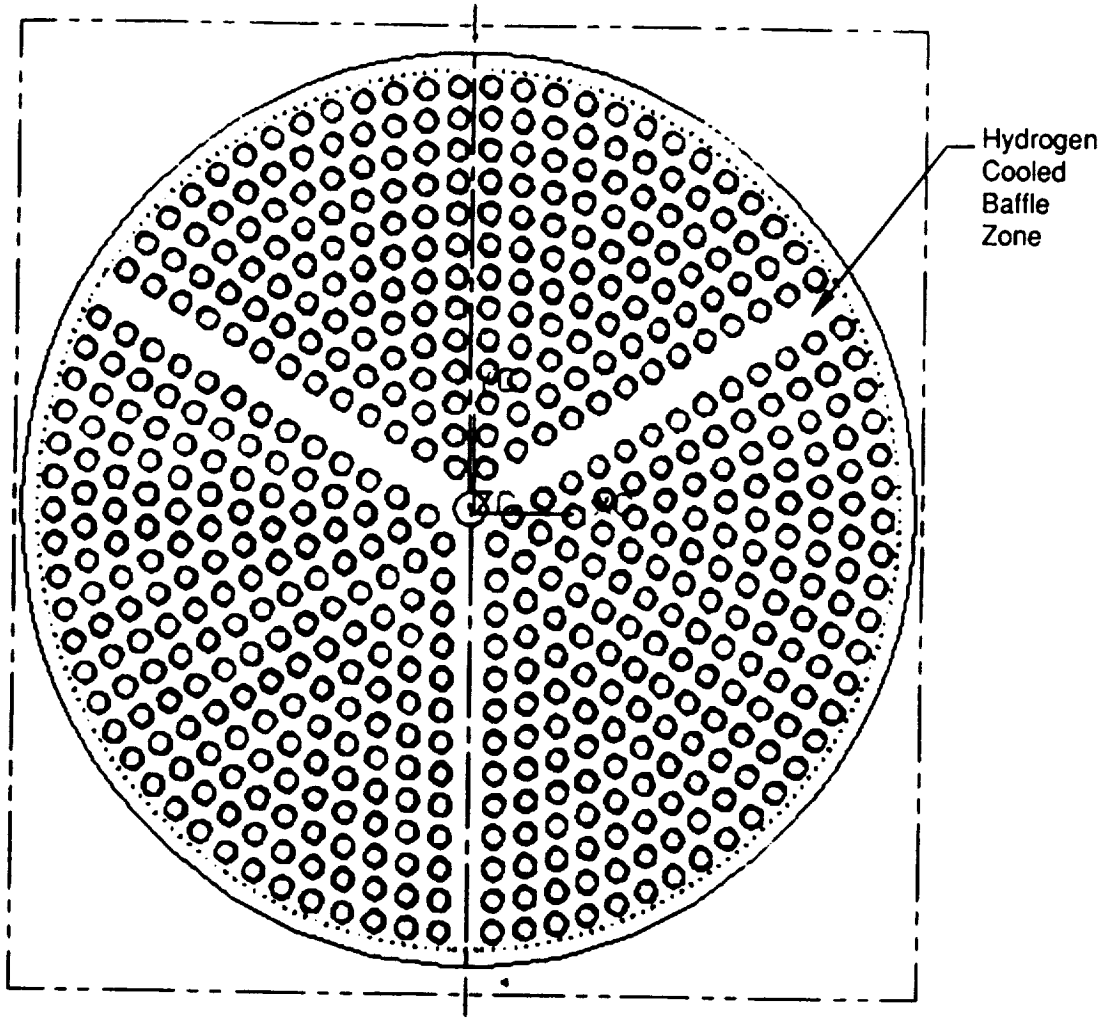

Figure 3-11. Full Scale Injector Face Pattern

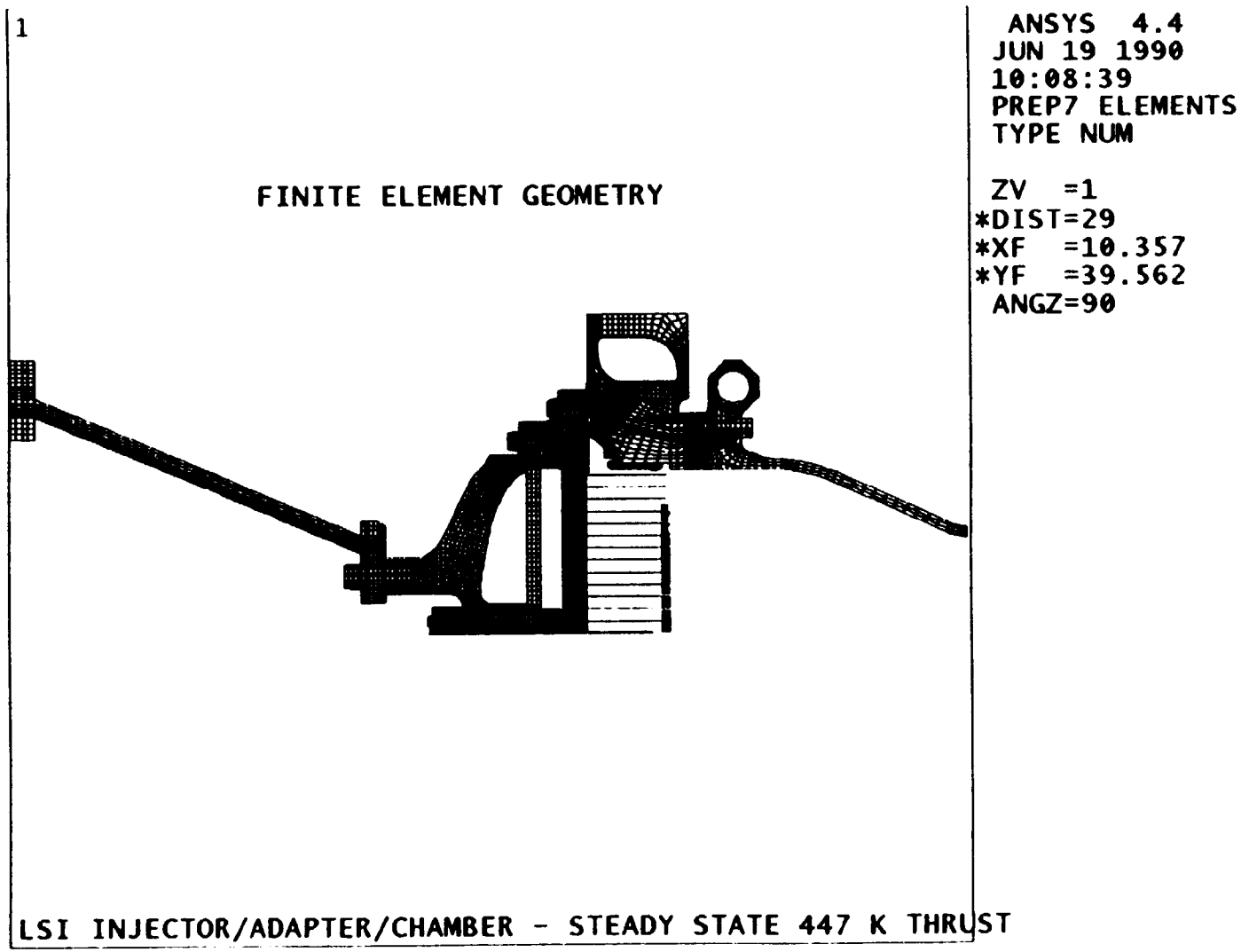

Figure 3-12. Injector Assembly-Finite Element Model

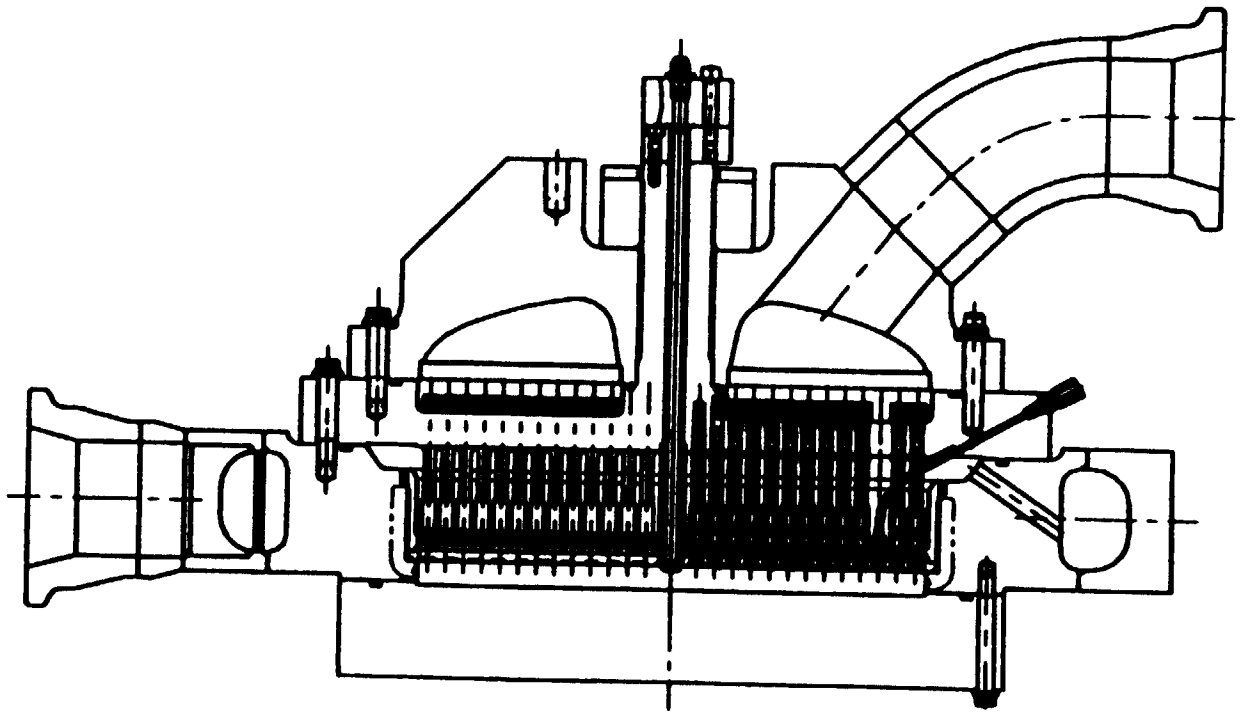

Proof/Leak Check Pressure = 1500-1600 psia

Figure 3-13. Injector Assembly-Proof and Leak Test

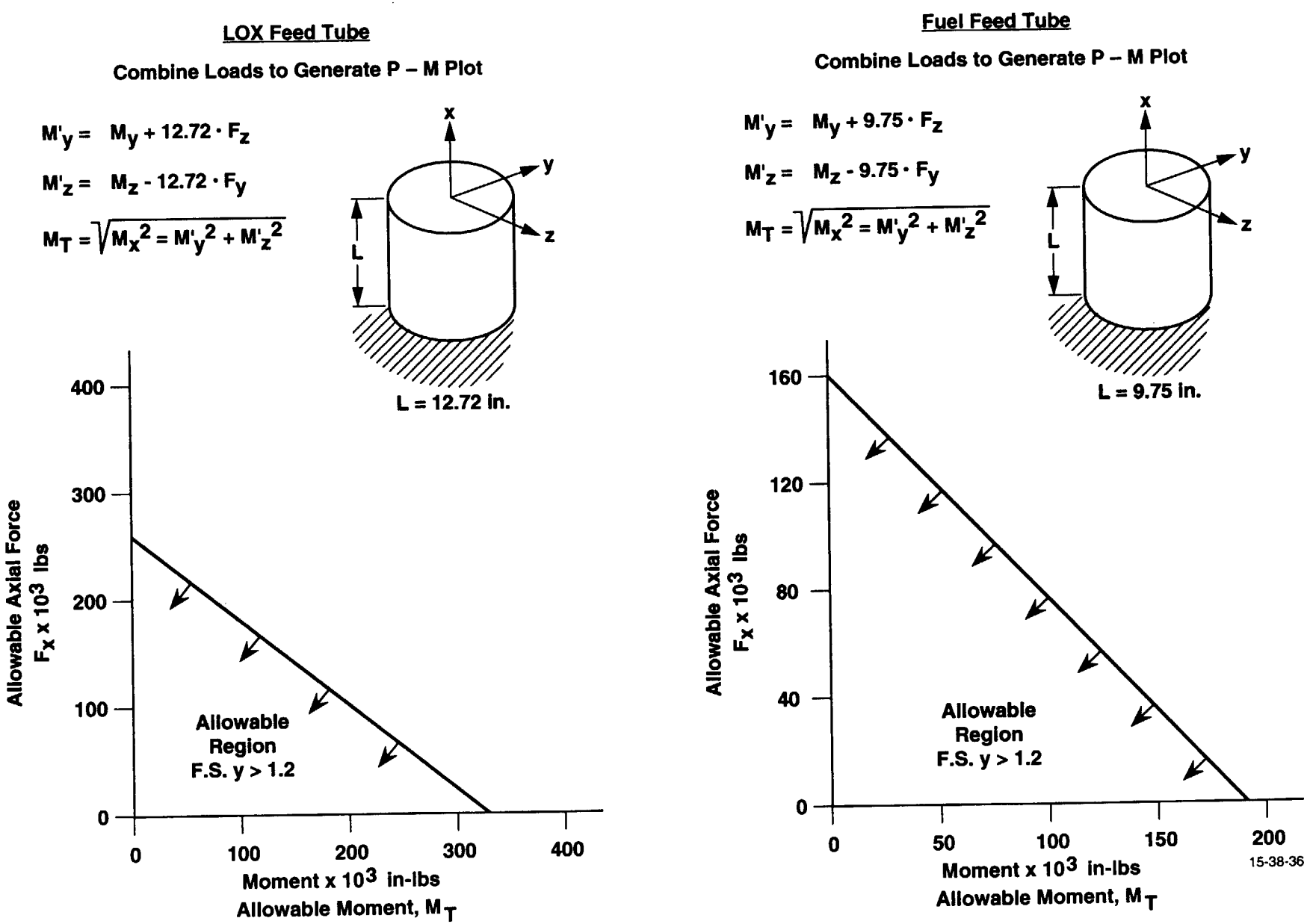

Figure 3-14. Propellant Line Allowable Diagrams

APD Suggested Chamber Strut To Take Out Side Loading

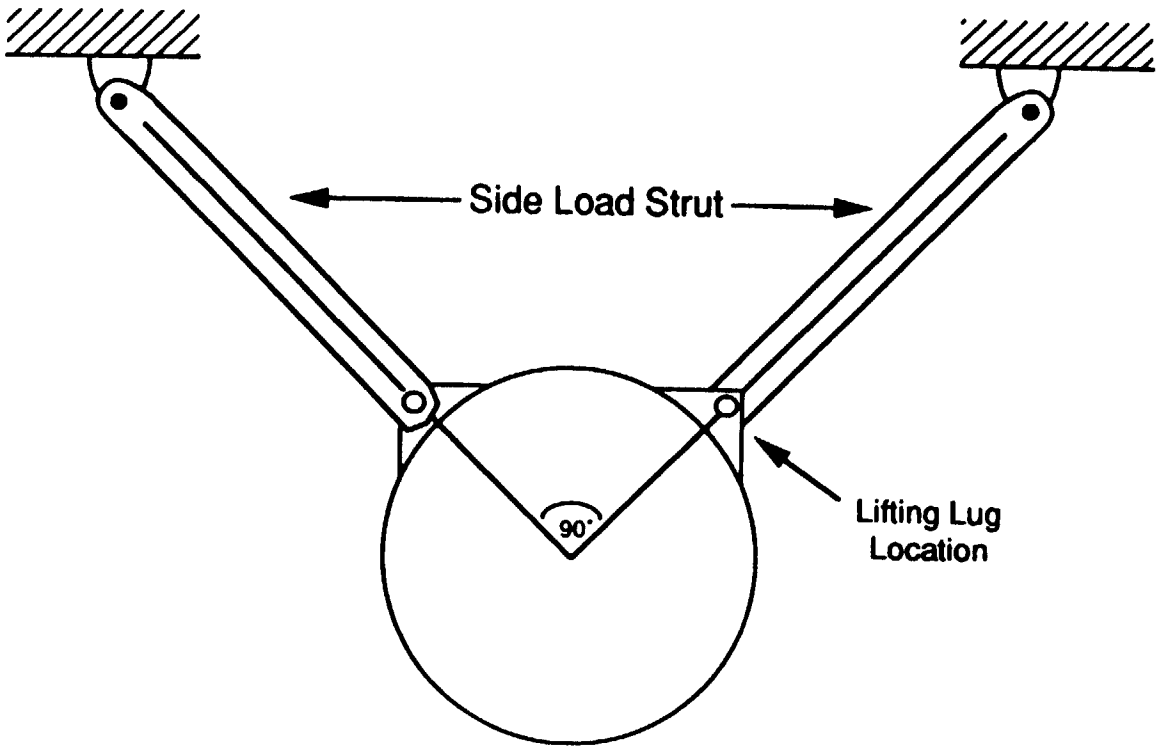

2 Struts At Each End Of Chamber

Figure 3-15. Facility Load Limits

Expanded View

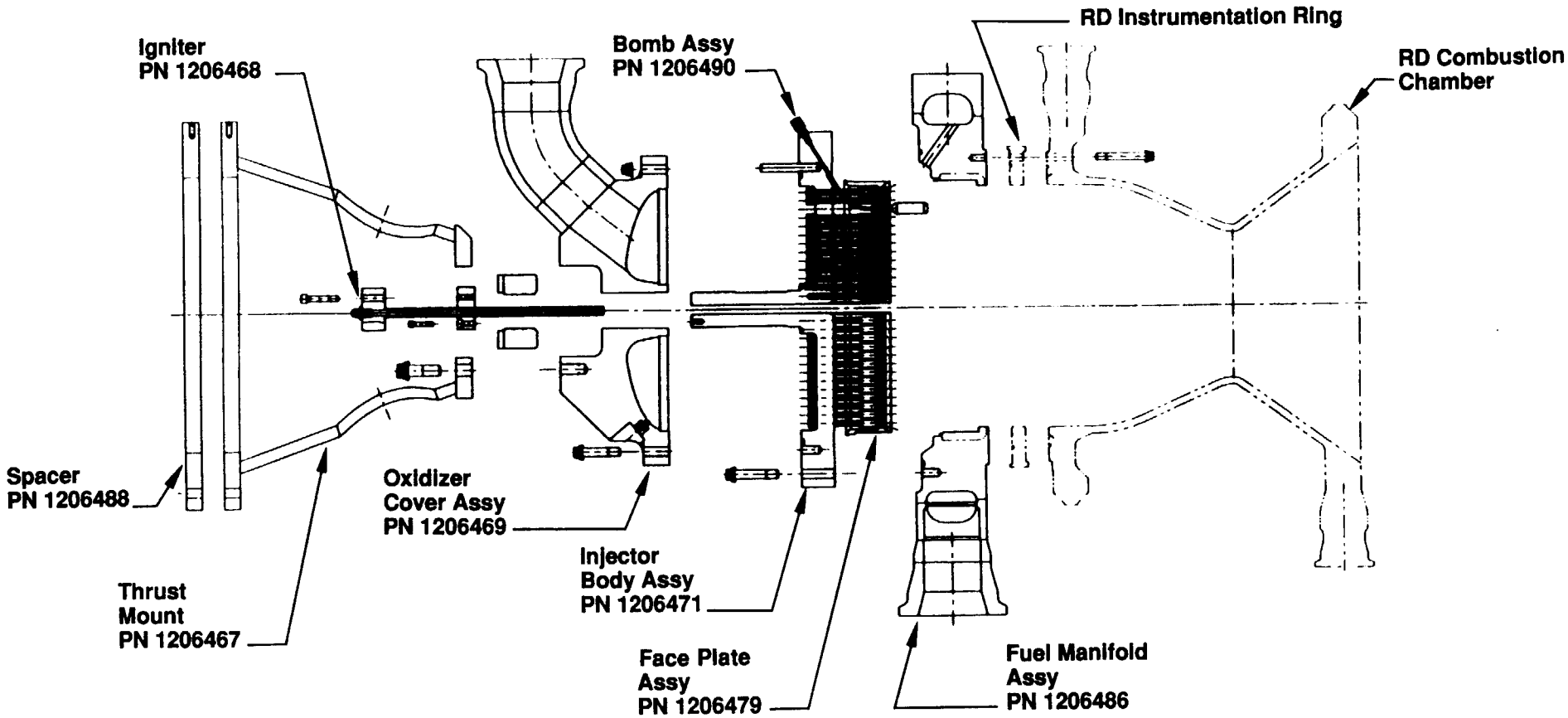

JS 6/29/90 21

Figure 3-16. LSI Thruster Assembly (PN 1206466)

ORIGINAL PAGE
BLACK AND WHITE PHOTOGRAPH

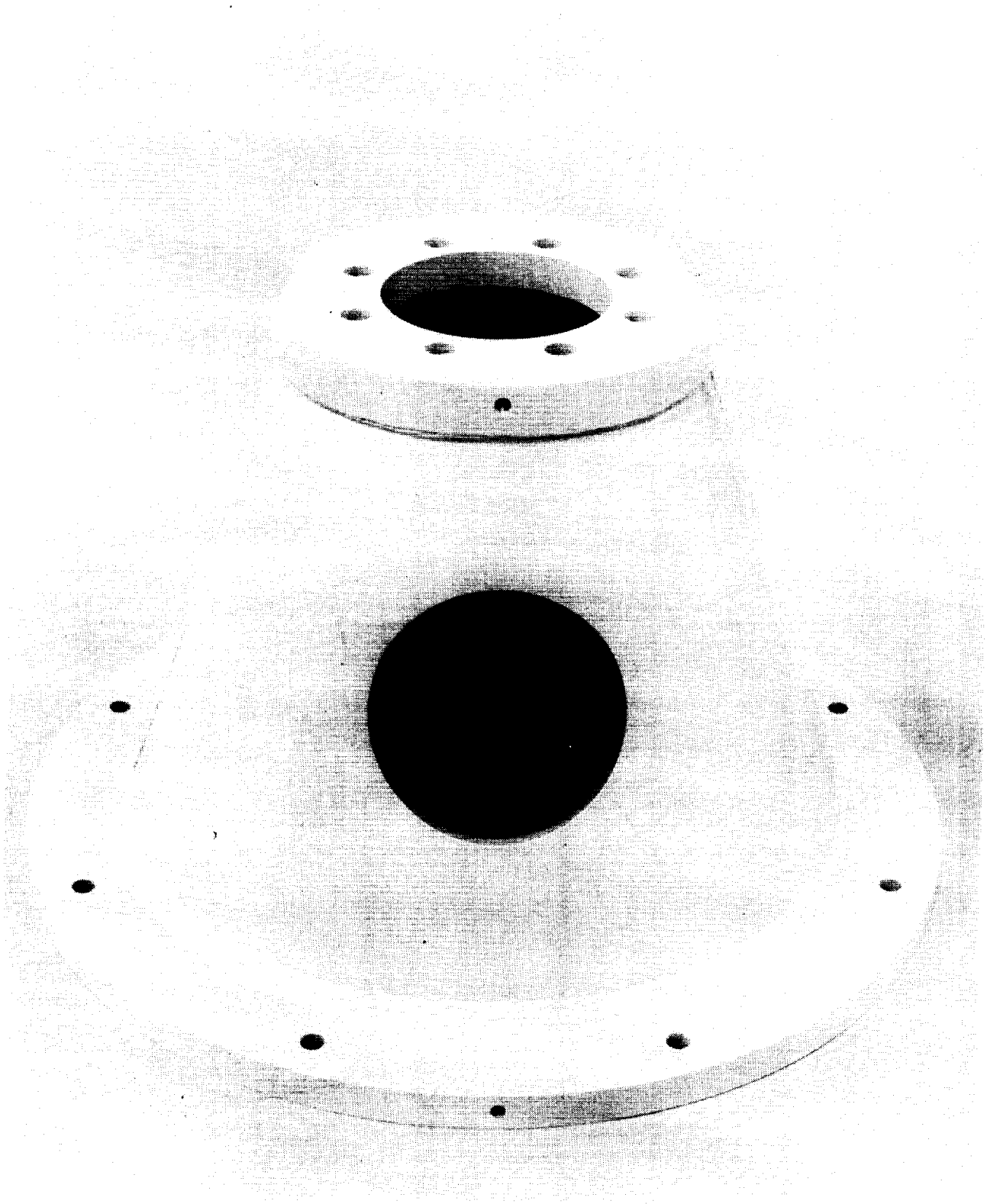

Figure 3-17. Thrust Mount Assembly (PN 1206467)

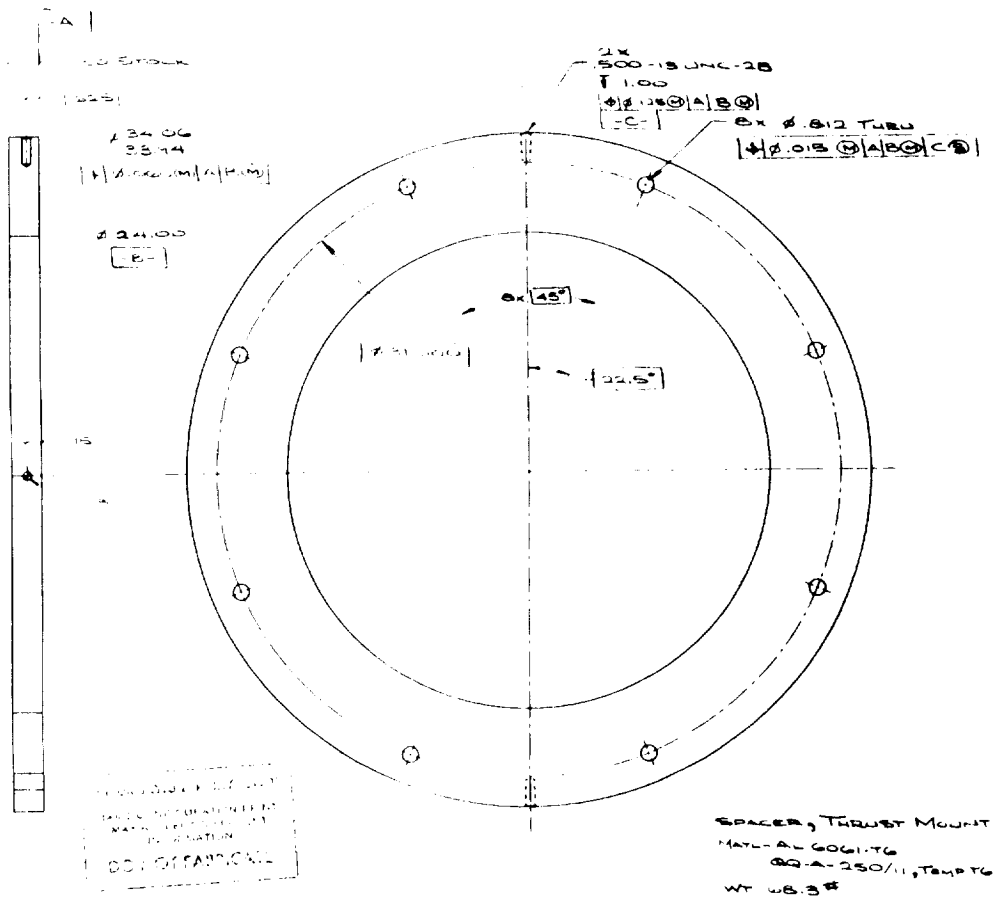

Figure 3-18. Spacer

ORIGINAL PAGE IS
OF POOR QUALITY

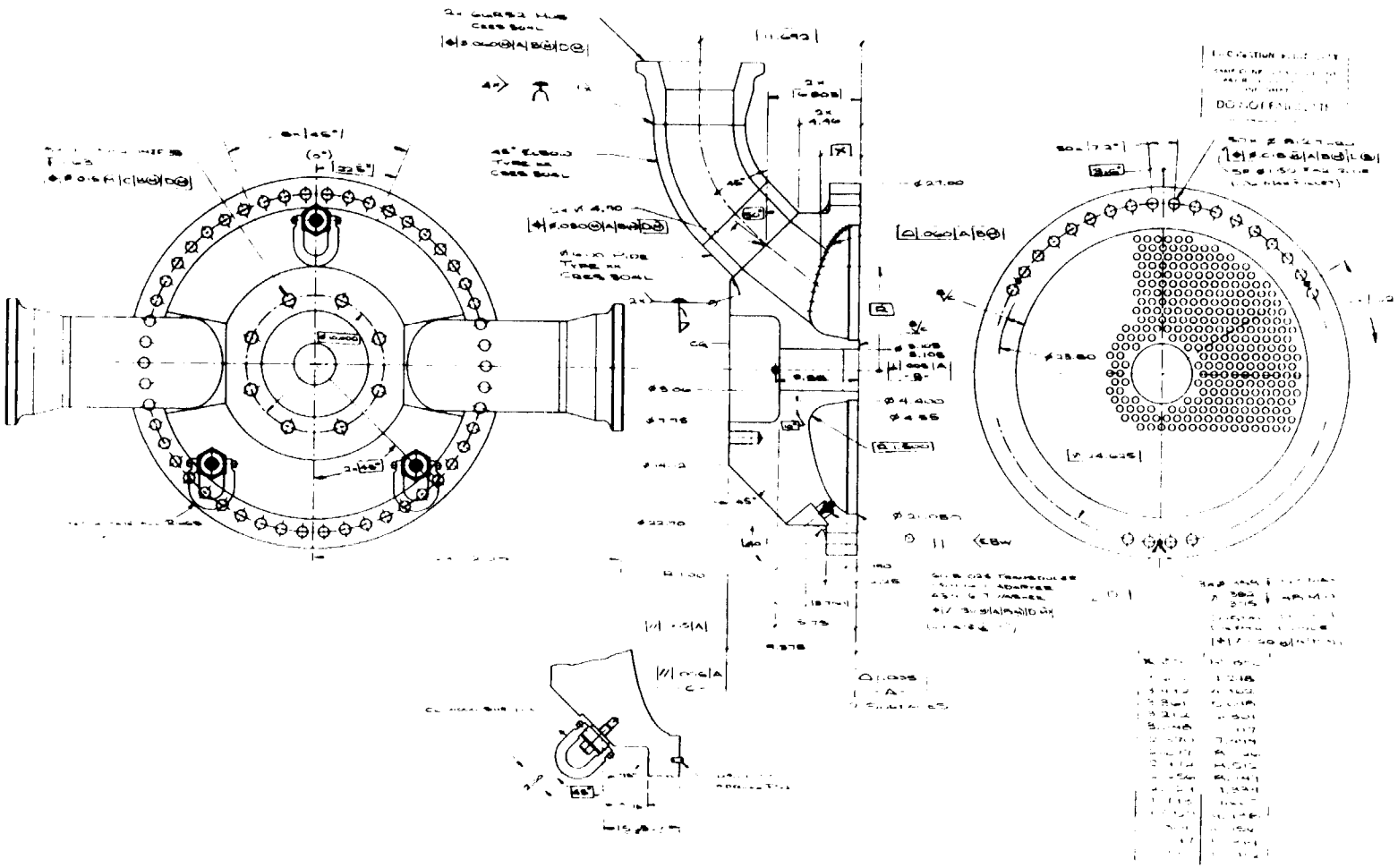

Figure 3-19. Oxidizer Inlet Assembly

ORIGINAL PAGE IS
OF POOR QUALITY

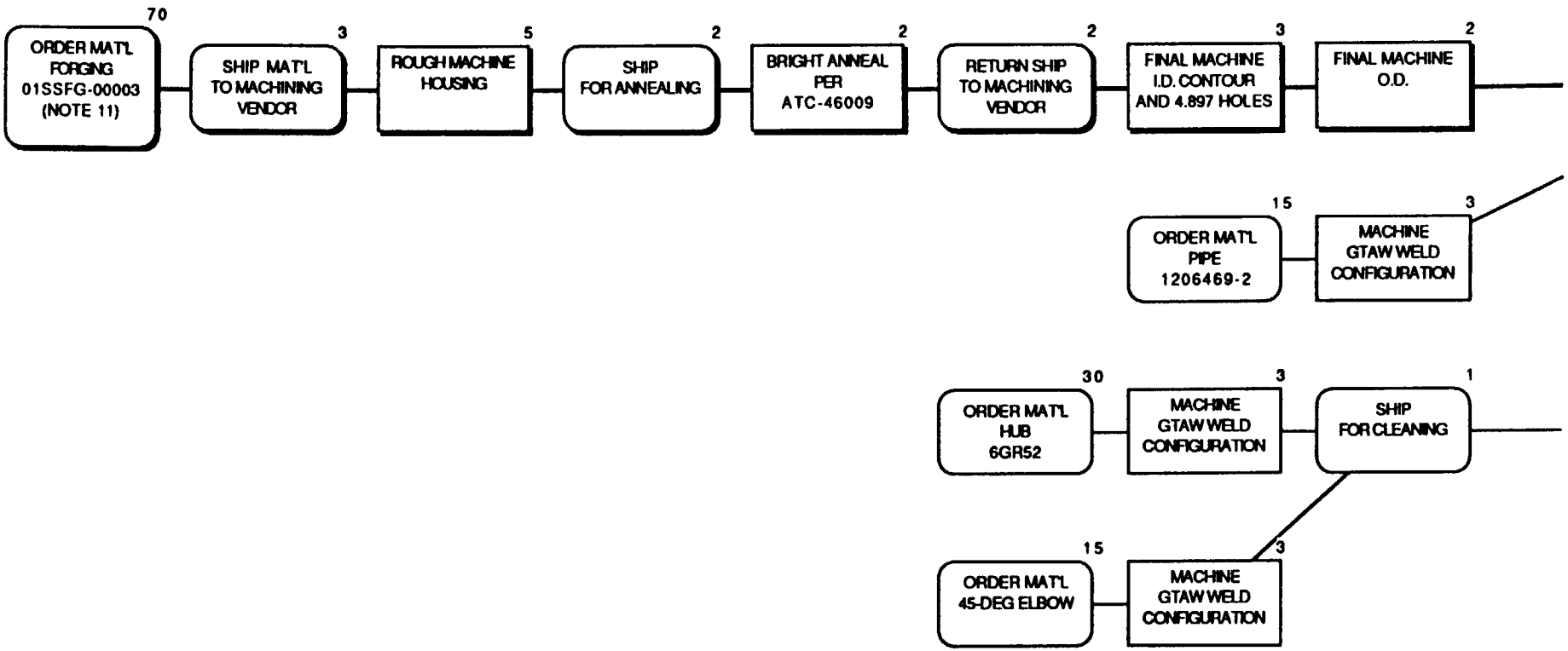

Figure 3-20. 1206469 – Oxidizer Cover Assembly Fabrication Flow Plan, Page 1 of 4

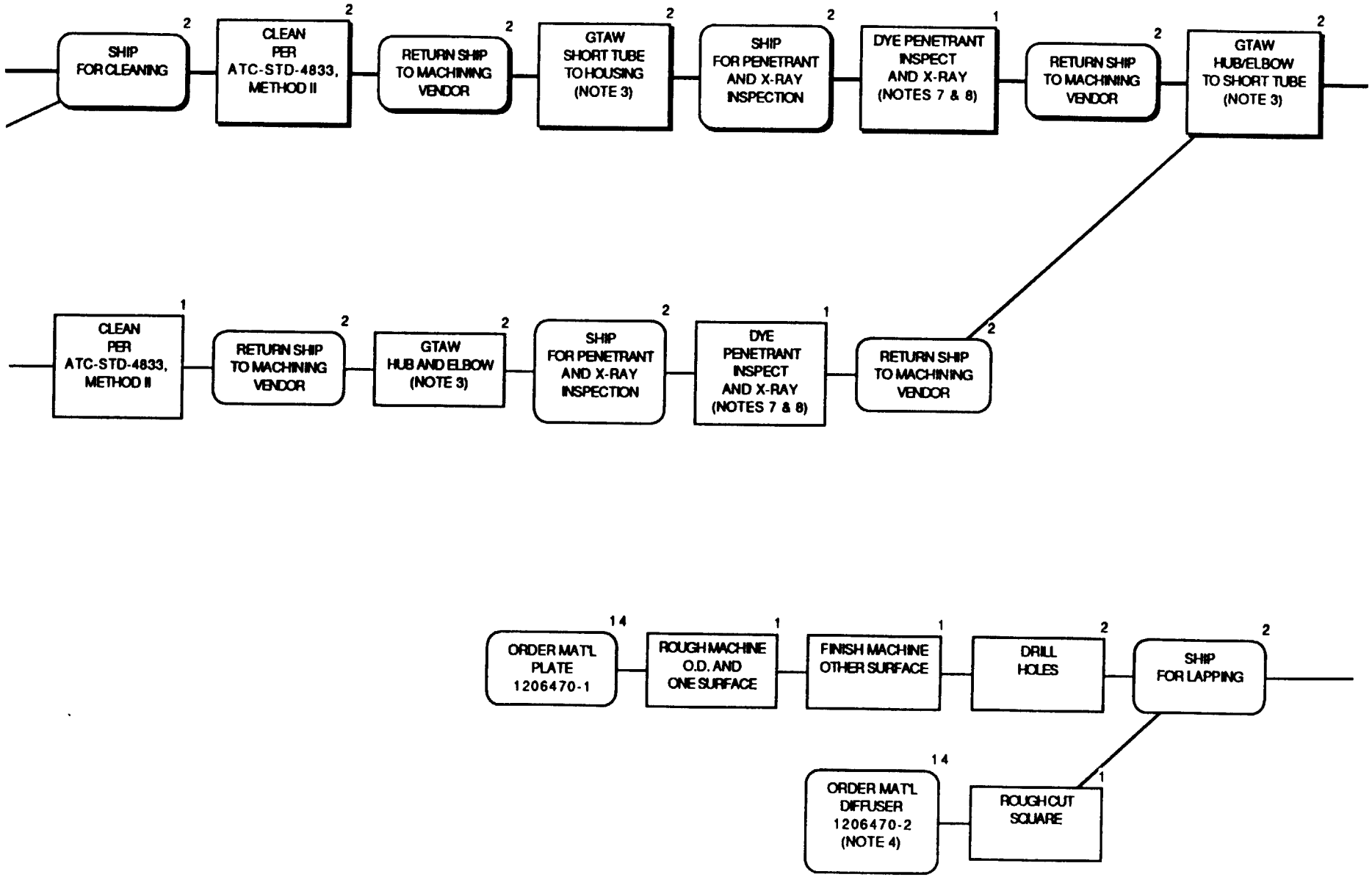

Figure 3-20. 1206469 – Oxidizer Cover Assembly Fabrication Flow Plan, Page 2 of 4

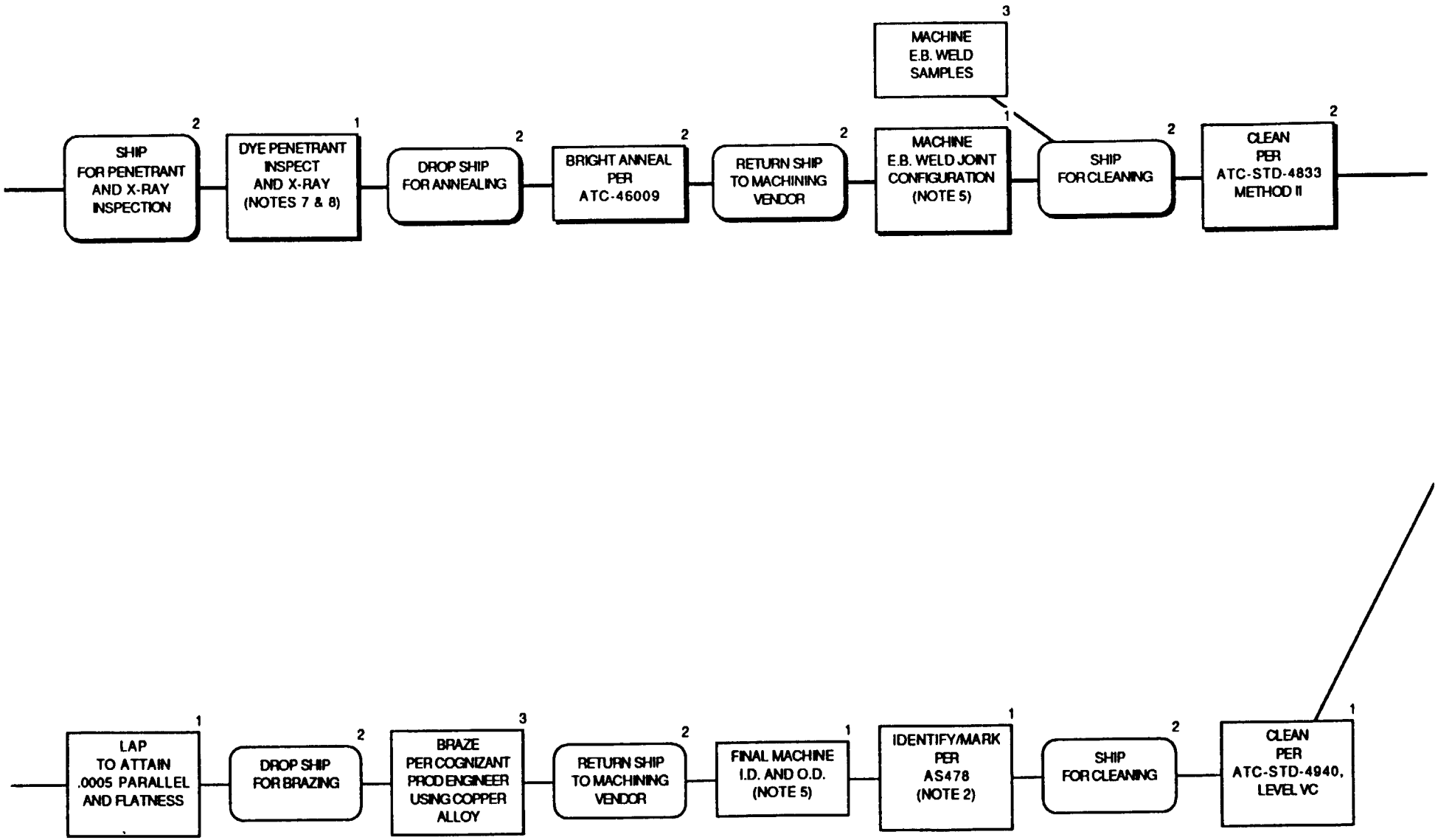

Figure 3-20. 1206469 – Oxidizer Cover Assembly Fabrication Flow Plan, Page 3 of 4

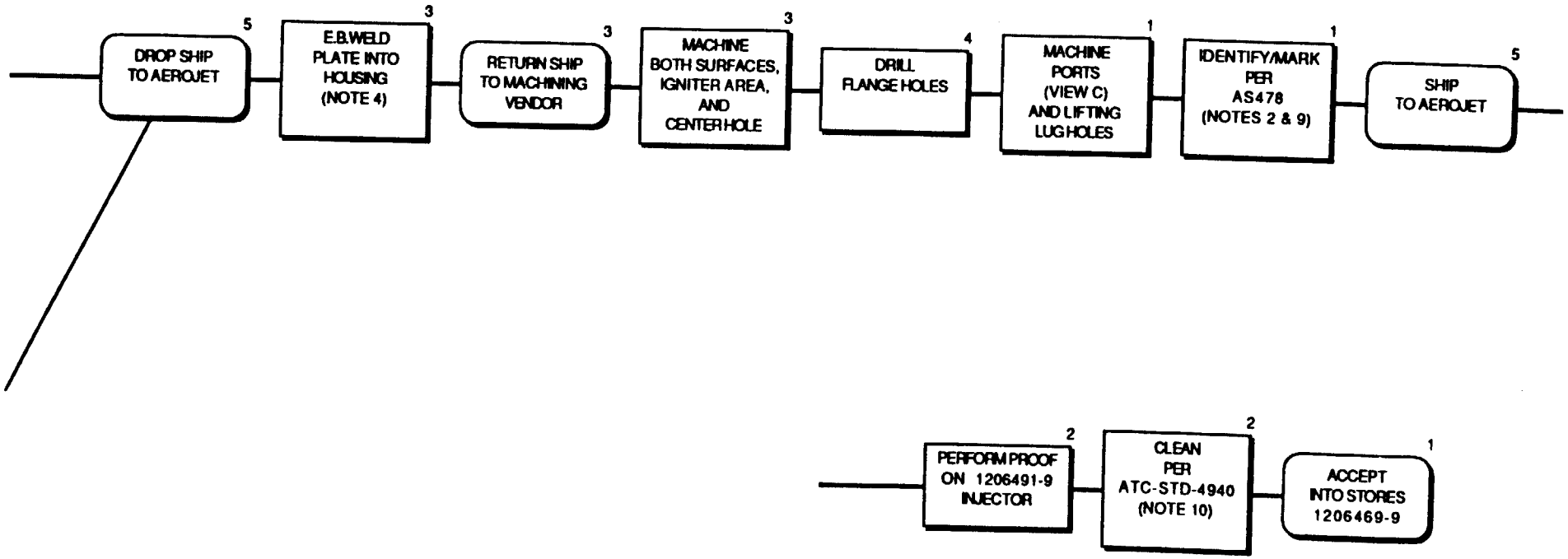

Figure 3-20. 1206469 – Oxidizer Cover Assembly Fabrication Flow Plan, Page 4 of 4

ORIGINAL PAGE
BLACK AND WHITE PHOTOGRAPH

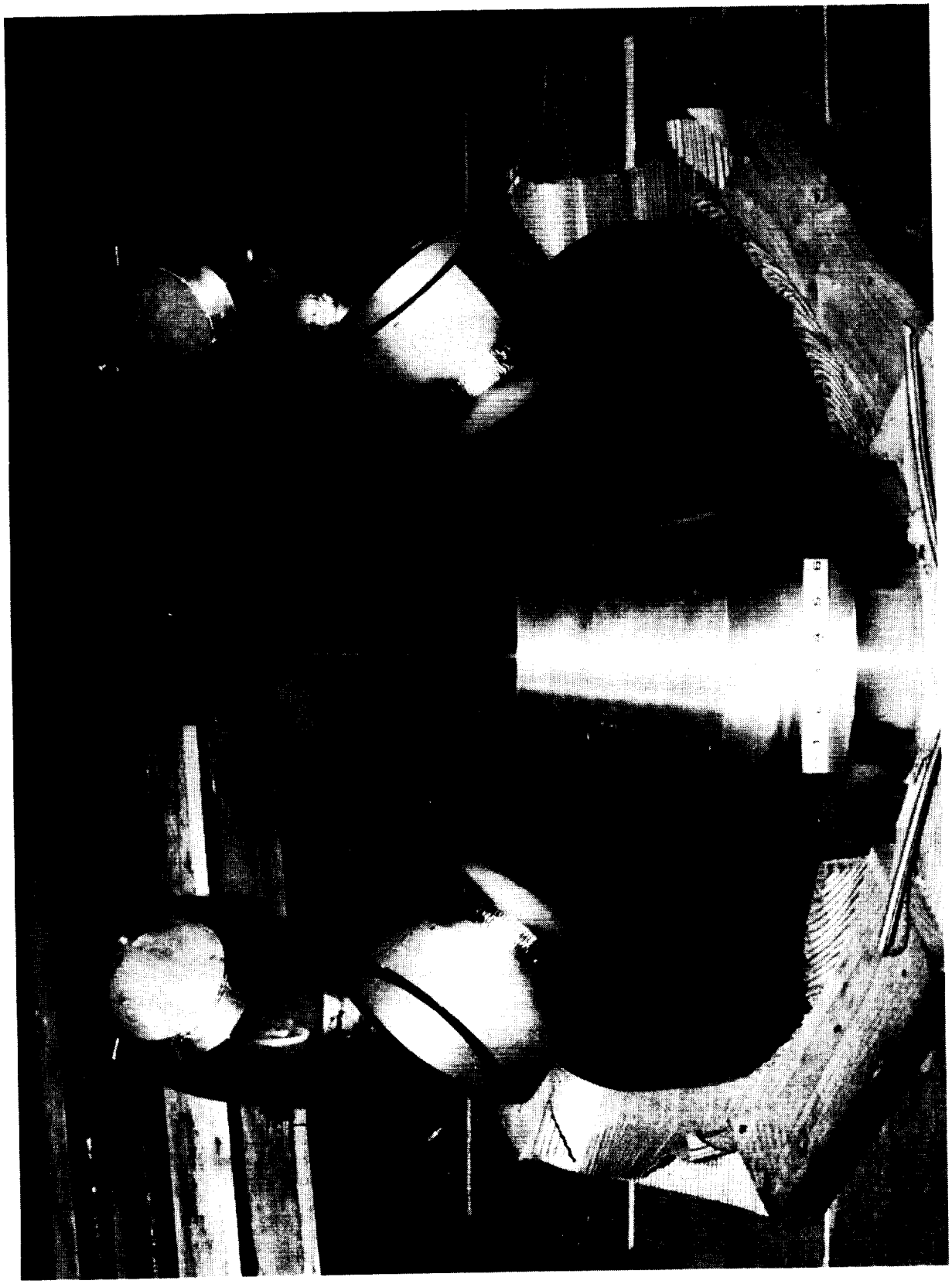

Figure 3-21. Oxidizer Manifold Housing Prior to Final Inlet Weld (PN 1206469-1)

ORIGINAL PAGE
BLACK AND WHITE PHOTOGRAPH

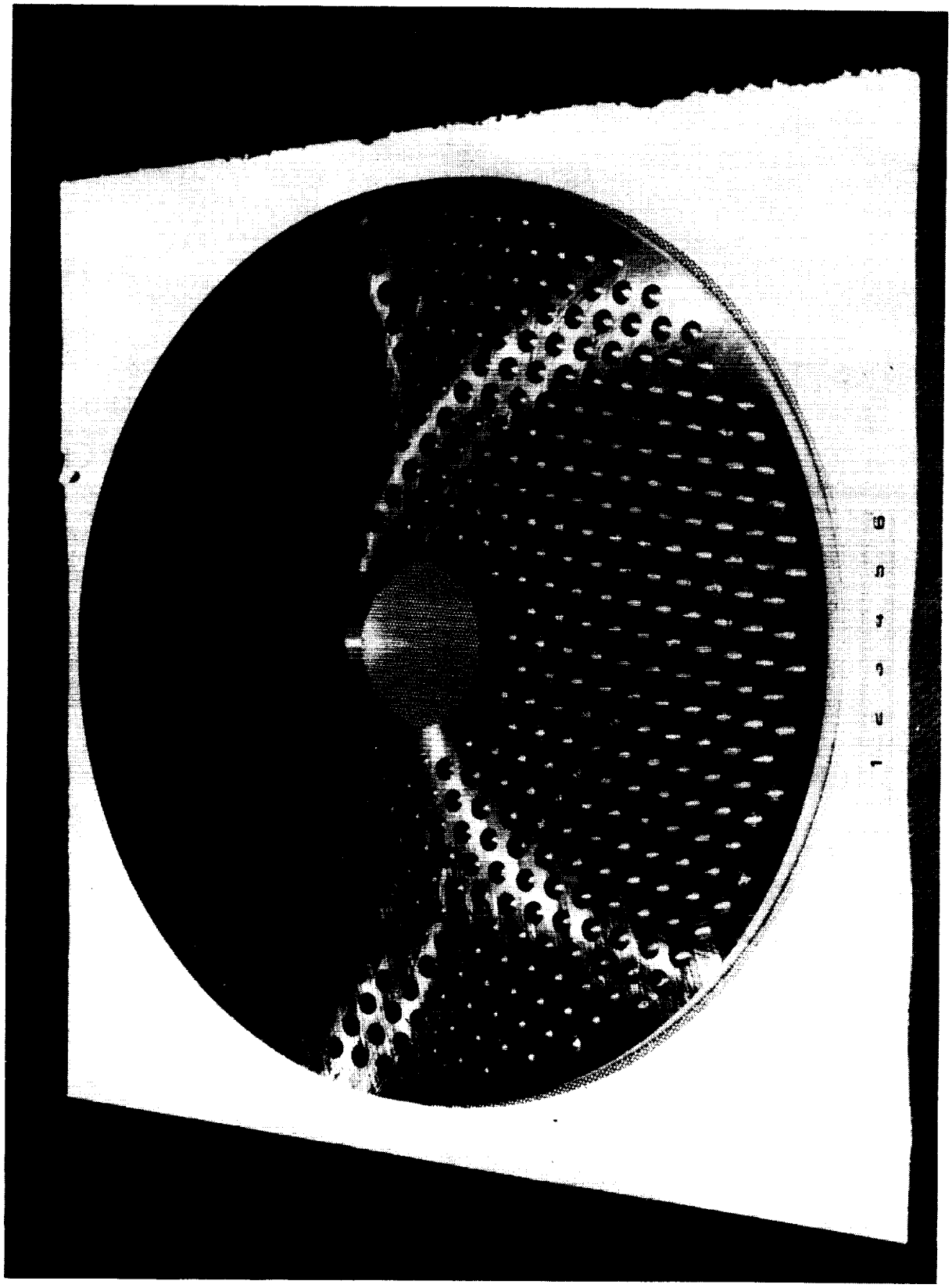

Figure 3-22. Oxidizer Distribution Plate Prior to Final Machining (PN 1206470-9)

ORIGINAL PAGE
BLACK AND WHITE PHOTOGRAPH

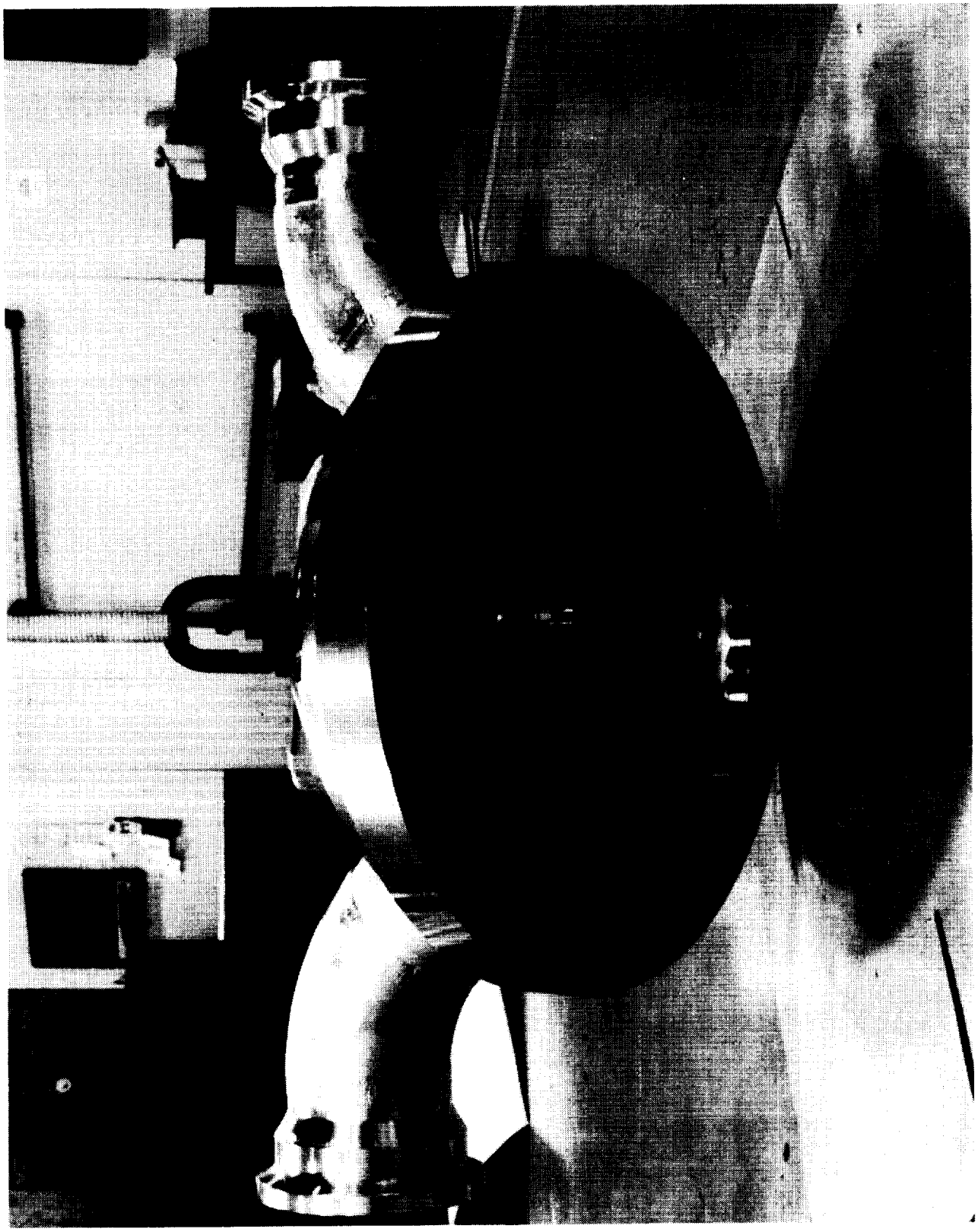

Figure 3-23. Interior of Ox Dome

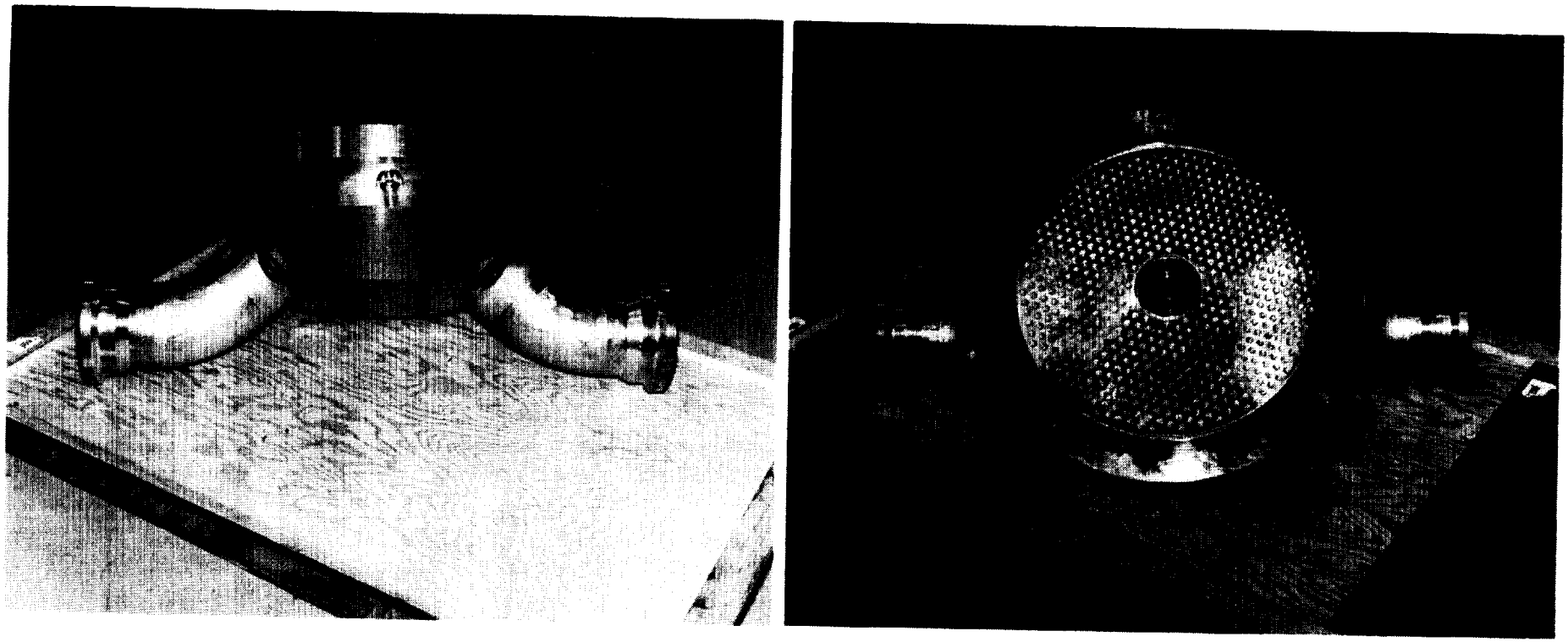

Figure 3-24. Welded Oxidizer Manifold Assembly

ORIGINAL PAGE
BLACK AND WHITE PHOTOGRAPH

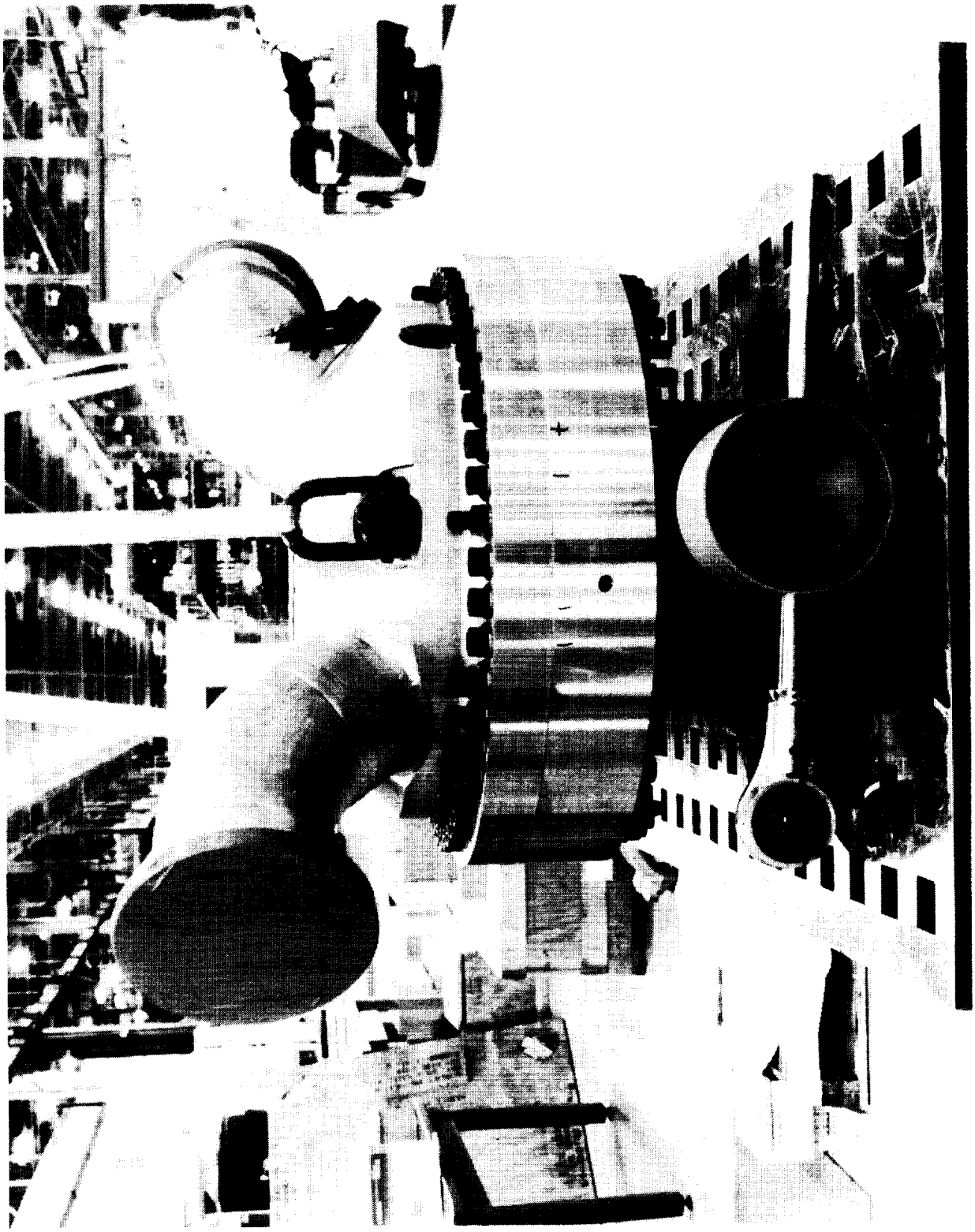

Figure 3-25. Tooling of the Oxidizer Dome for a High Pressure Proof Check

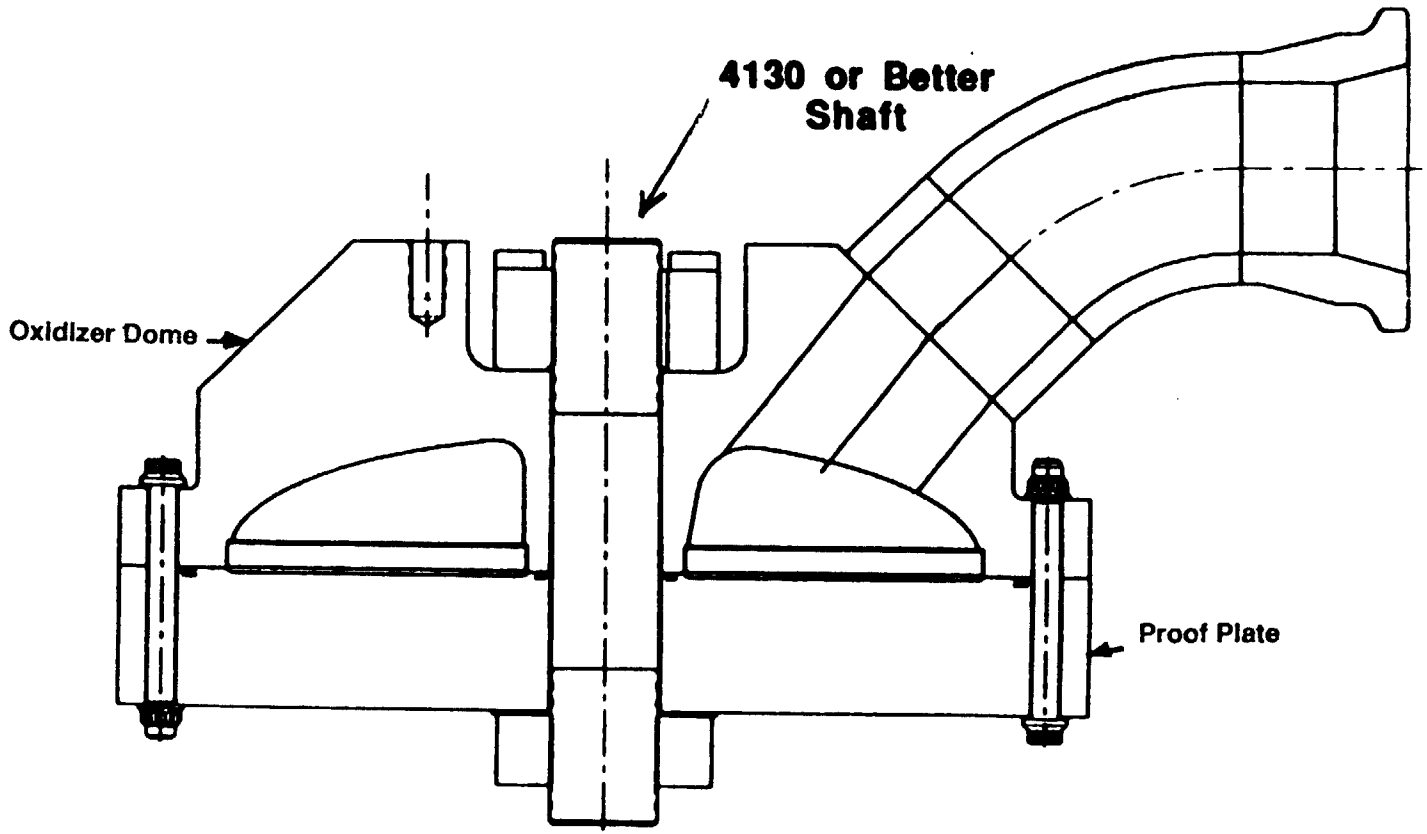

Proof/Leak Check Pressure = 5100-5200 psia

Figure 3-26. Oxidizer Manifold Assembly – Proof and Leak Test

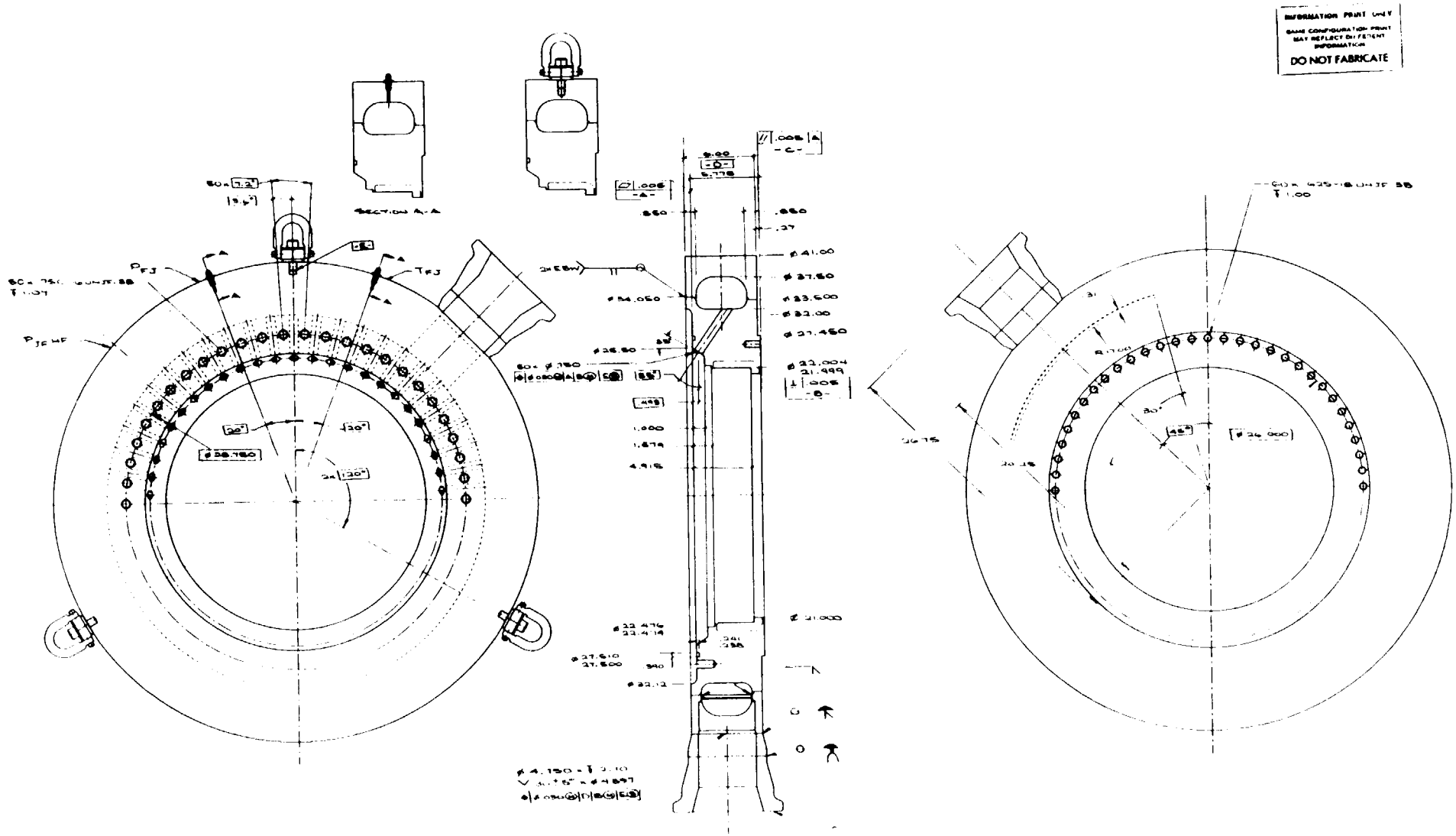

Figure 3-27. Fuel Inlet Manifold Assembly

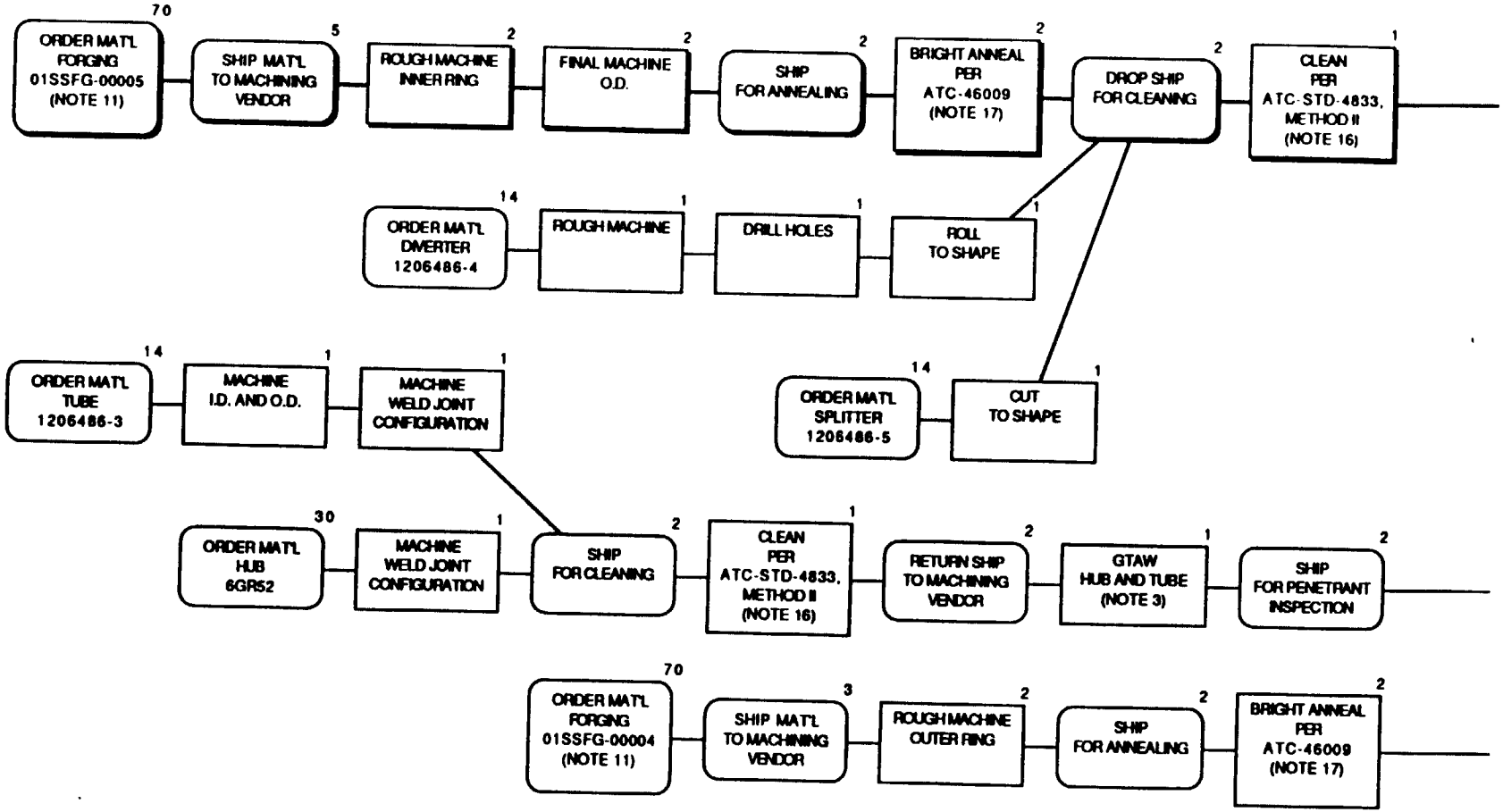

Figure 3-28. 1206486 – Fuel Inlet Manifold Assembly Fabrication Flow Plan, Page 1 of 4

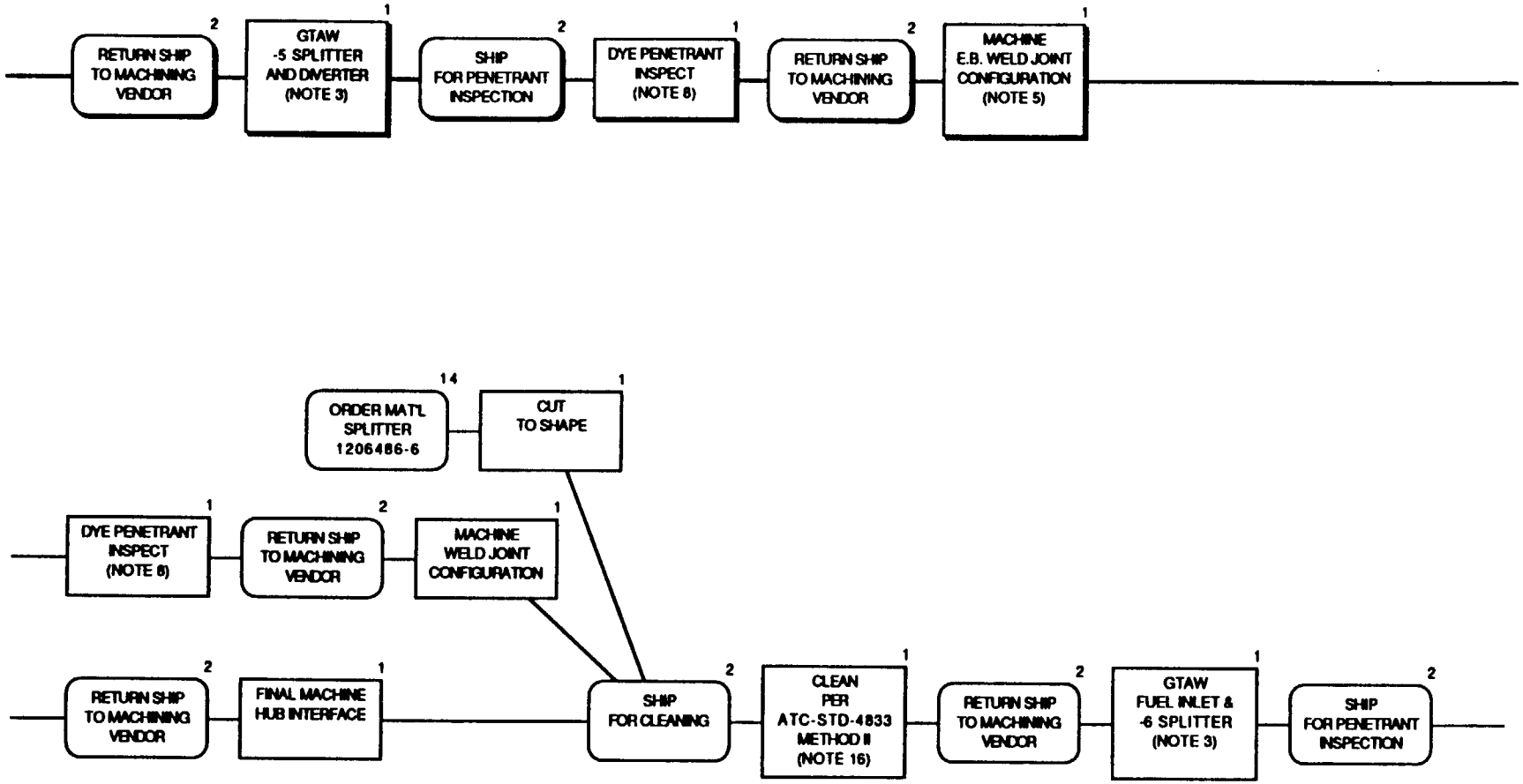

Figure 3-28. 1206486 – Fuel Inlet Manifold Assembly Fabrication Flow Plan, Page 2 of 4

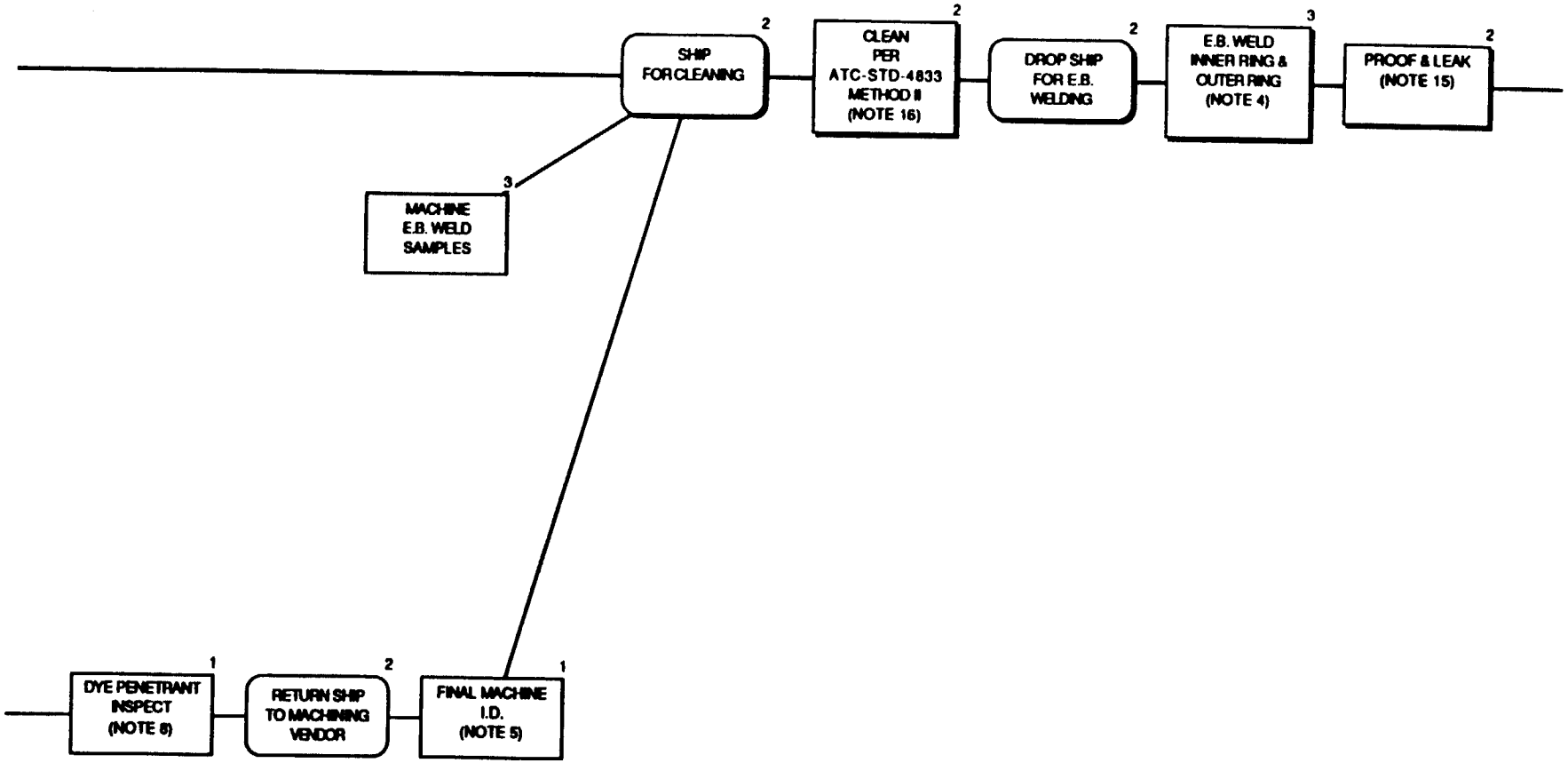

Figure 3-28. 1206486 – Fuel Inlet Manifold Assembly Fabrication Flow Plan, Page 3 of 4

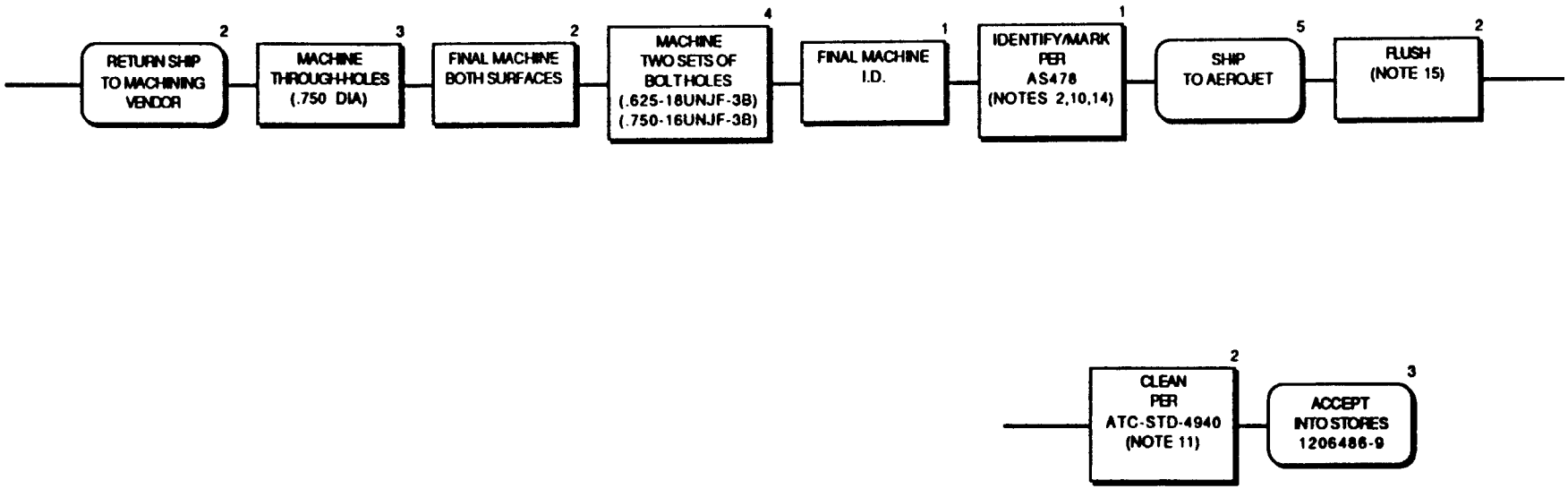

Figure 3-28. 1206486 – Fuel Inlet Manifold Assembly Fabrication Flow Plan, Page 4 of 4

ORIGINAL PAGE
BLACK AND WHITE PHOTOGRAPH

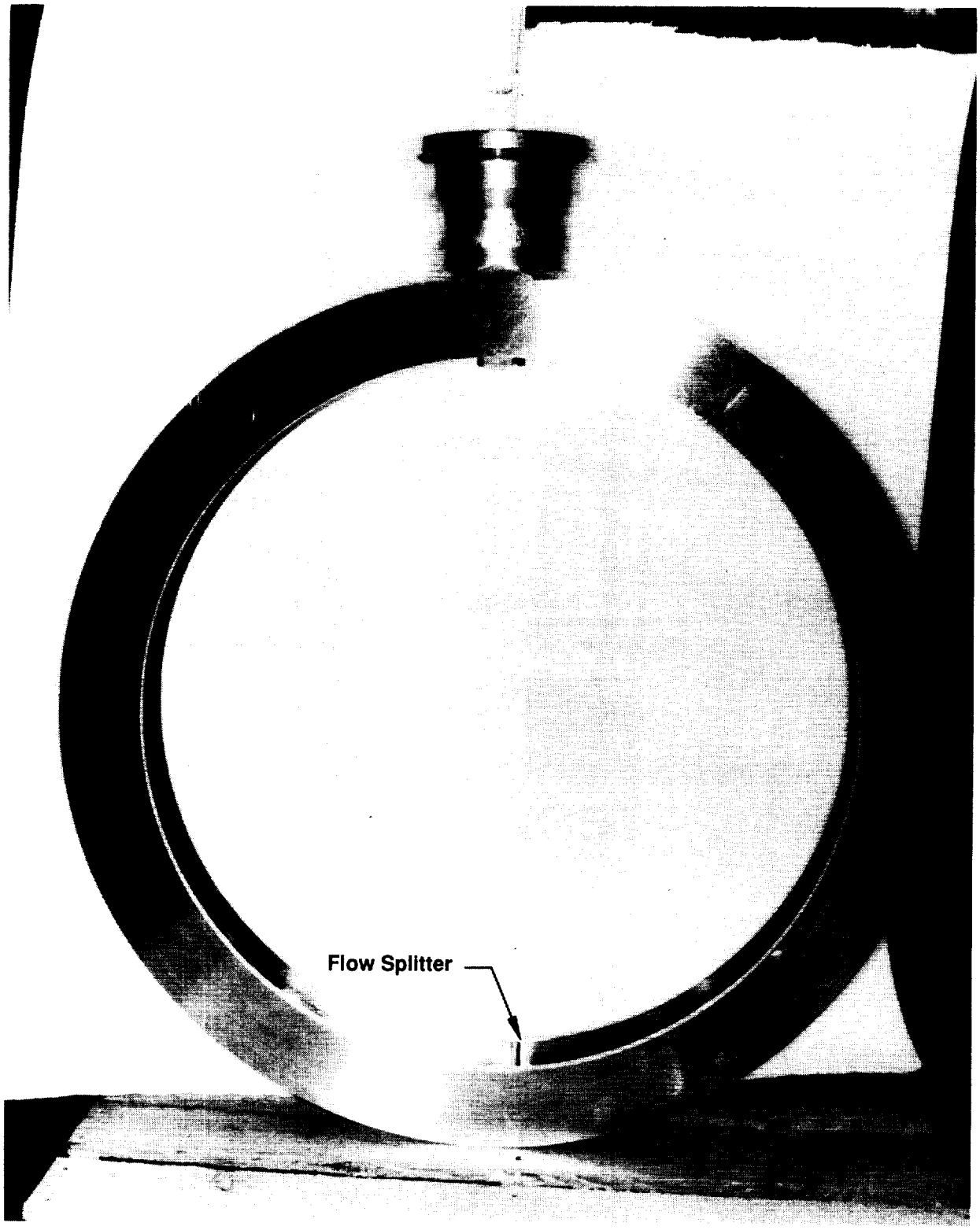

Figure 3-29. Outer Ring Fuel Manifold

ORIGINAL PAGE
BLACK AND WHITE PHOTOGRAPH

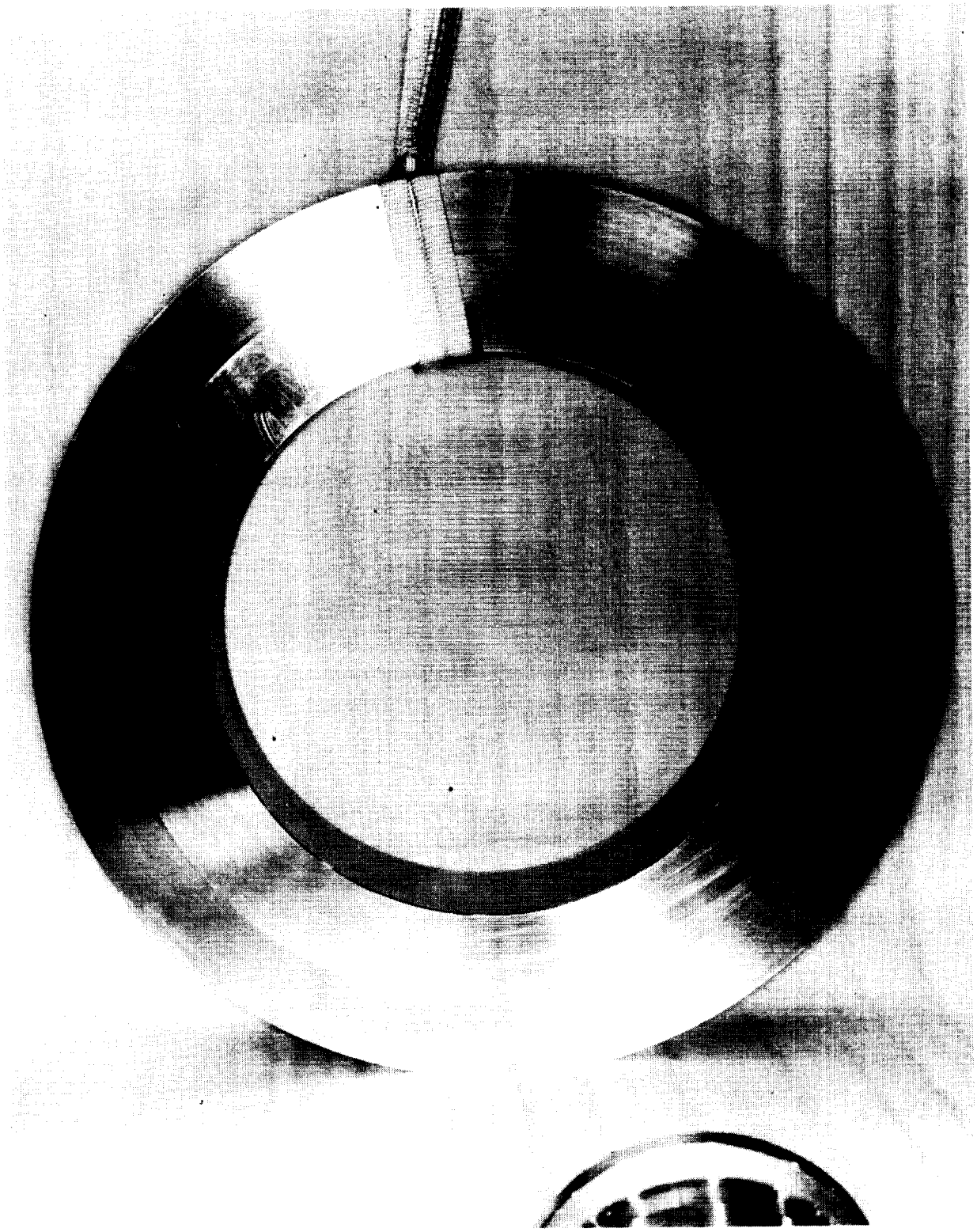

Figure 3-30. Inner Ring – Fuel Manifold

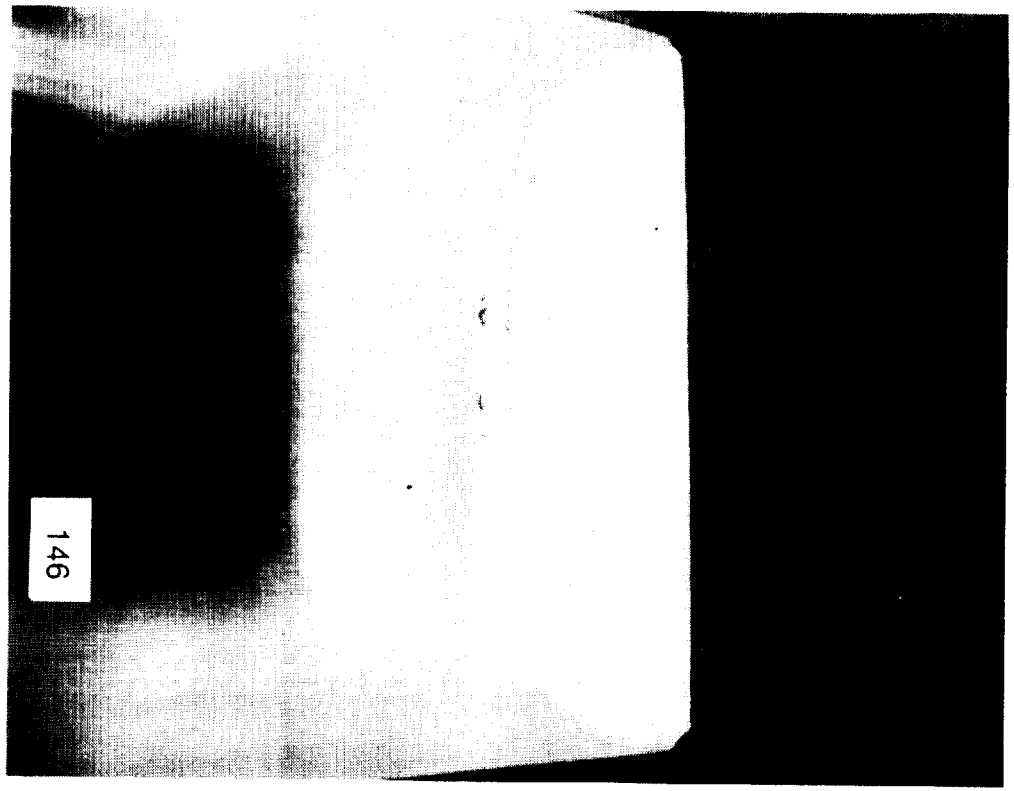

Outer Ring Flow Splitter

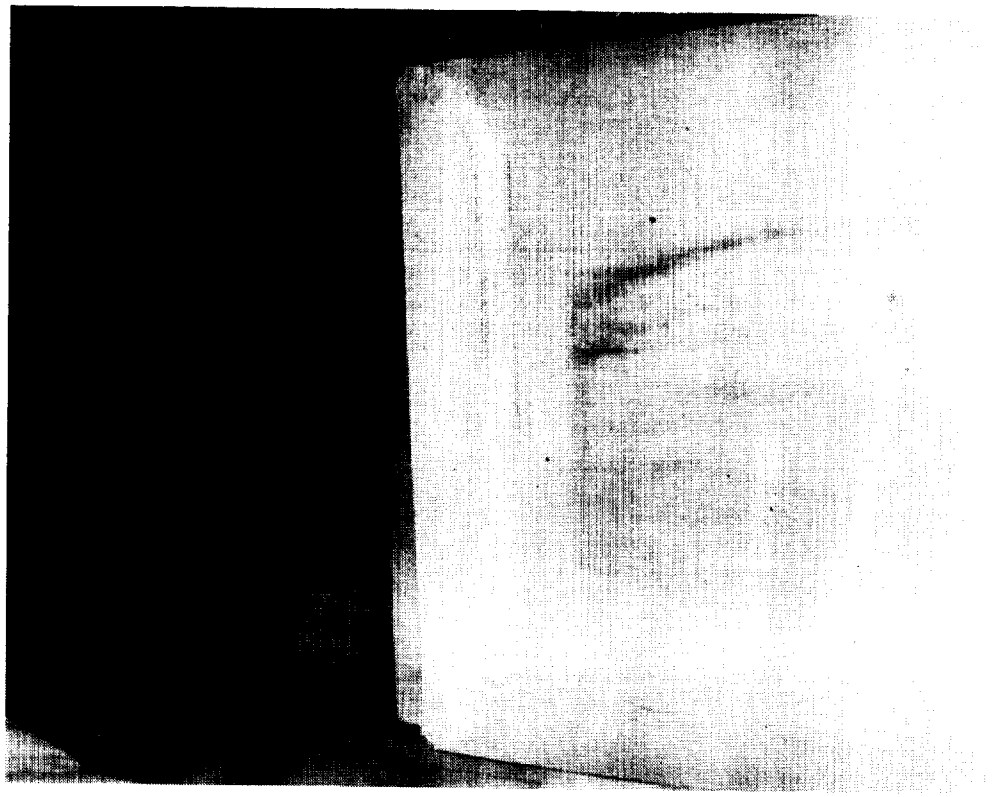

Inner Ring Flow Splitter

Figure 3-31. Two Piece Flow Splitter

ORIGINAL PAGE
BLACK AND WHITE PHOTOGRAPH

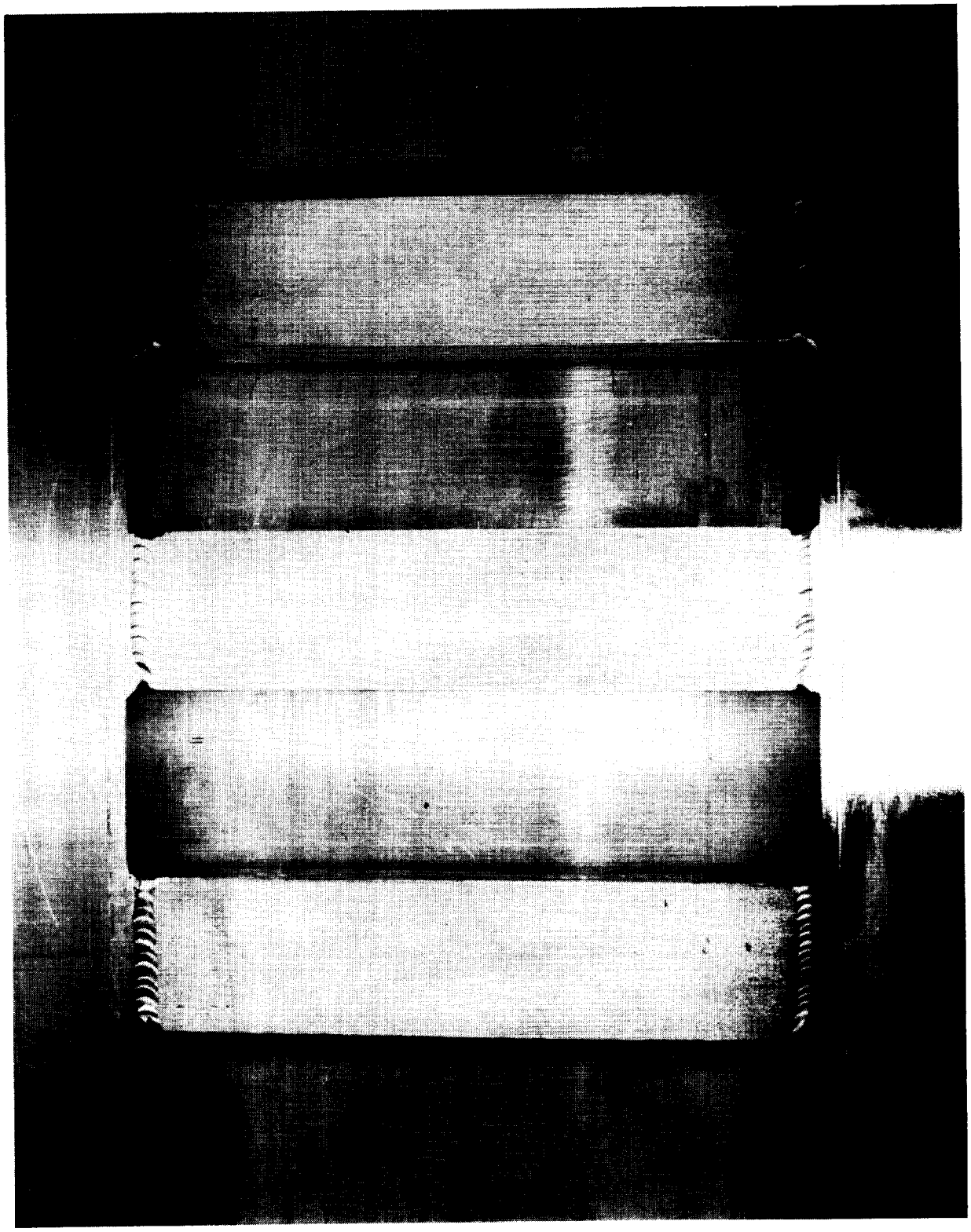

Figure 3-32. Inlet Flow Diverter

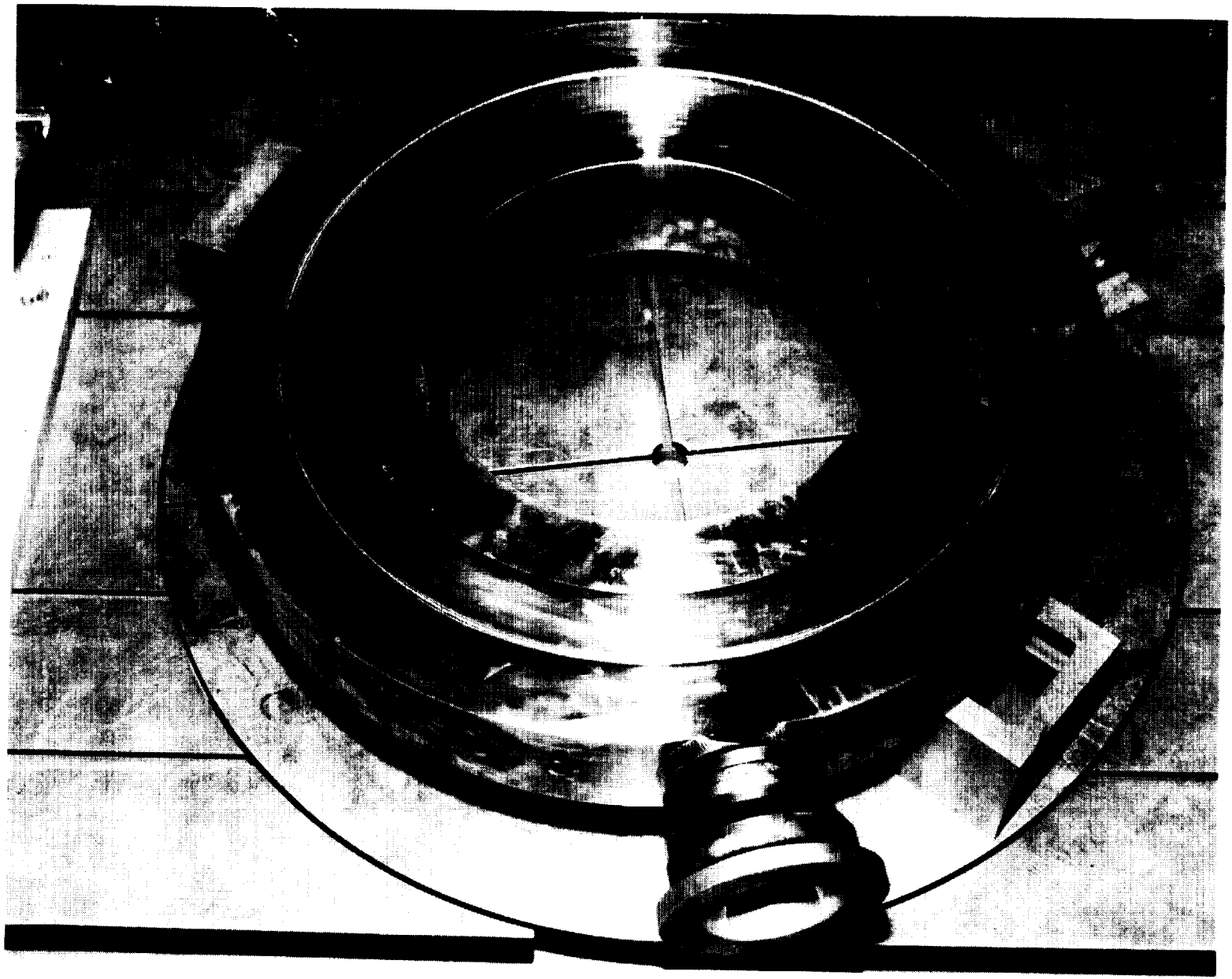

Figure 3-33. Welded Fuel Manifold Prior to Proof Check

ORIGINAL PAGE
BLACK AND WHITE PHOTOGRAPH

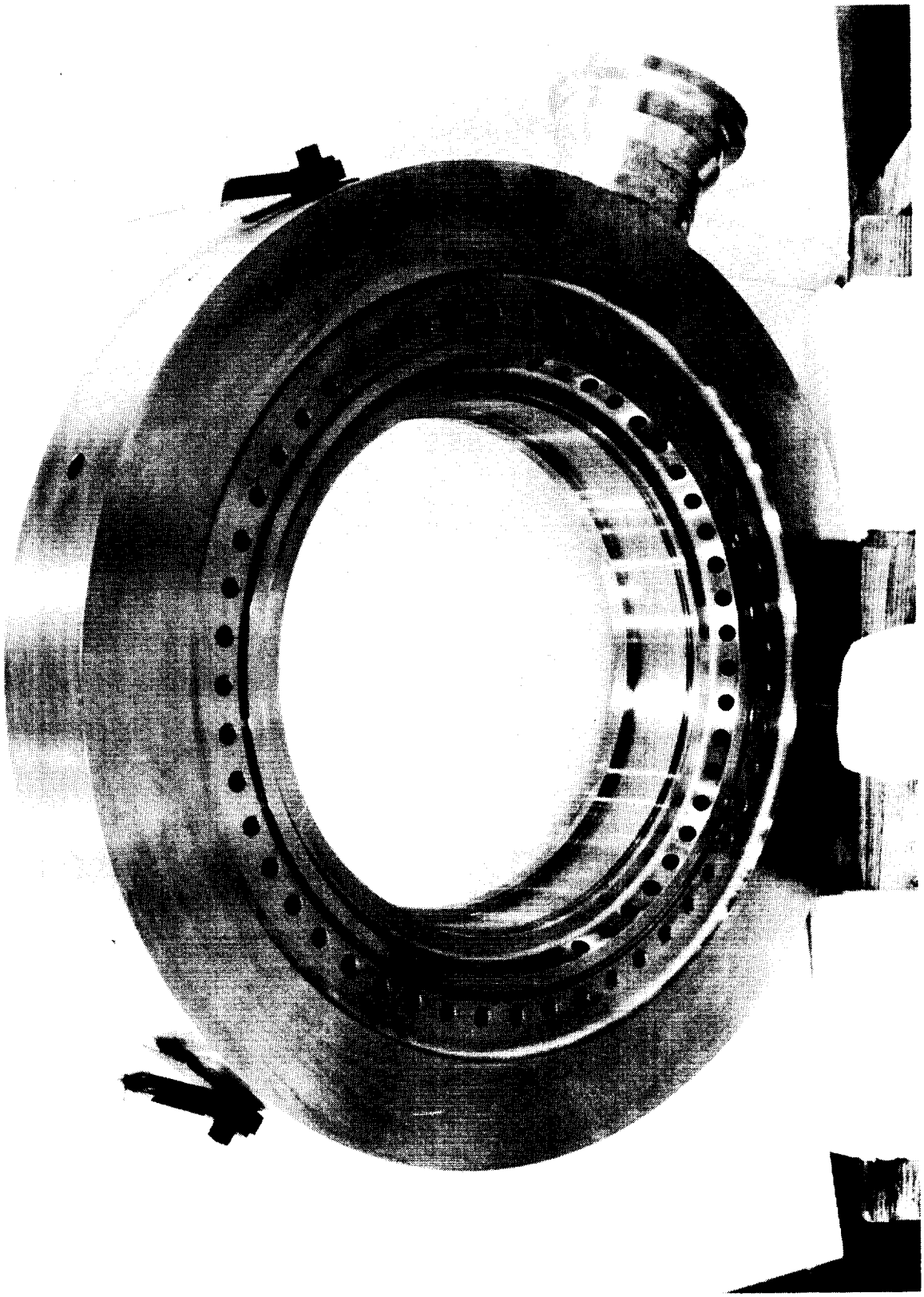

Figure 3-34. Fuel Manifold-Injector Interface

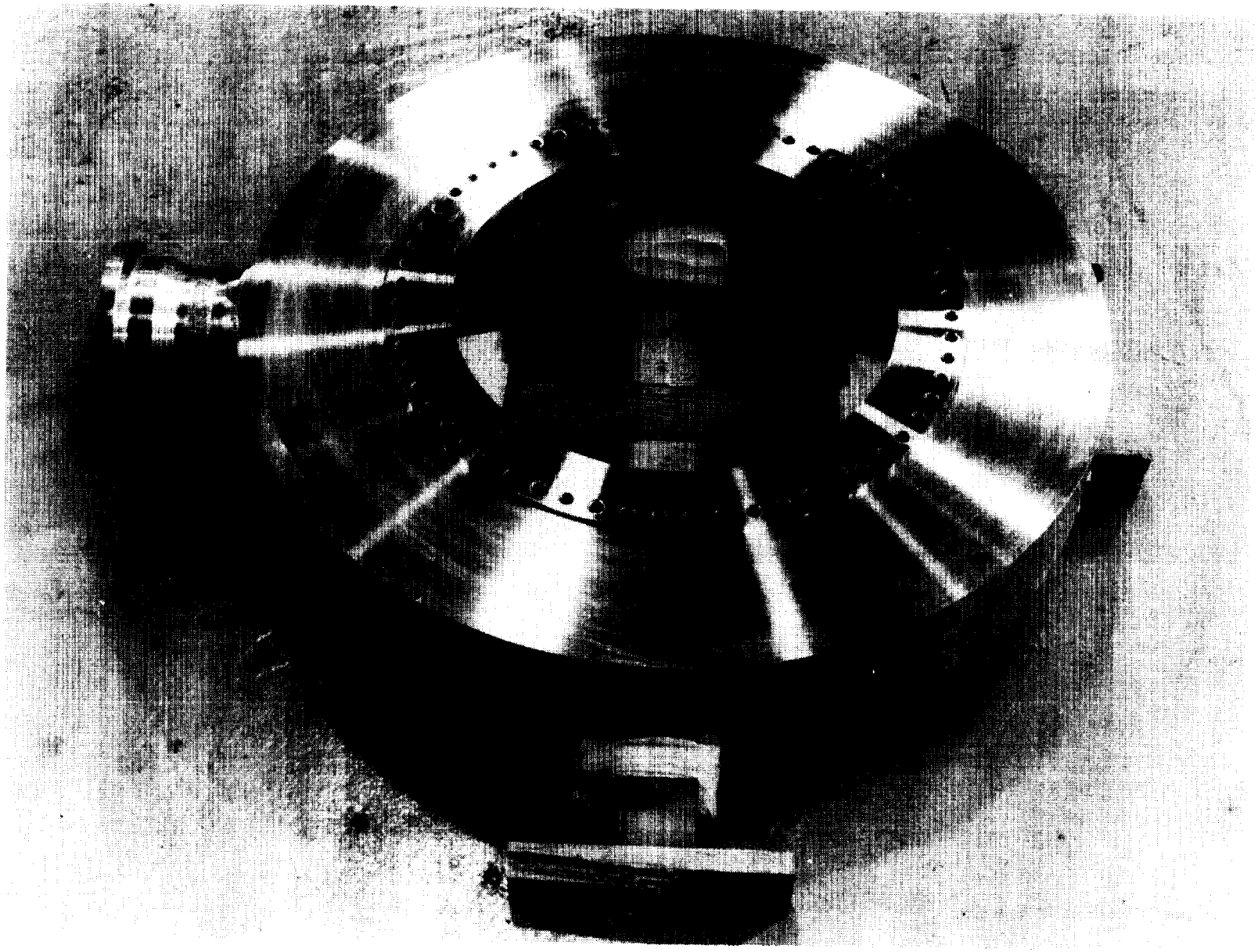

Figure 3-35. Fuel Manifold-Chamber Interface

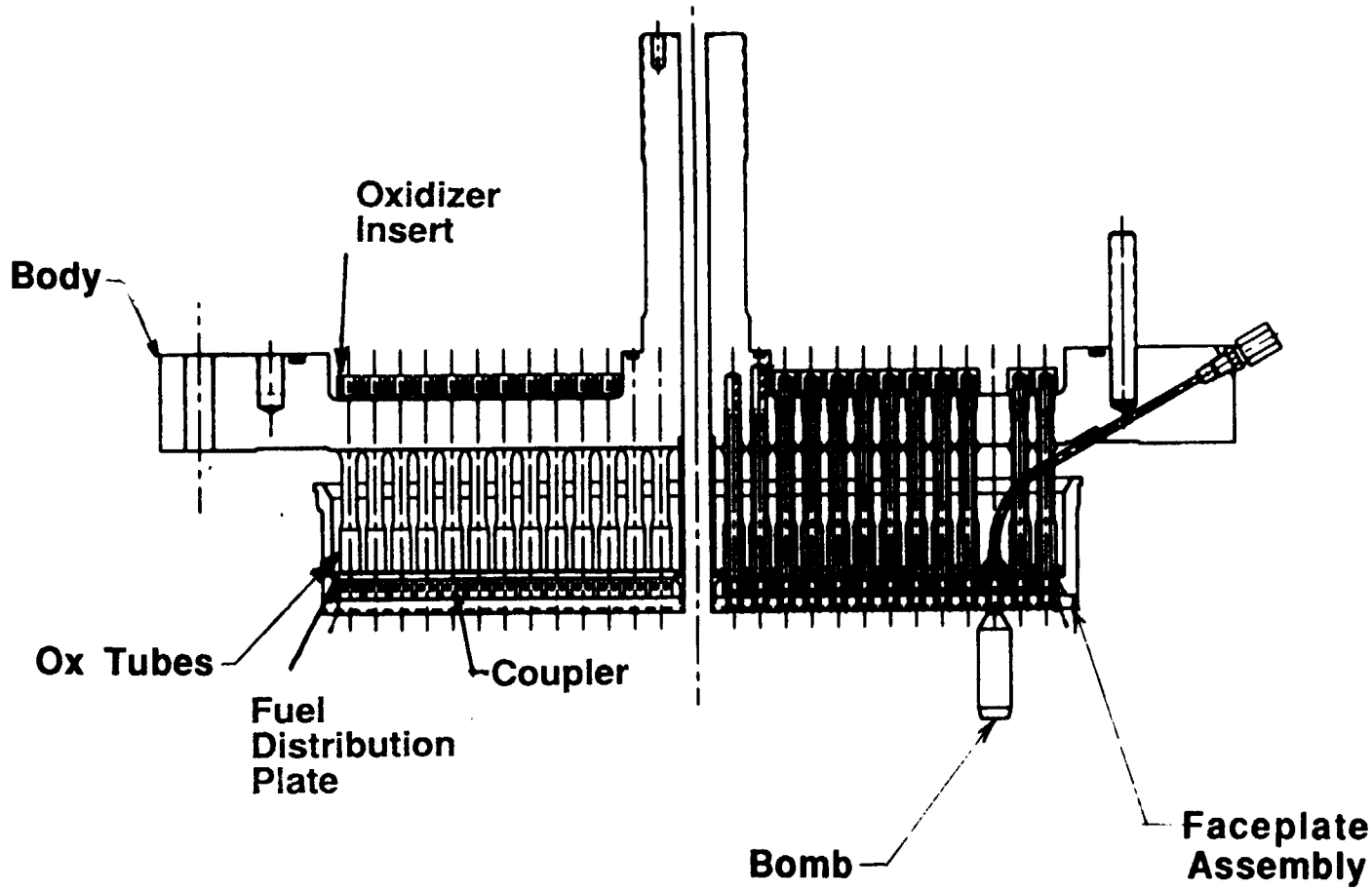

Figure 3-36. Injector Body Assembly

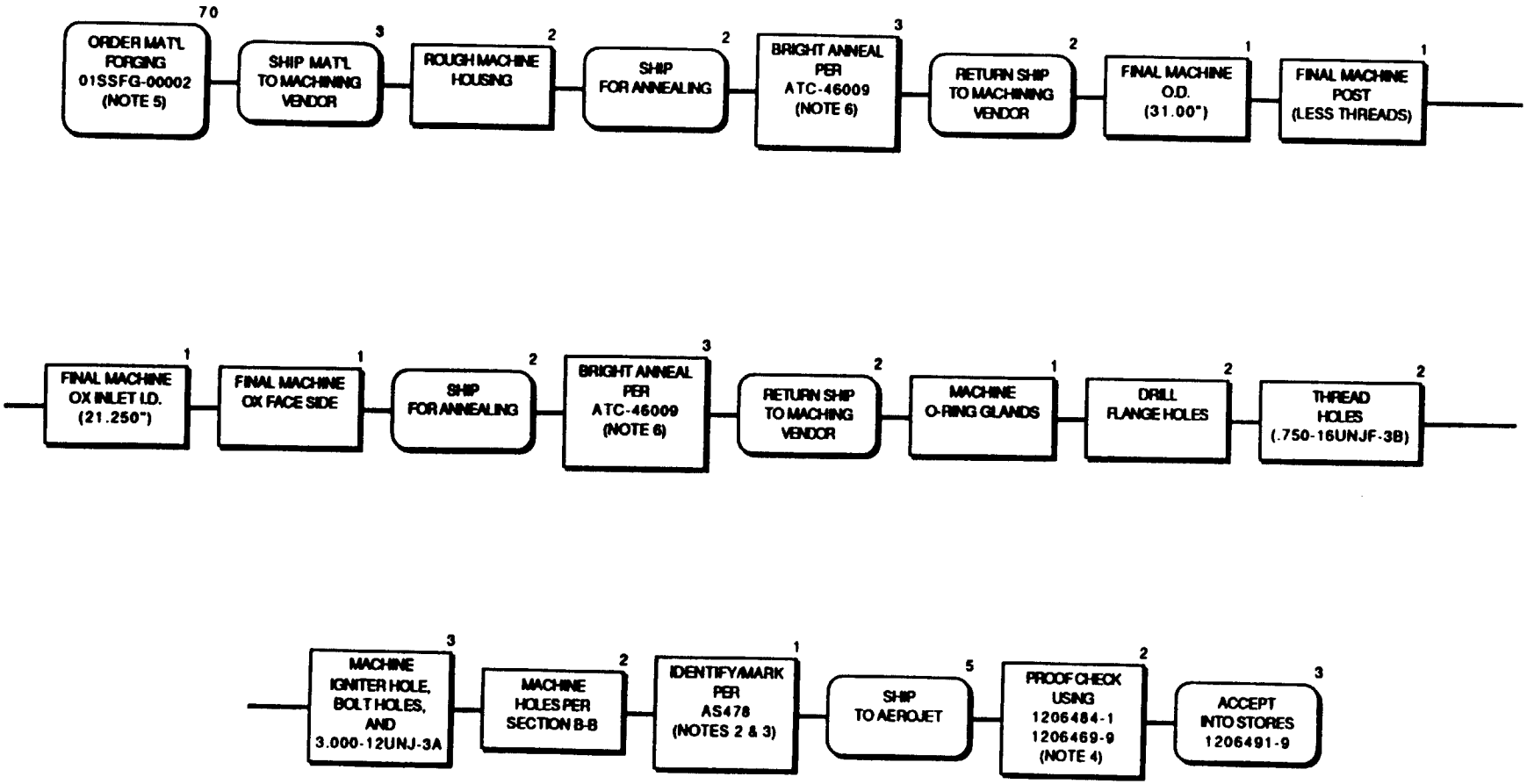

Figure 3-37. Injector Body, First Machine (PN 1206491-1) Fabrication Flow Logic

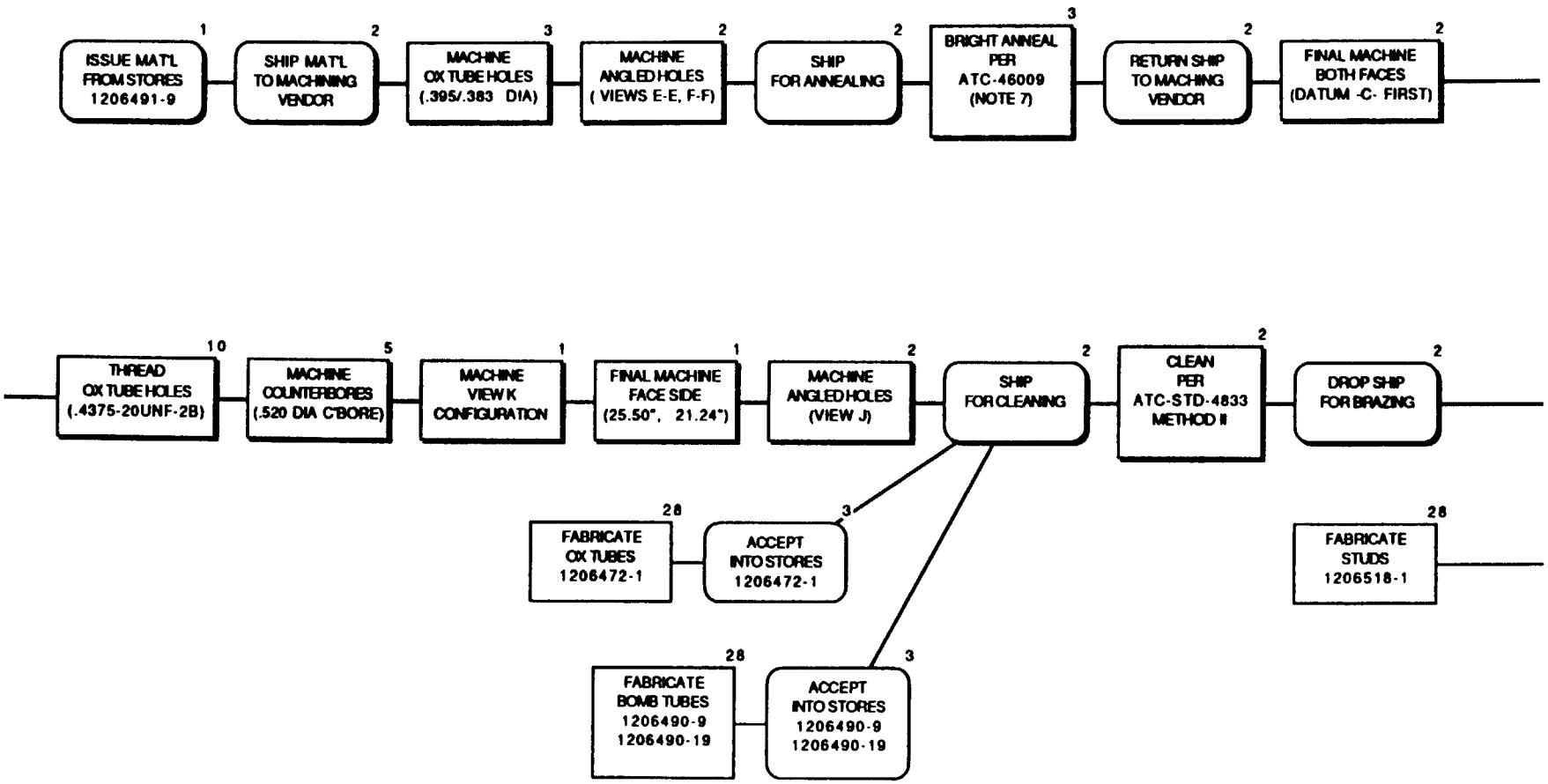

Figure 3-38. 1206489 – Injector (Braze) Subassembly Fabrication Flow Plan, Page 1 of 2

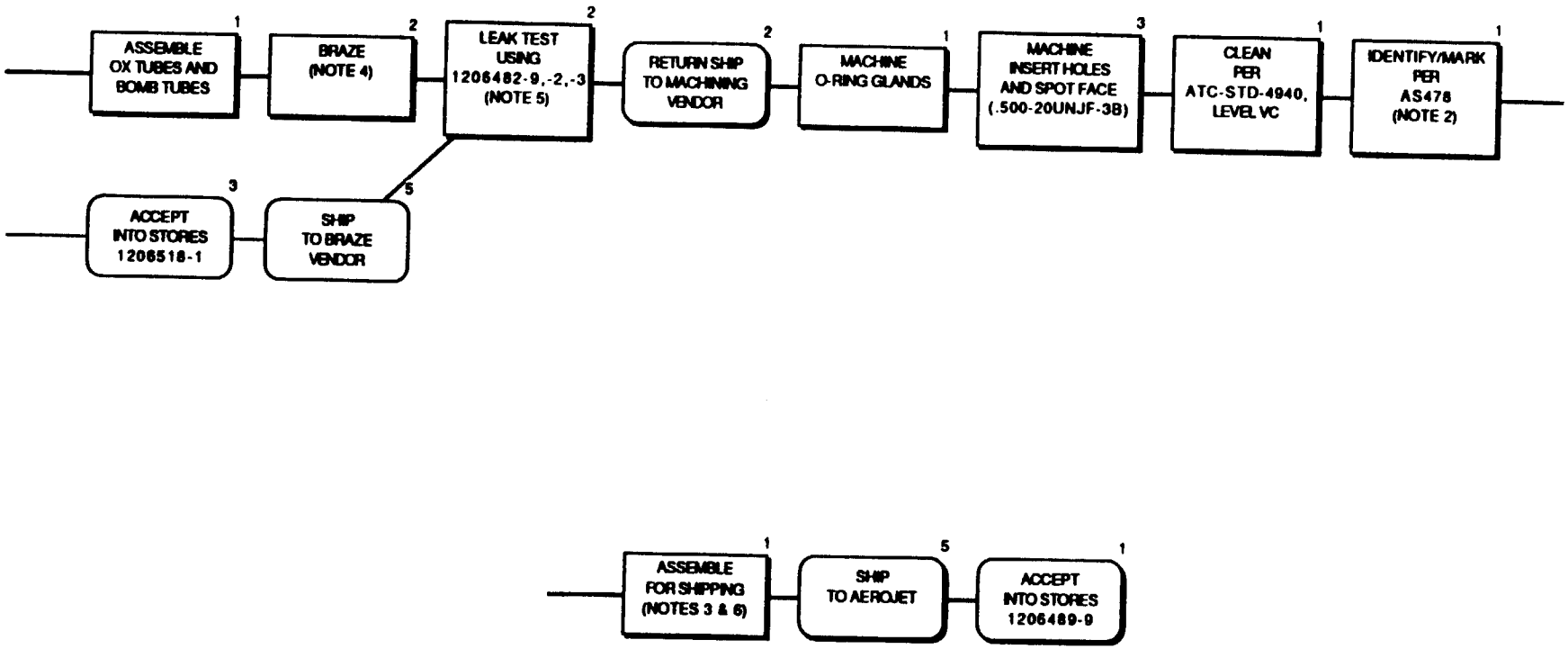

Figure 3-38. 1206489 – Injector (Braze) Subassembly Fabrication Flow Plan, Page 2 of 2

ORIGINAL PAGE
BLACK AND WHITE PHOTOGRAPH

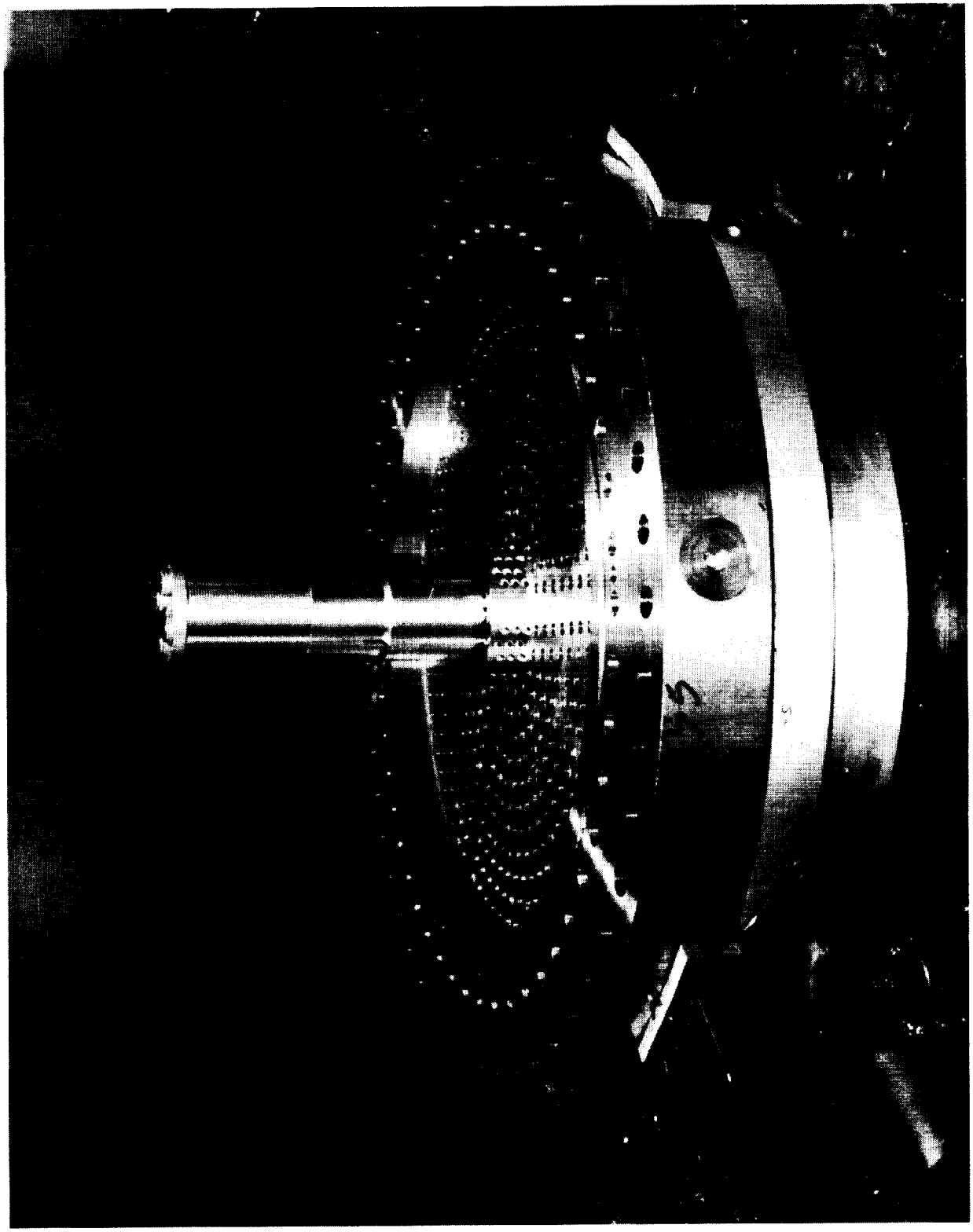

Figure 3-39. Completed Injector Body – 1st Machined

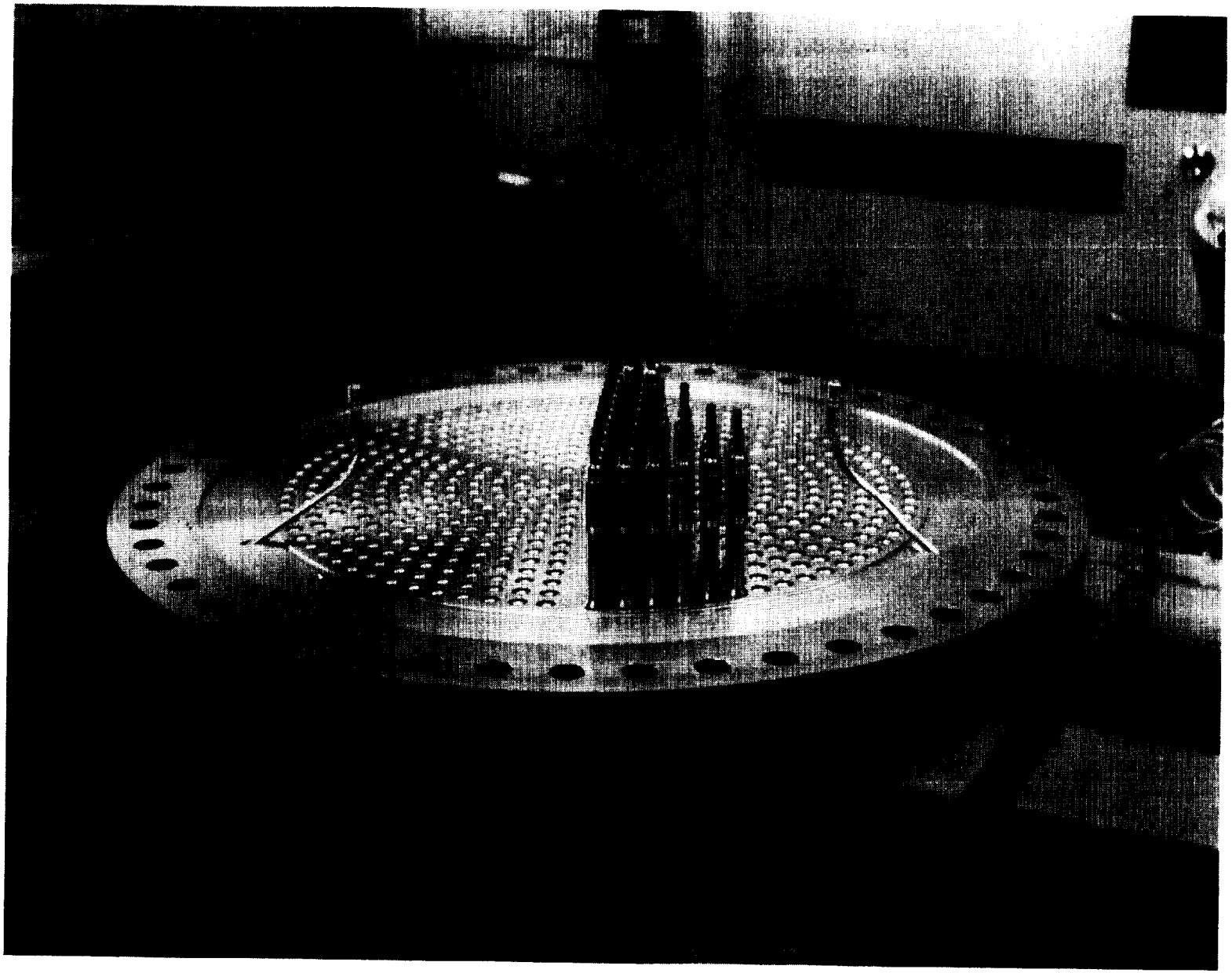

Figure 3-40. Assembly of Oxidizer Posts and Bomb Tubes

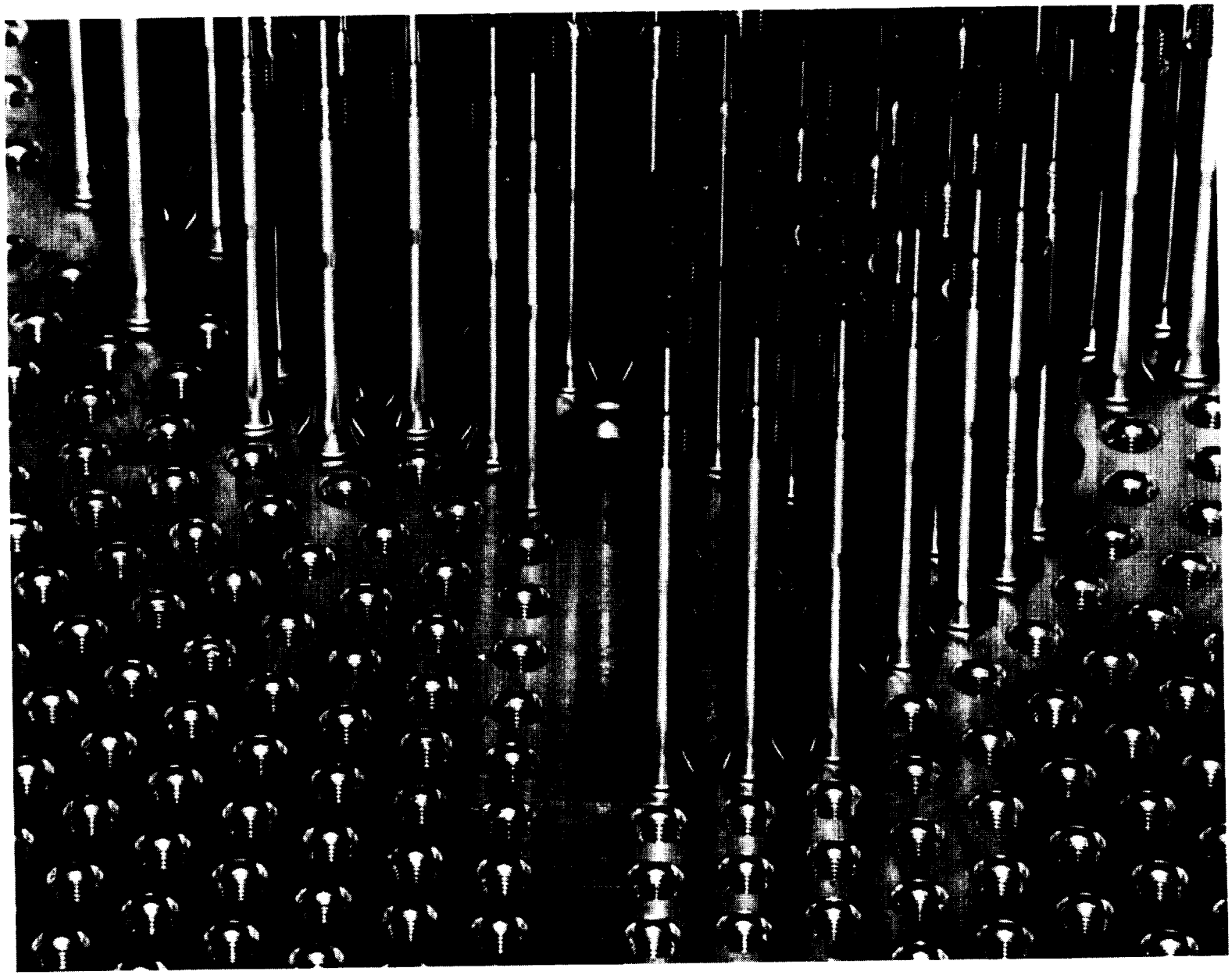

Figure 3-41. Closeup of Oxidizer Post Installation

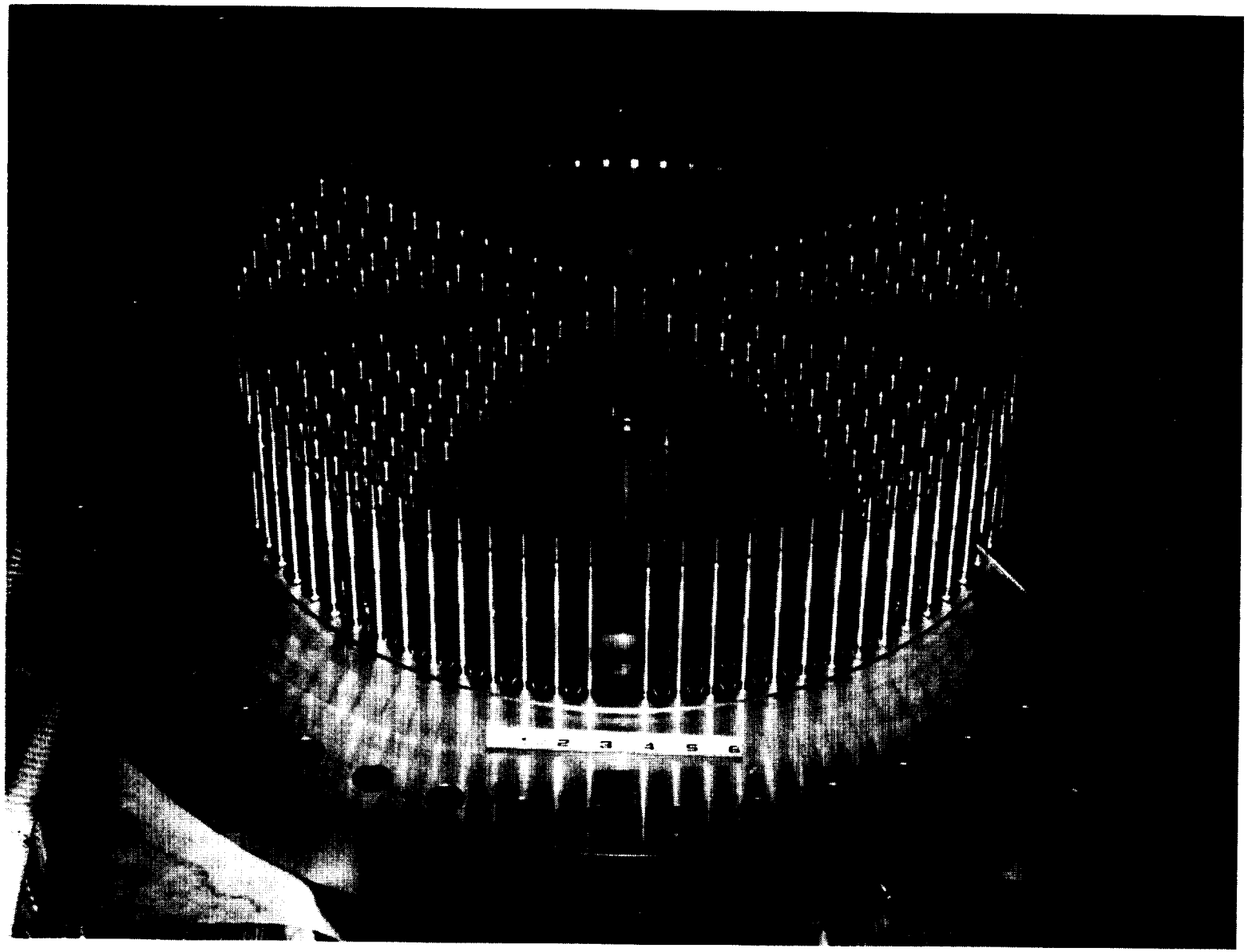

Figure 3-42. Installation of Oxidizer Posts Prior to Brazing

ORIGINAL PAGE
BLACK AND WHITE PHOTOGRAPH

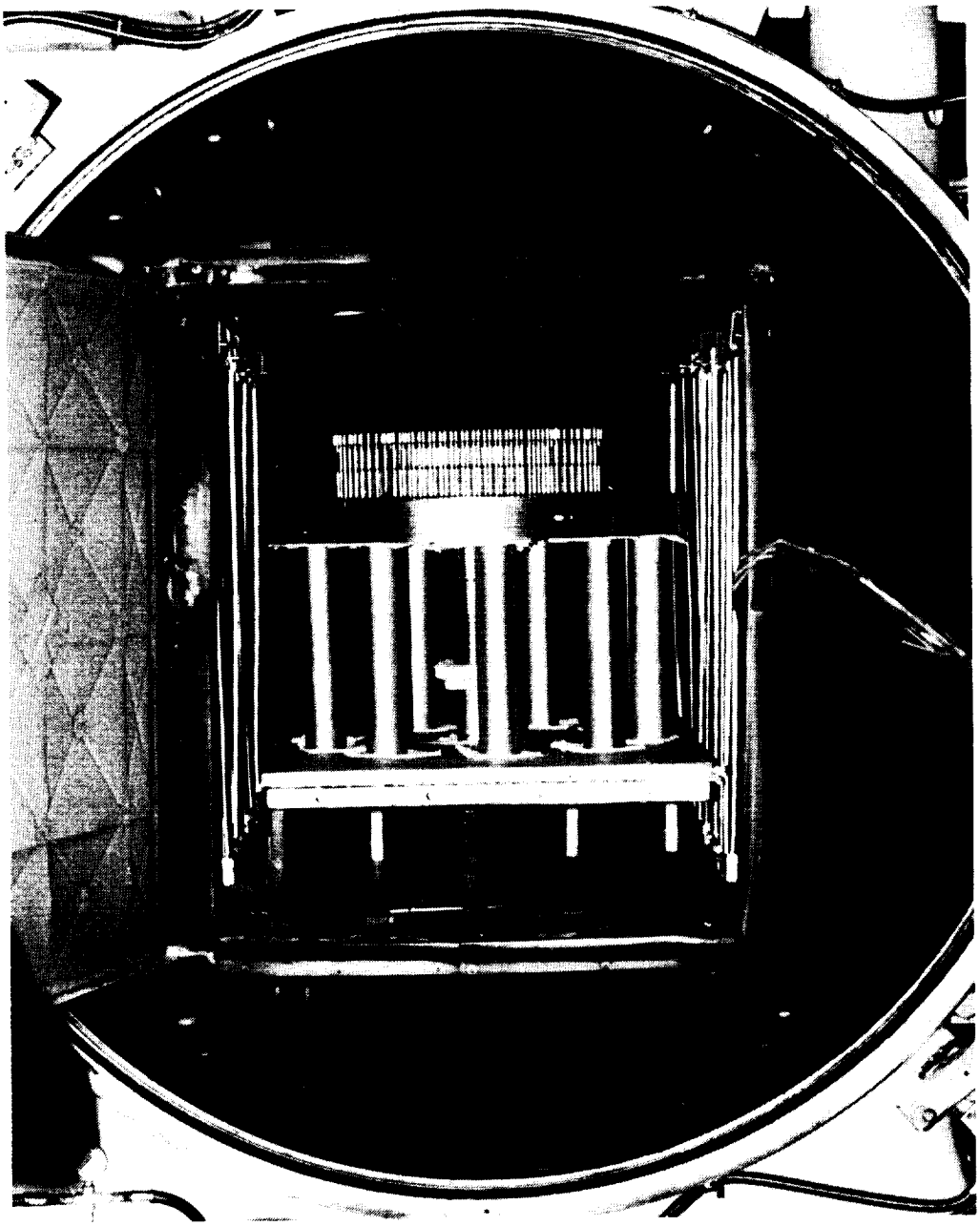

Figure 3-43. Injector Installed in Vacuum Furnace

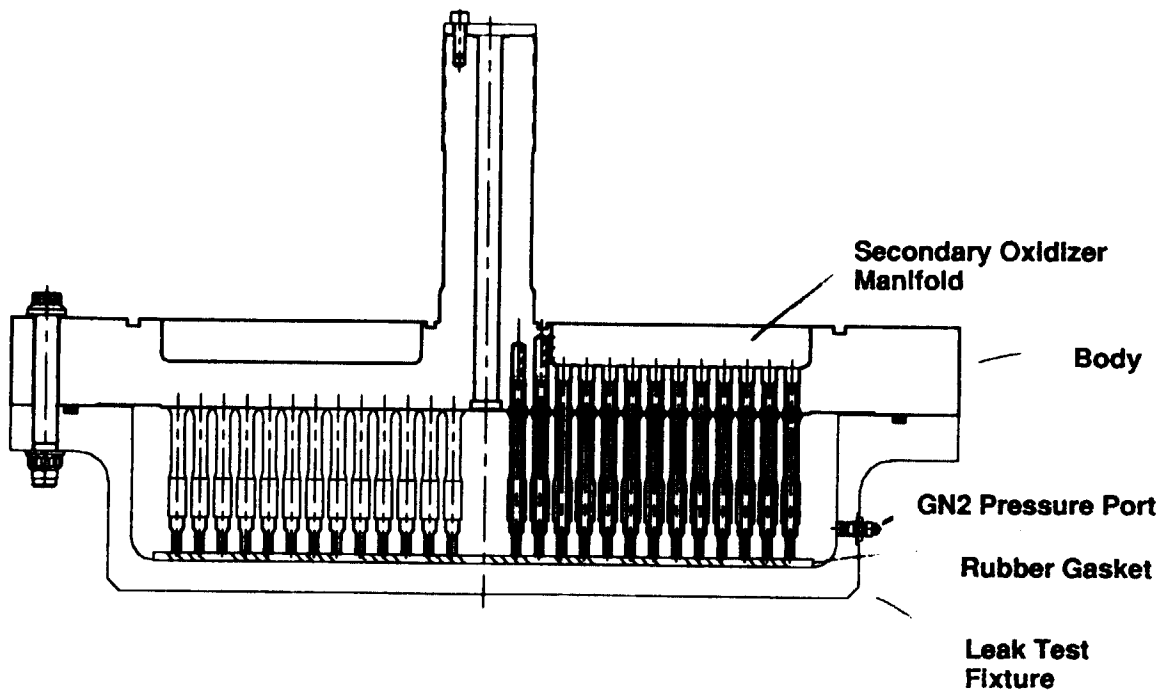

Leak Check Pressure = 45-55 psig

Figure 3-44. LSI APDR Injector Braze Leak Test

ORIGINAL PAGE
BLACK AND WHITE PHOTOGRAPH

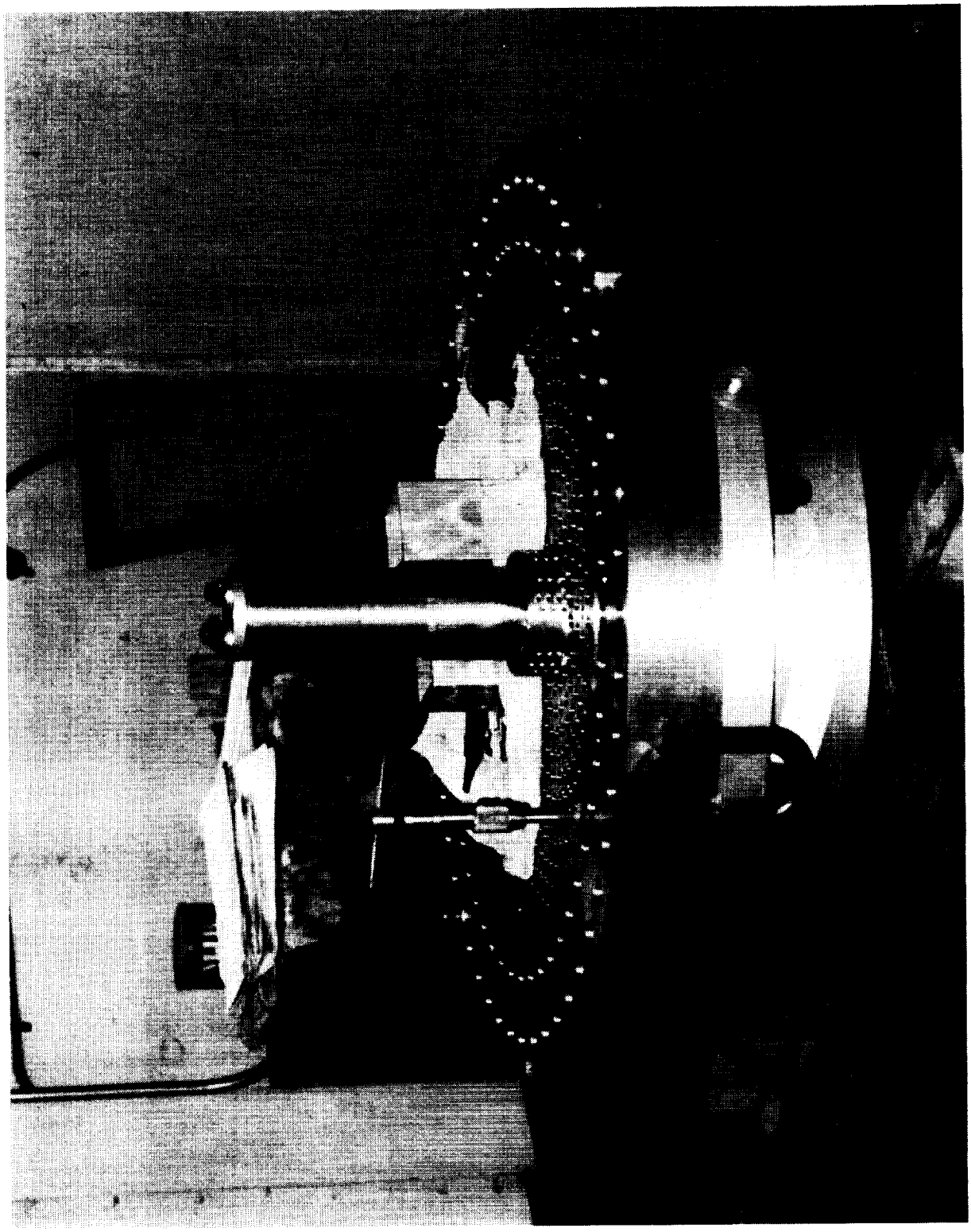

Figure 3-45. Final Machining of Injector Braze Assy

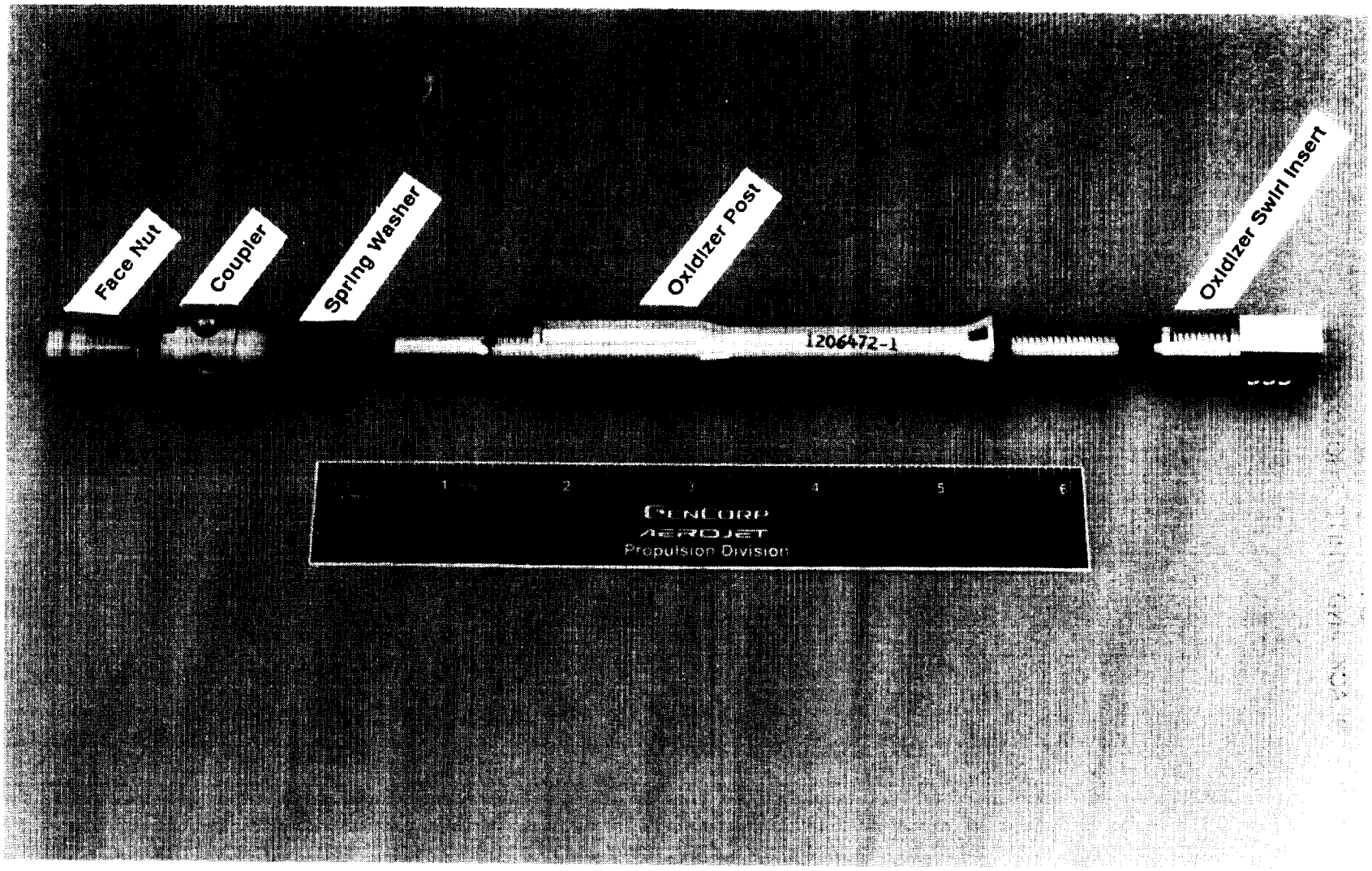

Figure 3-46. Injector Element Components

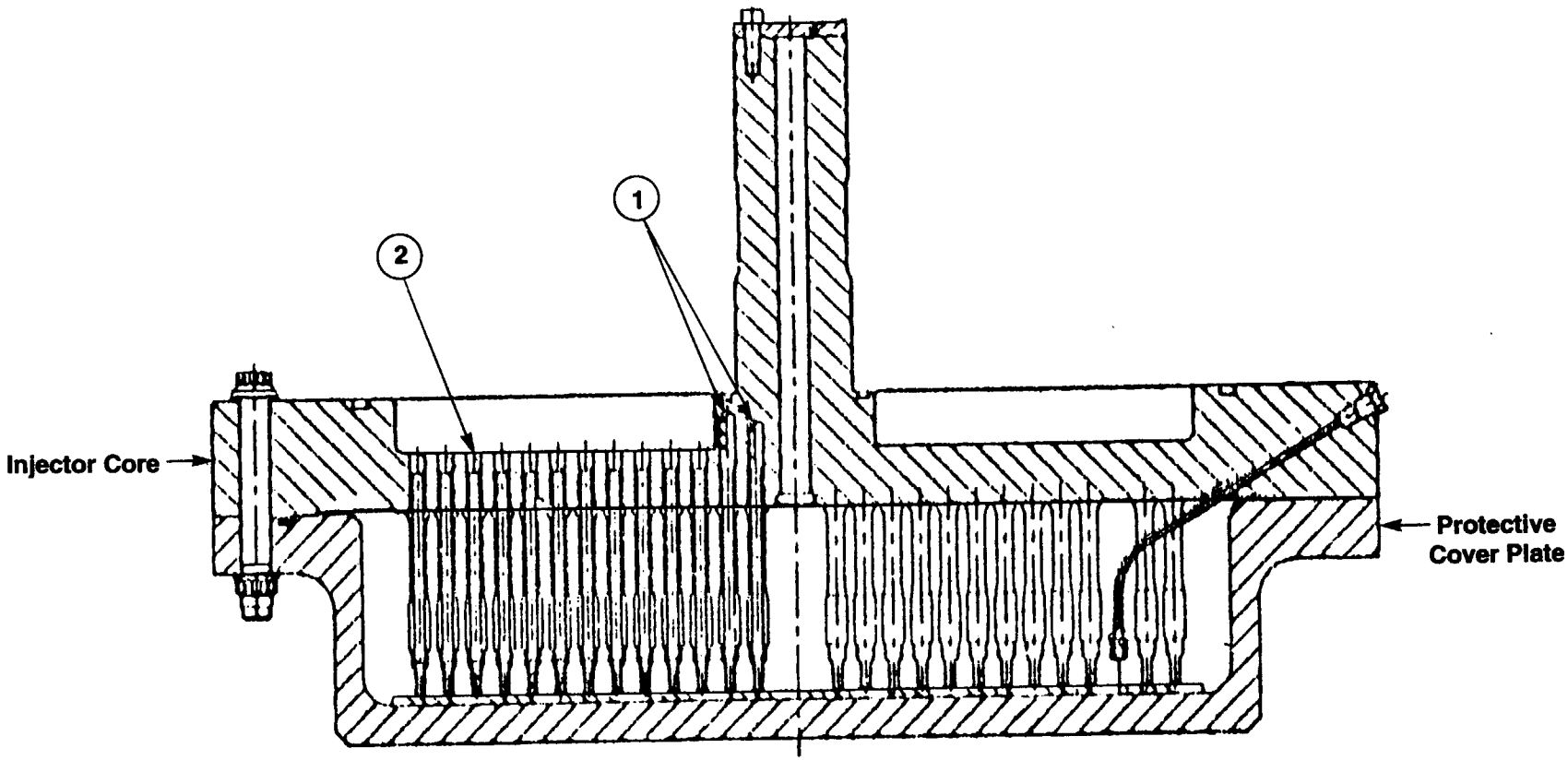

I) PN 1206471 Assembly Sequence – Oxidizer Circuit

1. Visually Inspect Center Inlets to Ensure All Machining Chips Have Been Removed and All Edges Are Deburred
2. Install Oxidizer Swirlers, Torque to 60 in.-lb, and Stake in Place

Figure 3-47. Oxidizer Circuit Assembly Sequence

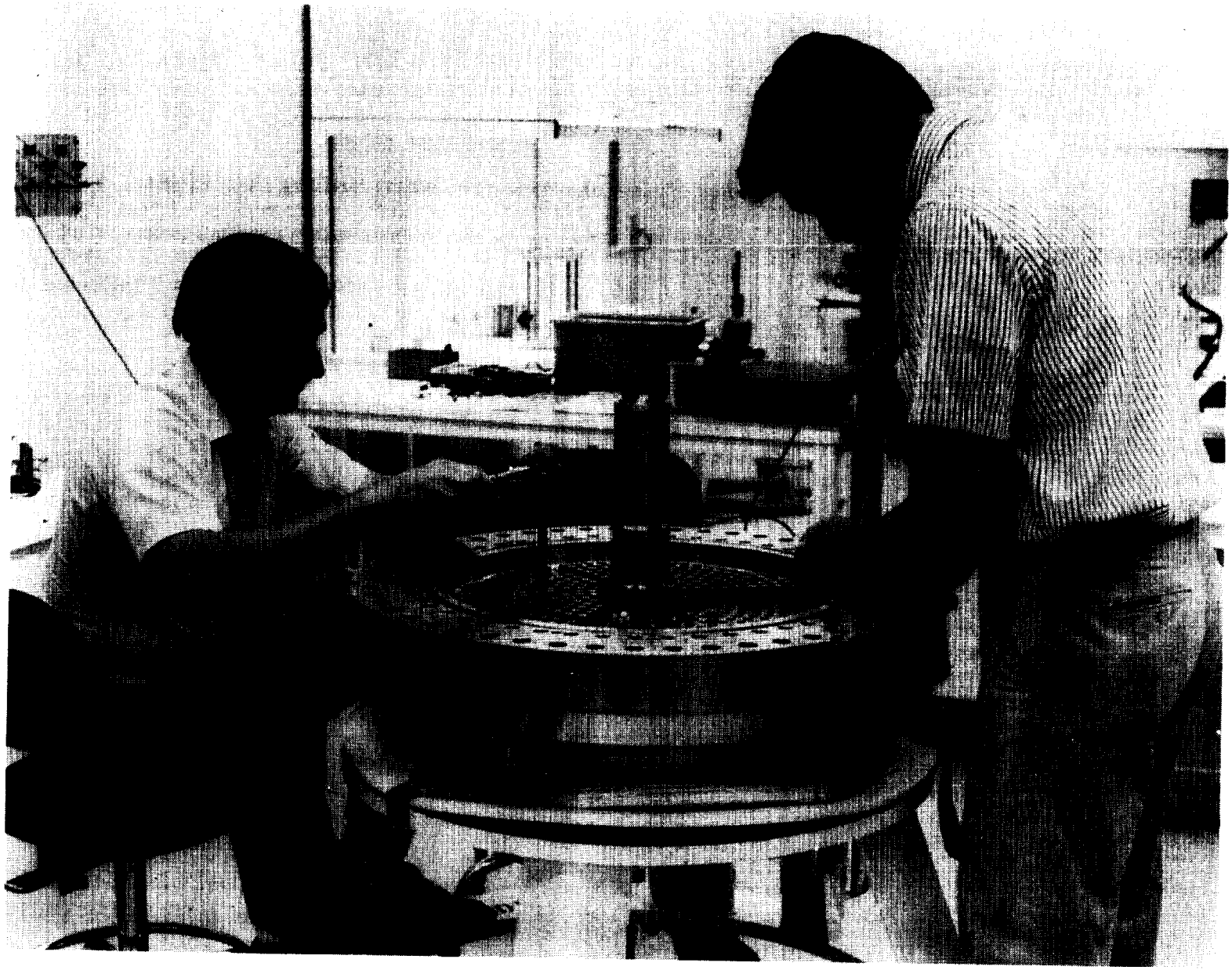

Figure 3-48. Installation of Oxidizer Swirler Inserts

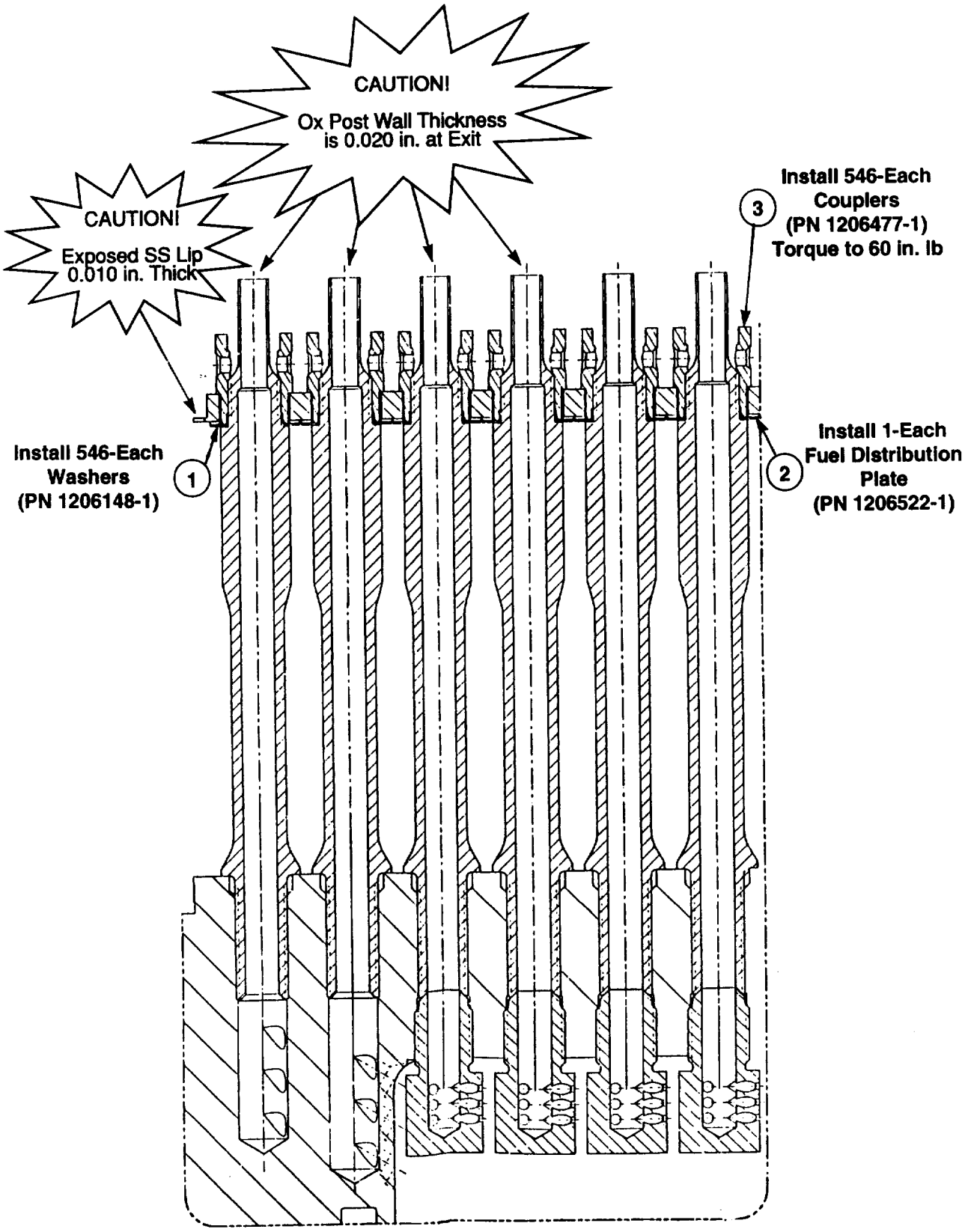

NOTE:
Clean All Parts to ATC-STD-4940, Level VC, Prior to Assembly

Figure 3-49. Assembly of Fuel Circuit – Part 1

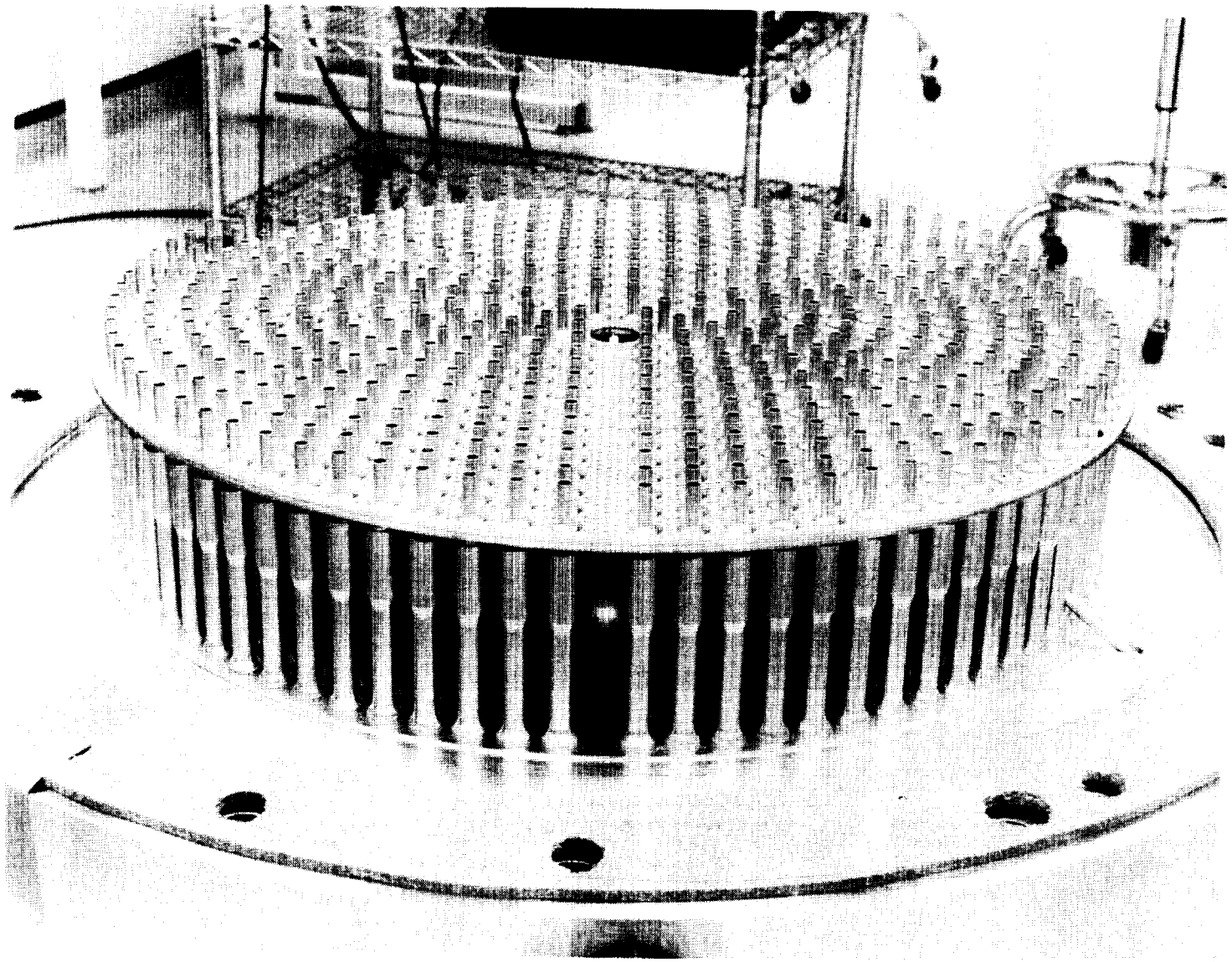

Figure 3-50. Assembly of Fuel Distribution Plate

ORIGINAL PAGE
BLACK AND WHITE PHOTOGRAPH

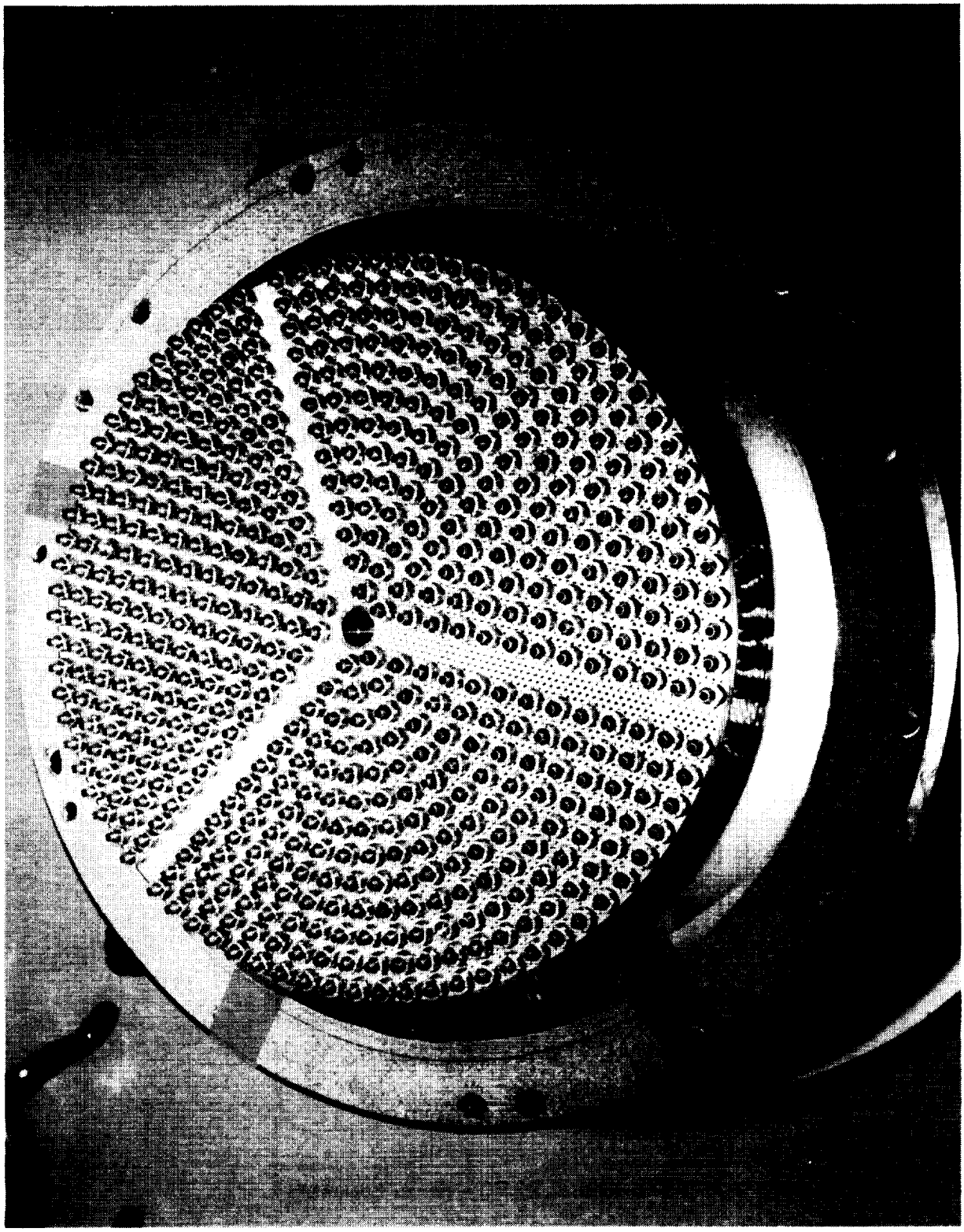

Figure 3-51. Installation of Couplers

Fuel Circuit Assembly Sequence Continued

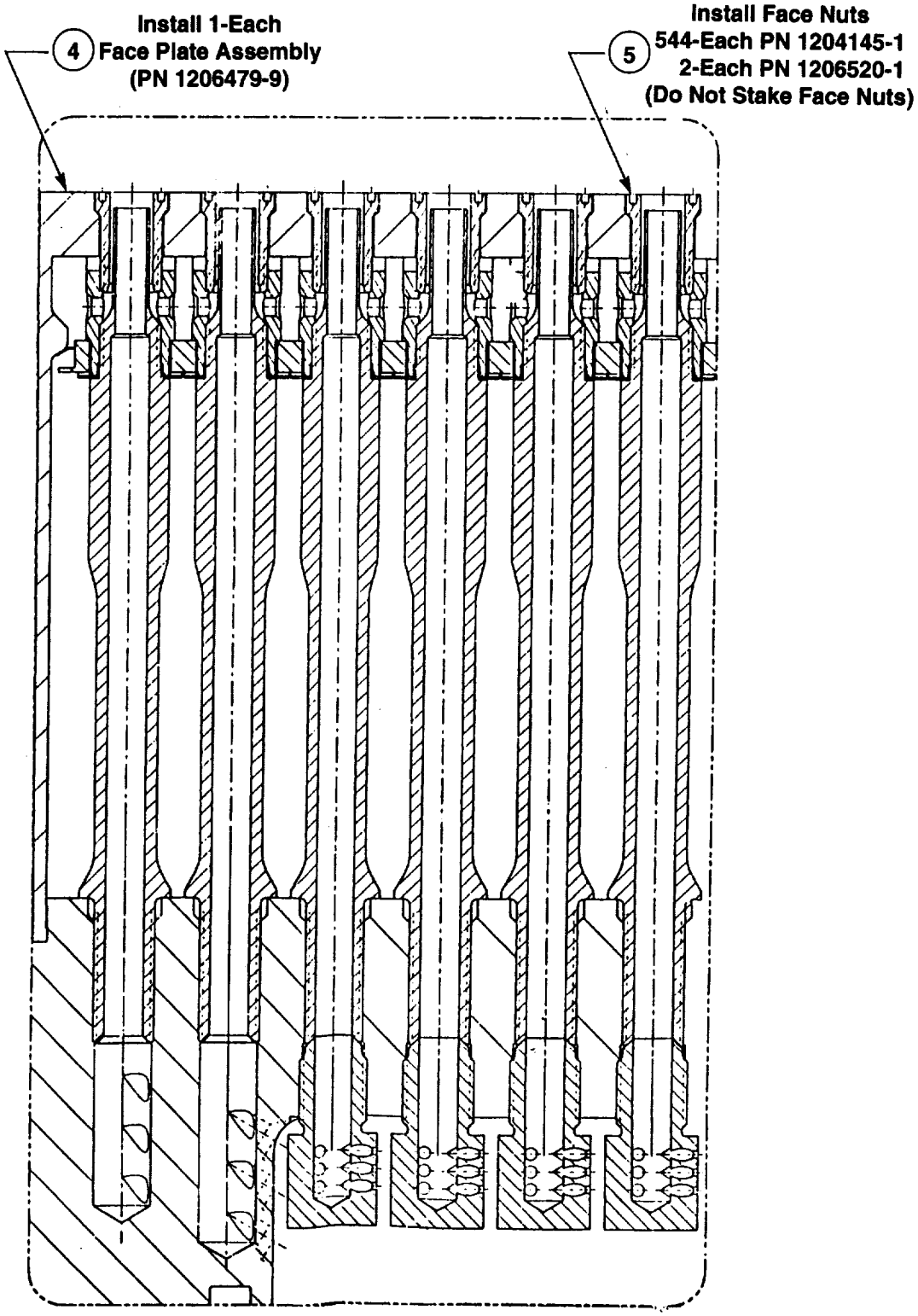

NOTE:
Clean All Parts to ATC-STD-4940, Level VC, Prior to Assembly

Figure 3-52. Assembly of Fuel Circuit – Part II

ORIGINAL PAGE
BLACK AND WHITE PHOTOGRAPH

Figure 3-53. Final Torquing of Face Nuts

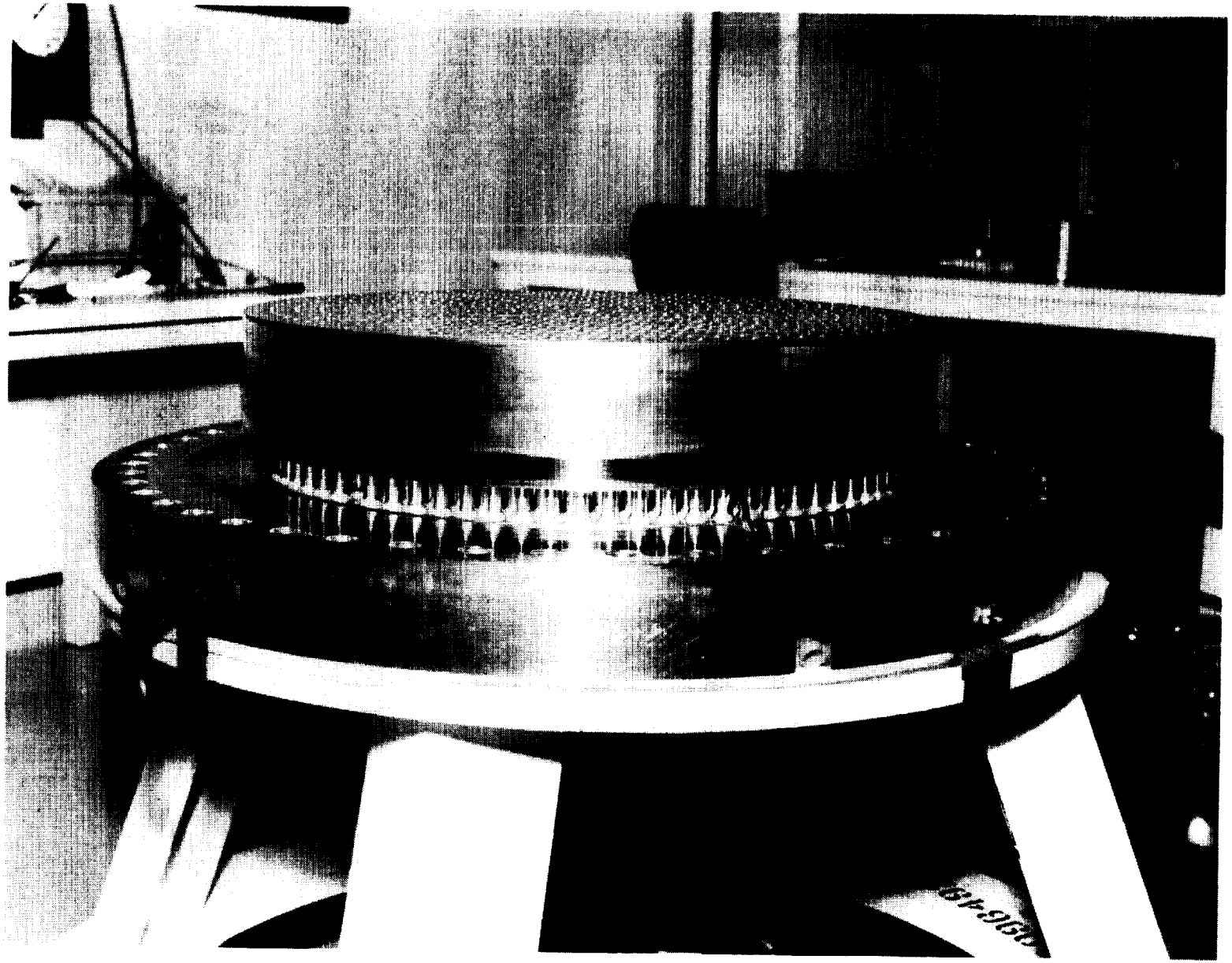

Figure 3-54. Completed Injector Body Assembly

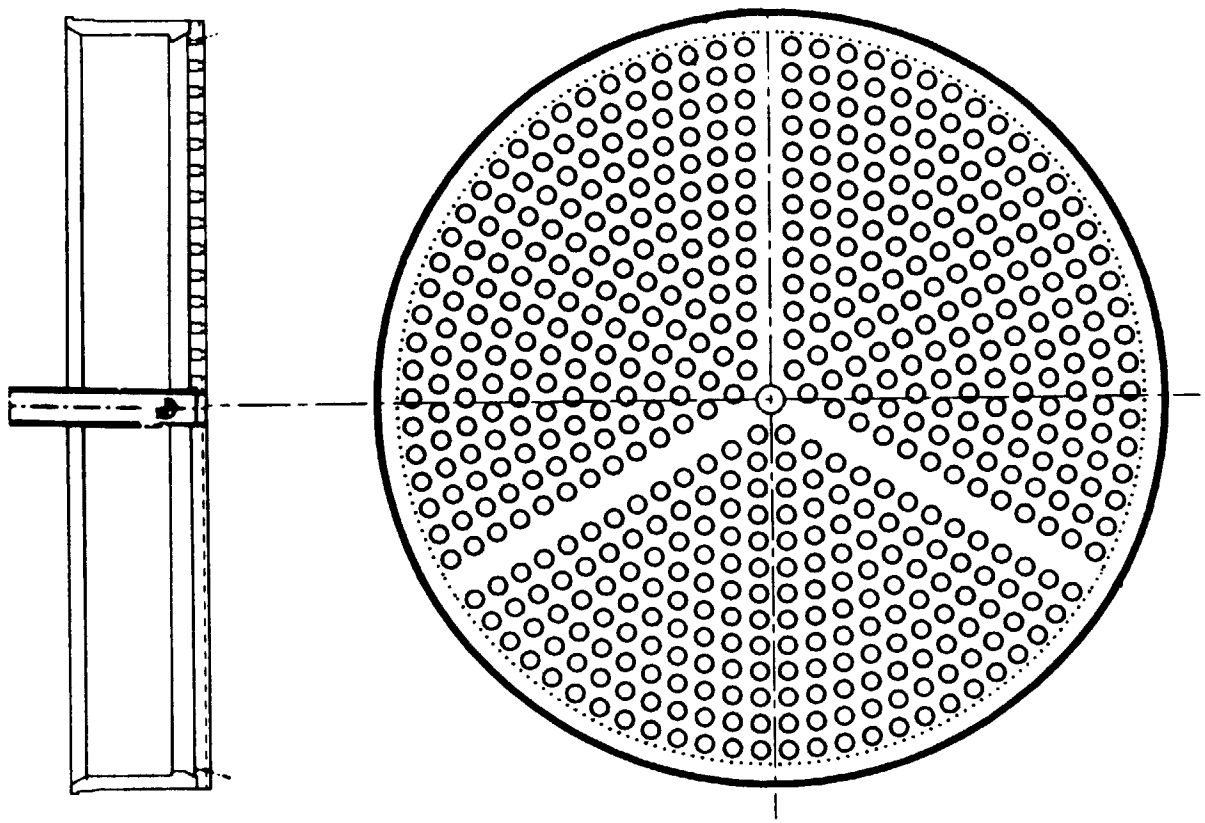

Figure 3-55. LSI APDR Faceplate Assembly

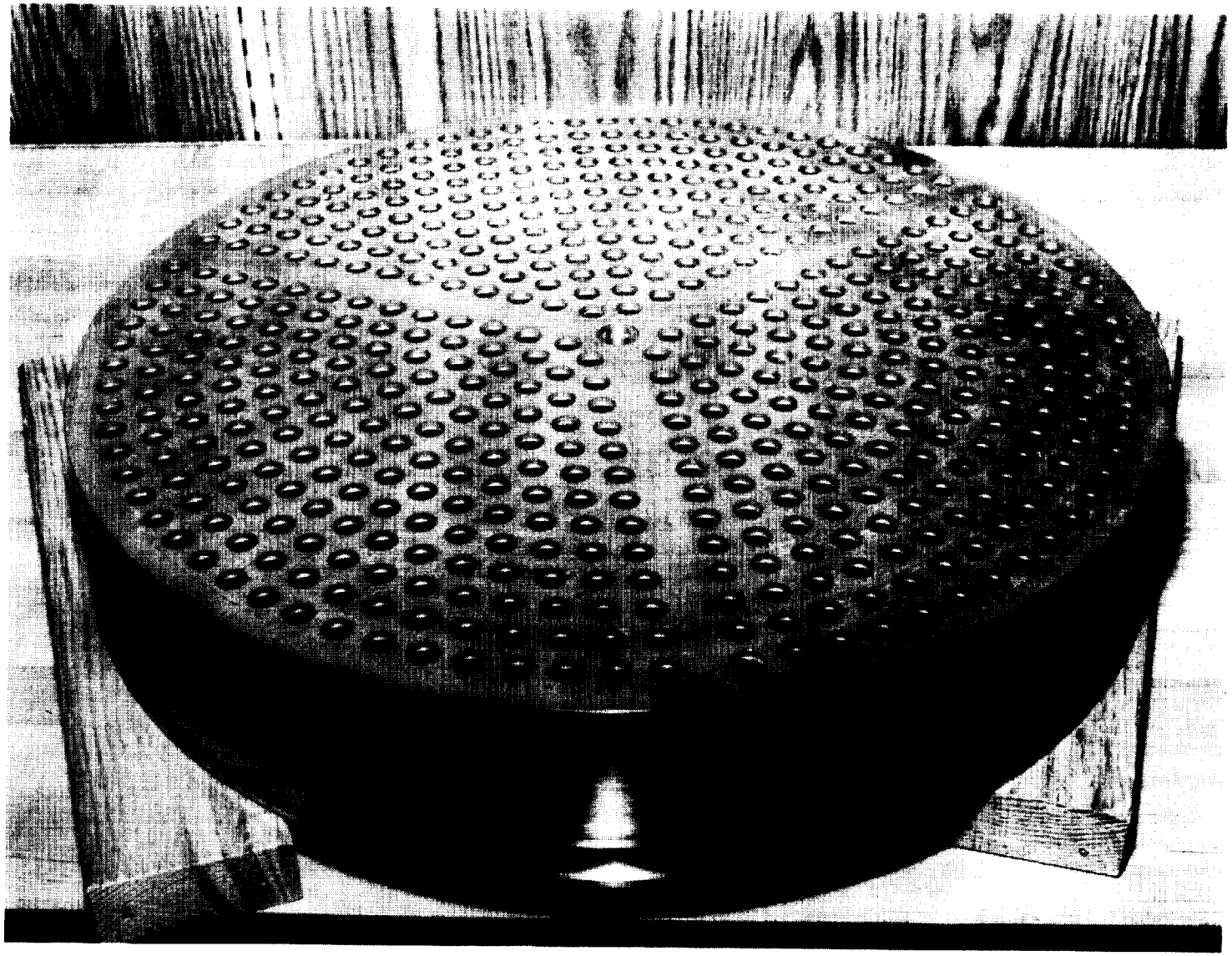

Figure 3-56. Face Plate/Ring Assembly

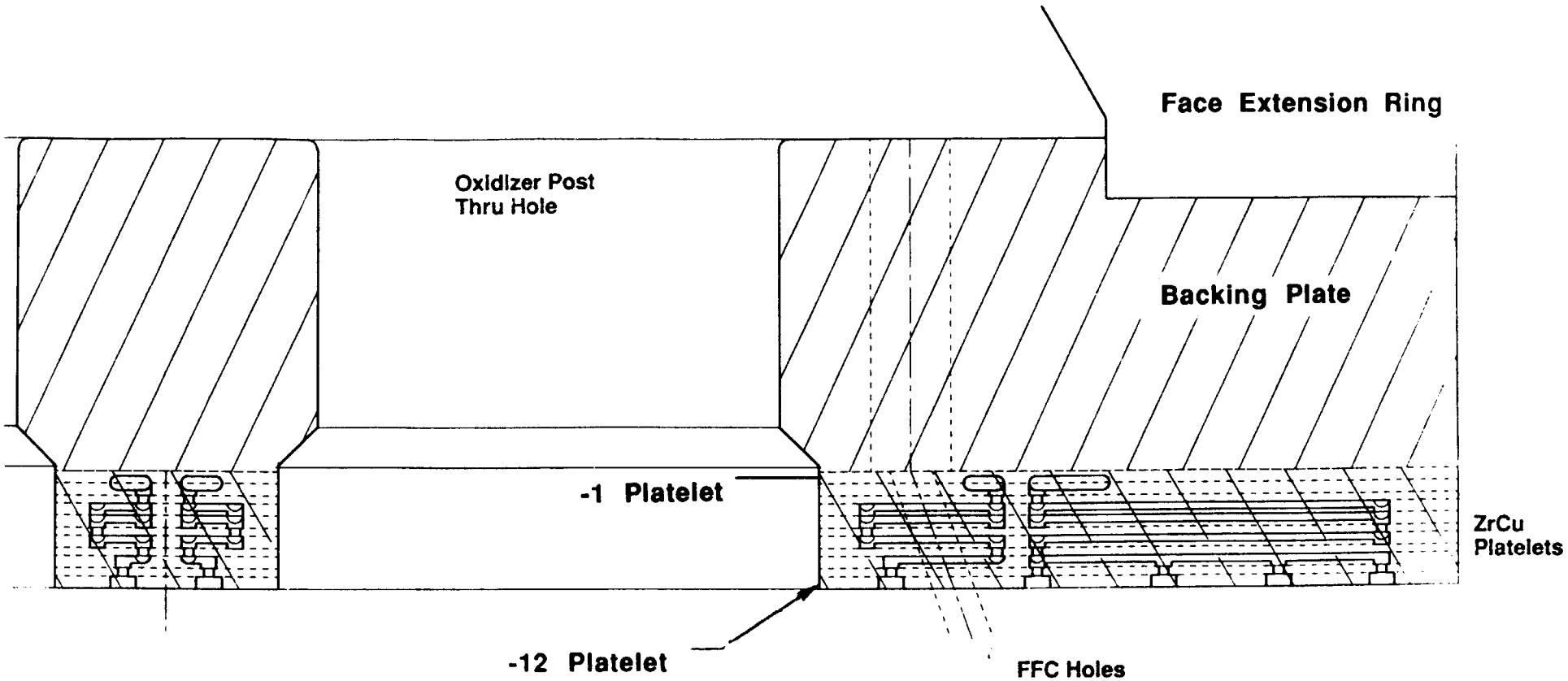

Figure 3-57. Regeneratively Cooled Faceplate

ORIGINAL PAGE
BLACK AND WHITE PHOTOGRAPH

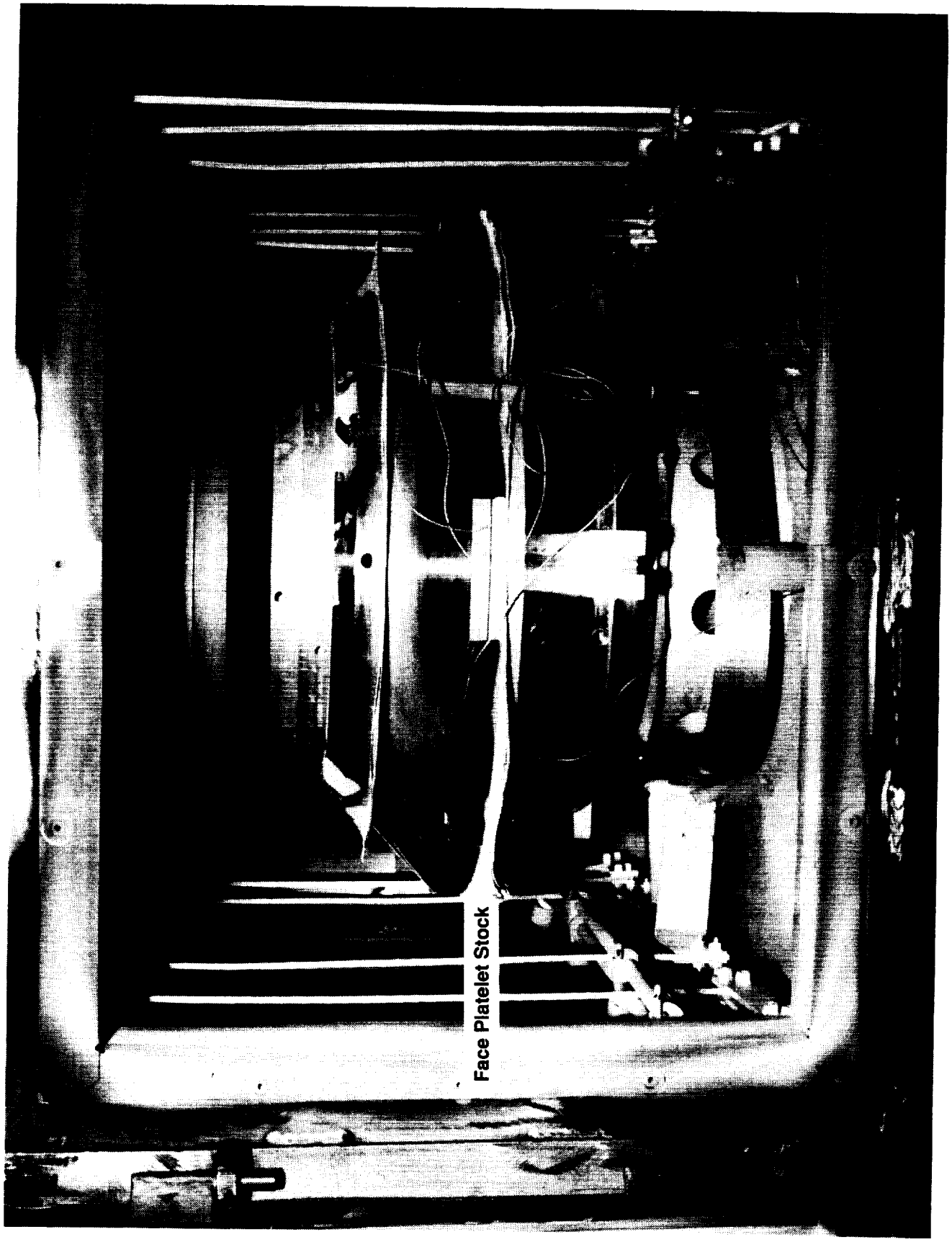

Figure 3-58. Fixturing of Face Platelet Stock in RAM Loaded Vacuum Furnace

ORIGINAL PAGE
BLACK AND WHITE PHOTOGRAPH

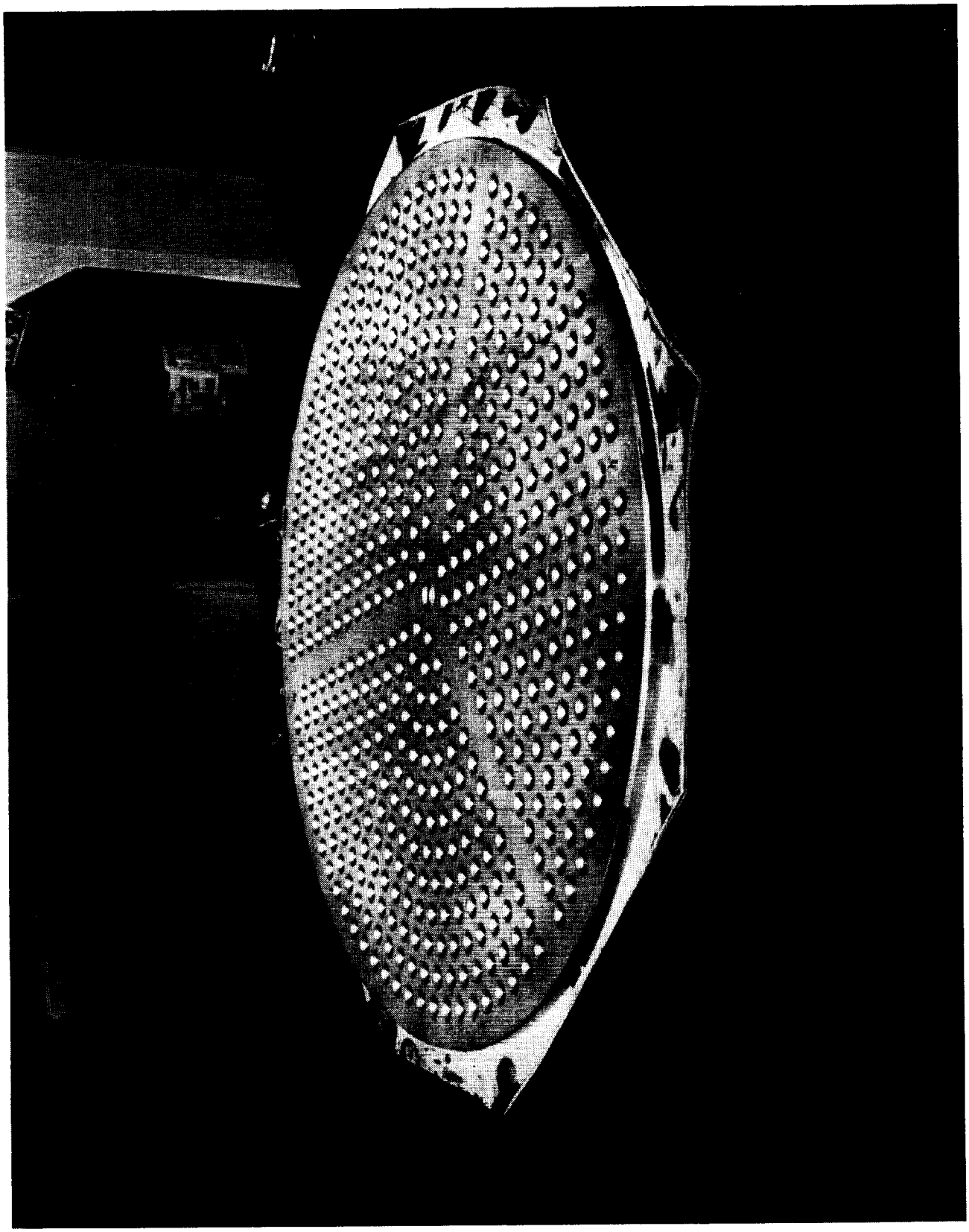

Figure 3-59. As-Bonded Face Platelet Assembly

ORIGINAL PAGE
BLACK AND WHITE PHOTOGRAPH

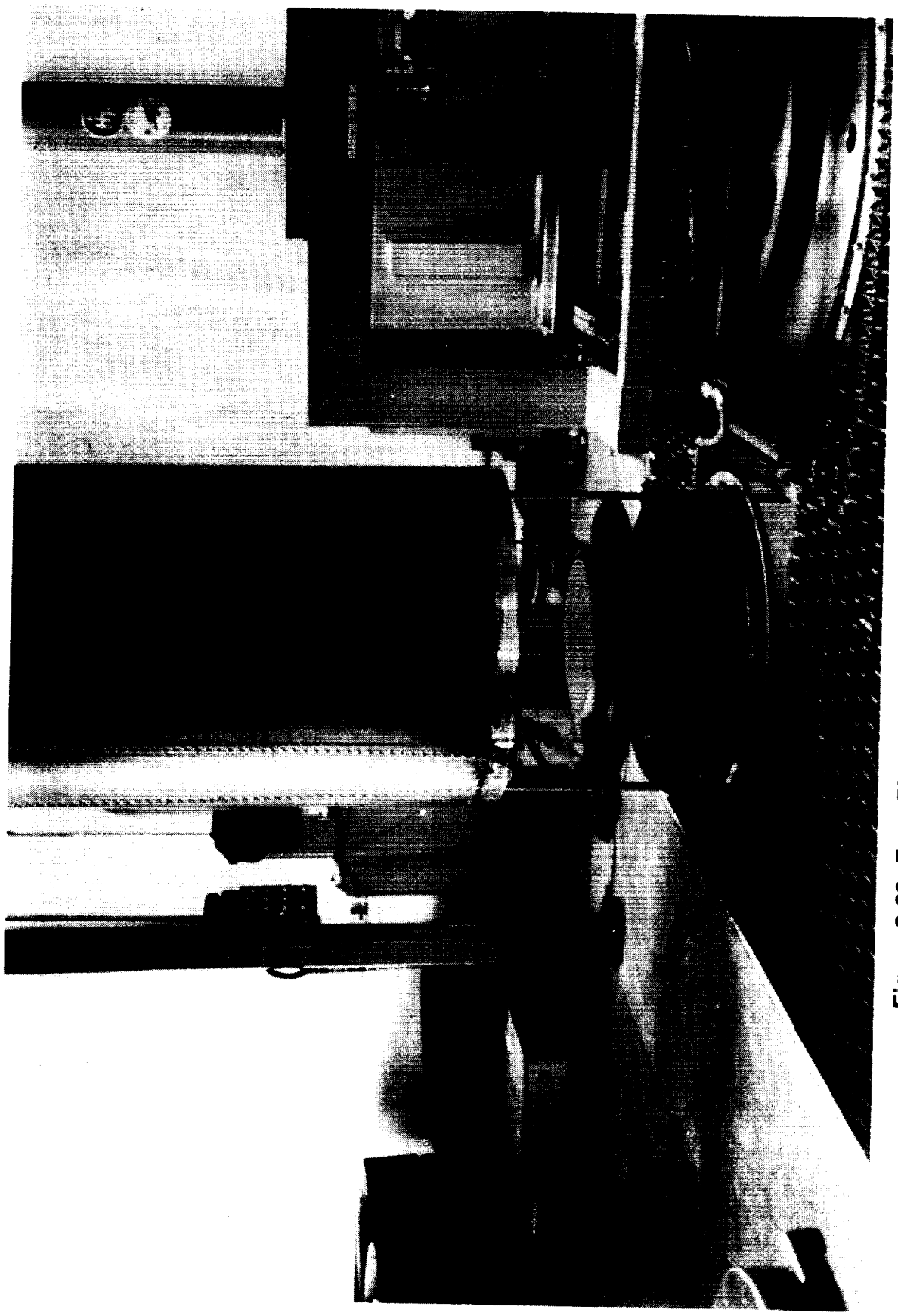

Figure 3-60. Face Platelet Assembly Loaded on HIP Furnace

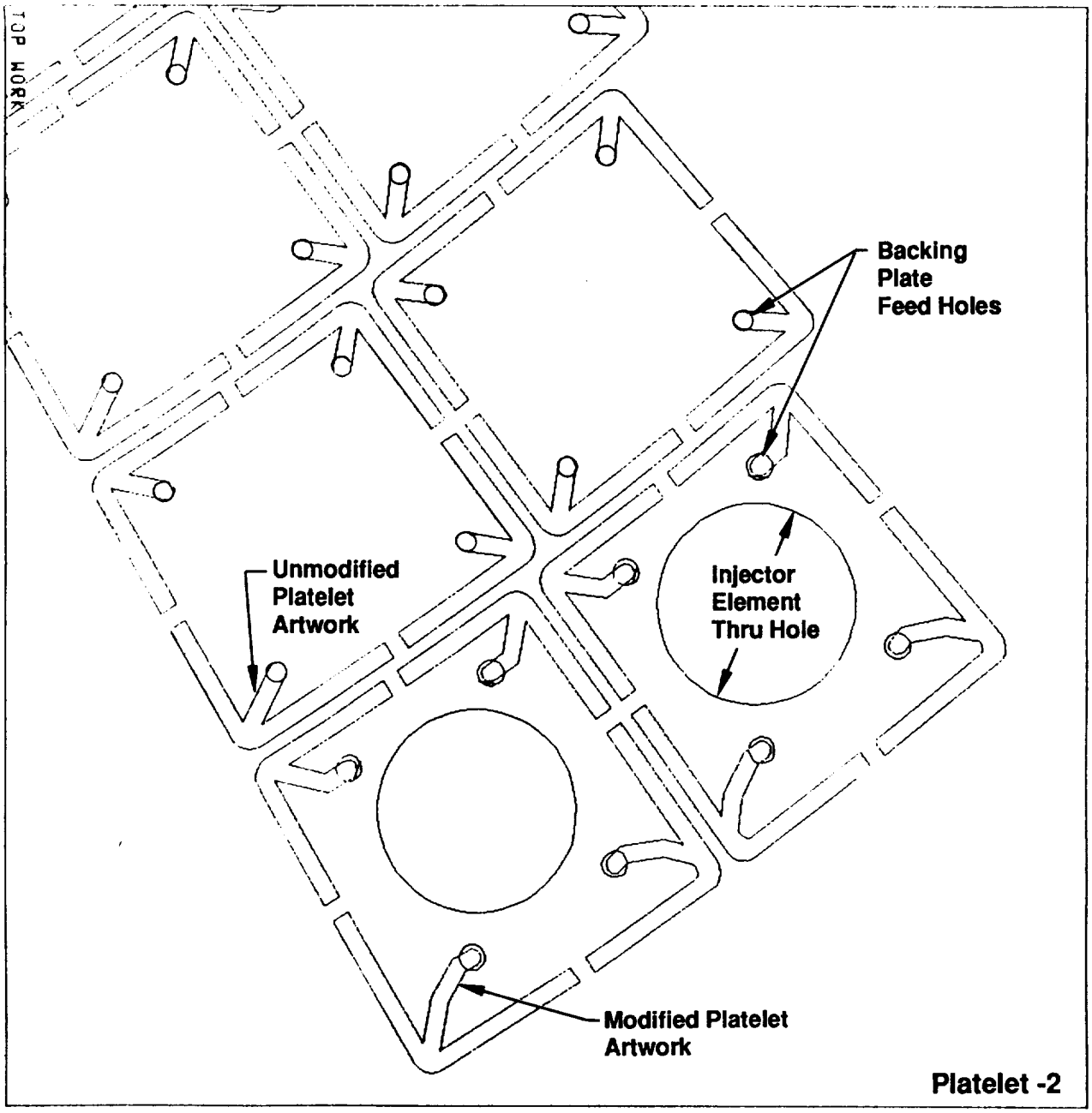

Figure 3-61. ZrCu Platelet Modifications

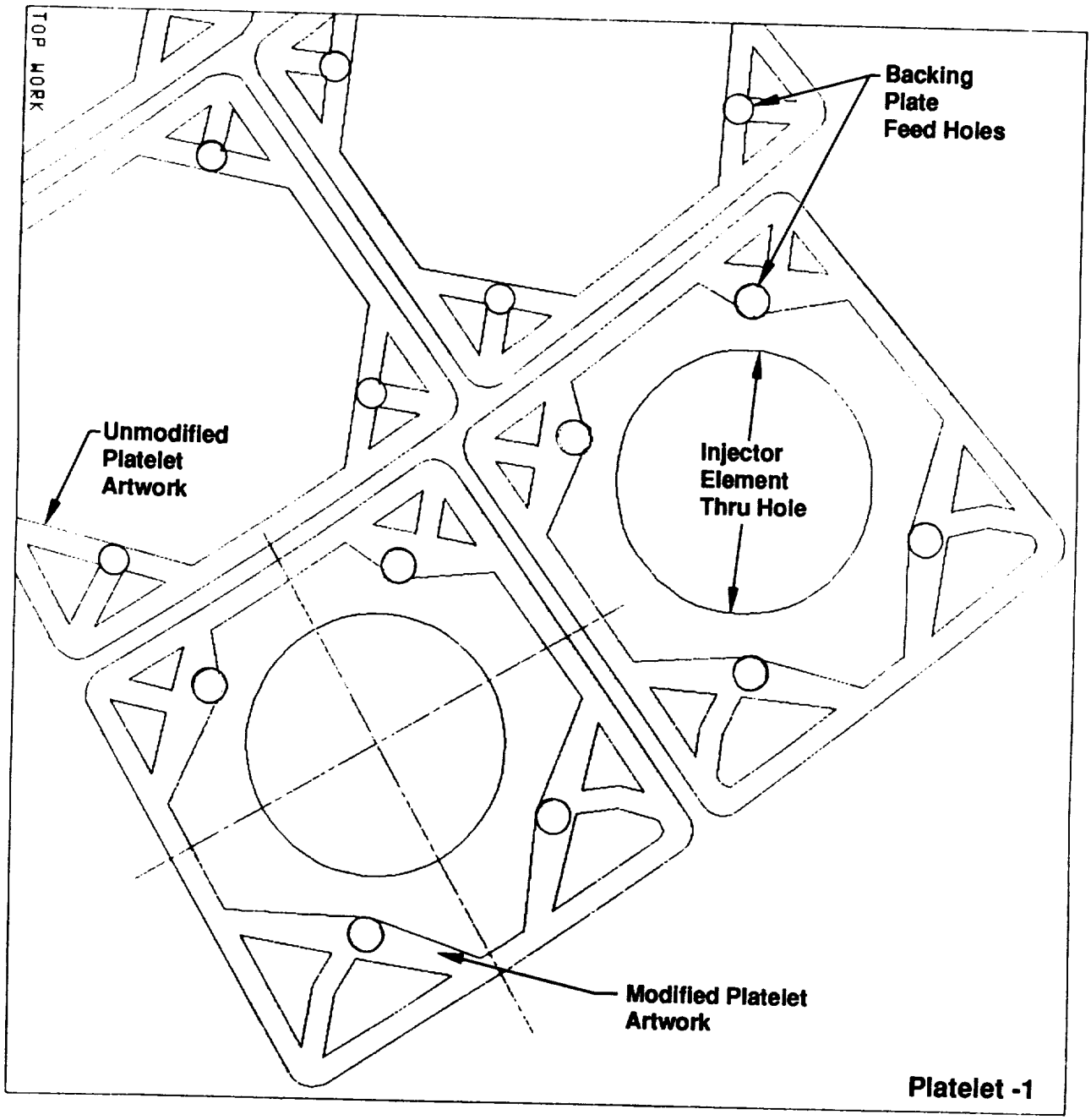

Figure 3-62. ZrCu Platelet -1 Modifications

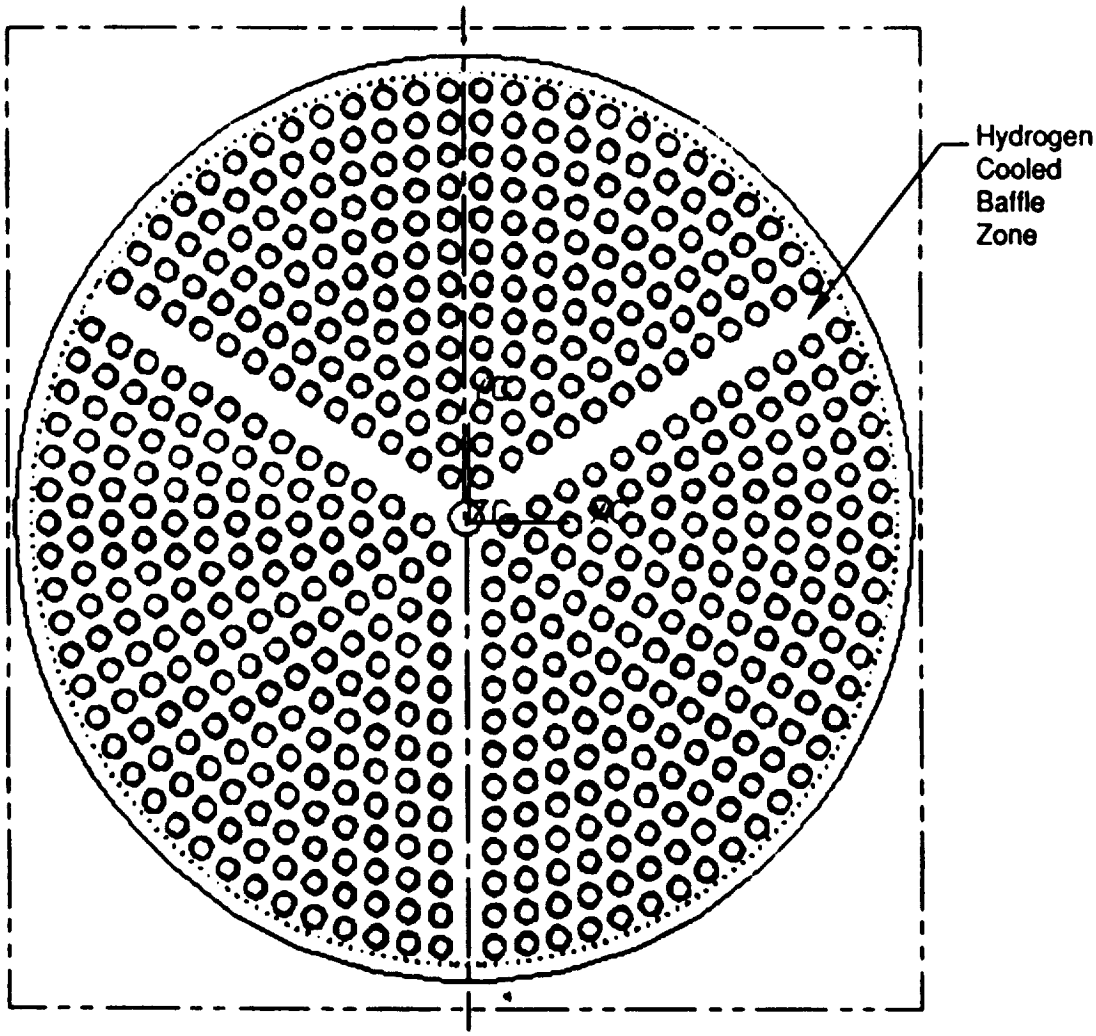

Figure 3-63. Full Scale Injector Face Pattern

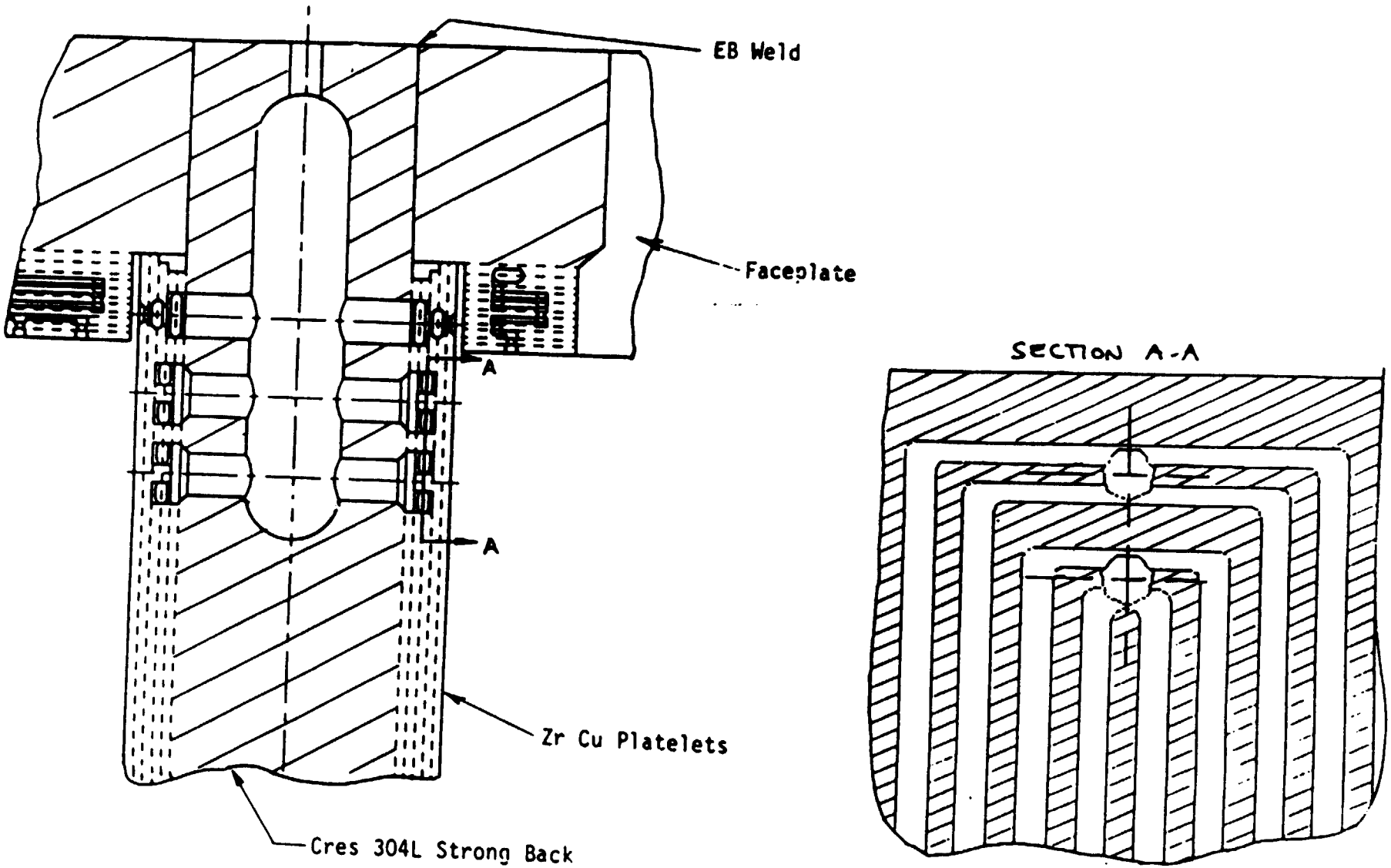

Figure 3-64. Baffle (Optional)

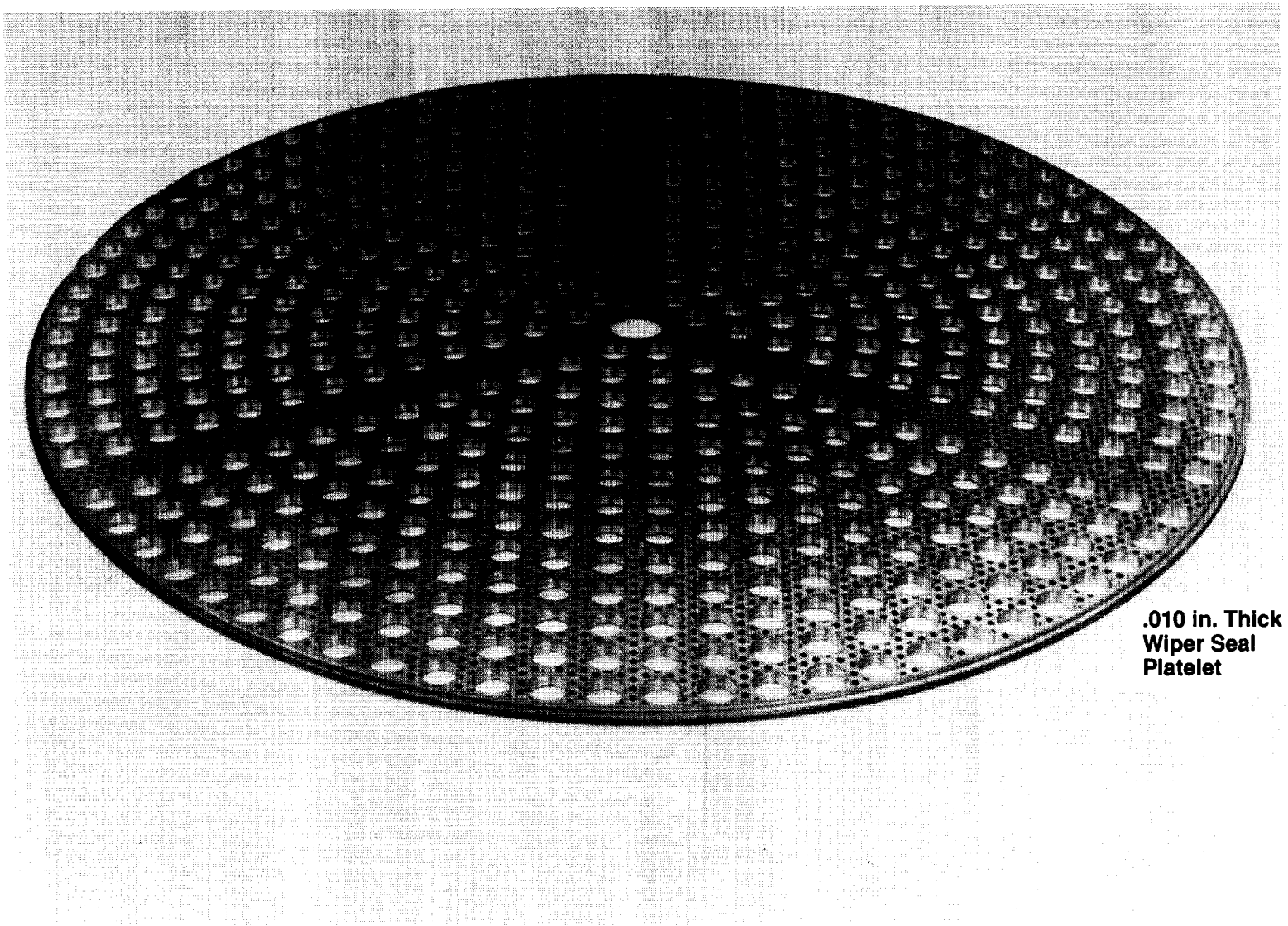

Figure 3-65. Fuel Distribution Plate

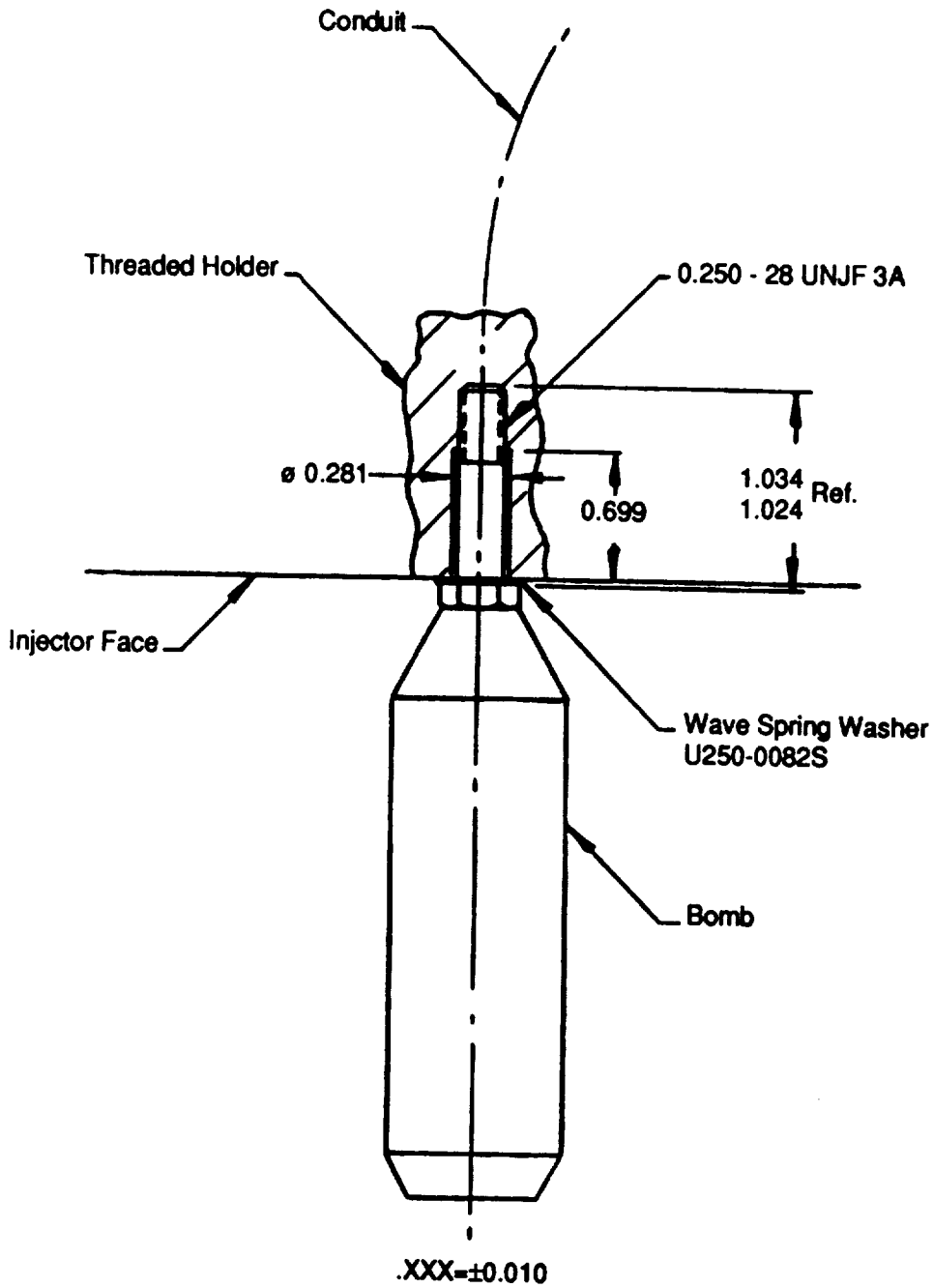

Figure 3-66. Rocketdyne Bomb Design

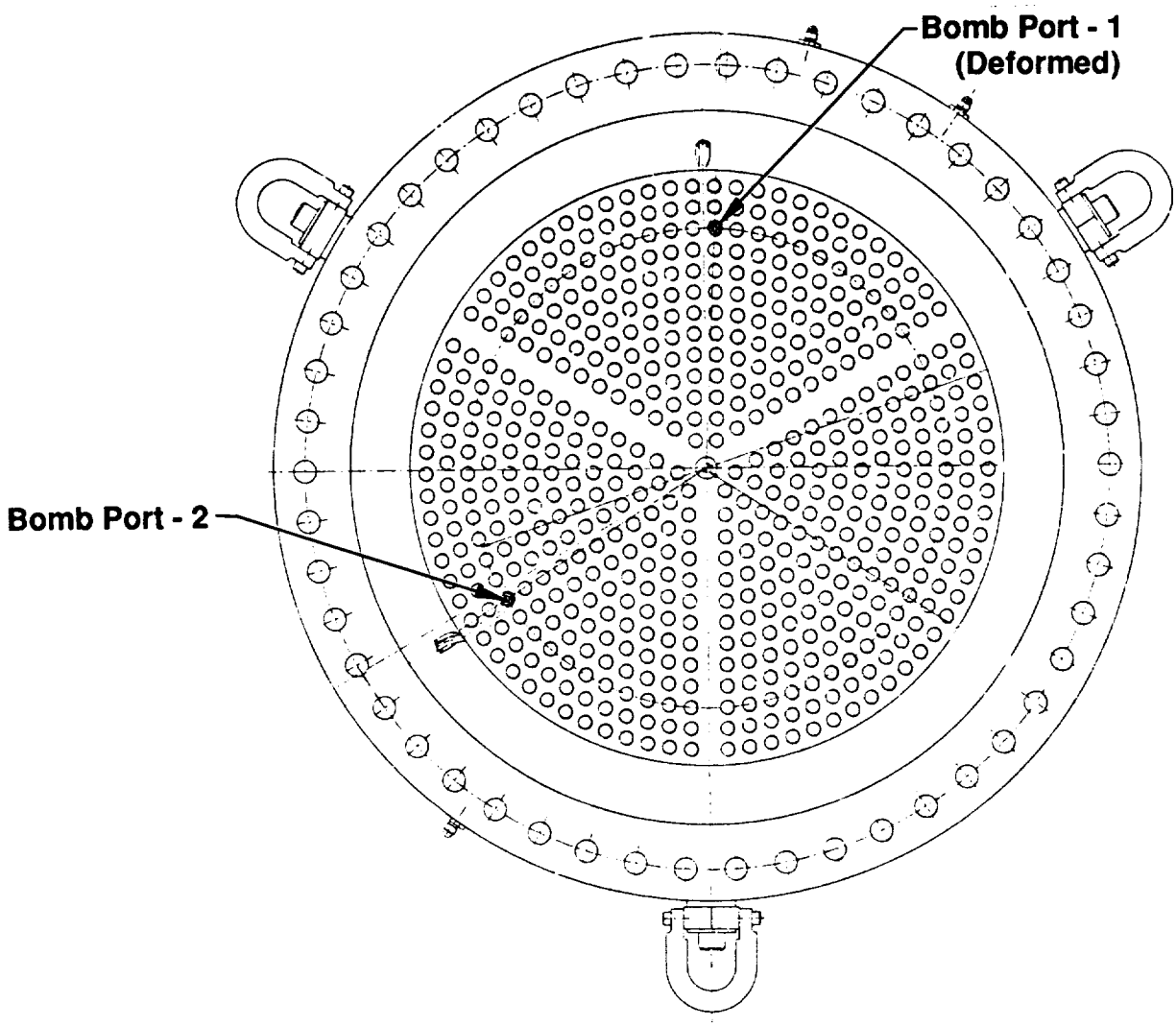

Figure 3-67. Face Bomb Locations

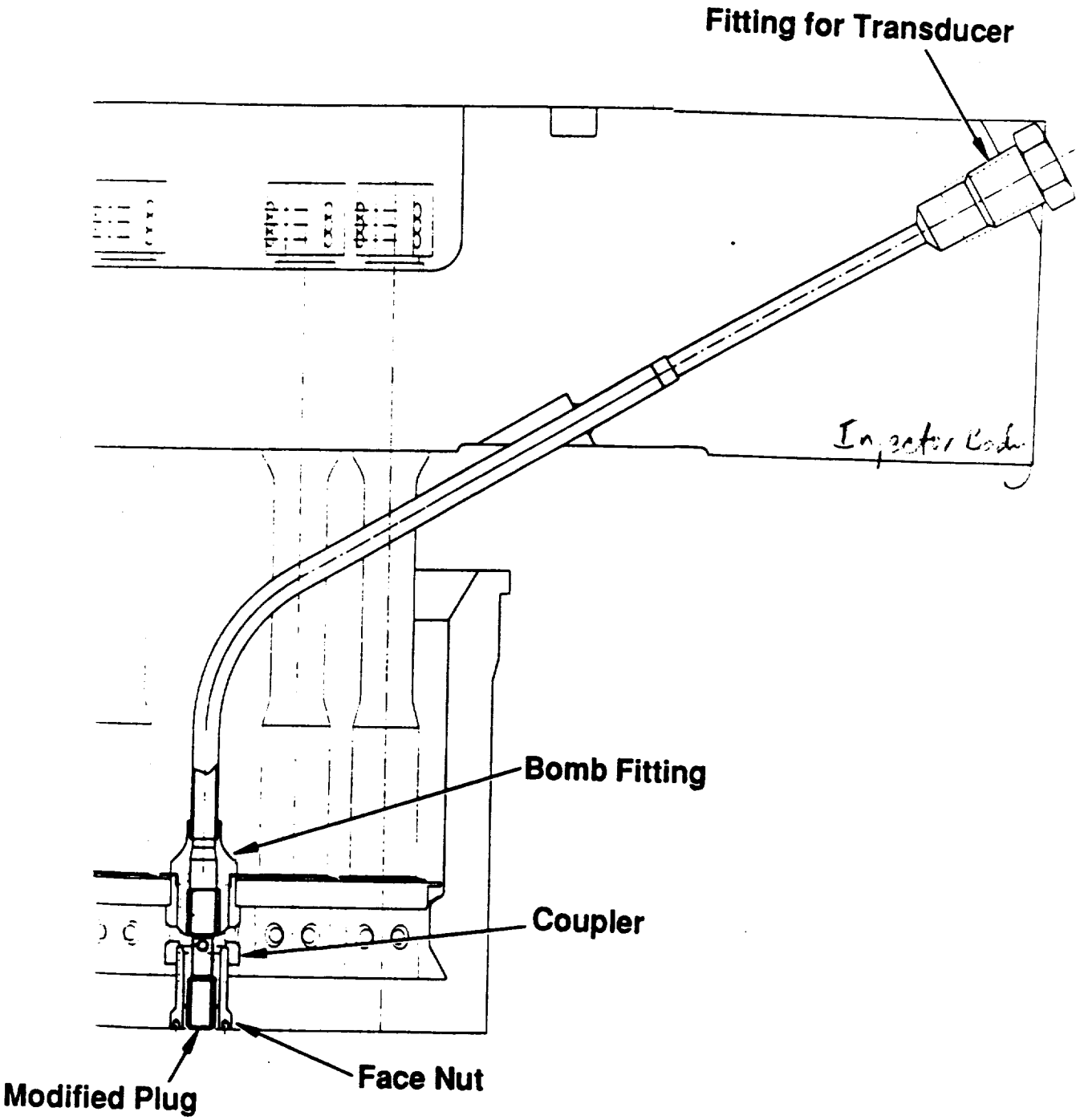

Figure 3-68. Bomb Port

ORIGINAL PAGE
BLACK AND WHITE PHOTOGRAPH

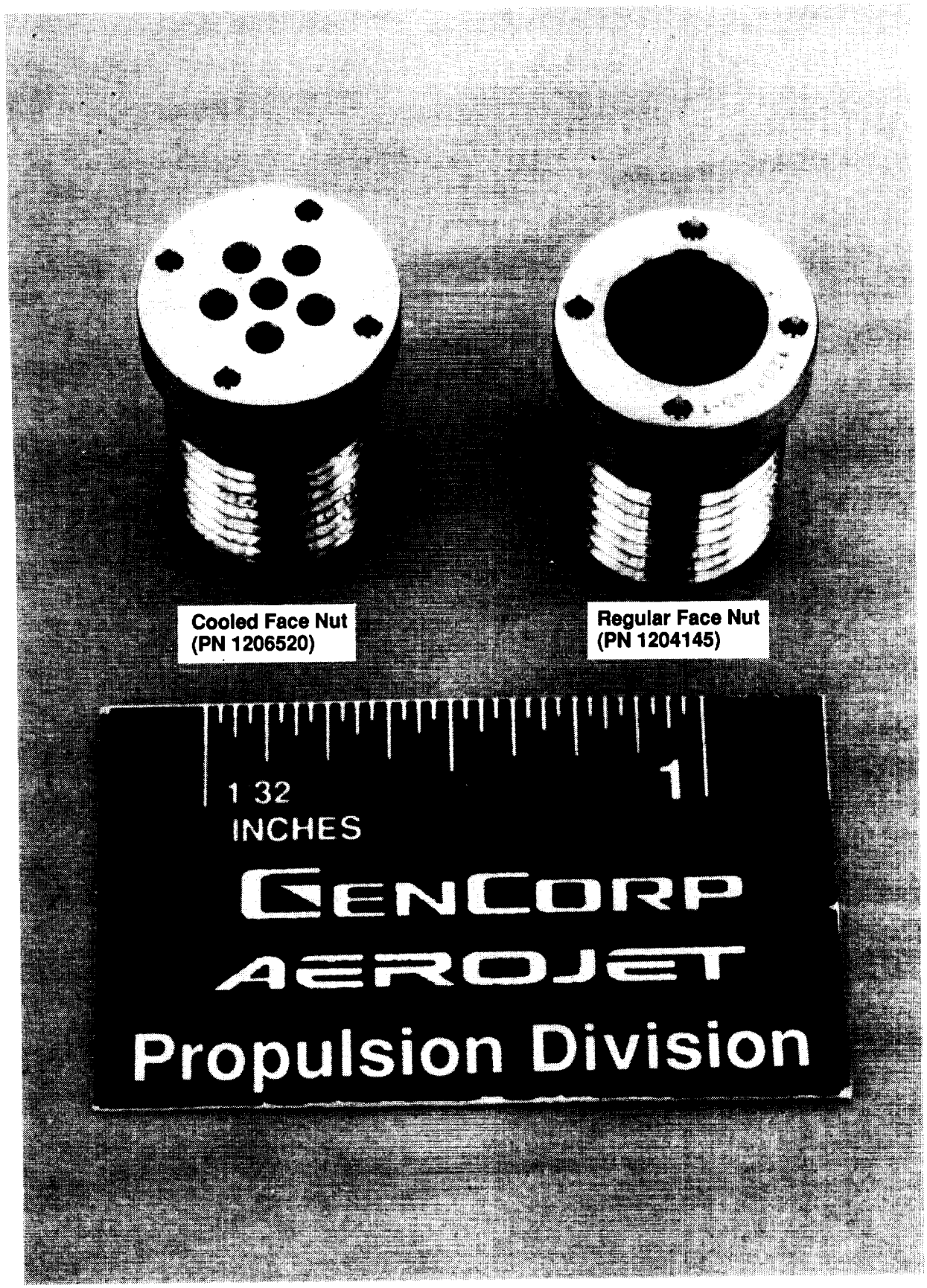

Figure 3-69. Cooled Face Nut

Figure 3-70. Deformed Bomb Port

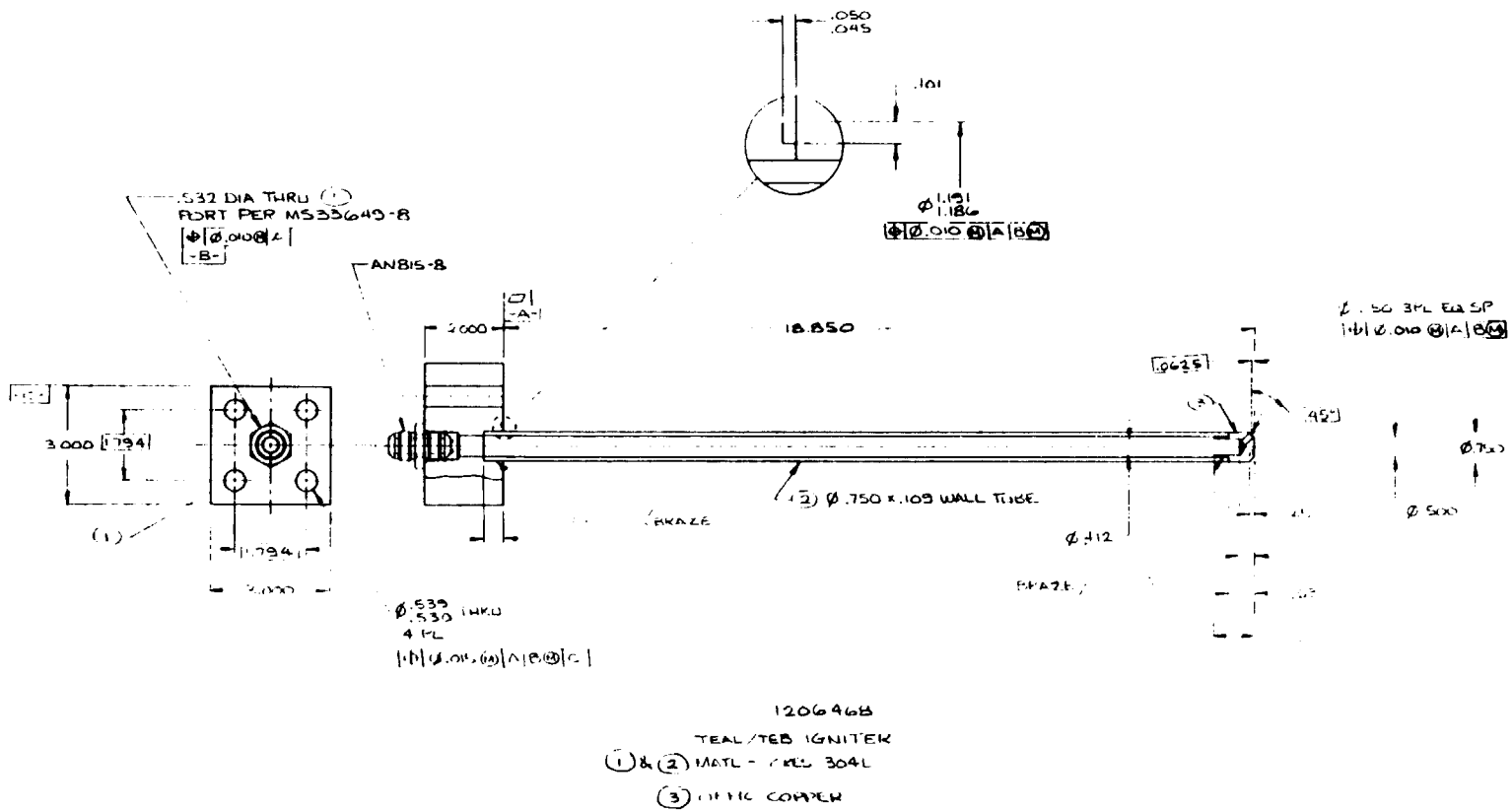

Figure 3-71. Igniter

ORIGINAL PAGE IS
OF POOR QUALITY

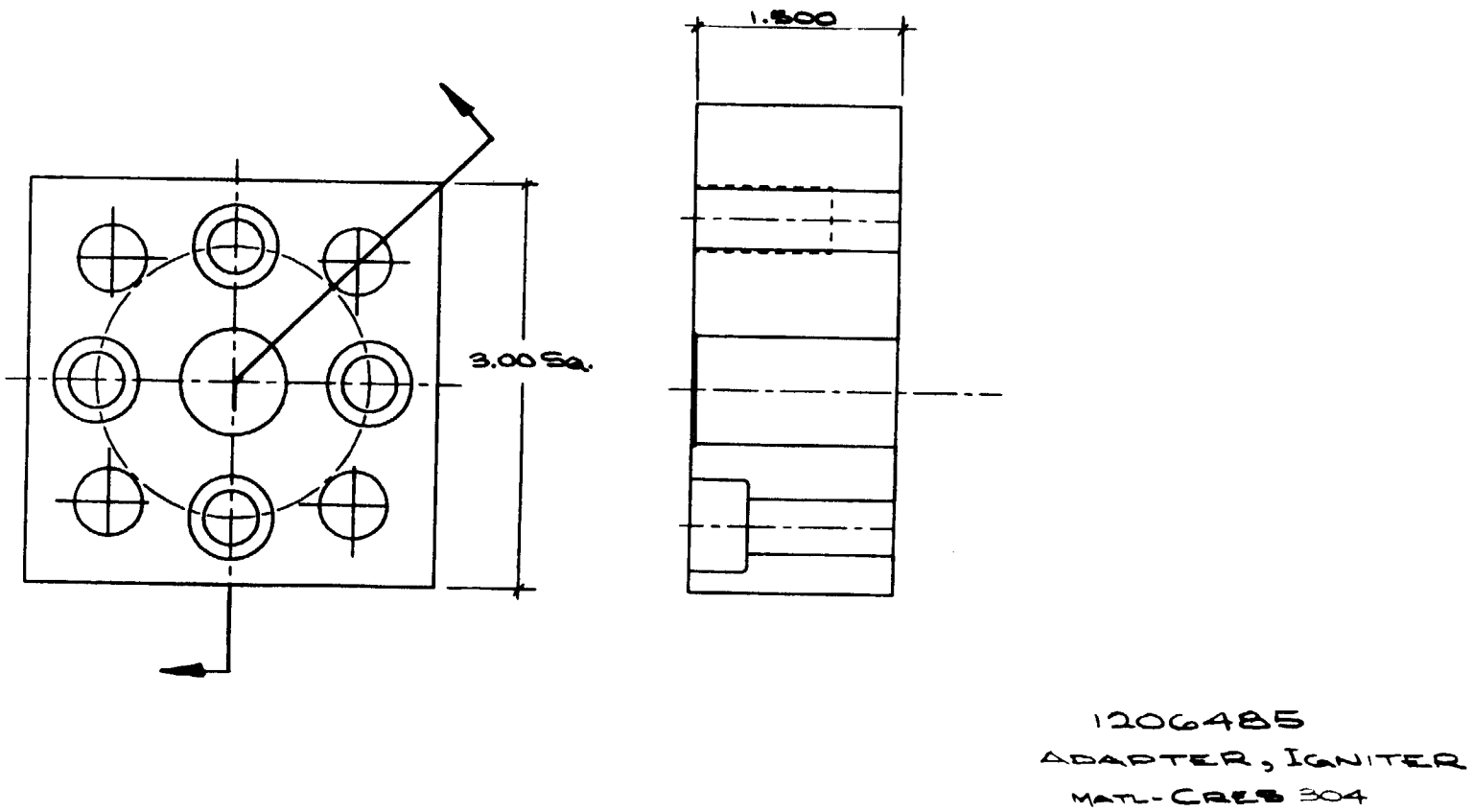

Figure 3-72. Igniter Adapter

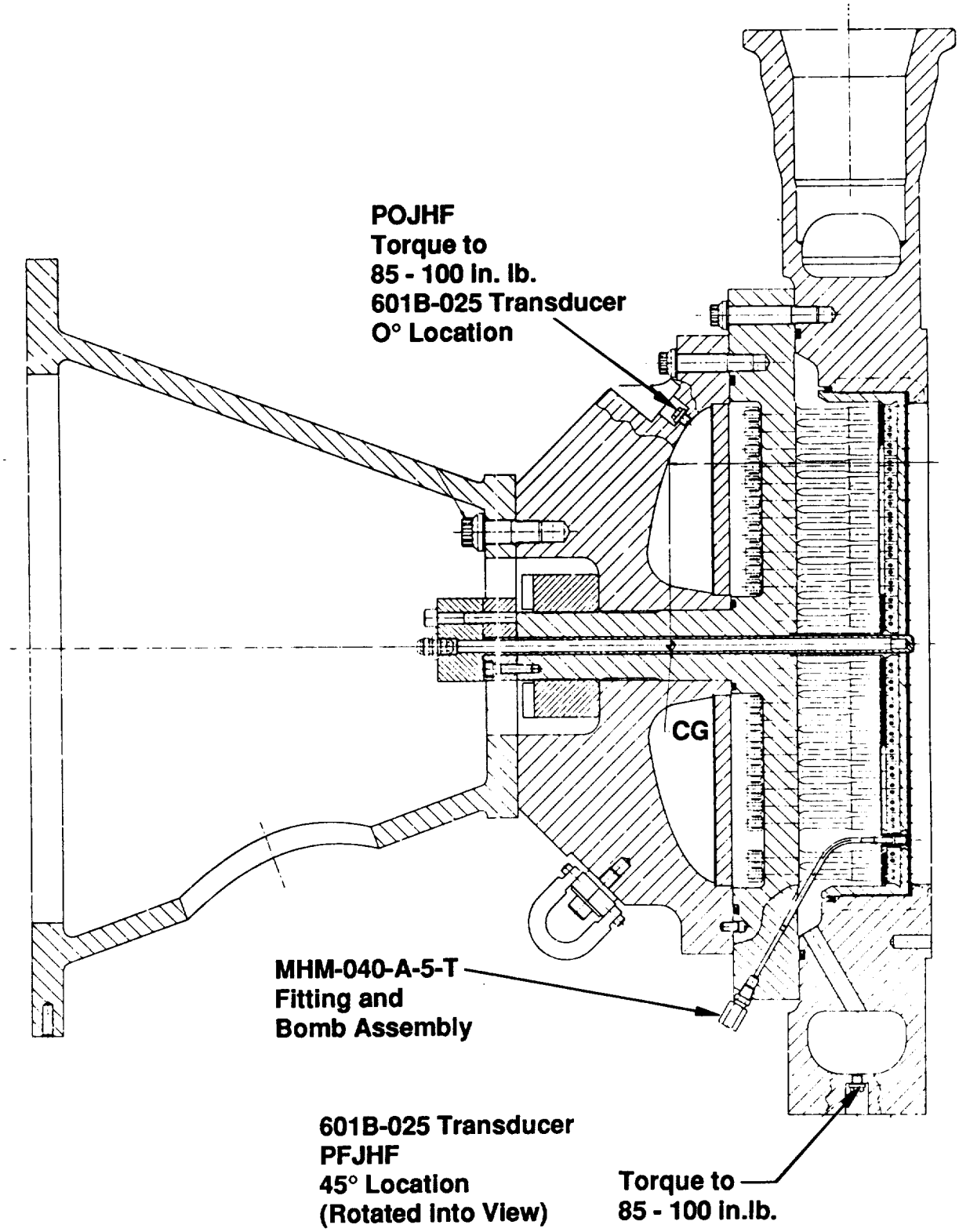

Figure 3-73. Side View – Thruster Assembly (1206466) Instrumentation Location

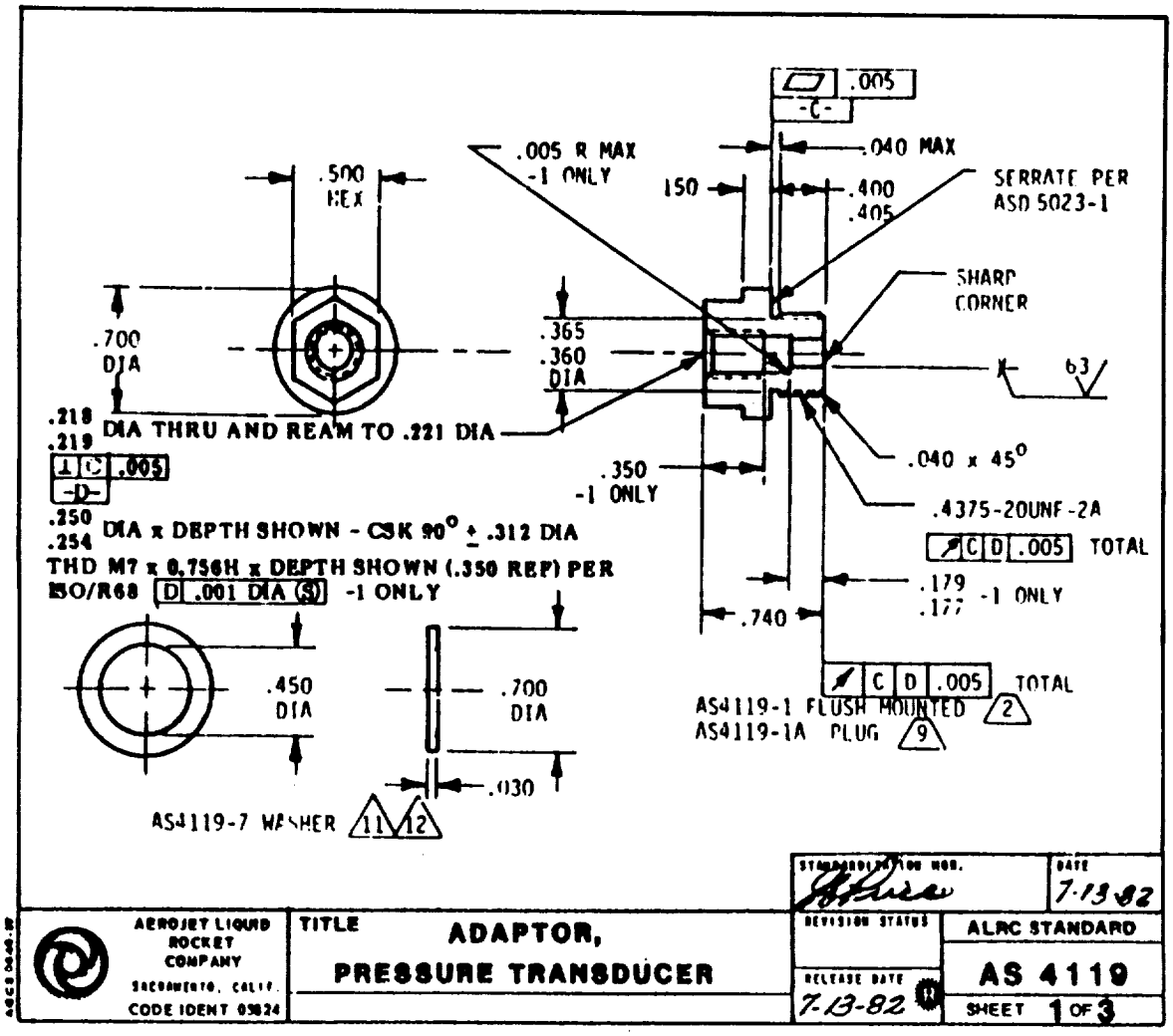

Plug Will Be Delivered as a –1, Machined to External Configuration Only. Internal Geometry is Dependant on High Frequency Transducer Dimensions

Figure 3-74. AS 4119 Pressure Transducer Adapter

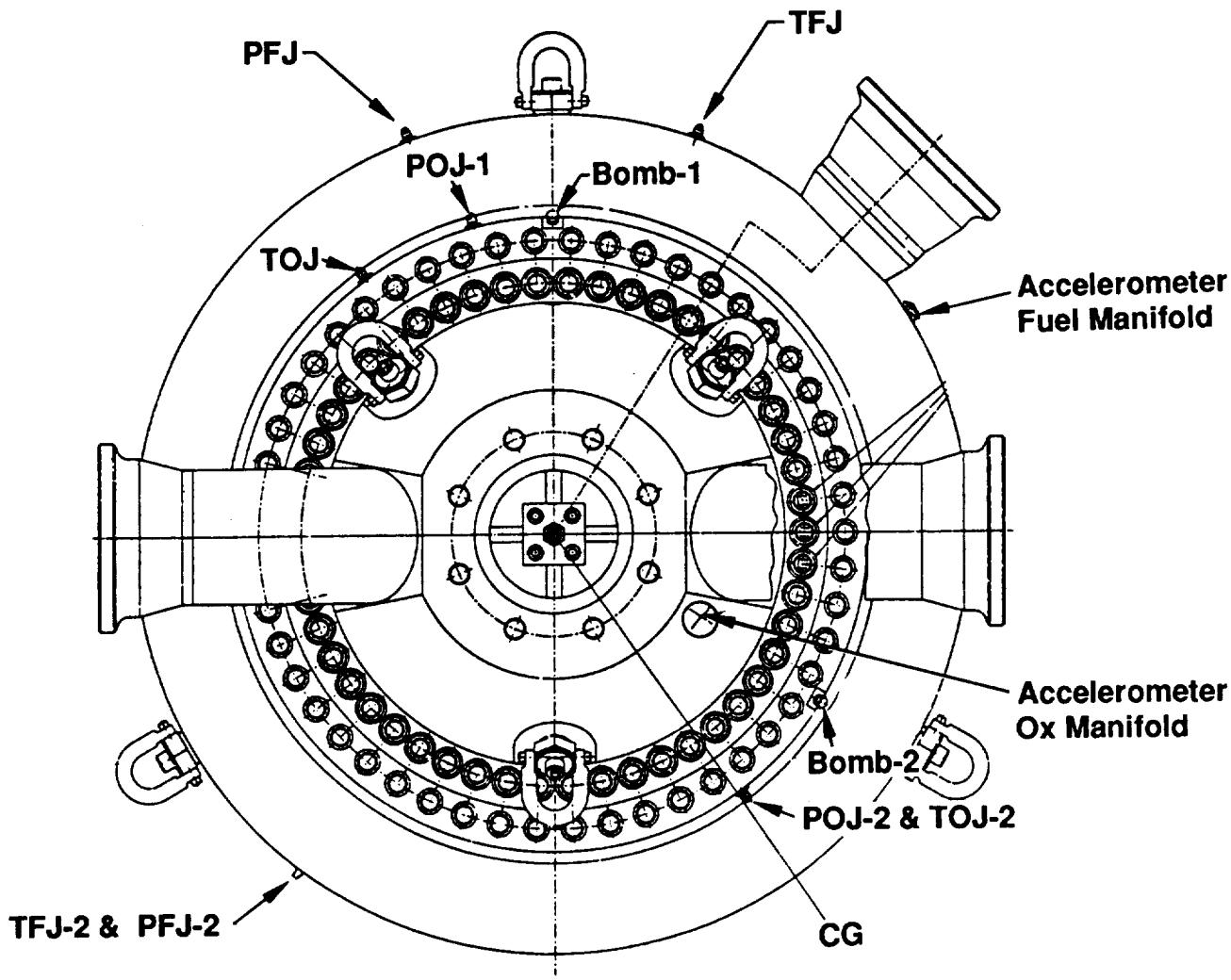

Figure 3-75. Forward View – Thruster Assembly (1206466) Instrumentation Location

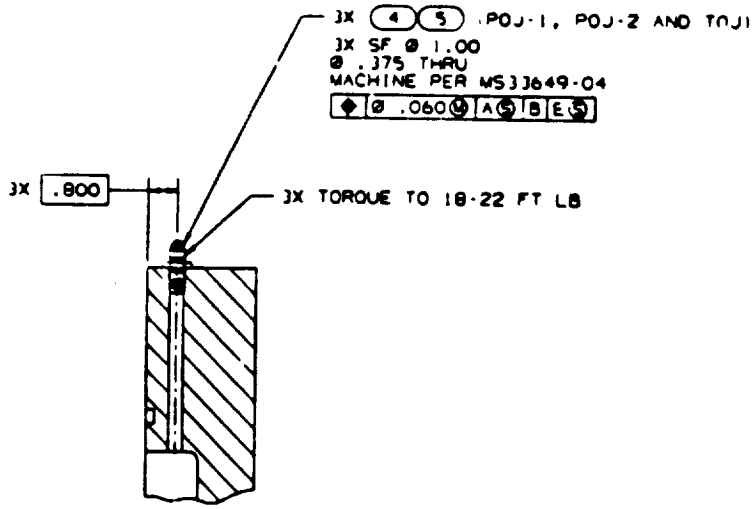

3 Places Marked

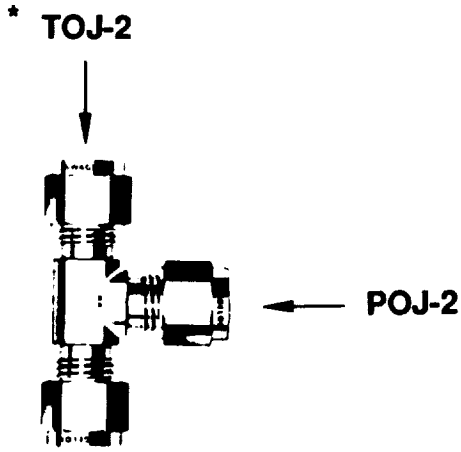

Union Tee

15° Location - POJ-1 Static Pressure Port, OX Manifold

215° Location - POJ-2 & TOJ-2* Pressure & Temp, Manifold

35° Location - TOJ Temperature, OX Manifold

Figure 3-76. Oxidizer Manifold – Injector Core Instrumentation

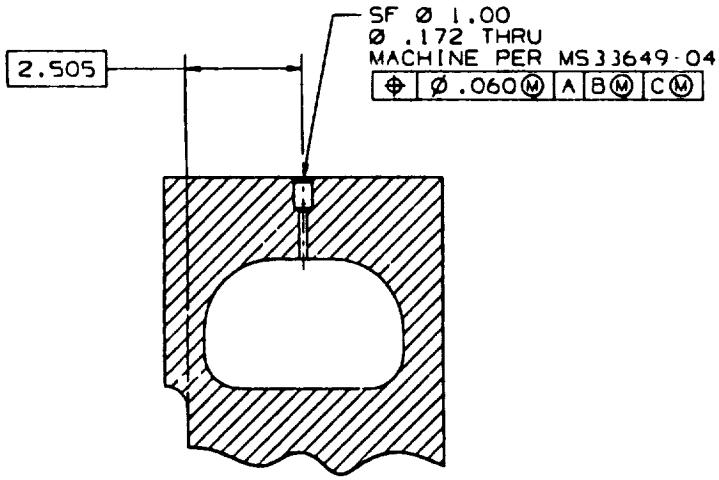

3 Places Marked

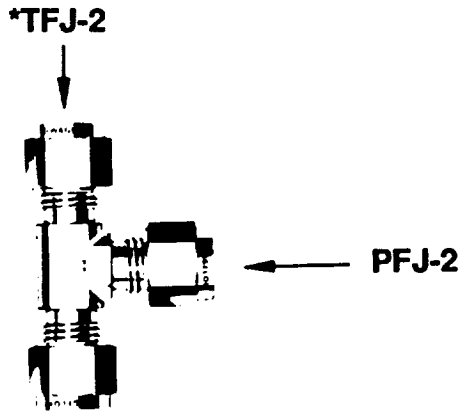

Union Tee

20° Location - PFJ-1 Static Pressure Port, Fuel Manifold

130° Location - PFJ-2 & TFJ-2* Pressure and Temperature, Manifold

340° Location - TFJ Temperature , Fuel Manifold

Figure 3-77. Fuel Manifold, Instrumentation

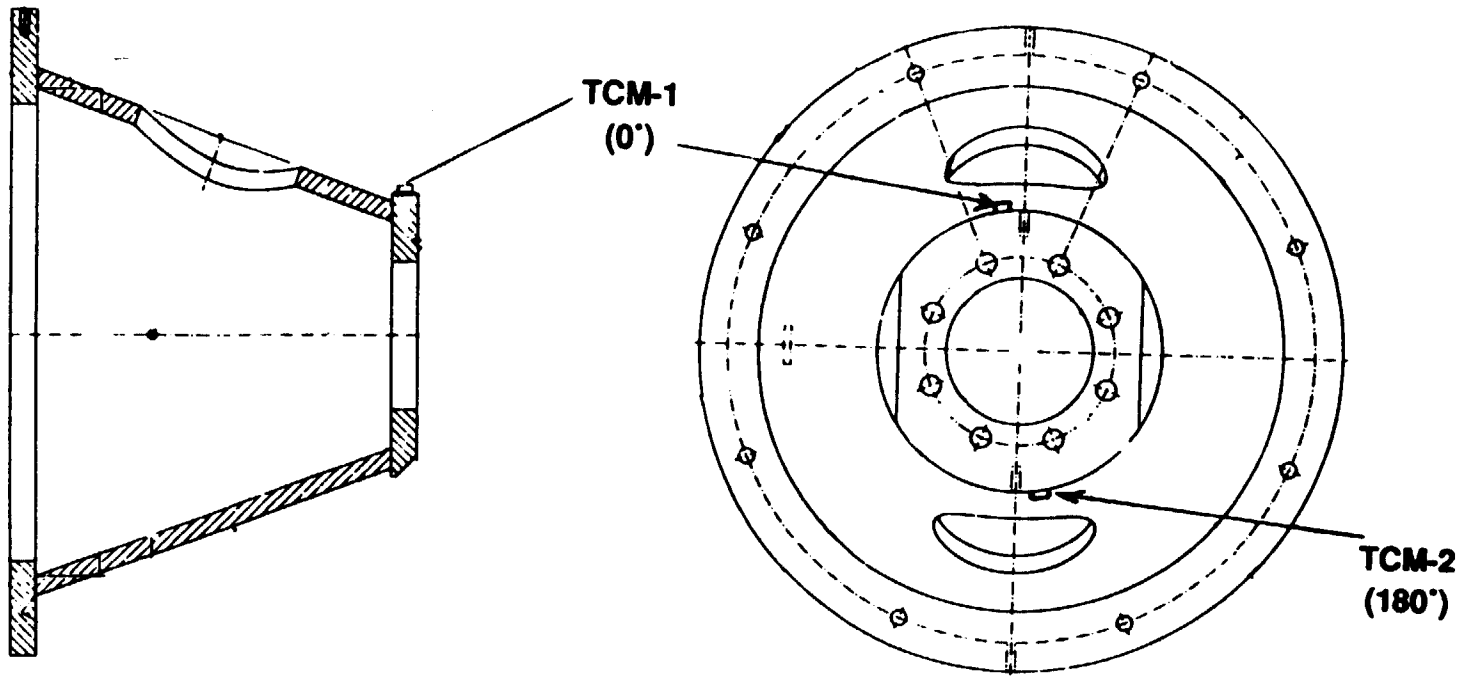

Mount 2 TC's On Thrust Mount To Injector Interface Flange As Shown (Top [0°] & Bottom [180°] Locations)

Temperature Must Be Greater Than 0°F

Figure 3-78. APD Pre-Chilling of Hardware Thrust Mount Precautions (PN 1206467)

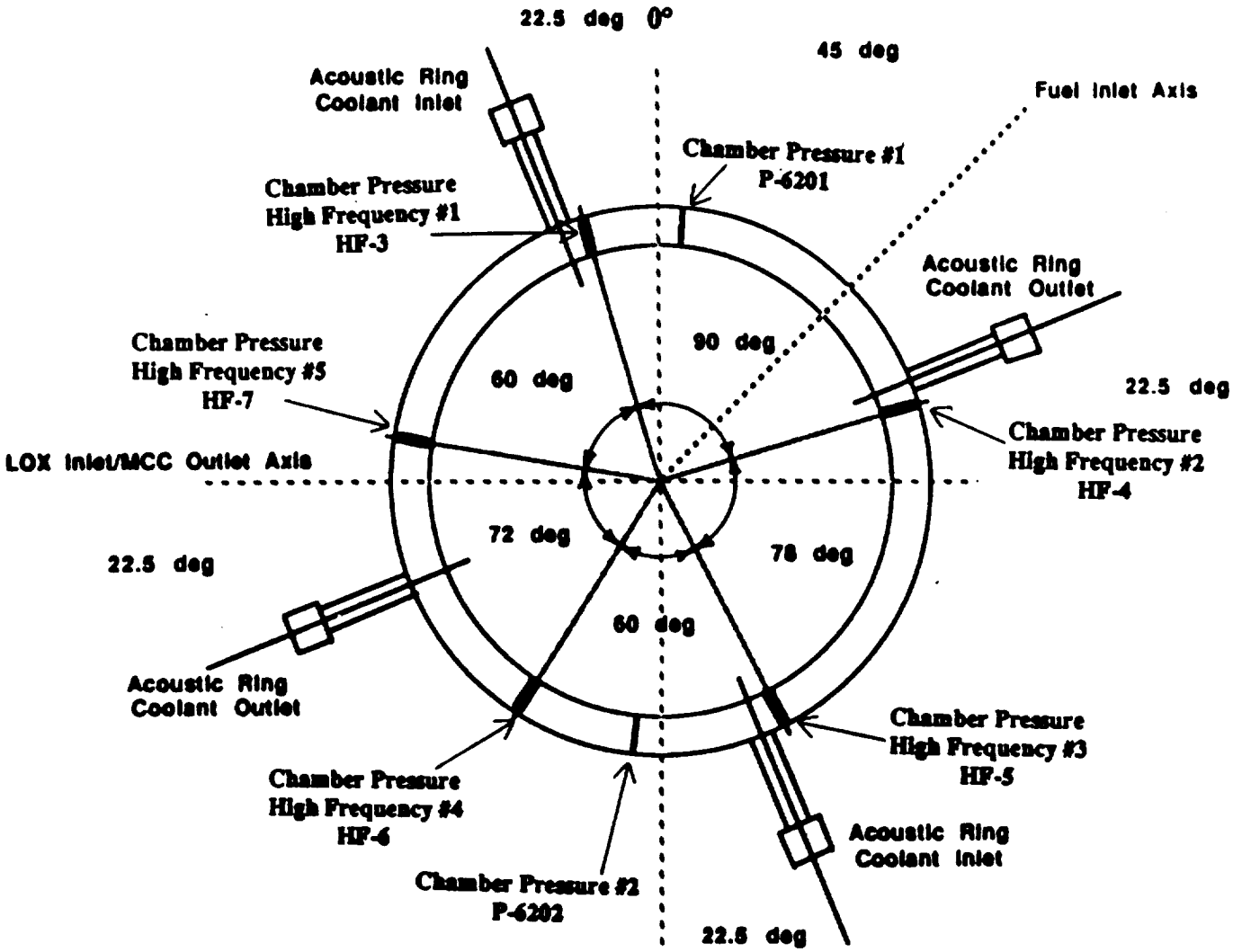

Figure 3-79. Instrumentation Ring Transducer Locations

DOCUMENT CHANGE NOTICE
CONTINUATION SHEET

GENCORP AEROJET
Propulsion Division
Sacramento, CA
CAGE 05824

☒ ADCN ☐ DCN	DATE 92-05-11	DRAWING NUMBER 1206520	REV LTR NC-2	SHEET 2 of 2

ZONE ITEM

Added:

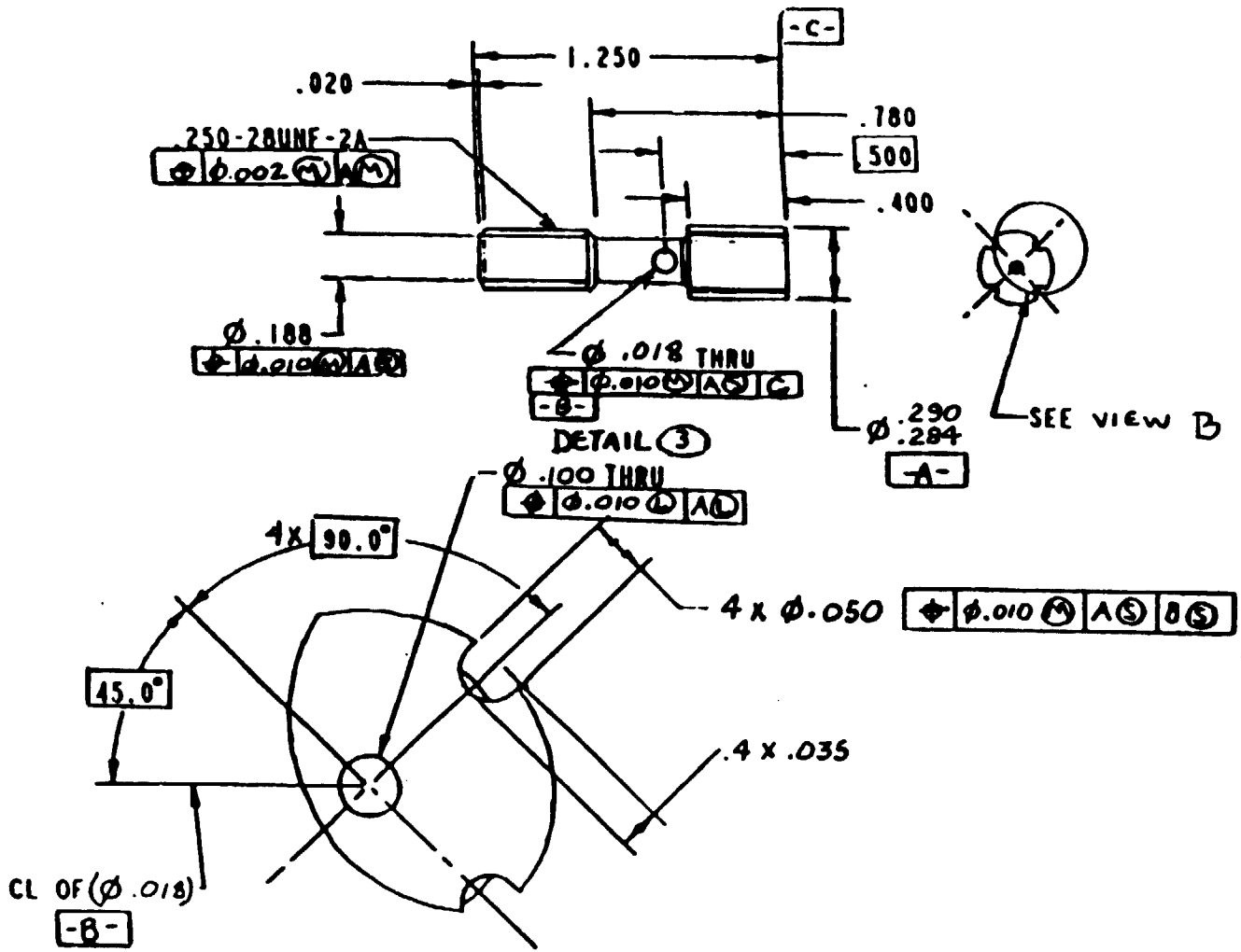

P.C. 424

Figure 3-80. Static PC Face Plug

- Install Injector (PN 1206471) Into Fuel Manifold (PN 1206486) With Noted Seals. Install and Torque Bolts

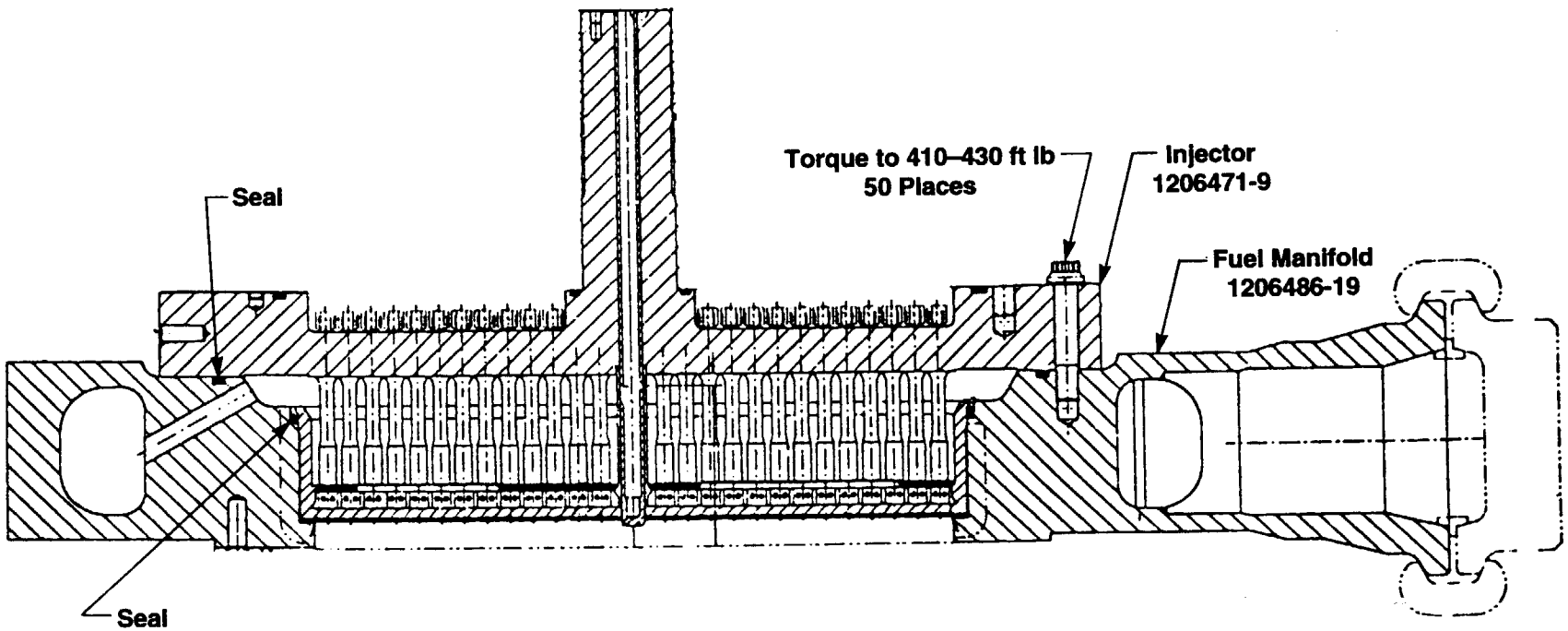

Figure 3-81. Assembly Sequence for Thruster Assembly (PN 1206466)

ORIGINAL PAGE
BLACK AND WHITE PHOTOGRAPH

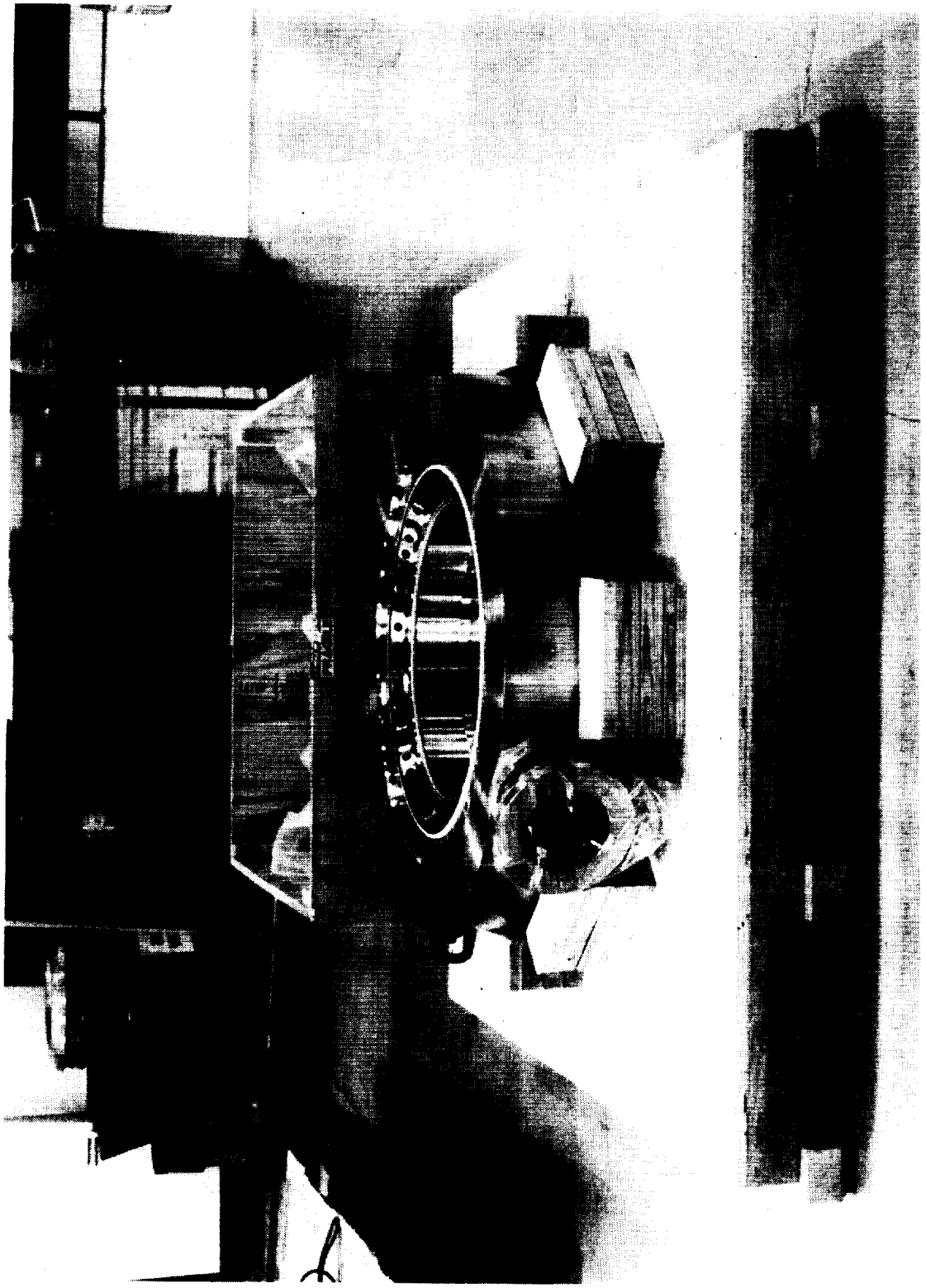

Figure 3-82. Fuel Manifold Prior to Final Assy

ORIGINAL PAGE
BLACK AND WHITE PHOTOGRAPH

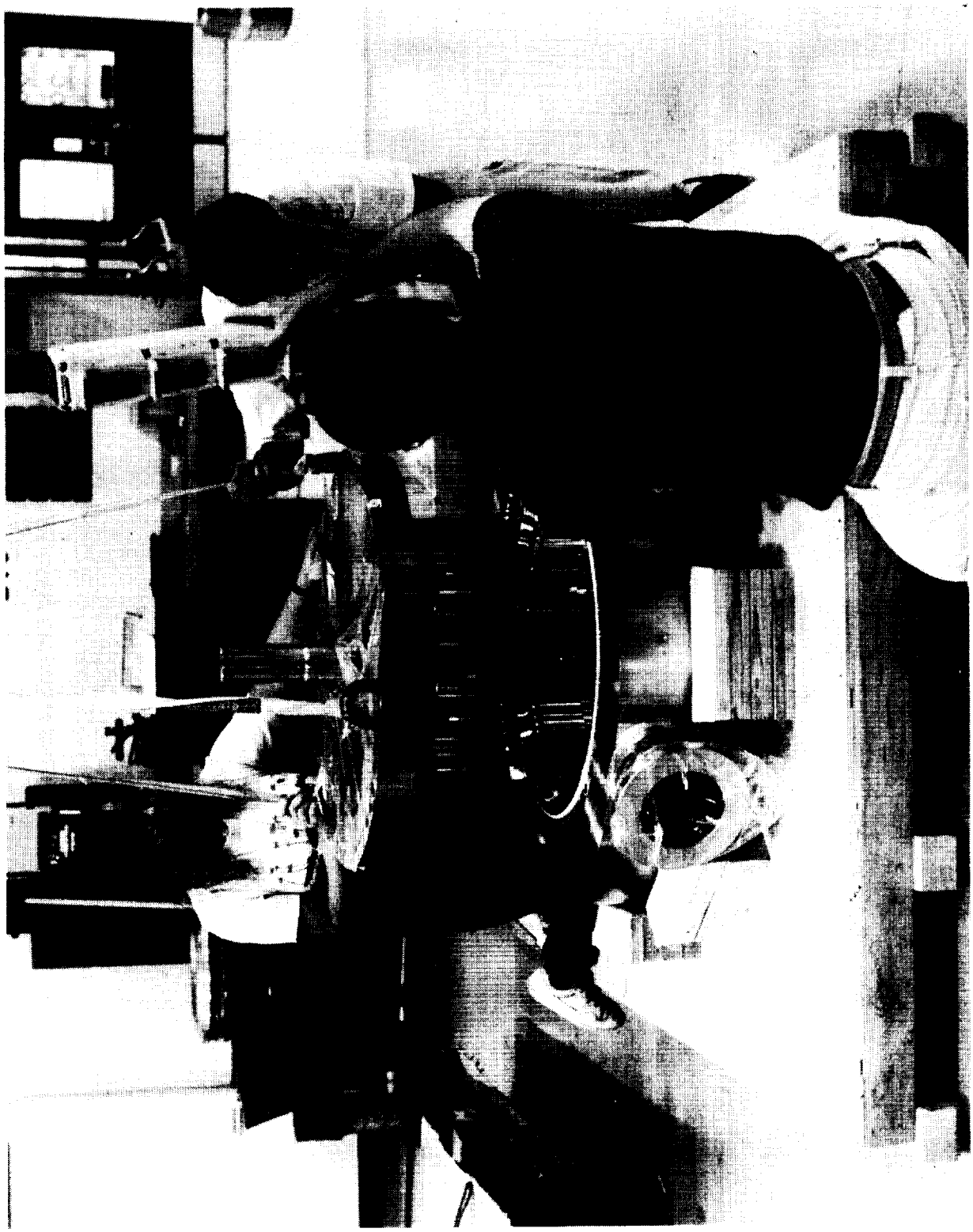

Figure 3-83. Assembly of Injector Assy Into Fuel Manifold

ORIGINAL PAGE
BLACK AND WHITE PHOTOGRAPH

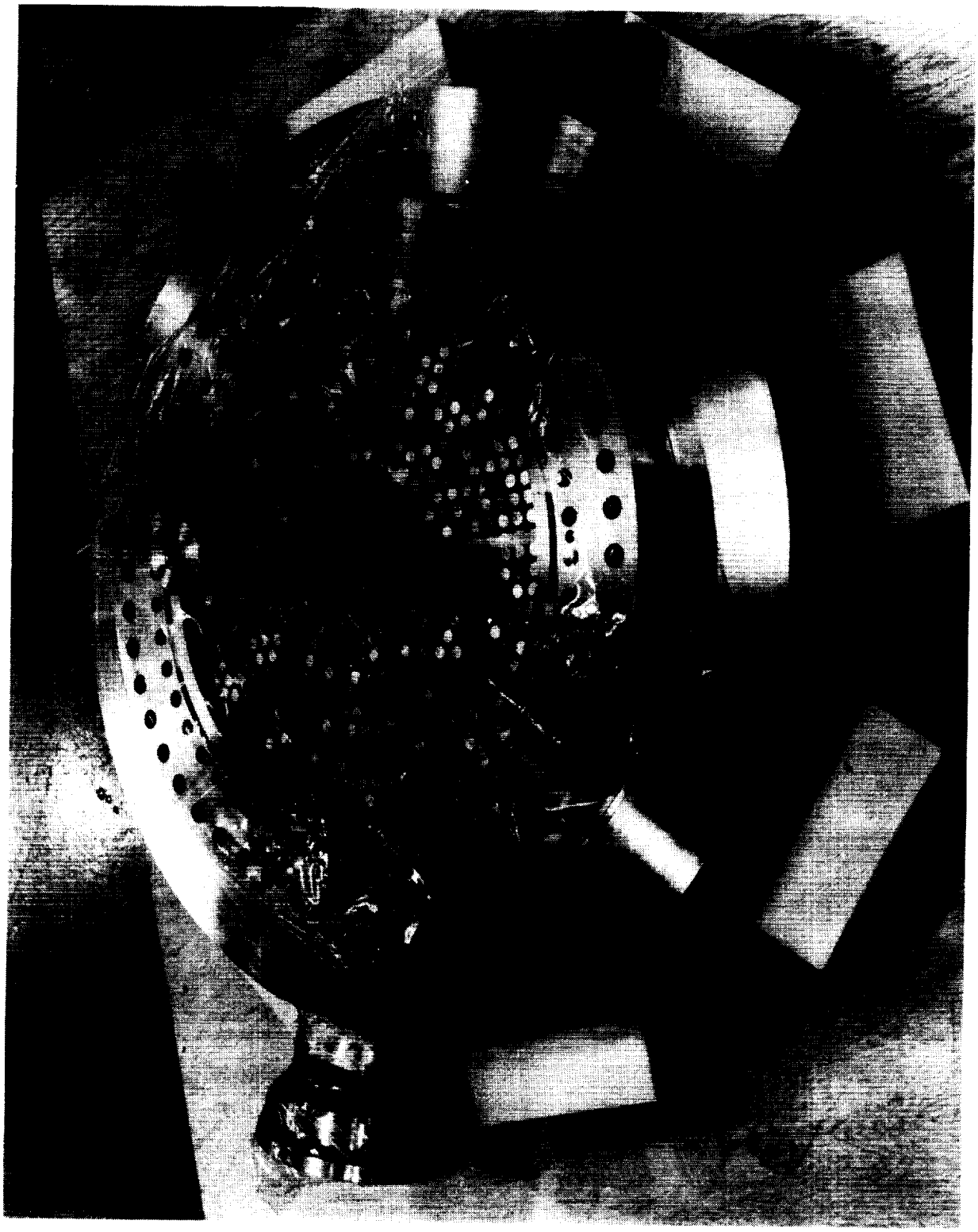

Figure 3-84. Injector/Fuel Manifold Assy Prior to Ox Cover Attachment

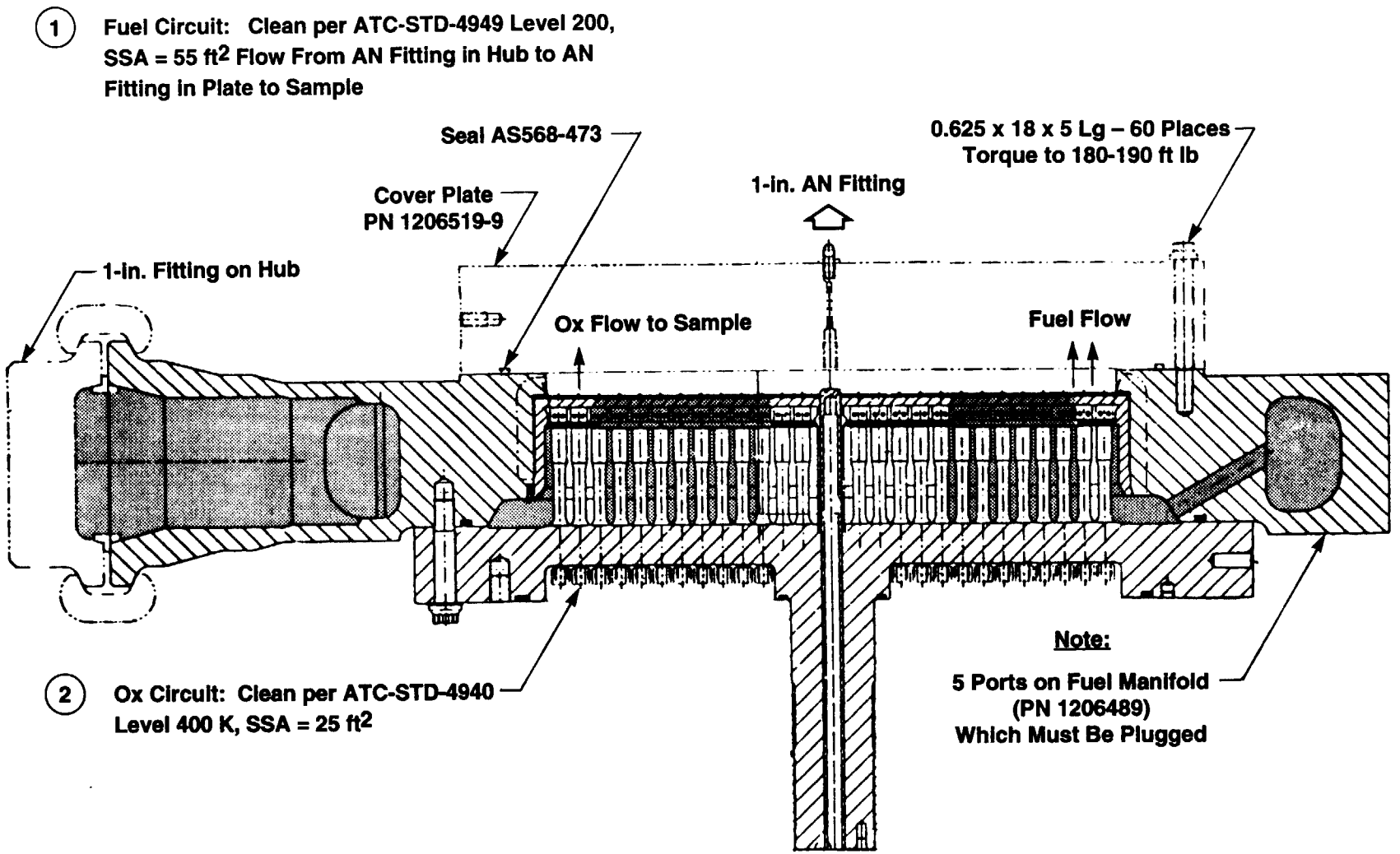

Ox Circuit

Weight = 2700 lb

Figure 3-85. Assembly 1206466 – Tool for Cleaning: Fuel and Oxidizer Circuits Back Flush Fuel

ORIGINAL PAGE
BLACK AND WHITE PHOTOGRAPH

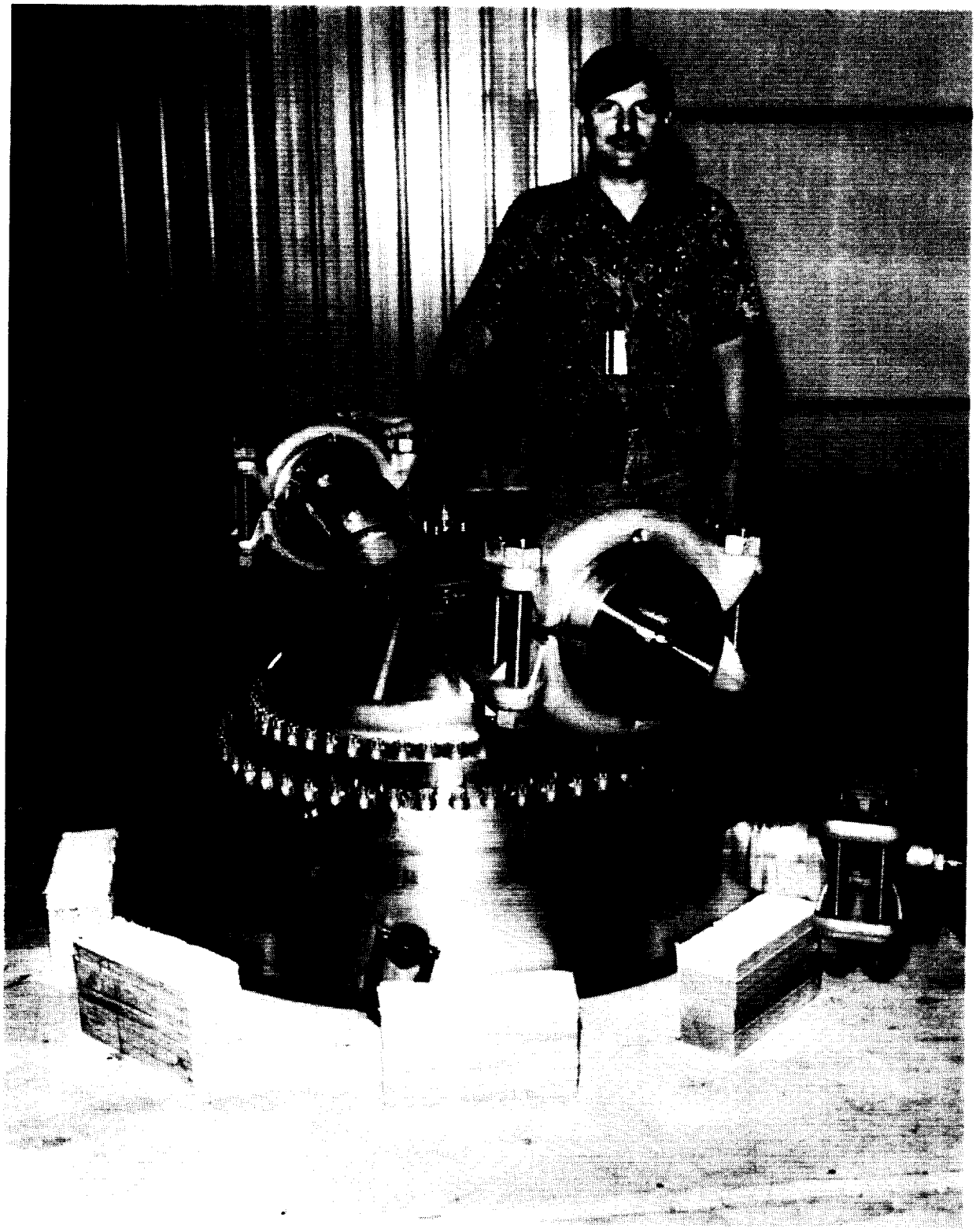

Figure 3-86. Completed Thruster Assy Prior to Shipping to NASA-MSFC

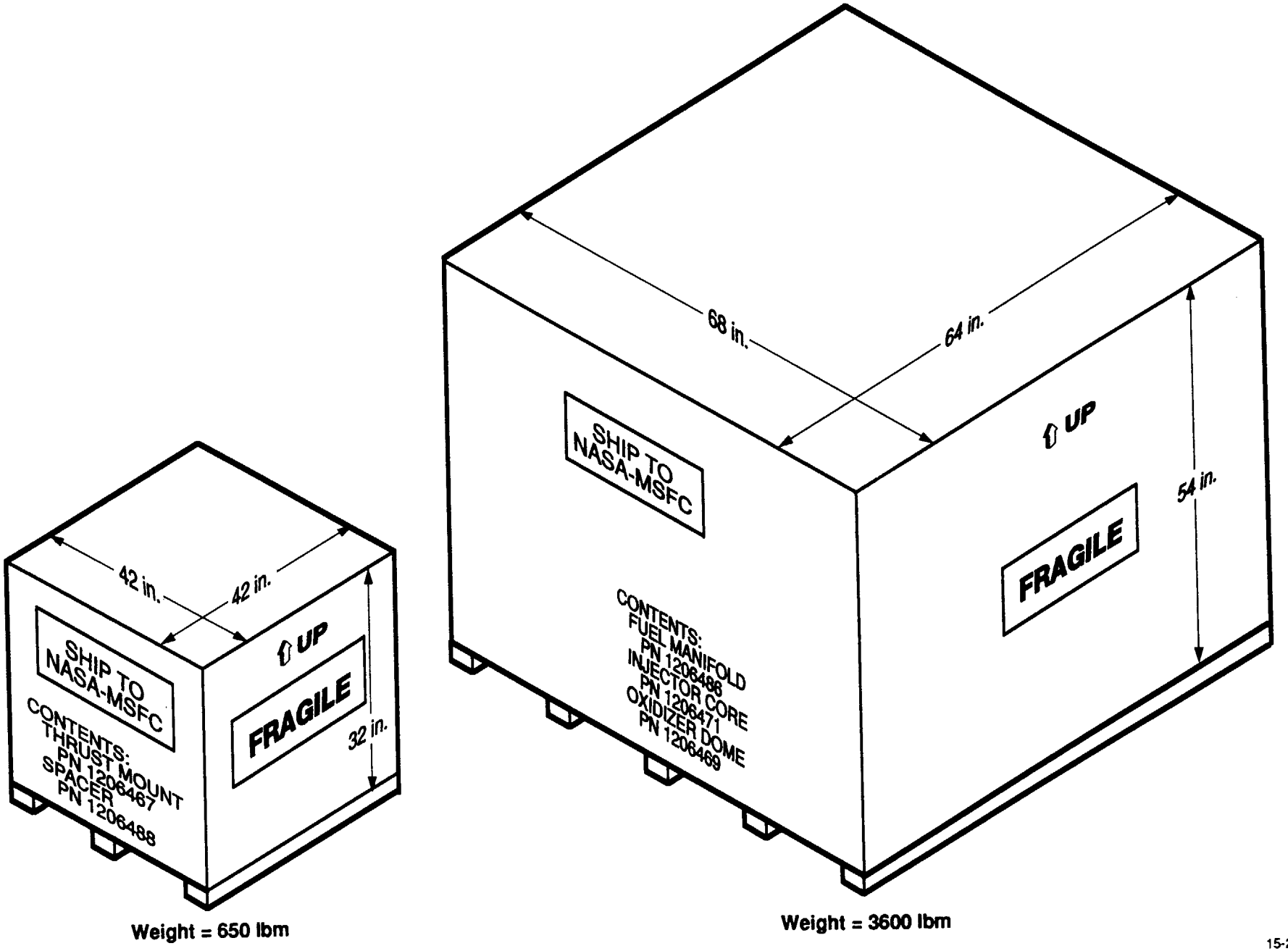

15-22-19

Figure 3-87. Shipping Crates for LSI Hardware

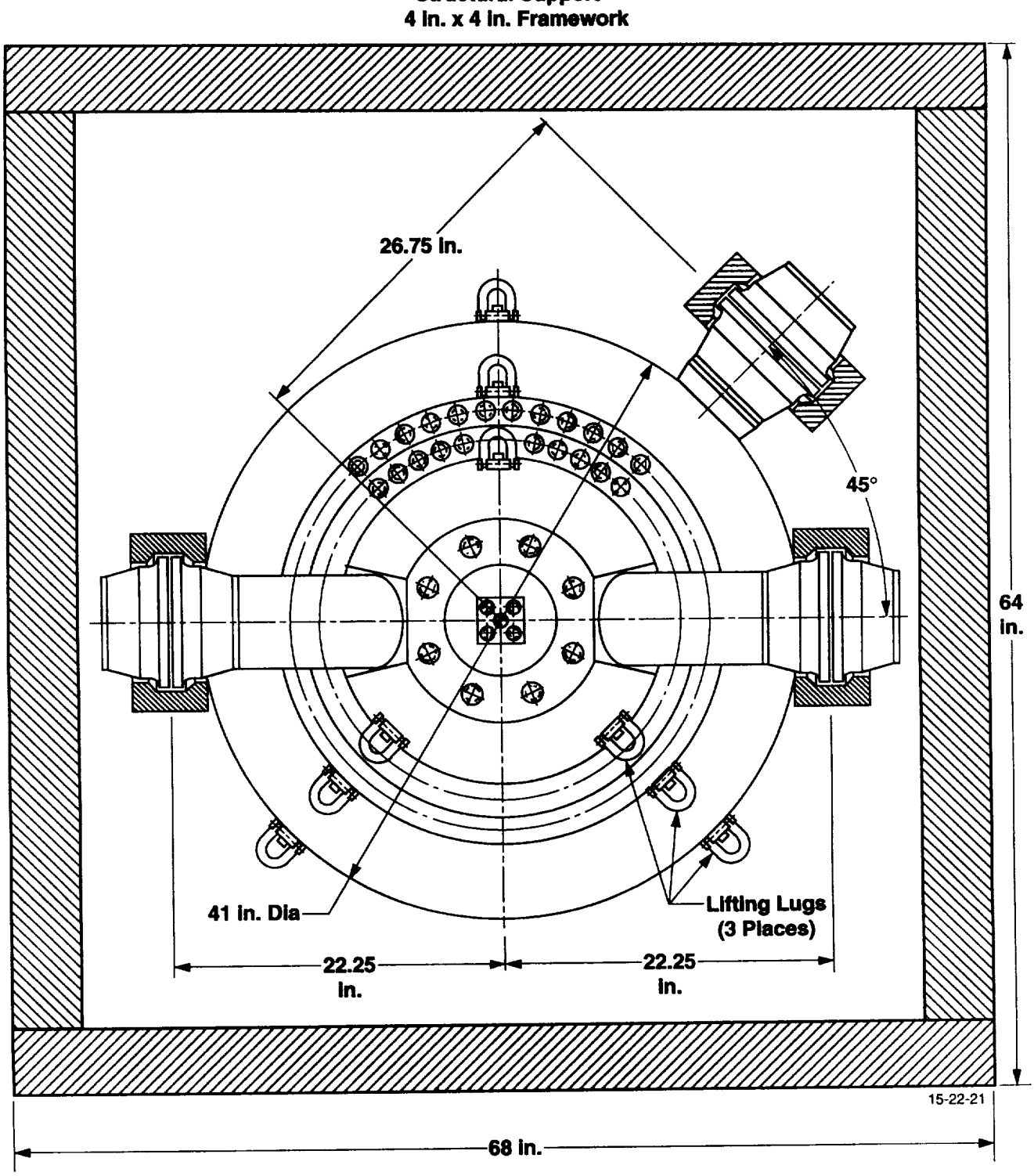

Figure 3-88. Top View of Shipping Crate With Thruster Assembly

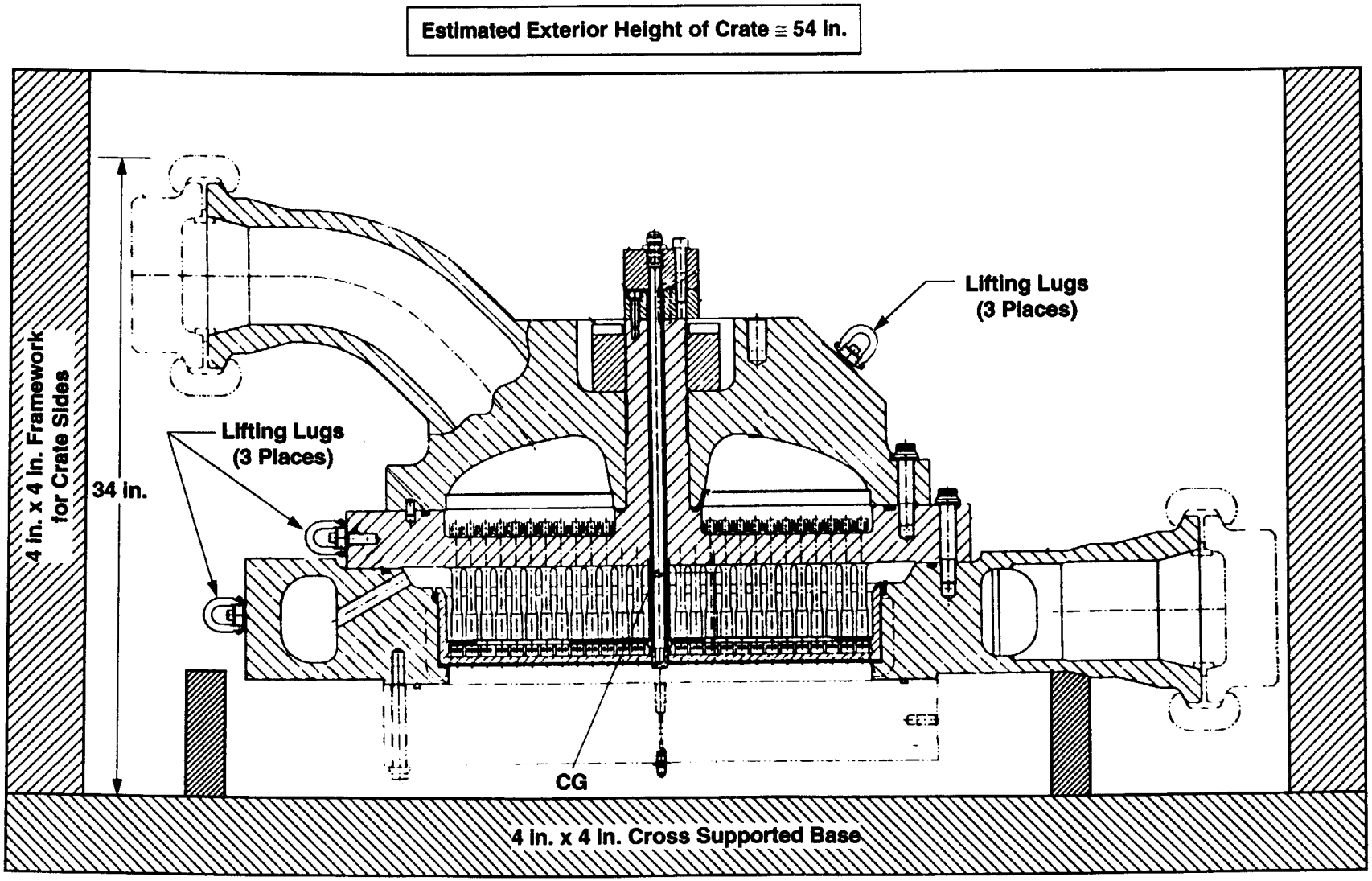

15-22-20

Figure 3-89. Cross Section View of Shipping Crate With Thruster Assembly

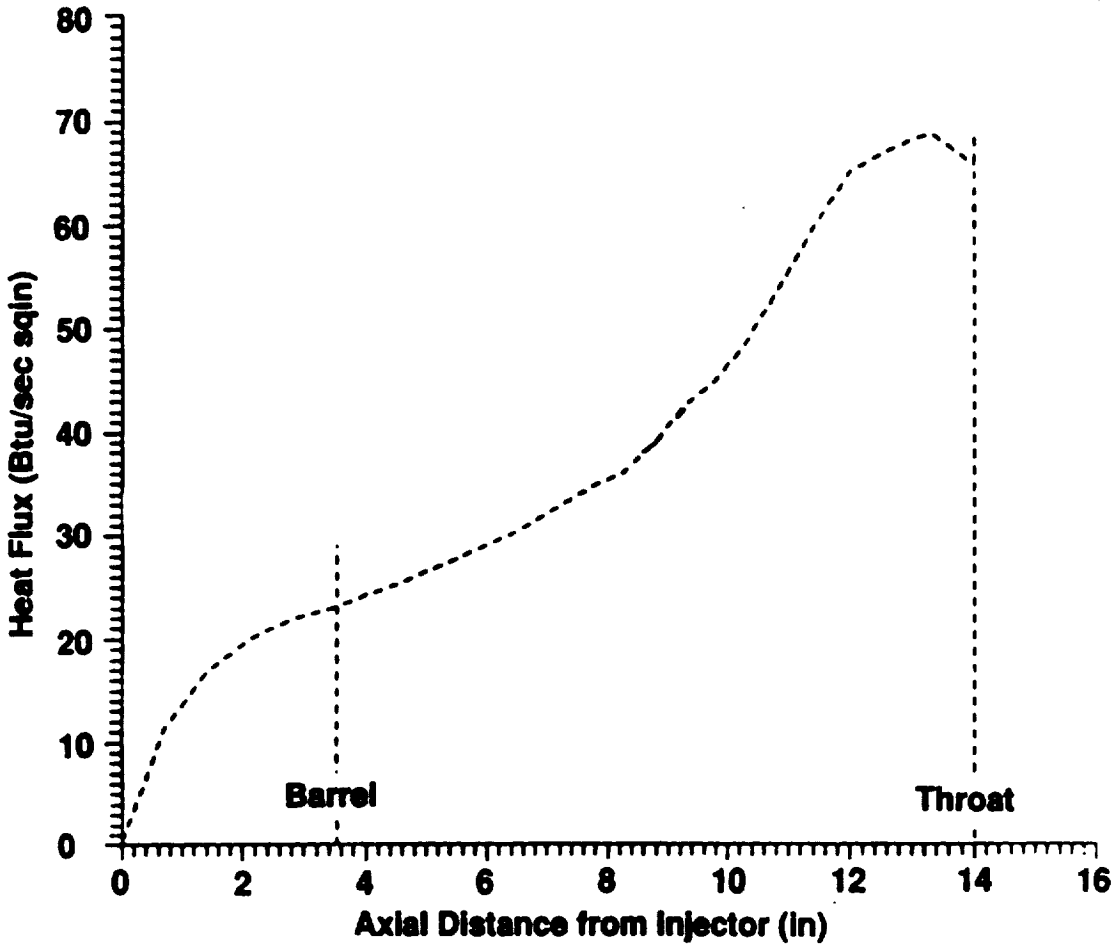

Figure 3-90. ADP Maximum Predicted Heat Flux With LSI Injector

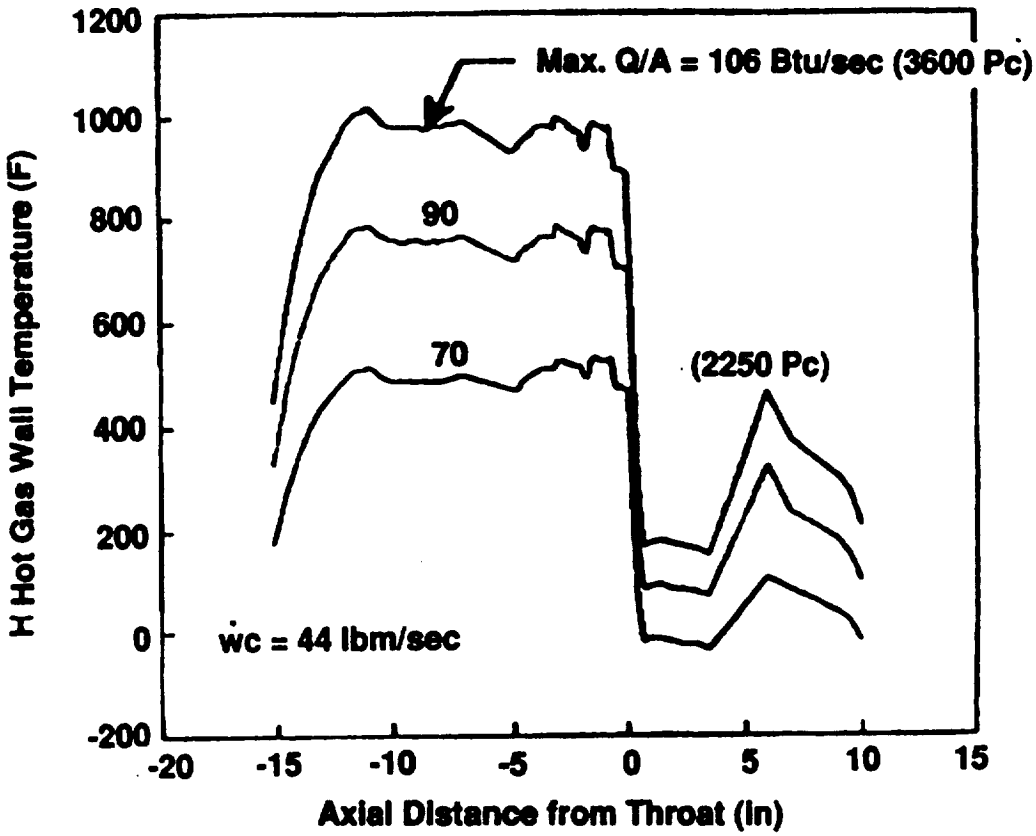

Figure 3-91. Hot Gas Wall Temperature Profiles (for RD Chamber)

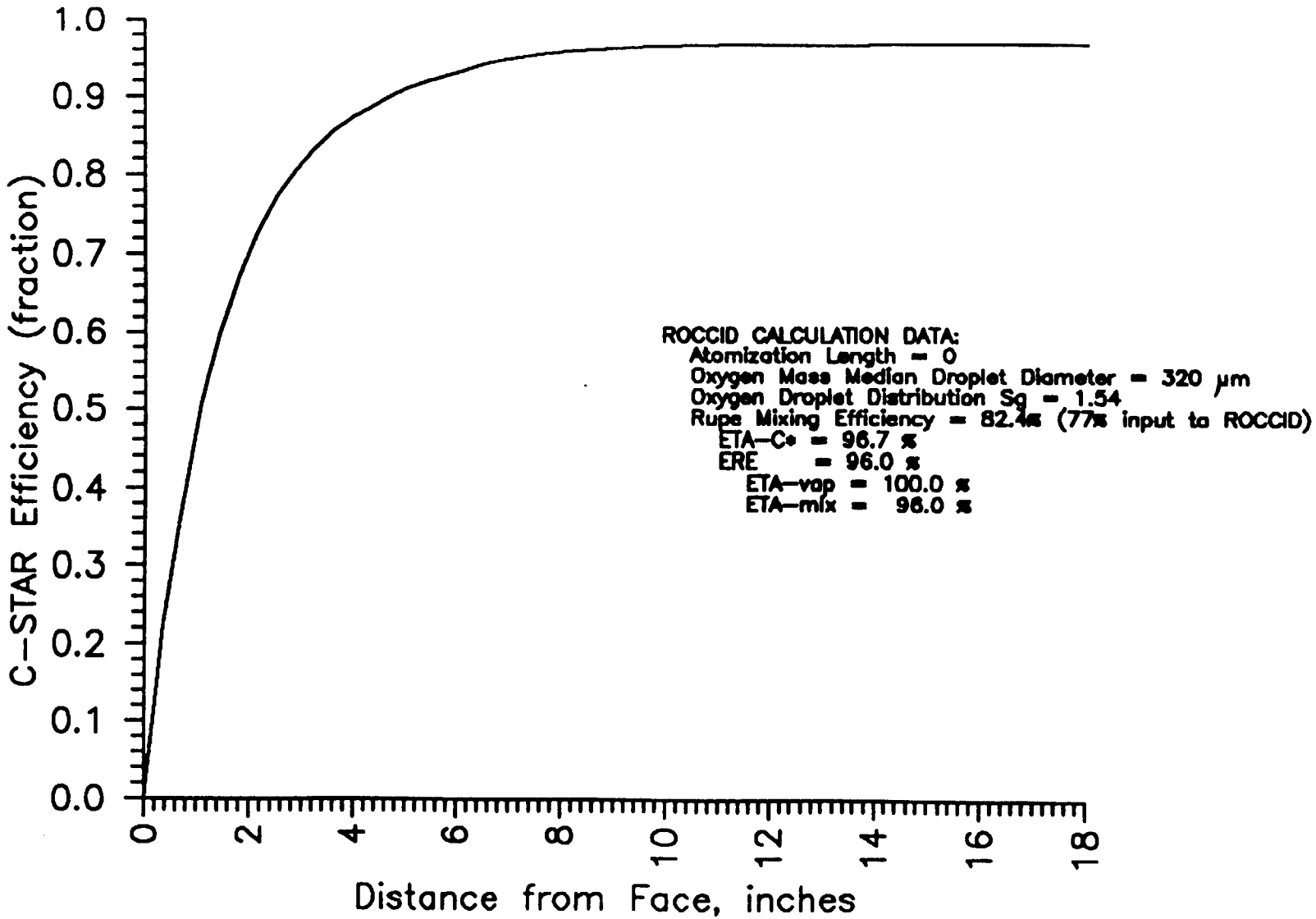

Figure 3-92. LSI Fullscale Injector Analyses Performance – Low Pc* = 1750 psia, O/F = 6.20

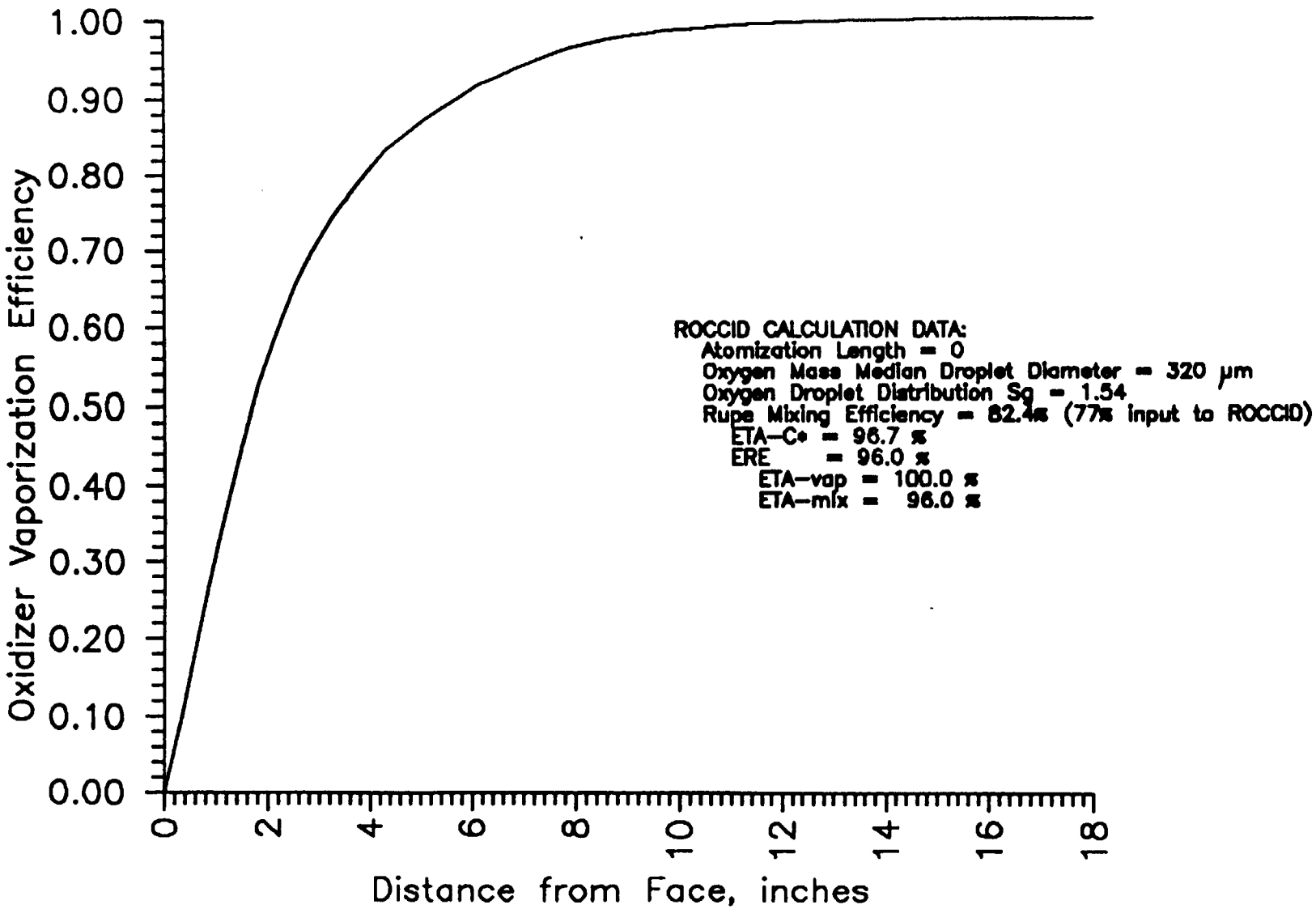

Figure 3-93. LSI Fullscale Injector Analyses Performance – Low Pc* = 1750 psia, O/F = 6.20

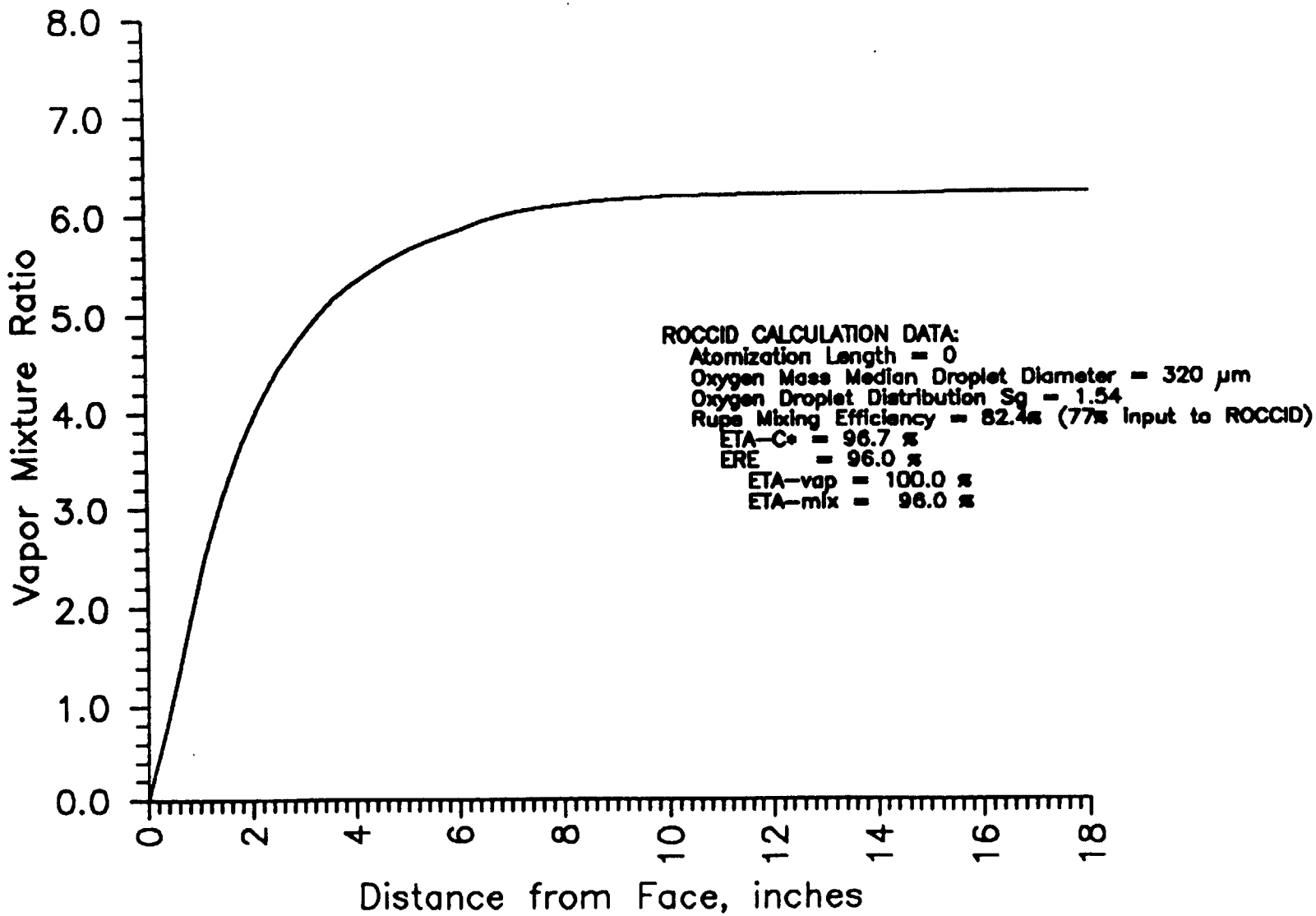

Figure 3-94. LSI Fullscale Injector Analyses Performance – Low Pc* = 1750 psia, O/F = 6.20

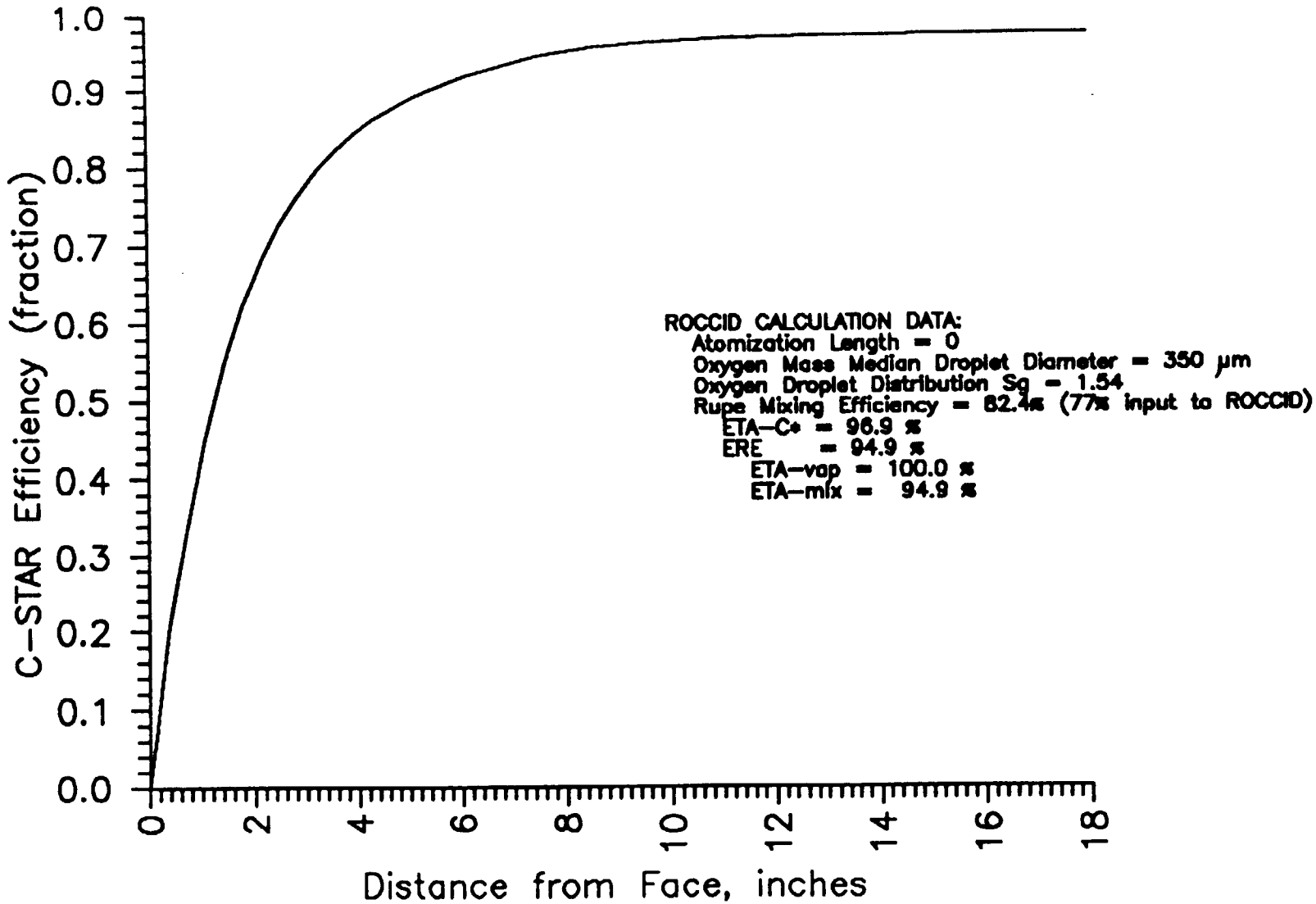

Figure 3-95. LSI Fullscale Injector Analyses Performance – Nominal Pc* = 2250 psia, O/F = 7.10

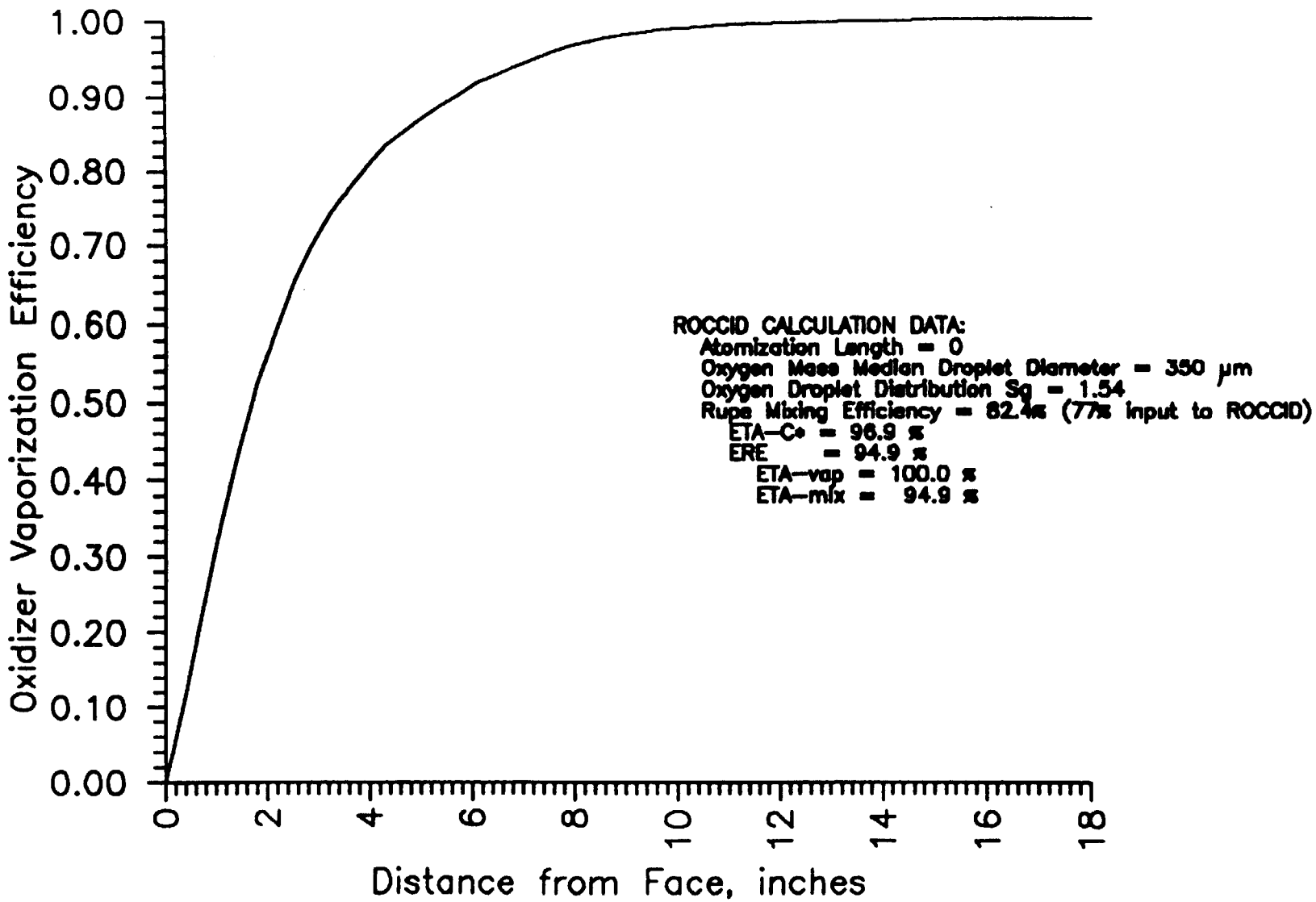

Figure 3-96. LSI Fullscale Injector Analyses Performance – Nominal Pc* = 2250 psia, O/F = 7.10

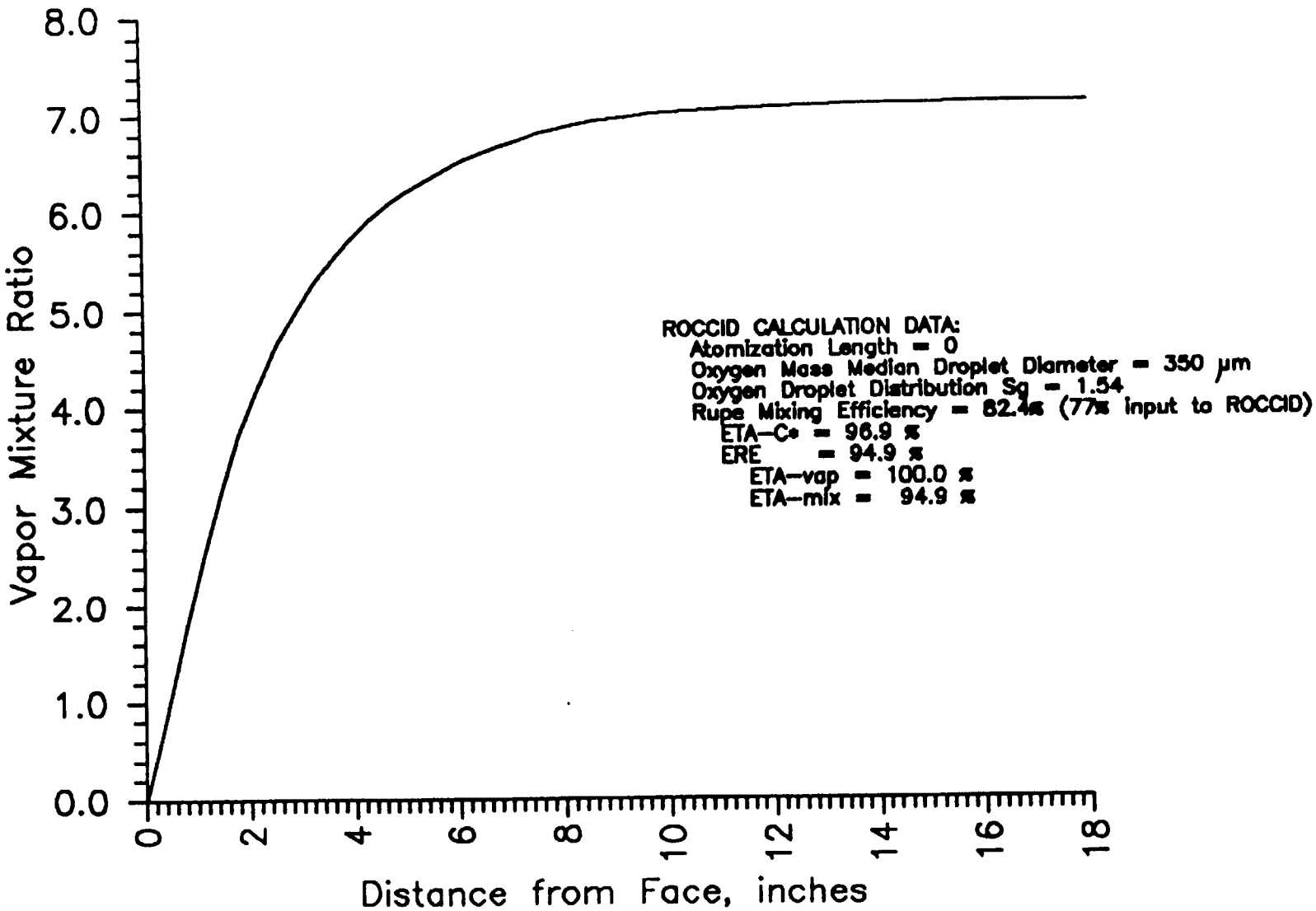

Figure 3-97. LSI Fullscale Injector Analyses Performance – Nominal Pc* = 2250 psia, O/F = 7.10

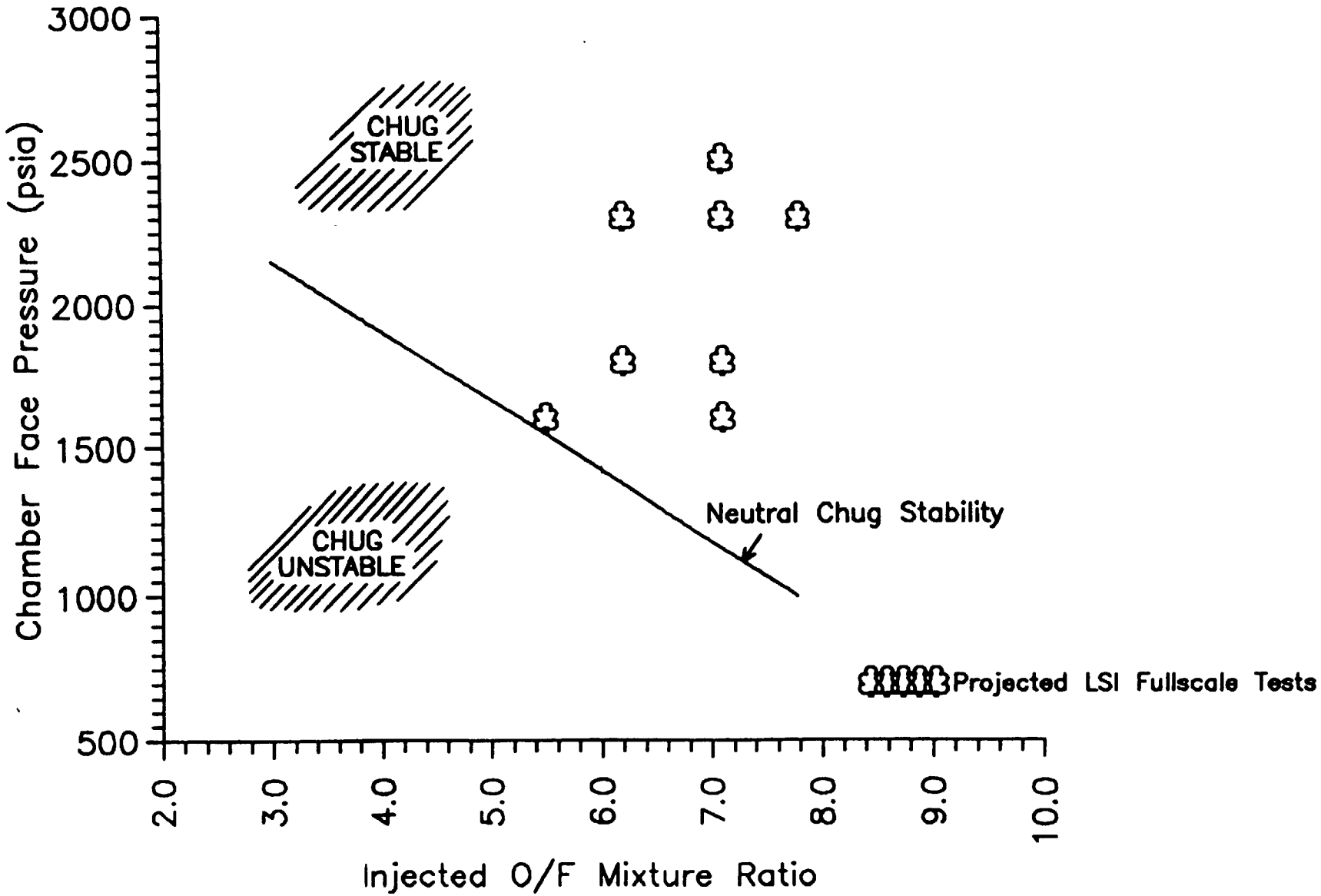

Figure 3-98. LSI Fullscale Injector Analyses Chamber Pressure Versus Mixture Ratio – Chug Prediction

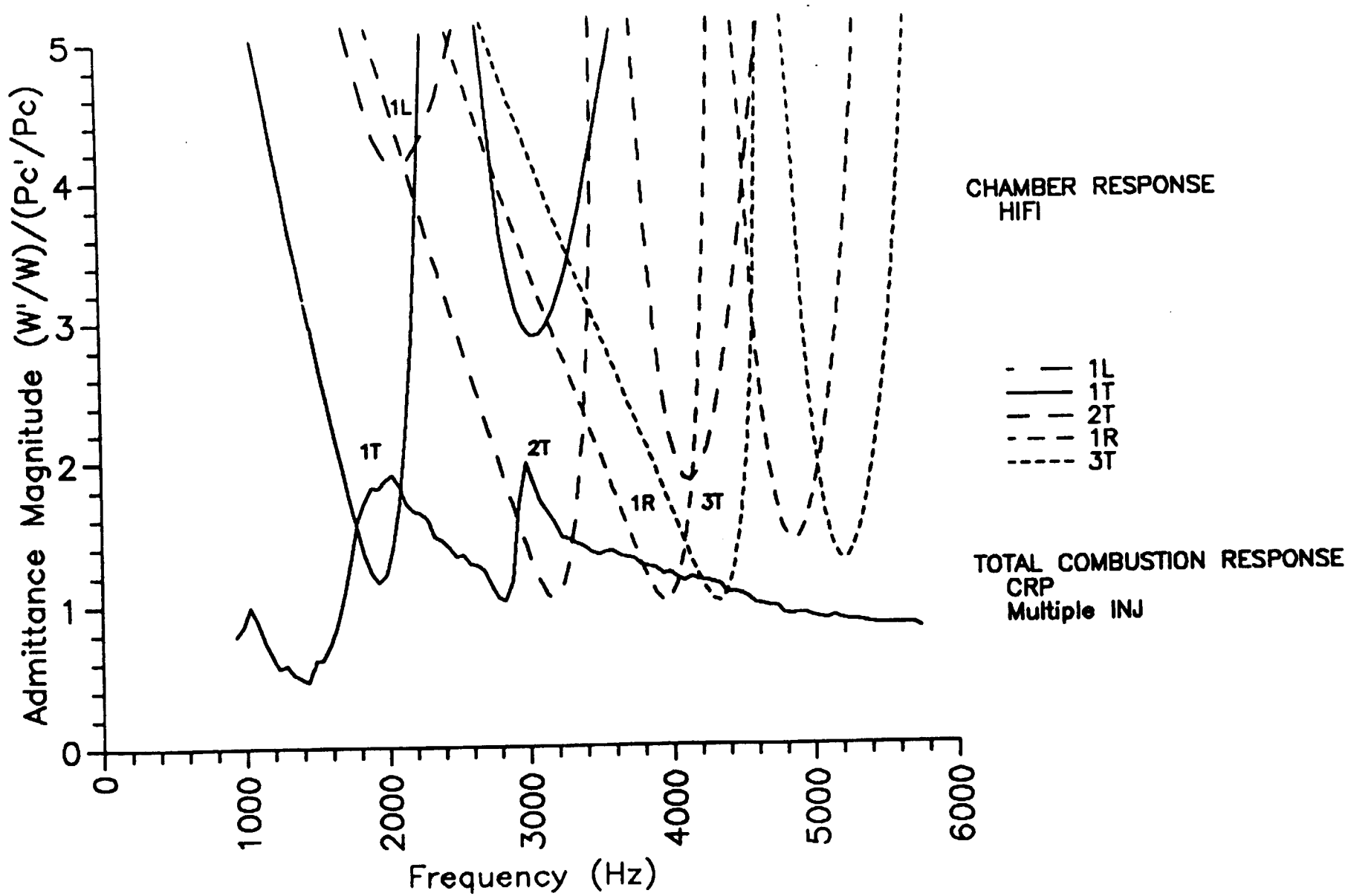

Figure 3-99. LSI Fullscale Injector Analyses High Frequency Stability – Low Pc* = 1750 psia, O/F = 6.20

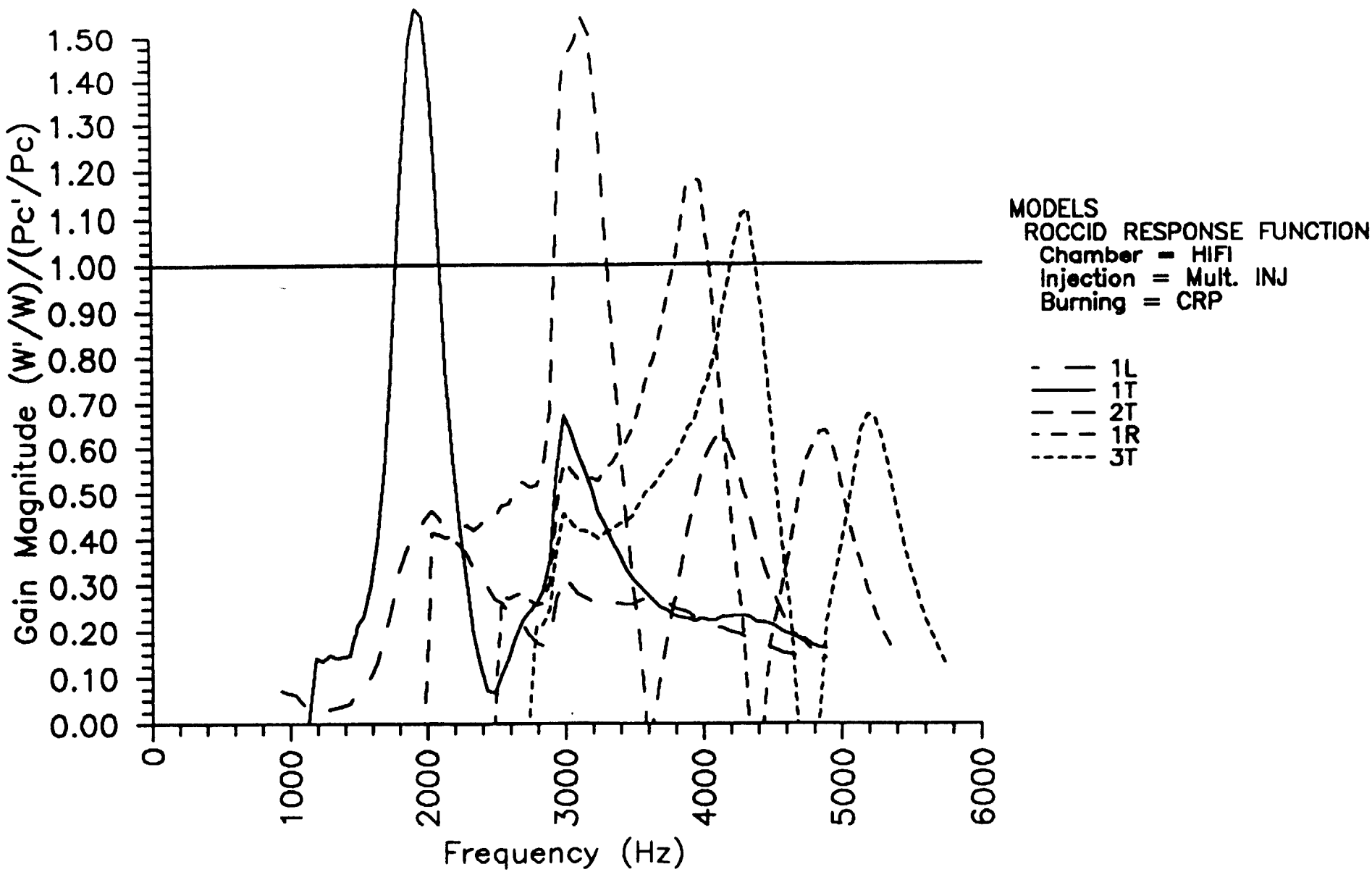

Figure 3-100. LSI Fullscale Injector Analyses High Frequency Stability – Low Pc* = 1750 psia, O/F = 6.20

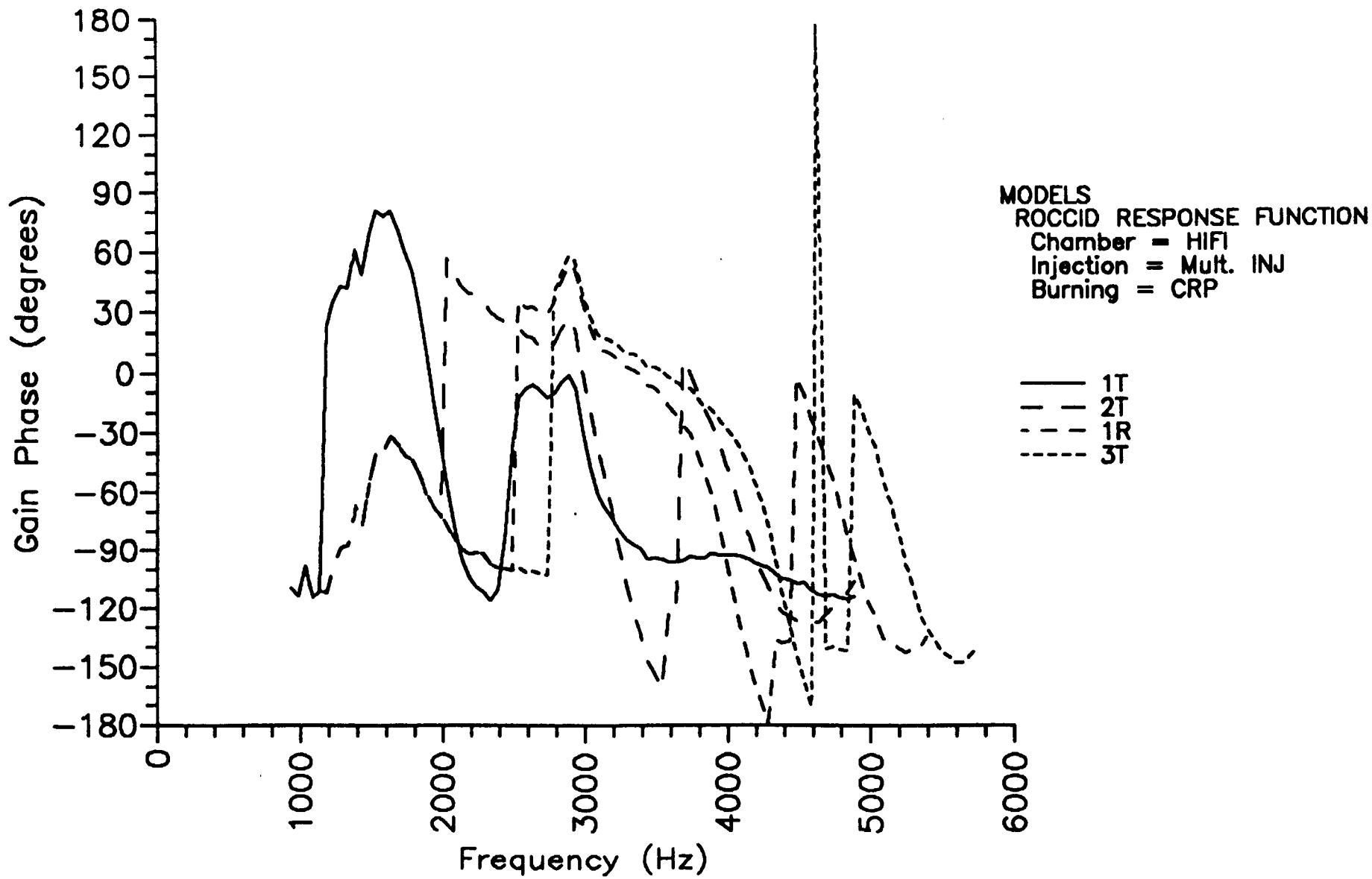

Figure 3-101. LSI Fullscale Injector Analyses High Frequency Stability – Low Pc* = 1750 psia, O/F = 6.20

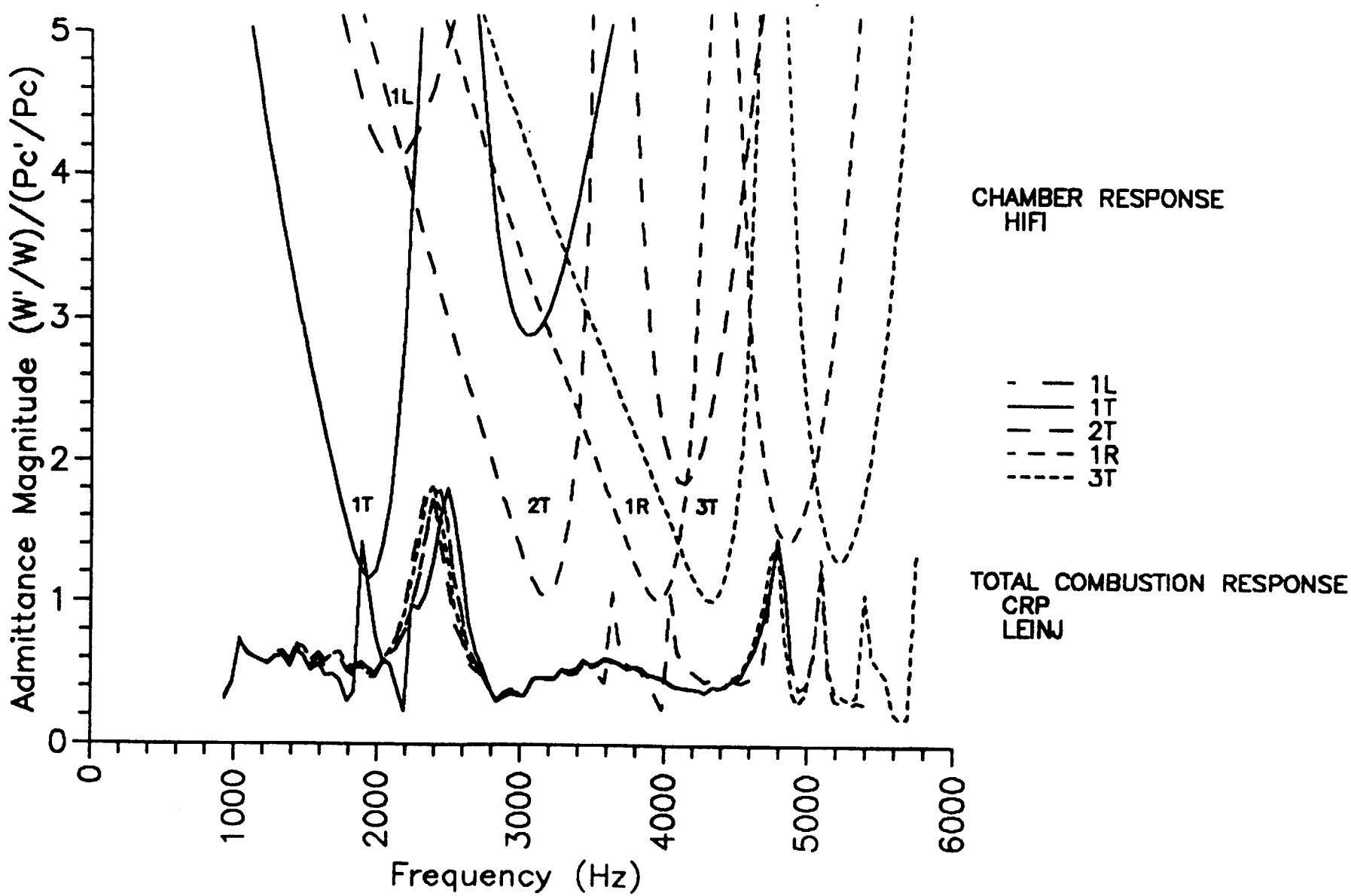

Figure 3-102. LSI Fullscale Injector Analyses High Frequency Stability – Low Pc* = 1750 psia, O/F = 6.20

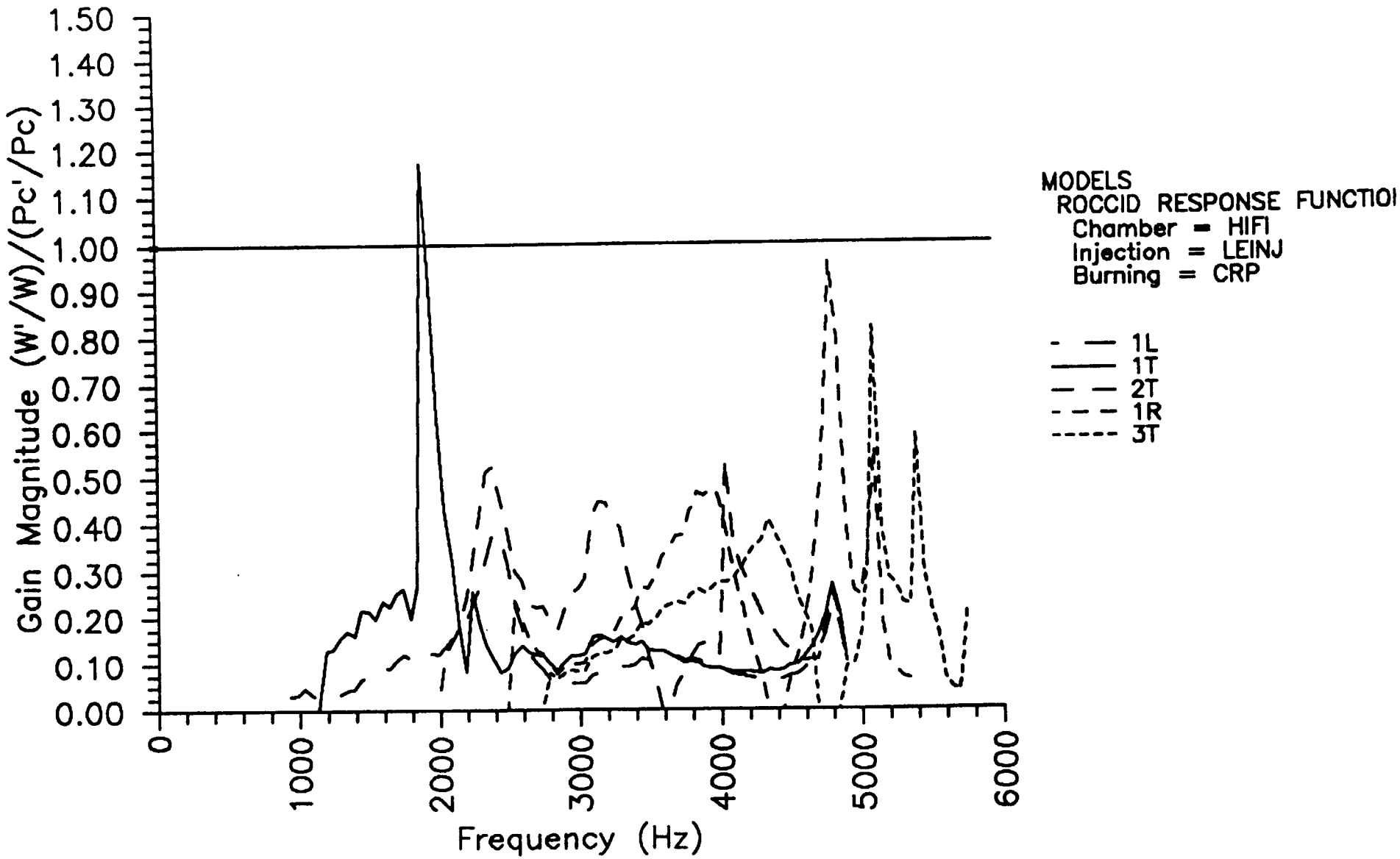

Figure 3-103. LSI Fullscale Injector Analyses High Frequency Stability – Low Pc* = 1750 psia, O/F = 6.20

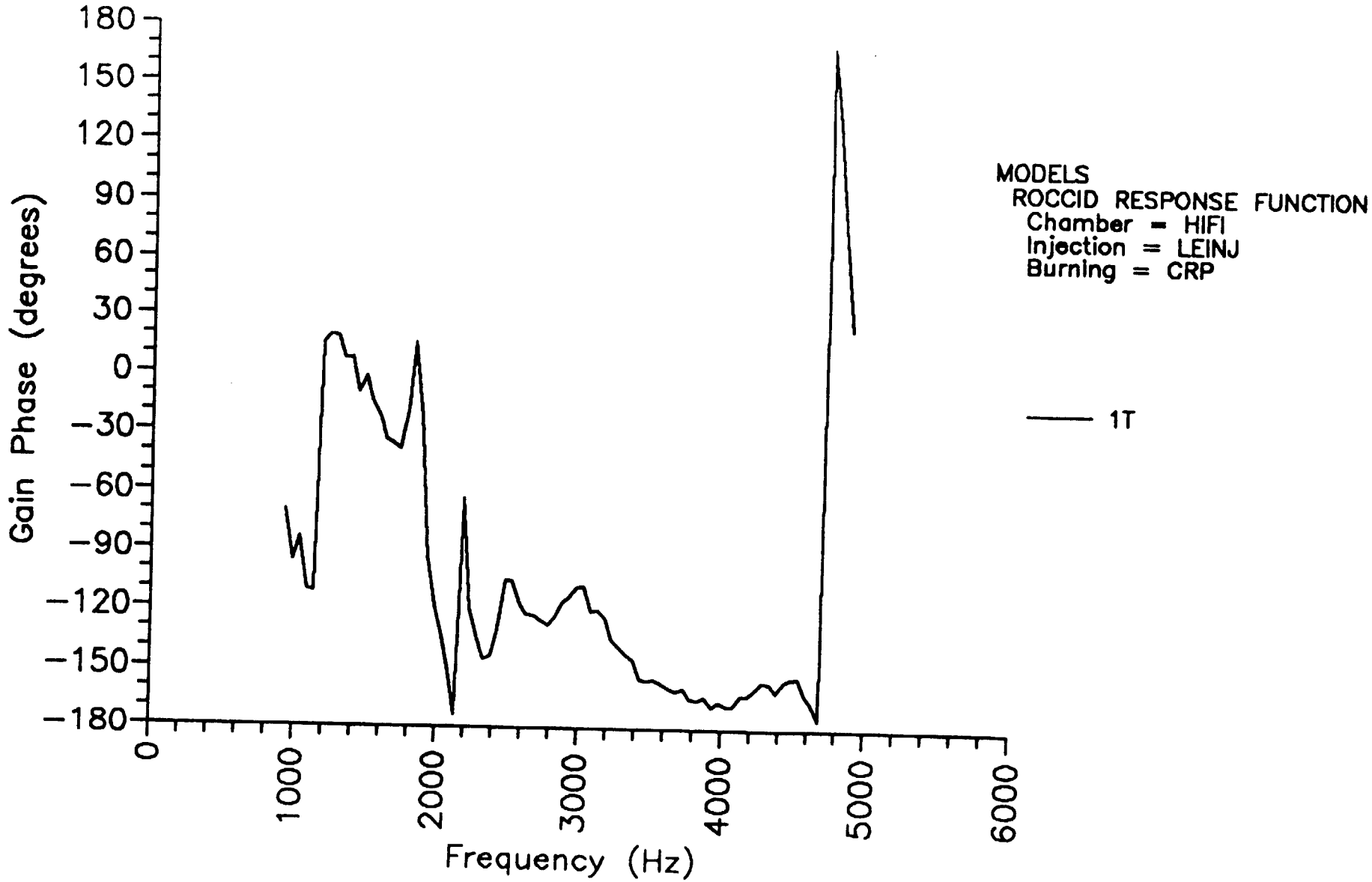

Figure 3-104. LSI Fullscale Injector Analyses High Frequency Stability – Low Pc* = 1750 psia, O/F = 6.20

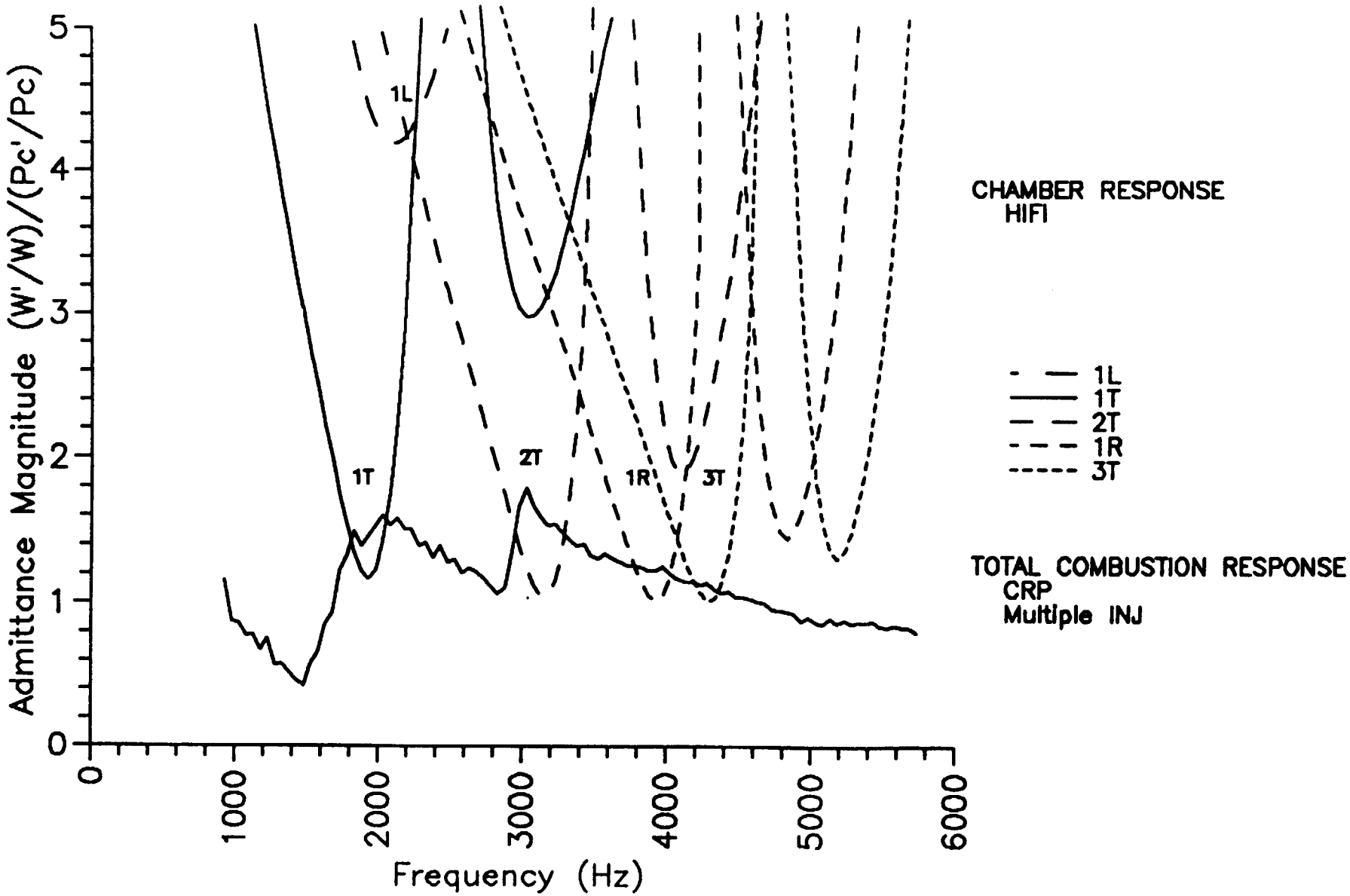

Figure 3-105. LSI Fullscale Injector Analyses High Frequency Stability – Nominal Pc* = 2250 psia, O/F = 7.10

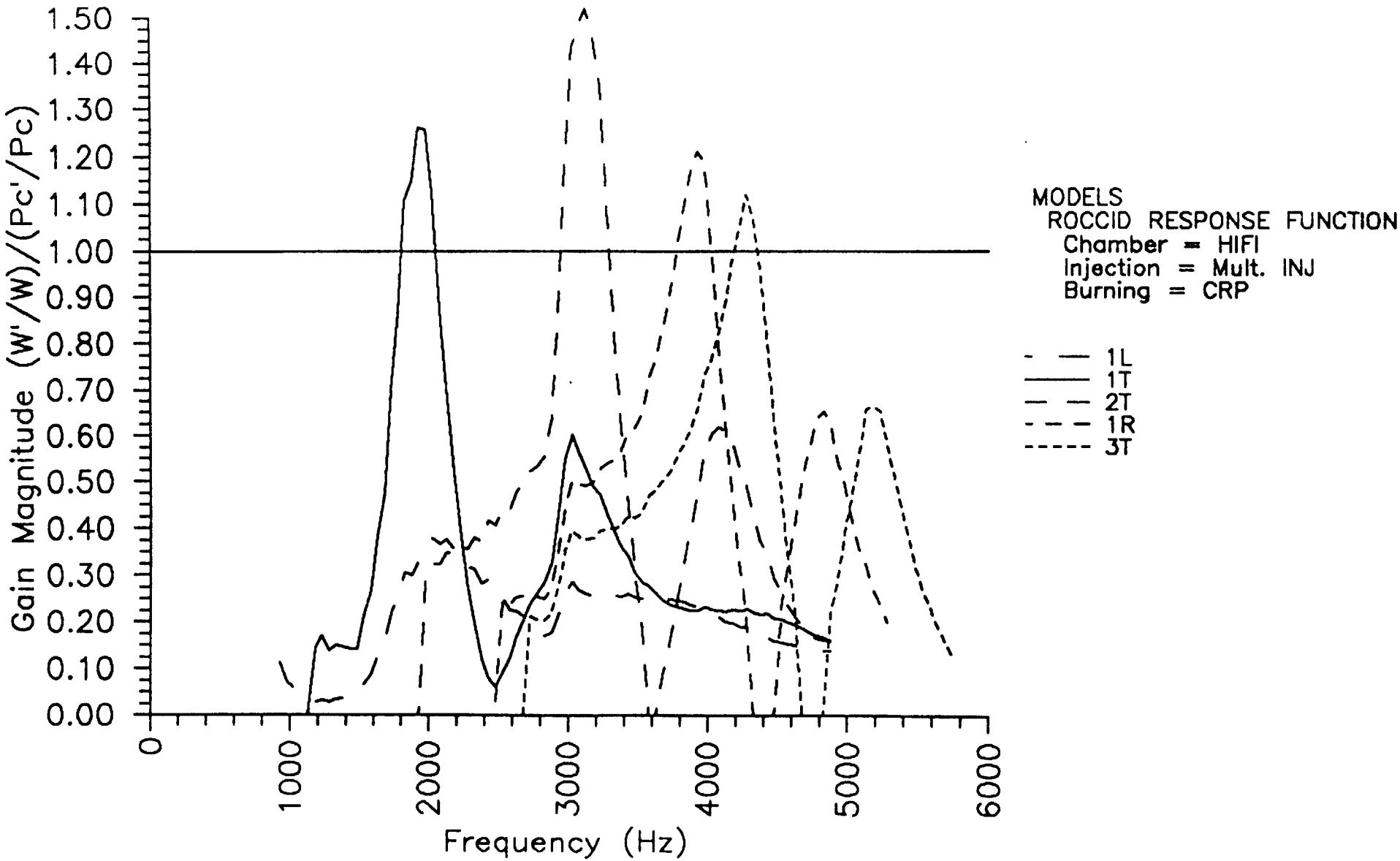

Figure 3-106. LSI Fullscale Injector Analyses High Frequency Stability – Nominal Pc* = 2250 psia, O/F = 7.10

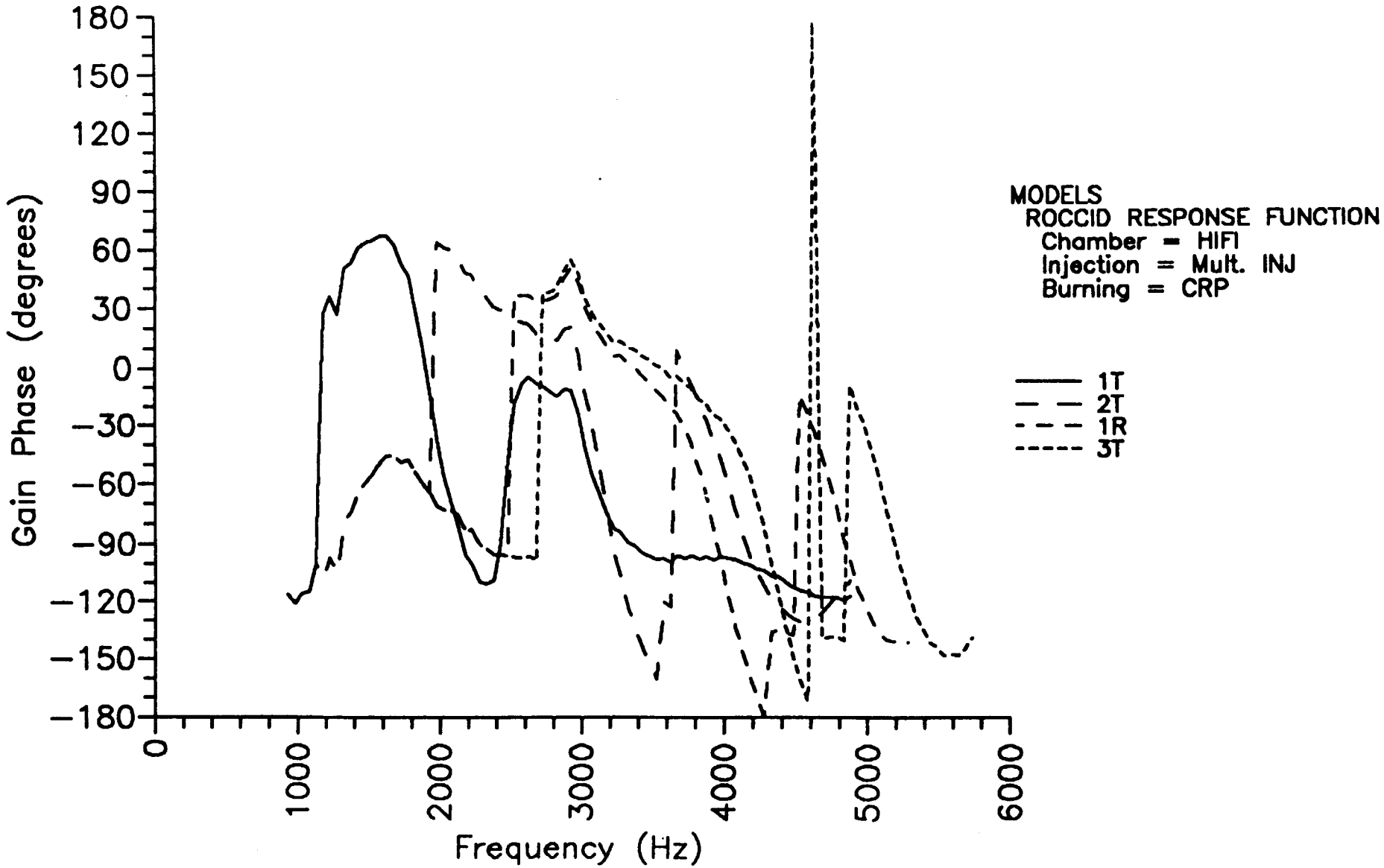

Figure 3-107. LSI Fullscale Injector Analyses High Frequency Stability – Nominal Pc* = 2250 psia, O/F = 7.10

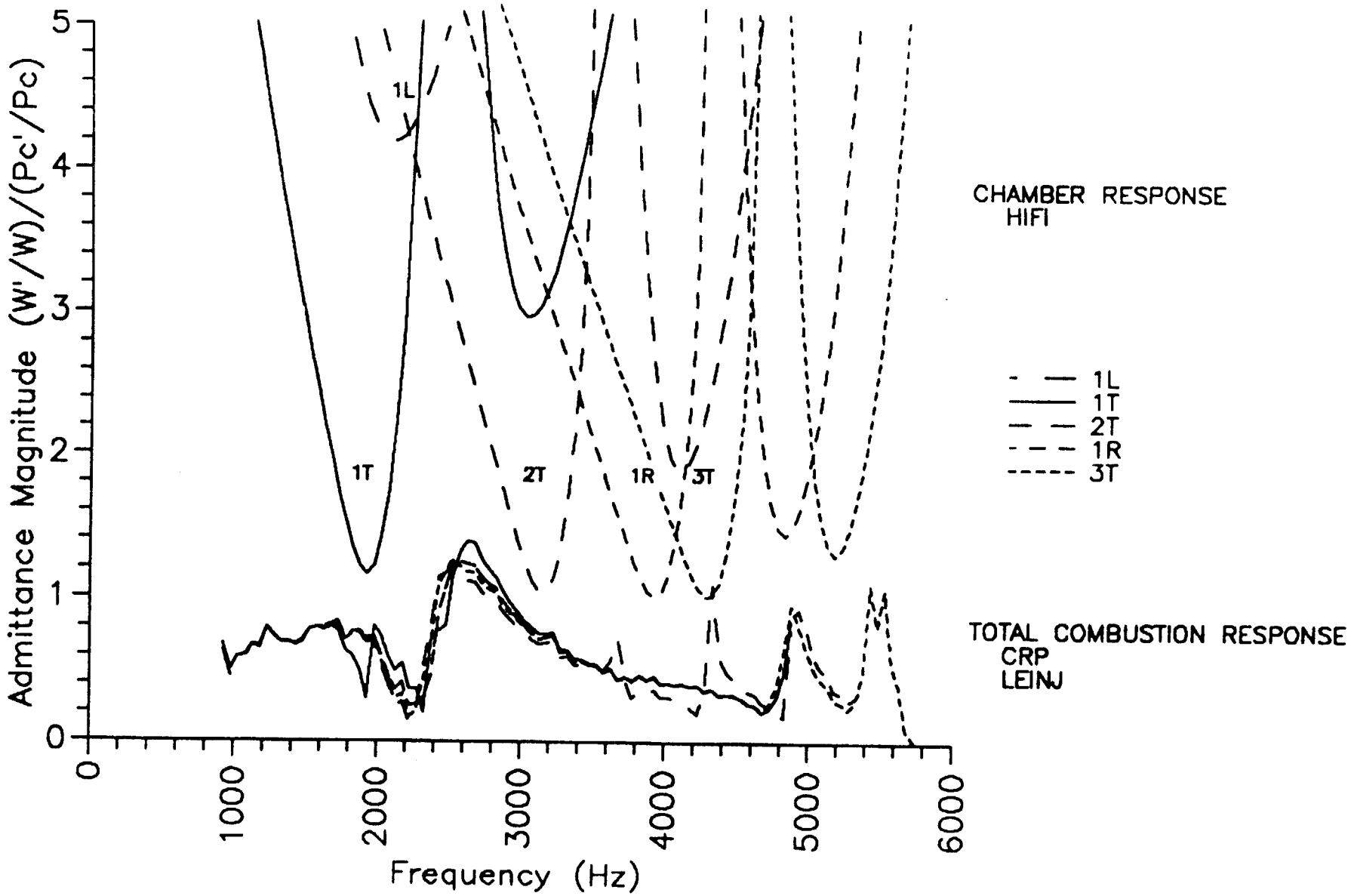

Figure 3-108. LSI Fullscale Injector Analyses High Frequency Stability – Nominal Pc* = 2250 psia, O/F = 7.10

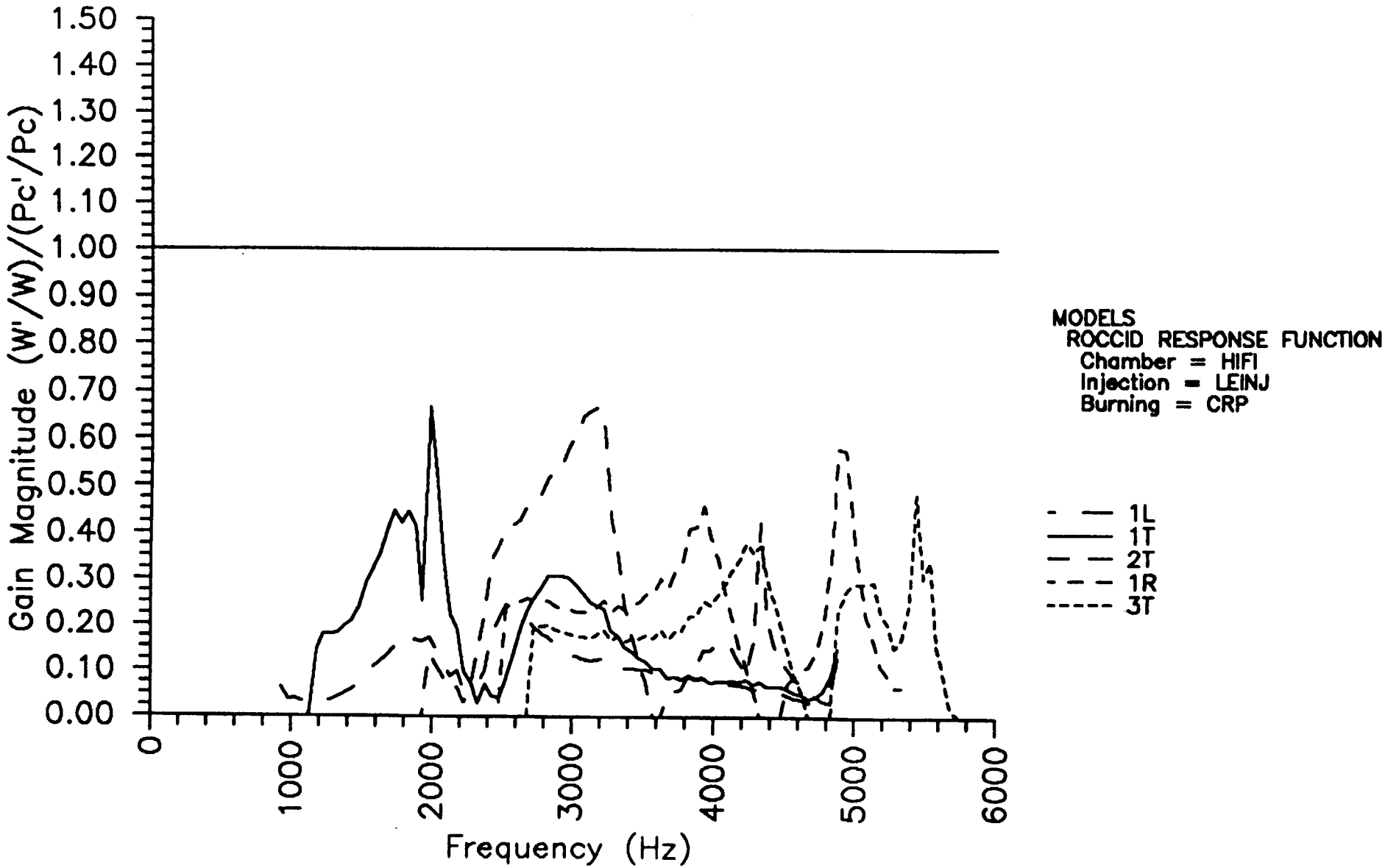

Figure 3-109. LSI Fullscale Injector Analyses High Frequency Stability – Nominal Pc* = 2250 psia, O/F = 7.10

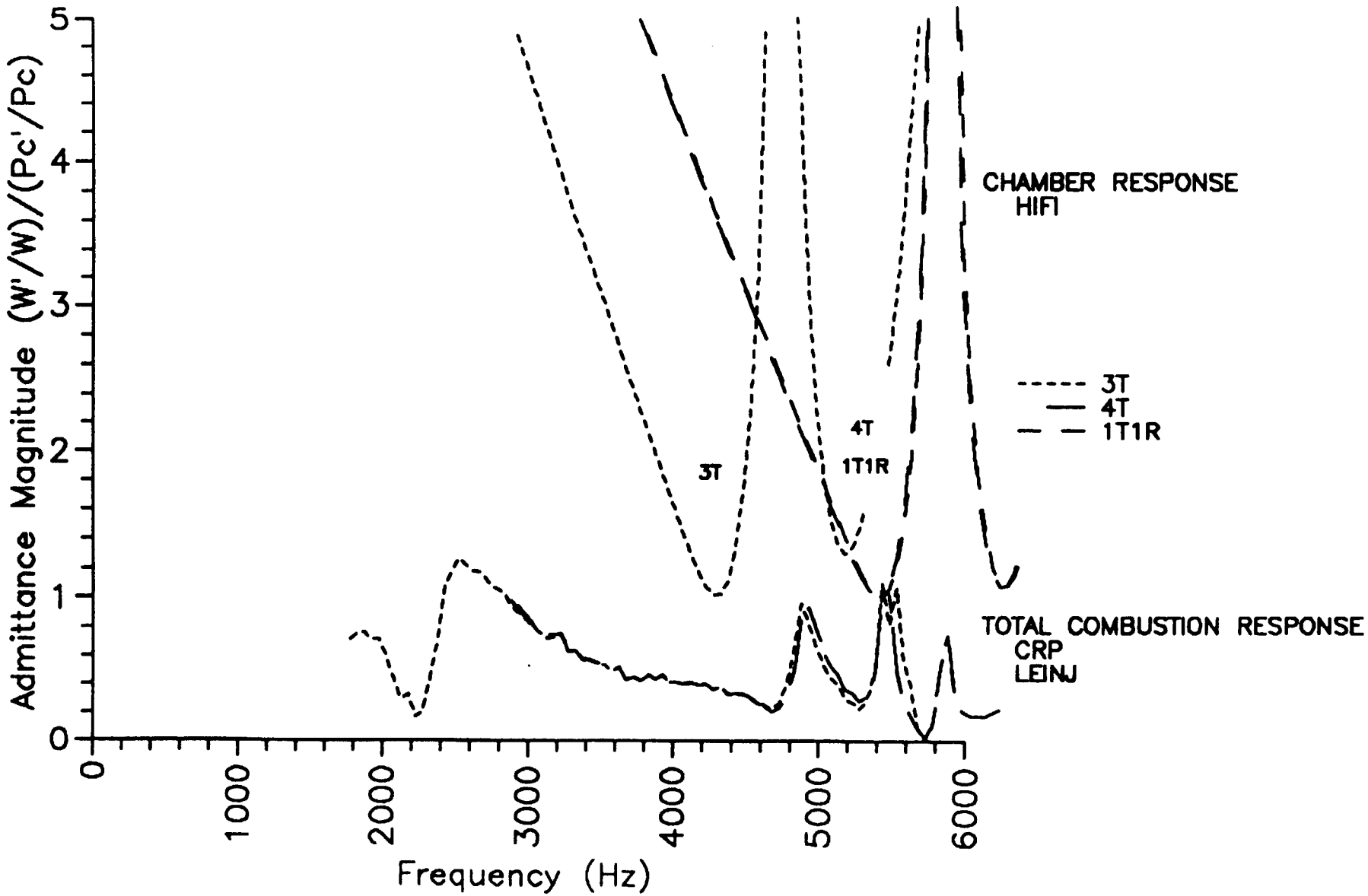

Figure 3-110. LSI Fullscale Injector Analyses High Frequency Stability – Nominal Pc* = 2250 psia, O/F = 7.10

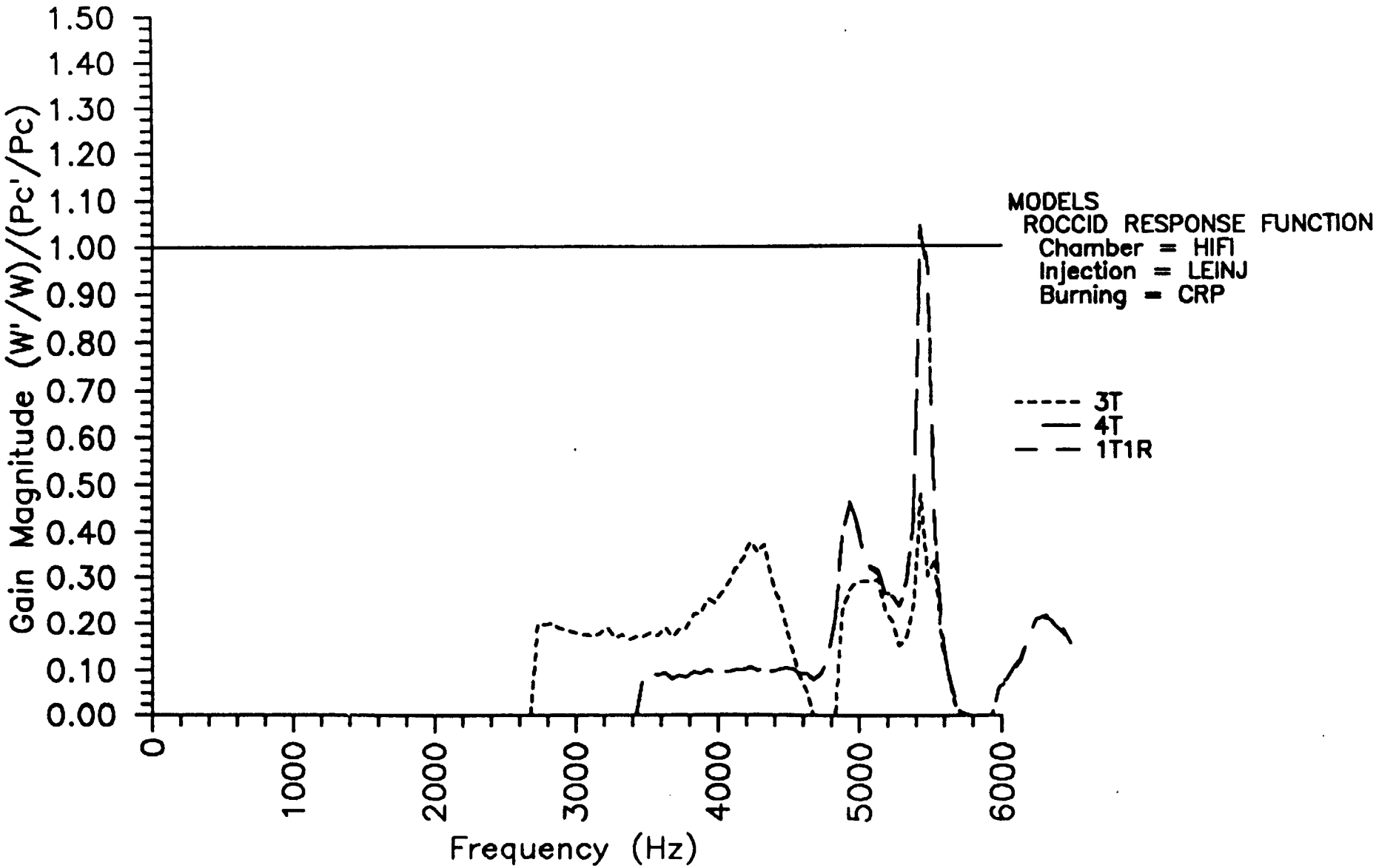

Figure 3-111. LSI Fullscale Injector Analyses High Frequency Stability – Nominal Pc* = 2250 psia, O/F = 7.10

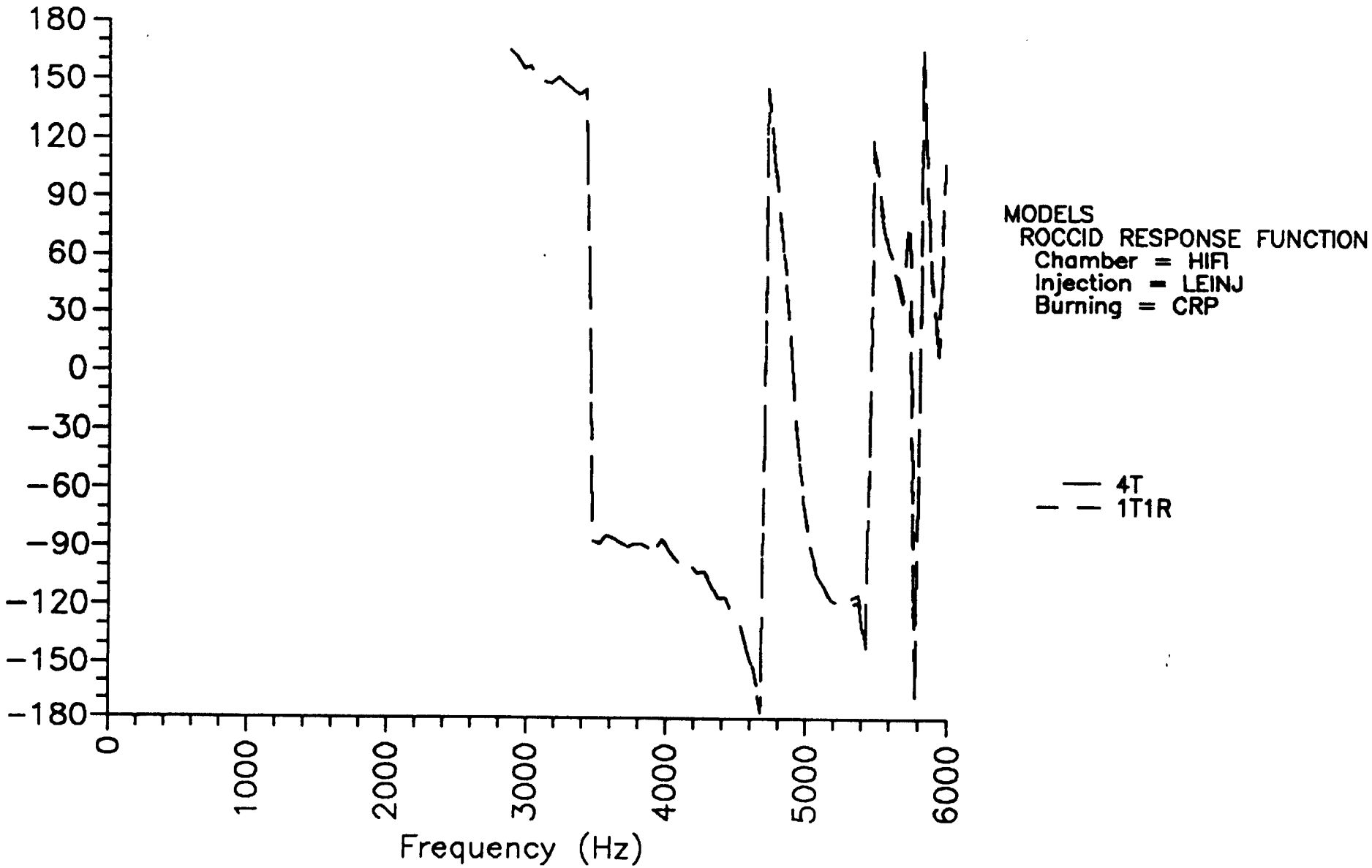

Figure 3-112. LSI Fullscale Injector Analyses High Frequency Stability – Nominal Pc* = 2250 psia, O/F = 7.10

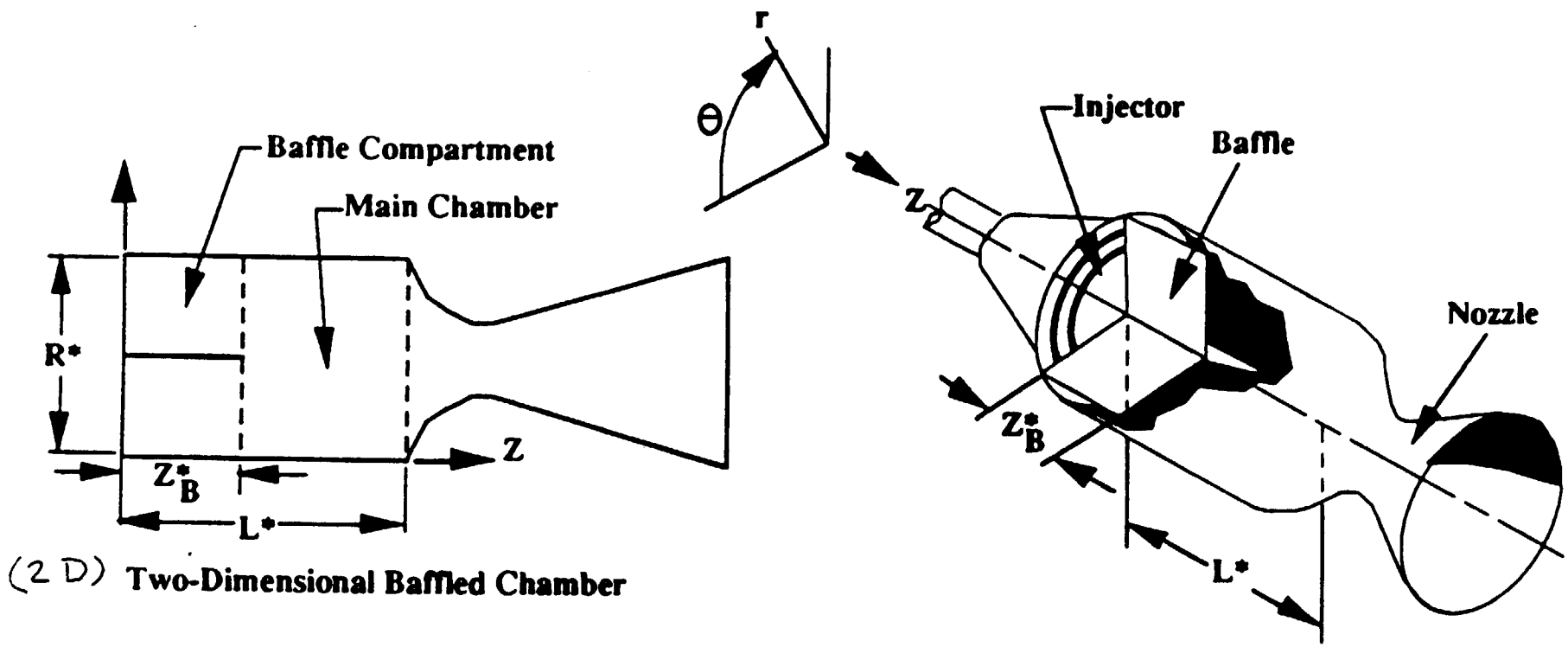

Figure 4-1. Examples of Baffled Thrust Chambers

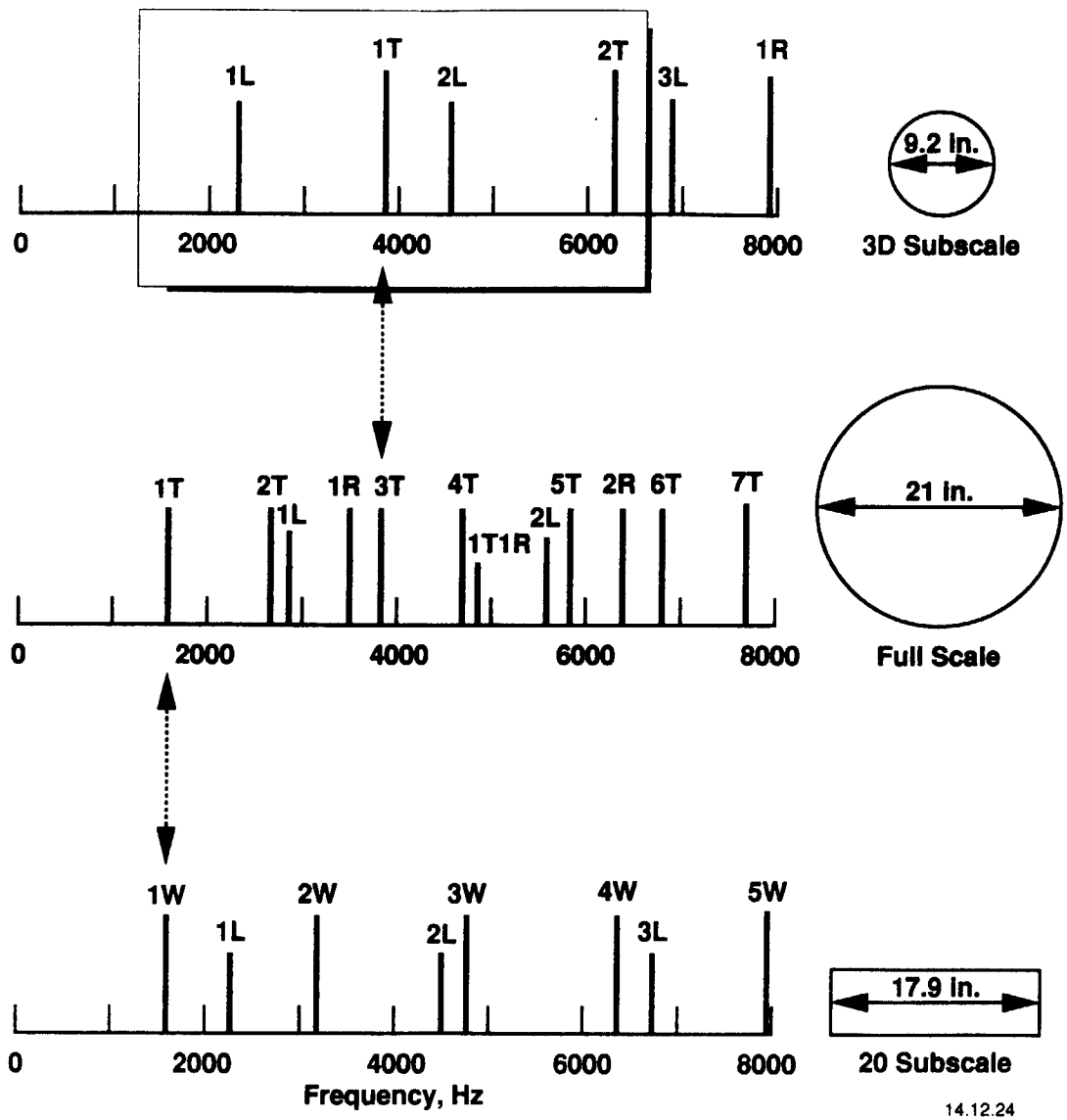

Figure 4-2. Stability Measurements Key to Scaling

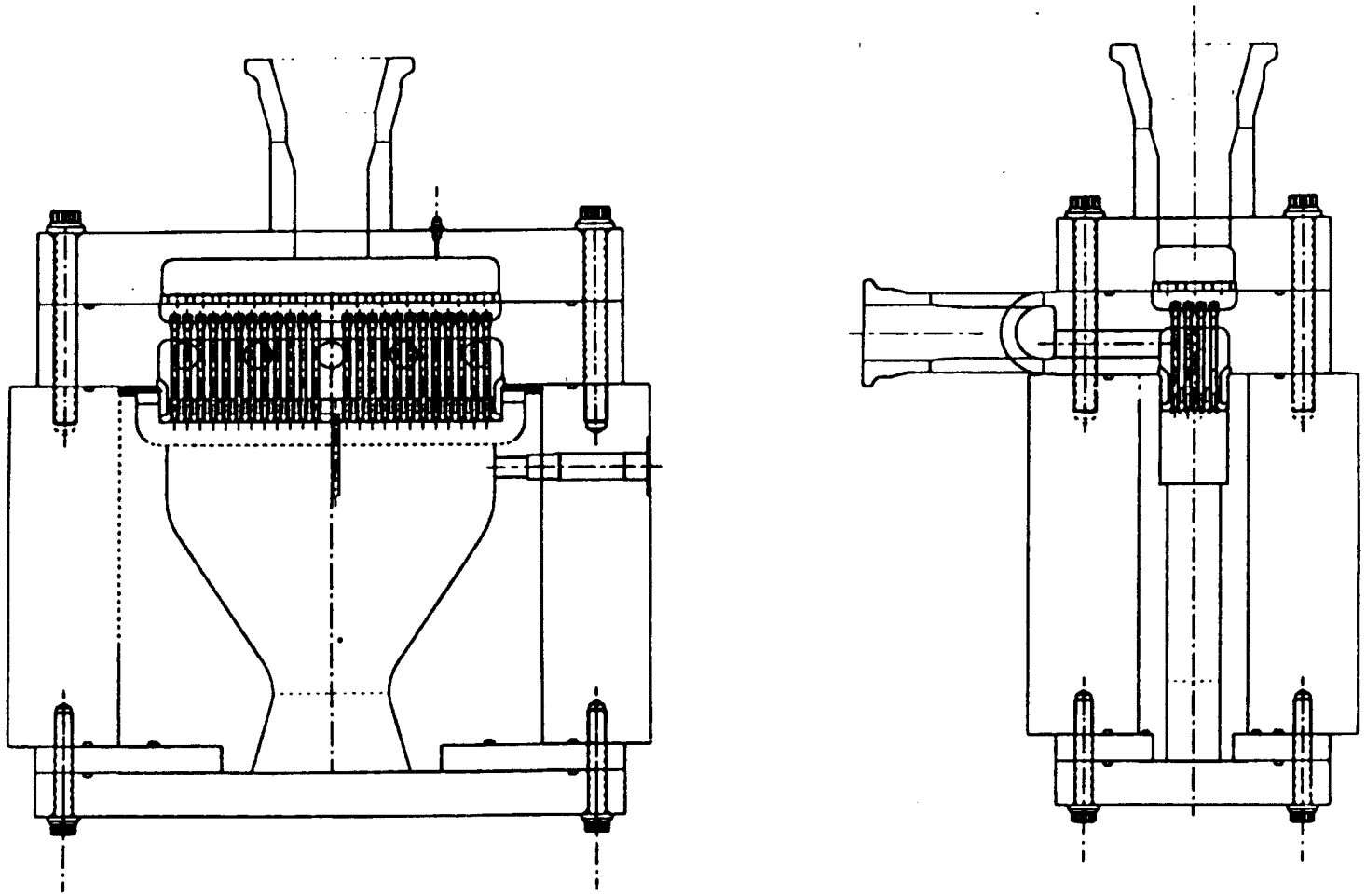

Figure 4-3. 2 D Subscale Assembly

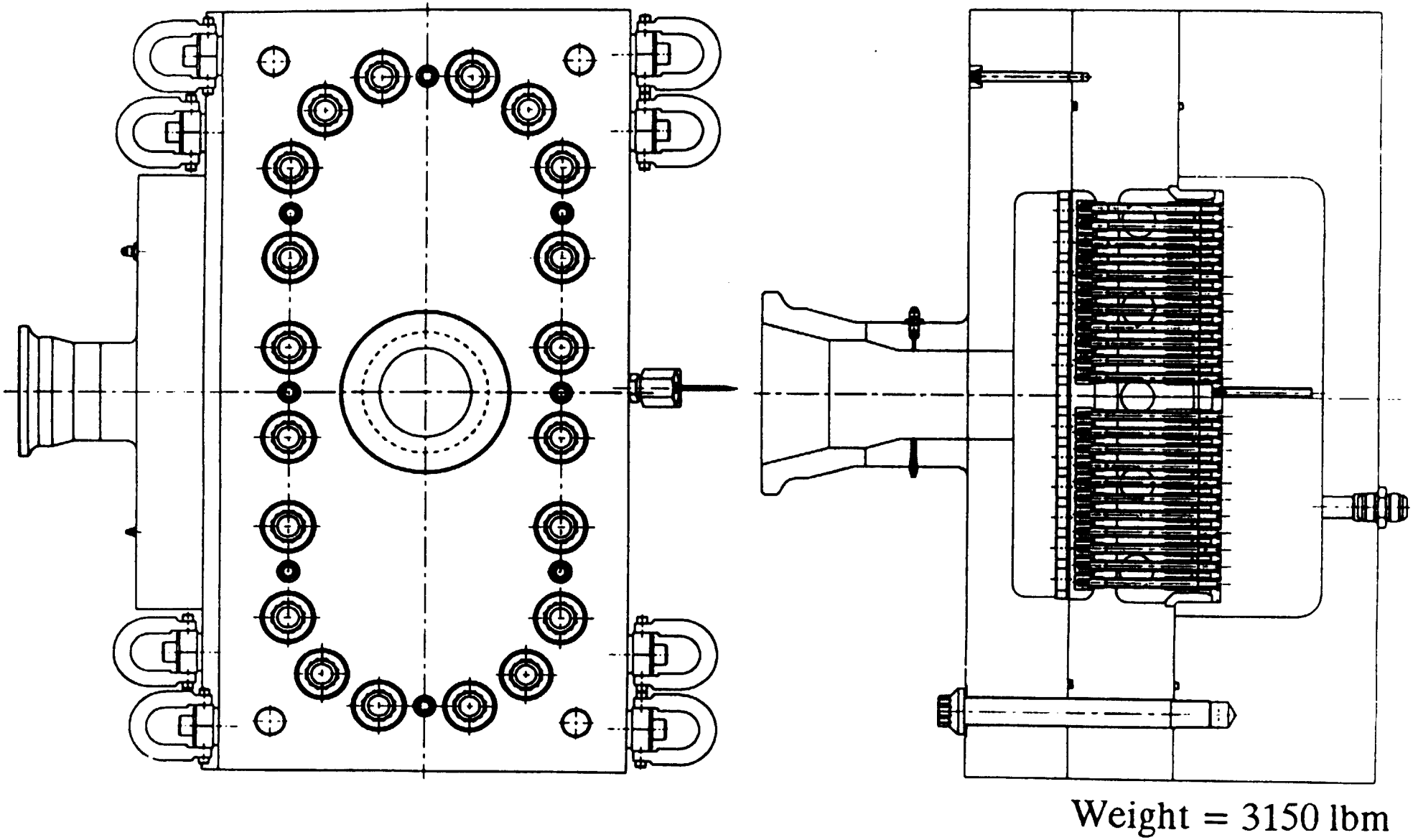

Figure 4-4. 2D Subscale Injector Assembly

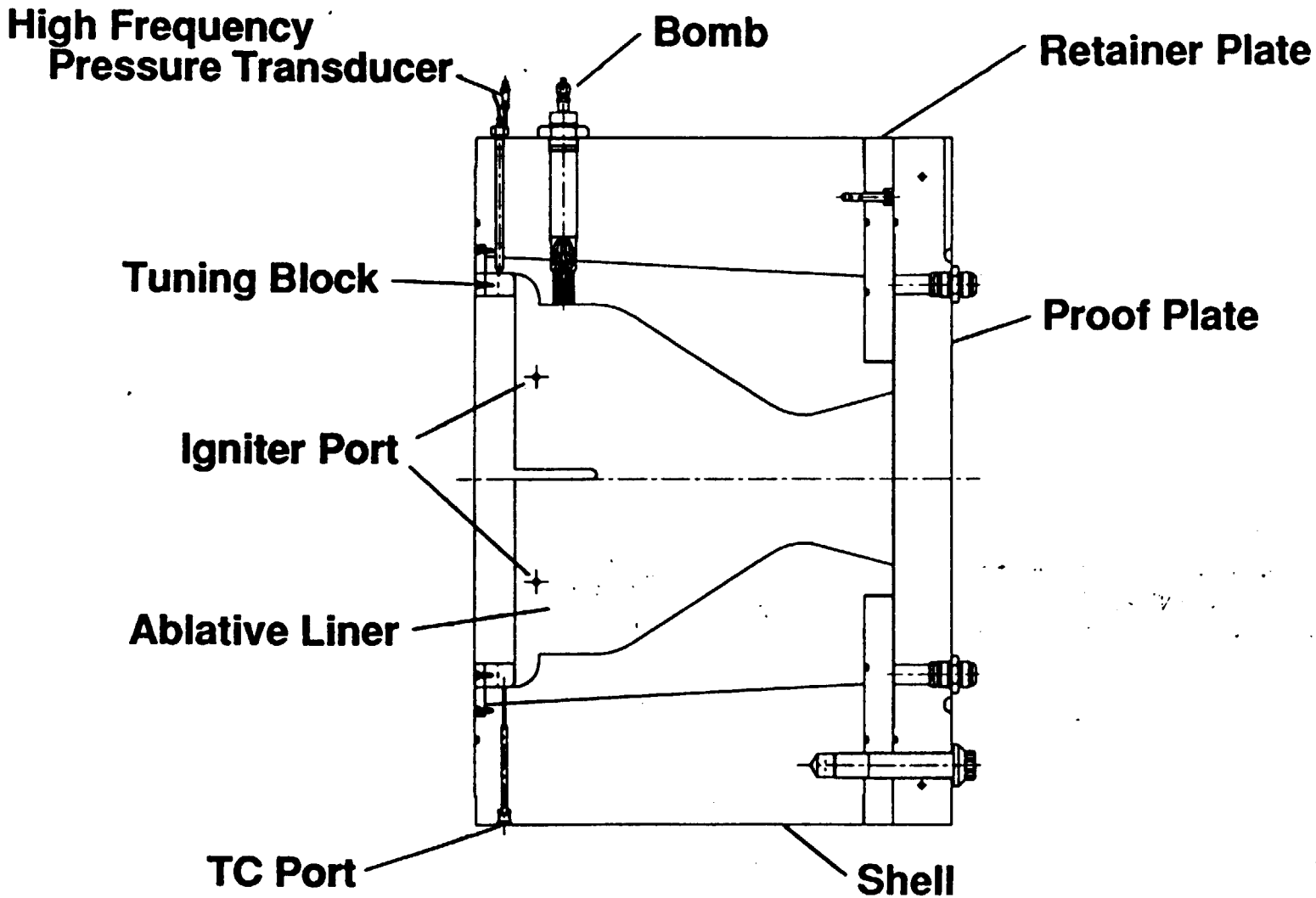

Figure 4-5. 2D Chamber Assembly

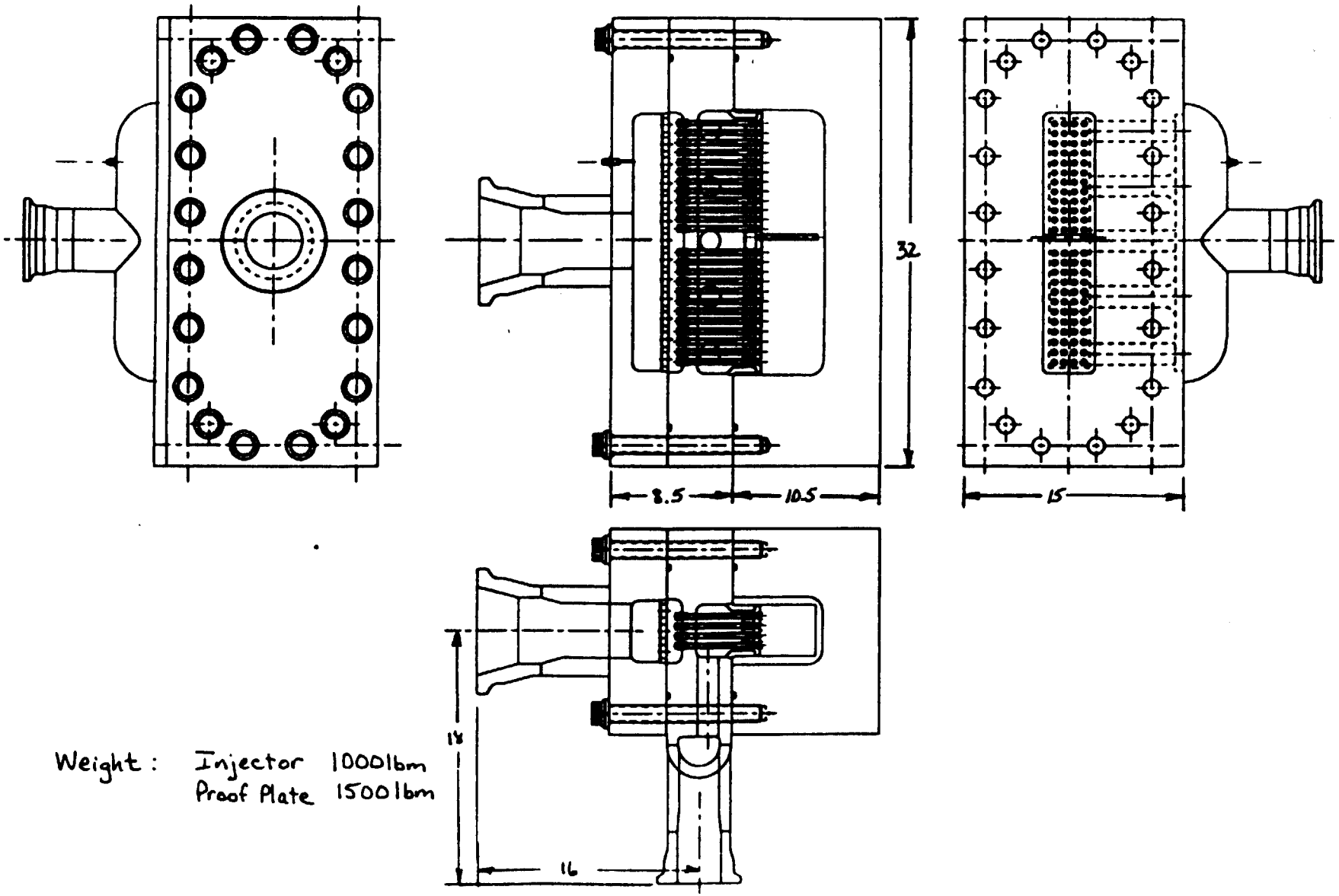

Figure 4-6. Flow Passage and Component Summary

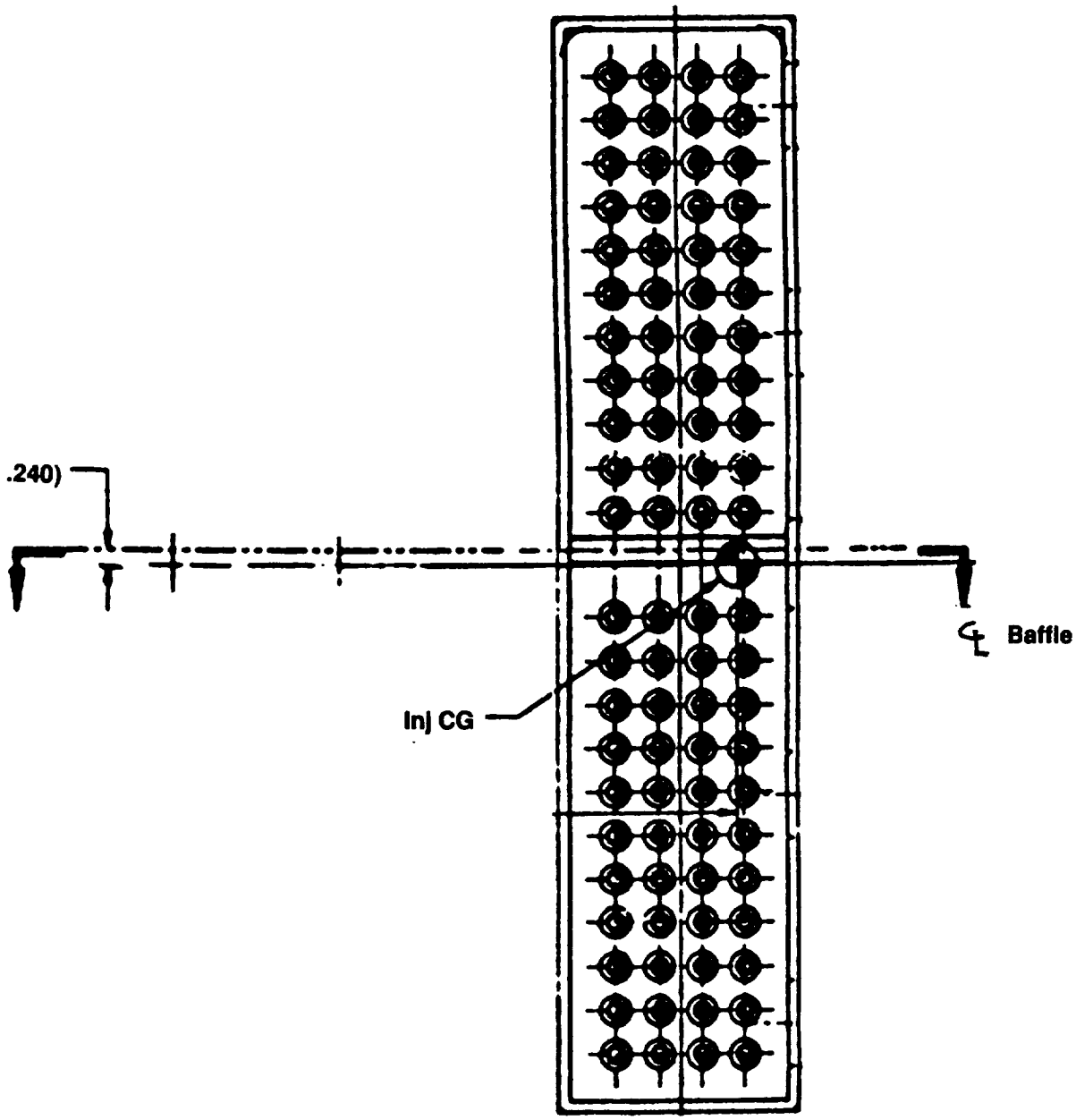

Figure 4-7. 2D Injector Element Configuration With Baffle Assembly

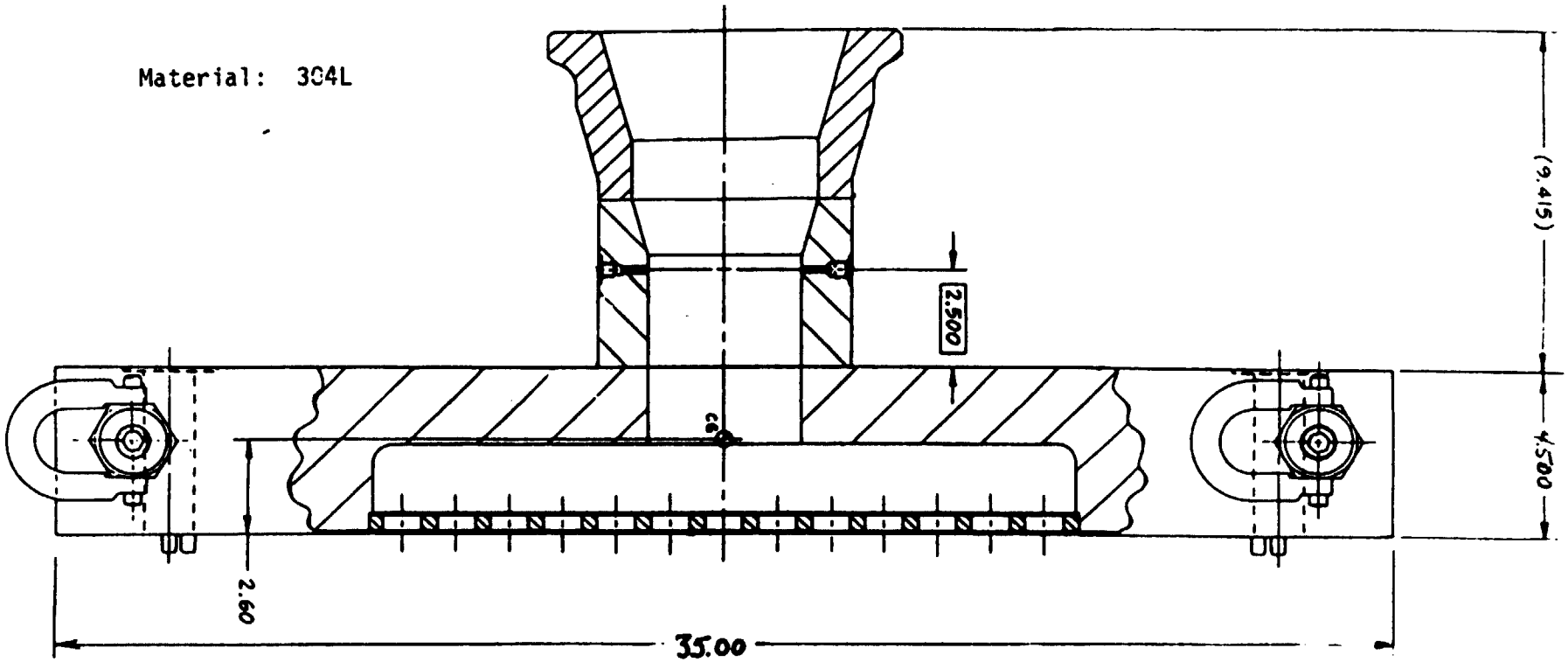

Weight = 820 lbm

Figure 4-8. Oxidizer Dome PN 1204151

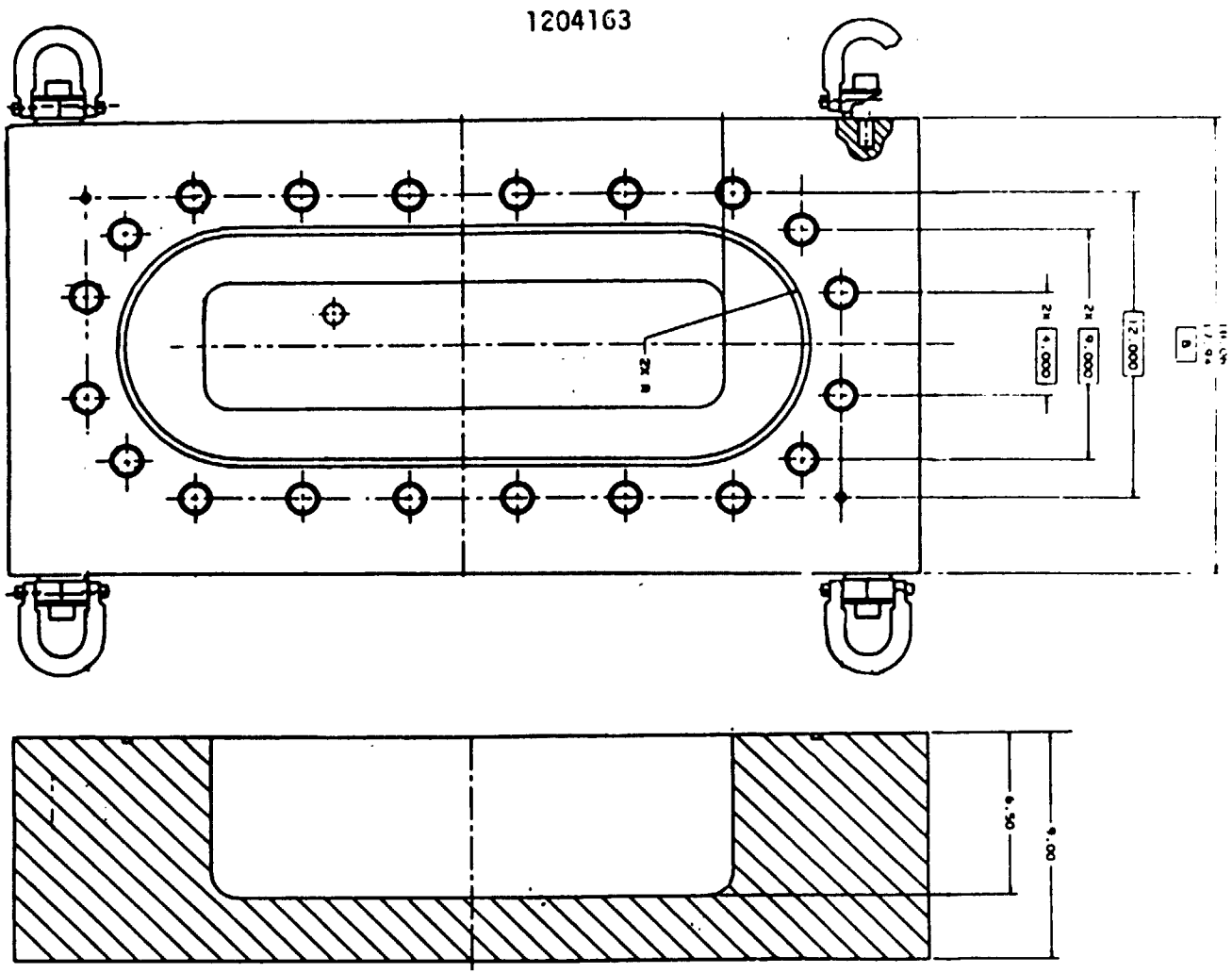

Material: 17-4 PH

Weight = 1420 lbm

Figure 4-9. Injector Proof Plate/Cover Plate

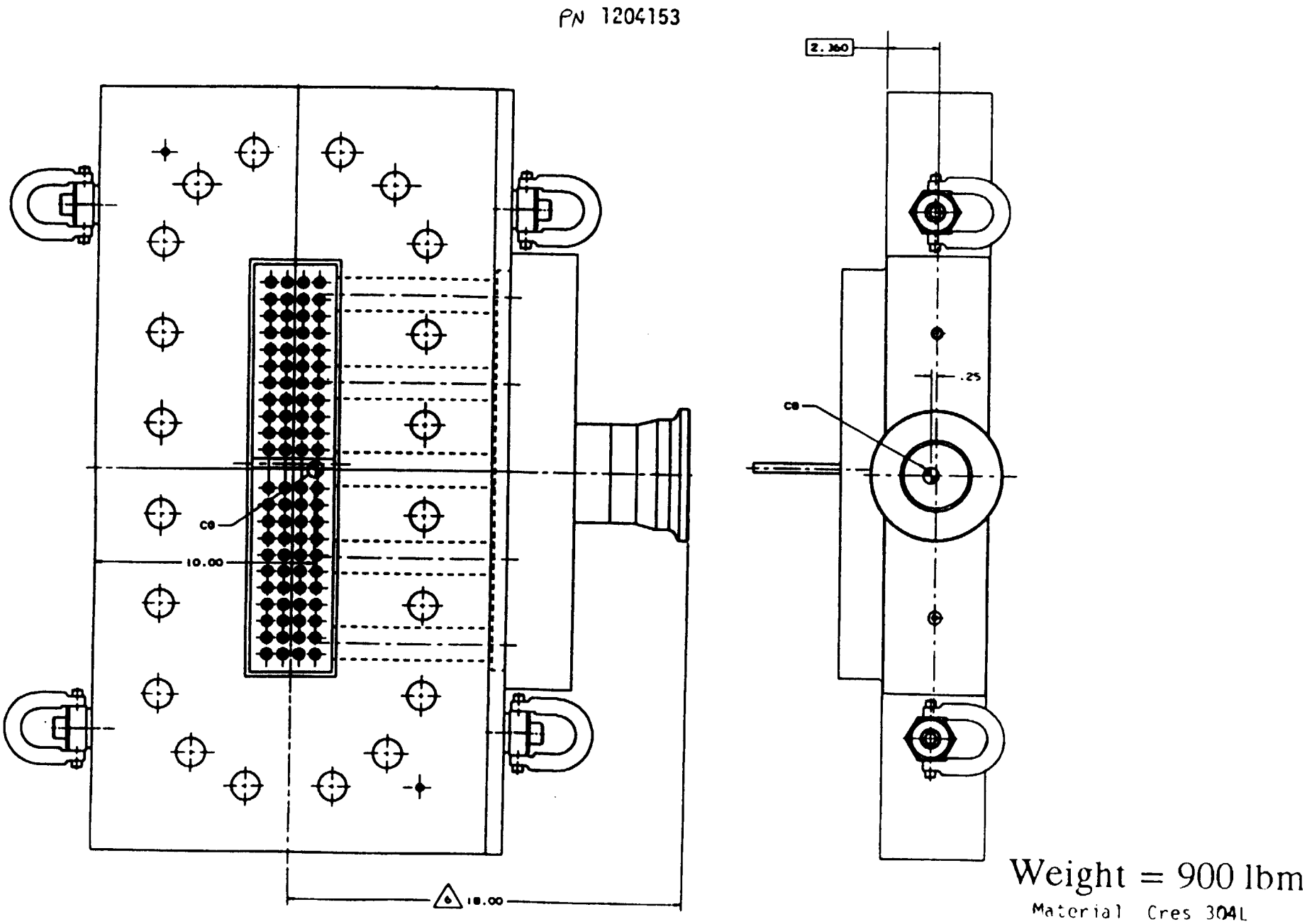

Figure 4-10. Fuel Body

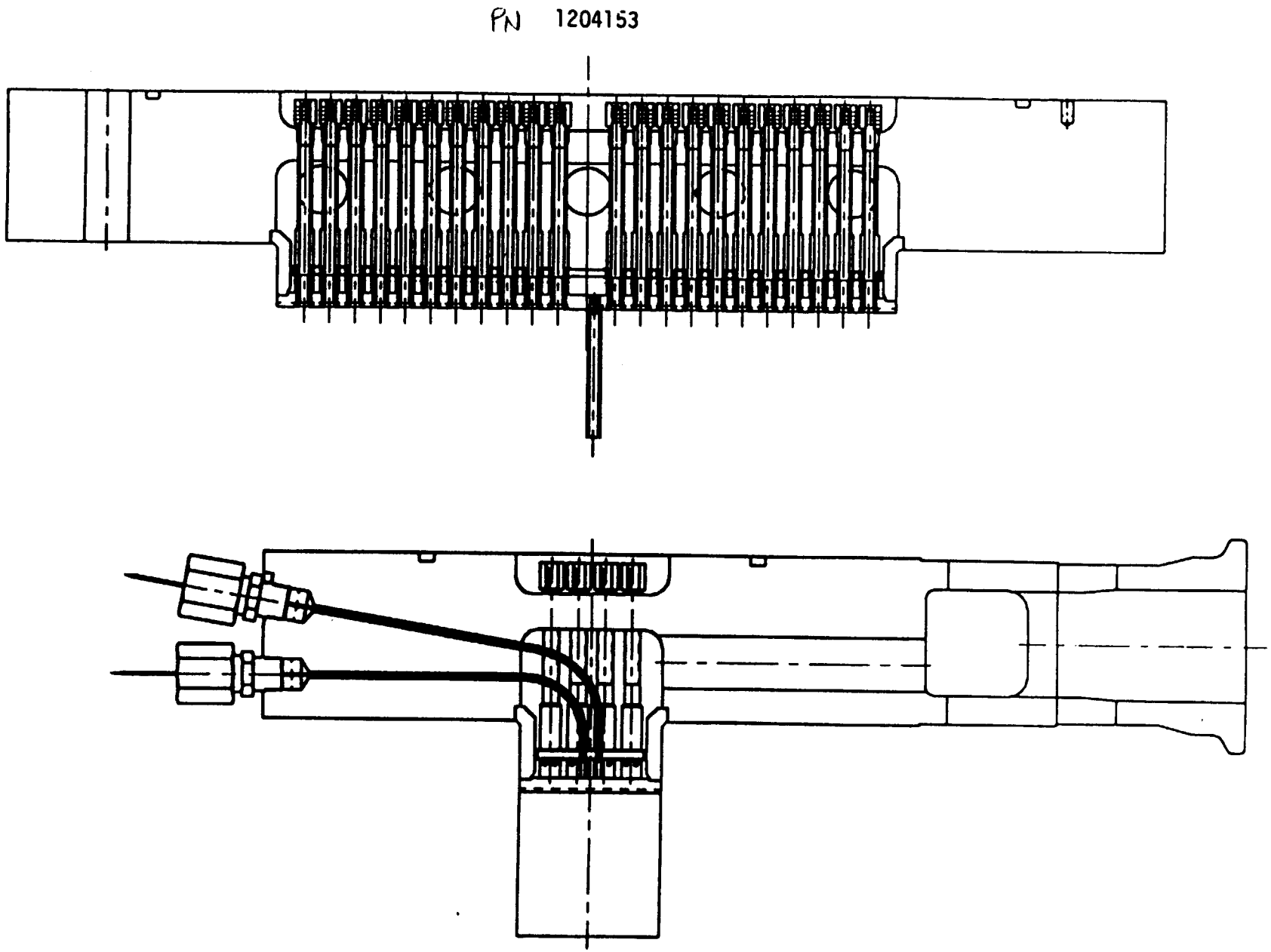

Figure 4-11. Injector Body

- Bolts equidistant from seal
- Racetrack design

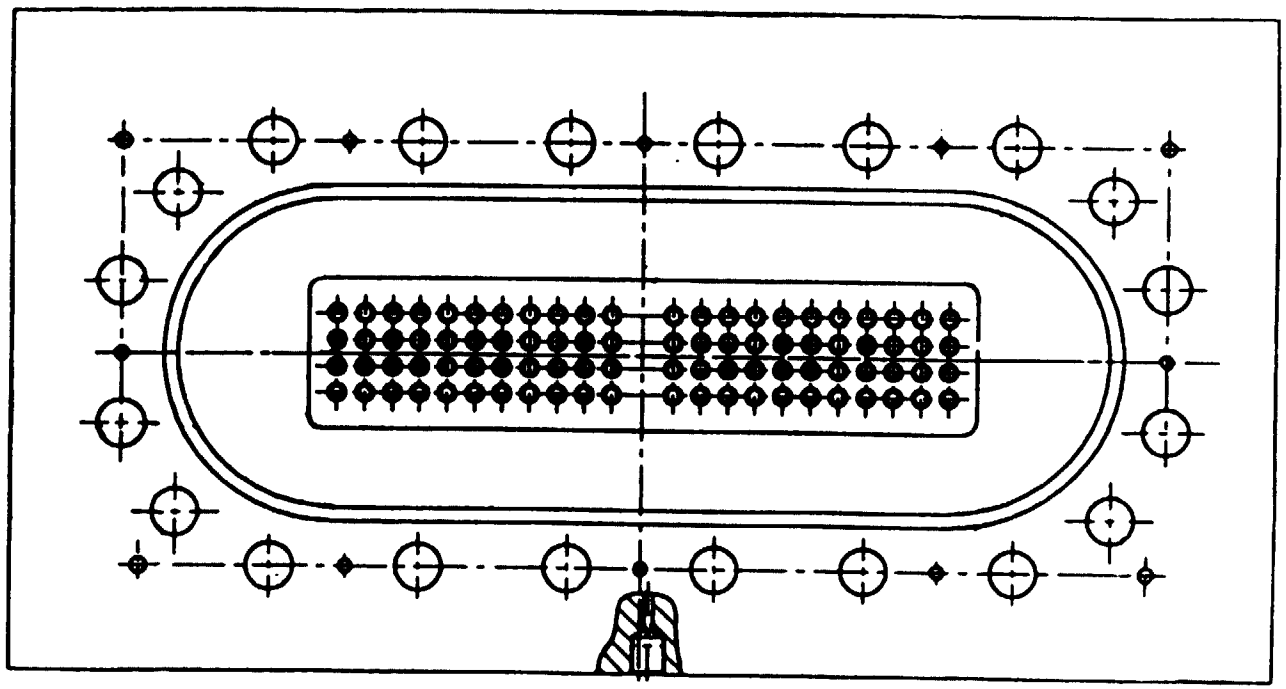

Figure 4-12. Seal Groove Design

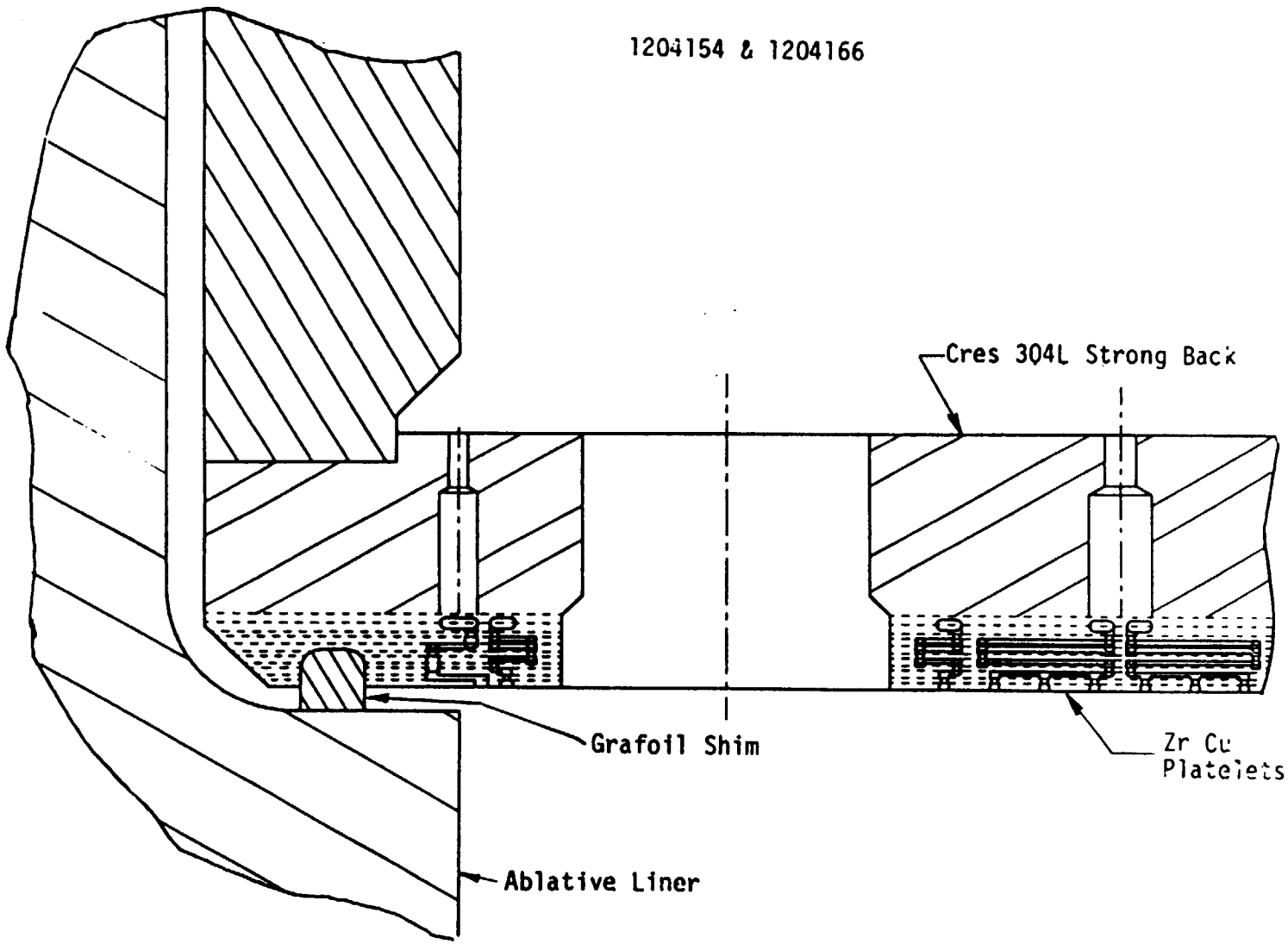

Figure 4-13. Face Plate

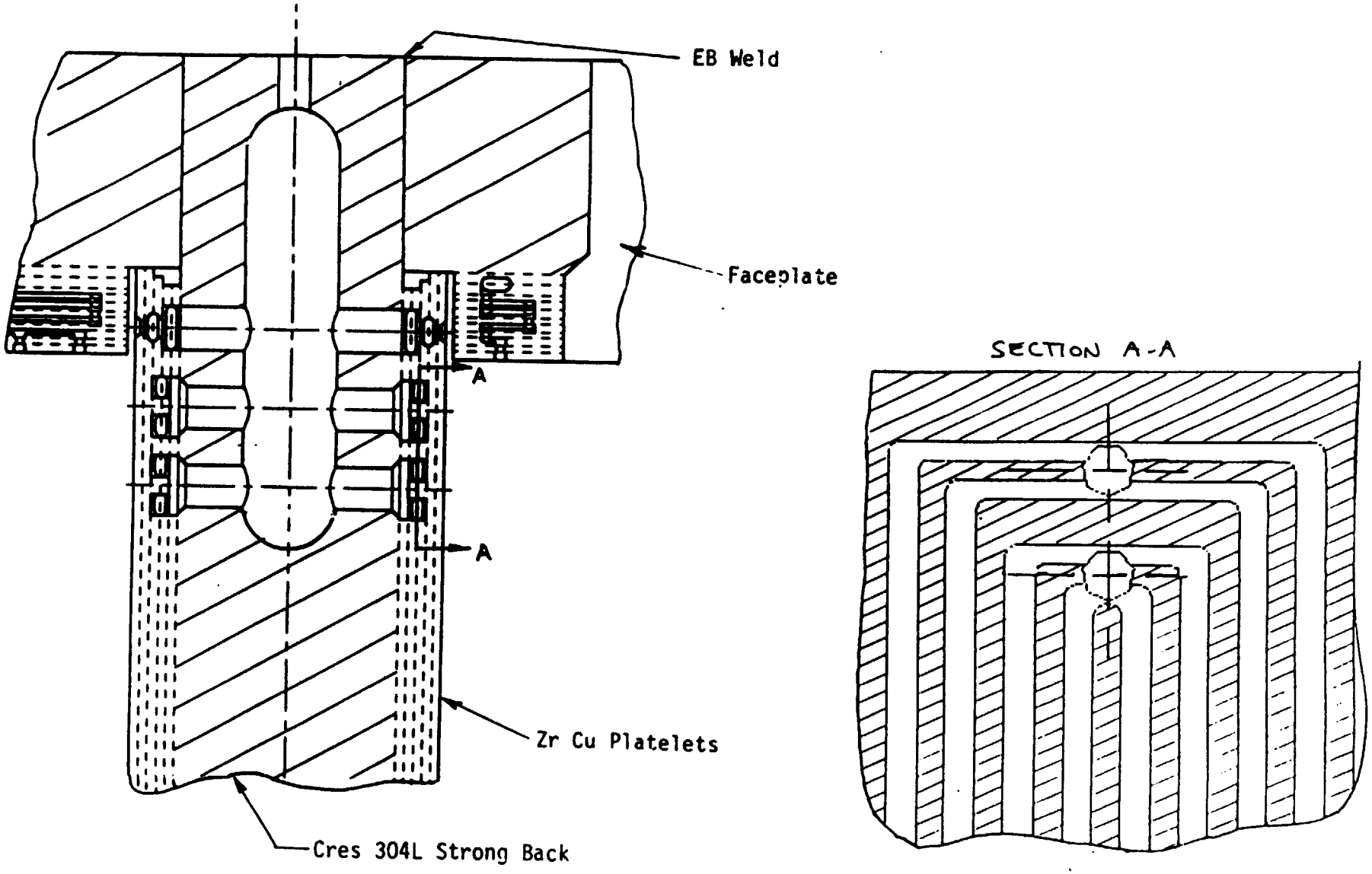

Figure 4-14. 2D Baffle Verifies Full Scale Design

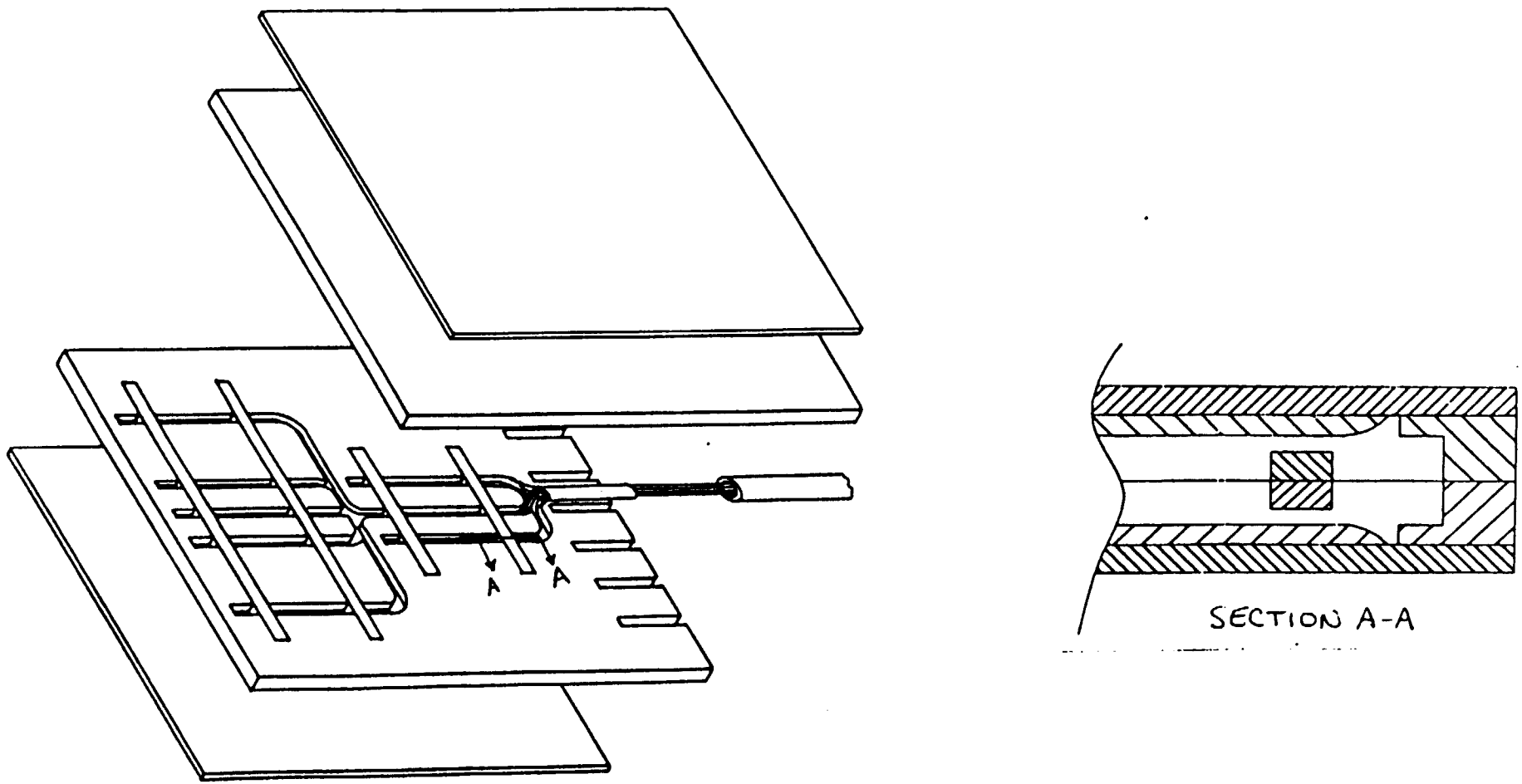

Figure 4-15. Minimal Handling Increases Thermocouple Reliability

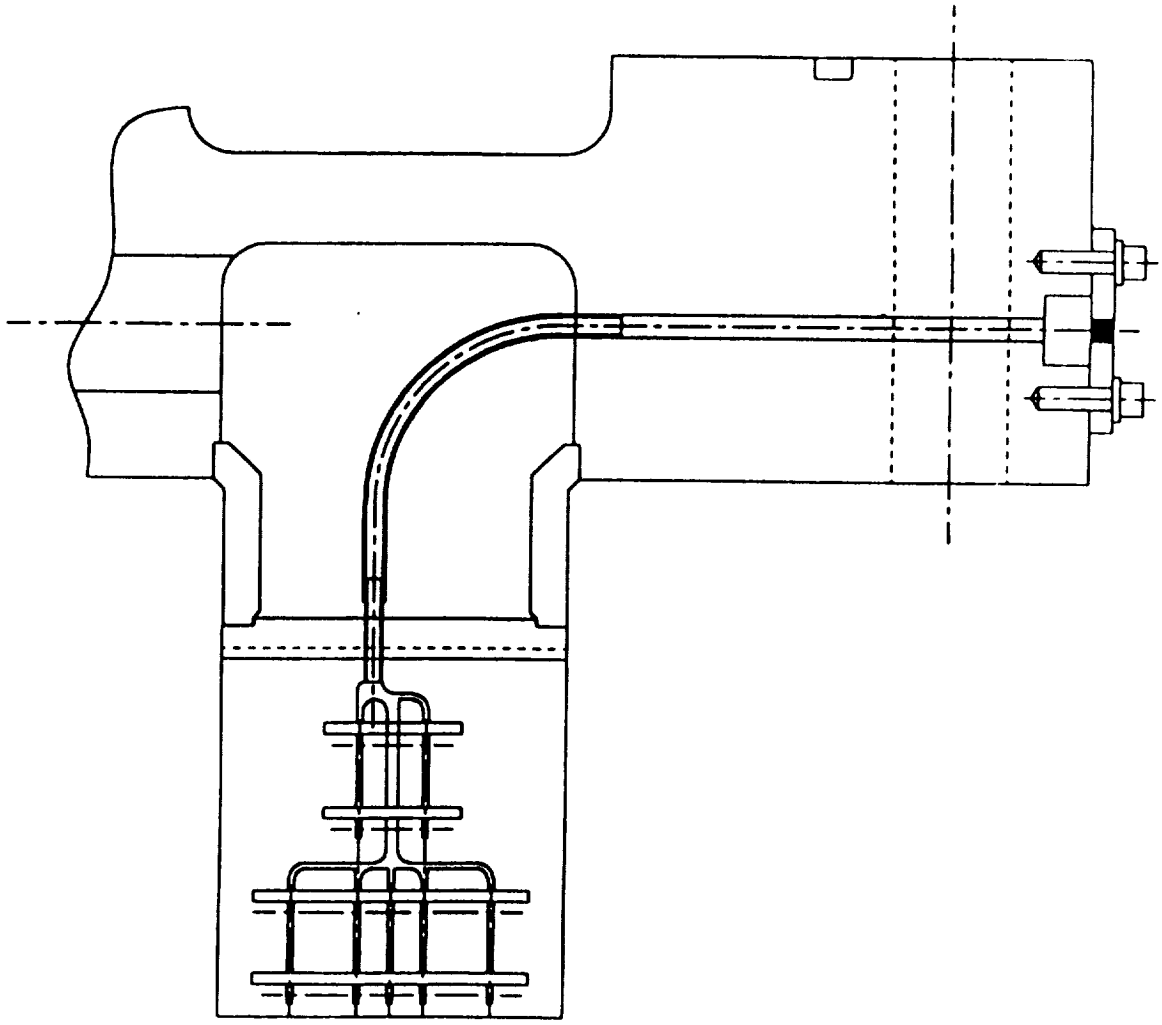

Figure 4-16. Baffle Thermocouples Provide Thermal Profile

Purpose:

- Contour of chamber
- Insulate shell from combustion gases

Features:

- 45° wrap angle using 3" wide tape; remainder of throat is hand layered.
- Tapered external walls; different taper angles reflect stress considerations for shell.
- ATC Spec available for fab (ATC-46955J)

Purpose behind tapered walls:

- Insure proper sealing between shell and liner
- Minimize potential for liner shifting during test
- Ease of liner installation and removal

Material: Silica Phenolic

Weight: ~120 lbs.

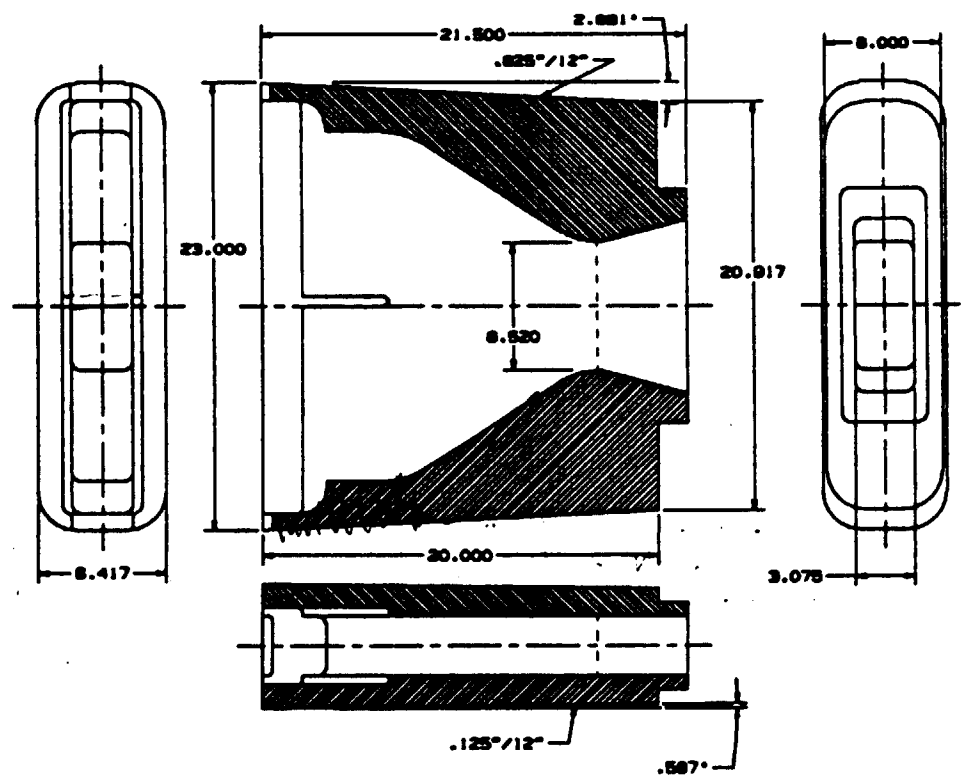

Figure 4-17. 2D Ablative Liner

Purpose:

- Support of liner and external ports

Features:

- Withstands proof pressure = 4500 psi.
- Swivel lug bolts
- Tapered internal walls
- Pins protect sealing surface

Material: 17-4 PH or HY-140

Weight: ~2920 lbs.

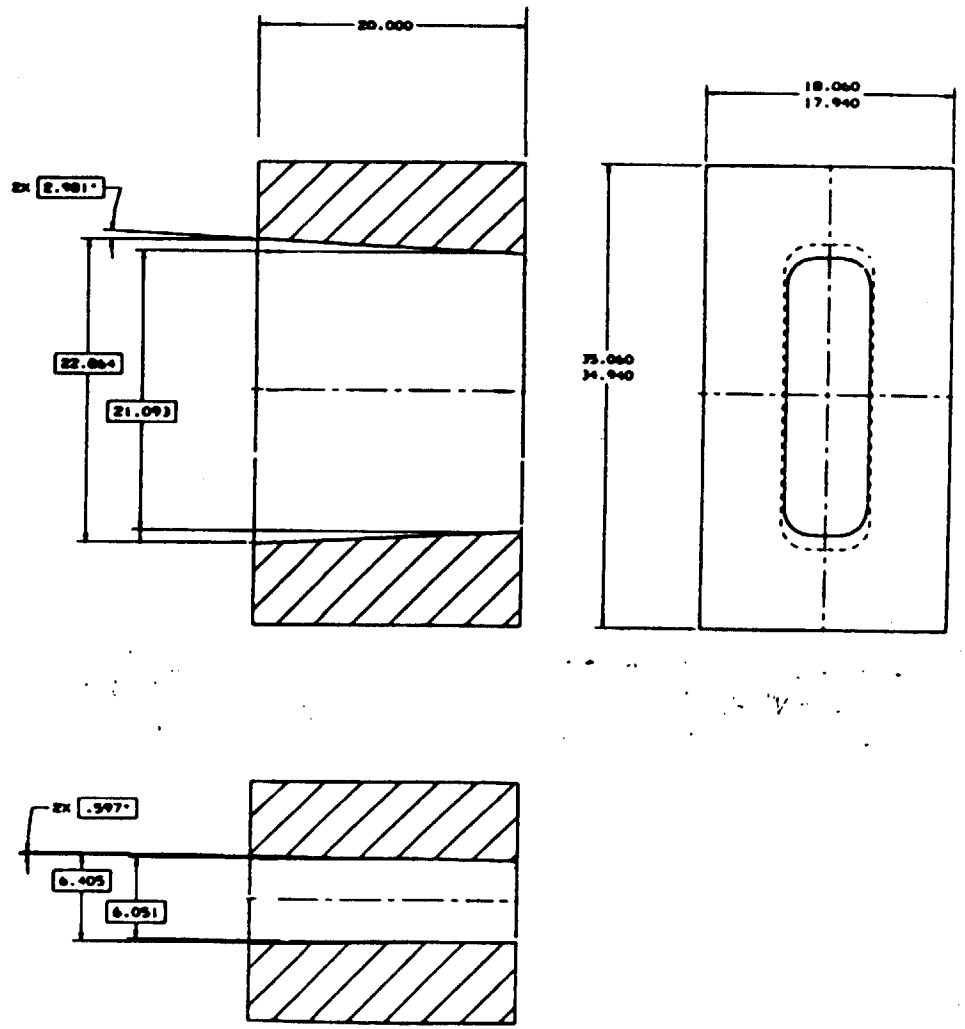

Figure 4-18. 2D Shell

Purpose:

- Retention of abaltive liner during testing

Features:

- 2 O-ring seal grooves
- Swivel lug bolts
- Pins protect sealing surface

Material: 17-4 PH or HY-140

Weight: ~240 lbs.

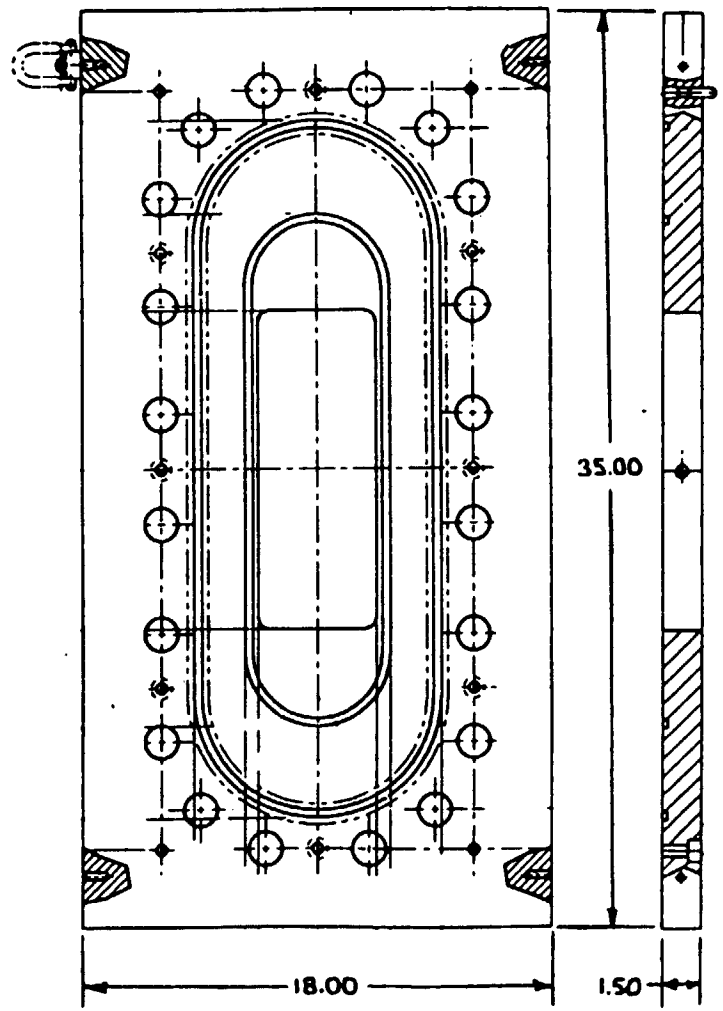

Figure 4-19. 2D Retainer Plate

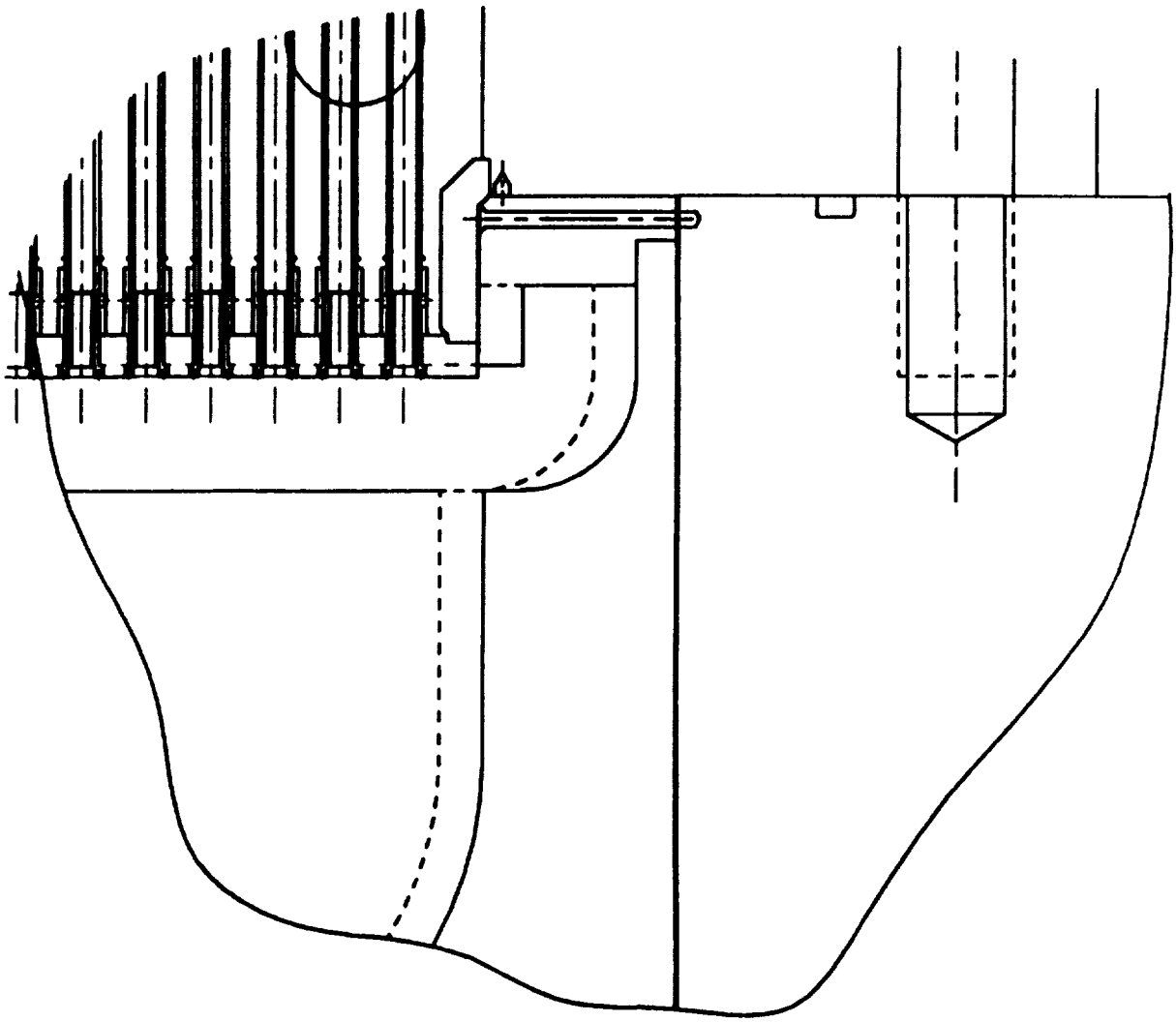

Figure 4-20. Resonator Tuning Blocks Accommodate Variable Wall Gap

Purpose:

- Tuning of resonator cavities
- Filling of voids created by machining injector cavity

Features:

- Modular construction - housing and tuning blocks
- Three block configurations: baseline, full-cavity, and blanks

Material: OFHC copper

Weight: 1.5 - 5 lbs.

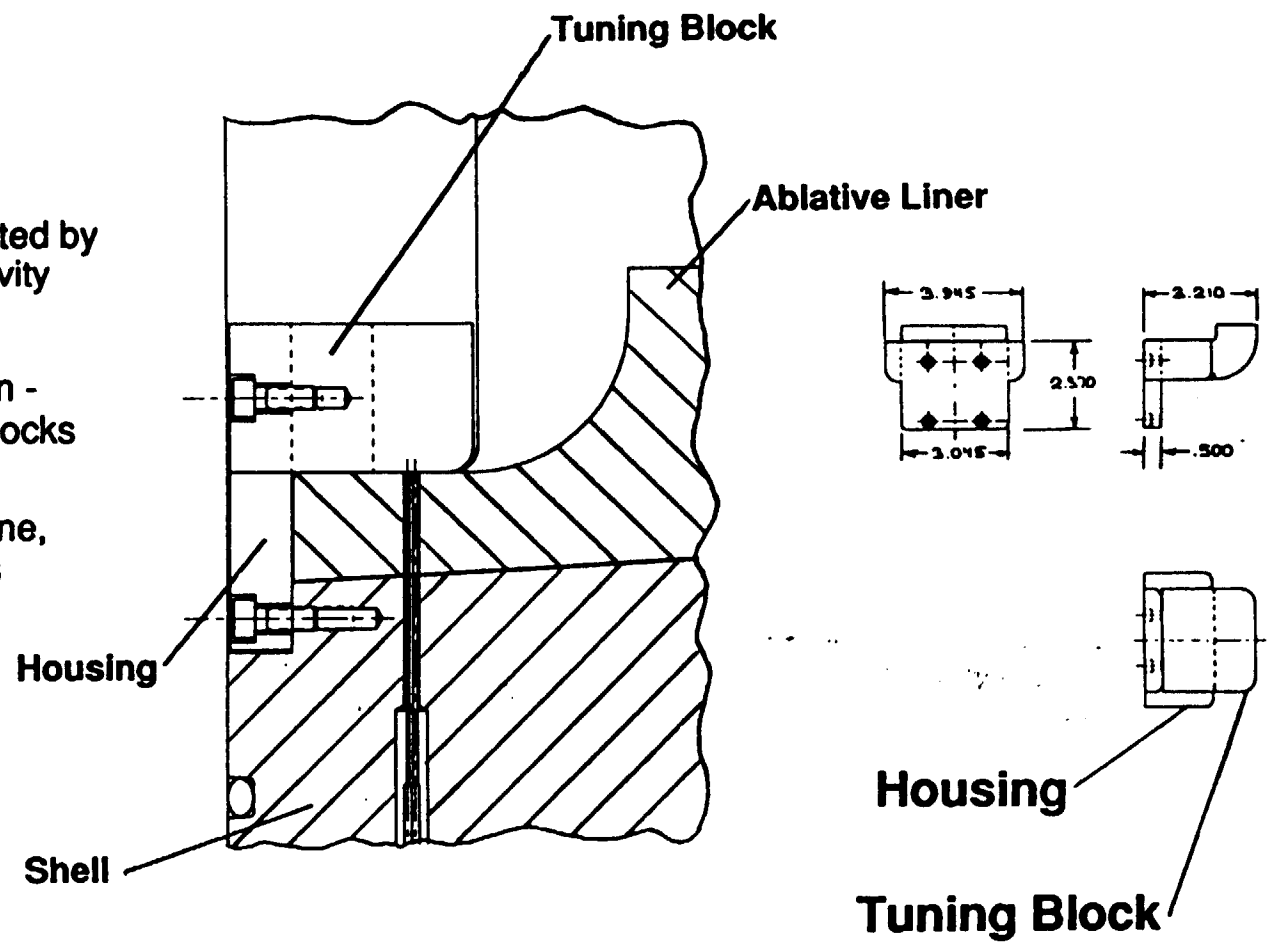

Figure 4-21. 2D Resonator Tuning Blocks

Procedure:

1. Center liner on RTV goove in proof plate.
2. Apply primer to liner external walls only.
3. Apply RTV-60 to tapered walls of both liner and shell.
4. Lower shell onto liner.
5. Cure RTV.
6. Machine aft end of liner flush with shell for retainer plate.

Features:

- Insures RTV on all surfaces
- Eliminates need for RTV ports and pumping of RTV.

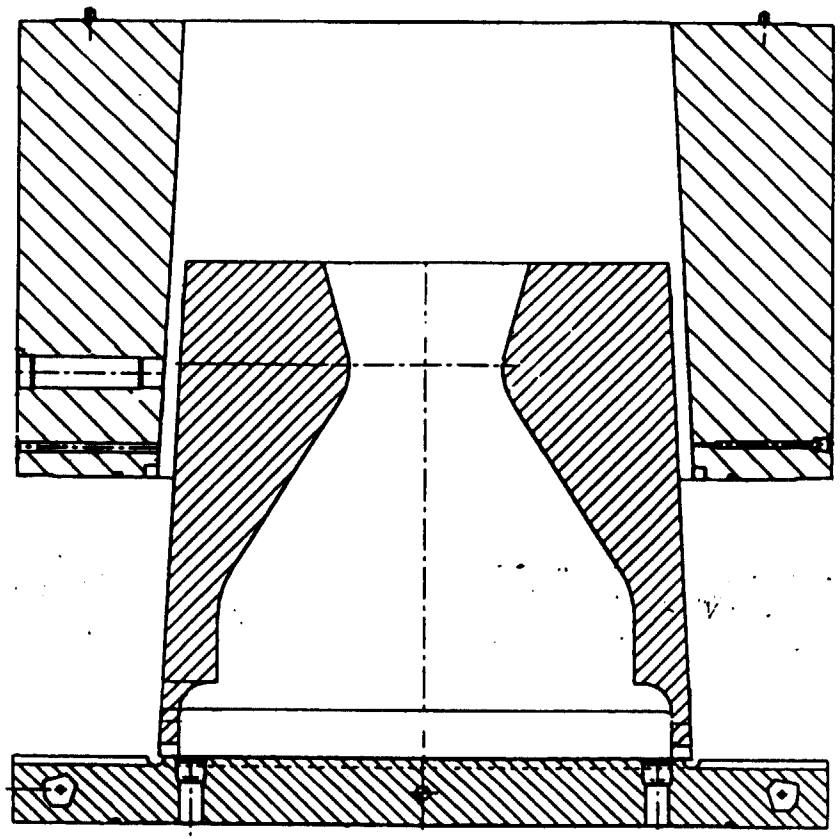

Figure 4-22. Liner and Shell Assembly Procedures

Purpose:

- Ignition of engine using teal/teb

Features:

- Igniter tube for each baffle pocket
- R eplaceable tube
- End of tube flush with inner liner wall
- Fan-shaped exit of teal/teb
- Simple construction
- Exit velocity = ~150 ft/sec
- Weight flowrate = ~0.8 lbf/sec/exit tube

Material: Commercial grade copper tubing

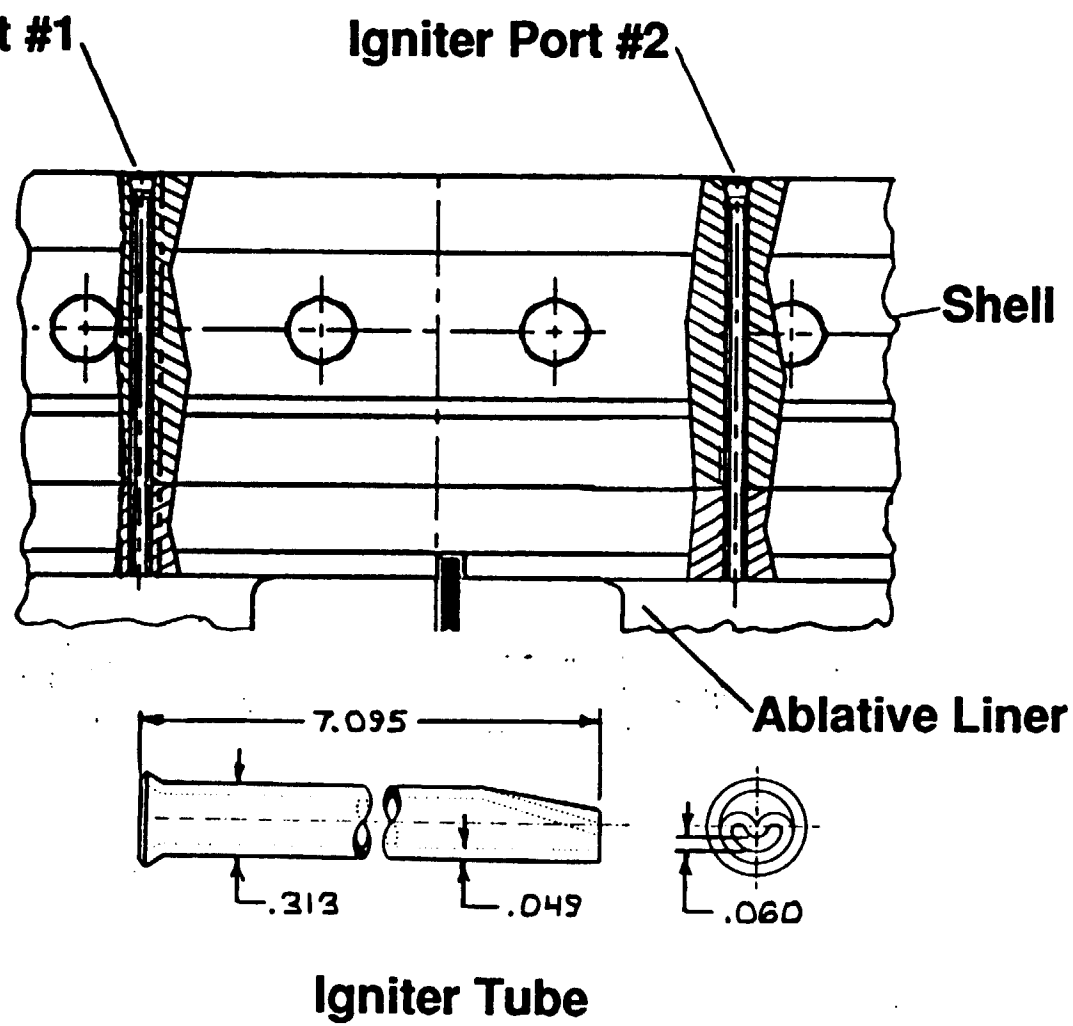

Figure 4-23. 2D Igniter

Purpose:

- Bombing of chamber

Features:

- 2 gr. - 13 gr. charge
- Protects liner during bombing
- Modified from STBE Stability Ring

Material: As Shown

Weight: ~4 lbs.

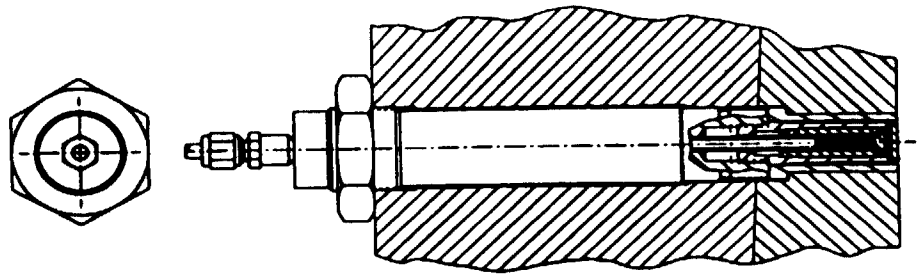

Assembled Bomb

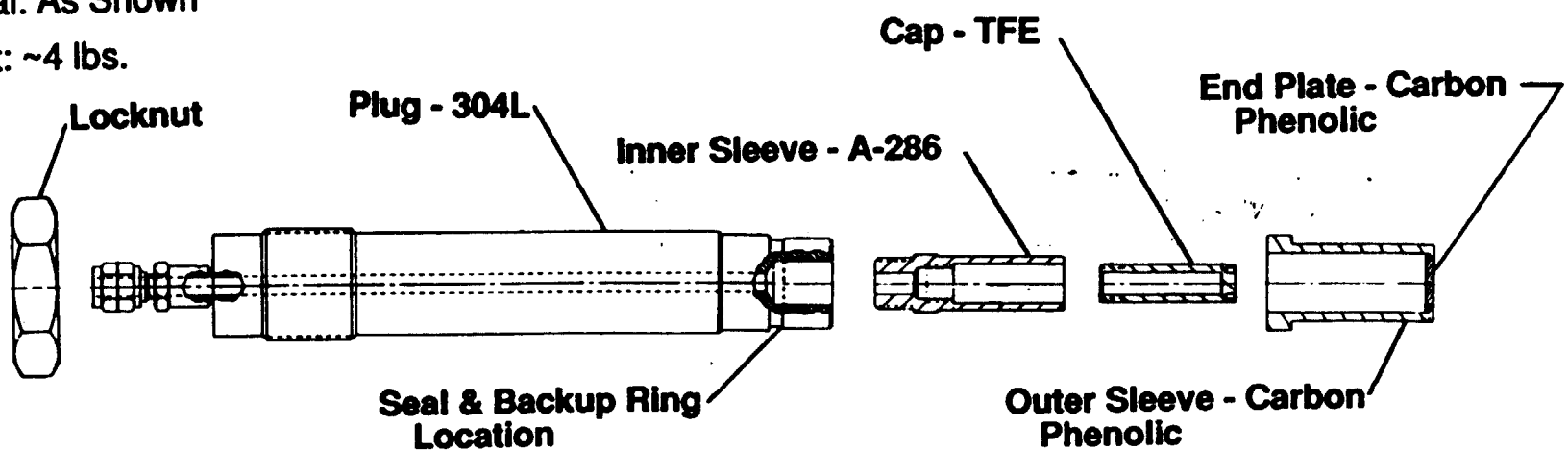

Detonator Not Shown

Exploded View of Bomb

Figure 4-24. 2D Bomb

2 Thermocouples in Resonator Cavity

Features:

- Permits the use of both .020 and .040 sheathed TC's for durability, fast response, and redundancy.
- Uses Conax sealing gland.

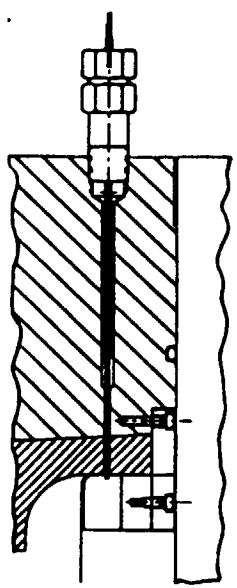

10 PCB High Frequency Transducers

Features:

- Custom lengths for different chamber widths.
- Small diameter permits reduction in shell wall thickness over the use of Kistlers.

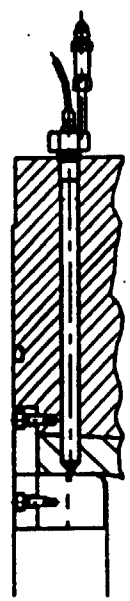

10 Static Pressure Transducers

Test Area to Provide Tabers

Figure 4-25. 2D Chamber Instrumentation

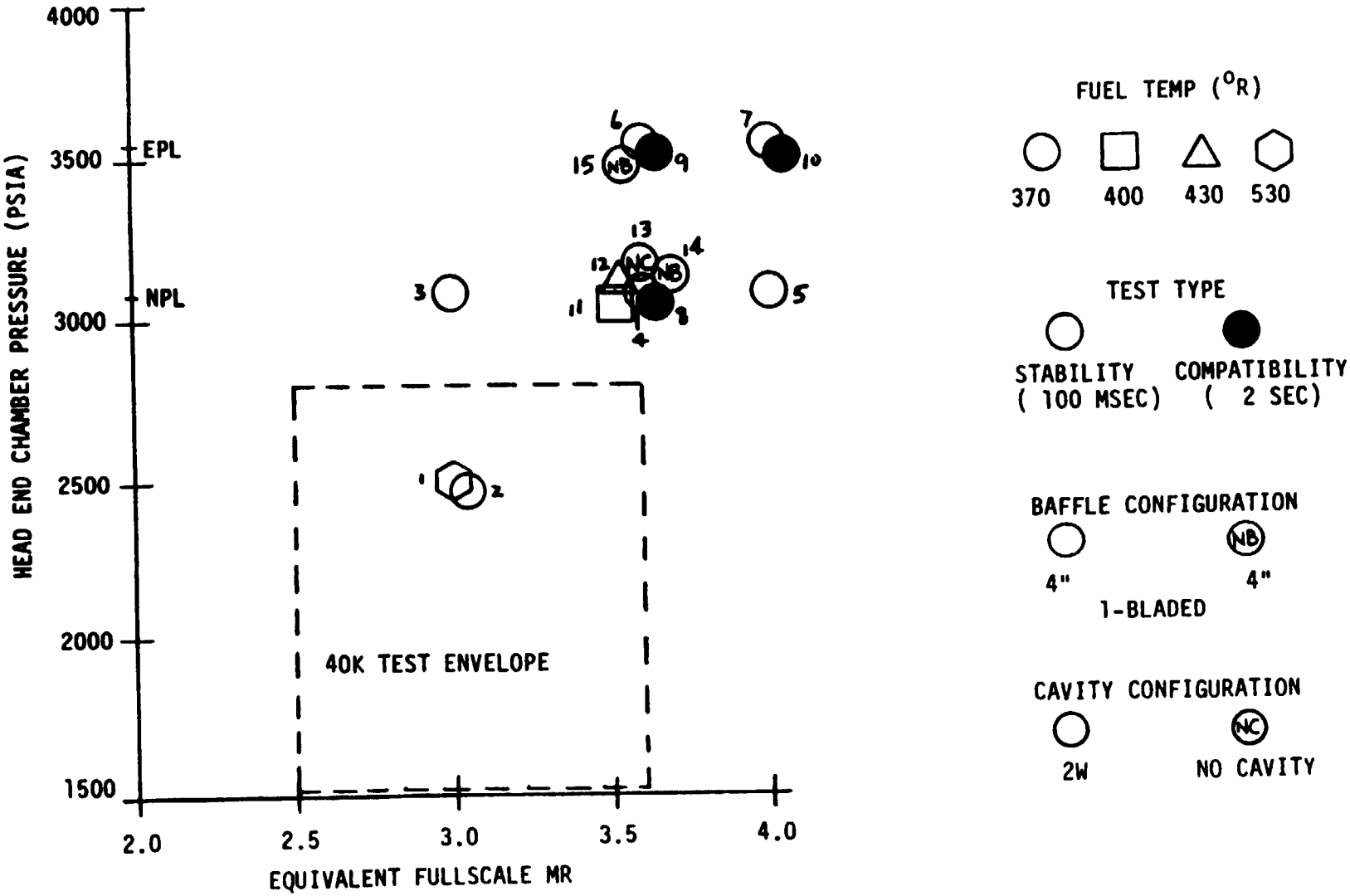

Figure 4-26. Proposed LSI 2D Subscale Test Matrix

LSI Concurrent Engineering Team and Subscale Hardware

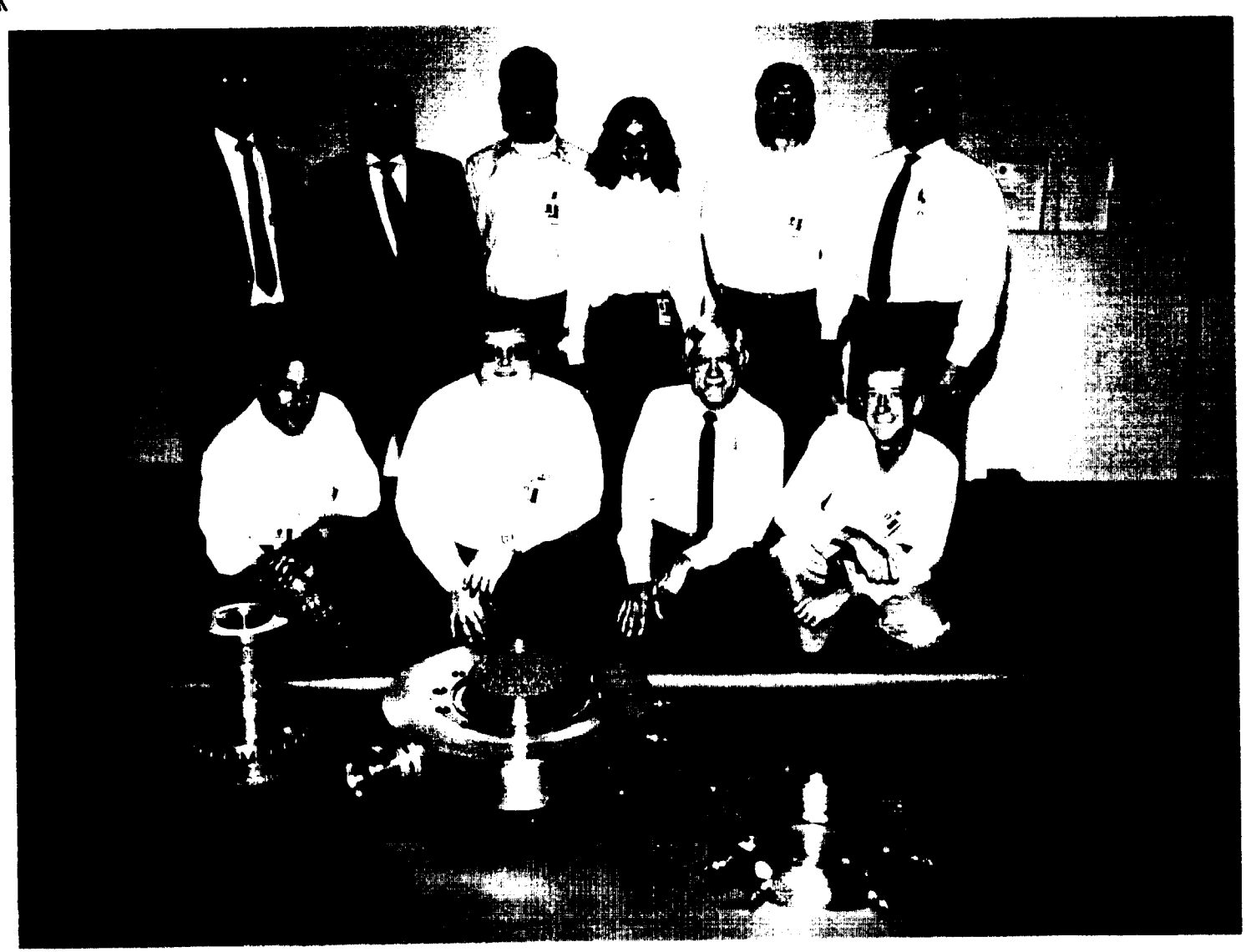

Figure 4-27. Completed LSI Subscale Hardware and Design Team

ORIGINAL PAGE
COLOR PHOTOGRAPH

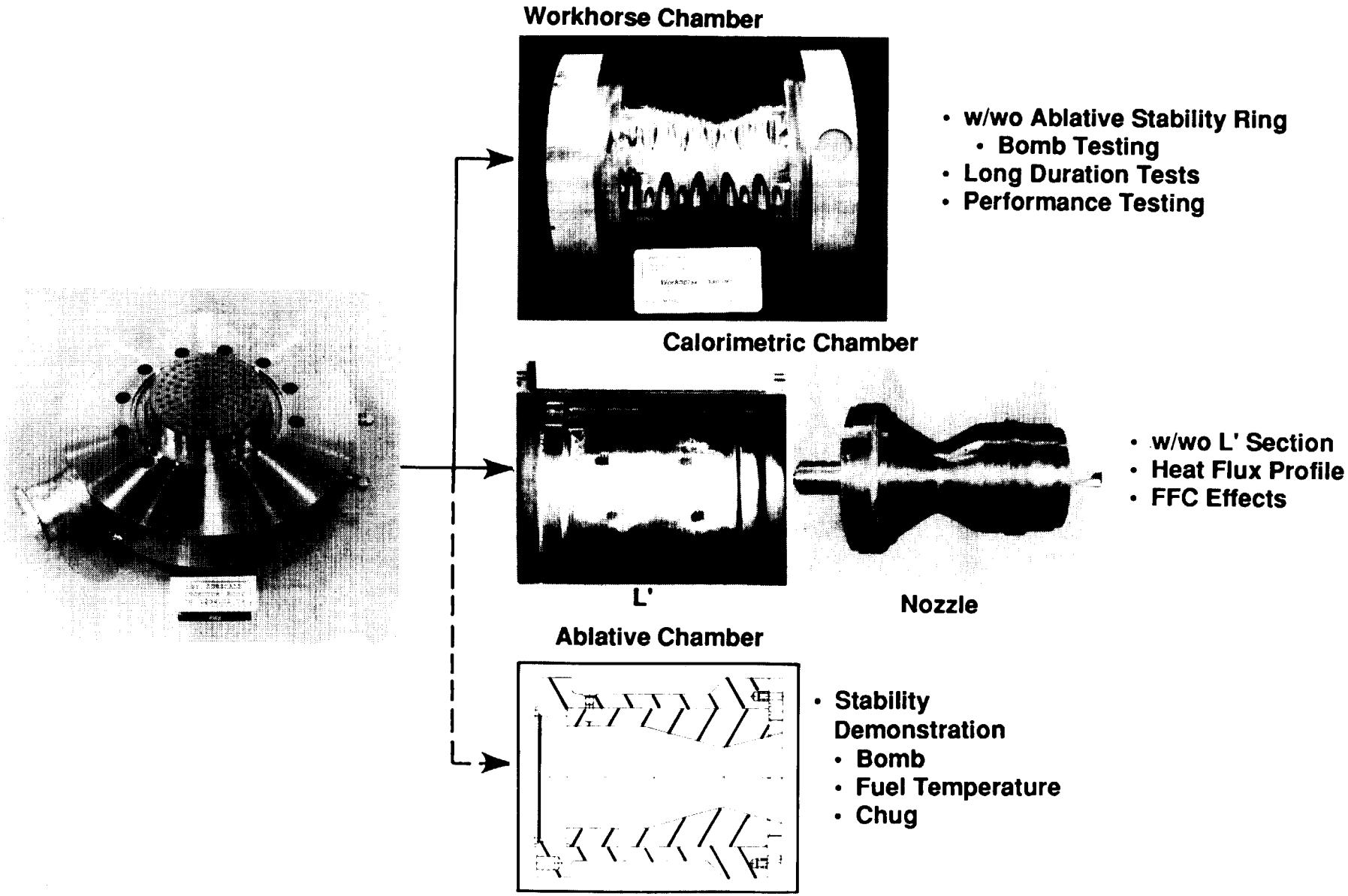

Figure 4-28. Aerojet Supplied Chambers Ensure a Complete Hot Fire Data Base

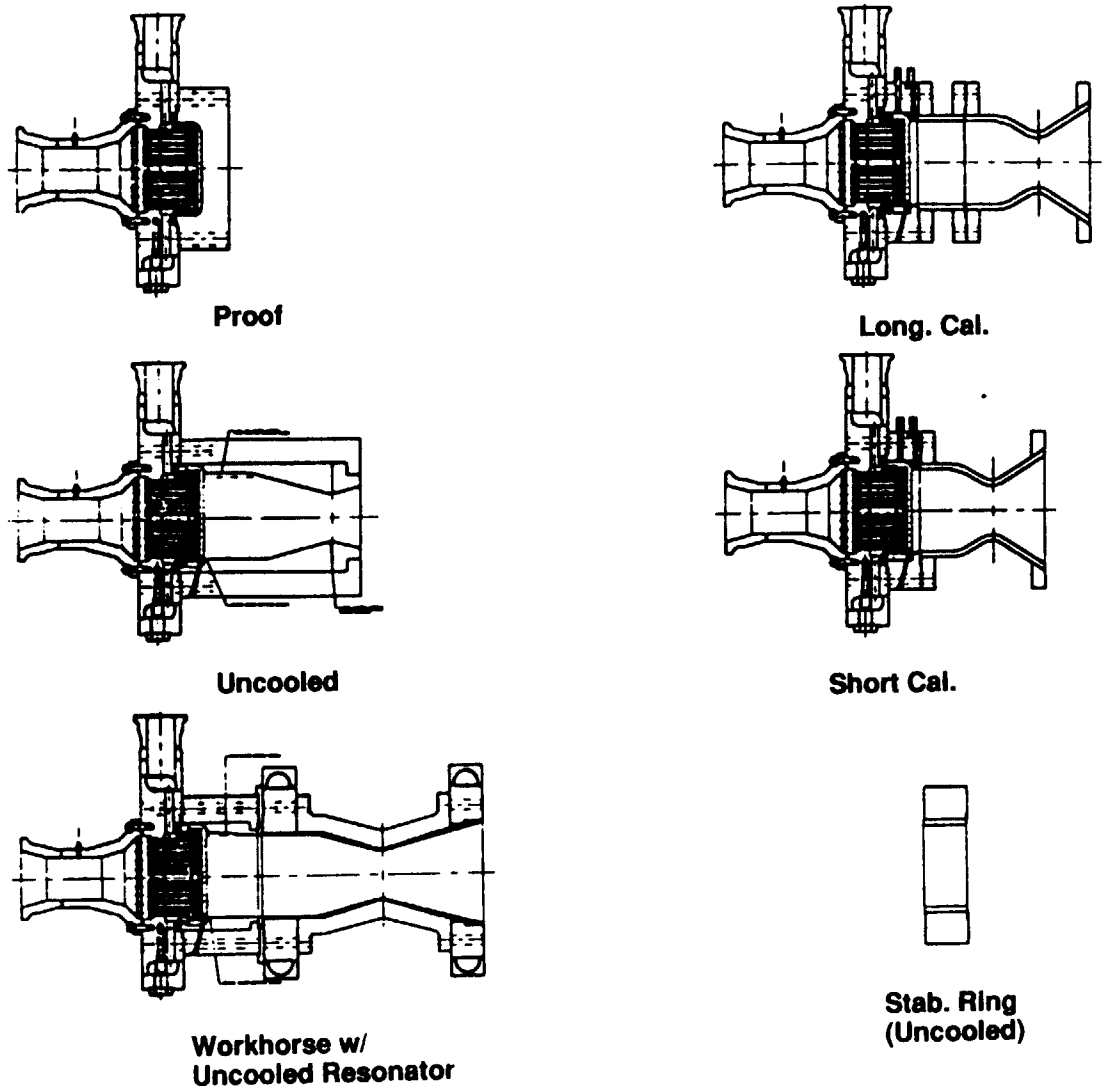

Figure 4-29. 3-D Hardware Configurations

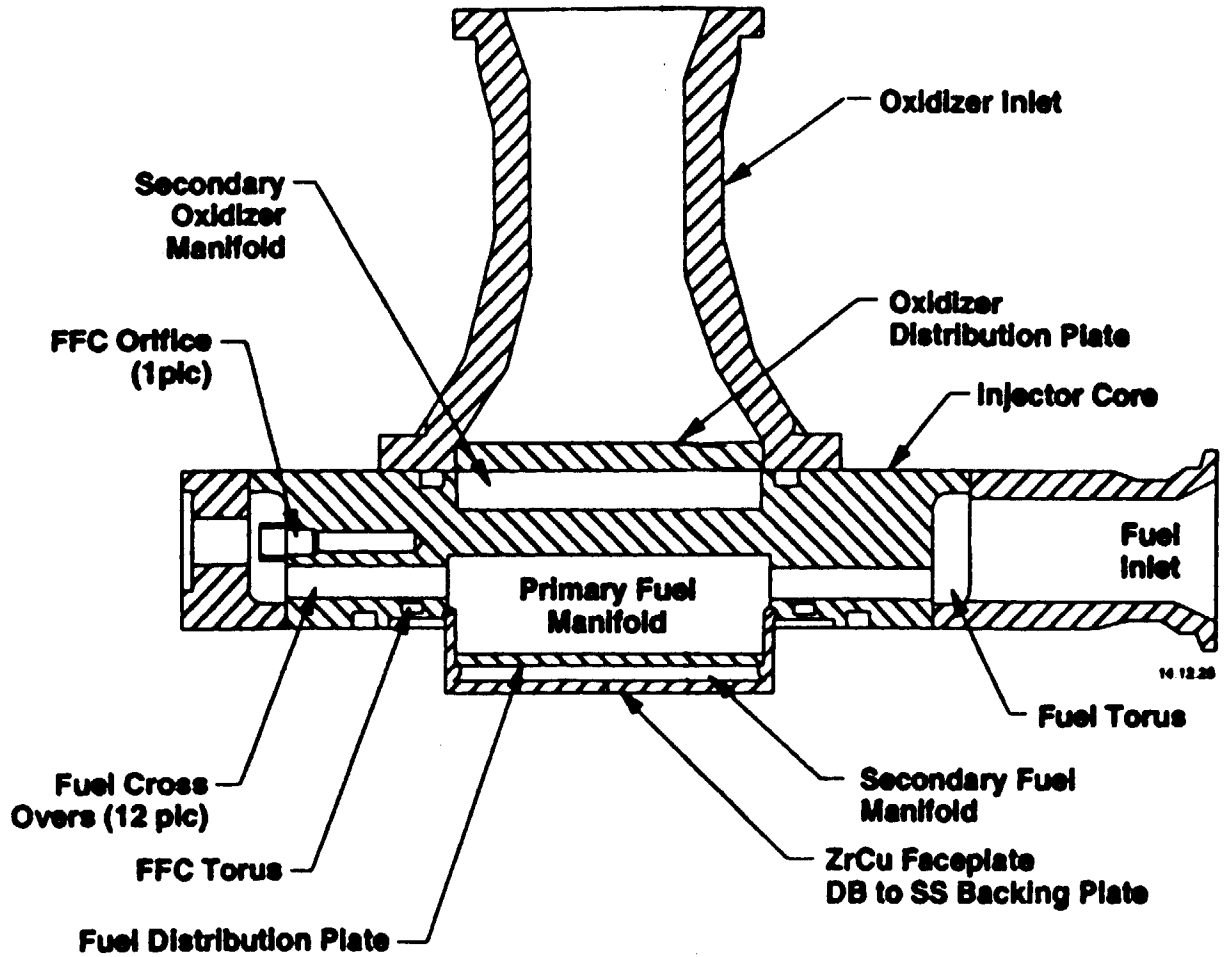

Figure 4-30. Flow Circuit Schematic of the LSI 3-D Subscale Injector

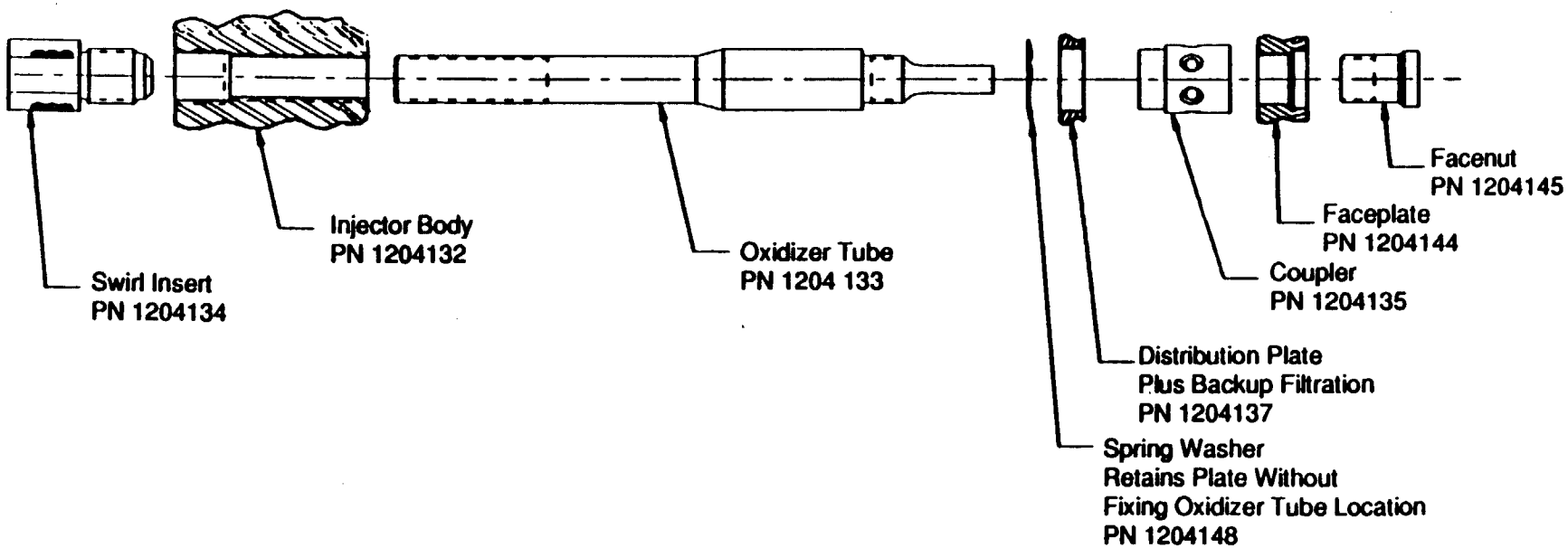

Figure 4-31. Swirl Coaxial Element Components

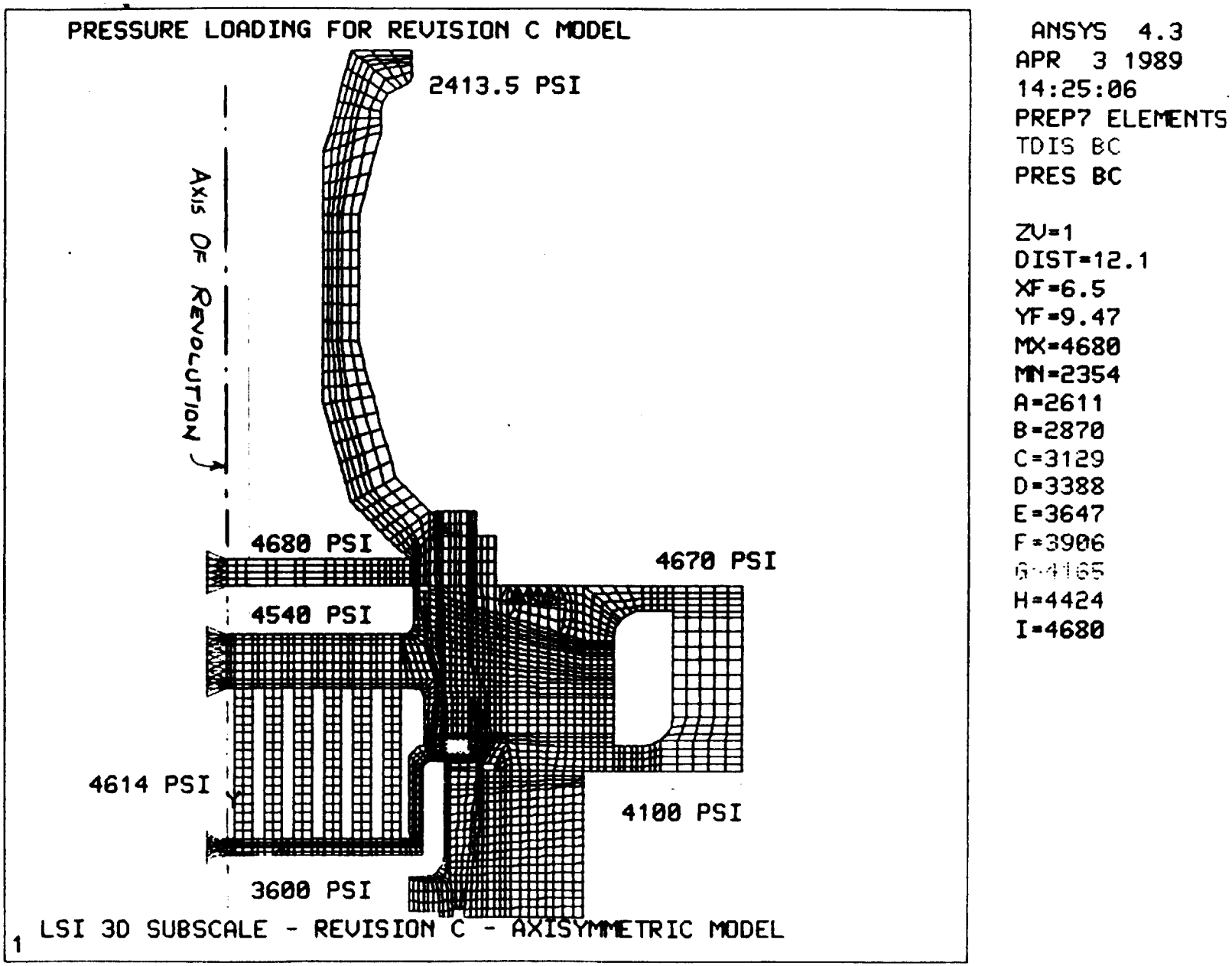

Figure 4-32. Pressure Loading for Revision C Model

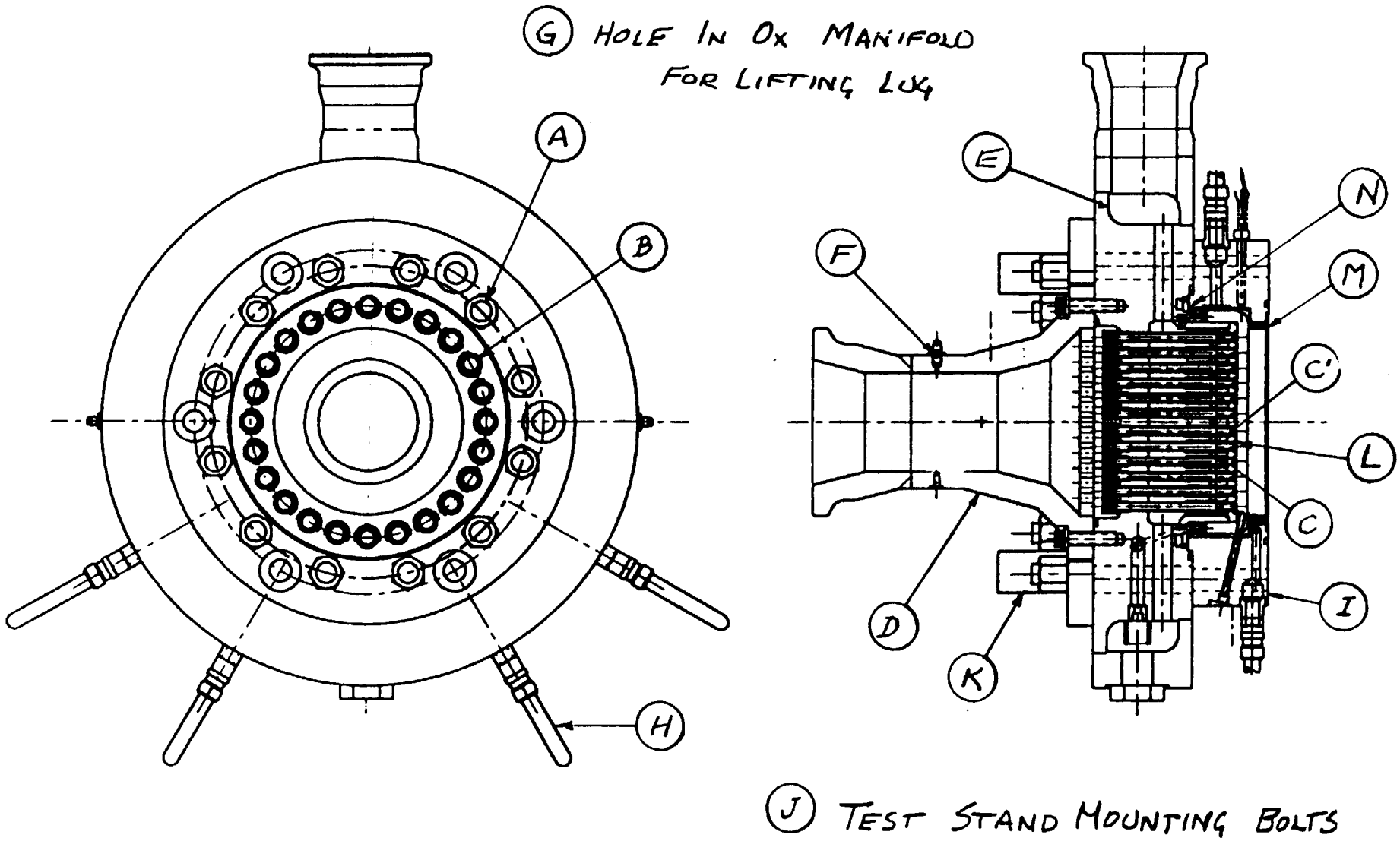

Figure 4-33. 3D Subscale – Location of Items Covered in Summary

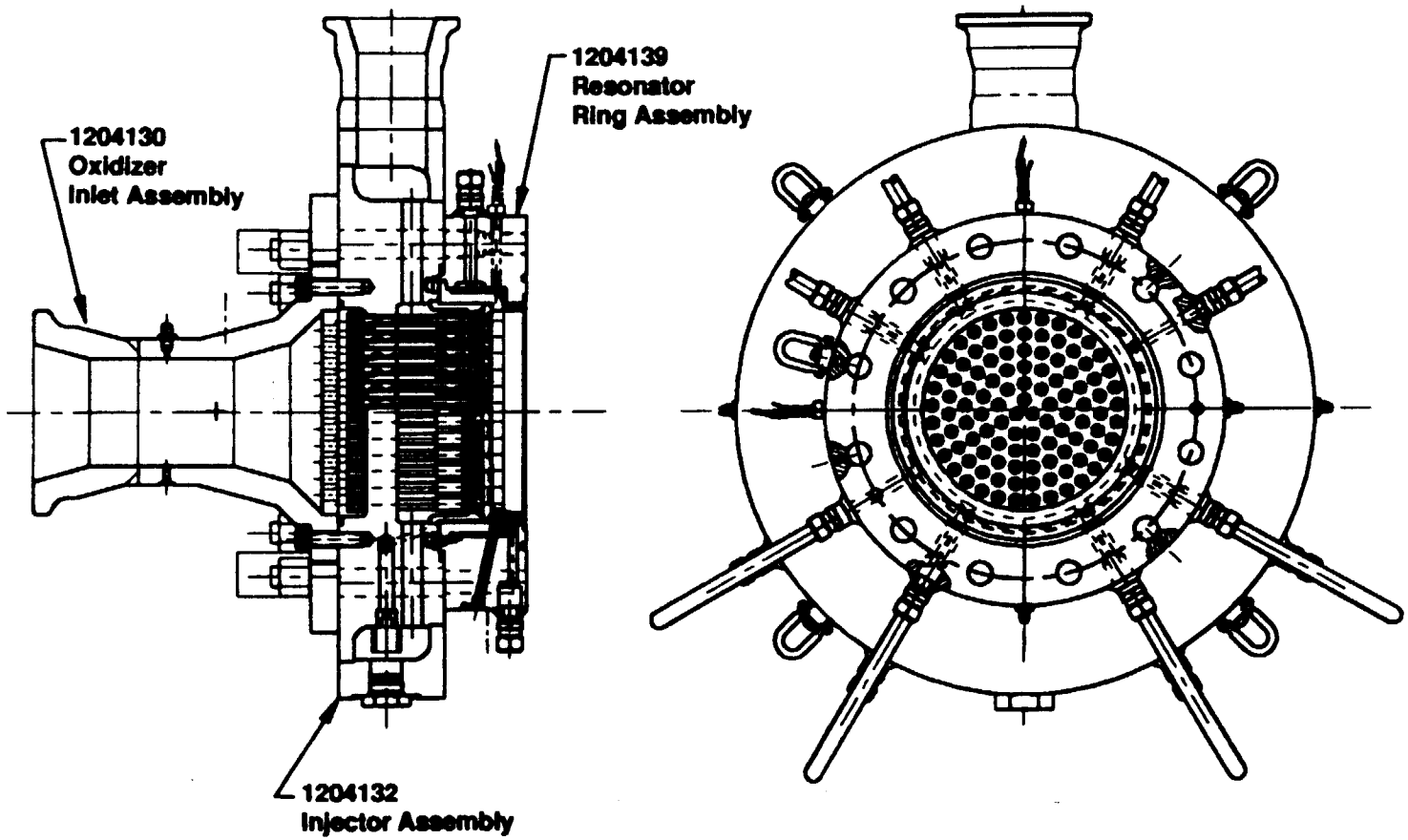

Figure 4-34. 3 D Subscale Injector Assembly (With Cooled Resonator Ring), PN 1204128

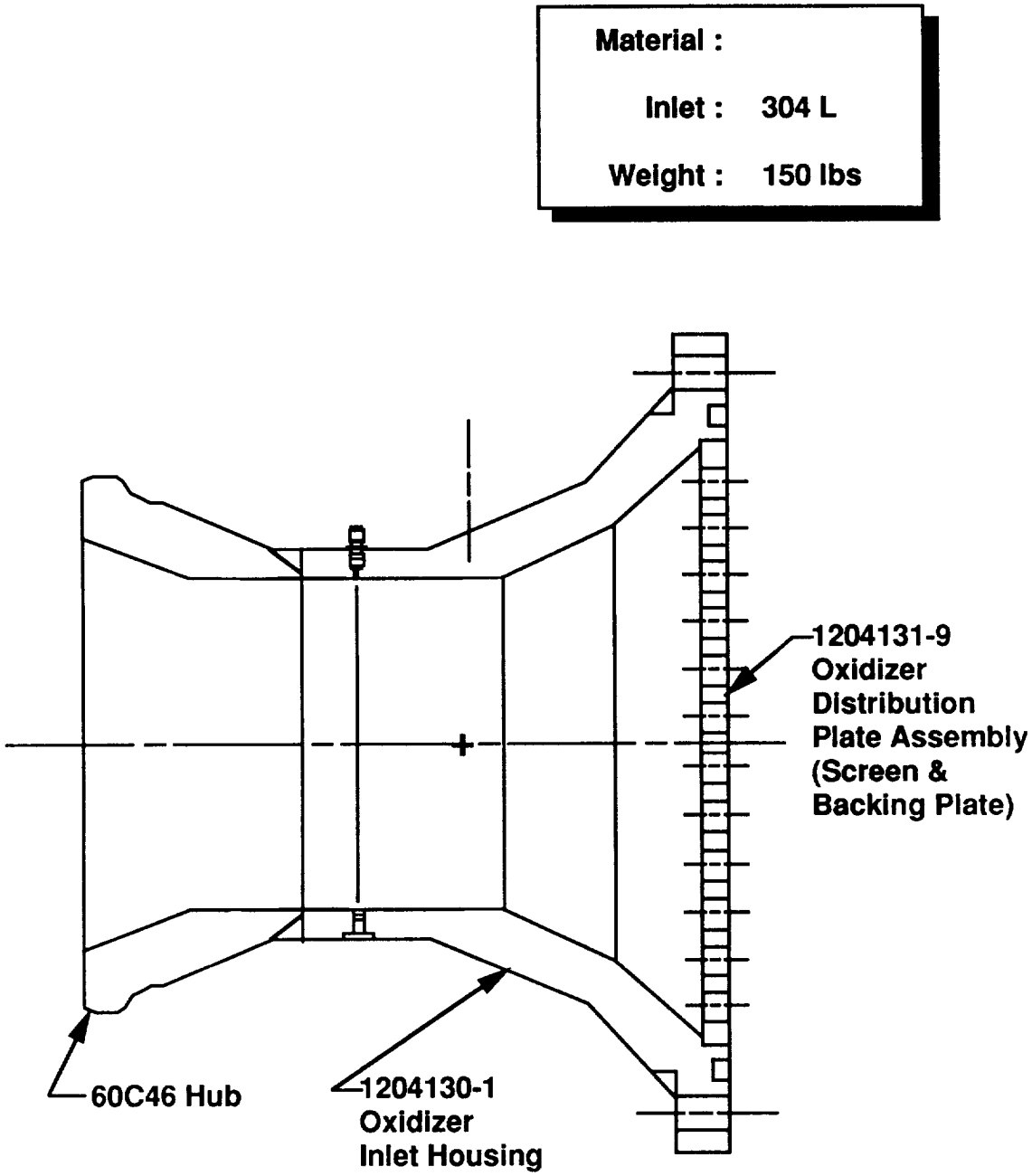

3.50.0.10

Figure 4-35. LSI 3 D Injector Oxidizer Inlet (Dwg 1204130)

ORIGINAL PAGE
BLACK AND WHITE PHOTOGRAPH

PN 1204131-1

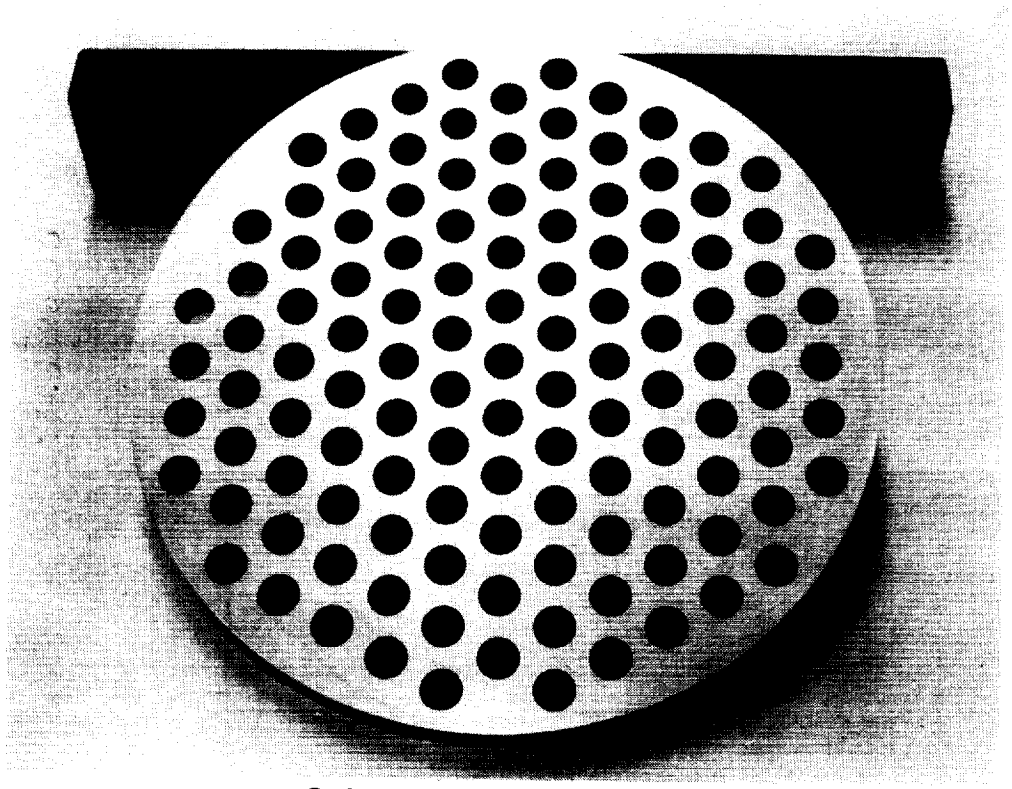

Oxidizer Distribution Plate
(Prior to Diffusion Bonding of Diffuser)

PN 1204131-2

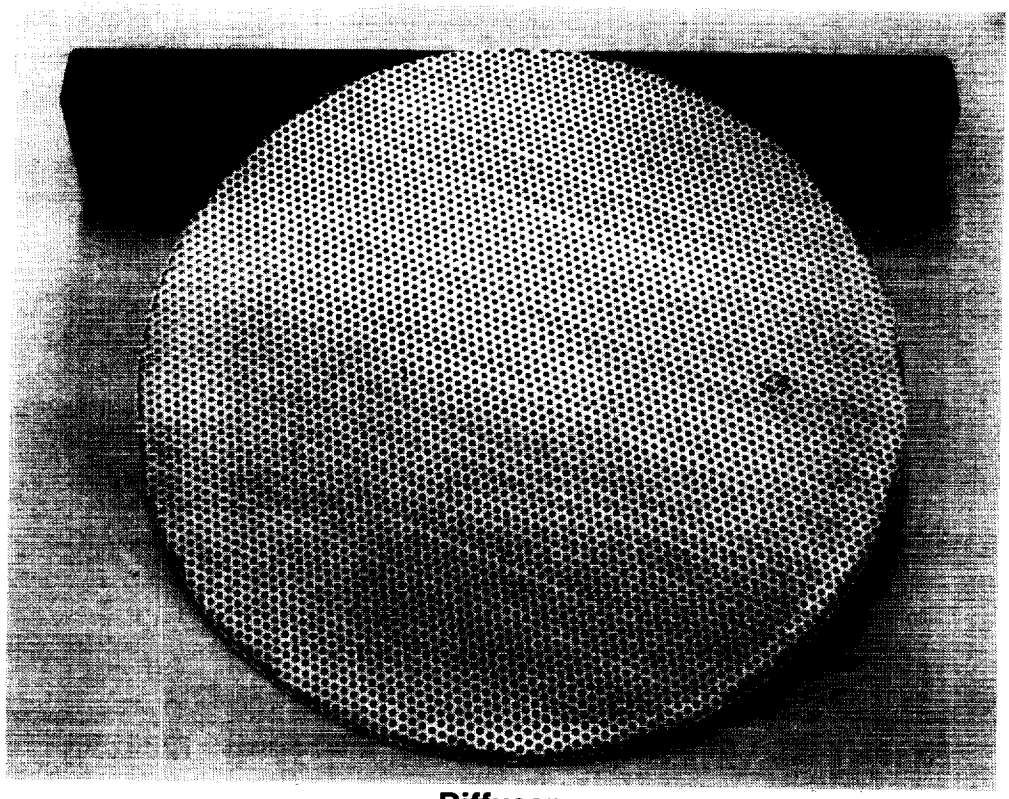

Diffuser
(Prior to Diffusion Bonding of Distribution Plate)

Figure 4-36. Oxidizer Distribution Plate Assembly Sub-Components

ORIGINAL PAGE
BLACK AND WHITE PHOTOGRAPH

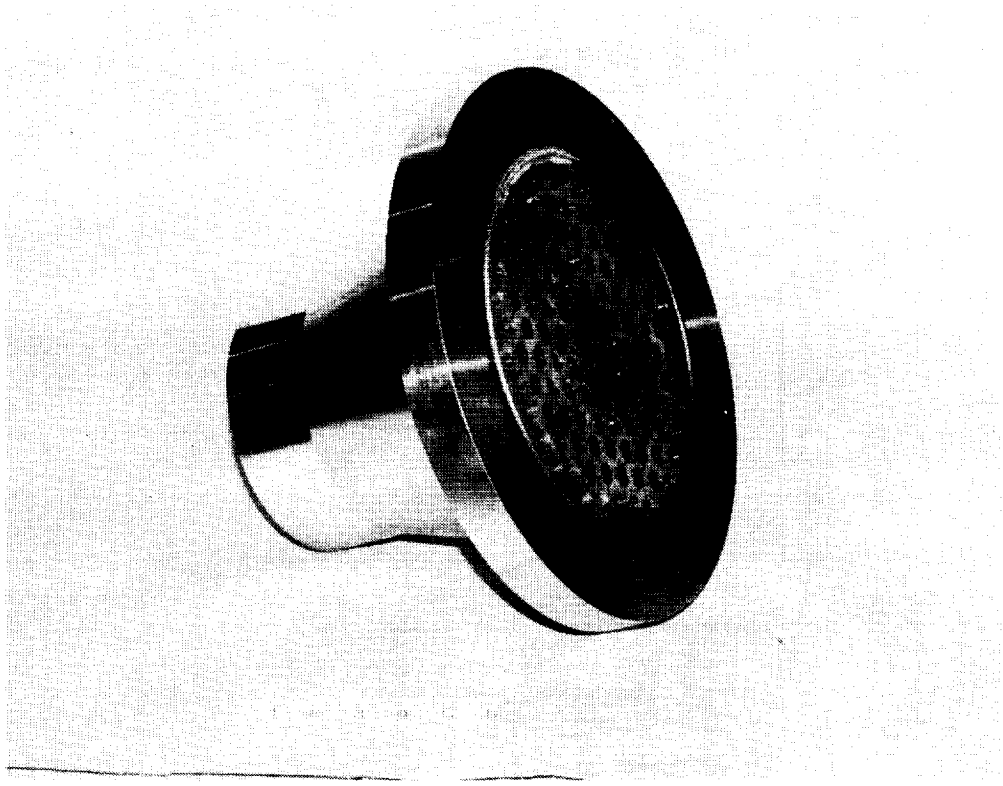

Side View

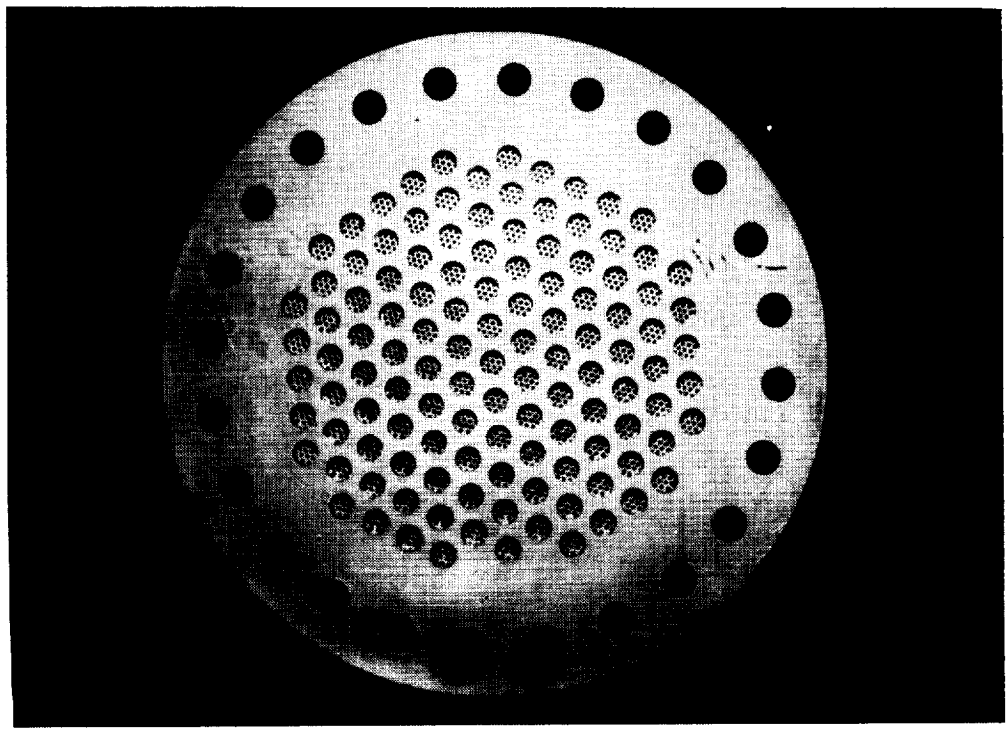

End View

Figure 4-37. Diffusion Bonded Oxidizer Distribution Plate EB Welded to Oxidizer Inlet

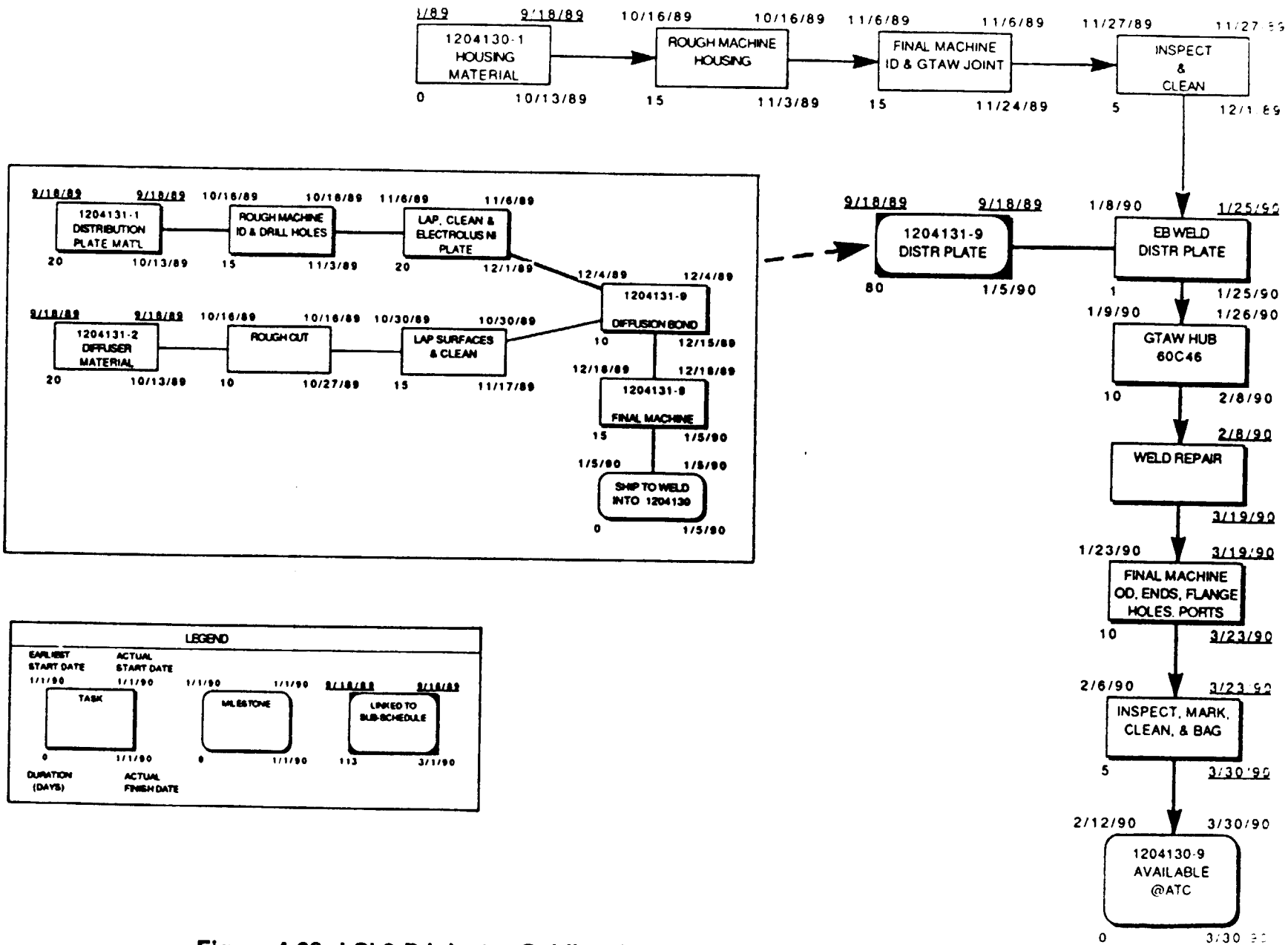

Figure 4-38. LSI 3 D Injector Oxidizer Inlet (Dwg 1204130) Detailed Fabrication Schedule

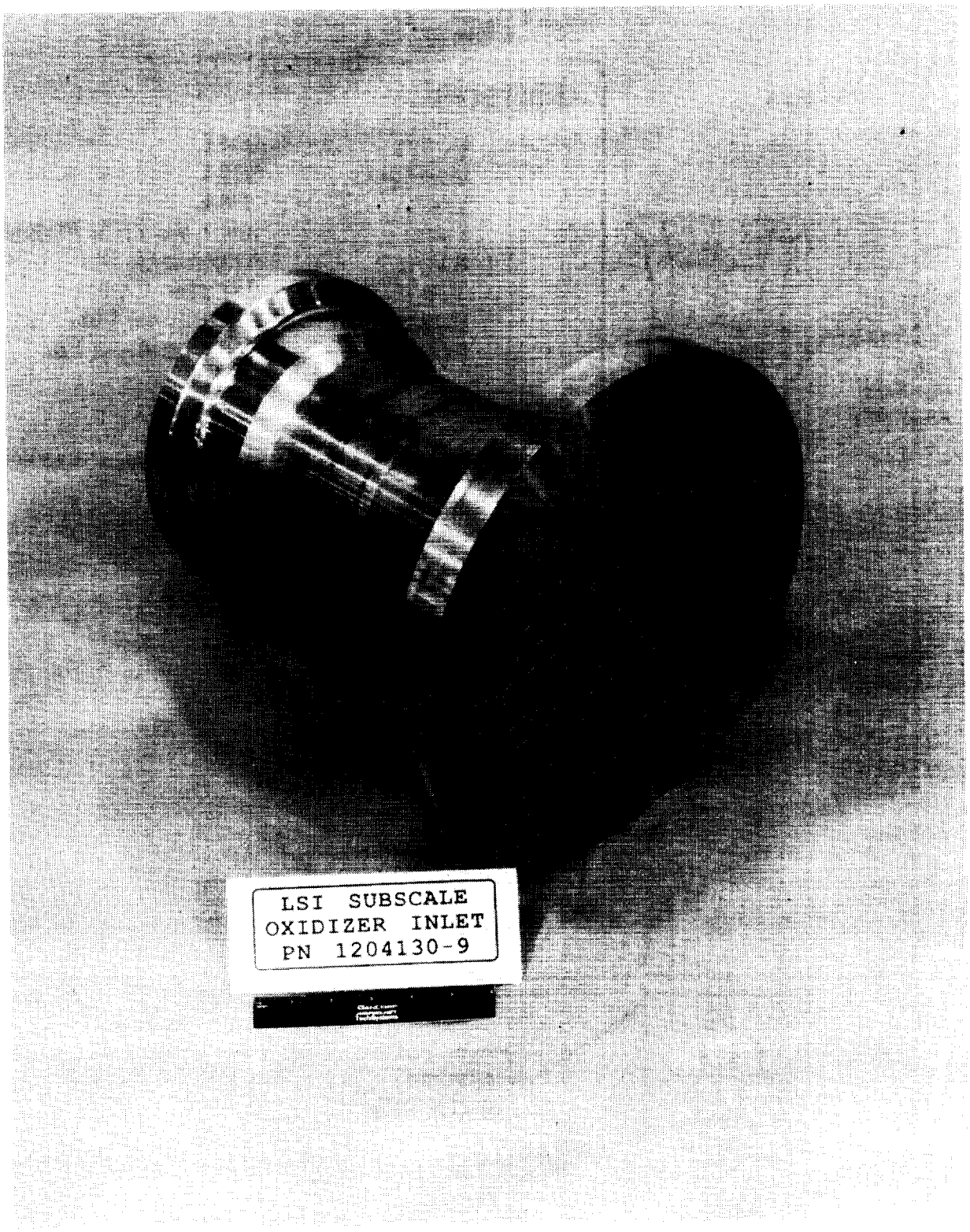

Figure 4-39. Completed LSI 3 D Injector Oxidizer Inlet (Dwg Number 1204130-9)

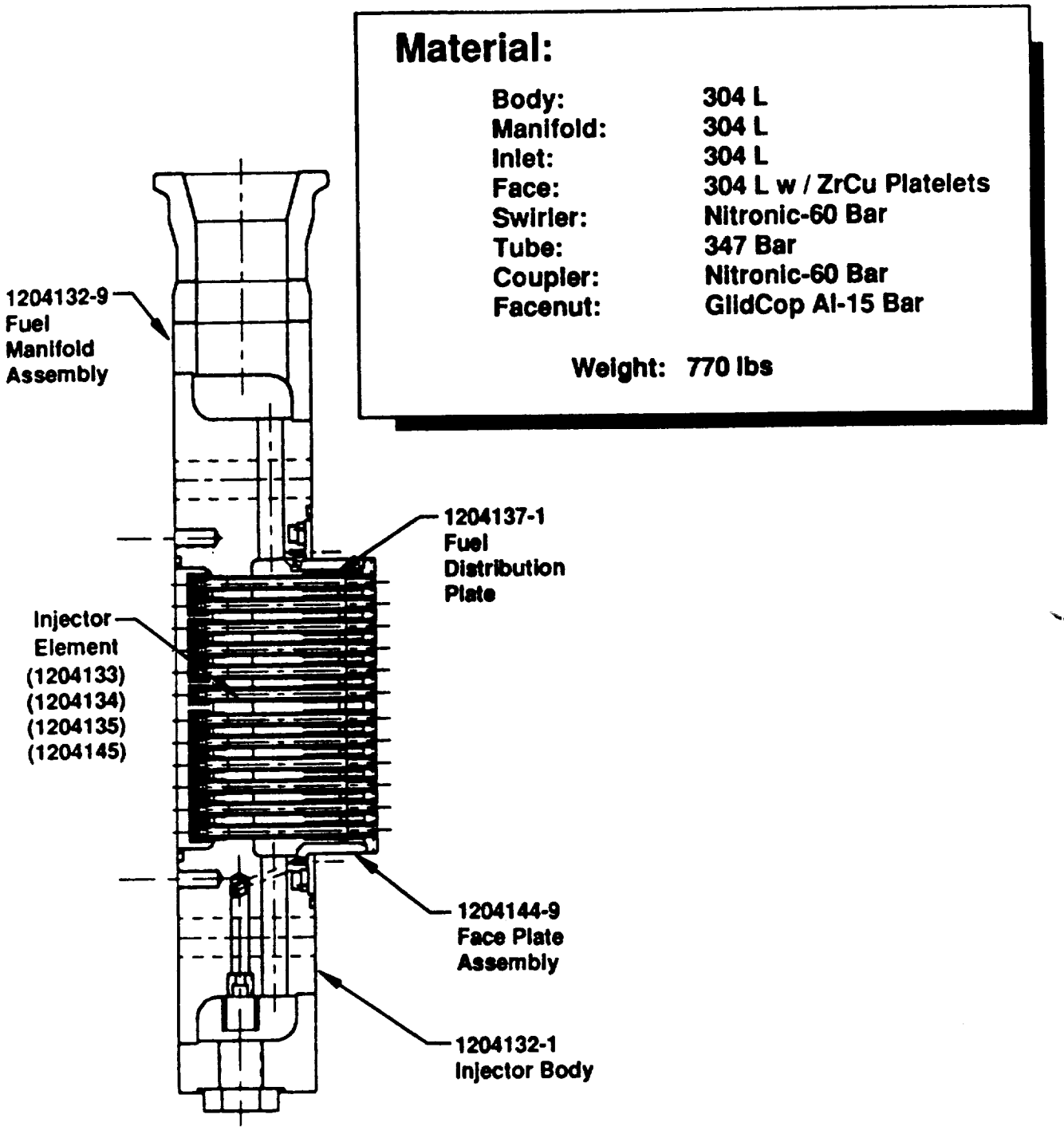

Figure 4-40. LSI 3 D Injector Body (Dwg 1204132)

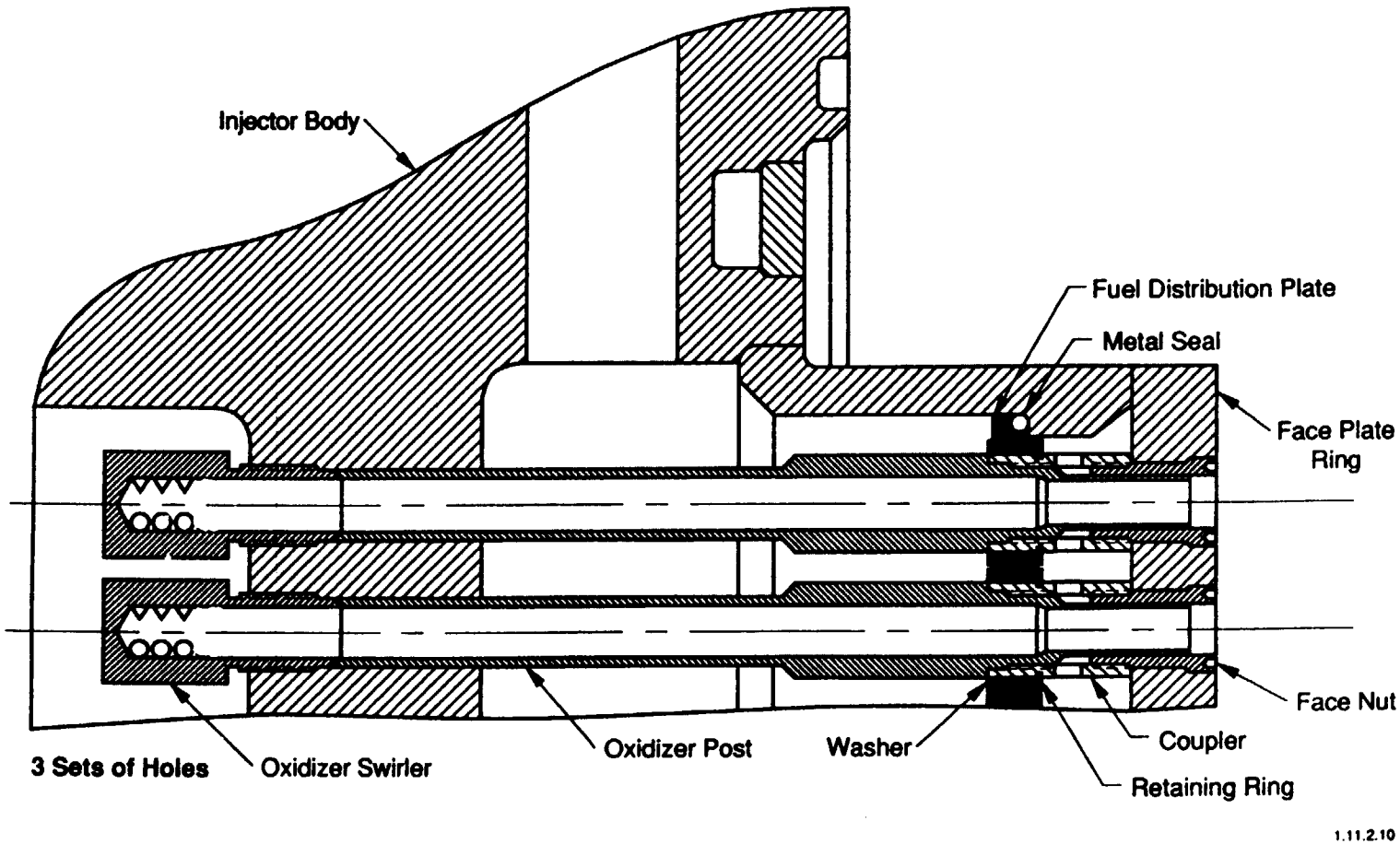

Figure 4-41. Final Assembly – Dwg 1204132-19 Injector Body

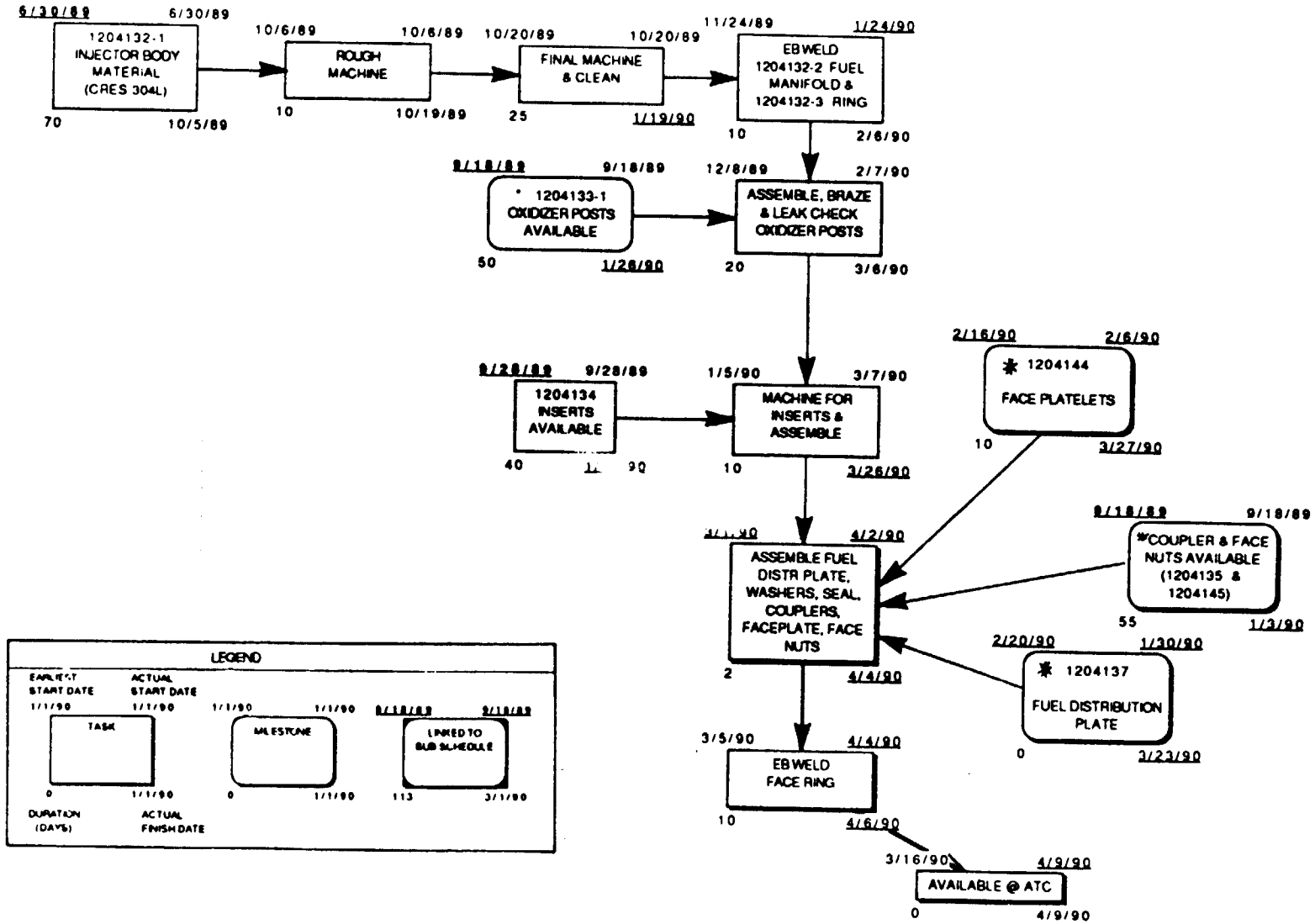

Figure 4-42. LSI 3 D Injector Body (Dwg 1204132) Detailed Fabrication Schedule

ORIGINAL PAGE
BLACK AND WHITE PHOTOGRAPH

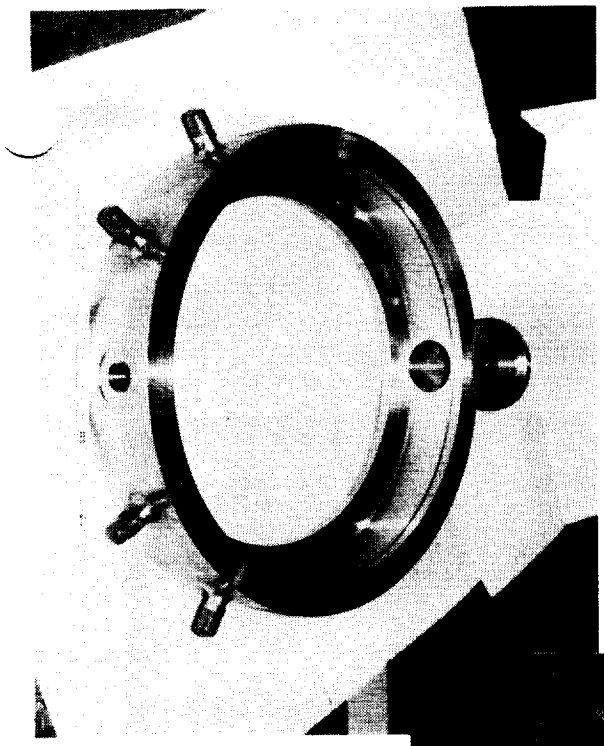

Fuel Manifold Assembly
(1204132-9: Consists of
1204132-2 and 1204132-4)

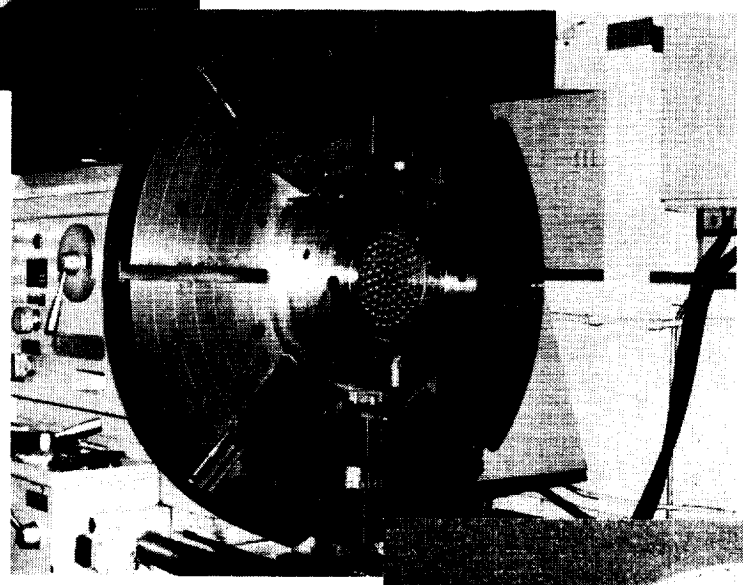

Injector Body
(1204132-1)

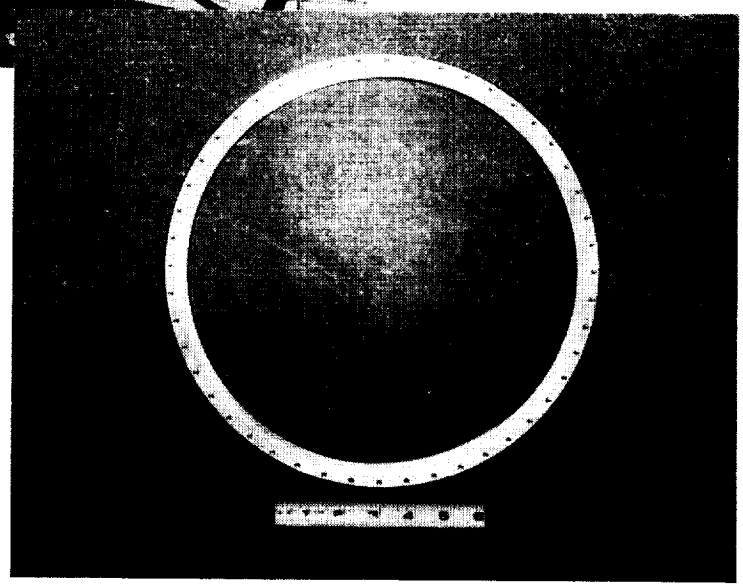

Ring
(1204132-3)

Figure 4-43. LSI 3-D Injector Body (Dwg 1204132) Sub-Components

ORIGINAL PAGE
BLACK AND WHITE PHOTOGRAPH

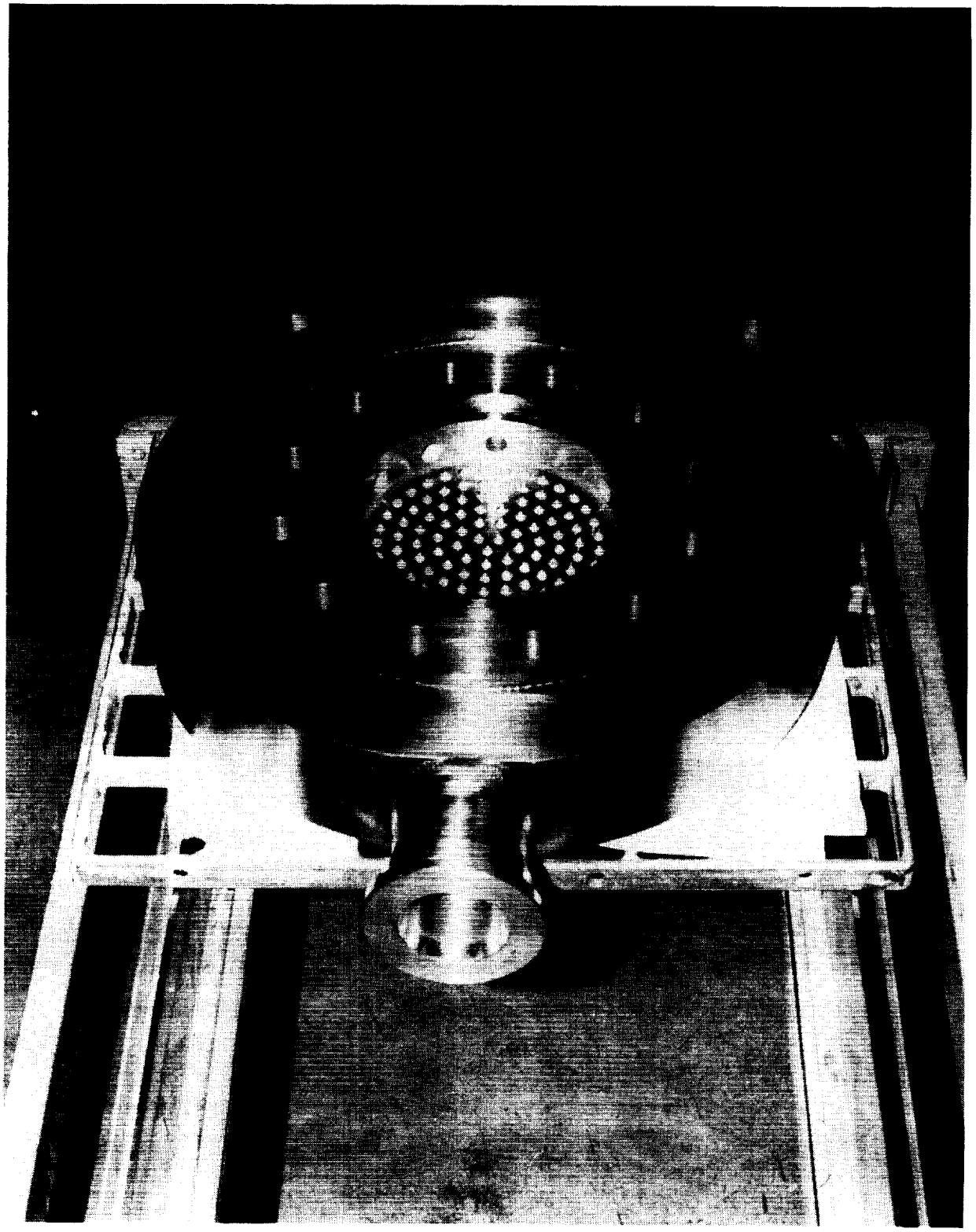

Figure 4-44. Injector Core Prior to Assembly

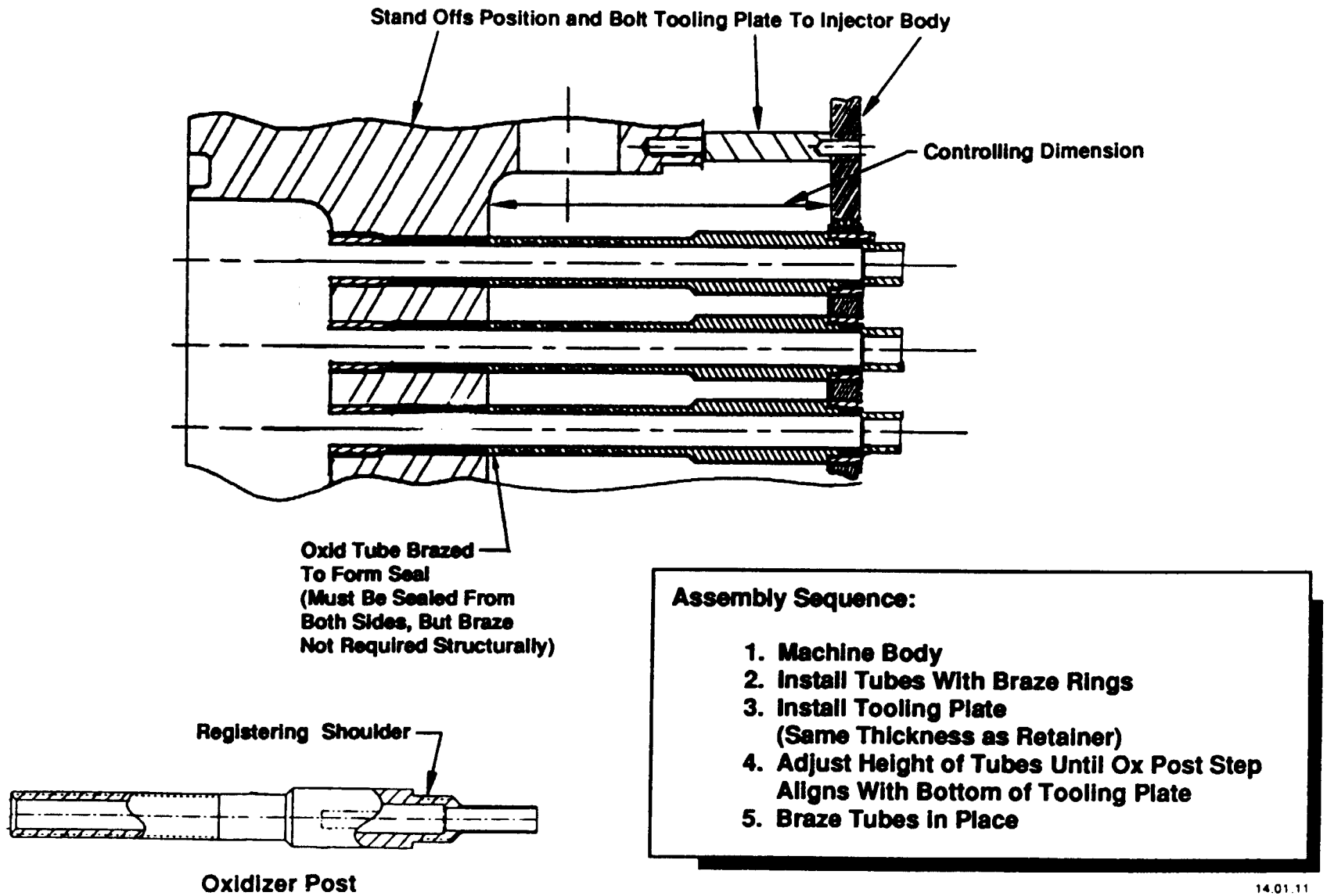

Figure 4-45. Modified Braze Procedure for Oxidizer Injection Posts to Injector Body Assembly (PN 1204132)

C-4

ORIGINAL PAGE
BLACK AND WHITE PHOTOGRAPH

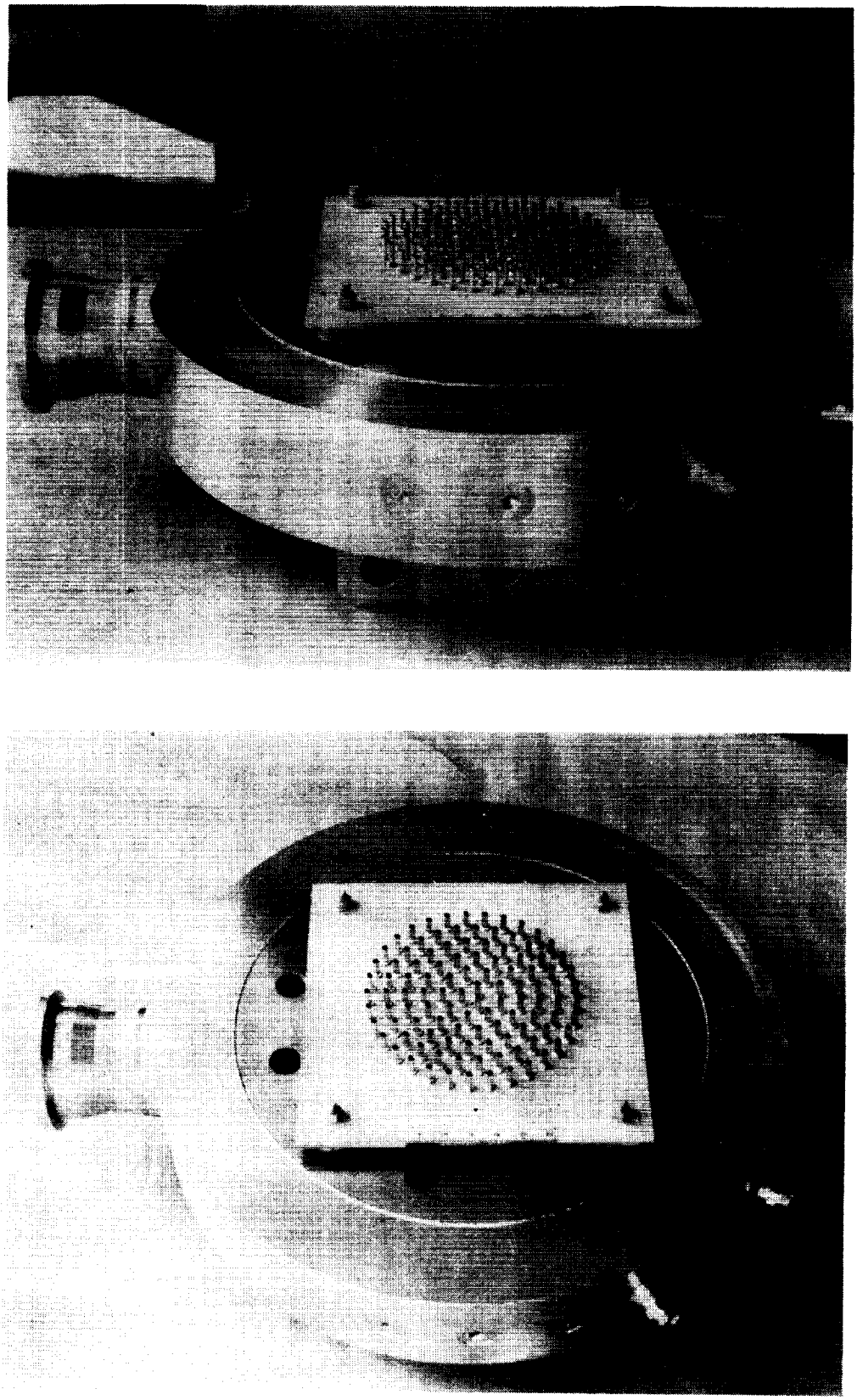

Figure 4-46. Tooling to Position Oxidizer Posts During Braze Operation

ORIGINAL PAGE
BLACK AND WHITE PHOTOGRAPH

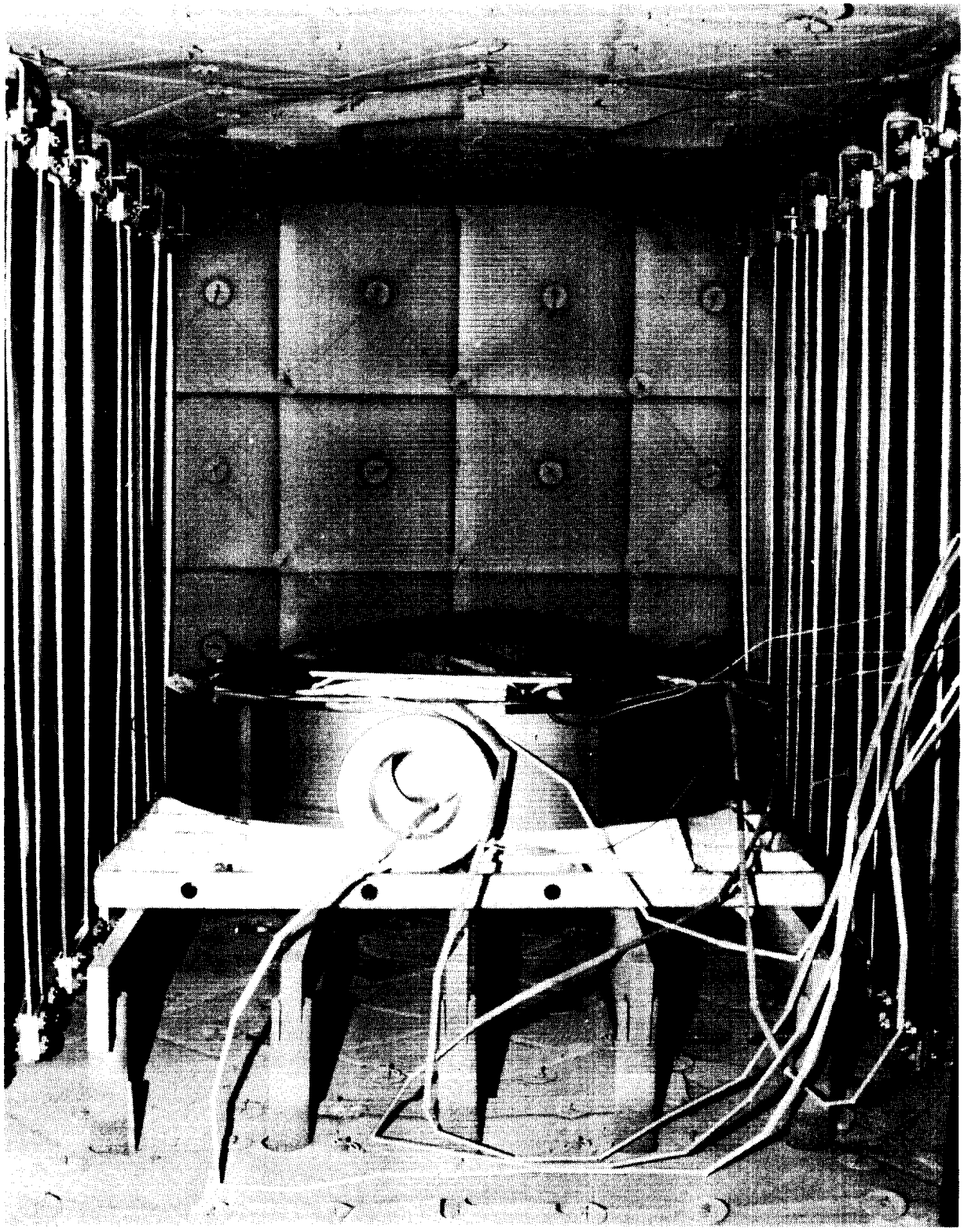

Figure 4-47. Injector Core in Vacuum Furnace

ORIGINAL PAGE
BLACK AND WHITE PHOTOGRAPH

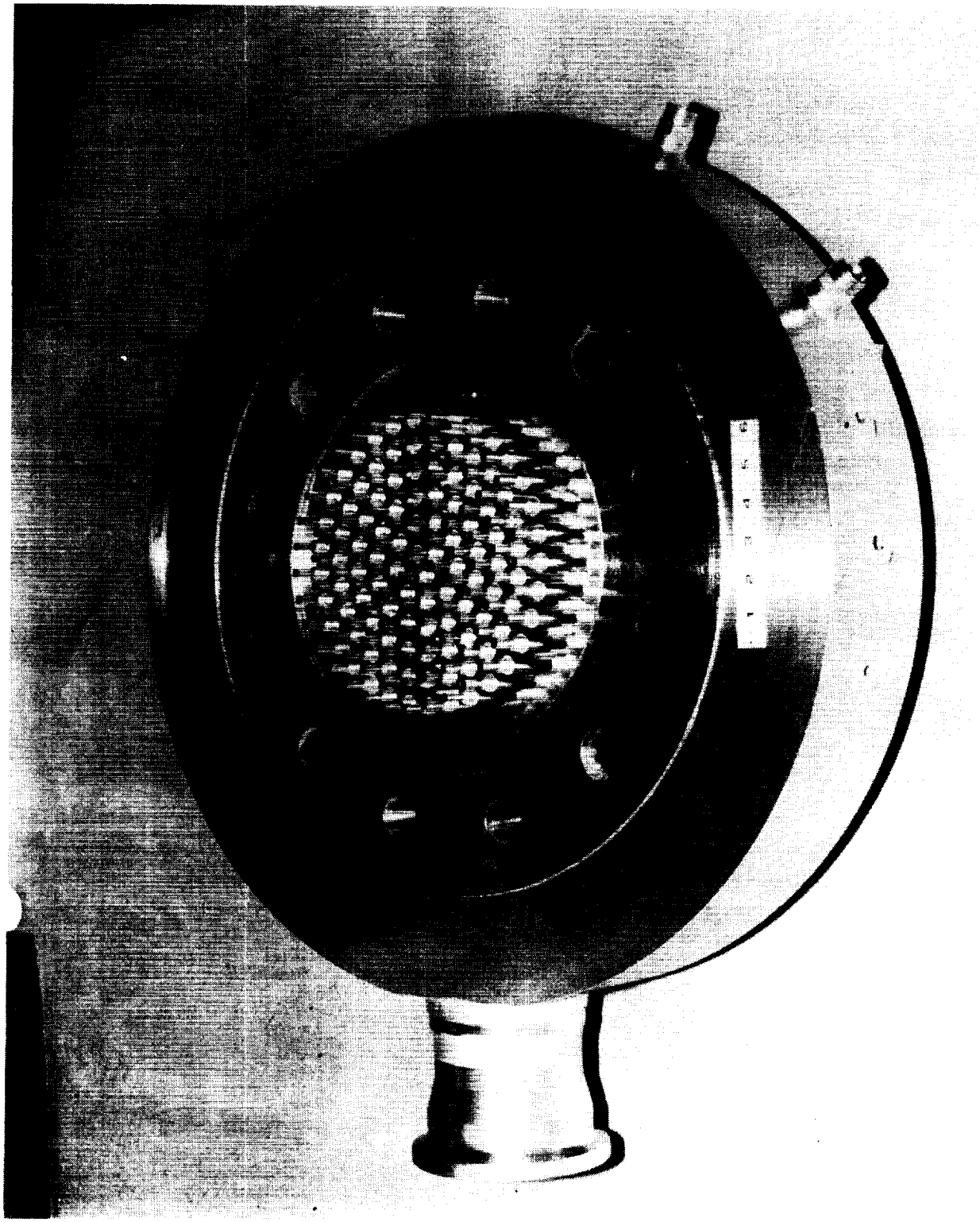

Figure 4-48. Brazed Oxidizer Core

ORIGINAL PAGE
BLACK AND WHITE PHOTOGRAPH

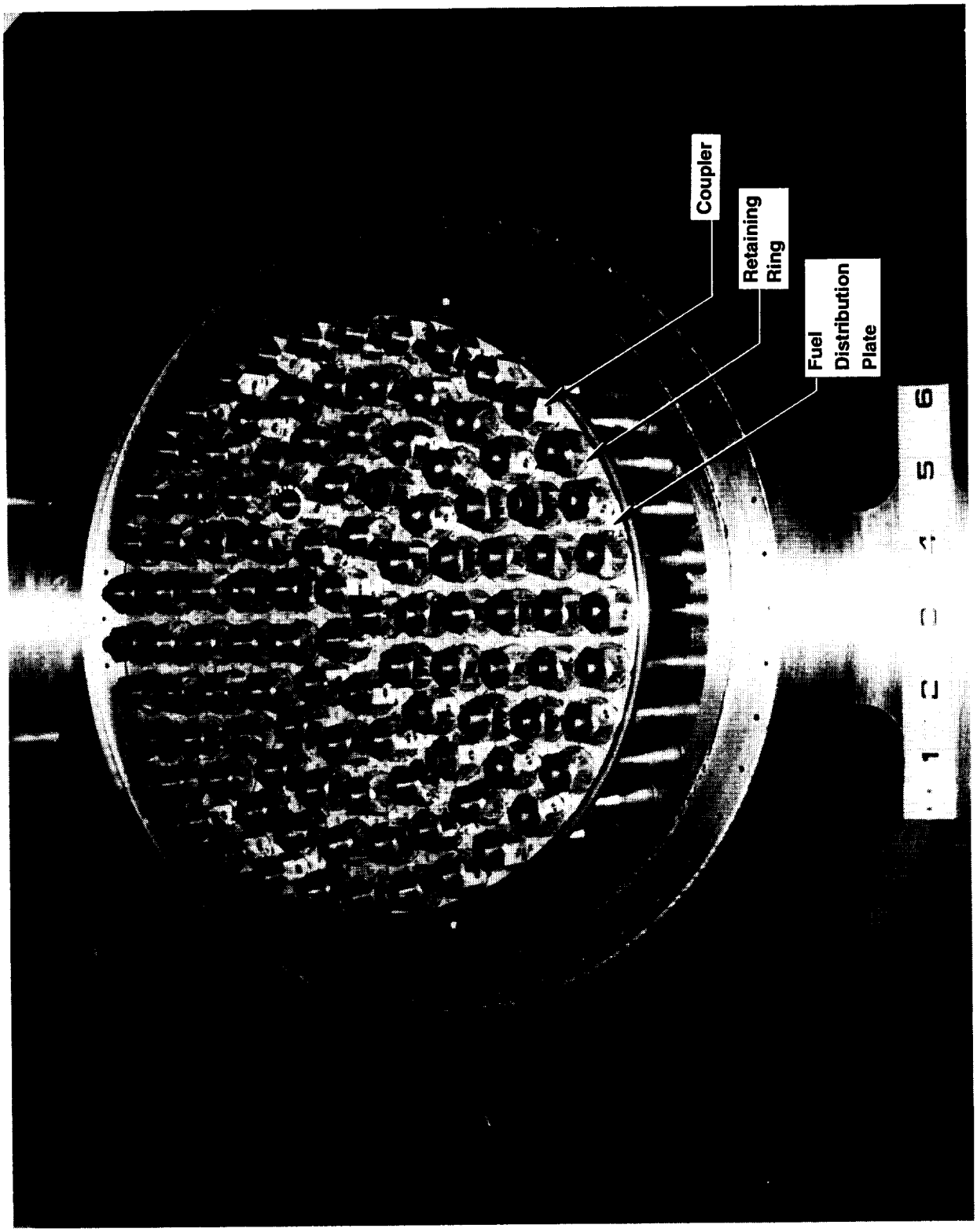

Figure 4-49. Top View of Injector Body and Fuel Distribution Plate

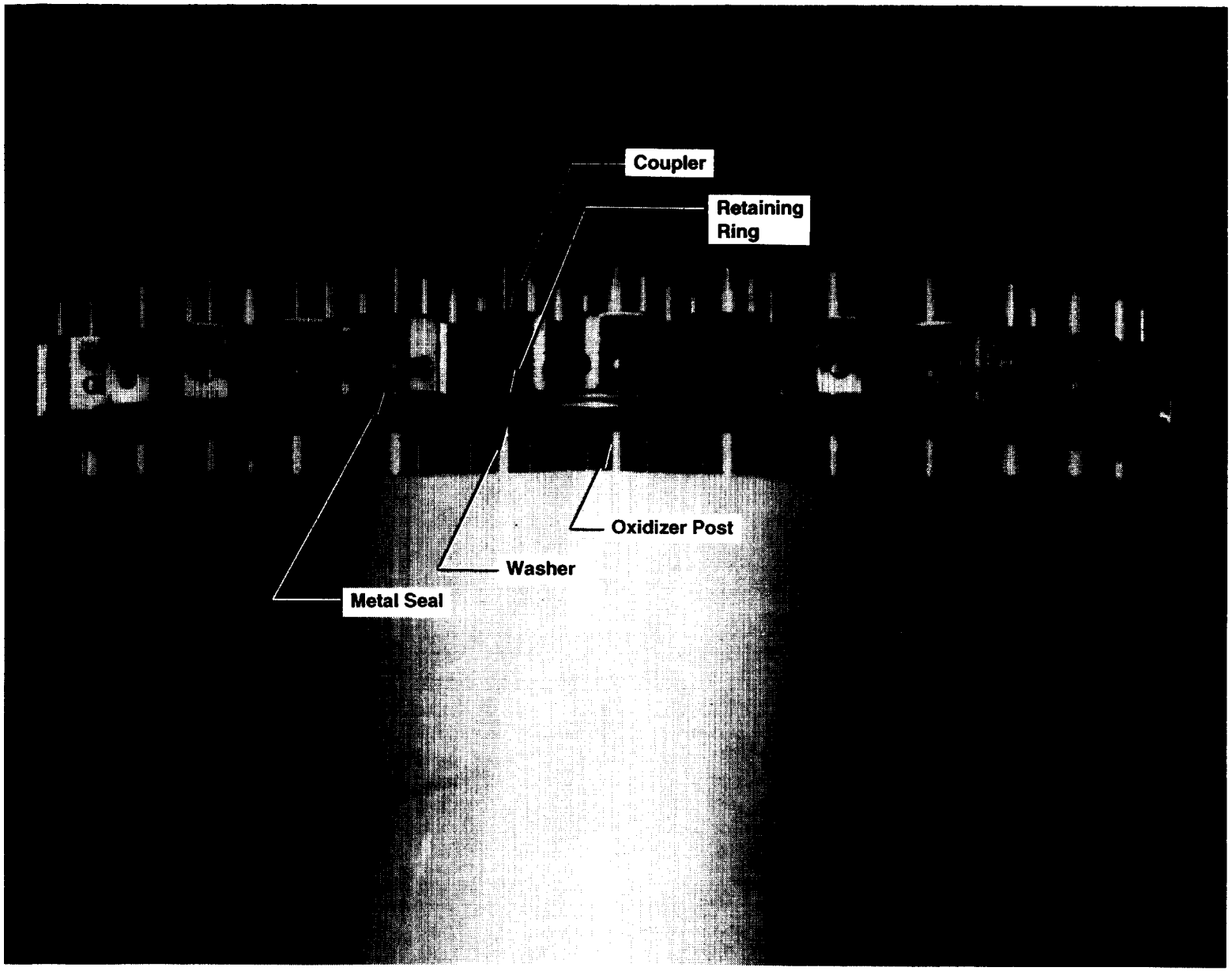

Figure 4-50. Side view of Injector Body, Washer, Fuel Distribution Plate, Retainer Ring, and Coupler

ORIGINAL PAGE
BLACK AND WHITE PHOTOGRAPH

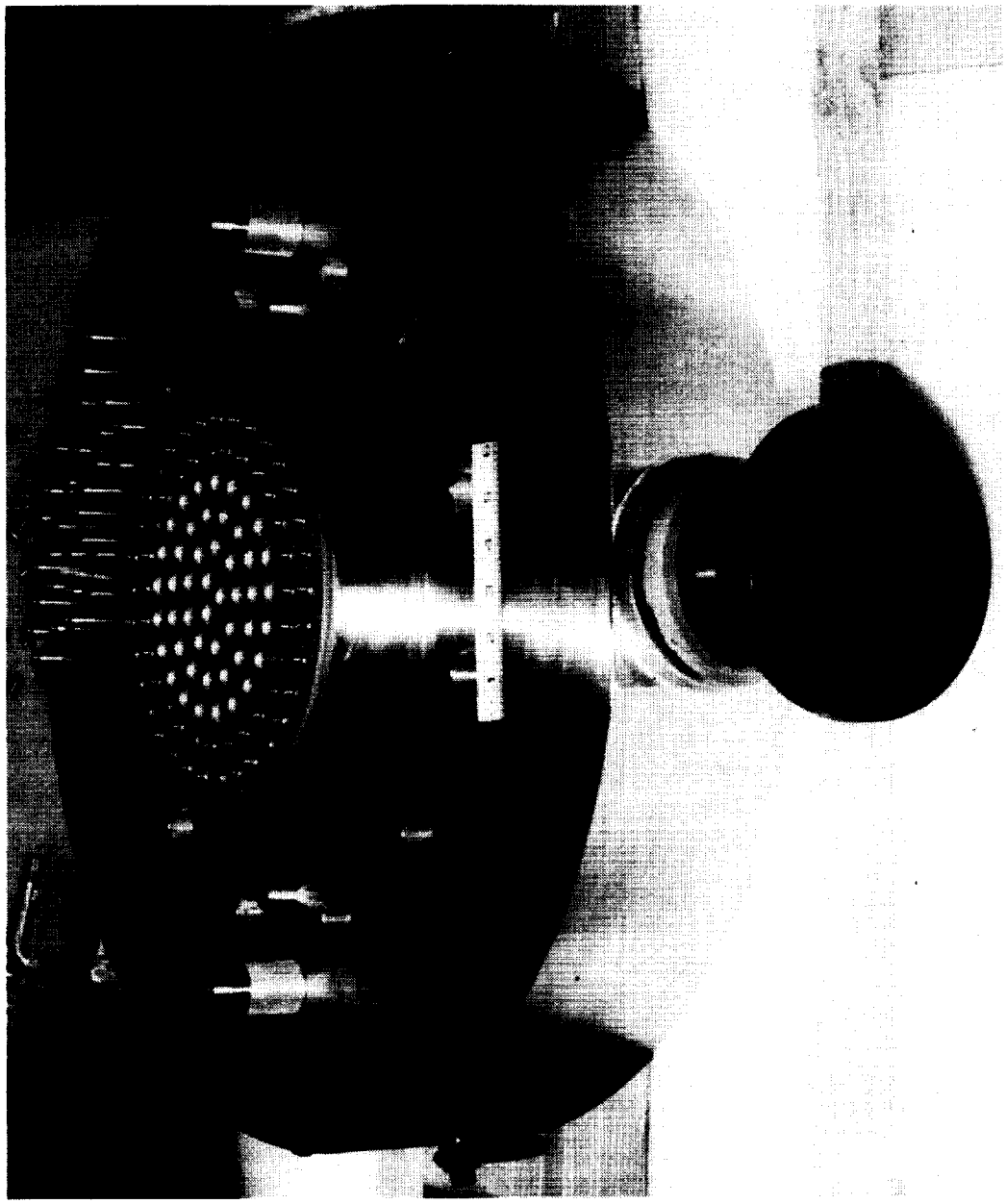

Figure 4-51. Assembly of Face Plate Ring and Face Nuts

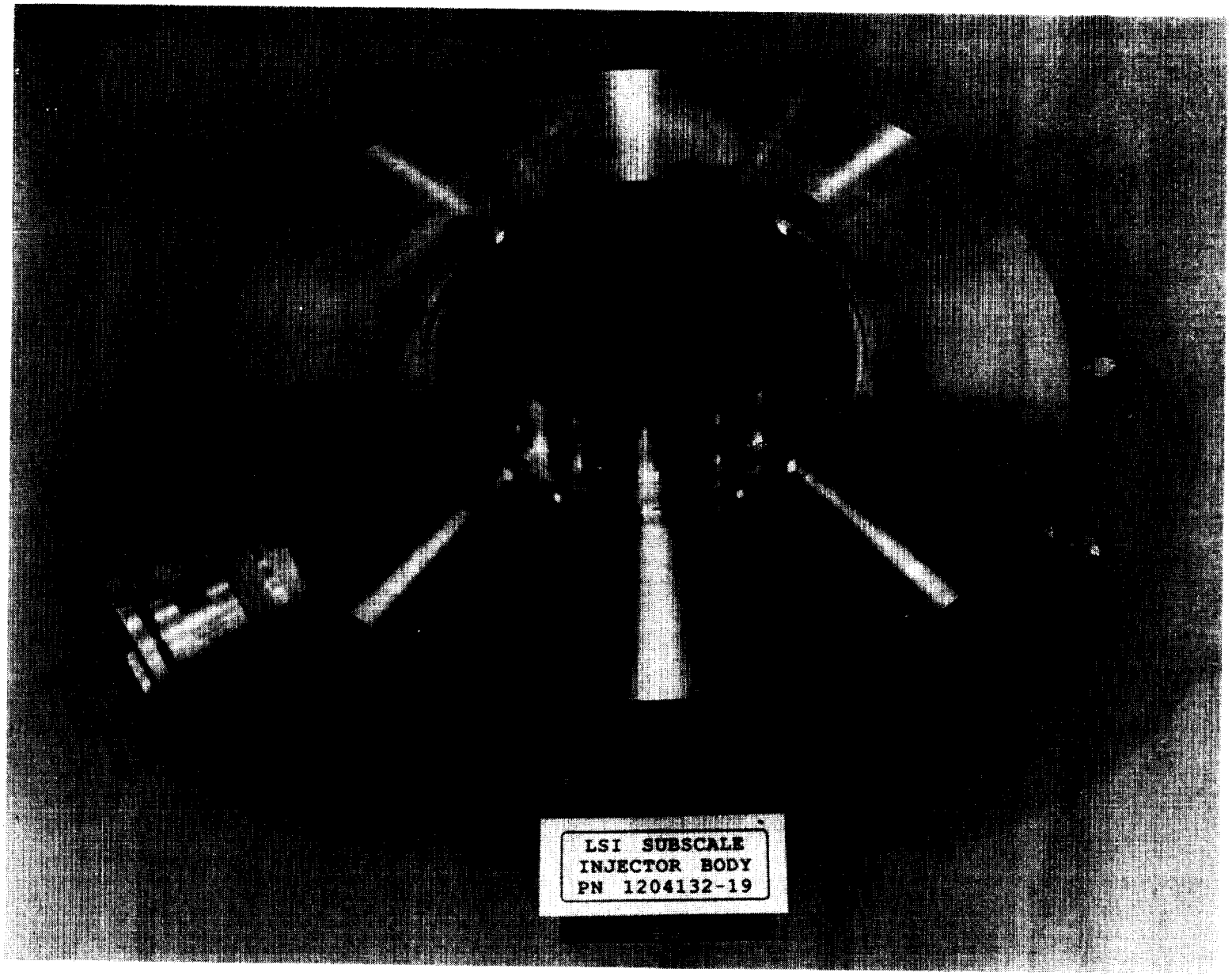

Figure 4-52. Injector Body – Chamber Side

ORIGINAL PAGE
BLACK AND WHITE PHOTOGRAPH

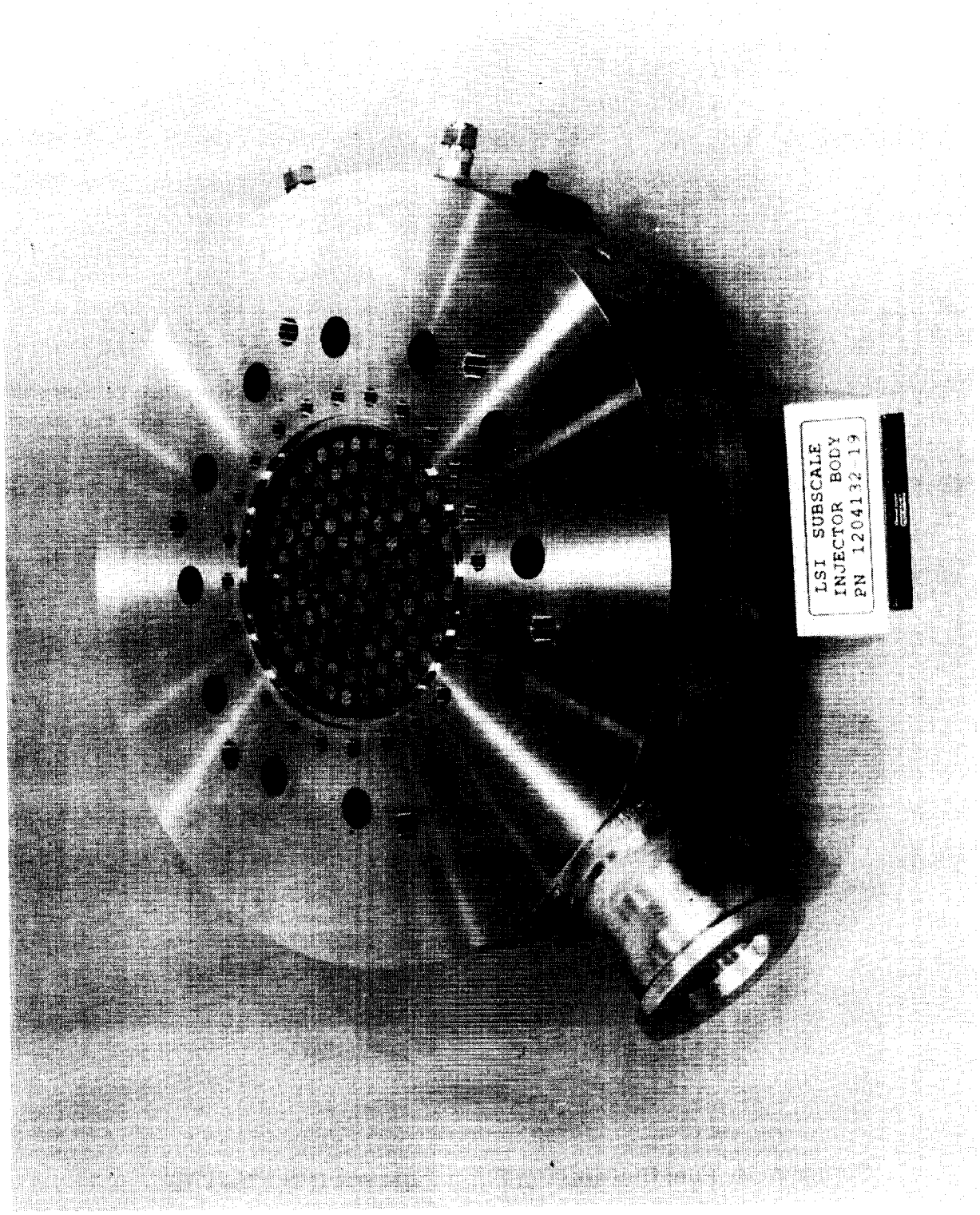

Figure 4-53. Injector Body – Oxidizer Inlet Side

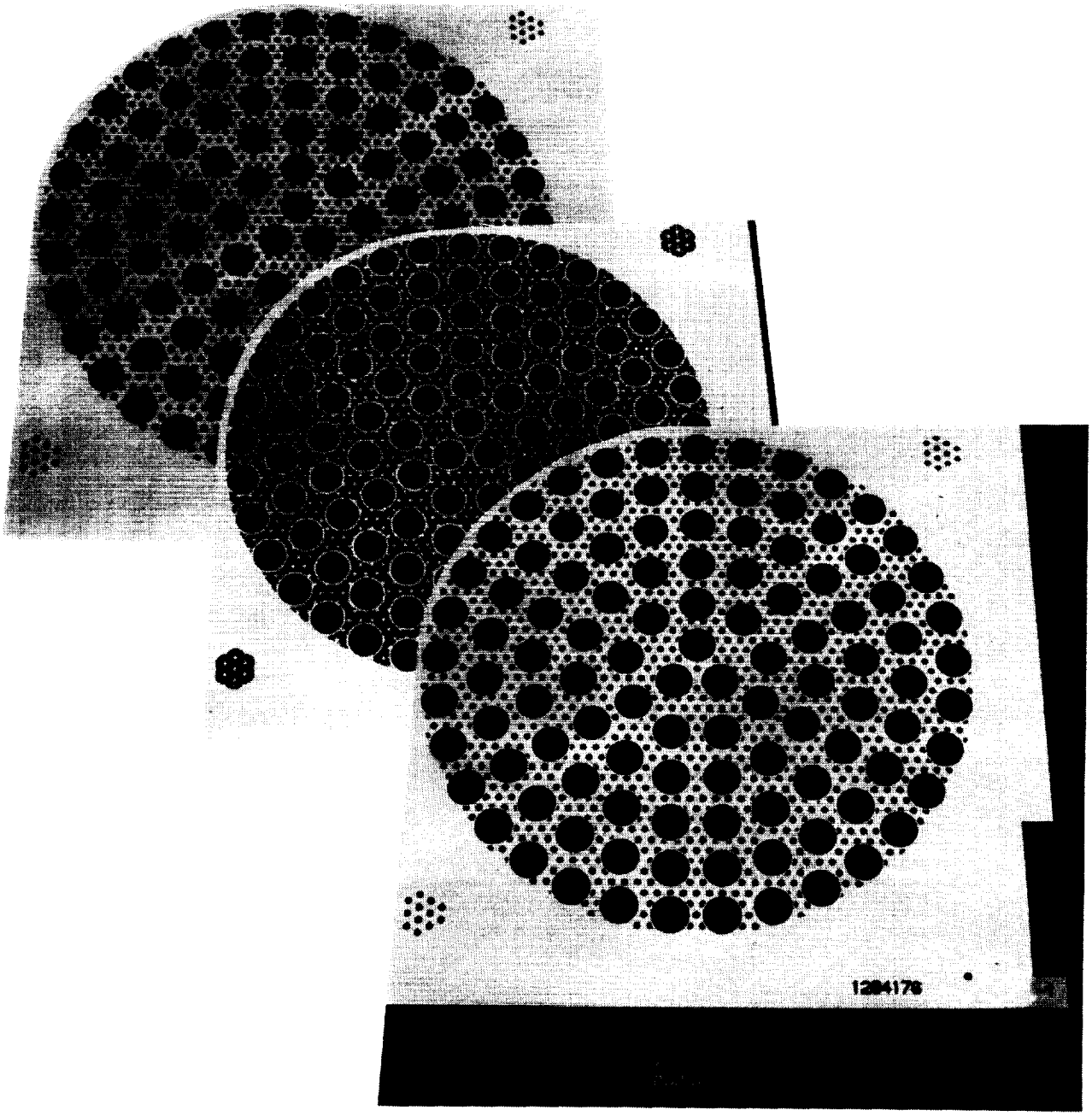

Figure 4-54. Fuel Distribution/Filter Platelets (PN 1204176)

ORIGINAL PAGE
BLACK AND WHITE PHOTOGRAPH

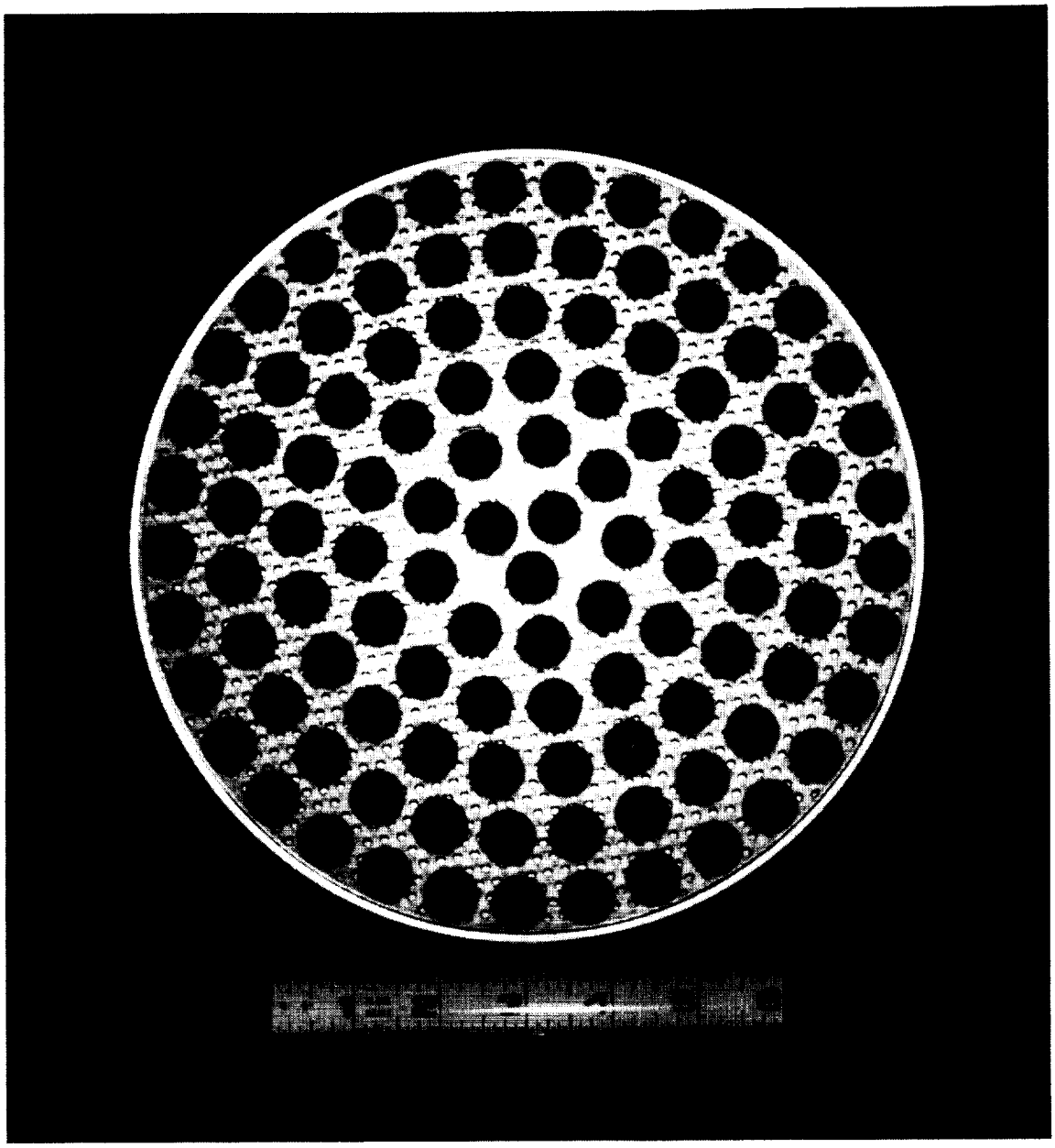

Figure 4-55. Fuel Distribution and Filter Plate

ORIGINAL PAGE
BLACK AND WHITE PHOTOGRAPH

Figure 4-56. Face Plate Assy Prior to Final Weldment to Injector Body

1204177 FACE PLATE ASSEMBLY

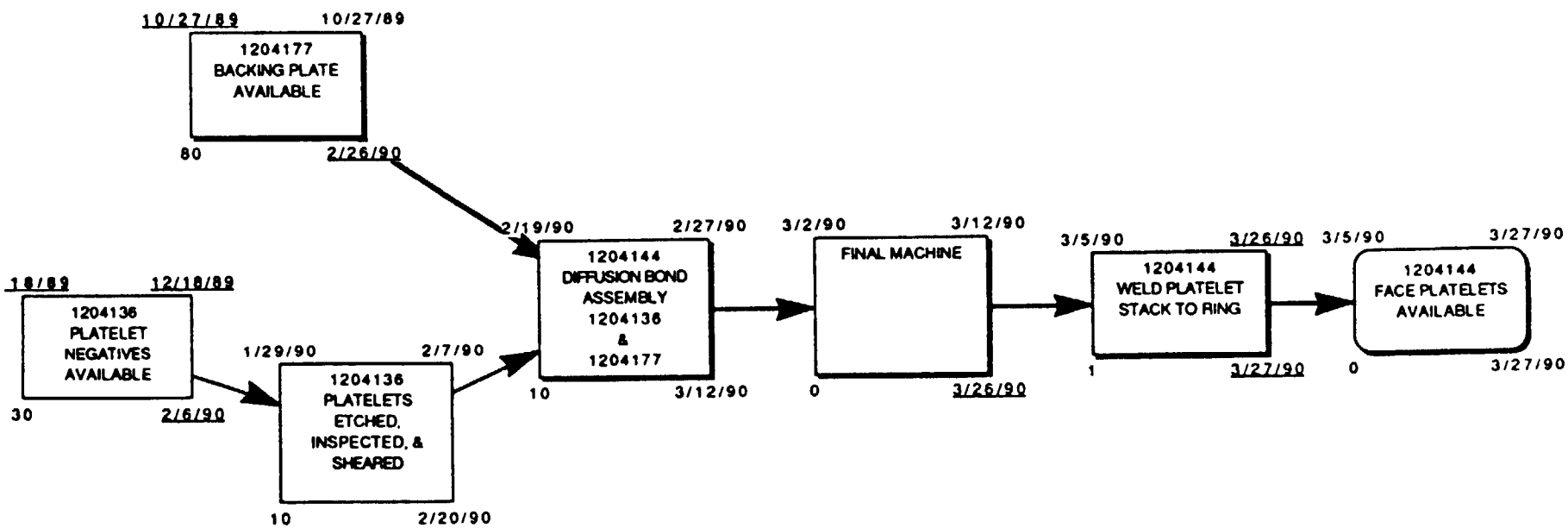

Figure 4-57. Face Platelet Assembly (PN 1204144) Detailed Fabrication Schedule

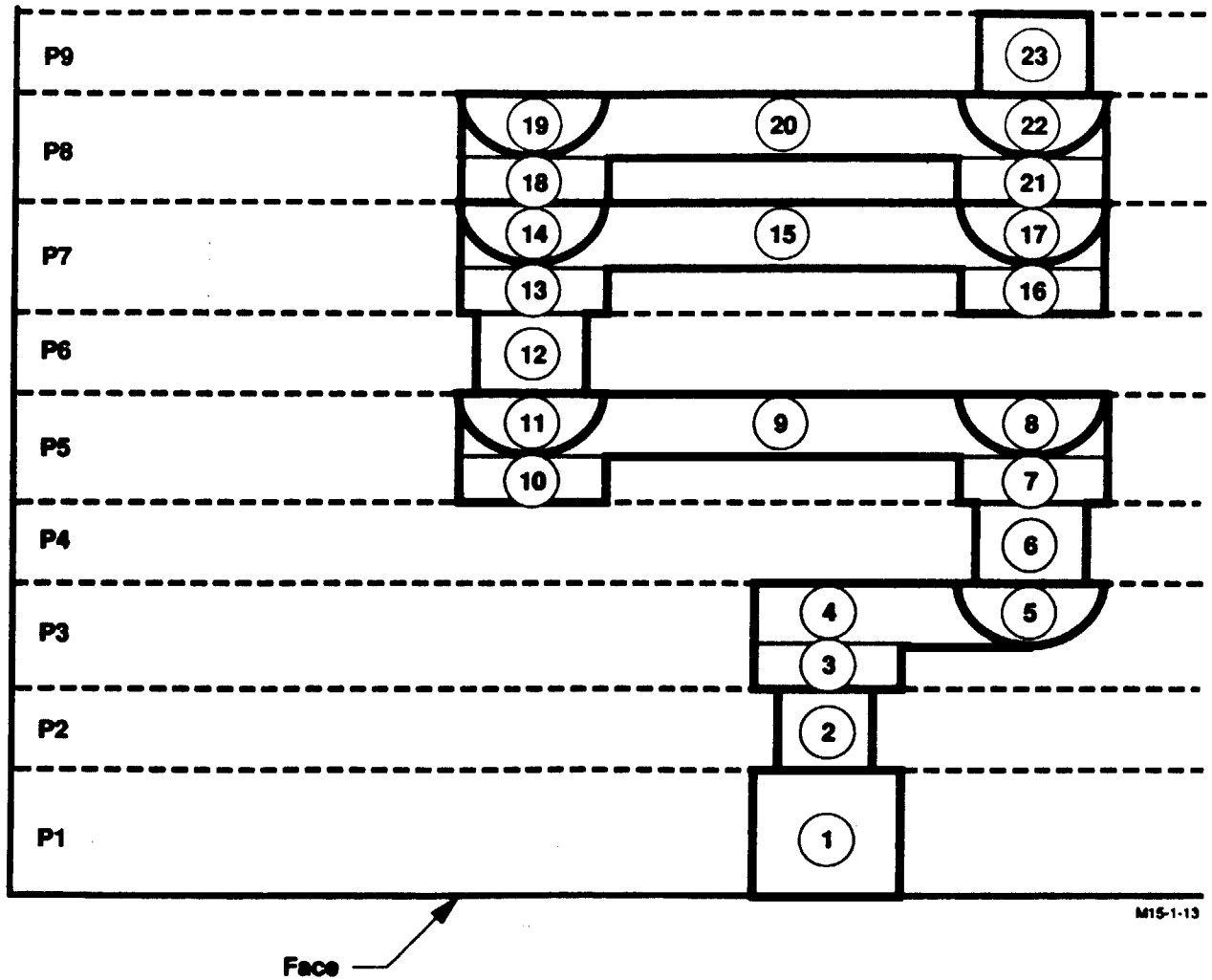

Figure 4-58. Cross Section of Fuel Flow Path for Injector Face Cooling Platelets (Dwg 1204136)

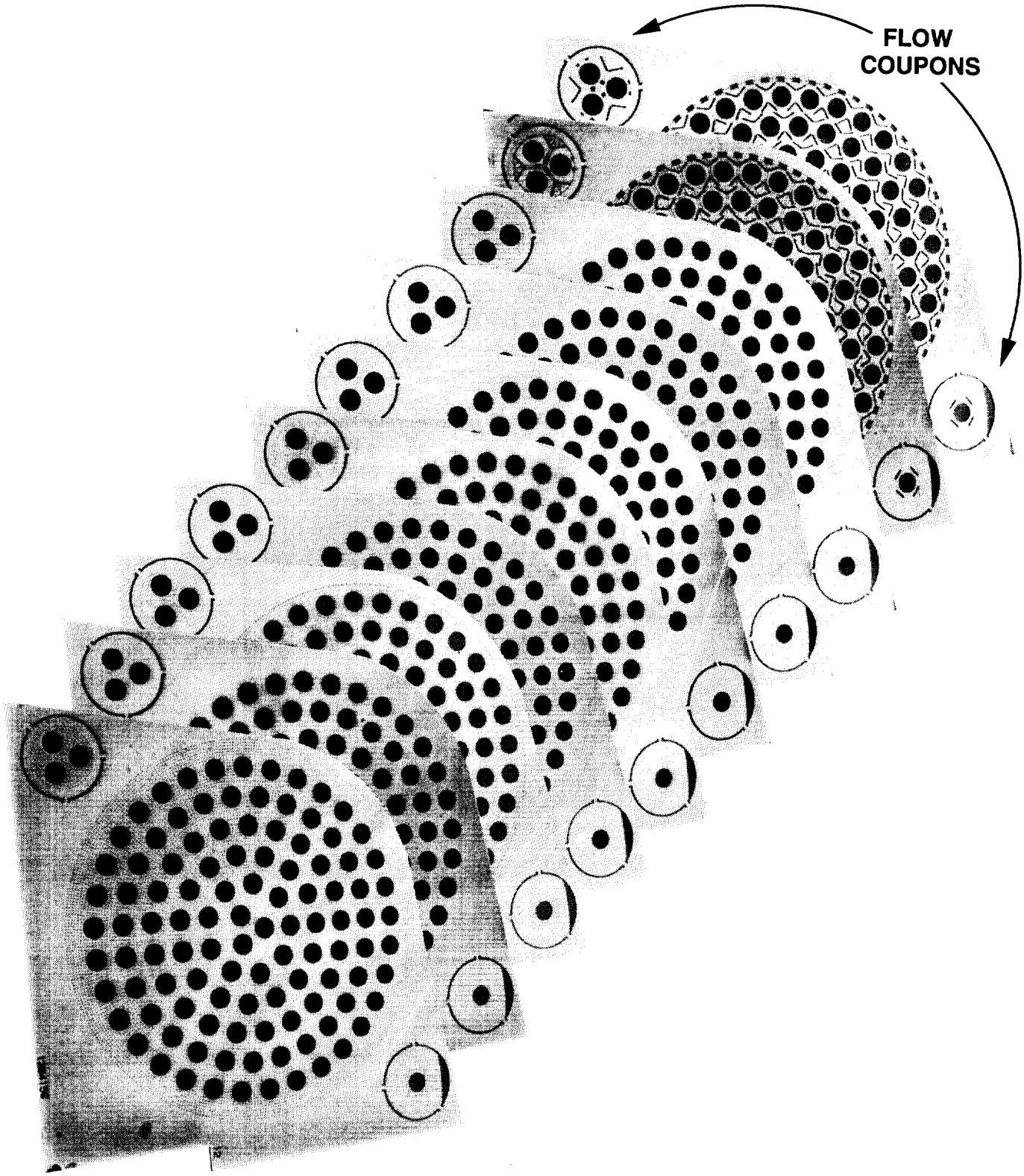

Figure 4-59. Face Cooling Platelets (PN 1204136)

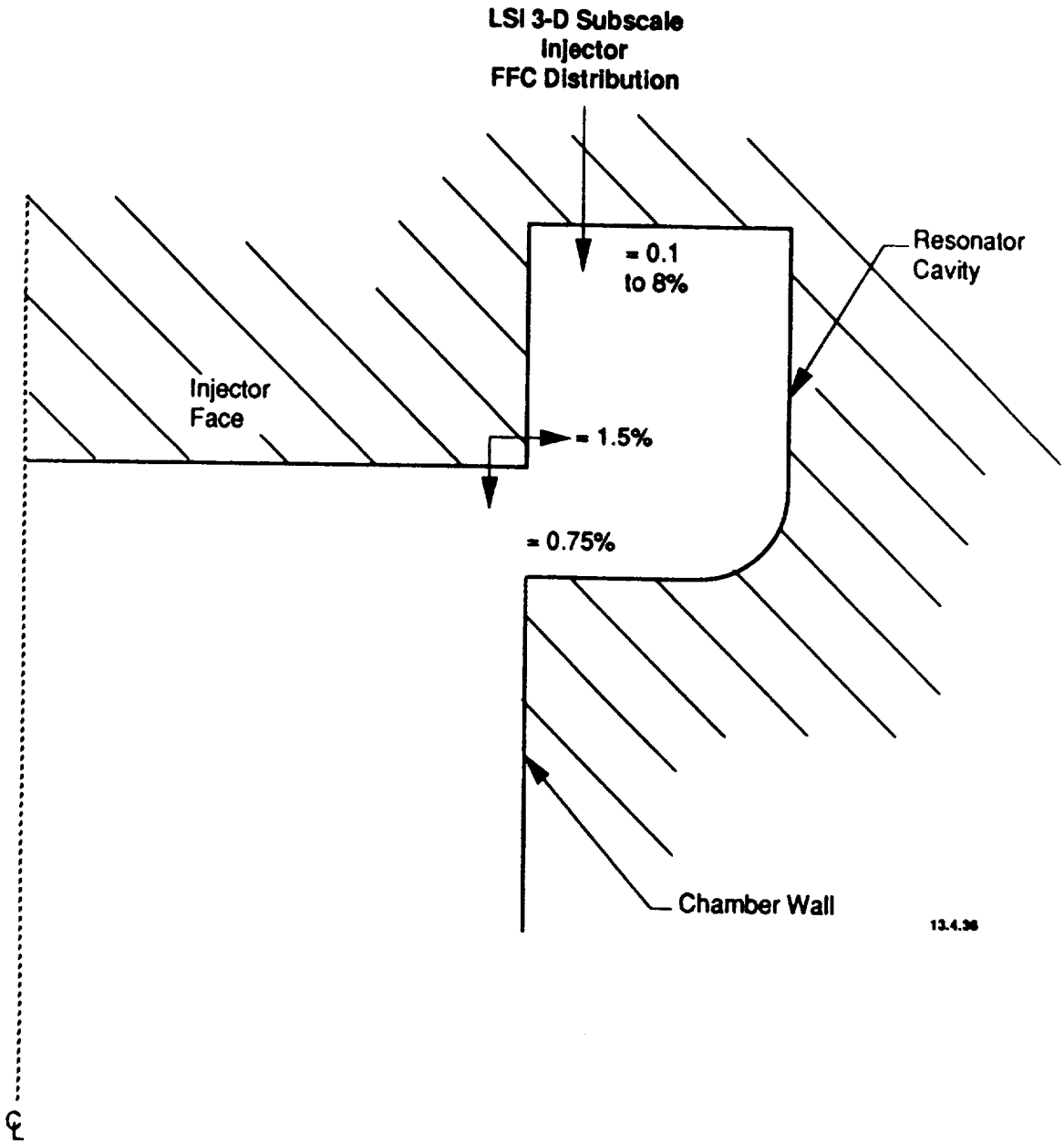

Figure 4-60. Fuel Film Cooling Injection Method Utilized on 3 D Subscale Design

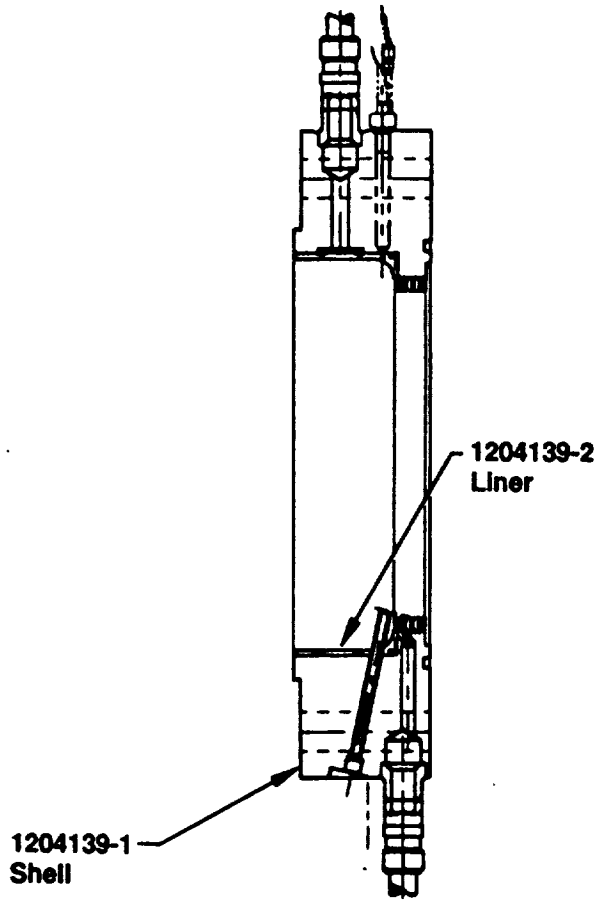

Material:

Body: 304 L
Liner: ZrCu

4 Coolant Circuits
2 High Frequency Pressure and Temperature
1 Igniter Port

Figure 4-61. LSI 3 D Injector Resonator Ring (Dwg 1204139)

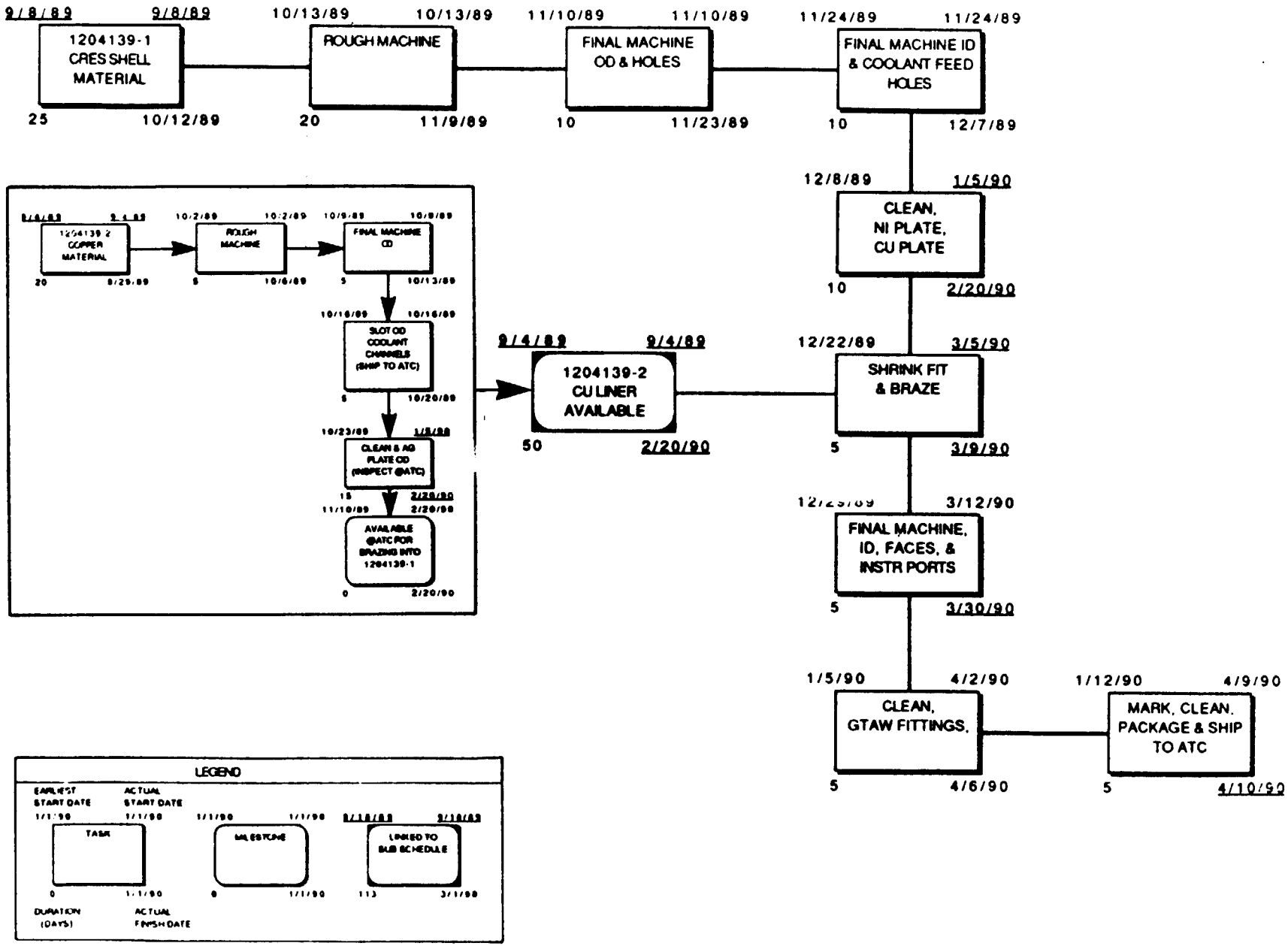

Figure 4-62. LSI 3 D Injector Resonator Ring (Dwg 1204139) Detailed Fabrication Schedule

ORIGINAL PAGE
BLACK AND WHITE PHOTOGRAPH

Resonator Ring Shell (PN 1204139-1)

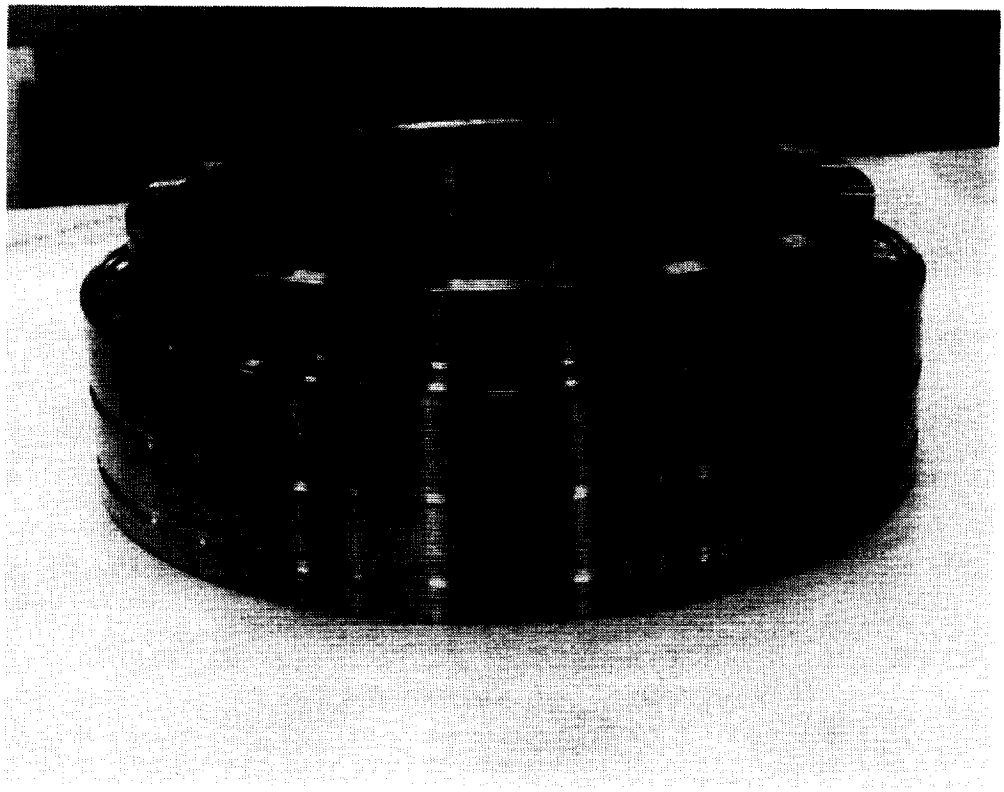

Resonator Ring Inner Liner With Coolant Channels (PN 1204139-2)

Figure 4-63. Resonator Ring Components

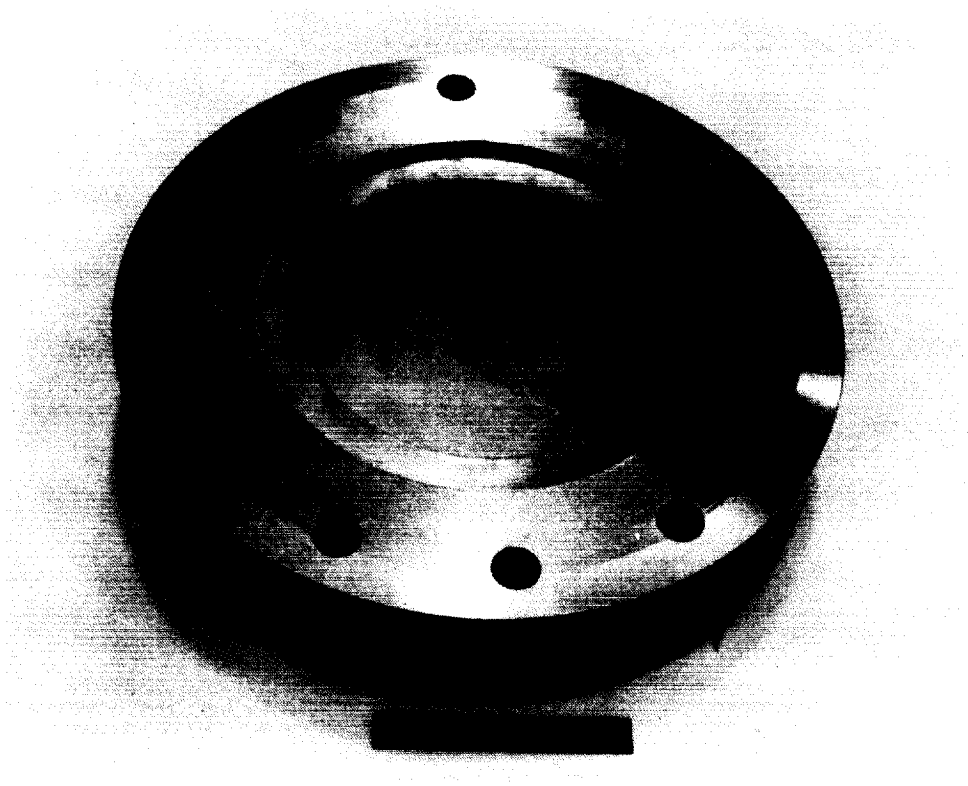

Top View

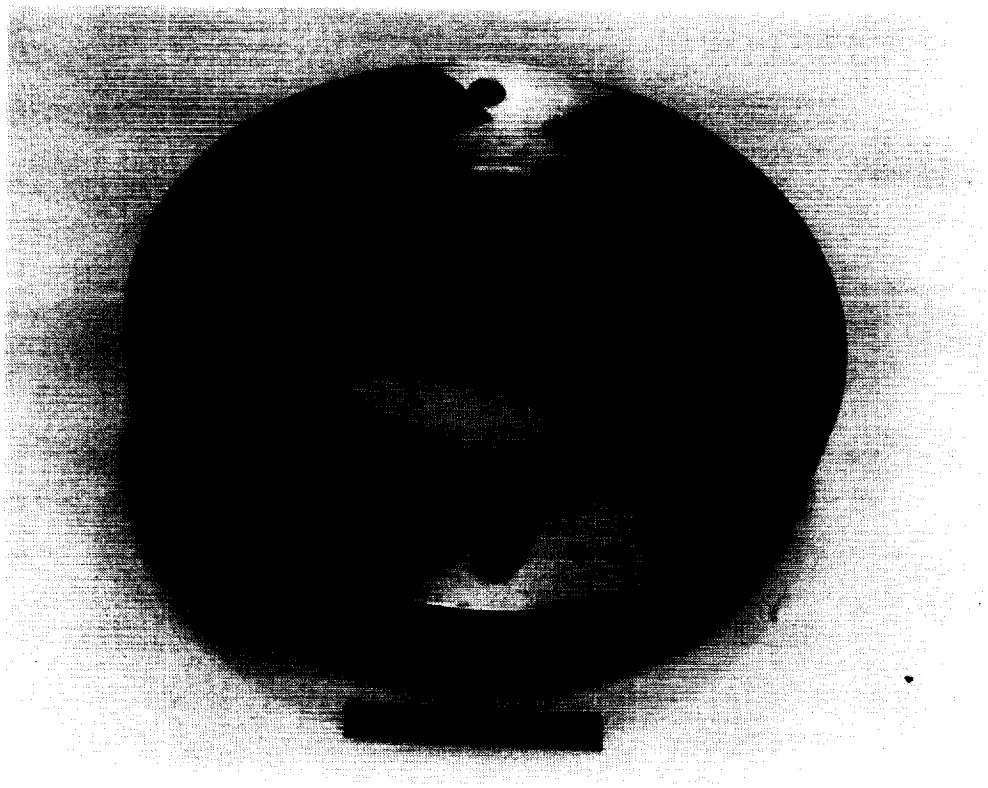

Bottom View

Figure 4-64. Brazed Resonator Ring

ORIGINAL PAGE
BLACK AND WHITE PHOTOGRAPH

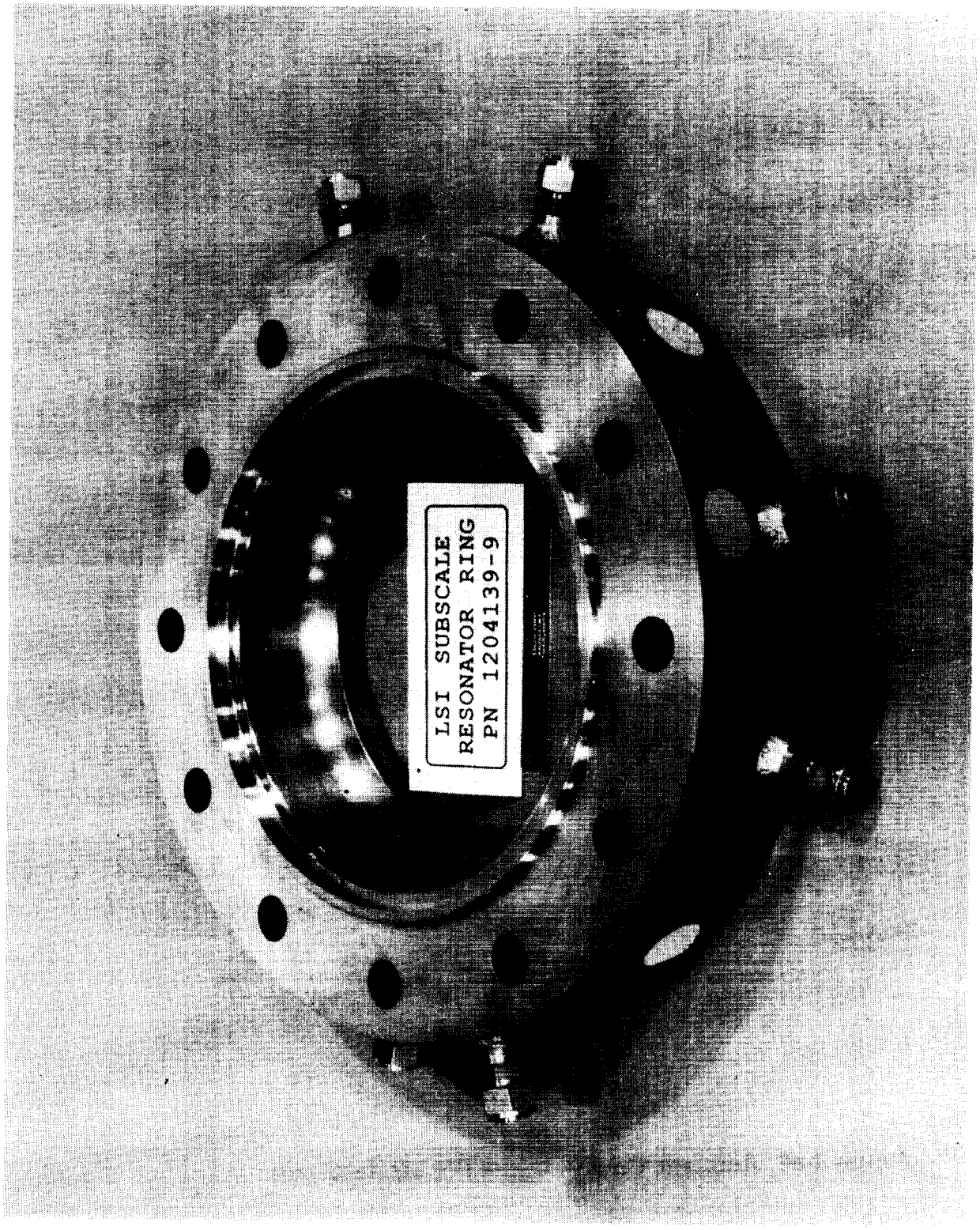

Figure 4-65. Completed LSI 3-D Injector Resonator Ring (Dwg Number 1204139-9)

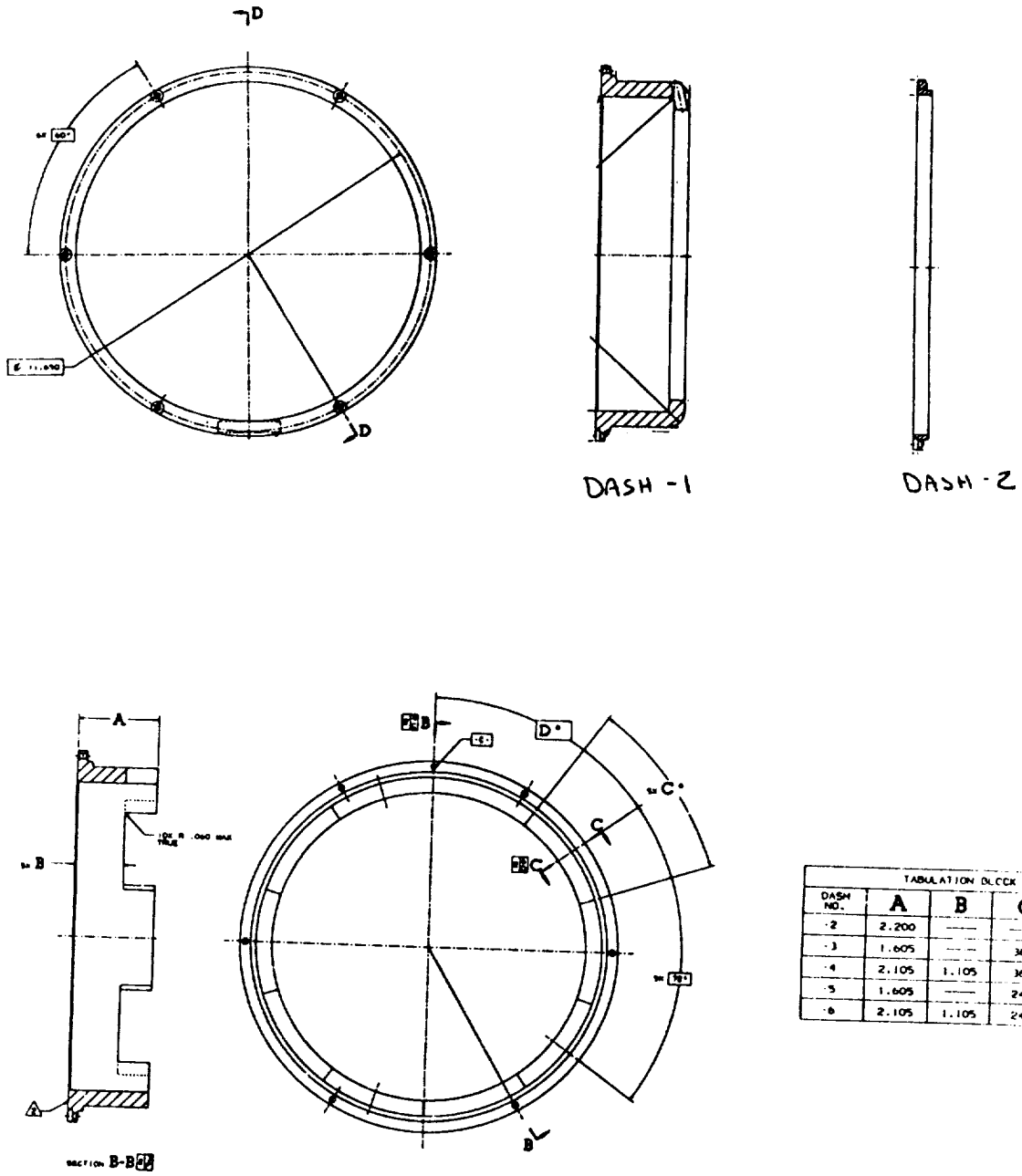

Figure 4-66. Acoustic Cavity Blocks For 3D Hardware

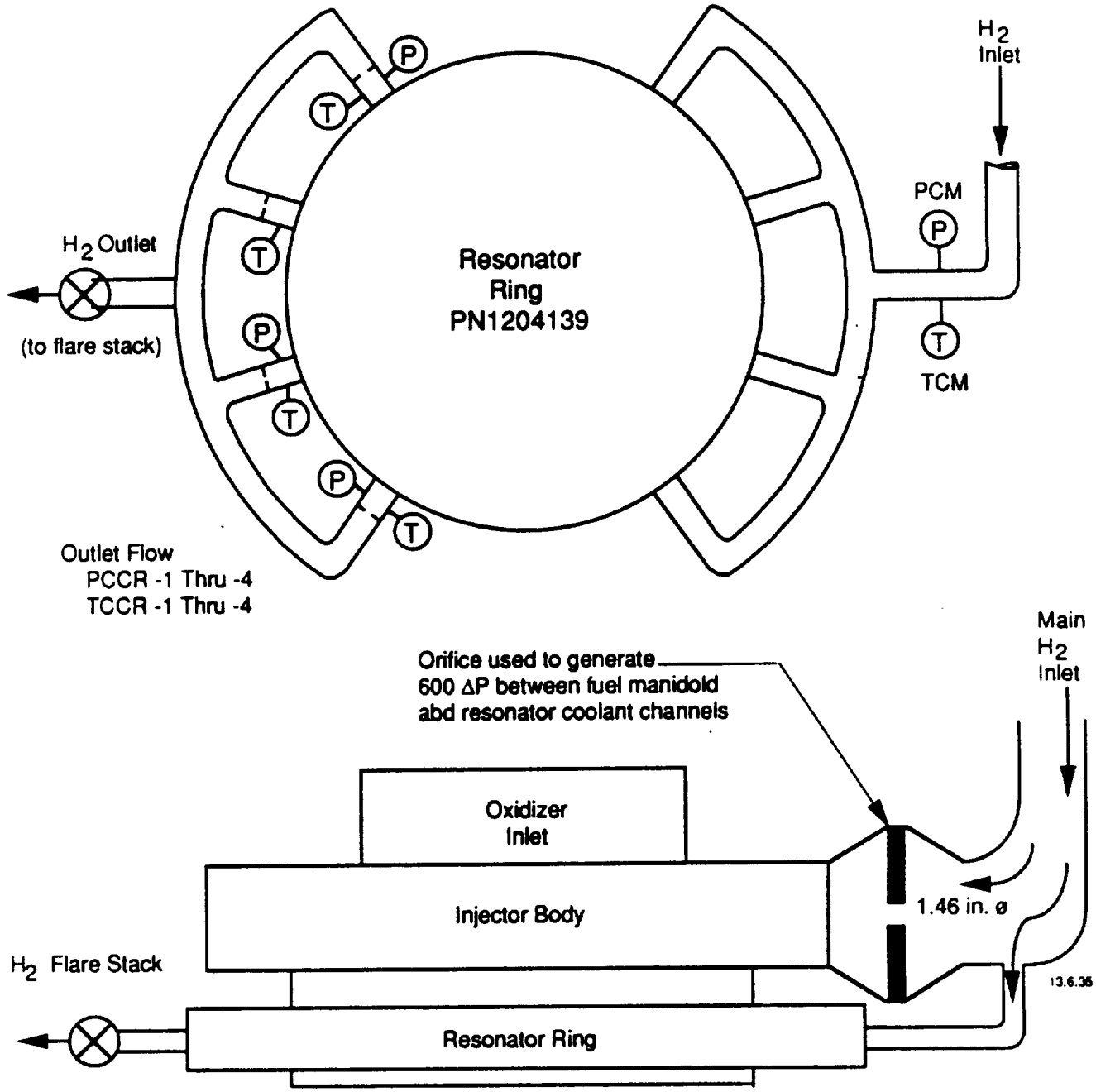

Figure 4-67. Resonator Ring Plumbing

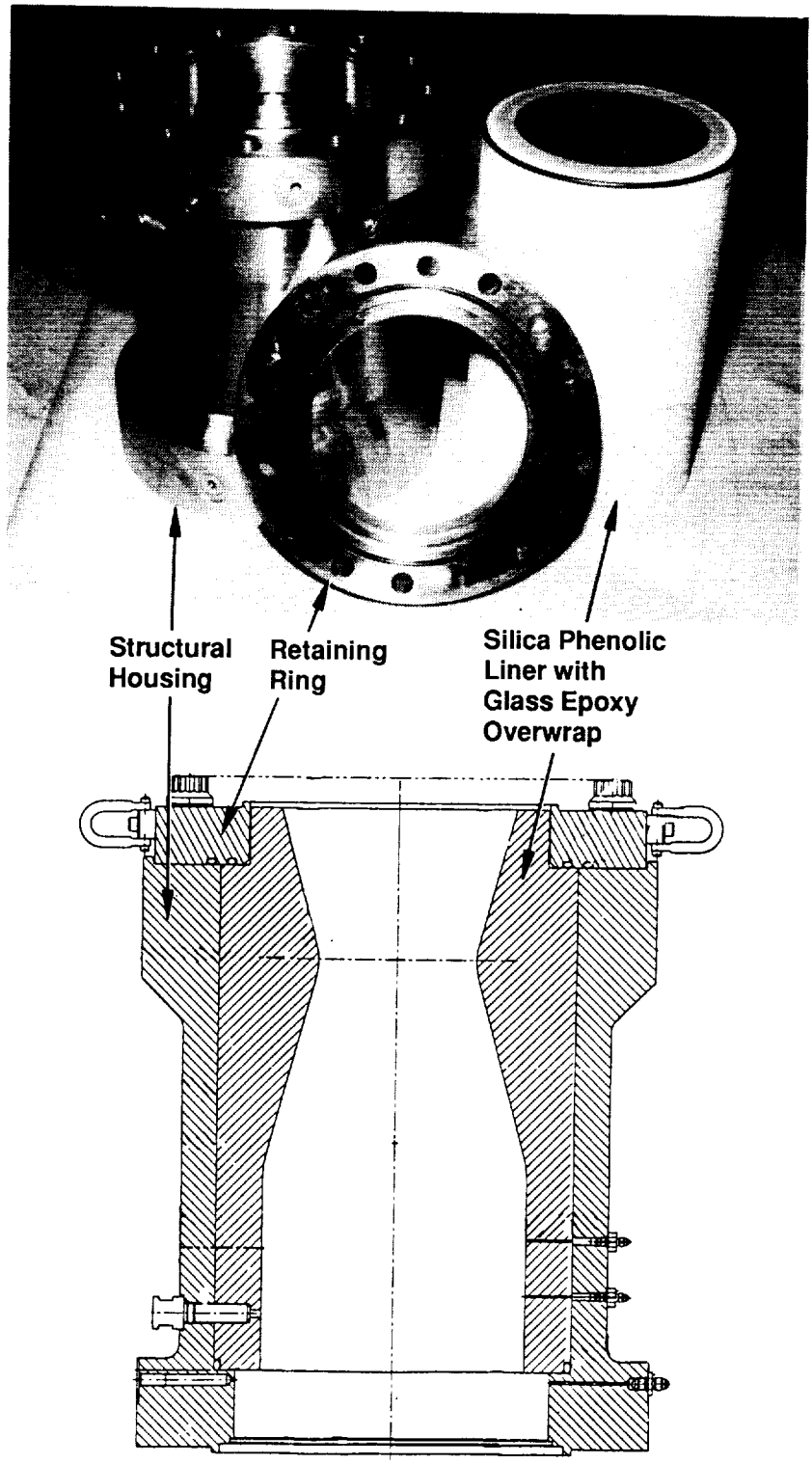

Figure 4-68. ADP Ablative Chamber

ORIGINAL PAGE
BLACK AND WHITE PHOTOGRAPH

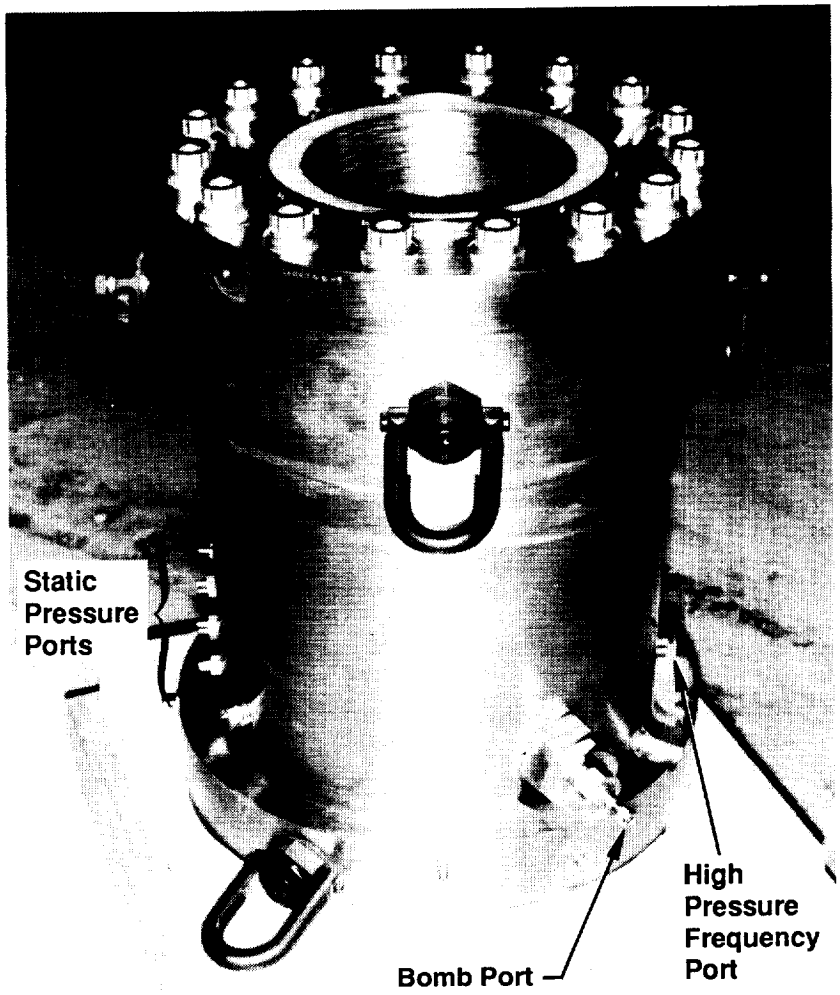

Figure 4-69. ADP Ablative Chamber Assembly

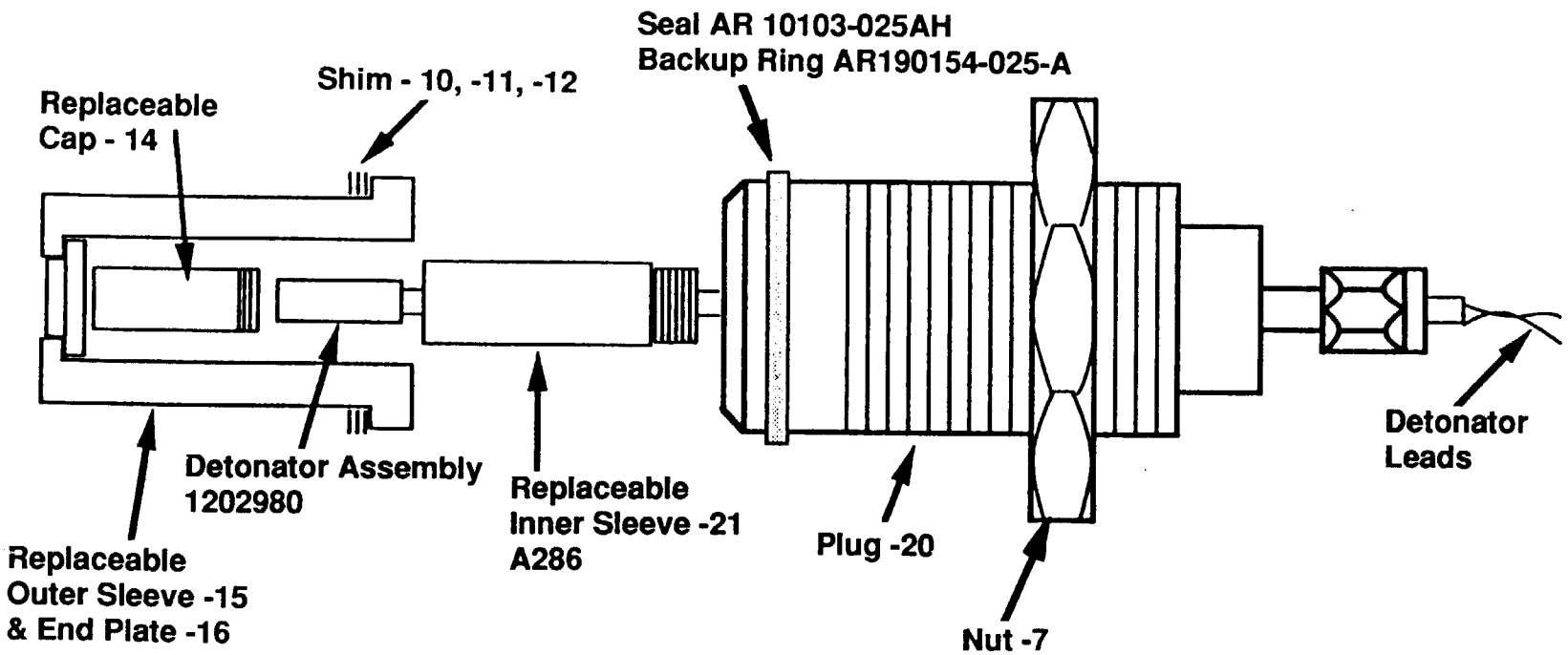

Note: All Dash Numbers Refer to Dwg 1202717

Figure 4-70. Bomb Port Assembly

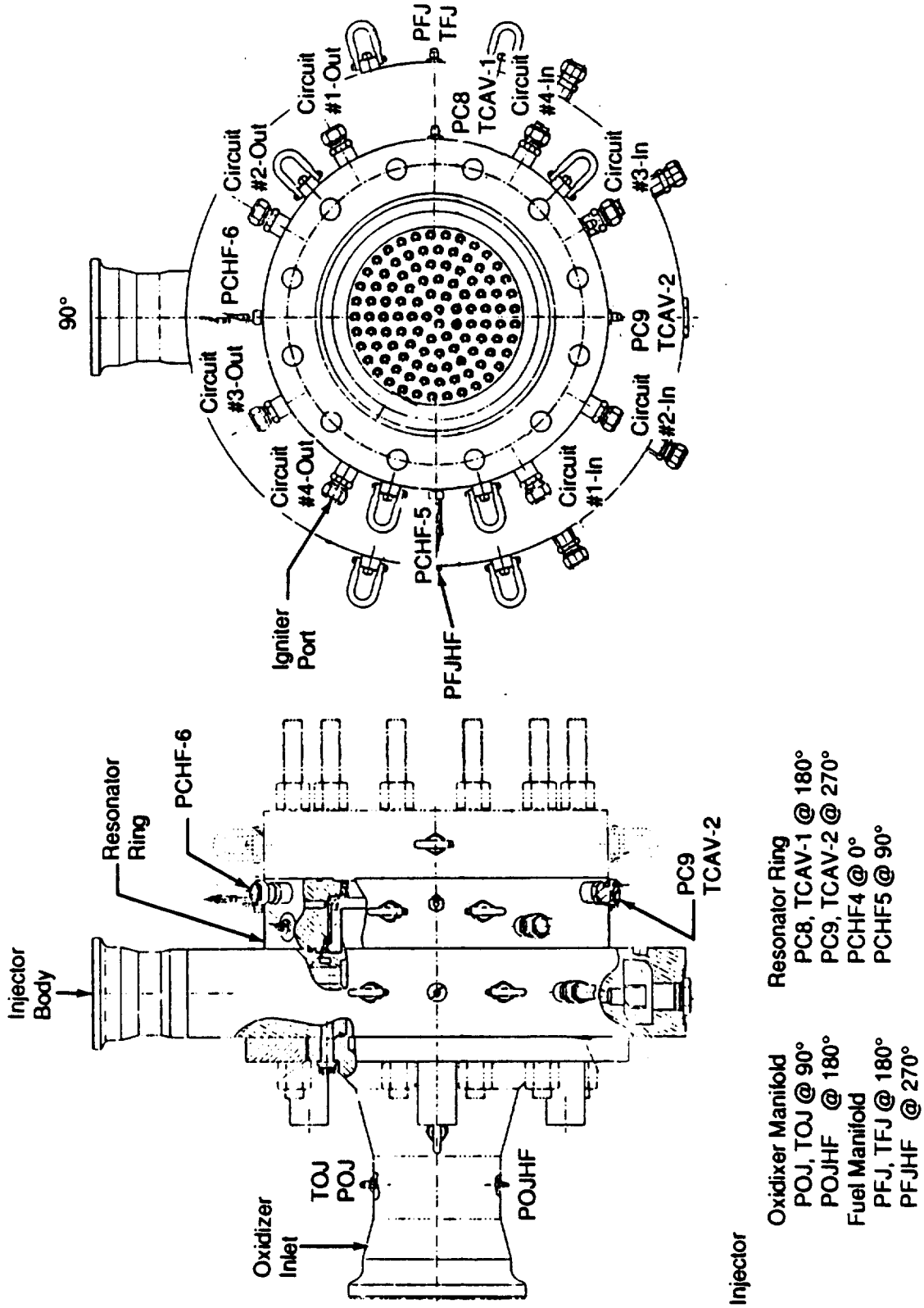

Figure 4-71. LSI Injector Instrumentation (PN 1204129-9)

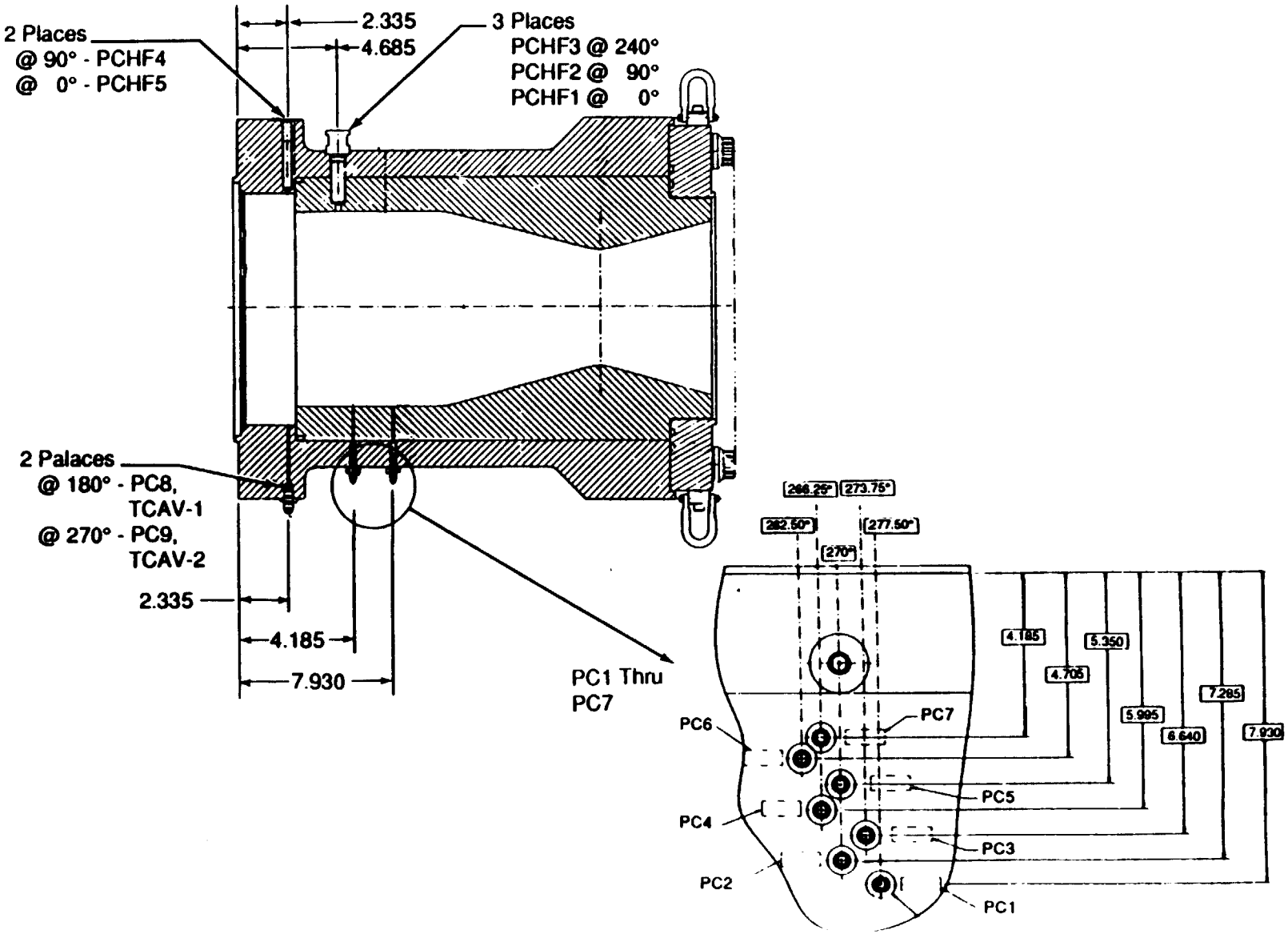

Figure 4-72. ADP Ablative Chamber Instrumentation
(Install w/o Resonator Ring) (PN 1206060)

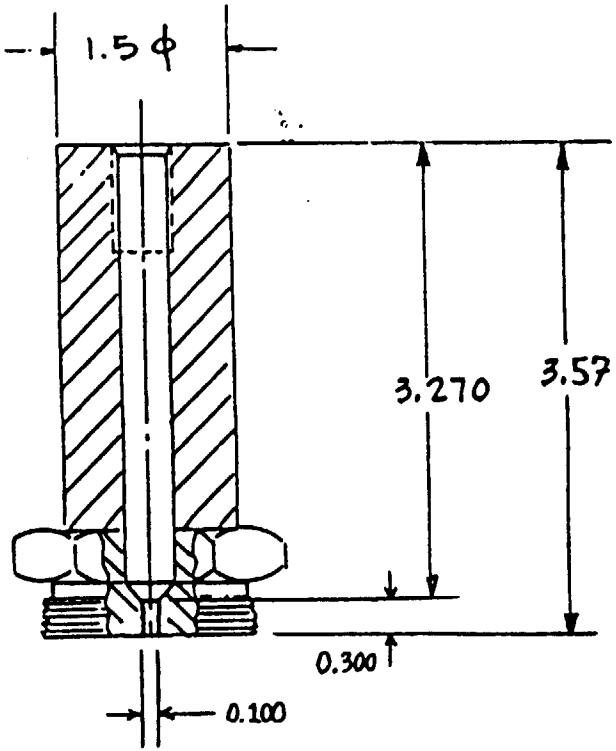

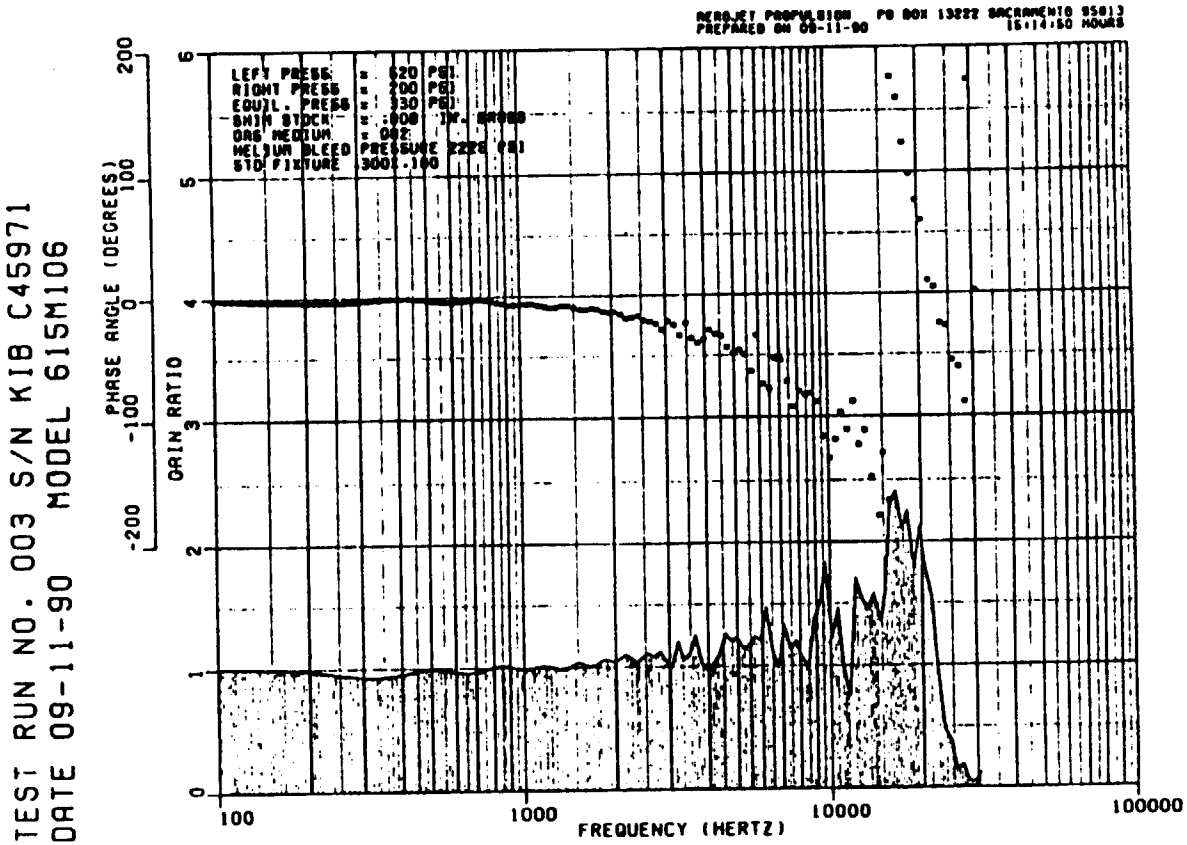

Figure 4-73. Shock Tube Response – Model 615M106 Kistler With 0.1 x 0.3 Inch Inlet

ORIGINAL PAGE
BLACK AND WHITE PHOTOGRAPH

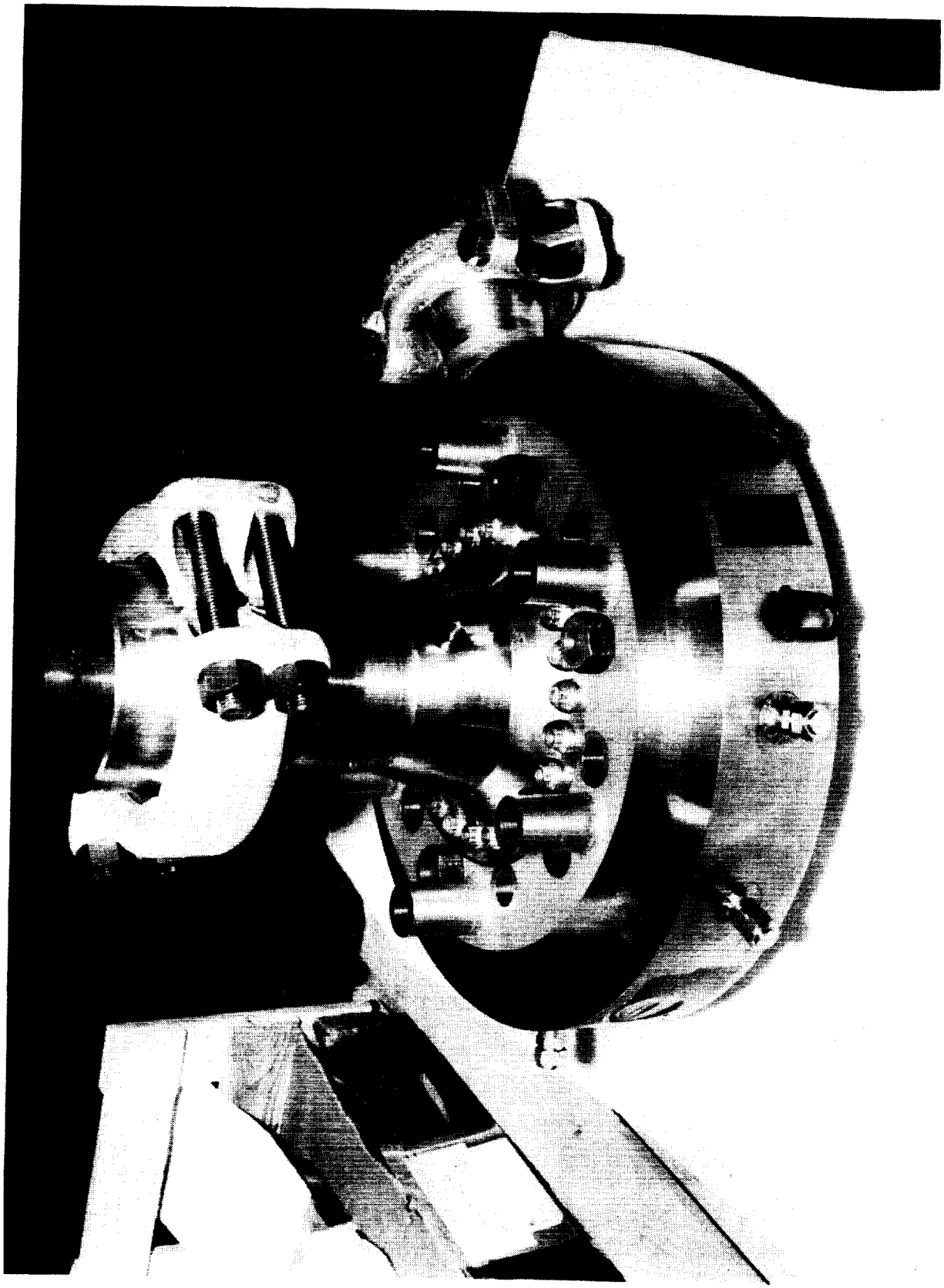

Figure 4-74. LSI 3-D Subscale Hardware Assembly

ORIGINAL PAGE
BLACK AND WHITE PHOTOGRAPH

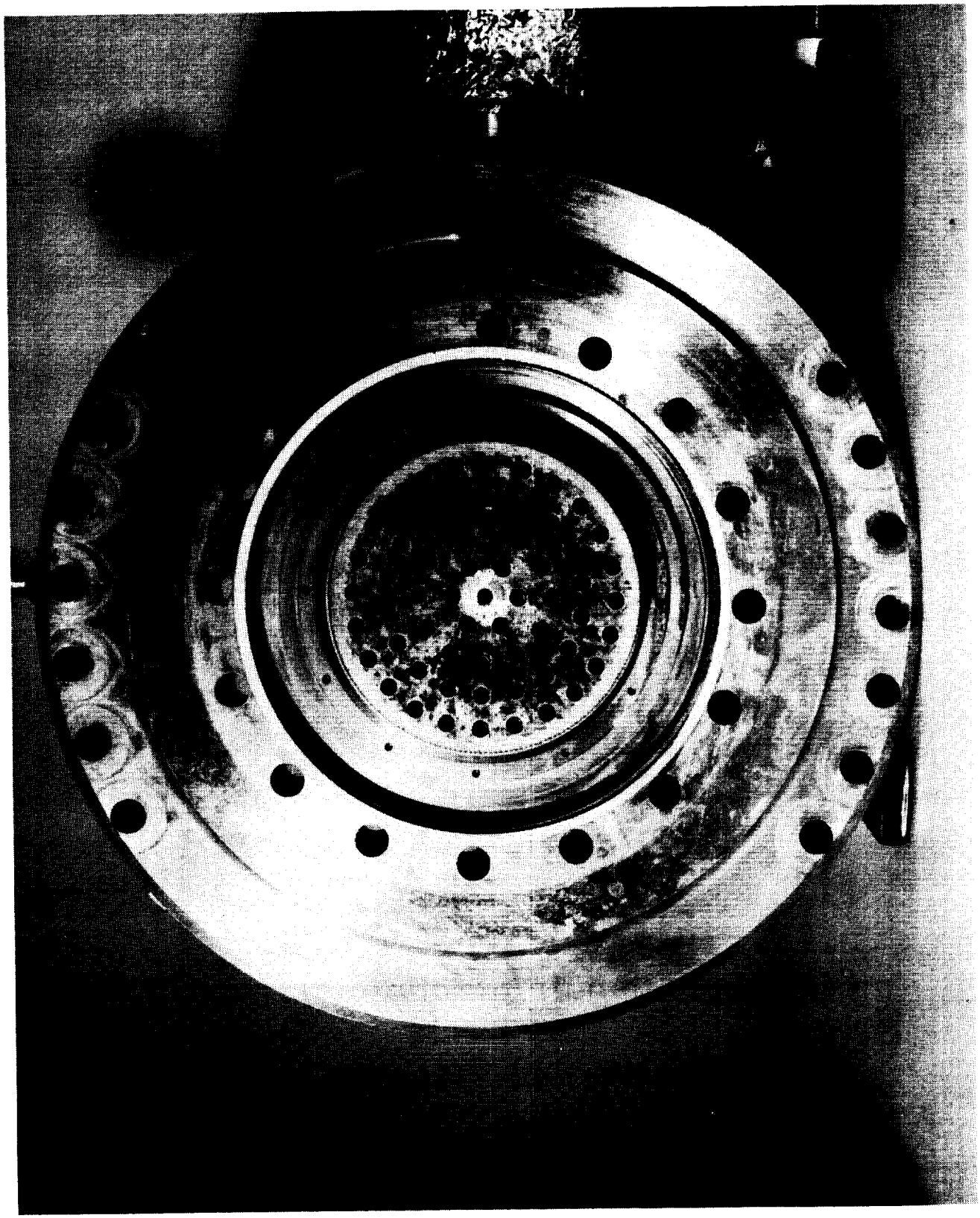

Figure 4-75. 40k lbf Injector Face After Completion of LOX/CH4 Testing

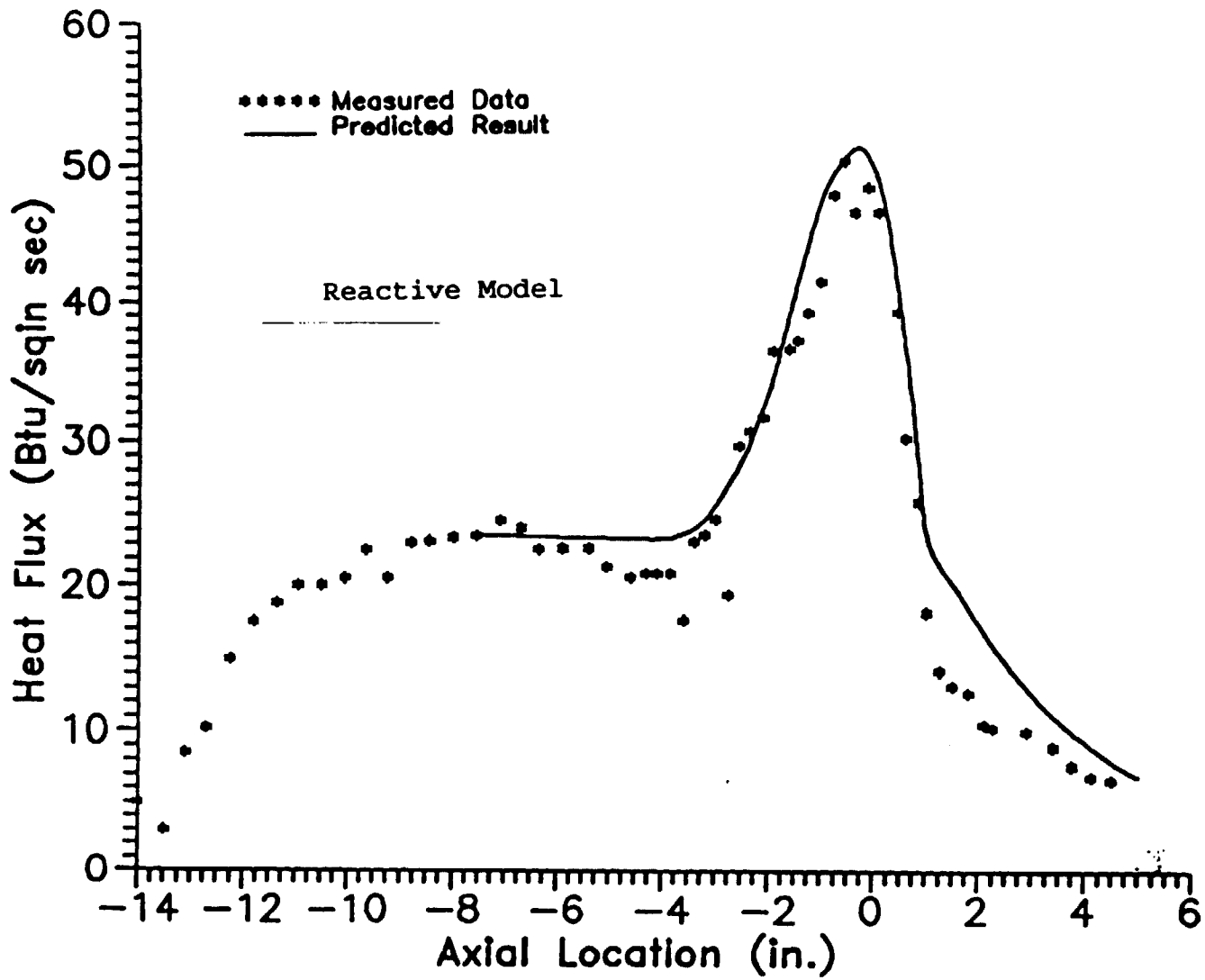

Figure 4-76. Comparison of Measured 40K LOX/CH4 Heat Flux Profile With Predicted Heat Flux From Boundary Layer Model

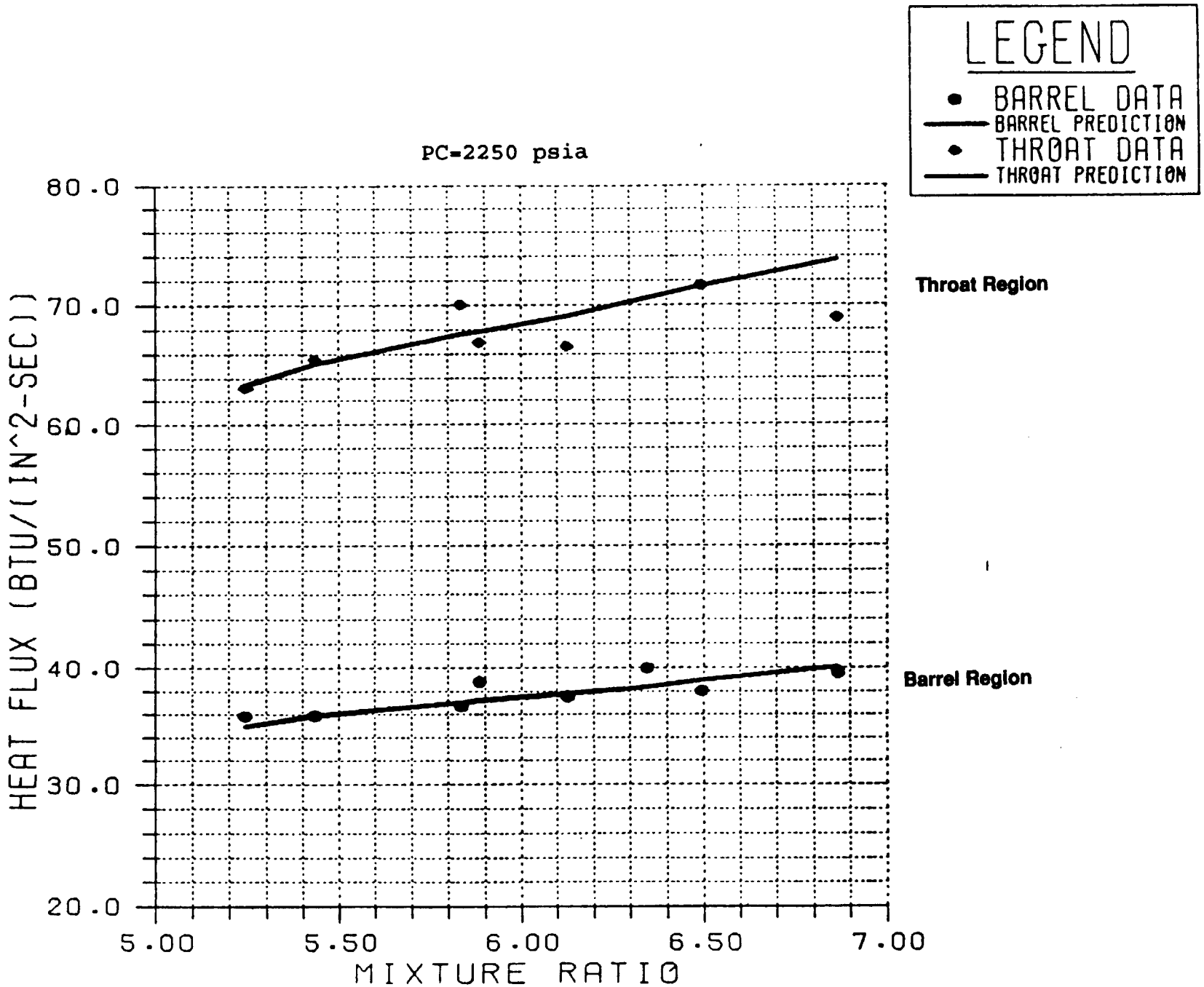

Figure 4-77. Comparison of Predicted (Reactive) and Measured Mixture Ratio Trends for LOX/H2

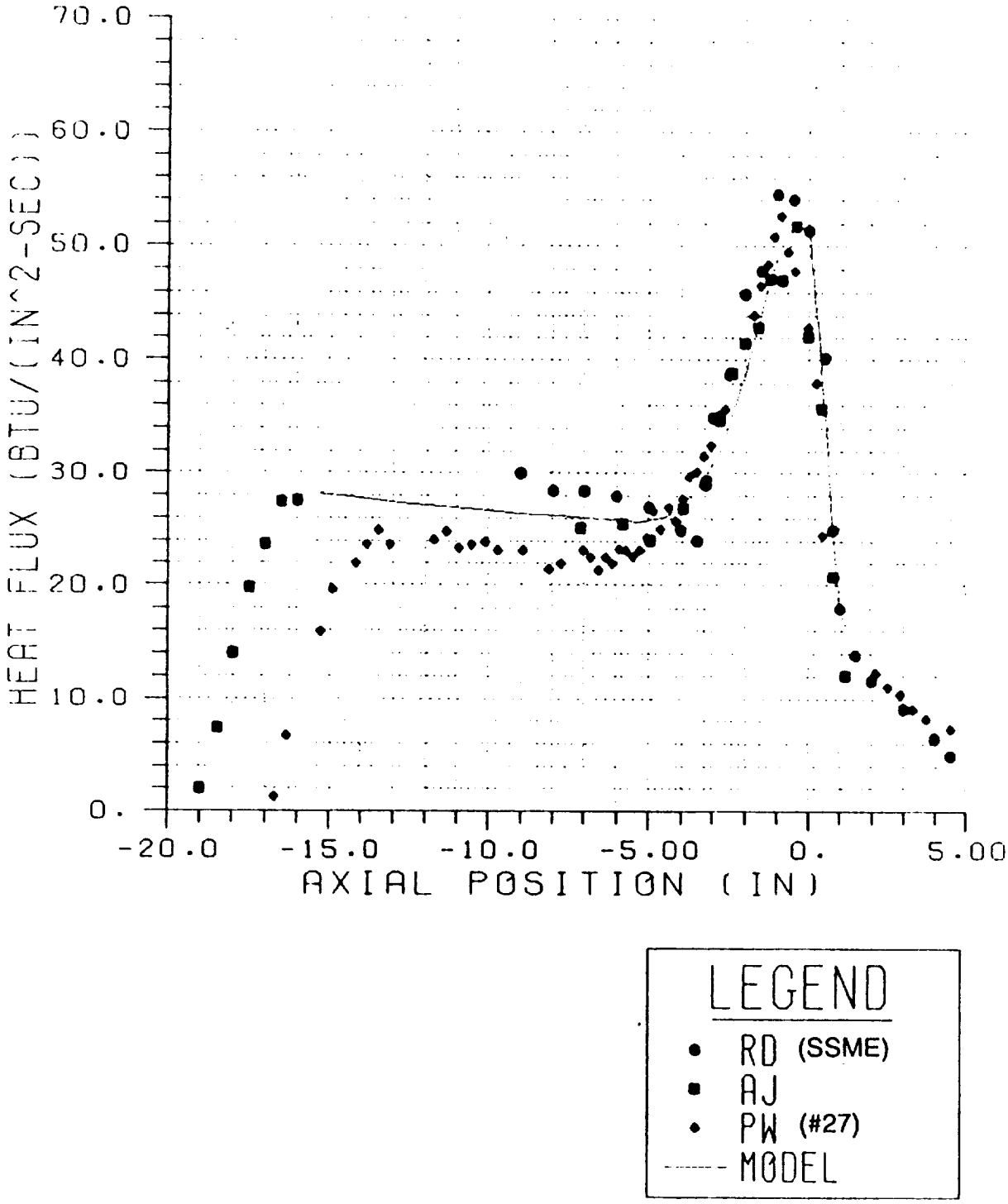

Figure 4-78. 40K – Heat Flux Comparison

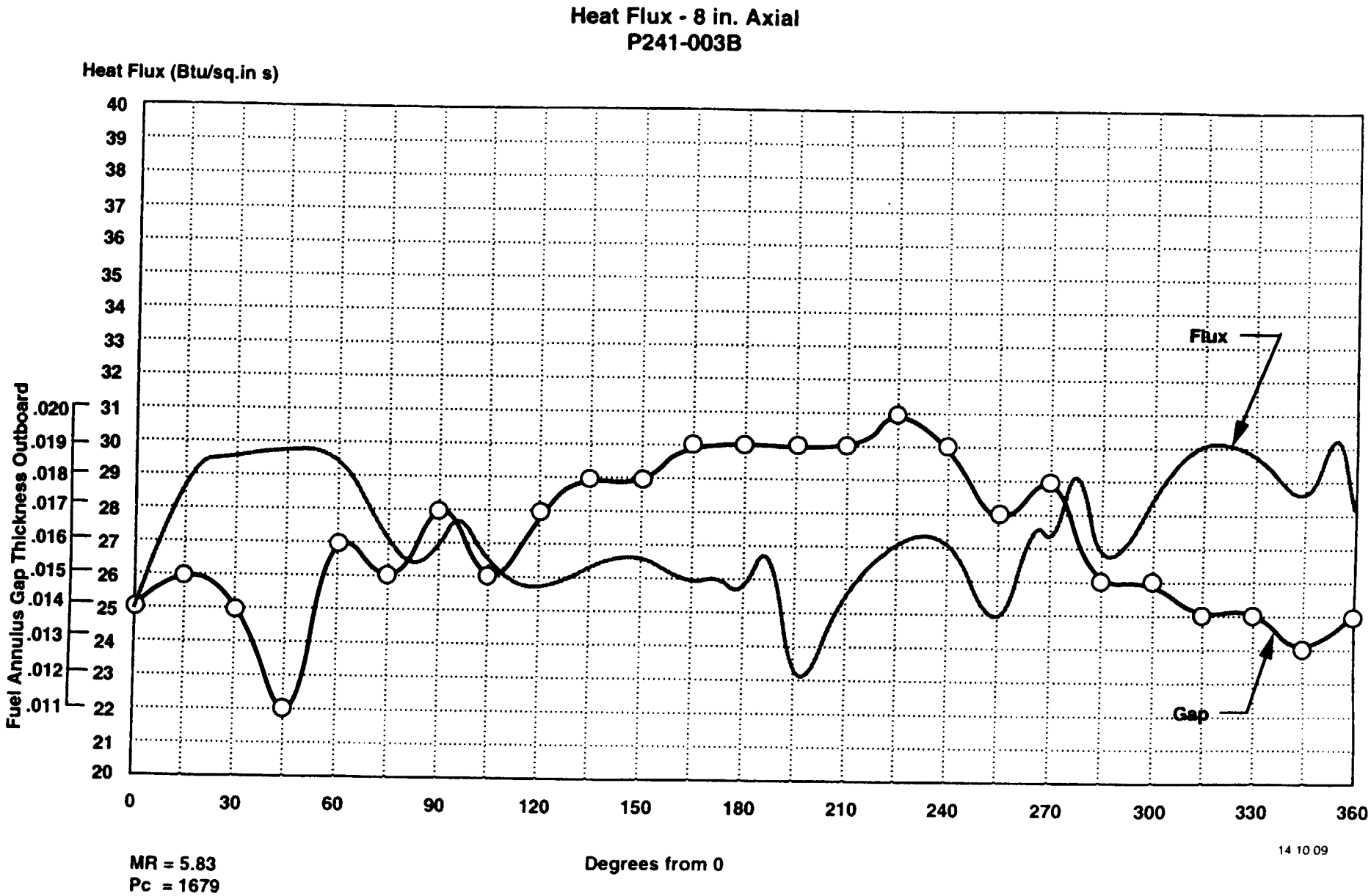

Figure 4-79. Aerojet 40K LOX/H2 Testing

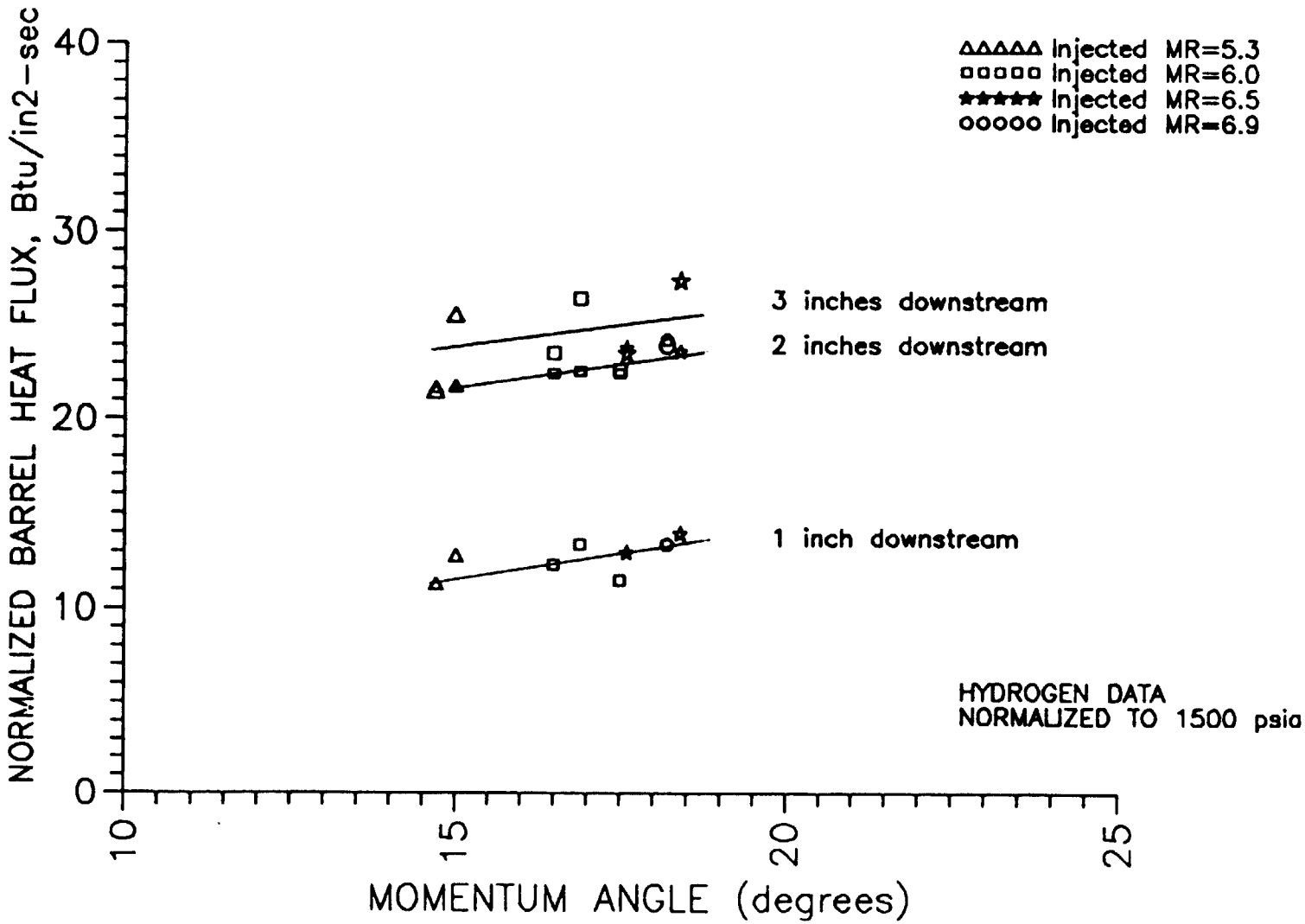

Figure 4-80. 40K LOX/Hydrogen Hot Fire Data Heat Flux Versus Momentum Angle

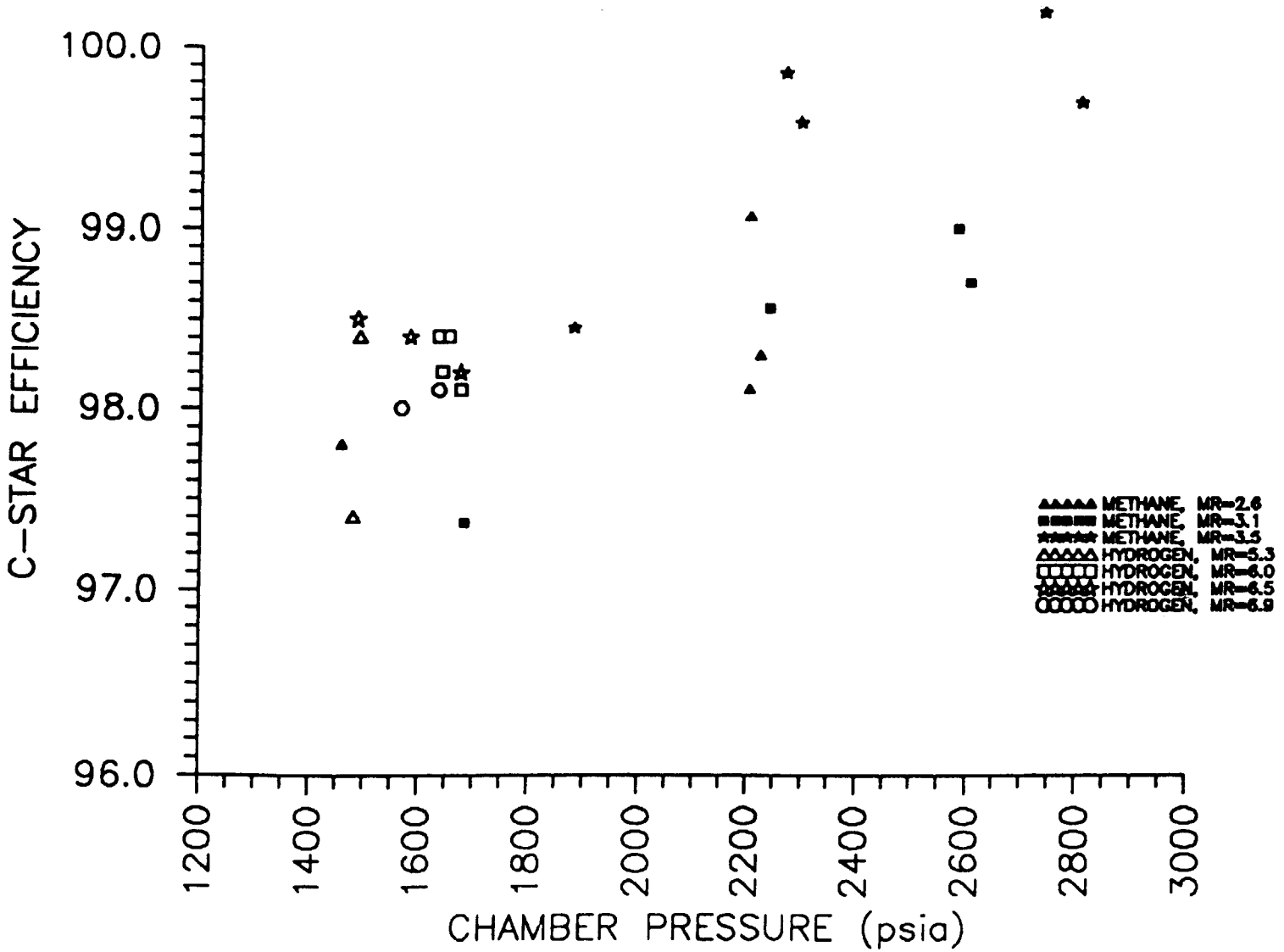

Figure 4-81. 40K LOX/Methane and LOX/Hydrogen Hot Fire Data C-Star Efficiency Versus Chamber Pressure

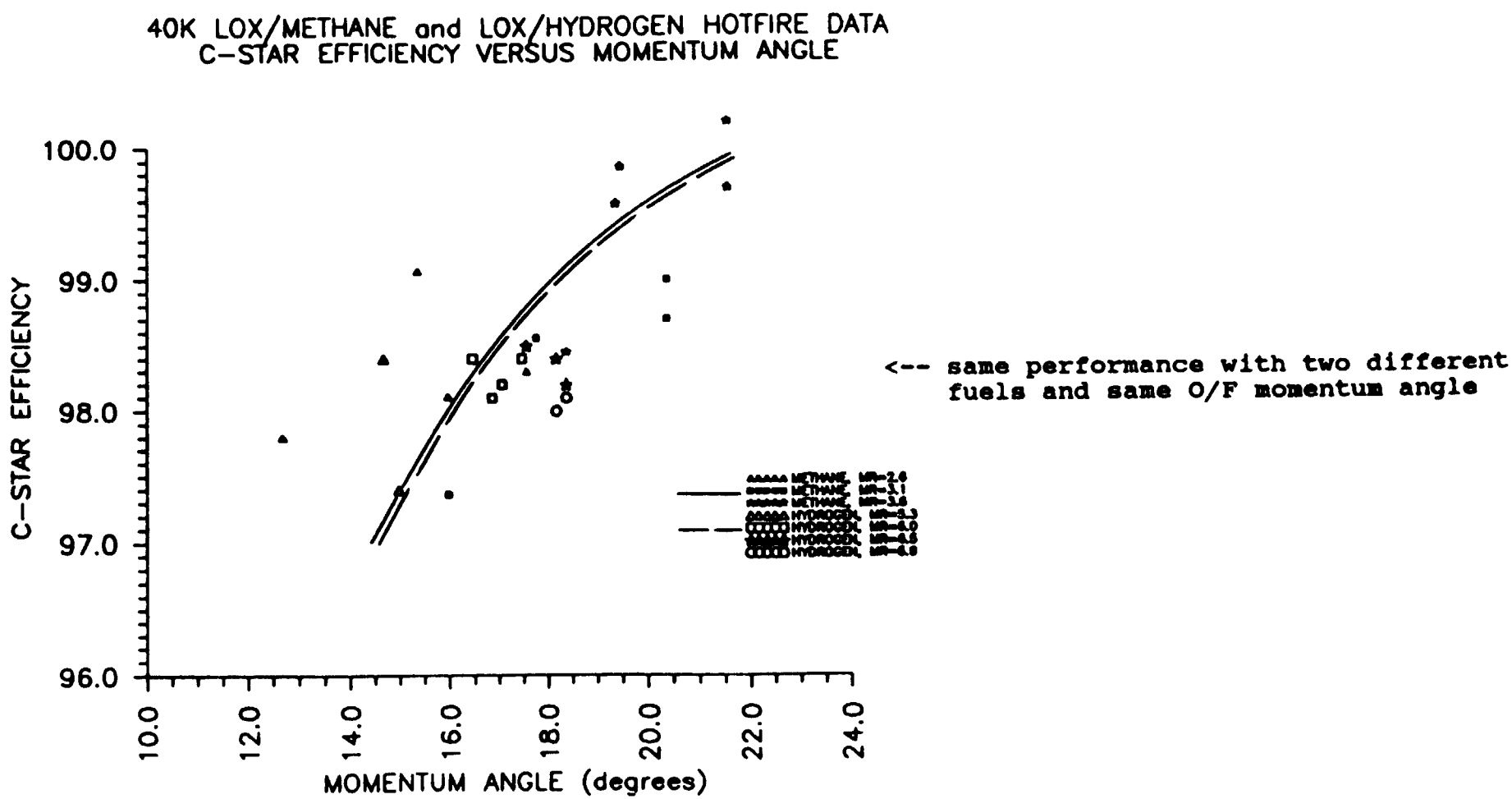

Figure 4-82. Swirl Coax Performance is a Function of O/F Momentum Independent of Fuel

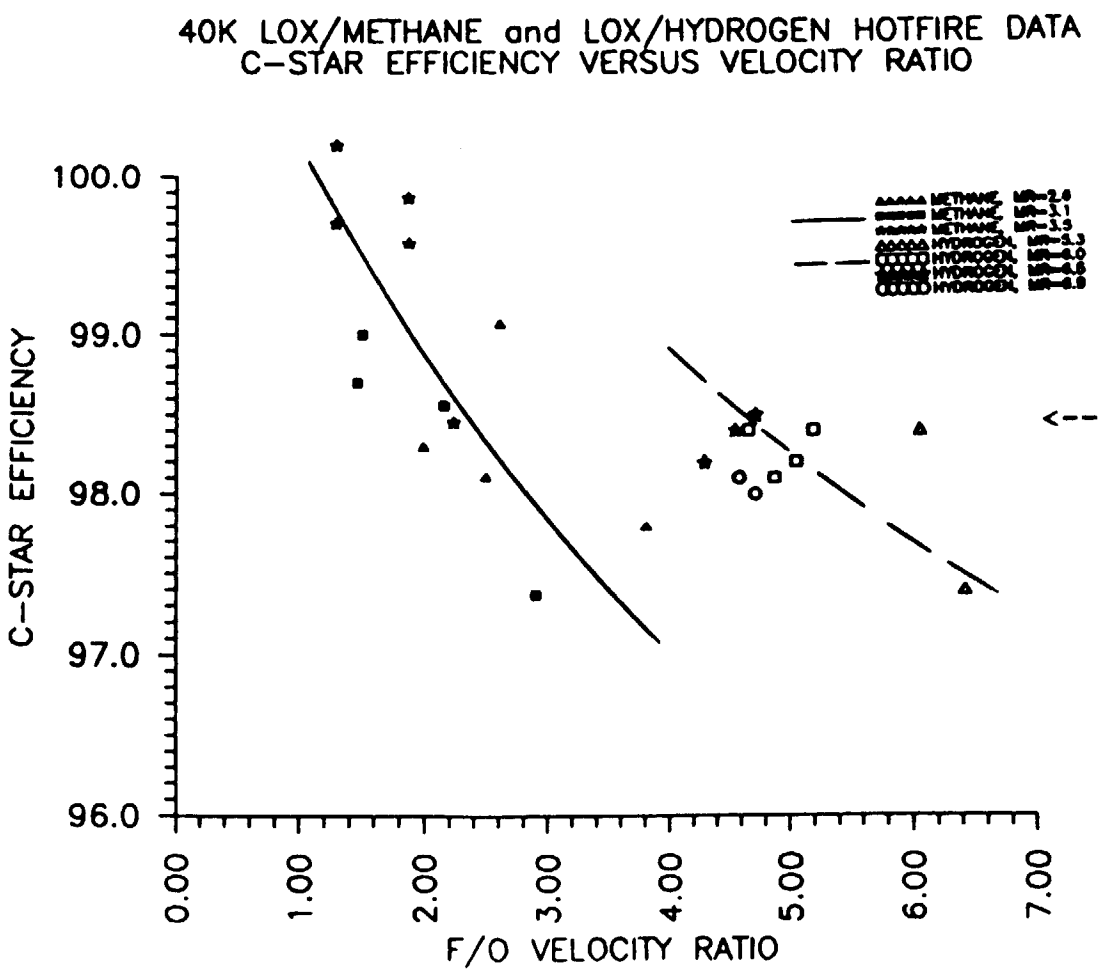

<-- same performance with two different fuels and two different ranges of F/O velocity ratio

The swirl coax liquid oxidizer is self-atomizing so that liquid breakup does not depend on gaseous fuel shearing.

A swirl coax does not operate like a shear coax and does not require high fuel pressure requirements and is not as sensitive to fuel temperature variations as a shear coax.

Figure 4-83. Swirl Coax Performance Is Not a Strong Function of F/O Velocity Ratio

ORIGINAL PAGE
BLACK AND WHITE PHOTOGRAPH

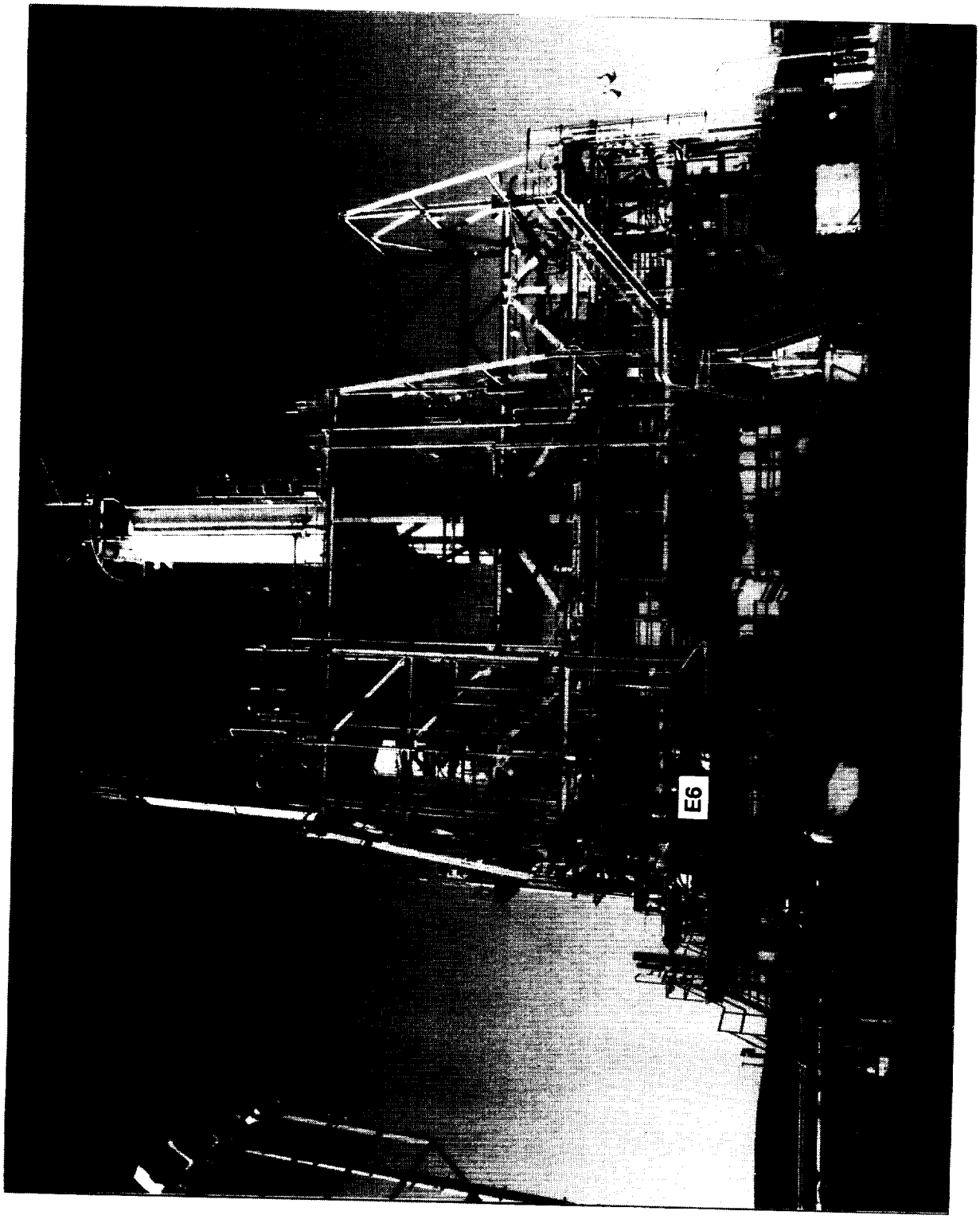

Figure 4-84. Aerojet Test Stand (E-6, E-5, and E-4)

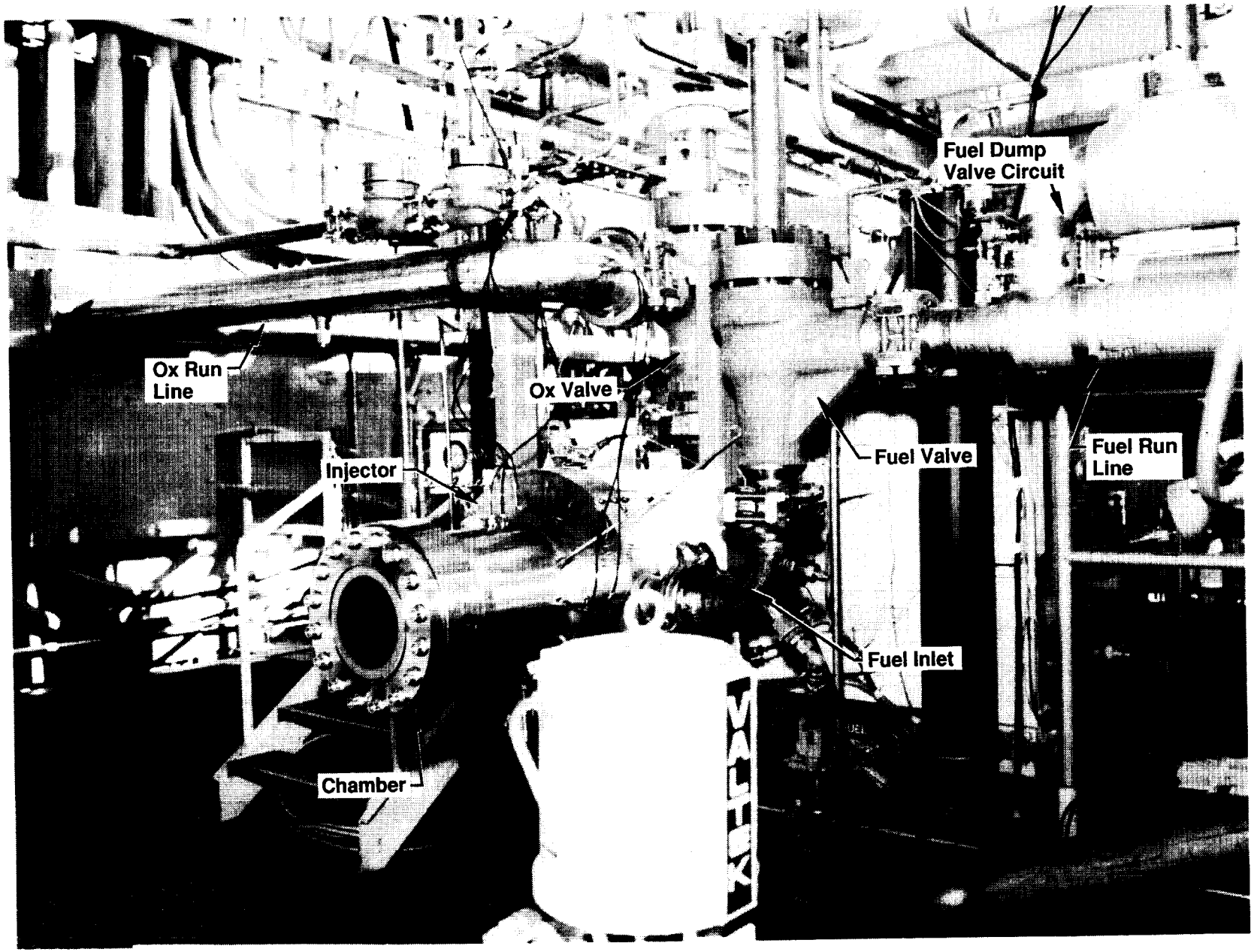

Figure 4-85. LSI 3 D Subscale Injector and ADP Ablative Chamber on Test Stand E-6

ORIGINAL PAGE
BLACK AND WHITE PHOTOGRAPH

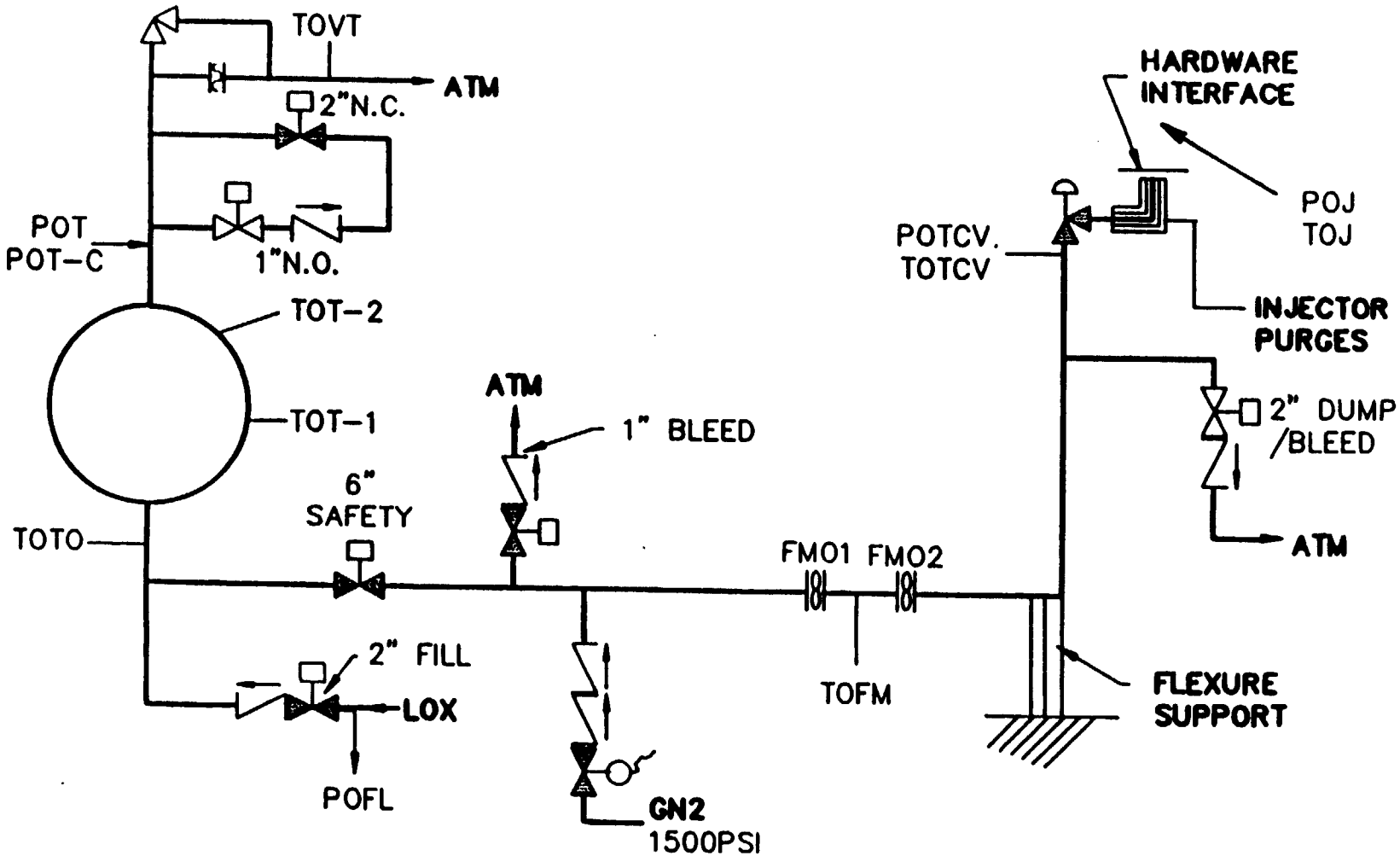

Figure 4-86. LOX Run System

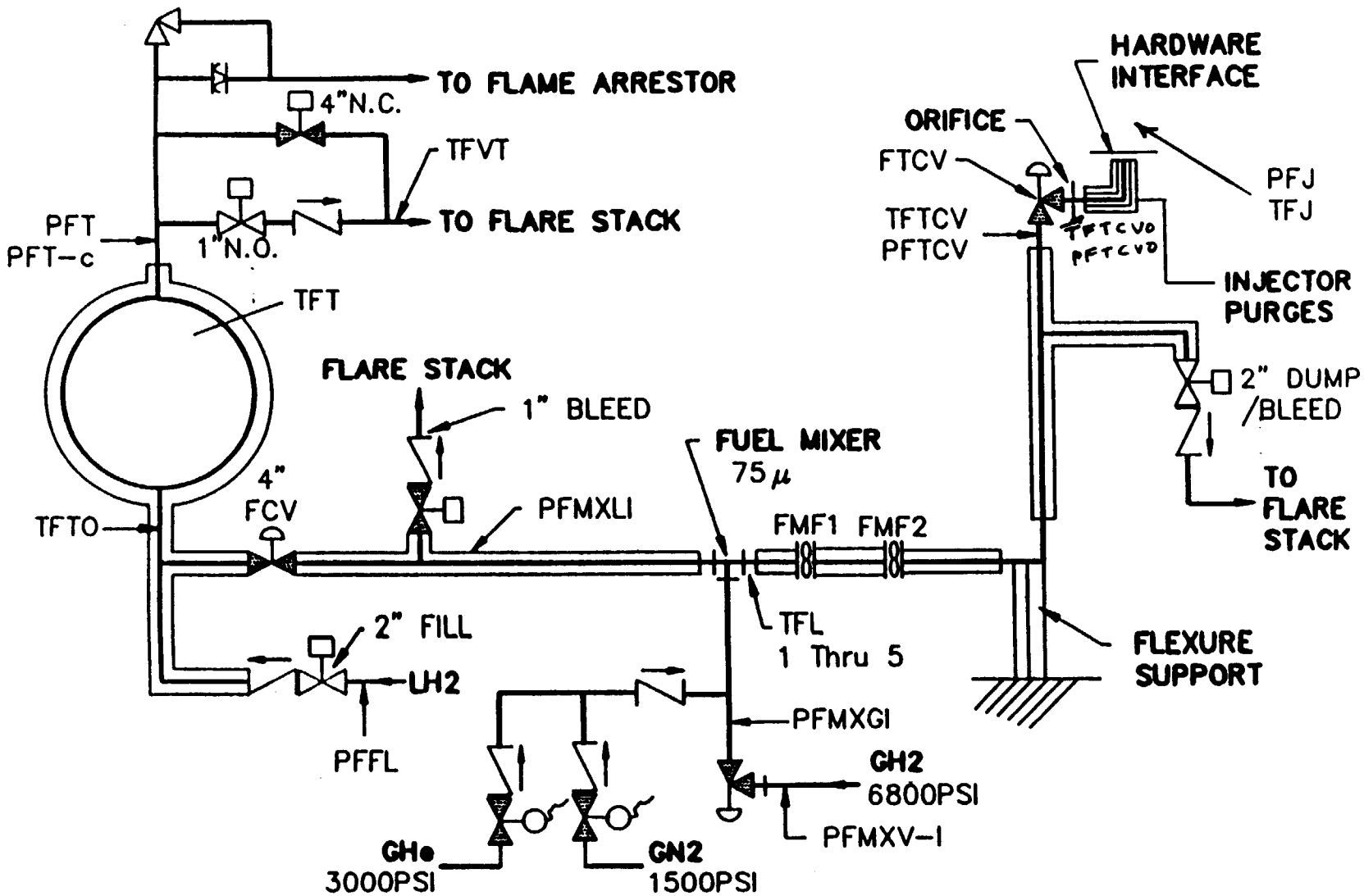

Figure 4-87. Fuel Run System

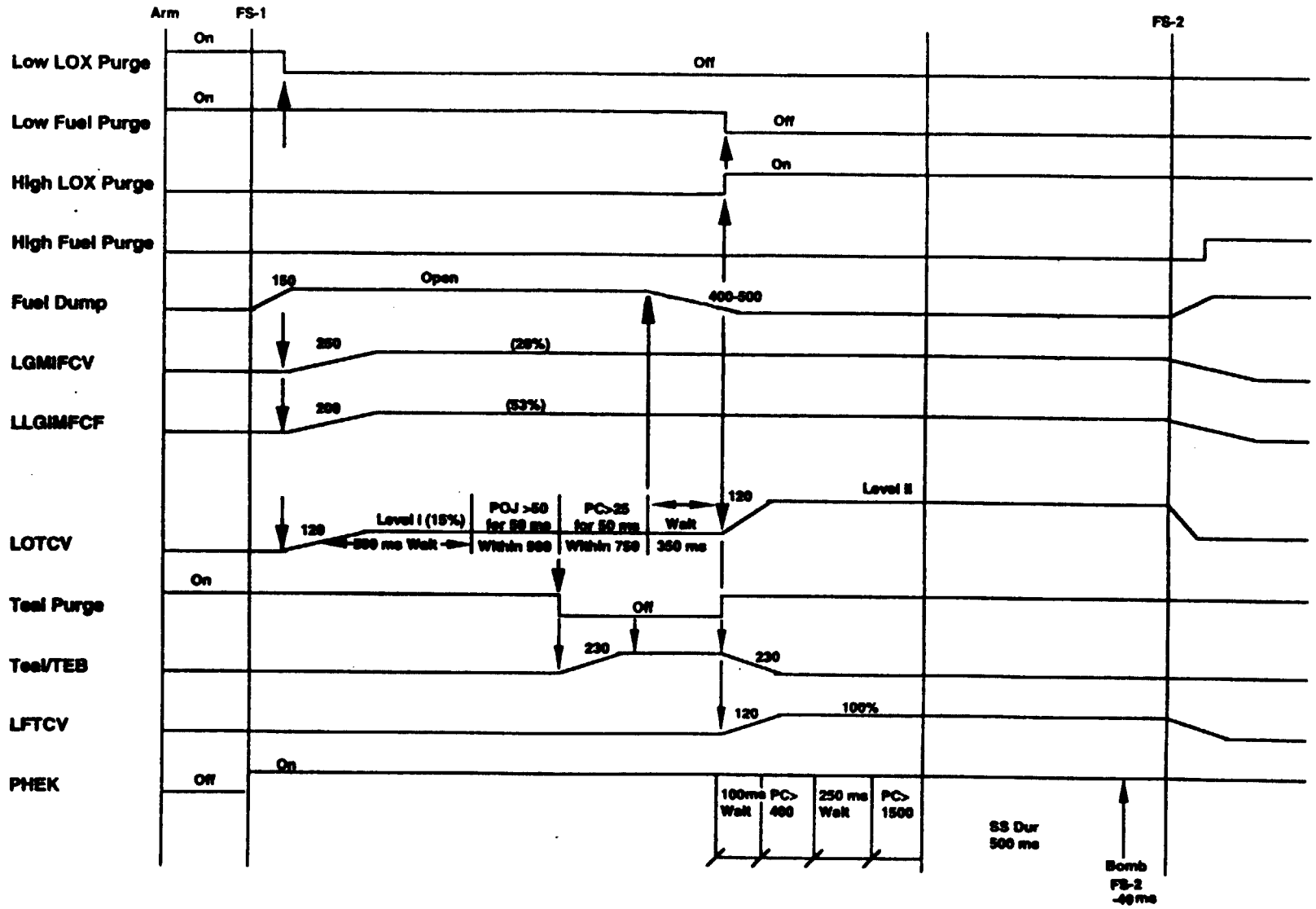

Figure 4-88. LSI Subscale Injector Program Sequence

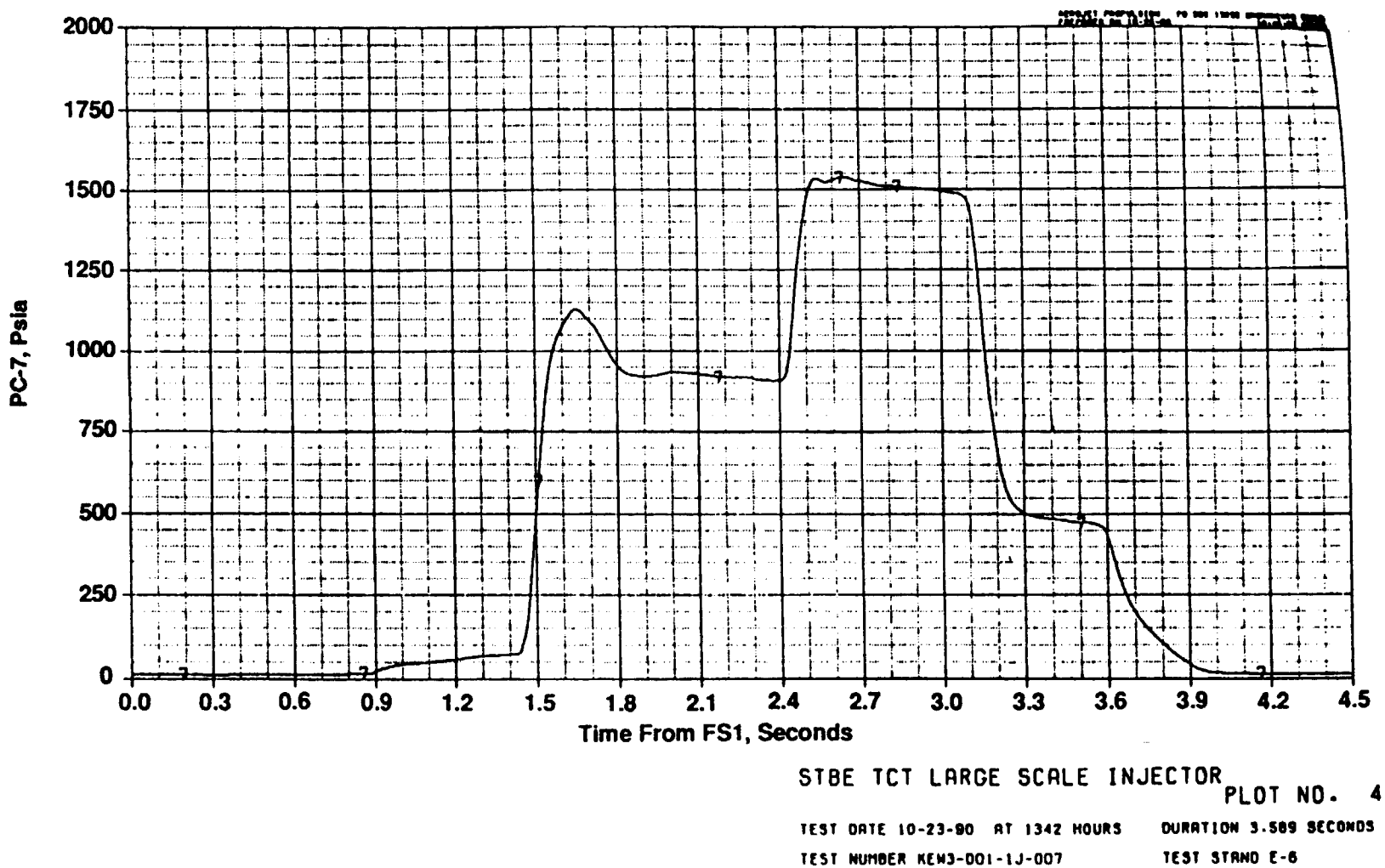

Figure 4-89. Chamber Pressure for Two Step (Level I to S.S.) Operation

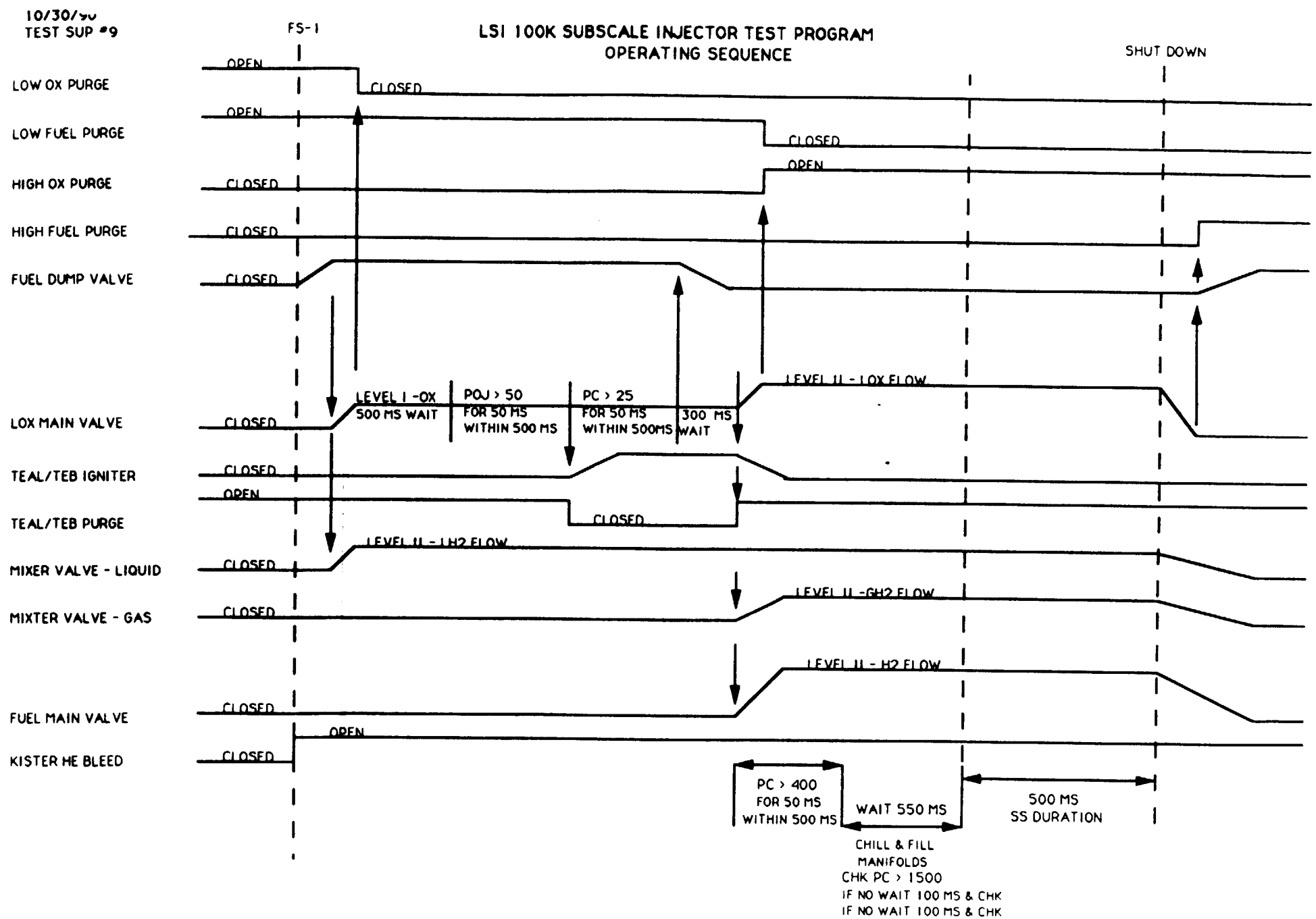

Figure 4-90. LSI 100K Subscale Injector Test Program Operating Sequence

PLOT NO. 4

TEST DATE 10-23-90 AT 1342 HOURS DURATION 3.500 SECONDS

TEST NUMBER KEH3-001-1J-007 TEST STAND E-6

~~Fig. 11~~ Chamber Pressure for Two Step (Level I to S.S.) Operation

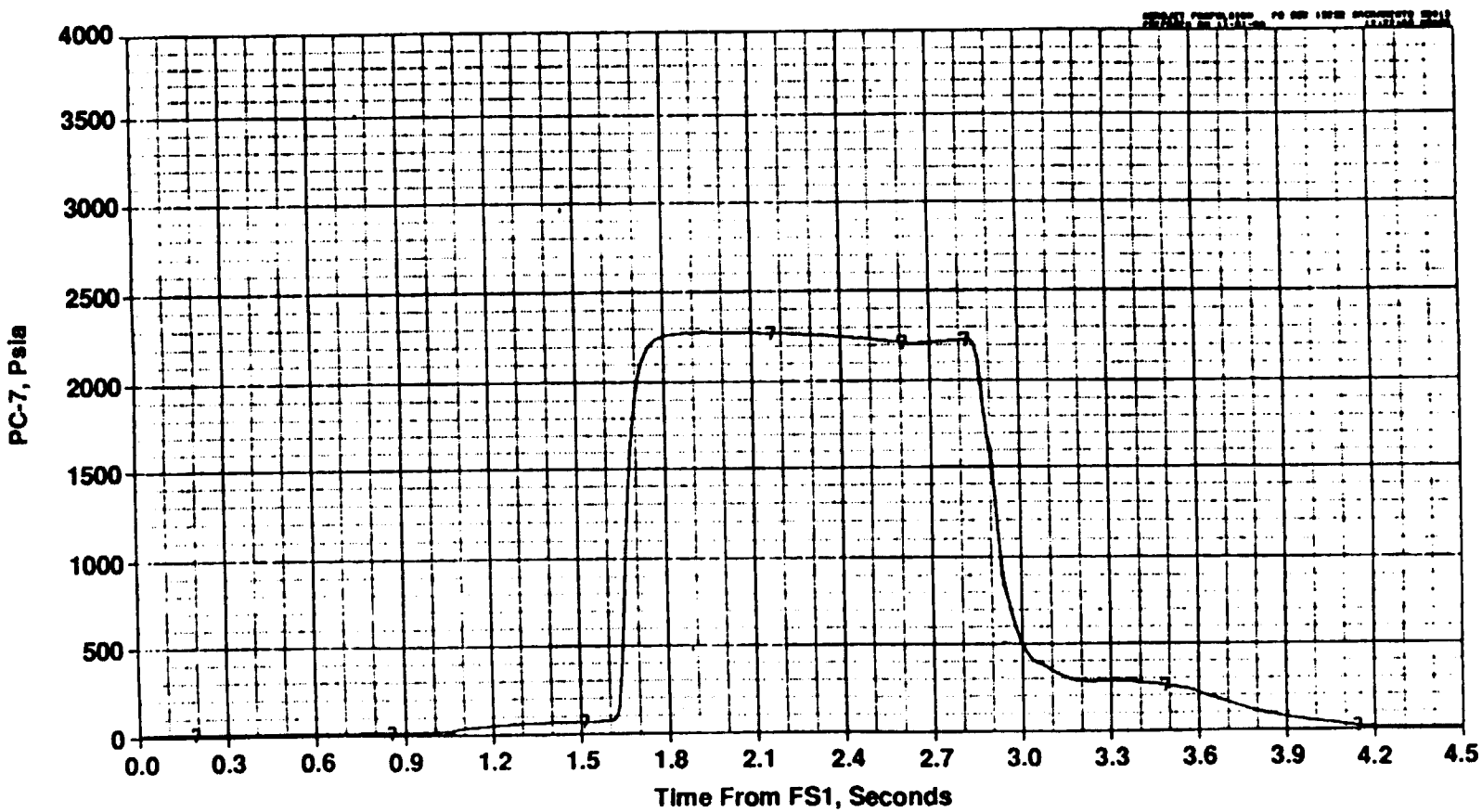

STBE TCT LARGE SCALE INJECTOR PLOT NO. 4

TEST DATE 10-31-90 AT 1551 HOURS DURATION 3.099 SECONDS

TEST NUMBER KEH3-001-1J-011 TEST STAND E-6

Figure 4-91. Chamber Pressure for Single-Step Operational Sequence

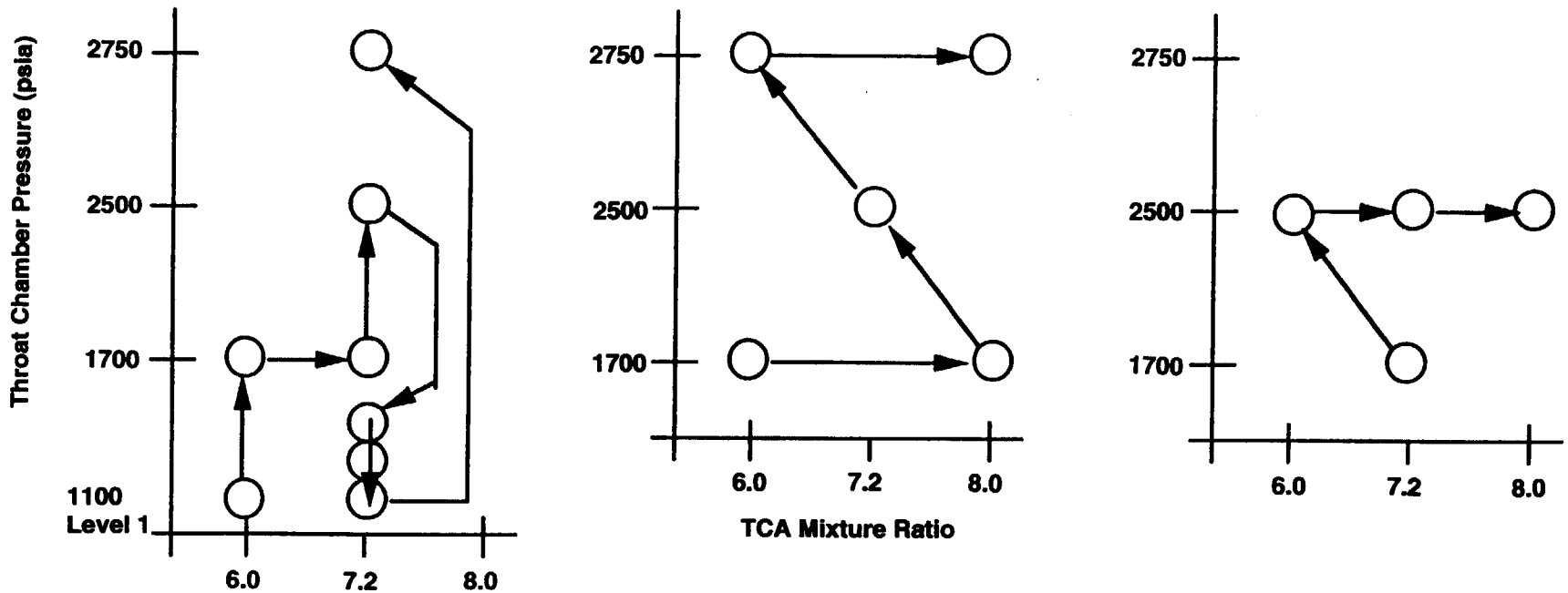

Start Series 0
- 1T Monotune Cavity
- Minimum Fuel Film Cooling
- Include Chug Tests to Avoid Additional Hardware Change

Core Element Bomb Series 1, 2 & 3
- No Cavities
- Minimum Fuel Film Cooling
- All Tests Bombed
- Fuel Temperature Ramp

Dupl. Calorimeter Series 4 & 5
- Cavities TBD
- Fuel Film Cooling TBD
- All Tests Bombed
- Last Tests for Hydrogen Temperature
- L^1 Variation

Figure 4-92. These Subscale Test Recommendations Result in a Minimum of 16 Tests Using Ablative Liners for the Swirl Coaxial Element Subscale Injector

ORIGINAL PAGE
BLACK AND WHITE PHOTOGRAPH

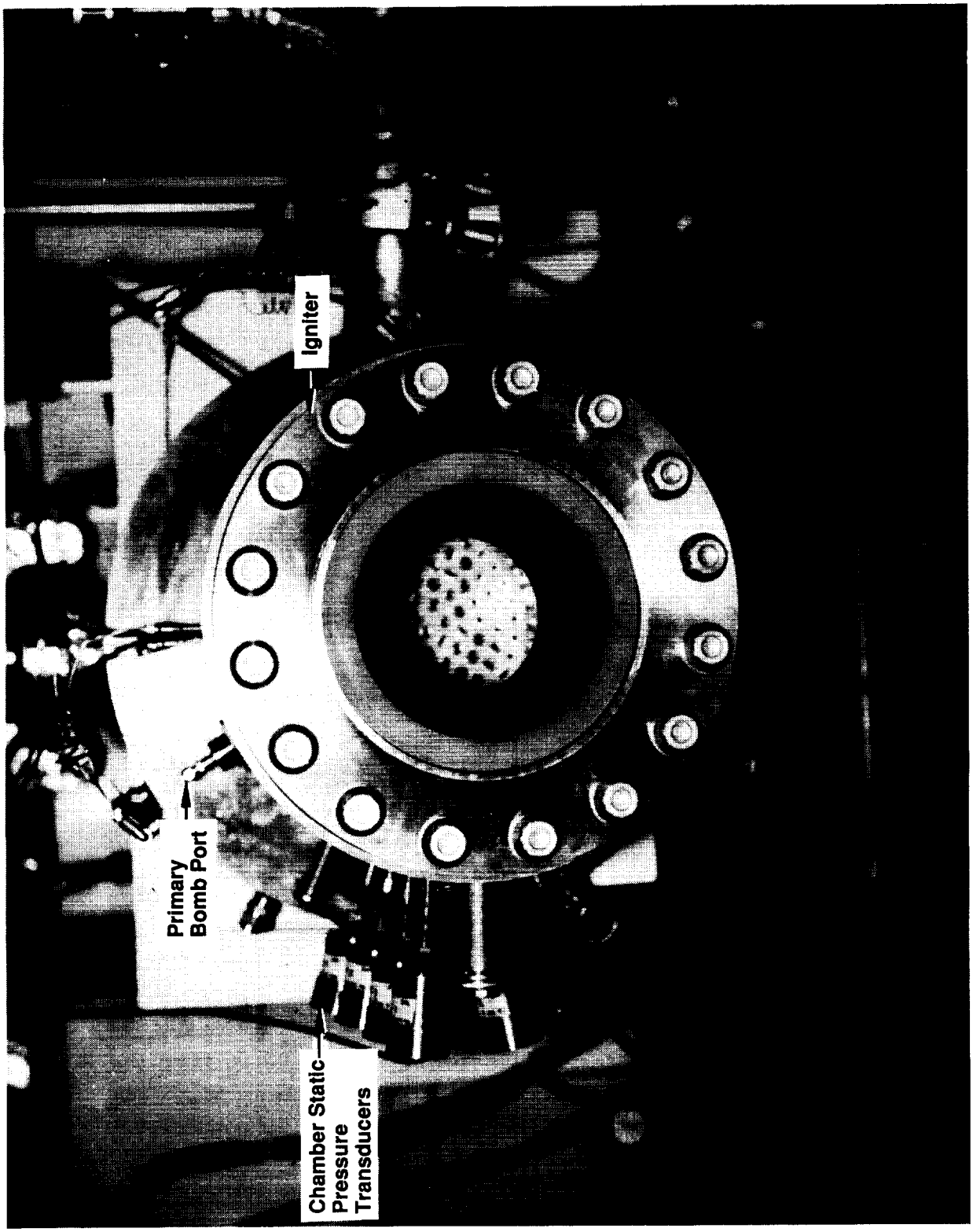

Figure 4-93. Injector and Chamber Prior to Test

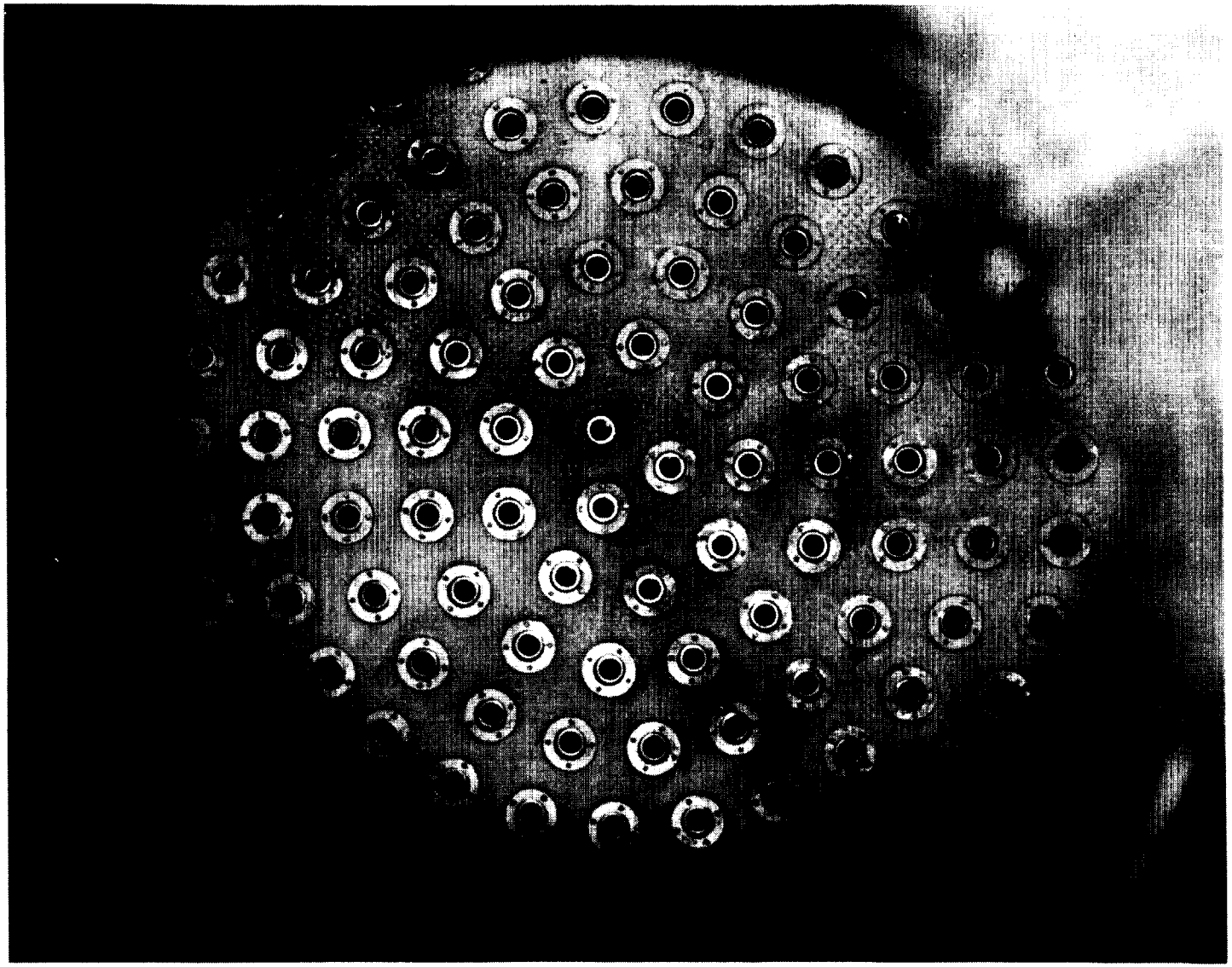

Figure 4-94. Injector Face Condition, Pretest 004

ORIGINAL PAGE
BLACK AND WHITE PHOTOGRAPH

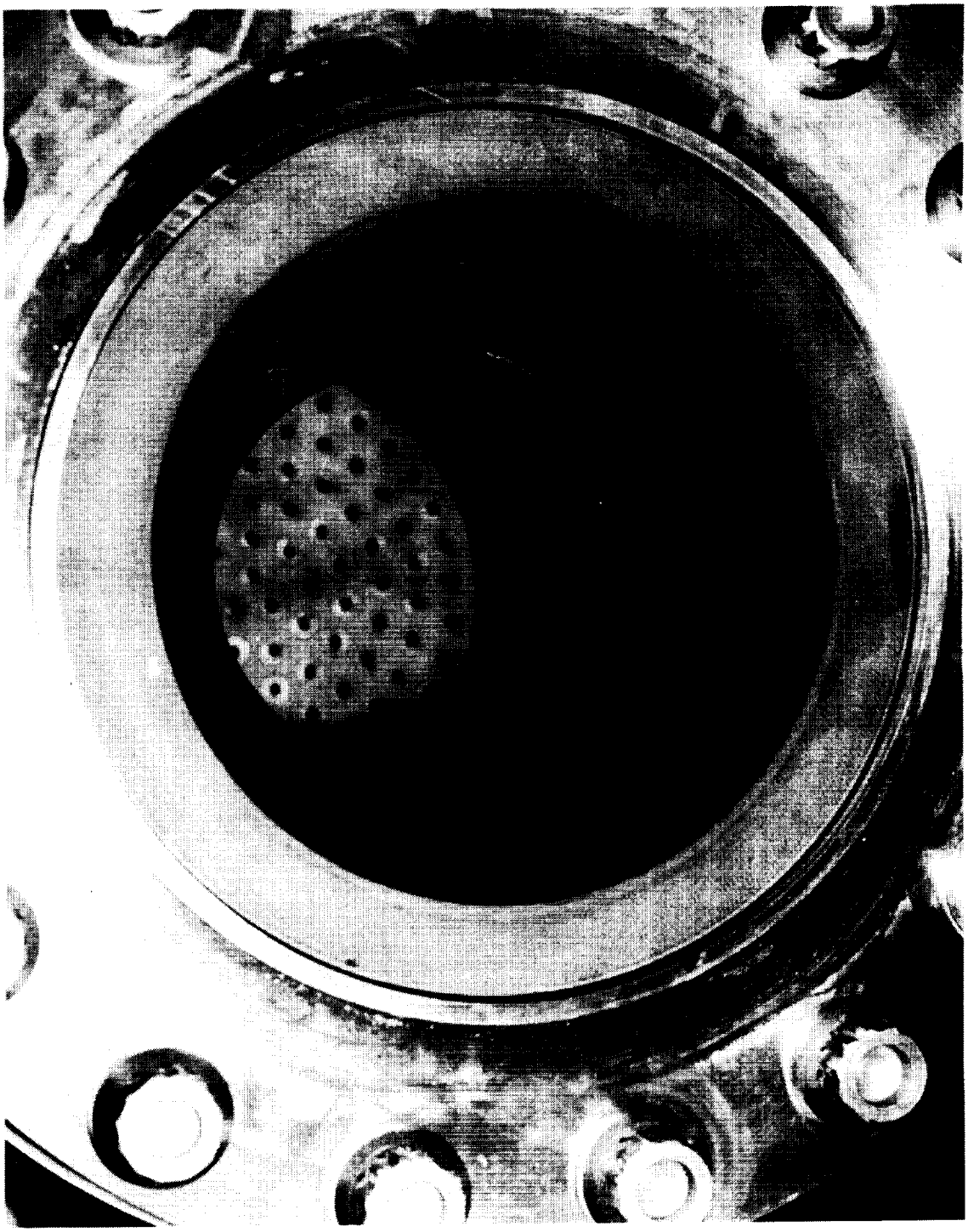

Figure 4-95. Ablative Chamber Condition, Pretest 004

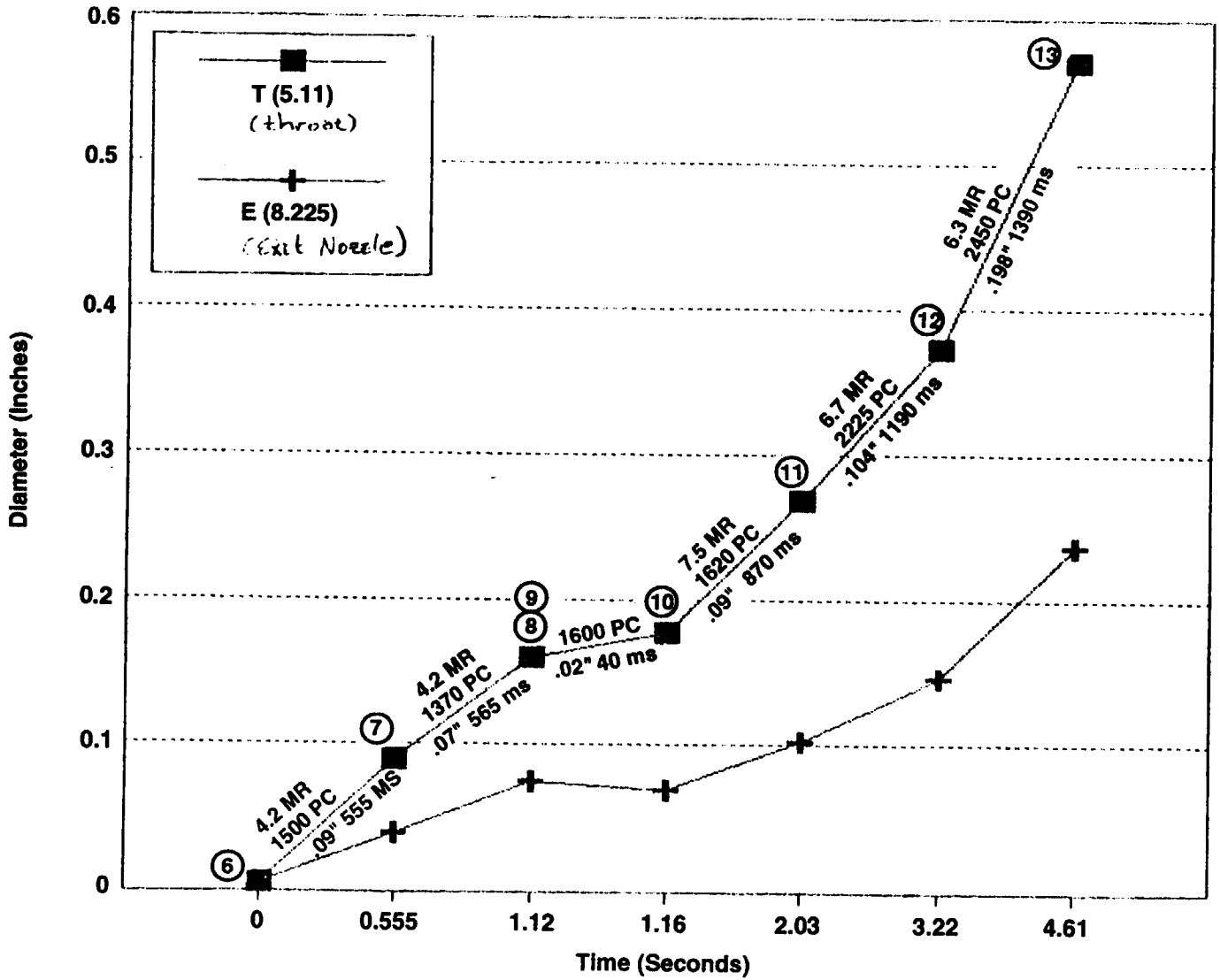

Figure 4-96. Ablation Rate

BLACK AND WHITE PHOTOGRAPH

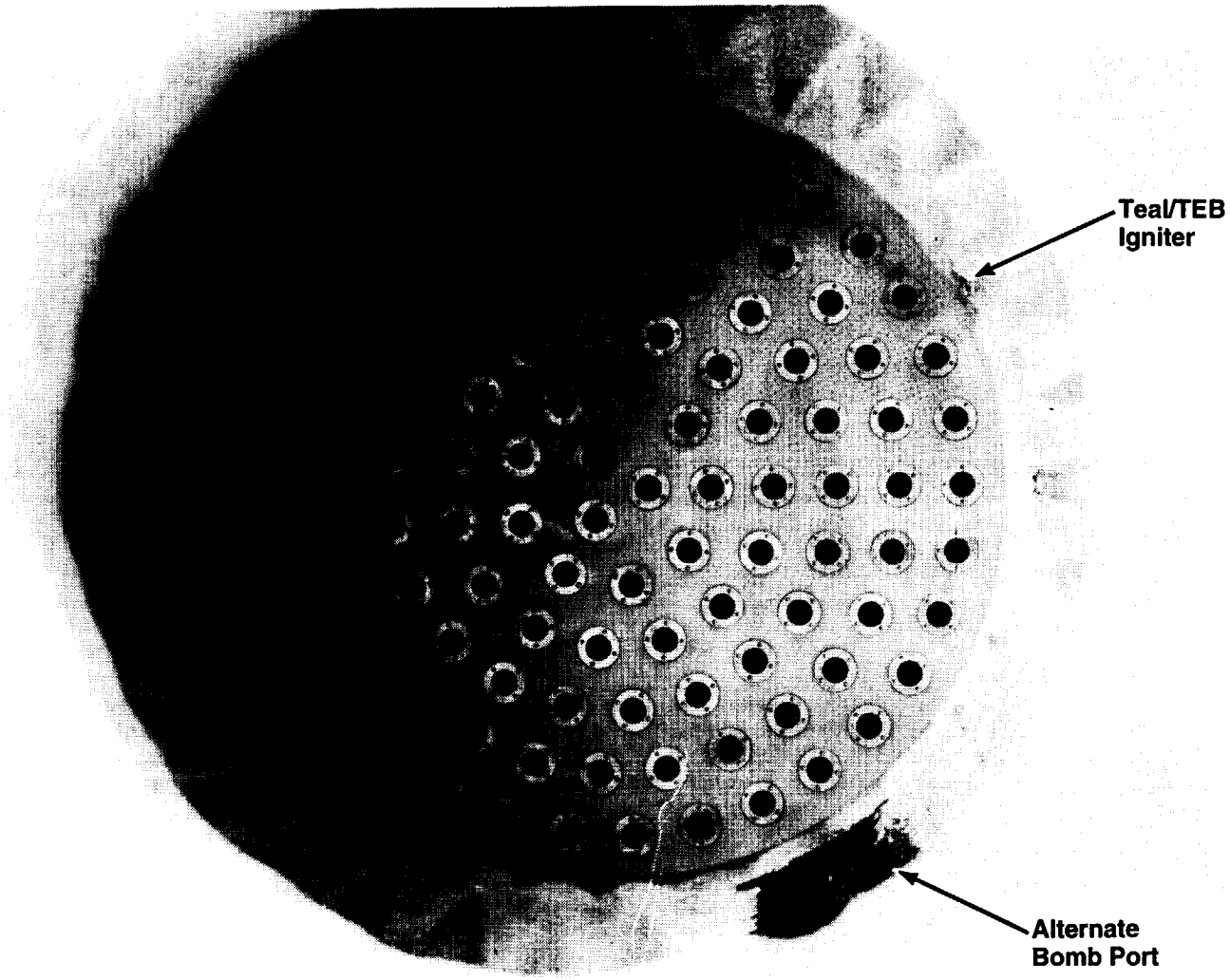

Figure 4-97. Injector Condition, Pretest 012

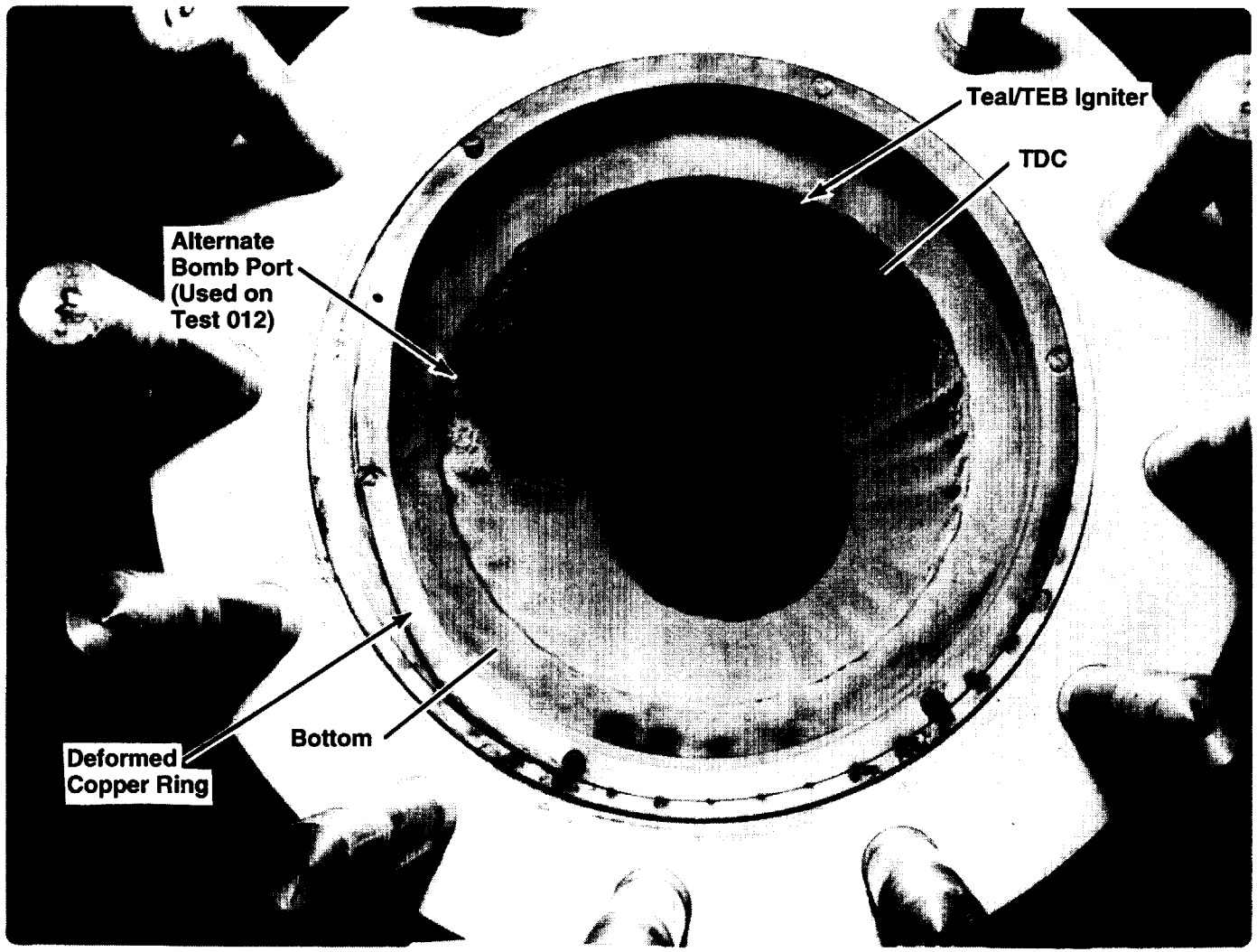

Figure 4-98. Barrel End of Ablative Chamber, Posttest 013

ORIGINAL PAGE
BLACK AND WHITE PHOTOGRAPH

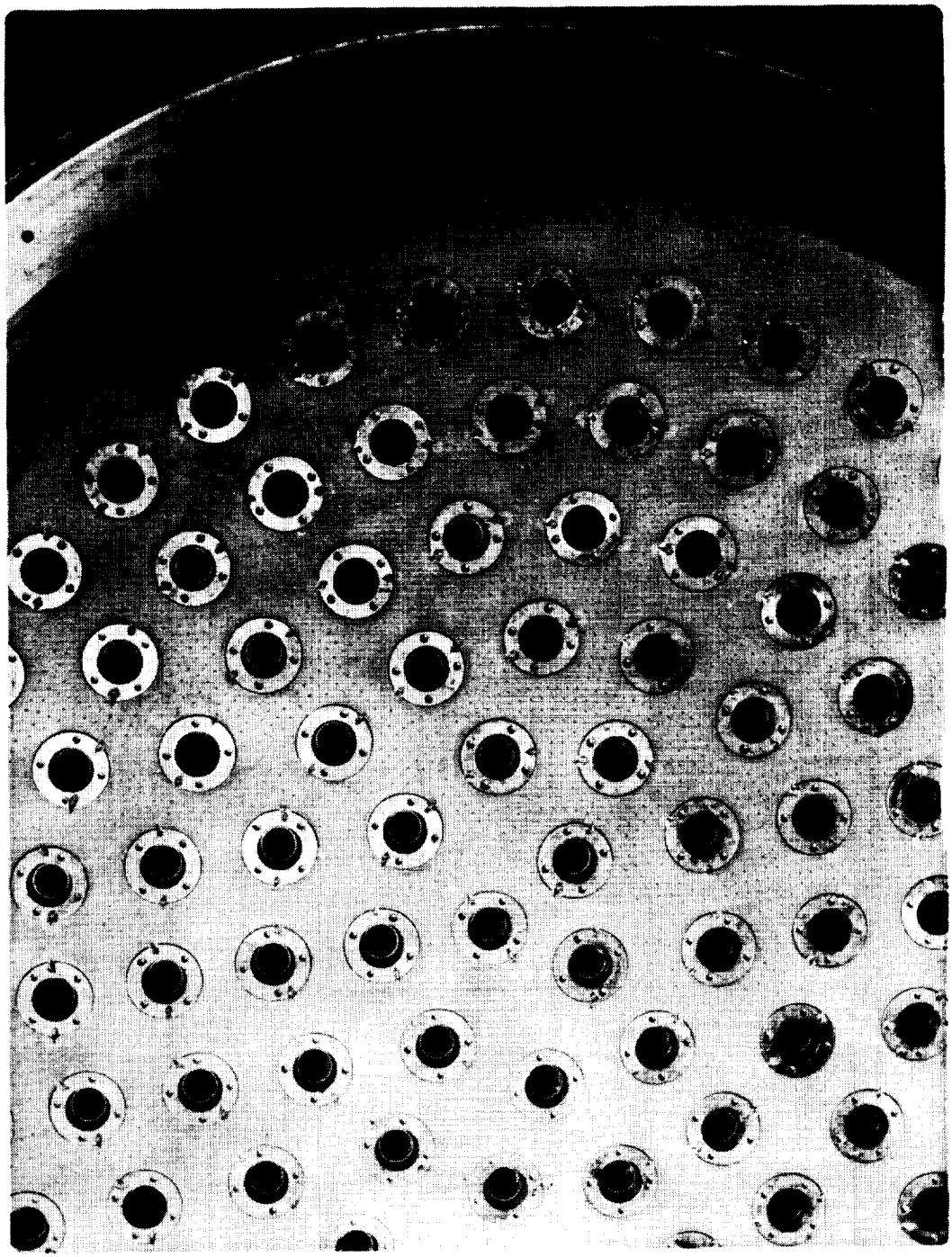

Figure 4-99. Staking of Face Nuts Prior to Test Series #2

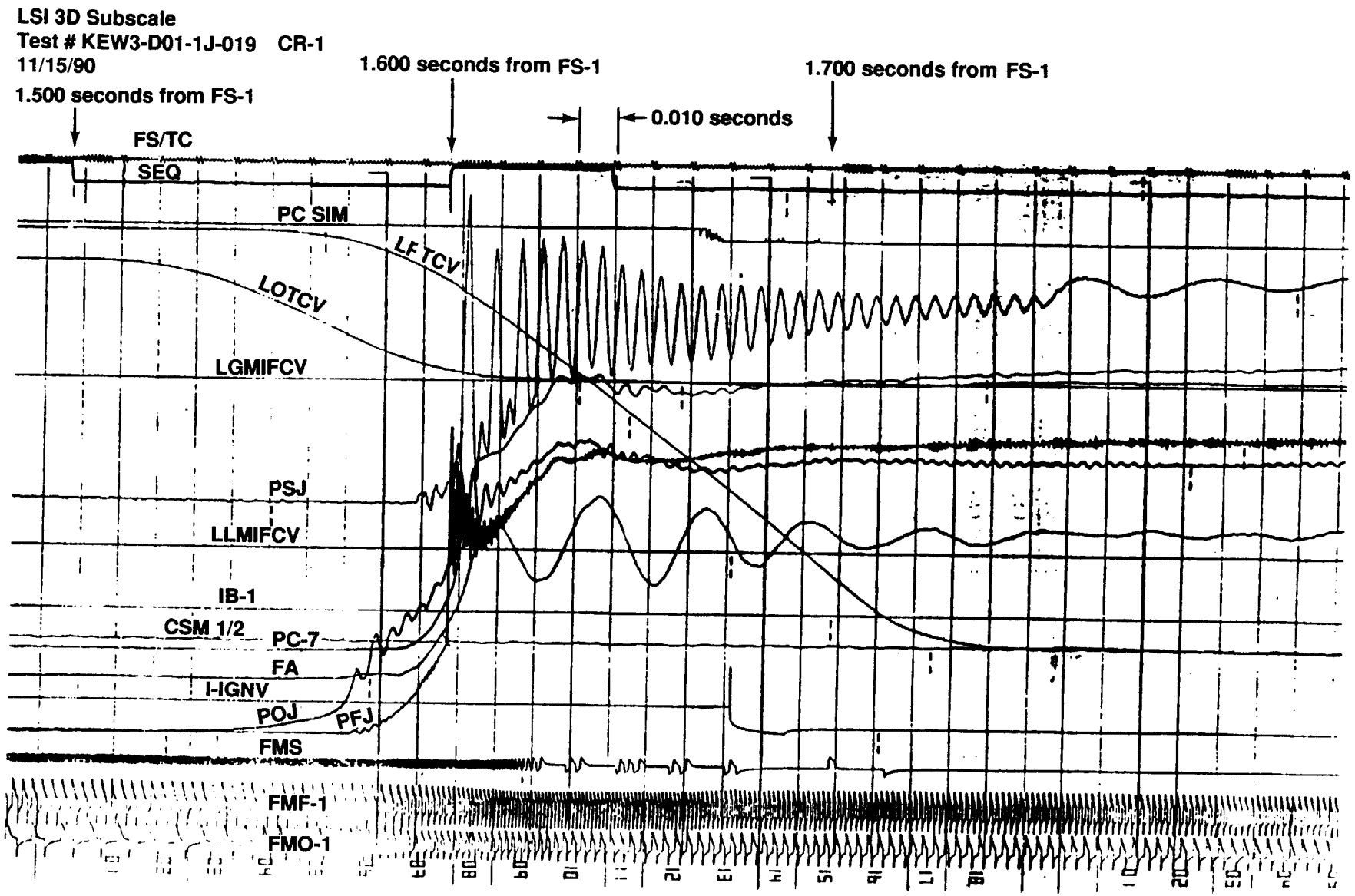

Figure 4-100. LSI 3D Subscale Injector Test Valve Signals and Manifold High Frequency Pressures

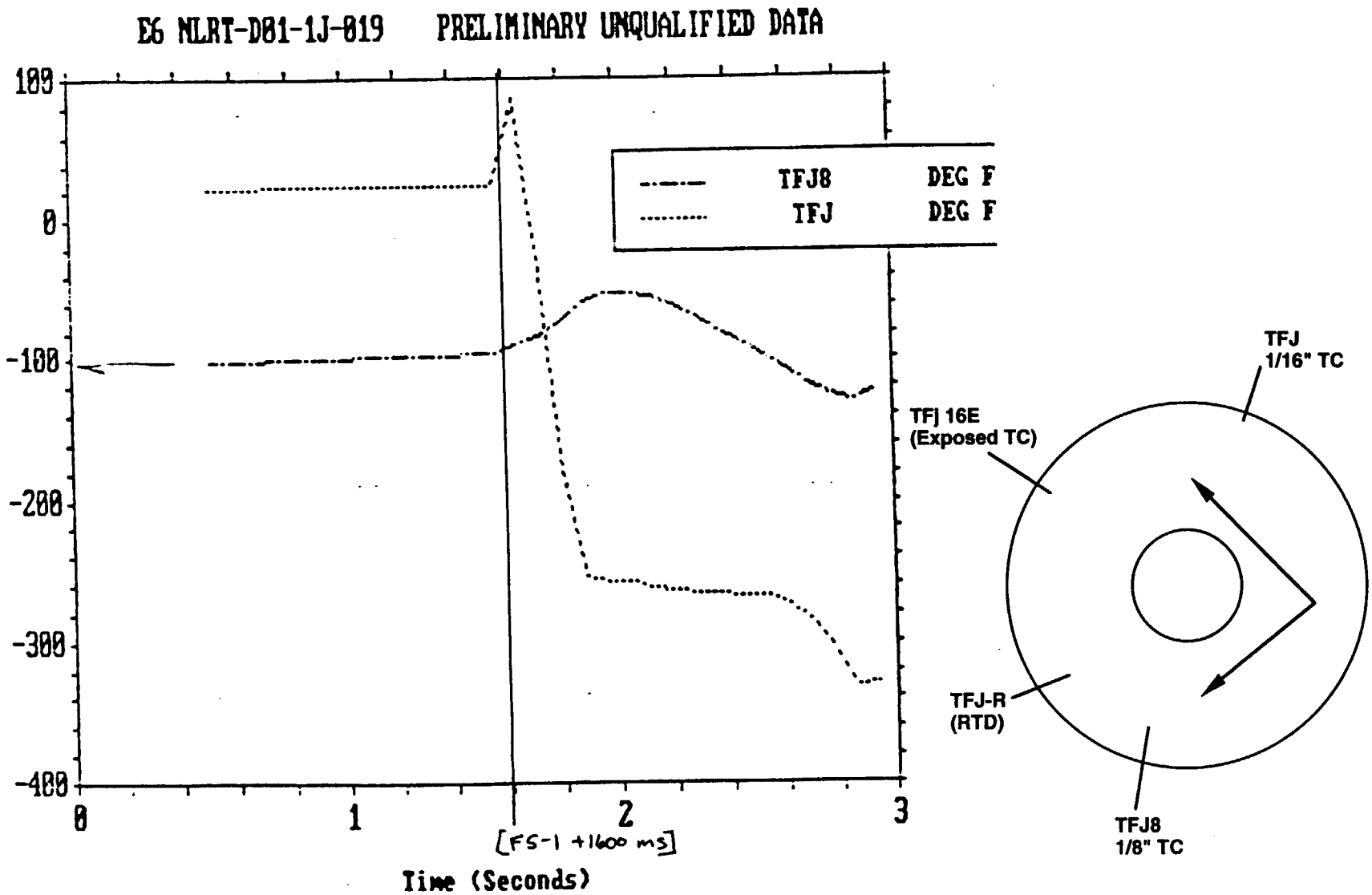

Figure 4-101. Fuel Manifold Temperatures

ORIGINAL PAGE
BLACK AND WHITE PHOTOGRAPH

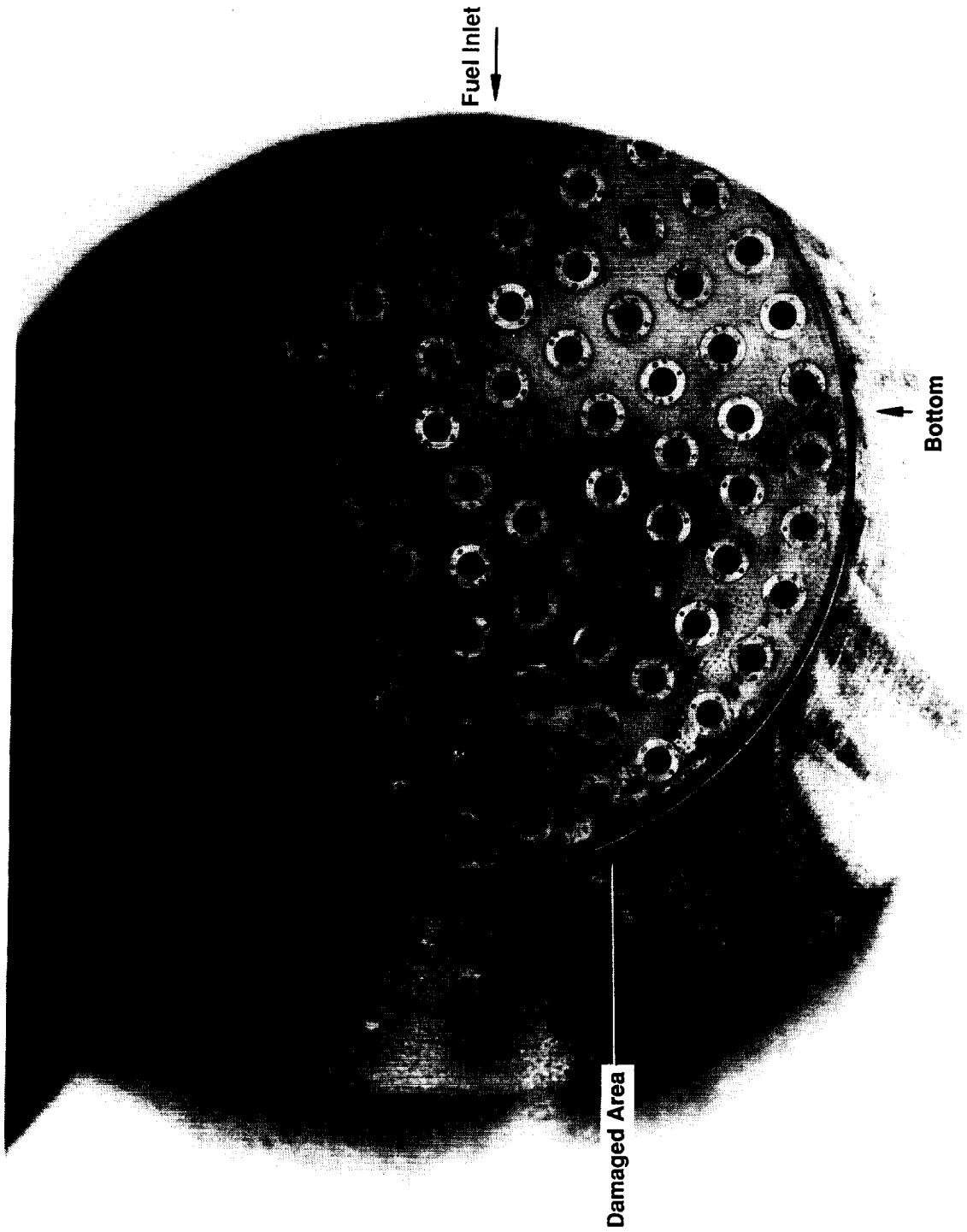

Figure 4-102. Hardware Condition Posttest 019

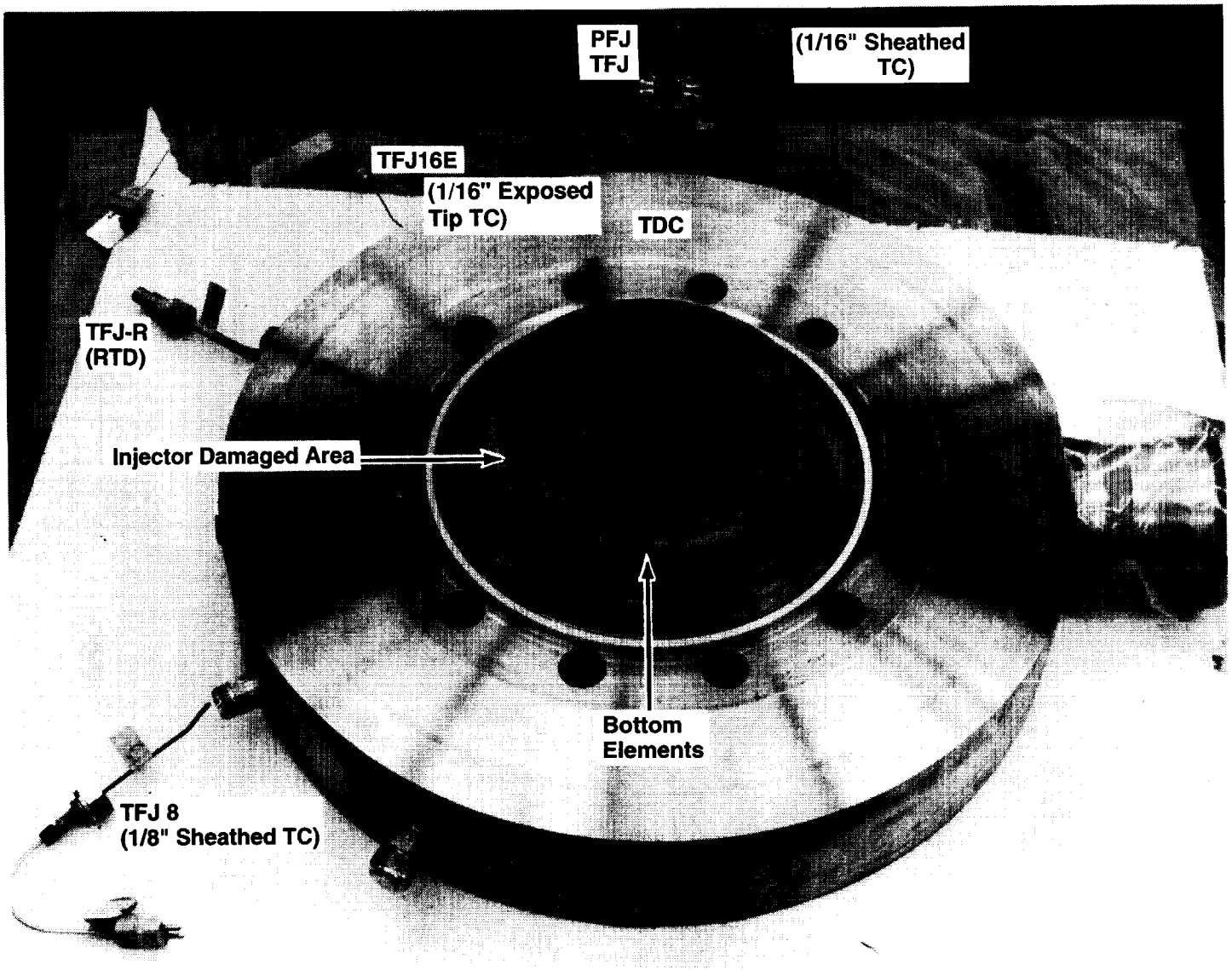

Figure 4-103. Injector Condition, Posttest 019

ORIGINAL PAGE
BLACK AND WHITE PHOTOGRAPH

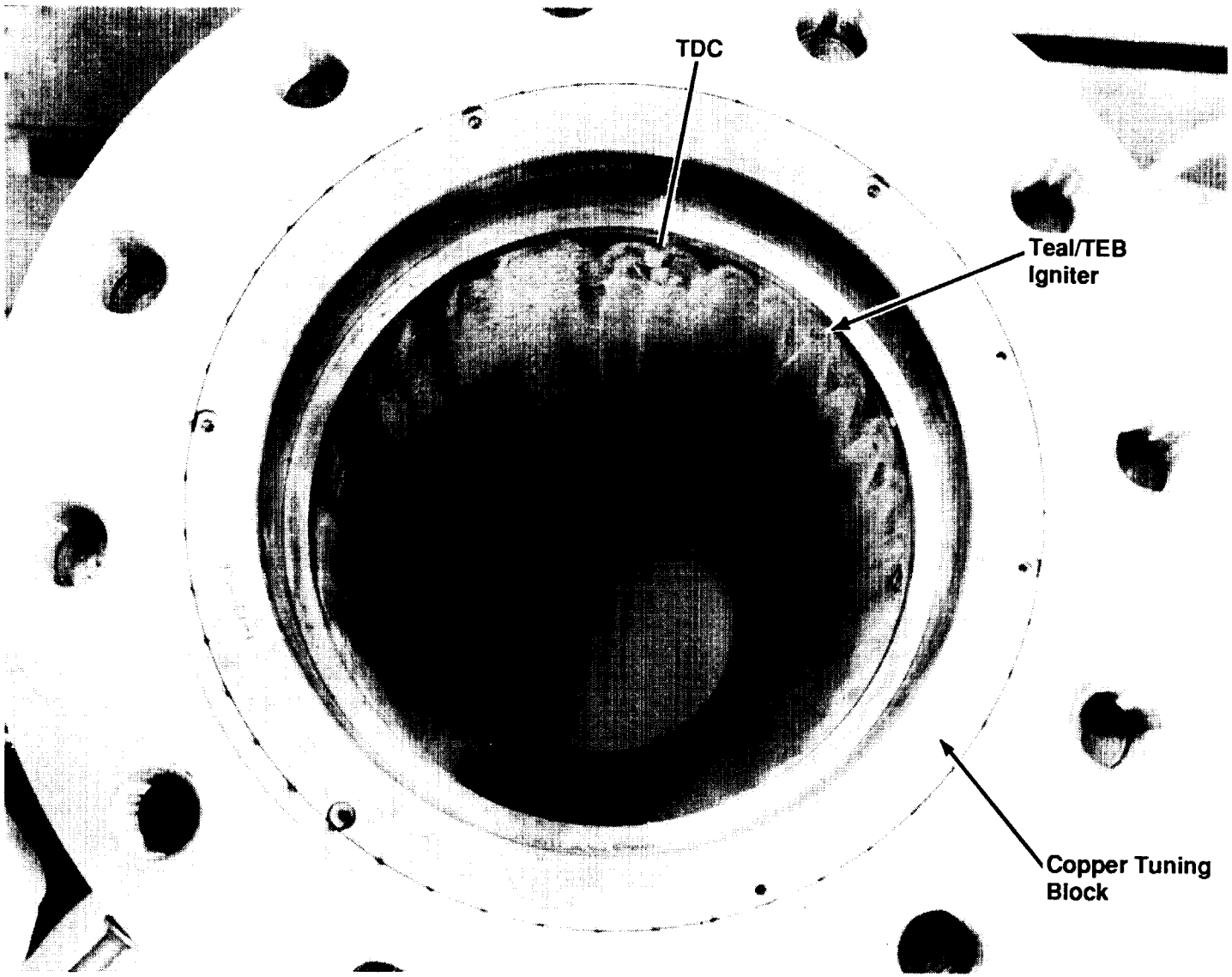

Figure 4-104. Ablative Chamber Condition, Posttest 019

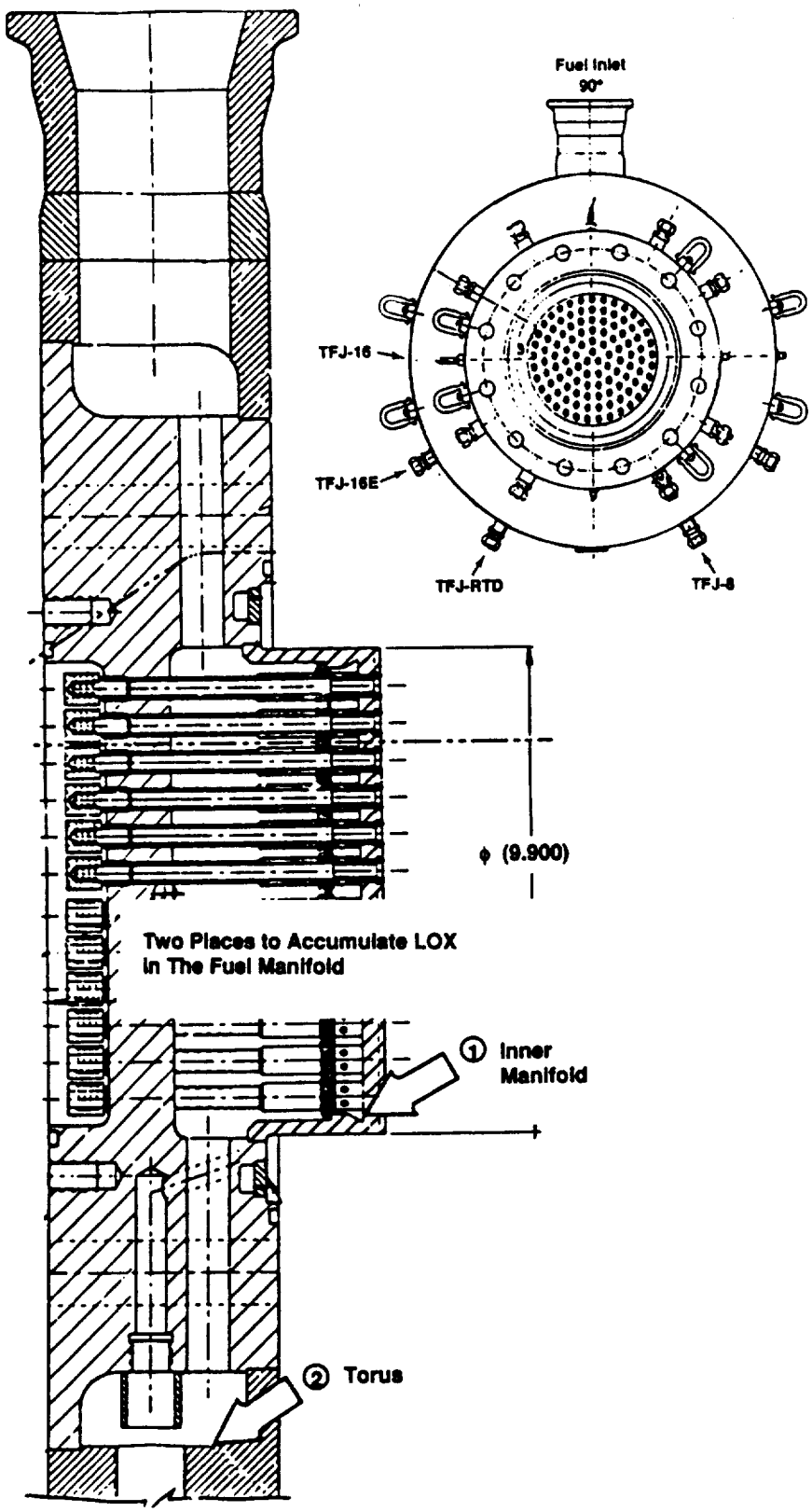

Figure 4-105. LOX Leak Path Into Fuel Manifold

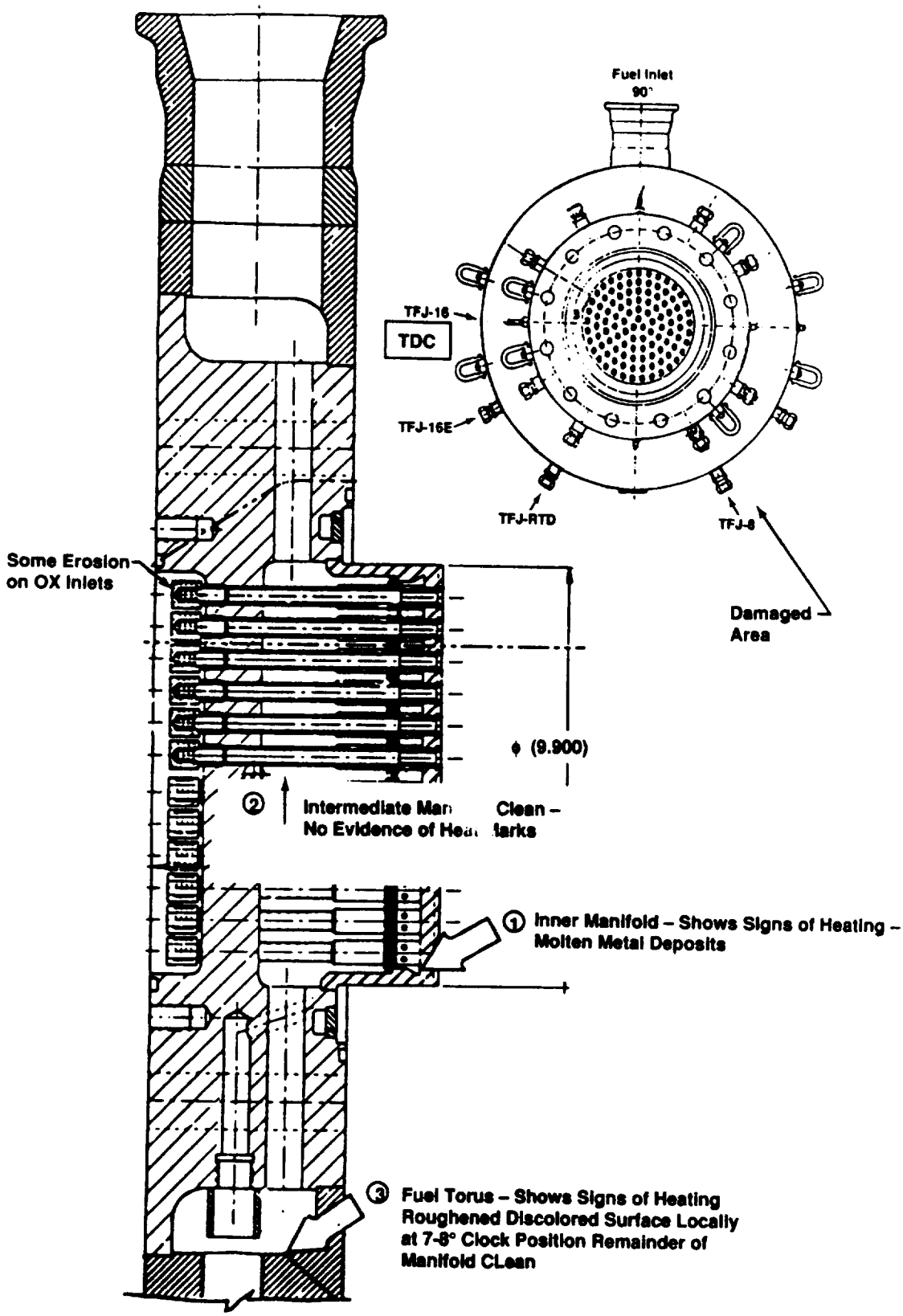

Figure 4-106. Visual Inspection of Injector

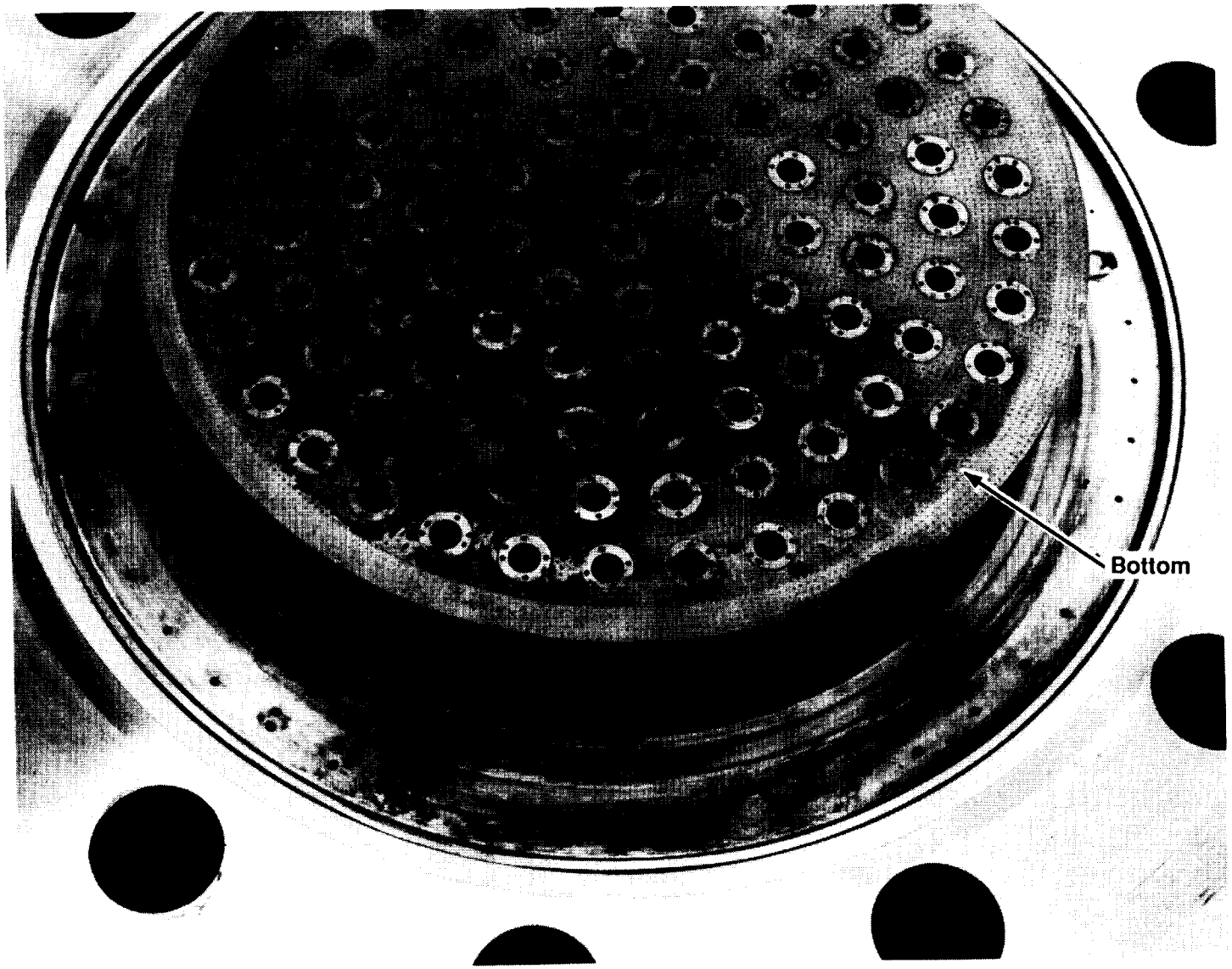

Figure 4-107. Close Up of Injector Damage

Note:
- After Test 013
  - Partial Cavity Block - Deformed (5 o'clock)
- After Test 019
  - Full Cavity Block - Undamaged Except For Heat Streak On Bottom

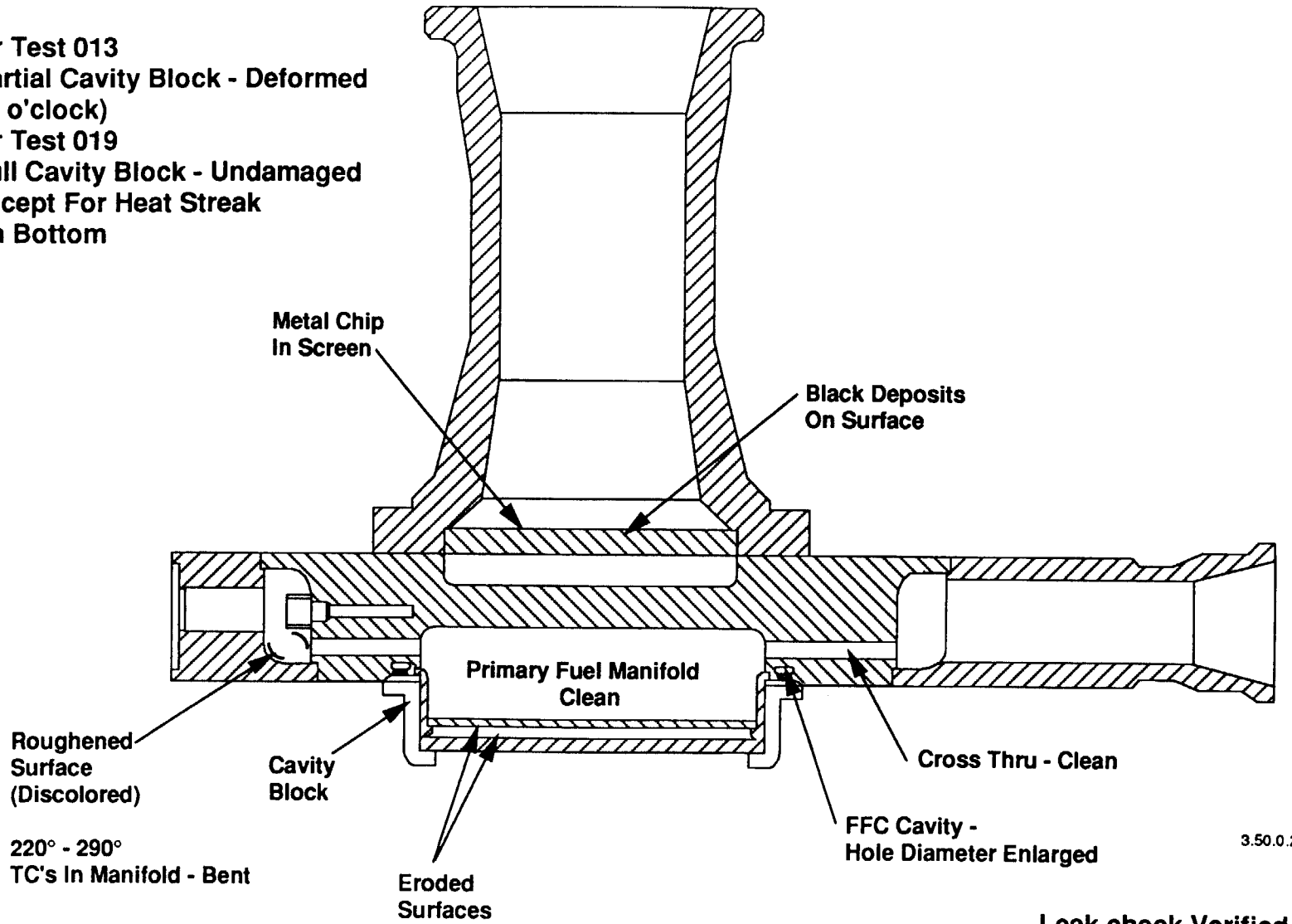

Leak check Verified
Integrity Of Braze Joints

Figure 4-108. LSI 3D Injector Posttest 019 Condition

ORIGINAL PAGE
BLACK AND WHITE PHOTOGRAPH

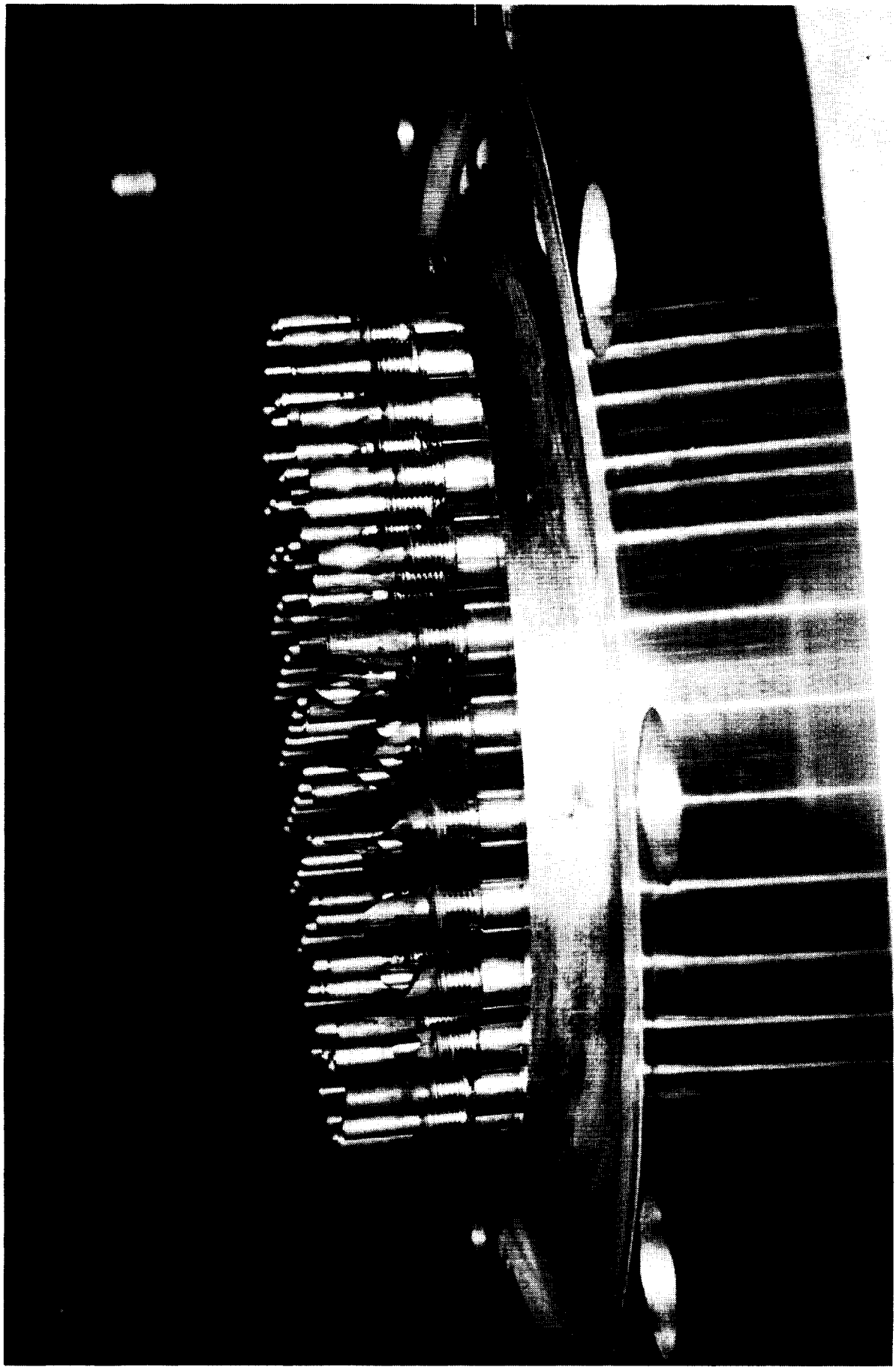

Figure 4-109. Side View of Damaged Oxidizer Injector Posts

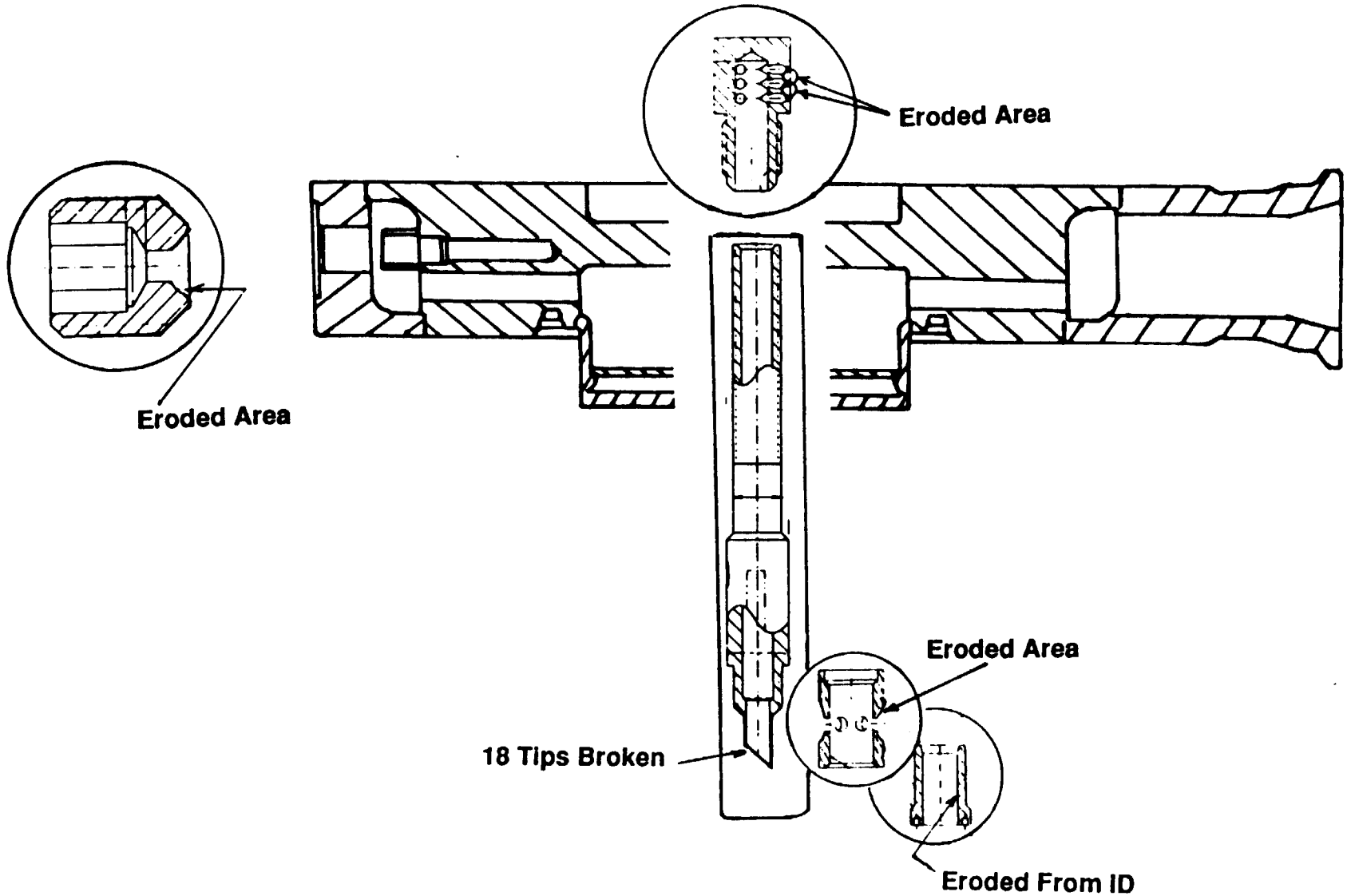

Figure 4-110. LSI 3D Injector Element Posttest 019 Condition

Sample #38

Evidence of Melting

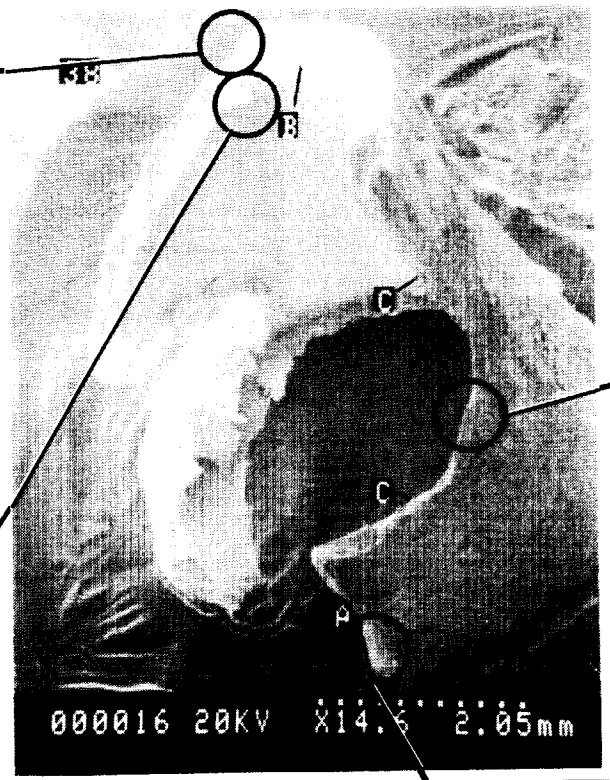

Evidence of
Cross-Section Melting
(Thinned Section)

Evidence of Dimples
(Fracture Surface)

Evidence of Melting

Figure 4-111. SEM Evaluation of Sample #38

III) LOX/H_2 Torch Follows Oxidizer Swirl Path to Reduce the Wall Thickness. Thinning and Heating of the Thin Wall Reduces the Structural Strength and a Ductile Fracture Occurs Along the ID Surface

II) Oxidizer Mixes With Fuel at Coupler Providing a LOX/H_2 "Torch" Which Burns Along Ox Tube OD

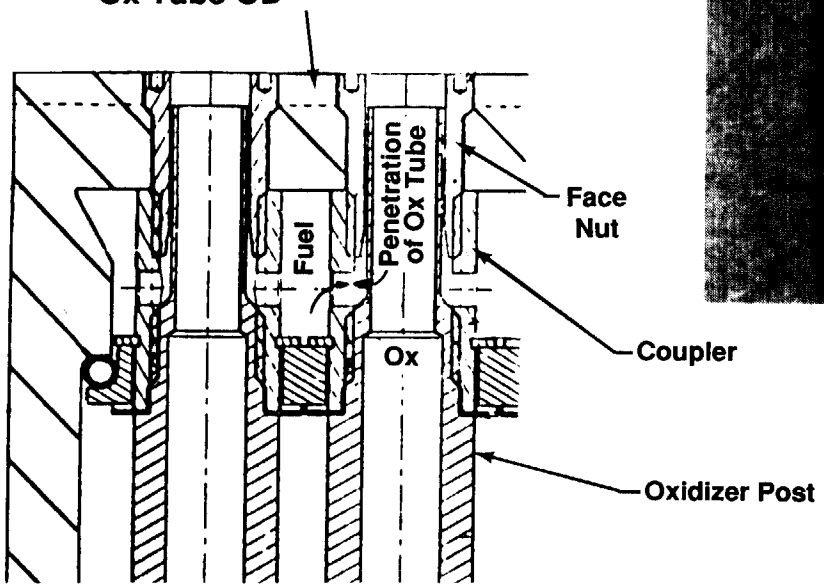

IV) Framented Tip Fails as it is Bent

I) Initial Burn Thru Evidenced by:
- Localized Thinning of Wall
- Melted Zone Through Wall

Figure 4-112. Proposed Failure Mechanism of Oxidizer Post Tip

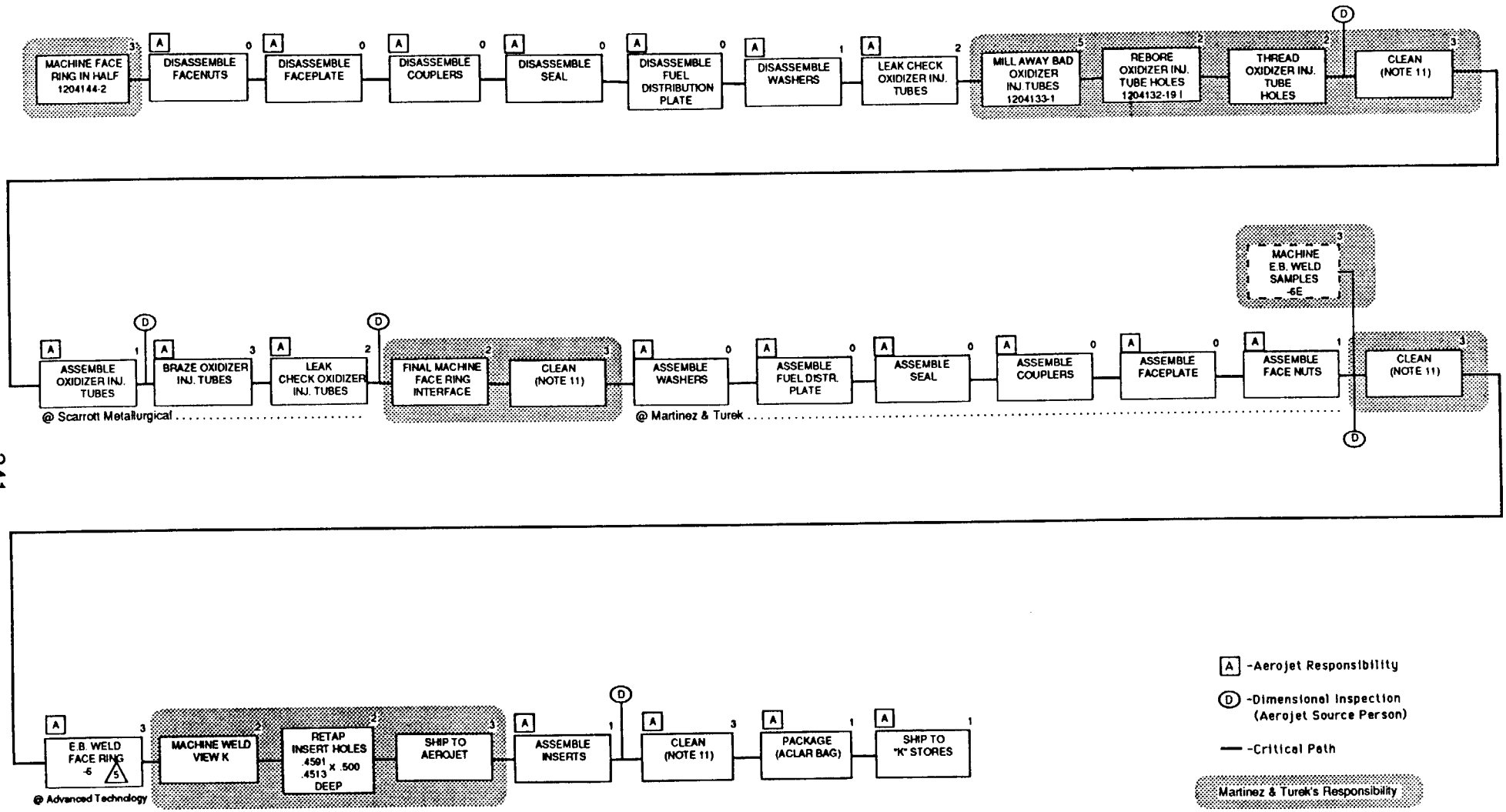

Figure 4-113. LSI – 3D Subscale Injector Repair P/N 1204132-19

ORIGINAL PAGE
BLACK AND WHITE PHOTOGRAPH

Figure 4-114. Repaired Subscale Injector

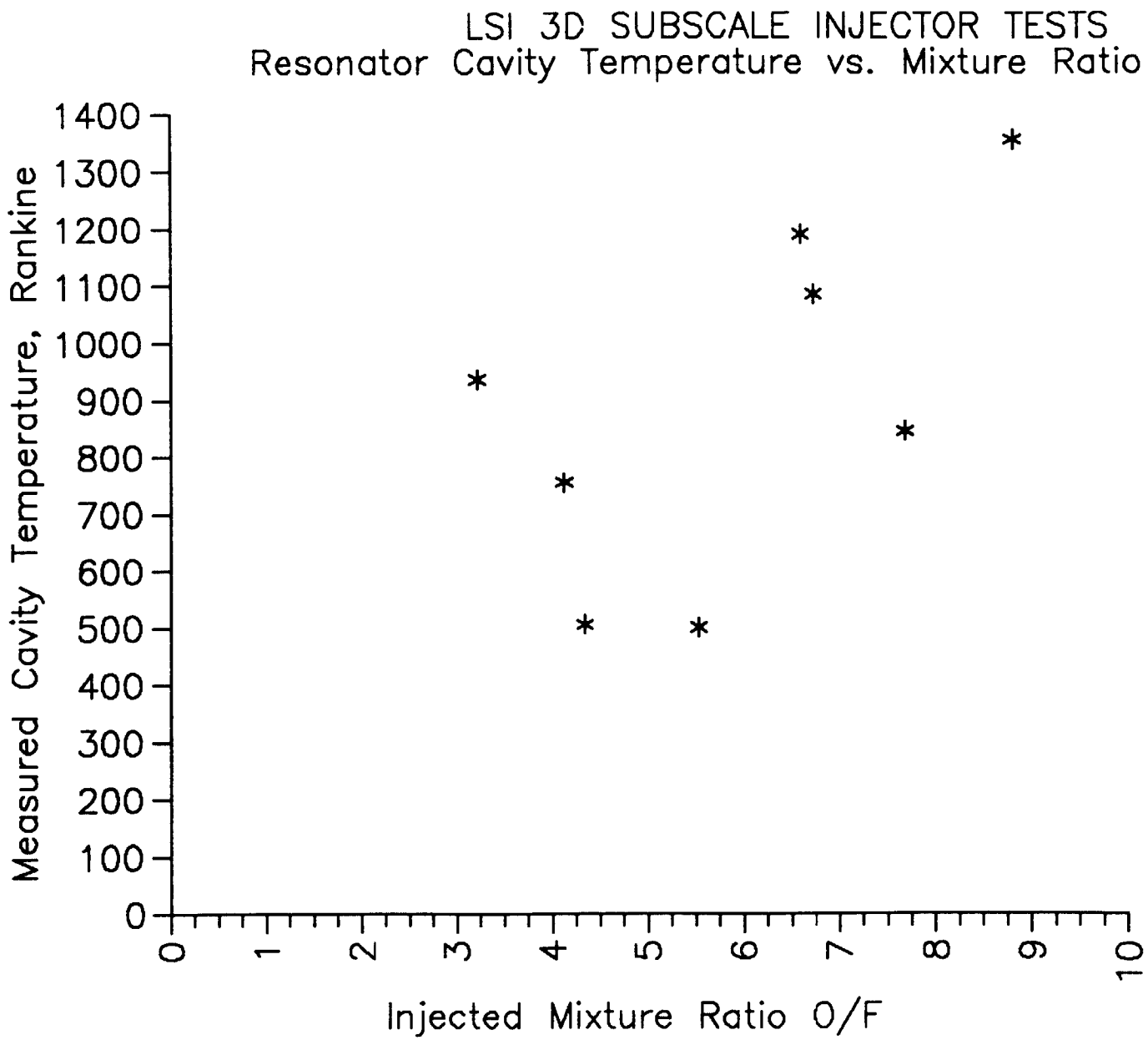

Figure 4-115. LSI 3D Subscale Injector Tests Resonator Cavity Temperature vs Mixture Ratio

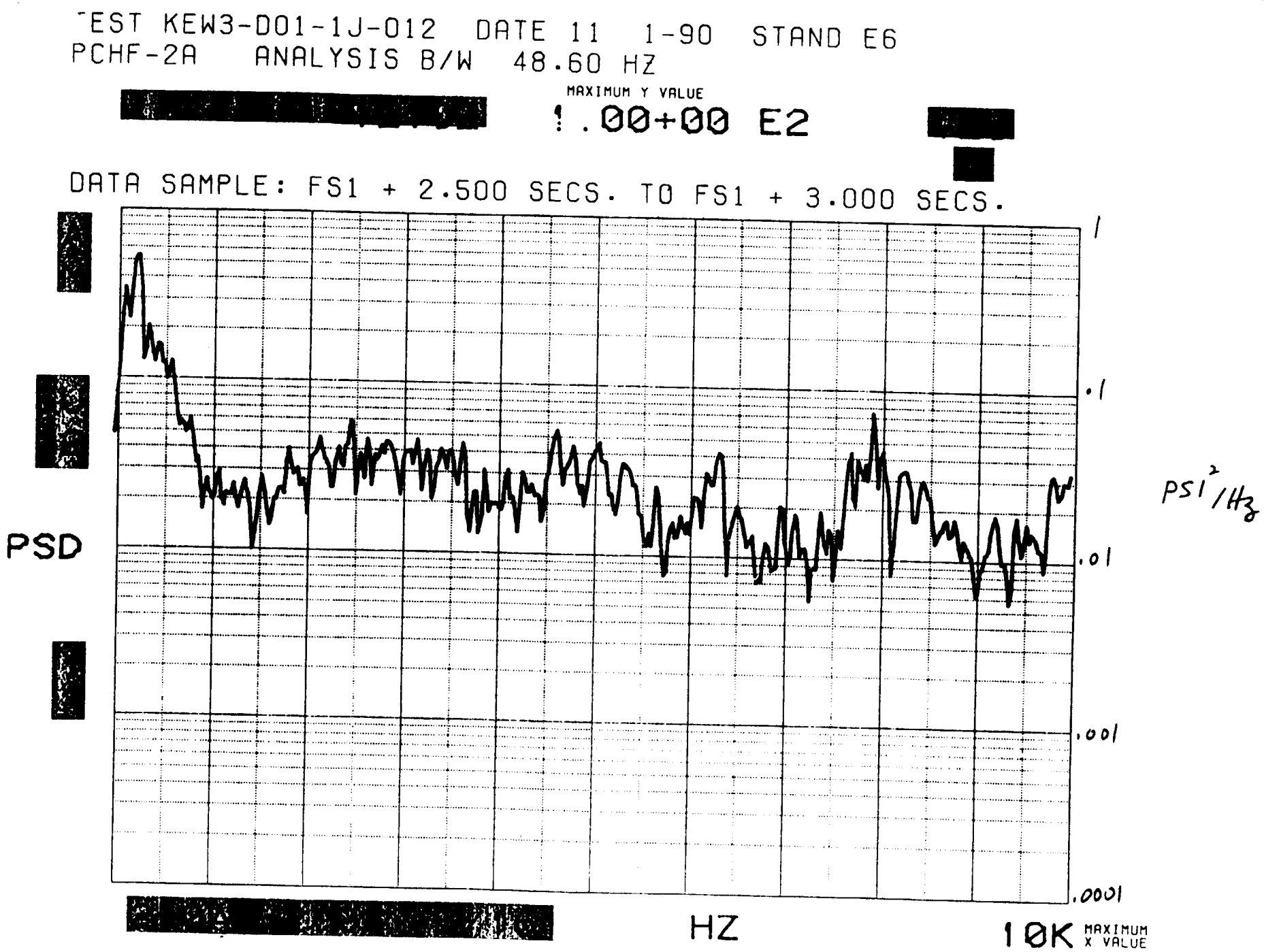

Figure 4-116. Test KEW3-D01-1J-012

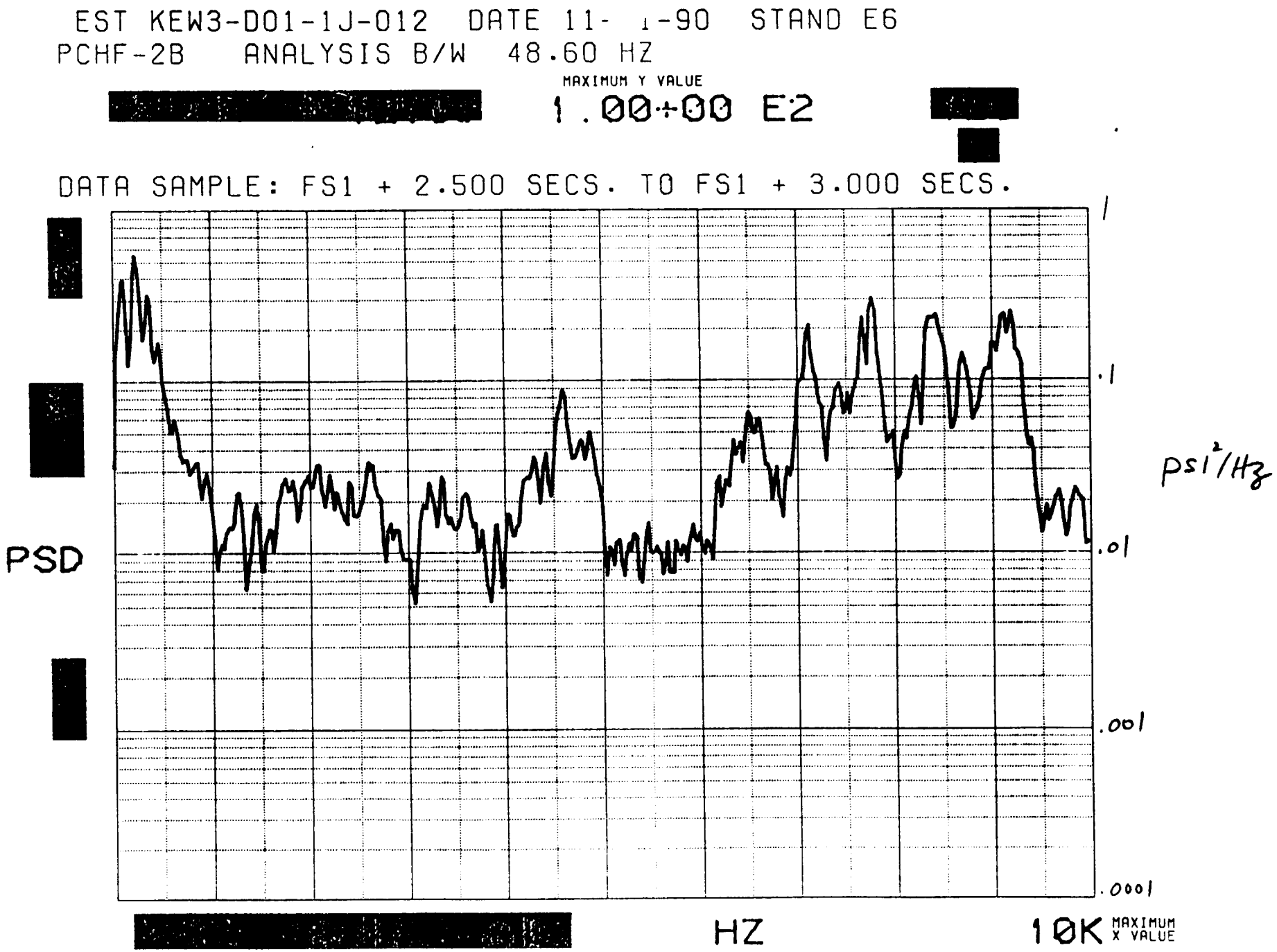

Figure 4-117. Test KEW3-D01-1J-012

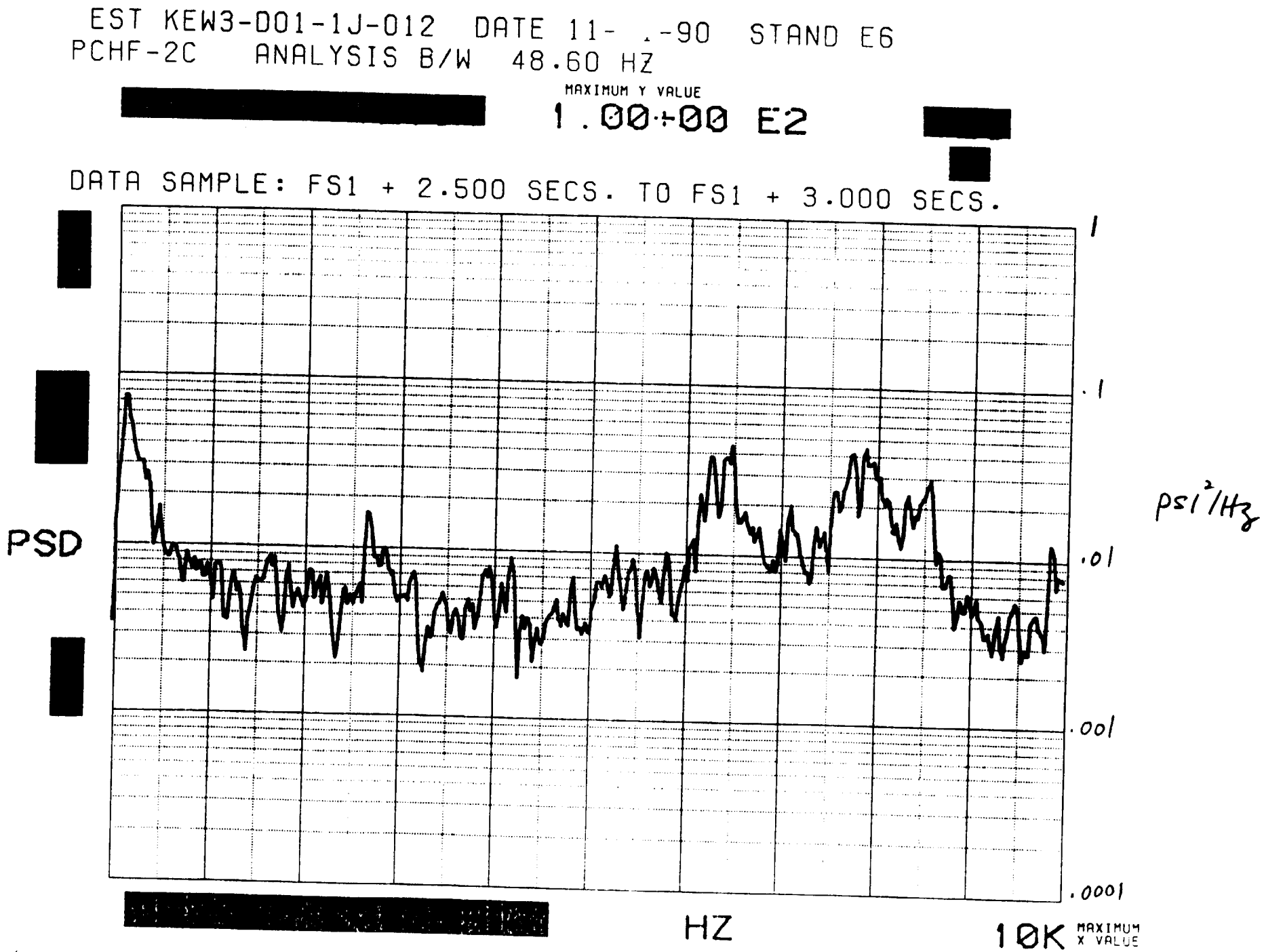

Figure 4-118. T KEW3-D01-1J-012

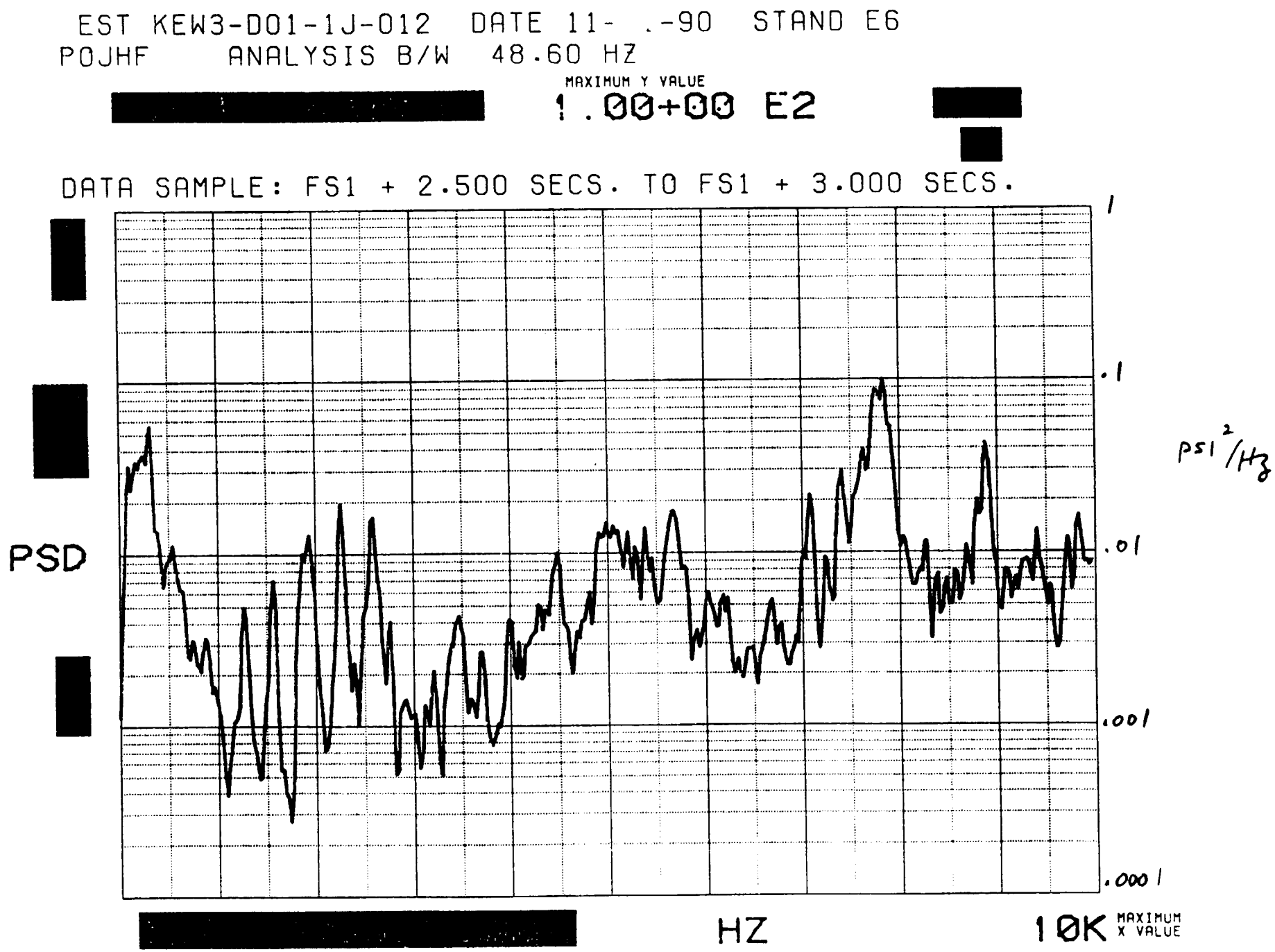

Figure 4-119. Test KEW3-D01-1J-012

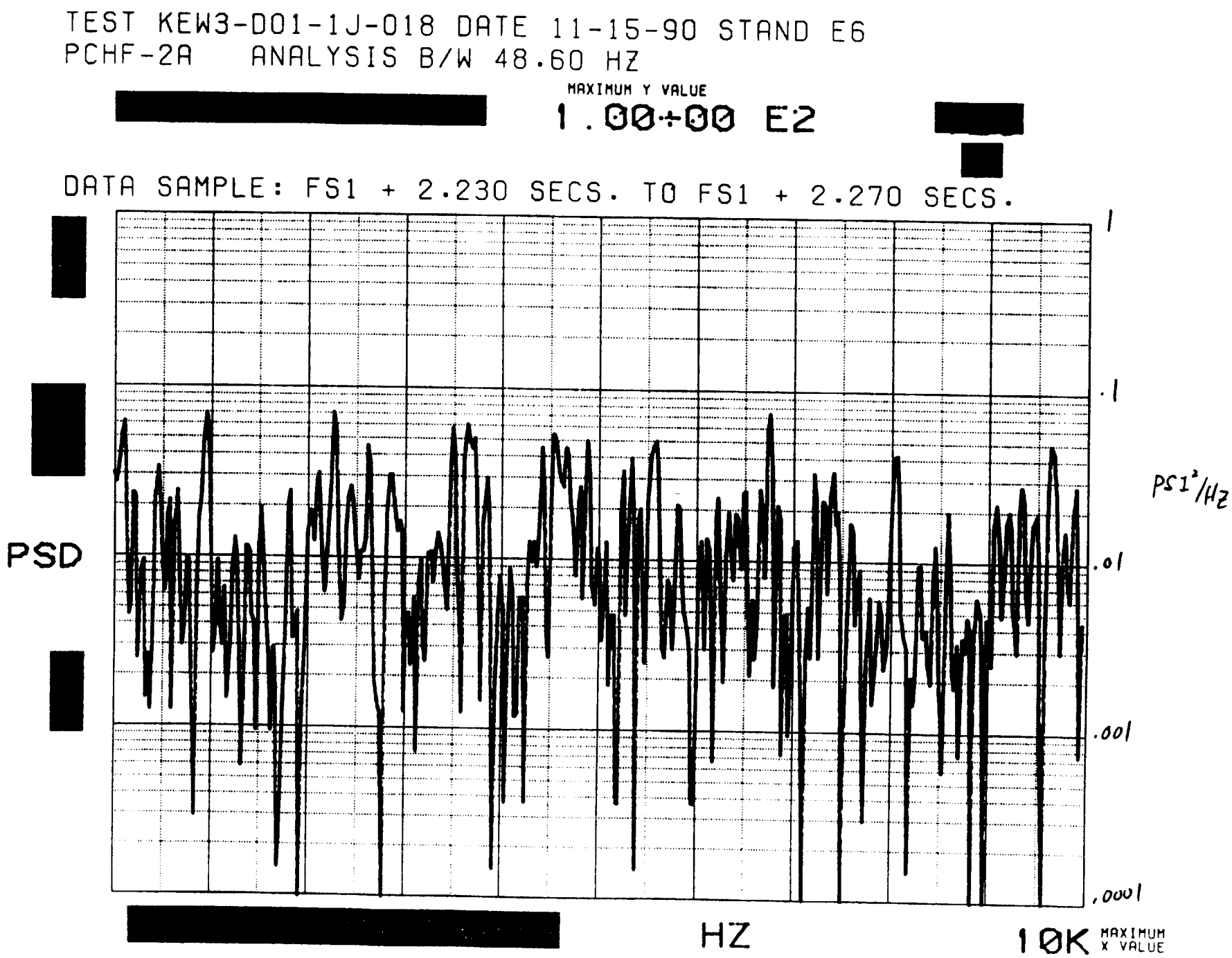

Figure 4-120. st KEW3-D01-1J-012

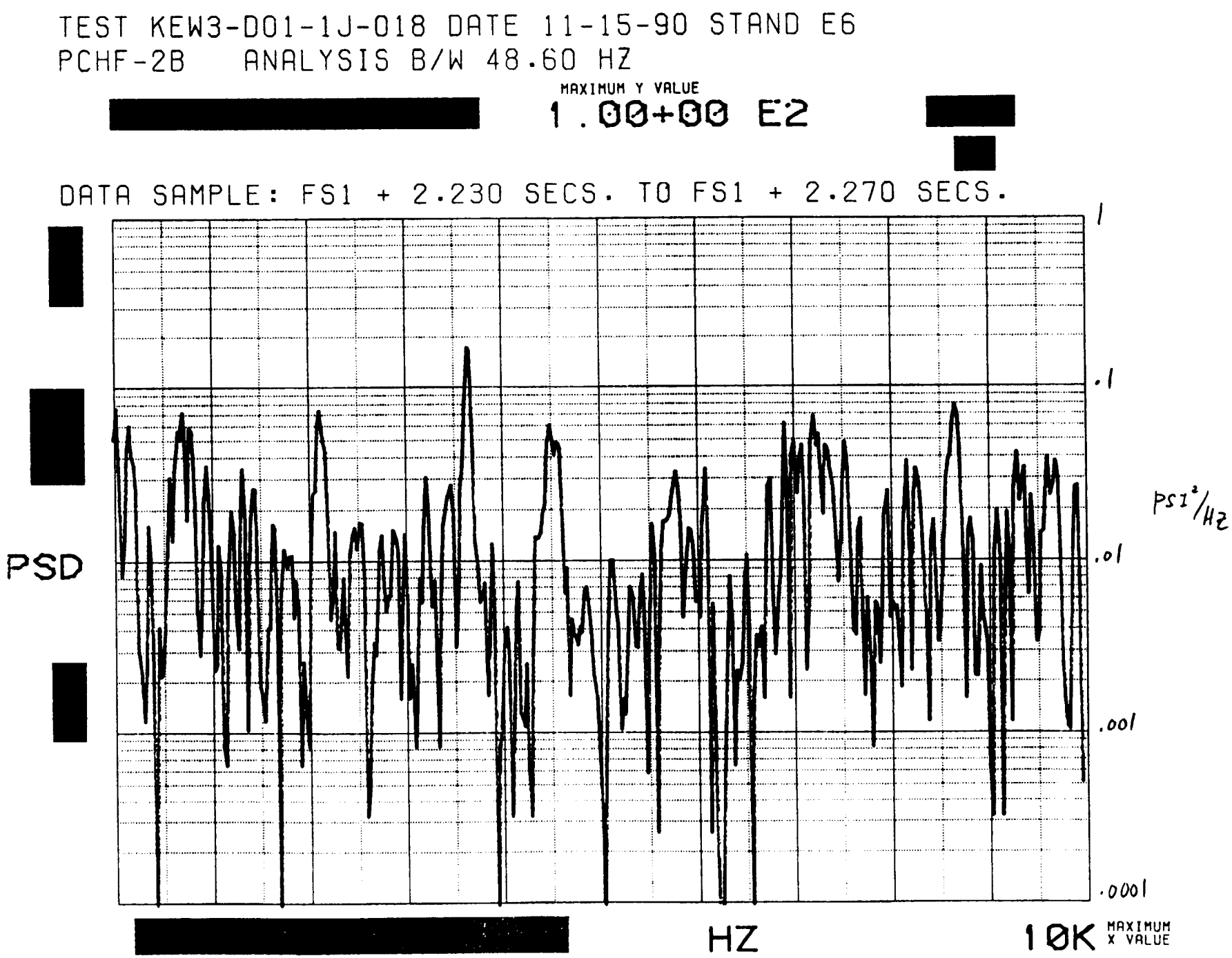

Figure 4-121. Test KEW3-D01-1J-012

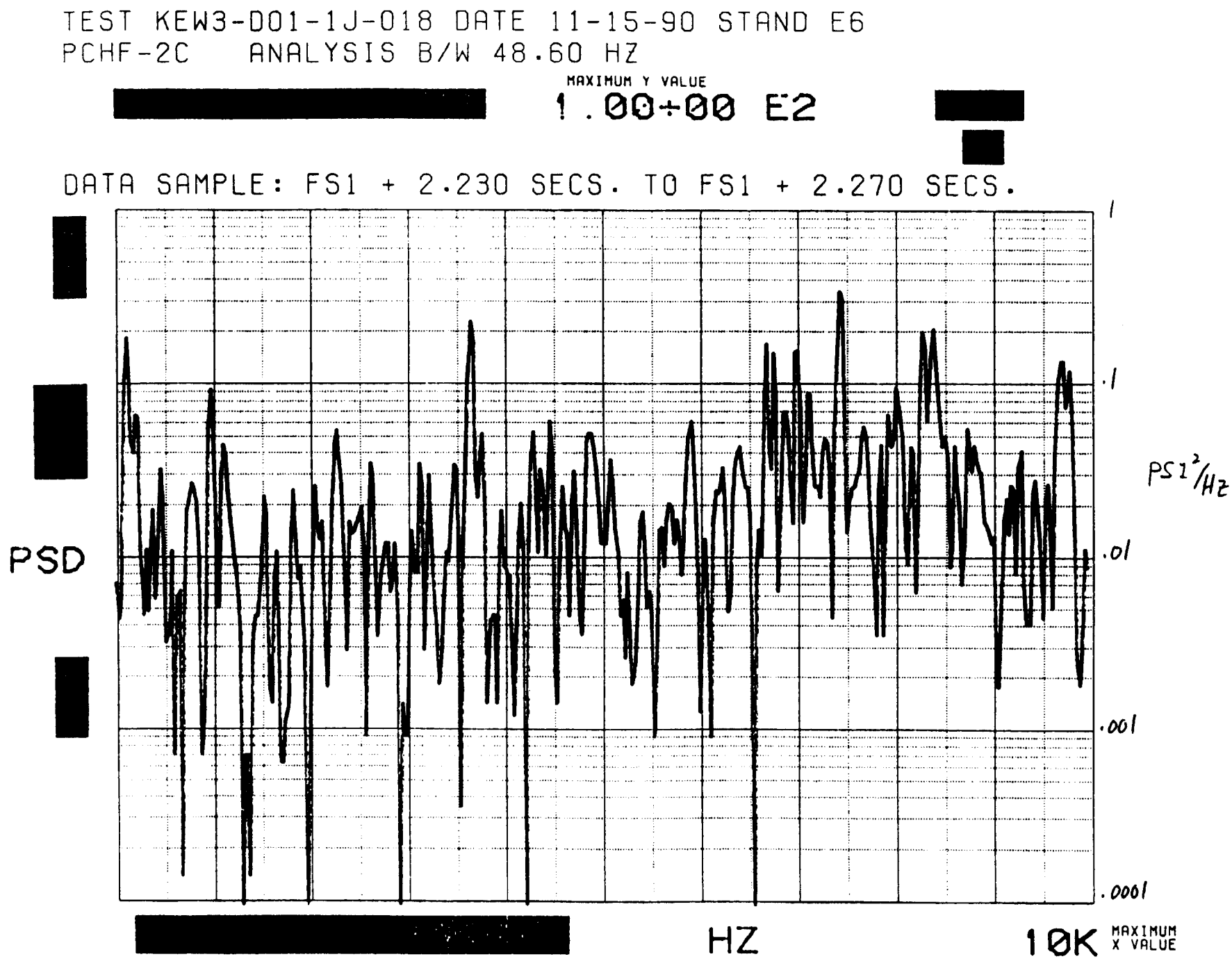

Figure 4-122. Test KEW3-D01-1J-012

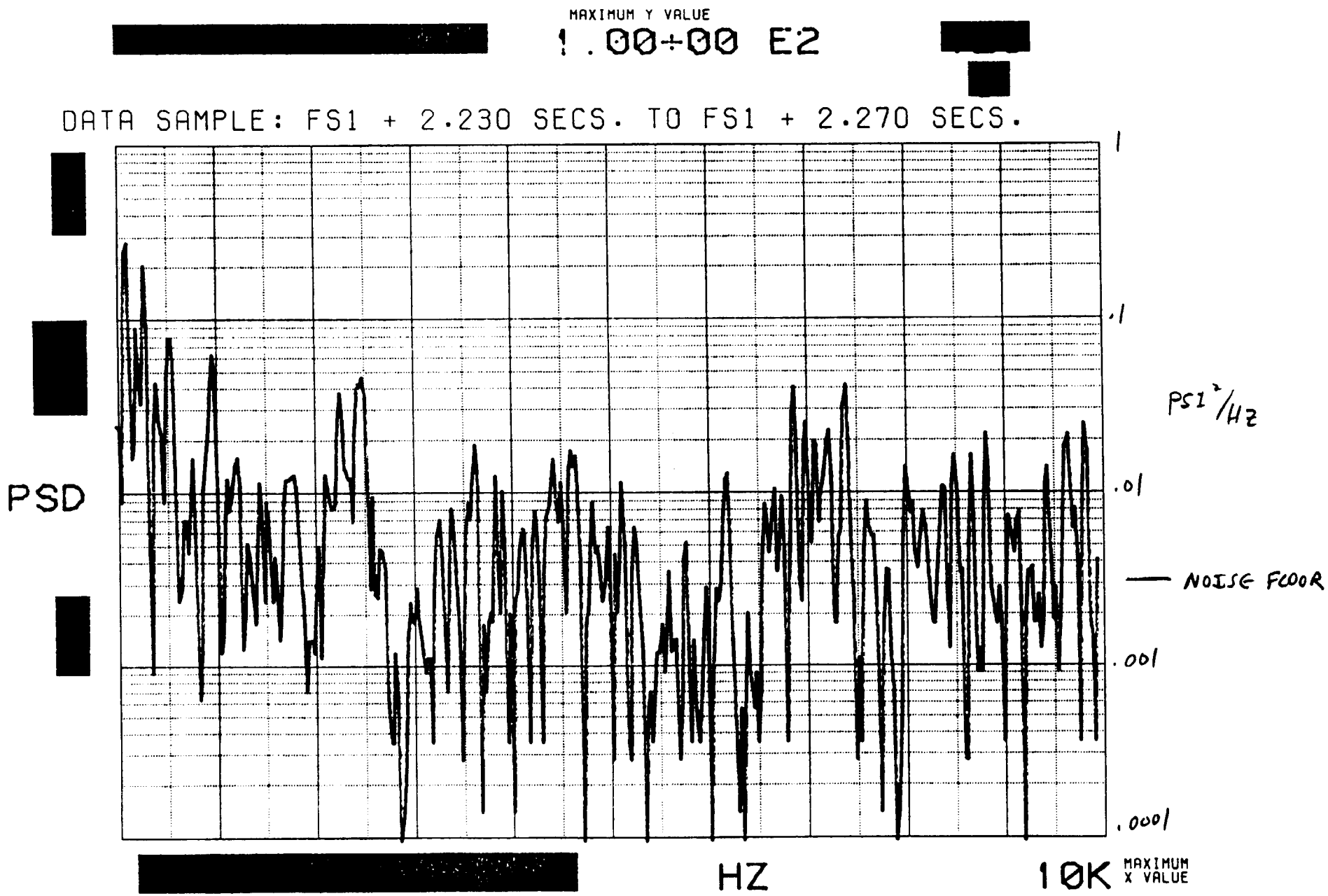

Figure 4-123. Test KEW3-D01-1J-012

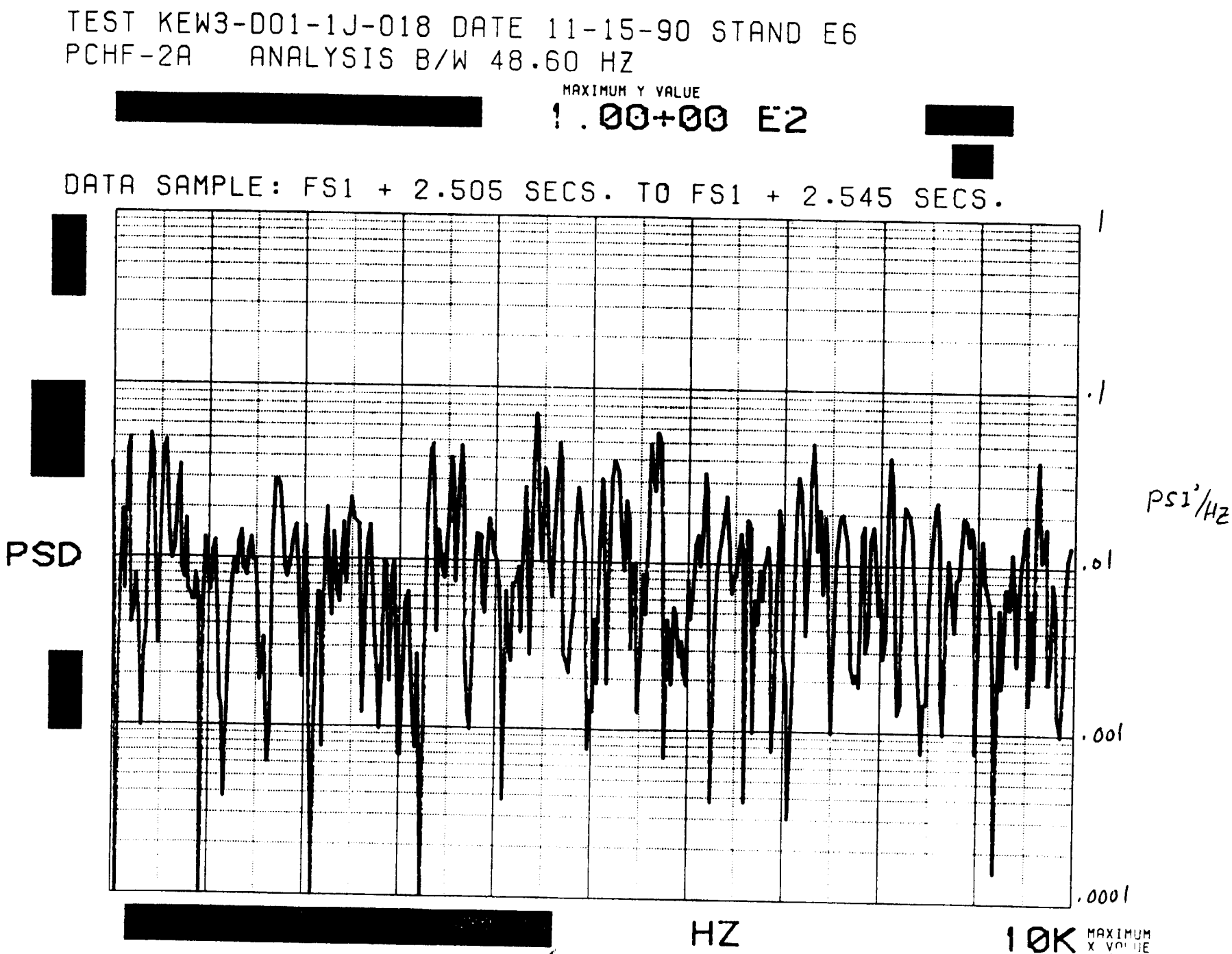

Figure 4-124. Test KEW3-D01-1J-012

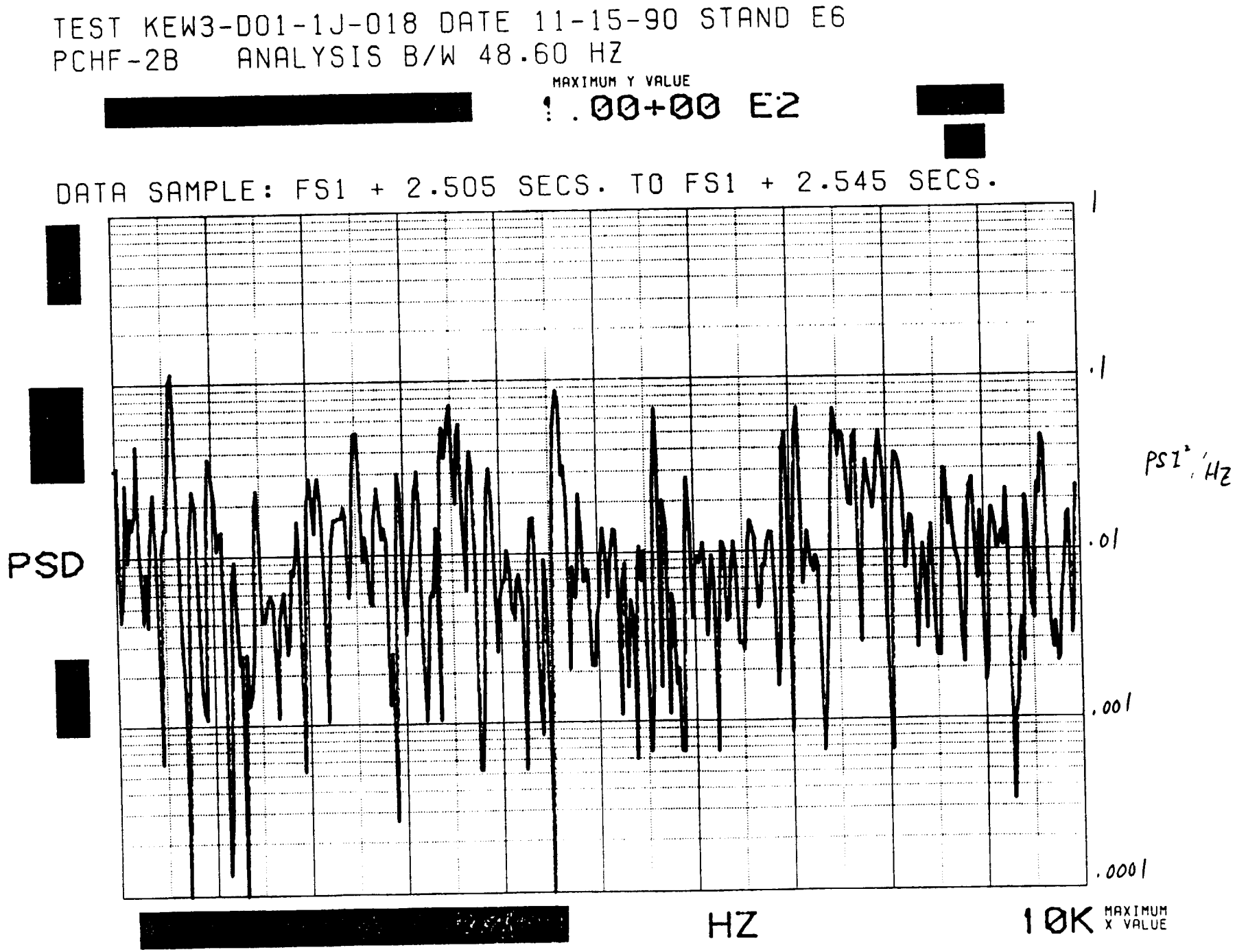

Figure 4-125. Test KEW3-D01-1J-012

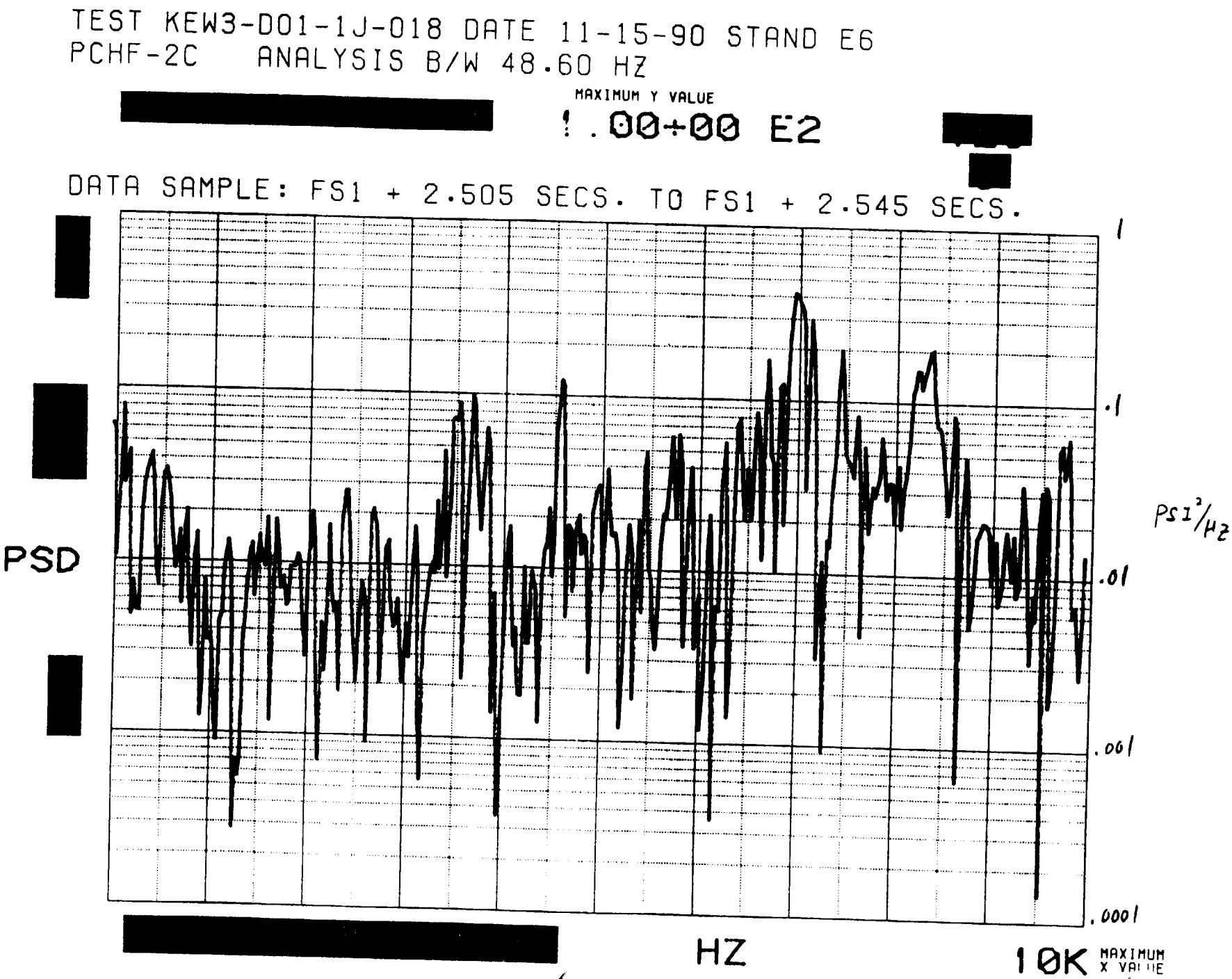

Figure 4-126. Test KEW3-D01-1J-012

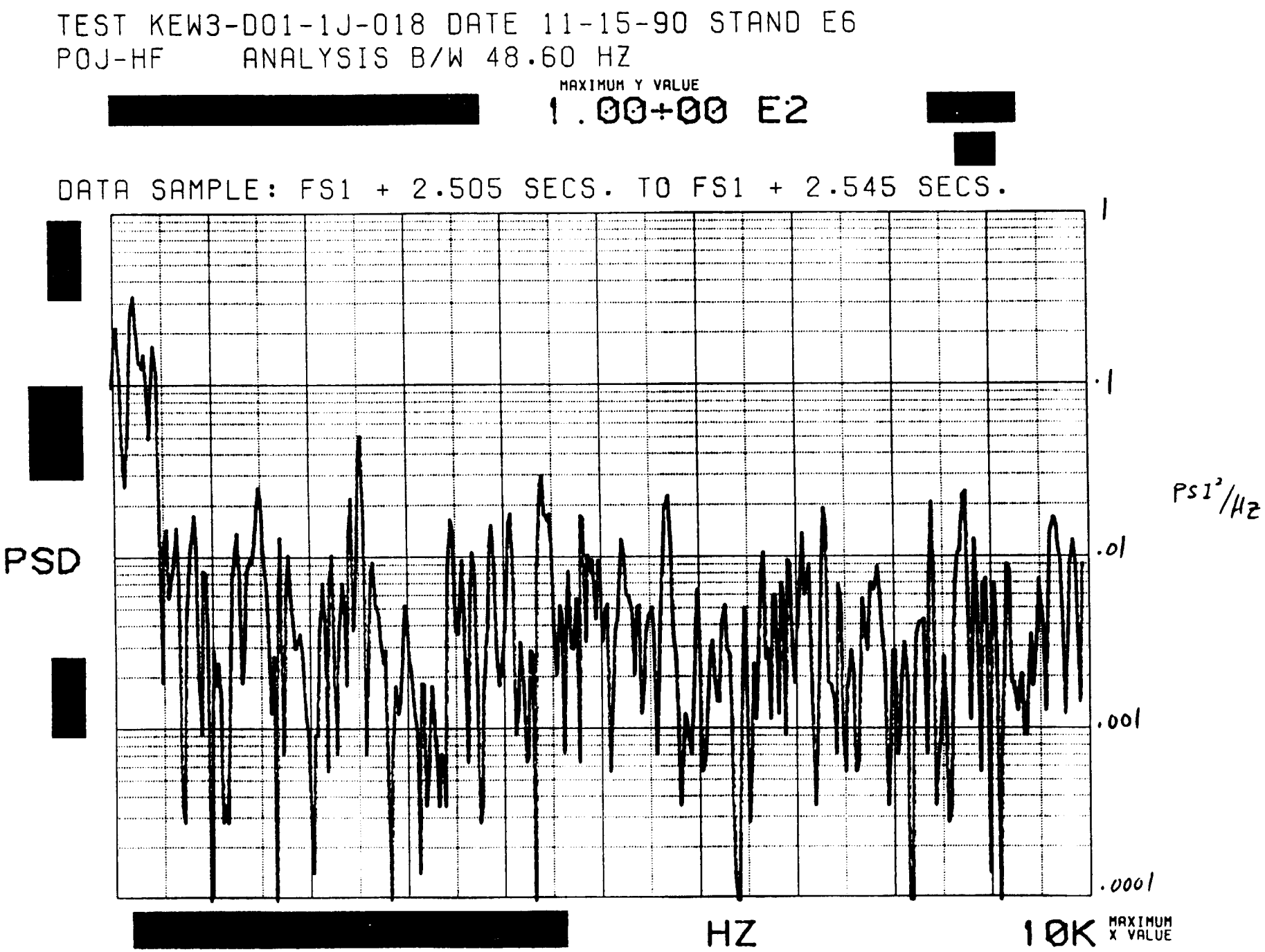

Figure 4-127. Test KEW3-D01-1J-012

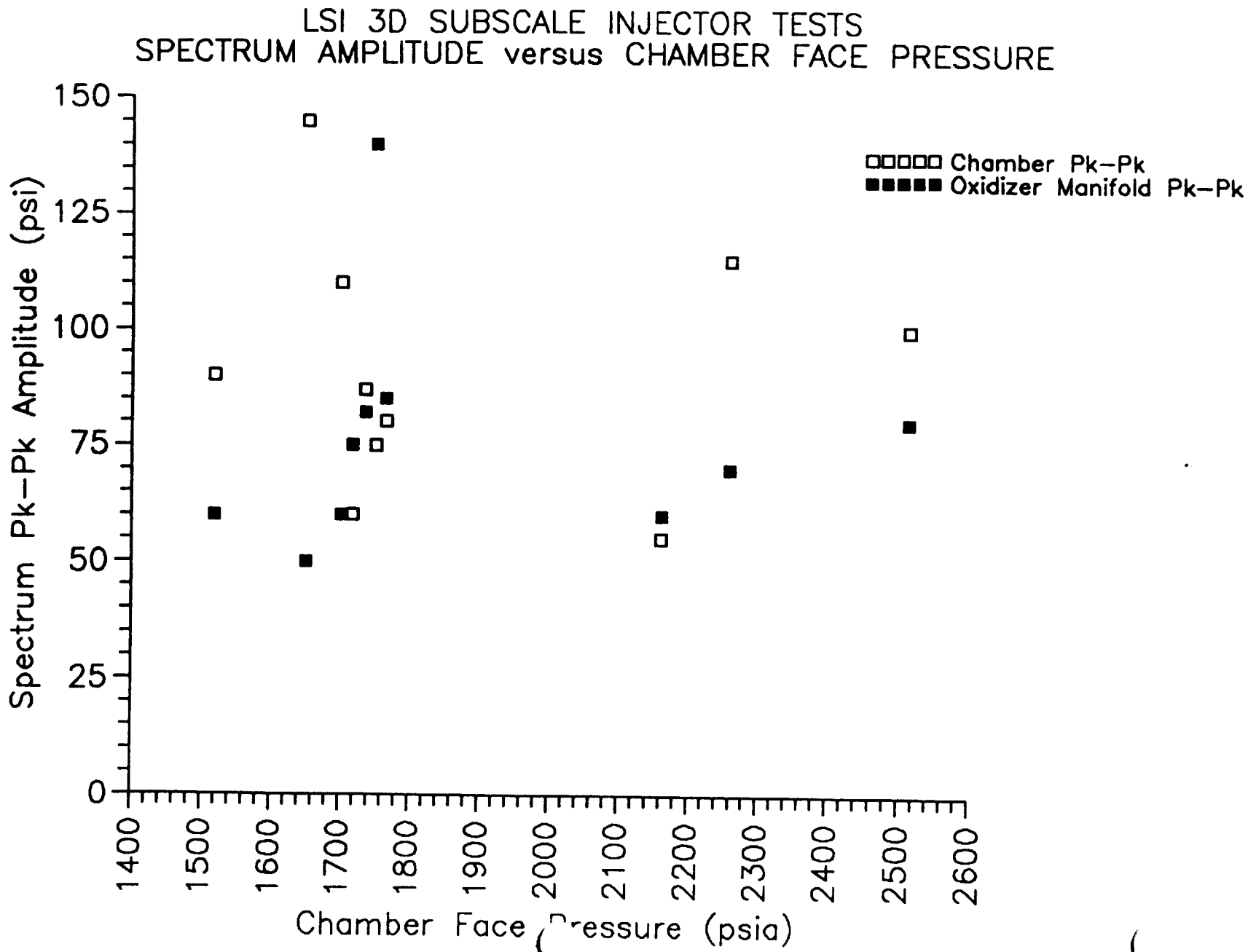

Figure 4-128. LSI 3D Subscale Injector Tests Spectrum Amplitude Versus Chamber Face Pressure

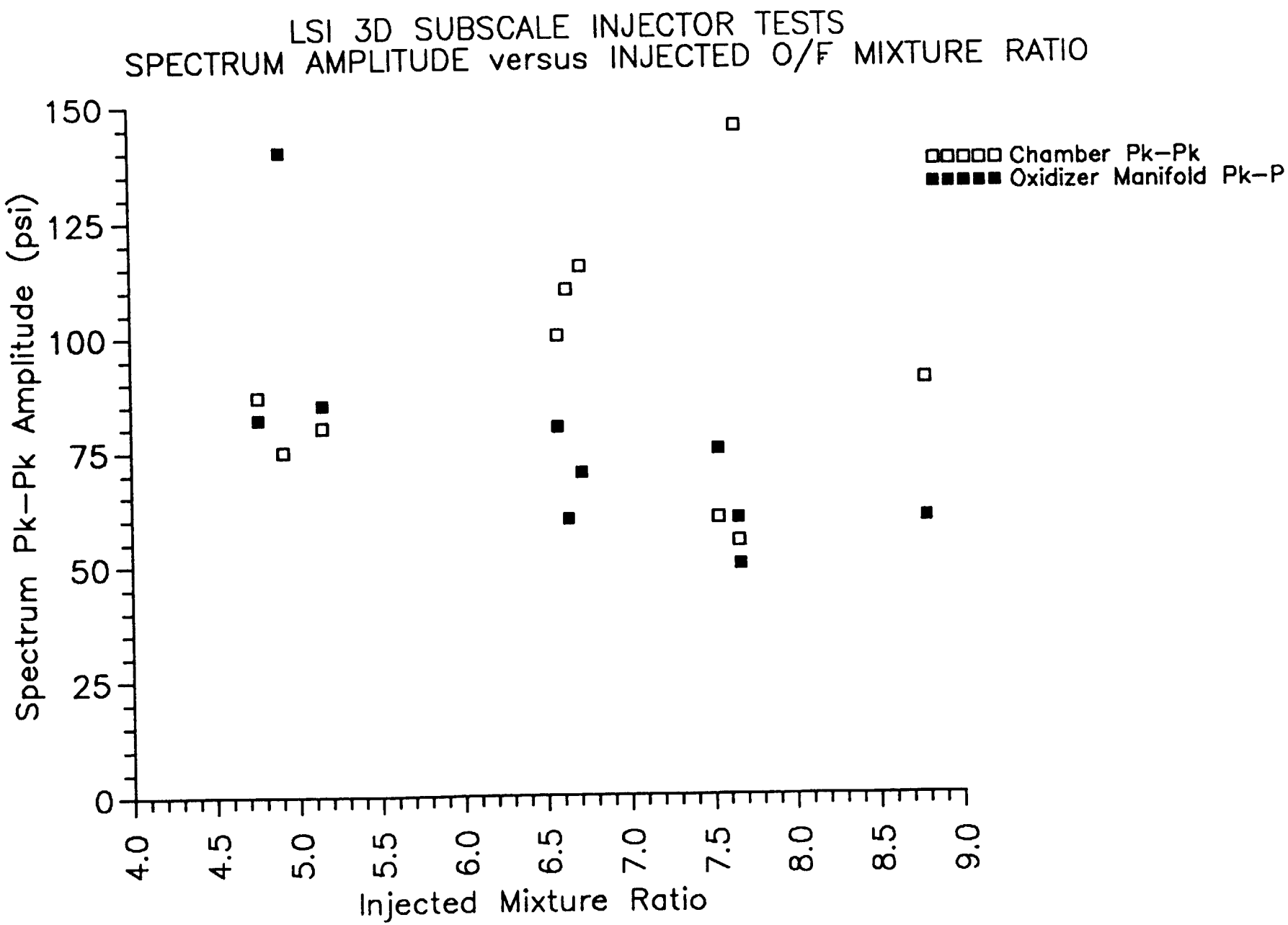

Figure 4-129. LSI 3D Subscale Injector Tests Spectrum Amplitude Versus Injected O/F Mixture Ratio

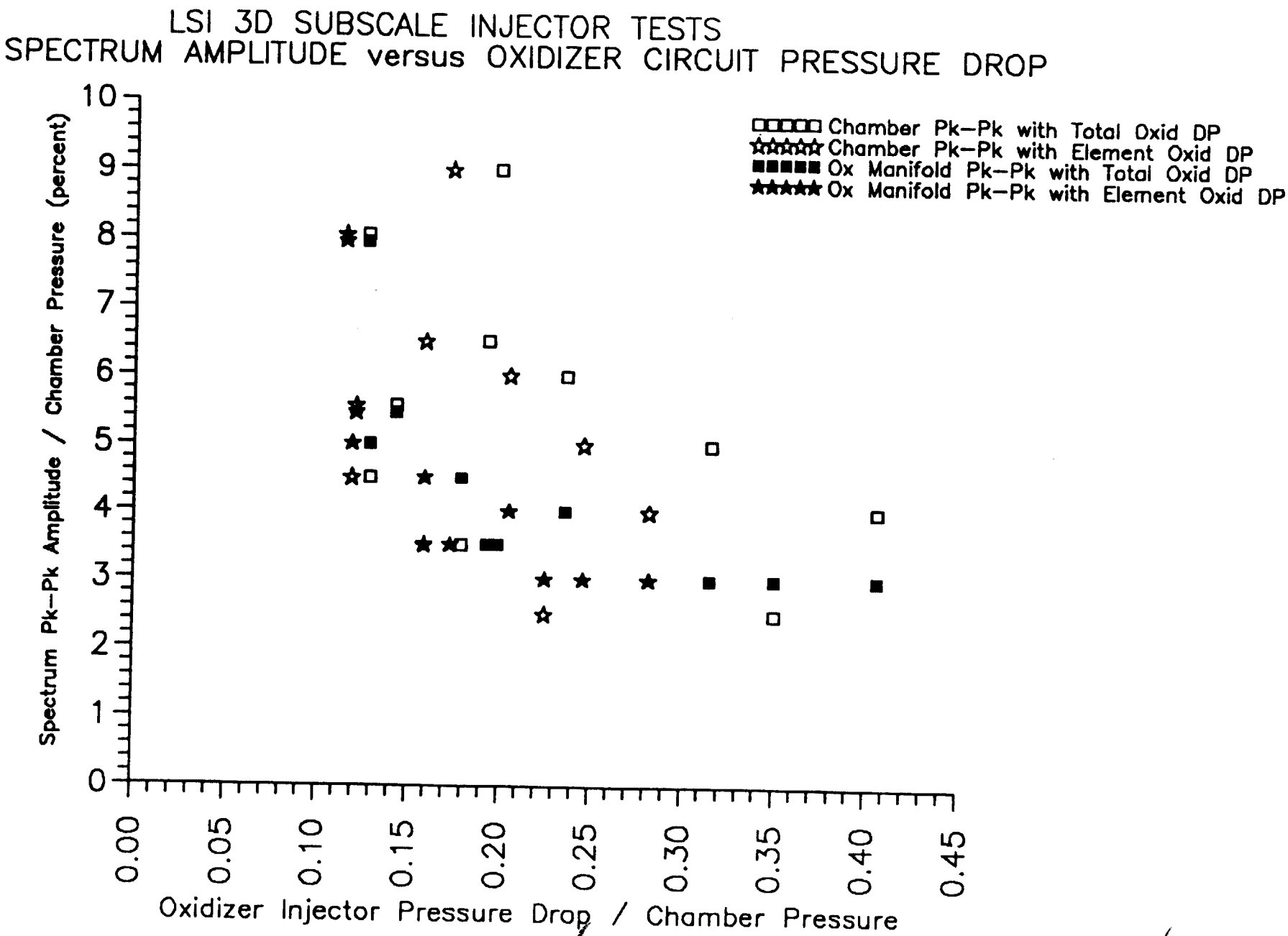

Figure 4-130. LSI 3D Subscale Injector Tests Spectrum Amplitude Versus Oxidizer Circuit Pressure Drop

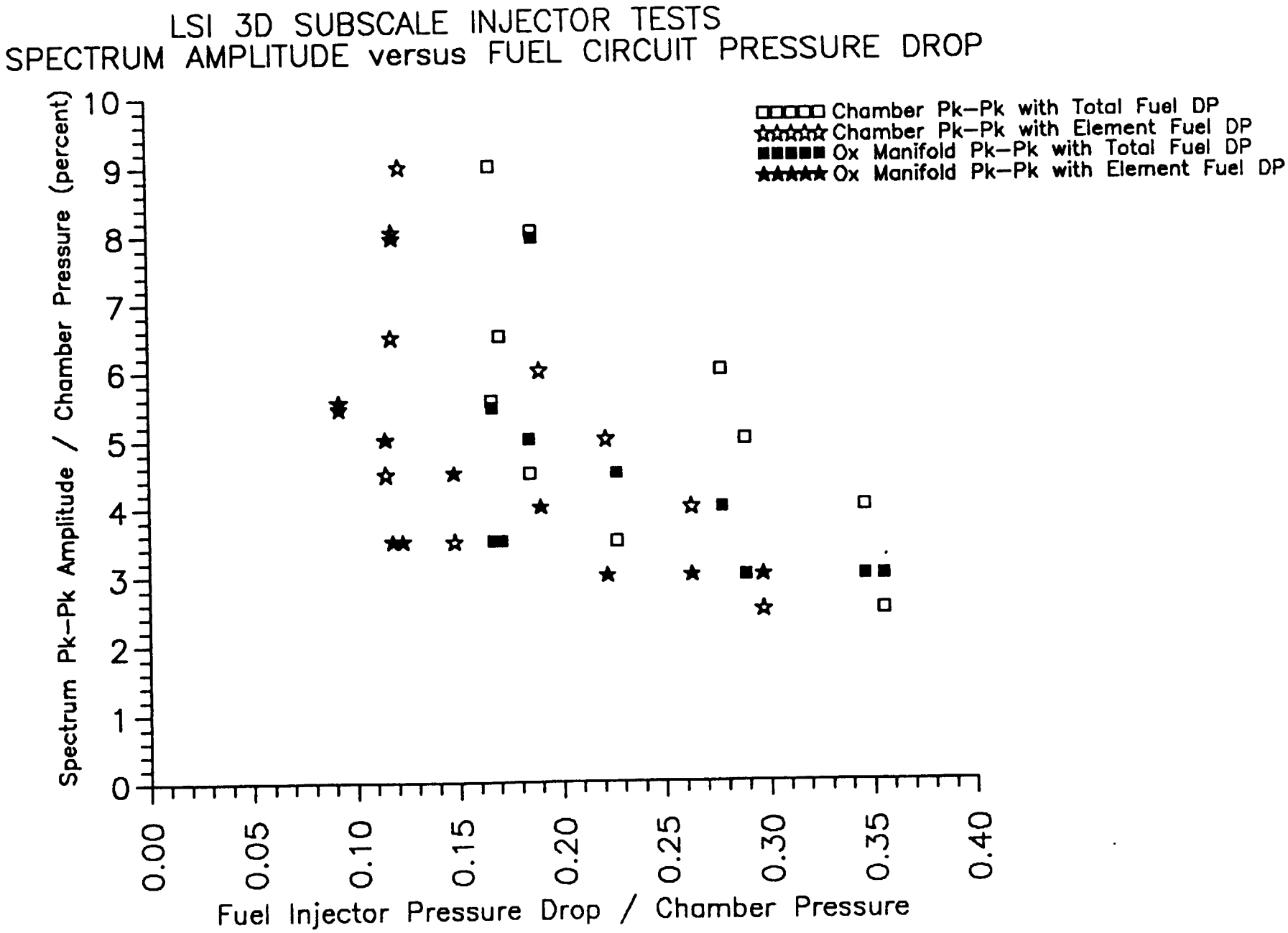

Figure 4-131. LSI 3D Subscale Injector Tests Spectrum Amplitude Versus Fuel Circuit Pressure Drop

TEST KEW3-D01-1J-018

Pc = 1715 Psia, O/F = 7.54

13 Grain Bomb at 330°
2.7 in. From Face

Chamber Kistler at 90°
0.2 in. From Face

Chamber Kistler at 240°
2.6 in. From Face

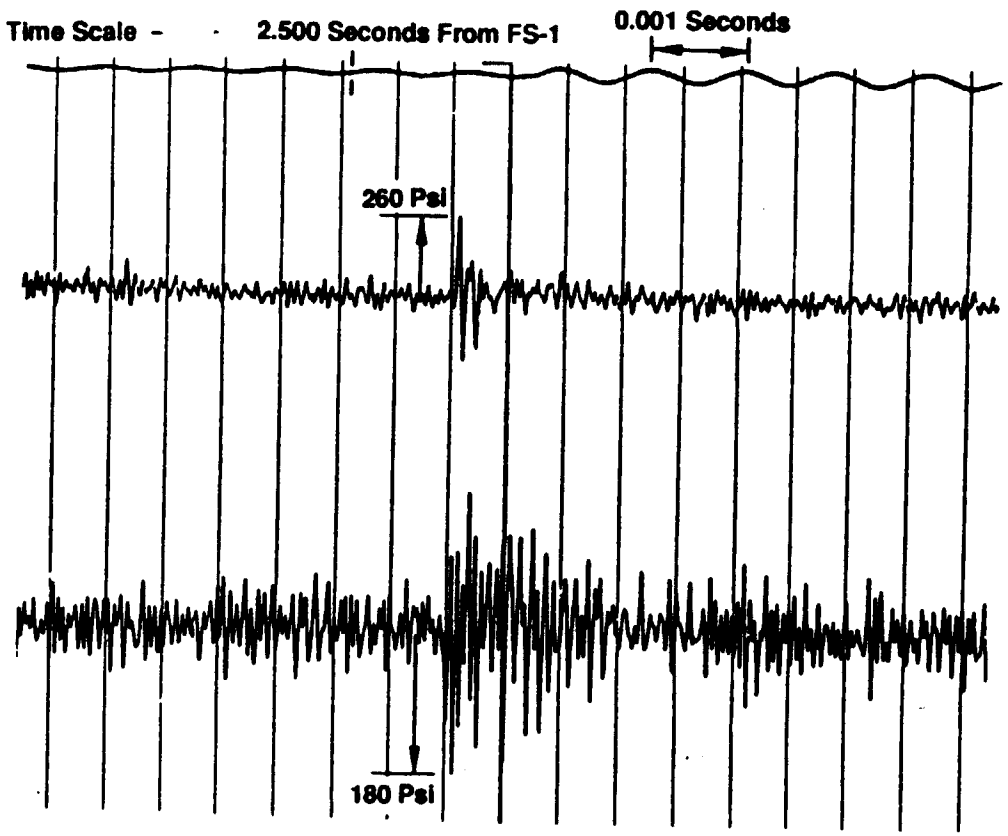

Figure 4-132. Test 018 – Combustion Response to Bomb Perturbation Was Stable

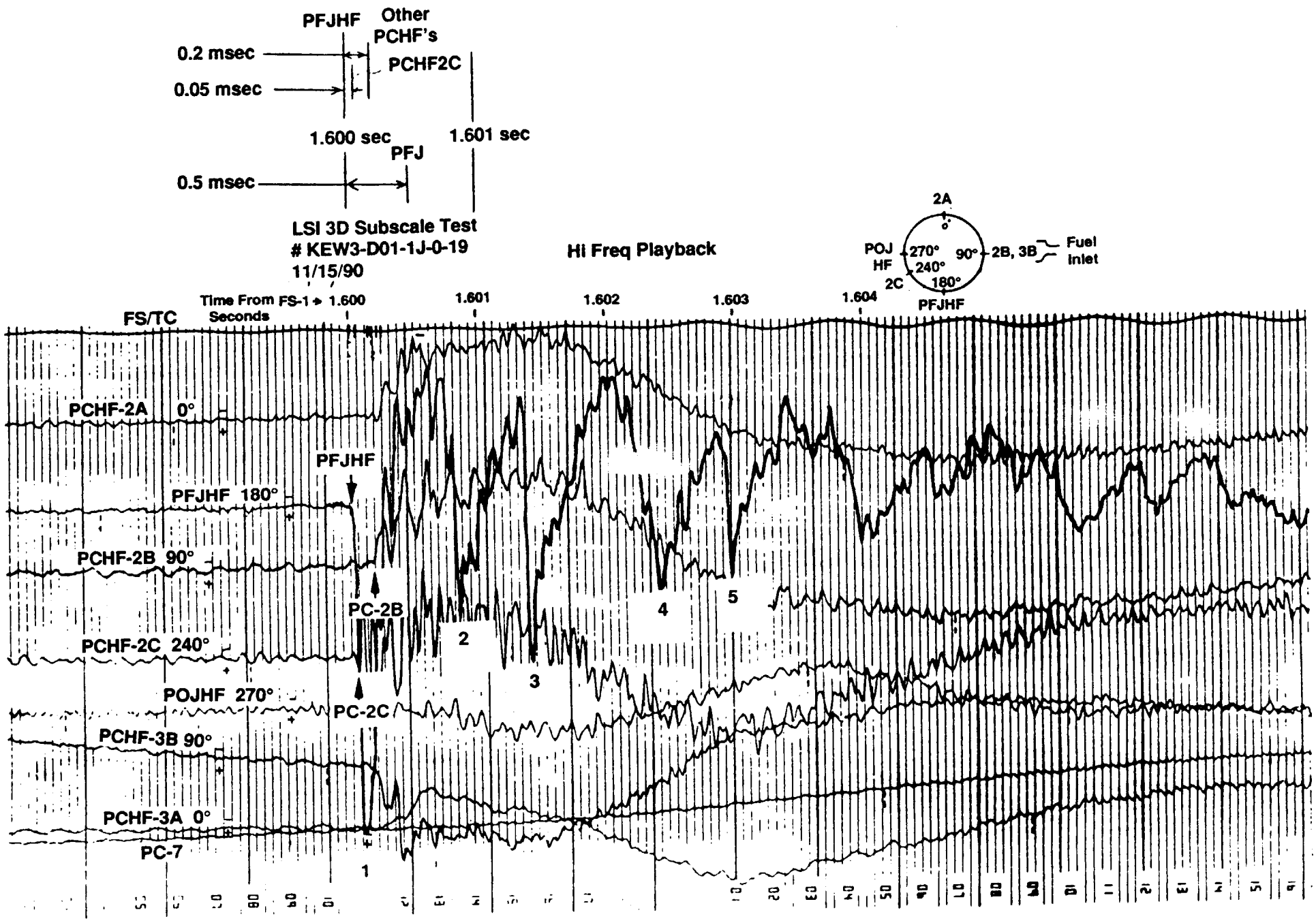

Figure 4-133. Traveling Waves in the Fuel torus Were Supersonic – Indicating Detonation

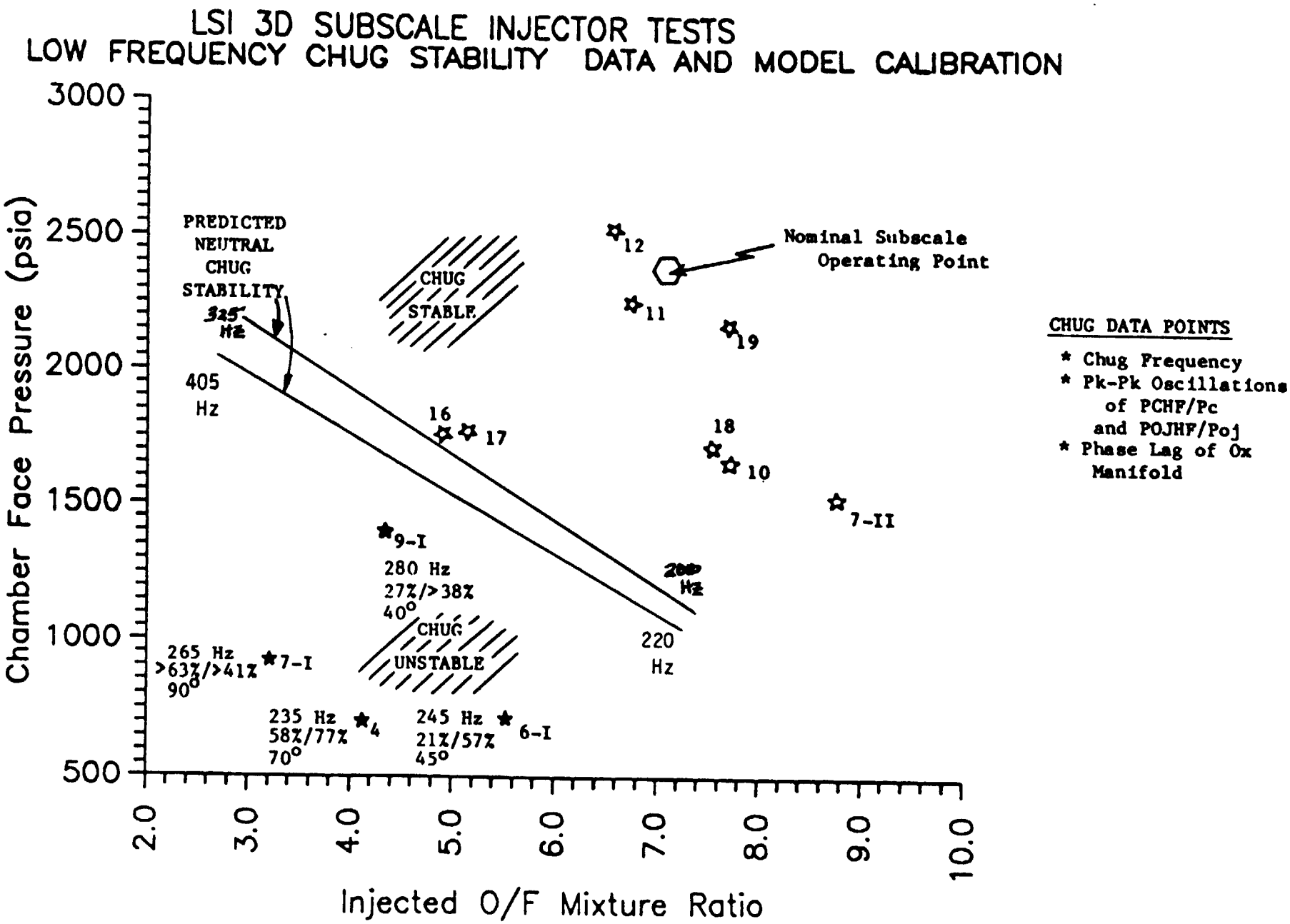

Figure 4-134. LSI 3D Subscale Injector Tests ' ow Frequency Chug Stability Data and Model Calib ' on

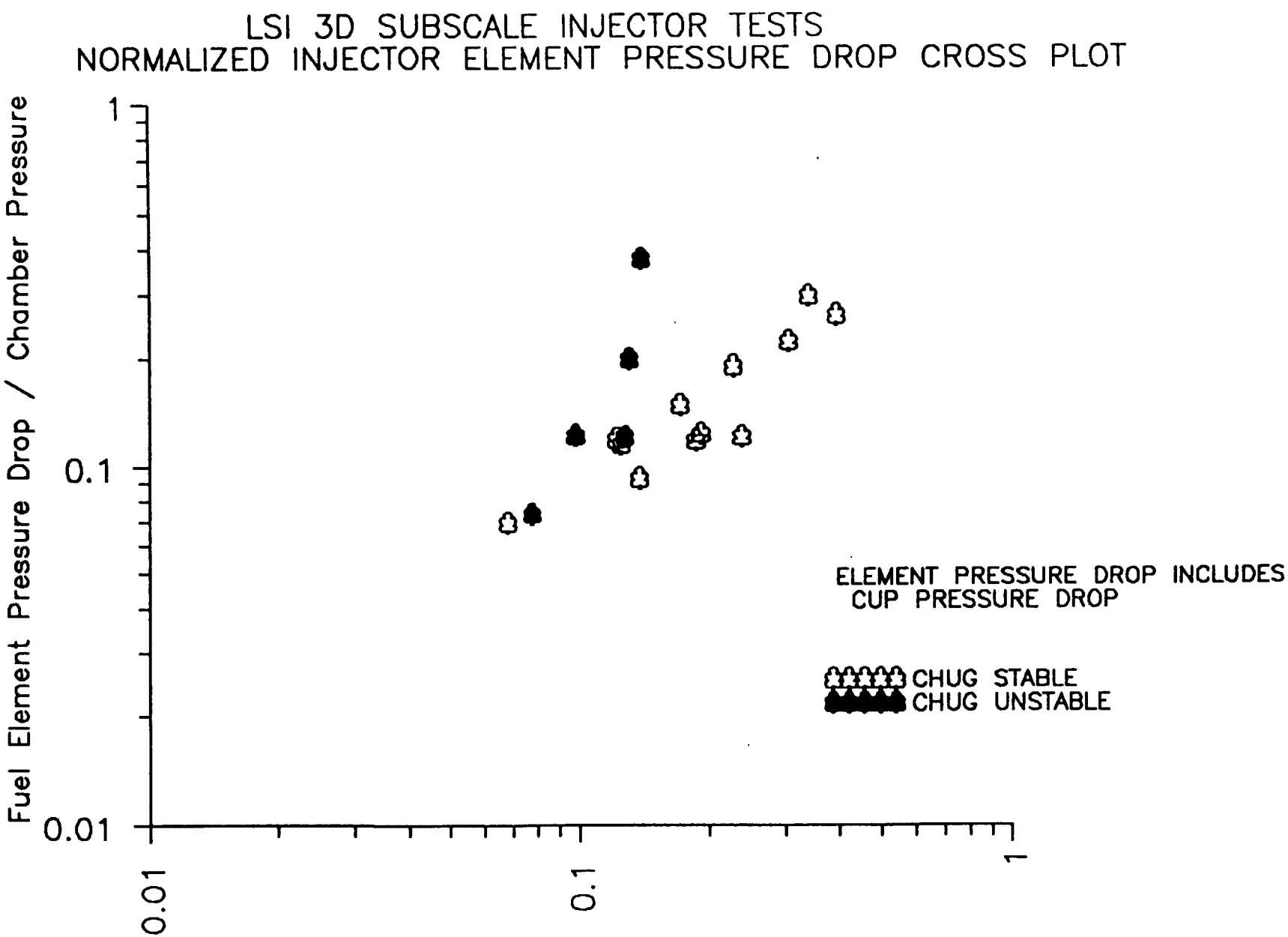

Figure 4-135. LSI 3D Subscale Injector Tests Normalized Injector Element Pressure Drop Cross Plot

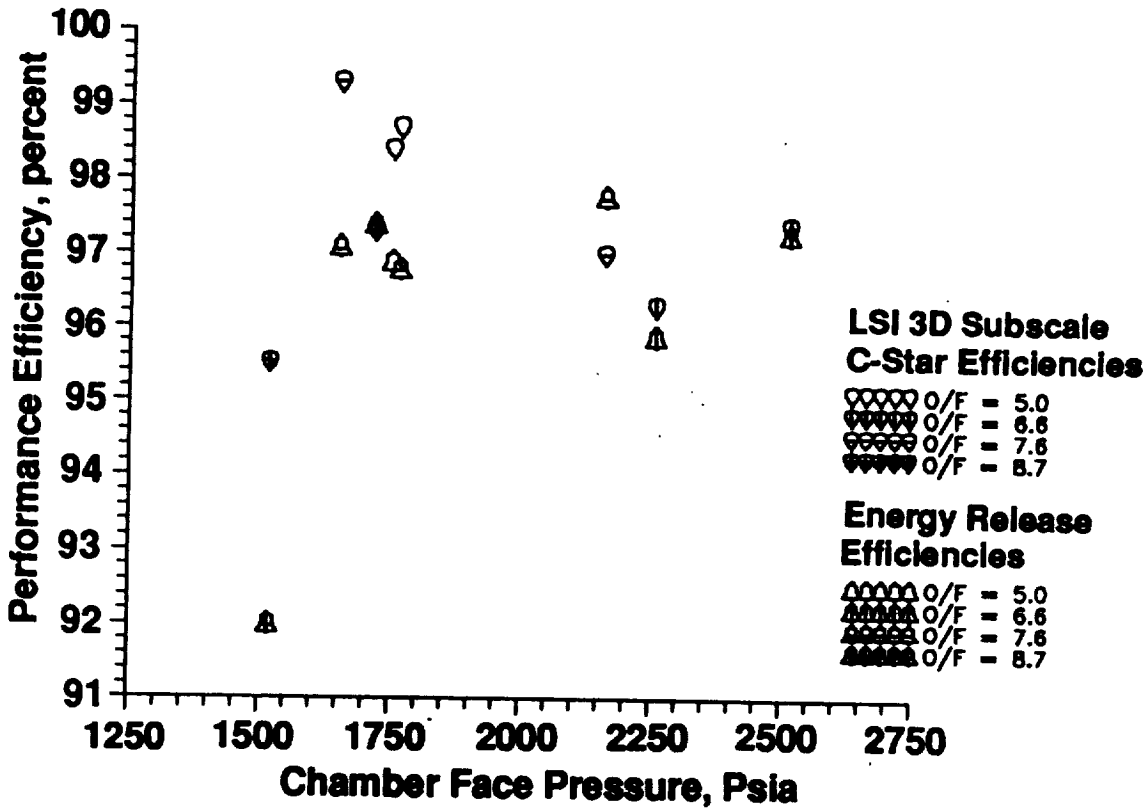

Figure 4-136. LSI 3D Subscale Combustion Performance Efficiency Versus Chamber Face Pressure and Injected Mixture Ratio

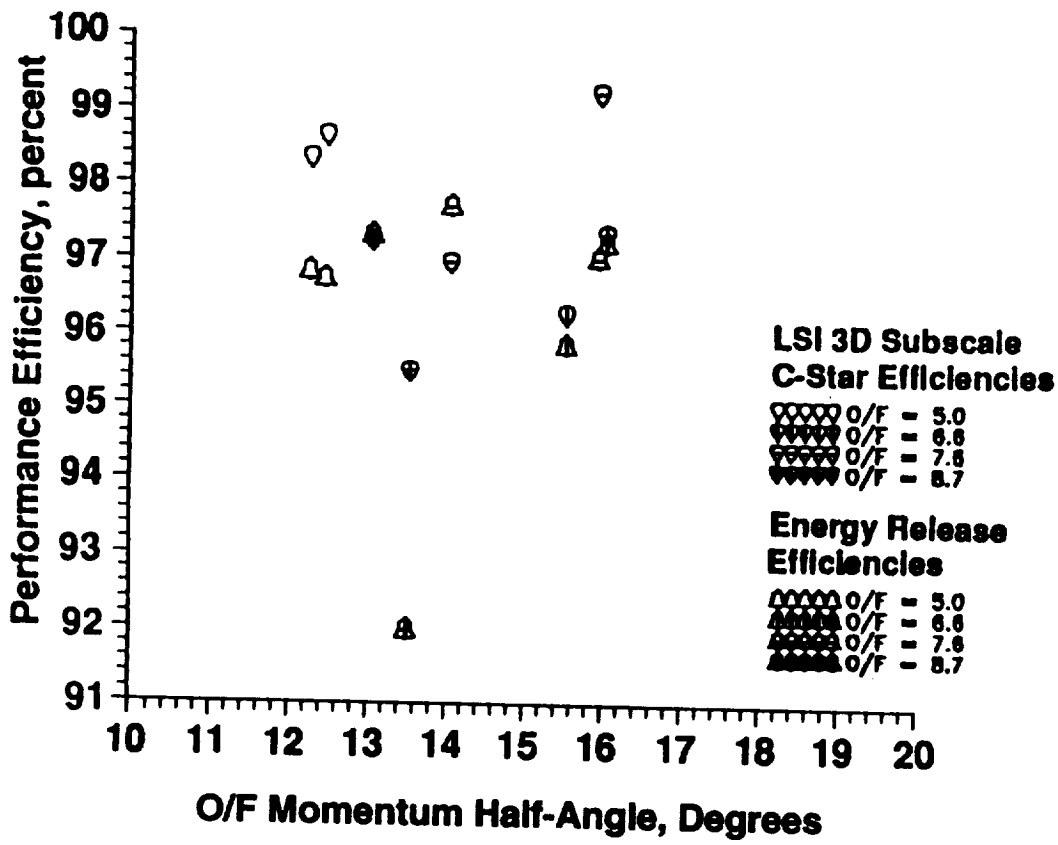

Figure 4-137. LSI 3D Subscale Combustion Performance Efficiency Versus Momentum Angle

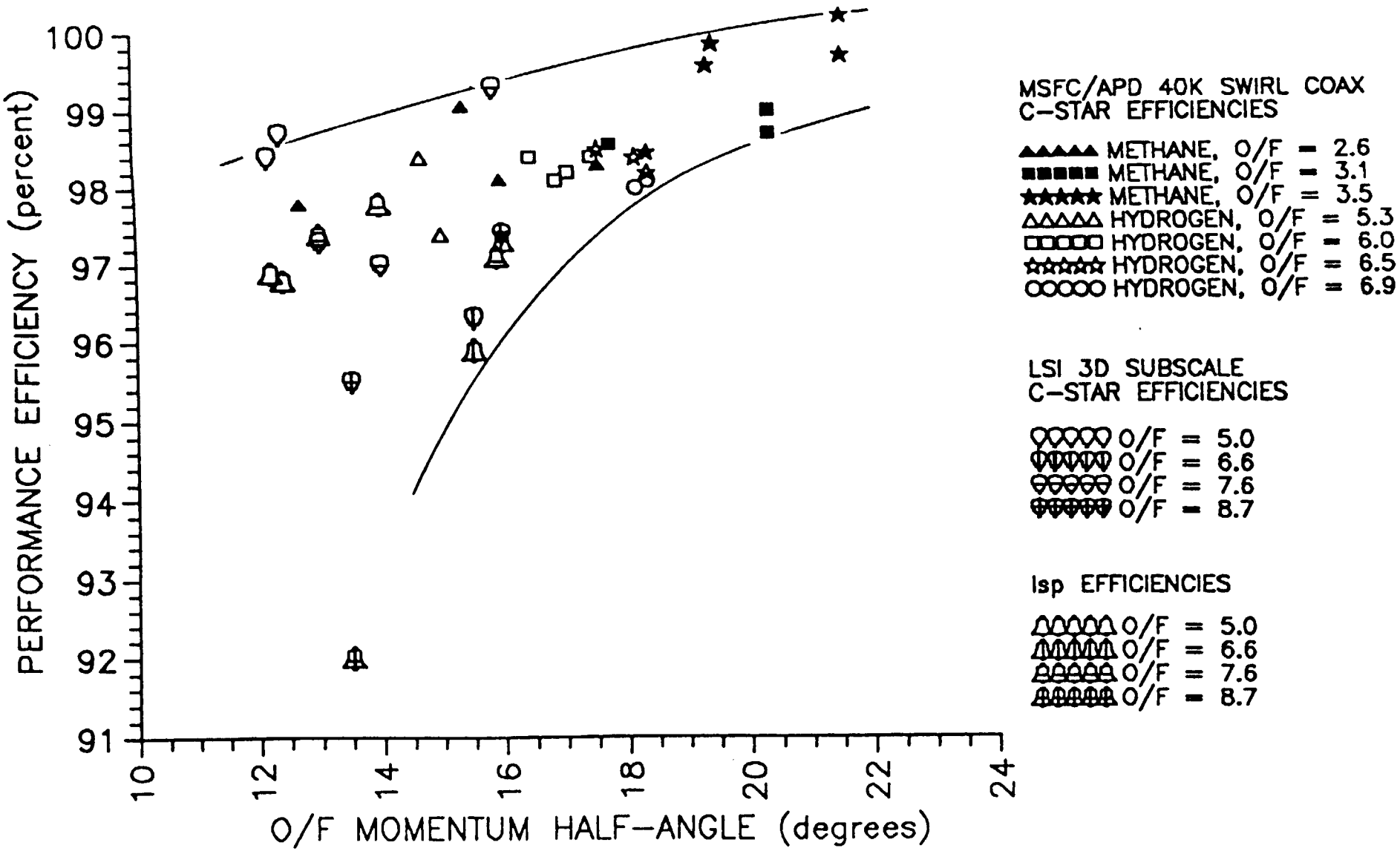

Figure 4-138. 40K LOX/Methane and 40K and LSI LOX/Hydrogen Data Combustion Performance Efficiency Versus Momentum Angle

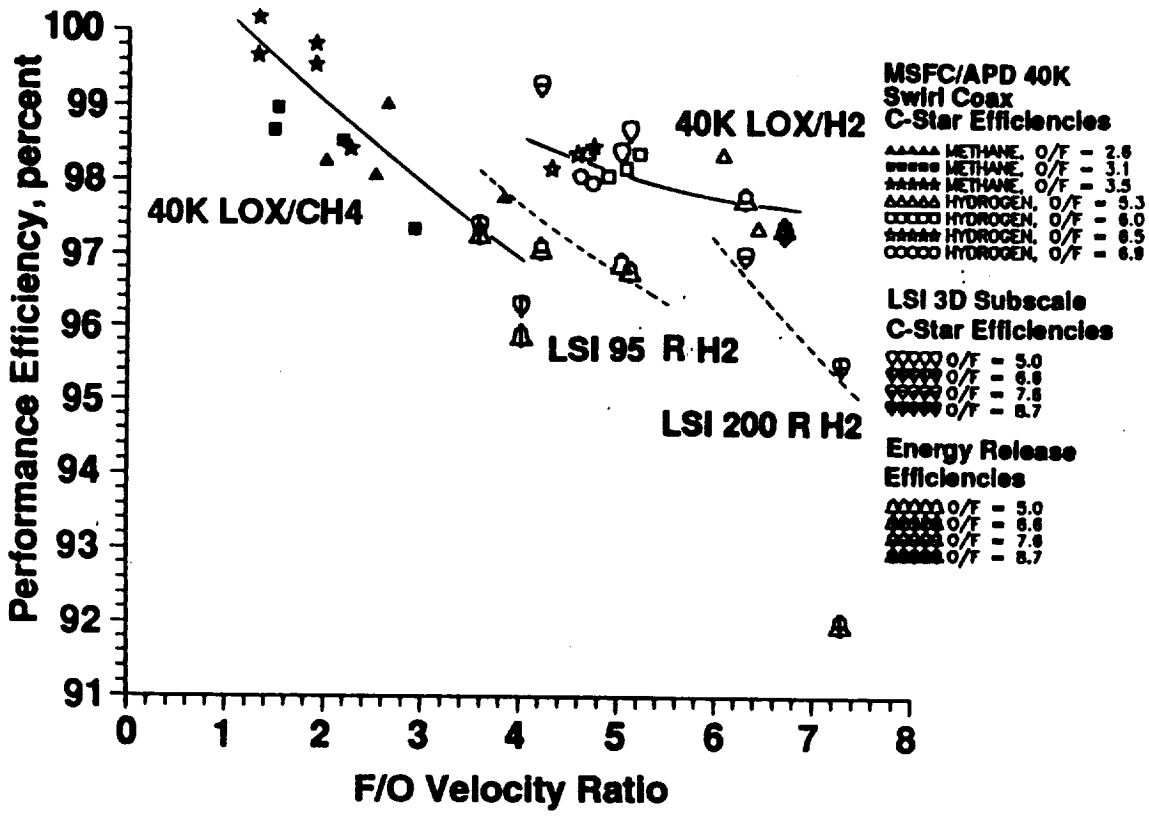

Figure 4-139. 40K LOX/Methane and 40K and LSI LOX/Hydrogen Data Combustion Performance Efficiency Versus F/O Velocity Ratio

WBS 5.1.4.2 Segment 1A Injector Development Logic

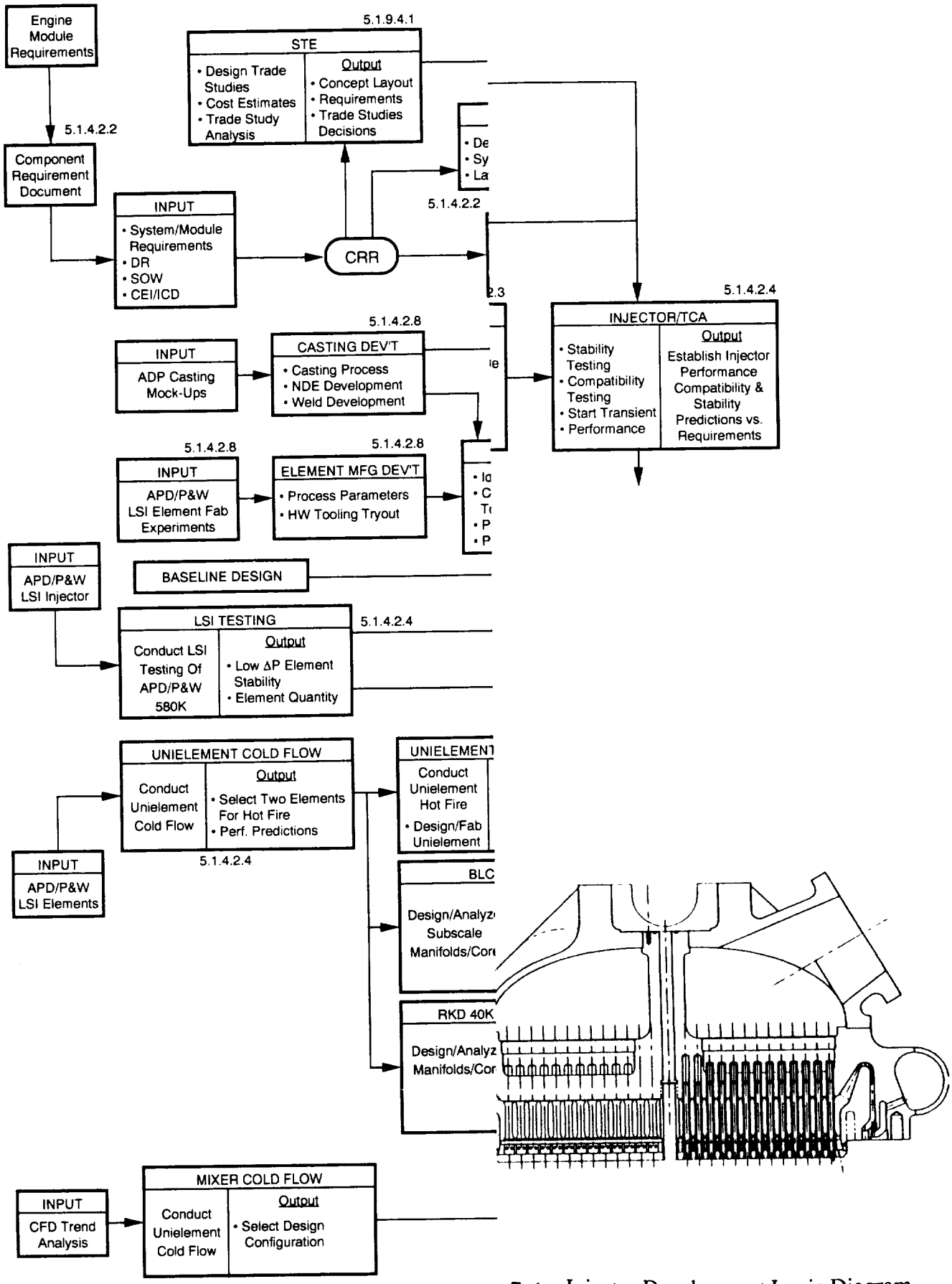

5-1 Injector Development Logic Diagram

FOLDOUT FRAME 1

FOLDOUT FRAME 2

APPENDIX A

DESIGN METHODOLOGY

APPENDIX A – DESIGN METHODOLOGY

The LSI program fullscale injector was designed using a modified form of a methodology developed by Aerojet for the Air Force Astronautics Laboratory for oxygen/hydrocarbon propellant engines, which is described from proposal to development in References A-1, A-2, and A-3. This injector characterization methodology consists of the use of a set of analysis models and specific reduced size hardware testing to describe the injector performance, combustion stability, and face and chamber wall compatibility of full scale injectors and thrust chambers.

Complete injector characterization with this methodology requires use of four scales of reduced size testing, as shown in Figure A-1. However, some of the testing may be bypassed due to the maturity of the existing data and analysis models and the amount of program risk desired. The flow of information between test scales and analysis model uncertainties is shown in Figure A-2. As shown, multielement reduced size hot fire and either cold flow or hot fire single element testing provide data for nearly all analysis model uncertainties.

On the LSI program, only two test scales — unielement hydraulic cold flow and 3D reduced size testing — were conducted. The subscale hardware size selected for test was large enough to provide significant information for injector performance and chamber compatibility, as shown in Figure A-2, and also for important combustion stability comparisons. The frequency of the first tangential (1T) mode of the subscale chamber was made equal to the frequency of the third tangential (3T) mode of the fullscale chamber. This size is a strategic cutoff in the injector characterization methodology: stability at this subscale size (3T=1T) with no damping devices provides a measure of acceptable injector element stability according to test experience at Aerojet.

Because of the compressed design schedule, the subscale test results were not used to optimize the fullscale injector design before fabrication. However, the testing was still adequate to characterize the fullscale injector for pretest predictions. The final design information for the LSI program is shown in Figure A-3.

The analysis portions of the methodology, shown as the topmost boxes on Figure A-1, are outlined in Figure A-4. Industry available computer programs that can perform these analyses are also identified in this figure. Any analysis technique or computer program may be used to perform the particular analysis as long as they are adequately anchored with reduced-size testing and their validity demonstrated in fullscale operation. The ROCCID computer program (Ref. A-4) was used on the LSI program because of concurrent development and validation (Ref. A-5).

In the early phases of the LSI program, before ROCCID was available, the various submodels which now comprise ROCCID – such as HIFI, LFCS, and CRP – were used in similar analyses.

The steady state combustion model is shown in Figure A-4 to be the focus of the analysis portion of the methodology. The calculations of this model are used as inputs for all other analyses. Consequently, definition of its inputs and anchoring of its uncertainties are most important for fullscale modeling success.

A significant portion of the inputs for the steady state combustion model can be obtained in single element studies. A long term spray model development program was initiated to generate satisfactory empirical relations for short term injector design, and mechanistic models for more rigorous long term design tools, such as CFD. A literature search and review was initiated to gather and analyze theoretical models and experimental measurements of injection hydraulics, intact core breakup functions, spray droplet size and size distributions, droplet velocity and velocity distributions, and bipropellant mixing. The literature search and review was completed on a follow-on ADP task (Ref. A-7).

Initial single element cold flow tests for LSI preliminary design were conducted to measure the spray characteristics of the 40K platelet injector element (Ref. A-6). Hydraulic admittance, mass and mixture ratio distribution, and droplet size were measured with benign cold flow simulants flowing to quiescent, ambient backpressure. Oxidizer hydraulic admittance of final LSI elements was measured to verify element pressure drop predictions.

Due to the immaturity of the swirl coaxial spray combustion models, most of the spray combustion parameters for the steady-state combustion model anchoring were derived from the subscale testing.

Measured axial static pressure profiles, injector flowrates and pressures, and calculated performance efficiencies were used to provide values for intact liquid oxygen core length ("atomization length"), mass median droplet diameter, droplet size distribution, mixing efficiency, and combustion plane location for the spray combustion model in ROCCID. Statistical high frequency stability was matched in the high frequency stability modeling with factors applied to the calculated response amplitudes. The low frequency combustion instability ("chug") data, including instability frequency and throttled pressure drops, were used to anchor total combustion ("dead time") timelags in the low frequency stability modeling. The subscale data used for anchoring are described in Section 4.4.

With anchored inputs, fullscale injector performance and low and high frequency combustion stability were predicted with the ROCCID computer model. The anchored fullscale predictions are described in Section 3.4.

APPENDIX A REFERENCES:

A-1) Pieper, J.L., and J.J. Fang, "Combustion Characterization Methodology for LOX/Hydrocarbon Engines,", 1986 JANNAF Propulsion Meeting, New Orleans, LA, August 1986.

A-2) Muss, J.A., and J.L. Pieper, "Performance and Stability Characterization of LOX/ Hydrocarbon Injectors," AIAA 88-3133, 24th Joint Propulsion Conference, Boston, MA, 1988.

A-3) Pieper, J.L., "Oxygen/Hydrocarbon Injector Characterization, Final Report," GenCorp Aerojet Propulsion Division, Phillips Laboratory Report PL-TR-91-3029, Contract, F04611-85-C-0100, October 1991.

A-4) Muss, J.A., T.V. Nguyen, and C.W. Johnson, "Users Manual for Rocket Combustor Interactive Design (ROCCID) and Analysis Computer Program," NASA CR-187109, Contract NAS 3-25556, May 1991.

A-5) Pieper, J.L., "LOX/Hydrocarbon Rocket Engine Analytical Design Methodology Development and Validation," NASA Lewis Research Center Contract NAS 3-25556, To Be Published.

A-6) Castiglone, L.A., "Advanced Launch Vehicle Propulsion Technology IR&D, Final IR&D Report, Swirl Coax Unielement Cold Flow Test Program," NLR8DA, PRA-SA-APD 5MAR92, January 1989.

A-7) Hulka, J., J. Davis, and J.A. Schneider, "Single Element Swirl Coax Cold Flow Testing for STME Injector Technology," Aerojet Propulsion Division, Propulsion Engineering Report No. 5236:0794, 8 January, 1993.

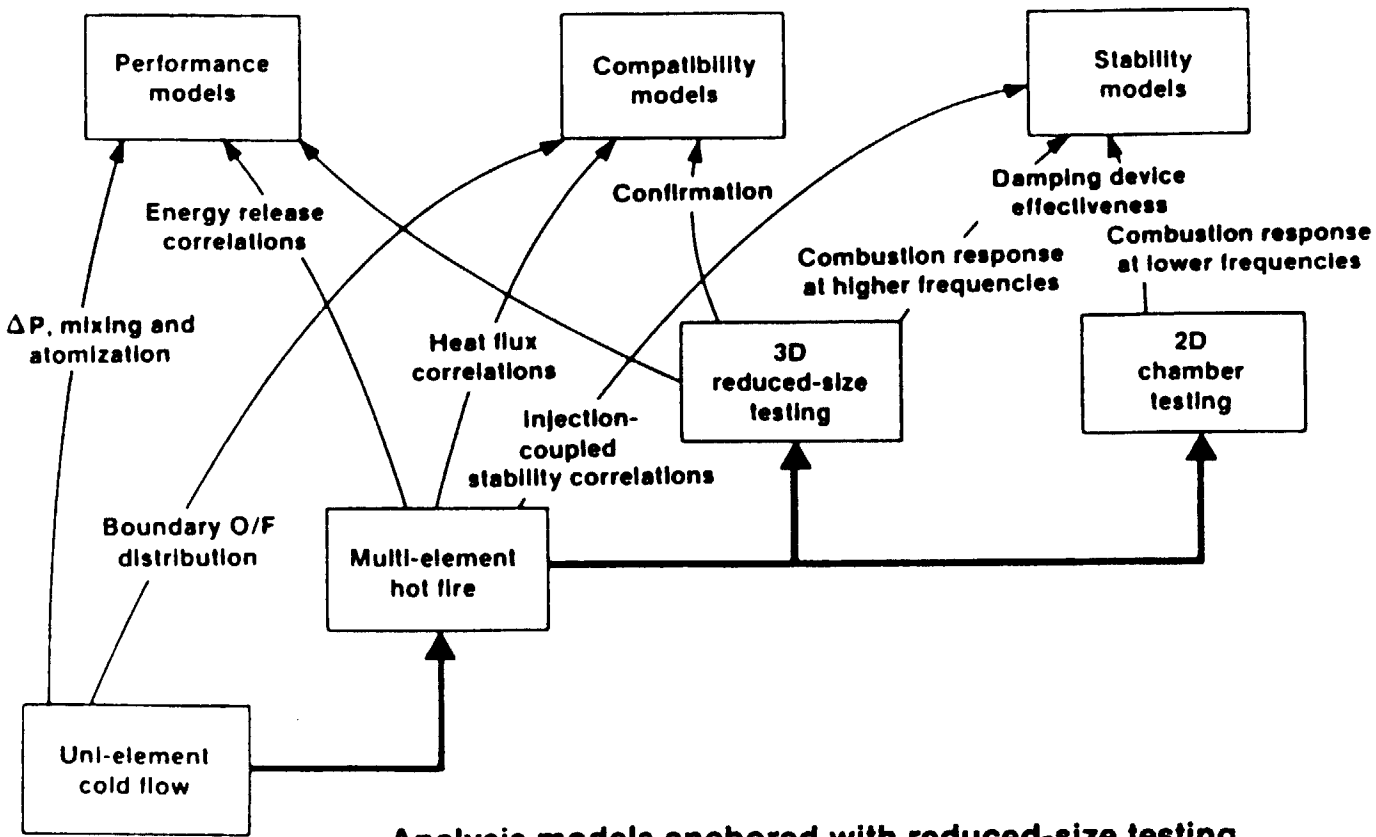

Analysis models anchored with reduced-size testing.

Figure A-1

Analysis Model Uncertainties

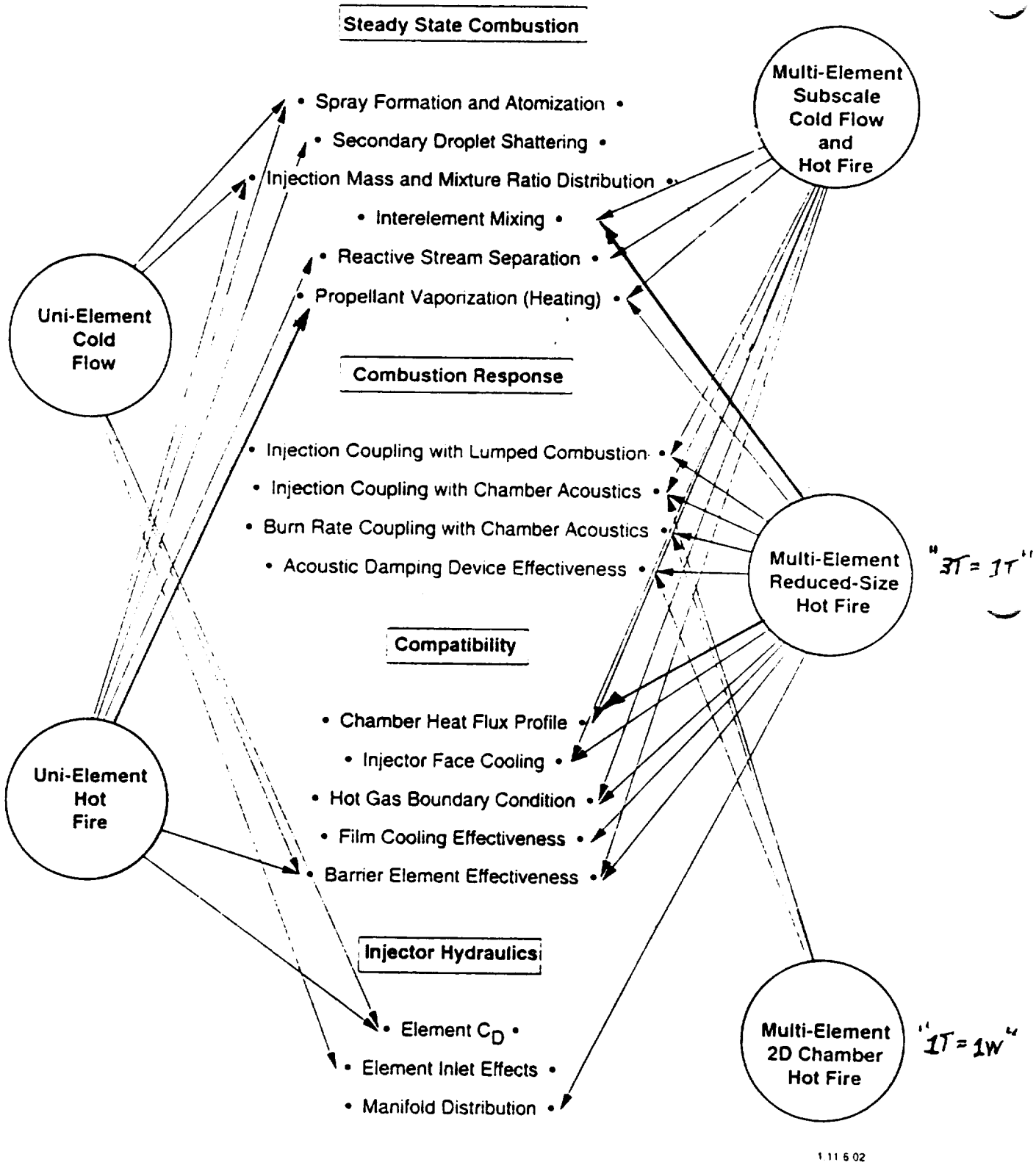

Figure A-2
Strategic Experimental Evaluations Are Used to Reduce Model Uncertainties

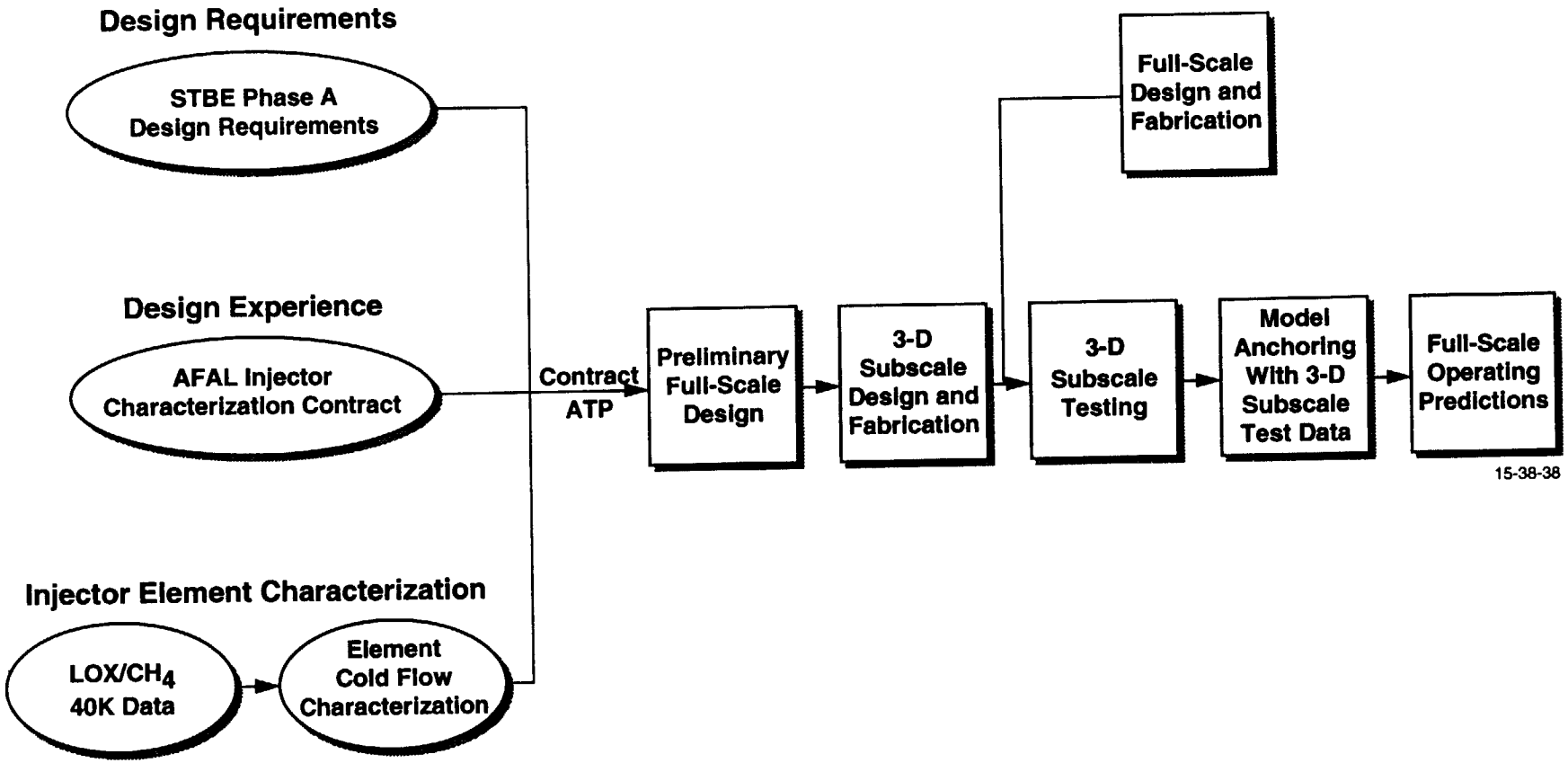

FigureA-3 Large-Scale Injector Design Flowchart

Figure A-4 **Our Analysis Will Cover Steady-state Combustion Performance, Combustion Stability, Compatibility and Injector Hydraulics**

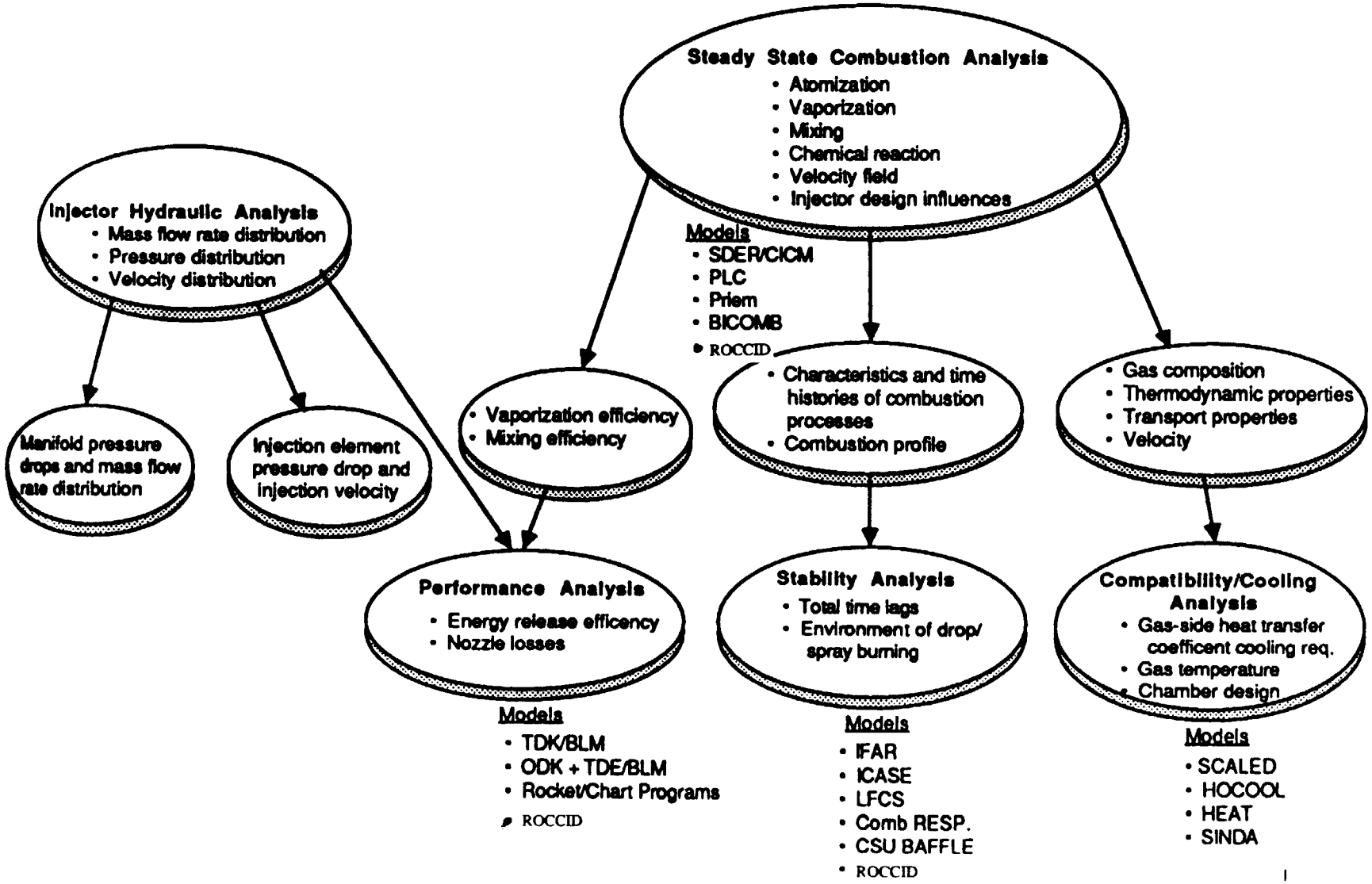

NOTES:

1. INTERPRET DRAWING PER ATC-STD-4926.
2. MARK PER AS478, CLASS D, WITH 1206466 AND APPLICABLE DASH NUMBER. 1/B
3. REMOVE HOIST RINGS, 3 PLACES, AFTER ASSEMBLY OF (4) TO (3) AND PRIOR TO ASSEMBLY OF (7) TO (4). 2/B
4. APPLY (33) TO ALL THREADS PRIOR TO INSTALLING FASTENERS.
5. ALIGN TDM SCRIBE LINES ON (2), (3), (4) AND (7) AND Ø .125 INDEX HOLE ON (1).
6. A MINIMUM OF 3 HOIST RINGS TO BE USED FOR LIFTING THESE ASSEMBLIES. 1/B
7. QUANTITY AND INSTALLATION OF THESE COMPONENTS PER COGNIZANT ENGINEER. 1/F
8. PROOF AND LEAK TEST -9 ASSEMBLY.
   A. PROOF TEST WITH WATER (FILTERED TO THE REQUIREMENTS OF ATC-STD-4940, LEVEL 200) AT 1550 TO 1600 PSIG FOR 5 MINUTES MINIMUM. NO PERMANENT DISTORTION OR FAILURE PERMITTED. 2/A
   B. LEAK TEST PER ATC-47603, METHOD II, USING CLEAR DRY GN_2 (FILTERED TO THE REQUIREMENTS OF ATC-STD-4940, LEVEL 200) AT 50±5 PSIG FOR 5 MINUTES MAXIMUM. NO DETECTABLE LEAKAGE ALLOWED.
9. SHIPPED AS LOOSE PIECE WITH ASSEMBLY. 1/B

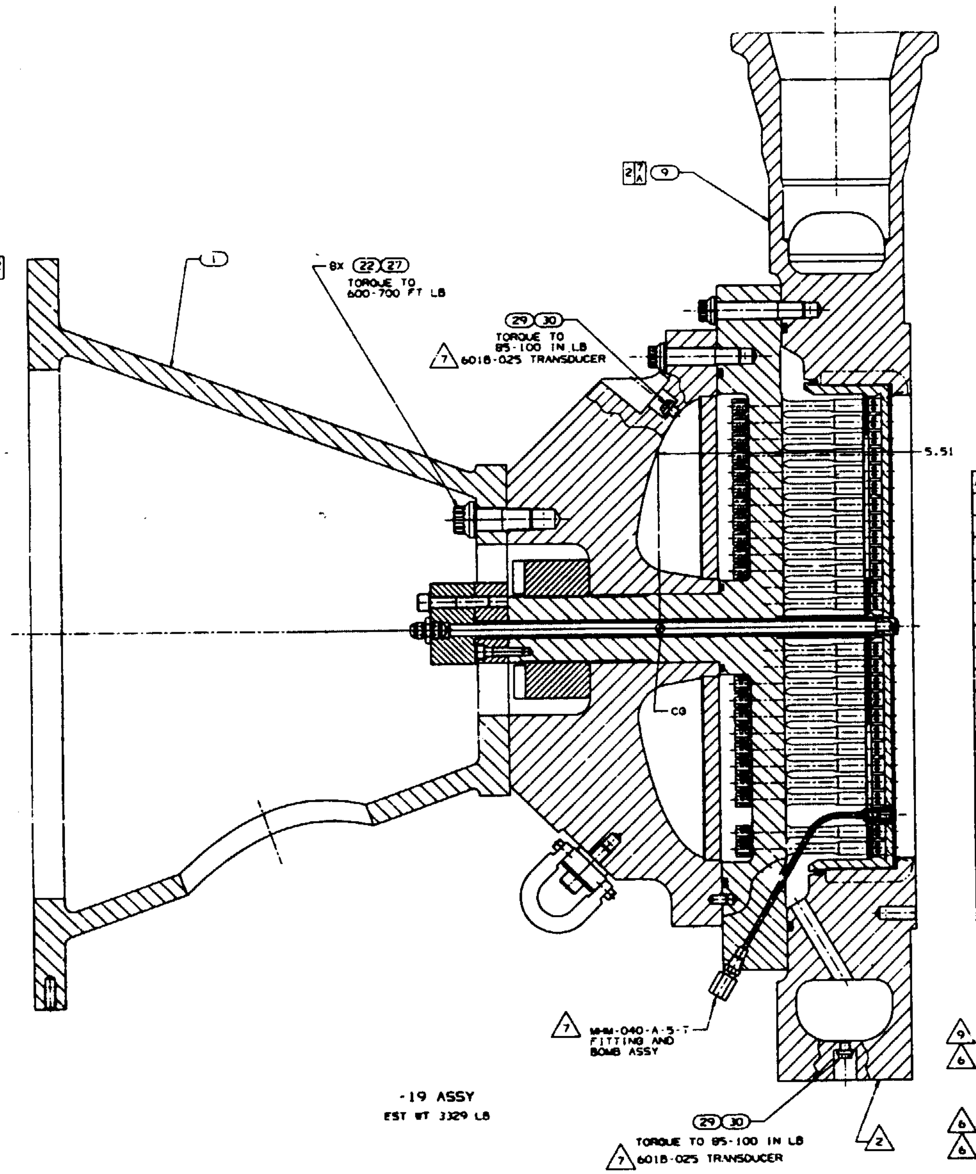

-19 ASSY
EST WT 3329 LB

AR	AR	CAGE	PART NO.	NOMENCLATURE	MATERIAL SPECIFICATION	ITEM
				LUBRICANT	ATC-44159	33
						32
						31
2			AS4119-7	WASHER		30
2			AS4119-1	ADAPTOR		29
						28
8			MS20002 C16	WASHER		27
	100		MS20002 C12	WASHER		26
	4		MS20002 C8	WASHER		25
						24
	6	56878	61170-1216	NUT		23
8		56878	72990 -16H-22	BOLT		22
	50	56878	EWB 0420 -12H-44	BOLT		21
	44	56878	EWB 0420 -12H-35	BOLT		20
						19
	4		NAS1351 N8-44	SCREW		18
	4		NAS1351 N6-24	SCREW		17
						16
	2	04319	E01-001(B) CB-07-15PC	SEAL		15
	1	05939	230107376	SEAL		14
	1	05939	380002643	SEAL		13
	1	05939	380002642	SEAL		12
	1	05939	380002641	SEAL		11
						10
1			-9	ASSY		9
			1206488-1	SPACER		8
	1		1206486-19	FUEL INLET MANIFOLD		7
	1		1206485-1	ADAPTER		6
	1		1206484-1	NUT		5
	1		1206471-9	INJECTOR ASSY		4
	1		1206469-9	OXIDIZER COVER		3
	1		1206468-9	IGNITER		2
1			1206467-9	THRUST MOUNT		1
-19	-9	CAGE CODE	PART OR IDENTIFYING NO.	NOMENCLATURE OR DESCRIPTION	MATERIAL SPECIFICATION	ITEM NO.

PARTS LIST

CONTRACT NO. NAS8-37470

UNLESS OTHERWISE SPECIFIED: DIMENSIONS & TOLERANCES ARE IN INCHES & PER ANSI Y14.5
TOLERANCES: DECIMALS .XX ±.03, .XXX ±.010; ANGLES ±0.5°

DO NOT SCALE DRAWING

GenCorp Aerojet TechSystems, Sacramento, California

TITLE: THRUSTER ASSEMBLY

SIZE E | CAGE CODE 05824 | DWG. NO. 1206466 | REV. 0

SCALE 1/2 | RELEASE DATE 90-3-31 | SHEET 1 OF 2

THIS DRAWING HAS BEEN REVIEWED PER POLICY 27-1,

A DIGITAL DEFINITION OF THIS PART IS AVAILABLE FROM THE CAD DATABASE. THIS DATA CAN BE ACCESSED BY ENTERING THE CAD SYSTEM WITH THE APPROPRIATE RELEASED FILENAME. MANUAL CHANGES TO THIS DWG ARE PROHIBITED.
FILENAME IS 424D.1206466.NC.THRSTR.ASY

DEVELOPMENT HARDWARE
FOR TEST OR EXPERIMENTATION

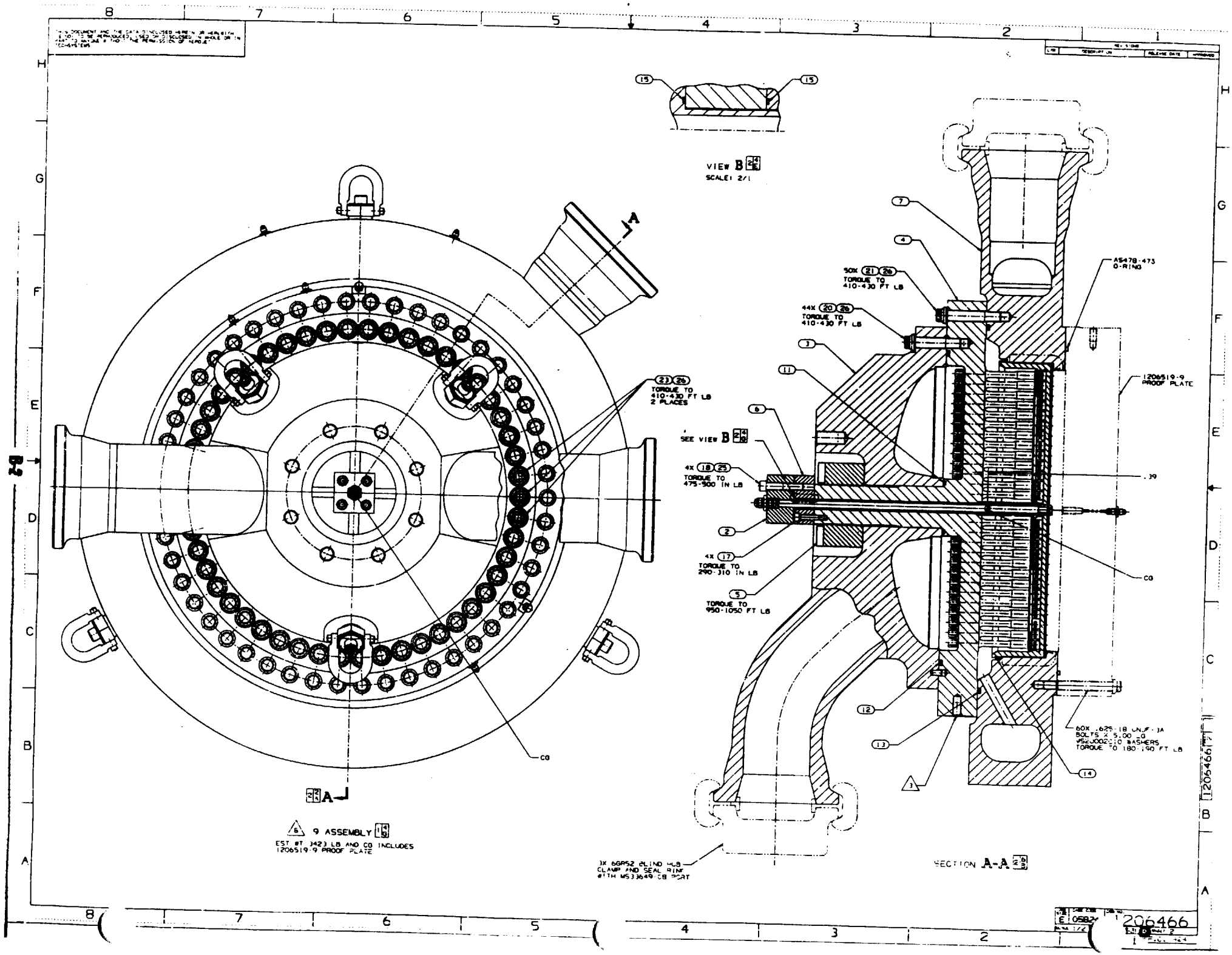
VIEW B
SCALE: 2/1
A
23 26
TORQUE TO
410-430 FT LB
2 PLACES
CG
A
9 ASSEMBLY
EST. WT. 3423 LB. AND CG INCLUDES
1206519-9 PROOF PLATE
50X 21 26
TORQUE TO
410-430 FT LB
44X 20 26
TORQUE TO
410-430 FT LB
AS478-473
O-RING
1206519-9
PROOF PLATE
SEE VIEW B
4X 18 25
TORQUE TO
475-500 IN LB
.39
4X 17
TORQUE TO
290-310 IN LB
5
TORQUE TO
950-1050 FT LB
CG
60X .625-18 UNJF-3A
BOLTS X 5.00 LG
VSKU002-10 WASHERS
TORQUE TO 180-190 FT LB
3X 6GR52 BLIND HUB
CLAMP AND SEAL RING
WITH MS33649-CB BOLT
SECTION A-A
1206466

☒ ADCN ☐ DCN	DATE 90-9-14	DOCUMENT CHANGE NOTICE	DWG LVL 1	DOCUMENT NUMBER 1206466	REV LTR NC-1
ECRA NO	RELEASE DATE 90-9-21	GENCORP AEROJET TechSystems SACRAMENTO, CALIFORNIA	DOCUMENT TITLE THRUSTER ASSY		SHEET 1 of 1
PREPARED BY B. CAROTHERS					

APPROVALS

SH	ZONE	ITEM	DESIGN 90-9-17	DESIGN ACTIVITY	CHECK B Campbell 90-9-21	STRESS	WT
				QA	MANUF	MAT'L	CMO
1	GN	1	(ADD) 10. MAINTAIN CLEANLINESS PER ATC-4940, LEVEL VC FOR ALL EXTERNAL SURFACES. INTERNAL SURFACES: LEVEL 200K FOR 4, 7 AND 3.				
1	PL	2	ITEM 20, EWB 0420-12H-34 (WAS) EWB 0420-12H-35				

BRUNING 40-22 TECH 00010

P.C. 424

☒ ADCN ☐ DCN	RELEASE DATE 91-8-21	DOCUMENT CHANGE NOTICE	DOCUMENT NUMBER 1206466	REV LTR NC-2	SHEET 1 of 1
SERIAL NO		GENCORP AEROJET Propulsion Division Sacramento, CA CAGE 05824	DOCUMENT TITLE THRUSTER ASSEMBLY		
PREPARED BY JA SCHNEIDER	DATE 91-08-16				

APPROVALS

CHECK	PROJECT ENGR	THERMAL	MFG / PRODUCIBILITY	NUCLEAR HDRS	STG DESIGN MGR
B Campbell 91-08-21	[signature]				
DESIGN 91-8-20 E. [signature]	CONFIGURATION	DYNAMICS	QUALITY ASSURANCE	RELIABILITY	PROCUREMENT
DESIGN MGR	STRESS	MATLS & PROCESSES	WEIGHTS	MAINTAINABILITY	CUSTOMER

ZONE ITEM

GN 1

△8 "IS"

LEAK TEST -9 ASSEMBLY

A. LEAK TEST PER ATC-47063, METHOD II, USING CLEAR DRY GASEOUS NITROGEN (FILTERED TO THE REQUIREMENTS OF ATC-STD-4940, LEVEL 200) AT 50+/-5 PSIG FOR 5 MINUTES MAXIMUM. NO DETECTABLE LEAKAGE ALLOWED.

△8 "WAS"

PROOF AND LEAK TEST -9 ASSEMBLY

A. PROOF TEST WITH WATER, (FILTERED TO THE REQUIREMENTS OF ATC-STD-4940, LEVEL 200) AT 1550 TO 1600 PSIG FOR 5 MINUTES MINIMUM. NO PERMANENT DISTORTION OR FAILURE PERMITTED.

B. LEAK TEST PER ATC-47603, METHOD II, USING CLEAR DRY GASEOUS NITROGEN (FILTERED TO THE REQUIREMENTS OF ATC-STD-4940, LEVEL 200) AT 50+/-5 PSIG FOR 5 MINUTES MAXIMUM. NO DETECTABLE LEAKAGE ALLOWED.

P.C. 424

DOCUMENT CHANGE NOTICE

GENCORP AEROJET Propulsion Division Sacramento, CA CAGE 05824

☒ ADCN ☐ DCN | 91-8-22

PREPARED BY: JA SCHNEIDER | DATE: 91-08-15

DOCUMENT NUMBER: 1206466 | REV LTR: NC-3 | SHEET: 1 of 3

DOCUMENT TITLE: THRUSTER ASSEMBLY

APPROVALS

ZONE ITEM

PL 1 "IS" "WAS"

PL 2 "IS" "WAS"

PL 3. ADDED

P.C. 424

DOCUMENT CHANGE NOTICE CONTINUATION SHEET

GENCORP AEROJET Propulsion Division Sacramento, CA CAGE 05824

☒ ADCN ☐ DCN | DATE: 91-08-15 | DOCUMENT NUMBER: 1206466 | REV LTR: NC-3 | SHEET: 2 of 3

ZONE ITEM

4 ADDED Item (10)

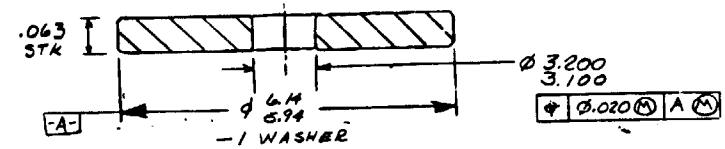

1F 5. SHT2

"IS" AS568-473 O RING

"WAS" AS478-473 O-RING

P/L 6. ITEM (20)

"IS" EWB 0420-12H-35

"WAS" EWB 0420-12H-34 (ITEM 2 OF NC-1)

SHT2 4C 7 "IS" (5) TORQUE TO 5000 TO 5500 FT LB

"WAS" (5) TORQUE TO 950 to 1050 FT-LB

P.C. 424

DOCUMENT CHANGE NOTICE CONTINUATION SHEET

GENCORP AEROJET Propulsion Division Sacramento, CA CAGE 05824

☒ ADCN ☐ DCN | DATE: 91-08-15 | DOCUMENT NUMBER: 1206466 | REV LTR: NC-3 | SHEET: 3 of 3

ZONE ITEM

SH1 4E 8
SH2 3D

ADDED Item (10)

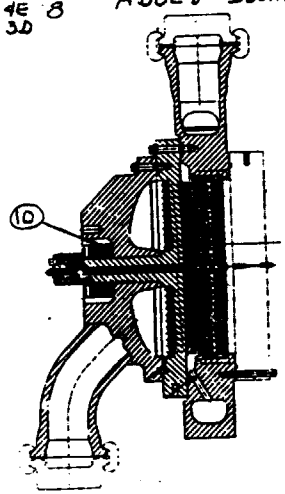

P.C. 424

☒ ADCN ☐ DCN | 91-94

DOCUMENT CHANGE NOTICE

GenCorp Aerojet — Propulsion Division, Sacramento, CA — CAGE 05824

1206466 | NC-4 | 1 of 3

THRUSTER ASSEMBLY

E.W. Higgins Jr. | 91-08-23

ZONE ITEM

G/H 1

REVISED NOTE 8

"IS"

8 LEAK TEST -9 ASSEMBLY
A. LEAK TEST PER ASO-47063, METHOD II, USING CLEAN DRY GASEOUS NITROGEN (FILTERED TO THE REQUIREMENTS OF ASO-STD-4940, LEVEL 200) AT 150+/-5 PSIG FOR 5 MINUTES MAXIMUM. NO DETECTABLE LEAKAGE ALLOWED.

"WAS" (ADCN NO-2)

8 LEAK TEST -9 ASSEMBLY
A. LEAK TEST PER ASO-47063, METHOD II, USING CLEAN DRY GASEOUS NITROGEN (FILTERED TO THE REQUIREMENTS OF ASO-STD-4940, LEVEL 200) AT 500+/-5 PSIG FOR 5 MINUTES MAXIMUM. NO DETECTABLE LEAKAGE ALLOWED.

G/H 2 of 3

ADDED NOTES 11 & 12:

11 ANNEAL TO 040 CONDITION AFTER FABRICATION.

12 THESE HOLES FOR HOOKUP USE ONLY IN PLACE OF ITEM 33. 8 REQUIRED.

P.G. 424

DOCUMENT CHANGE NOTICE CONTINUATION SHEET

GenCorp Aerojet — Propulsion Division, Sacramento, CA — CAGE 05824

☒ ADCN ☐ DCN | 91-08-23 | 1206466 | NC-4 | 2 of 3

ZONE ITEM

P/L 4

REVISED P/L AS SHOWN

"IS"

"WAS"

P.G. 424

DOCUMENT CHANGE NOTICE CONTINUATION SHEET

GenCorp Aerojet — Propulsion Division, Sacramento, CA — CAGE 05824

☒ ADCN ☐ DCN | 91-08-23 | 1206466 | NC-4 | 3 of 3

ZONE ITEM

5F 5 SHT 1

"IS"

8x 24
8x 22
16x 27

"WAS"

8x 22 27

P.G. 424

ORIGINAL PAGE IS OF POOR QUALITY

INTERPRET DRAWING PER ATC STD 4026.

2. WAX PER ASATB, CLASS D #TT4 1206467 AND [6] [3] PER CABLE TRIM POWER.

3. ALL DIAMETERS [Ø] 3.000 [Ⓜ] C [Ⓢ] UNLESS OTHERWISE NOTED.

4. PERMISSIBLE TO FABRICATE (1) USING 2 OR MORE PIECES WITH FULL PENETRATION WELDS.

5. FUSION WELD PER ATC 46351, USING (5).

6. PENETRANT INSPECT PER ATC-STD-4442, TYPE I, METHOD A. ETCHING PER PARA 5.1.41 IS NOT REQUIRED. ACCEPTANCE CRITERIA PER ATC-STD-4006, CLASS II.

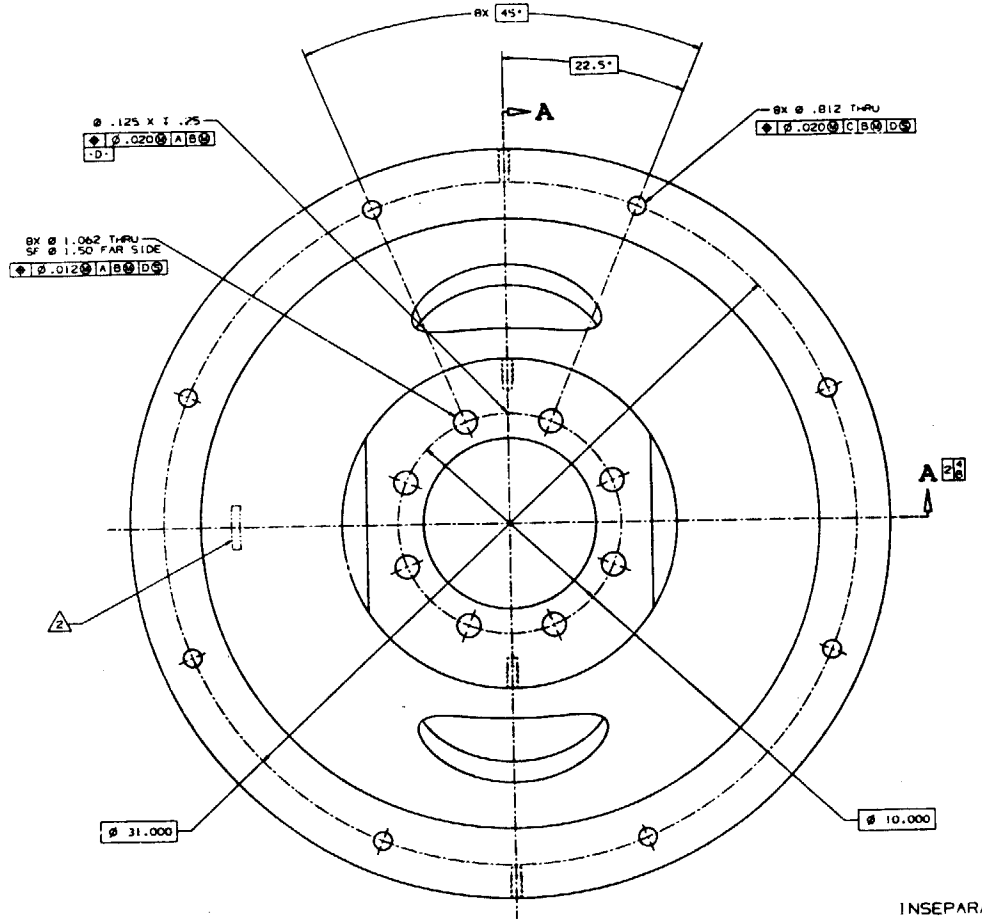

INSEPARABLE ASSEMBLY DRAWING

	AR			WELD ROD	AMS 6466 OR AMS 6457
	1		-3	CONE	4130 ALLOY STEEL — MIL-S-18729 OR AMS 6350 OR AMS 6351
	1		-2	RING	
	1		-1	RING	
	-Q	CAGE CODE	PART OR IDENTIFYING NO.	NOMENCLATURE OR DESCRIPTION	MATERIAL SPECIFICATION

NASA-37470

DO NOT SCALE DRAWING

556 LB

FULLER

THRUST MOUNT

E 05824 1206467

1/2 90-7-20 1 OF 2

P.C. 124

DEVELOPMENT HARDWARE
FOR TEST OR EXPERIMENTATION

A 3-DIMENSIONAL DEFINITION OF THIS PART IS AVAILABLE FROM THE CAD DATABASE. THIS DATA CAN BE ACCESSED BY ENTERING THE CAD SYSTEM WITH THE APPROPRIATE PC-DOS FILENAME. SEND CHANGES TO THIS DWG AND PROGRAMMER.

FILENAME IS 529C.1206467.NC.MOUNT

B-7

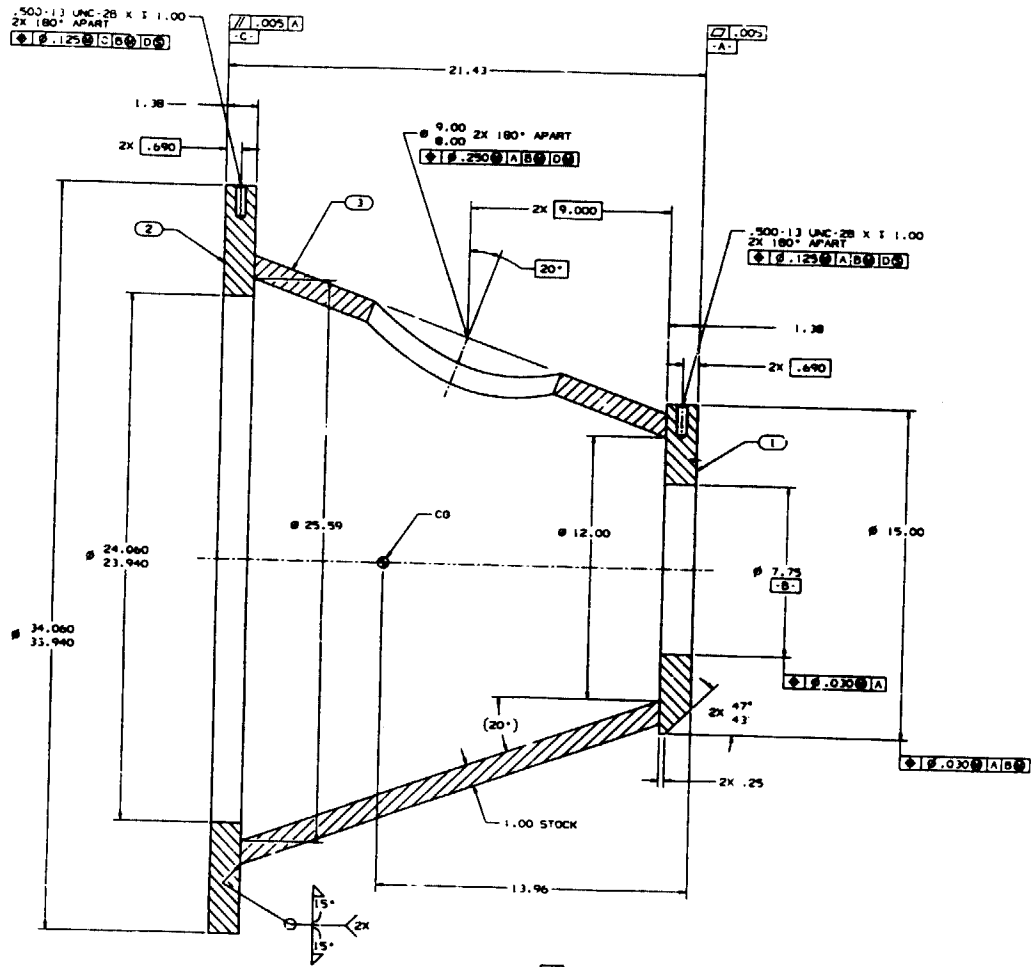

SECTION A-A

B-8

E 05824 1206467

SCALE 1/2 SHEET 2

P.C. 424

DCN	☐ DCN	RELEASE DATE 91-4-18
ECRA NO		
PREPARED BY J SCHNEIDER		DATE 91-4-16

DOCUMENT CHANGE NOTICE

GENCORP AEROJET
Propulsion Division
Sacramento, CA
CAGE 05824

DOCUMENT NUMBER	REV LTR	SHEET
1206467	NC-2	1 of 1

DOCUMENT TITLE: THRUST MOUNT

APPROVALS

CHECK B Campbell 91-04-18	PROJECT ENGR	THERMAL	MFG / PRODUCTIBILITY	NUCLEAR HDNS	SYS DESIGN MGR
DESIGN E Wh	CONFIGURATION	DYNAMICS	QUALITY ASSURANCE	RELIABILITY	PROCUREMENT
DESIGN MGR	STRESS	MATLS & PROCESSES	WEIGHTS	MAINTAINABILITY	CUSTOMER

ZONE ITEM

GN 1 "ADDED"

9 AFTER WELDING, NORMALIZE AND TEMPER TO 100 - 120 KSI TENSILE STRENGTH RANGE PER MIL-H-6875.

GN 2 "IS"

6 MAGNETIC PARTICLE INSPECT WELDS PER ATC-STD-4817, TYPE II. ACCEPTANCE CRITERIA PER ATC-STD-4005, CLASS II.

FOR "WAS" CONDITION SEE ITEM 5 OF NC-1 ADCN

GN 3 "IS"

2 MARK PER AS478, CLASS C WITH 1206467 AND APPLICABLE DASH NUMBER.

"WAS"

2 MARK PER AS478, CLASS D WITH 1206467 AND APPLICABLE DASH NUMBER.

P.C. 424

☒ ADCN ☐ DCN	DATE 90-8-16	DOCUMENT CHANGE NOTICE	DWG LTR 1	DOCUMENT NUMBER 1206467	REV LTR NC-1
ECN NO	RELEASE DATE 90-9-10	GENCORP AEROJET TechSystems SACRAMENTO, CALIFORNIA	DOCUMENT TITLE THRUST MOUNT		SHEET 1 of 2
PREPARED BY B. CAROTHERS					

APPROVALS

SH	ZONE	ITEM	
1	PL	1	ITEM 1, 2 & 3, REMOVE "OR AMS 6351"
1	PL	2	ITEM 5, REMOVE "OR AMS 6457"
1	GN	3	(ADD TO GEN NOTES) PAINT ALL SURFACES, EXCEPT TAPPED HOLES, WITH A SUITABLE PRIMER AND 2 COATS OF (6) OR EQUIVALENT.
1	PL	4	(ADD)

	AR	08002	7282	PAINT	RUST-OLEUM CO	6
	-9	CAGE CODE	Part Or Ident. No.	Nom Or Description	Mat'l Spec	Item No.

SH	ZONE	ITEM	
			6. PENETRANT INSPECT WELDS PER ATC-STD-4942... ACCEPTANCE CRITERIA PER ATC-STD-4005, CLASS II.
1	GN	5	(WAS) 6. PENETRANT INSPECT PER ATC-STD-4942... ACCEPTANCE CRITERIA PER ATC-STD-4006, CLASS II.
1	GN	6	5. FUSION WELD PER ATC-46351, USING (5). WELD PER AWS WHB4, CHAPTER 63.
			(WAS) 5. FUSION WELD PER ATC-46351 USING (5).
1	GN	7	(ADD) 7. HEAT TREAT AFTER WELD INSPECTION TO E_{tu} = 90 KSI PER MIL-H-6875.

PC 424

DOCUMENT CHANGE NOTICE CONTINUATION SHEET

GENCORP AEROJET TechSystems SACRAMENTO, CALIFORNIA 90-9-10

☒ ADCN ☐ DCN	DATE 90-8-16	DWG LEVEL	DOCUMENT NUMBER 1206467	REV LTR NC-1	SHEET 2 of 2

SH	ZONE	ITEM	
1	GN	8	(6) ULTRASONIC INSPECT PER ATC-STD-4943, TYPE II. ACCEPTANCE CRITERIA PER ATC-STD-4006, CLASS II.
1	PL	9	(8) (4)

		-3	CONE	
		-2	RING	
		-1	RING	

(WAS) (4)

		-3	CONE	
		-2	RING	
		-1	RING	

PC 424

THIS DOCUMENT AND T... ...CLOSED HEREIN OR HEREWITH IS NOT TO BE REPRODU... ...OR DISCLOSED IN WHOLE OR IN PART TO ANYONE WITHOU... ...PERMISSION OF AEROJET TECHSYSTEMS

NOTES:

1. INTERPRET DRAWING PER ATC-STD-4926.
2. MARK PER AS478-7A3 WITH 1206468 AND APPLICABLE DASH NUMBER.
3. DIMENSION IS NON-MANDATORY (MFG DATA) MACHINE (1) TO ACCOMPLISH A .001 TO .003 DIAMETRICAL CLEARANCE FIT.
4. DIMENSION IS NON-MANDATORY (MFG DATA) MACHINE (3) TO ACCOMPLISH A .001 TO .003 DIAMETRICAL CLEARANCE FIT.
5. ASSEMBLE (1), (2) & (3) AND BRAZE AT 1750° ± 10°F FOR 2 TO 5 MINUTES IN A VACUUM OR DRY HYDROGEN ENVIRONMENT USING (8). FURNACE EQUIPMENT ONLY MUST CONFORM TO MIL-H-6875.
6. LEAK TEST -9 ASSEMBLY USING GN, AT 50 ± 5 PSIG FOR 2 ± 1 MINUTES PER ATC-47063, METHOD II. NO EVIDENCE OF LEAKAGE ALLOWED.
7. NICKEL STRIKE SURFACE INDICATED .0003/.0005 THICK PRIOR TO BRAZING PER QQ-N-290.

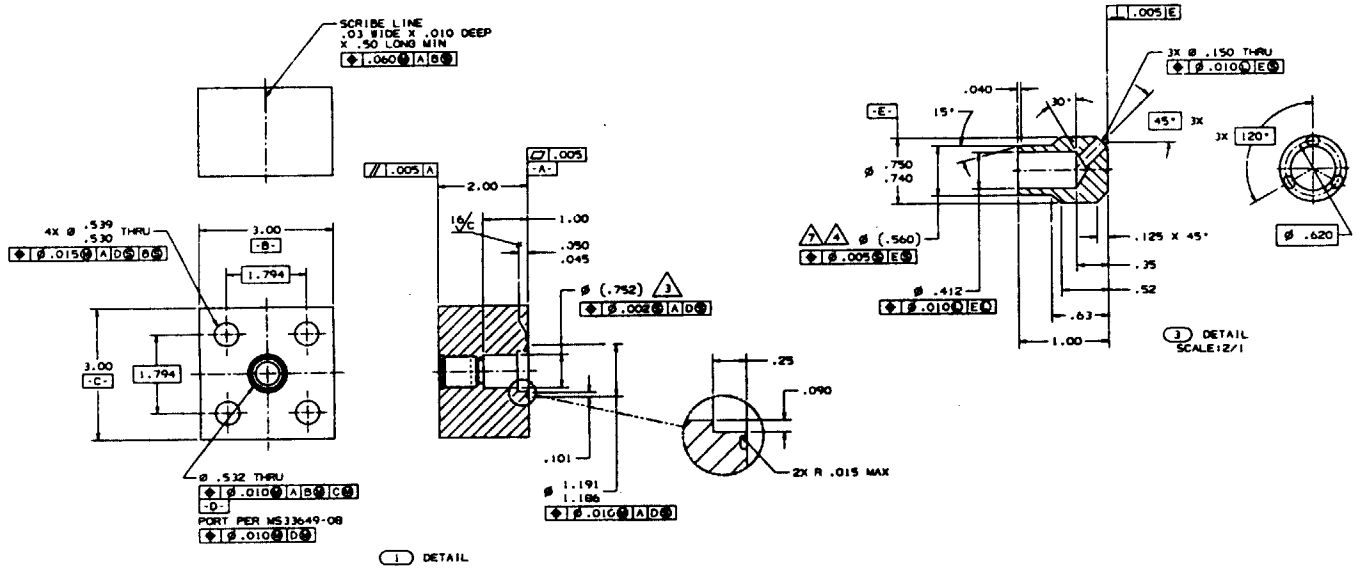

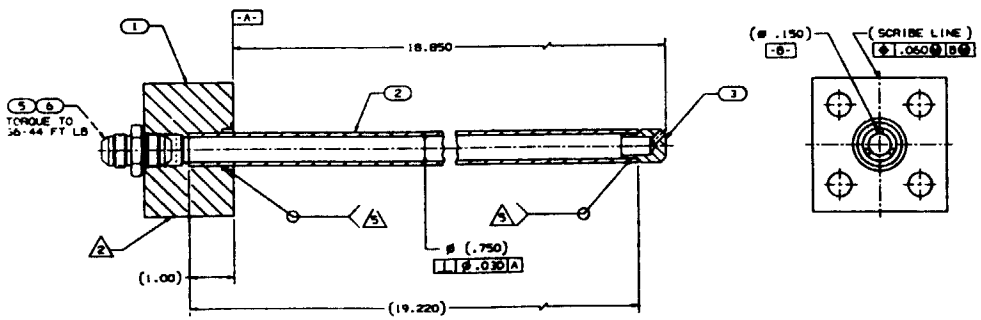

-9 ASSEMBLY

INSEPARABLE ASSEMBLY DRAWING

AR			BRAZE ALLOY	NICORO 80	8
					7
1	50398	VD261-0109-0308	SEAL		6
1		AN815-8J	UNION		5
					4
1		-3	TIP	Cu-.15Zr COPPER CDA C15000	3
1		-2	TUBE	CRES TP304L .750 O.D. X .095 WALL ASTM-A-269	2
1		-1	FLANGE	CRES QQ-S-763 OR 766 CL 304L COND A	1
-9					

NASB-37470

FULLER

GENCORP AEROJET Technique

IGNITER

E 05824 1206468

1/1 90-8-30 1 OF 1

P.C. 424

DO NOT SCALE DRAWING

DEVELOPMENT HARDWARE
FOR TEST OR EXPERIMENTATION

A DIGITAL DEFINITION OF THIS PART IS AVAILABLE FROM THE CAD DATABASE. THIS DATA CAN BE ACCESSED BY ENTERING THE CAD SYSTEM WITH THE APPROPRIATE RELEASED FILENAME. MANUAL CHANGES TO THIS DWG ARE PROHIBITED.

FILENAME IS 424U.1206468.NC.IGNITER

THIS DOCUMENT AND THE DATA DISCLOSED HEREIN OR HEREWITH IS NOT TO BE REPRODUCED, USED OR DISCLOSED IN WHOLE OR IN PART TO ANYONE WITHOUT THE PERMISSION OF AEROJET TECH SYSTEMS

LTR	DESCRIPTION	RELEASE DATE	APPROVED
A	REPLACES REV. NC WITH CHANGE SEE A DCN	90-9-21	

NOTES:

1. INTERPRET DRAWING PER ATC-STD-4926.
2. MARK PER AS478, CLASS D WITH 1206469 AND APPLICABLE DASH NUMBER.
3. FUSION WELD PER ATC-46351, USING (15).
4. ELECTRON BEAM WELD PER ATC-STD-4097-1.
5. DIMENSION IS NON-MANDATORY (MFG DATA) MACHINE TO MATING PART (4) TO ACCOMPLISH A .000 TO .010 DIAMETRICAL CLEARANCE FIT.
6. ALL DIAMETERS ⌖ Ø .030 Ⓜ A Ⓑ Ⓜ UNLESS OTHERWISE NOTED.
7. PENETRANT INSPECT WELDS PER ATC-STD-4942, TYPE I, METHOD A, ETCHING (PER PARA 5.1.4) IS NOT REQD. ACCEPTANCE CRITERIA PER ATC-STD-4005, CLASS II.
8. RADIOGRAPHIC INSPECT WELDS PER ATC-STD-4944. ACCEPTANCE CRITERIA PER ATC-STD-4005, CLASS II.
9. MARK PER AS478-7 WITH INFORMATION SHOWN WITH .25 HIGH CHARACTERS.
10. CLEANLINESS PER ATC-STD-4940, EXTERNAL SURFACES LEVEL VC AND INTERNAL SURFACES LEVEL 200K, SSA IS 10.9 SQUARE FEET.
11. ULTRASONIC INSPECT FORGING PER MIL-STD-2154, CLASS B.
12. PROOF AND LEAK TEST PROCEDURE.
    - A LEAK TEST PER ATC-47063, METHOD II USING CLEAR, DRY GAS, (FILTERED TO THE REQUIREMENTS OF ATC-STD-4940, LEVEL 200) AT 50 ± 5 PSIG FOR 5 MINUTES MAXIMUM. NO DETECTABLE LEAKAGE ALLOWED.
    - B PROOF TEST THE ASSEMBLY WITH WATER, (FILTERED TO THE REQUIREMENTS OF ATC-STD-4940, LEVEL 200) AT 5150 TO 5200 PSIG FOR 5 MINUTES MINIMUM. NO PERMANENT DISTORTION OR FAILURE PERMITTED.
    - C LEAK TEST PER ATC-47063, METHOD II USING CLEAR, DRY GAS, (FILTERED TO THE REQUIREMENTS OF ATC-STD-4940, LEVEL 200) AT 50 ± 5 PSIG FOR 5 MINUTES MAXIMUM. NO DETECTABLE LEAKAGE ALLOWED.
13. ANNEAL BEFORE FINAL MACHINING AND PRIOR TO WELDING (4) TO (1). ANNEAL PER THE REQUIREMENTS OF ATC-46009.

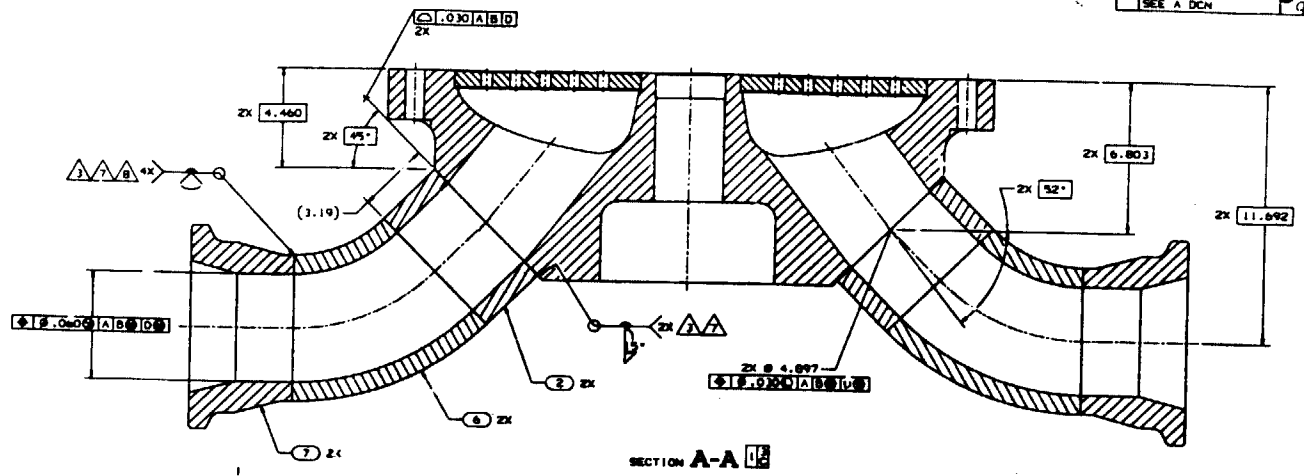

SECTION A-A

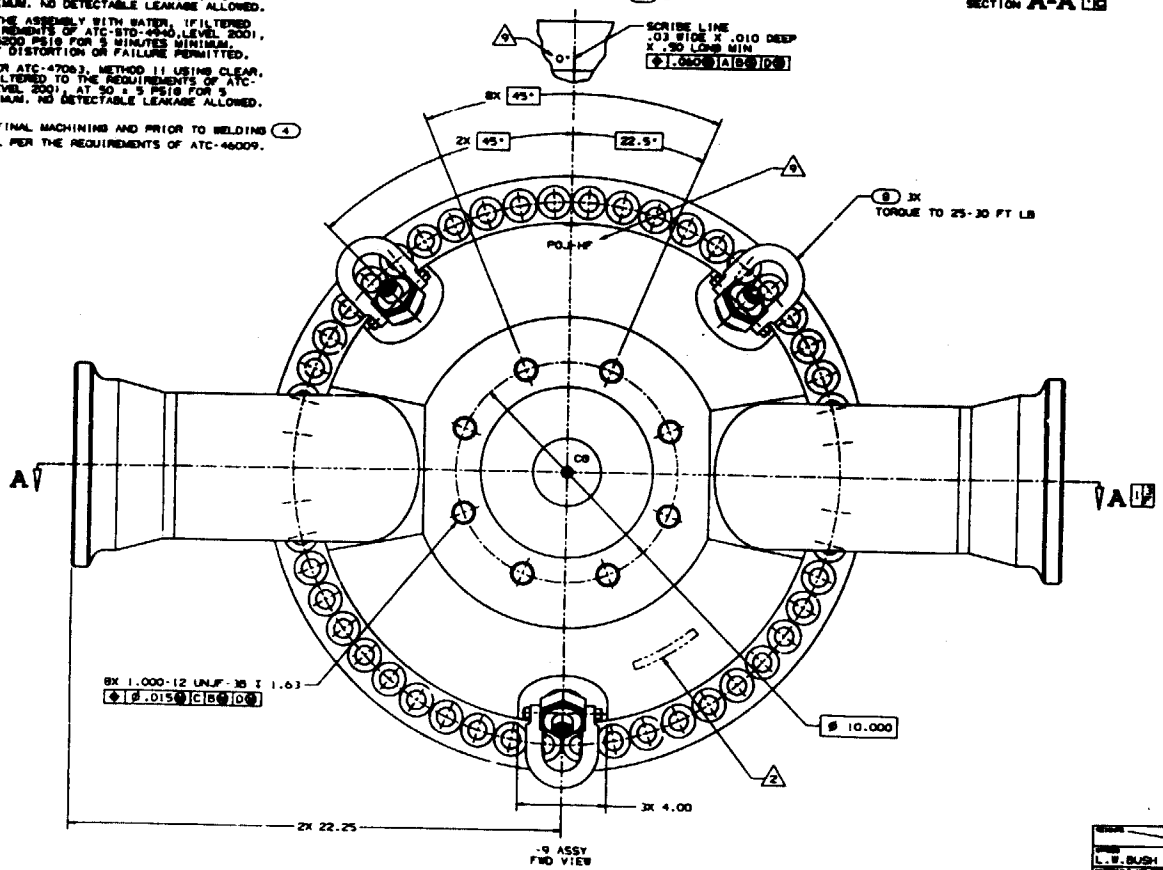

-9 ASSY
FWD VIEW

INSEPARABLE ASSEMBLY DRAWING

	AR			WELD ROD	ER349 CR ER308L AWS A5.9	15
						14
	3		MS171710	SPRING PIN		13
						12
	1		AS4119-7	WASHER		11
	1		AS4119-1A	ADAPTER		10
						9
	3	99862	CL-4000-2-R-1	SWIVEL HOIST RING		8
	2	14713	60R52	HUB	CRES ASTM A403 WP 304L	7
	2			45° ELBOW	SCHED XXS (NPS 6) ASTM A403 LONG RADIUS WP 304L	6
						5
	1		1206470-9	DISTR PLATE		4
						3
	2		-2	TUBE	6 INCH SCHED XXS PIPE CRES TP 304L ASTM A312	2
	1		-1	HOUSING	CRES 00-S-763 (FORGING) CL 304L COND A	1
	.9					

1206469 A B

NASA-37470

DEVELOPMENT HARDWARE
FOR TEST OR EXPERIMENTATION

A DIGITAL REPRESENTATION OF THIS PART IS AVAILABLE FROM THE CAD DATABASE. THIS DATA CAN BE ACCESSED BY PASSING THE CAD SYSTEM WITH THE APPROPRIATE RELEASED FILENAME. ORIGINAL CHANGES TO THIS DWG ARE PROHIBITED.
FILENAME IS 824D.1206469.-A.OX.COVER

DRAWN	L.W.BUSH	90/8/1
CHECKED AS PRESENTED	G.JANSER	90/8/1
ENGINEERING APPROVAL	D.SUTHERLAND	90/7/11

FULLER 90/8/1
B.CAMPBELL 90/8/1
E.T.HIGGINS 90/7/31
J.SCHNEIDER 90/8/1
L.MYERS 90/8/1

DO NOT SCALE DRAWING
824 L85 1

AEROJET TECH SYSTEMS

TITLE: OXIDIZER COVER ASSEMBLY

E 05824 1206469

1/2 90/8/2 1 OF 3

P.C. 424

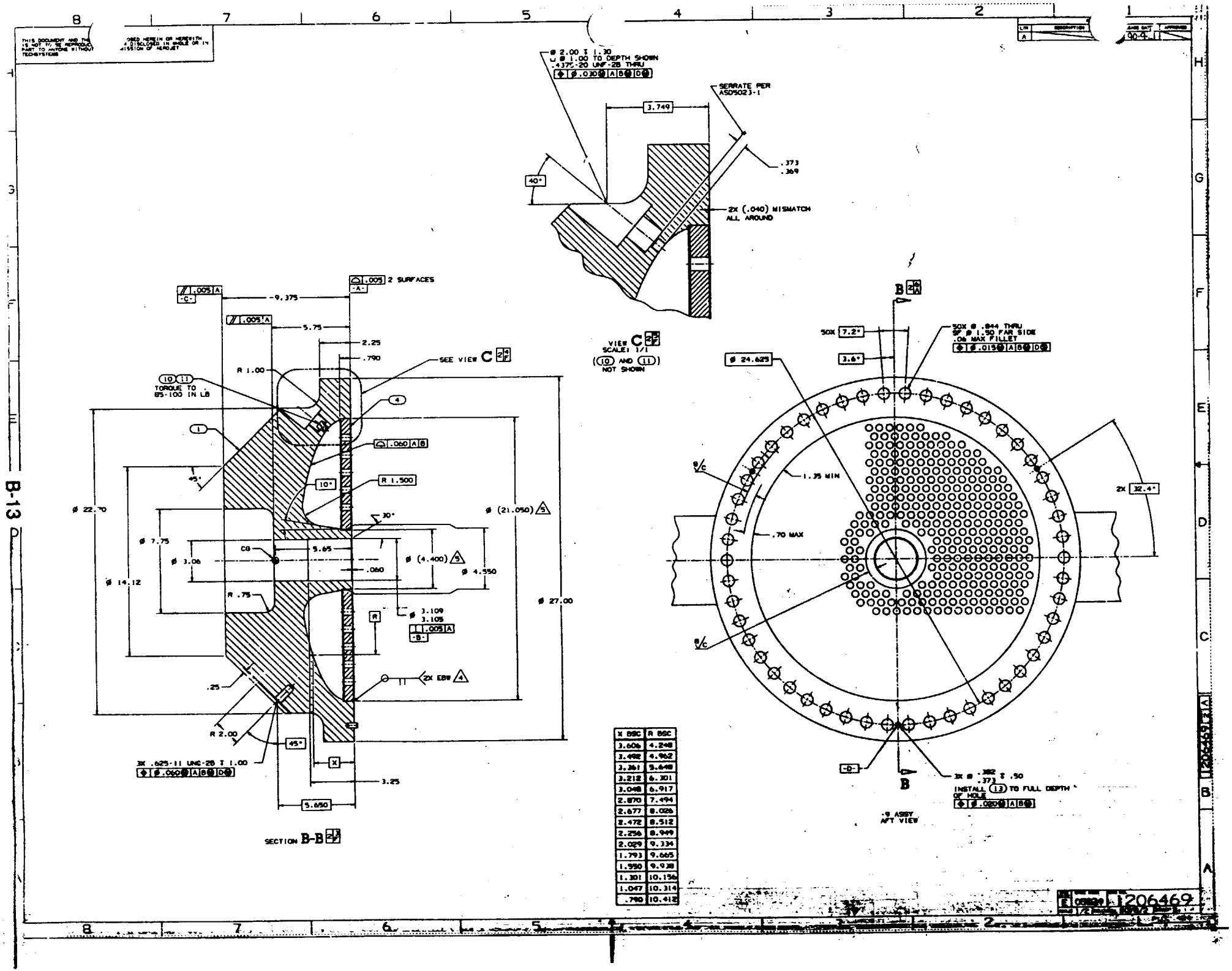

X BSC	R BSC
3.606	4.248
3.492	4.962
3.361	5.648
3.212	6.301
3.048	6.917
2.870	7.494
2.677	8.026
2.472	8.512
2.256	8.949
2.029	9.334
1.793	9.665
1.550	9.938
1.301	10.156
1.047	10.314
.790	10.412

THIS DOCUMENT AND THE DATA DISCLOSED HEREIN OR HEREWITH IS NOT TO BE REPRODUCED, USED OR DISCLOSED IN WHOLE OR IN PART TO ANYONE WITHOUT THE PERMISSION OF AEROJET TECHSYSTEMS

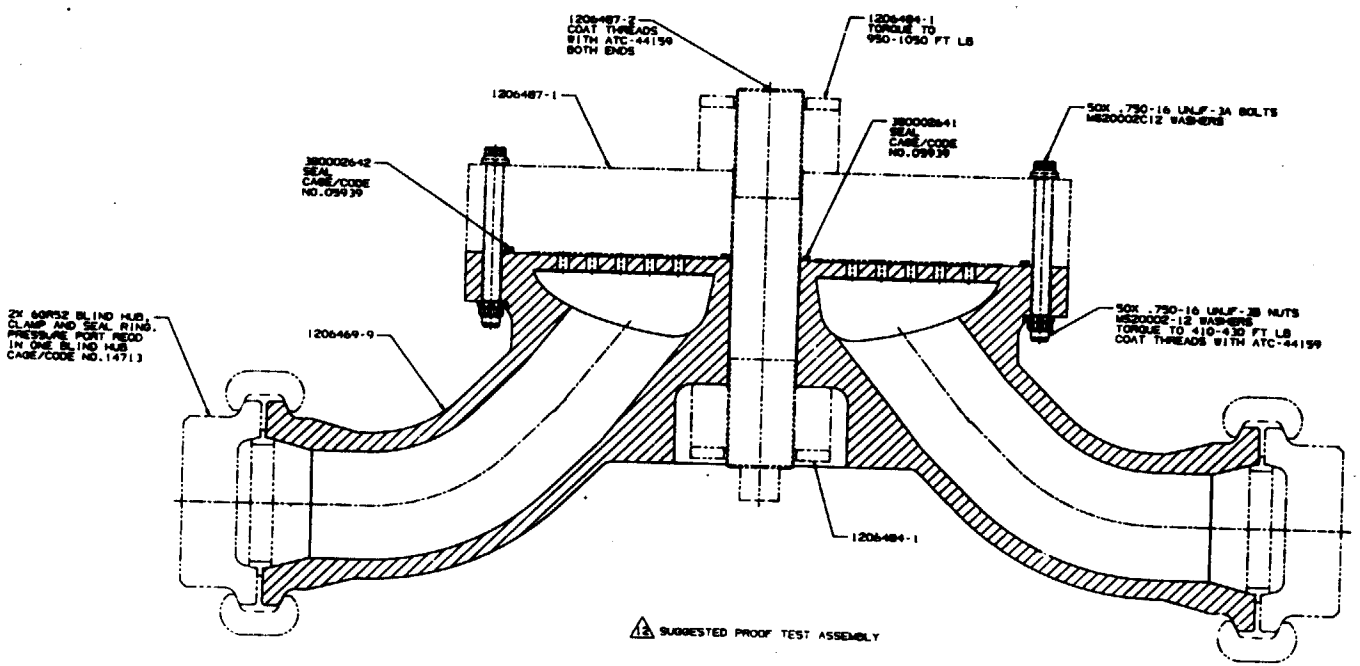

LTR	DESCRIPTION	RELEASE DATE	APPROVED
A		00-9-21	

E 05824 1206469

SCALE 1/2 30/8/2 SHEET 1

P.C. 424

1206469 A

THIS DOCUMENT AND THE INFORMATION DISCLOSED HEREIN OR HEREWITH IS NOT TO BE REPRODUCED OR DISCLOSED IN WHOLE OR IN PART TO ANYONE WITHOUT THE PERMISSION OF AEROJET TECHSYSTEMS

LTR	DESCRIPTION	RELEASE DATE	APPROVED
A	REPLACES R0 WITH CHANGE SEE DCN	90-9-26	

NOTES:

1. INTERPRET DRAWING PER ATC-STD-4926.
2. MARK PER AS478-37 WITH :206470 AND APPLICABLE DASH NO.
3. BRAZE (1) AND (2) PER COGNIZANT DESIGN ACTIVITY USING (3).
4. PERFORATED WITH Ø .0625, STAGGERED PATTERN, 41% OPEN.
5. PERMISSIBLE TO BRIGHT ANNEAL 304L PER THE REQUIREMENTS OF ATC-46009.
6. NO COPPER ALLOWED ON SURFACES INDICATED.

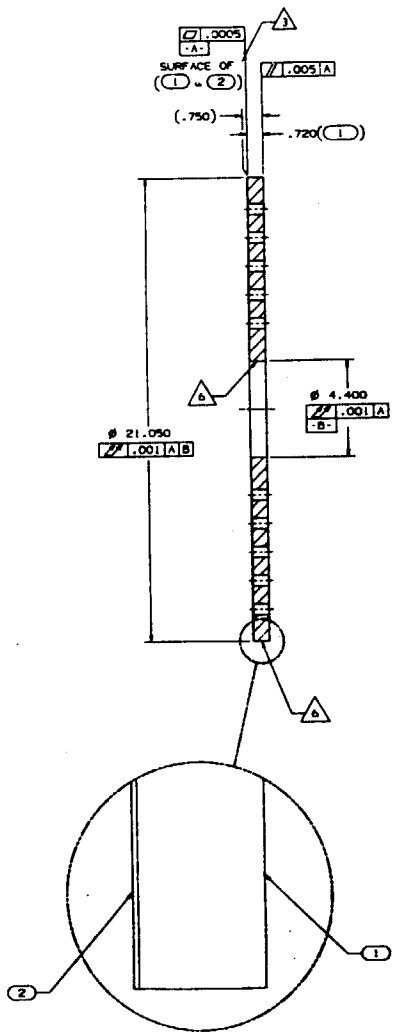

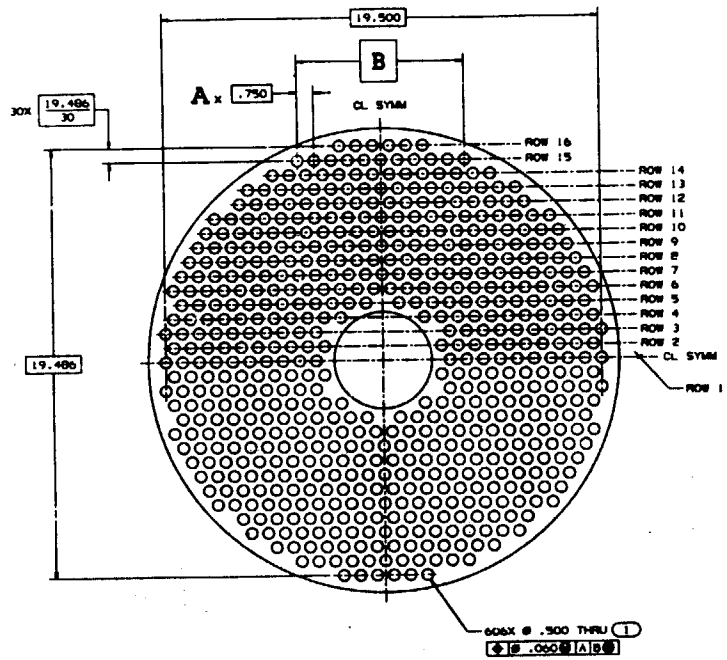

ROW NO.	B BSC	A x .750
1	19.500	18X ON THE BASIS OF 26X
2	18.750	18X ON THE BASIS OF 25X
3	19.500	18X ON THE BASIS OF 26X
4	18.750	20X ON THE BASIS OF 25X
5	18.000	22X ON THE BASIS OF 24X
6	18.750	25X
7	18.000	24X
8	17.250	23X
9	16.500	22X
10	15.750	21X
11	15.000	20X
12	12.750	17X
13	12.000	16X
14	9.750	13X
15	7.500	10X
16	3.750	5X

INSEPARABLE ASSEMBLY DRAWING

	AR			BRAZE ALLOY	OF COPPER .001 THK	ASTM B170 GRADE 2
4 3	1		-2	DIFFUSER	CRES SHEET 22 GA	00-5-766 CL 304L
5	1		-1	FACE PLATE	CRES	00-5-766 CL 304L
	-0	CHG NO.	PART OR IDENTIFYING NO.	NOMENCLATURE OR DESCRIPTION	ORIGINAL IDENTIFICATION	LINE NO.

PARTS LIST

NASA-17470

L.V. BUSH 90/9/1
B. JANSER
D. SUTHERLAND 90/9/1

DO NOT SCALE DRAWING

SCALE 1

Synopsis 90/9/6
D. CAMPBELL 90/9/1
E.T. HIBBINS 90/9/1
J. SCHNEIDER 90/9/1
L. MYERS 90/9/1

AEROJET TechSystems SACRAMENTO, CALIFORNIA

TITLE DISTRIBUTION PLATE, OXIDIZER

SIZE E CODE IDENT NO. 08824 DWG NO. 1206470

SCALE 1/2 DATE 90-8-8 SHEET 1 OF 1

DEVELOPMENT HARDWARE
FOR TEST OR EXPERIMENTATION

A DIGITAL REPRESENTATION OF THIS PART IS AVAILABLE FROM THE CAD DATABASE. THIS DATA CAN BE ACCESSED BY BUILDING THE CAD SYSTEM WITH THE APPROPRIATE DATA PROCESSING. GENERAL CHANGES TO THIS DWG MUST PRECEDE.

FILENAME IS 4240.1206470.-A.DW.DIST.PL

F.S.C. 424

B-15

THIS DOCUMENT AND THE DATA DISCLOSED HEREIN OR HEREWITH IS NOT TO BE REPRODUCED, USED OR DISCLOSED IN WHOLE OR IN PART TO ANYONE WITHOUT THE PERMISSION OF AEROJET TECH-SYSTEMS

NOTES:

1. INTERPRET DRAWING PER ATC-STD-4926.
2. MARK PER AS478-7A, WITH 1206471 AND APPLICABLE DASH NUMBER. [1 F]
3. STAKE IN TWO PLACES, APPROXIMATELY 60° APART, DIMPLE (7) APPROXIMATELY .020 DEEP, WITHIN .050 OF MAJOR DIAMETER OF THREADS. [2 C]
4. PREVENTIVE MEASURES SHALL BE TAKEN TO PROTECT INTERNAL PASSAGES IN (6) & (4) FROM BLOCKAGE OR CONTAMINATION DURING ASSEMBLY AND HANDLING. USE OF 1206482-9 AND 1206521-9 IS REQUIRED. [2 F]
5. CLEANLINESS PER ATC-STD-4940, EXTERNAL SURFACES LEVEL VC AND INTERNAL SURFACES LEVEL 200K. SSA IS TBD SQUARE FEET.

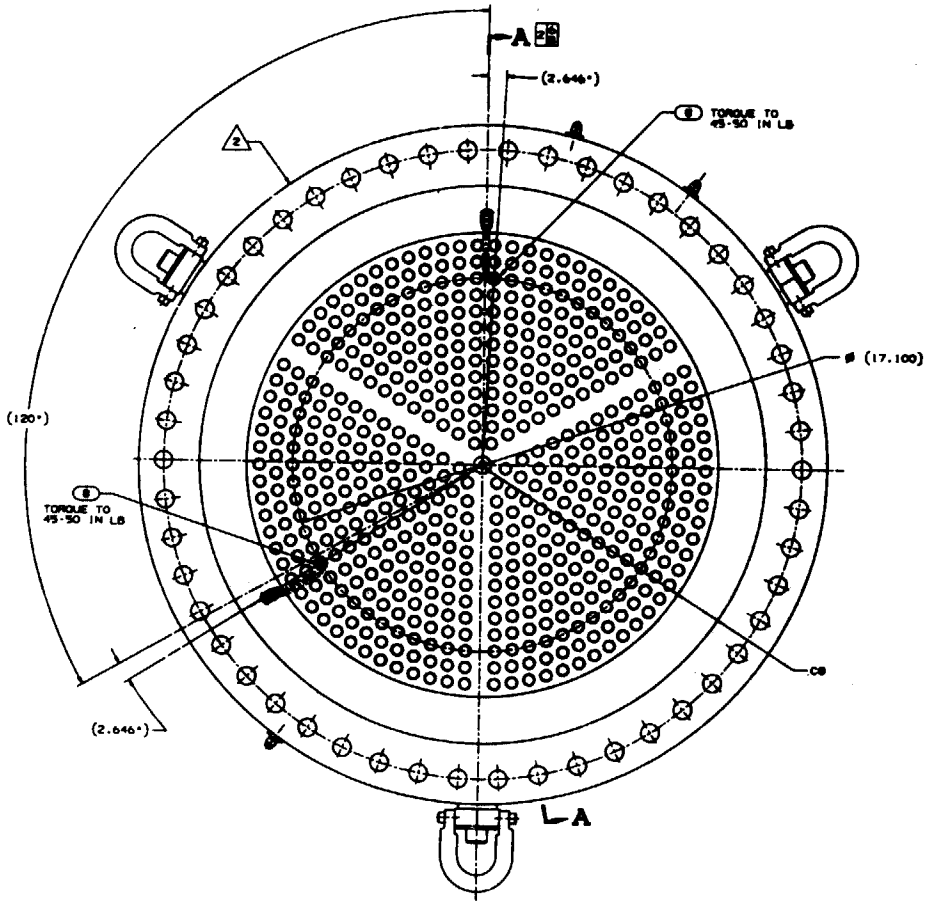

2		1206520-1	FACE NUT, COOLED		8
1		1206489-19	BRAZE ASSY		7
1		1206479-9	FACE PLATE ASSY		6
S48		1206477-1	COUPLER		5
1		1206522-1	FUEL DISTR PLATE		4
S48		1204148-1	WASHER		3
S44		1204145-1	FACE NUT		2
S26		1204134-1	INSERT		1
-9					

PARTS LIST

NAS8-37470

WESTMAN

.XX ±.03 ±0.5°
.XXX ±.010

DO NOT SCALE DRAWING

676 LB | 1

DEVELOPMENT HARDWARE
FOR TEST OR EXPERIMENTATION

A DIGITAL DEFINITION OF THIS PART IS AVAILABLE FROM THE CAD DATABASE. THIS DATA CAN BE ACCESSED BY ENTERING THE CAD SYSTEM WITH THE APPROPRIATE RELEASED FILENAME. MANUAL CHANGES TO THIS DWG ARE PROHIBITED.

FILENAME IS 424D.1206471.NC.INJ.ASSY

GENCORP AEROJET Techsystems
SACRAMENTO, CALIFORNIA

INJECTOR BODY ASSEMBLY

E | 05824 | 1206471

1/2 | 90-8-31 | 1 OF 2

P.C. 424

B-16

THIS DOCUMENT AND THE DATA DISCLOSED HEREIN OR HEREWITH IS NOT TO BE REPRODUCED, USED OR DISCLOSED IN WHOLE OR IN PART TO ANYONE WITHOUT THE PERMISSION OF AEROJET TECHSYSTEMS

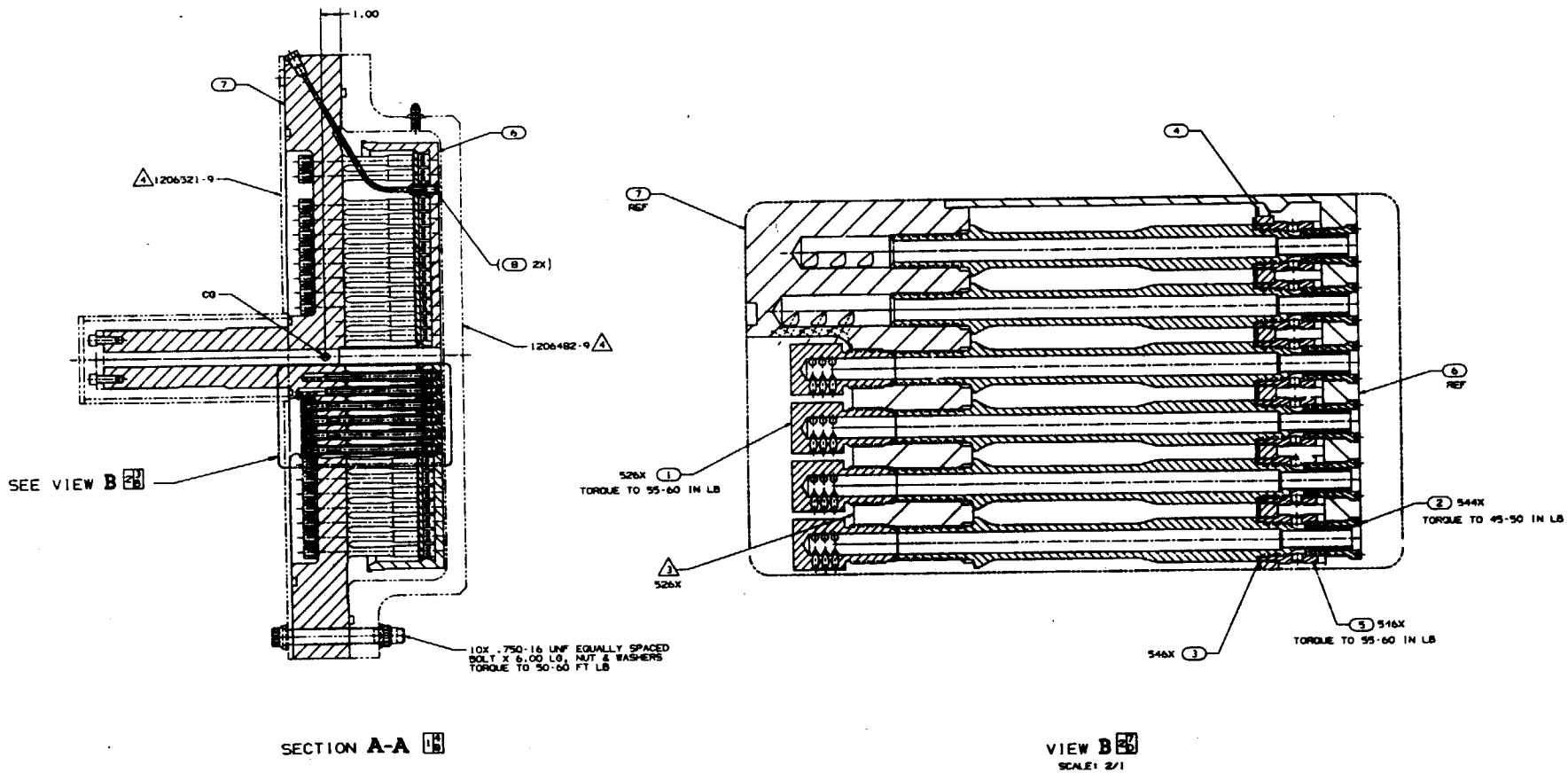

1206471

THIS DOCUMENT AND THE DATA DISCLOSED HEREIN OR HEREWITH IS NOT TO BE REPRODUCED, USED OR DISCLOSED IN WHOLE OR IN PART TO ANYONE WITHOUT THE PERMISSION OF AEROJET TECHSYSTEMS COMPANY

LTR	DESCRIPTION	RELEASE DATE	APPROVED
A	REPLACES REV NC WITH CHANGE. SEE A DCN	R 89-11-9	89-11-9

NOTES:

1 INTERPRET DRAWING PER ATC-STD-4926.

2 IDENTIFY IN ACCORDANCE WITH MIL-STD-130 PER MARKING METHOD OF AS478-7A.

3 REMOVED

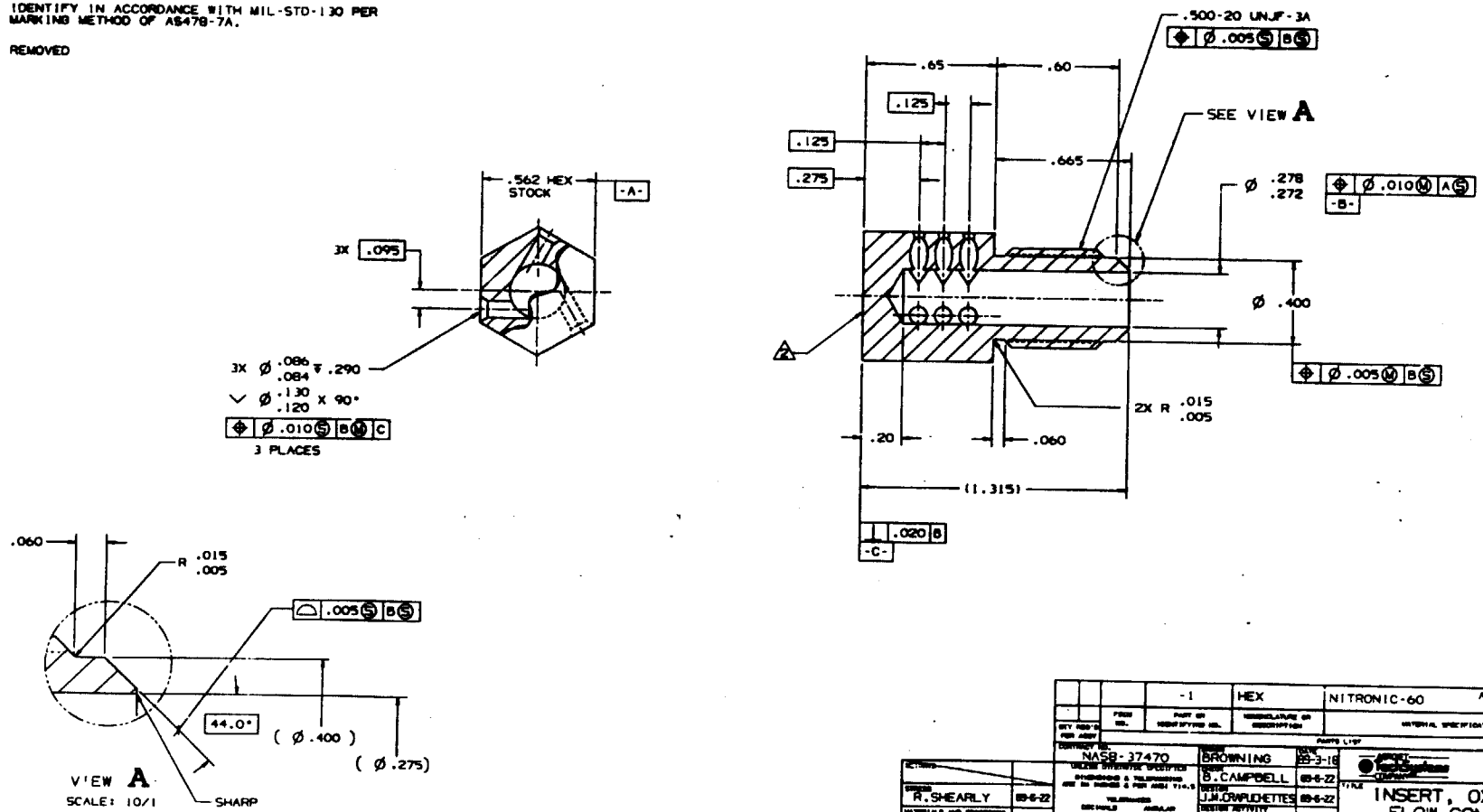

DEVELOPMENT HARDWARE
FOR TEST OR EXPERIMENTATION

A DIGITAL DEFINITION OF THIS PART IS AVAILABLE FROM THE CAD DATABASE. THIS DATA CAN BE ACCESSED BY ENTERING THE CAD SYSTEM WITH THE APPROPRIATE RELEASED FILENAME. MANUAL CHANGES TO THIS DWG ARE PROHIBITED.
FILENAME IS 424D.1204134.-A.INSERT.OX

		-1	HEX	NITRONIC-60	ASTM A276 OR AMS 5848
QTY REQ'D PER ASSY	FSCM NO.	PART OR IDENTIFYING NO.	NOMENCLATURE OR DESCRIPTION	MATERIAL SPECIFICATION	ITEM NO.

PARTS LIST

CONTRACT NO. NAS8-37470
UNLESS OTHERWISE SPECIFIED DIMENSIONS & TOLERANCES ARE IN INCHES & PER ANSI Y14.5
TOLERANCES: DECIMALS .XX ±.03, .XXX ±.010; ANGULAR ±.5°
SURFACE ROUGHNESS
DO NOT SCALE DRAWING
DWG. LEVEL 1

DRAWN	BROWNING	89-3-18
CHECK	B.CAMPBELL	89-6-22
DESIGN	J.M.CRAPUCHETTES	89-6-22
DESIGN ACTIVITY	J.M.McBRIDE	89-6-22
PROJECT QUALITY	LANCE MYERS	89-6-22
TECHNICAL	R.EWEN	89-6-22
PROGRAM	D.SICHER	89-6-22
PROCUREMENT	D.BROWN	89-6-22

ACTIVITY		
STRESS	R.SHEARLY	89-6-22
MATERIALS AND PROCESSES	D.DENNIES	89-6-22
MANUFACTURING SHOPS		
QUALITY ASSURANCE	S.FLETCHER	89-6-22
ADDITIONAL APPROVALS		DATE

AEROJET TECHSYSTEMS COMPANY — SACRAMENTO, CALIFORNIA

TITLE: INSERT, OXIDIZER FLOW CONTROL-LSI INJECTORS

SIZE D | FSCM NO. 05824 | DWG. NO. 1204134

SCALE 4/1 | RELEASE DATE 89-6-23 | SHEET 1 OF 1

THIS DRAWING HAS BEEN REVIEWED PER POLICY 27-1, 89-3-18 | P.C. 424

1204134 A

THIS DOCUMENT AND THE DATA DISCLOSED HEREIN OR HEREWITH IS NOT TO BE REPRODUCED, USED OR DISCLOSED IN WHOLE OR IN PART TO ANYONE WITHOUT THE PERMISSION OF AEROJET TECHSYSTEMS COMPANY

REVISIONS			
LTR	DESCRIPTION	RELEASE DATE	APPROVED
A	REPLACES REV NC WITH CHANGE SEE A DCN	R 89-11-2	89-11-2

NOTES:

1 INTERPRET DRAWING PER ATC-STD-4926.

2 IDENTIFY IN ACCORDANCE WITH MIL-STD-130 PER MARKING METHOD OF AS478-7A.

3 REMOVED

4 MATERIAL TO MEET HYDROGEN EMBRITTLEMENT TEST OF ASTM-B-577, PROCEDURE B.

5 KNURL INDICATED SURFACE WITH A 164 DP STRAIGHT KNURL, MINIMUM OF 75% OF INDICATED SURFACE.

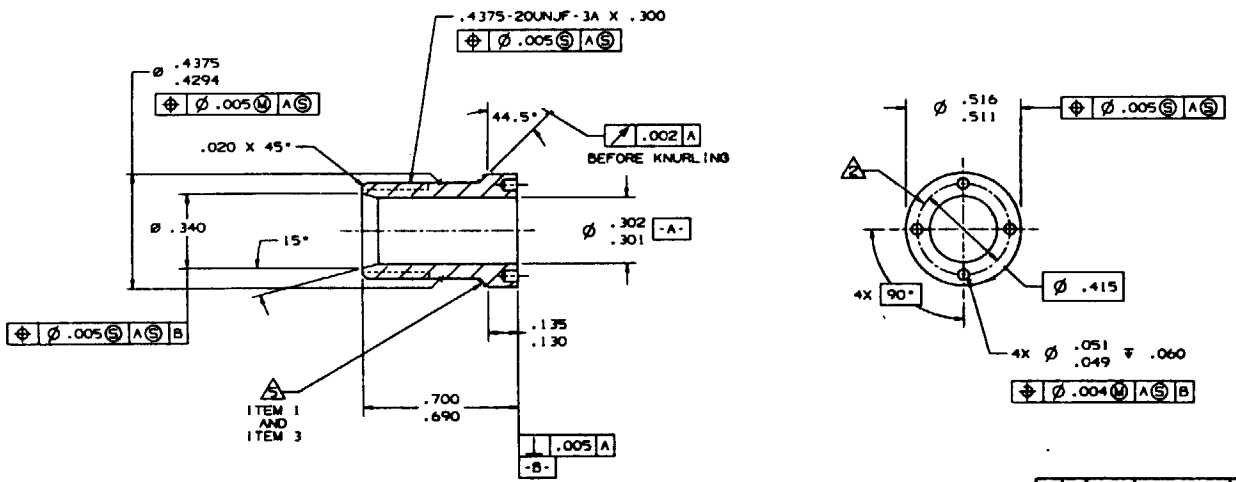

1, 2 AND 3 DETAILS

QTY REQ'D PER ASSY	FSCM NO.	PART OR IDENTIFYING NO.	NOMENCLATURE OR DESCRIPTION	MATERIAL SPECIFICATION	ITEM NO.
		-3	NUT	CRES QQ-S-763 CLASS 304L, COND A	3
4		-2	NUT	GLIDCOP GR AL-15	2
4		-1	NUT	GLIDCOP GR AL-15	1

PARTS LIST

DEVELOPMENT HARDWARE
FOR TEST OR EXPERIMENTATION

A DIGITAL DEFINITION OF THIS PART IS AVAILABLE FROM THE CAD DATABASE. THIS DATA CAN BE ACCESSED BY ENTERING THE CAD SYSTEM WITH THE APPROPRIATE RELEASED FILENAME. MANUAL CHANGES TO THIS DWG ARE PROHIBITED.
FILENAME IS 424D.1204145.-A.FACE.NUT

DRAWN	BROWNING 4-8-89
DESIGN	B.CAMPBELL 89-6-22
MATERIAL	J.M.CRAPUCHETTES 89-6-22
MANUFACTURING	J.M.McBRIDE 89-6-22
QUALITY	LANCE MYERS 89-6-22
TECHNICAL	R.EWEN 89-6-22
PROGRAM	D.SICHER 89-6-22
PROJECT	D.BROWN 89-6-22
SCALE	4/1
RELEASE DATE	89-6-23
SHEET	1 OF 1

DESIGNED	R.SHEARLY 89-6-22
MATERIALS AND PROCESSES	D.DENNIES 89-6-22
QUALITY ASSURANCE	S.FLETCHER 89-6-22
ADDITIONAL APPROVALS	DATE

NAS8-37470

DO NOT SCALE DRAWING

SCALE 1

SACRAMENTO, CALIFORNIA

TITLE: FACE NUT - LSI INJECTORS

SIZE D | FSCM NO. 05824 | DWG. NO. 1204145

THIS DRAWING HAS BEEN REVIEWED PER POLICY 27-1, 89-4-8

P.C. 424

1204145 A

☒ ADCN ☐ DCN	DATE 89-12-14	DOCUMENT CHANGE NOTICE	DWG LVL 1	DOCUMENT NUMBER 1204145	REV LTR A-1
ECRA NO	RELEASE DATE 89-12-18	GENCORP AEROJET TechSystems SACRAMENTO, CALIFORNIA	DOCUMENT TITLE FACE NUT - LSI INJECTORS		SHEET 1 of 1
PREPARED BY SCHNEIDER					

APPROVALS

SH	ZONE	ITEM	DESIGN	DESIGN ACTIVITY	CHECK	STRESS	WT
1	GN	1	J.M. Cogenhill	[signature]	[signature] 89-12-18		
				QA	MANUF	MAT'L	CMO

NOTE 5 "IS"
5 KNURL INDICATED SURFACE WITH A 160 DP STRAIGHT KNURL, MINIMUM OF 75% OF INDICATED SURFACE.

NOTE 5 "WAS"
5 KNURL INDICATED SURFACE WITH A 164 DP STRAIGHT KNURL, MINIMUM OF 75% OF INDICATED SURFACE.

BRUNING 40-22 TECH 00010

PC 424

THIS DOCUMENT AND THE DATA DISCLOSED HEREIN OR HEREWITH IS NOT TO BE REPRODUCED, USED OR DISCLOSED IN WHOLE OR IN PART TO ANYONE WITHOUT THE PERMISSION OF AEROJET TECHSYSTEMS COMPANY

NOTES:

1. INTERPRET DRAWING PER ATC-STD-4926.
2. IDENTIFY IN ACCORDANCE WITH MIL-STD-130 PER MARKING METHODS OF AS478-37.
3. AGE PER MIL-H-6875.
4. CLEAN AND PASSIVATE PER ATC-STD-4833, METHOD II.

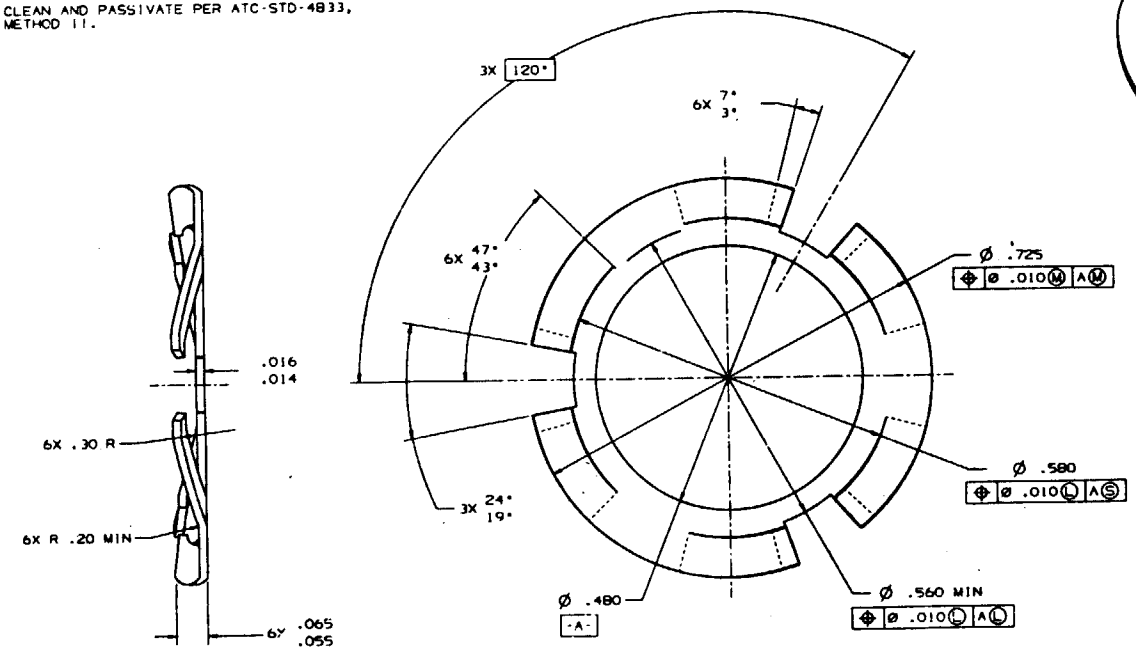

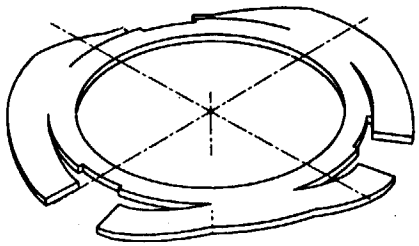

REVISIONS			
LTR	DESCRIPTION	RELEASE DATE	APPROVED

QTY REQ'D PER ASSY	FSCM NO.	PART OR IDENTIFYING NO.	NOMENCLATURE OR DESCRIPTION	MATERIAL SPECIFICATION	ITEM NO.
		-1		A-286 AMS 5525	

PARTS LIST

CONTRACT NO. NASB-37170

UNLESS OTHERWISE SPECIFIED DIMENSIONS & TOLERANCES ARE IN INCHES & PER ANSI Y14.5

TOLERANCES	DECIMALS	ANGULAR
.XX	±.03	±.5°
.XXX	±.010	

SURFACE ROUGHNESS

DO NOT SCALE DRAWING

DRAWN BOYLAN 89-5-30

DESIGN 89-6-30

MANUFACTURING 89-6-30

QUALITY ASSURANCE

ADDITIONAL APPROVALS

DATE

DWG. LEVEL 1

AEROJET TechSystems COMPANY SACRAMENTO, CALIFORNIA

TITLE WASHER, LSI 2D/3D SUBSCALE

SIZE D FSCM NO. 05824 DWG. NO. 1204148

SCALE 10/1 RELEASE DATE 89-6-29 R SHEET 1 OF 1

THIS DRAWING HAS BEEN REVIEWED PER POLICY 27-1, 89-06-21

P.C. 424

DEVELOPMENT HARDWARE
FOR TEST OR EXPERIMENTATION

A DIGITAL DEFINITION OF THIS PART IS AVAILABLE FROM THE CAD DATABASE. THIS DATA CAN BE ACCESSED BY ENTERING THE CAD SYSTEM WITH THE APPROPRIATE RELEASED FILENAME. MANUAL CHANGES TO THIS DWG ARE PROHIBITED.

FILENAME IS 424D.1204148.NC.WASHER

1204148

THIS DOCUMENT AND THE DATA DISCLOSED HEREIN OR HEREWITH IS NOT TO BE REPRODUCED, USED OR DISCLOSED IN WHOLE OR IN PART TO ANYONE WITHOUT THE PERMISSION OF AEROJET TECH-SYSTEMS

NOTES:

1. INTERPRET DRAWING PER ATC-STD-4926.
2. MARK PER AS478-7A WITH 1206472 AND APPLICABLE DASH NUMBER.

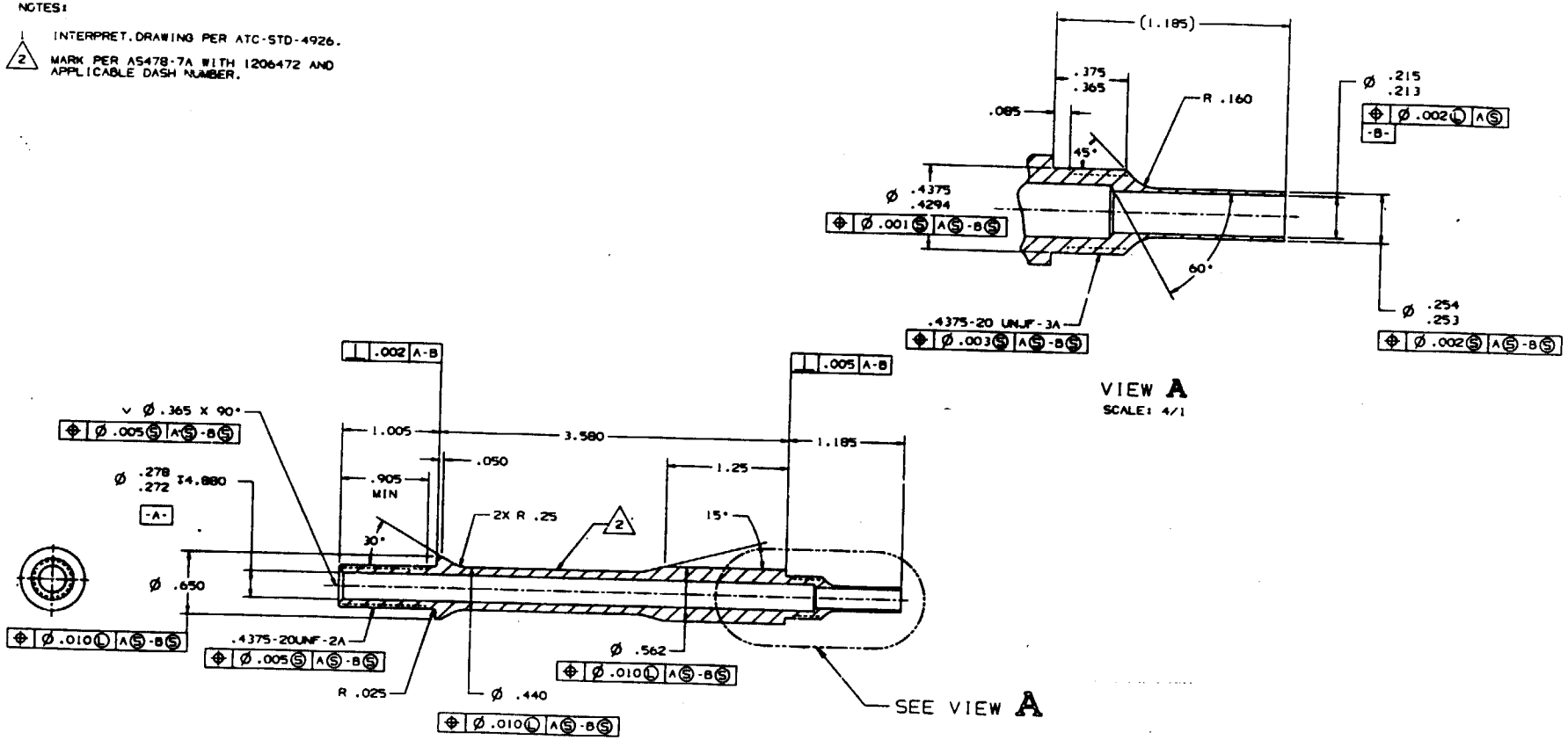

LTR	DESCRIPTION	RELEASE DATE	APPROVED

REVISIONS

QTY REQD PER ASSY	CAGE CODE	PART OR IDENTIFYING NO.	NOMENCLATURE OR DESCRIPTION	MATERIAL SPECIFICATION	ITEM NO.
		-1		CRES 00-S-763, CL 347, COND A	1

PARTS LIST

CONTRACT NO. NASA-37470

UNLESS OTHERWISE SPECIFIED DIMENSIONS & TOLERANCES ARE IN INCHES & PER ANSI Y14.5

TOLERANCES: DECIMALS .XX ±.03, .XXX ±.010; ANGULAR ±0.5°

SURFACE FINISH-MICRO

DO NOT SCALE DRAWING

DRAWN WESTMAN 90-7-12

CHECKED 90-8-28

ENGINEERING 90/8/27

MANUFACTURING 90/8/27

QUALITY

COMPANY

DEV. LEVEL 1

UNICORP AEROJET TechSystems SACRAMENTO, CALIFORNIA

TITLE OXIDIZER INJECTION TUBE

SIZE D CAGE CODE 05824 DWG. NO. 1206472

SCALE 2/1 RELEASE DATE 90-8-29 R SHEET 1 OF 1

THIS DRAWING HAS BEEN REVIEWED PER POLICY 27-1. 90-7-12

P.C. 424

RETAINED

ORIGINATOR 5-17-90

CHECKED 8-27-90

SUBMITTED 8-27-90

ADDITIONAL APPROVALS DATE

DEVELOPMENT HARDWARE
FOR TEST OR EXPERIMENTATION

A DIGITAL DEFINITION OF THIS PART IS AVAILABLE FROM THE CAD DATABASE. THIS DATA CAN BE ACCESSED BY ENTERING THE CAD SYSTEM WITH THE APPROPRIATE RELEASED FILENAME. MANUAL CHANGES TO THIS DWG ARE PROHIBITED.

FILENAME IS 424D.1206472.NC.OX.TUBE

1206472

THIS DOCUMENT AND THE DATA DISCLOSED HEREIN OR HEREWITH IS NOT TO BE REPRODUCED, USED OR DISCLOSED IN WHOLE OR IN PART TO ANYONE WITHOUT THE PERMISSION OF AEROJET TECHSYSTEMS

REVISIONS

LTR	DESCRIPTION	RELEASE DATE	APPROVED

NOTES:

1. INTERPRET DRAWING PER ATC-STD-4926.
2. MARK PER AS478- 35D WITH 1206473 AND APPLICABLE DASH NUMBER.
3. KNURL INDICATED SURFACE WITH A 160 DP STRAIGHT KNURL, MINIMUM OF 75% OF INDICATED SURFACE.
4. MATERIAL TO MEET HYDROGEN EMBRITTLEMENT TEST OF ASTM-B-577, PROCEDURE B.

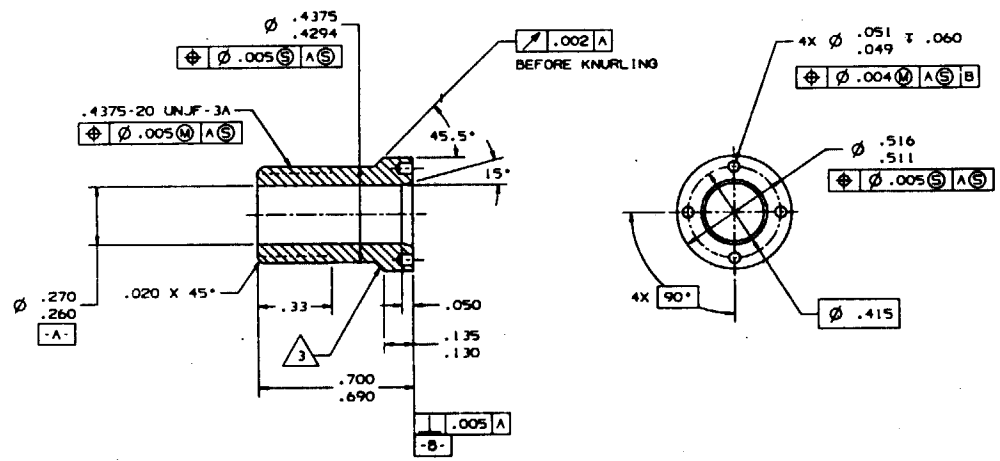

4		-1		GLIDCOP GR AL-15	1
QTY REQD PER ASSY	CASE CODE	PART OR IDENTIFYING NO.	NOMENCLATURE OR DESCRIPTION	MATERIAL SPECIFICATION	ITEM NO.

PARTS LIST

CONTRACT NO. NAS8-37470

UNLESS OTHERWISE SPECIFIED DIMENSIONS & TOLERANCES ARE IN INCHES & PER ANSI Y14.5

TOLERANCES
DECIMALS ANGULAR
.XX ±.03 ±0.5°
.XXX ±.010
SURFACE ROUGHNESS
DO NOT SCALE DRAWING

DRAWN WESTMAN DATE 90-7-16

GENCORP AEROJET TechSystems SACRAMENTO, CALIFORNIA

TITLE FACE NUT, BOMB

SIZE D CAGE CODE 05824 DWG. NO. 1206473

SCALE 4/1 RELEASE DATE 90-8-29 R SHEET 1 OF 1

DEVELOPMENT HARDWARE
FOR TEST OR EXPERIMENTATION

A DIGITAL DEFINITION OF THIS PART IS AVAILABLE FROM THE CAD DATABASE. THIS DATA CAN BE ACCESSED BY ENTERING THE CAD SYSTEM WITH THE APPROPRIATE RELEASED FILENAME. MANUAL CHANGES TO THIS DWG ARE PROHIBITED.

FILENAME IS 424D.1206473.NC.FCNUT.BMB

ADDITIONAL APPROVALS DATE

DWG. LEVEL 1

THIS DRAWING HAS BEEN REVIEWED PER POLICY 27-1. 90-7-16

P.C. 424

1206473 1

THIS DOCUMENT AND THE DATA DISCLOSED HEREIN OR HEREWITH IS NOT TO BE REPRODUCED, USED OR DISCLOSED IN WHOLE OR IN PART TO ANYONE WITHOUT THE PERMISSION OF AEROJET TECHSYSTEMS

NOTES:

1. INTERPRET DRAWING PER ATC-STD-4926.
2. MARK PER AS478-35D WITH 1206477 AND APPLICABLE DASH NUMBER.

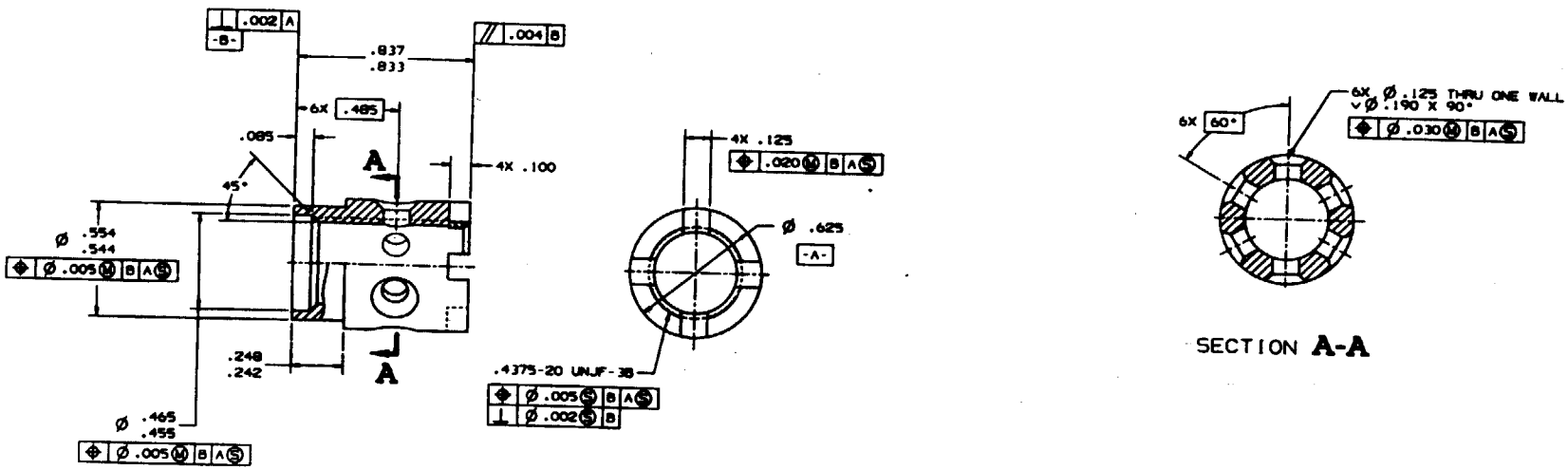

		-1	COUPLER	NITRONIC-60 AMS 5848	1
QTY REQD PER ASSY	CAGE CODE	PART OR IDENTIFYING NO.	NOMENCLATURE OR DESCRIPTION	MATERIAL SPECIFICATION	ITEM NO.

PARTS LIST

NAS8-37470

WESTMAN 90-7-11

GROUP AEROJET Technisystems SACRAMENTO, CALIFORNIA

TITLE: COUPLER - INJECTOR ELEMENT

SIZE D | CAGE CODE 05824 | DWG. NO. 1206477

SCALE 4/1 | RELEASE DATE 90-8-2 | SHEET 1 OF 1

THIS DRAWING HAS BEEN REVIEWED PER POLICY 27-1, 90-7-11 | P.C. 424

DEVELOPMENT HARDWARE
FOR TEST OR EXPERIMENTATION

A DIGITAL DEFINITION OF THIS PART IS AVAILABLE FROM THE CAD DATABASE. THIS DATA CAN BE ACCESSED BY ENTERING THE CAD SYSTEM WITH THE APPROPRIATE RELEASED FILENAME. MANUAL CHANGES TO THIS DWG ARE PROHIBITED.

FILENAME IS 424D.1206477.NC.COUPLER

1206477

NOTES:

1. INTERPRET DRAWING PER ATC-STD-4926.
2. MARK PER AS478-7A WITH 1206479 AND APPLICABLE DASH NUMBER.
3. MARK PER AS478-7A WITH INFORMATION SHOWN WITH .25 HIGH CHARACTERS.
4. FUSION WELD PER ATC-46351, USING (5).
5. ELECTRON BEAM WELD PER ATC-STD-4897-1.
6. ALL DIMENSIONS ⌖ Ø.01C Ⓢ A C Ⓢ UNLESS OTHERWISE NOTED.
7. PENETRANT INSPECT WELDS PER ATC-STD-4942, TYPE I, METHOD A. ETCHING (PER PARA 5.1.4) IS NOT REQD. ACCEPTANCE CRITERIA PER ATC-STD-4005, CLASS II.
8. CLEANLINESS PER ATC-STD-4940, LEVEL VC EXTERNAL SURFACES AND LEVEL 200 INTERNAL PASSAGES. SSA IS 750 SQUARE FEET.
9. PREVENTIVE MEASURES SHALL BE TAKEN TO PROTECT INTERNAL PASSAGES IN (1) FROM BLOCKAGE OR CONTAMINATION DURING MACHINING AND HANDLING.

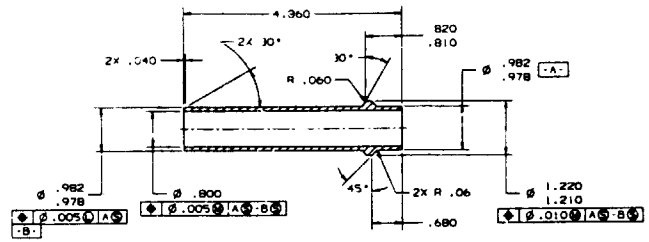

(3) DETAIL
SCALE: 1/1

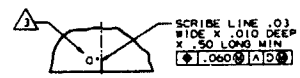

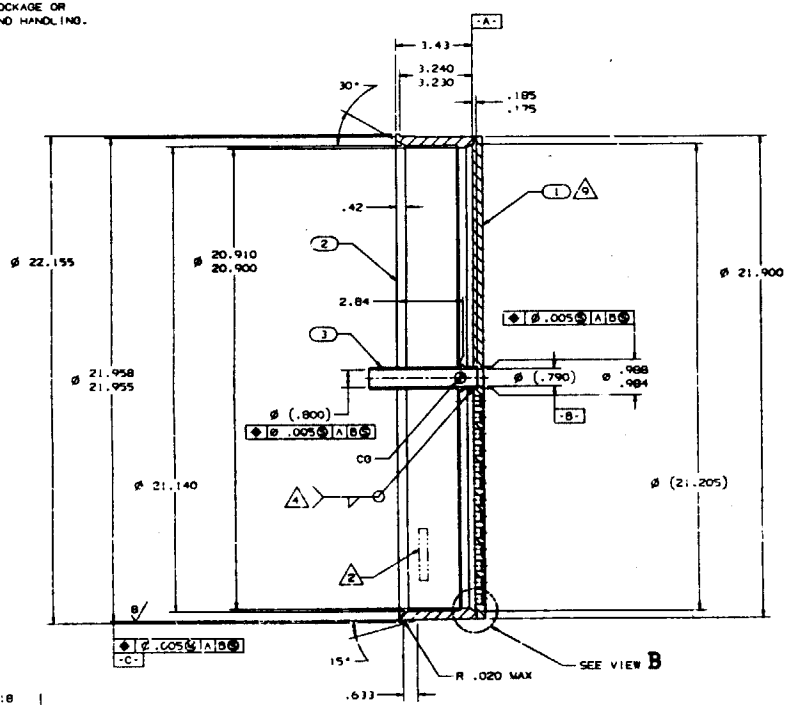

SECTION A-A

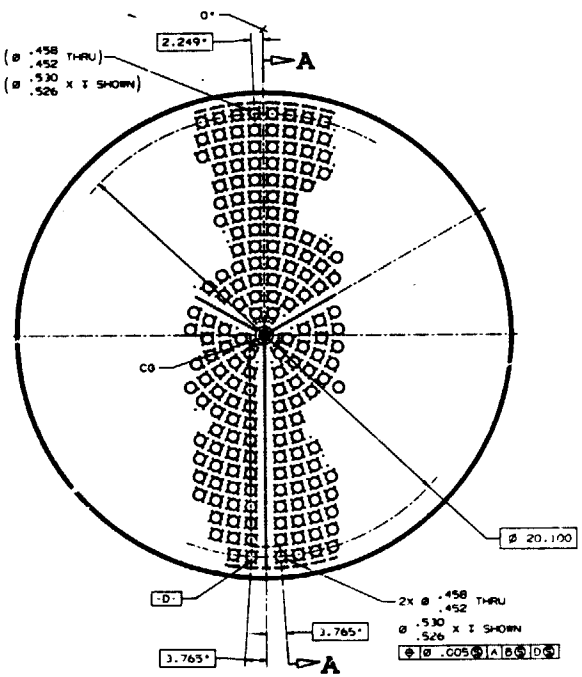

-9 ASSY

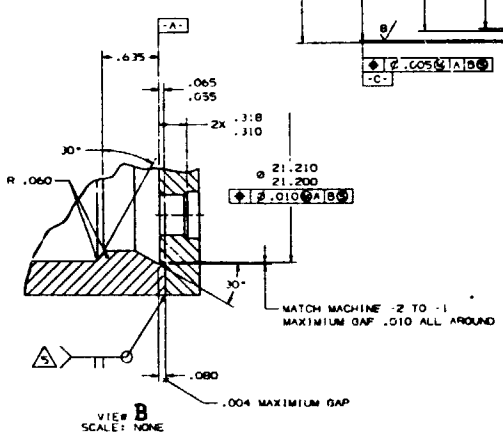

VIEW B
SCALE: NONE

INSEPARABLE ASSEMBLY DRAWING

AR			WELD ROD	ER349 OR 308L AWS A5.9		5
						4
1		-3	TUBE	CRES	QQ-S-763 OR 766 CL 304L COND A	3
1		-2	FACE RING			2
1		-1	FACE PLATE	ALTER FROM 1206490 D		1
REQ	CAGE CODE	PART OR IDENTIFYING NO.	NOMENCLATURE OR DESCRIPTION	MATERIAL SPECIFICATION		ITEM NO.

PARTS LIST

PROPRIETARY NO. NAS8-37470

DO NOT SCALE DRAWING

DEVELOPMENT HARDWARE
FOR TEST OR EXPERIMENTATION

A DIGITAL DEFINITION OF THIS PART IS AVAILABLE FROM THE CAD DATABASE. THIS DATA CAN BE ACCESSED BY ENTERING THE CAD SYSTEM WITH THE APPROPRIATE RELEASED FILENAME. MANUAL CHANGES TO THIS DWG ARE PROHIBITED.
FILENAME IS 424P.1206479.NC.FACE.PL

62.7 .8 1

GENCORP AEROJET
Textron Systems

FACE PLATE ASSY

SIZE E CAGE CODE 05824 DWG NO. 1206479
SCALE 1/1 DATE 90-8-31 REV R SHEET 1 OF 1

P.C. 424

B-25

☒ ADCN ☐ DCN	RELEASE DATE 91-6-21	DOCUMENT CHANGE NOTICE	DOCUMENT NUMBER 1206479	REV LTR NC-2	SHEET 1 of 1
ECRA NO		GENCORP AEROJET Propulsion Division Sacramento, CA CAGE 05824	DOCUMENT TITLE FACE PLATE ASSY		
PREPARED BY JA SCHNEIDER	DATE 91-06-18				

APPROVALS

CHECK B Campbell 91-06-20	PROJECT ENGR	THERMAL	MFG / PRODUCIBILITY	NUCLEAR HDNS	STG DESIGN MGR
DESIGN E.W.	CONFIGURATION	DYNAMICS	QUALITY ASSURANCE	RELIABILITY	PROCUREMENT
DESIGN MGR	STRESS	MATLS & PROCESSES	WEIGHTS	MAINTAINABILITY	CUSTOMER

ZONE ITEM

5D

"IS"

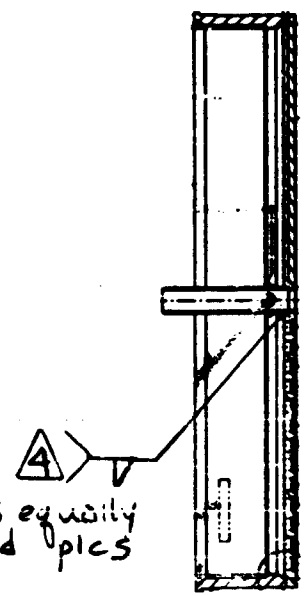

Weld 3 equally spaced plcs

"WAS"

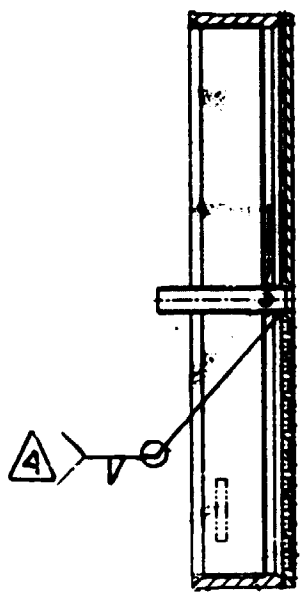

P.C. 424

☒ ADCN ☐ DCN | 91-6-5

DOCUMENT CHANGE NOTICE

GenCorp Aerojet — Propulsion Division, Sacramento, CA, CAGE 05824

1206479 | NC-1 | 1 of 2

FACE PLATE ASSY

JA SCHNEIDER | 91-5-31

APPROVALS

ZONE ITEM

PL 1 "IS"

10	1		-1	FACE PLATE	ALTER FROM 1206480-9	1
	-9	CAGE CODE	PART OR IDENTIFYING NO	NOMENCLATURE OR DESCRIPTION	MATERIAL SPECIFICATION	ITEM NO.

"WAS"

	1		-1	FACE PLATE	ALTER FROM 1206480-9	1
	-9	CAGE CODE	PART OR IDENTIFYING NO	NOMENCLATURE OR DESCRIPTION	MATERIAL SPECIFICATION	ITEM NO.

7B 2 "IS" "WAS"

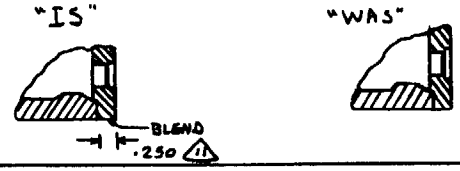

P.C. 424

DOCUMENT CHANGE NOTICE CONTINUATION SHEET

GenCorp Aerojet — Propulsion Division, Sacramento, CA, CAGE 05824

91-6-5

☒ ADCN ☐ DCN | 91-5-31 | 1206479 | NC-1 | 2 of 2

ZONE ITEM

GN 3 NOTE 8 "IS":

8 MAINTAIN CLEANLINESS SUCH THAT AT FINAL ASSEMBLY INTO PN 1206471, REQUIRED CLEANLINESS LEVEL IS MAINTAINED. ALL FLUIDS INTRODUCED MUST BE FILTERED TO ATC-STD-4940, LEVEL 200.

NOTE 8 "WAS":

8 CLEANLINESS PER ATC-STD-4940, LEVEL VC EXTERNAL SURFACES AND LEVEL 200 INTERNAL PASSAGES. SSA IS TBD SQUARE FEET.

GN 4 "ADDED" NOTE 10:

10 PRIOR TO MACHINING, PERFORM A POST DIFFUSION BOND HIP PROCESS IN ARGON AT 15,000 PSI PER ATC-STD-47247. HEAT PART TO 1700 °F AND HOLD FOR 1 HOUR. COOL WITHIN 30 MINUTES TO 1100 °F AND HOLD FOR 2 HOURS. COOL TO ROOM TEMPERATURE.

GN 5 "ADDED" NOTE 11:

11 ALL MACHINING IN THIS ZONE MUST USE AN ELECTRO-DISCHARGE MACHINING (EDM) PROCESS.

P.C. 424

THIS DOCUMENT AND THE DATA DISCLOSED HEREIN OR HEREWITH IS NOT TO BE REPRODUCED, USED OR DISCLOSED IN WHOLE OR IN PART TO ANYONE WITHOUT THE PERMISSION OF AEROJET TECHSYSTEMS

NOTES:

1. INTERPRET DRAWING PER ATC-STD-4926.
2. MARK PER AS478-37 WITH 1206481 AND APPLICABLE DASH NUMBER.
3. CLEAN AND PASSIVATE PER ATC-STD-4833, METHOD II.

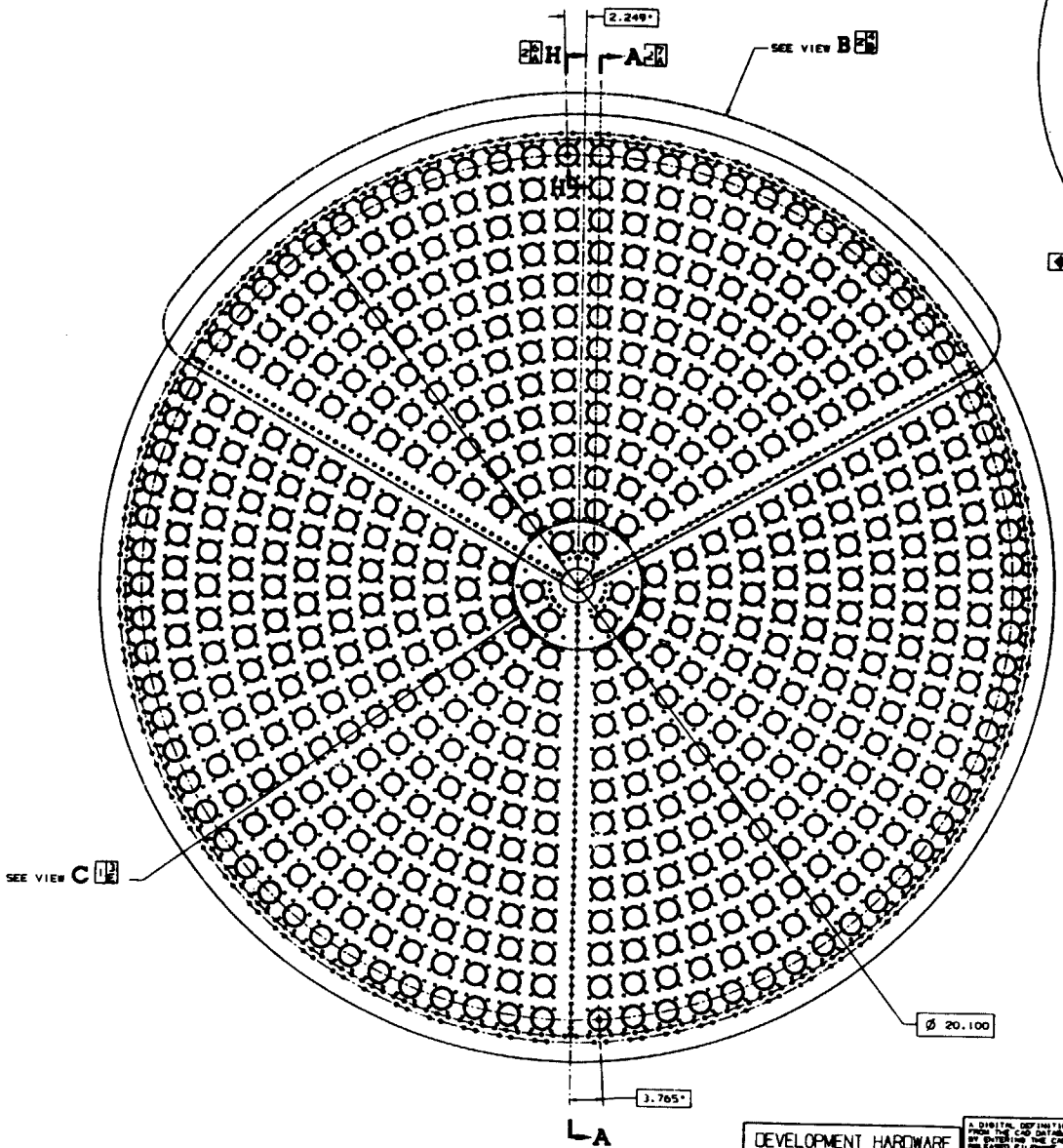

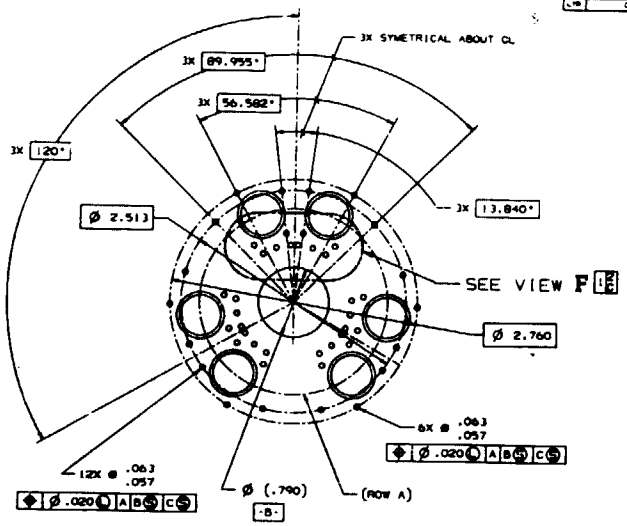

VIEW C
SCALE: 2/1

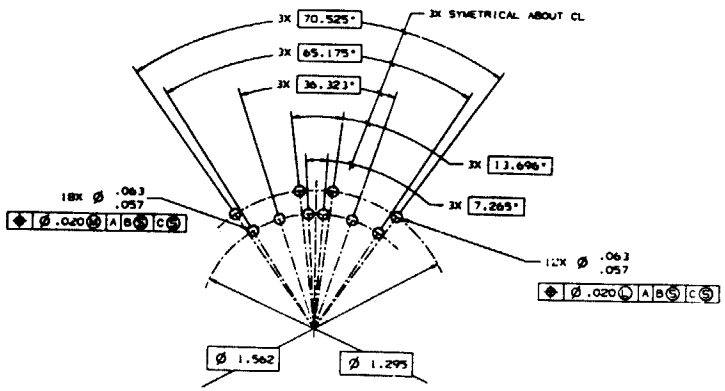

VIEW F
SCALE: 4/1

DEVELOPMENT HARDWARE
FOR TEST OR EXPERIMENTATION

A DIGITAL DEFINITION OF THIS PART IS AVAILABLE FROM THE CAD DATABASE. THIS DATA CAN BE ACCESSED BY ENTERING THE CAD SYSTEM WITH THE APPROPRIATE RELEASED FILENAME. MANUAL CHANGES TO THIS DWG ARE PROHIBITED.
FILENAME IS 4240.1206481.NC.BACK.PLATE

-1		CRES	00-5-766 CL 304L, COND A

NAS8-37470 | WESTMAN | 90-07-23

DO NOT SCALE DRAWING

BACKING PLATE

E | 05824 | 1206481

1/2 | 90-8-30 | 1 OF 3

P.C. 424

1206481

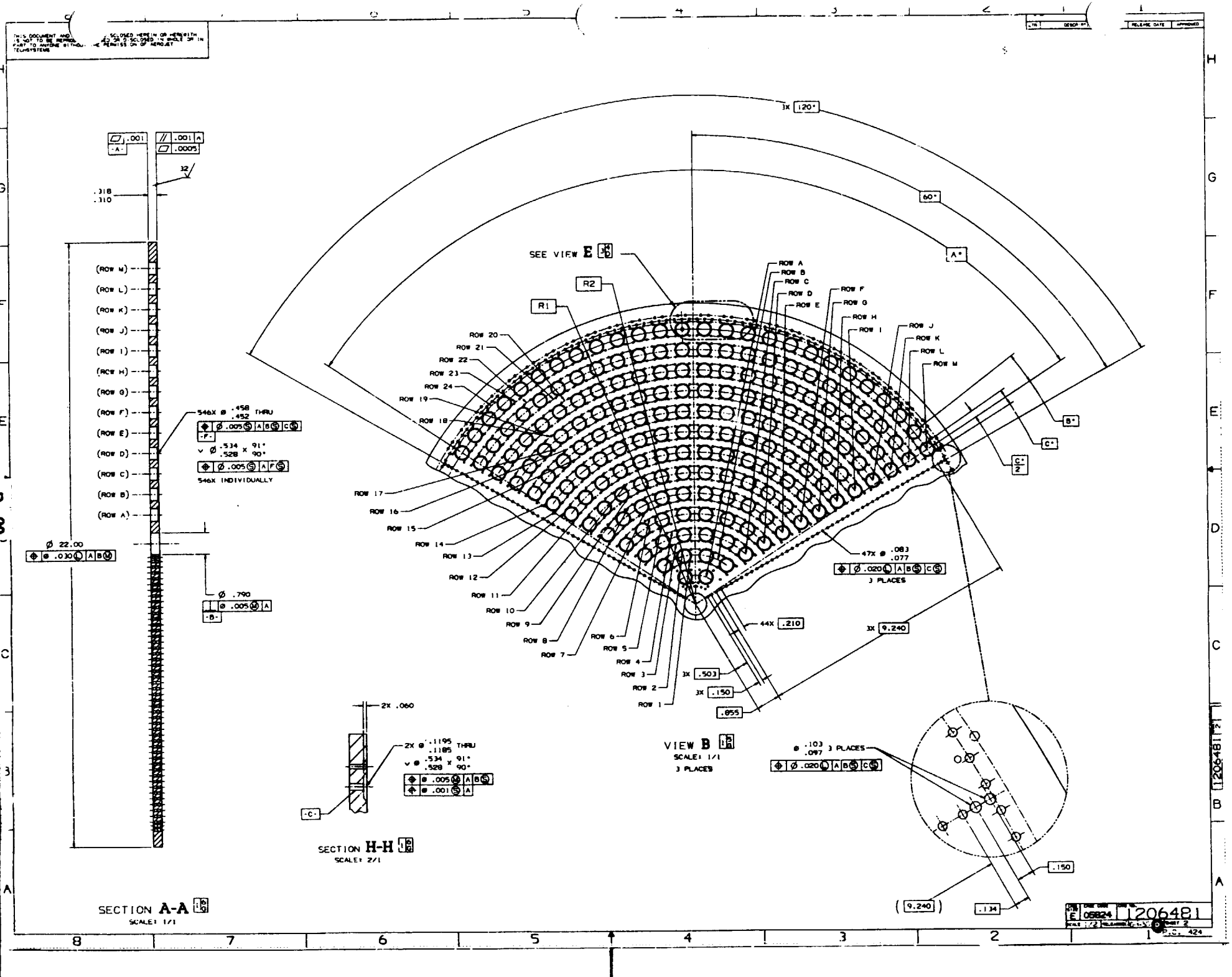

SECTION A-A
SCALE: 1/1
SECTION H-H
SCALE: 2/1
VIEW B
SCALE: 1/1
3 PLACES
SEE VIEW E
546X INDIVIDUALLY
47X ø .083 .077
3 PLACES
ø .103 .097 3 PLACES
3X 120°
60°
A°
B°
C°
C°/2
R1
R2
44X .210
3X 9.240
3X .503
3X .150
.855
.150
.134
(9.240)
2X .060
2X ø .1195 .1185 THRU
ø .534 .528 x 91° 90°
ø .005 M A B S
ø .001 S A
ø 22.00
ø .030 L A B M
ø .790
ø .005 M A
-B-
-C-
-F-
ROW A
ROW B
ROW C
ROW D
ROW E
ROW F
ROW G
ROW H
ROW I
ROW J
ROW K
ROW L
ROW M
ROW 1
ROW 2
ROW 3
ROW 4
ROW 5
ROW 6
ROW 7
ROW 8
ROW 9
ROW 10
ROW 11
ROW 12
ROW 13
ROW 14
ROW 15
ROW 16
ROW 17
ROW 18
ROW 19
ROW 20
ROW 21
ROW 22
ROW 23
ROW 24
.318
.310
.001
.001 A
.0005
32
1206481
05824
P.C. 424

THIS DOCUMENT AND THE DATA DISCLOSED HEREIN OR HEREWITH IS NOT TO BE REPRODUCED, USED OR DISCLOSED IN WHOLE OR IN PART TO ANYONE WITHOUT THE PERMISSION OF ASHLEY TECHNOLOGIES

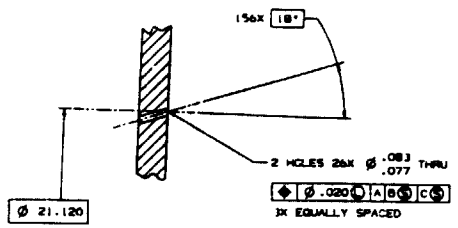

SECTION D-D
SCALE: 2/1

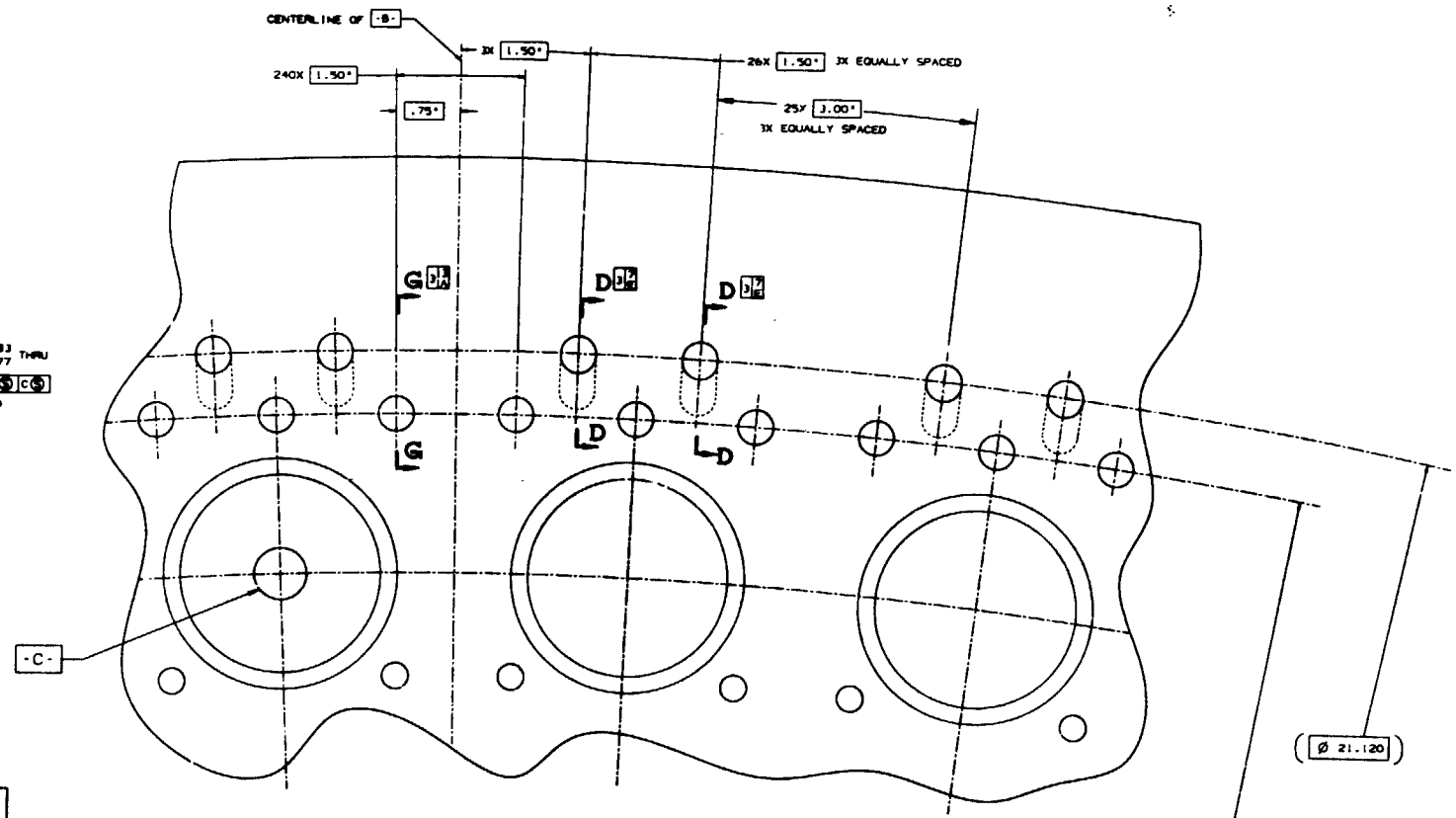

VIEW E
SCALE: 10/1

TABLE I 3 PLACES EQUALLY SPACED ◆ Ø .020 Ⓛ A B Ⓢ C					
ROW NO.	A°	R2	C°	NUMBER OF HOLES	B°
1	76.977	1.550	16.840	2 HOLES 4X	76.977/3
2	76.977	2.006	17.070	2 HOLES 4X	76.977/3
3	90.000	2.303	11.734	2 HOLES 6X	90.000/5
4	90.000	2.782	11.262	2 HOLES 6X	90.000/5
5	96.926	3.054	9.900	2 HOLES 8X	96.926/7
6	96.926	3.534	8.721	2 HOLES 8X	96.926/7
7	101.242	3.805	7.300	2 HOLES 10X	101.242/9
8	101.242	4.286	7.116	2 HOLES 10X	101.242/9
9	104.194	4.556	6.141	2 HOLES 12X	104.194/11
10	104.194	5.037	6.009	2 HOLES 12X	104.194/11
11	106.341	5.276	5.300	2 HOLES 14X	106.341/13
12	106.341	5.787	5.200	2 HOLES 14X	106.341/13
13	107.973	6.052	4.560	2 HOLES 16X	107.973/15
14	107.973	6.533	4.665	2 HOLES 16X	107.973/15
15	109.257	6.802	4.095	2 HOLES 18X	109.257/17
16	109.257	7.284	4.163	2 HOLES 18X	109.257/17
17	110.291	7.549	3.637	2 HOLES 20X	110.291/19
18	110.291	8.030	3.818	2 HOLES 20X	110.291/19
19	111.146	8.303	3.379	2 HOLES 22X	111.146/21
20	111.146	8.785	3.425	2 HOLES 22X	111.146/21
21	111.860	9.056	3.131	2 HOLES 24X	111.860/23
22	111.860	9.538	3.123	2 HOLES 24X	111.860/23
23	112.469	9.812	2.262	2 HOLES 26X	112.469/25
24	112.469	10.320	2.152	2 HOLES 26X	112.469/25

TABLE II 3 PLACES EQUALLY SPACED				
ROW NO.	A°	R1	NUMBER OF HOLES	B°
A	42.110	1.050	2	42.110
B	76.977	1.800	4	76.977/3
C	90.000	2.550	6	90.000/5
D	96.926	3.300	8	96.926/7
E	101.242	4.050	10	101.242/9
F	104.194	4.800	12	104.194/11
G	106.341	5.550	14	106.341/13
H	107.973	6.300	16	107.973/15
I	109.257	7.050	18	109.257/17
J	110.291	7.800	20	110.291/19
K	111.146	8.550	22	111.146/21
L	111.860	9.300	24	111.860/23
M	112.469	10.050	26	112.469/25

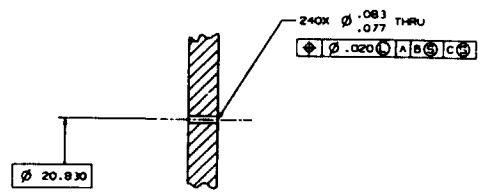

SECTION G-G
SCALE: 2/1

SIZE	CAGE CODE	DWG NO.
E	05824	1206481

SCALE 1/2 REVISED 1-3-7 SHEET 3 OF 3

B-3

DOCUMENT CHANGE NOTICE

GENCORP AEROJET — TechSystems, SACRAMENTO, CALIFORNIA

☒ ADCN ☐ DCN	DATE 90-10-18	DWG LVL 1	DOCUMENT NUMBER 1206481
ECRA NO	RELEASE DATE 90-12-21	DOCUMENT TITLE BACKING PLATE	REV LTR NC-1
PREPARED BY B. CAROTHERS			SHEET 1 of 1

APPROVALS

DESIGN	DESIGN ACTIVITY	CHECK	STRESS	WT
	QA	MANUF	MAT'L	CMO

SH	ZONE	ITEM	
3	4C	1	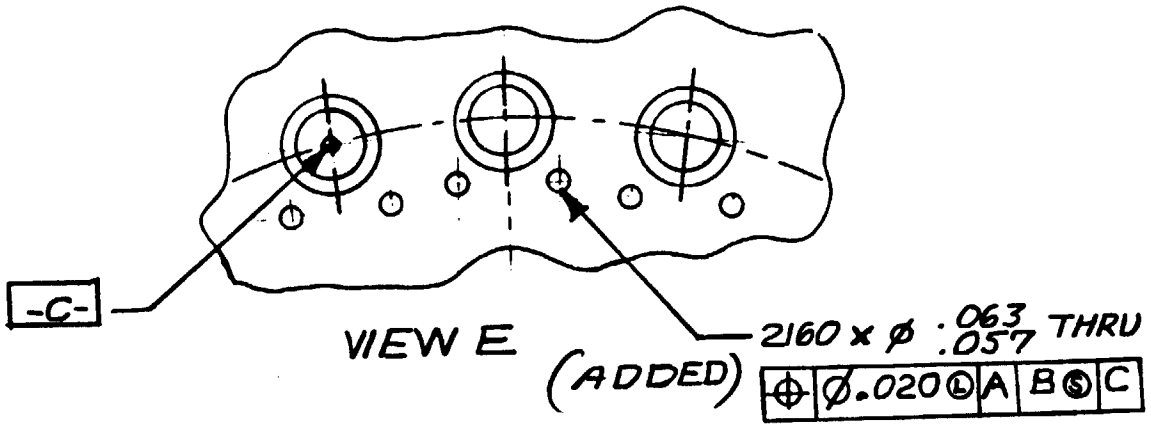
3	7D	2	(IS) TABLE I 3 PLACES EQUALLY SPACED (WAS) TABLE I 3 PLACES EQUALLY SPACED ⌖ Ø.020 Ⓛ A B Ⓢ C
2	6B	3	(IS) 2 x Ø .121/.120 thru (WAS) 2 x Ø .1195/.1185 thru

P.C. 424

BRUNING 40-22 TECH 00010

THIS DOCUMENT AND THE DATA DISCLOSED HEREIN OR HEREWITH IS NOT TO BE REPRODUCED, USED OR DISCLOSED IN WHOLE OR IN PART TO ANYONE WITHOUT THE PERMISSION OF AEROJET TECHSYSTEMS

NOTES:

1. INTERPRET DRAWING PER ATC-STD-4926.
2. MARK PER AS478 CLASS D WITH 1206482 AND APPLICABLE DASH NUMBER.
3. MARK PER AS478-37 WITH 1206482 AND APPLICABLE DASH NUMBER.
4. ALL DIAMETERS ⌖ ø.030Ⓜ A B Ⓜ UNLESS OTHERWISE NOTED.
5. ANODIZE PER MIL-A-8625, TYPE II, CLASS I, AFTER FINISH MACHINING.
6. PERMISSIBLE TO FABRICATE FROM MULTIPLE PIECES USING (7). ALL DIMENSIONS APPLY AFTER WELDING.
7. WELD PER ATC-46351.
8. PENETRANT INSPECT WELDS PER ATC-STD-4942, TYPE I, METHOD A. ETCHING (PER PARA 5.1.4) IS NOT REQUIRED. ACCEPTANCE CRITERIA PER ATC-STD-4005, CLASS II.

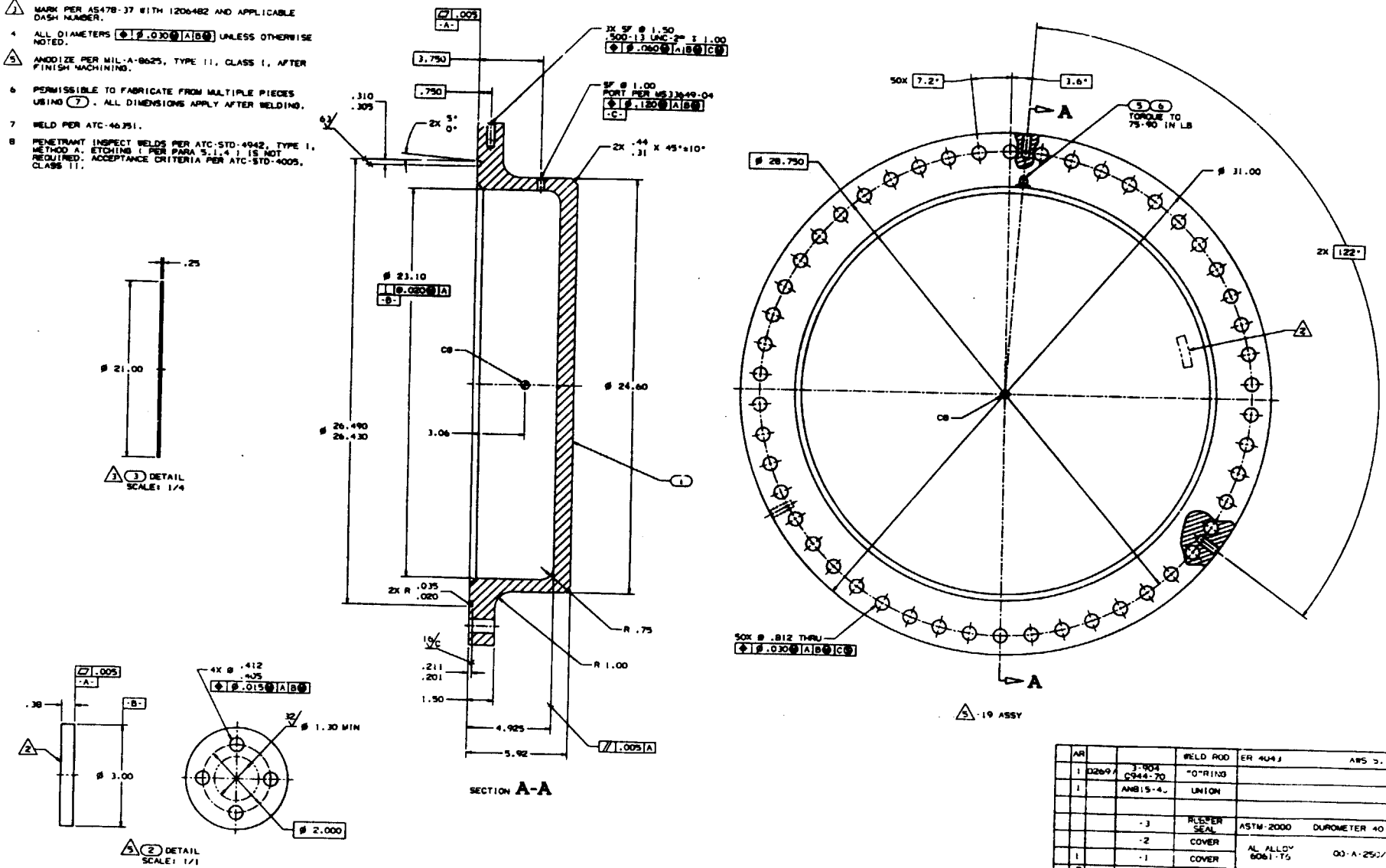

	AR			WELD ROD	ER 4043 AWS 5.10	7
	1	0269	3-904 C944-70	"O"RING		6
	1		AN815-4	UNION		5
						4
			-3	RUBBER SEAL	ASTM-2000 DUROMETER 40-50	3
			-2	COVER	AL ALLOY 6061-T6 QQ-A-250/11	2
	1		-1	COVER		1
	-9	CODE IDENT	PART OR IDENTIFYING NO.	NOMENCLATURE OR DESCRIPTION	MATERIAL SPECIFICATION	ITEM NO.

PARTS LIST

NASA-37470

FULLER 5/8/87

GenCorp AEROJET TechSystems SACRAMENTO, CALIFORNIA

TITLE COVER PLATE, INJECTOR LEAK

SIZE E CODE IDENT 05824 DWG. NO. 1206482

SCALE 1/2 WEIGHT 115.5 LB SHEET 1 OF 1

90-8-30

P.C. 424

DEVELOPMENT HARDWARE
FOR TEST OR EXPERIMENTATION

A DIGITAL DEFINITION OF THIS PART IS AVAILABLE FROM THE CAD DATABASE. THIS DATA CAN BE ACCESSED BY SUBMITTING THE CAD SYSTEM WITH THE APPROPRIATE RELEASED FILENAME. MANUAL CHANGES TO THIS DWG ARE PROHIBITED.
FILENAME IS 424Y.1206482.NC.INJ.COVER

DO NOT SCALE DRAWING

THIS DOCUMENT AND THE DATA DISCLOSED HEREIN OR HEREWITH IS NOT TO BE REPRODUCED, USED OR DISCLOSED IN WHOLE OR IN PART TO ANYONE WITHOUT THE PERMISSION OF AEROJET TECHSYSTEMS

NOTES:

1. INTERPRET DRAWING PER ATC-STD-4926.
2. MARK PER AS478-CLASS C WITH 1206484 AND APPLICABLE DASH NUMBER.

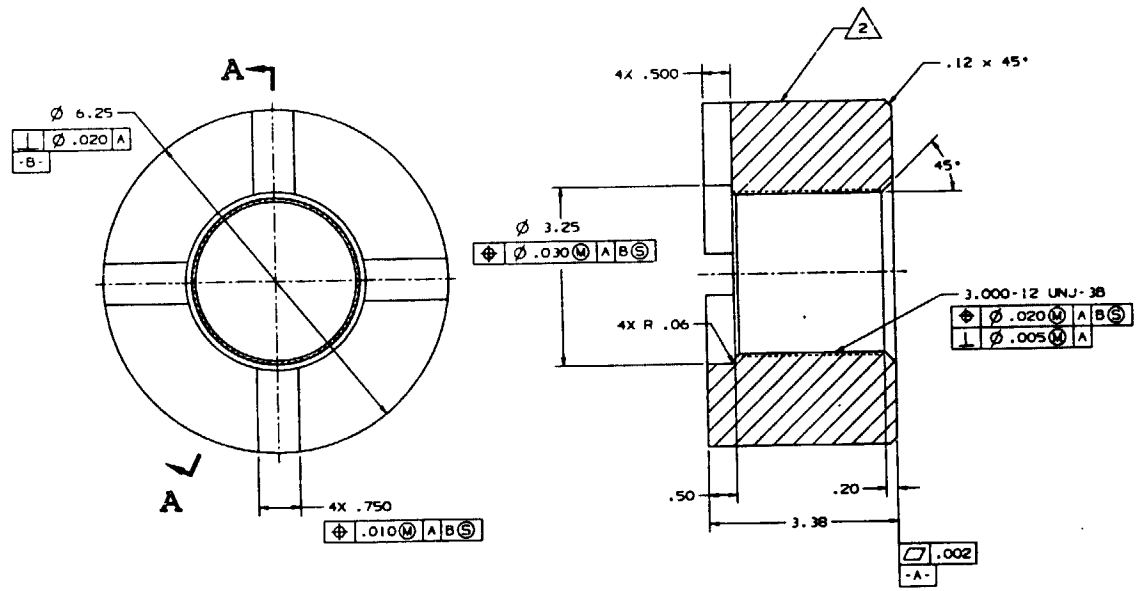

SECTION **A-A**

REVISIONS			
LTR	DESCRIPTION	RELEASE DATE	APPROVED

QTY REQD PER ASSY	CAGE CODE	PART OR IDENTIFYING NO.	NOMENCLATURE OR DESCRIPTION	MATERIAL SPECIFICATION	ITEM NO.
		-1		NITRONIC-60 AMS 5848	1

PARTS LIST

CONTRACT NO. NAS8-37470
UNLESS OTHERWISE SPECIFIED DIMENSIONS & TOLERANCES ARE IN INCHES & PER ANSI Y14.5
TOLERANCES DECIMALS ±.03 .XX ±.010 .XXX ANGULAR ±0.5°
DO NOT SCALE DRAWING
DWG. LEVEL 1

DESIGN WESTMAN DATE 90-7-16
DRAWN 7/1/90
MATERIAL AND PROCESSES 7/1/90
QUALITY ASSURANCE 90/8/1
ADDITIONAL APPROVALS DATE

GenCorp AEROJET TechSystems SACRAMENTO, CALIFORNIA

TITLE NUT - OXIDIZER COVER

SIZE D CAGE CODE 05824 DWG. NO. 1206484
SCALE 1/1 RELEASE DATE 90-8-2 REV R SHEET 1 OF 1

THIS DRAWING HAS BEEN REVIEWED PER POLICY 27-1. 90-7-16

P.C. 424

DEVELOPMENT HARDWARE
FOR TEST OR EXPERIMENTATION

A DIGITAL DEFINITION OF THIS PART IS AVAILABLE FROM THE CAD DATABASE. THIS DATA CAN BE ACCESSED BY ENTERING THE CAD SYSTEM WITH THE APPROPRIATE RELEASED FILENAME. MANUAL CHANGES TO THIS DWG ARE PROHIBITED.
FILENAME IS 424Y.1206484.NC.NUT-OXID

1206484 1

THIS DOCUMENT AND THE DATA DISCLOSED HEREIN OR HEREWITH IS NOT TO BE REPRODUCED, USED OR DISCLOSED IN WHOLE OR IN PART TO ANYONE WITHOUT THE PERMISSION OF AEROJET TECHSYSTEMS

REVISIONS			
LTR	DESCRIPTION	RELEASE DATE	APPROVED

NOTES:

1. INTERPRET DRAWING PER ATC-STD-4926.
2. MARK PER AS478-7A WITH 1206485 AND APPLICABLE DASH NUMBER.

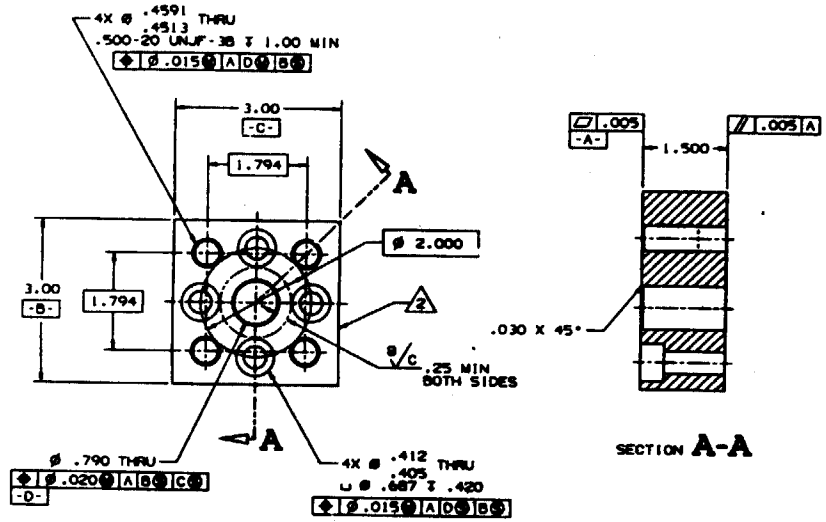

SECTION A-A

		-1		CRES	QQ-S-766 OR 763 CL. 304L COND A	1
QTY REQD PER ASSY	CAGE CODE	PART OR IDENTIFYING NO.	NOMENCLATURE OR DESCRIPTION	MATERIAL SPECIFICATION	ITEM NO.

PARTS LIST

NASA-37470 UNLESS OTHERWISE SPECIFIED DIMENSIONS & TOLERANCES ARE IN INCHES & PER ANSI Y14.5 TOLERANCES DECIMALS .XX ±.03 .XXX ±.010 ANGULAR ±0.5° SURFACE ROUGHNESS DO NOT SCALE DRAWING

FULLER

GenCorp AEROJET TechSystems S. CHARTRES, CALIFORNIA

TITLE ADAPTER, IGNITER

SIZE D | CAGE CODE 05824 | DWG NO. 1206485

SCALE 1/1 | RELEASE DATE 90-8-2 | SHEET 1 OF 1

THIS DRAWING MAS REVIEWED PER POLICY E7-1. | P.C. 424

DEVELOPMENT HARDWARE
FOR TEST OR EXPERIMENTATION

A DIGITAL DEFINITION OF THIS PART IS AVAILABLE FROM THE CAD DATABASE. THIS DATA CAN BE ACCESSED BY ENTERING THE CAD SYSTEM WITH THE APPROPRIATE RELEASED FILENAME. MANUAL CHANGES TO THIS DWG ARE PROHIBITED.

FILENAME IS 424U.1206485.NC.ADAPTER

1206485

THIS DOCUMENT AND DISCLOSED HEREIN OR HEREWITH IS NOT TO BE REPRODUCED OR DISCLOSED IN WHOLE OR IN PART TO ANYONE WITHOUT PERMISSION OF AEROJET TECHSYSTEMS

NOTES:

1. INTERPRET DRAWING PER ATC-STD-4926.
2. MARK PER AS478, CLASS D WITH 1206486 AND APPLICABLE DASH NUMBER. [2 4 C]
3. FUSION WELD PER ATC-46351, USING (19). [3 1 2 6 7 C G D C]
4. ELECTRON BEAM WELD PER ATC-STD-4897-1. VENDOR TO SUBMIT 6 WELD SAMPLES FOR AEROJET APPROVAL PER PARA 5.5.3 [3 7 6 G F]
5. DIMENSION IS NON-MANDATORY (MFG DATA) MACHINE MATING PARTS TO ACCOMPLISH A .000 TO .004 DIAMETRICAL CLEARANCE FIT. [3 6 4 G F]
6. FOR -9 ASSY ALL DIAMETERS [⌖ Ø.030 Ⓜ A B Ⓜ] UNLESS OTHERWISE NOTED.
7. FOR -19 ASSY ALL DIAMETERS [⌖ Ø.010 Ⓜ A B Ⓜ] UNLESS OTHERWISE NOTED.
8. PENETRANT INSPECT WELDS PER ATC-STD-4942, TYPE I. METHOD A. ETCHING (PER PARA 5.1.4) IS NOT REQD. ACCEPTANCE CRITERIA PER ATC-STD-4005, CLASS II. [3 1 1 5 7 C G D C]
9. RADIOGRAPHIC INSPECT WELDS PER ATC-STD-4944. ACCEPTANCE CRITERIA PER ATC-STD-4005, CLASS II. [3 1 1 5 7 C G D C]
10. MARK PER AS478-7 WITH INFORMATION SHOWN WITH .25 HIGH CHARACTERS. [1 5 4 5 6 C F F F]
11. CLEANLINESS PER ATC-STD-4940, LEVEL VC EXTERNAL SURFACES, LEVEL 200K INTERNAL SURFACES, SSA IS 10.3 SQUARE FEET.
12. ULTRASONIC INSPECT FORGING PER MIL-STD-2154, CLASS B. [1 3 B]
13. DIMENSION APPLIES BEFORE WELDING. [3 4 6 7 F G G]
14. MARK PER AS478-3D WITH 1206486 AND APPLICABLE DASH NUMBER. [3 4 C]
15. PROOF AND LEAK TEST PROCEDURE IS AS FOLLOWS:
    A. LEAK TEST PER ATC-47063, METHOD II USING CLEAR, DRY GN2, (FILTERED TO REQUIREMENTS OF ATC-STD-4940, LEVEL 2001, AT 50 ±5 PSIG FOR 5 MINUTES MAXIMUM. NO DETECTABLE LEAKAGE ALLOWED.
    B. PROOF TEST THE MANIFOLD WITH WATER, (FILTERED TO THE REQUIREMENTS OF ATC-STD-4940, LEVEL 2001, AT 4450 TO 4500 PSIG FOR 5 MINUTES MINIMUM. NO PERMANENT DISTORTION OR FAILURE PERMITTED.
    C. LEAK TEST PER ATC-47063, METHOD II USING CLEAR, DRY GN2, (FILTERED TO REQUIREMENTS OF ATC-STD-4940, LEVEL 2001, AT 50 ±5 PSIG FOR 5 MINUTES MAXIMUM. NO DETECTABLE LEAKAGE ALLOWED.

    FUEL INLET MANIFOLD (1206486-19). BACKFLUSH
    FLUSH AND BACKFLUSH THE PROPELLANT CIRCUIT USING WATER TO REMOVE CONTAMINATION AFTER DRILLING THE 50 Ø.75 INCH FEED HOLES.
16. PRIOR TO WELDING, PARTS TO BE FREE OF OXIDE SCALE AND OXYGEN CONTAMINATED LAYERS AND CLEANED PER ATC-STD-4833 METHOD II.
17. PERMISSIBLE TO BRIGHT ANNEAL PER COGNIZANT AEROJET PRODUCIBILITY ACTIVITY.

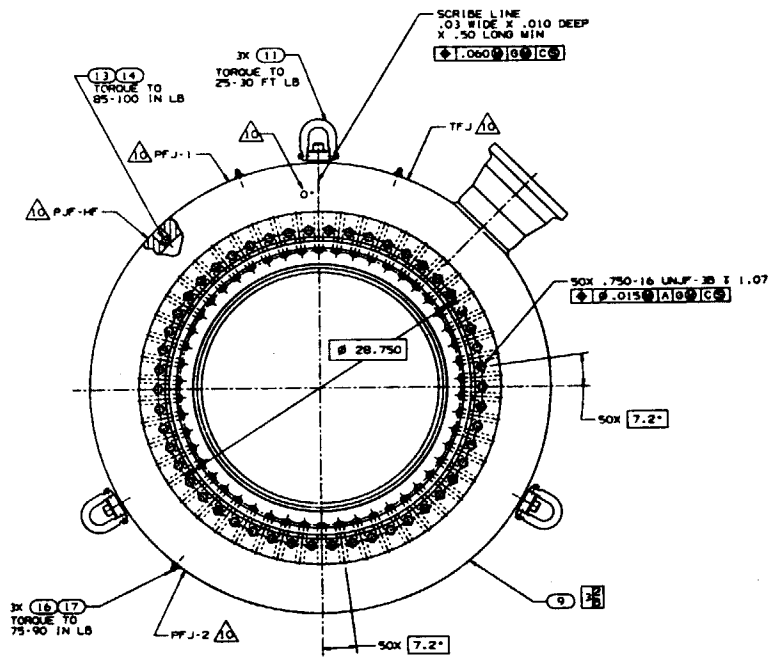

-19 ASSY
FWD VIEW

INSEPARABLE ASSEMBLY DRAWING

	AR						
				WELD ROD	ER349 OR ER308L AWS A5.9		19
							18
	3	50398	V0261-C109-0304	SEAL			17
	3		AN815-4J	UNION			16
							15
	1		AS4119-7	WASHER			14
	1		AS4119-1A	ADAPTER			13
							12
	3	99862	CL-4000-SHR-1	SWIVEL HOIST RING			11
							10
	1		-9	MANIFOLD ASSY			9
	1	14713	6GR52	HUB	CRES	ASTM A403 BP 304L	8
							7
	1		-6	SPLITTER			6
	1		-5	SPLITTER	CRES	00-S-766 CL 304L COND A	5
	3		-4	DIVERTER			4
	1		-3	TUBE		00-S-763 OR 00-S-766 CL 304L, COND A	3
(12)	1		-2	OUTER RING	CRES (FORGING)	00-S-763 CL 304L COND A	2
(12)	1		-1	INNER RING			1
-19	-9	BASE ASSY	PART NO. HIGHER ASSY NO.	DESCRIPTION	MATERIAL SPECIFICATION		ITEM NO.

1206486

DEVELOPMENT HARDWARE
FOR TEST OR EXPERIMENTATION

A DIGITAL DEFINITION OF THIS PART IS AVAILABLE FROM THE CAD DATABASE. THIS DATA CAN BE ACCESSED BY ENTERING THE CAD SYSTEM WITH THE APPROPRIATE RELEASED FILENAME. MANUAL CHANGES TO THIS DWG ARE PROHIBITED.
FILENAME IS 424D.1206486.NC.FUEL.INLET

DO NOT SCALE DRAWING

NASA-37470	FULLER	5/7/79	
TOLERANCES: DECIMALS .XX ±.03 .XXX ±.010; ANGULAR ±0.5°			
WEIGHT (POUNDS) 1241 LB	SHEET 1 OF 1		

AEROJET TECHSYSTEMS — MANIFOLD ASSY, FUEL INLET

SIZE E | CAGE CODE 05824 | DWG NO. 1206486 | SCALE 1/4 | RELEASE DATE 10-9-80 | SHEET 1 OF 3

P.G. 424

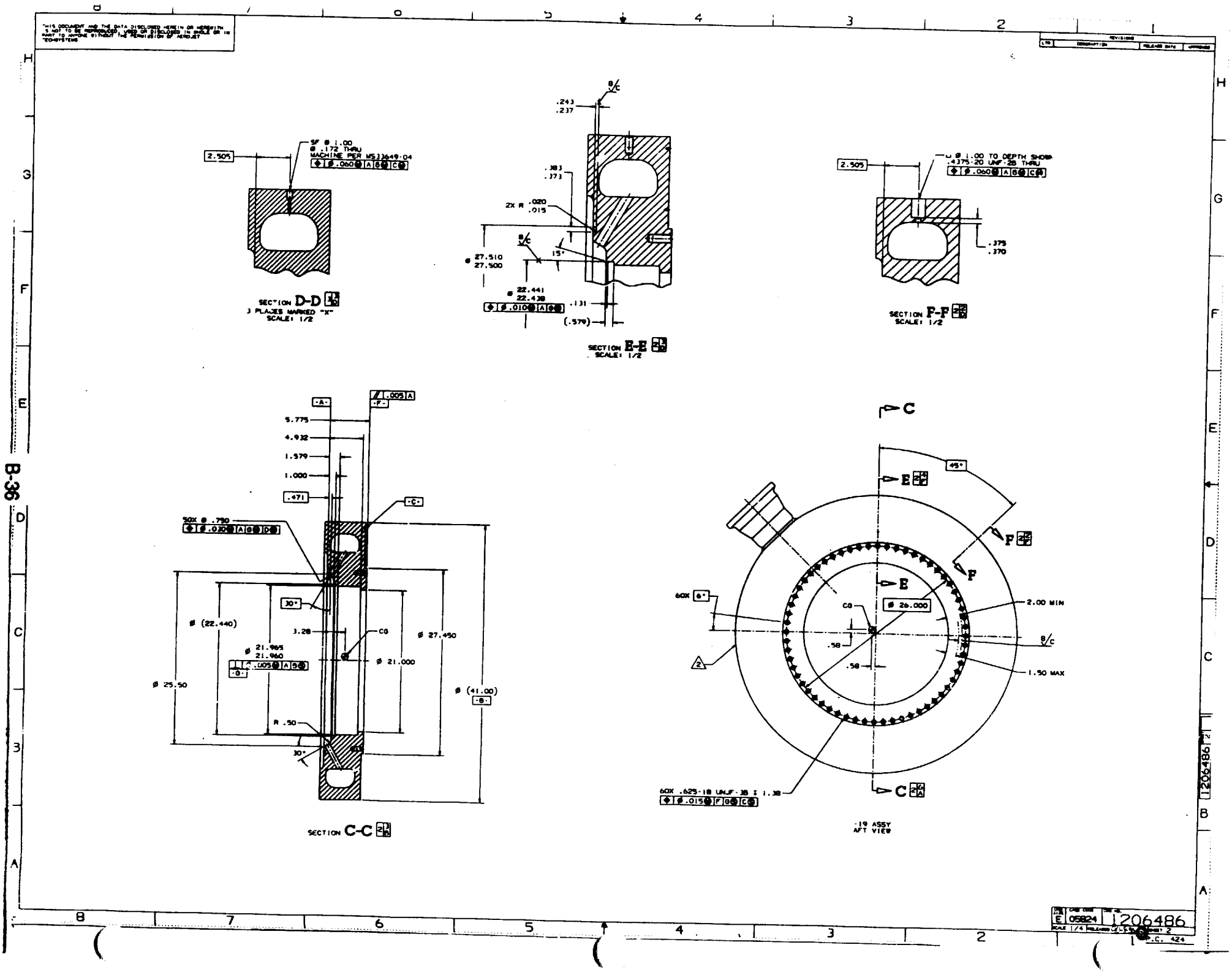

SECTION D-D
3 PLACES MARKED "X"
SCALE: 1/2
SECTION E-E
SCALE: 1/2
SECTION F-F
SCALE: 1/2
SECTION C-C
-19 ASSY
AFT VIEW
1206486

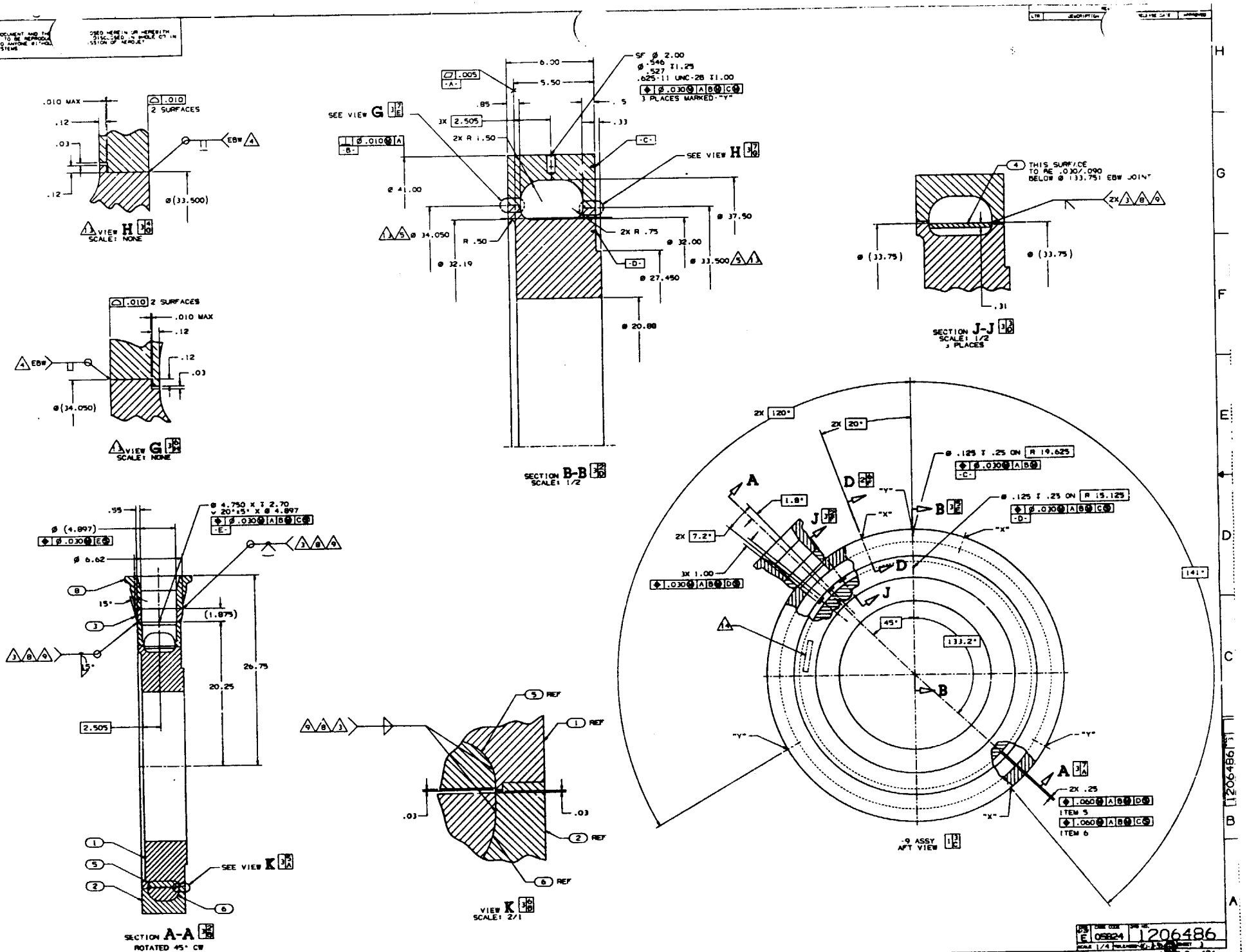
VIEW H
SCALE: NONE
VIEW G
SCALE: NONE
SEE VIEW G
SEE VIEW H
SF Ø 2.00
Ø .546 ↧1.25
.527
.625-11 UNC-2B ↧1.00
3 PLACES MARKED "Y"
SECTION B-B
SCALE: 1/2
THIS SURFACE TO BE .030/.090 BELOW Ø 33.751 EBW JOINT
SECTION J-J
SCALE: 1/2
3 PLACES
SECTION A-A
ROTATED 45° CW
SEE VIEW K
VIEW K
SCALE: 2/1
.9 ASSY
AFT VIEW
ITEM 5
ITEM 6
1206486
P.C. 424

☒ ADCN ☐ DCN	DATE 70-12-21	DOCUMENT CHANGE NOTICE	DWG LVL 1	DOCUMENT NUMBER 1206486	REV LTR NC-1
ECRA NO	RELEASE DATE 91-1-10	GENCORP AEROJET TechSystems SACRAMENTO, CALIFORNIA	DOCUMENT TITLE MANIFOLD ASSY, FUEL ASSY		SHEET 1 of 1
PREPARED BY J. SCHNEIDER					

APPROVALS

DESIGN	DESIGN ACTIVITY	CHECK	STRESS	WT
		B Campbell 91-1-9		
	MANUF	MAT'L	CMO	

SH	ZONE	ITEM	
3	1G	1	(IS) 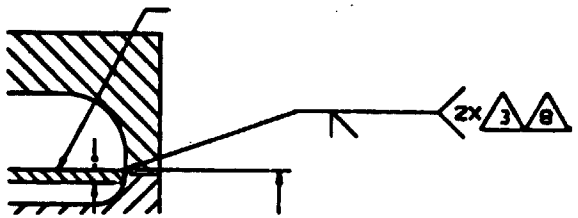 (WAS) 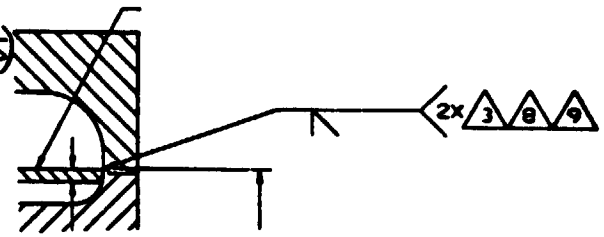
3	6B	2	(IS) 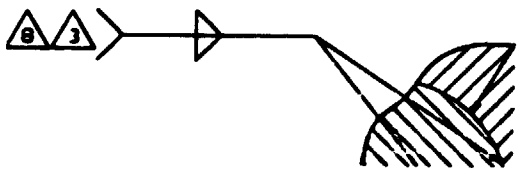 (WAS) 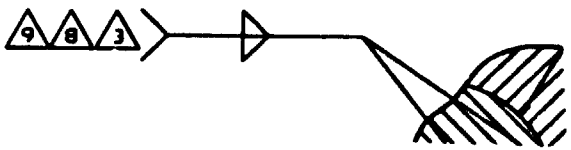

BRUNING 40-22 TECH 00010

PC 424

DOCUMENT CHANGE NOTICE

GENCORP AEROJET — Propulsion Division, Sacramento, CA, CAGE 05824

☒ ADCN ☐ DCN	RELEASE DATE 91-6-5	DOCUMENT NUMBER 1206486	REV LTR NC-2 / SHEET 1 of 1
ECRA NO		DOCUMENT TITLE MANIFOLD ASSY, FUEL INLET	
PREPARED BY JA SCHNEIDER	DATE 91-5-31		

APPROVALS

CHECK 91-06-04	PROJECT ENGR 5/31	THERMAL	MFG / PRODUCIBILITY	NUCLEAR PGMS	SYS DESIGN MGR
DESIGN 5/31/91	CONFIGURATION	DYNAMICS	QUALITY ASSURANCE	RELIABILITY	PROCUREMENT
DESIGN MGR	STRESS	MATLS & PROCESSES	WEIGHTS	MAINTAINABILITY	CUSTOMER

ZONE ITEM

PL 1-SHT1

"IS"

QTY REQD PER ASSY		CAGE CODE	PART OR IDENTIFYING NO	NOMENCLATURE OR DESCRIPTION	MATERIAL SPECIFICATION	ITEM NO.
	1		-6	SPLITTER	CRES QQ-S-766 OR QQ-S-763, CL 304L COND A	6
	1		-5	SPLITTER		5
	1		-4	DIVERTER		4
	-9					

"WAS"

QTY REQD PER ASSY		CAGE CODE	PART OR IDENTIFYING NO	NOMENCLATURE OR DESCRIPTION	MATERIAL SPECIFICATION	ITEM NO.
	1		-6	SPLITTER	CRES QQ-S-766 CL 304L COND A	6
	1		-5	SPLITTER		5
	1		-4	DIVERTER		4
	-9					

P.C. 424

THIS DOCUMENT AND THE DATA DISCLOSED HEREIN OR HEREWITH IS NOT TO BE REPRODUCED, USED OR DISCLOSED IN WHOLE OR IN PART TO ANYONE WITHOUT THE PERMISSION OF AEROJET TECHSYSTEMS

NOTES:

1. INTERPRET DRAWING PER ATC-STD-4926.
2. MARK PER AS478 CLASS C WITH 1206487 AND APPLICABLE DASH NUMBER.
3. MARK PER AS478-7A WITH 1206487 AND APPLICABLE DASH NUMBER.
4. ALL DIAMETERS ⌖ ø .030 Ⓜ A B Ⓜ UNLESS OTHERWISE NOTED.

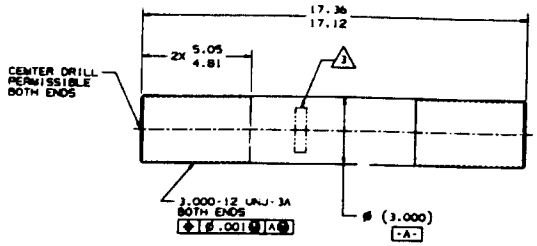

(2) DETAIL

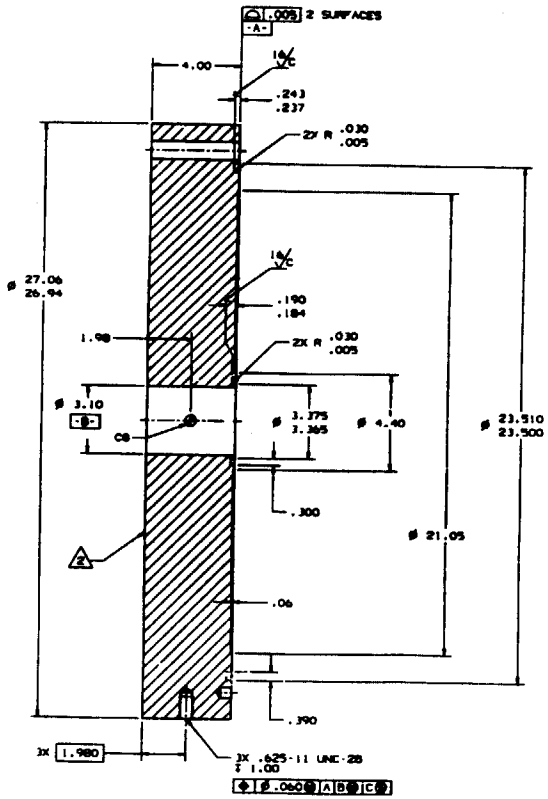

SECTION A-A

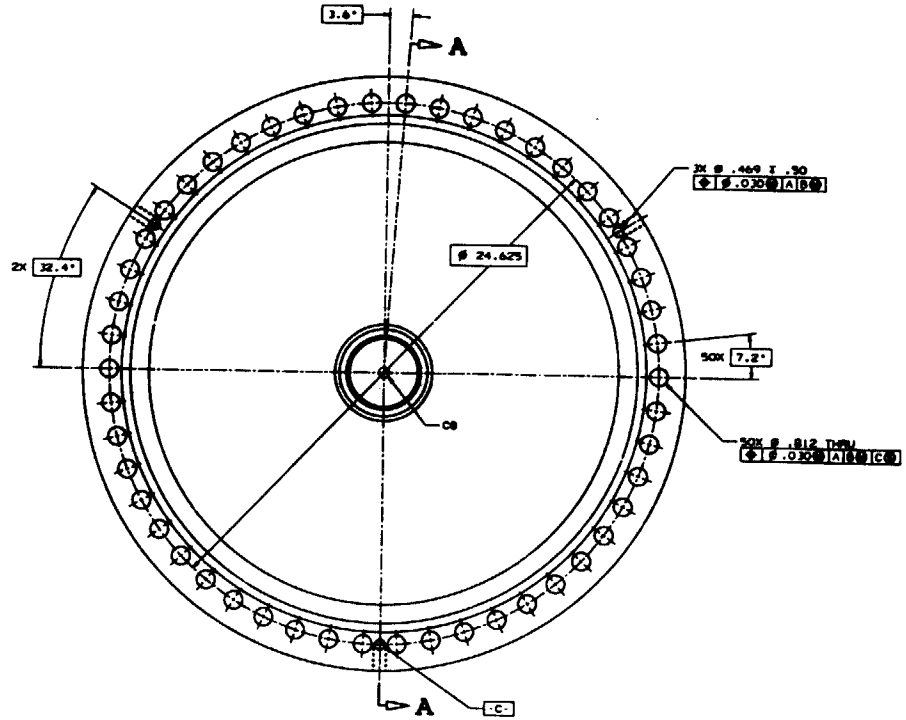

(1) DETAIL

	-2	STUD	4130	AMS 6348	2
	-1	PLATE	CRES	QQ-S-763 UR 766 CL 304L COND A	1

NASB-37470

FULLER

DO NOT SCALE DRAWING

617.4 LB

1

DEVELOPMENT HARDWARE
FOR TEST OR EXPERIMENTATION

A DIGITAL DEFINITION OF THIS PART IS AVAILABLE FROM THE CAD DATABASE. THIS DATA CAN BE ACCESSED BY ENTERING THE CAD SYSTEM WITH THE APPROPRIATE RELEASED FILENAME. MANUAL CHANGES TO THIS DWG ARE PROHIBITED.

FILENAME IS 424Y_1206487_NC_PRF_PL_OX

GeoCorp Aerojet Technologies
SACRAMENTO, CALIFORNIA

PROOF PLATE, OXIDIZER COVER

E 05824 1206487

1/2 QQ-S-30 1 OF 1

P.C. 424

THIS DRAWING HAS BEEN REVIEWED PER POLICY 27-1, 05/8/90

1206487

THIS DOCUMENT AND ... DISCLOSED HEREIN OR HEREWITH IS NOT TO BE REPR... ED OR DISCLOSED IN WHOLE OR IN PART TO ANYONE WITH... PERMISSION OF AEROJET TECHSYSTEMS

NOTES:

1. INTERPRET DRAWING PER ATC-STD-4926.
2. MARK PER AS478, CLASS D WITH 1206488 AND APPLICABLE DASH NUMBER.

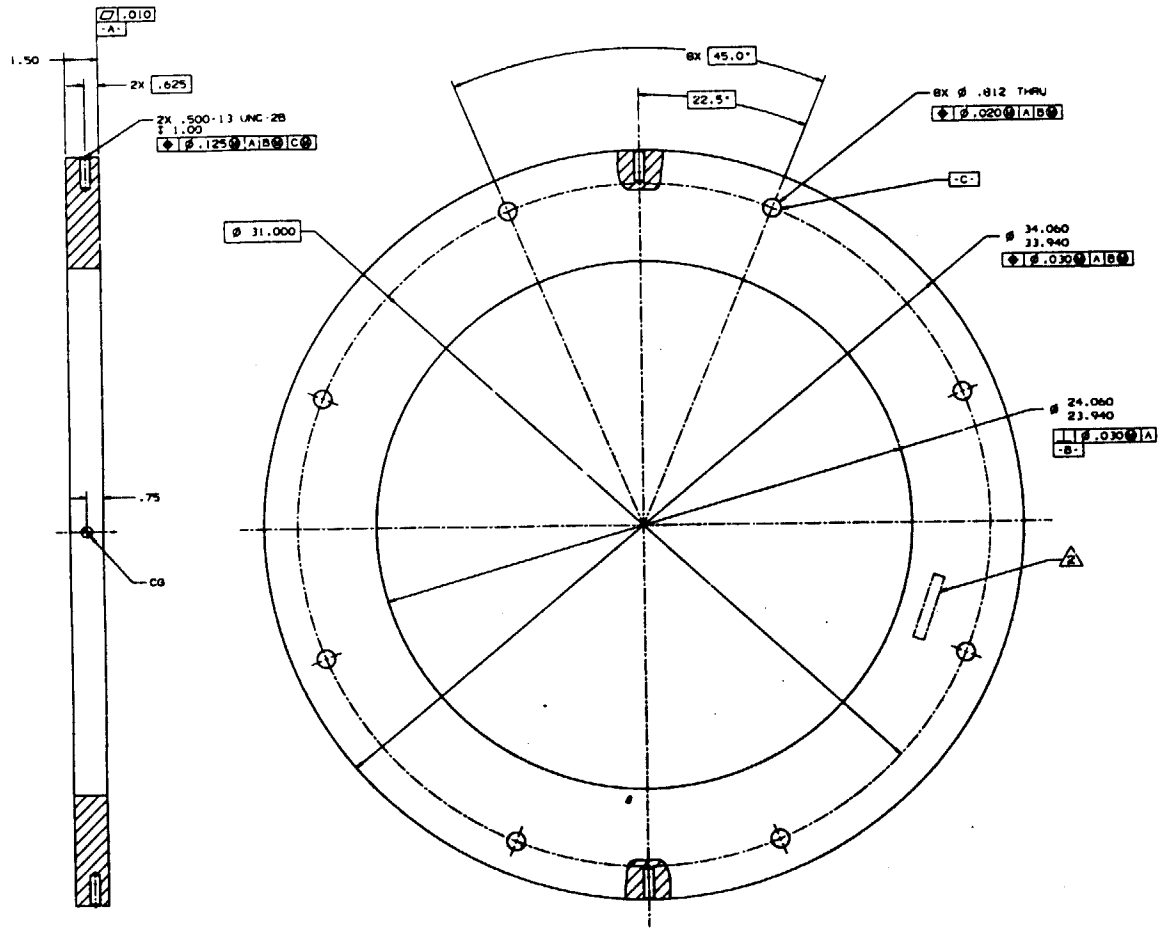

	-1	AL ALLOY 6061-T6	QQ-A-250/11, TEMP T6

NAS8-37470 | WESTMAN | GENCORP AEROJET Technisystems

SPACER, THRUST MOUNT

DO NOT SCALE DRAWING

E | 05824 | 1206488

1/2 | 90-8-2 | 1 OF 1

P.C. 424

DEVELOPMENT HARDWARE
FOR TEST OR EXPERIMENTATION

A DIGITAL DEFINITION OF THIS PART IS AVAILABLE FROM THE CAD DATABASE. THIS DATA CAN BE ACCESSED BY ENTERING THE CAD SYSTEM WITH THE APPROPRIATE RELEASED FILENAME. MANUAL CHANGES TO THIS DWG ARE PROHIBITED.

FILENAME IS 424C.1206488.NC.SPACER.TM

THIS DOCUMENT AND THE DATA DISCLOSED HEREIN OR HEREWITH IS NOT TO BE REPRODUCED, USED OR DISCLOSED IN WHOLE OR IN PART TO ANYONE WITHOUT THE PERMISSION OF AEROJET TECHSYSTEMS

NOTES:

1. INTERPRET DRAWING PER ATC-STD-4926.
2. MARK PER AS478, CLASS D WITH 1206489 AND APPLICABLE DASH NUMBER.
3. IF HOIST RINGS ARE REMOVED, REINSTALL AND TORQUE TO 25-30 FT LB. IF STUDS ARE REMOVED, REINSTALL PRIOR TO SHIPPING.
4. FURNACE BRAZE PER COGNIZANT PRODUCIBILITY ACTIVITY.
5. LEAK TEST -9 ASSY PER ATC-47063, METHOD II, USING CLEAR DRY GASEOUS NITROGEN AT 50 ± 5 PSIG. NO DETECTABLE LEAKAGE ALLOWED.
6. USE OF 1206482-9 AND 1206521 SHALL BE USED TO PROTECT TUBE ENDS AND FAYING SURFACES.
7. PERMISSIBLE TO BRIGHT ANNEAL (1) PER COGNIZANT AEROJET PRODUCIBILITY ACTIVITY.

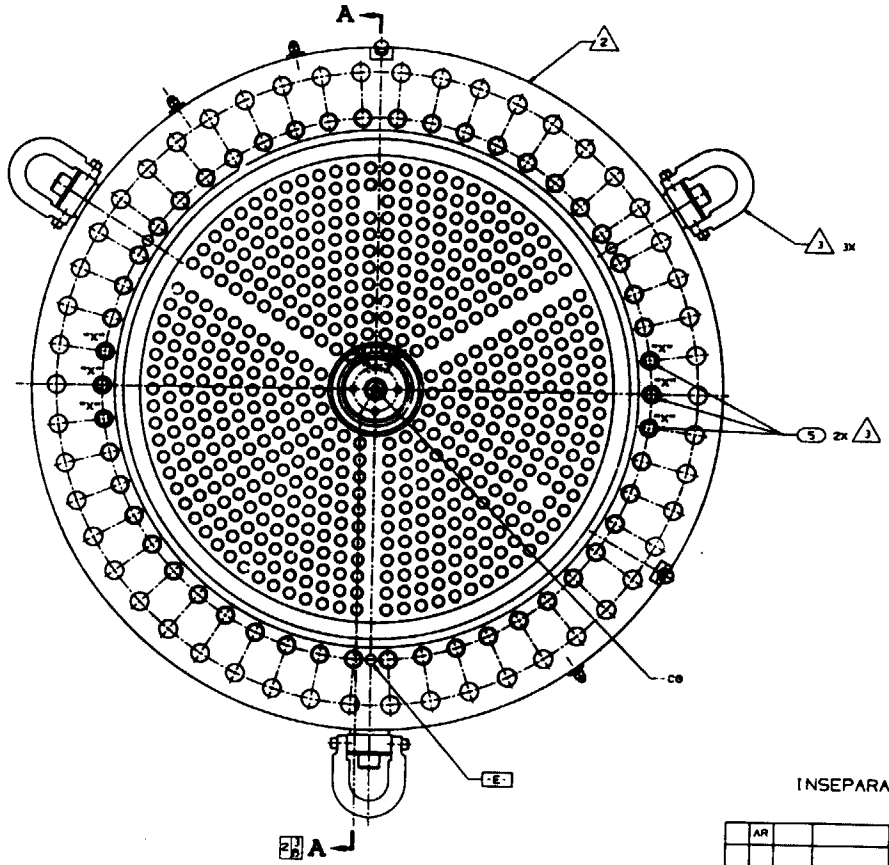

-19 ASSY

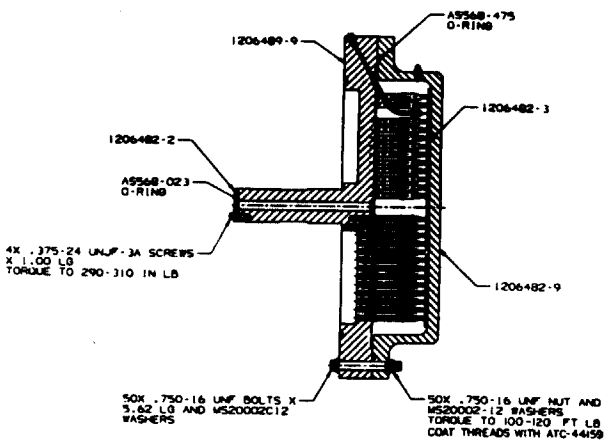

5 SUGGESTED LEAK TEST ASSEMBLY
SCALE: 1/4

INSEPARABLE ASSEMBLY DRAWING

	AR			BRAZE ALLOY	Ø .030 OF COPPER WIRE ASTM B170 GRADE 2	11
						10
1			-9	BRAZE ASSY		9
						8
	2		AN933-2	PIPE PLUG		7
						6
6			1206518-1	STUD		5
	1		1206490-19	TUBE, BOMB		4
	1		1206490-9	TUBE, BOMB		3
	544		1206472-1	OXID TUBE		2
	1		-1	BODY	ALTER FROM 1206491-9	1
-19	-9	CODE IDENT	PART OR IDENTIFYING NO.	NOMENCLATURE OR DESCRIPTION	MATERIAL SPECIFICATION	ITEM NO.

PARTS LIST

CONTRACT NO. NAS8-37470

DEVELOPMENT HARDWARE
FOR TEST OR EXPERIMENTATION

A DIGITAL DEFINITION OF THIS PART IS AVAILABLE FROM THE CIT DATABASE. THIS DATA CAN BE ACCESSED BY ENTERING THE CAD SYSTEM WITH THE APPROPRIATE RELEASED FILENAME. MANUAL CHANGES TO THIS DWG ARE PROHIBITED.
FILENAME IS 424D.1206489.NC.INJ.BRAZE

DO NOT SCALE DRAWING

540 LB	1		

Sunada 59/7/27

GENCORP AEROJET Technicolor SACRAMENTO, CALIFORNIA

TITLE: INJECTOR BRAZE ASSEMBLY

SIZE	CAGE CODE	DWG. NO.
E	05824	1206489

SCALE 1/2 | 90-8-30 | SHEET 1 OF 5

THIS DRAWING HAS BEEN REVIEWED FOR POLICY 27-1, 90/7/27

P.T. 424

1206489

THIS DOCUMENT AND THE DATA DISCLOSED HEREIN OR HEREWITH IS NOT TO BE REPRODUCED, USED OR DISCLOSED IN WHOLE OR IN PART TO ANYONE WITHOUT THE PERMISSION OF AEROJET TECHSYSTEMS

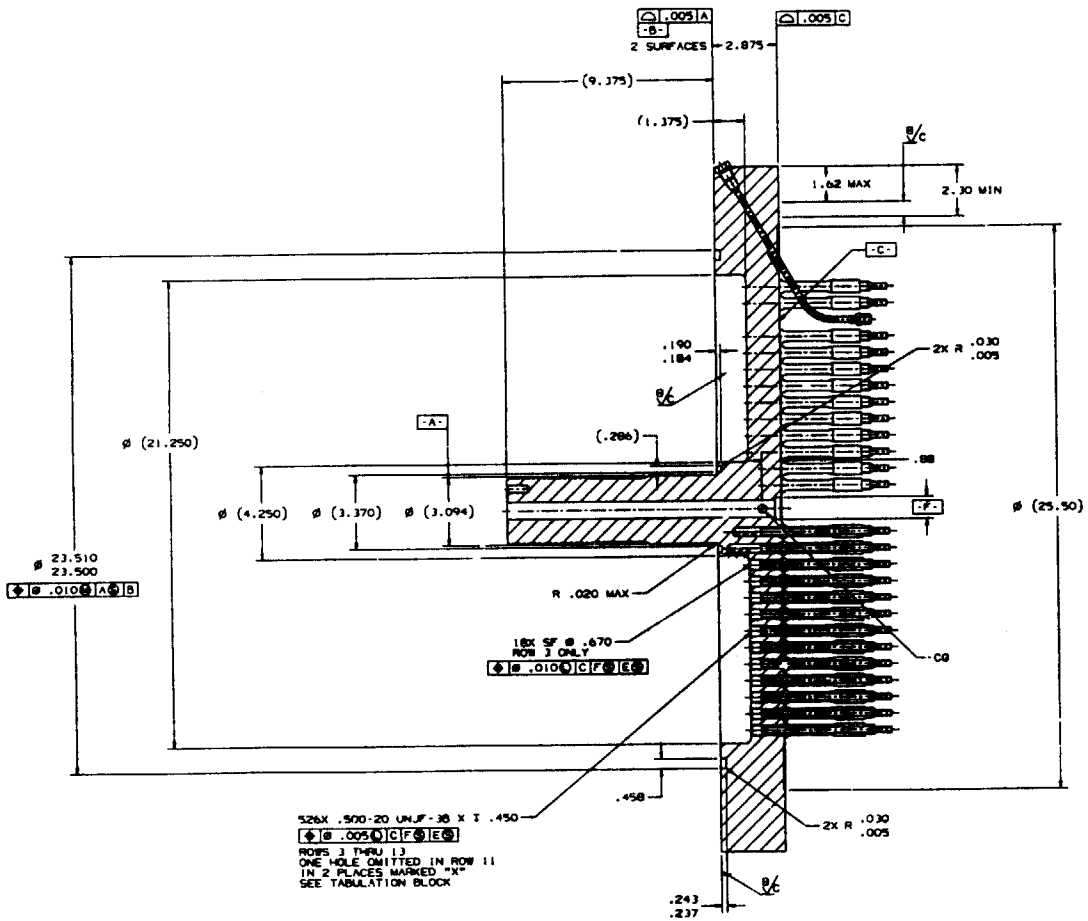

SECTION A-A

E	05824	1206489
SCALE 1/2		SHEET 2

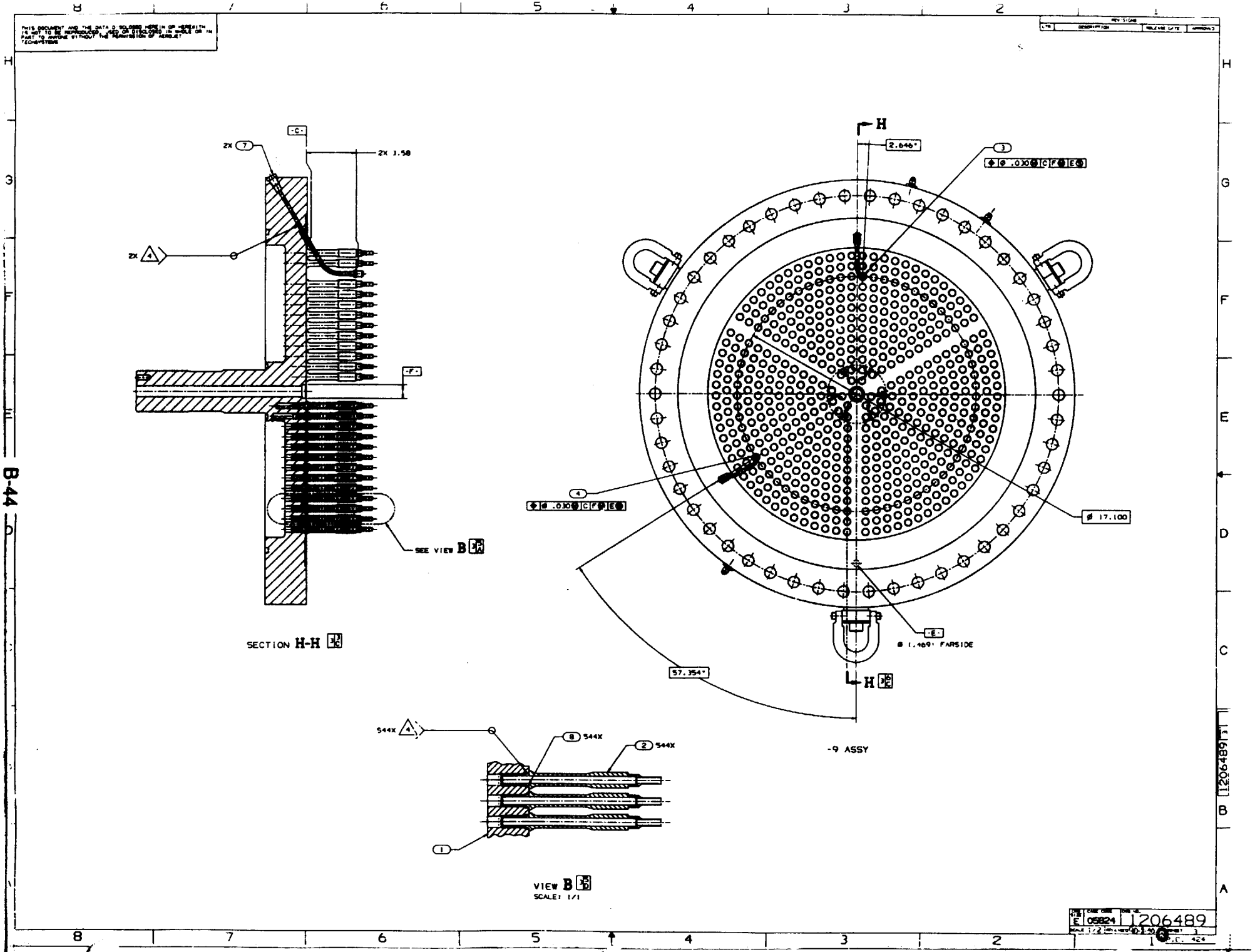

2X 7
2X 3.58
2X 4
-C-
-F-
SEE VIEW B
SECTION H-H
H
2.646"
3
Ø .030 C F E
4
Ø .030 C F E
Ø 17.100
-E-
Ø 1.469' FARSIDE
57.354"
H
-9 ASSY
544X 4
8 544X
2 544X
1
VIEW B
SCALE: 1/1
E 05824 1206489
SCALE 1/2
P.C. 424

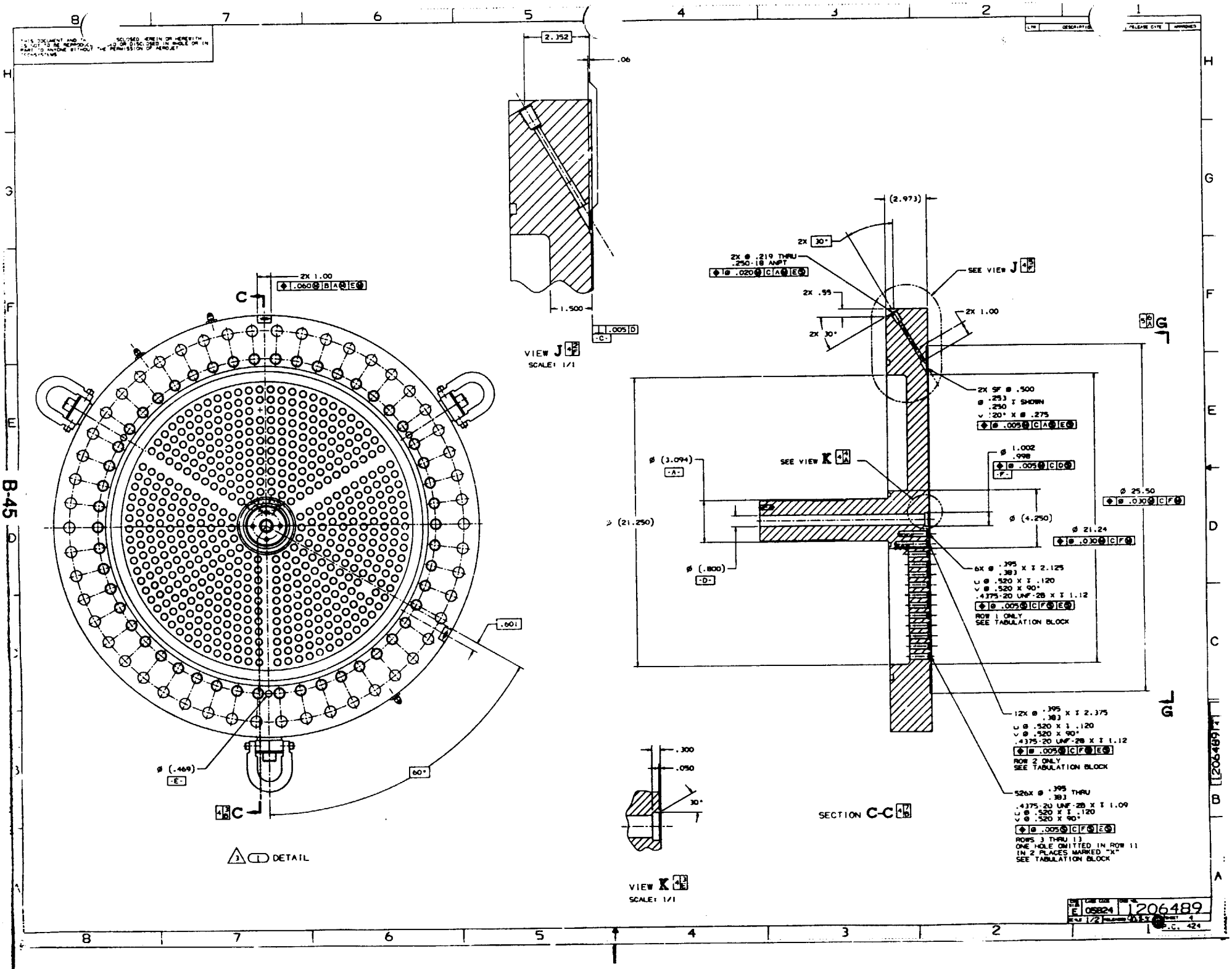

2.352
.06
1.500
.005 D
-C-
VIEW J
SCALE: 1/1
2X 1.00
.060 B A E
C
.601
60°
Ø (.469)
-E-
DETAIL
(2.973)
2X 30°
2X Ø .219 THRU
.250-18 ANPT
Ø .020 C A E
SEE VIEW J
2X .55
2X 1.00
2X 30°
2X SF Ø .500
Ø .253 ↧ SHOWN
.250
∨ 120° X Ø .275
Ø .005 C A E
Ø 1.002
.998
Ø .005 C D
-F-
Ø (3.094)
-A-
SEE VIEW K
Ø (21.250)
Ø (4.250)
Ø 25.50
Ø .030 C F
Ø 21.24
Ø .030 C F
Ø (.800)
-D-
6X Ø .395 X ↧ 2.125
.383
⌴ Ø .520 X ↧ .120
∨ Ø .520 X 90°
.4375-20 UNF-2B X ↧ 1.12
Ø .005 C F E
ROW 1 ONLY
SEE TABULATION BLOCK
12X Ø .395 X ↧ 2.375
.383
⌴ Ø .520 X ↧ .120
∨ Ø .520 X 90°
.4375-20 UNF-2B X ↧ 1.12
Ø .005 C F E
ROW 2 ONLY
SEE TABULATION BLOCK
526X Ø .395 THRU
.383
.4375-20 UNF-2B X ↧ 1.09
⌴ Ø .520 X ↧ .120
∨ Ø .520 X 90°
Ø .005 C F E
ROWS 3 THRU 13
ONE HOLE OMITTED IN ROW 11
IN 2 PLACES MARKED "X"
SEE TABULATION BLOCK
.300
.050
30°
VIEW K
SCALE: 1/1
SECTION C-C
E
05824
1206489
1/2
4
P.C. 424

THIS DOCUMENT AND THE DATA DISCLOSED HEREIN OR HEREWITH IS NOT TO BE REPRODUCED, USED OR DISCLOSED, IN WHOLE OR IN PART TO ANYONE WITHOUT THE PERMISSION OF HEADJET TECHSYSTEMS

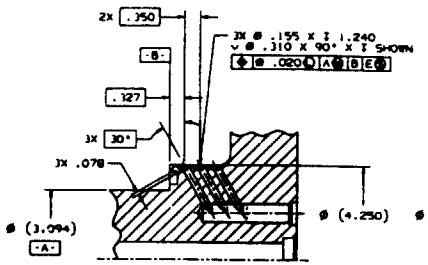

SECTION F-F
2 PLACES
SCALE: 1/1

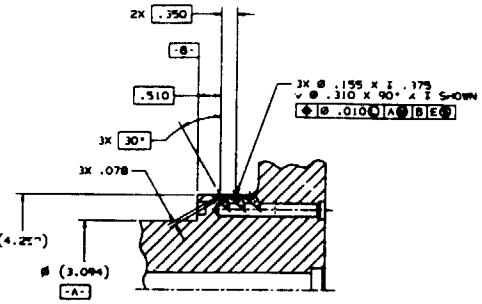

SECTION E-E
4 PLACES
SCALE: 1/1

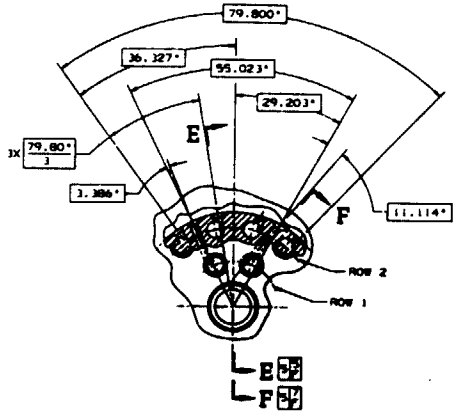

VIEW D
3 PL EQL SP
SCALE: 1/1

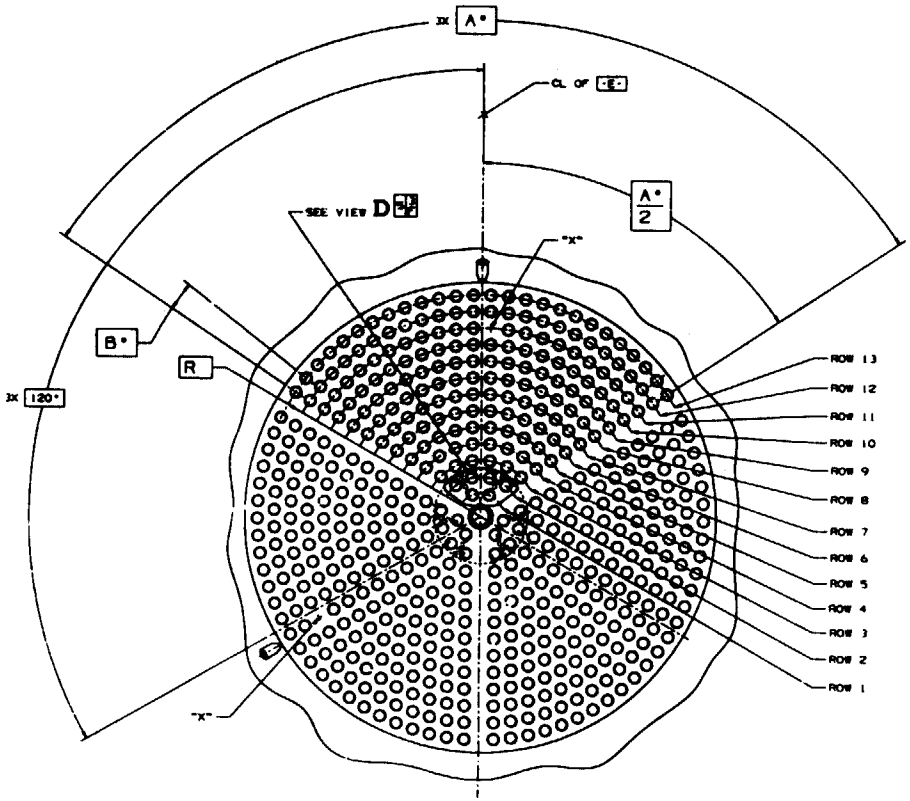

VIEW G-G

3 PLACES EQUALLY SPACED
(⌀ .005 Ⓢ C F E)

ROW NO.	A°	R	NO. HOLES	B°
1	42.110°	1.050	2	42.110°
2	76.980°	1.800	4	3X 76.980°/3
3	90.000°	2.550	6	5X 90.000°/5
4	96.926°	3.300	8	7X 96.926°/7
5	101.242°	4.050	10	9X 101.242°/9
6	104.194°	4.800	12	11X 104.194°/11
7	106.341°	5.550	14	13X 106.341°/13
8	107.973°	6.300	16	15X 107.973°/15
9	109.257°	7.050	18	17X 109.257°/17
10	110.291°	7.800	20	19X 110.291°/19
11	111.146°	8.550	22	21X 111.146°/21
12	111.860°	9.300	24	23X 111.860°/23
13	112.469°	10.050	26	25X 112.469°/25

SIZE E CAGE CODE 05824 DWG NO. 1206489
SCALE 1/2 SHEET 5
P.C. 424

☒ ADCN ☐ DCN	91-4-11	DOCUMENT CHANGE NOTICE	1206489	NC-1	1 of 2
JA SCHNEIDER	91-4-4	GENCORP AEROJET Propulsion Division Sacramento, CA CAGE 05824	INJECTOR BRAZE ASSEMBLY		

APPROVALS

ZONE ITEM "ADDED"

PL 1 △B | 544 | -2 | BRAZE SLEEVE | .5" O.D. Cop Tube C101, C102, C103 ASTM B75 TEMPER H58 | 12

GN 2 "ADDED"

△B CLEAN PER ATC-STD-4820

3 "ADDED"

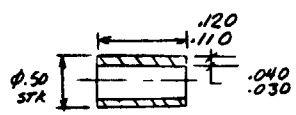

Item (12)

P.C. 424

DOCUMENT CHANGE NOTICE CONTINUATION SHEET

GENCORP AEROJET Propulsion Division Sacramento, CA CAGE 05824 91-4-11

☒ ADCN ☐ DCN	91-4-4	1206489	NC-1	2 of 2

ZONE ITEM SHT 3

7G 4 "IS"

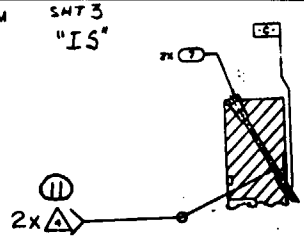

"WAS"

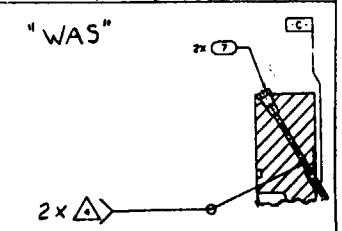

5B 5 SHT 3 "IS"

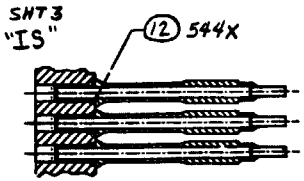

"WAS"

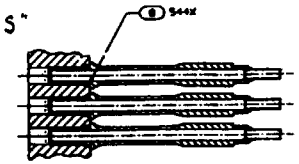

P.C. 424

THIS DOCUMENT AND THE DATA DESCRIBED HEREIN OR APPERTAINING IS NOT TO BE REPRODUCED, USED OR DISCLOSED IN WHOLE OR IN PART TO ANYONE WITHOUT THE PERMISSION OF AEROJET TECHSYSTEMS

NOTES:

1. INTERPRET DRAWING PER ATC-STD-4926.
2. MARK PER AS478-37 WITH 1206490 AND APPLICABLE DASH NUMBER.
3. BRAZE PER COGNIZANT PRODUCIBILITY ACTIVITY USING (6)

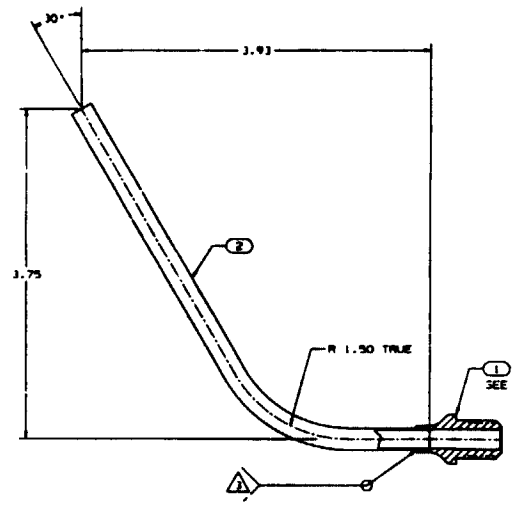

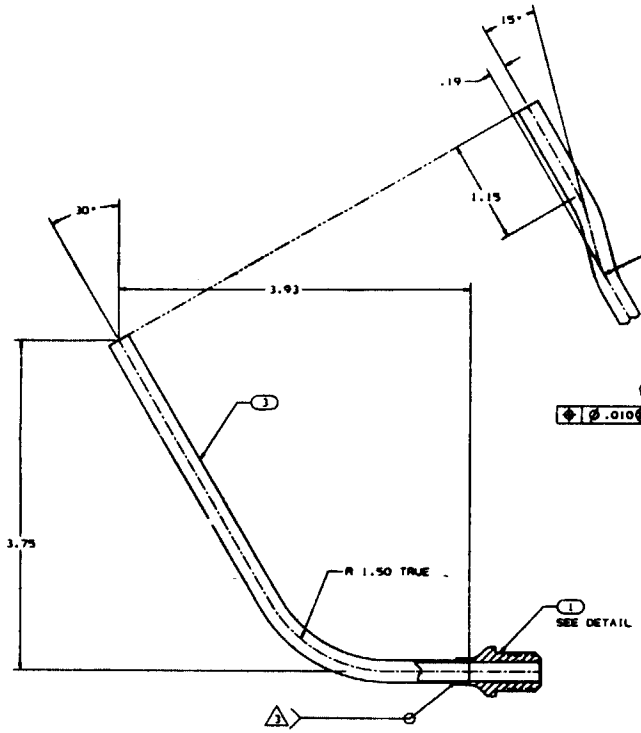

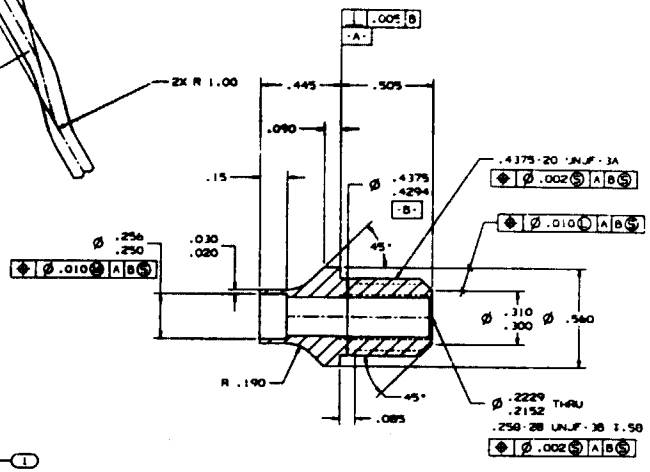

(1) DETAIL
SCALE: 4/1

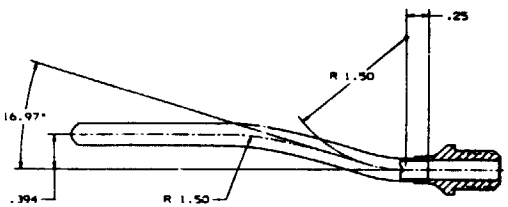

-9 ASSY

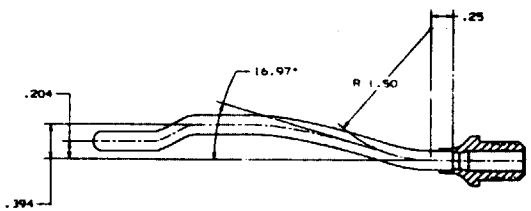

-19 ASSY

INSEPARABLE ASSEMBLY DRAWING

AR	AR			BRAZE ALLOY	PALNIRO 1 AMS4784	6
						5
						4
1			-3	TUBE	.250 OD X .020 WALL CRES 304L AMS 5567	3
	1		-2	TUBE	.250 OD X .020 WALL CRES 304L AMS 5567	2
1	1		-1	FITTING	CRES QQ-S-763 CLASS 304L, COND A	1
-19	-9	CHG PARTS	PART OF DESCRIPTION NO.	NOMENCLATURE OR DESCRIPTION		ITEM NO.

PARTS LIST

REFERENCE NO. NAS8-37470

DEVELOPMENT HARDWARE
FOR TEST OR EXPERIMENTATION

A DIGITAL DEFINITION OF THIS PART IS AVAILABLE FROM THE LIO DATABASE. THIS DATA CAN BE ACCESSED BY ENTER NO THE CAD SYSTEM WITH THE APPROPRIATE RELEASED FILENAME. MANUAL CHANGES TO THIS DWG ARE PROHIBITED.
FILENAME IS 424Y.1206490.NC.TUBE.ASSY

DO NOT SCALE DRAWING

REV'MAN

AEROJET TechSystems

TUBE ASSEMBLY, BOMB

E 05824 1206490

SCALE 2/1 90-8-30 SHEET 1 OF 1

S.C. 424

THIS DOCUMENT AND ... DISCLOSED HEREIN OR HEREWITH IS NOT TO BE REPRODUCED, USED OR DISCLOSED IN WHOLE OR IN PART TO ANYONE WITHOUT THE PERMISSION OF AEROJET TECHSYSTEMS

NOTES:

1. INTERPRET DRAWING PER ATC-STD-4926.
2. MARK PER AS478, CLASS D WITH 1206491 AND APPLICABLE DASH NUMBER. [1 6 E]
3. MARK PER AS478-7 WITH INFORMATION SHOWN WITH .25 HIGH CHARACTERS. [1 3 5 5 2 4 C G F E H]
4. MEASURE AND RECORD 9.327 DIMENSION AND PARALLELISM OF -F-. ASSEMBLE TEST FIXTURE AND PROOF TEST WITH WATER TO 1550±25 PSIG. HOLD FOR 3±1 MINUTES. RELEASE PRESSURE AND CHECK 9.327 DIMENSION AND PARALLELISM OF -F-. PERMANENT DEFORMATION GREATER THAN .005 SHALL BE CAUSE FOR REJECTION. [2 2 4 7 G G B]
5. ULTRASONIC INSPECT FORGING PER MIL-STD-2154, CLASS B. [1 3 B]
6. PERMISSIBLE TO BRIGHT ANNEAL PER COGNIZANT AEROJET PRODUCIBILITY ENGINEER.

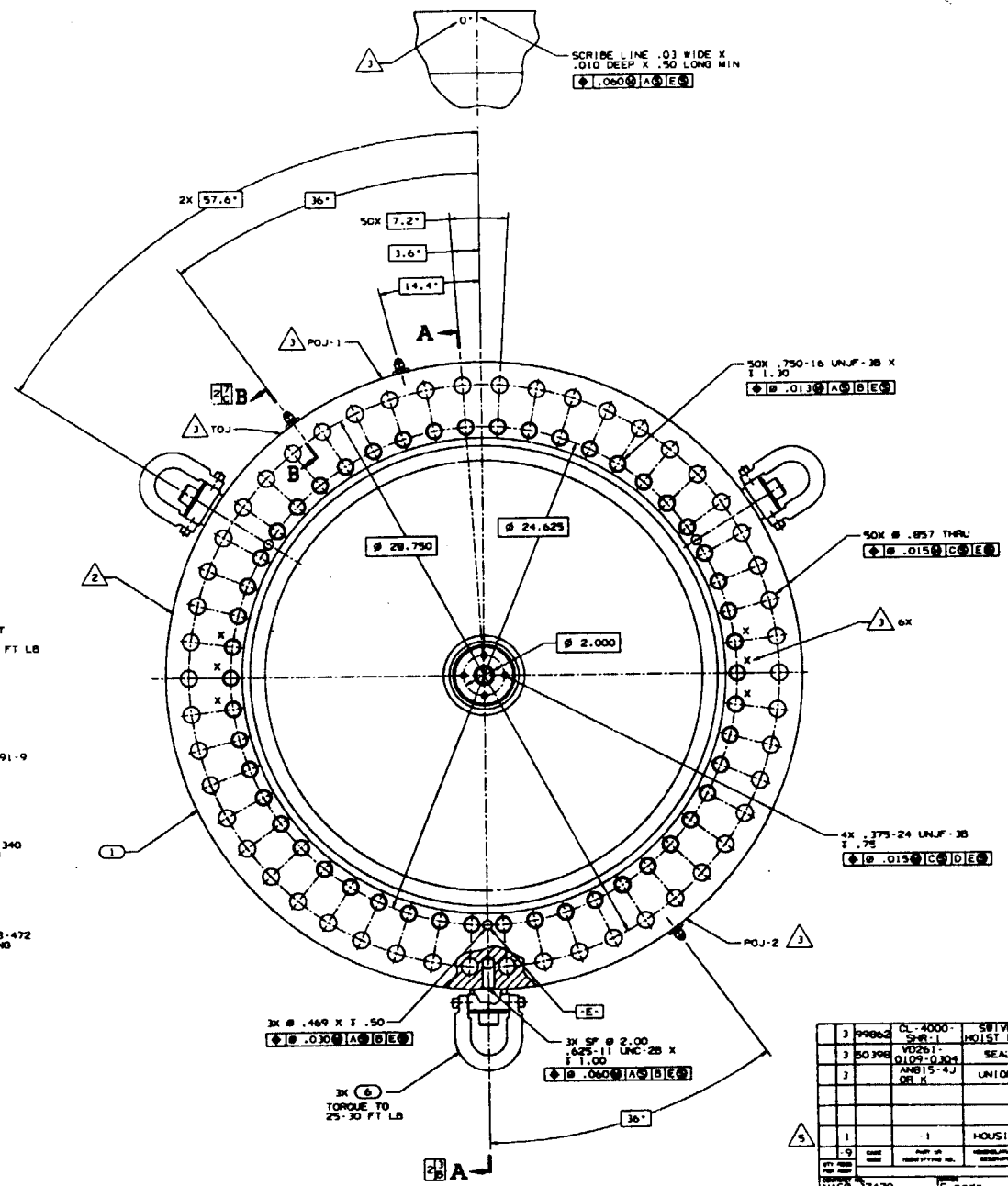

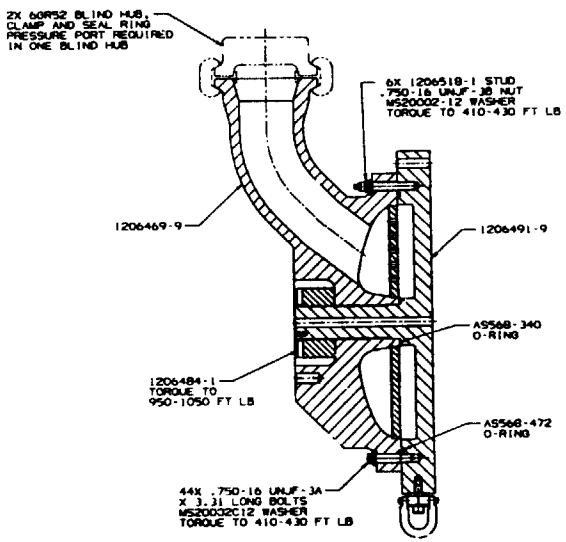

4 SUGGESTED PROOF TEST ASSEMBLY
SCALE: 1/4

QTY REQD PER ASSY	CODE IDENT	PART OR IDENTIFYING NO.	NOMENCLATURE OR DESCRIPTION	MATERIAL SPECIFICATION	ITEM NO.
3	99862	CL-4000-SHR-1	SWIVEL HOIST RING		6
3	50398	VD261-0109-0304	SEAL		5
3		AN815-4J OR K	UNION		4
					3
					2
1		-1	HOUSING	CRES FORGING QQ-S-763 CL 304L, COND A	1

5

CONTRACT NO. NAS8-37470	DRAWN Sunoda	DATE 10/7/11	GenCorp Aerojet Techsystems SACRAMENTO, CALIFORNIA
DO NOT SCALE DRAWING			TITLE INJECTOR, FIRST MACHINE-SUBASSEMBLY
SIZE 505 LB	SCALE 1		SIZE E · CODE IDENT 05824 · DWG. NO. 1206491
			SCALE 1/2 · RELEASE DATE 90-8-30 · SHEET 1 OF 2

DEVELOPMENT HARDWARE
FOR TEST OR EXPERIMENTATION

A DIGITAL DEFINITION OF THIS PART IS AVAILABLE FROM THE CAD DATABASE. THIS DATA CAN BE ACCESSED BY ENTERING THE CAD SYSTEM WITH THE APPROPRIATE RELEASED FILENAME. MANUAL CHANGES TO THIS DWG ARE PROHIBITED.
FILENAME IS 424D.1206491.NC.INJ.MACH

THIS DRAWING HAS BEEN REVIEWED FOR RELEASE 27-1, 10/7/11

P.C. 424

1206491

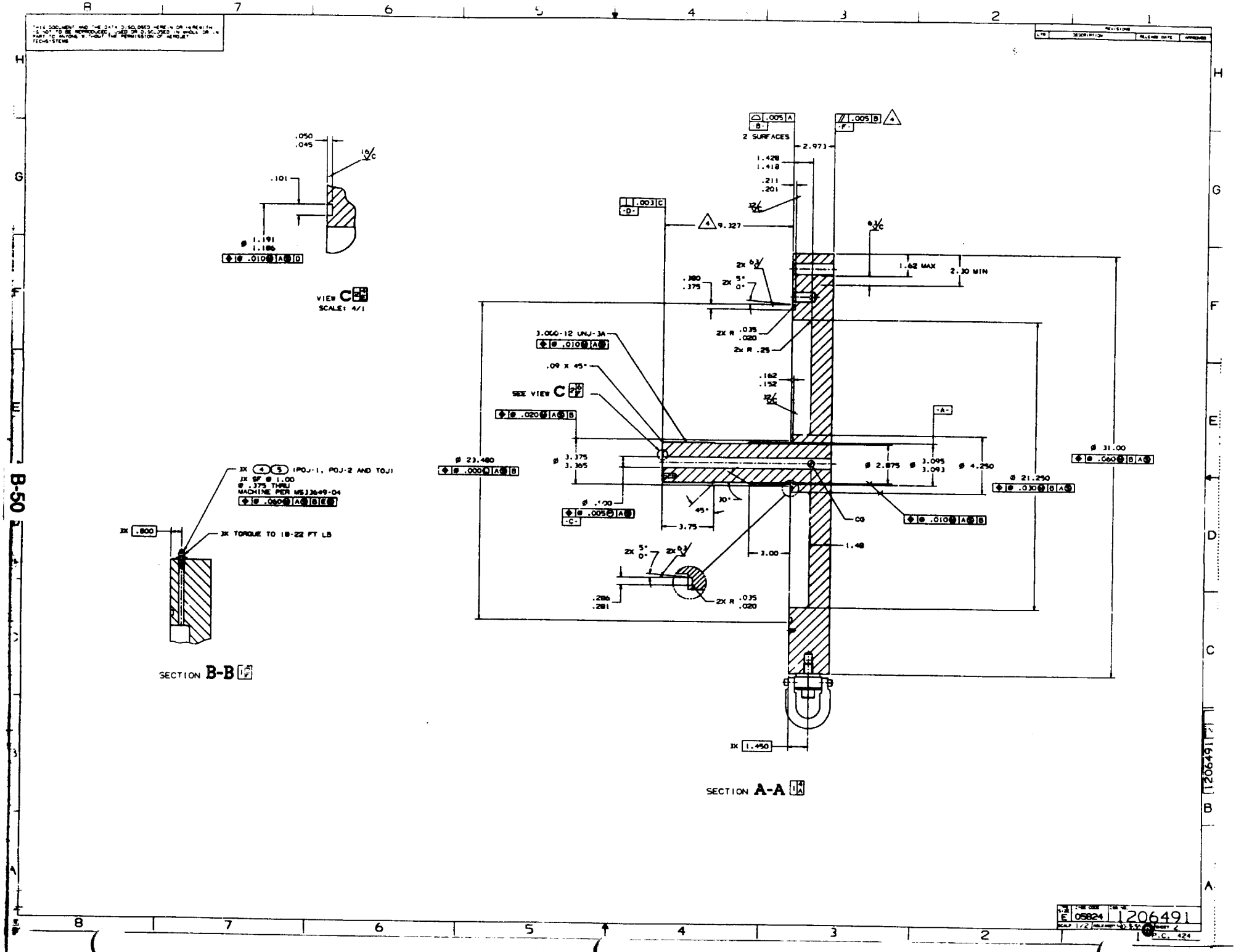

VIEW C
SCALE: 4/1
SECTION B-B
SECTION A-A
2 SURFACES
3.000-12 UNJ-3A
.09 X 45°
SEE VIEW C
3X TORQUE TO 18-22 FT LB
1.62 MAX
2.30 MIN
3X 1.450
05824
1206491
P.C. 424

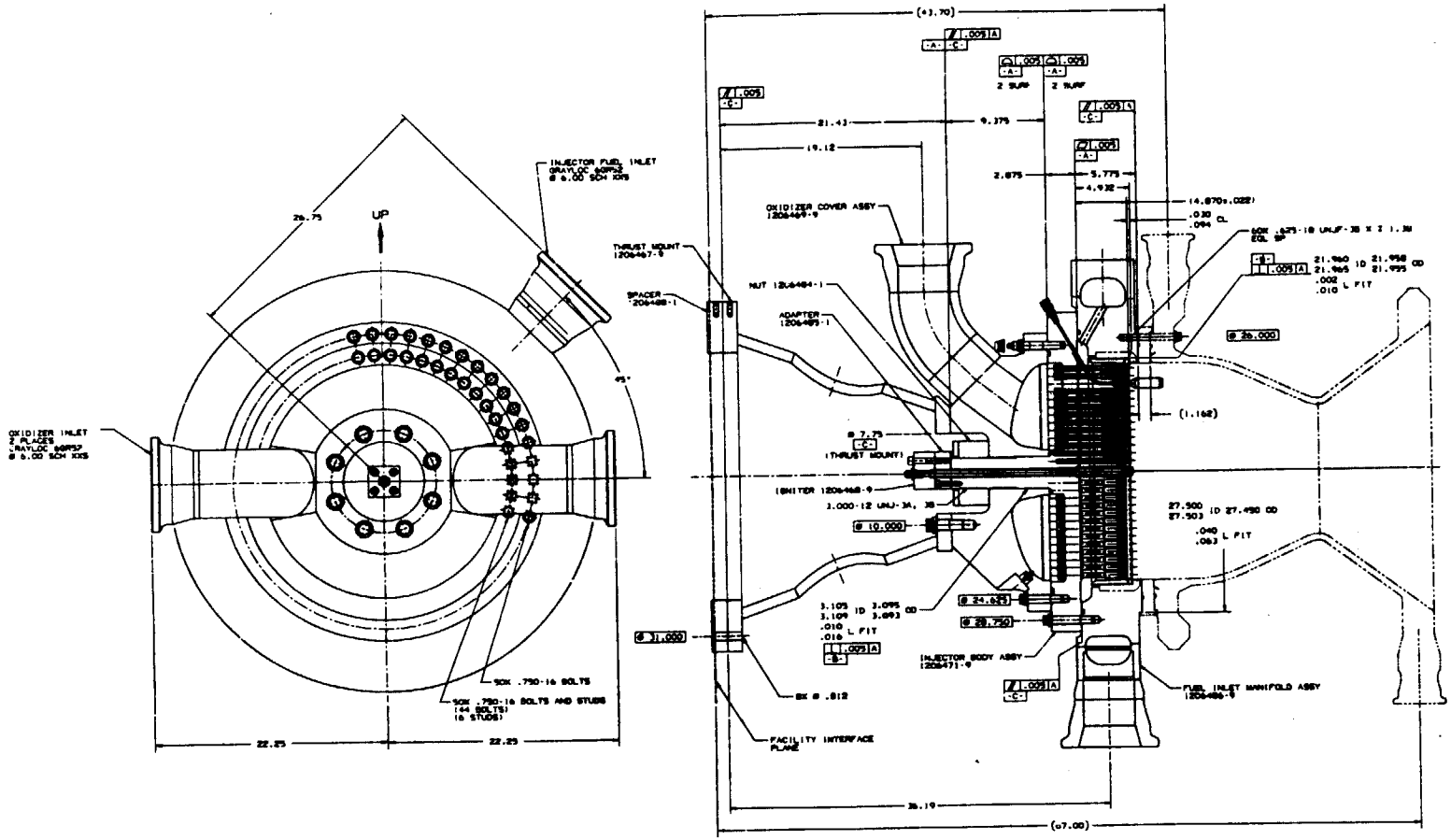

DEVELOPMENT HARDWARE
FOR TEST OR EXPERIMENTATION

A DIGITAL DEFINITION OF THIS PART IS AVAILABLE FROM THE CAD DATABASE. THIS DATA CAN BE ACCESSED BY ENTERING THE CAD SYSTEM WITH THE APPROPRIATE RELEASED FILENAME. MANUAL CHANGES TO THIS DWG ARE PROHIBITED.

FILENAME IS 4240.1206516.NC.LSI.LAYOUT

NASB 37470

DO NOT SCALE DRAWING

Sunada

GENCORP AEROJET Technisystems SACRAMENTO, CALIFORNIA

LAYOUT, STBE LARGE SCALE INJECTOR

E 05824 1206516

1/4 9-9-10 1 OF 1

P.C. 424

THIS DOCUMENT AND THE DATA DISCLOSED HEREIN OR HEREWITH IS NOT TO BE REPRODUCED, USED OR DISCLOSED IN WHOLE OR IN PART TO ANYONE WITHOUT THE PERMISSION OF AEROJET TECHSYSTEMS

NOTES:

1. INTERPRET DRAWING PER ATC-STD-4926.
2. MARK PER AS478-7A3 WITH 1206518 AND APPLICABLE DASH NUMBER.
3. ROLL THREADS PER AMS 7481. STUD MUST BE CAPABLE OF 200,000 PSI ULTIMATE TENSILE STRENGTH.

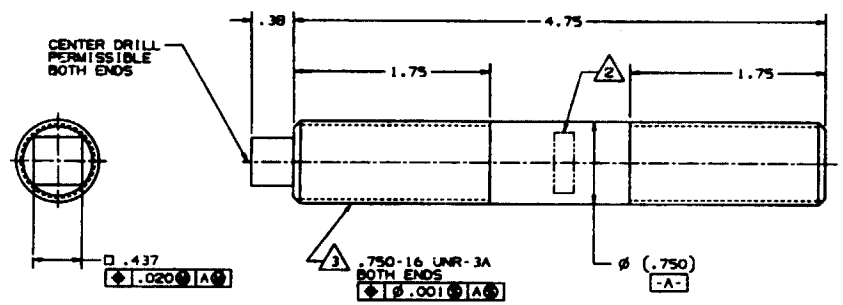

QTY REQD PER ASSY	CODE	PART OR IDENTIFYING NO.	NOMENCLATURE OR DESCRIPTION	MATERIAL SPECIFICATION	ITEM NO.
		-1		A-286 AMS 5726	1

PARTS LIST

CONTRACT NO. NAS8-37470

UNLESS OTHERWISE SPECIFIED DIMENSIONS & TOLERANCES ARE IN INCHES & PER ANSI Y14.5

TOLERANCES: DECIMALS .XX ±.03, .XXX ±.010; ANGULAR ±0.5°

SURFACE ROUGHNESS

DO NOT SCALE DRAWING

DWG. LEVEL 1

DRAWN FULLER 90/7/16

GENCORP AEROJET TechSystems SACRAMENTO, CALIFORNIA

TITLE STUD, INJECTOR/ OXIDIZER INLET

SIZE D | CAGE CODE 05824 | DWG. NO. 1206518

SCALE 2/1 | RELEASE DATE 90-8-30 | SHEET 1 OF 1

THIS DRAWING HAS BEEN REVIEWED PER POLICY 27-1. 90/7/16

P.C. 424

DEVELOPMENT HARDWARE
FOR TEST OR EXPERIMENTATION

A DIGITAL DEFINITION OF THIS PART IS AVAILABLE FROM THE CAD DATABASE. THIS DATA CAN BE ACCESSED BY ENTERING THE CAD SYSTEM WITH THE APPROPRIATE RELEASED FILENAME. MANUAL CHANGES TO THIS DWG ARE PROHIBITED.

FILENAME IS 424D.1206518.NC.STUD

1206518

☒ ADCN ☐ DCN | 91-9-4

DOCUMENT CHANGE NOTICE

GenCorp Aerojet — Propulsion Division, Sacramento, CA — CAGE 05624

1206518 | NC-1 | 1 of 2

STUD, INJECTOR/ OXIDIZER INLET

JA SCHNEIDER | 91-08-29

ZONE ITEM

1 "ADDED" (2)

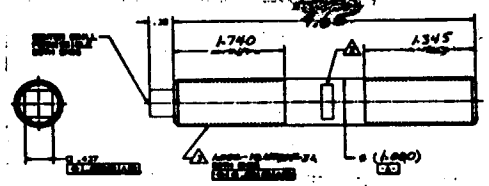

-2 DETAIL

P.C. 424

DOCUMENT CHANGE NOTICE CONTINUATION SHEET

GenCorp Aerojet — Propulsion Division, Sacramento, CA — CAGE 05624

☒ ADCN ☐ DCN | 91-08-29 | 1206518 | NC-1 | 2 of 2

ZONE ITEM

2 "ADDED" (3)

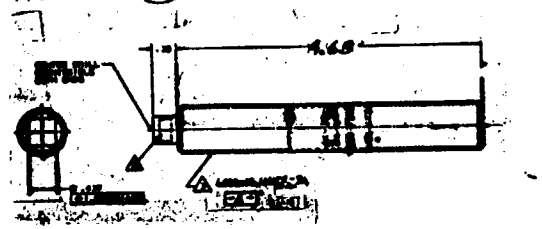

-3 DETAIL

PL 3 "ADDED" (2) & (3)

		-3		A-286	AMS 5726	3
		-2		A-286	AMS 5726	2
STOCK	CAGE CODE	PART OR IDENTIFYING NO.	NOMENCLATURE OR DESCRIPTION	MATERIAL SPECIFICATION		STOCK SIZE

P.C. 424

THIS DOCUMENT AND THE DATA DISCLOSED HEREIN OR HEREWITH IS NOT TO BE REPRODUCED, USED OR DISCLOSED IN WHOLE OR IN PART TO ANYONE WITHOUT THE PERMISSION OF AEROJET TECHSYSTEMS

NOTES:

1. INTERPRET DRAWING PER ATC-STD-4926.
2. MARK PER A5478 CLASS D WITH 1206519 AND APPLICABLE DASH NUMBER.

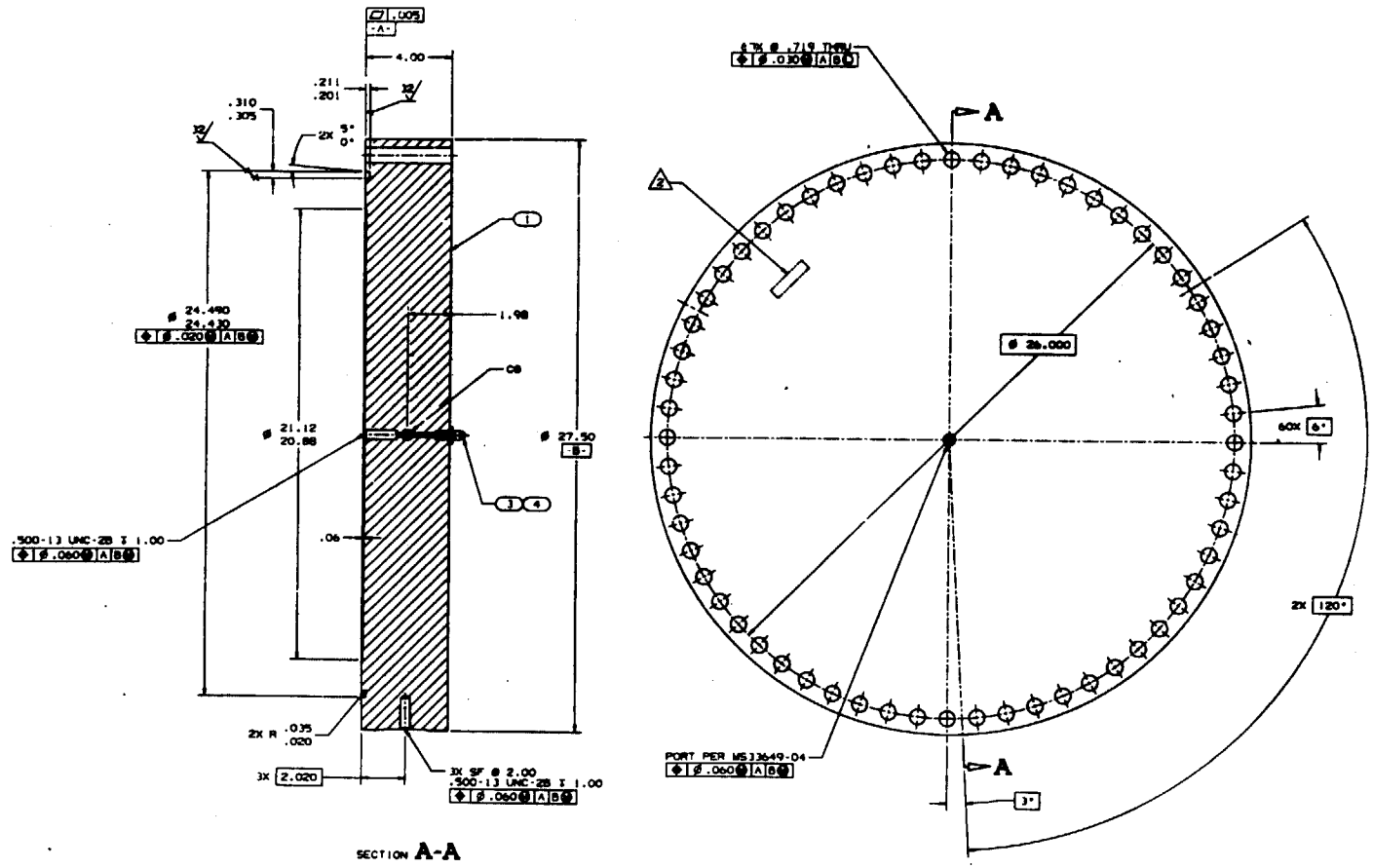

1	02697	3-904 C944-70	"O"RING		4
1		AN815-4J	UNION		3
					2
1		-1	PLATE	STEEL ASTM A36	1
-9					

NASB-37470

FULLER

DO NOT SCALE DRAWING

650 LB

1

PROOF PLATE, THRUSTER

E 05824 1206519

1/2 90-8-29 1 OF 1

P.C. 424

DEVELOPMENT HARDWARE
FOR TEST OR EXPERIMENTATION

A DIGITAL DEFINITION OF THIS PART IS AVAILABLE FROM THE CAD DATABASE. THIS DATA CAN BE ACCESSED BY ENTERING THE CAD SYSTEM WITH THE APPROPRIATE RELEASED FILENAME. MANUAL CHANGES TO THIS DWG ARE PROHIBITED.

FILENAME IS 424Y.1206519.NC.PROOF.PL

1206519

B-54

THIS DOCUMENT AND THE DATA DISCLOSED HEREIN OR HEREWITH IS NOT TO BE REPRODUCED, USED OR DISCLOSED IN WHOLE OR IN PART TO ANYONE WITHOUT THE PERMISSION OF AEROJET TECHSYSTEMS

REVISIONS			
LTR	DESCRIPTION	RELEASE DATE	APPROVED

NOTES:

1. INTERPRET DRAWING PER ATC-STD-4926.
2. MARK PER AS478- 35D WITH 1206520 AND APPLICABLE DASH NUMBER.
3. KNURL INDICATED SURFACE WITH A 160 DP STRAIGHT KNURL, MINIMUM OF 75% OF INDICATED SURFACE.
4. MATERIAL TO MEET HYDROGEN EMBRITTLEMENT TEST OF ASTM-B-577, PROCEDURE B.

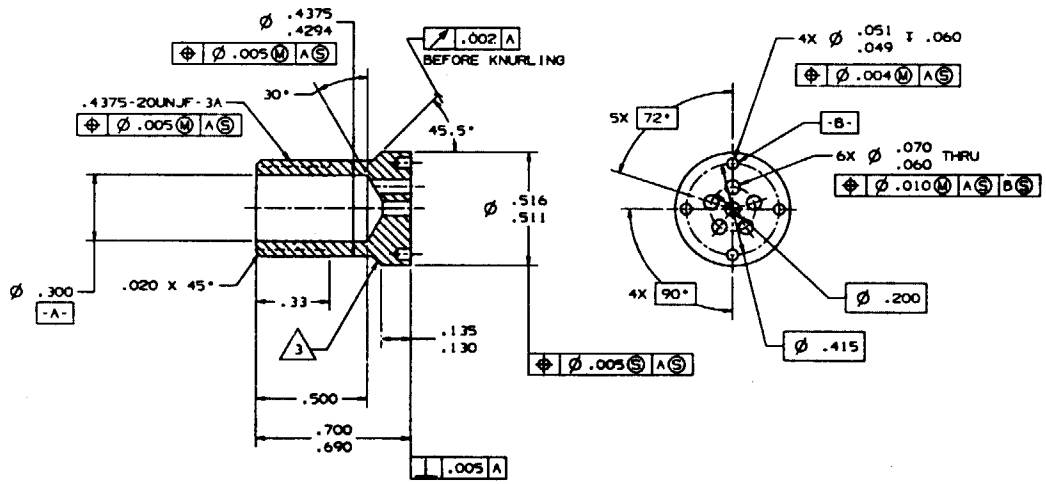

QTY REQD PER ASSY	CAGE CODE	PART OR IDENTIFYING NO.	NOMENCLATURE OR DESCRIPTION	MATERIAL SPECIFICATION	ITEM NO.
		-1		GLIDCOP GR AL-15	1

PARTS LIST

CONTRACT NO. NAS8-37470 — DRAWN WESTMAN — DATE 90-7-31

UNLESS OTHERWISE SPECIFIED DIMENSIONS & TOLERANCES ARE IN INCHES & PER ANSI Y14.5
TOLERANCES: DECIMALS .XX ±.03, .XXX ±.010; ANGLES ±0.5°
SURFACE ROUGHNESS
DO NOT SCALE DRAWING

DEVELOPMENT HARDWARE
FOR TEST OR EXPERIMENTATION

A DIGITAL DEFINITION OF THIS PART IS AVAILABLE FROM THE CAD DATABASE. THIS DATA CAN BE ACCESSED BY ENTERING THE CAD SYSTEM WITH THE APPROPRIATE RELEASED FILENAME. MANUAL CHANGES TO THIS DWG ARE PROHIBITED.
FILENAME IS 424D.1206520.NC.FCNUT.CLD

GENCORP AEROJET — TechSystems, SACRAMENTO, CALIFORNIA

TITLE: FACE NUT, COOLED

SIZE D — CAGE CODE 05824 — DWG NO. 1206520

SCALE 4/1 — RELEASE DATE 90-8-30 — SHEET 1 OF 1

THIS DRAWING HAS BEEN REVIEWED PER POLICY 27-1, 90-7-31 — P.C. 424

B-55

☒ ADCN ☐ DCN | 92-2-24

DOCUMENT CHANGE NOTICE

GENCORP AEROJET Propulsion Division Sacramento, CA CAGE 05624

1206520 | NC-1 | 1 of 2

FACE NUT, COOLED

J SCHNEIDER | 92-02-17

APPROVALS

ZONE ITEM

ADDED -2

			-2		GLISCOP OR AL-15	2
		CAGE CODE	PART OR IDENTIFYING NUMBER	NOMENCLATURE OR DESCRIPTION	MATERIAL SPECIFICATION	ITEM NO.

P.C. 424

DOCUMENT CHANGE NOTICE CONTINUATION SHEET

GENCORP AEROJET Propulsion Division Sacramento, CA CAGE 05624

☒ ADCN ☐ DCN | 92-02-17 | 1206520 | NC-1 | 2 of 2

ZONE ITEM

Added:

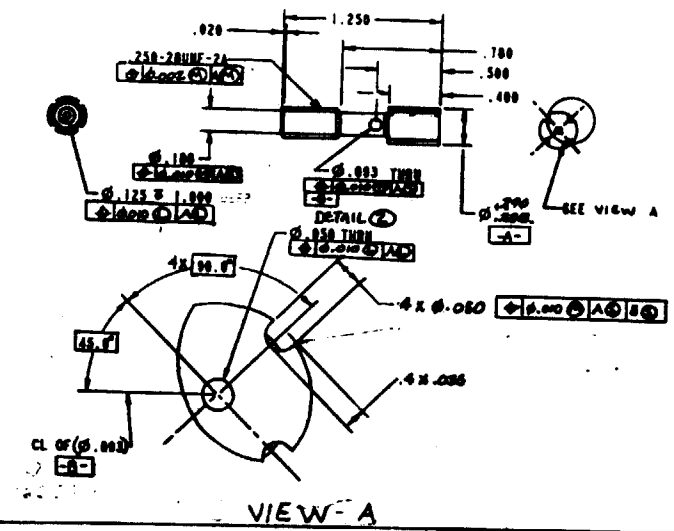

VIEW A

P.C. 424

☒ ADCN ☐ DCN	92-6-2	DOCUMENT CHANGE NOTICE	1206520	NC-2	1 of 2
JA SCHNEIDER	92-05-11	GENCORP AEROJET Propulsion Division Sacramento, CA CAGE 05824	FACE NUT, COOLED		

APPROVALS

ZONE ITEM

ADDED -3

A			-3		GLIDCOP OR AL-15	3
QTY REQD PER ASSY		CAGE CODE	PART OR IDENTIFYING NUMBER	NOMENCLATURE OR DESCRIPTION	MATERIAL SPECIFICATION	ITEM NO.

PARTS LIST

P.C. 424

DOCUMENT CHANGE NOTICE CONTINUATION SHEET

GENCORP AEROJET Propulsion Division Sacramento, CA CAGE 05824

☒ ADCN ☐ DCN	92-05-11	1206520	NC-2	2 of 2

ZONE ITEM

Added:

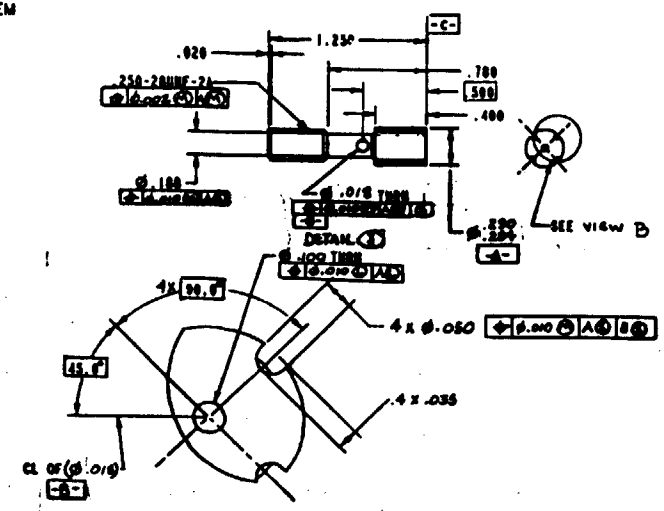

VIEW B

P.C. 424

THIS DOCUMENT AND THE DATA DISCLOSED HEREIN OR HEREWITH IS NOT TO BE REPRODUCED, USED OR DISCLOSED IN WHOLE OR IN PART TO ANYONE WITHOUT THE PERMISSION OF AEROJET TECHSYSTEMS

NOTES:

1. INTERPRET DRAWING PER ATC-STD-4926.
2. MARK PER AS478 CLASS D WITH 1206521 AND APPLICABLE DASH NUMBER.
3. FUSION WELD PER ATC-46351, USING (5).
4. ANODIZE PER MIL-A-8625, TYPE II, CLASS I, AFTER FINISH MACHINING.

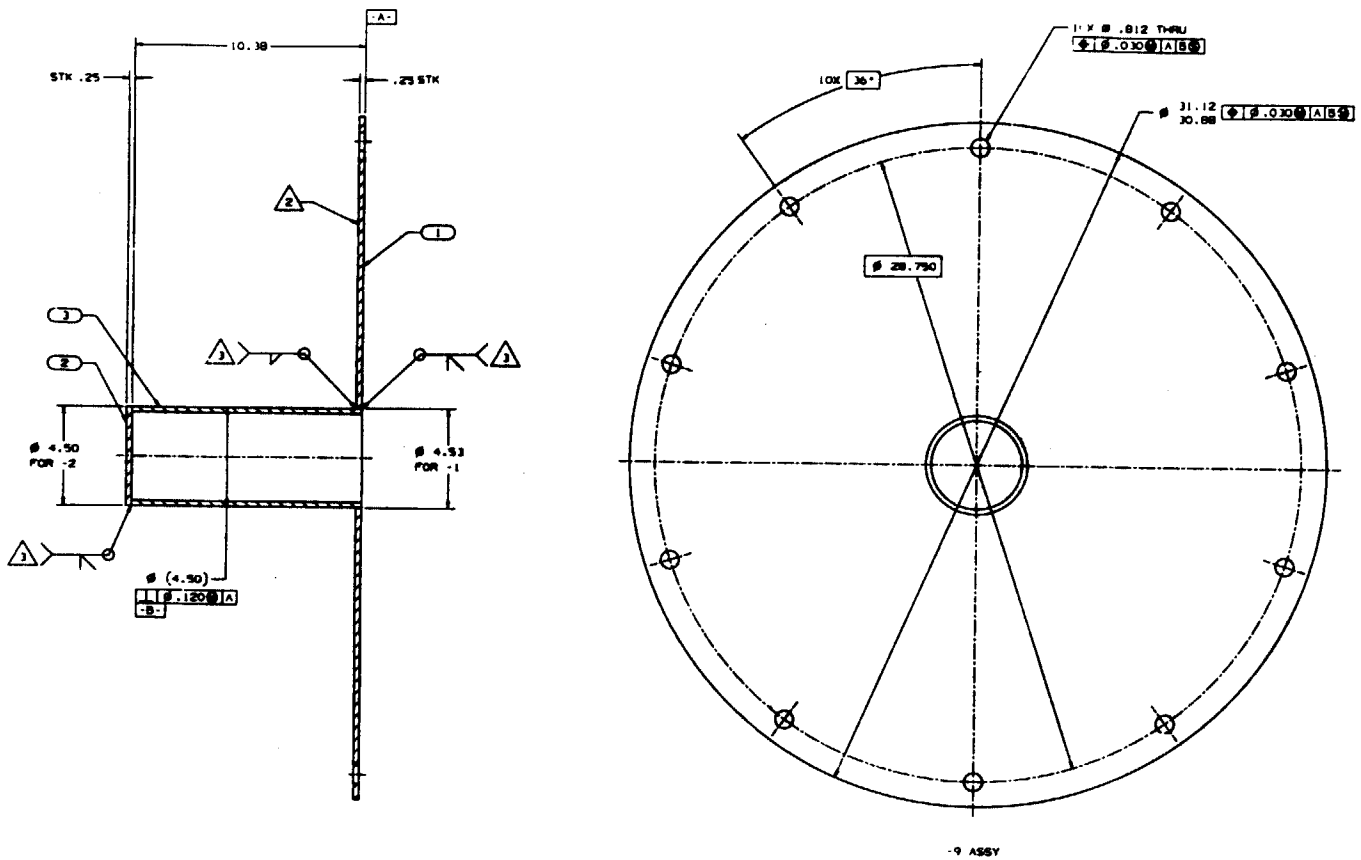

INSEPARABLE ASSEMBLY DRAWING

AR			WELD WIRE	AWS A5.10	ER 4043	5
						4
1		-3	TUBE	4.00 SCHD 40 PIPE AL ALLOY 6061	ASTM-B429	3
1		-2	CAP	AL ALLOY 6061-T6	QQ-A-250/11	2
1		-1	PLATE			1
-9						

NASB-37470

FULLER

GeoCorp Aerojet Technicians

COVER PLATE, INJECTOR

.XX ±.03 ±0.5°
.XXX ±.010

DO NOT SCALE DRAWING

22.2 LB | 1

E | 05824 | 1206521

1/2 | 90-8-30 | R | 1 OF 1

P.C. 424

DEVELOPMENT HARDWARE
FOR TEST OR EXPERIMENTATION

A DIGITAL DEFINITION OF THIS PART IS AVAILABLE FROM THE CAD DATABASE. THIS DATA CAN BE ACCESSED BY ENTERING THE CAD SYSTEM WITH THE APPROPRIATE RELEASED FILENAME. MANUAL CHANGES TO THIS DWG ARE PROHIBITED.

FILENAME IS 424Y.1206521.NC.INJ.COVER

■ ADCN	☐ DCN	DATE 90-11-6
ECRA NO.	RELEASE DATE 90-12-21	
PREPARED BY L. MYERS		

DOCUMENT CHANGE NOTICE

GENCORP AEROJET — TechSystems — SACRAMENTO, CALIFORNIA

DWG LVL	DOCUMENT NUMBER	REV LTR
1	1206521	NC-1

DOCUMENT TITLE: COVER PLATE, INJECTOR

SHEET 1 OF 1

APPROVALS

DESIGN	DESIGN ACTIVITY	CHECK	STRESS	WT
		90-12-20		
		MANUF	MAT'L	CMO

SH	ZONE	ITEM	
1	L/M	1	(15) ITEM 3 ASTM - B241 - 87, ASME - SB241 OR MIL - P - 25995B WAS: ASTM - B429

PC 424

THIS DOCUMENT AND THE DATA DISCLOSED HEREIN OR HEREWITH IS NOT TO BE REPRODUCED, USED OR DISCLOSED IN WHOLE OR IN PART TO ANYONE WITHOUT THE PERMISSION OF AEROJET TECHSYSTEMS

NOTES:

1. INTERPRET DRAWING PER ATC-STD-4926.
2. MARK PER A5478-37 WITH 1206522 AND APPLICABLE DASH NUMBER.

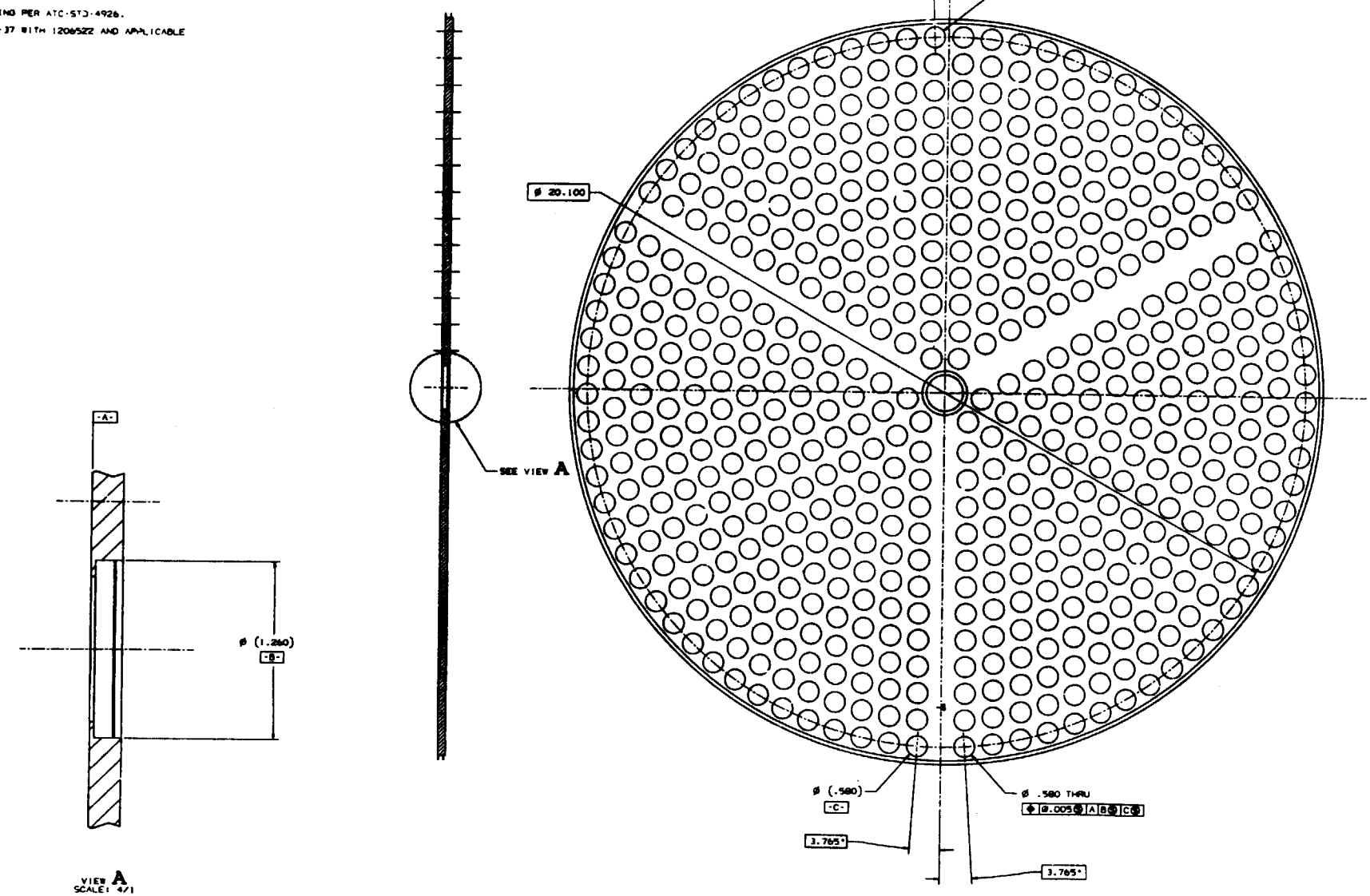

	-1	MAKE FROM 1206475-9	1

NAS8-37470

D. PIERMAN

GeoCorp AEROJET Techsystems SACRAMENTO, CALIFORNIA

TITLE: DISTRIBUTION PLATE, FUEL- MACHINED

.XX ±.03 ±0.5°
.XXX ±.010

DO NOT SCALE DRAWING

E | 05824 | 1206522

1/1 | 90-8-30 | 1 OF 1

P.C. 424

DEVELOPMENT HARDWARE
FOR TEST OR EXPERIMENTATION

A DIGITAL DEFINITION OF THIS PART IS AVAILABLE FROM THE CAD DATABASE. THIS DATA CAN BE ACCESSED BY ENTERING THE CAD SYSTEM WITH THE APPROPRIATE RELEASED FILENAME. MANUAL CHANGES TO THIS DWG ARE PROHIBITED.

FILENAME IS 4240.1206522.NC.F.DIST.PL

THIS DRAWING HAS BEEN REVIEWED FOR POLICY 27-1, 88-8-2

1206522

THIS DOCUMENT AN... IS NOT TO BE REP... PART TO ANYONE ... TECHSYSTEMS
DISCLOSED HEREIN OR HEREWITH ... OR DISCLOSED IN WHOLE OR IN ... PERMISSION OF AEROJET

NOTES:

1. INTERPRET DRAWING PER ATC-STD-4926.
2. MARK PER AS478, CLASS D, WITH 1206523 AND APPLICABLE DASH NUMBER.
3. ANODIZE PER MIL-A-8625, TYPE II, CLASS 1, AFTER FINISH MACHINING.

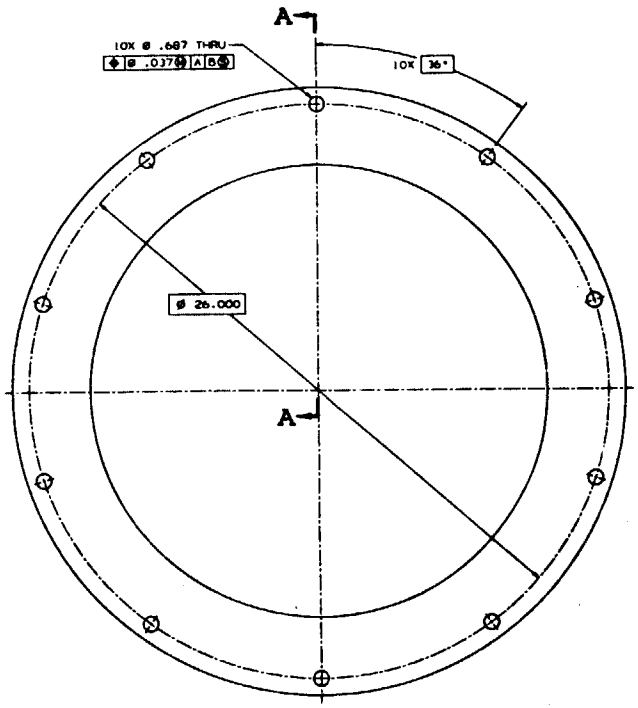

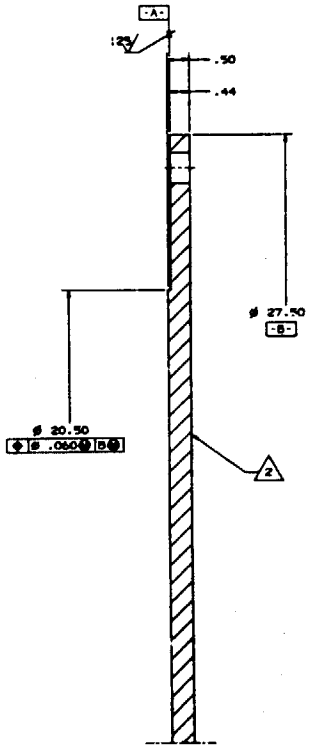

SECTION A-A
SCALE: 1/1

-1		AL ALLOY 6061-T6	QQ-A-250/11

NAS8-37470

Sunada

COVER PLATE, THRUSTER

E 05824 1206523

1/2 QQ-9-18 1 OF 1

DEVELOPMENT HARDWARE
FOR TEST OR EXPERIMENTATION

FILENAME IS 424Y.1206523.NC.CVR.THRSTR

P.C. 424

1206523

NASA
National Aeronautics and Space Administration

REPORT DOCUMENTATION PAGE

1. Report No. N/A	2. Government Accession No.	3. Recipient's Catalog No.

4. Title And Subtitle Space Transportation Booster Engine Thrust Chamber Technology, Large Scale Injector Final Report	5. Report Date February 1993
	6. Performing Organization Code
7. Author(s) Colin Faulkner, Program Manager Judy Schneider, Chief Project Engineer	8. Performing Organization Report No.
	10. Work Unit No.
9. Performing Organization Name and Address Aerojet Propulsion Division P.O. Box 13222 Sacramento, CA 95813-6000	11. Contract or Grant No. NAS 8-37470
	13. Type of Report and Period Covered Final Report February 1993
12. Sponsoring Agency Name and Address National Aeronautics & Space Administraiton Washington, D.C. 20546 NASA MSFC, Huntsville	14. Sponsoring Agency Code

15. Supplementary Notes

16. Abstract

17. Key Words (Suggested by Author(s)) Large Scale Injector	18. Distribution Statement

19. Security Classif. (of this report) Unclassified	20. Security Classif. (of this page) Unclassified	21. No. of pages 464	22. Price

NASA FORM 1626 OCT 86

PRECEDING PAGE BLANK NOT FILMED