IN-20
164773
P.192

NASA Contractor Report 191059 -VOL-2

LOX/Hydrocarbon Rocket Engine Analytical Design Methodology Development and Validation

Karen E. Niiya and Richard E. Walker
Aerojet Propulsion Division
Sacramento, California

May 1993

Prepared for
Lewis Research Center
Under Contract NAS3–25556

National Aeronautics and
Space Administration

(NASA-CR-191059-Vol-2)
LOX/HYDROCARBON ROCKET ENGINE
ANALYTICAL DESIGN METHODOLOGY
DEVELOPMENT AND VALIDATION. VOLUME
2: APPENDICES Final Report
(GenCorp Aerojet) 192 p

N93-27532

Unclas

G3/20 0164773

LOX/HYDROCARBON ROCKET ENGINE ANALYTICAL DESIGN METHODOLOGY DEVELOPMENT AND VALIDATION

(Contract NAS 3-25556)

Final Report

VOLUME II
APPENDICES

Prepared
For

NASA/Lewis Research Center
21000 Brookpark Road
Cleveland, Ohio 44135

Prepared By:

J.L. Pieper
Project Engineer

Thong V. Nguyen
Project Engineer

Approved By:

Bryce L. Reimer
Program Manager

Aerojet Propulsion Division
P.O. Box 13222
Sacramento, California 95813-6000

TABLE OF CONTENTS

Appendices		Page
A	Measured Manifold and Chamber Mean Pressures Versus Time Plot for All Successful Tests	A-1
B	Time Series, Amplitude and Frequency Evolution, and Power Spectral Analysis of Chamber Pressure for All Unstable-Combustion Tests	B-1
C	Time Series, Amplitude and Frequency Evolution, and Power Spectral Analysis of Manifold and Chamber Pressures and Accelerations for Test 004	C-1
D	ROCCID Validation Hardware Design Drawing Package	D-1
E	Advanced Document Change Notices for the ROCCID Design Disclosure	E-1
F	Nonconformance Reports	F-1

PRECEDING PAGE BLANK NOT FILMED

APPENDIX A

MEASURED MANIFOLD AND CHAMBER MEAN PRESSURES VERSUS TIME PLOT FOR ALL SUCCESSFUL TESTS

INDEX OF TEST DATA PLOTS

Page No.	
A-3	Foreword
A-5	Data From Test No. KFN7-D01-1J-004
A-6	Data From Test No. KFN7-D01-1J-007
A-7	Data From Test No. KFN7-D01-1J-009
A-8	Data From Test No. KFN7-D01-1J-012
A-9	Data From Test No. KFN7-D01-1J-013
A-10	Data From Test No. KFN7-D01-1J-014
A-11	Data From Test No. KFN7-D01-1J-015
A-12	Data From Test No. KFN7-D01-1J-017
A-13	Data From Test No. KFN7-D01-1J-018
A-14	Data From Test No. KFN7-D01-1J-019
A-15	Data From Test No. KFN7-D01-1J-020
A-16	Data From Test No. KFN7-D01-1J-021
A-17	Data From Test No. KFN7-D01-1J-022
A-18	Data From Test No. KFN7-D01-1J-023
A-19	Data From Test No. KFN7-D01-1J-025
A-20	Data From Test No. KFN7-D01-1J-026
A-21	Data From Test No. KFN7-D01-1J-027
A-22	Data From Test No. KFN7-D01-1J-028
A-23	Data From Test No. KFN7-D01-1J-029
A-24	Data From Test No. KFN7-D01-1J-030
A-25	Data From Test No. KFN7-D01-1J-031
A-26	Data From Test No. KFN7-D01-1J-036
A-27	Data From Test No. KFN7-D01-1J-037
A-28	Data From Test No. KFN7-D01-1J-038
A-29	Data From Test No. KFN7-D01-1J-039
A-30	Data From Test No. KFN7-D01-1J-040

FOREWORD

This Appendix contains plots of selected pressure measurements as a function of time from the initial fireswitch (FS-1) activation. These plots were prepared from digital data obtained from the analog-to-digital converter for all 27 tests, where meaningful operation was achieved, in order to assess the combustion stability or instability characteristics of the combustor. The plots start at FS-1 + 1.10 seconds, which is the approximate time that the LOX/TEA + TEB ignition occurs. This hypergolic propellant combination is used as a combustion source to ignite the LOX/RP-1 propellants. Test data is plotted until well after the test shutdown switch (FS-2) in order to show pressure decays during the shutdown transient. Information contained in these plots are identified below:

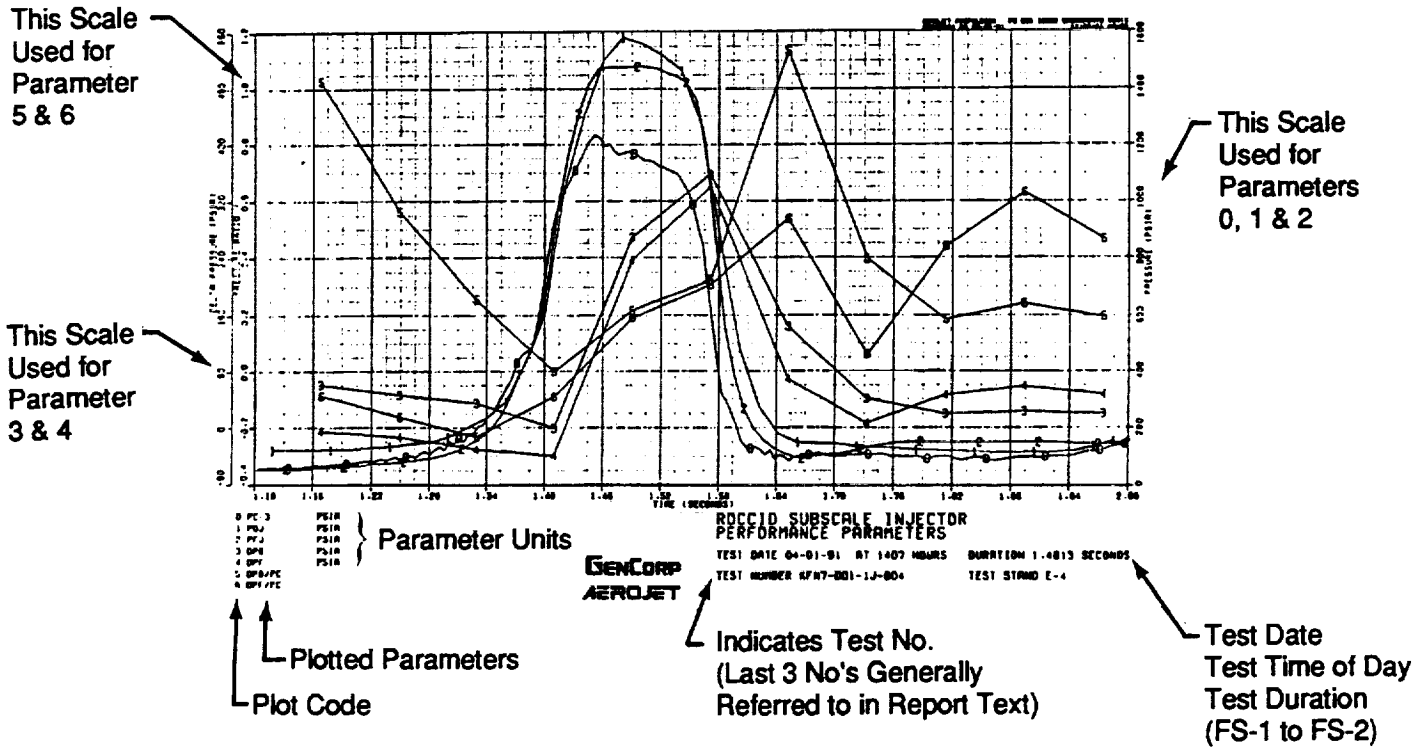

PLOTTED PARAMETERS

PC-3	Chamber Pressure
POJ	LOX Injector Manifold Pressure
PFJ	RP-1 Injector Manifold Pressure
DPO	LOX Injector ΔP (POJ-Pc-3)
DPF	RP-1 Injector ΔP (PFJ-Pc-3)
DPO/Pc	DPO/Pc-3
DPF/Pc	DPF/Pc-3

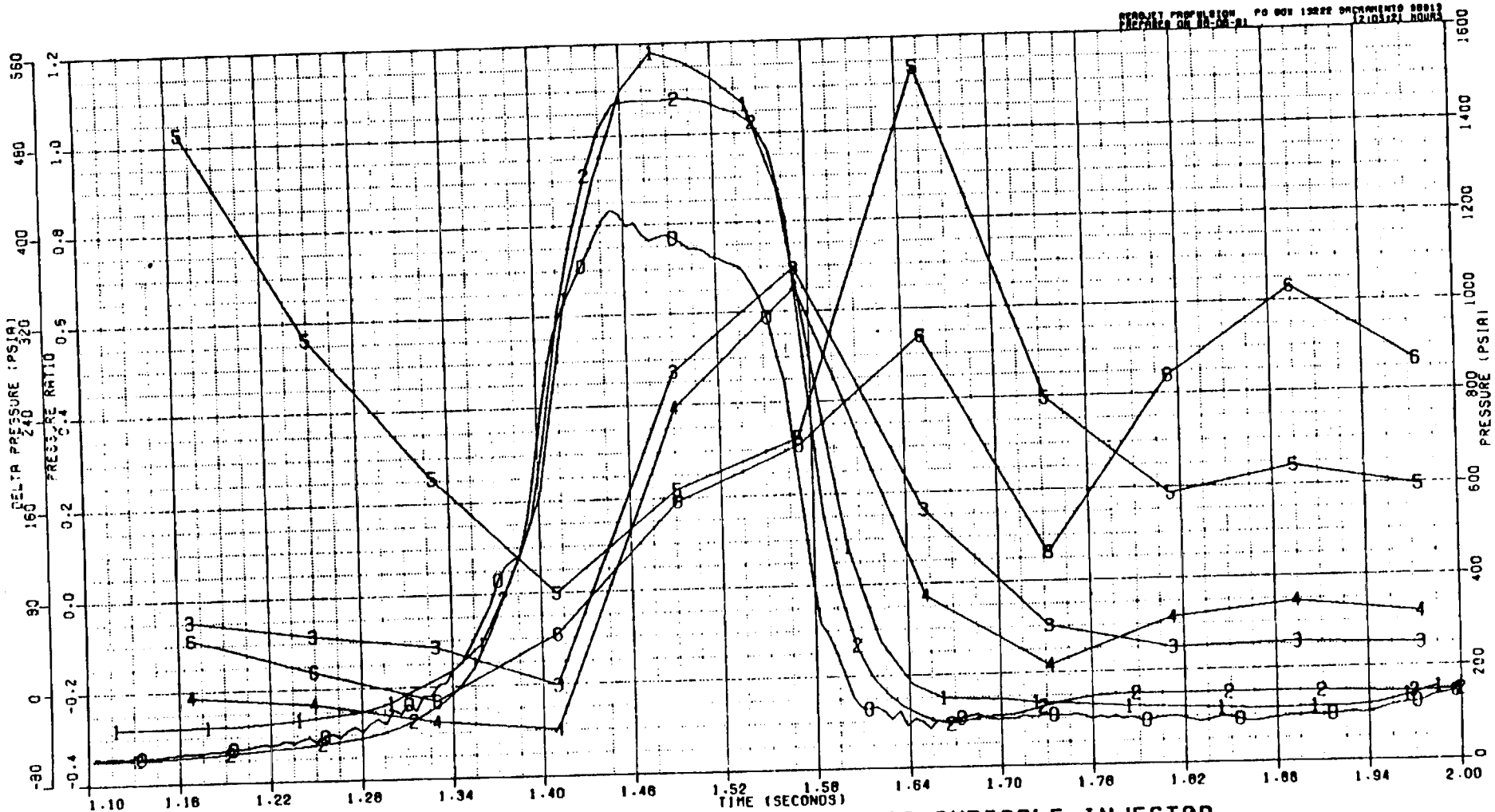

0 PC-3 PSIA
1 POJ PSIA
2 PFJ PSIA
3 OPO PSIA
4 OPF PSIA
5 OPO/PC
6 OPF/PC

GENCORP
AEROJET

ROCCID SUBSCALE INJECTOR
PERFORMANCE PARAMETERS

TEST DATE 04-01-91 AT 1407 HOURS DURATION 1.4613 SECONDS

TEST NUMBER KFN7-001-1J-004 TEST STAND E-4

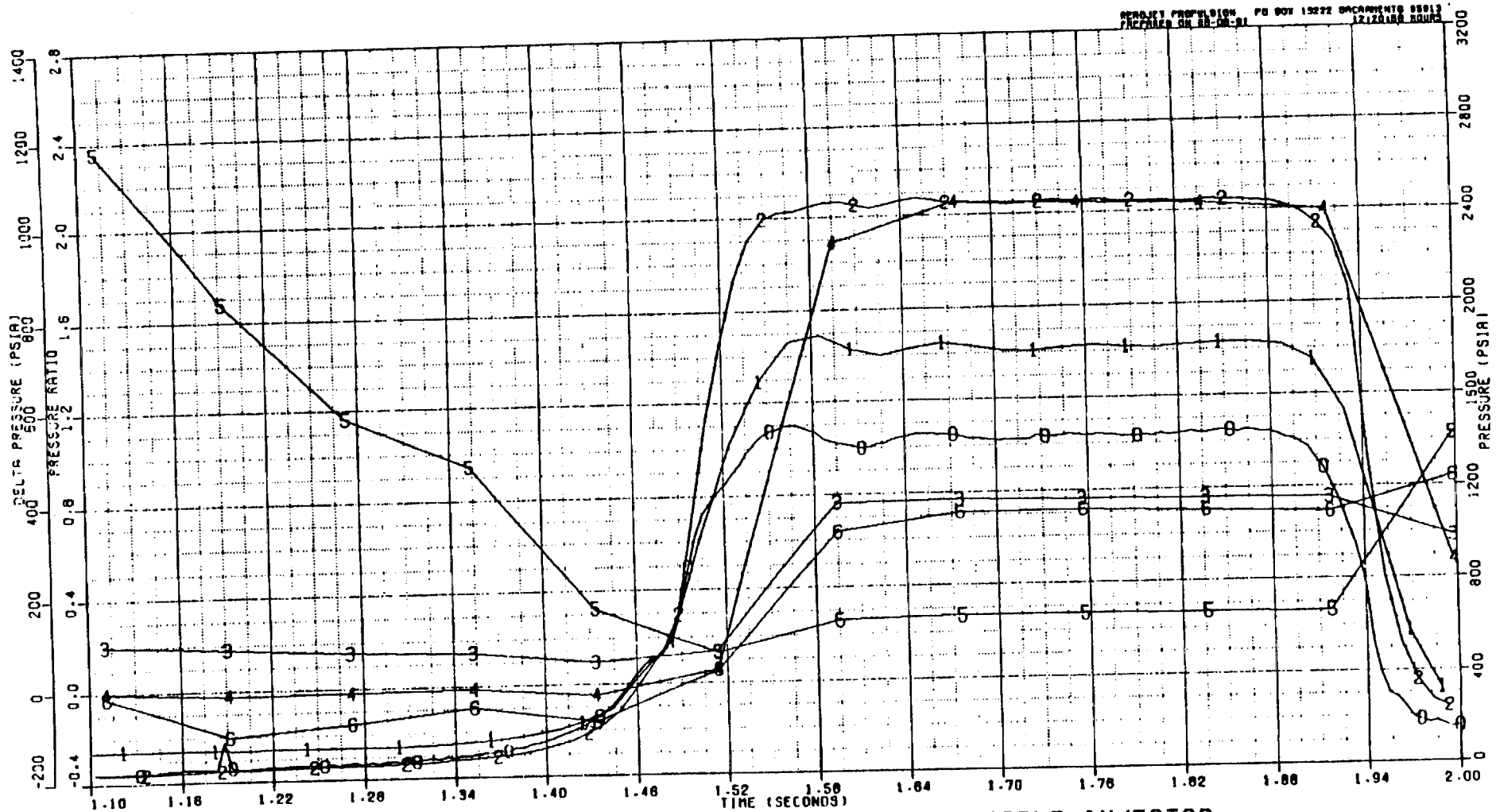

0 PC-3 PSIA
1 POJ PSIA
2 PFJ PSIA
3 OPO PSIA
4 OPF PSIA
5 OPO/PC
6 OPF/PC

GENCORP
AEROJET

ROCCID SUBSCALE INJECTOR
PERFORMANCE PARAMETERS

TEST DATE 04-04-91 AT 1115 HOURS DURATION 1.853 SECONDS

TEST NUMBER KFN7-001-1J-007 TEST STAND E-4

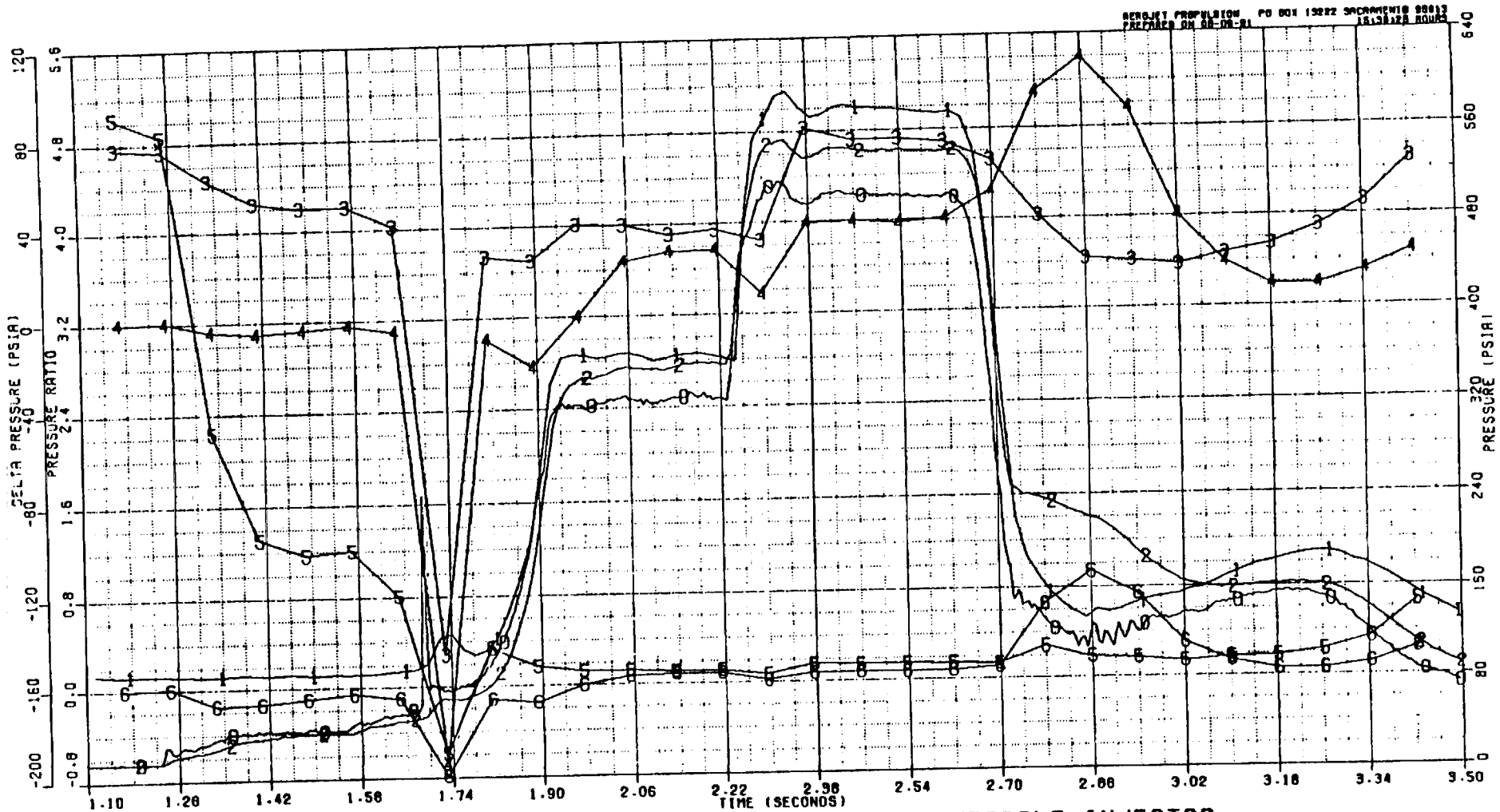

ROCCID SUBSCALE INJECTOR
PERFORMANCE PARAMETERS

TEST DATE 04-04-91 AT 1522 HOURS DURATION 2.569 SECONDS

TEST NUMBER KFN7-001-1J-009 TEST STAND E-4

GENCORP
AEROJET

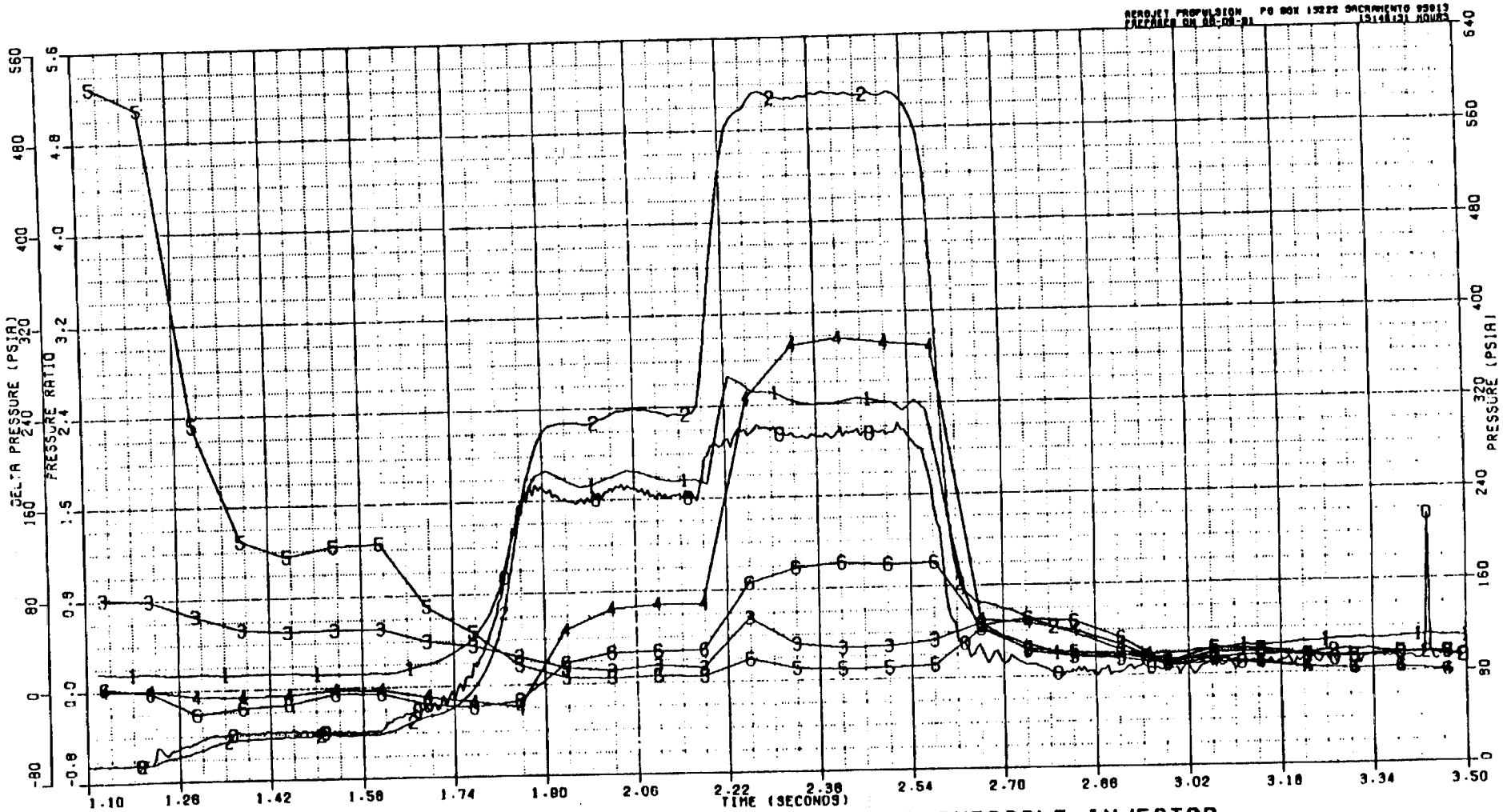

0	PC-3	PSIA
1	POJ	PSIA
2	PFJ	PSIA
3	OPO	PSIA
4	OPF	PSIA
5	OPO/PC	
6	OPF/PC	

GENCORP
AEROJET

ROCCID SUBSCALE INJECTOR
PERFORMANCE PARAMETERS

TEST DATE 04-08-91 AT 1409 HOURS DURATION 2.494 SECONDS

TEST NUMBER KFN7-D01-1J-012 TEST STAND E-4

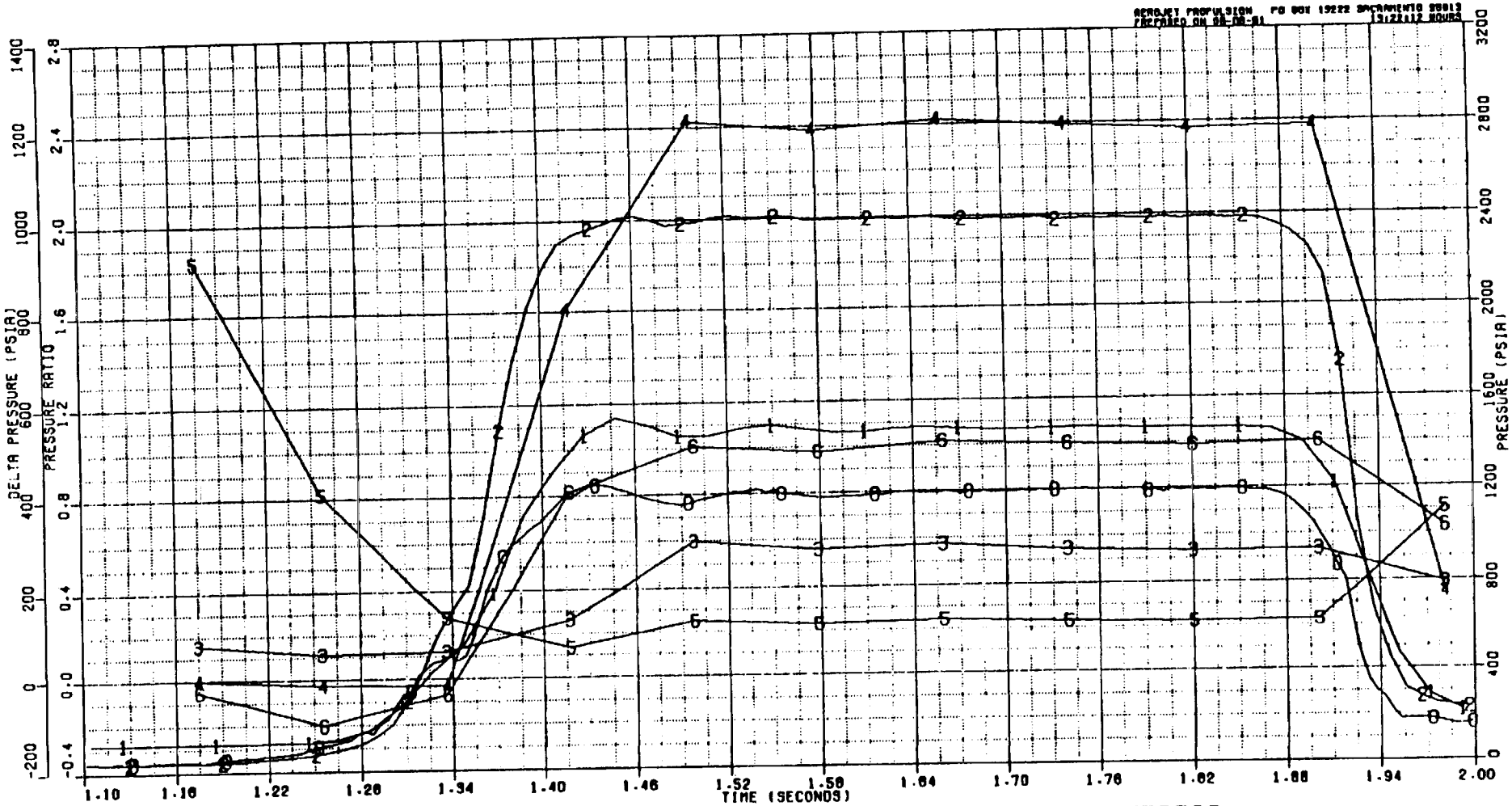

0 PC-3 PSIA
1 POJ PSIA
2 PFJ PSIA
3 OPO PSIA
4 OPF PSIA
5 OPO/PC
6 OPF/PC

GENCORP
AEROJET

ROCCID SUBSCALE INJECTOR PERFORMANCE PARAMETERS

TEST DATE 04-08-91 AT 1750 HOURS DURATION 1.823 SECONDS

TEST NUMBER KFN7-001-1J-013 TEST STAND E-4

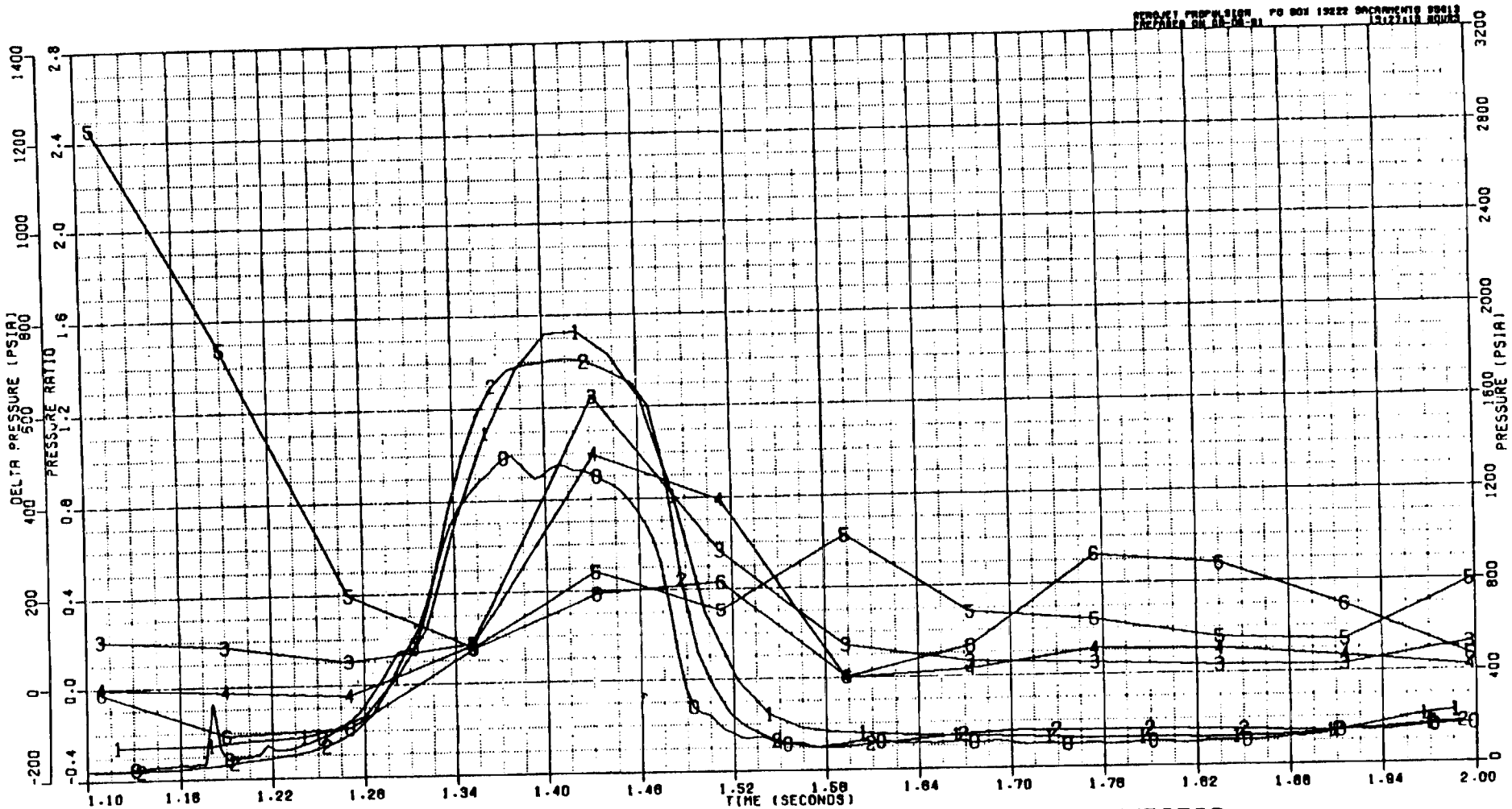

0 PC-3 PSIA
1 POJ PSIA
2 PFJ PSIA
3 OPO PSIA
4 OPF PSIA
5 OPO/PC
6 OPF/PC

GENCORP
AEROJET

ROCCID SUBSCALE INJECTOR
PERFORMANCE PARAMETERS

TEST DATE 04-09-91 AT 1110 HOURS DURATION 1.387 SECONDS

TEST NUMBER KFN7-001-1J-014 TEST STAND E-4

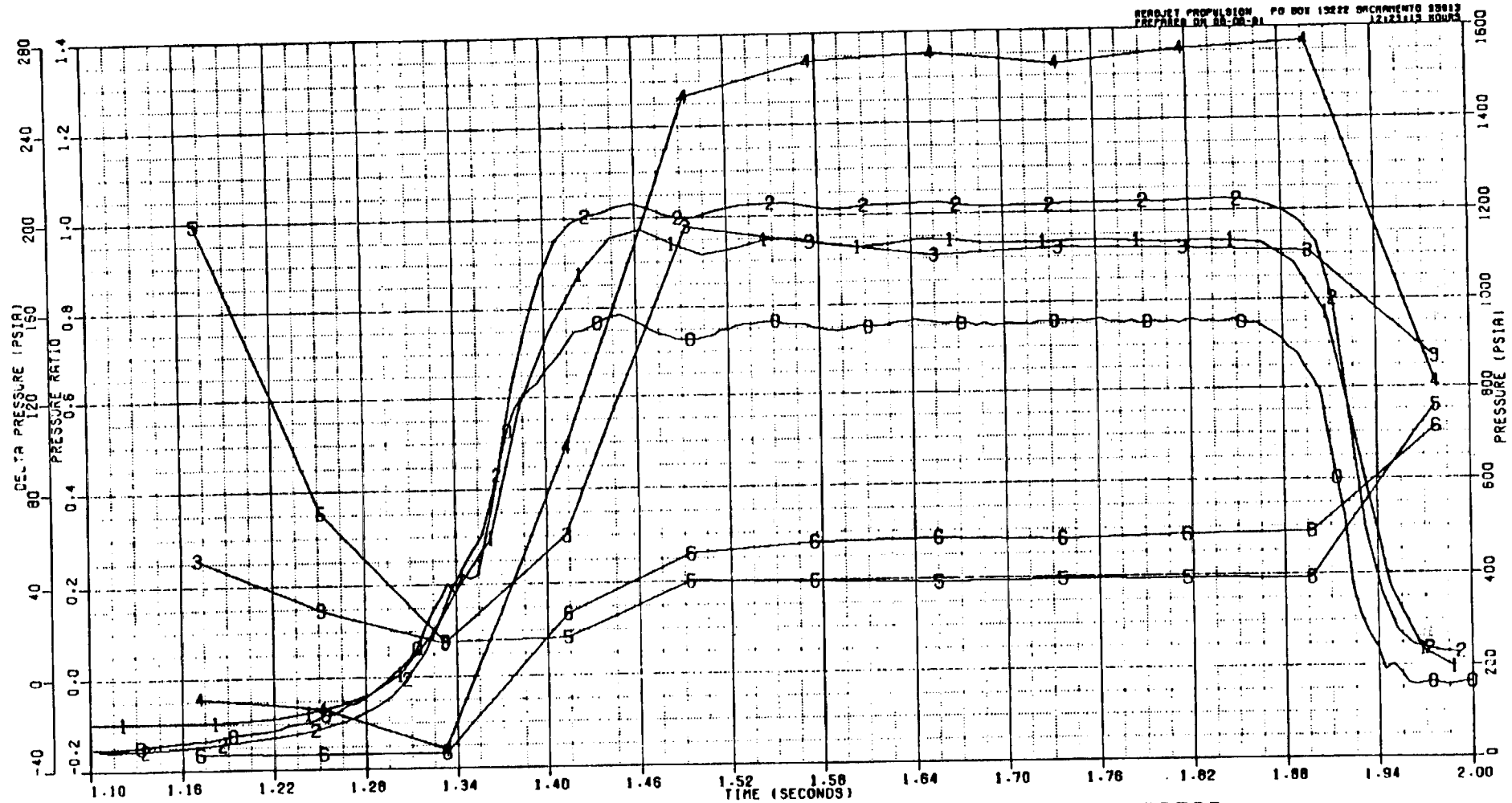

0 PC-3 PSIA
1 POJ PSIA
2 PFJ PSIA
3 OPO PSIA
4 OPF PSIA
5 OPO/PC
6 OPF/PC

GENCORP
AEROJET

ROCCID SUBSCALE INJECTOR
PERFORMANCE PARAMETERS

TEST DATE 04-09-91 AT 1347 HOURS DURATION 1.823 SECONDS

TEST NUMBER KFN7-D01-1J-015 TEST STAND E-4

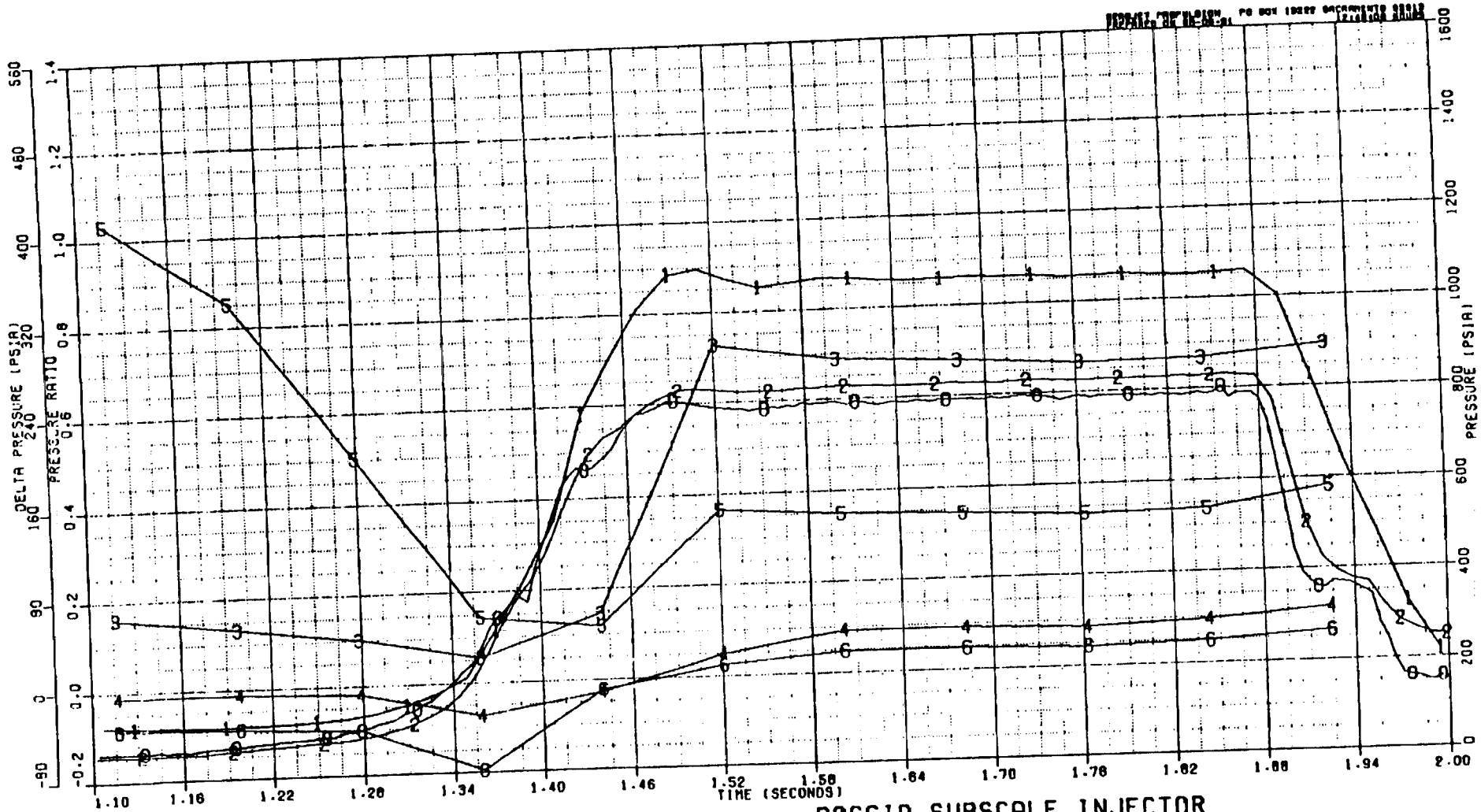

0 PC-3 PSIA
1 POJ PSIA
2 PFJ PSIA
3 OPO PSIA
4 OPF PSIA
5 OPO/PC
6 OPF/PC

GENCORP
AEROJET

ROCCID SUBSCALE INJECTOR
PERFORMANCE PARAMETERS

TEST DATE 04-09-91 AT 1553 HOURS DURATION 1.836 SECONDS

TEST NUMBER KFN7-D01-1J-017 TEST STAND E-4

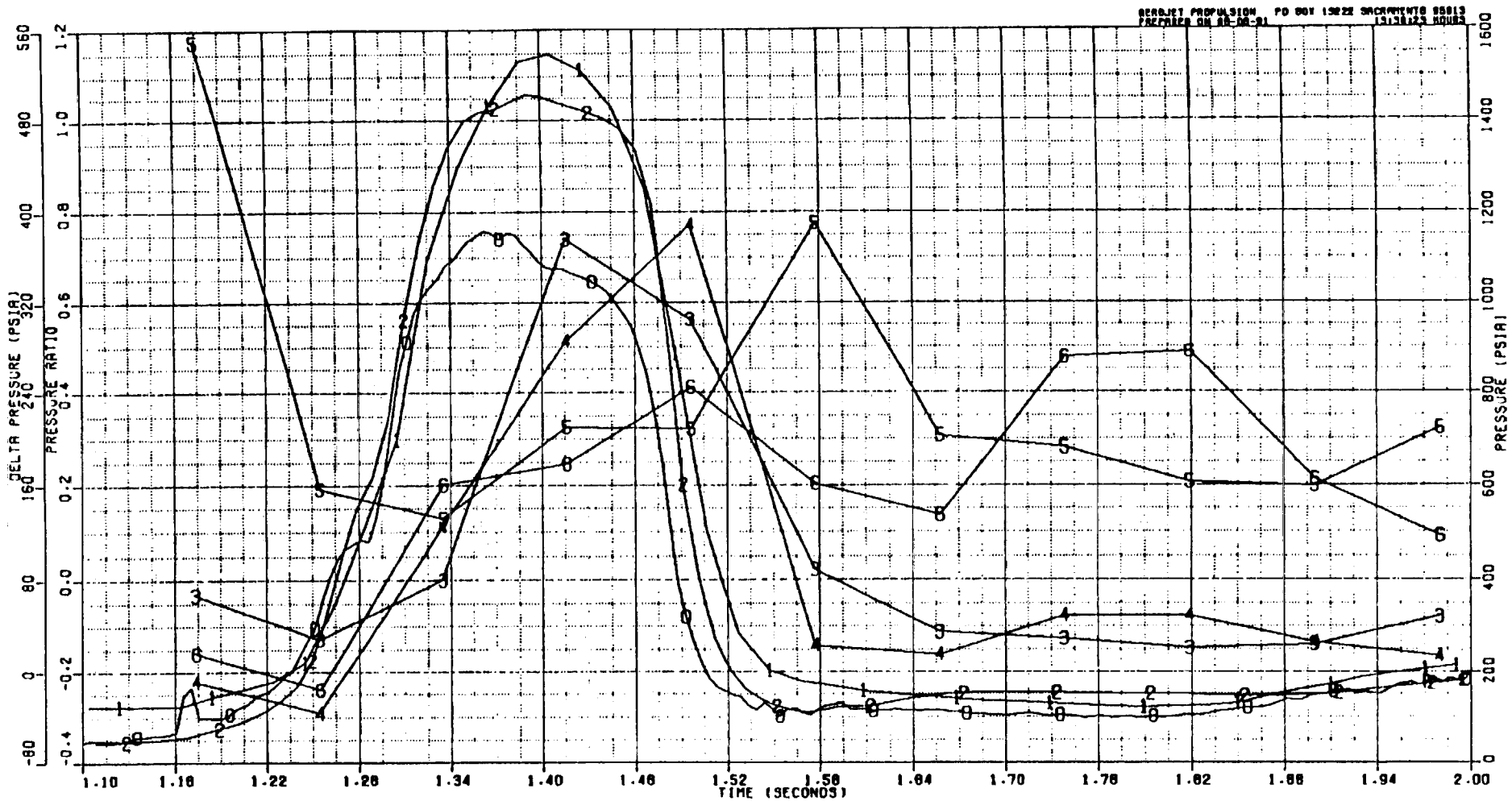

0 PC-3 PSIA
1 POJ PSIA
2 PFJ PSIA
3 OPO PSIA
4 OPF PSIA
5 OPO/PC
6 OPF/PC

GENCORP
AEROJET

ROCCID SUBSCALE INJECTOR PERFORMANCE PARAMETERS

TEST DATE 04-10-91 AT 1105 HOURS DURATION 1.383 SECONDS

TEST NUMBER KFN7-001-1J-018 TEST STAND E-4

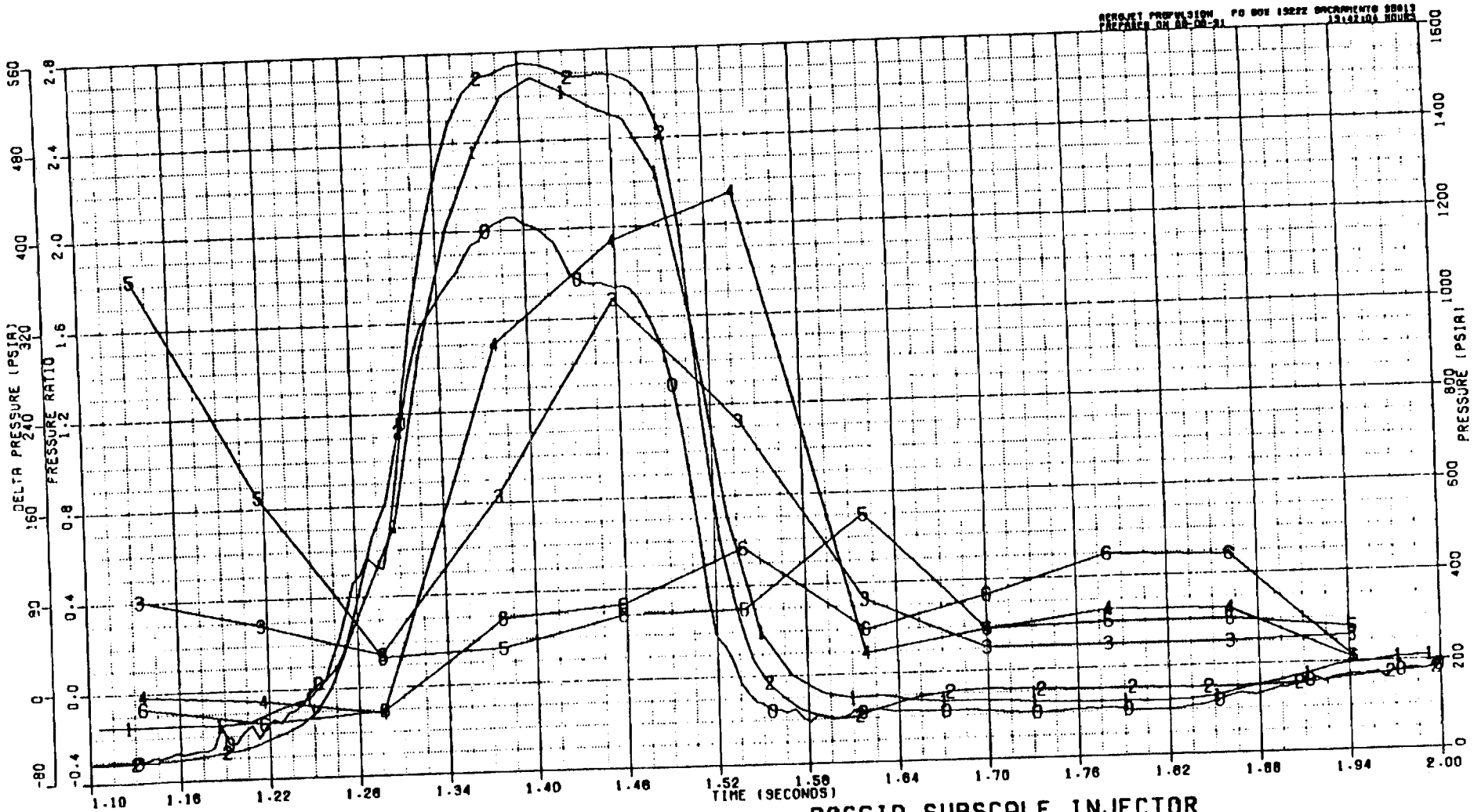

ROCCID SUBSCALE INJECTOR
PERFORMANCE PARAMETERS

TEST DATE 04-10-91 AT 1341 HOURS DURATION 1.403 SECONDS

TEST NUMBER KFN7-001-1J-019 TEST STAND E-4

GENCORP
AEROJET

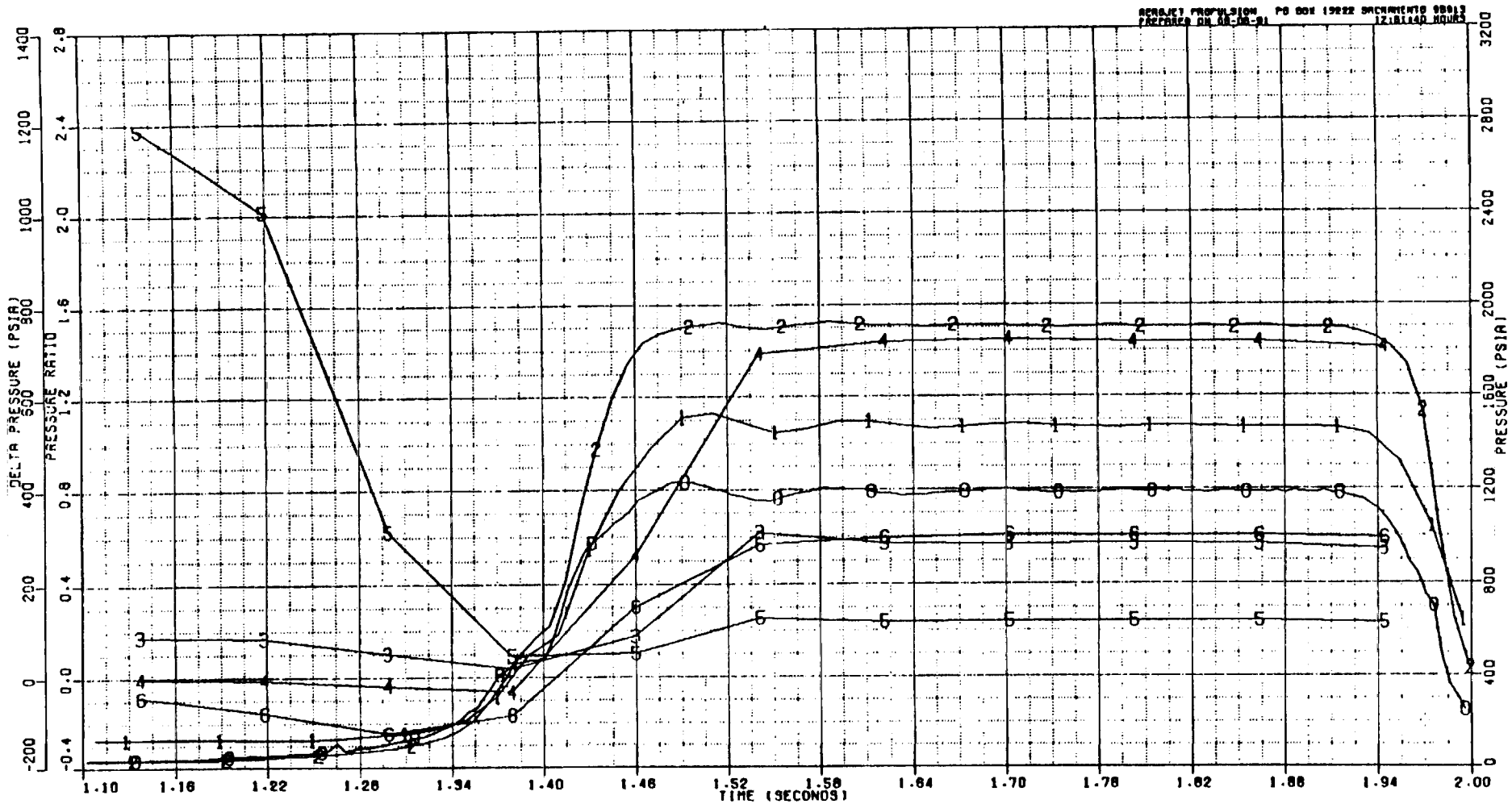

0 PC-3 PSIA
1 POJ PSIA
2 PFJ PSIA
3 OPO PSIA
4 OPF PSIA
5 OPO/PC
6 OPF/PC

GENCORP
AEROJET

ROCCID SUBSCALE INJECTOR PERFORMANCE PARAMETERS

TEST DATE 04-10-91 AT 1455 HOURS DURATION 1.865 SECONDS

TEST NUMBER KFN7-001-1J-020 TEST STAND E-4

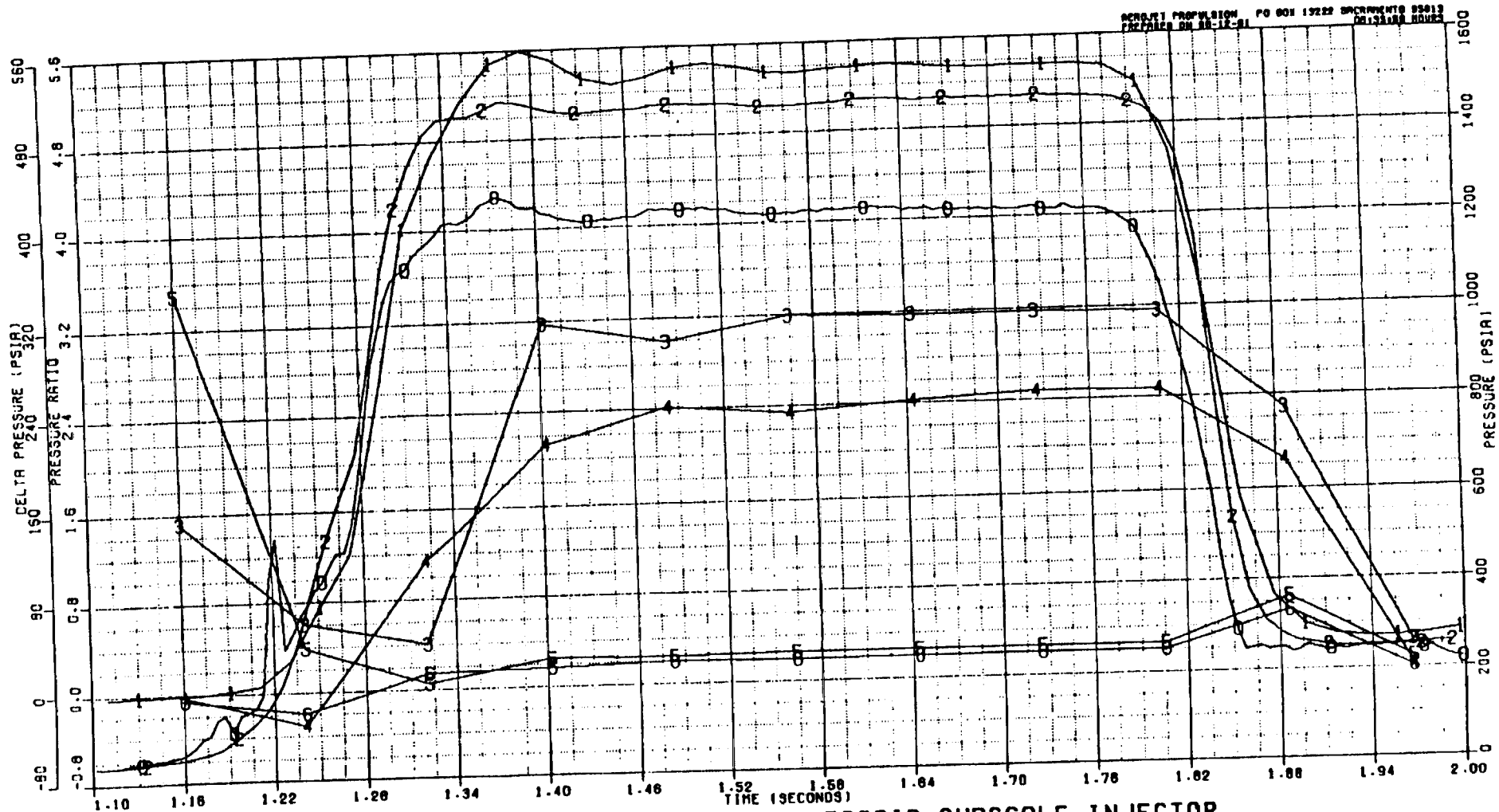

ROCCID SUBSCALE INJECTOR
PERFORMANCE PARAMETERS

TEST DATE 04-15-91 AT 1342 HOURS DURATION 1.744 SECONDS

TEST NUMBER KFN7-001-1J-021 TEST STAND E-4

GENCORP
AEROJET

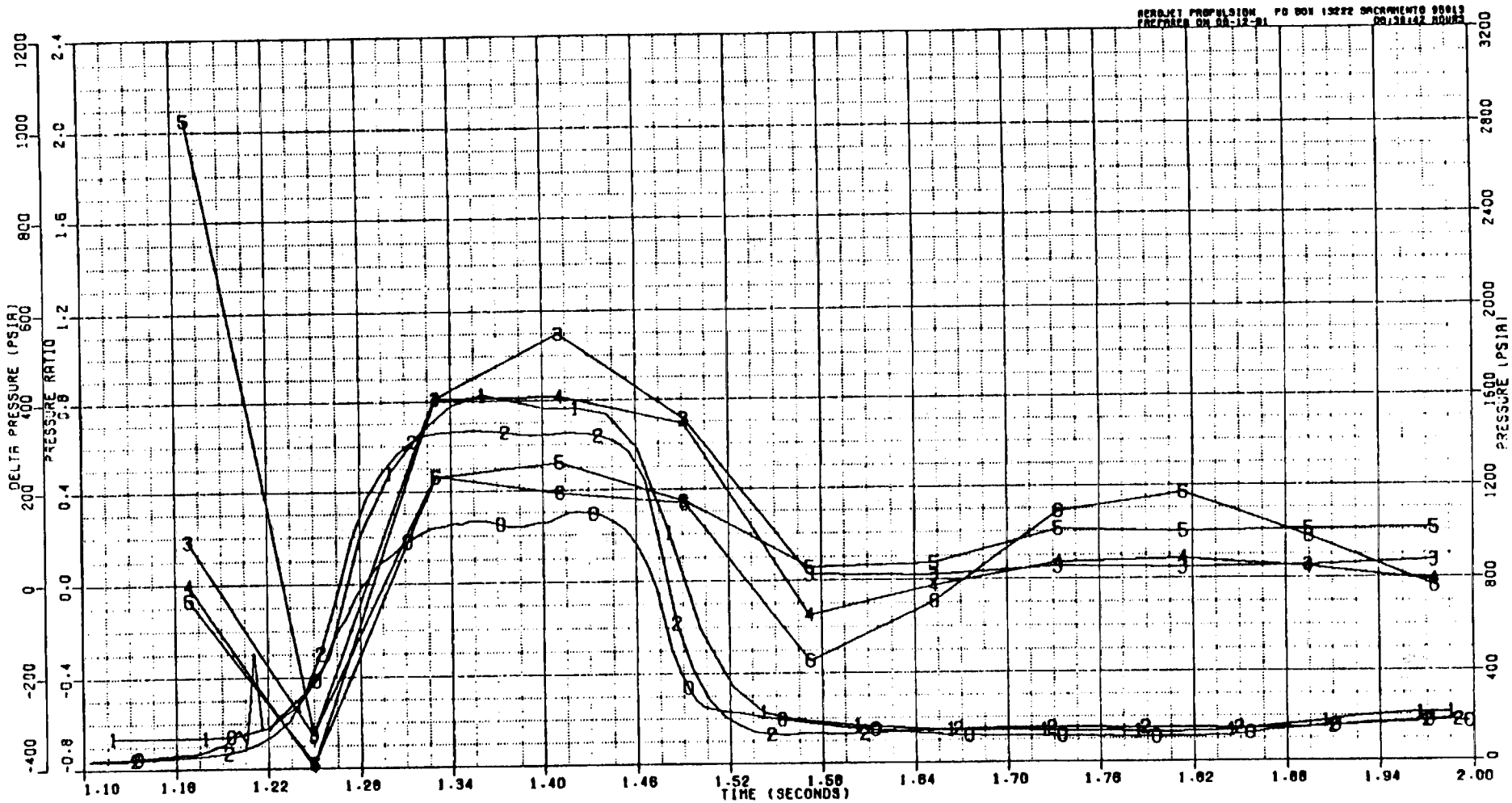

0 PC-3 PSIA
1 POJ PSIA
2 PFJ PSIA
3 OPO PSIA
4 OPF PSIA
5 OPO/PC
6 OPF/PC

GENCORP
AEROJET

ROCCID SUBSCALE INJECTOR
PERFORMANCE PARAMETERS

TEST DATE 04-15-91 AT 1439 HOURS DURATION 1.366 SECONDS

TEST NUMBER KFN7-D01-1J-022 TEST STAND E-4

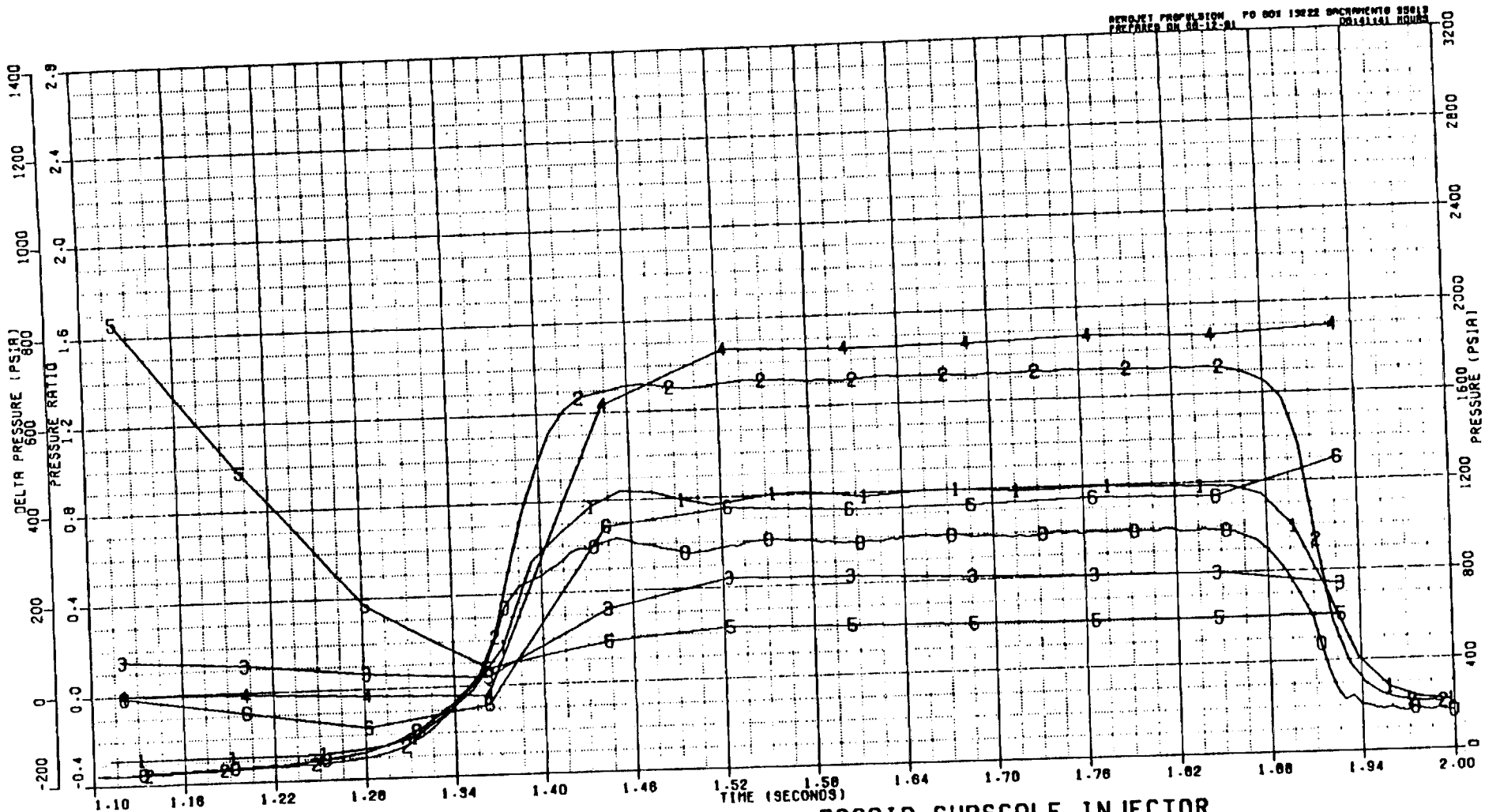

ROCCID SUBSCALE INJECTOR
PERFORMANCE PARAMETERS

TEST DATE 04-17-91 AT 1000 HOURS DURATION 1.825 SECONDS

TEST NUMBER KFN7-D01-1J-023 TEST STAND E-4

GENCORP
AEROJET

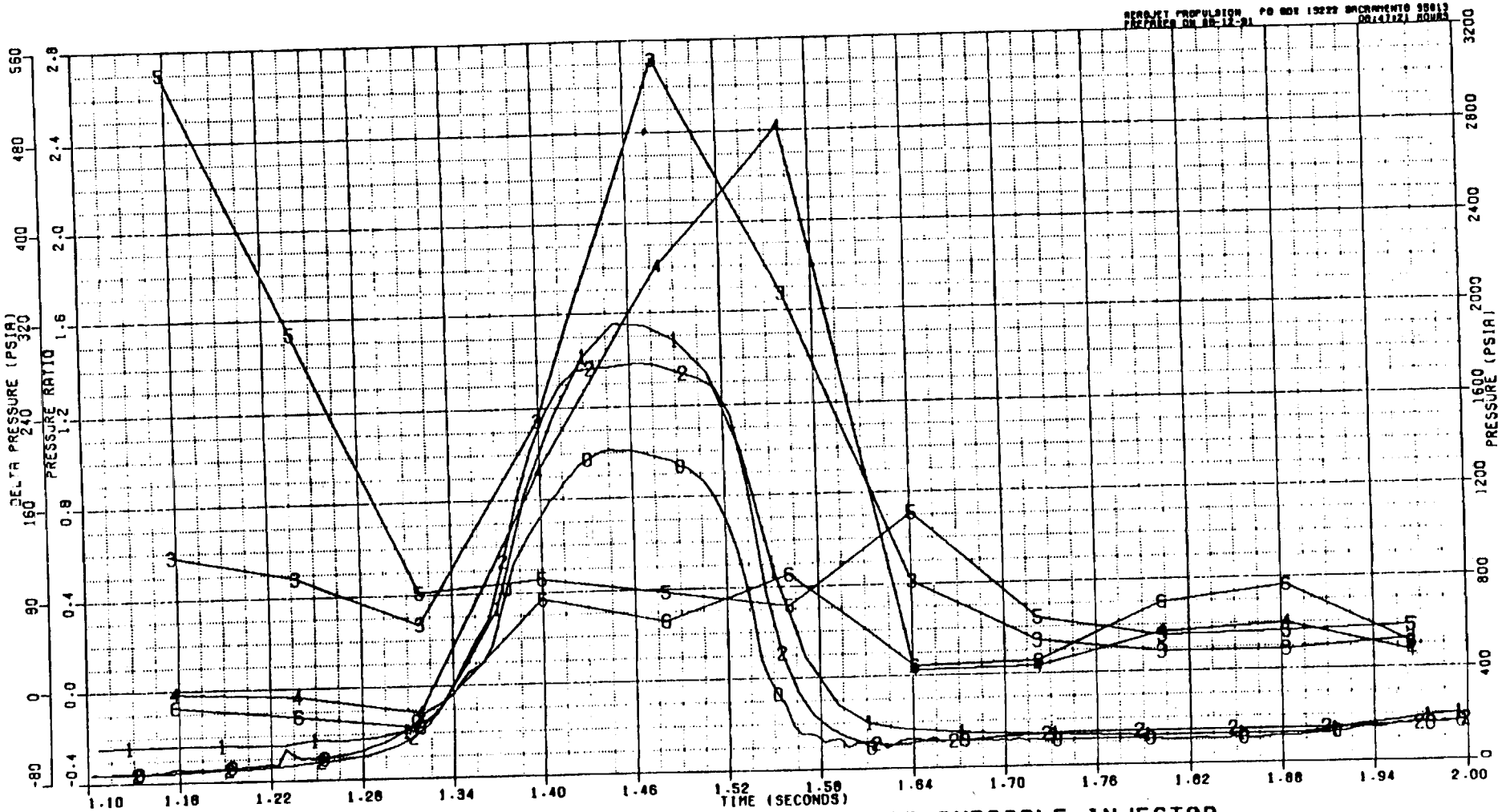

ROCCID SUBSCALE INJECTOR
PERFORMANCE PARAMETERS

TEST DATE 04-17-91 AT 1330 HOURS DURATION 1.425 SECONDS

TEST NUMBER KFN7-D01-1J-025 TEST STAND E-4

GENCORP
AEROJET

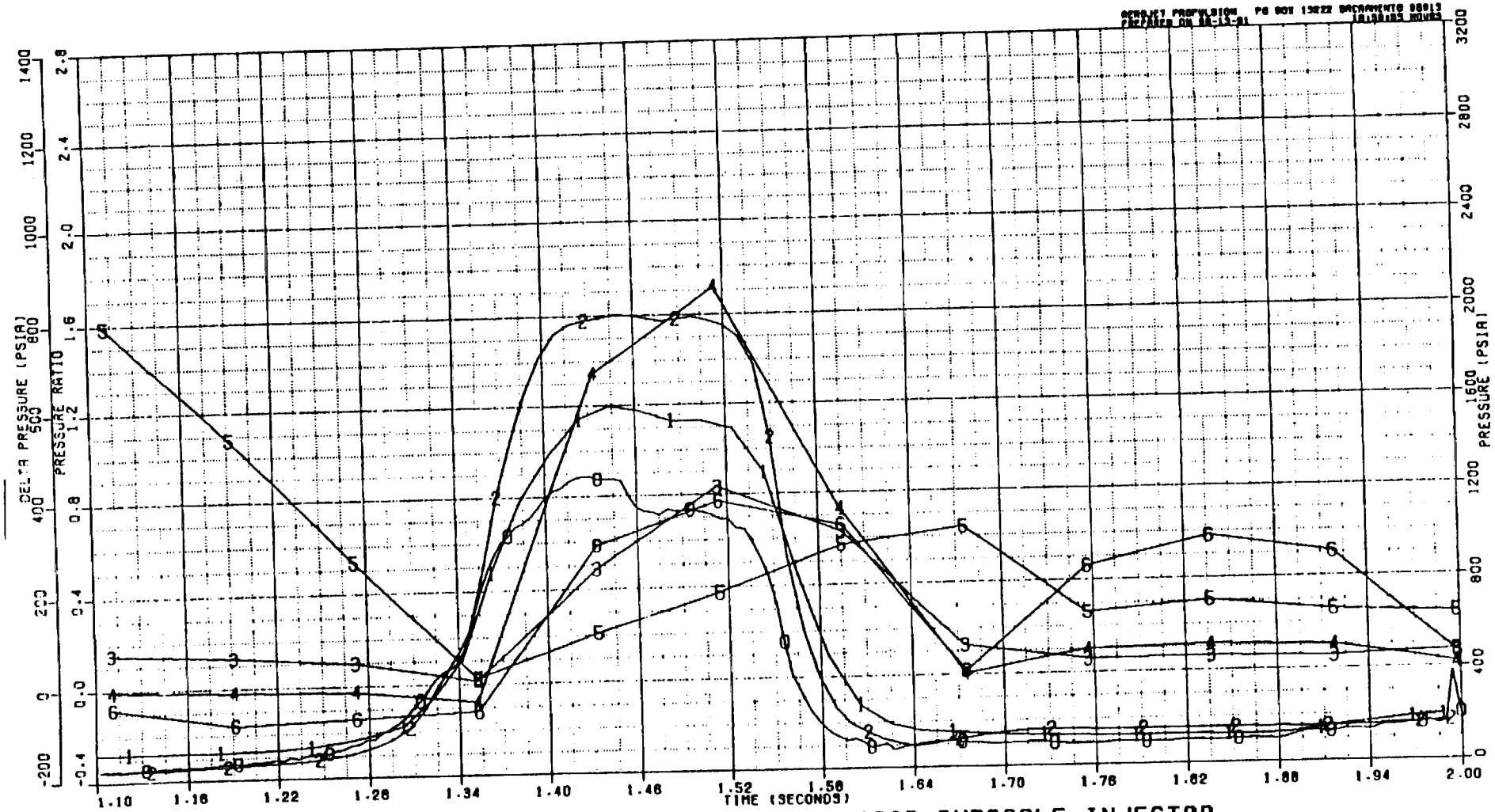

0 PC-3 PSIA
1 POJ PSIA
2 PFJ PSIA
3 OPO PSIA
4 OPF PSIA
6 OPO/PC
6 OPF/PC

GENCORP
AEROJET

ROCCID SUBSCALE INJECTOR
PERFORMANCE PARAMETERS

TEST DATE 04-22-91 AT 1315 HOURS DURATION 1.464 SECONDS

TEST NUMBER KFN7-D01-1J-026 TEST STAND E-4

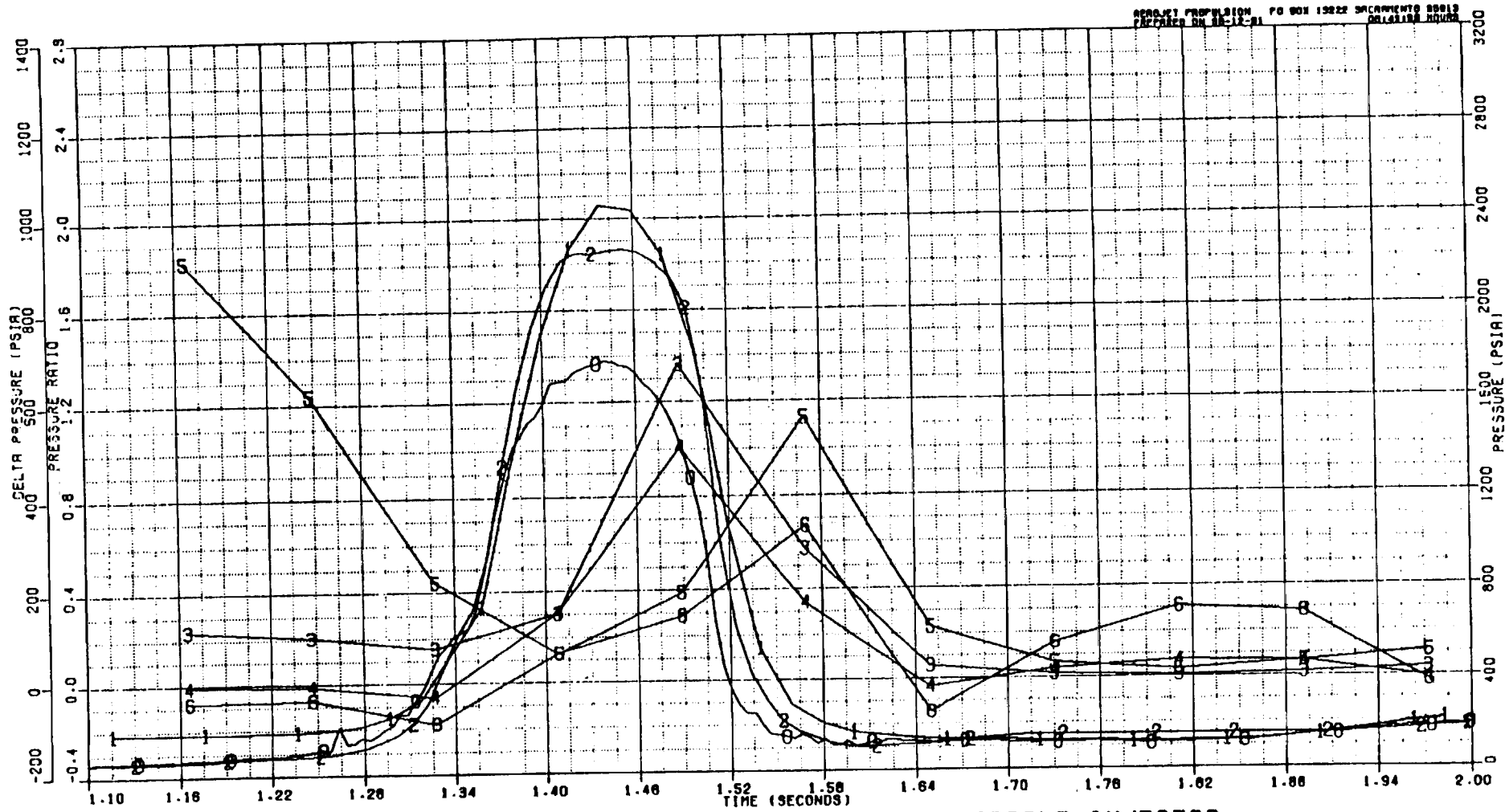

0 PC-3 PSIA
1 POJ PSIA
2 PFJ PSIA
3 OPO PSIA
4 OPF PSIA
5 OPO/PC
6 OPF/PC

GENCORP
AEROJET

ROCCID SUBSCALE INJECTOR
PERFORMANCE PARAMETERS

TEST DATE 04-23-91 AT 1056 HOURS DURATION 1.410 SECONDS

TEST NUMBER KFN7-D01-1J-027 TEST STAND E-4

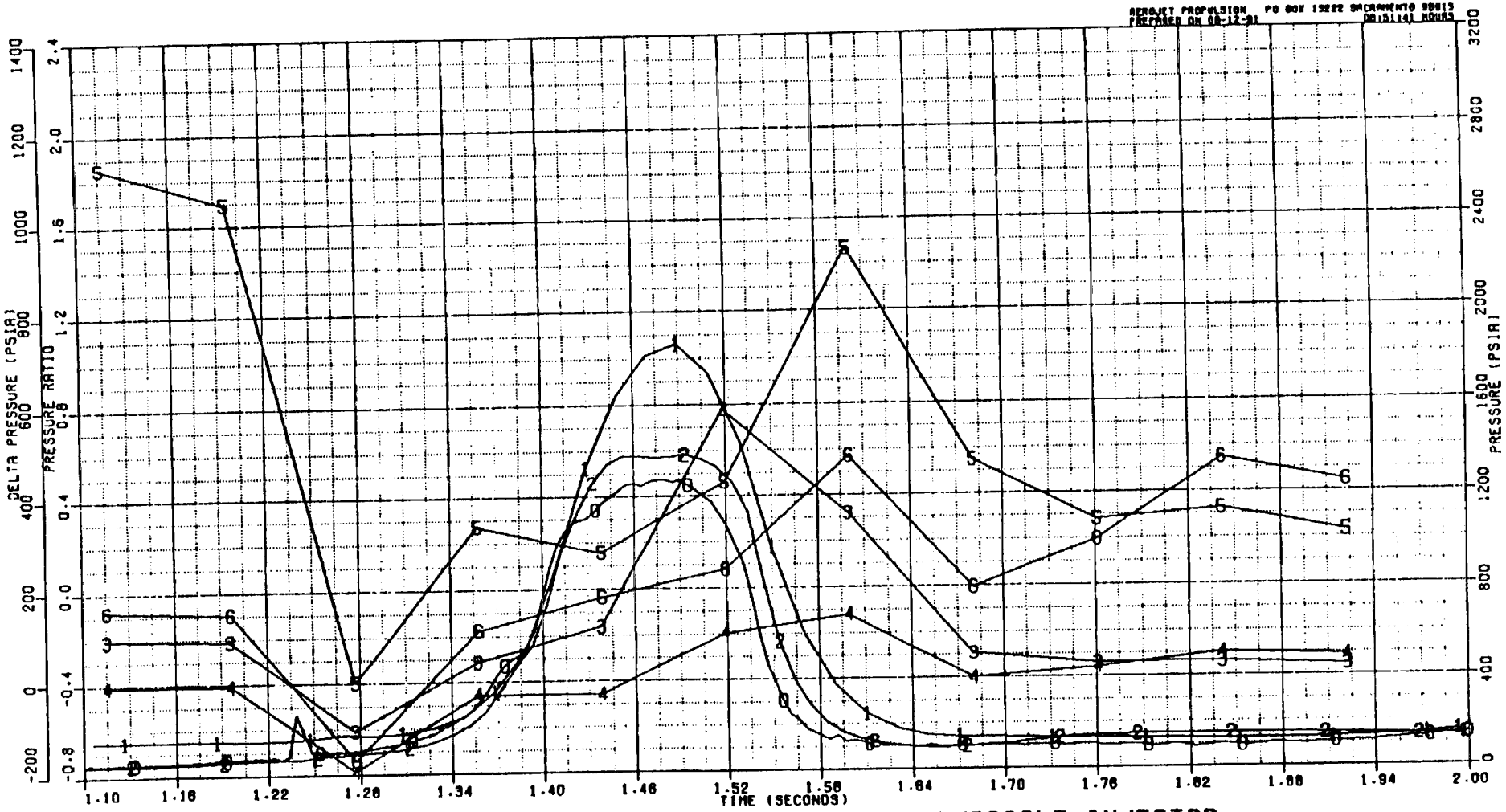

0 PC-3	PSIA	
1 POJ	PSIA	
2 PFJ	PSIA	
3 OPO	PSIA	
4 OPF	PSIA	
5 OPO/PC		
6 OPF/PC		

GENCORP
AEROJET

ROCCID SUBSCALE INJECTOR
PERFORMANCE PARAMETERS

TEST DATE 04-23-91 AT 1305 HOURS DURATION 1.436 SECONDS

TEST NUMBER KFN7-001-1J-028 TEST STAND E-4

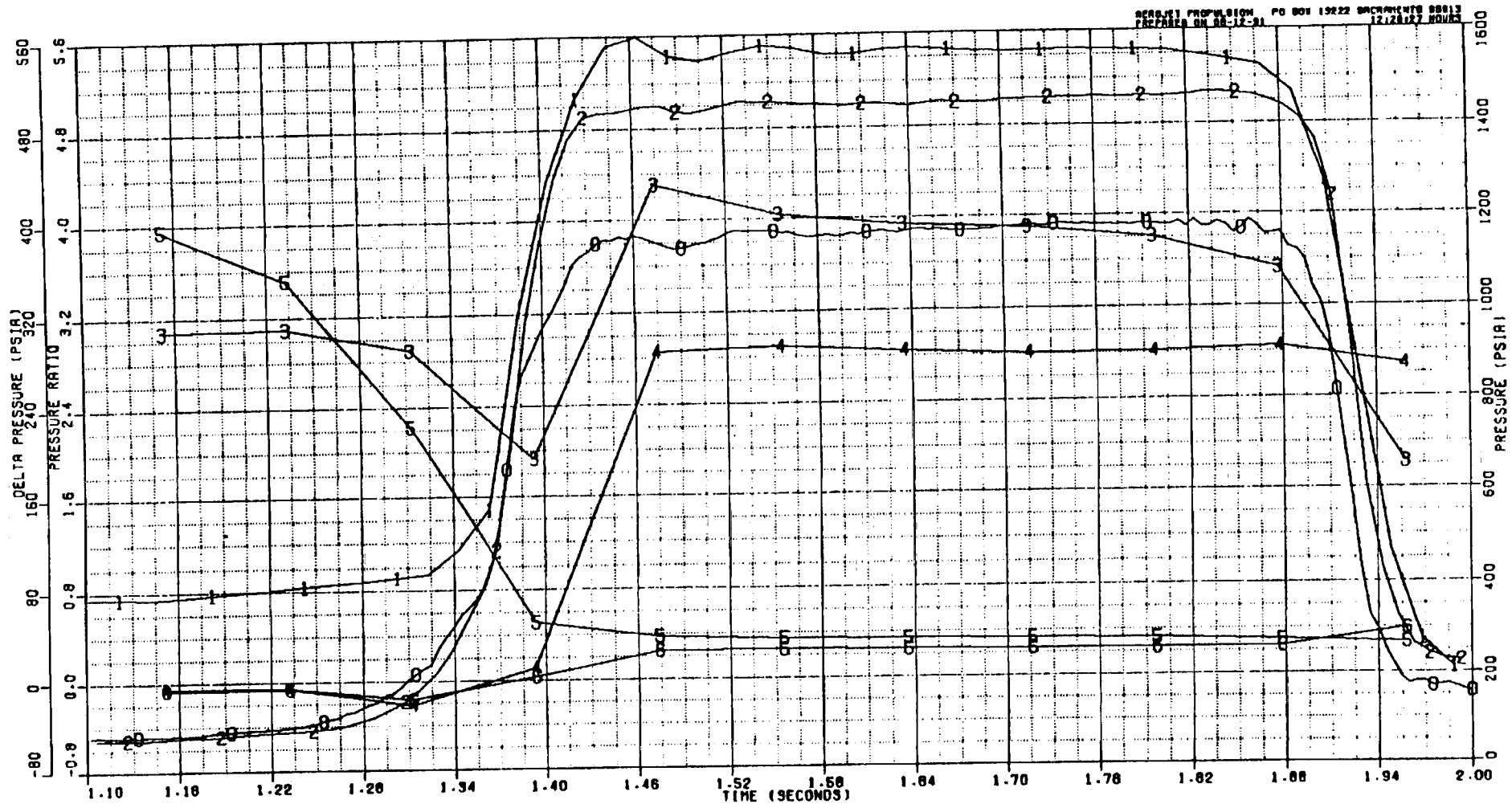

0 PC-3 PSIA
1 POJ PSIA
2 PFJ PSIA
3 OPO PSIA
4 OPF PSIA
5 OPO/PC
6 OPF/PC

GENCORP
AEROJET

ROCCID SUBSCALE INJECTOR
PERFORMANCE PARAMETERS

TEST DATE 04-30-91 AT 1300 HOURS DURATION 1.835 SECONDS

TEST NUMBER KFN7-D01-1J-029 TEST STAND E-4

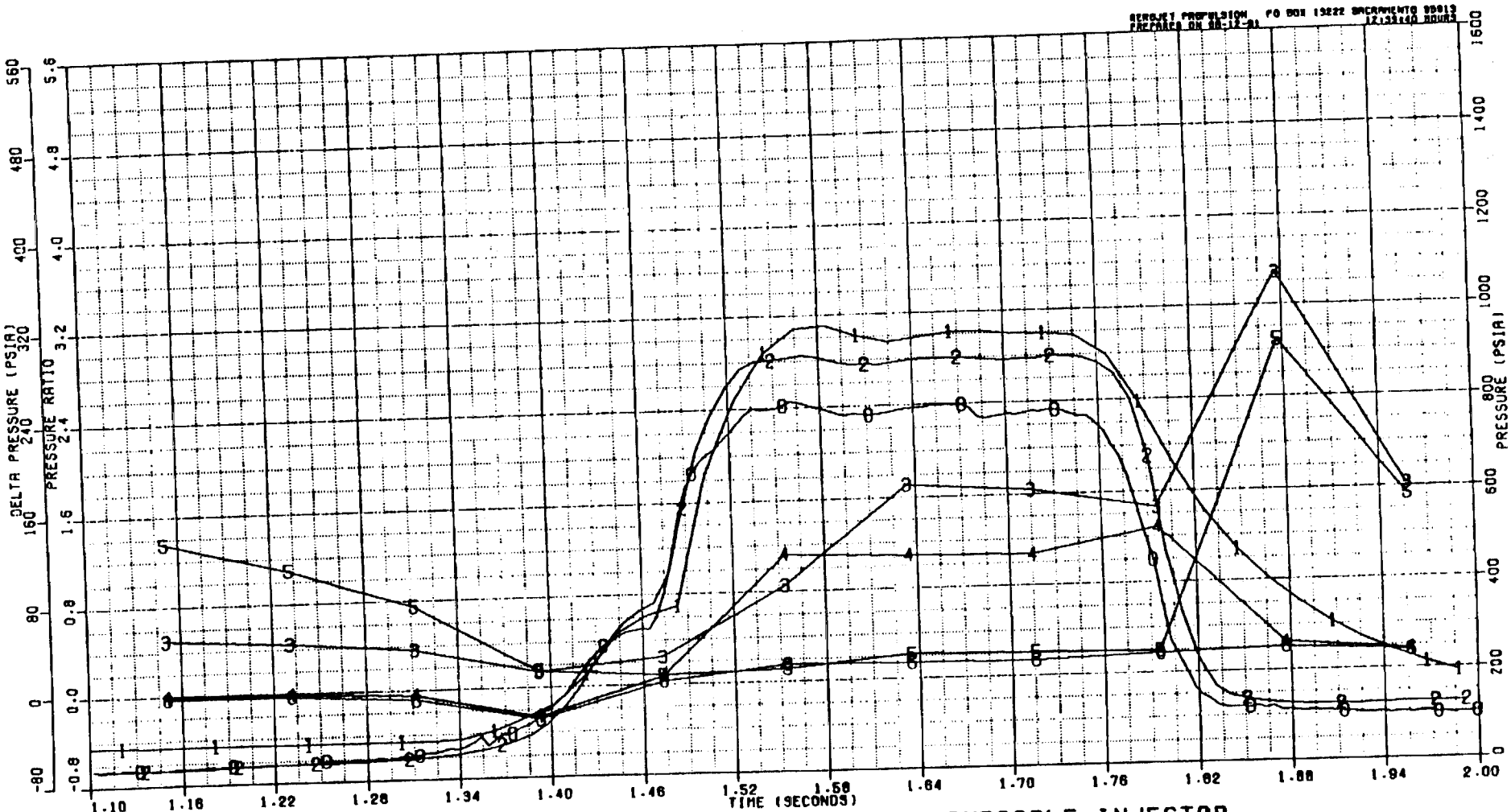

0 PC-3 PSIA
1 POJ PSIA
2 PFJ PSIA
3 OPO PSIA
4 OPF PSIA
5 OPO/PC
6 OPF/PC

GENCORP
AEROJET

ROCCID SUBSCALE INJECTOR
PERFORMANCE PARAMETERS

TEST DATE 04-30-91 AT 1441 HOURS DURATION 1.693 SECONDS

TEST NUMBER KFN7-001-1J-030 TEST STAND E-4

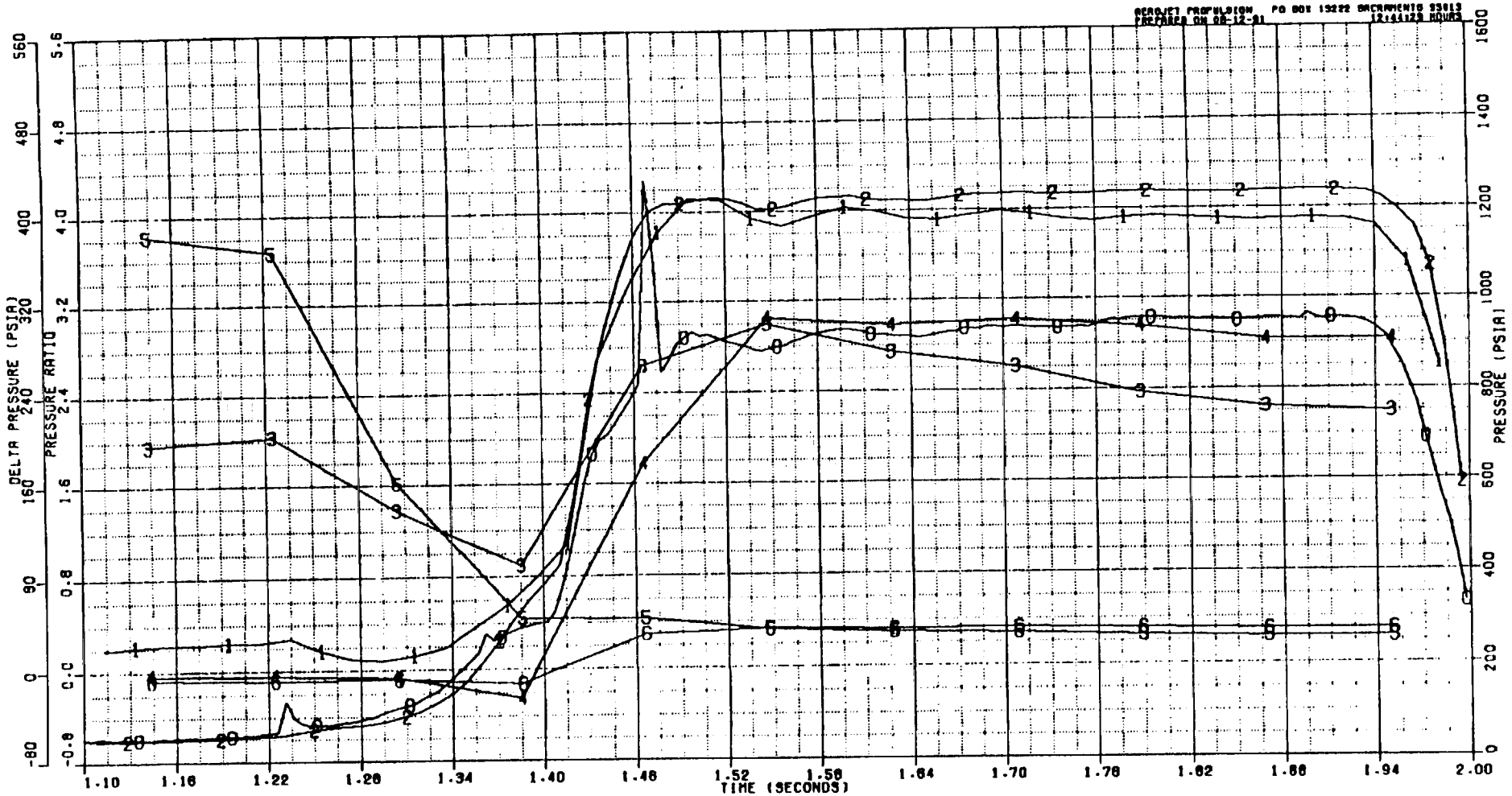

0 PC-3 PSIA
1 POJ PSIA
2 PFJ PSIA
3 OPO PSIA
4 OPF PSIA
5 OPO/PC
6 OPF/PC

GENCORP
AEROJET

ROCCID SUBSCALE INJECTOR PERFORMANCE PARAMETERS

TEST DATE 05-01-91 AT 1102 HOURS DURATION 1.904 SECONDS

TEST NUMBER KFN7-001-1J-031 TEST STAND E-4

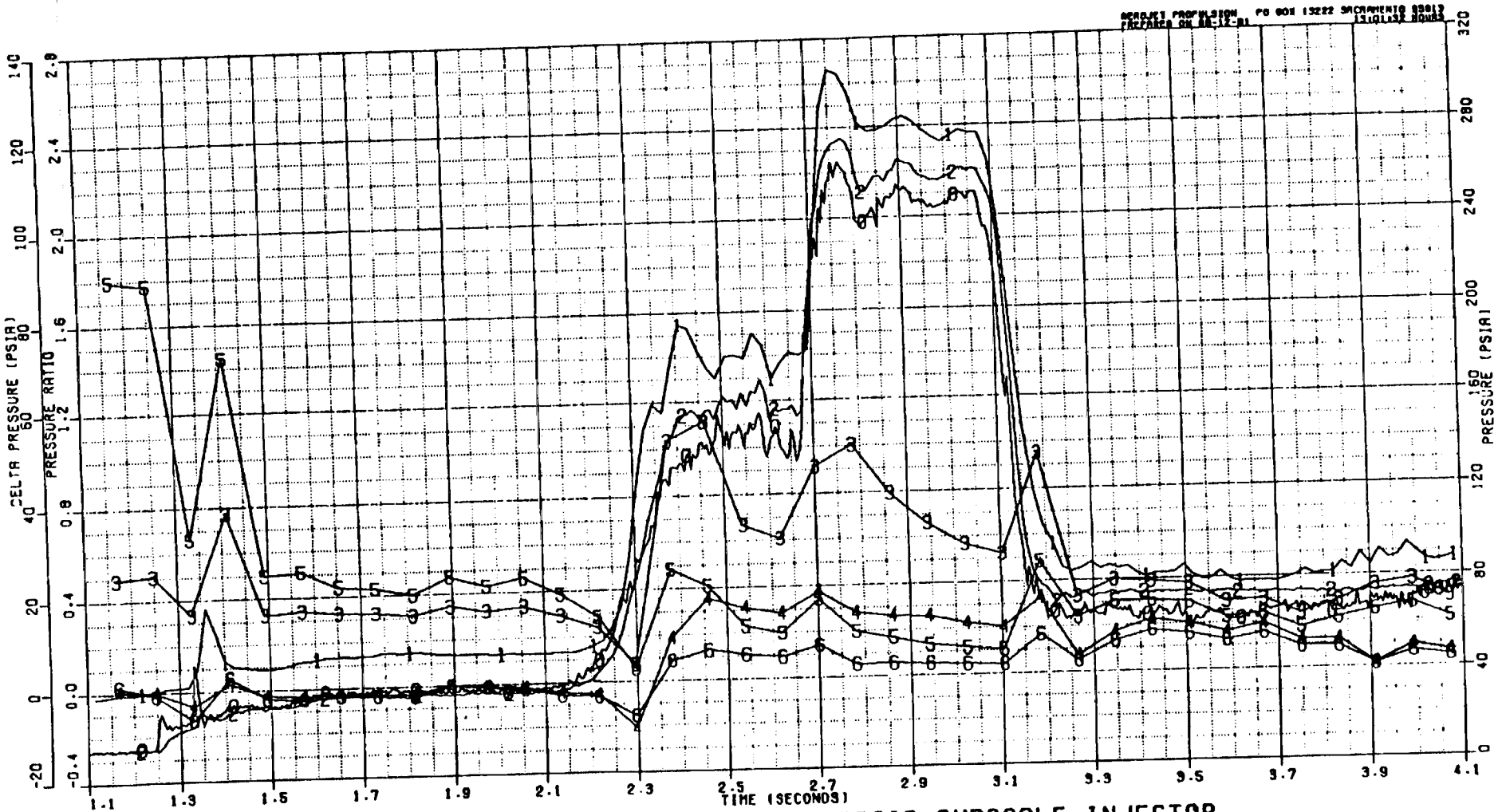

0 PC-3 PSIA
1 POJ PSIA
2 PFJ PSIA
3 OPO PSIA
4 OPF PSIA
5 OPO/PC
6 OPF/PC

GENCORP
AEROJET

ROCCID SUBSCALE INJECTOR
PERFORMANCE PARAMETERS

TEST DATE 05-01-91 AT 1618 HOURS DURATION 3.016 SECONDS

TEST NUMBER KFN7-D01-1J-036 TEST STAND E-4

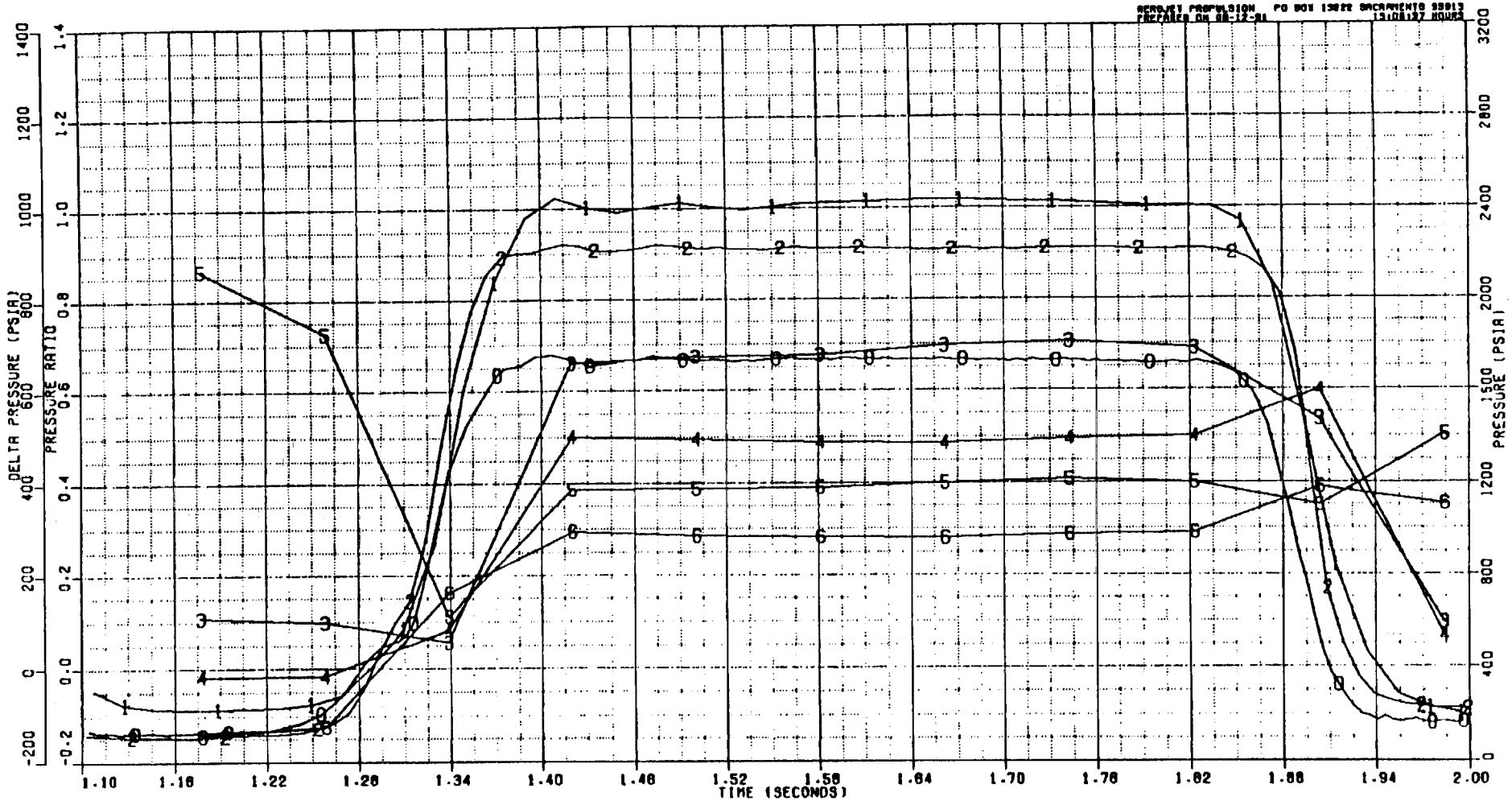

0 PC-3 PSIA
1 POJ PSIA
2 PFJ PSIA
3 OPO PSIA
4 OPF PSIA
5 OPO/PC
6 OPF/PC

GENCORP
AEROJET

ROCCID SUBSCALE INJECTOR PERFORMANCE PARAMETERS

TEST DATE 05-02-91 AT 1336 HOURS DURATION 1.805 SECONDS

TEST NUMBER KFN7-D01-1J-037 TEST STAND E-4

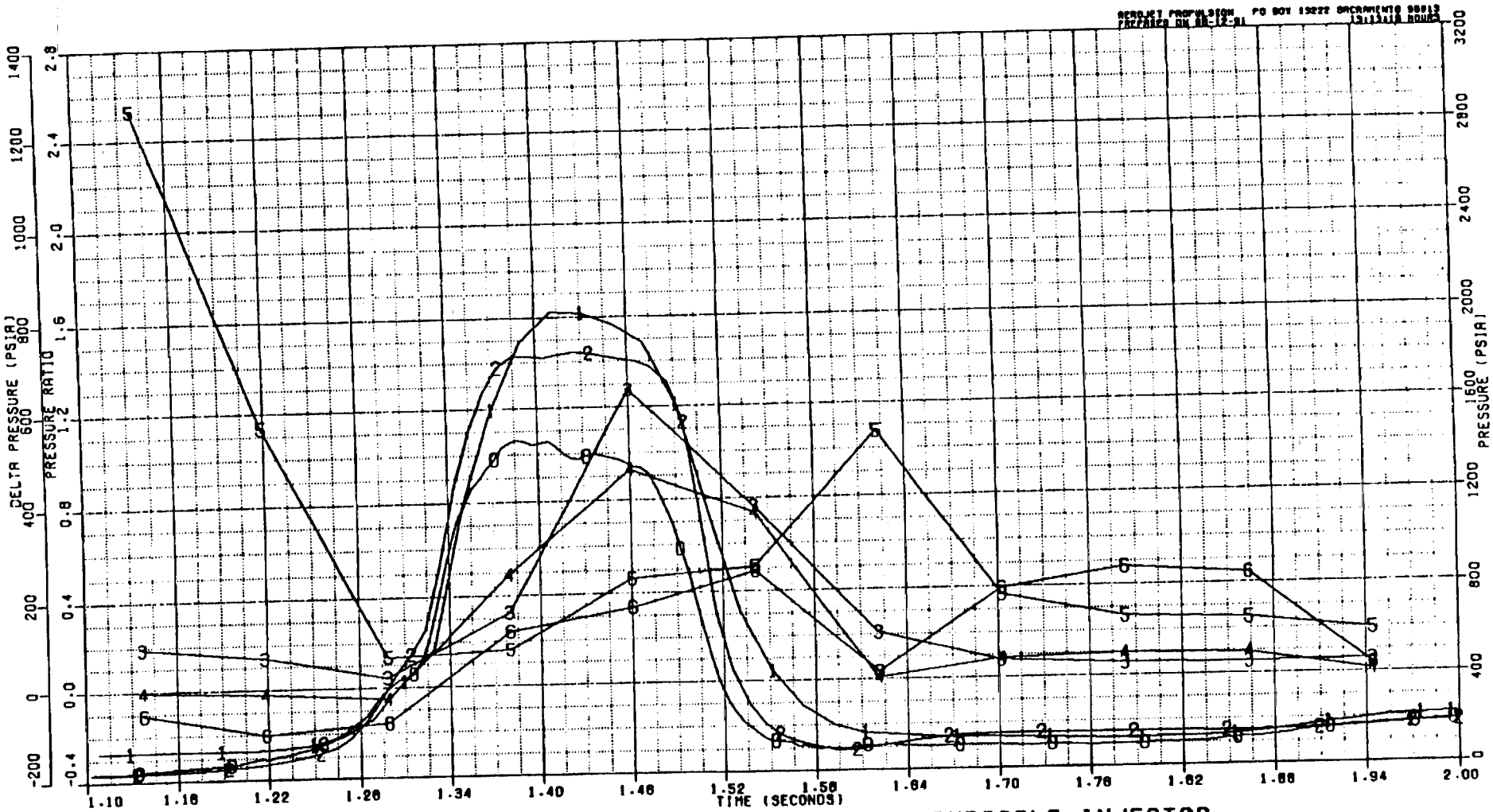

0 PC-3 PSIA
1 POJ PSIA
2 PFJ PSIA
3 OPO PSIA
4 OPF PSIA
5 OPO/PC
6 OPF/PC

GENCORP
AEROJET

ROCCID SUBSCALE INJECTOR
PERFORMANCE PARAMETERS

TEST DATE 05-02-91 AT 1452 HOURS DURATION 1.402 SECONDS

TEST NUMBER KFN7-D01-1J-030 TEST STAND E-4

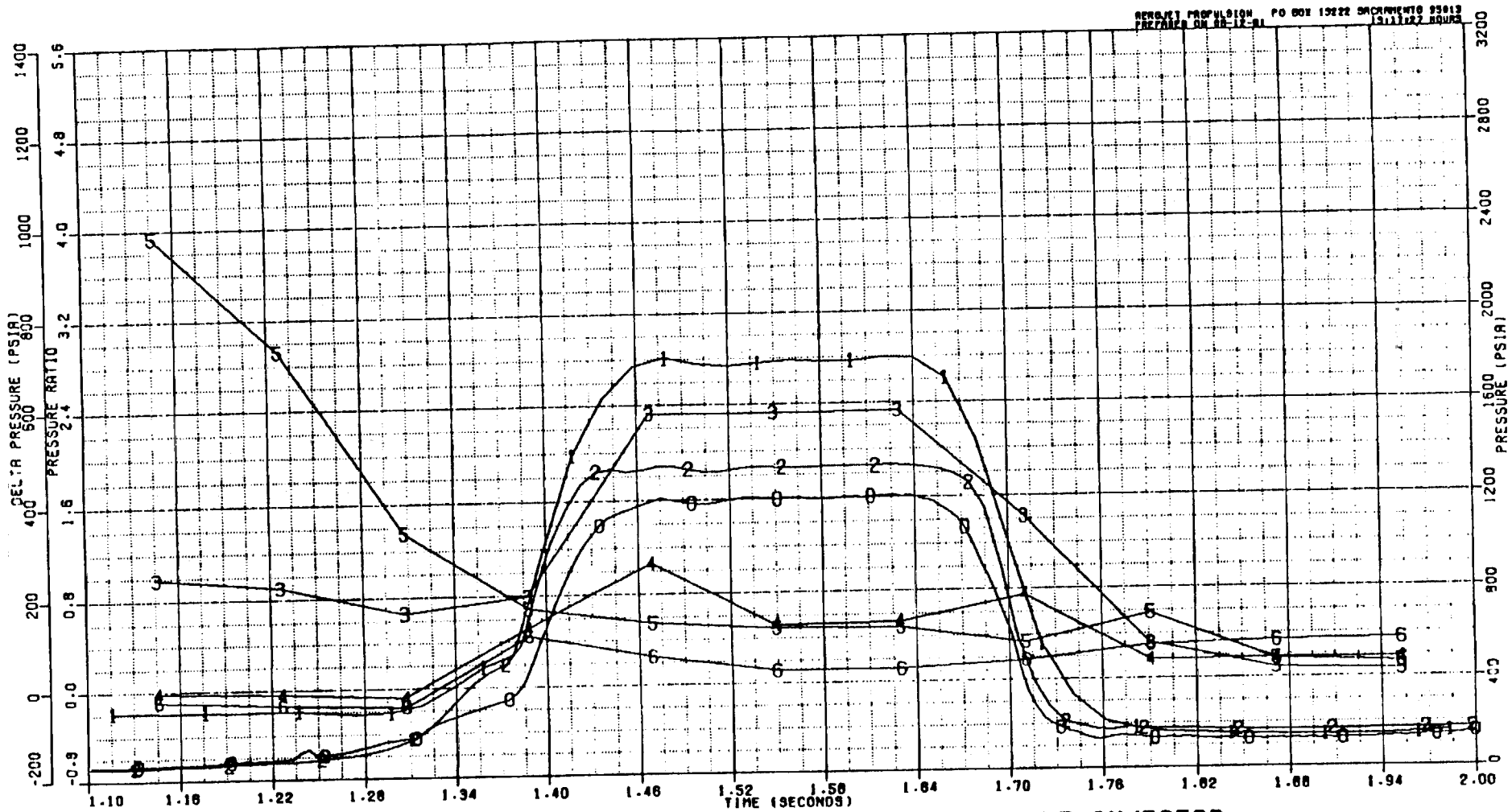

ROCCID SUBSCALE INJECTOR
PERFORMANCE PARAMETERS

TEST DATE 05-03-91 AT 1120 HOURS DURATION 1.594 SECONDS

TEST NUMBER KFN7-D01-1J-039 TEST STAND E-4

GENCORP
AEROJET

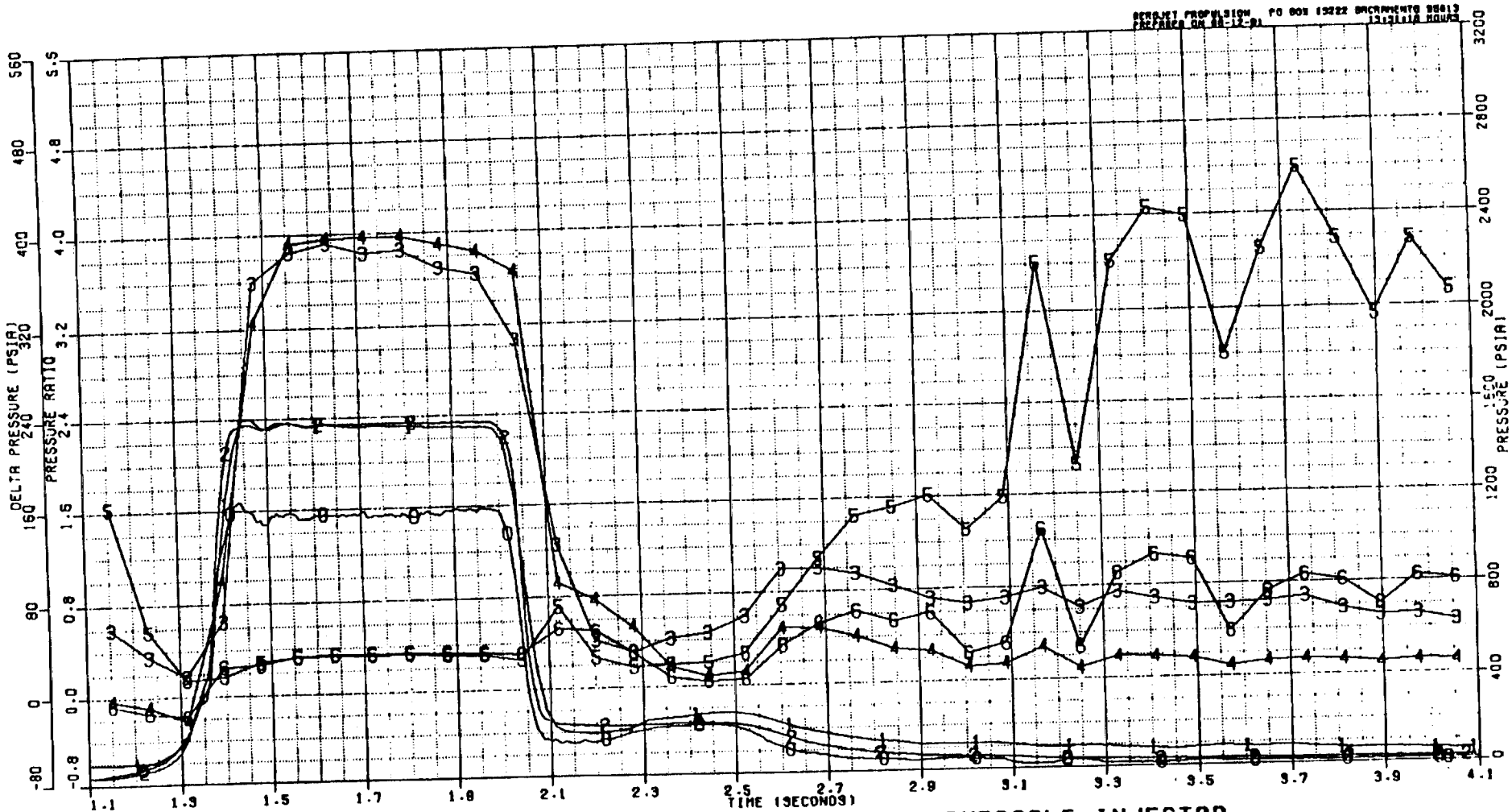

0 PC-3 PSIA
1 POJ PSIA
2 PFJ PSIA
3 OPO PSIA
4 OPF PSIA
5 OPO/PC
6 OPF/PC

GENCORP
AEROJET

ROCCID SUBSCALE INJECTOR
PERFORMANCE PARAMETERS

TEST DATE 05-03-91 AT 1314 HOURS DURATION 1.943 SECONDS

TEST NUMBER KFN7-001-1J-040 TEST STAND E-4

APPENDIX B

TIME SERIES, AMPLITUDE AND FREQUENCY EVOLUTION, AND POWER SPECTRAL ANALYSIS OF CHAMBER PRESSURE FOR ALL UNSTABLE-COMBUSTION TESTS

INDEX OF TEST DATA PLOTS

Page No.	
B-3 Thru B-5	Foreword
B-6 Thru B-8	Data From Test No. KFN7-D01-1J-004
B-9 Thru B-11	Data From Test No. KFN7-D01-1J-014
B-12 Thru B-14	Data From Test No. KFN7-D01-1J-018
B-15 Thru B-17	Data From Test No. KFN7-D01-1J-019
B-18 Thru B-20	Data From Test No. KFN7-D01-1J-021
B-21 Thru B-23	Data From Test No. KFN7-D01-1J-022
B-24 Thru B-26	Data From Test No. KFN7-D01-1J-025
B-27 Thru B-29	Data From Test No. KFN7-D01-1J-026
B-30 Thru B-32	Data From Test No. KFN7-D01-1J-027
B-33 Thru B-35	Data From Test No. KFN7-D01-1J-028
B-36 Thru B-38	Data From Test No. KFN7-D01-1J-029
B-39 Thru B-41	Data From Test No. KFN7-D01-1J-030
B-42 Thru B-44	Data From Test No. KFN7-D01-1J-037
B-45 Thru B-47	Data From Test No. KFN7-D01-1J-038
B-48 Thru B-50	Data From Test No. KFN7-D01-1J-039
B-51 Thru B-53	Data From Test No. KFN7-D01-1J-040

Note: See Foreword (next page) for explanation of information contained in the 3 plot set for each test.

FOREWORD

Unstable operation was observed during 16 of the 27 valid tests conducted during the ROCCID validation test program. For each of these unstable tests, the following information is contained in this appendix:

(1) High Frequency Chamber Pressure Transducer playback of the pressure amplitude versus time prior to and during the observed unstable combustion event. Sample format for this plot is as follows:

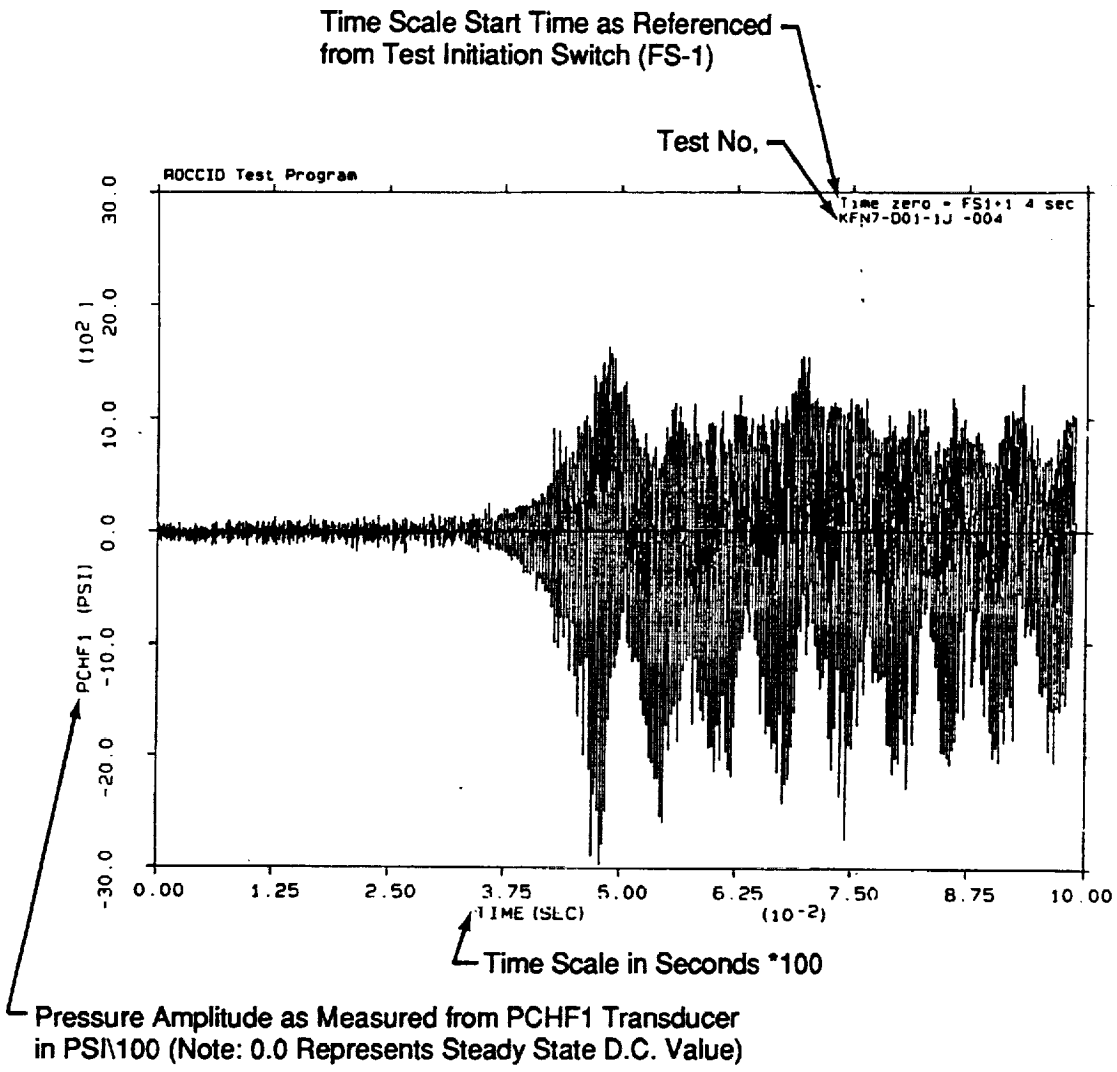

(2) Power Spectral Density (PSD) analysis of the high frequency pressure amplitude recorded signal. Sample format for this plot is as follows:

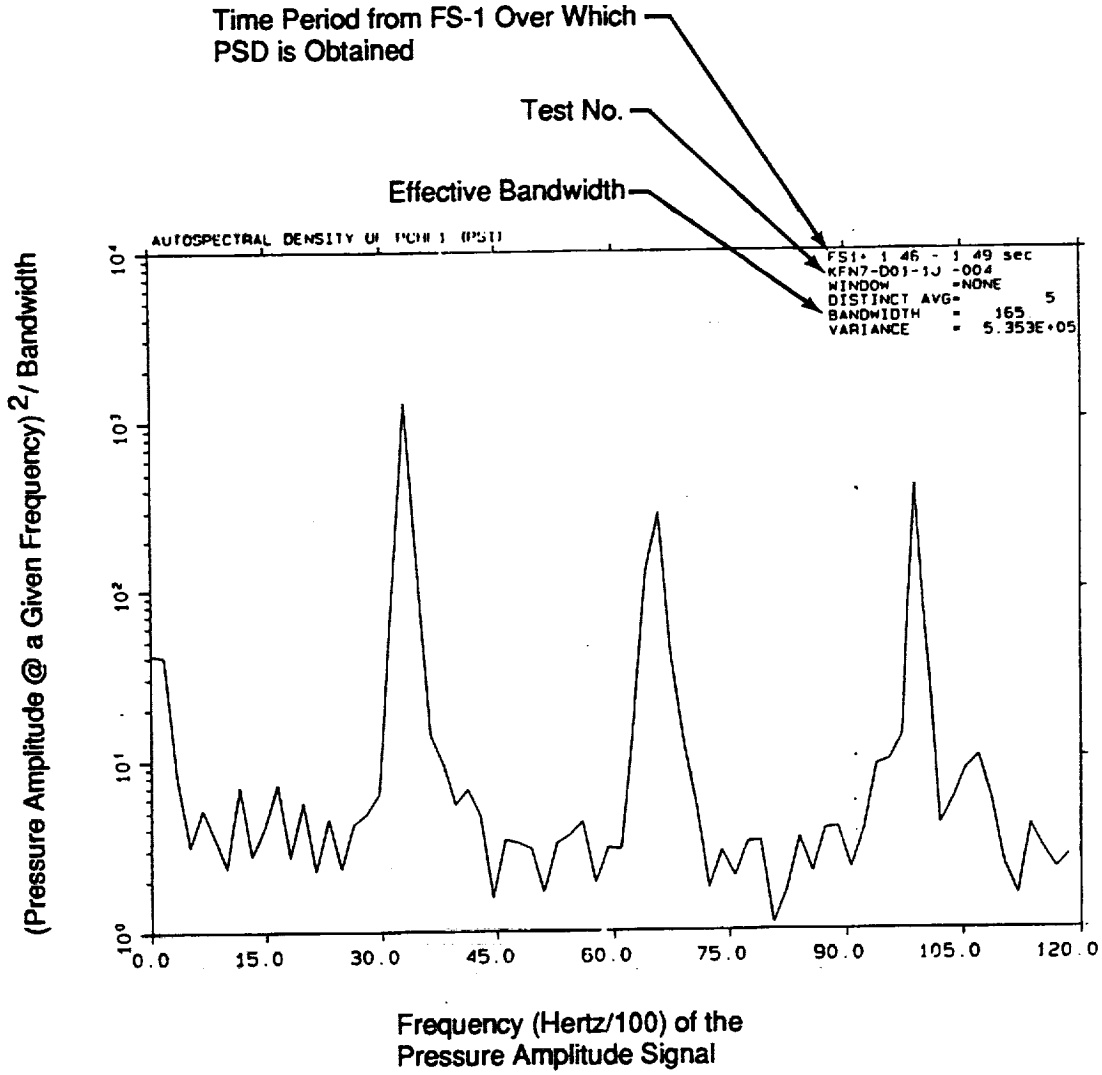

(3) Power Spectral Analysis of the high frequency pressure amplitude signal. Sample format for this pot is as follows:

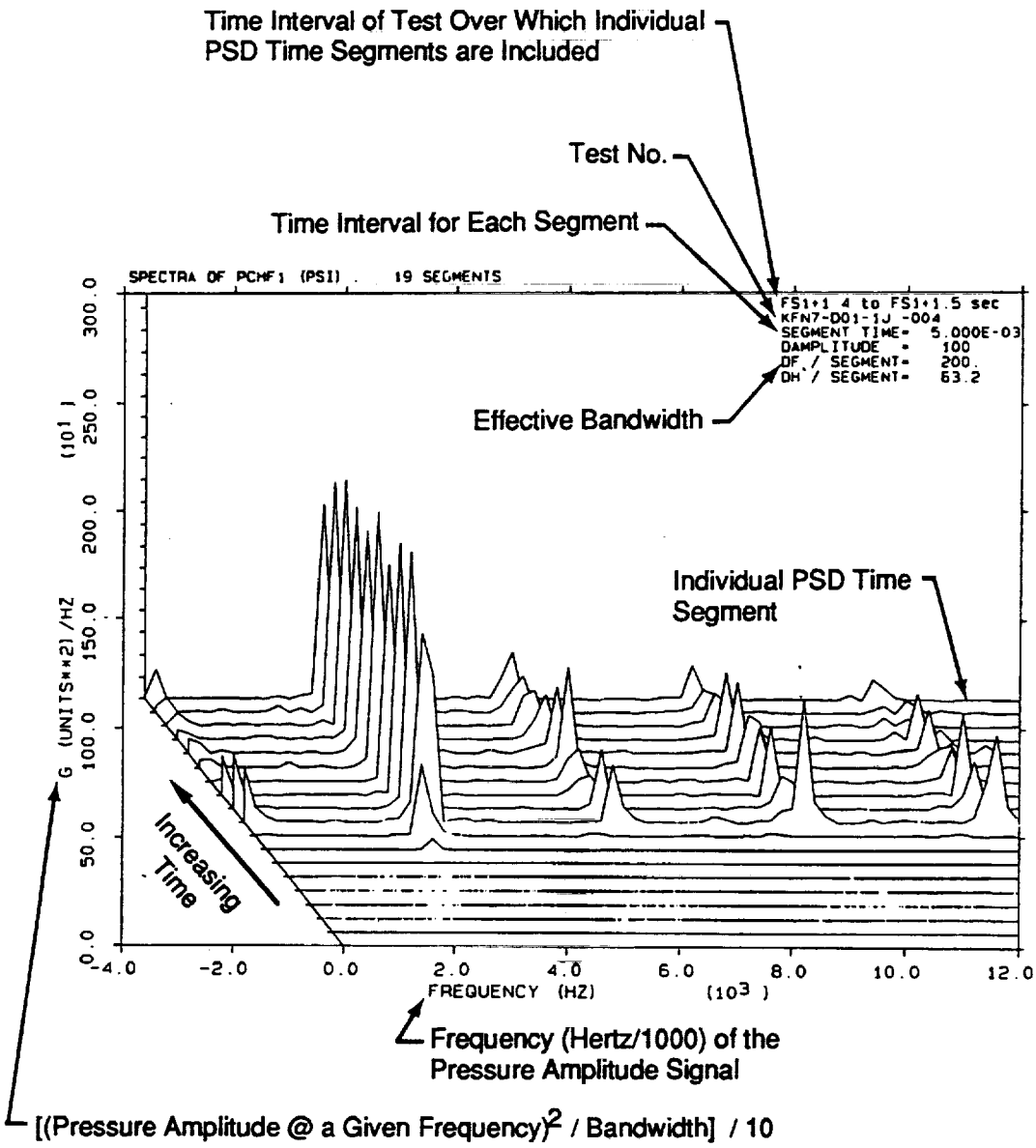

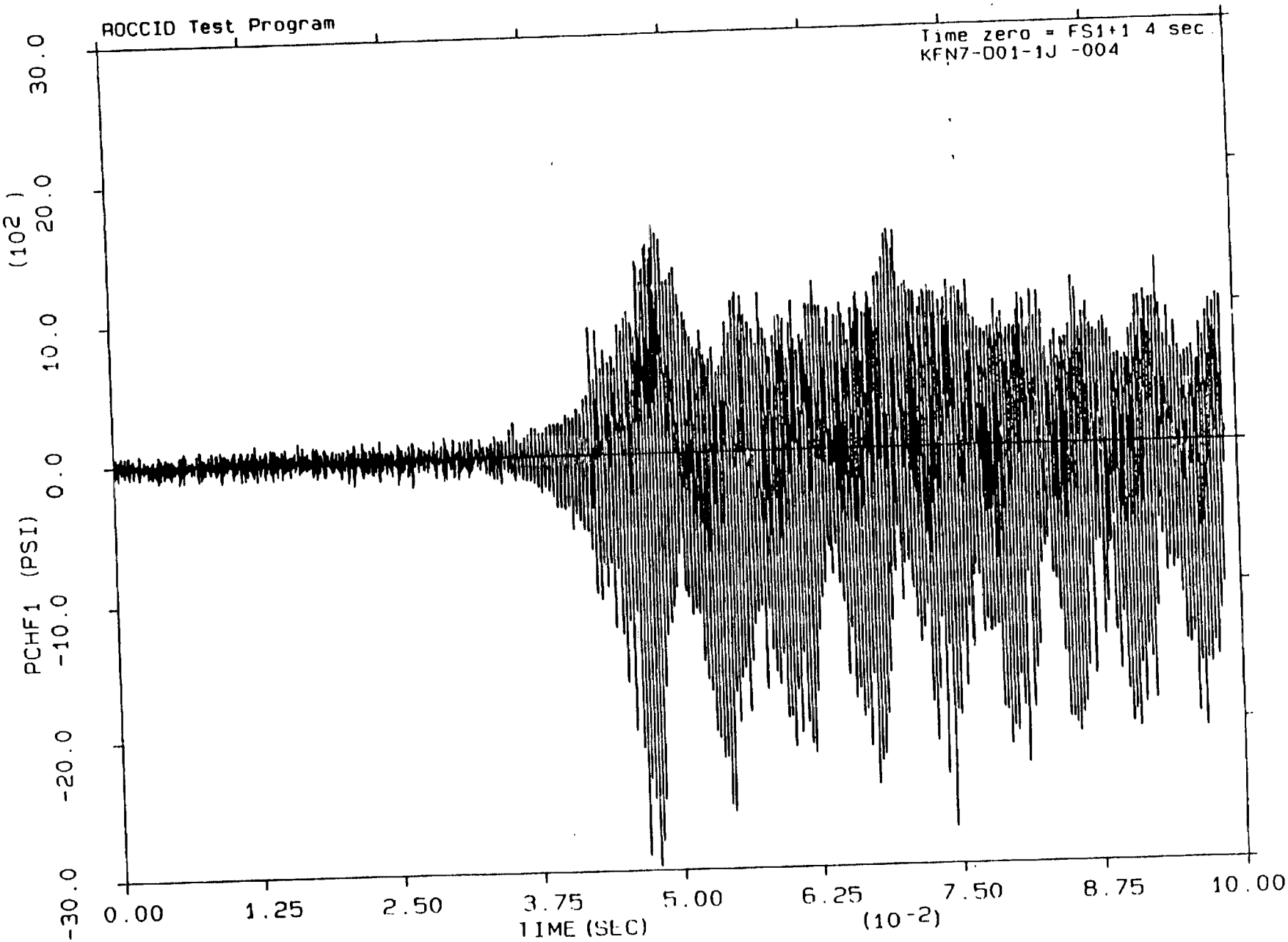
ROCCID Test Program
Time zero = FS1+1 4 sec
KFN7-001-1J -004
PCHF1 (PSI)
(10^2)
30.0
20.0
10.0
0.0
-10.0
-20.0
-30.0
0.00
1.25
2.50
3.75
5.00
6.25
7.50
8.75
10.00
TIME (SEC)
(10^-2)

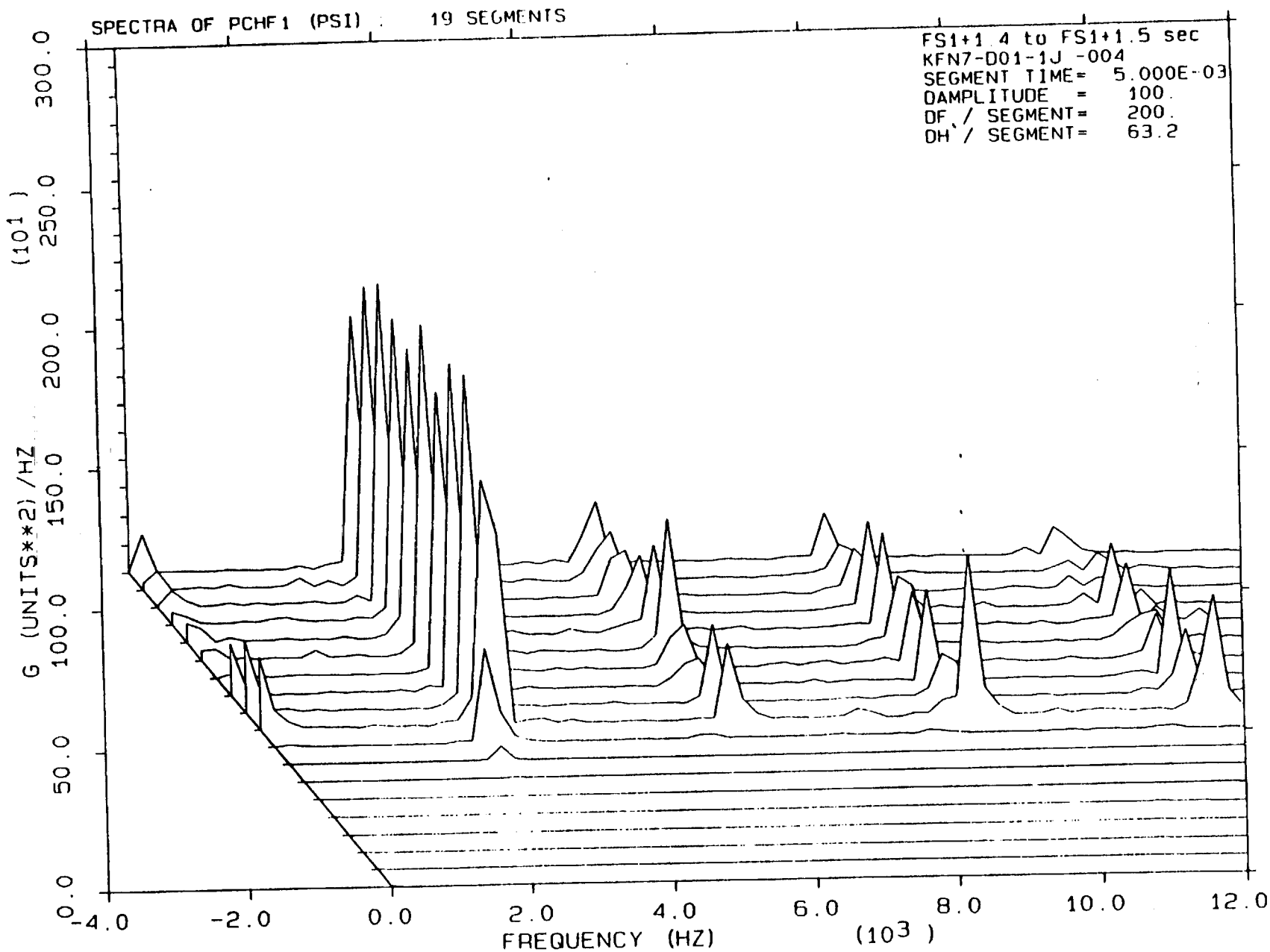
SPECTRA OF PCHF1 (PSI) : 19 SEGMENTS
FS1+1.4 to FS1+1.5 sec
KFN7-D01-1J -004
SEGMENT TIME= 5.000E-03
DAMPLITUDE = 100.
DF / SEGMENT= 200.
DH / SEGMENT= 63.2
G (UNITS**2) /HZ (10^1)
300.0
250.0
200.0
150.0
100.0
50.0
0.0
-4.0
-2.0
0.0
2.0
4.0
6.0
8.0
10.0
12.0
FREQUENCY (HZ) (10^3)

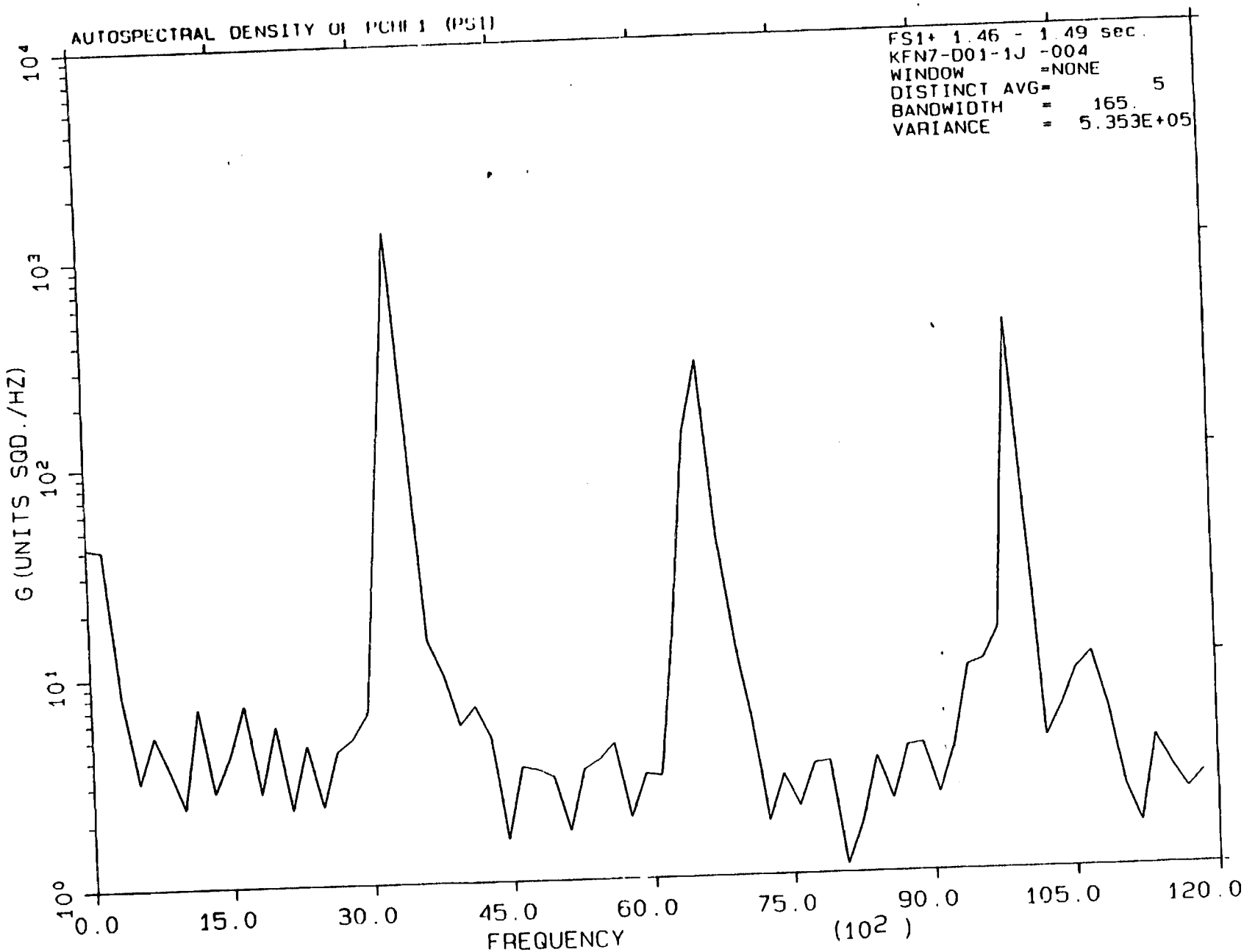
AUTOSPECTRAL DENSITY OF PCHI 1 (PSI)
FS1+ 1.46 - 1.49 sec.
KFN7-D01-1J -004
WINDOW =NONE
DISTINCT AVG= 5
BANDWIDTH = 165.
VARIANCE = 5.353E+05
G (UNITS SQD./HZ)
10^4
10^3
10^2
10^1
10^0
0.0
15.0
30.0
45.0
60.0
75.0
90.0
105.0
120.0
FREQUENCY
(10^2)

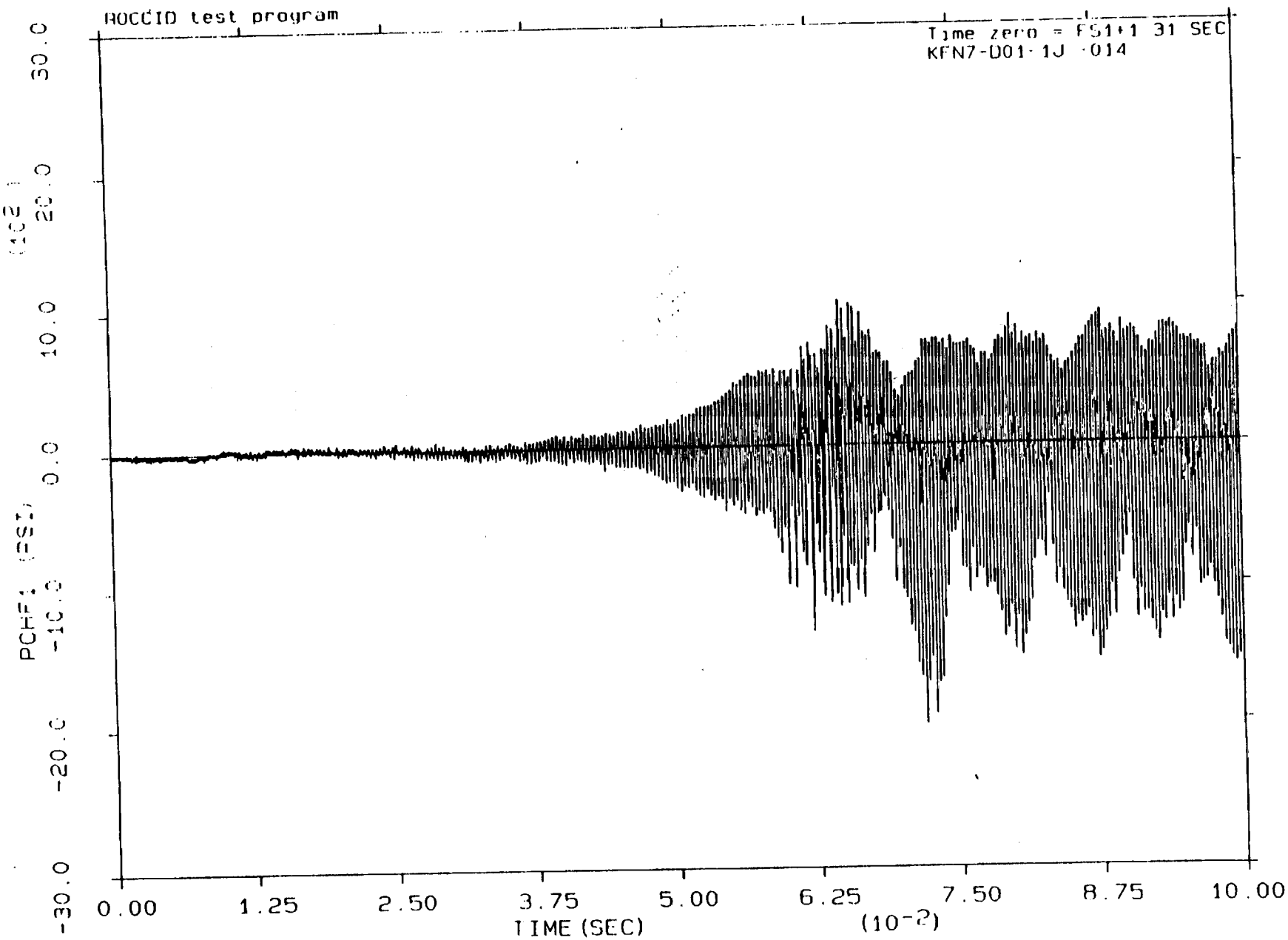
ROCCID test program
Time zero = FS1+1 31 SEC
KFN7-D01-1J -014
30.0
20.0
10.0
0.0
-10.0
-20.0
-30.0
PCHF1 (PSI)
0.00
1.25
2.50
3.75
5.00
6.25
7.50
8.75
10.00
TIME (SEC)
(10^-2)

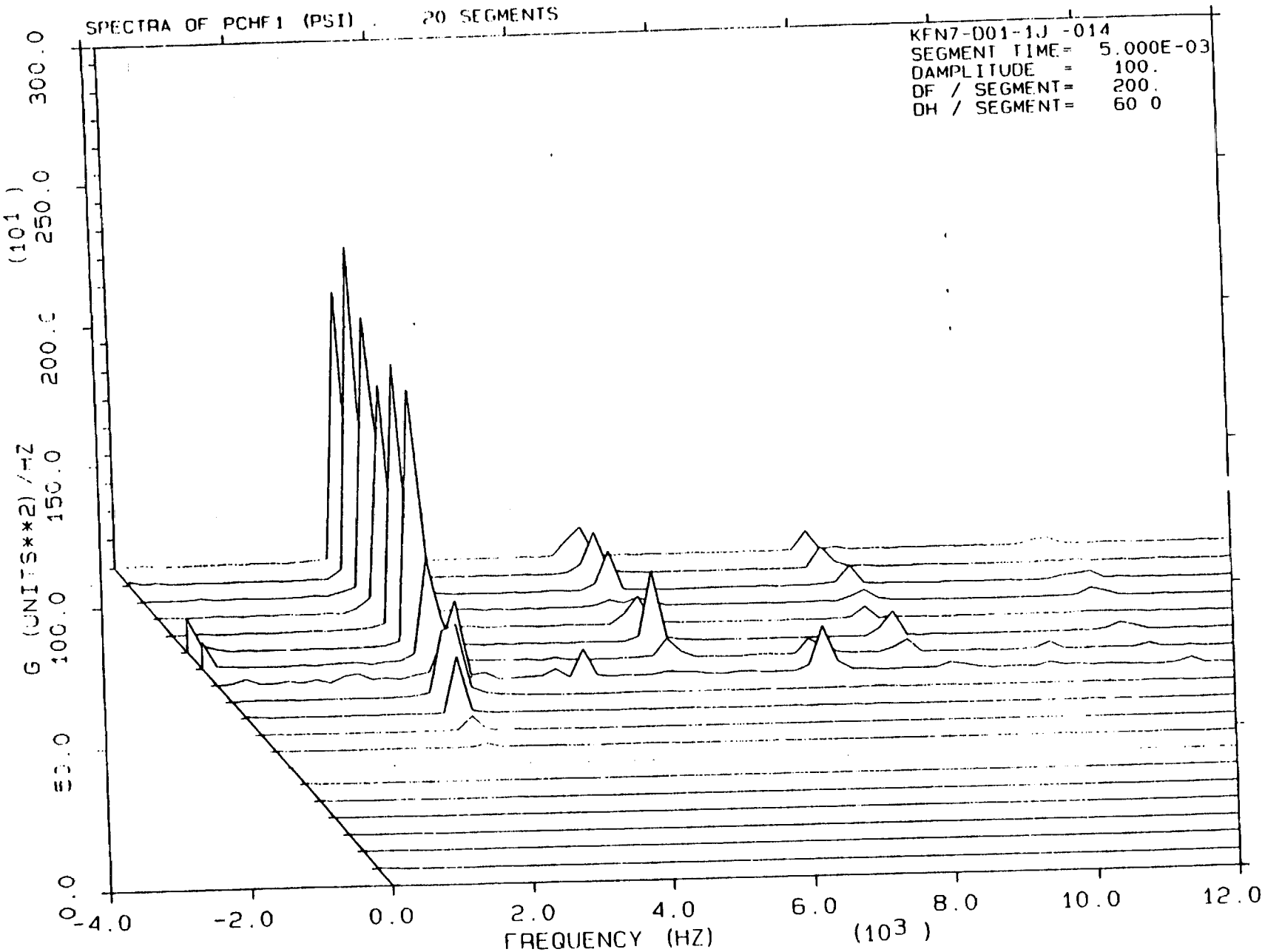
SPECTRA OF PCHF1 (PSI) . 20 SEGMENTS
KFN7-D01-1J -014
SEGMENT TIME= 5.000E-03
DAMPLITUDE = 100.
DF / SEGMENT= 200.
DH / SEGMENT= 60 0
G (UNITS**2) /HZ (10^1)
0.0
50.0
100.0
150.0
200.0
250.0
300.0
-4.0
-2.0
0.0
2.0
4.0
6.0
8.0
10.0
12.0
FREQUENCY (HZ) (10^3)

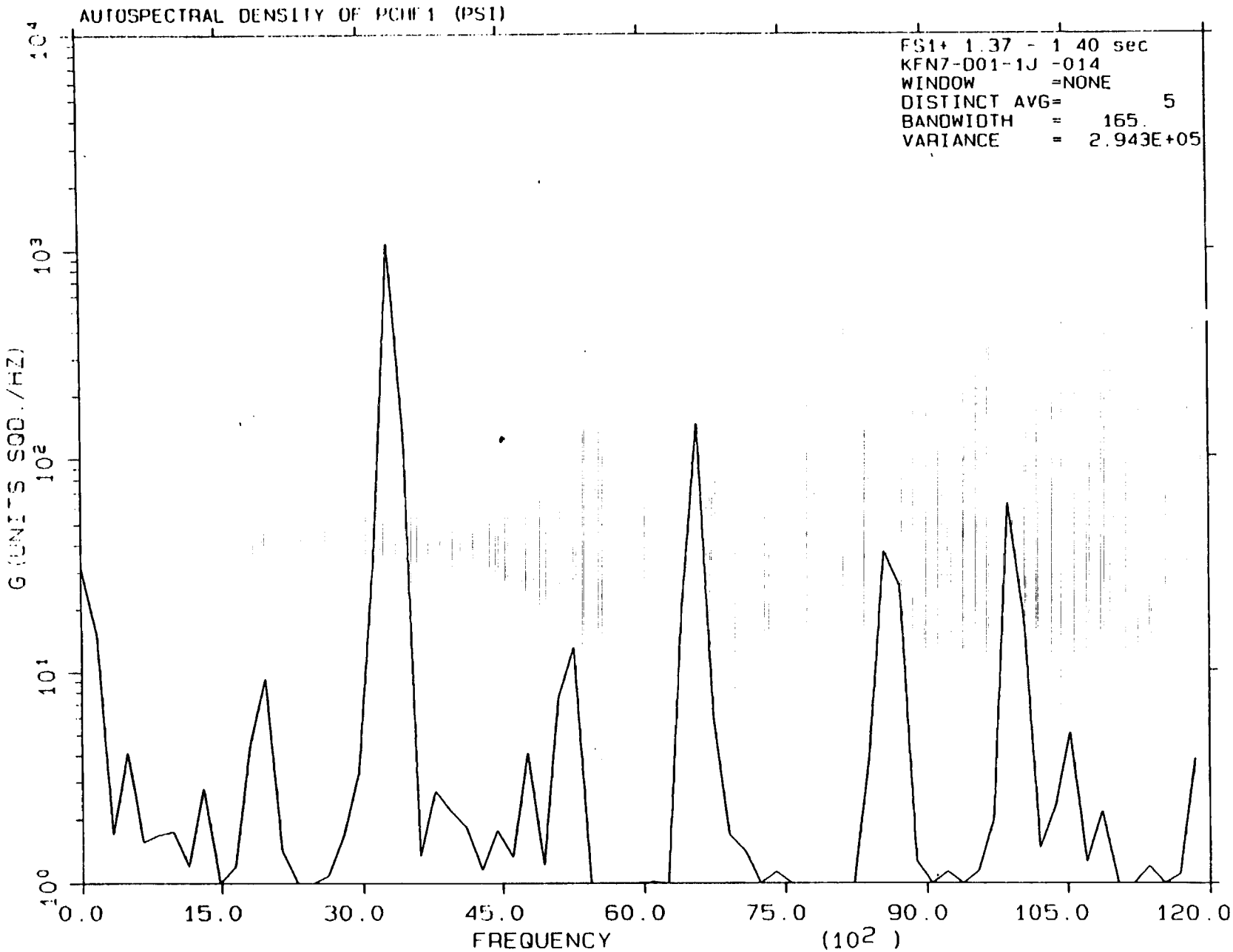
AUTOSPECTRAL DENSITY OF PCHF 1 (PSI)
FS1+ 1.37 - 1 40 sec
KFN7-D01-1J -014
WINDOW =NONE
DISTINCT AVG= 5
BANDWIDTH = 165.
VARIANCE = 2.943E+05
G (UNITS SQD./HZ)
10^4
10^3
10^2
10^1
10^0
0.0
15.0
30.0
45.0
60.0
75.0
90.0
105.0
120.0
FREQUENCY
(10^2)

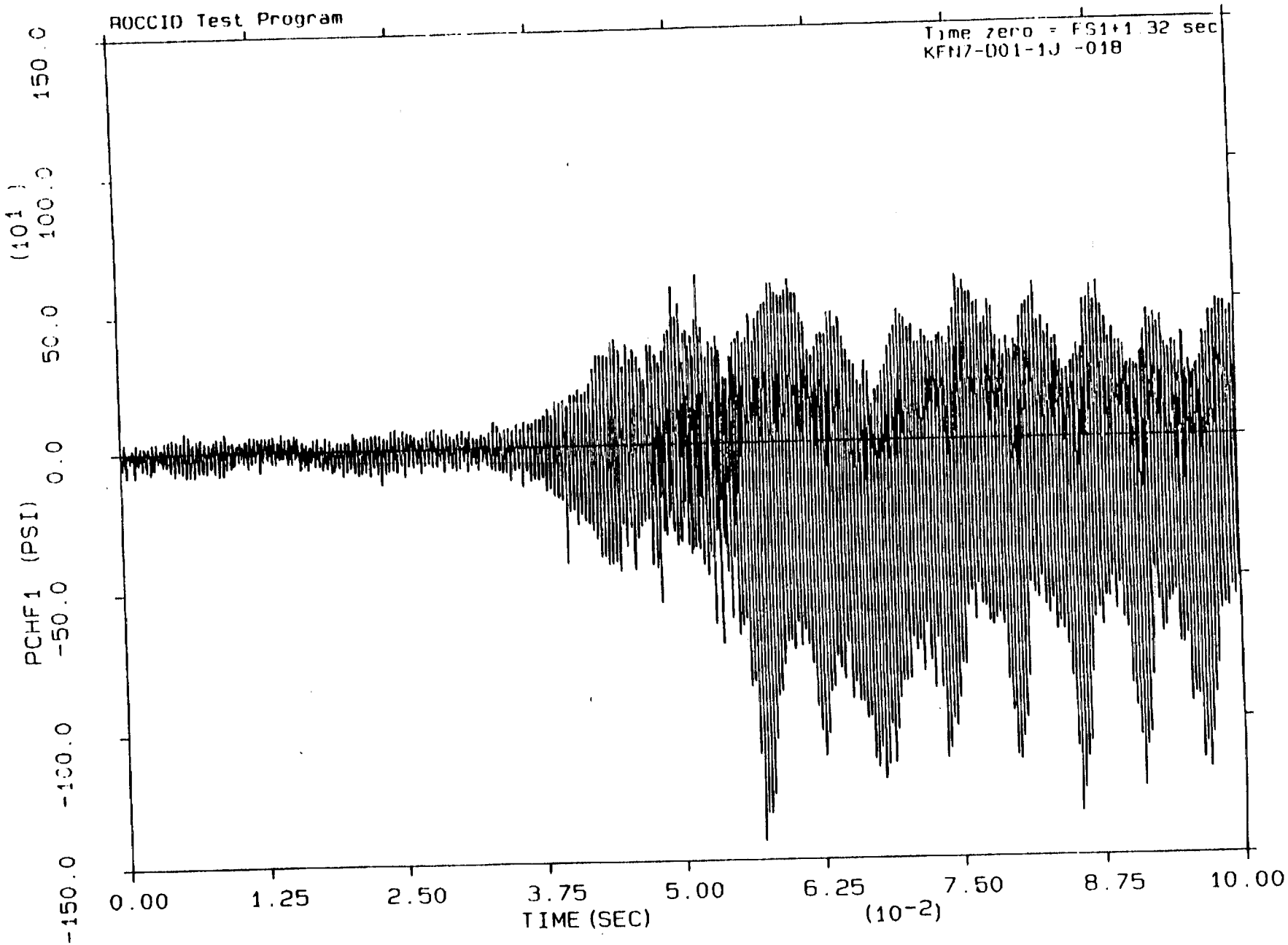
ROCCID Test Program
Time zero = FS1+1.32 sec
KFN7-001-1J -018
PCHF1 (PSI)
150.0
100.0
50.0
0.0
-50.0
-100.0
-150.0
(10¹)
0.00
1.25
2.50
3.75
5.00
6.25
7.50
8.75
10.00
TIME (SEC)
(10⁻²)

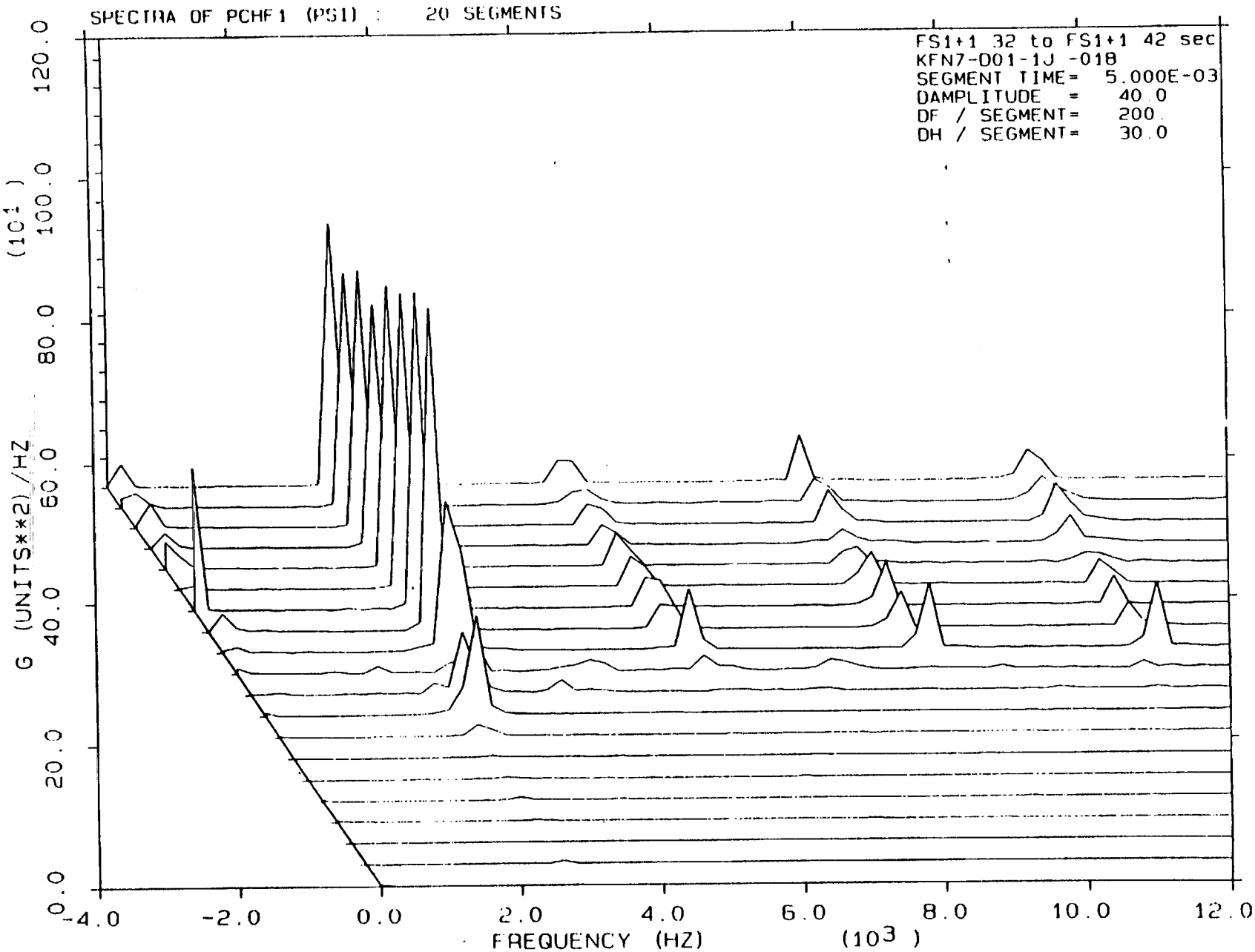
SPECTRA OF PCHF1 (PS1) : 20 SEGMENTS
FS1+1 32 to FS1+1 42 sec
KFN7-D01-1J -018
SEGMENT TIME= 5.000E-03
DAMPLITUDE = 40.0
DF / SEGMENT= 200.
DH / SEGMENT= 30.0
G (UNITS**2)/HZ (10^1)
0.0
20.0
40.0
60.0
80.0
100.0
120.0
-4.0
-2.0
0.0
2.0
4.0
6.0
8.0
10.0
12.0
FREQUENCY (HZ) (10^3)

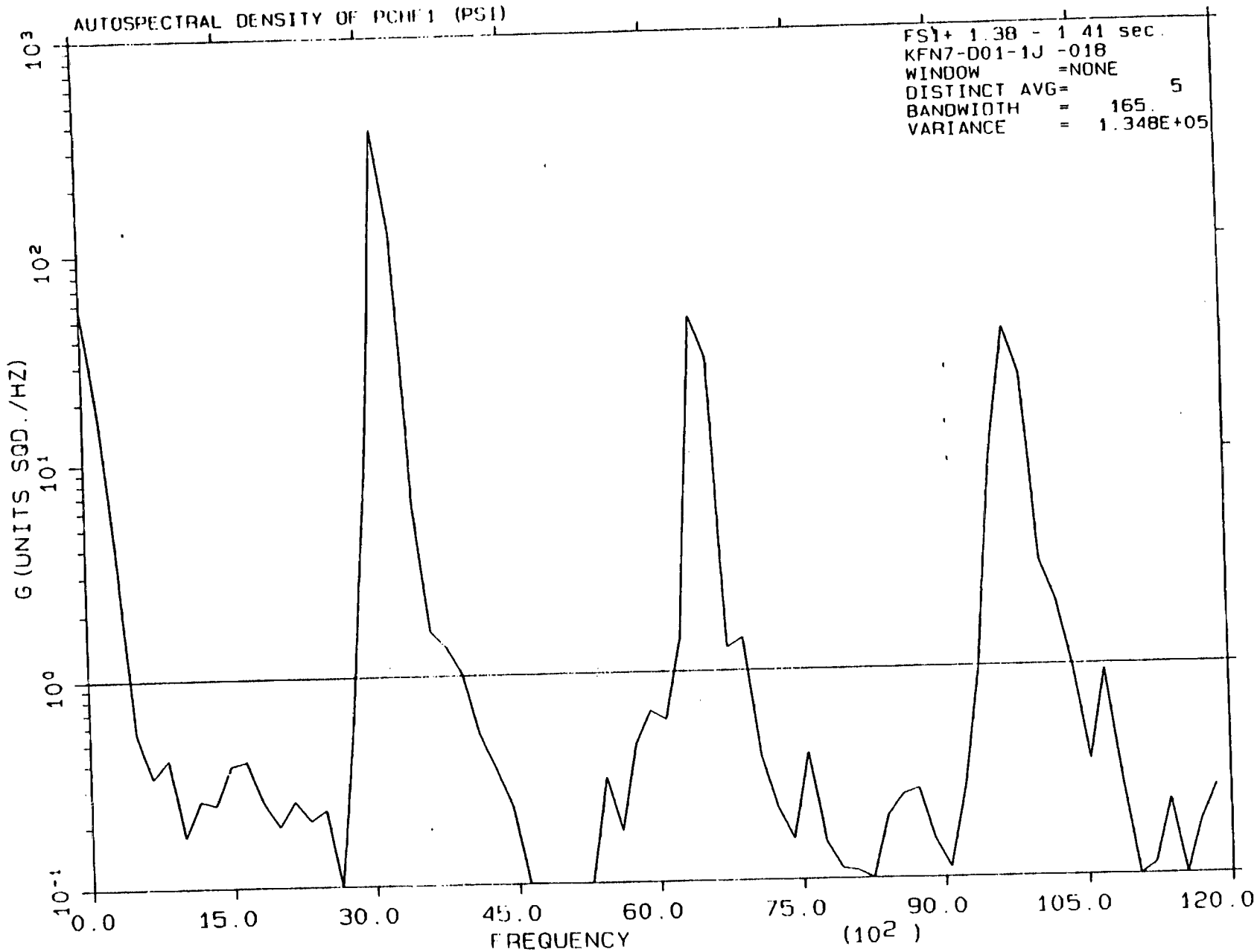
AUTOSPECTRAL DENSITY OF PCHF1 (PSI)
FS1+ 1.38 - 1 41 sec.
KFN7-D01-1J -018
WINDOW =NONE
DISTINCT AVG= 5
BANDWIDTH = 165.
VARIANCE = 1.348E+05
G (UNITS SQD./HZ)
10^3
10^2
10^1
10^0
10^{-1}
0.0
15.0
30.0
45.0
60.0
75.0
90.0
105.0
120.0
FREQUENCY
(10^2)

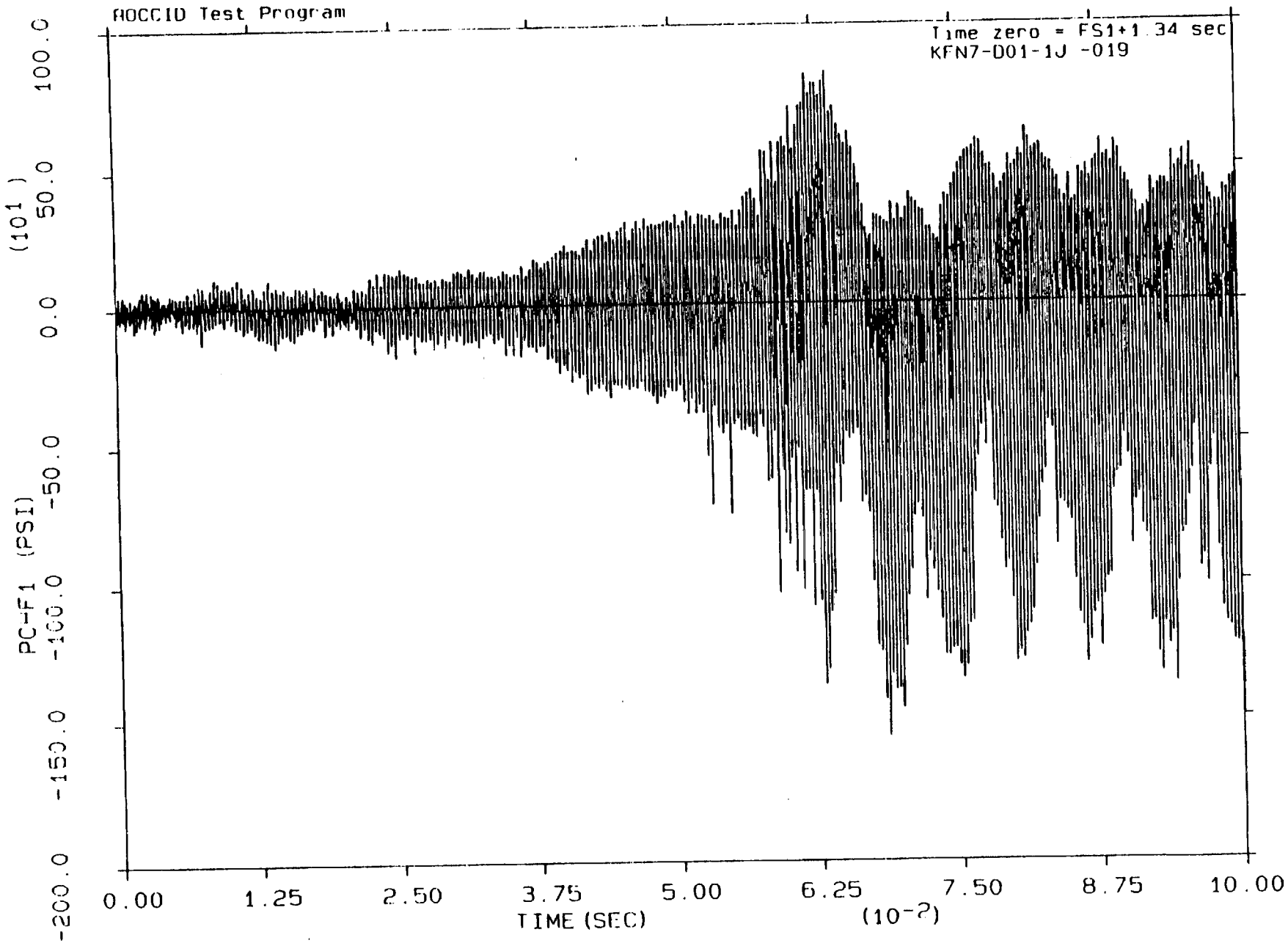
ROCCID Test Program
Time zero = FS1+1.34 sec
KFN7-D01-1J -019
PC-F1 (PSI)
(10¹)
100.0
50.0
0.0
-50.0
-100.0
-150.0
-200.0
0.00
1.25
2.50
3.75
5.00
6.25
7.50
8.75
10.00
TIME (SEC)
(10⁻²)

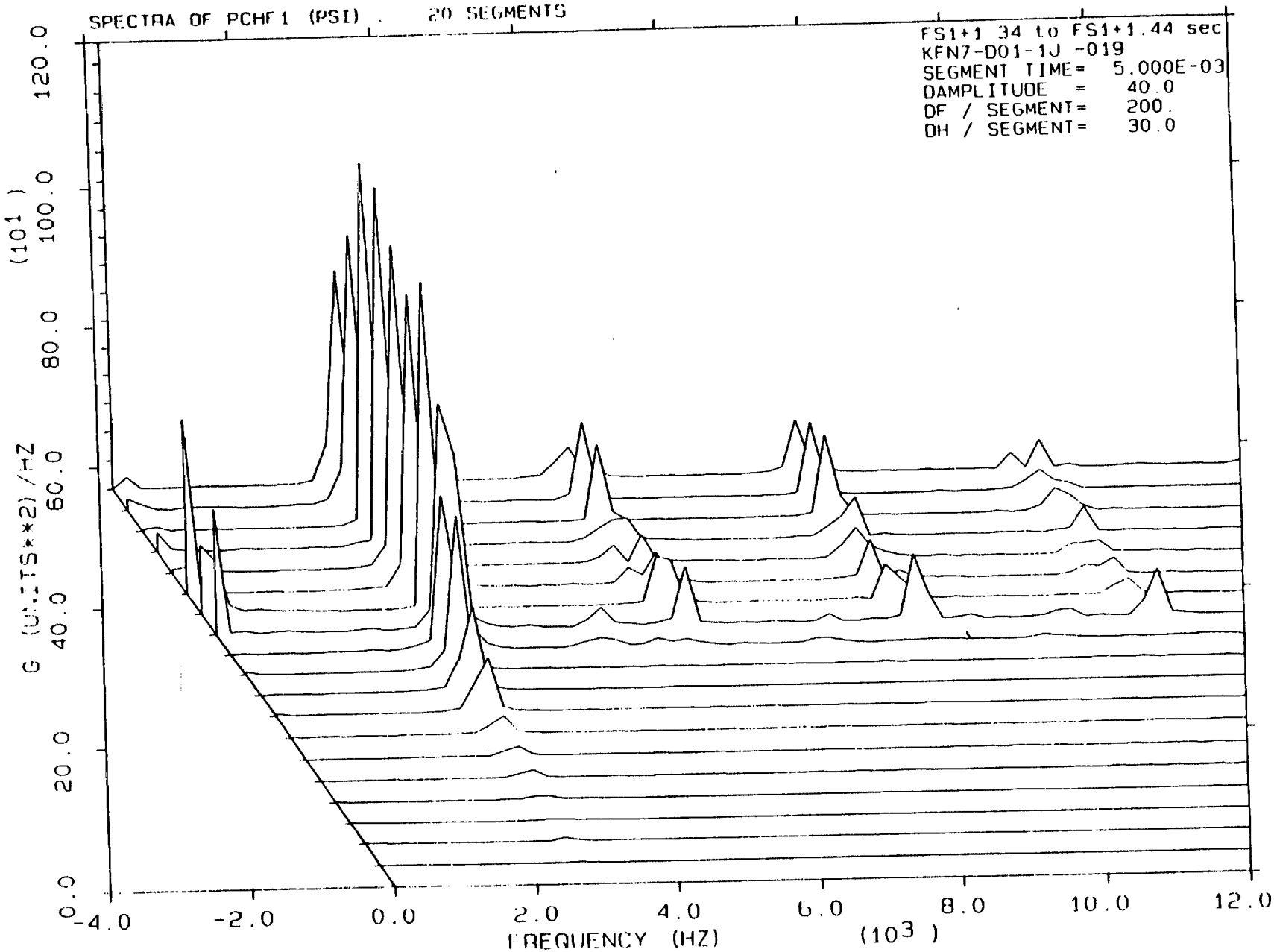
SPECTRA OF PCHF1 (PSI) . 20 SEGMENTS
FS1+1 34 to FS1+1.44 sec
KFN7-D01-1J -019
SEGMENT TIME= 5.000E-03
DAMPLITUDE = 40.0
DF / SEGMENT= 200.
DH / SEGMENT= 30.0
G (UNITS**2)/HZ
(10^1)
0.0
20.0
40.0
60.0
80.0
100.0
120.0
-4.0
-2.0
0.0
2.0
4.0
6.0
8.0
10.0
12.0
FREQUENCY (HZ)
(10^3)

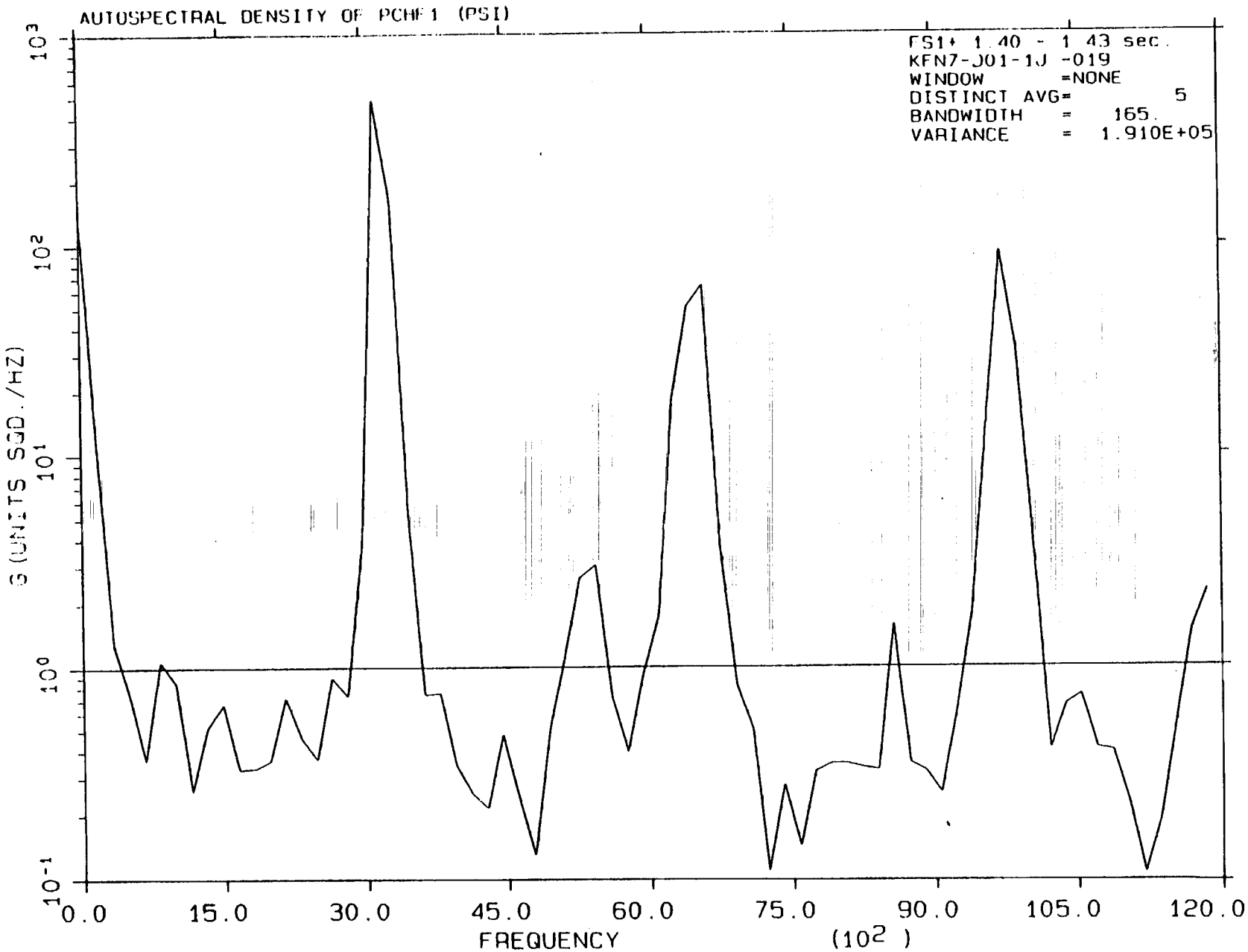
AUTOSPECTRAL DENSITY OF PCHF 1 (PSI)
FS1+ 1.40 - 1.43 sec.
KFN7-J01-1J -019
WINDOW =NONE
DISTINCT AVG= 5
BANDWIDTH = 165.
VARIANCE = 1.910E+05
G (UNITS SQD./HZ)
10^3
10^2
10^1
10^0
10^{-1}
0.0
15.0
30.0
45.0
60.0
75.0
90.0
105.0
120.0
FREQUENCY
(10^2)

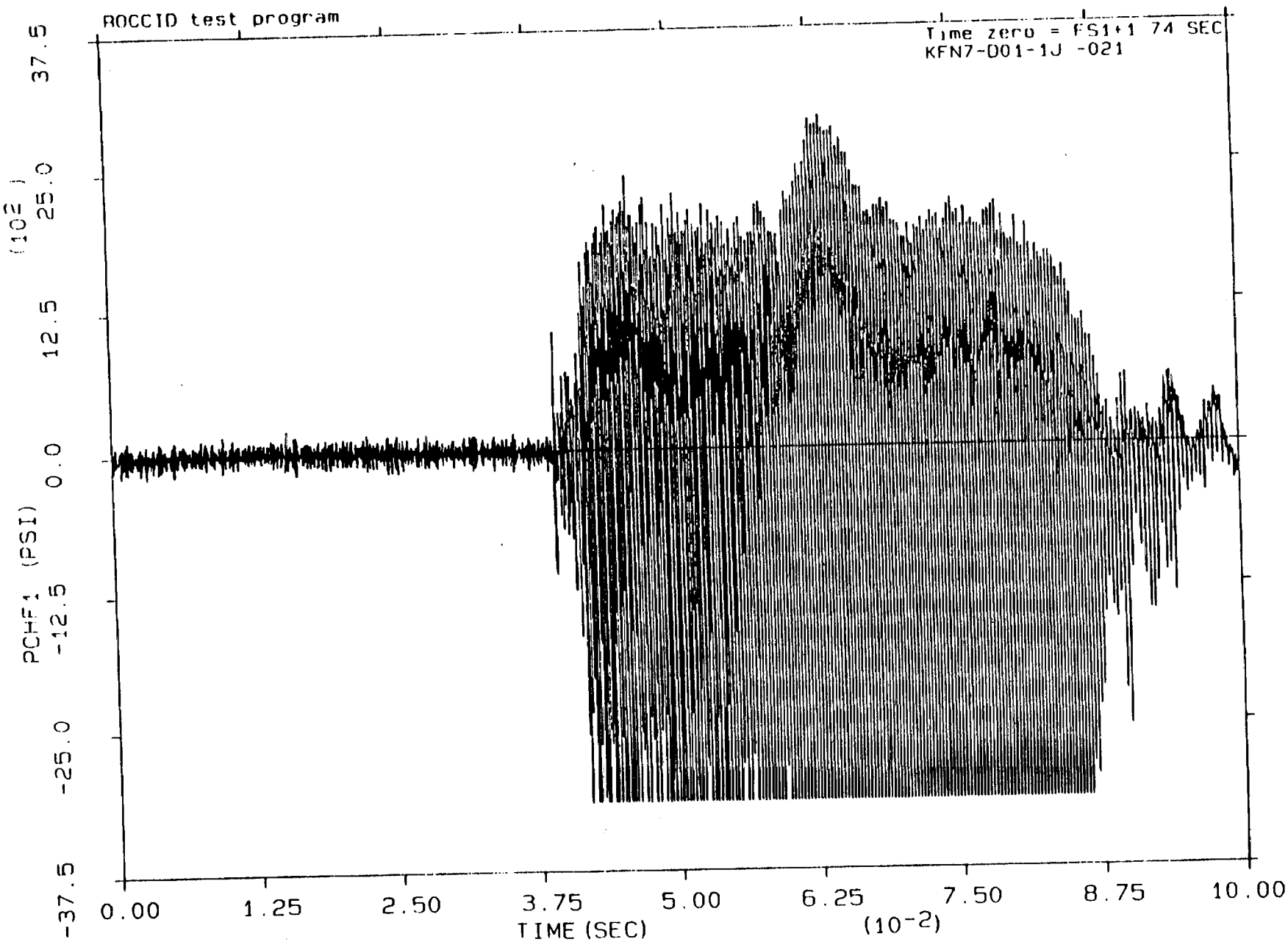
ROCCID test program
Time zero = FS1+1 74 SEC
KFN7-D01-1J -021
PCHF1 (PSI)
(10³)
37.5
25.0
12.5
0.0
-12.5
-25.0
-37.5
0.00
1.25
2.50
3.75
5.00
6.25
7.50
8.75
10.00
TIME (SEC)
(10⁻²)

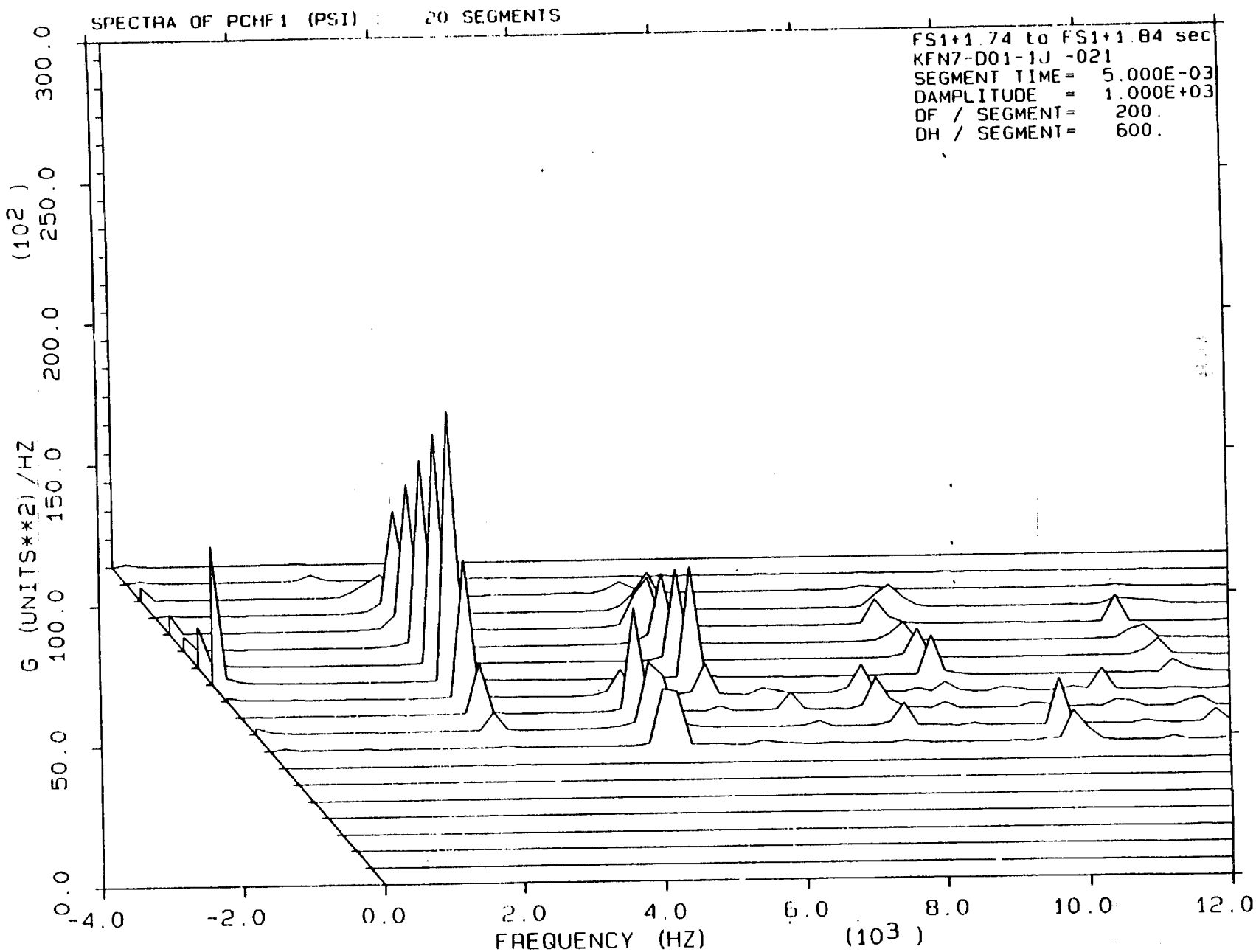
SPECTRA OF PCHF1 (PSI) : 20 SEGMENTS
FS1+1.74 to FS1+1.84 sec
KFN7-D01-1J -021
SEGMENT TIME= 5.000E-03
DAMPLITUDE = 1.000E+03
DF / SEGMENT= 200.
DH / SEGMENT= 600.
G (UNITS**2) /HZ (10^2)
0.0
50.0
100.0
150.0
200.0
250.0
300.0
-4.0
-2.0
0.0
2.0
4.0
6.0
8.0
10.0
12.0
FREQUENCY (HZ) (10^3)

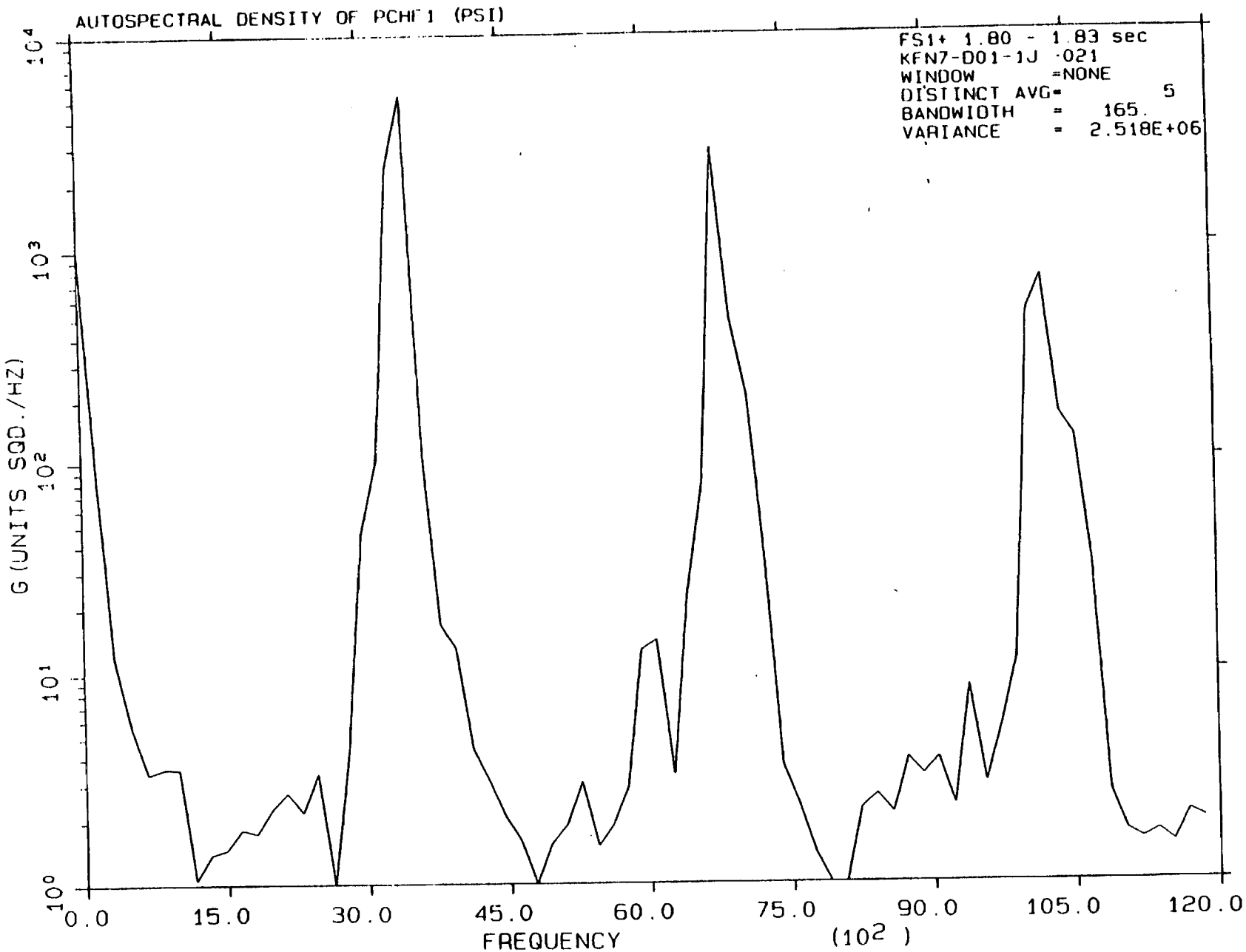
AUTOSPECTRAL DENSITY OF PCHF1 (PSI)
FS1+ 1.80 - 1.83 sec
KFN7-D01-1J ·021
WINDOW =NONE
DISTINCT AVG= 5
BANDWIDTH = 165.
VARIANCE = 2.518E+06
G (UNITS SQD./HZ)
10^4
10^3
10^2
10^1
10^0
0.0
15.0
30.0
45.0
60.0
75.0
90.0
105.0
120.0
FREQUENCY
(10^2)

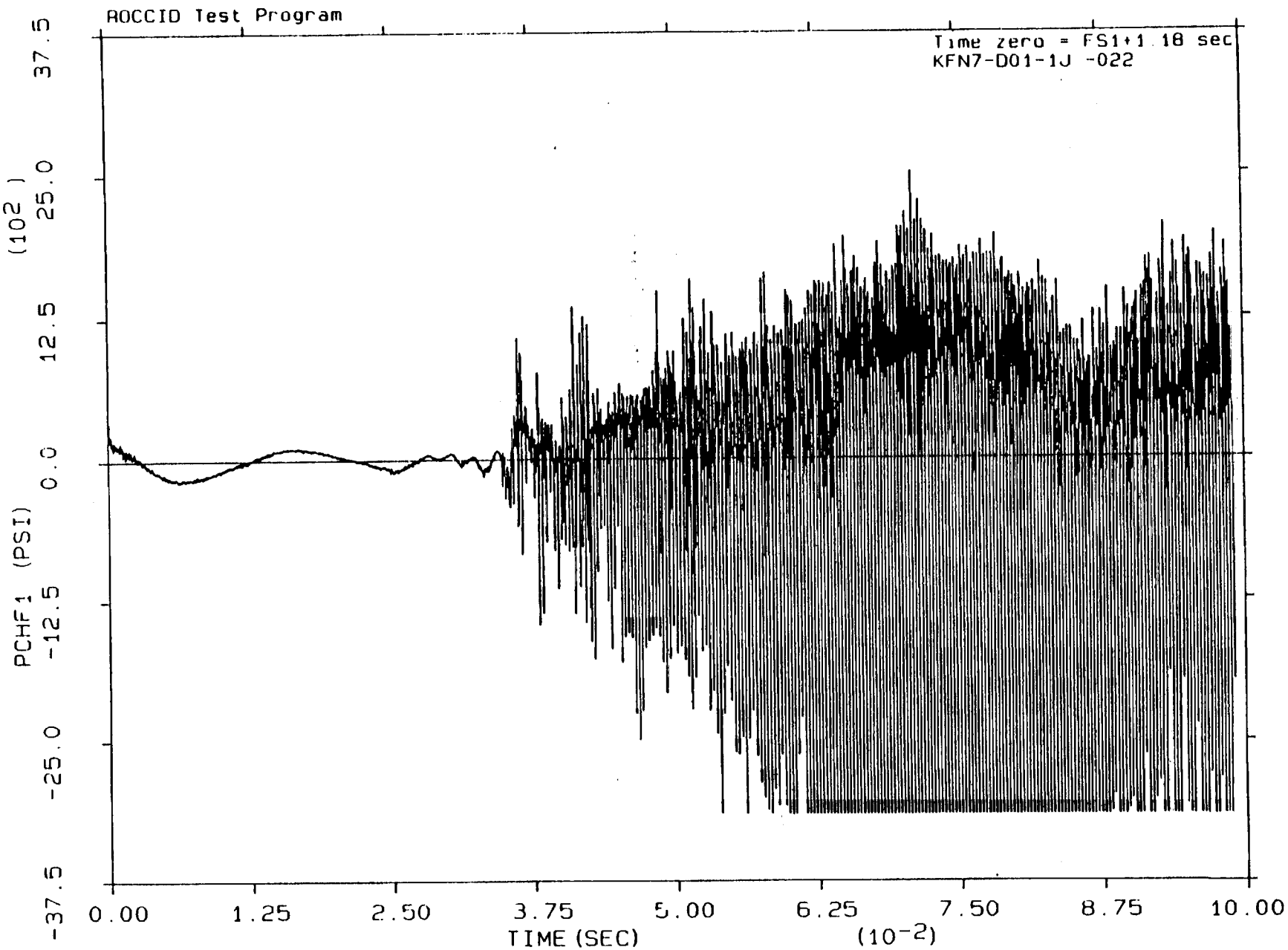
ROCCID Test Program
Time zero = FS1+1.18 sec
KFN7-D01-1J -022
PCHF1 (PSI)
(10^2)
37.5
25.0
12.5
0.0
-12.5
-25.0
-37.5
0.00
1.25
2.50
3.75
5.00
6.25
7.50
8.75
10.00
TIME (SEC)
(10^-2)

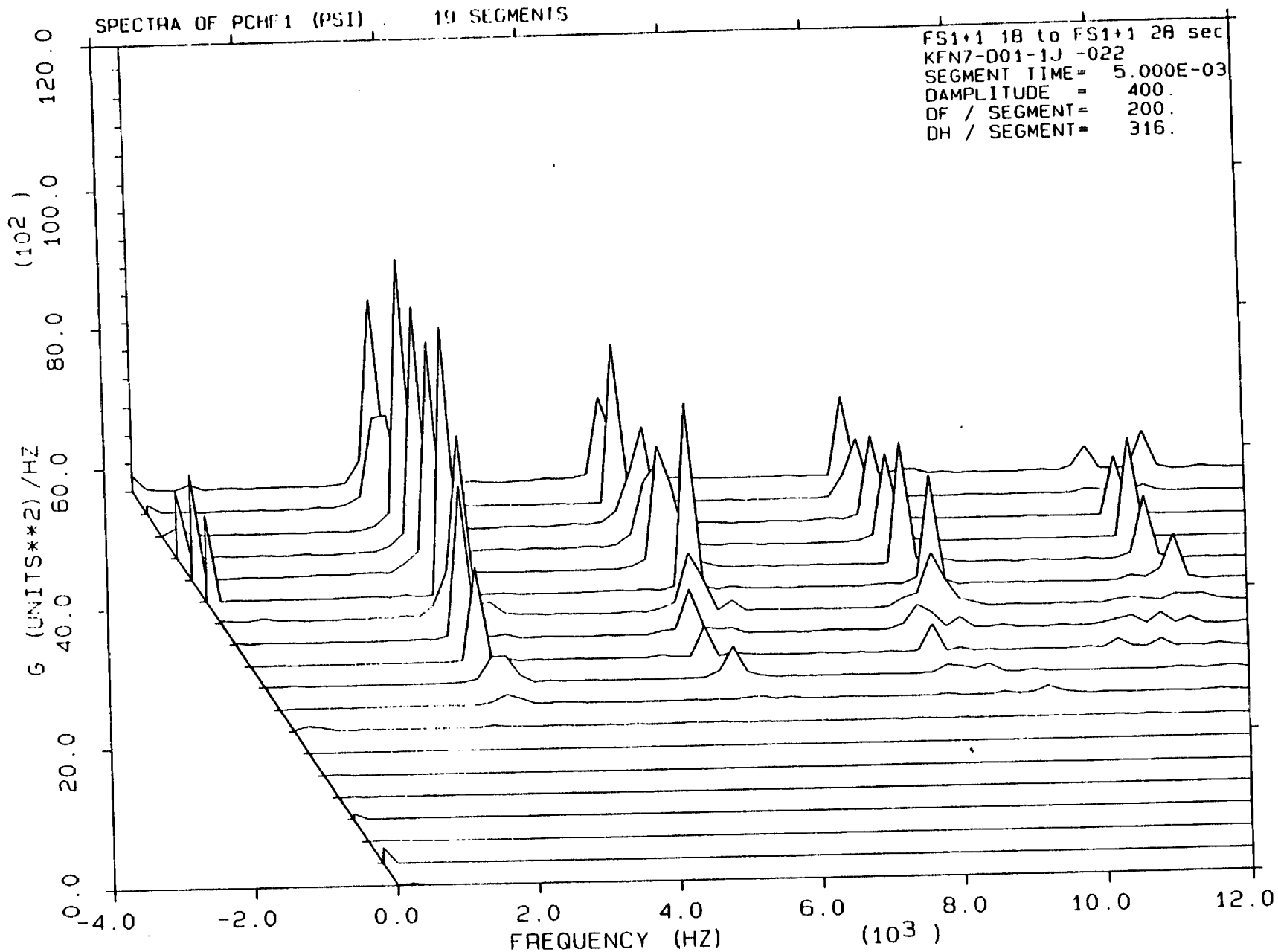
SPECTRA OF PCHF1 (PSI) 19 SEGMENTS
FS1+1 18 to FS1+1 28 sec
KFN7-D01-1J -022
SEGMENT TIME= 5.000E-03
DAMPLITUDE = 400.
DF / SEGMENT= 200.
DH / SEGMENT= 316.
G (UNITS**2) /HZ (10^2)
0.0
20.0
40.0
60.0
80.0
100.0
120.0
-4.0
-2.0
0.0
2.0
4.0
6.0
8.0
10.0
12.0
FREQUENCY (HZ) (10^3)

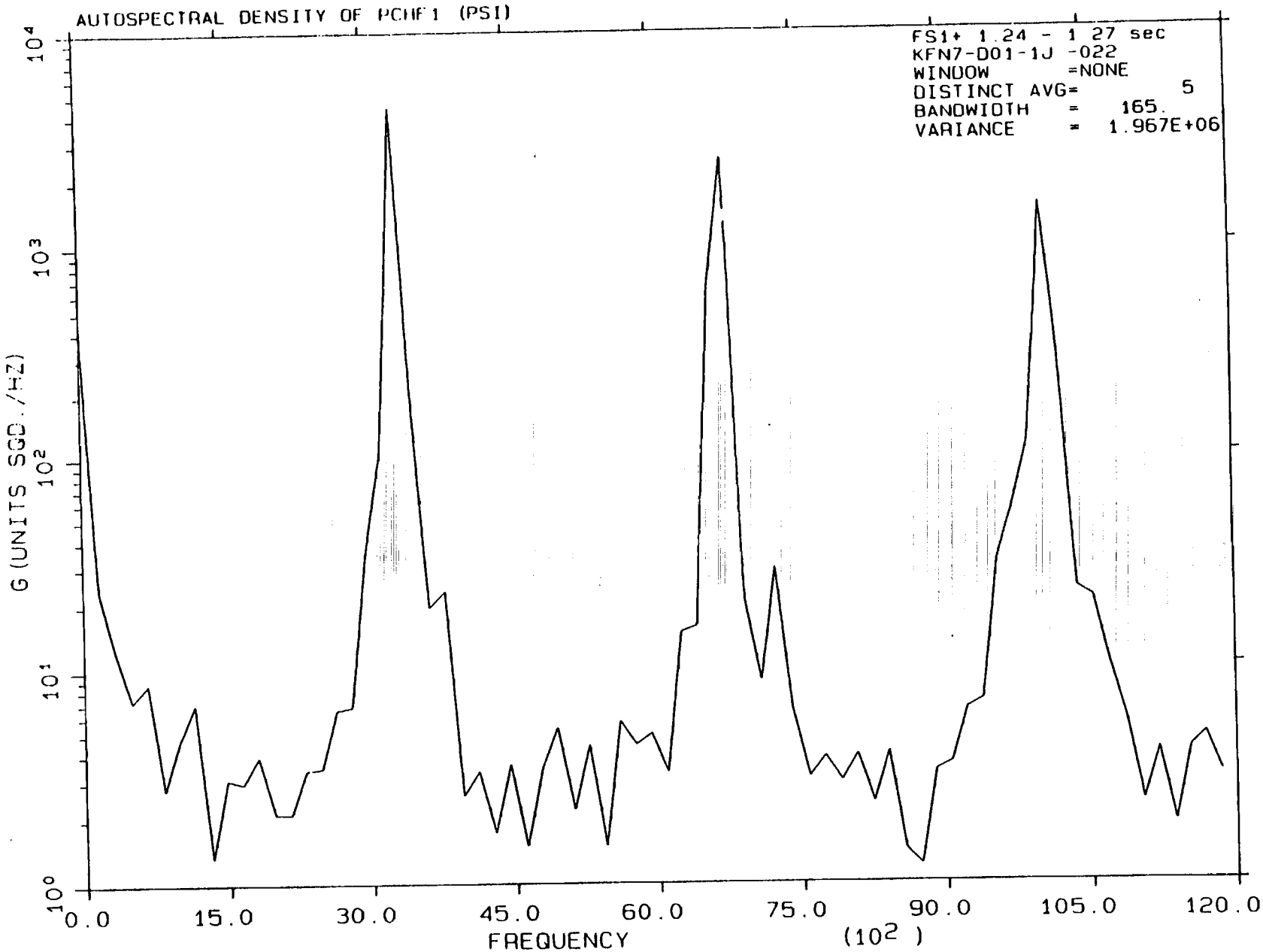
AUTOSPECTRAL DENSITY OF PCHF1 (PSI)
FS1+ 1.24 - 1 27 sec
KFN7-D01-1J -022
WINDOW =NONE
DISTINCT AVG= 5
BANDWIDTH = 165.
VARIANCE = 1.967E+06
G (UNITS SQD./HZ)
10^4
10^3
10^2
10^1
10^0
0.0
15.0
30.0
45.0
60.0
75.0
90.0
105.0
120.0
FREQUENCY
(10^2)

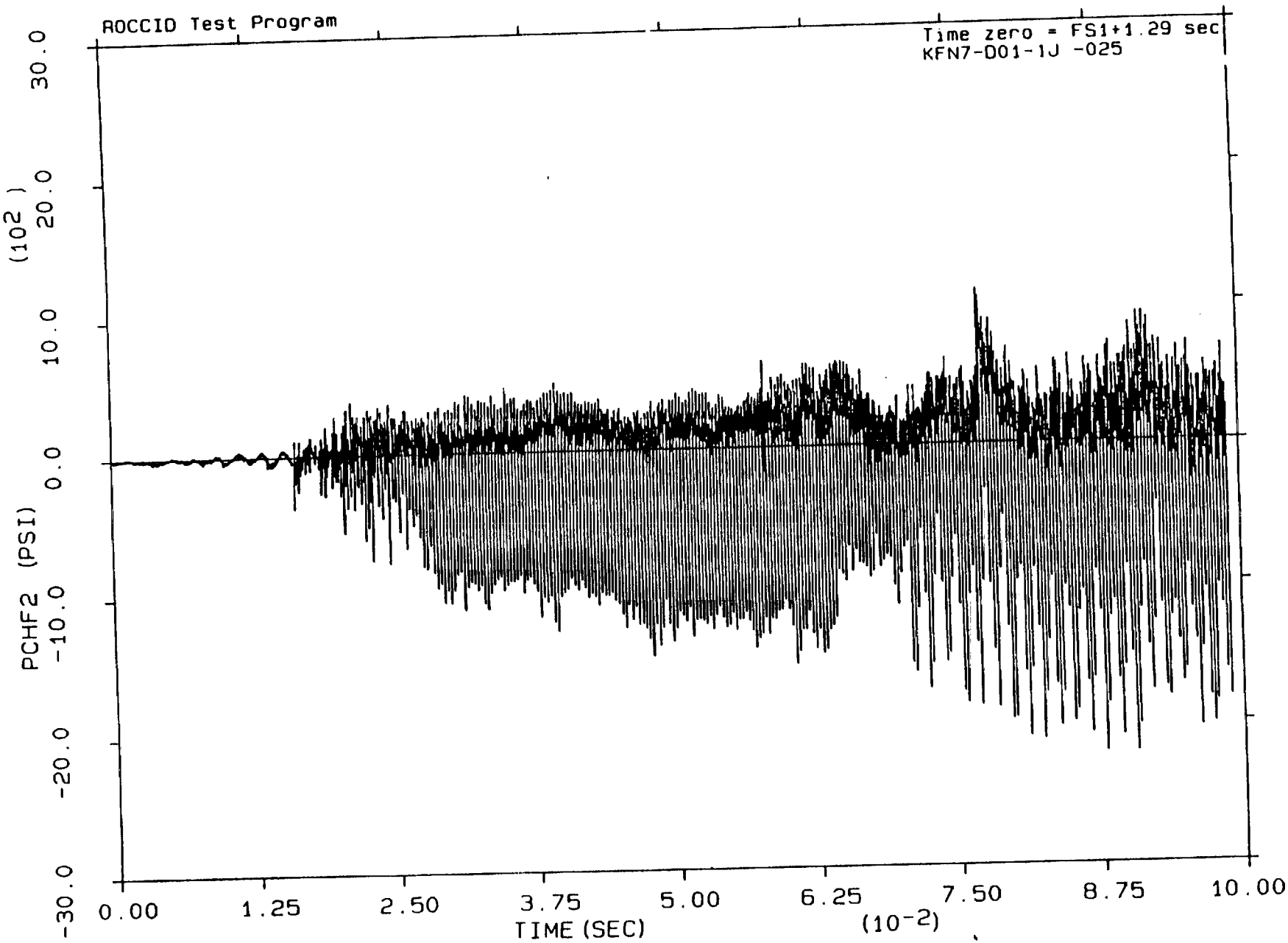
ROCCID Test Program
Time zero = FS1+1.29 sec
KFN7-D01-1J -025
PCHF2 (PSI)
(10^2)
30.0
20.0
10.0
0.0
-10.0
-20.0
-30.0
0.00
1.25
2.50
3.75
5.00
6.25
7.50
8.75
10.00
TIME (SEC)
(10^-2)

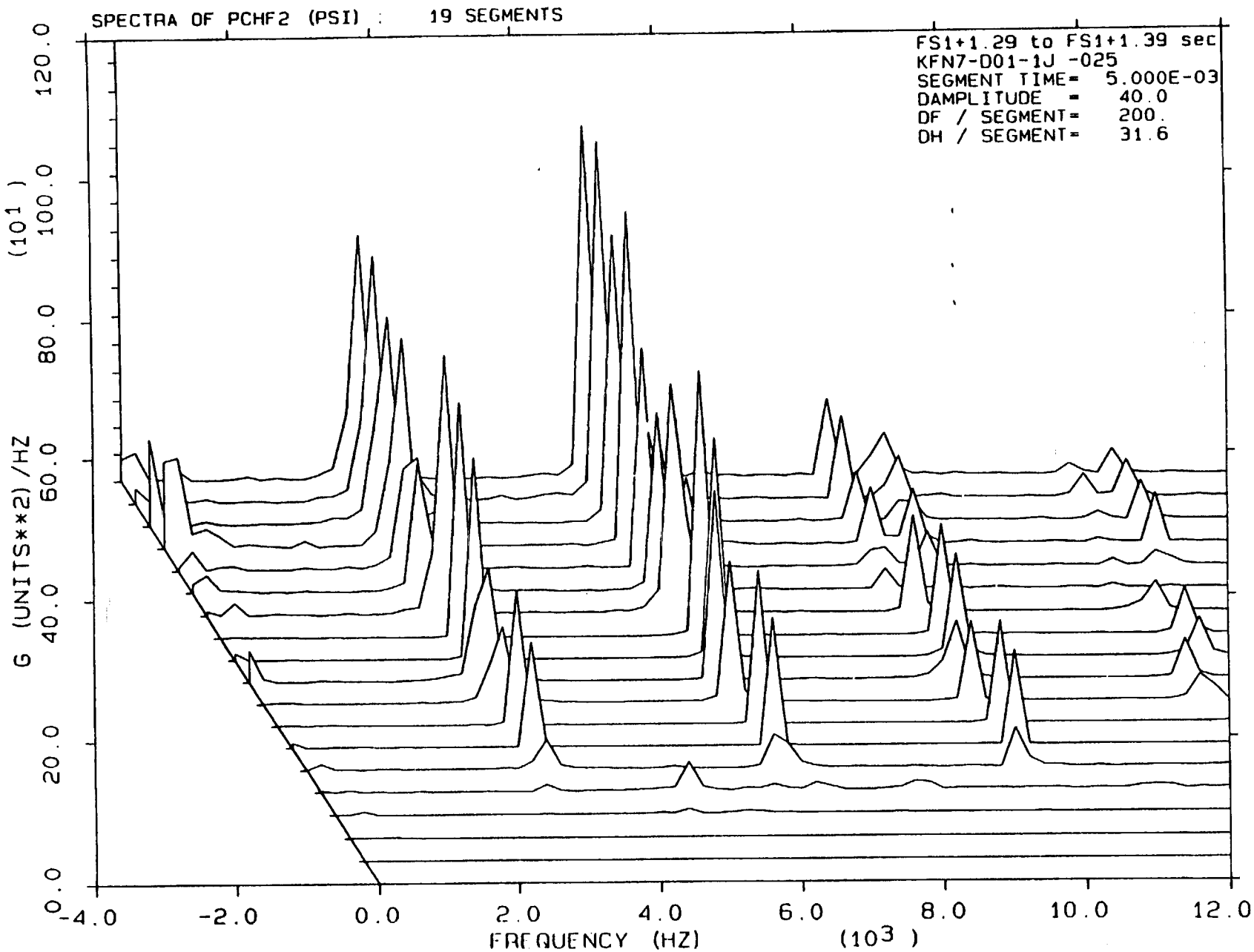
SPECTRA OF PCHF2 (PSI) : 19 SEGMENTS
FS1+1.29 to FS1+1.39 sec
KFN7-D01-1J -025
SEGMENT TIME= 5.000E-03
DAMPLITUDE = 40.0
DF / SEGMENT= 200.
DH / SEGMENT= 31.6
G (UNITS**2)/HZ (10^1)
0.0
20.0
40.0
60.0
80.0
100.0
120.0
-4.0
-2.0
0.0
2.0
4.0
6.0
8.0
10.0
12.0
FREQUENCY (HZ) (10^3)

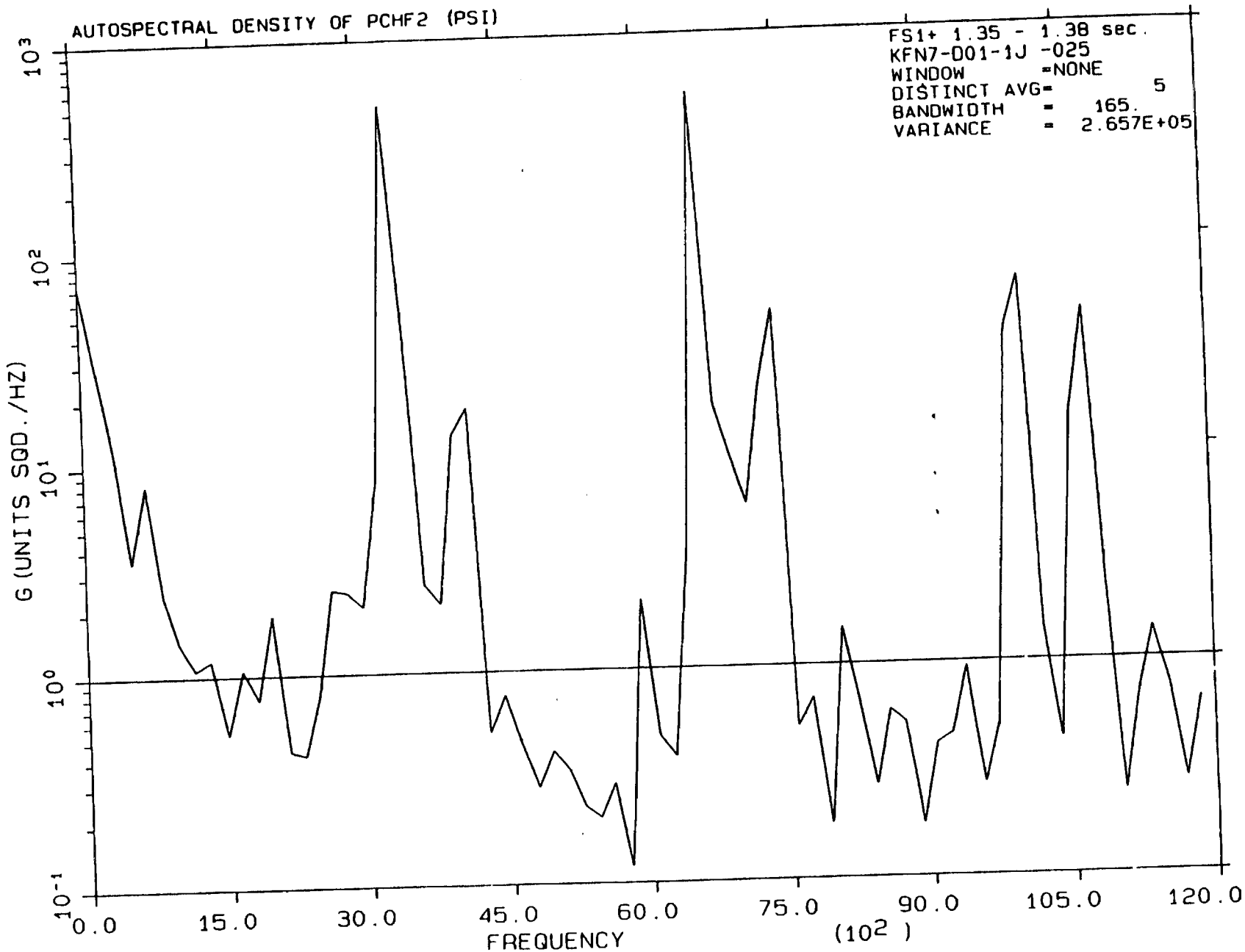
AUTOSPECTRAL DENSITY OF PCHF2 (PSI)
FS1+ 1.35 - 1.38 sec.
KFN7-D01-1J -025
WINDOW =NONE
DISTINCT AVG= 5
BANDWIDTH = 165.
VARIANCE = 2.657E+05
G (UNITS SQD./HZ)
10^3
10^2
10^1
10^0
10^{-1}
0.0
15.0
30.0
45.0
60.0
75.0
90.0
105.0
120.0
FREQUENCY
(10^2)

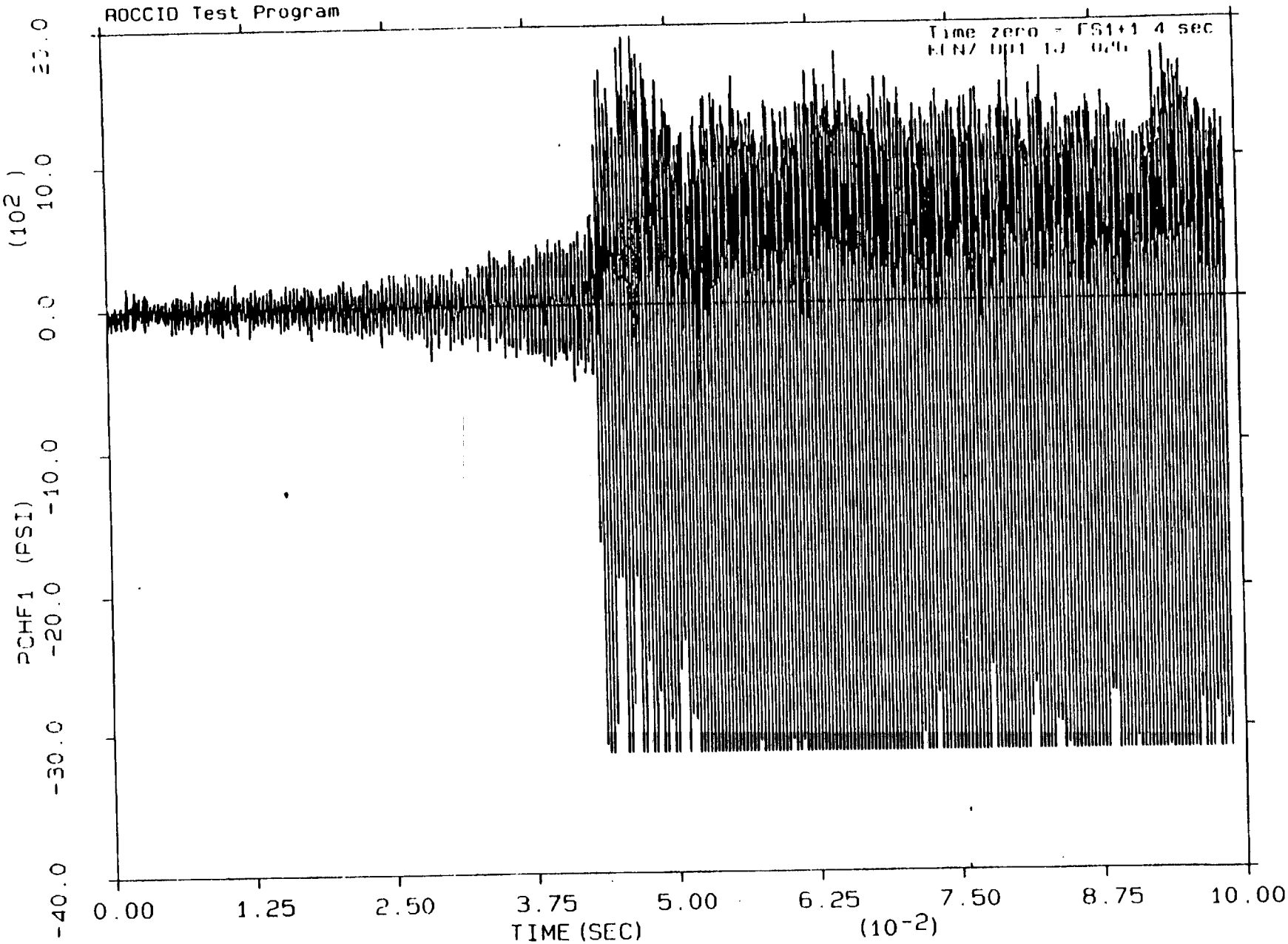
ROCCID Test Program
Time zero = FS1+1.4 sec
PCHF1 (PSI)
(10^2)
20.0
10.0
0.0
-10.0
-20.0
-30.0
-40.0
0.00
1.25
2.50
3.75
5.00
6.25
7.50
8.75
10.00
TIME (SEC)
(10^-2)

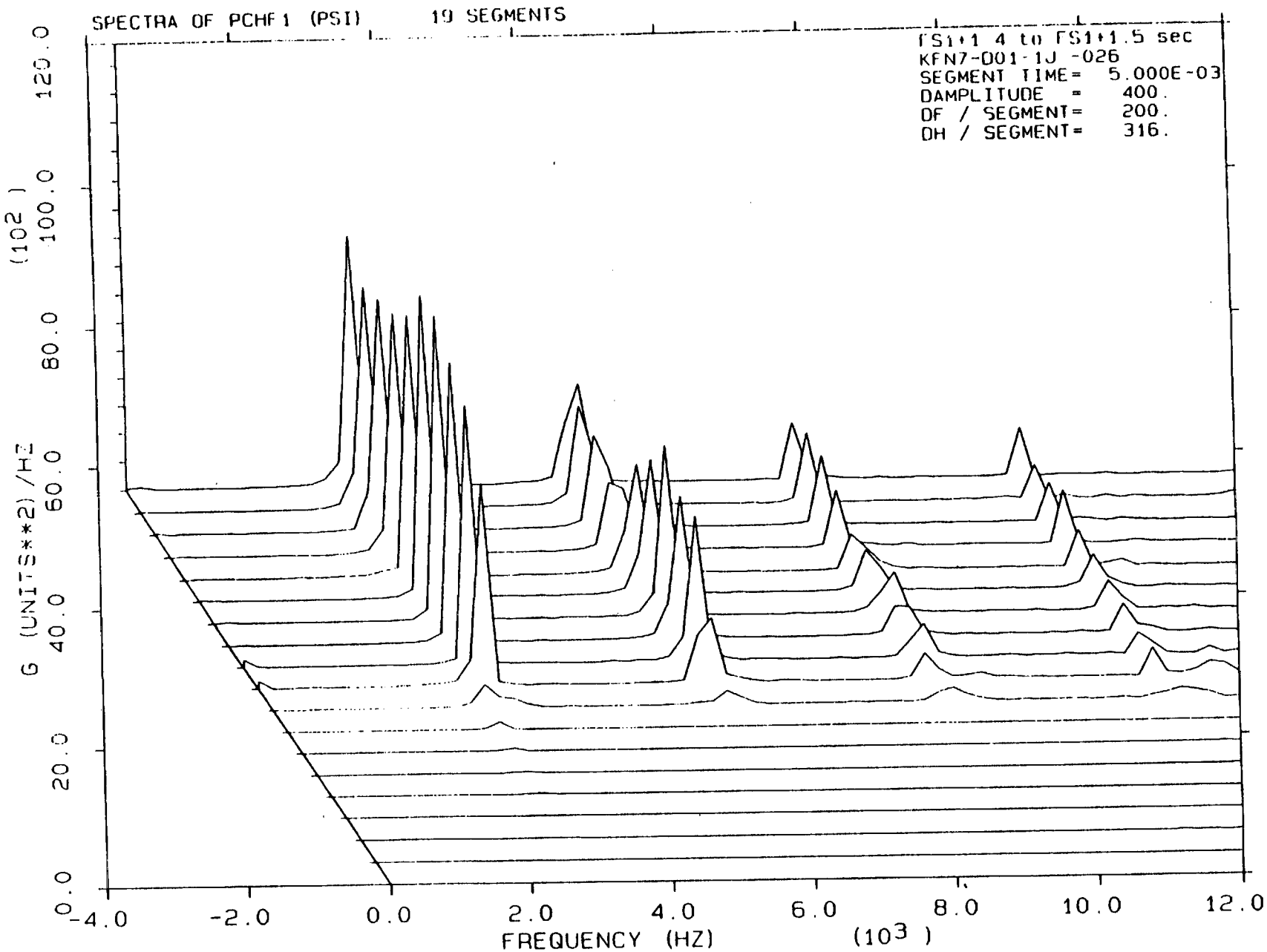
SPECTRA OF PCHF1 (PSI)
19 SEGMENTS
FS1+1.4 to FS1+1.5 sec
KFN7-001-1J -026
SEGMENT TIME= 5.000E-03
DAMPLITUDE = 400.
DF / SEGMENT= 200.
DH / SEGMENT= 316.
G (UNITS**2)/HZ (10^2)
0.0
20.0
40.0
60.0
80.0
100.0
120.0
-4.0
-2.0
0.0
2.0
4.0
6.0
8.0
10.0
12.0
FREQUENCY (HZ) (10^3)

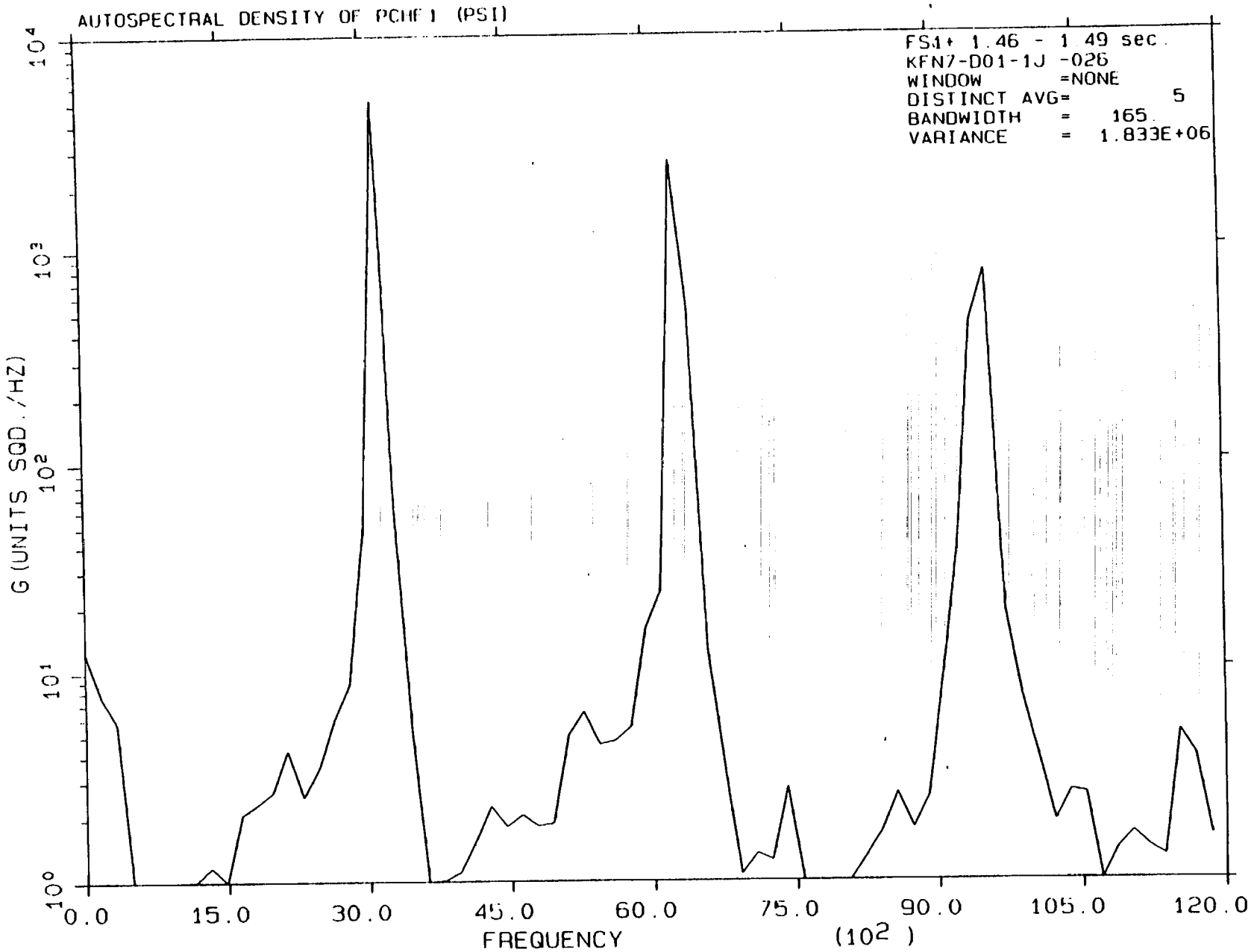
AUTOSPECTRAL DENSITY OF PCHF 1 (PSI)
FS1+ 1.46 - 1.49 sec.
KFN7-D01-1J -026
WINDOW =NONE
DISTINCT AVG= 5
BANDWIDTH = 165.
VARIANCE = 1.833E+06
G (UNITS SQD./HZ)
10^4
10^3
10^2
10^1
10^0
0.0
15.0
30.0
45.0
60.0
75.0
90.0
105.0
120.0
FREQUENCY
(10^2)

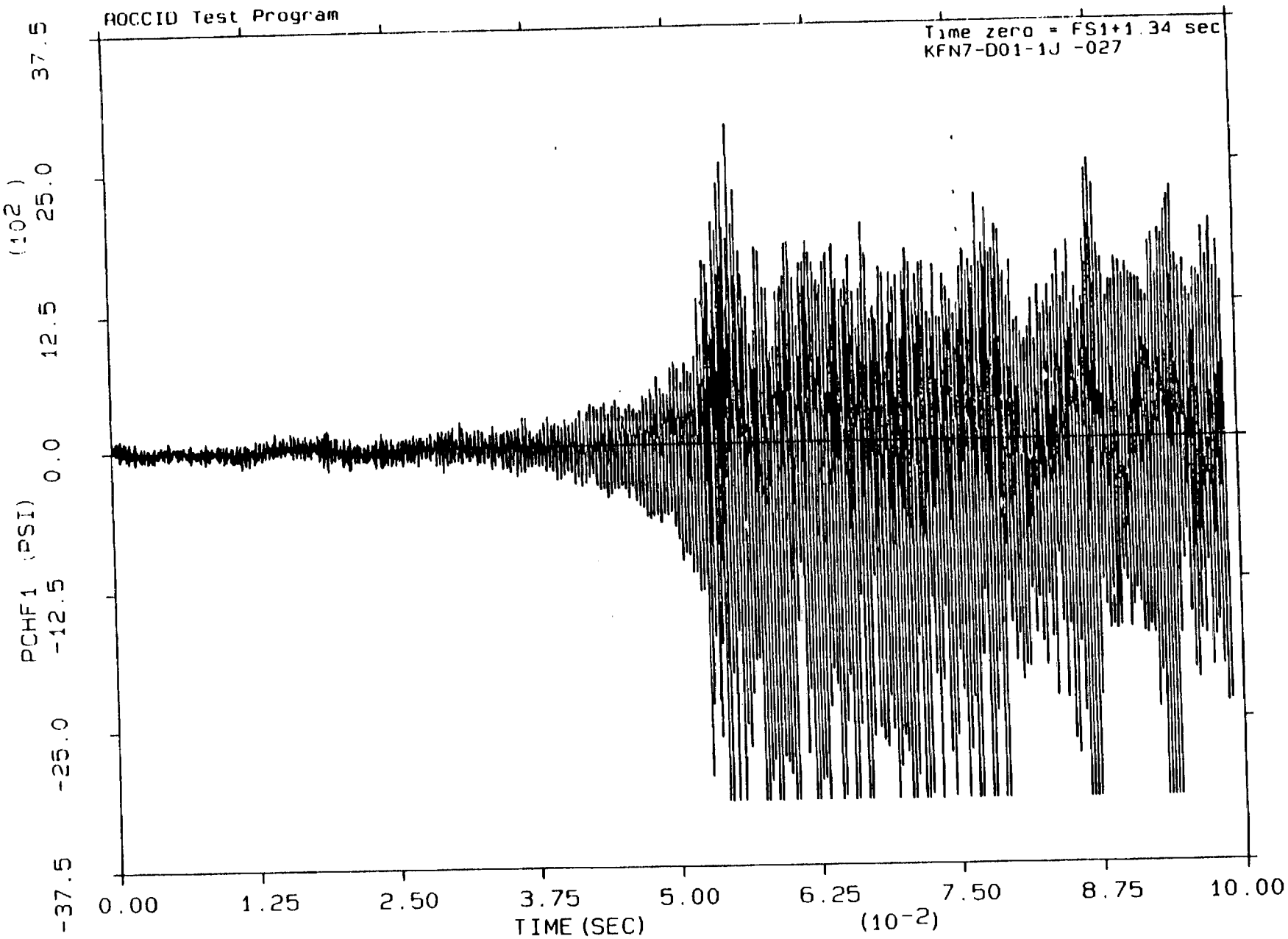
AOCCID Test Program
Time zero = FS1+1.34 sec
KFN7-D01-1J -027
PCHF1 (PSI)
(10^2)
37.5
25.0
12.5
0.0
-12.5
-25.0
-37.5
0.00
1.25
2.50
3.75
5.00
6.25
7.50
8.75
10.00
TIME (SEC)
(10^-2)

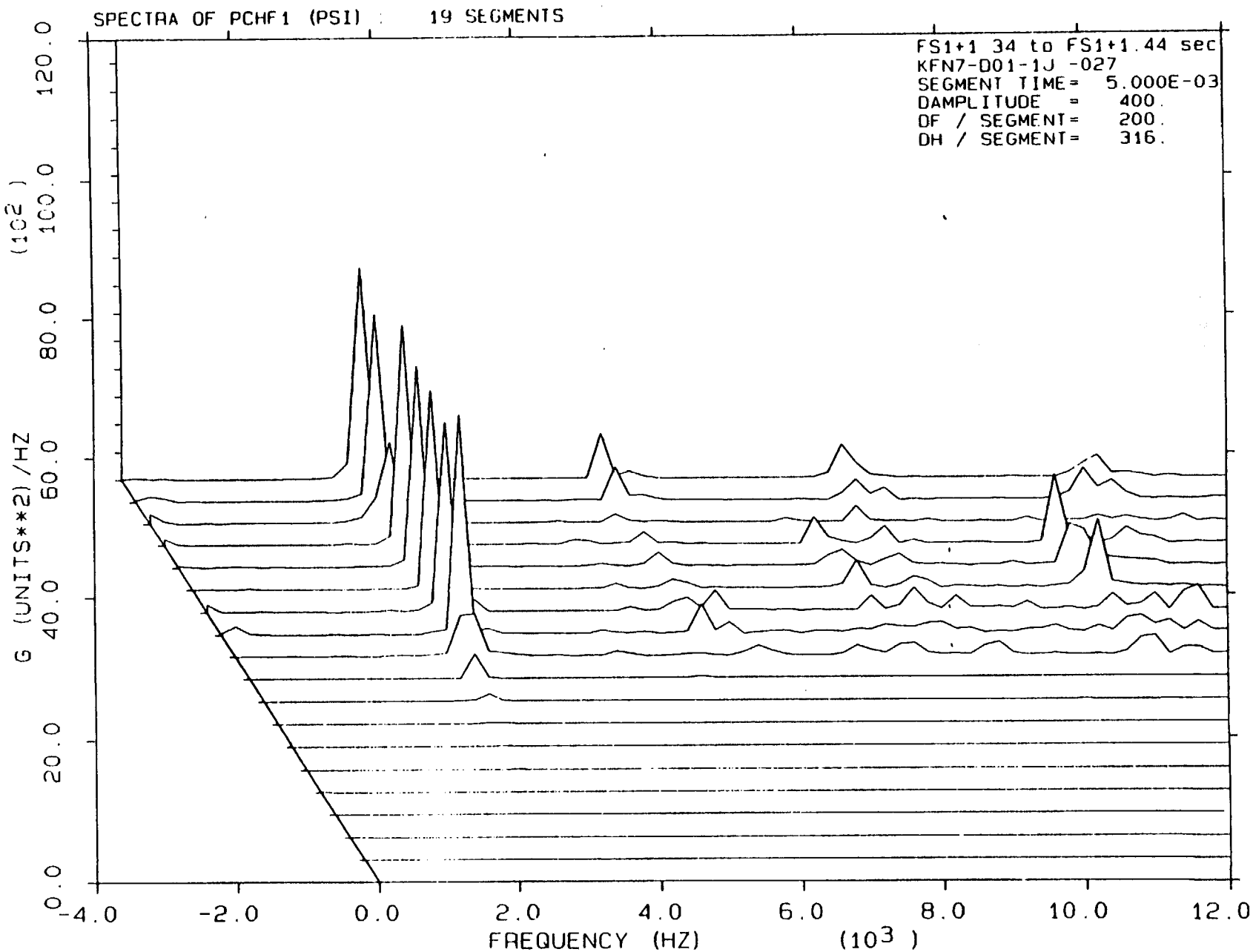
SPECTRA OF PCHF1 (PSI) : 19 SEGMENTS
FS1+1 34 to FS1+1.44 sec
KFN7-D01-1J -027
SEGMENT TIME= 5.000E-03
DAMPLITUDE = 400.
DF / SEGMENT= 200.
DH / SEGMENT= 316.
G (UNITS**2)/HZ (10^2)
0.0
20.0
40.0
60.0
80.0
100.0
120.0
-4.0
-2.0
0.0
2.0
4.0
6.0
8.0
10.0
12.0
FREQUENCY (HZ) (10^3)

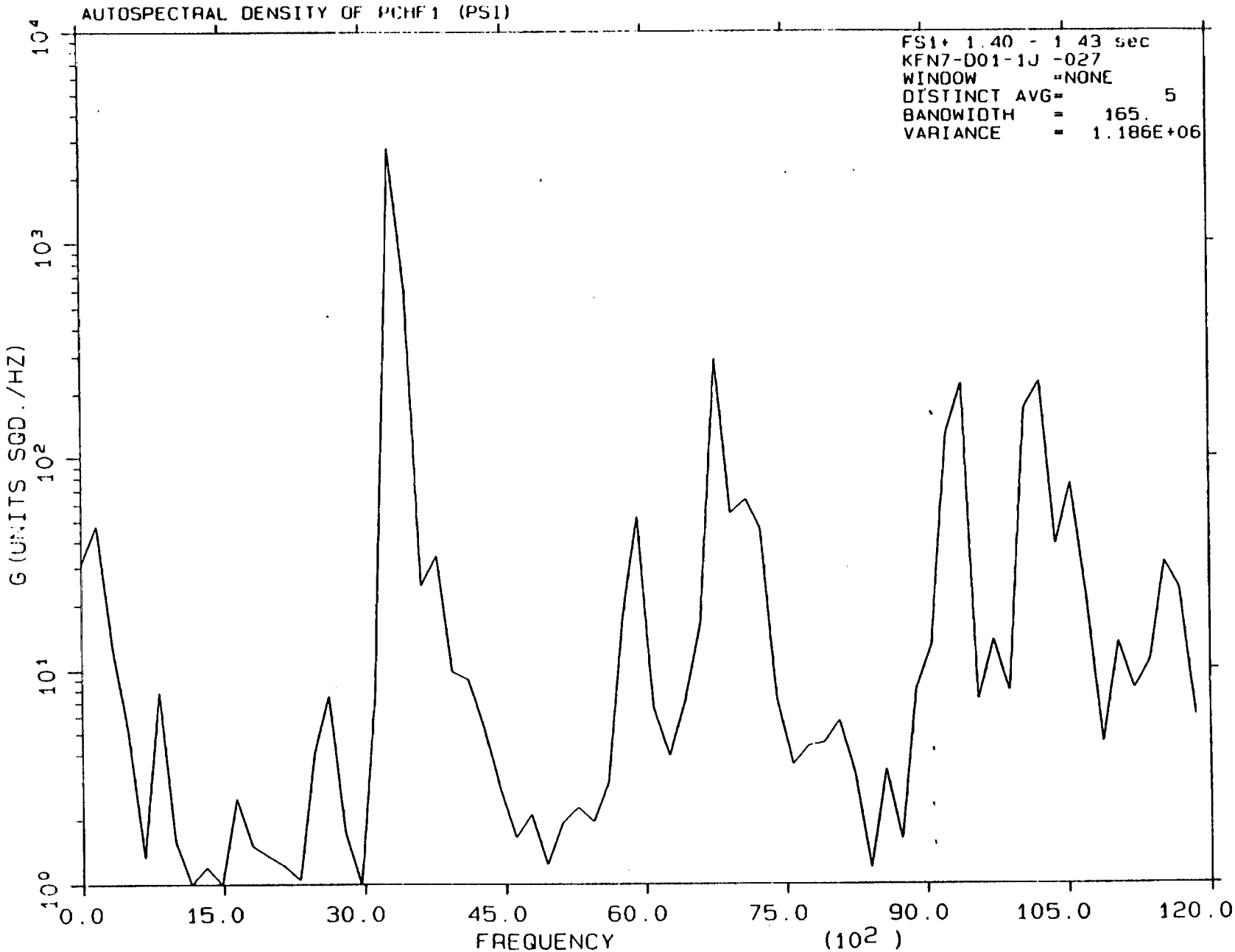
AUTOSPECTRAL DENSITY OF PCHF1 (PSI)
FS1+ 1.40 - 1 43 sec
KFN7-D01-1J -027
WINDOW =NONE
DISTINCT AVG= 5
BANDWIDTH = 165.
VARIANCE = 1.186E+06
G (UNITS SQD./HZ)
10^4
10^3
10^2
10^1
10^0
0.0
15.0
30.0
45.0
60.0
75.0
90.0
105.0
120.0
FREQUENCY
(10^2)

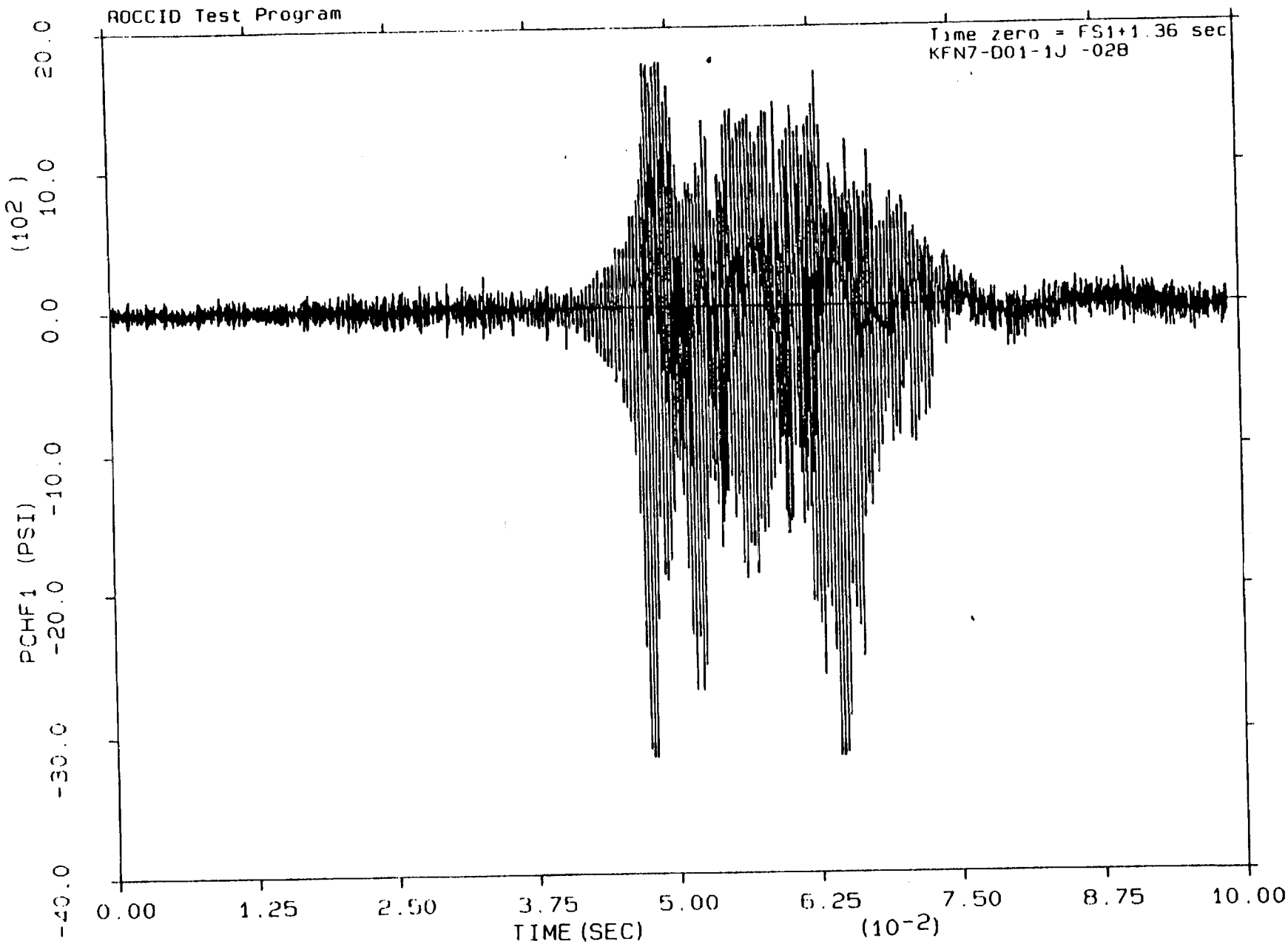
AOCCID Test Program
Time zero = FS1+1.36 sec
KFN7-D01-1J -028
PCHF1 (PSI)
(10^2)
20.0
10.0
0.0
-10.0
-20.0
-30.0
-40.0
0.00
1.25
2.50
3.75
5.00
6.25
7.50
8.75
10.00
TIME (SEC)
(10^-2)

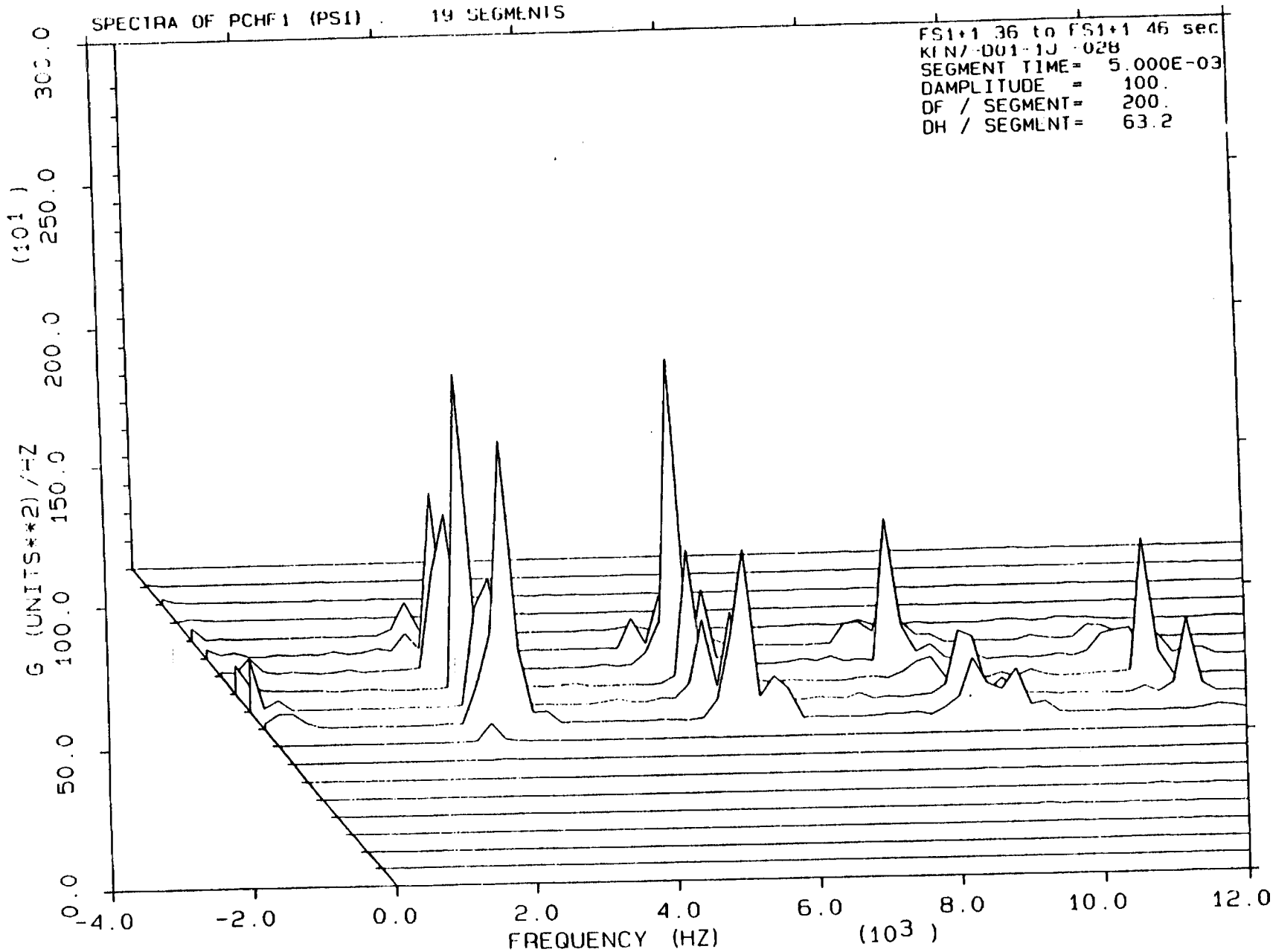
SPECTRA OF PCHF1 (PSI) . 19 SEGMENTS
FS1+1.36 to FS1+1.46 sec
KIN7-001-10-028
SEGMENT TIME= 5.000E-03
DAMPLITUDE = 100.
DF / SEGMENT= 200.
DH / SEGMENT= 63.2
G (UNITS**2) /HZ
(10^1)
300.0
250.0
200.0
150.0
100.0
50.0
0.0
-4.0
-2.0
0.0
2.0
4.0
6.0
8.0
10.0
12.0
FREQUENCY (HZ)
(10^3)

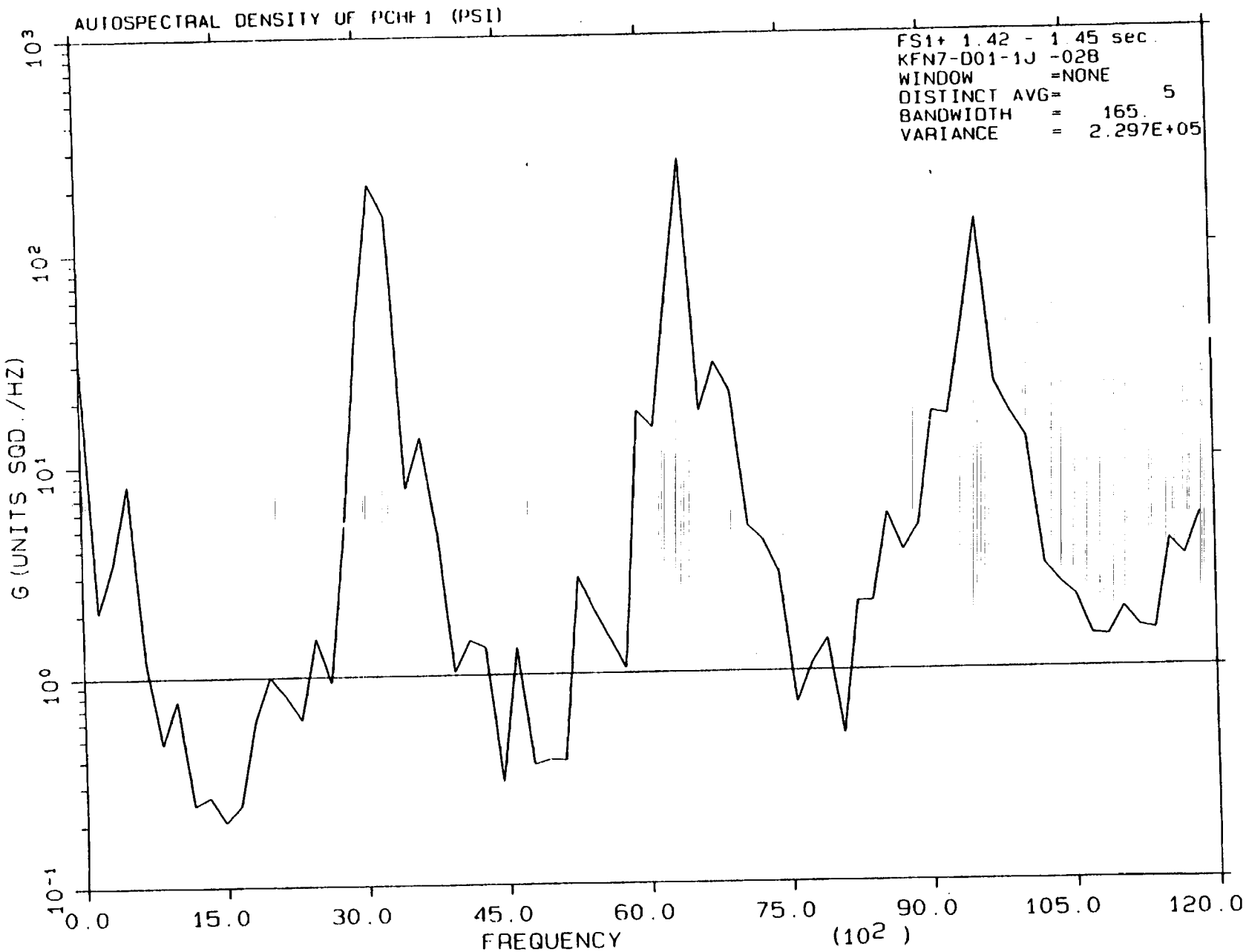
AUTOSPECTRAL DENSITY OF PCHF 1 (PSI)
FS1+ 1.42 - 1.45 sec
KFN7-D01-1J -02B
WINDOW =NONE
DISTINCT AVG= 5
BANDWIDTH = 165.
VARIANCE = 2.297E+05
G (UNITS SQD./HZ)
10^3
10^2
10^1
10^0
10^{-1}
0.0
15.0
30.0
45.0
60.0
75.0
90.0
105.0
120.0
FREQUENCY
(10^2)

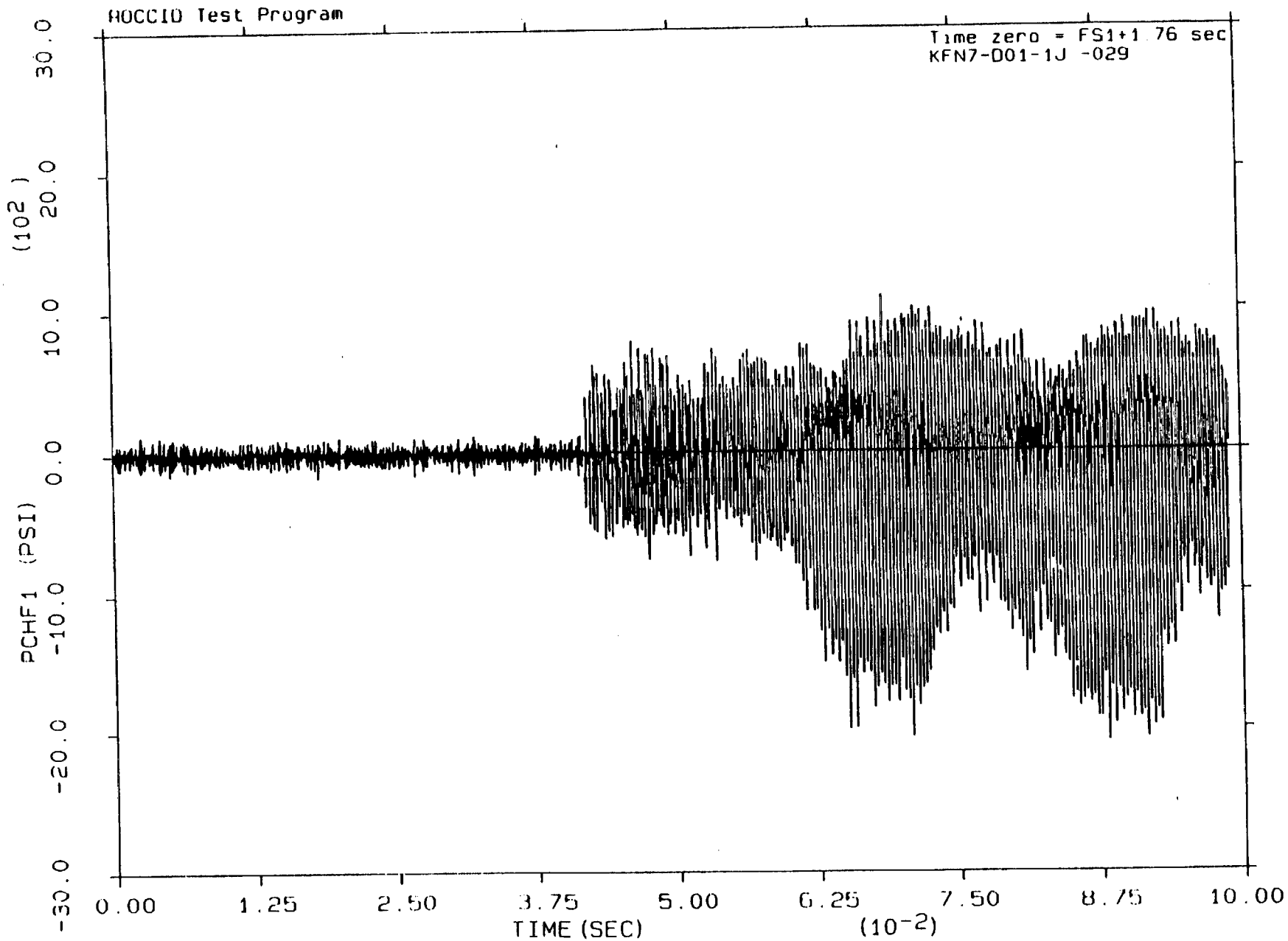
ROCCID Test Program
Time zero = FS1+1.76 sec
KFN7-D01-1J -029
PCHF1 (PSI)
(10^2)
30.0
20.0
10.0
0.0
-10.0
-20.0
-30.0
0.00
1.25
2.50
3.75
5.00
6.25
7.50
8.75
10.00
TIME (SEC)
(10^-2)

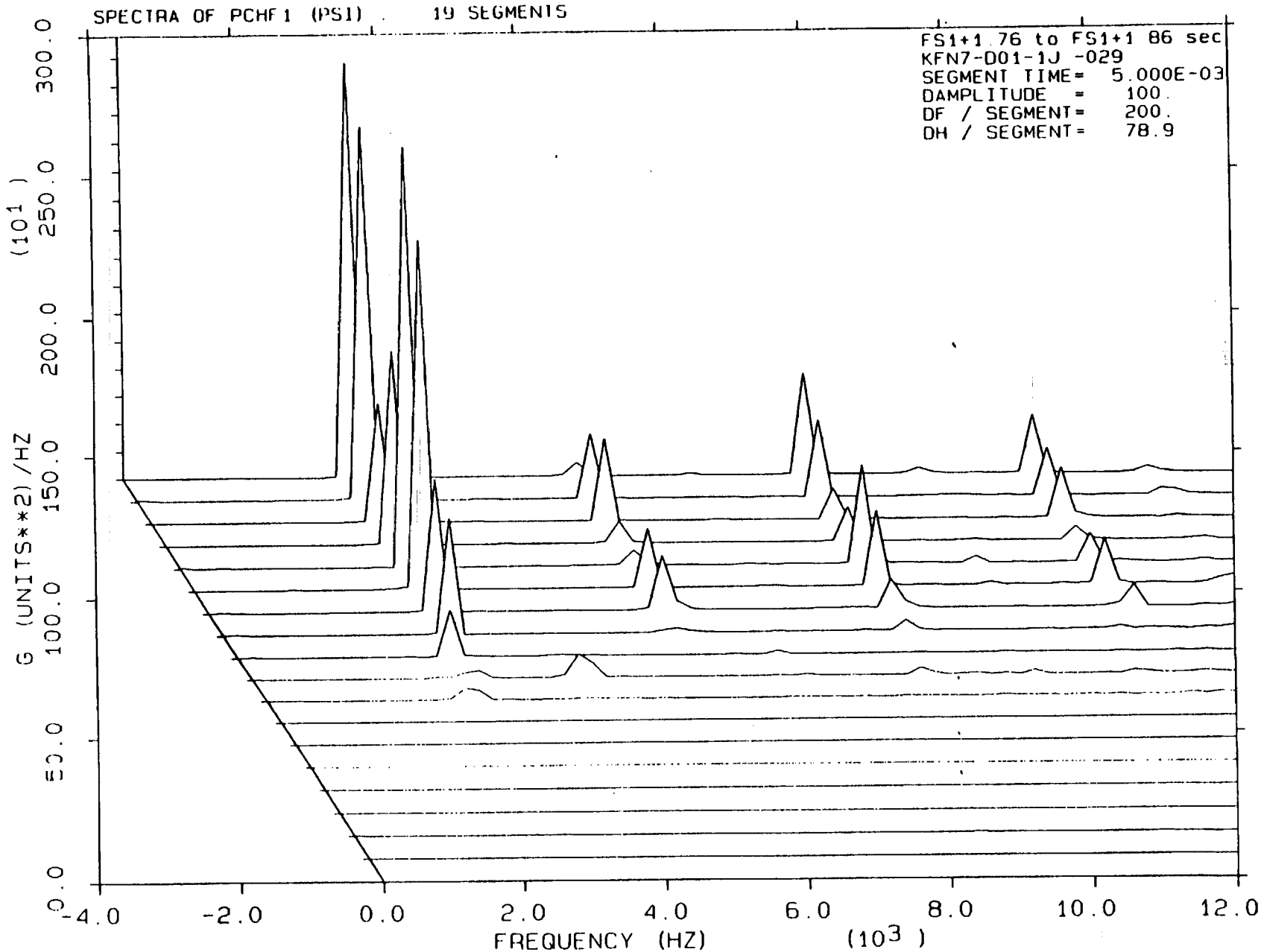
SPECTRA OF PCHF1 (PSI) . 19 SEGMENTS
FS1+1.76 to FS1+1.86 sec
KFN7-D01-1J -029
SEGMENT TIME= 5.000E-03
DAMPLITUDE = 100.
DF / SEGMENT= 200.
DH / SEGMENT= 78.9
G (UNITS**2)/HZ (10^1)
300.0
250.0
200.0
150.0
100.0
50.0
0.0
-4.0
-2.0
0.0
2.0
4.0
6.0
8.0
10.0
12.0
FREQUENCY (HZ) (10^3)

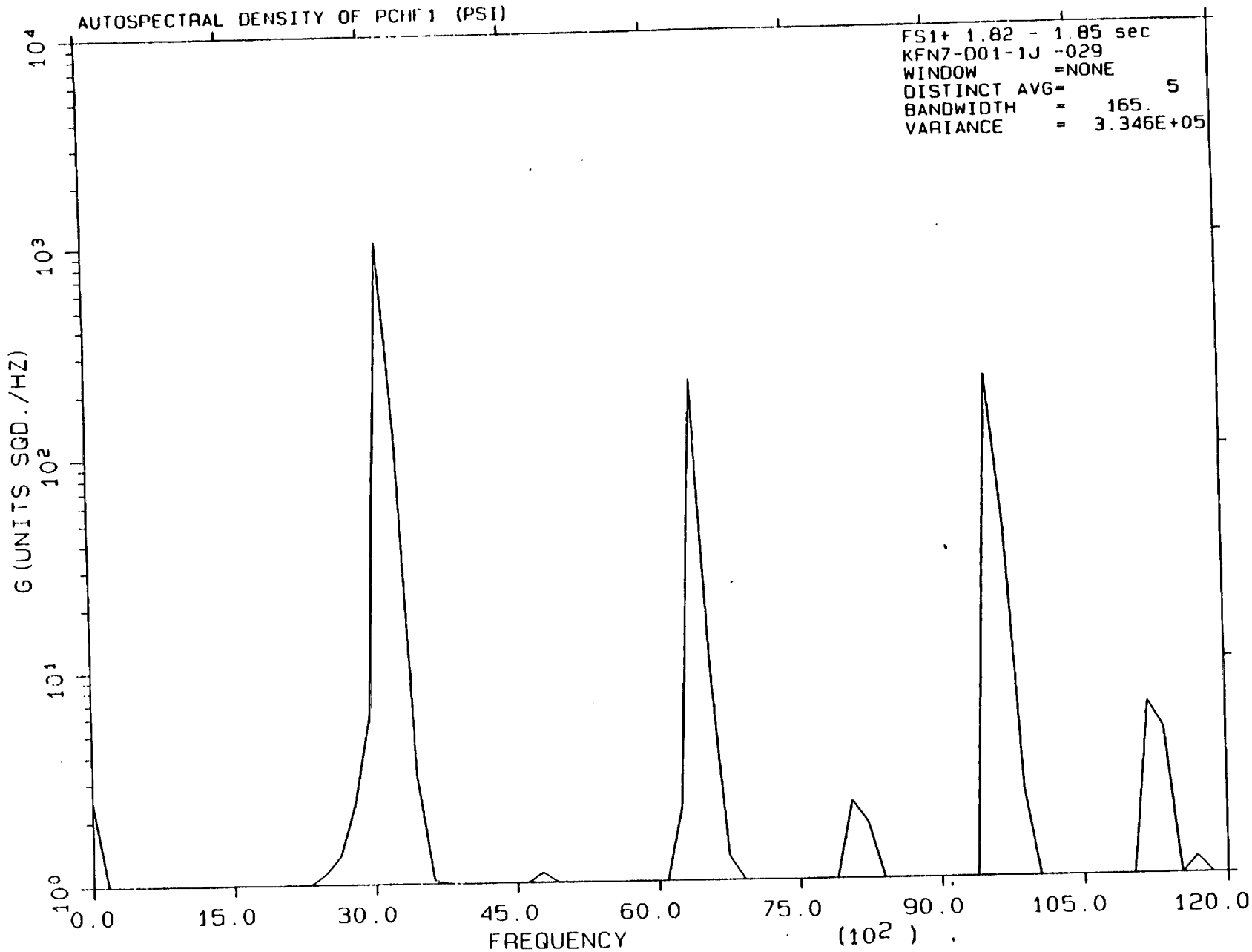
AUTOSPECTRAL DENSITY OF PCHF 1 (PSI)
FS1+ 1.82 - 1.85 sec
KFN7-D01-1J -029
WINDOW =NONE
DISTINCT AVG= 5
BANDWIDTH = 165.
VARIANCE = 3.346E+05
G (UNITS SQD./HZ)
10^4
10^3
10^2
10^1
10^0
0.0
15.0
30.0
45.0
60.0
75.0
90.0
105.0
120.0
FREQUENCY
(10^2)

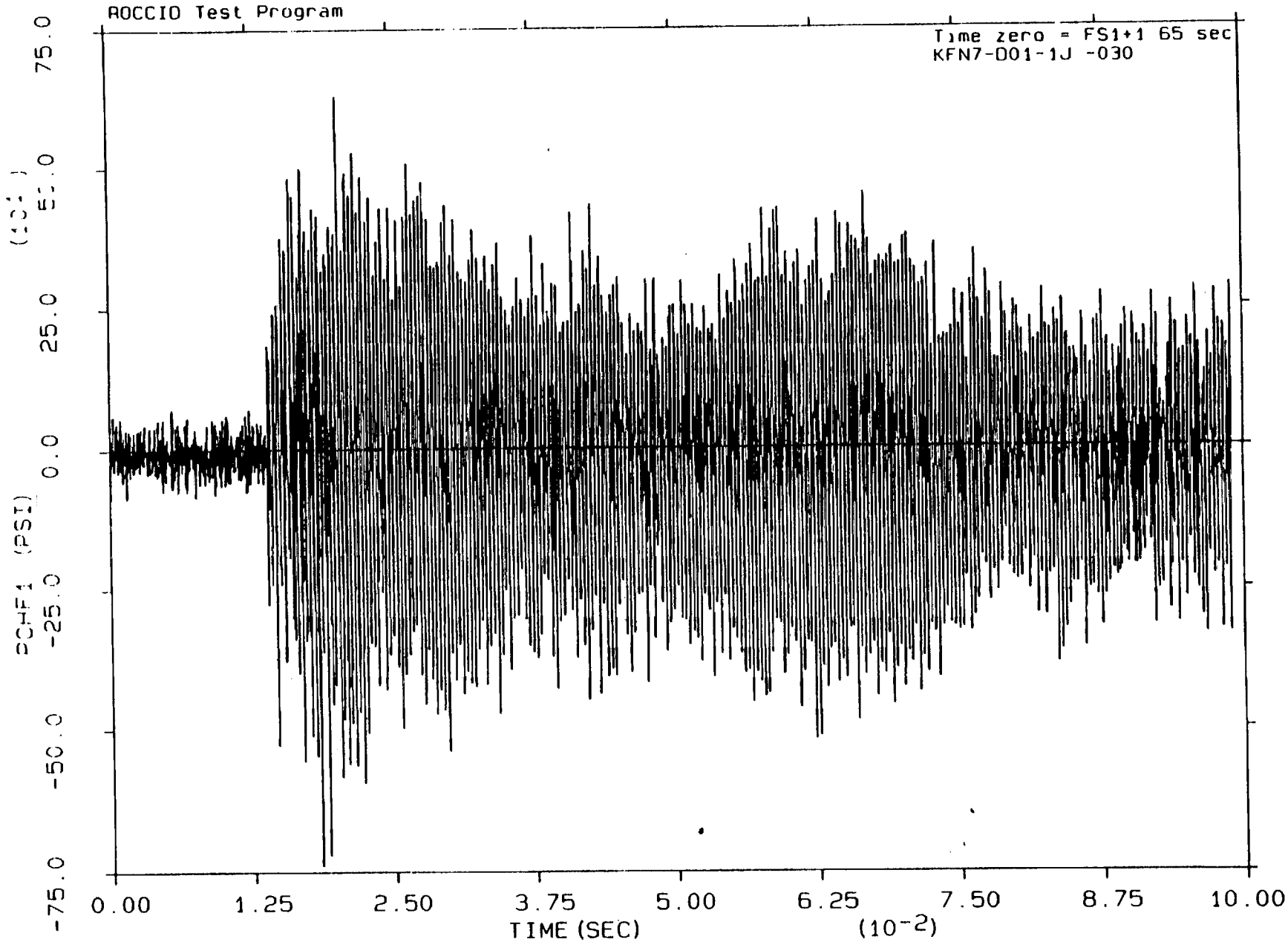
ROCCIO Test Program
Time zero = FS1+1 65 sec
KFN7-D01-1J -030
75.0
50.0
25.0
0.0
-25.0
-50.0
-75.0
0.00
1.25
2.50
3.75
5.00
6.25
7.50
8.75
10.00
TIME (SEC)
(10^-2)

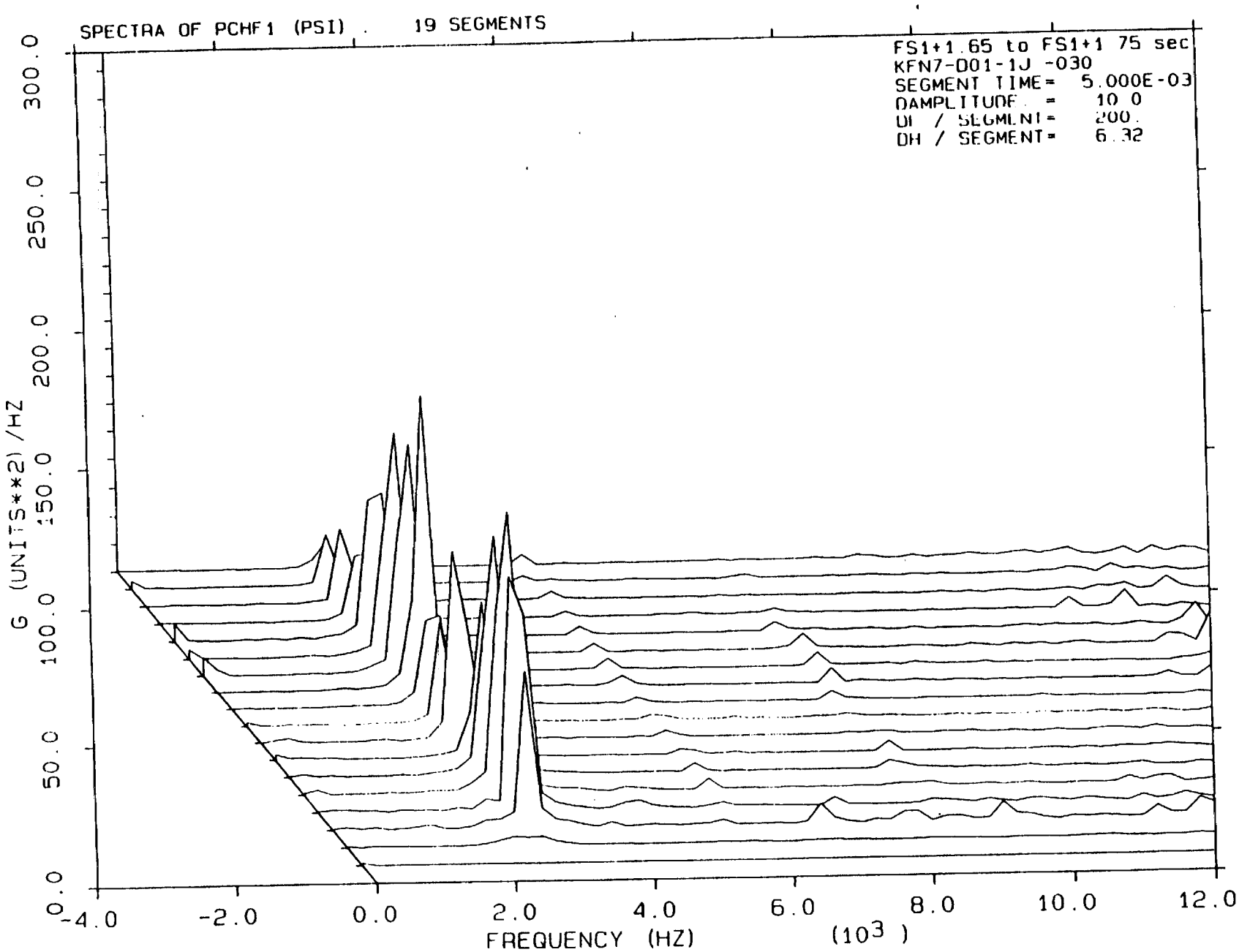
SPECTRA OF PCHF1 (PSI) . 19 SEGMENTS
FS1+1.65 to FS1+1 75 sec
KFN7-D01-1J -030
SEGMENT TIME= 5.000E-03
DAMPLITUDE = 10 0
DI / SEGMENT= 200.
DH / SEGMENT= 6.32
G (UNITS**2) /HZ
300.0
250.0
200.0
150.0
100.0
50.0
0.0
-4.0
-2.0
0.0
2.0
4.0
6.0
8.0
10.0
12.0
FREQUENCY (HZ)
(10^3)

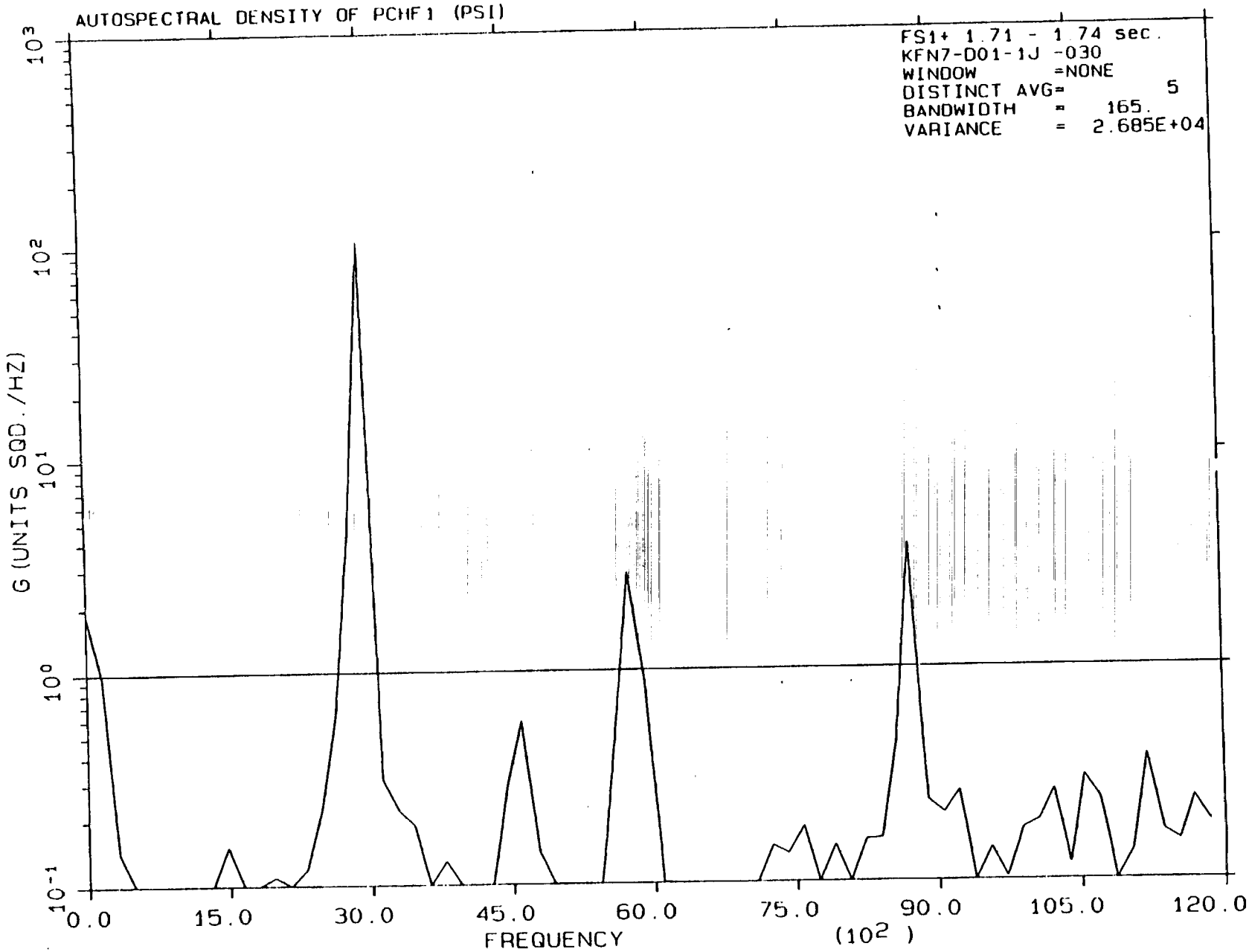
AUTOSPECTRAL DENSITY OF PCHF1 (PSI)
FS1+ 1.71 - 1.74 sec.
KFN7-D01-1J -030
WINDOW =NONE
DISTINCT AVG= 5
BANDWIDTH = 165.
VARIANCE = 2.685E+04
G (UNITS SQD./HZ)
10^3
10^2
10^1
10^0
10^{-1}
0.0
15.0
30.0
45.0
60.0
75.0
90.0
105.0
120.0
FREQUENCY
(10^2)

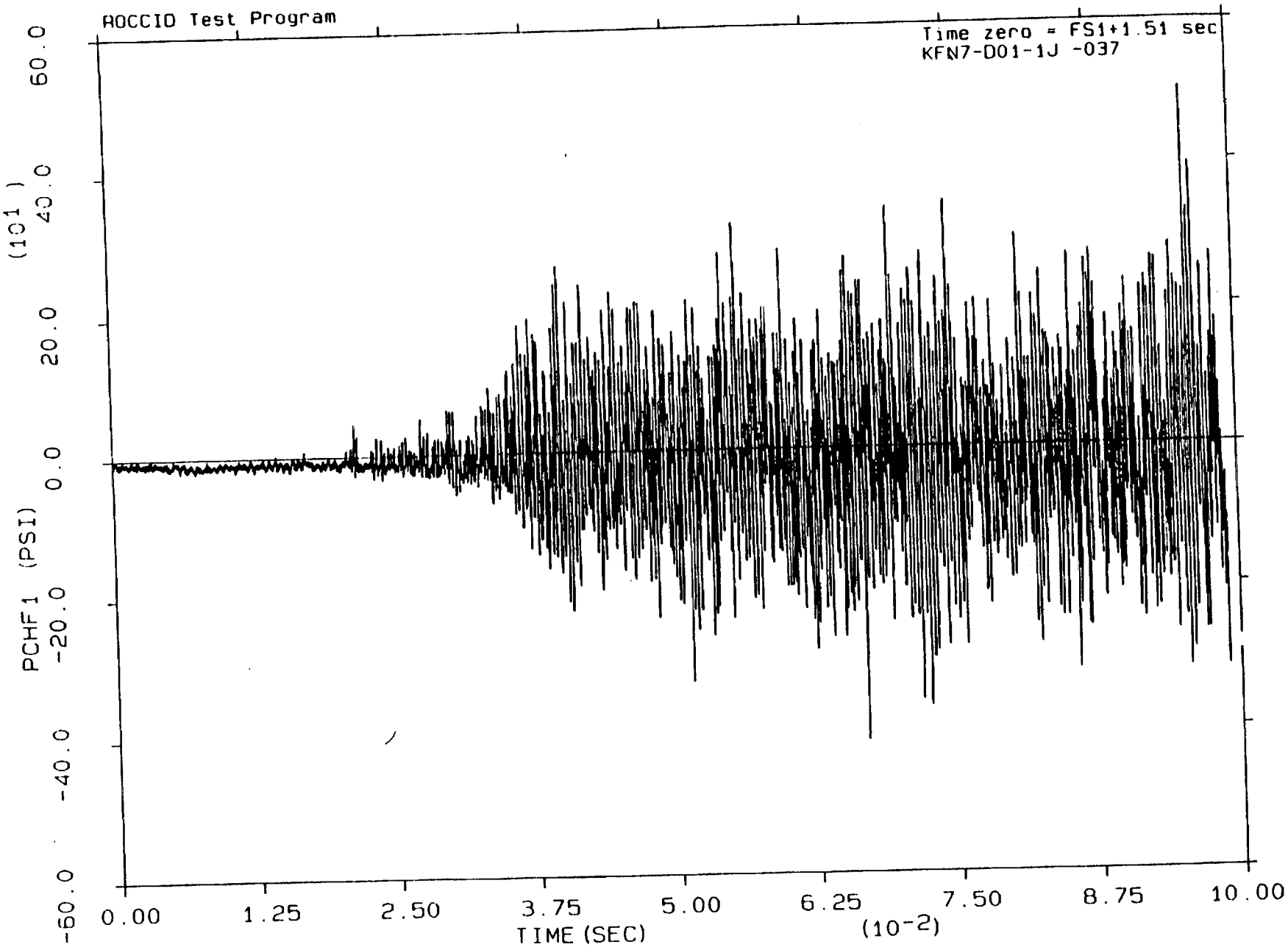
AOCCID Test Program
Time zero = FS1+1.51 sec
KFN7-D01-1J -037
PCHF1 (PSI)
(10^1)
60.0
40.0
20.0
0.0
-20.0
-40.0
-60.0
0.00
1.25
2.50
3.75
5.00
6.25
7.50
8.75
10.00
TIME (SEC)
(10^-2)

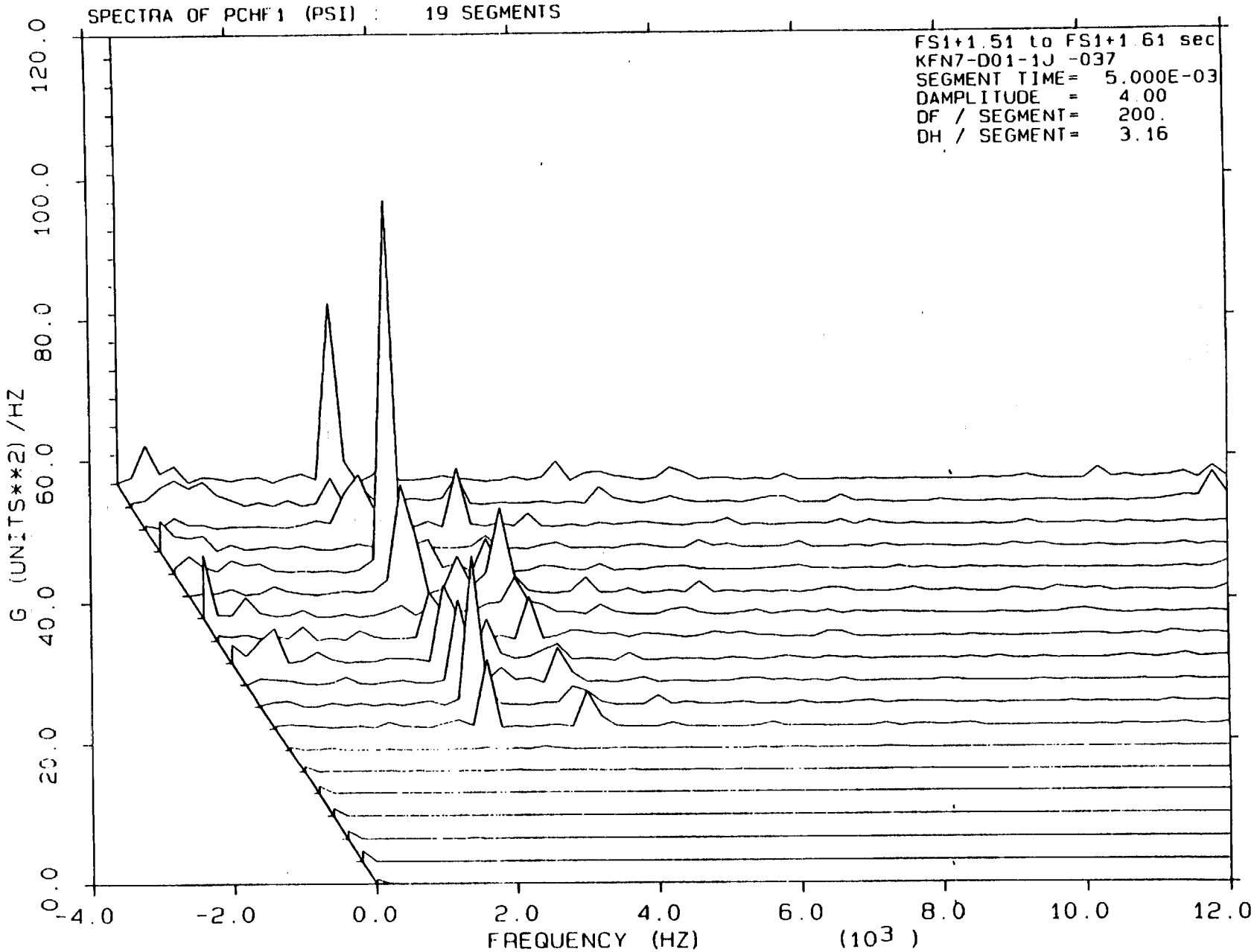
SPECTRA OF PCHF1 (PSI) : 19 SEGMENTS
FS1+1.51 to FS1+1.61 sec
KFN7-D01-1J -037
SEGMENT TIME= 5.000E-03
DAMPLITUDE = 4.00
DF / SEGMENT= 200.
DH / SEGMENT= 3.16
G (UNITS**2) /HZ
0.0
20.0
40.0
60.0
80.0
100.0
120.0
-4.0
-2.0
0.0
2.0
4.0
6.0
8.0
10.0
12.0
FREQUENCY (HZ)
(10^3)

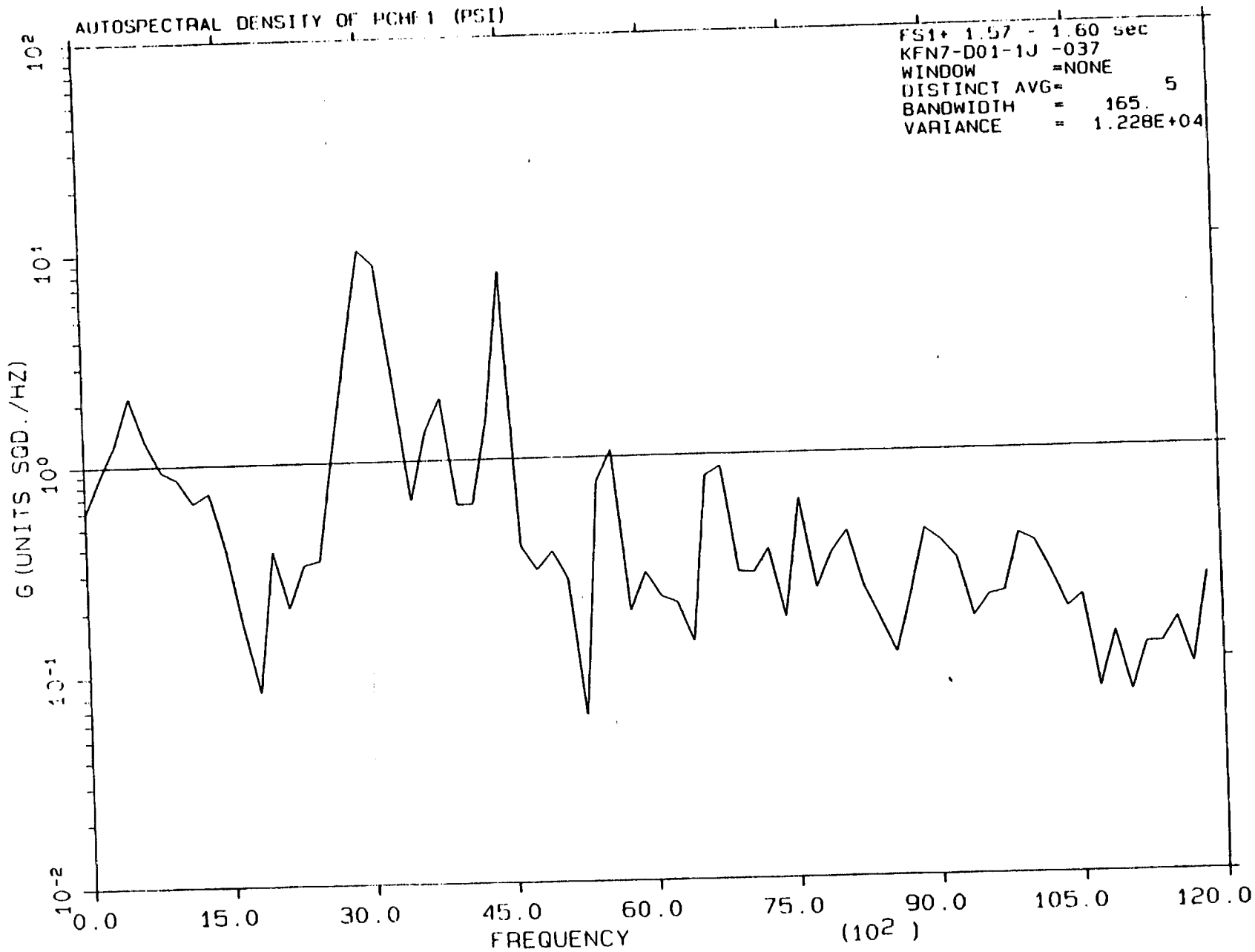
AUTOSPECTRAL DENSITY OF PCHF 1 (PSI)
FS1+ 1.57 - 1.60 sec
KFN7-D01-1J -037
WINDOW =NONE
DISTINCT AVG= 5
BANDWIDTH = 165.
VARIANCE = 1.228E+04
G (UNITS SQD./HZ)
10^2
10^1
10^0
10^{-1}
10^{-2}
0.0
15.0
30.0
45.0
60.0
75.0
90.0
105.0
120.0
FREQUENCY
(10^2)

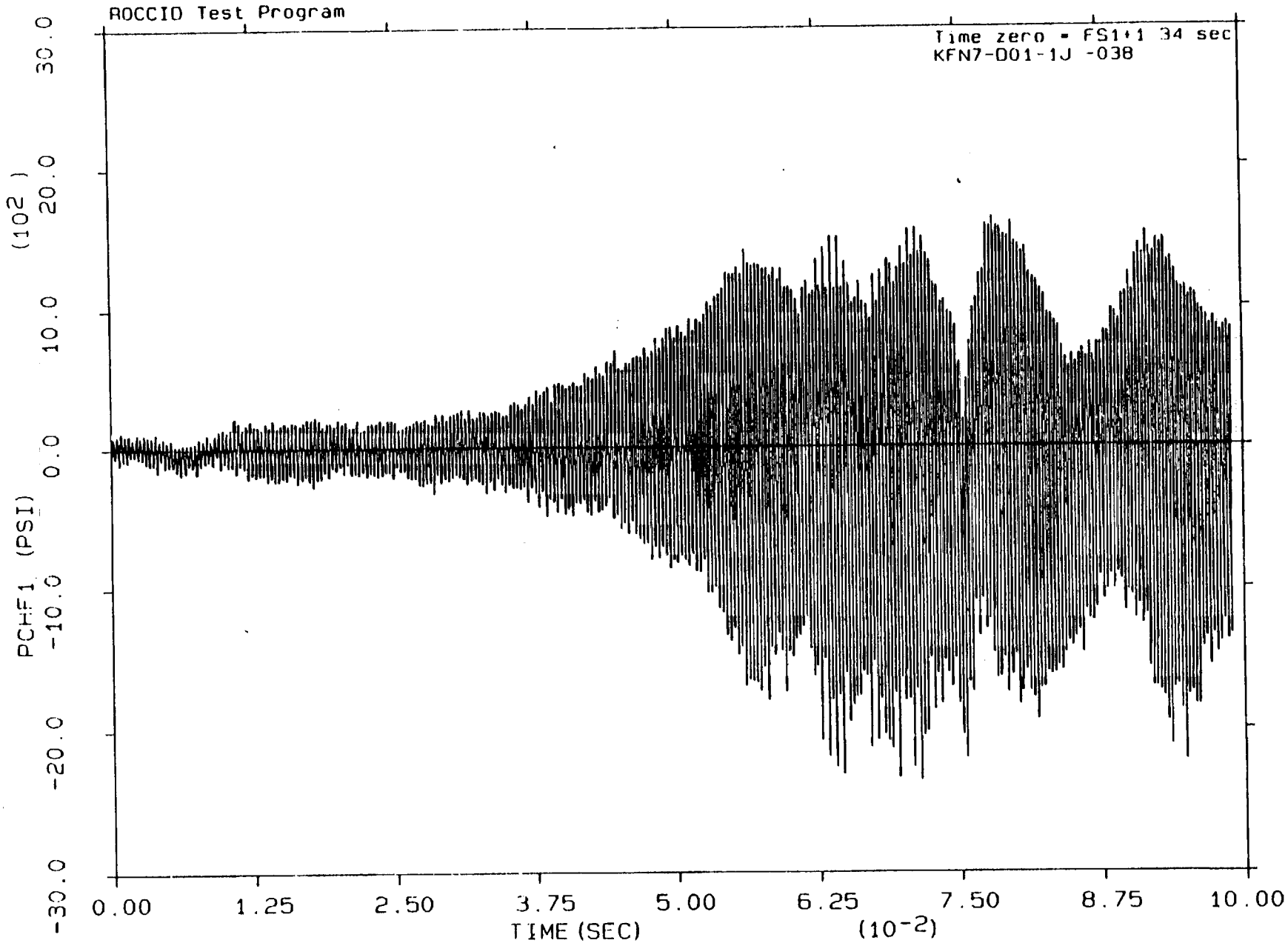
ROCCID Test Program
Time zero = FS1+1 34 sec
KFN7-D01-1J -038
PCHF1 (PSI)
(10^2)
30.0
20.0
10.0
0.0
-10.0
-20.0
-30.0
0.00
1.25
2.50
3.75
5.00
6.25
7.50
8.75
10.00
TIME (SEC)
(10^-2)

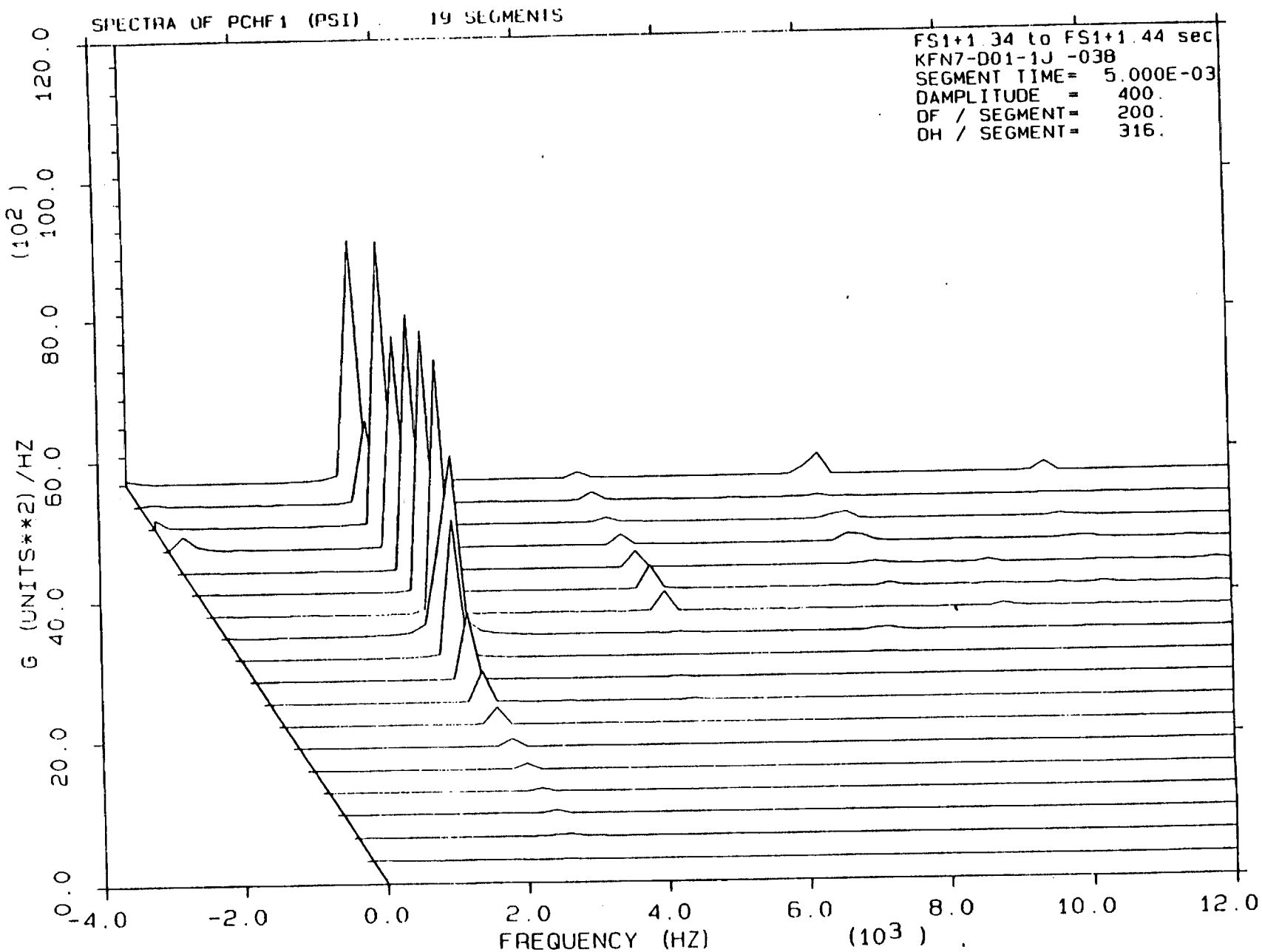
SPECTRA OF PCHF1 (PSI) 19 SEGMENTS
FS1+1.34 to FS1+1.44 sec
KFN7-D01-1J -038
SEGMENT TIME= 5.000E-03
DAMPLITUDE = 400.
DF / SEGMENT= 200.
DH / SEGMENT= 316.
G (UNITS**2) /HZ (10^2)
0.0
20.0
40.0
60.0
80.0
100.0
120.0
-4.0
-2.0
0.0
2.0
4.0
6.0
8.0
10.0
12.0
FREQUENCY (HZ) (10^3)

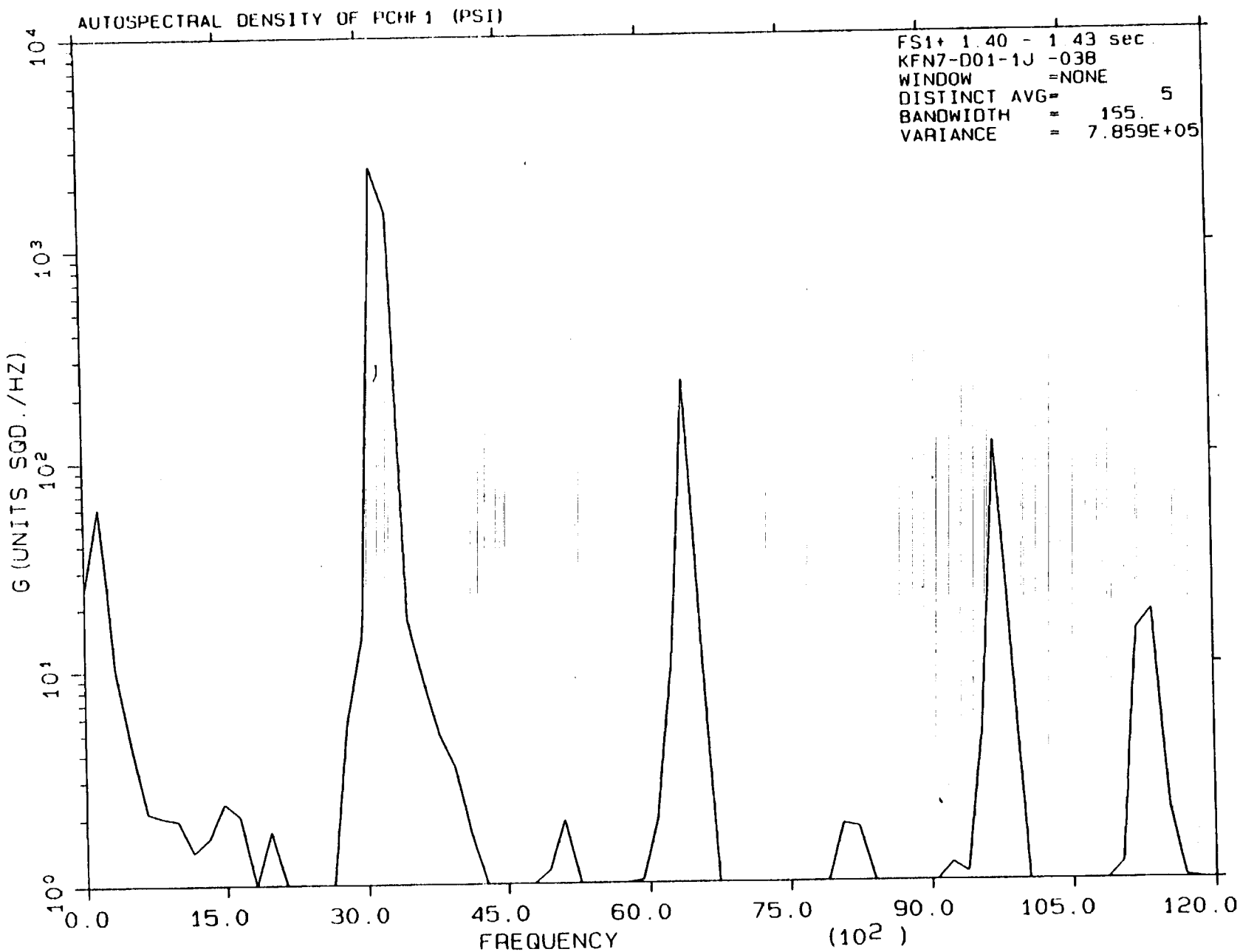
AUTOSPECTRAL DENSITY OF PCHF 1 (PSI)
FS1+ 1.40 - 1.43 sec
KFN7-D01-1J -038
WINDOW =NONE
DISTINCT AVG= 5
BANDWIDTH = 155.
VARIANCE = 7.859E+05
G (UNITS SQD./HZ)
10^4
10^3
10^2
10^1
10^0
0.0
15.0
30.0
45.0
60.0
75.0
90.0
105.0
120.0
FREQUENCY
(10^2)

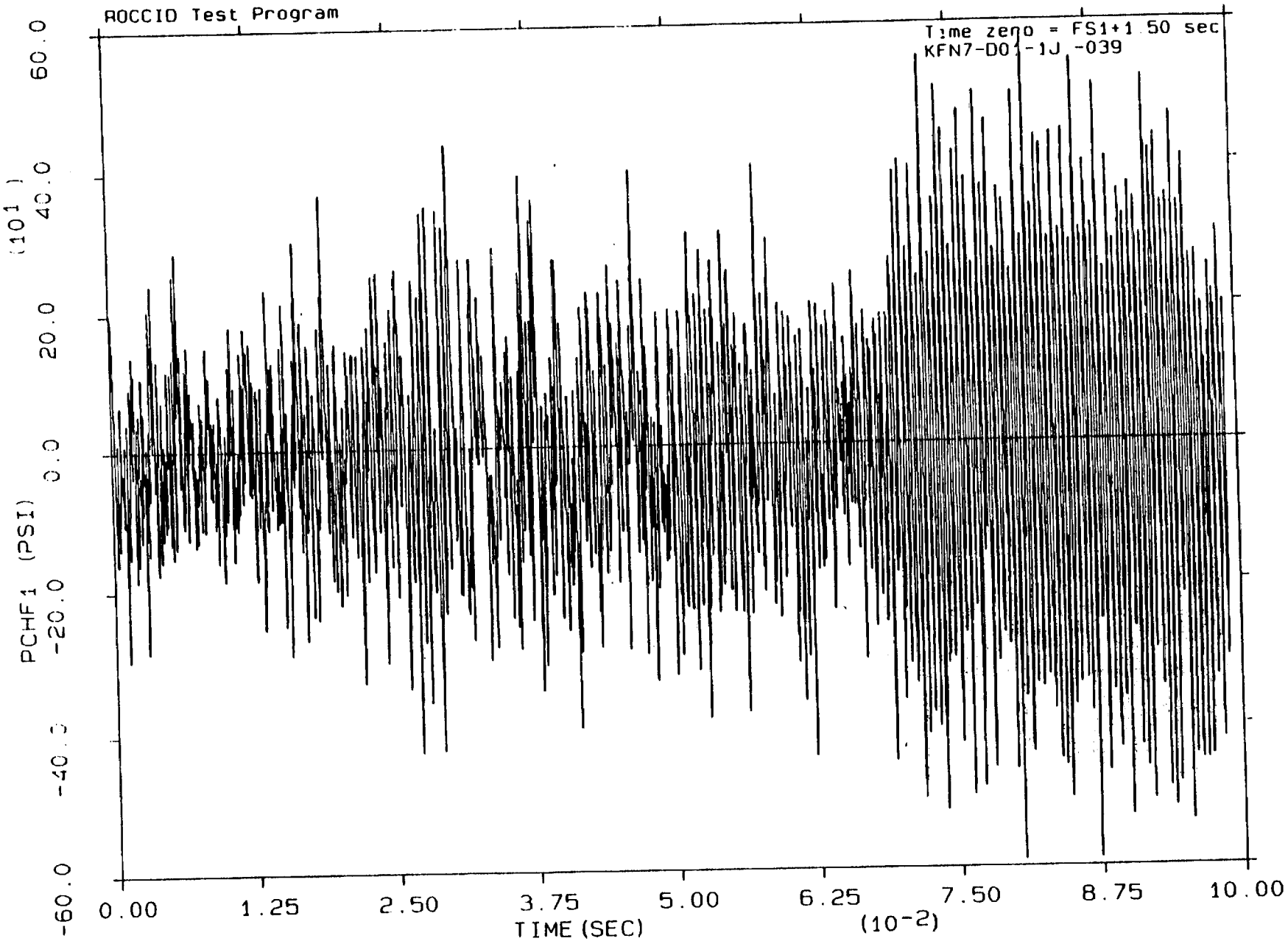
AOCCID Test Program
Time zero = FS1+1.50 sec
KFN7-D01-1J -039
PCHF1 (PSI)
(10¹)
60.0
40.0
20.0
0.0
-20.0
-40.0
-60.0
0.00
1.25
2.50
3.75
5.00
6.25
7.50
8.75
10.00
TIME (SEC)
(10⁻²)

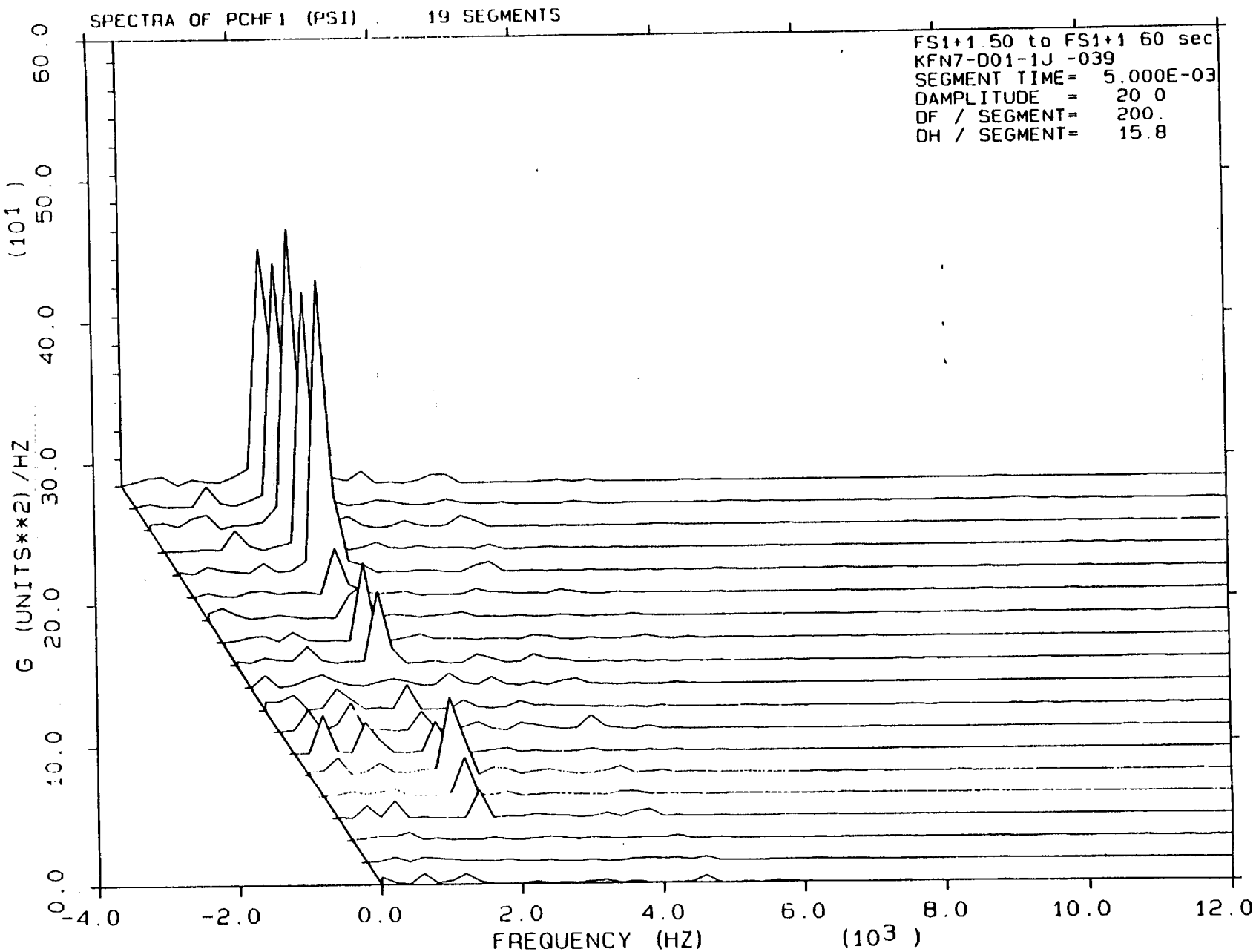
SPECTRA OF PCHF1 (PSI) 19 SEGMENTS
FS1+1.50 to FS1+1.60 sec
KFN7-D01-1J -039
SEGMENT TIME= 5.000E-03
DAMPLITUDE = 20.0
DF / SEGMENT= 200.
DH / SEGMENT= 15.8
G (UNITS**2) /HZ
(10^1)
0.0
10.0
20.0
30.0
40.0
50.0
60.0
-4.0
-2.0
0.0
2.0
4.0
6.0
8.0
10.0
12.0
FREQUENCY (HZ)
(10^3)

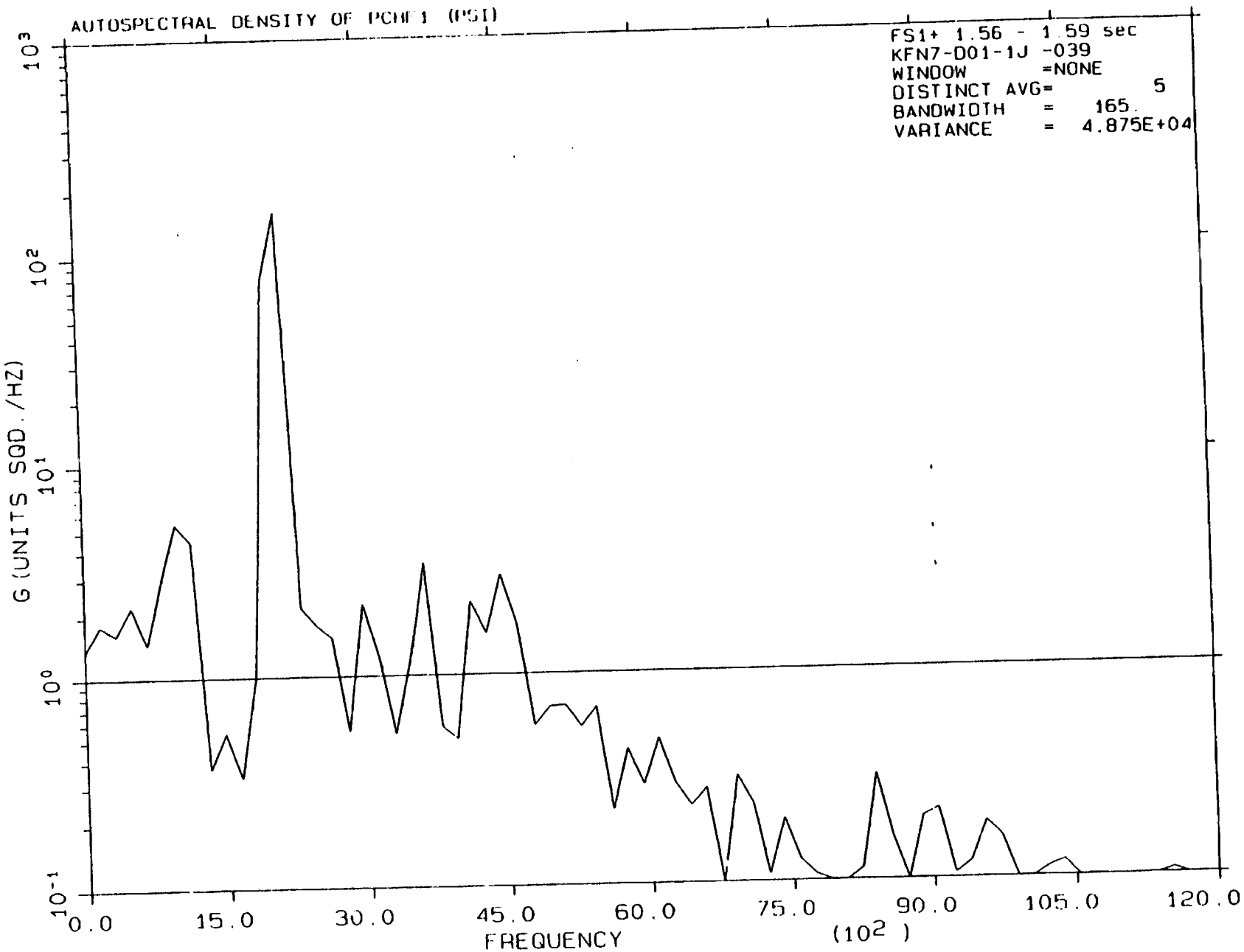
AUTOSPECTRAL DENSITY OF PCHF1 (PSI)
FS1+ 1.56 - 1.59 sec
KFN7-D01-1J -039
WINDOW =NONE
DISTINCT AVG= 5
BANDWIDTH = 165.
VARIANCE = 4.875E+04
G (UNITS SQD./HZ)
10^3
10^2
10^1
10^0
10^{-1}
0.0
15.0
30.0
45.0
60.0
75.0
90.0
105.0
120.0
FREQUENCY
(10^2)

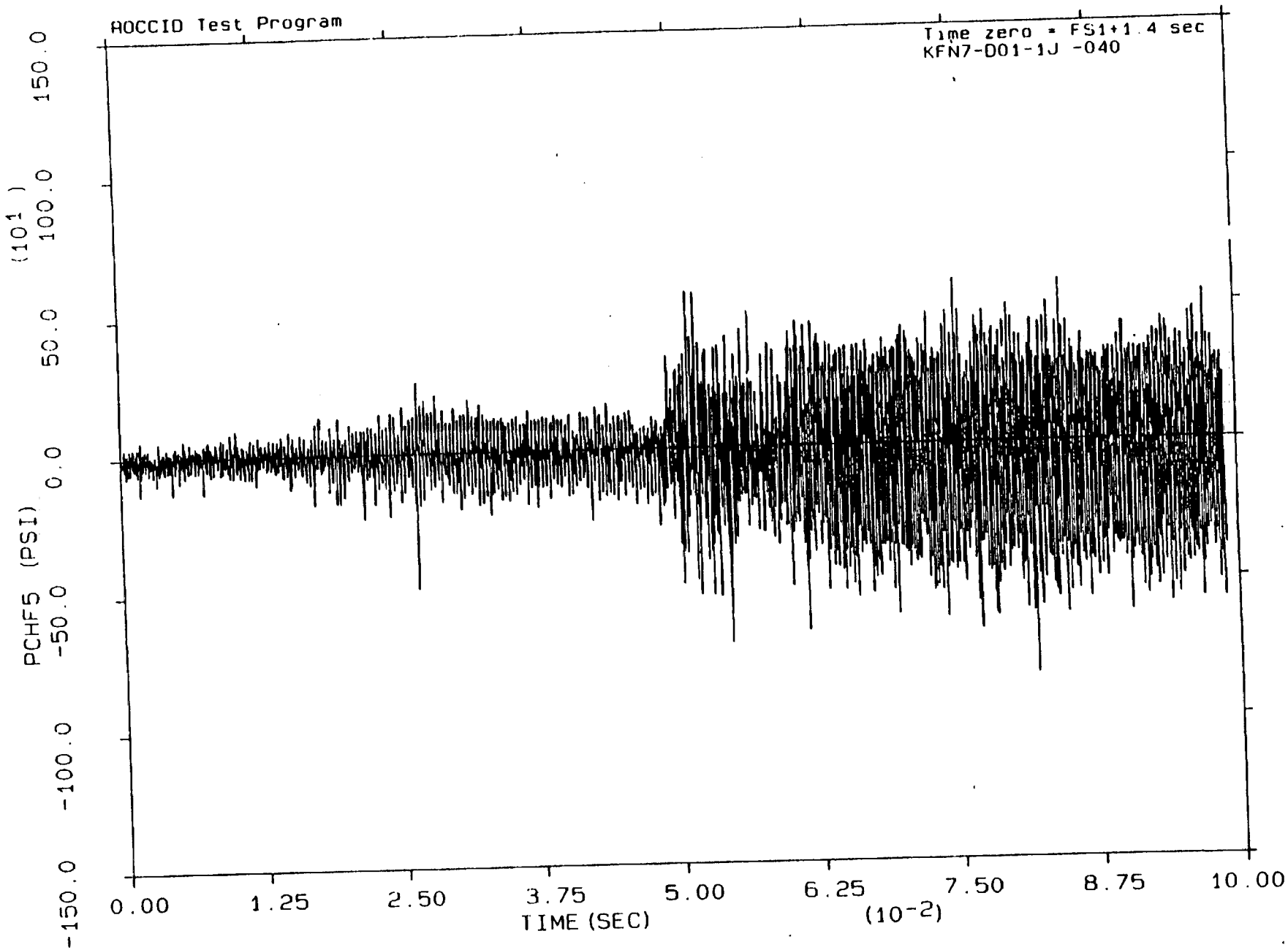
AOCCID Test Program
Time zero = FS1+1.4 sec
KFN7-D01-1J -040
PCHF5 (PSI)
(10¹)
150.0
100.0
50.0
0.0
-50.0
-100.0
-150.0
0.00
1.25
2.50
3.75
5.00
6.25
7.50
8.75
10.00
TIME (SEC)
(10⁻²)

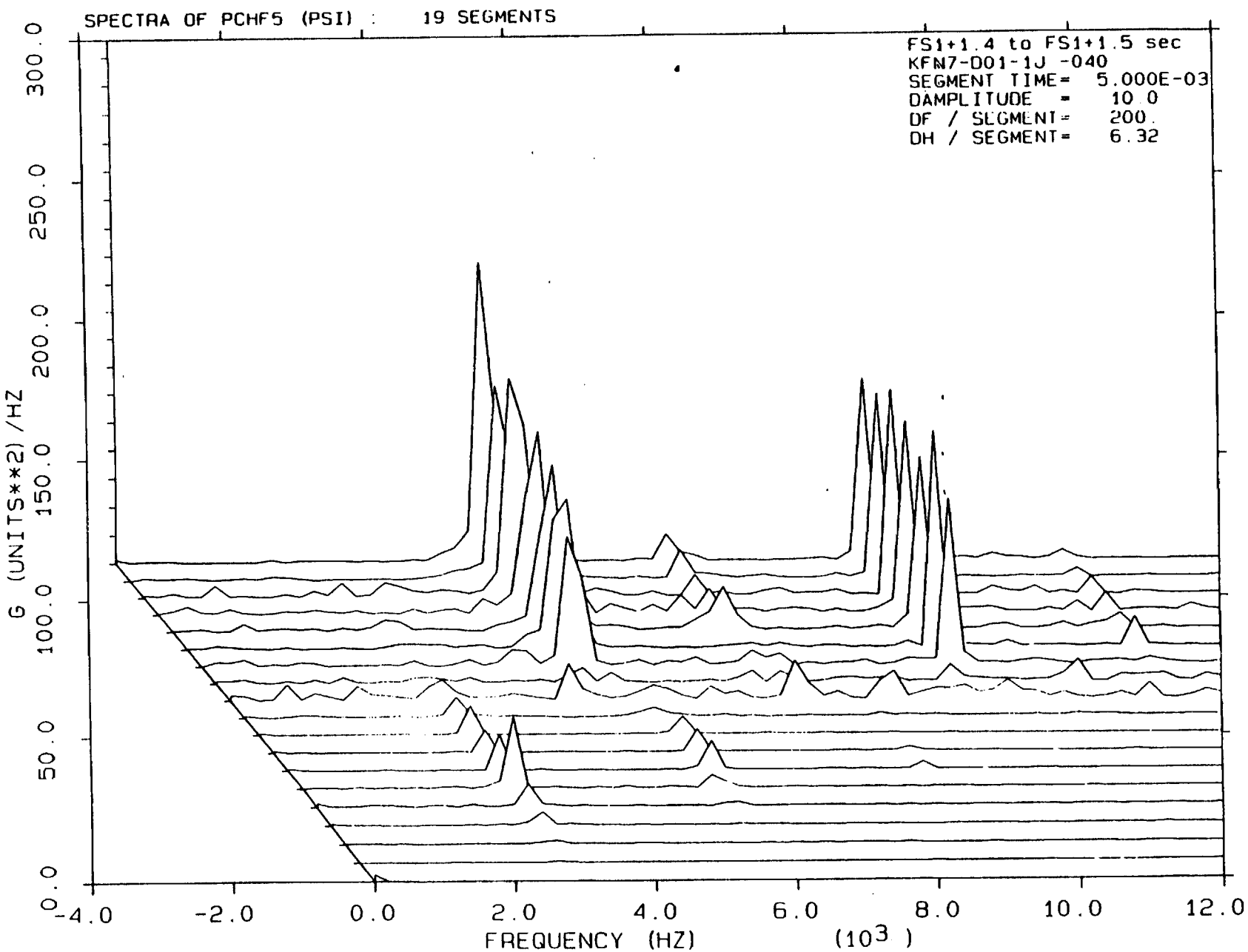
SPECTRA OF PCHF5 (PSI) : 19 SEGMENTS
FS1+1.4 to FS1+1.5 sec
KFN7-D01-1J -040
SEGMENT TIME= 5.000E-03
DAMPLITUDE = 10.0
DF / SEGMENT= 200.
DH / SEGMENT= 6.32
G (UNITS**2) /HZ
0.0
50.0
100.0
150.0
200.0
250.0
300.0
-4.0
-2.0
0.0
2.0
4.0
6.0
8.0
10.0
12.0
FREQUENCY (HZ)
(10^3)

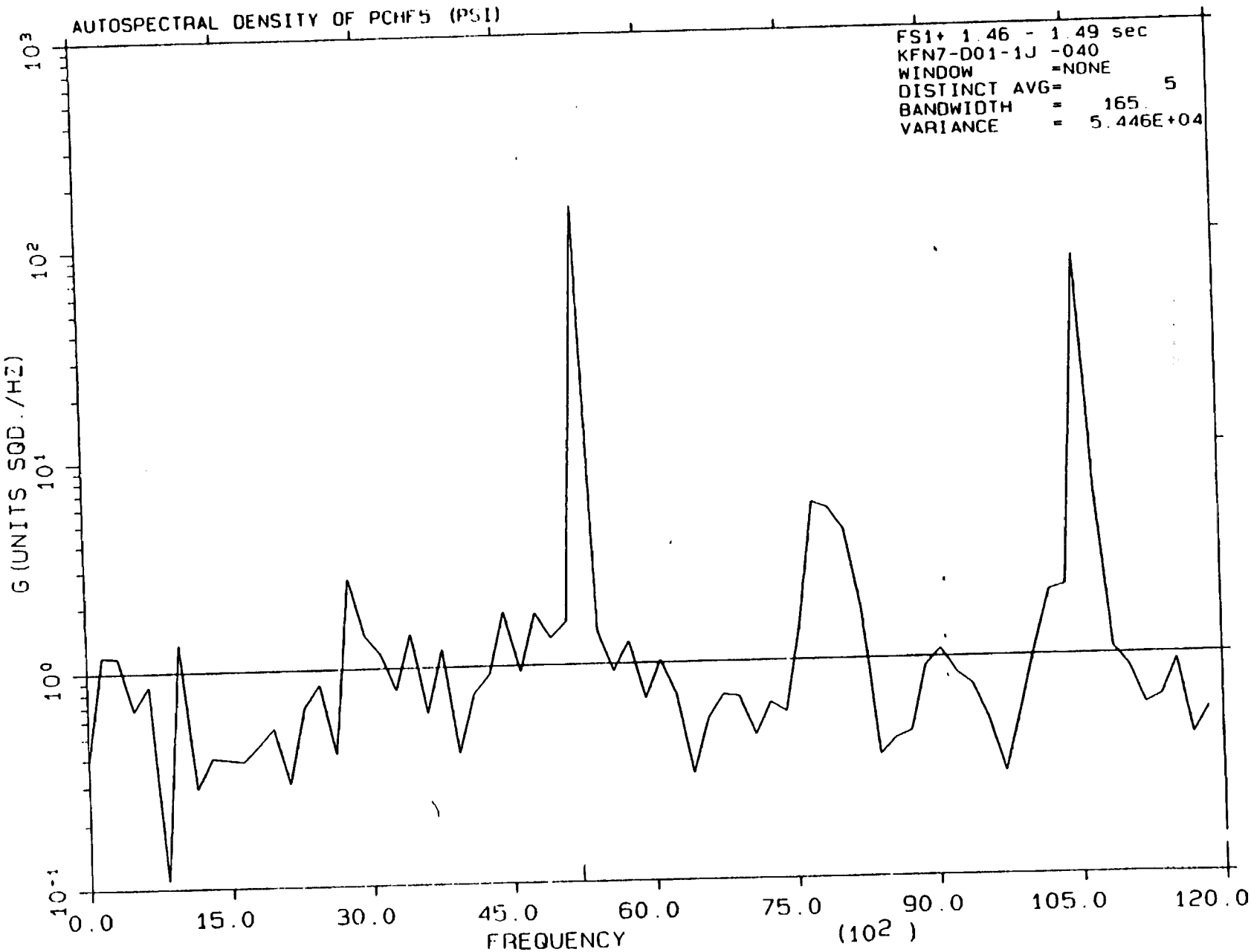
AUTOSPECTRAL DENSITY OF PCHF5 (PSI)
FS1+ 1.46 - 1.49 sec
KFN7-D01-1J -040
WINDOW =NONE
DISTINCT AVG= 5
BANDWIDTH = 165.
VARIANCE = 5.446E+04
G (UNITS SQD./HZ)
10^3
10^2
10^1
10^0
10^{-1}
0.0
15.0
30.0
45.0
60.0
75.0
90.0
105.0
120.0
FREQUENCY
(10^2)

APPENDIX C

TIME SERIES, AMPLITUDE AND FREQUENCY EVOLUTION, AND POWER SPECTRAL ANALYSIS OF MANIFOLD AND CHAMBER PRESSURES AND ACCELERATIONS FOR TEST 004

INDEX OF TEST DATA PLOTS

ALL DATA OBTAINED FROM TEST NO. KFN7-D01-1J-004

High Frequency Measurement Parameter	High Frequency Amplitude Versus Time Playback	Power Spectral Analysis	Power Spectral Density
	(Page Nos. for Specific Plot for Each Parameter)		
PCHF-1	C-2	C-3	C-4
PCHF-2	C-5	C-6	C-7
PCHF-3	C-8	C-9	C-10
PCHF-4	C-11	C-12	C-13
PCHF-5	C-14	C-15	C-16
POJHF	C-17	C-18	C-19
PFJHF	C-20	C-21	C-22
AX	C-23	C-24	C-25
AY	C-26	C-27	C-28
AZ	C-29	C-30	C-31

Symbol	Parameter Definition
PCHF	High Frequency Chamber Pressure (PSI)
POJHF	High Frequency LOX Injector Manifold Pressure (PSI)
PFJHF	High Frequency RP-1 Injector Manifold Pressure (PSI)
AX	Accelerometer X Axis (g's)
AY	Accelerometer Y Axis (g's)
AZ	Accelerometer Z Axis (g's)

FOREWORD

Included in this appendix is a complete display of high frequency measurements obtained during test KFN7-D01-1J-004. A total of 10 parameters are displayed including five high frequency chamber pressure measurements (see Figure 51 of Volume I for measurement locations), one each high frequency pressure measurements located in the injector manifold inlet pipes of the fuel and oxidizer circuits, and three accelerometer recordings obtained from a tri-axial accelerometer mounted on the injector assembly. High frequency amplitude versus time, power spectral analysis and power spectral density plots for each of the 10 parameters are included. The plot formats are the same as those described in Appendix B.

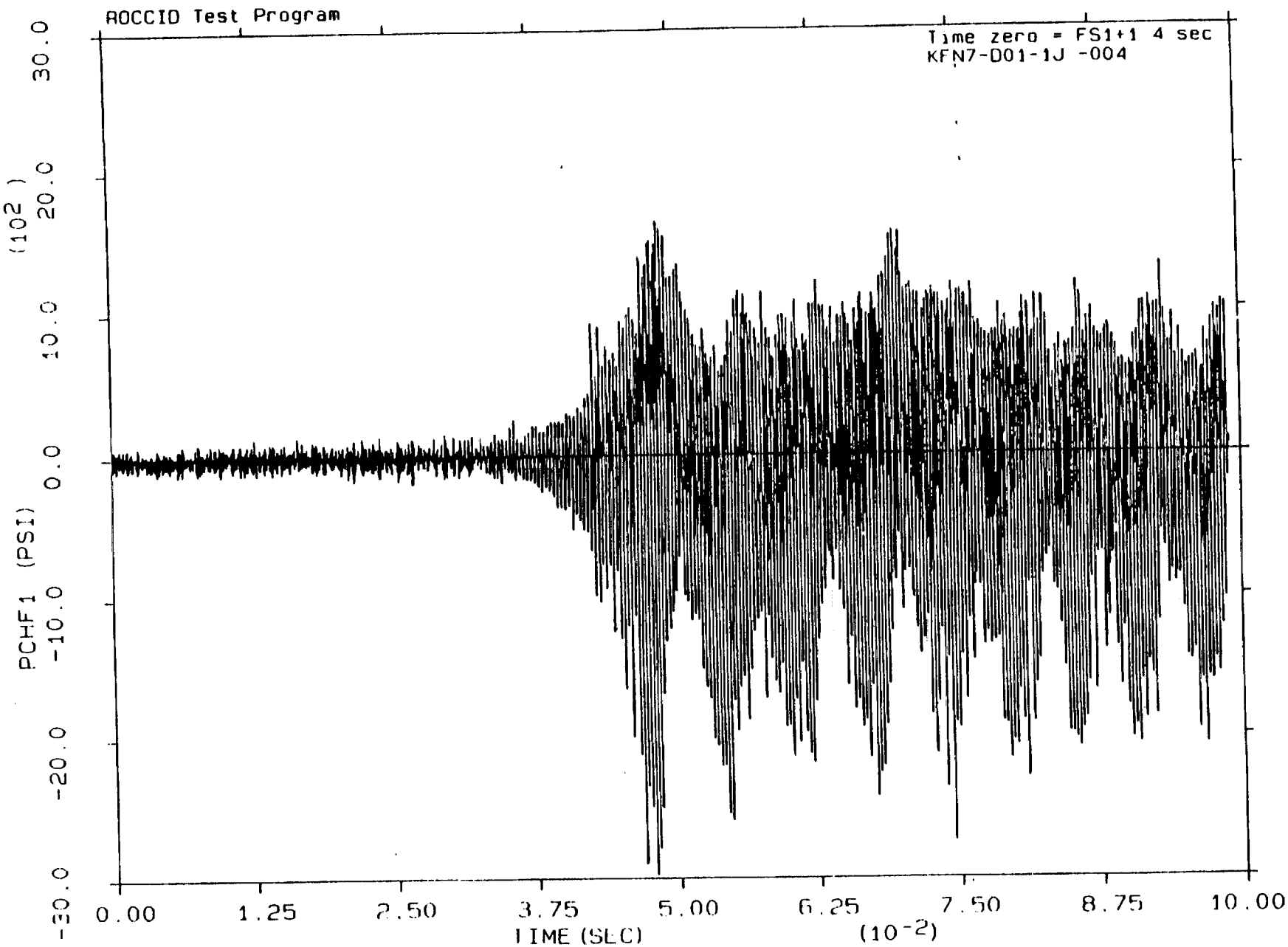
ROCCID Test Program
Time zero = FS1+1 4 sec
KFN7-D01-1J -004
PCHF1 (PSI)
(10^2)
30.0
20.0
10.0
0.0
-10.0
-20.0
-30.0
0.00
1.25
2.50
3.75
5.00
6.25
7.50
8.75
10.00
TIME (SEC)
(10^-2)

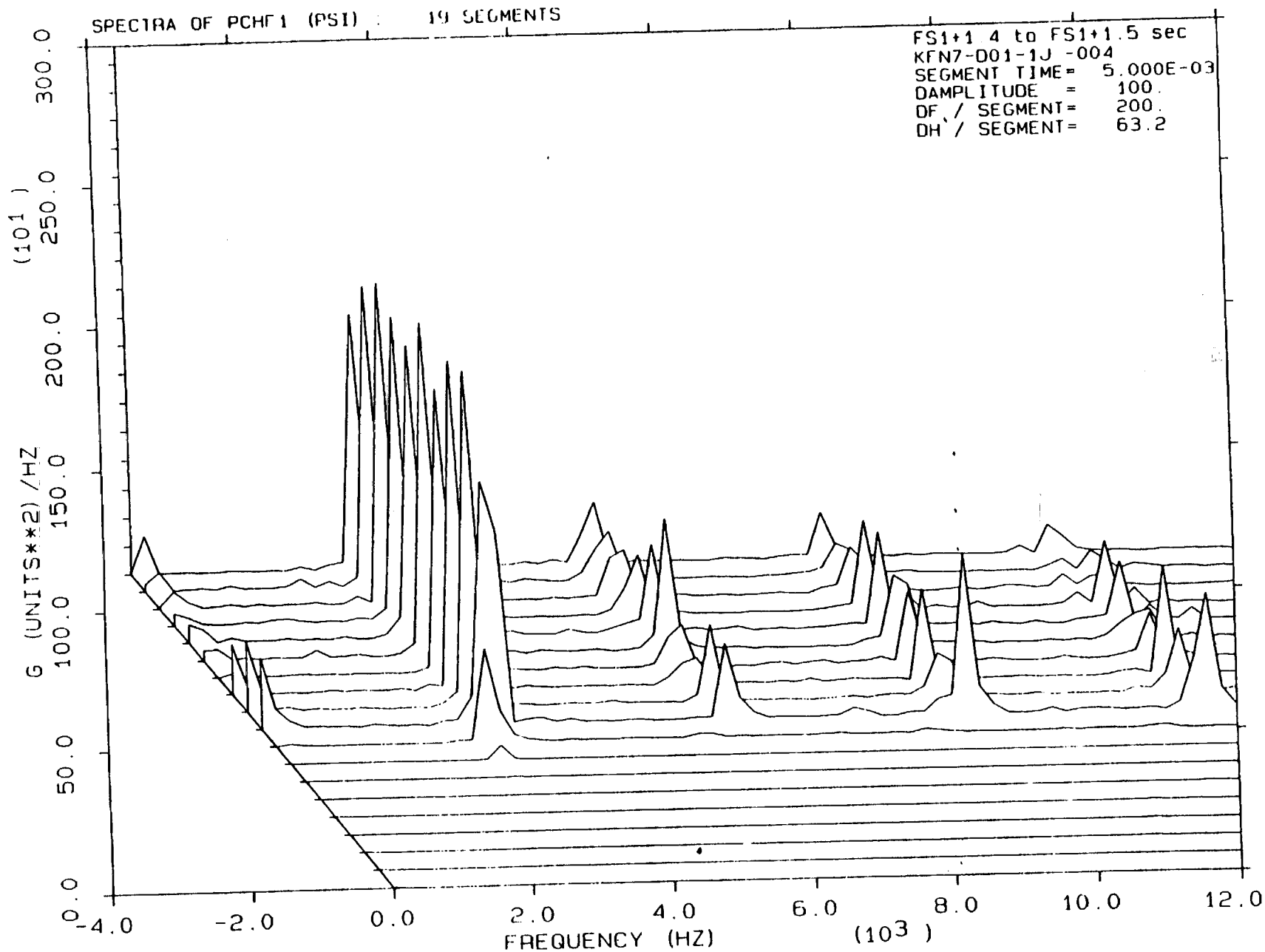
SPECTRA OF PCHF1 (PSI) : 19 SEGMENTS
FS1+1.4 to FS1+1.5 sec
KFN7-D01-1J -004
SEGMENT TIME= 5.000E-03
DAMPLITUDE = 100.
DF / SEGMENT= 200.
DH / SEGMENT= 63.2
G (UNITS**2) /HZ (10^1)
300.0
250.0
200.0
150.0
100.0
50.0
0.0
-4.0
-2.0
0.0
2.0
4.0
6.0
8.0
10.0
12.0
FREQUENCY (HZ) (10^3)

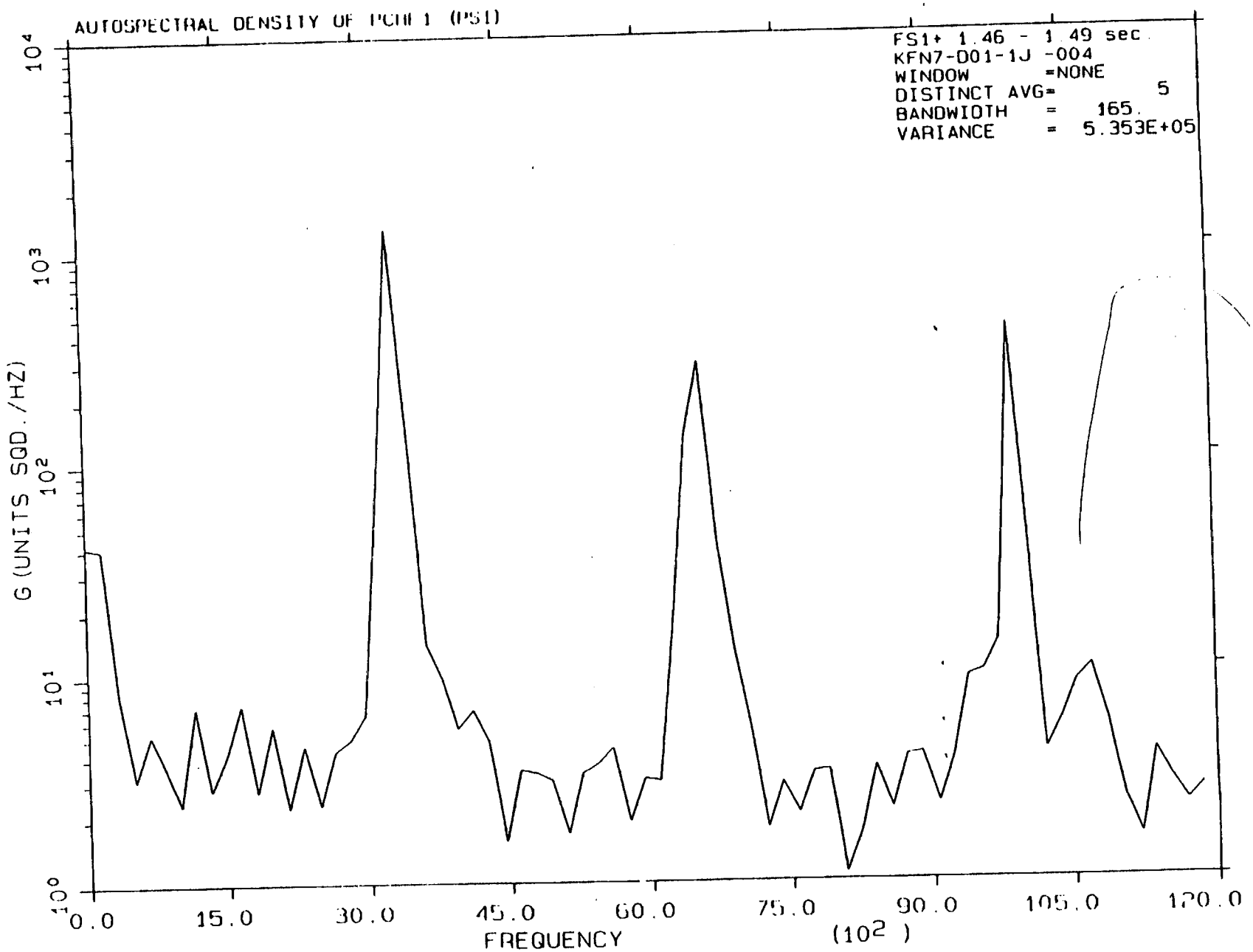
AUTOSPECTRAL DENSITY OF PCH 1 (PSI)
FS1+ 1.46 - 1.49 sec
KFN7-D01-1J -004
WINDOW =NONE
DISTINCT AVG= 5
BANDWIDTH = 165.
VARIANCE = 5.353E+05
G (UNITS SQD./HZ)
10^4
10^3
10^2
10^1
10^0
0.0
15.0
30.0
45.0
60.0
75.0
90.0
105.0
120.0
FREQUENCY
(10^2)

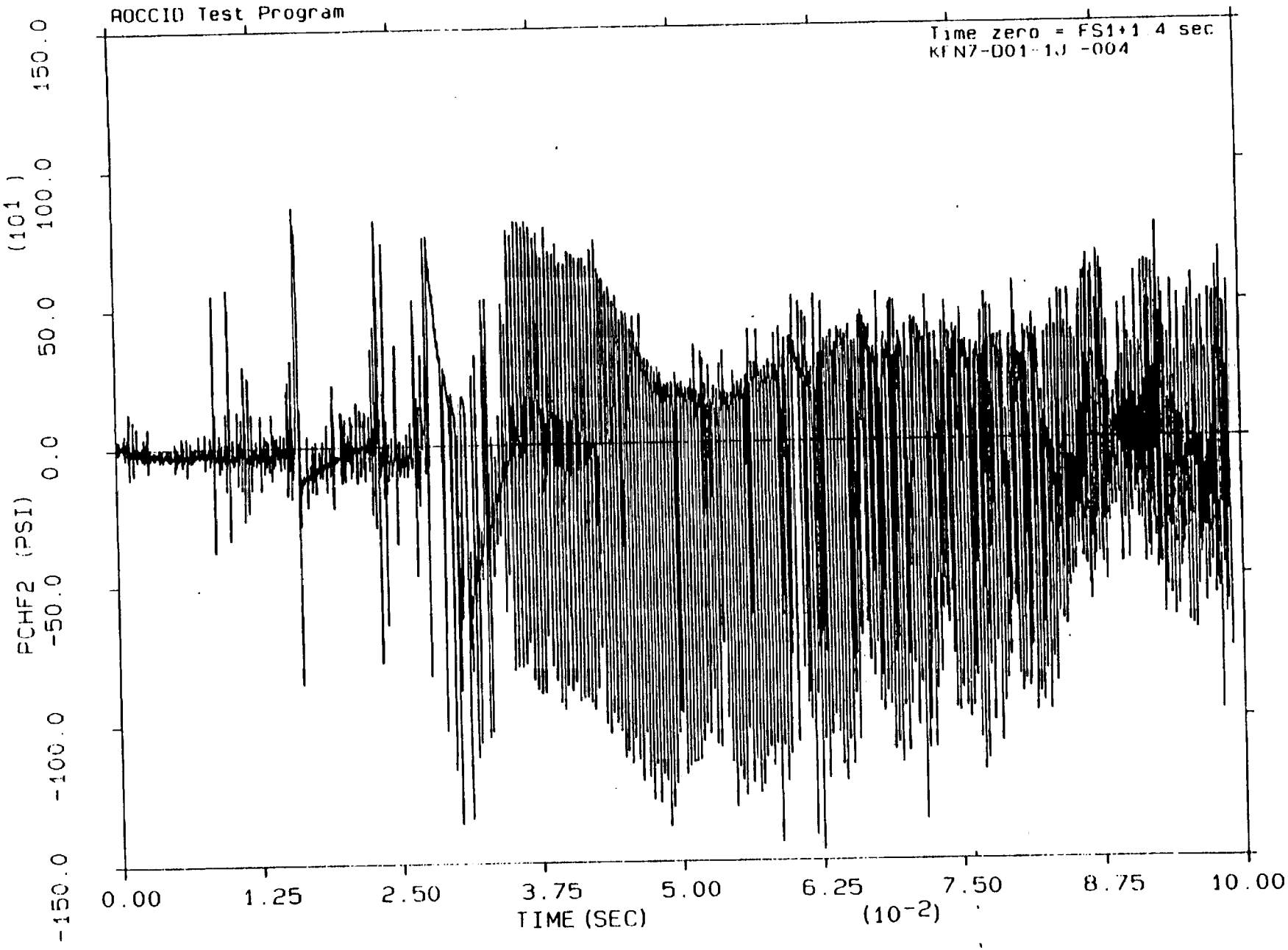
AOCCID Test Program
Time zero = FS1+1.4 sec
KFN7-D01-1J -004
PCHF2 (PSI)
(10¹)
150.0
100.0
50.0
0.0
-50.0
-100.0
-150.0
0.00
1.25
2.50
3.75
5.00
6.25
7.50
8.75
10.00
TIME (SEC)
(10⁻²)

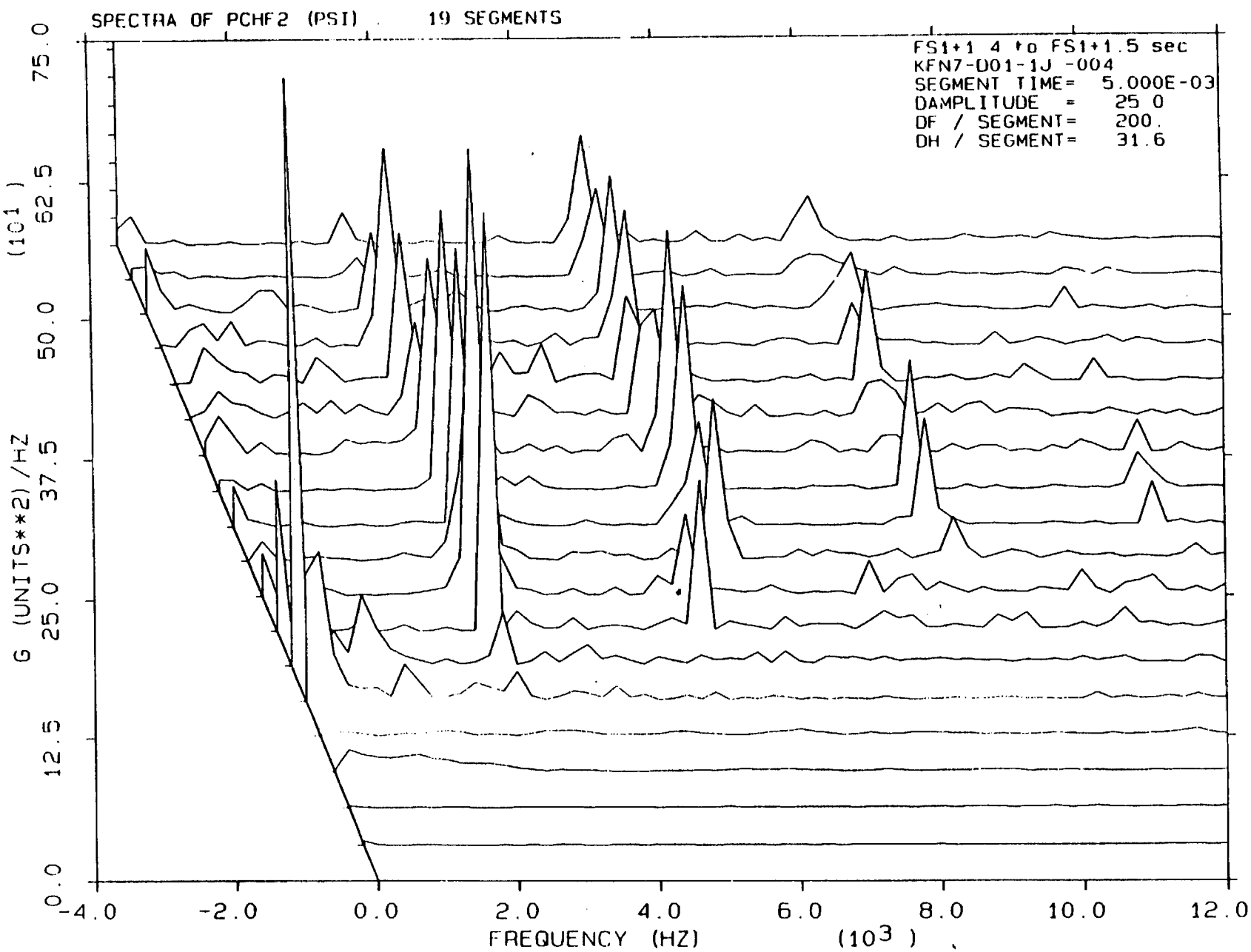
SPECTRA OF PCHF2 (PSI) 19 SEGMENTS
FS1+1 4 to FS1+1.5 sec
KFN7-D01-1J -004
SEGMENT TIME= 5.000E-03
DAMPLITUDE = 25 0
DF / SEGMENT= 200.
DH / SEGMENT= 31.6
G (UNITS**2) /HZ (10^1)
0.0
12.5
25.0
37.5
50.0
62.5
75.0
-4.0
-2.0
0.0
2.0
4.0
6.0
8.0
10.0
12.0
FREQUENCY (HZ) (10^3)

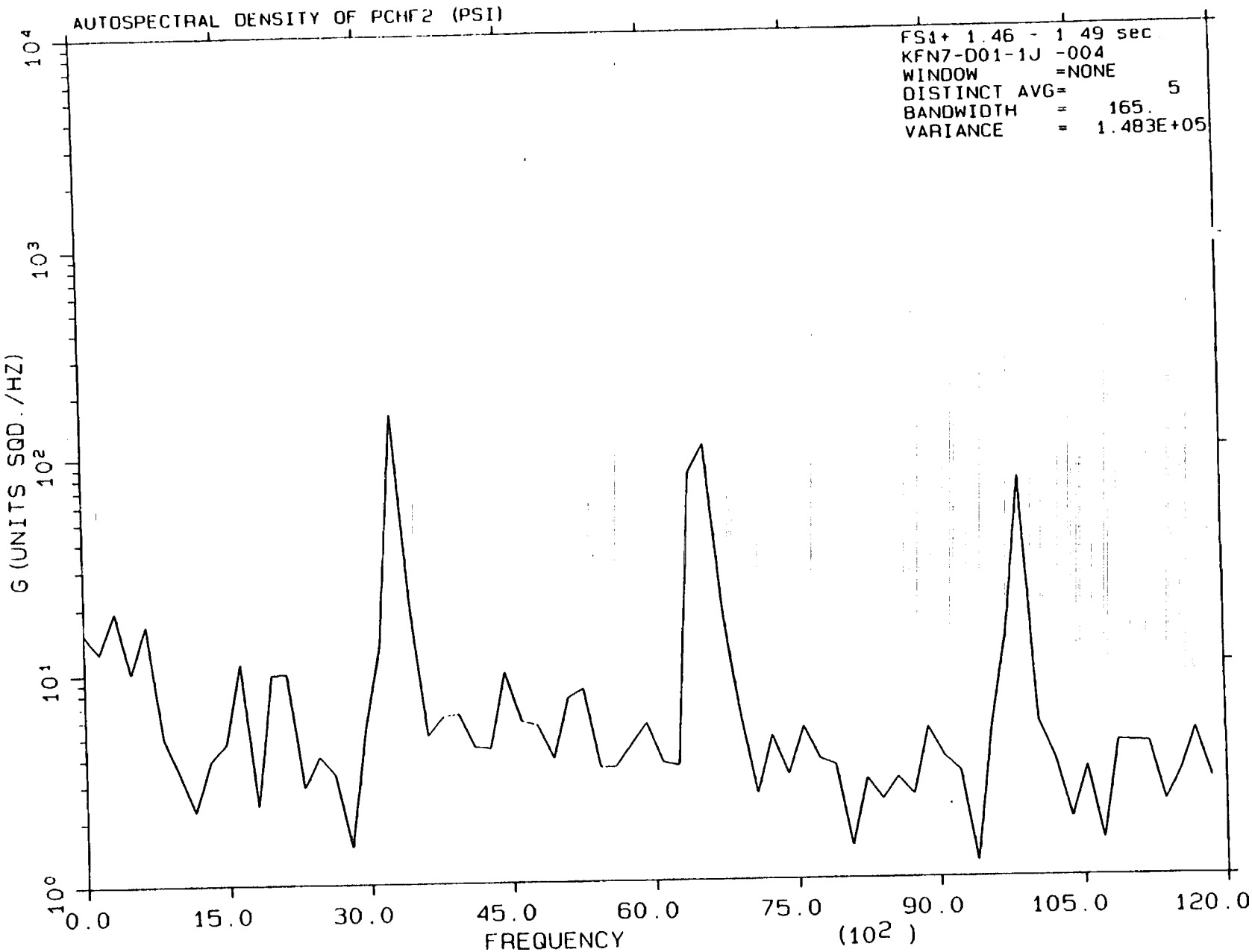
AUTOSPECTRAL DENSITY OF PCHF2 (PSI)
FS1+ 1.46 - 1 49 sec
KFN7-D01-1J -004
WINDOW =NONE
DISTINCT AVG= 5
BANDWIDTH = 165.
VARIANCE = 1.483E+05
G (UNITS SQD./HZ)
10^4
10^3
10^2
10^1
10^0
0.0
15.0
30.0
45.0
60.0
75.0
90.0
105.0
120.0
FREQUENCY
(10^2)

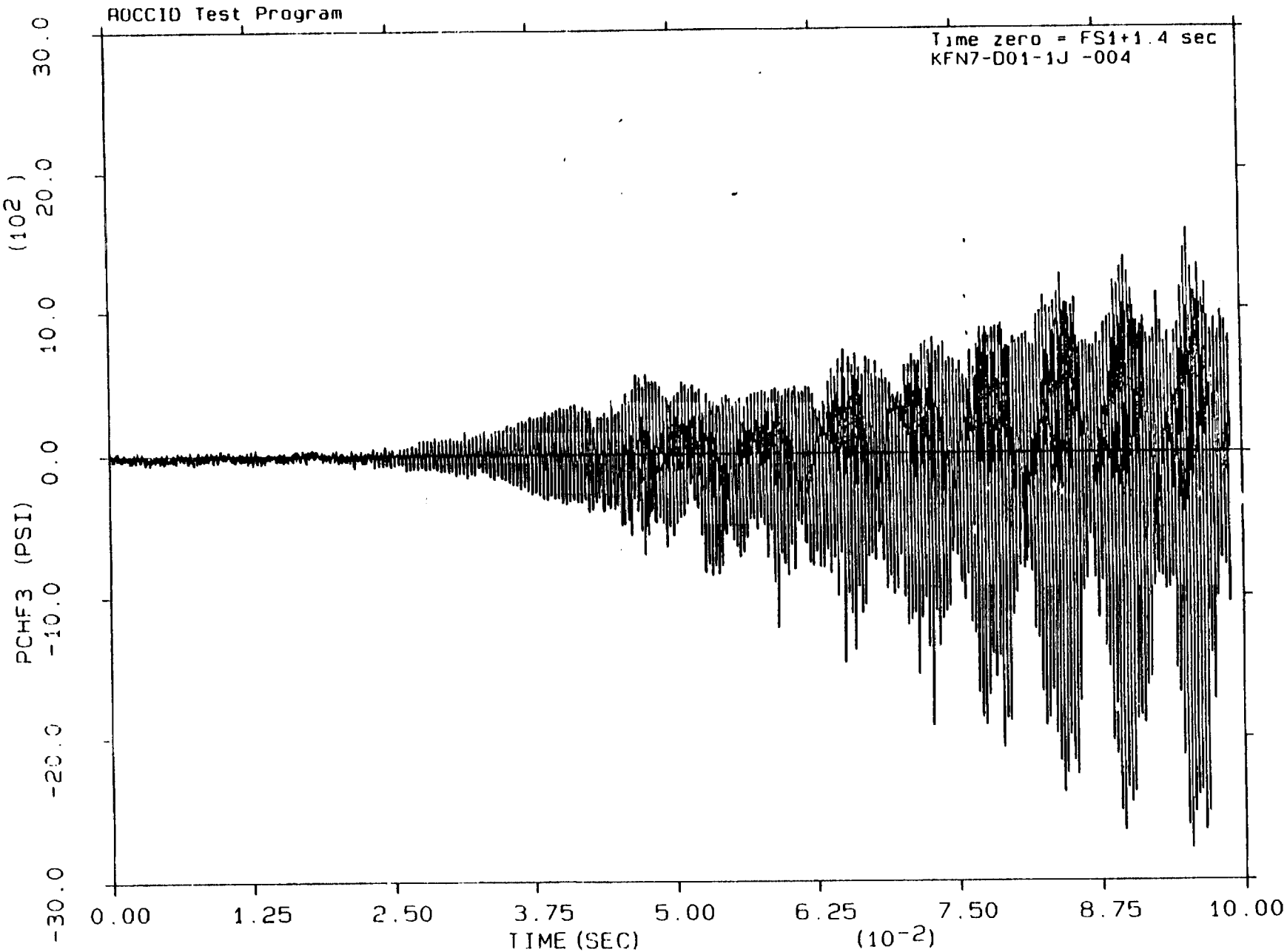
AOCCID Test Program
Time zero = FS1+1.4 sec
KFN7-D01-1J -004
PCHF3 (PSI)
(10^2)
30.0
20.0
10.0
0.0
-10.0
-20.0
-30.0
0.00
1.25
2.50
3.75
5.00
6.25
7.50
8.75
10.00
TIME (SEC)
(10^-2)

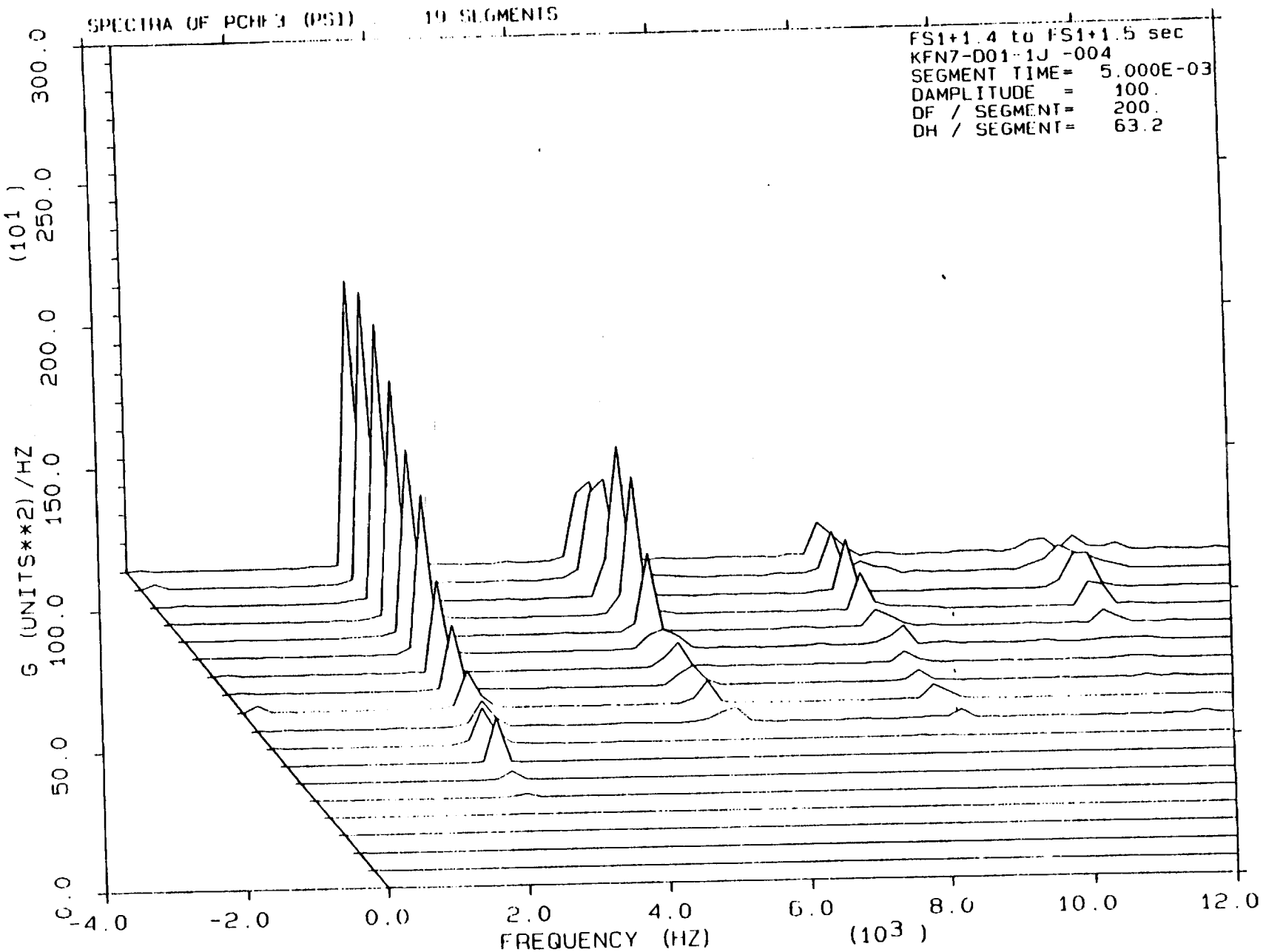
SPECTRA OF PCHF3 (PSI)
19 SEGMENTS
FS1+1.4 to FS1+1.5 sec
KFN7-D01-1J -004
SEGMENT TIME= 5.000E-03
DAMPLITUDE = 100.
DF / SEGMENT= 200.
DH / SEGMENT= 63.2
G (UNITS**2) /HZ
(10^1)
0.0
50.0
100.0
150.0
200.0
250.0
300.0
-4.0
-2.0
0.0
2.0
4.0
6.0
8.0
10.0
12.0
FREQUENCY (HZ)
(10^3)

C-9

C-2

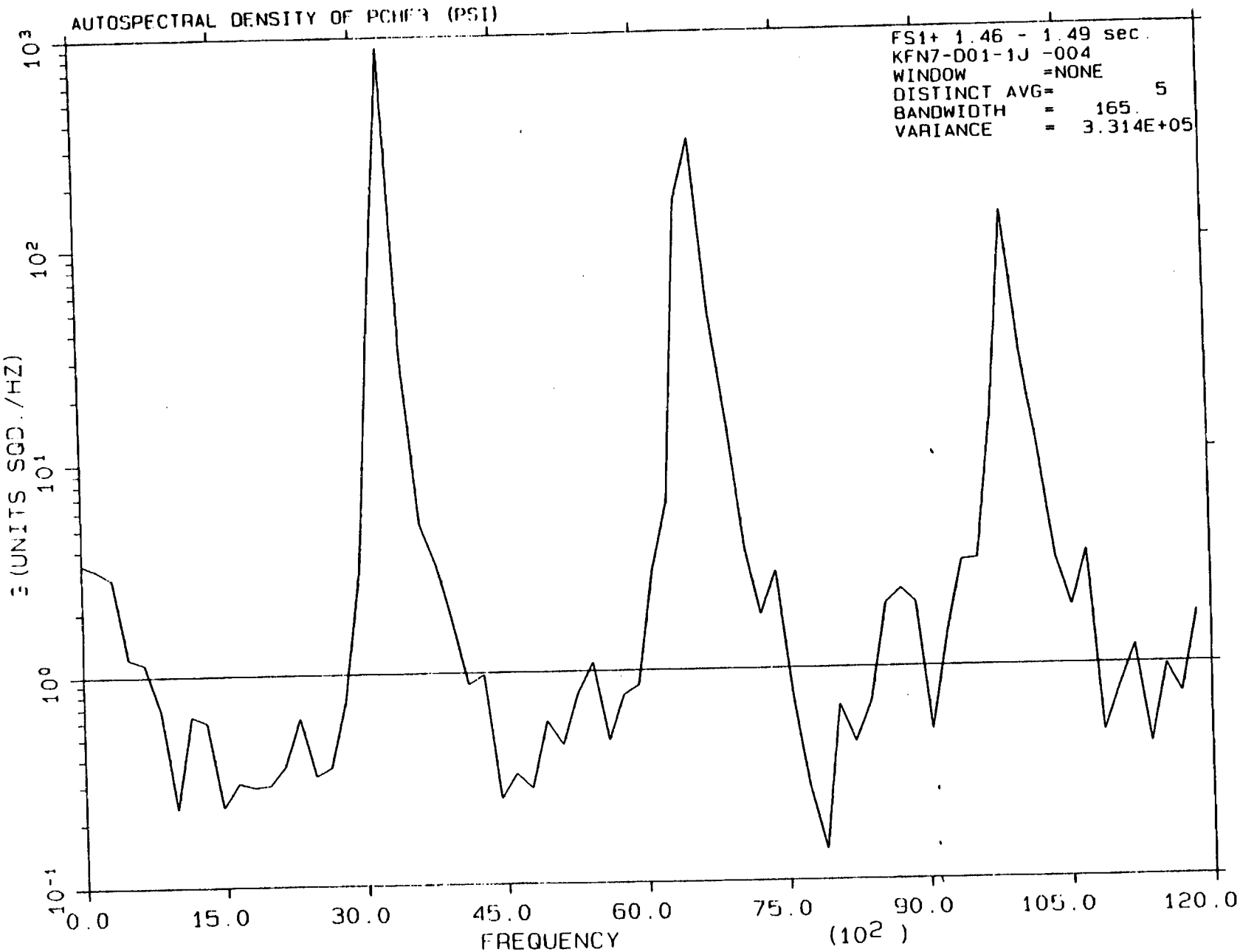
AUTOSPECTRAL DENSITY OF PCHF3 (PSI)
FS1+ 1.46 - 1.49 sec.
KFN7-D01-1J -004
WINDOW =NONE
DISTINCT AVG= 5
BANDWIDTH = 165.
VARIANCE = 3.314E+05
Ξ (UNITS SQD./HZ)
10³
10²
10¹
10⁰
10⁻¹
0.0
15.0
30.0
45.0
60.0
75.0
90.0
105.0
120.0
FREQUENCY
(10²)

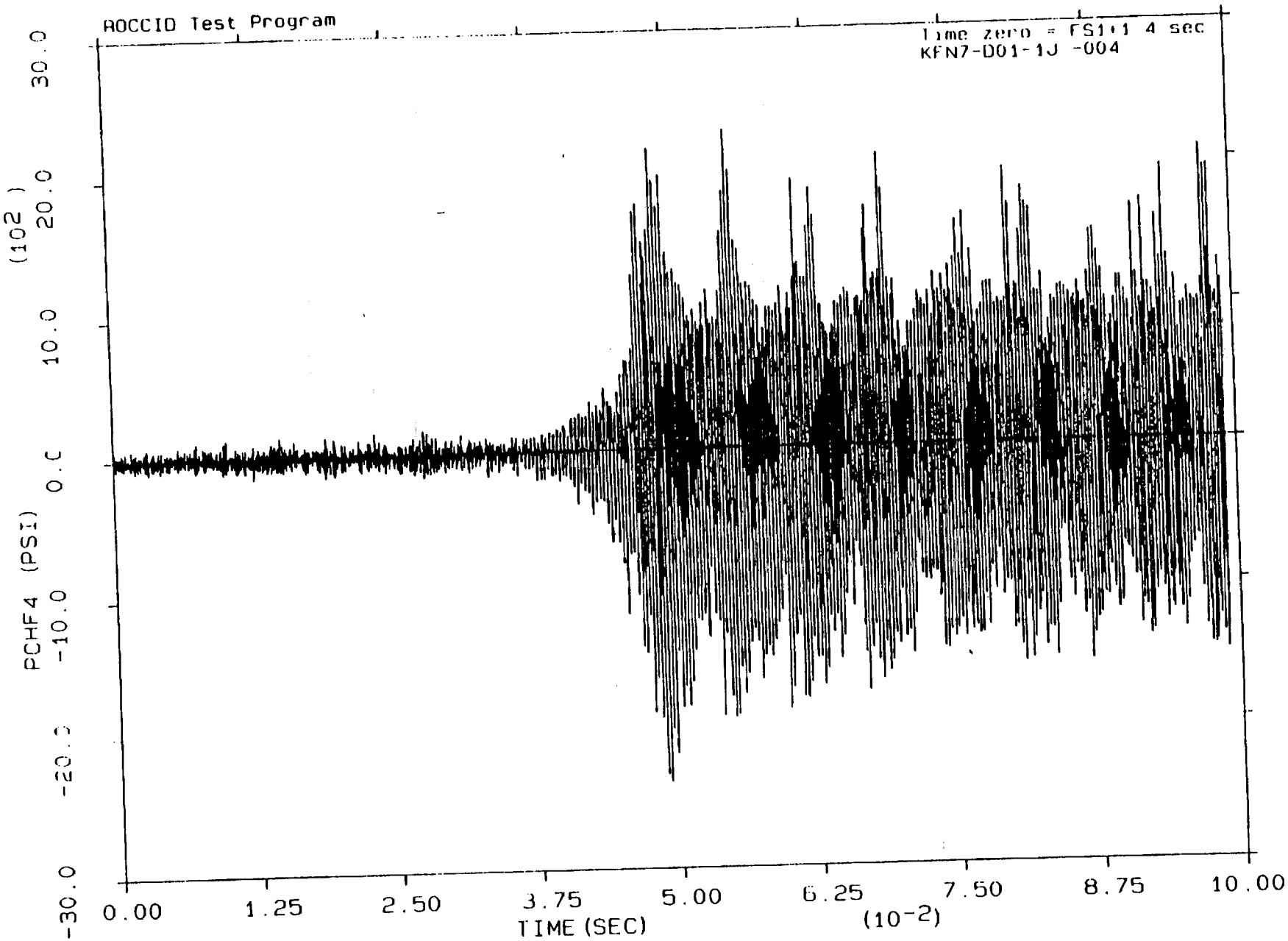
AOCCID Test Program
Time zero = FS1+1 4 sec
KFN7-D01-1J -004
PCHF4 (PSI)
(10^2)
30.0
20.0
10.0
0.0
-10.0
-20.0
-30.0
0.00
1.25
2.50
3.75
5.00
6.25
7.50
8.75
10.00
TIME (SEC)
(10^-2)

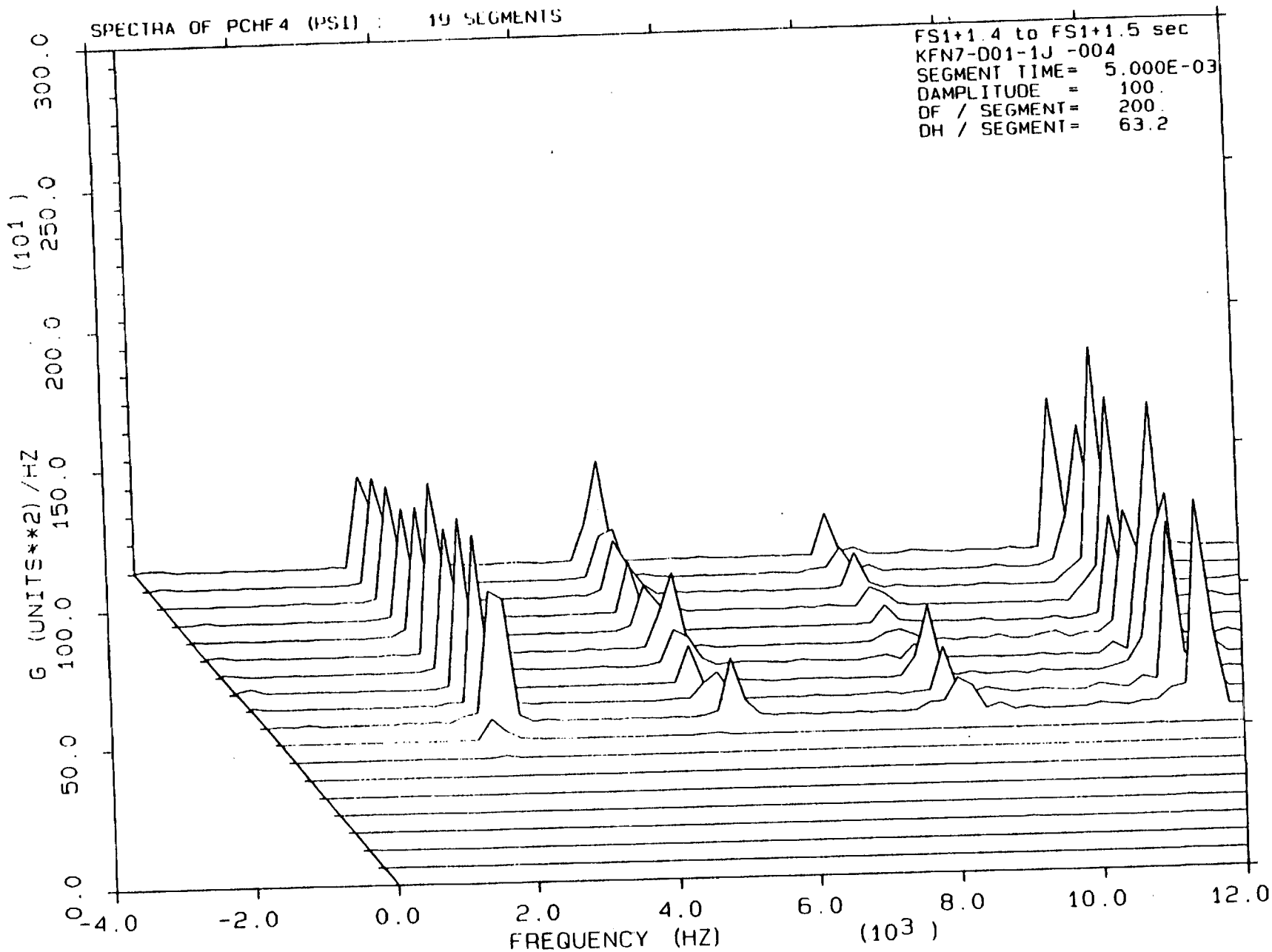
SPECTRA OF PCHF4 (PSI) : 19 SEGMENTS
FS1+1.4 to FS1+1.5 sec
KFN7-D01-1J -004
SEGMENT TIME= 5.000E-03
DAMPLITUDE = 100.
DF / SEGMENT= 200.
DH / SEGMENT= 63.2
G (UNITS**2) /HZ (10^1)
0.0
50.0
100.0
150.0
200.0
250.0
300.0
-4.0
-2.0
0.0
2.0
4.0
6.0
8.0
10.0
12.0
FREQUENCY (HZ) (10^3)

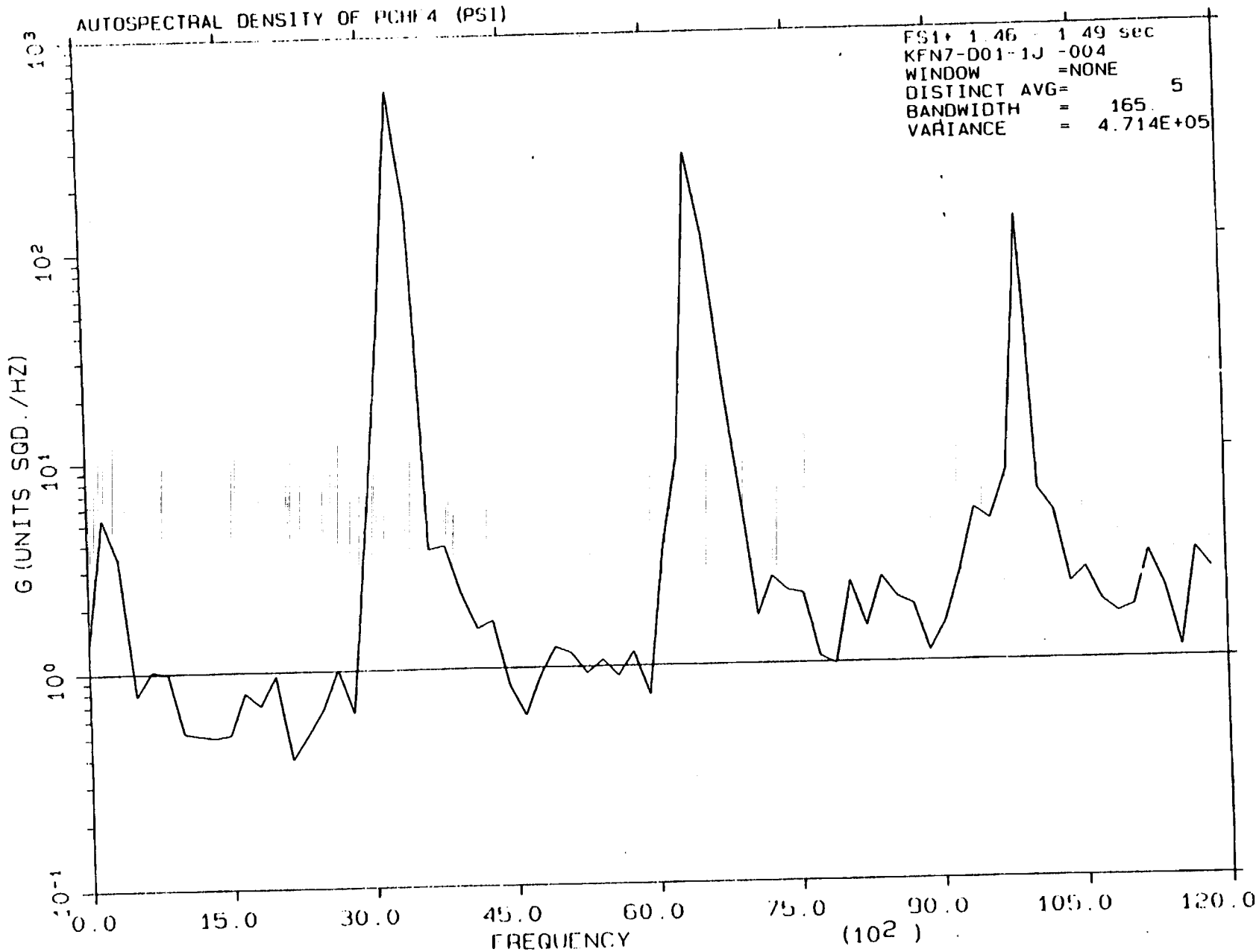
AUTOSPECTRAL DENSITY OF PCHF 4 (PS1)
FS1: 1.46 - 1.49 sec
KFN7-D01-1J -004
WINDOW =NONE
DISTINCT AVG= 5
BANDWIDTH = 165.
VARIANCE = 4.714E+05
G (UNITS SQD./HZ)
10^3
10^2
10^1
10^0
10^-1
0.0
15.0
30.0
45.0
60.0
75.0
90.0
105.0
120.0
FREQUENCY (10^2)

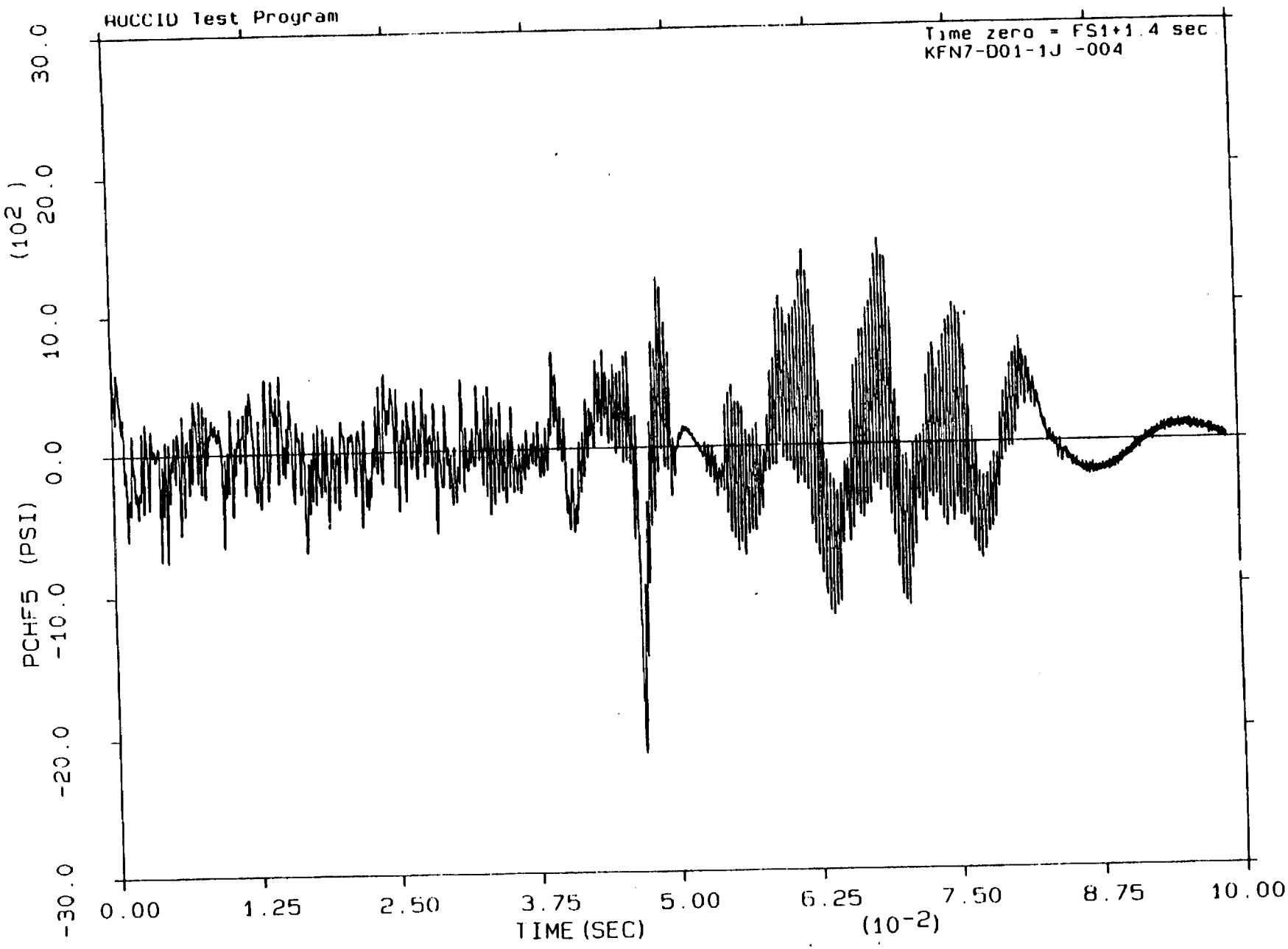
HUCCID Test Program
Time zero = FS1+1.4 sec
KFN7-D01-1J -004
PCHF5 (PSI)
(10^2)
30.0
20.0
10.0
0.0
-10.0
-20.0
-30.0
0.00
1.25
2.50
3.75
5.00
6.25
7.50
8.75
10.00
TIME (SEC)
(10^-2)

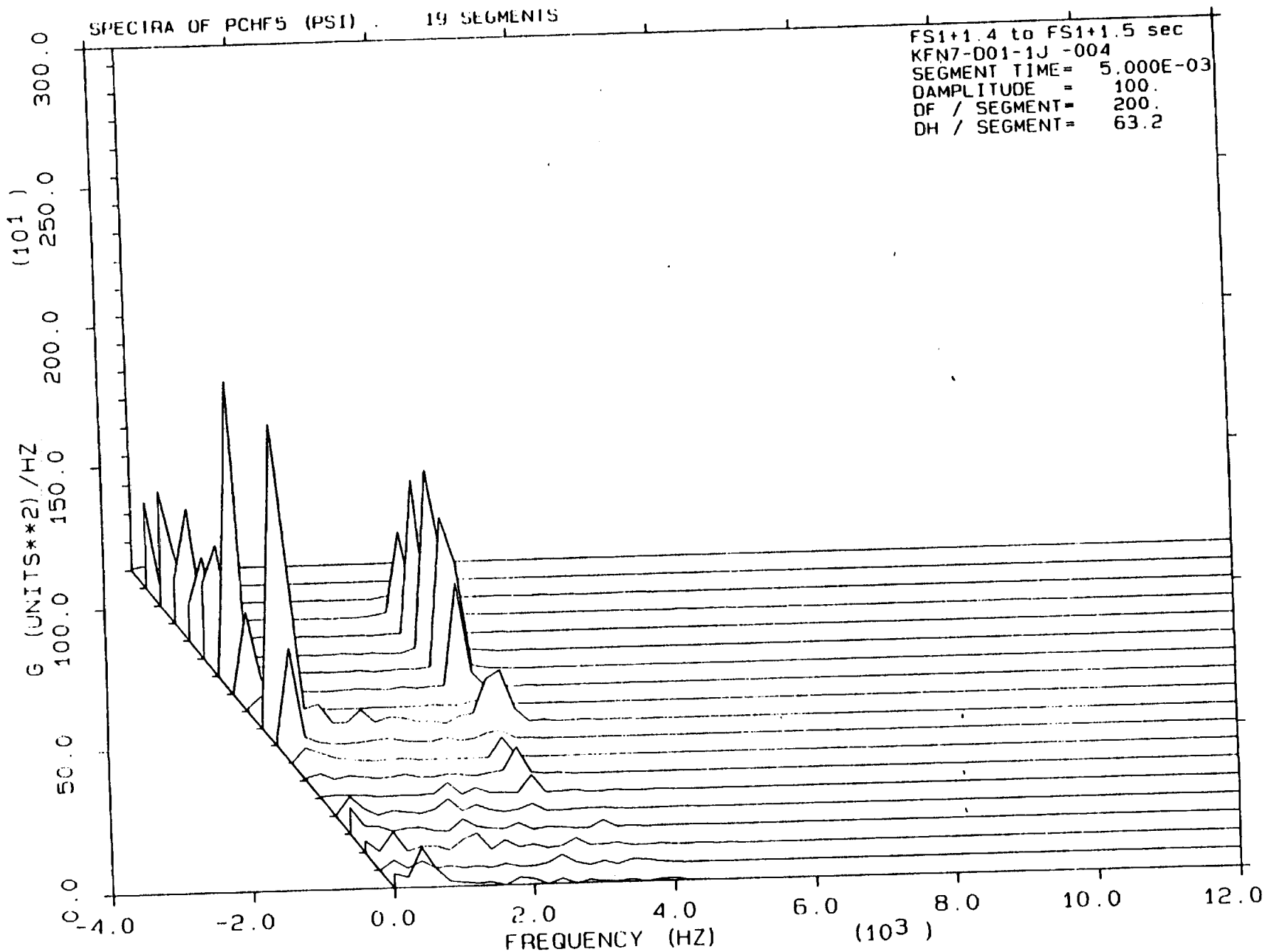
SPECTRA OF PCHFS (PSI) . 19 SEGMENTS
FS1+1.4 to FS1+1.5 sec
KFN7-D01-1J -004
SEGMENT TIME= 5.000E-03
DAMPLITUDE = 100.
DF / SEGMENT= 200.
DH / SEGMENT= 63.2
G (UNITS**2) /HZ (10^1)
300.0
250.0
200.0
150.0
100.0
50.0
0.0
-4.0
-2.0
0.0
2.0
4.0
6.0
8.0
10.0
12.0
FREQUENCY (HZ) (10^3)

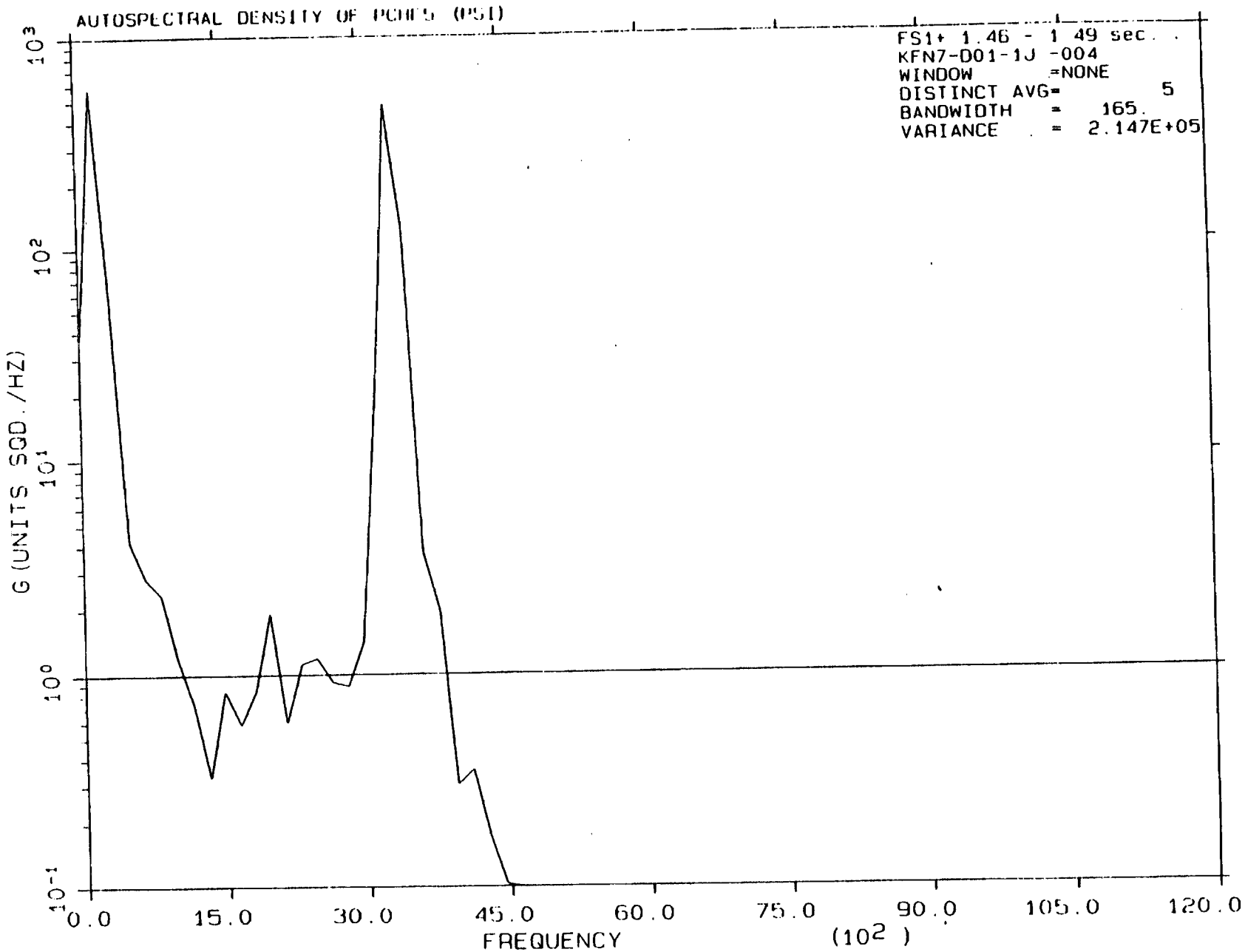
AUTOSPECTRAL DENSITY OF PCHFS (PSI)
FS1+ 1.46 - 1 49 sec.
KFN7-D01-1J -004
WINDOW =NONE
DISTINCT AVG= 5
BANDWIDTH = 165.
VARIANCE = 2.147E+05
G (UNITS SQD./HZ)
10^3
10^2
10^1
10^0
10^{-1}
0.0
15.0
30.0
45.0
60.0
75.0
90.0
105.0
120.0
FREQUENCY
(10^2)

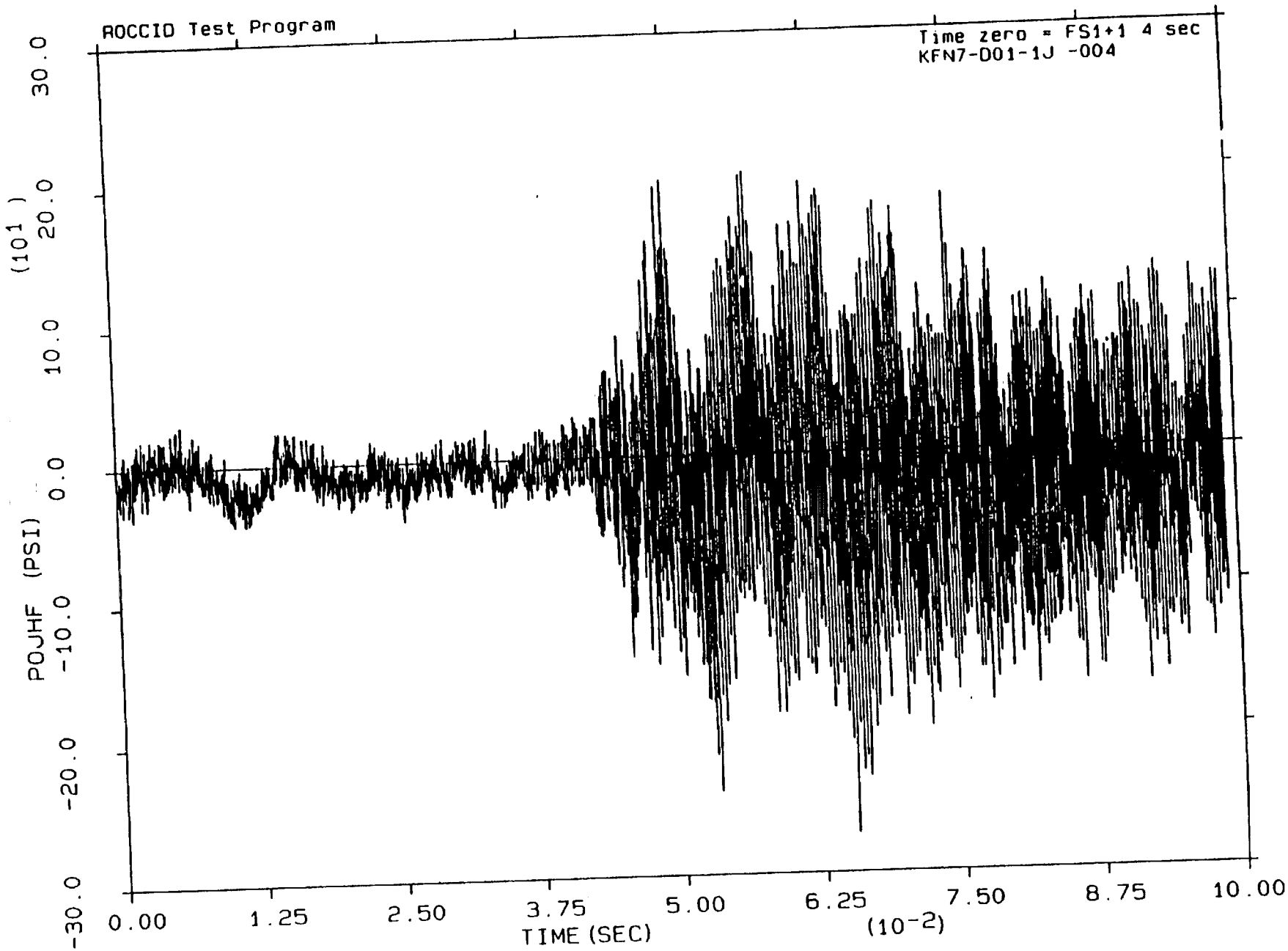
ROCCID Test Program
Time zero = FS1+1 4 sec
KFN7-D01-1J -004
POJHF (PSI)
(10^1)
30.0
20.0
10.0
0.0
-10.0
-20.0
-30.0
0.00
1.25
2.50
3.75
5.00
6.25
7.50
8.75
10.00
TIME (SEC)
(10^-2)

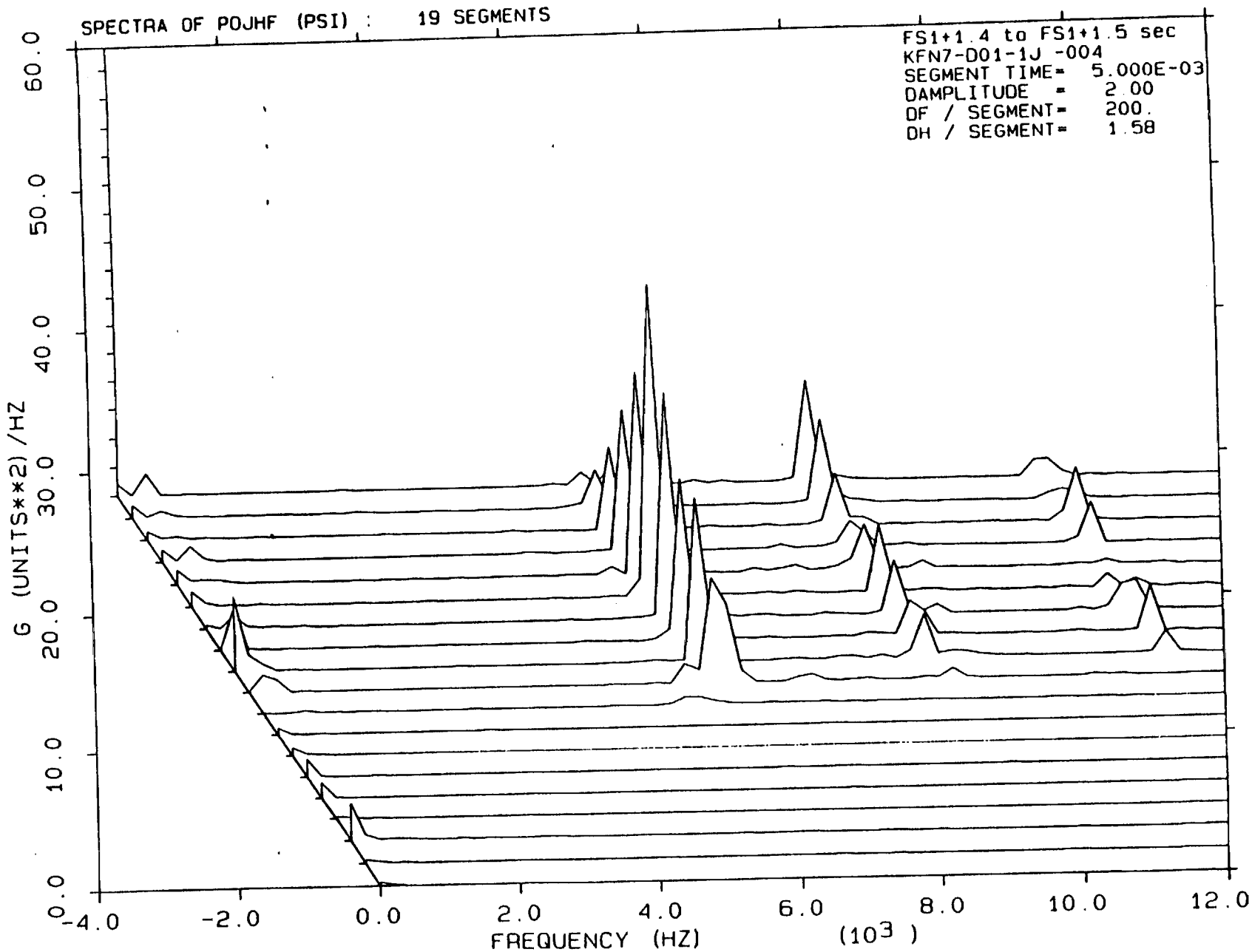
SPECTRA OF POJHF (PSI) : 19 SEGMENTS
FS1+1.4 to FS1+1.5 sec
KFN7-D01-1J -004
SEGMENT TIME= 5.000E-03
DAMPLITUDE = 2.00
DF / SEGMENT= 200.
DH / SEGMENT= 1.58
G (UNITS**2) /HZ
0.0
10.0
20.0
30.0
40.0
50.0
60.0
-4.0
-2.0
0.0
2.0
4.0
6.0
8.0
10.0
12.0
FREQUENCY (HZ)
(10^3)

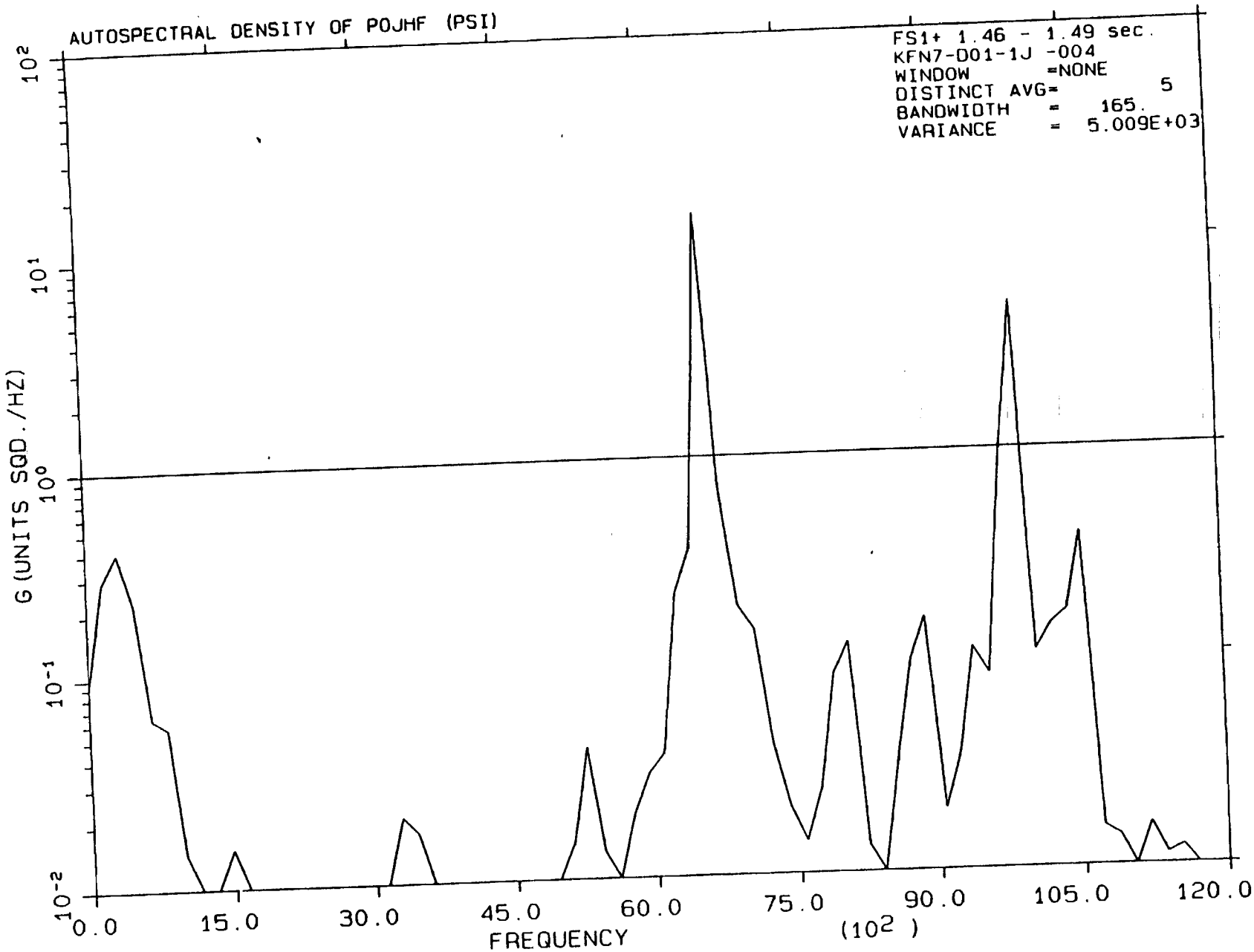
AUTOSPECTRAL DENSITY OF POJHF (PSI)
FS1+ 1.46 - 1.49 sec.
KFN7-D01-1J -004
WINDOW =NONE
DISTINCT AVG= 5
BANDWIDTH = 165.
VARIANCE = 5.009E+03
G (UNITS SQD./HZ)
10^2
10^1
10^0
10^{-1}
10^{-2}
0.0
15.0
30.0
45.0
60.0
75.0
90.0
105.0
120.0
FREQUENCY
(10^2)

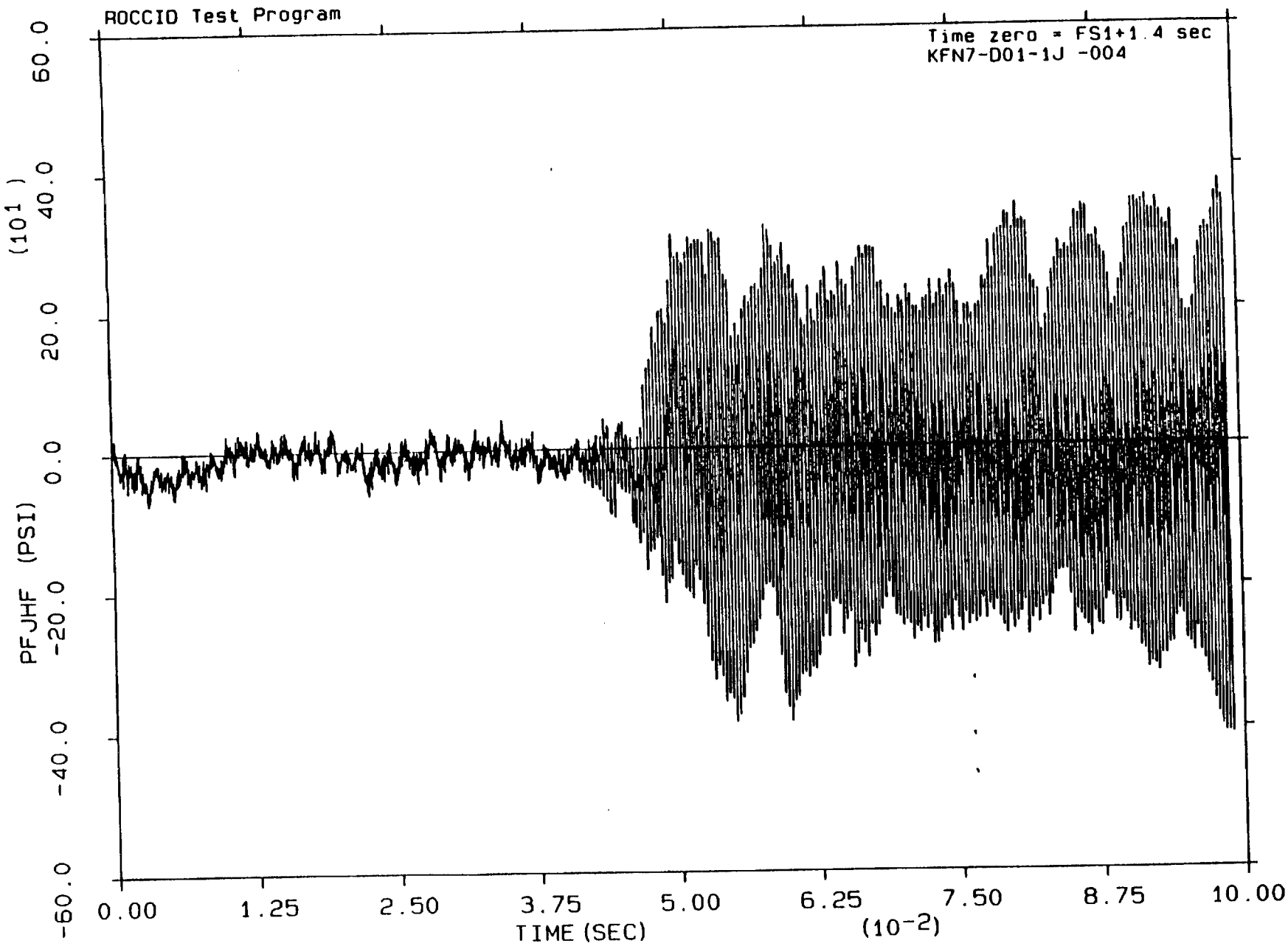
ROCCID Test Program
Time zero = FS1+1.4 sec
KFN7-D01-1J -004
PFJHF (PSI)
(10^1)
60.0
40.0
20.0
0.0
-20.0
-40.0
-60.0
0.00
1.25
2.50
3.75
5.00
6.25
7.50
8.75
10.00
TIME (SEC)
(10^-2)

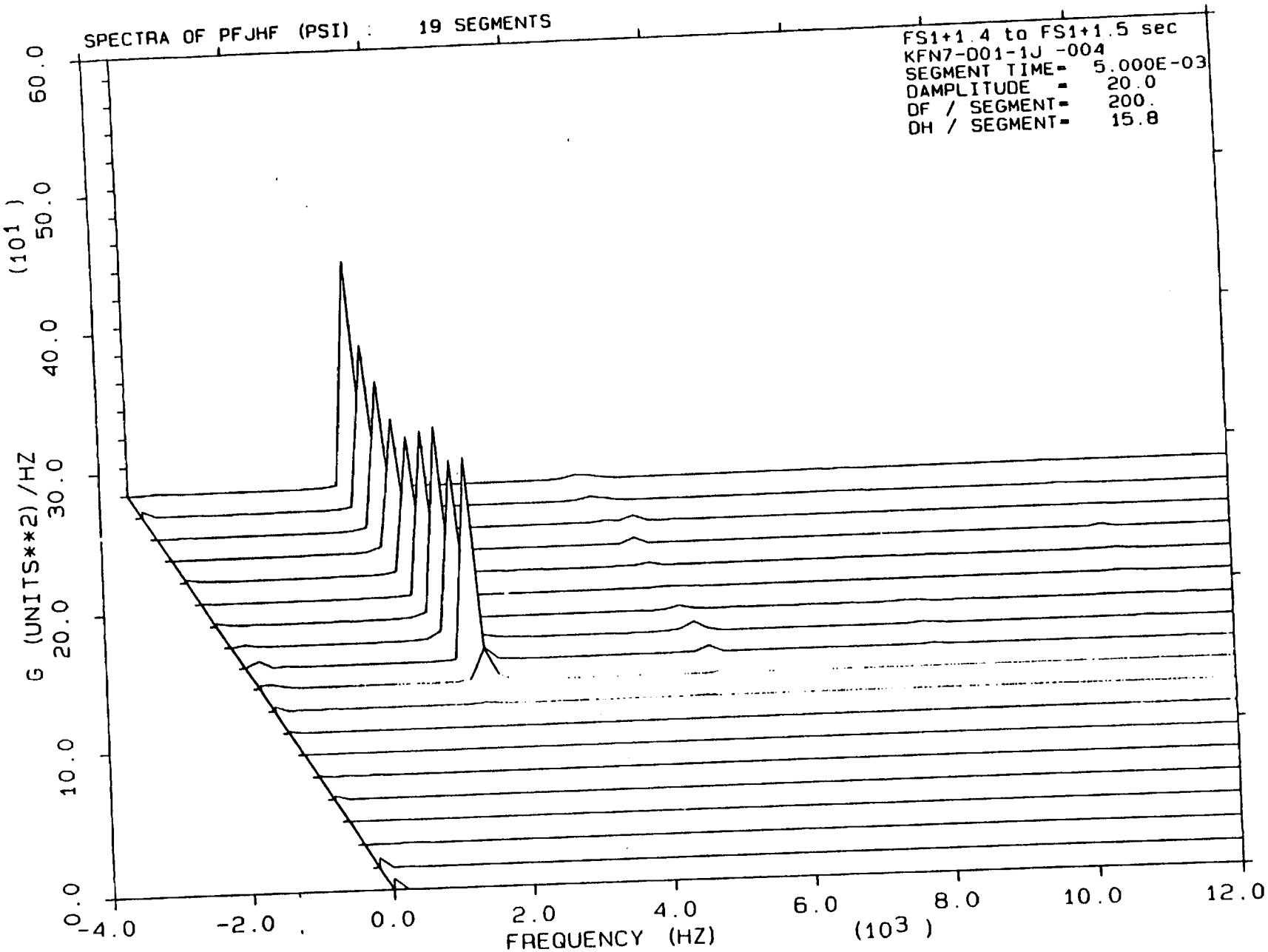
SPECTRA OF PFJHF (PSI) : 19 SEGMENTS
FS1+1.4 to FS1+1.5 sec
KFN7-D01-1J -004
SEGMENT TIME= 5.000E-03
DAMPLITUDE = 20.0
DF / SEGMENT= 200.
DH / SEGMENT= 15.8
G (UNITS**2) /HZ
(10^1)
0.0
10.0
20.0
30.0
40.0
50.0
60.0
-4.0
-2.0
0.0
2.0
4.0
6.0
8.0
10.0
12.0
FREQUENCY (HZ)
(10^3)

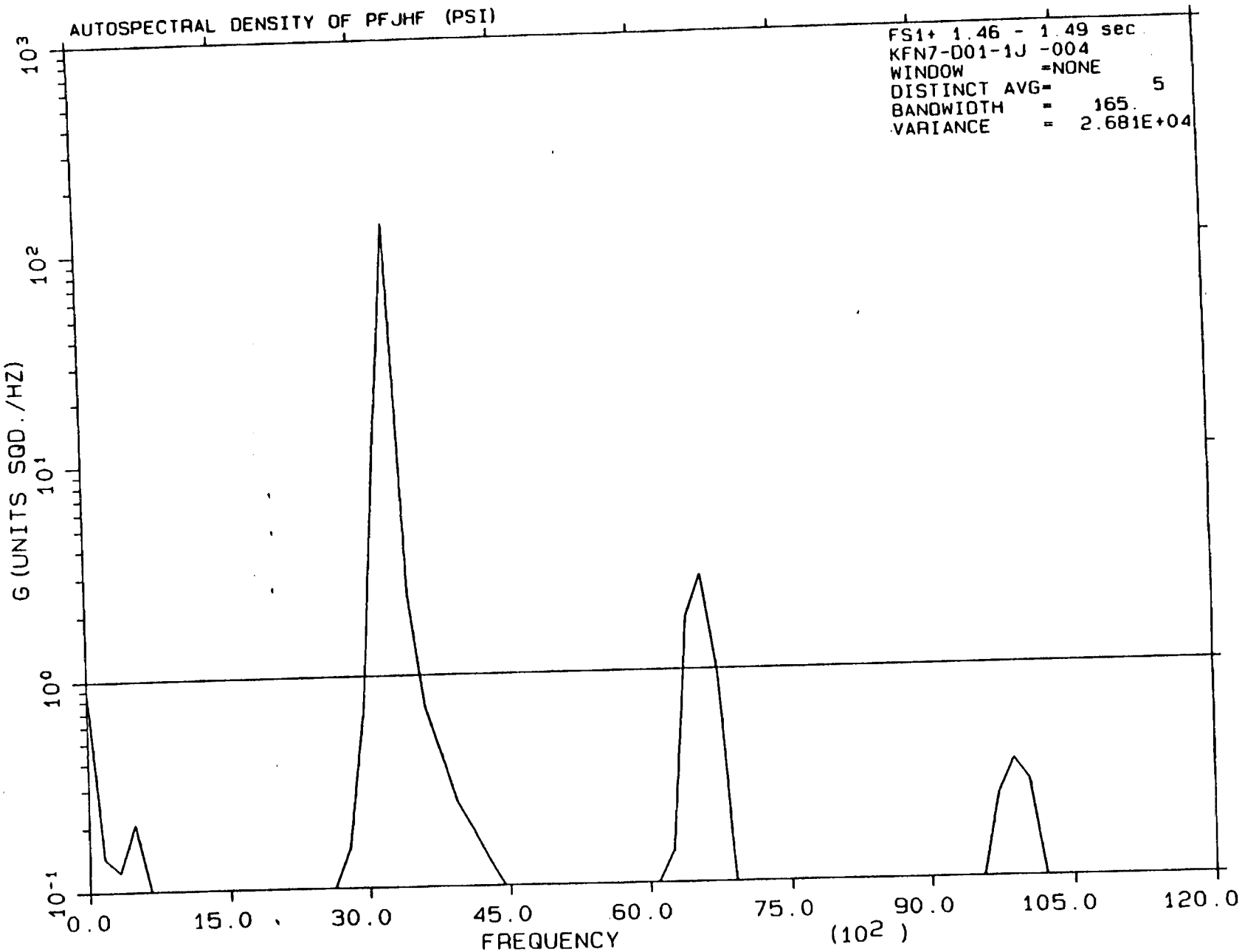
AUTOSPECTRAL DENSITY OF PFJHF (PSI)
FS1+ 1.46 - 1.49 sec
KFN7-D01-1J -004
WINDOW =NONE
DISTINCT AVG= 5
BANDWIDTH = 165.
VARIANCE = 2.681E+04
G (UNITS SQD./HZ)
10^3
10^2
10^1
10^0
10^{-1}
0.0
15.0
30.0
45.0
60.0
75.0
90.0
105.0
120.0
FREQUENCY
(10^2)

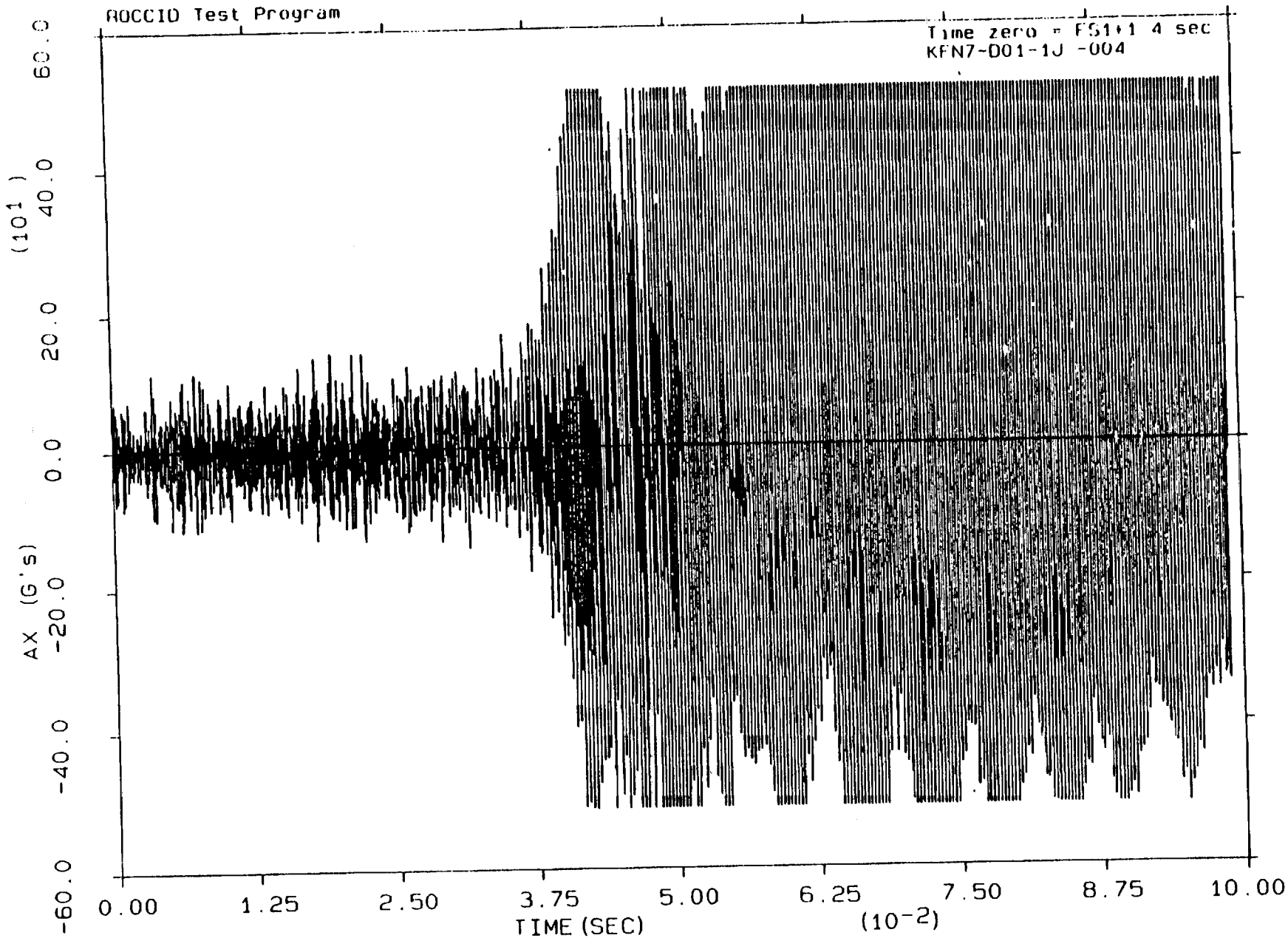
ROCCID Test Program
Time zero = FS1+1 4 sec
KFN7-D01-1J -004
AX (G's)
(10^1)
60.0
40.0
20.0
0.0
-20.0
-40.0
-60.0
0.00
1.25
2.50
3.75
5.00
6.25
7.50
8.75
10.00
TIME (SEC)
(10^-2)

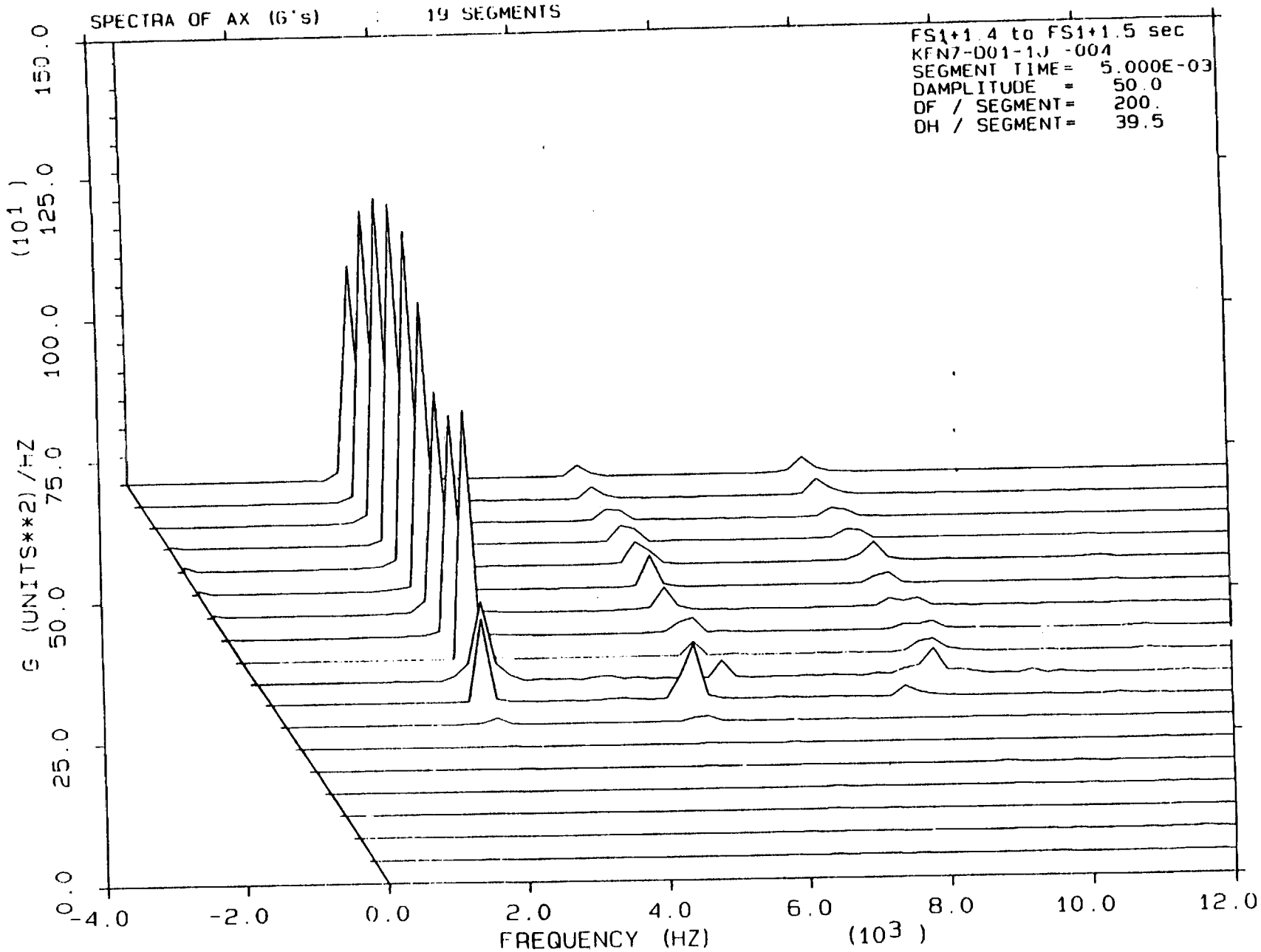
SPECTRA OF AX (G's)
19 SEGMENTS
FS1+1.4 to FS1+1.5 sec
KFN7-D01-1J -004
SEGMENT TIME= 5.000E-03
DAMPLITUDE = 50.0
DF / SEGMENT= 200.
DH / SEGMENT= 39.5
G (UNITS**2)/HZ (10^1)
0.0
25.0
50.0
75.0
100.0
125.0
150.0
-4.0
-2.0
0.0
2.0
4.0
6.0
8.0
10.0
12.0
FREQUENCY (HZ) (10^3)

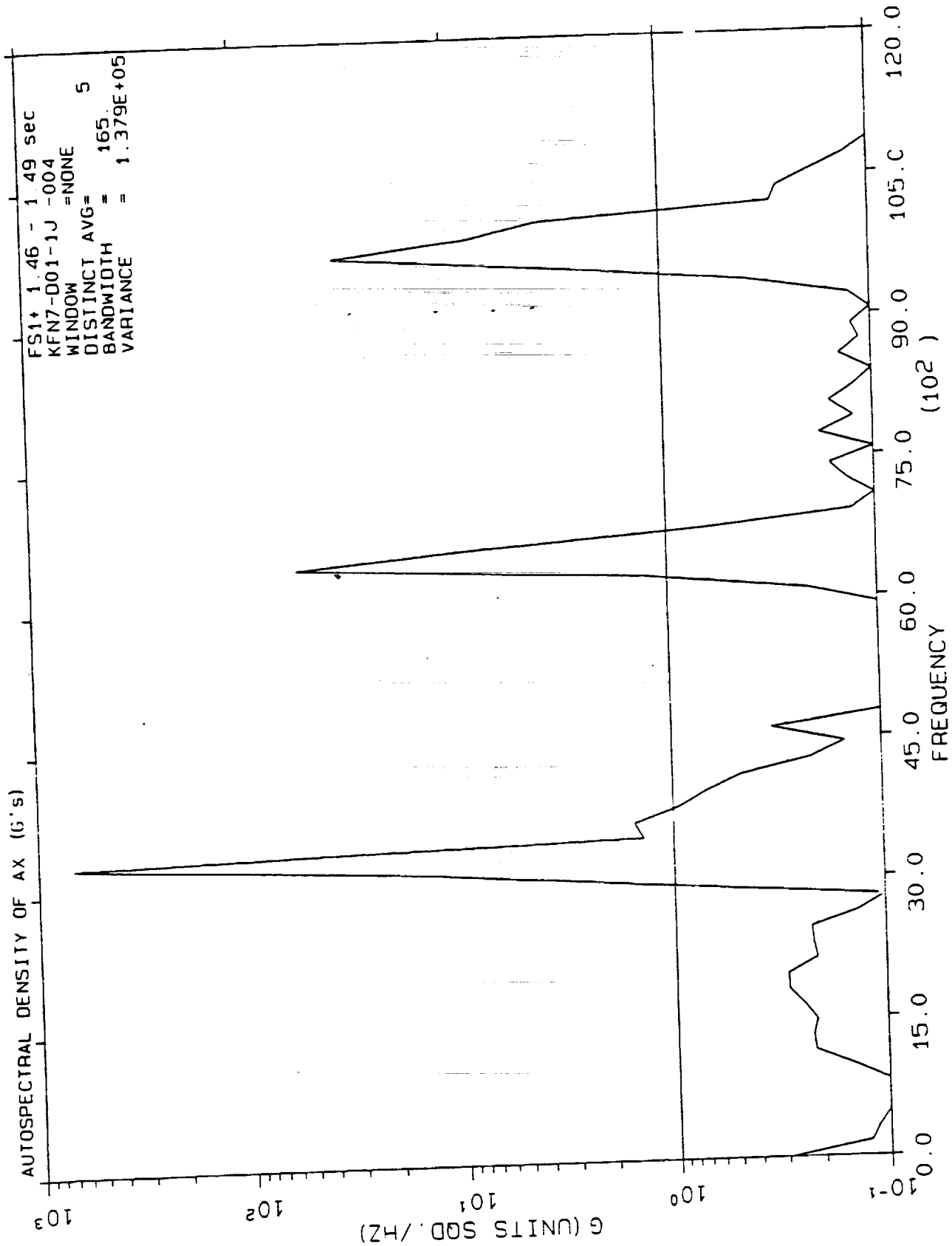
AUTOSPECTRAL DENSITY OF AX (G's)
FS1+ 1.46 - 1.49 sec
KFN7-001-1J -004
WINDOW =NONE
DISTINCT AVG= 5
BANDWIDTH = 165.
VARIANCE = 1.379E+05
G (UNITS SQD./HZ)
10-1
100
101
102
103
0.0
15.0
30.0
45.0
60.0
75.0
90.0
105.0
120.0
FREQUENCY
(102)

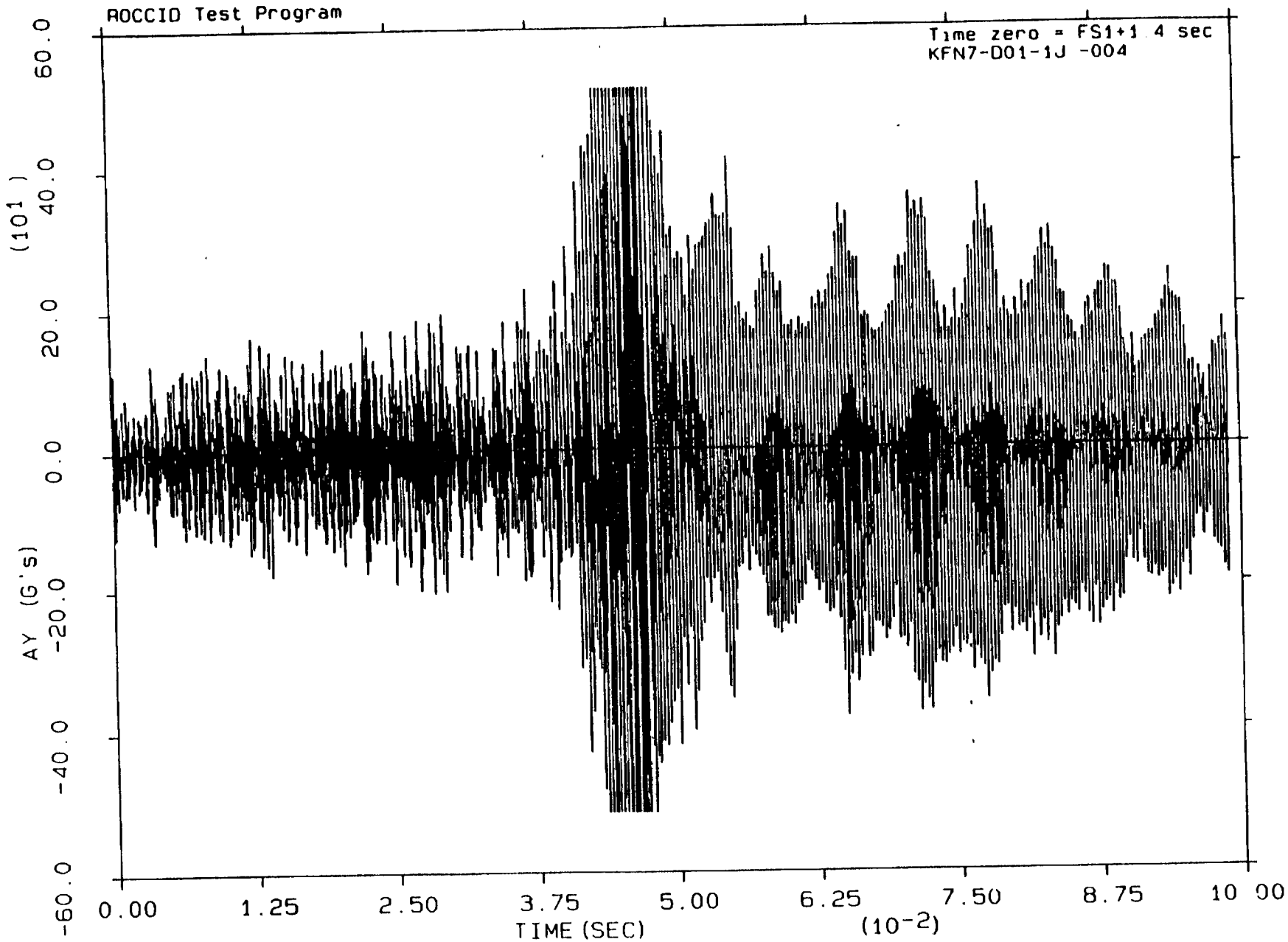
ROCCID Test Program
Time zero = FS1+1.4 sec
KFN7-D01-1J -004
AY (G's)
(10¹)
60.0
40.0
20.0
0.0
-20.0
-40.0
-60.0
0.00
1.25
2.50
3.75
5.00
6.25
7.50
8.75
10.00
TIME (SEC)
(10⁻²)

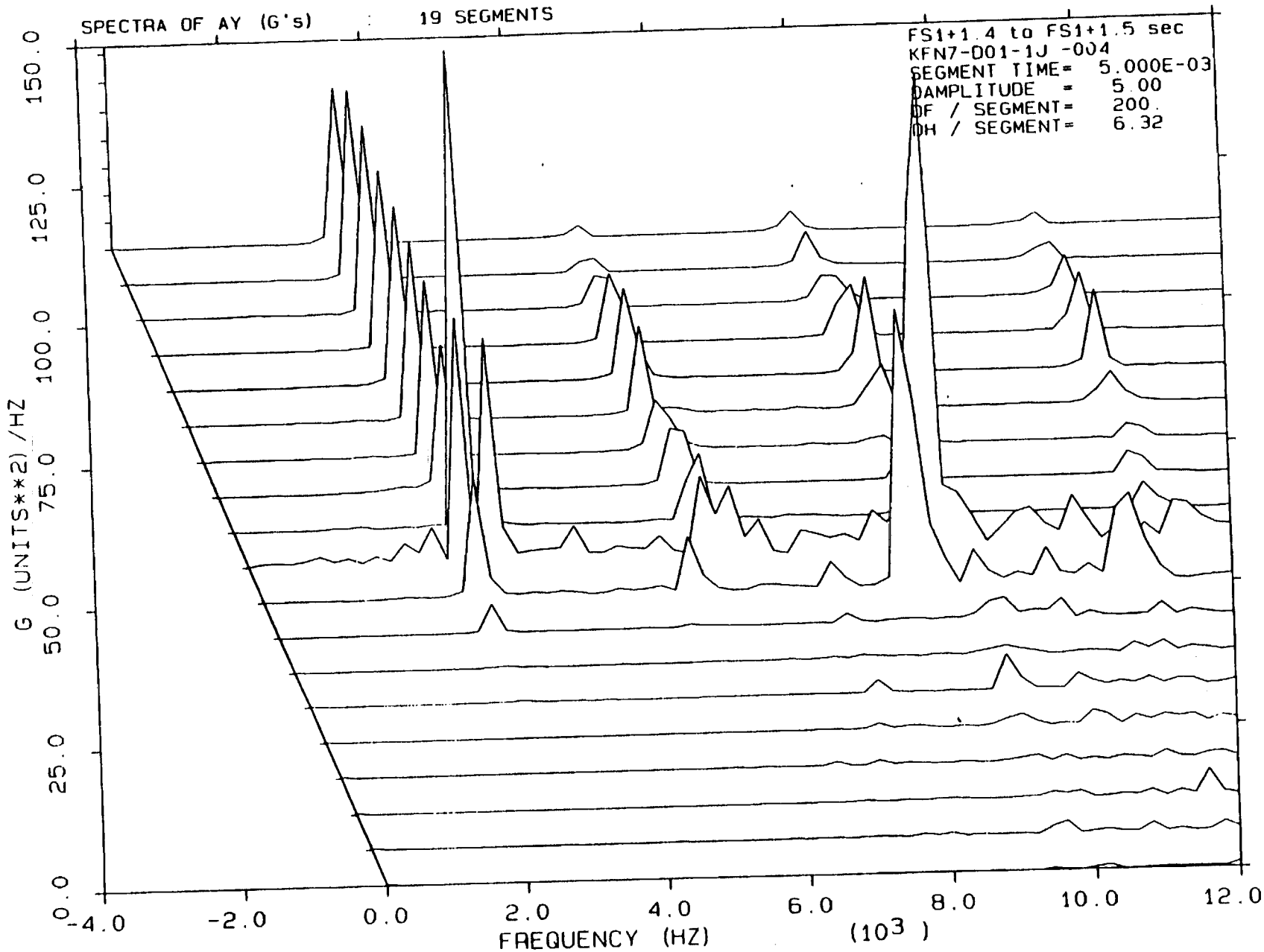
SPECTRA OF AY (G's)
19 SEGMENTS
FS1+1.4 to FS1+1.5 sec
KFN7-001-1J -004
SEGMENT TIME= 5.000E-03
DAMPLITUDE = 5.00
DF / SEGMENT= 200.
DH / SEGMENT= 6.32
G (UNITS**2) /HZ
0.0
25.0
50.0
75.0
100.0
125.0
150.0
-4.0
-2.0
0.0
2.0
4.0
6.0
8.0
10.0
12.0
FREQUENCY (HZ)
(10^3)

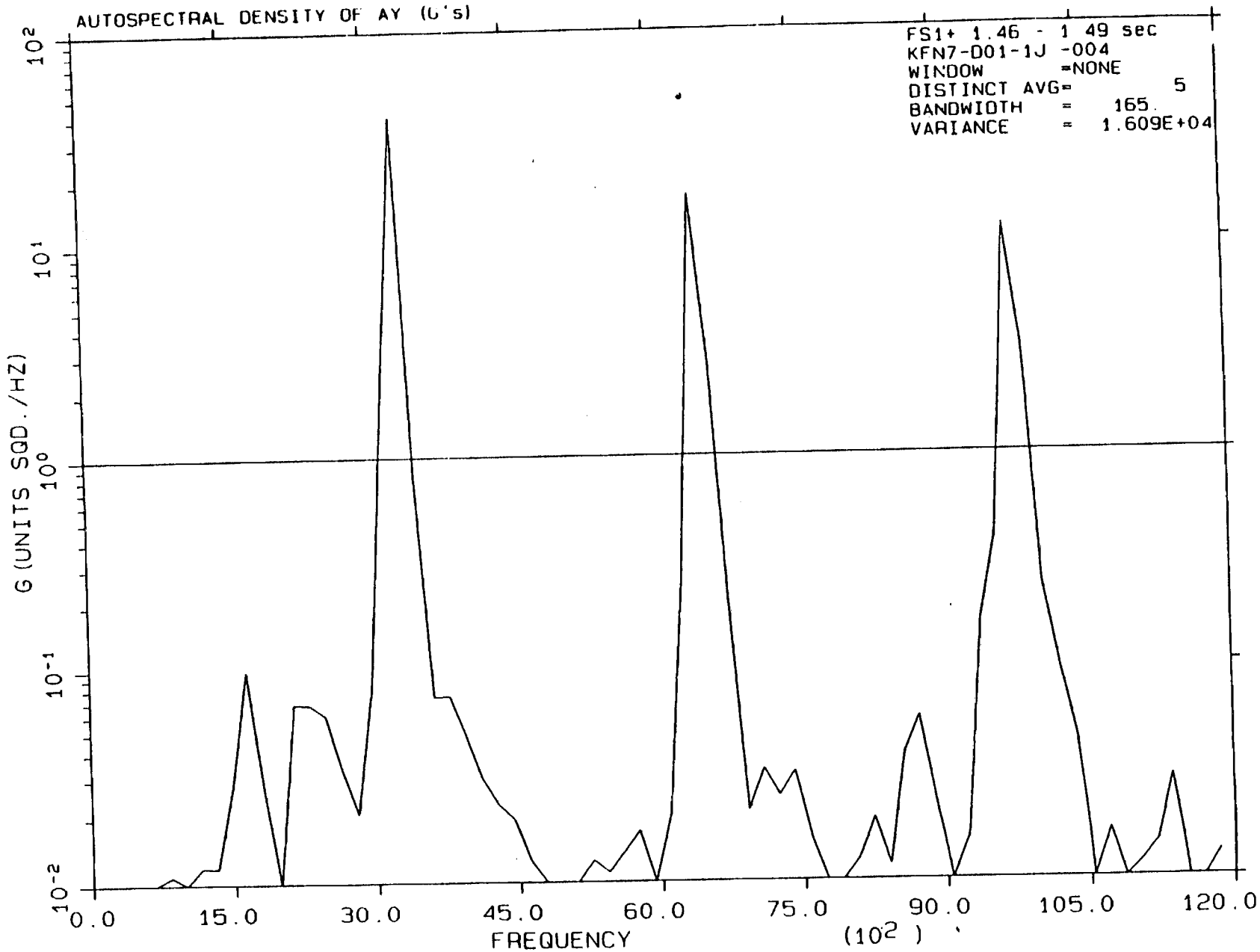
AUTOSPECTRAL DENSITY OF AY (G'S)
FS1+ 1.46 - 1 49 sec
KFN7-D01-1J -004
WINDOW =NONE
DISTINCT AVG= 5
BANDWIDTH = 165.
VARIANCE = 1.609E+04
G (UNITS SQD./HZ)
10^2
10^1
10^0
10^{-1}
10^{-2}
0.0
15.0
30.0
45.0
60.0
75.0
90.0
105.0
120.0
FREQUENCY
(10^2)

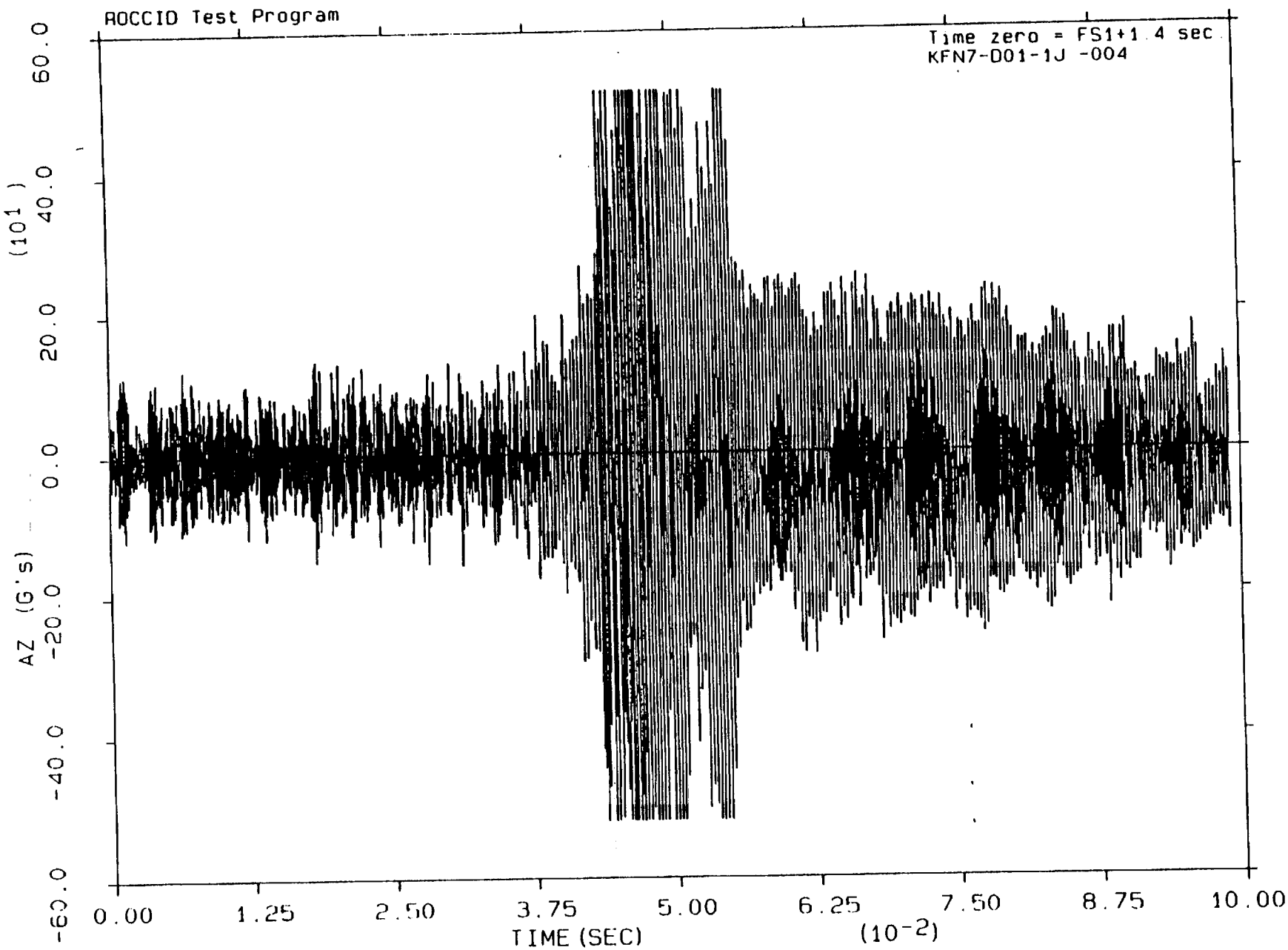
ROCCID Test Program
Time zero = FS1+1.4 sec
KFN7-D01-1J -004
AZ (G's)
(10^1)
60.0
40.0
20.0
0.0
-20.0
-40.0
-60.0
0.00
1.25
2.50
3.75
5.00
6.25
7.50
8.75
10.00
TIME (SEC)
(10^-2)

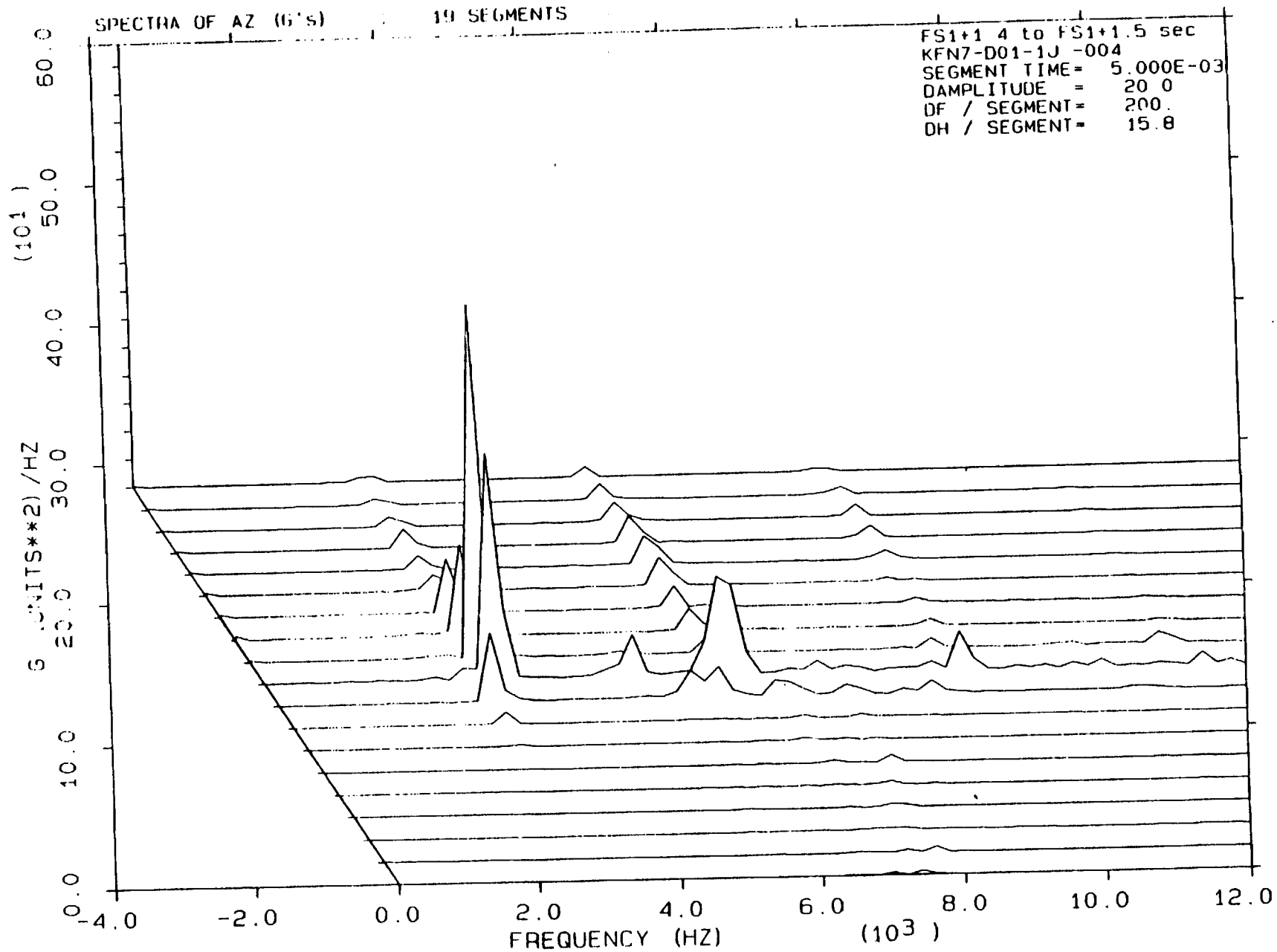
SPECTRA OF AZ (G'S)
19 SEGMENTS
FS1+1 4 to FS1+1.5 sec
KFN7-D01-1J -004
SEGMENT TIME= 5.000E-03
DAMPLITUDE = 20 0
DF / SEGMENT= 200.
DH / SEGMENT= 15.8
(10¹)
60.0
50.0
40.0
30.0
20.0
10.0
0.0
-4.0
-2.0
0.0
2.0
4.0
6.0
8.0
10.0
12.0
FREQUENCY (HZ)
(10³)

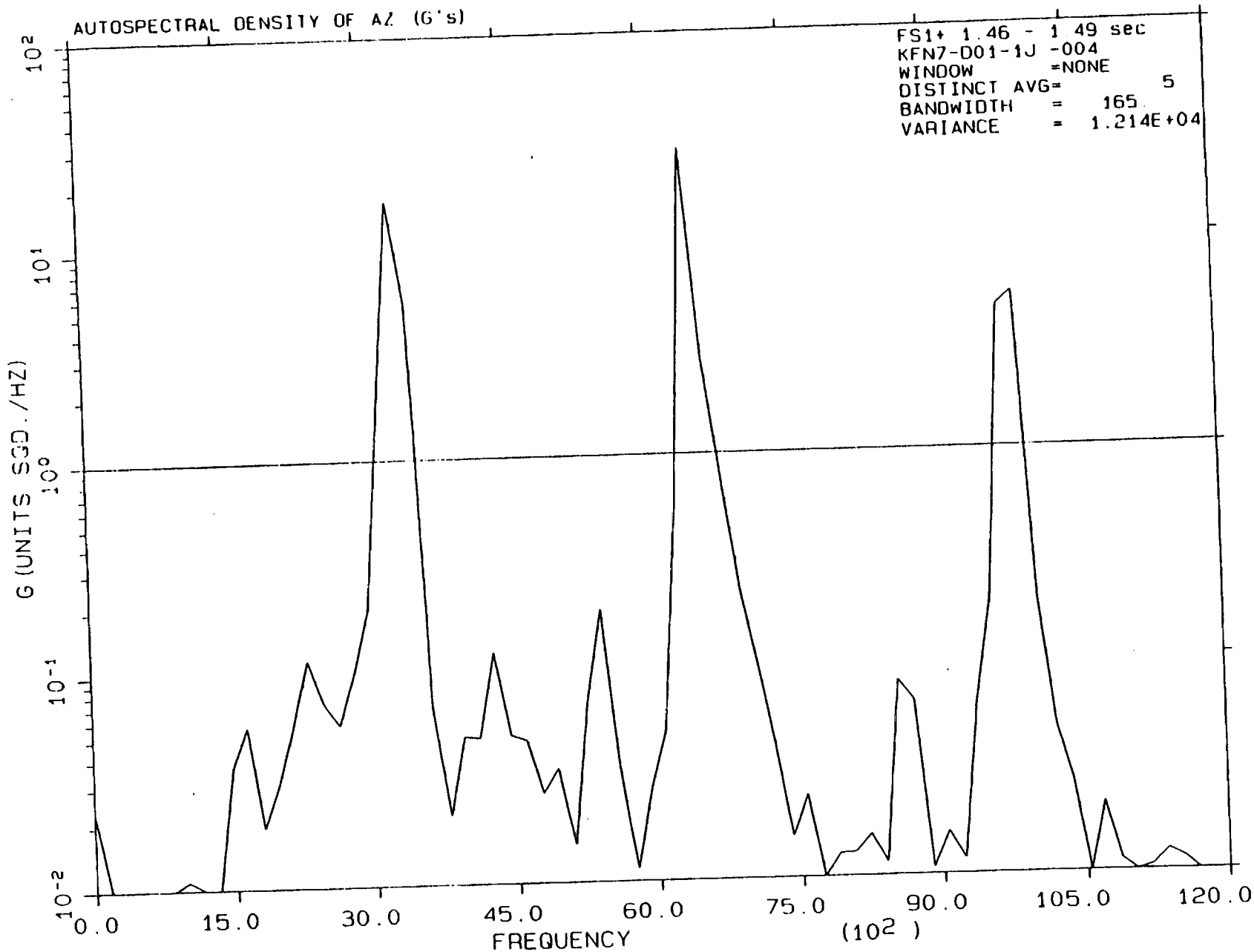
AUTOSPECTRAL DENSITY OF AZ (G's)
FS1+ 1.46 - 1.49 sec
KFN7-D01-1J -004
WINDOW =NONE
DISTINCT AVG= 5
BANDWIDTH = 165
VARIANCE = 1.214E+04
G (UNITS SQD./HZ)
10²
10¹
10⁰
10⁻¹
10⁻²
0.0
15.0
30.0
45.0
60.0
75.0
90.0
105.0
120.0
FREQUENCY
(10²)

APPENDIX D

ROCCID VALIDATION HARDWARE DESIGN DRAWING PACKAGE

LIST OF DRAWINGS

Drawing Description	Drawing No.	No. of Sheets	Figure Nos.
Engine assembly	1206430	2	D-3/D-4
Injector Assembly	1206427	1	D-5
Injector Flange	1200773A	3	D-6/D-8
Injector Core Assembly	1206423	2	D-9/D-10
Injector Core	1200729	7	D-11/D-17
Thrust Chamber Assembly	1206428	3	D-18/D-20
Chamber Body Forging	1206432	1	D-21
Chamber Liner	1206429	1	D-22
Chamber Retaining Plate	1200976A	1 + ADCN	D-23/D-24
Chamber Proof Plate	1200977A	1 + ADCN	D-25/D-26
1/4 Wave Tube Resonator	1206426	1	D-27
Resonator Cavity Blank	1206431	1	D-28
Bomb Adapters	1201080A	1	D-29

NOTES:

1. [illegible]
2. [illegible]
3. SEAL AND PACKING REQUIREMENTS
   a. [illegible] PER [illegible]
   b. NO LUBRICANT REQUIRED FOR SEALS.
4. APPLY [illegible] TO ALL THREADS, PRIOR TO INSTALLATION, PER [illegible]
5. SAFETY LOCKWIRE PER [illegible], CLASS 1A.
6. ALL TUBE FITTINGS TO BE INSTALLED PER [illegible]
7. TORQUE ALL BOLTS ON THREADS PER [illegible]
8. TORQUE INFORMATION PER [illegible].
9. FILL [illegible] WITH [illegible].
10. -10 AND -20 ASSEMBLIES SHALL BE LEAK CHECKED AS FOLLOWS: PRESSURIZE EACH ASSEMBLY TO APPROXIMATELY 50 PSI USING CLEAN FILTERED NITROGEN [illegible] LEVEL 2000. LEAK CHECK ALL FITTINGS AND JOINTS. REPEAT PROCESS INCREASING NITROGEN PRESSURE TO APPROXIMATELY 100 PSI.
11. -9 ASSEMBLY SHALL BE PROOF TESTED AS FOLLOWS: PRESSURIZE ASSEMBLY USING [illegible] ± 100 PSI WATER FILTERED TO [illegible] LEVEL [illegible]. HOLD PRESSURE FOR APPROXIMATELY 5 MINUTES.

											47
	36	36	36	56878	SPS 72789-52	NUT		2		4 E	46
4	AR	AR	AR			LUBRICANT	ATC 14159				45
	AR	AR	AR	00426	RTV 60	SEALANT				2 F	44
											43
	AR	AR	AR		AS1425 506	TAPE		2 B	6 C	6 E	42
	AR	AR	AR		AS1425-387				2	6 B	41
	AR	AR	AR		AS1425-376			1 A	6 D	6 E	40
											39
	AR	AR	AR		AS1425-230				2	6 E	38
	AR	AR	AR		AS1425-181				2	6 D	37
	AR	AR	AR		AS1425-133	TAPE			2	6 E	36
	[illegible]	[illegible]	[illegible]	[illegible]	[illegible]	[illegible]	[illegible]			[illegible]	[illegible]

OUT FRAME /.

AR	AR	AR		AS1425-116	TAPE		2	B	35
AR	AR	AR		AS1425-03	TAPE		2	E	34
AR	AR	AR		AS1425-102	TAPE		2	D	33
4	4	4		NAS334CPR10	BOLT		2	A	32
16	16	16		NAS628H30	BOLT		2	A	31
9	9	9		NAS334 CPR13	BOLT		2	A	30
									29
									28
									27
2	2	2		MS28782-25	RETAINER		2	C	26
20	20	20		MS21250 16072	BOLT		2	E	25
		16		MS21250 16063	BOLT		2	D	24
16	16			MS21250 16032	BOLT		2	D	23
1	1	1		MS9068-433	O-RING		2	C	22
1	1	2		MS9068-450	O-RING	2	E	21
		1		MS9068-444	O-RING		2	B	20
									19
2	2	2		MS9068-221	O-RING		2	C	18
2	2	2		MS9068-120	O-RING		2	C	17
									16
72	72	72		AN960C616L	WASHER	2	E	D	15
16	16	16		AN960C316L	WASHER		A		14
									13
									12
1	1	2		1200480-19	HOMB ADAPTER		2	B	11
1				1206431-1	RESONATOR PLATE		2	D	10
		1		1206426-1	THRUST CHAMBER		2	B	9
1	1			1206428-9	THRUST CHAMBER		2	D	8
1	1	1		1206427-9	INJECTOR ASSY		2	A	7
	1			1206426-1	RESONATOR, 1/4 WAVE		2	D	6
									5
									4
1	1			1200480-19	SJMB ADAPTER		2	B	3
		1		1200977-19	PLATE, CLOSURE		2	A	2
1	1	1		1200976-2	PLATE, RETAINER		2	D	1

NAS 3-25556

US DEMETER

ENGINE ASSY, O2/HC-
30 DOSCALE
(DOCCID TEST VALIDATION)

E 05624 1206430

1/2 02-7-23 1 OF 2

DEVELOPMENT HARDWARE

Figure D-1

ORIGINAL PAGE IS OF POOR QUALITY

FOLDOUT FRAME 2

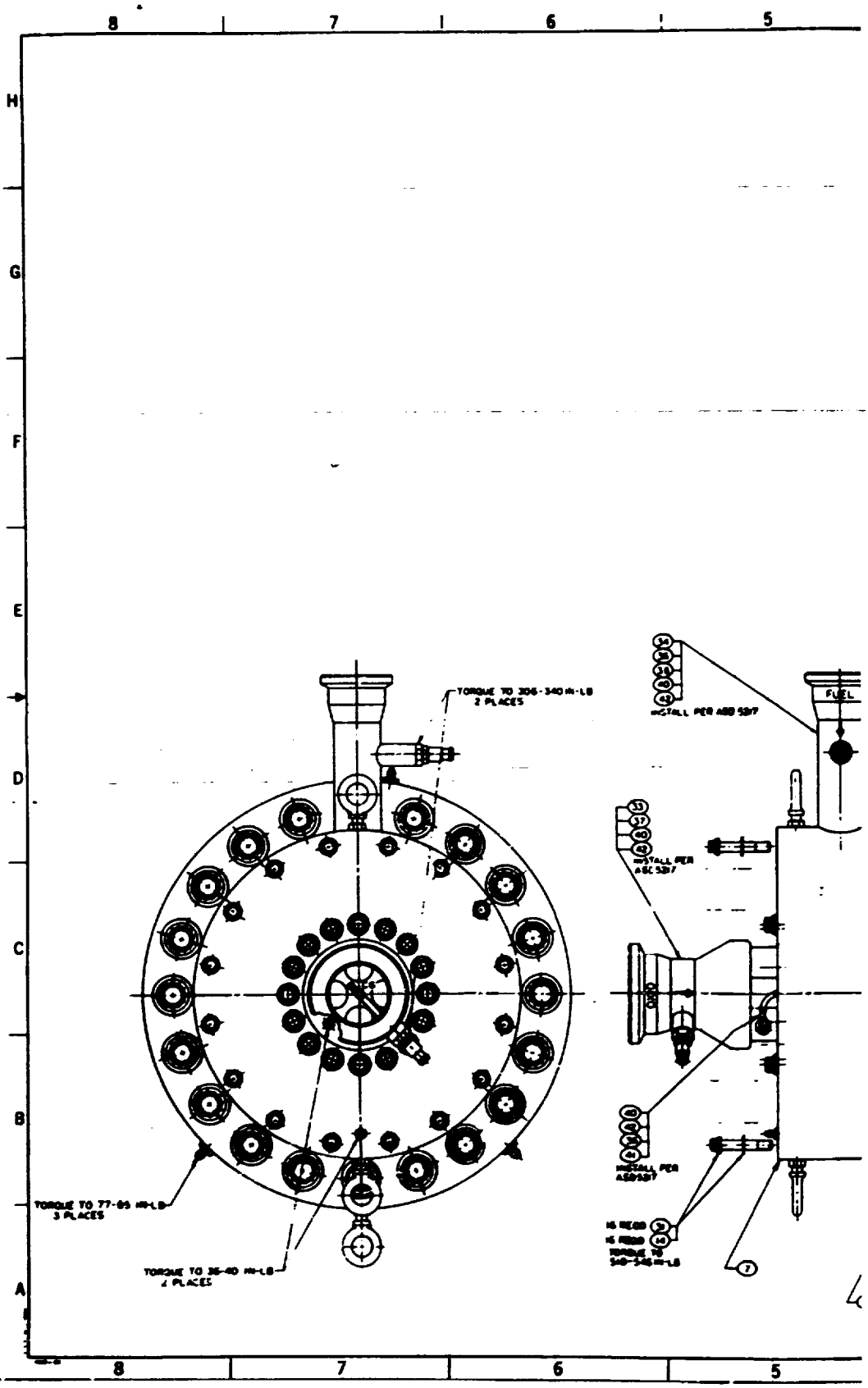

FOLDOUT FRAME 1.

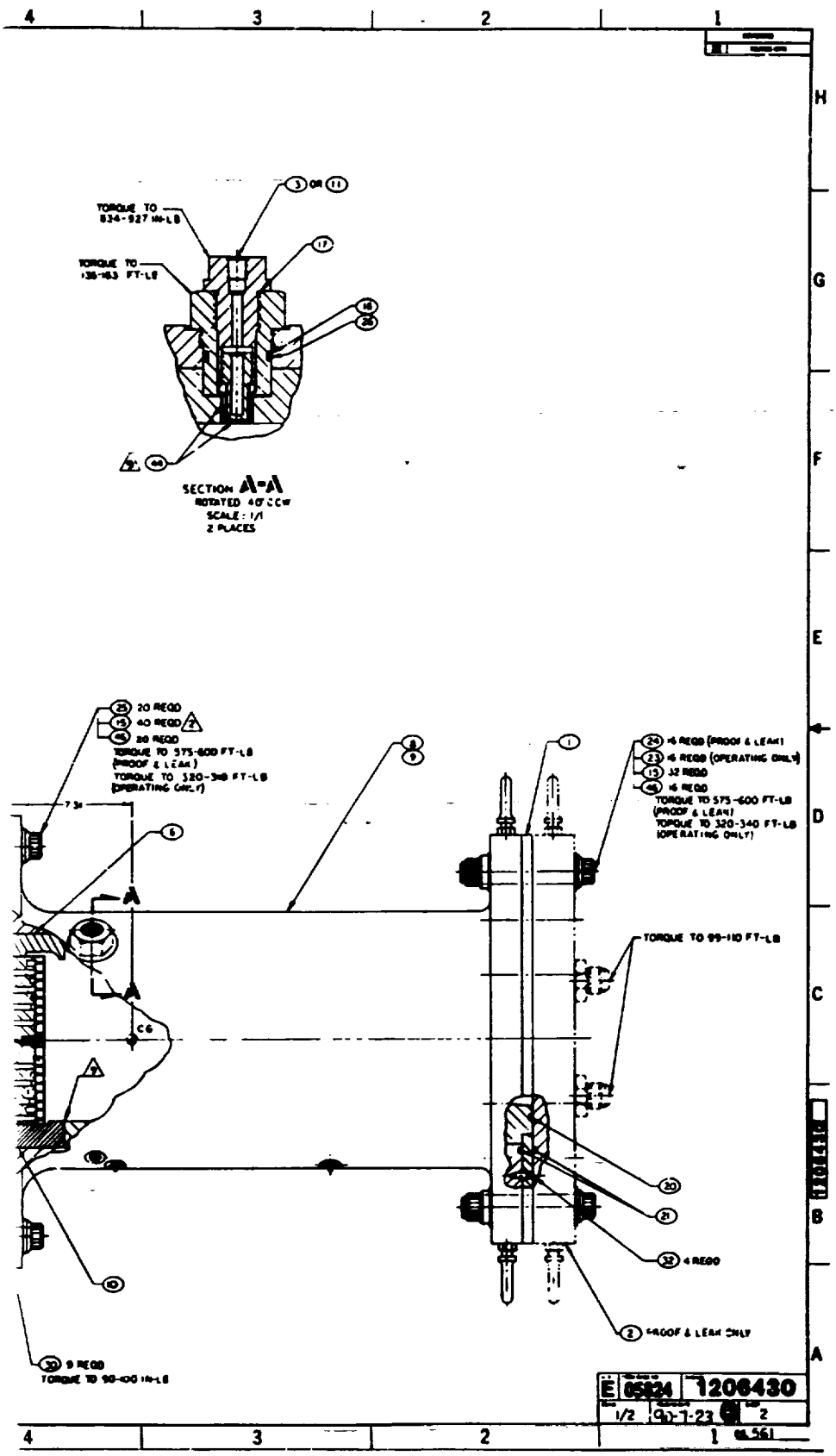
TORQUE TO 834-927 IN-LB
TORQUE TO 136-163 FT-LB
SECTION A-A
ROTATED 40° CCW
SCALE: 1/1
2 PLACES
20 REQD
40 REQD
20 REQD
TORQUE TO 575-600 FT-LB (PROOF & LEAK)
TORQUE TO 320-340 FT-LB (OPERATING ONLY)
16 REQD (PROOF & LEAK)
16 REQD (OPERATING ONLY)
32 REQD
16 REQD
TORQUE TO 575-600 FT-LB (PROOF & LEAK)
TORQUE TO 320-340 FT-LB (OPERATING ONLY)
TORQUE TO 99-110 FT-LB
4 REQD
PROOF & LEAK ONLY
9 REQD
TORQUE TO 90-100 IN-LB
E 05824 1206430
1/2 90-7-23 2

Figure D-2

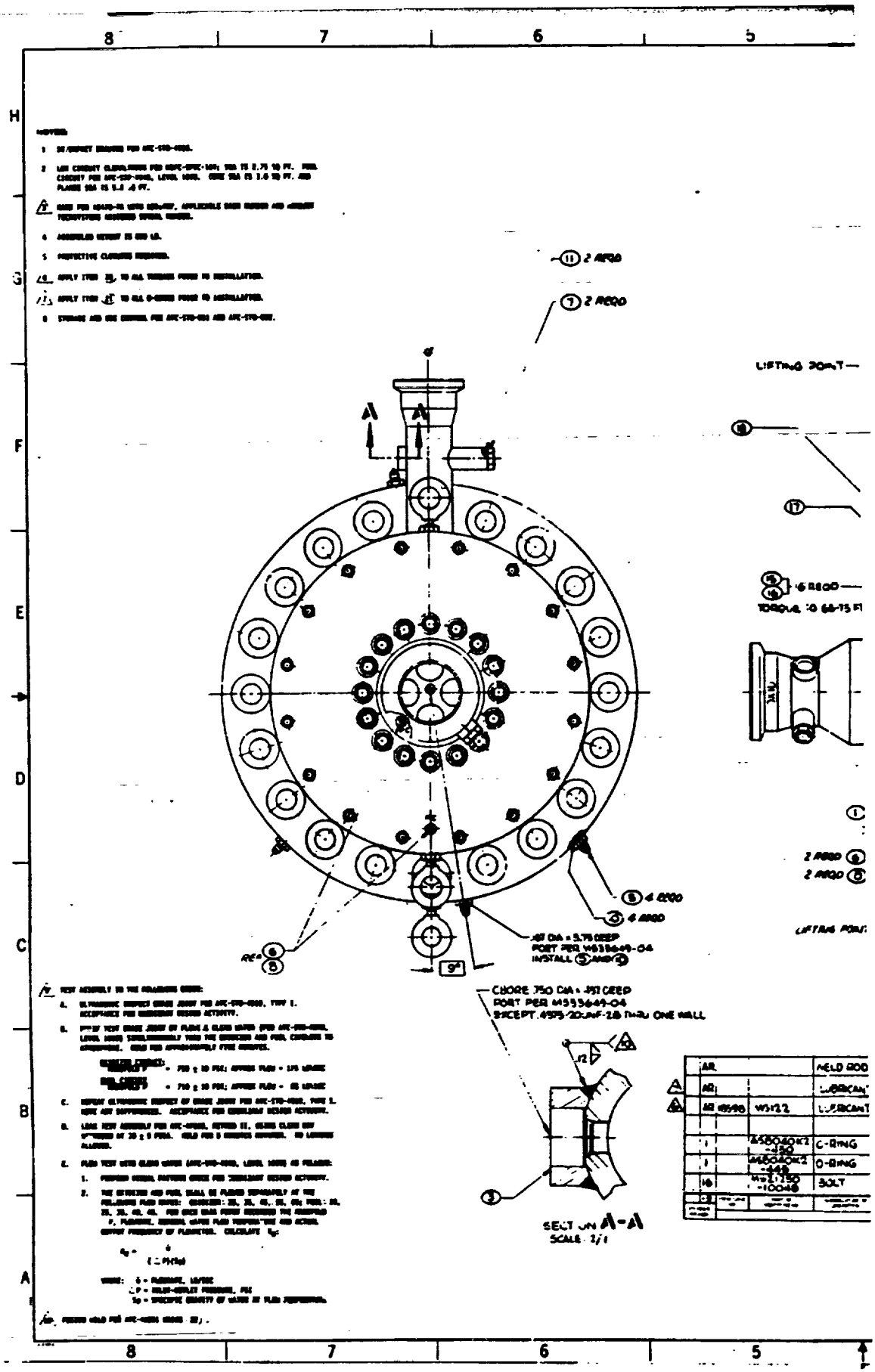

RIGINAL PAGE IS
F POOR QUALITY

FOLDOUT FRAME 1

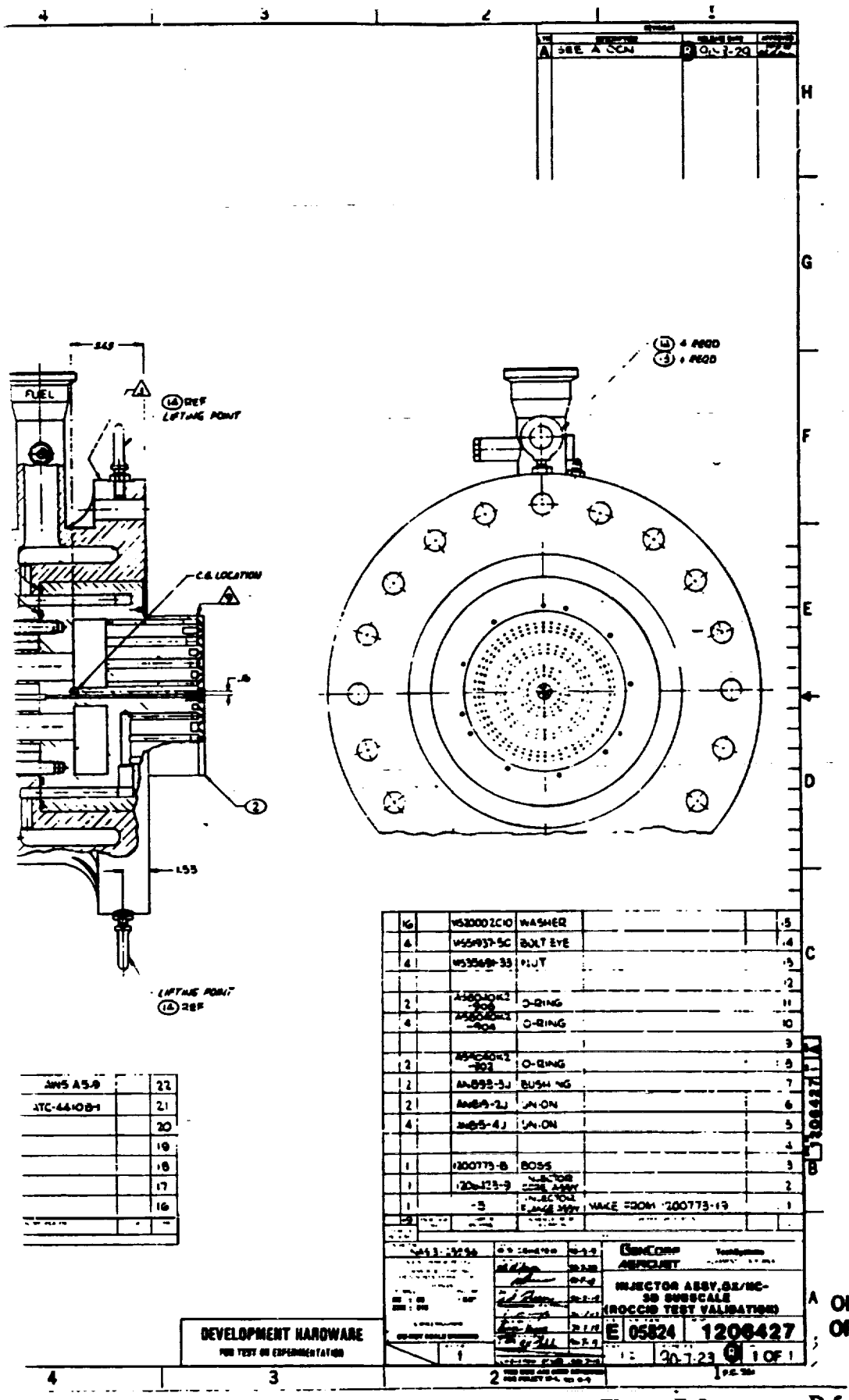

ORIGINAL PAGE
OF POOR QUALI

Figure D-3

FOLDOUT FRAME

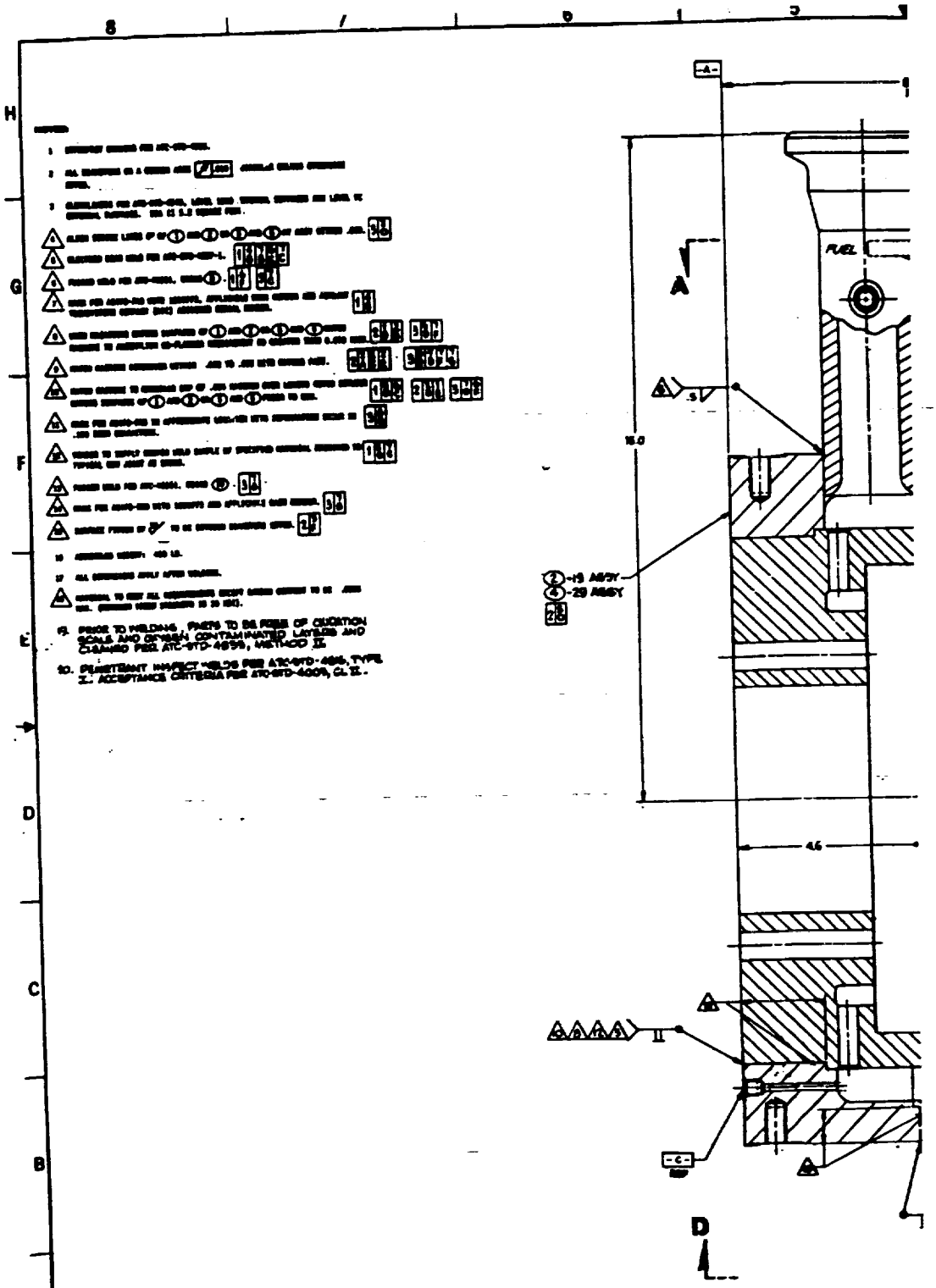

ORIGINAL PAGE IS
OF POOR QUALITY

FOLDOUT FRAME

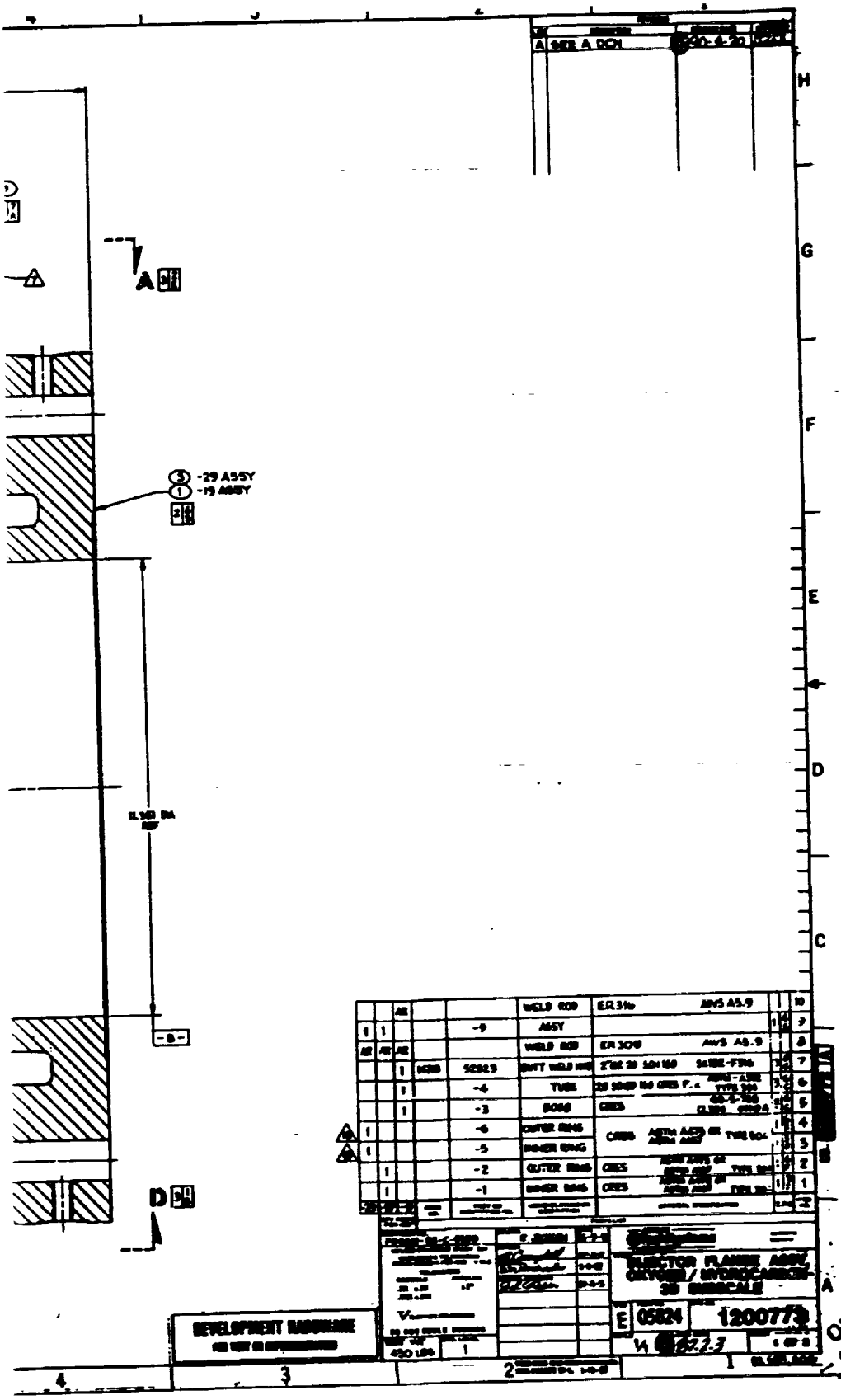

Figure D-4

FOLDOUT FRAME

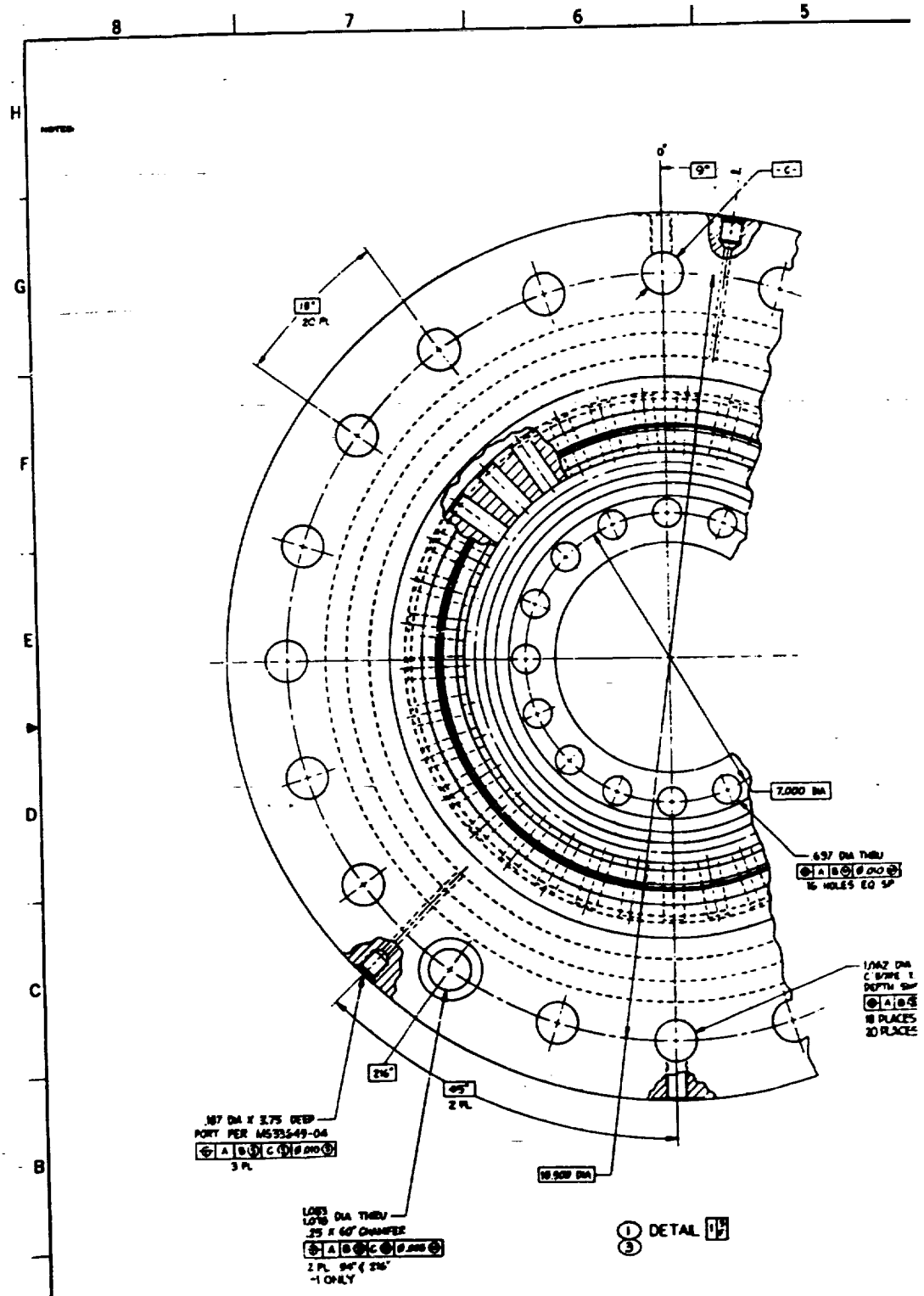

ORIGINAL PAGE IS
OF POOR QUALITY

FOLDOUT FRAME

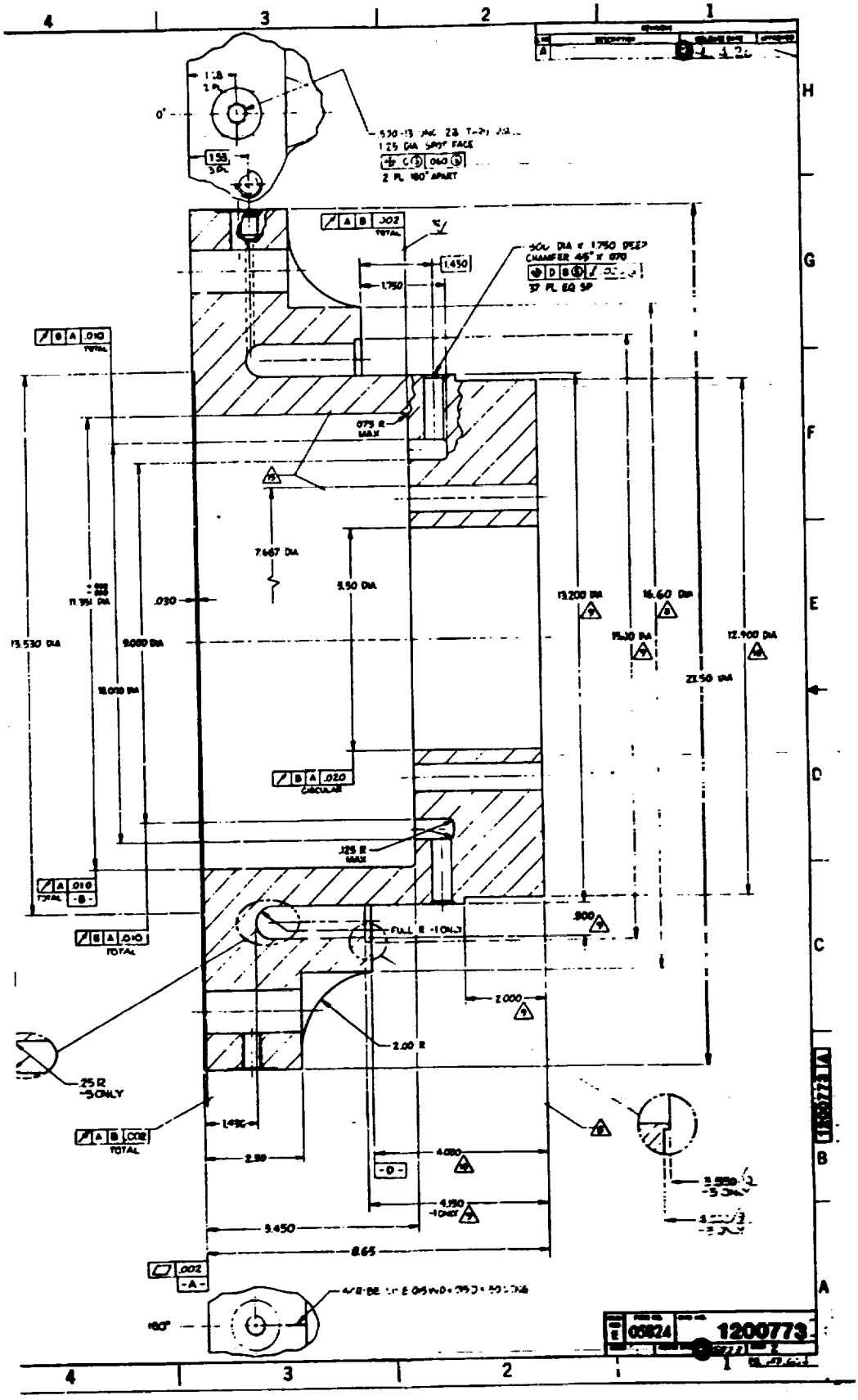

Figure D-5

D-7

FOLDOUT FRAME 2.

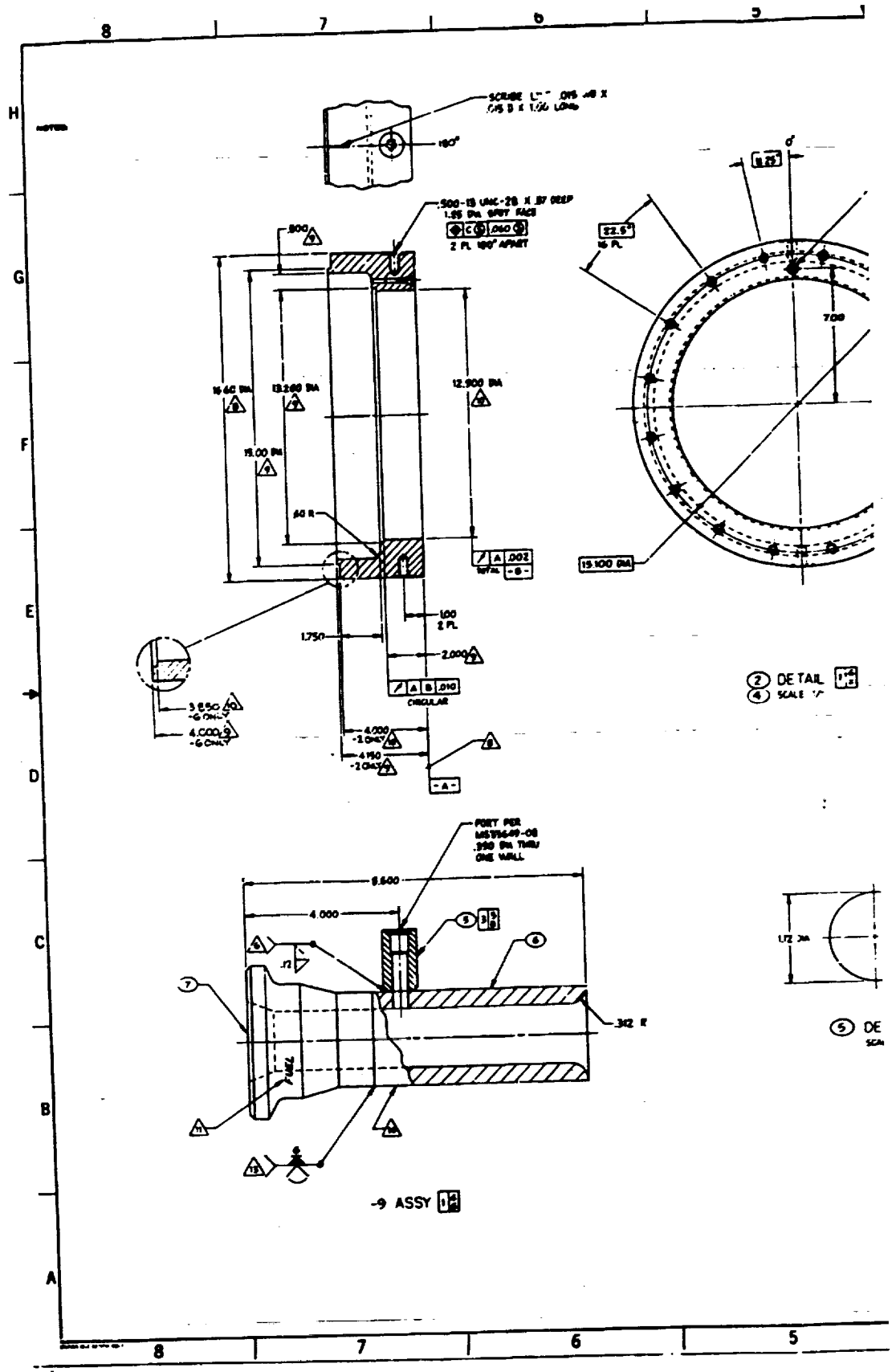

FOLDOUT FRAME

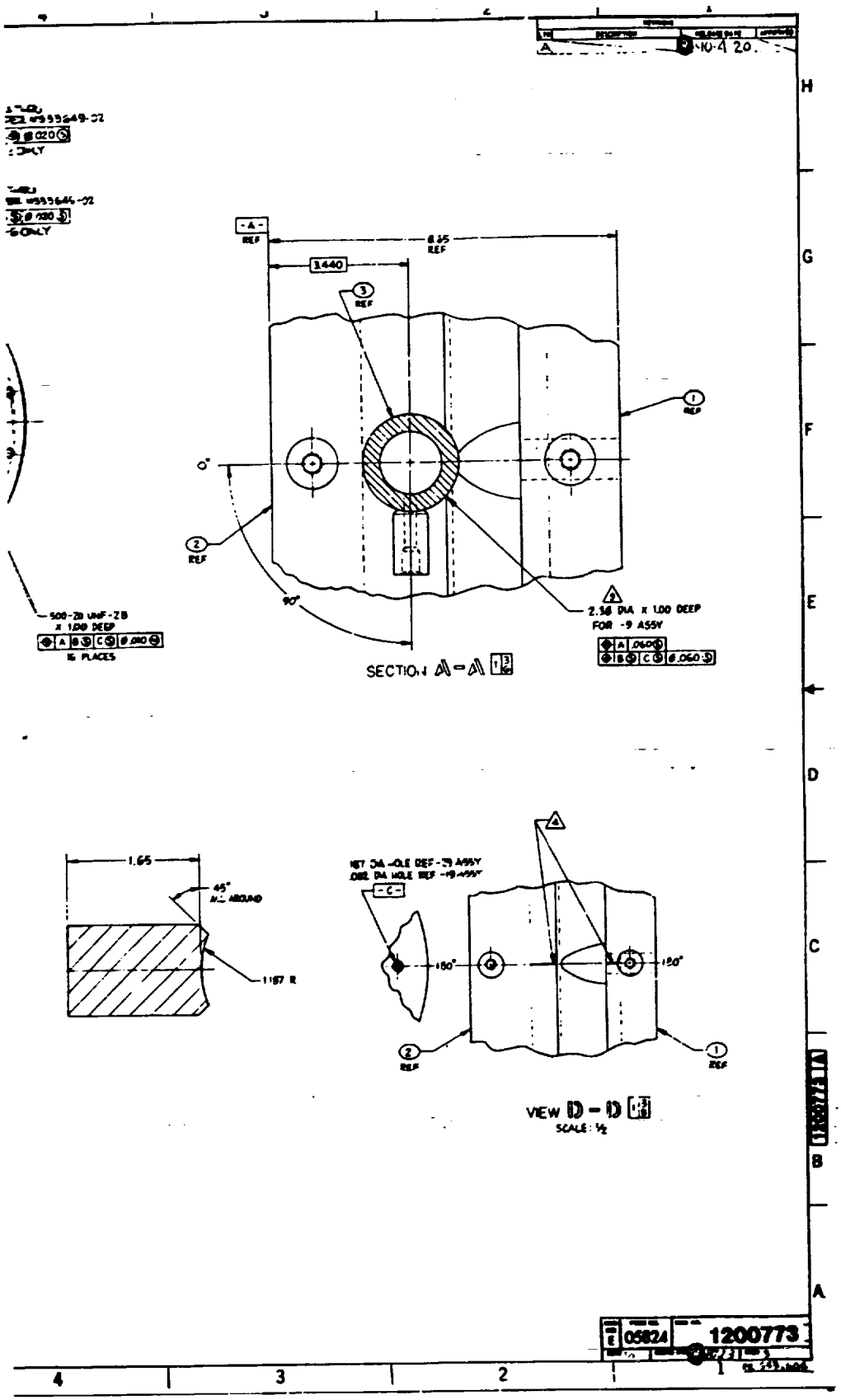

Figure D-6

FOLDOUT FRAME

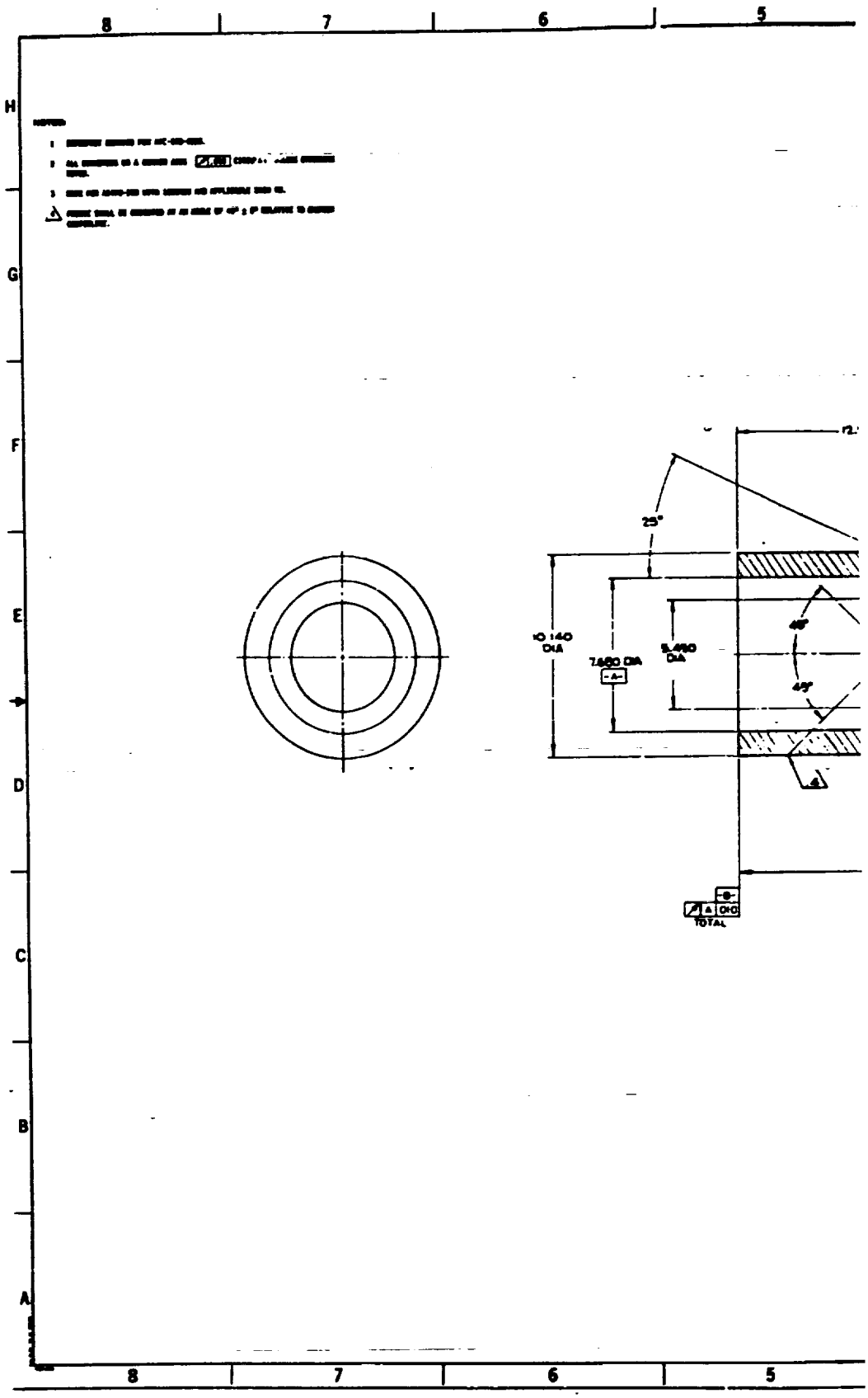

FOLDOUT FRAME

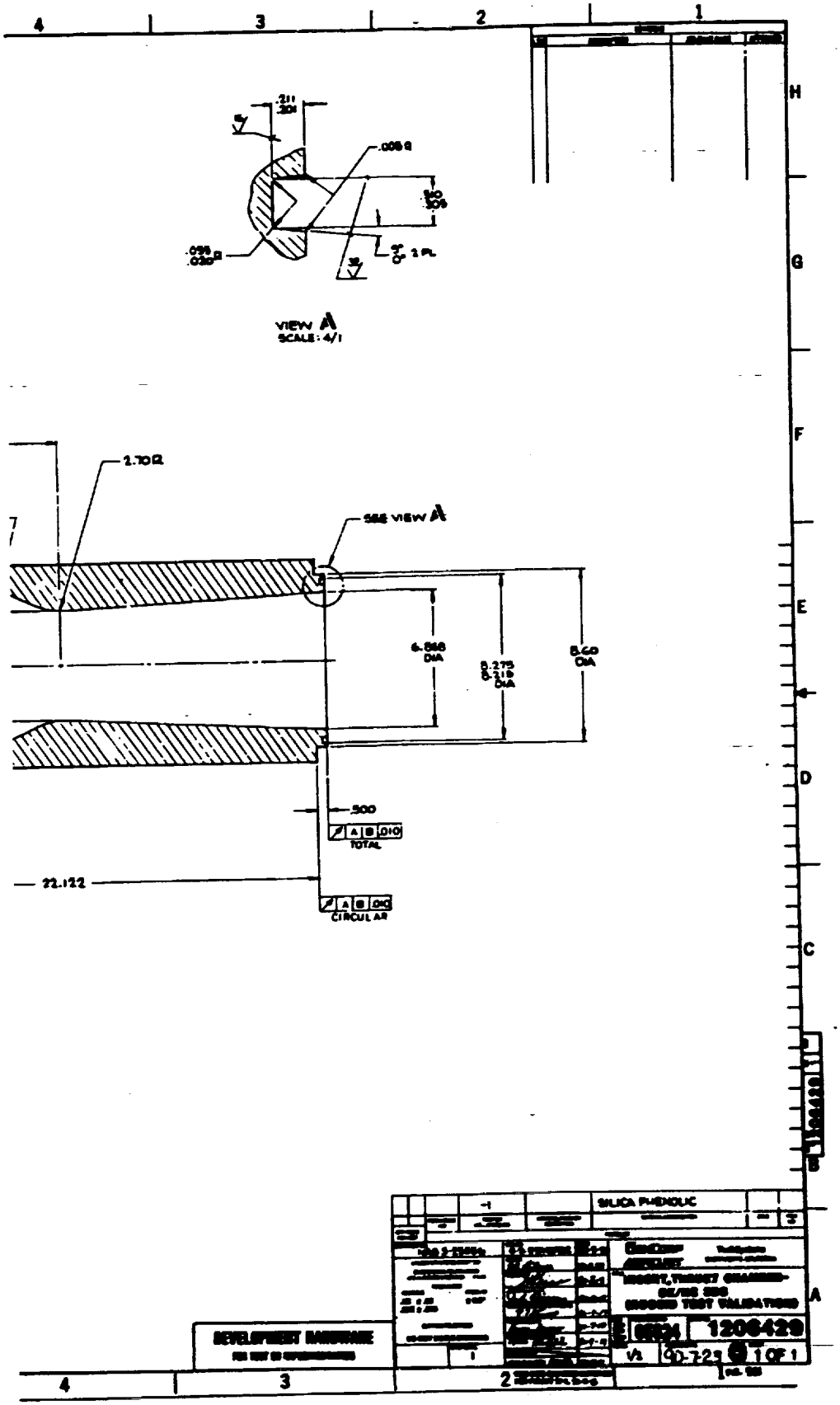

Figure D-7

FOLDOUT FRAME 2

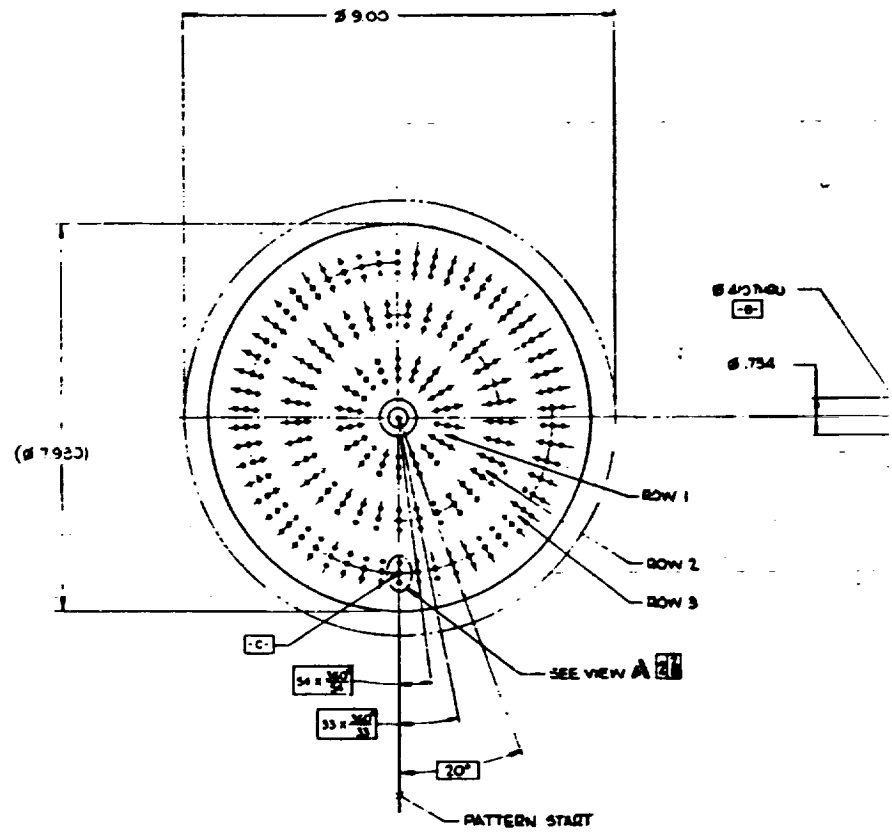

② DETAIL

ROW NO.	R BASIC	START ANGLE	REPEAT ANGLE BASIC	NO. OF PATTERNS
1	1.022	0°	20°	18
2	2.124	0°	10.909°	33
3	3.227	0°	6.666°	54

FOLDOUT FRAME

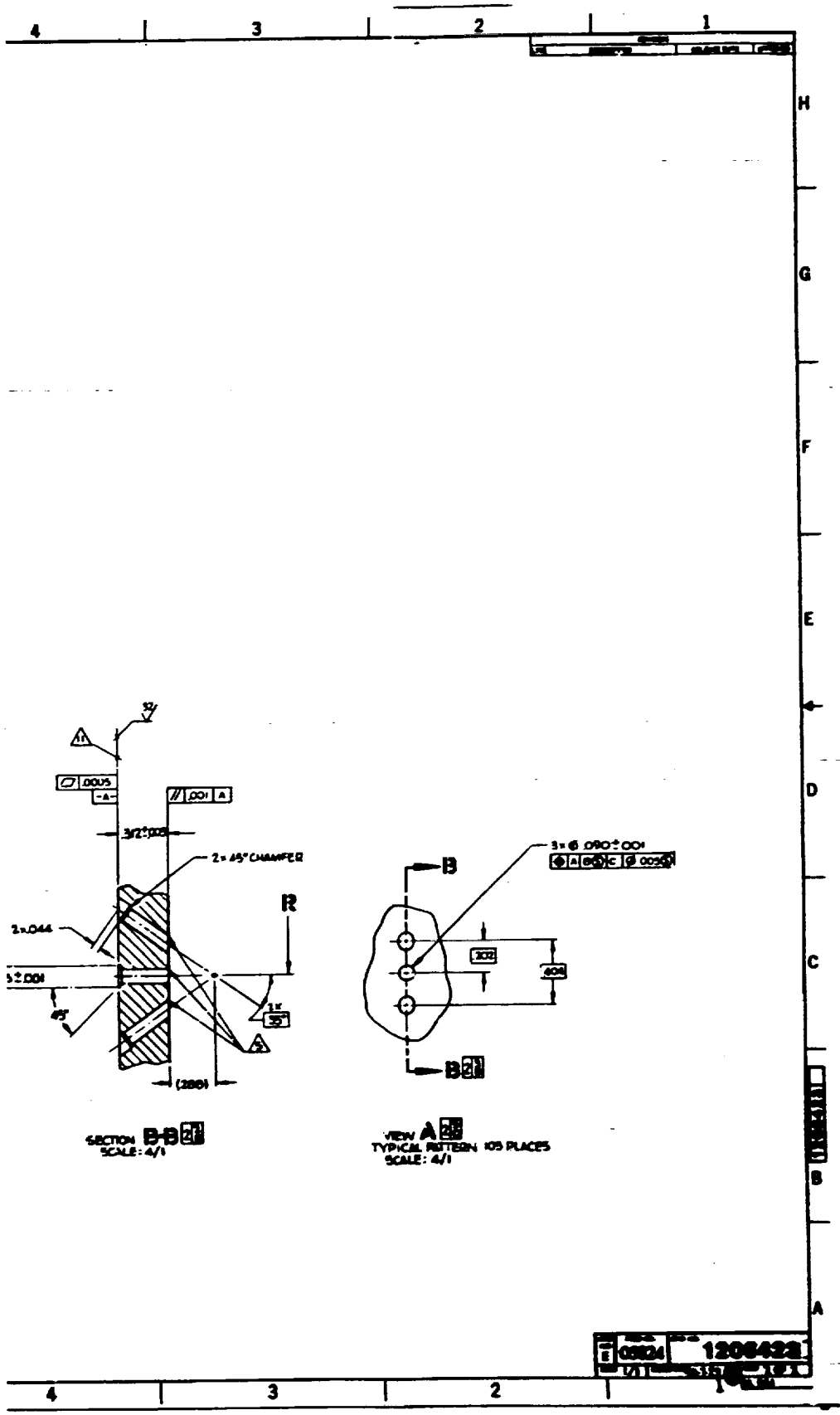
2 x 45° CHAMFER
2 x .044
45°
(.280)
SECTION B-B
SCALE: 4/1
3 x Ø .090 ± .001
.302
.604
VIEW A
TYPICAL PATTERN 105 PLACES
SCALE: 4/1
1206422

Figure D-8

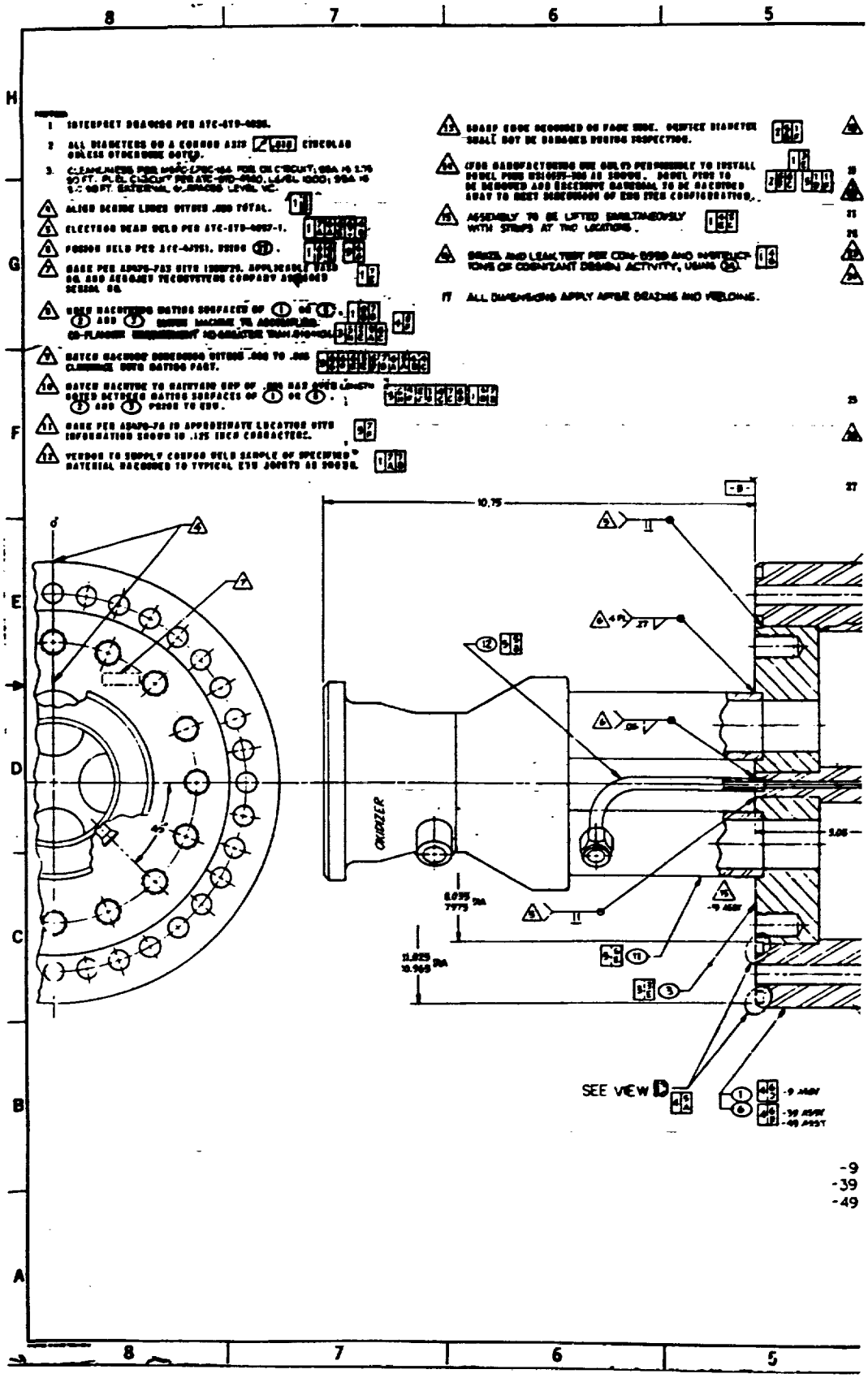

ORIGINAL PAGE IS OF POOR QUALITY

FOLDOUT FRAME

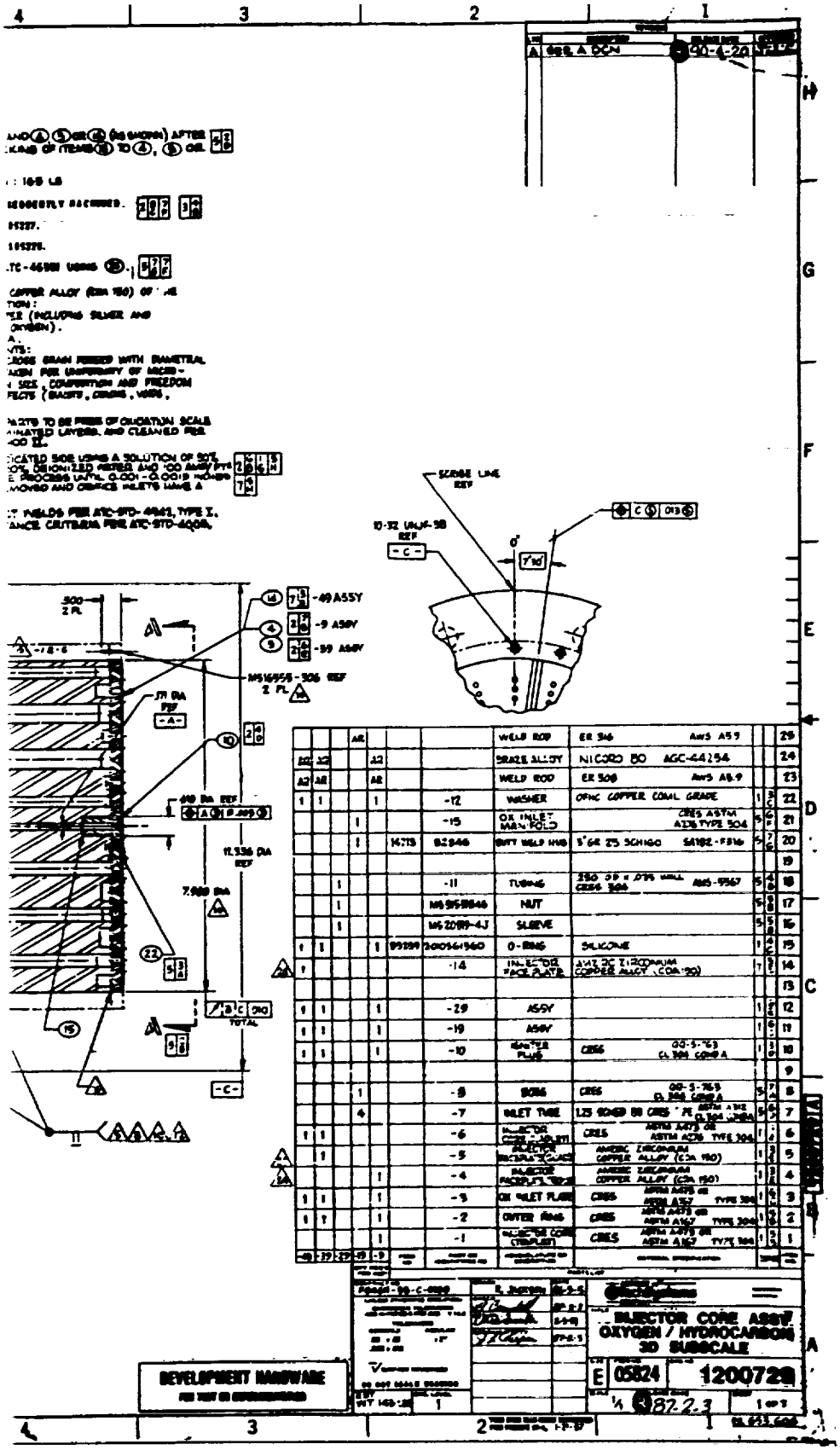

ORIGINAL PAGE IS
OF POOR QUALITY

Figure D-9

FOLDOUT FRAME

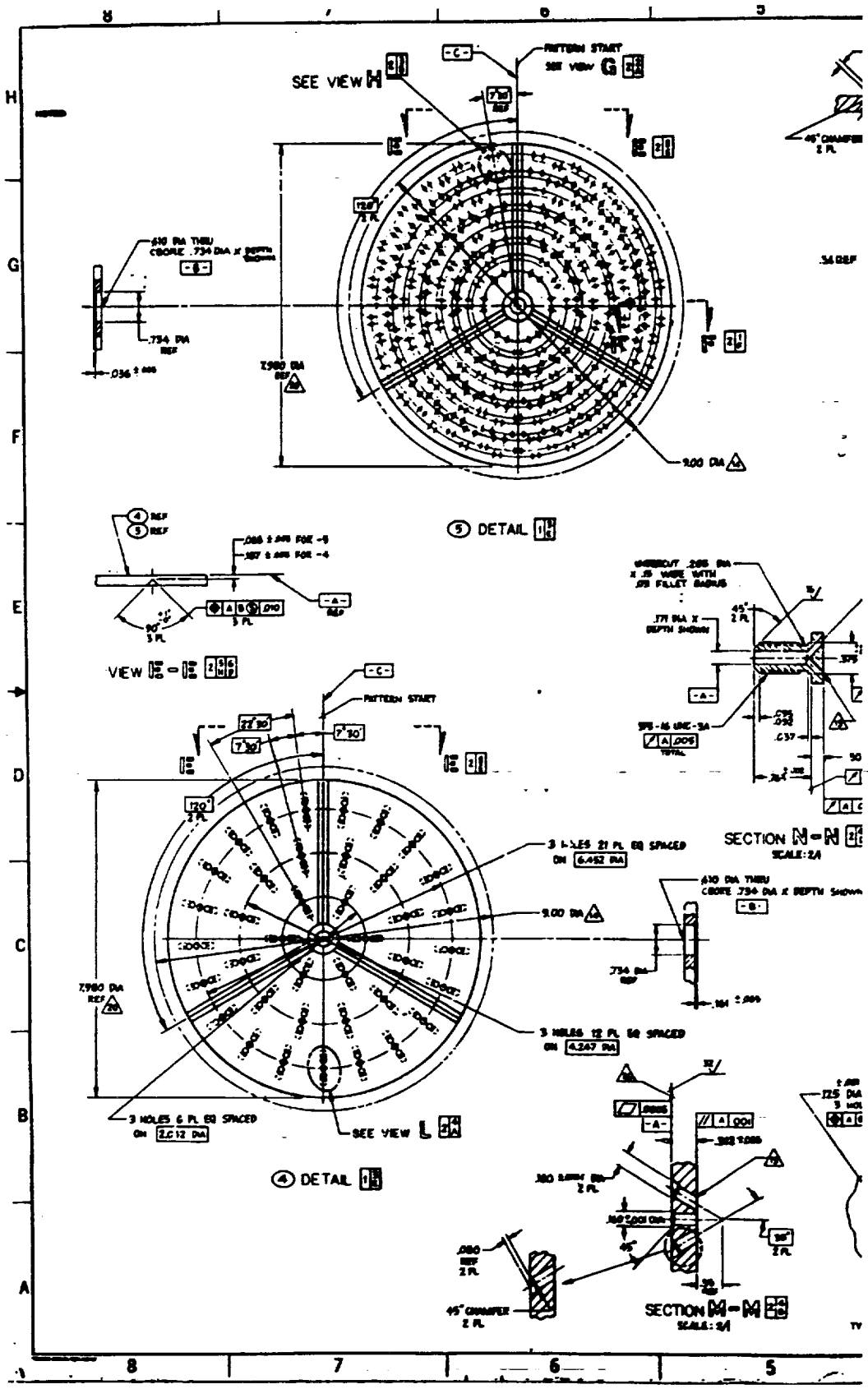

FOLDOUT FRAME

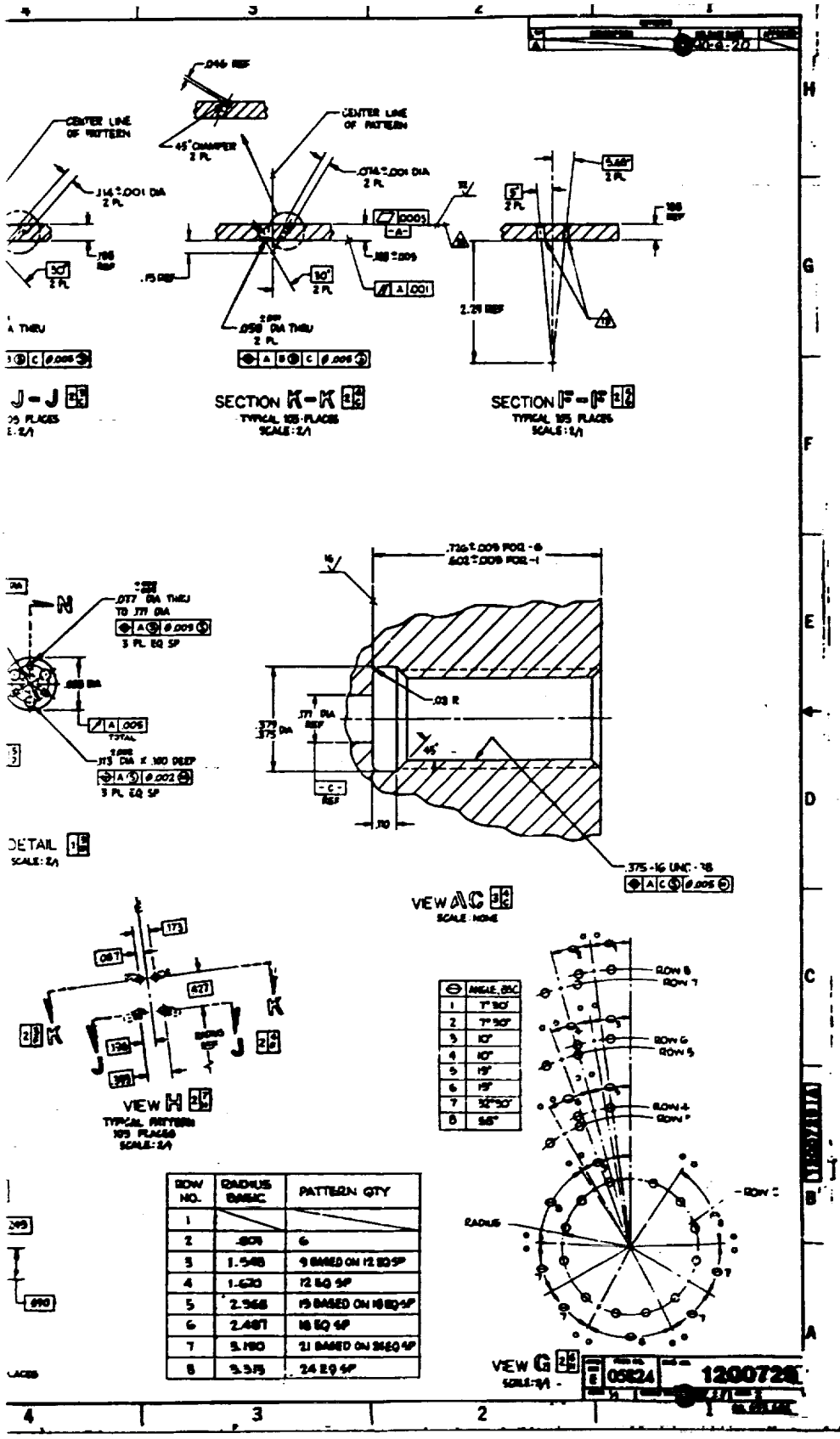

⊖	ANGLE, BAC
1	7° 30'
2	7° 30'
3	10°
4	10°
5	15°
6	15°
7	22° 30'
8	30°

ROW NO.	RADIUS BASIC	PATTERN QTY
1		
2	.809	6
3	1.548	9 BASED ON 12 EQ SP
4	1.620	12 EQ SP
5	2.366	15 BASED ON 18 EQ SP
6	2.487	18 EQ SP
7	3.180	21 BASED ON 24 EQ SP
8	3.375	24 EQ SP

Figure D-10

FOLDOUT FRAME 2

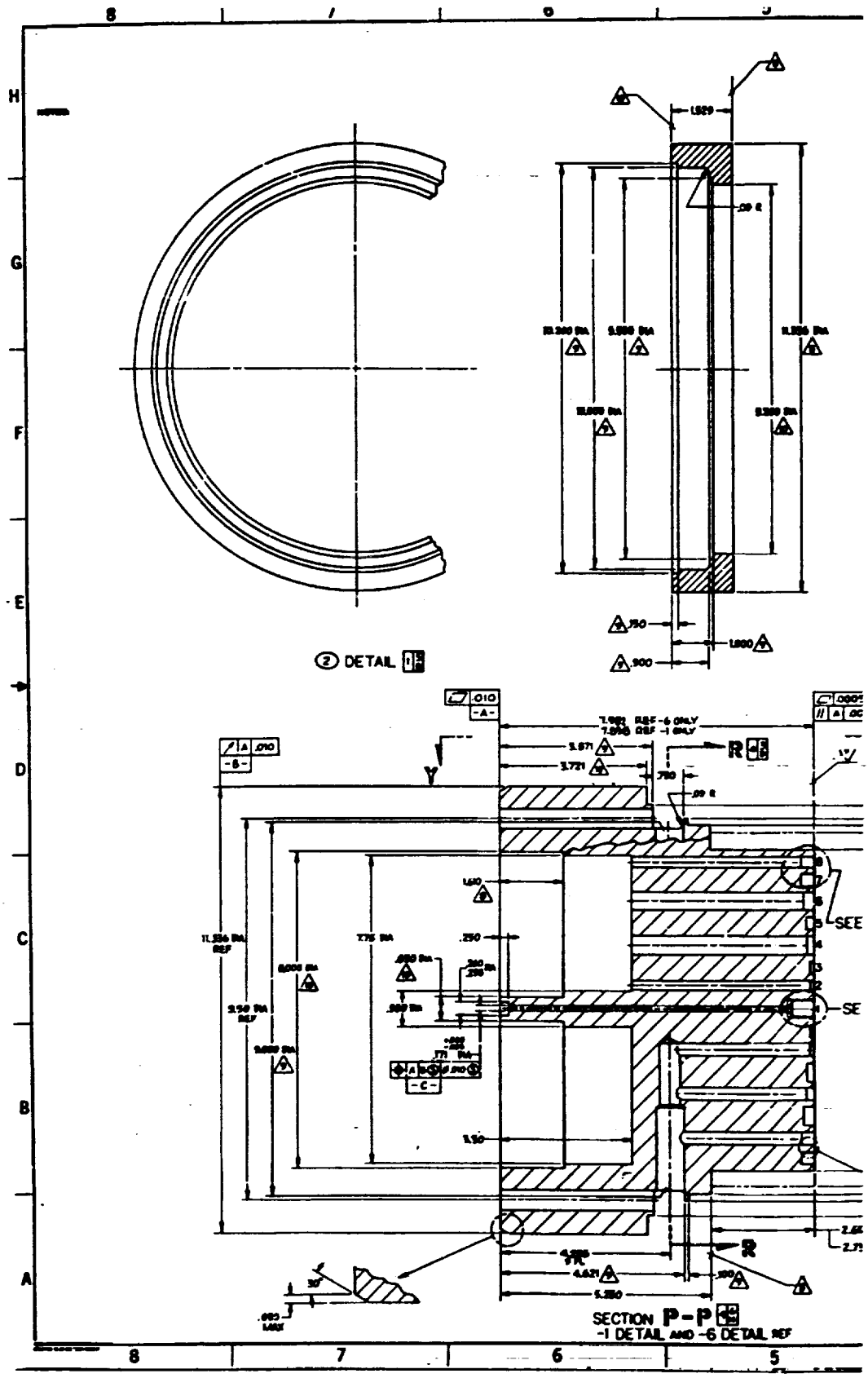

FOLDOUT FRAME

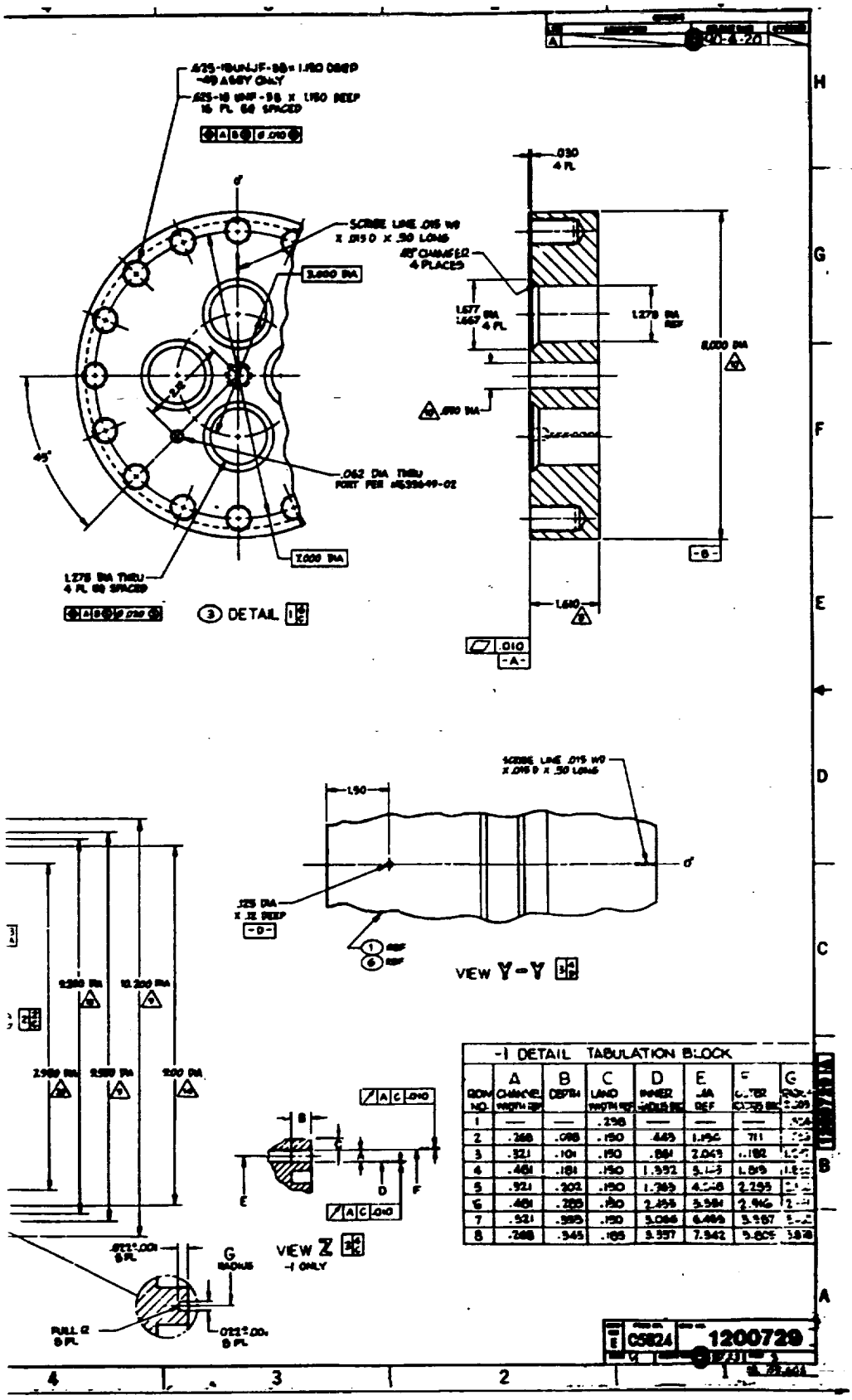

Figure D-11

2.

FOLDOUT FRAME

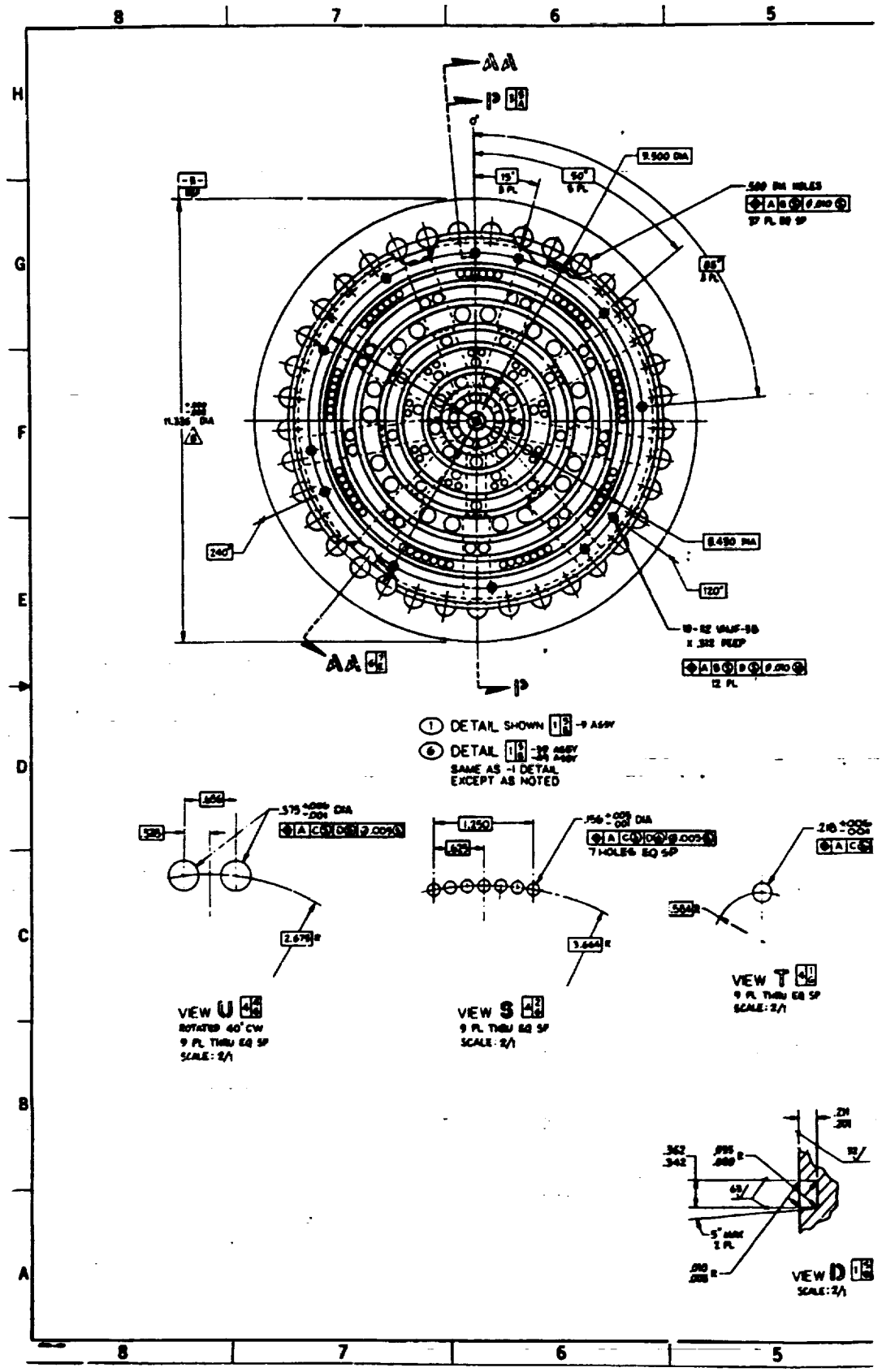

FOLDOUT FRAME

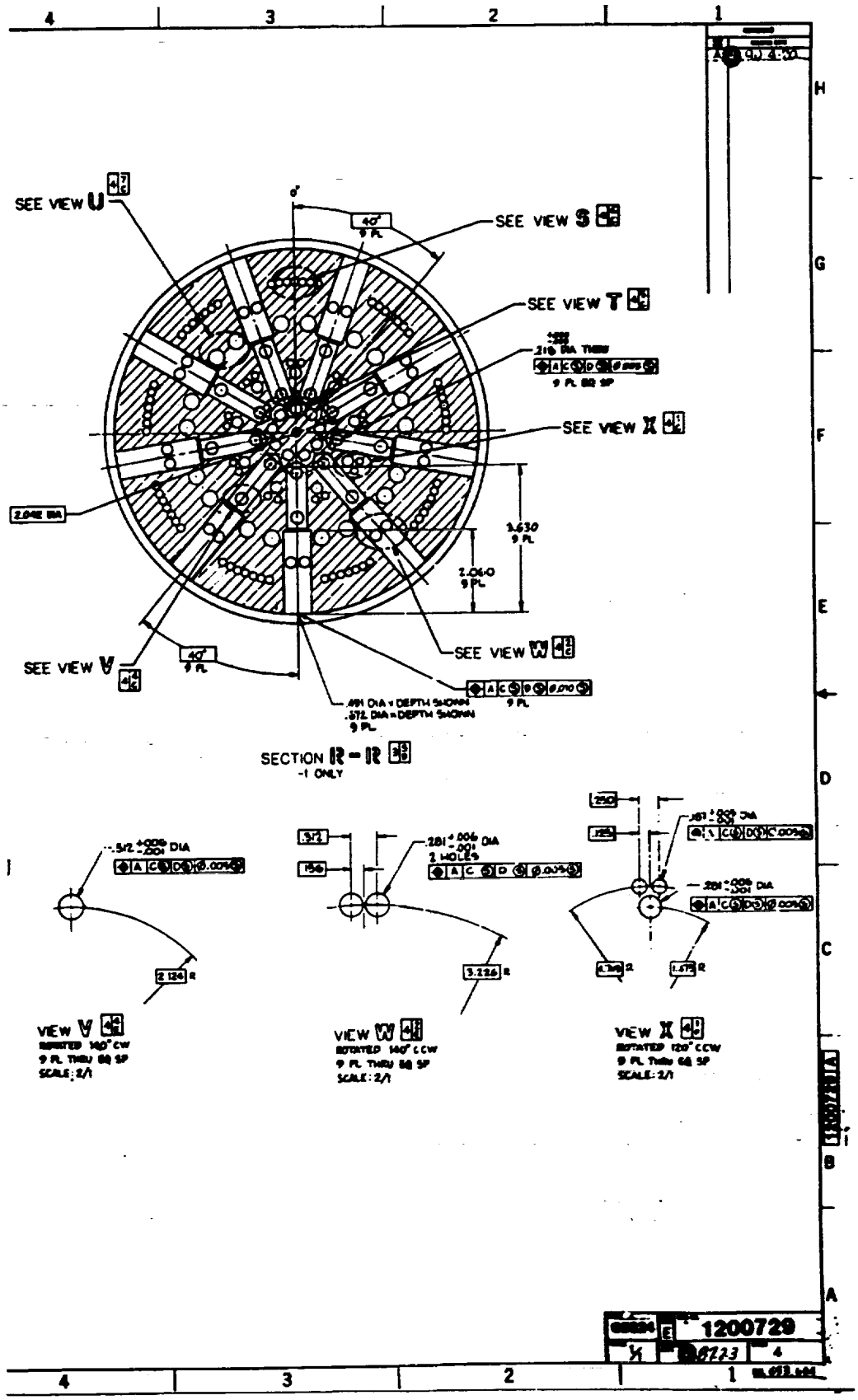

Figure D-12 D-14

FOLDOUT FRAME

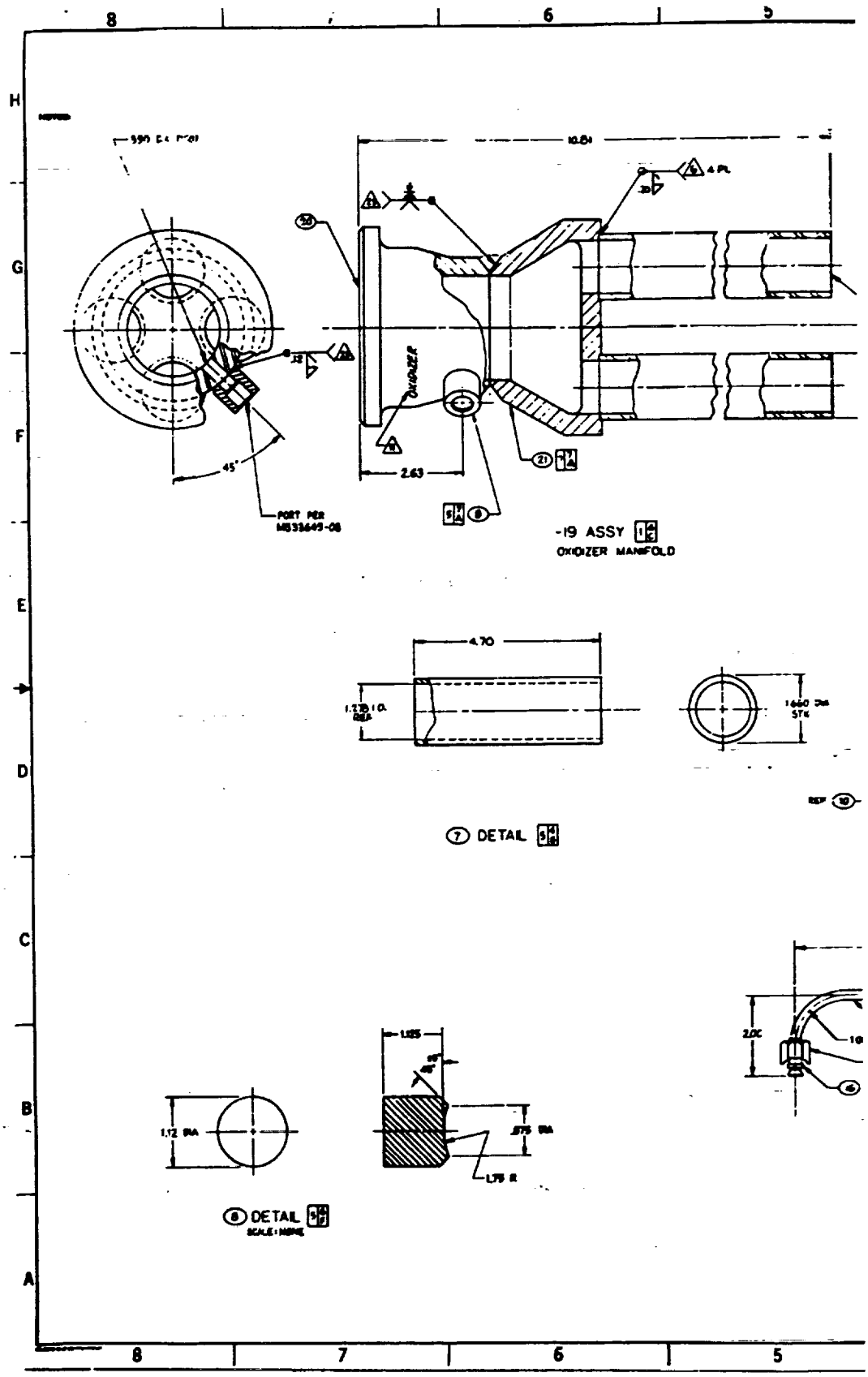

FOLDOUT FRAME

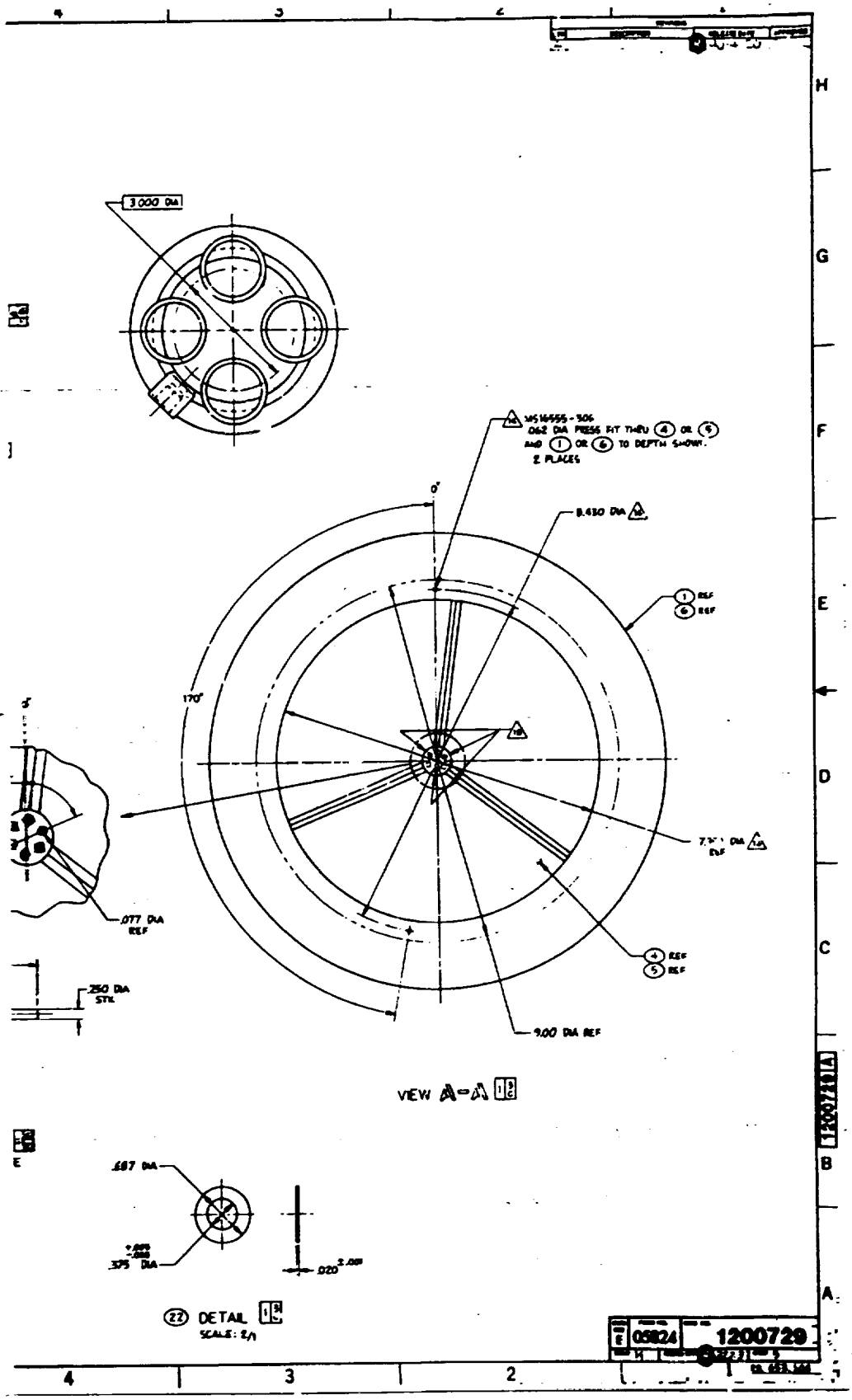

Figure D-13

2

FOLDOUT FRAME

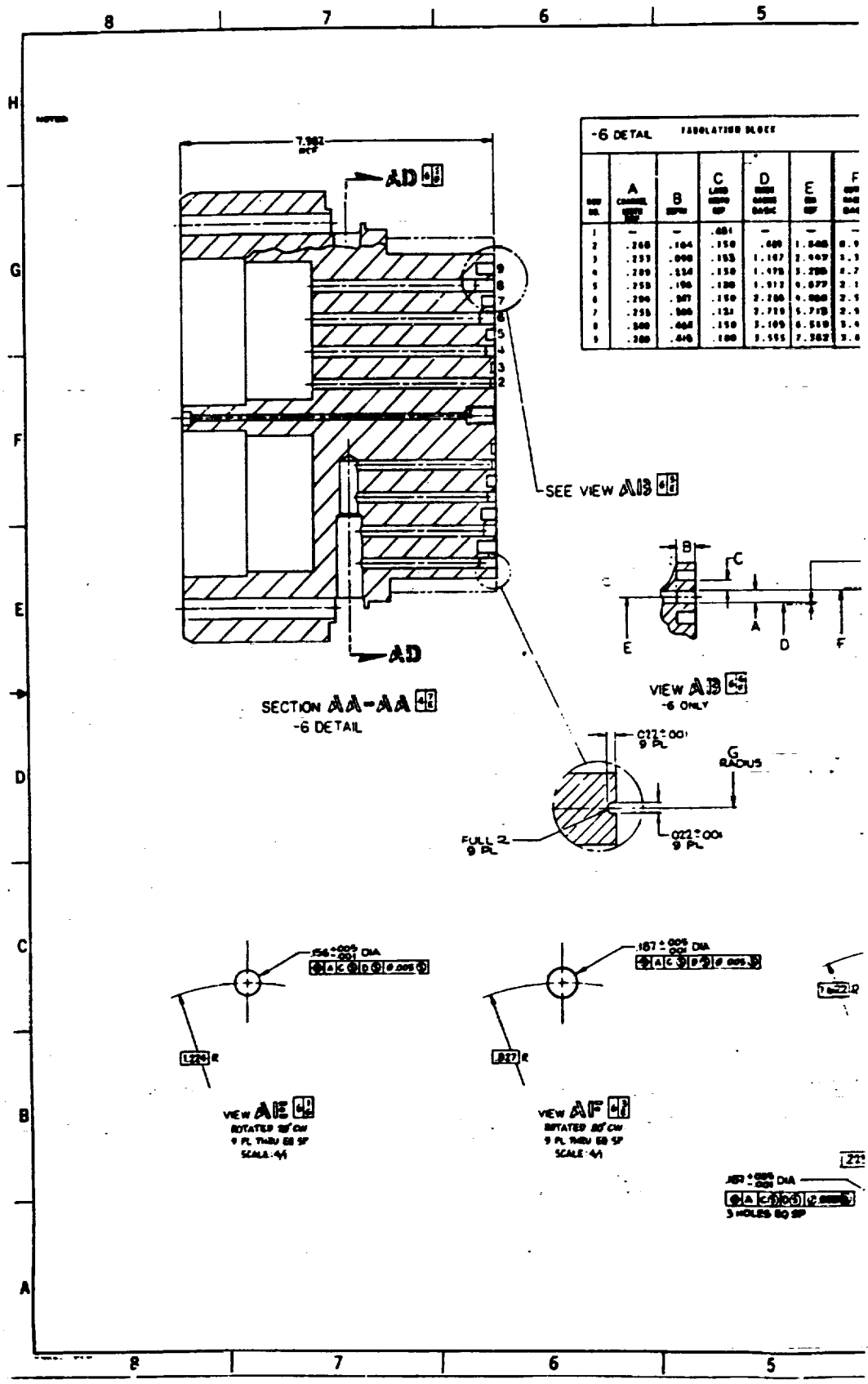

FOLDOUT FRAME

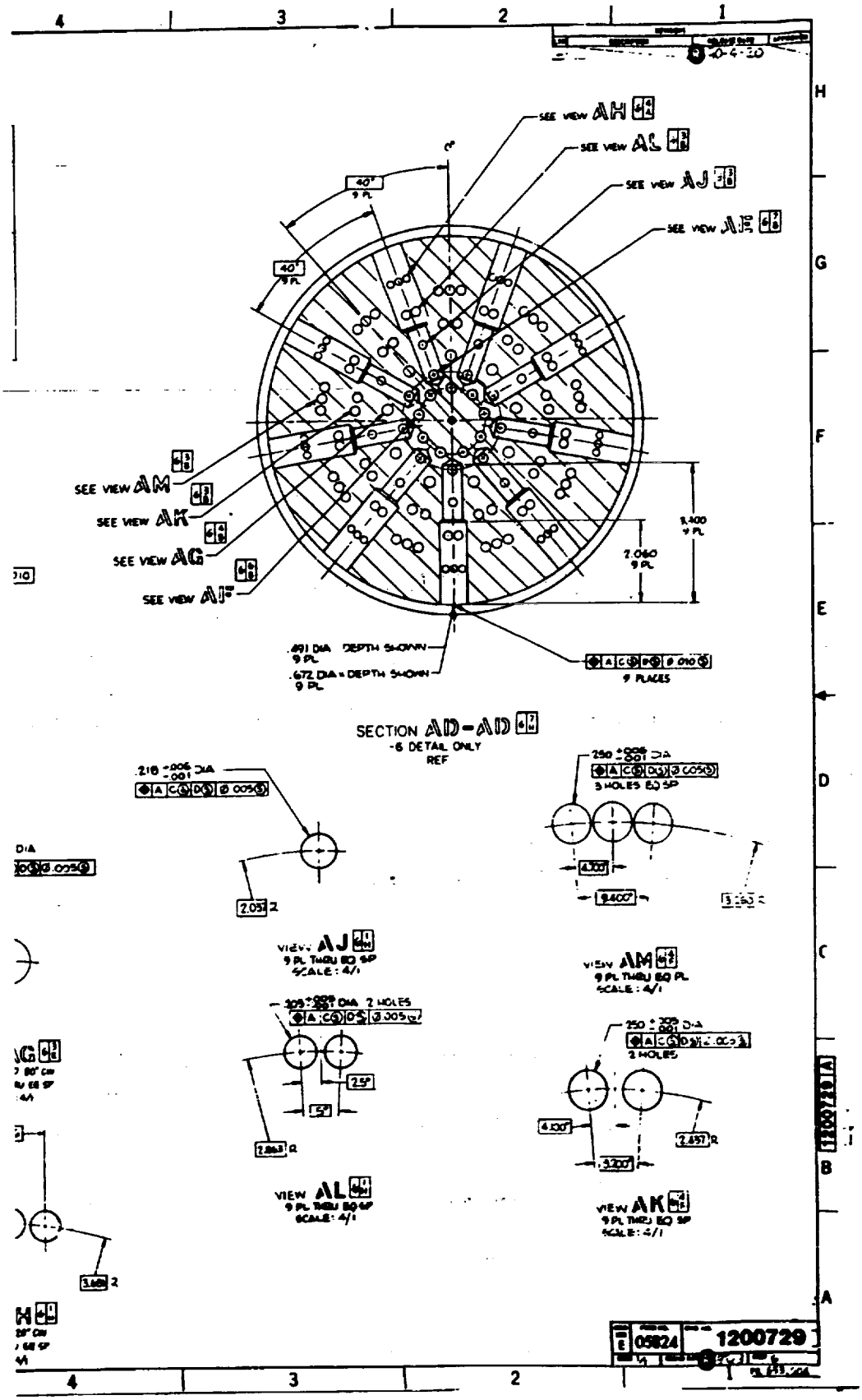

Figure D-14

FOLDOUT FRAME

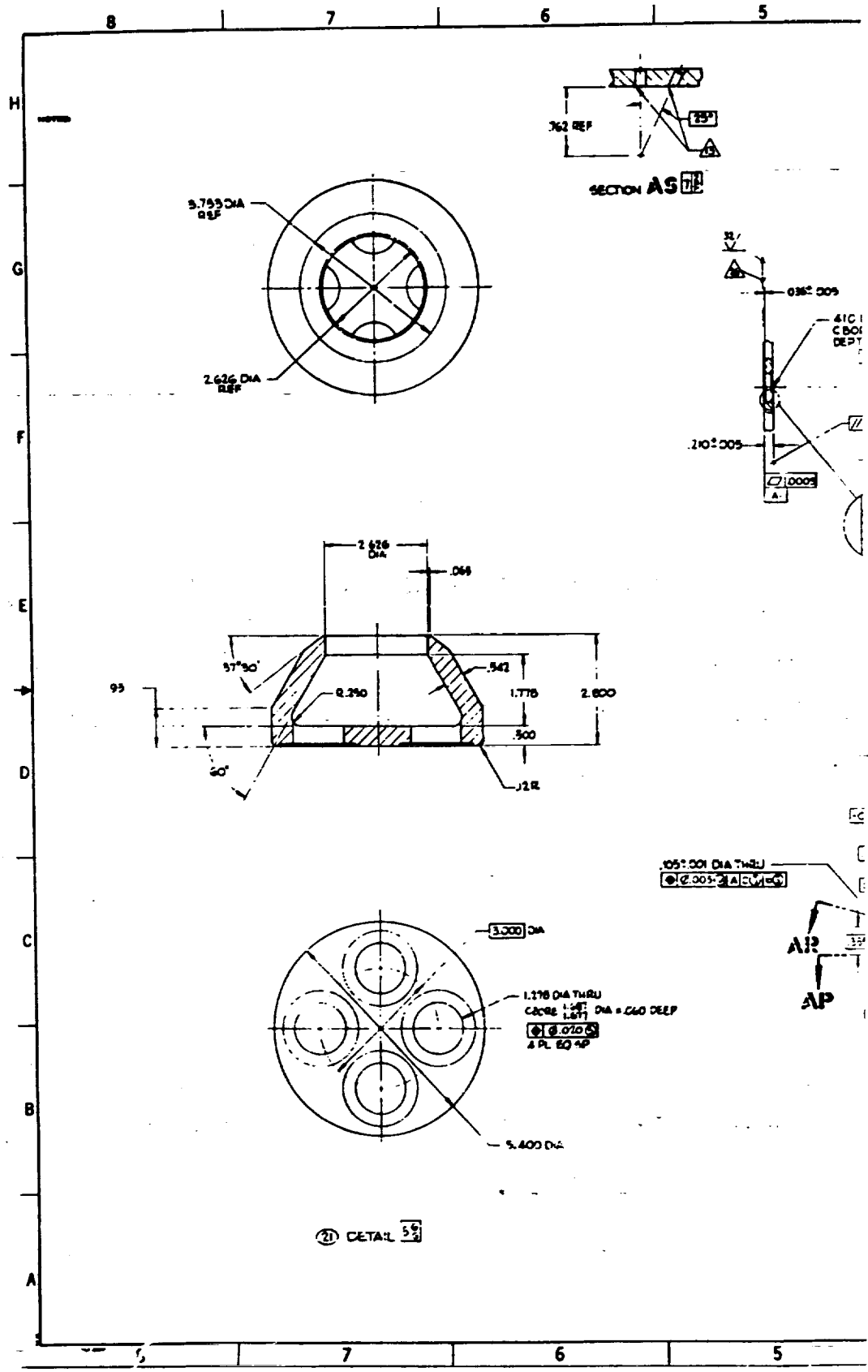

FOLDOUT FRAME

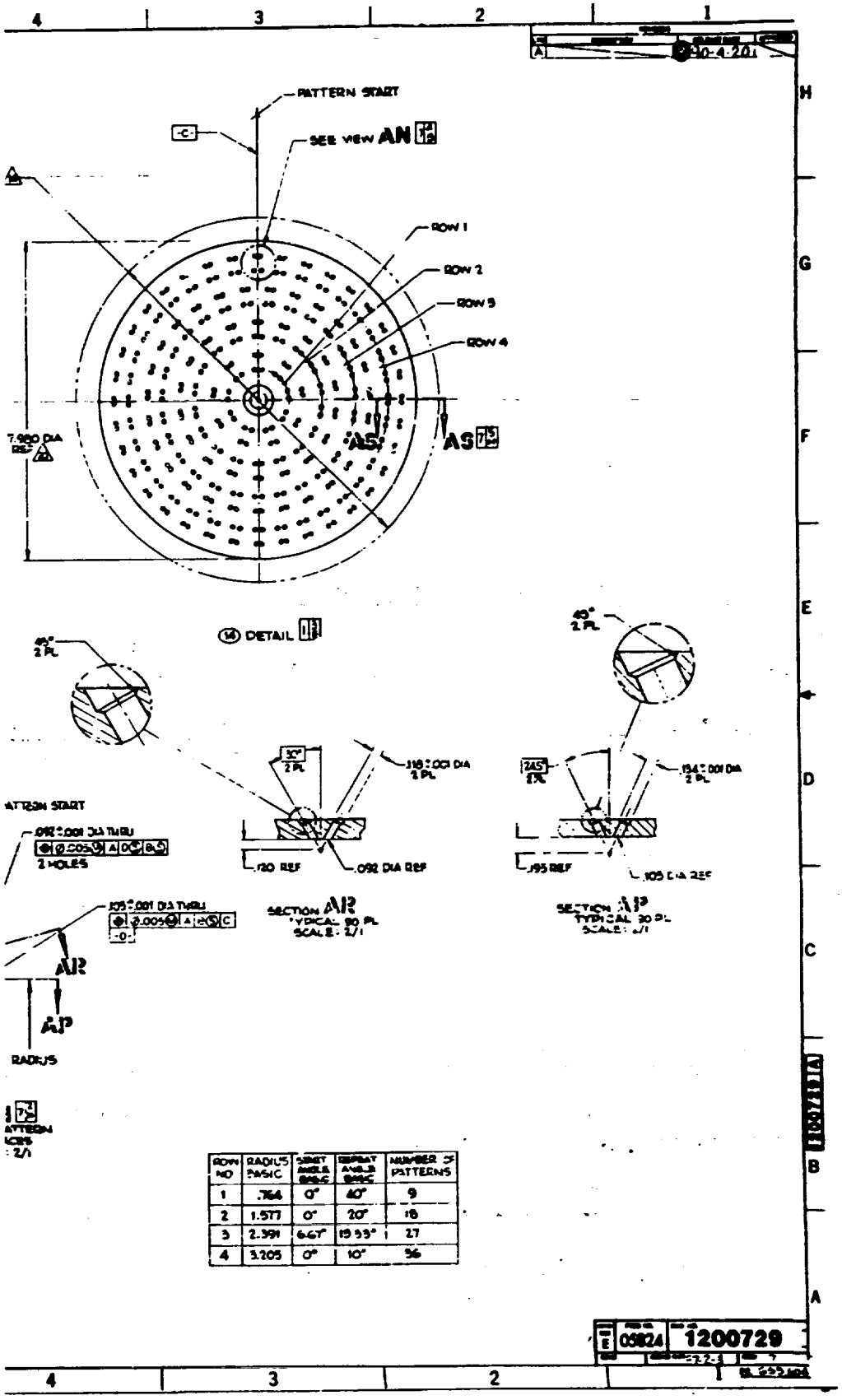

ROW NO	RADIUS BASIC	START ANGLE BASIC	SPACING ANGLE BASIC	NUMBER OF PATTERNS
1	.764	0°	40°	9
2	1.577	0°	20°	18
3	2.391	6.67°	13.33°	27
4	3.205	0°	10°	36

Figure D-15

FOLDOUT FRAME 2.

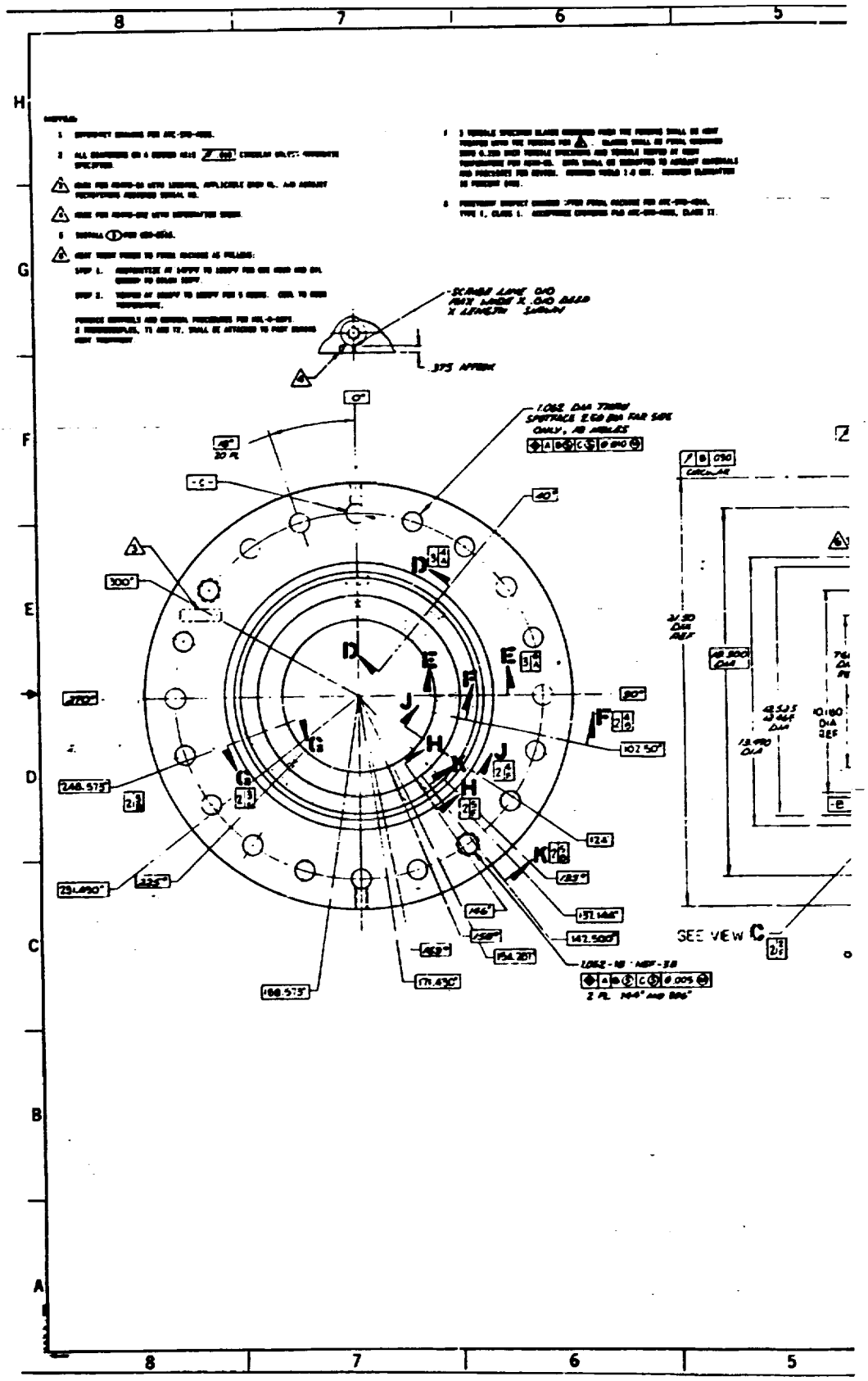

FOLDOUT FRAME

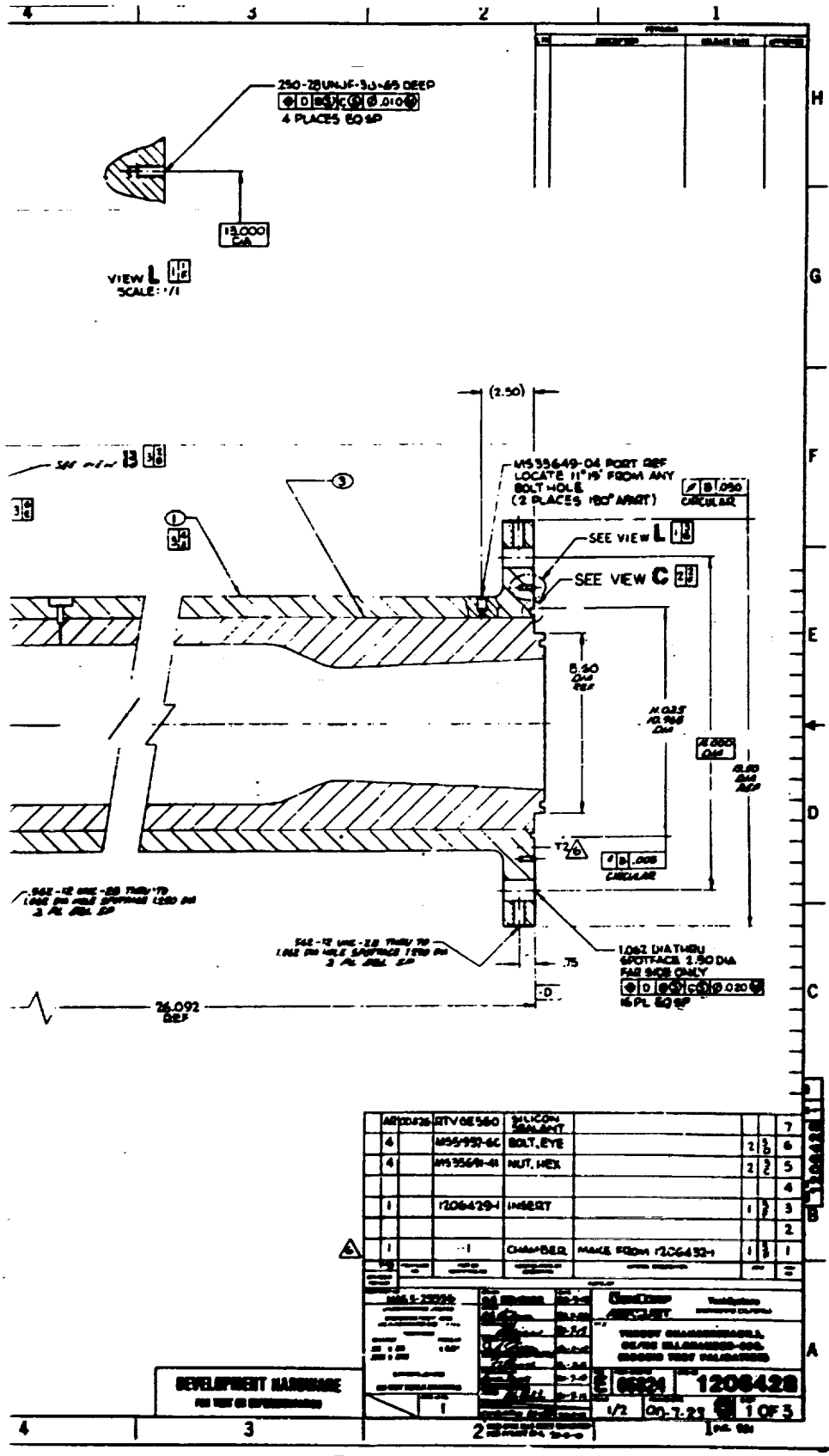

Figure D-16

2.

FOLDOUT FRAME

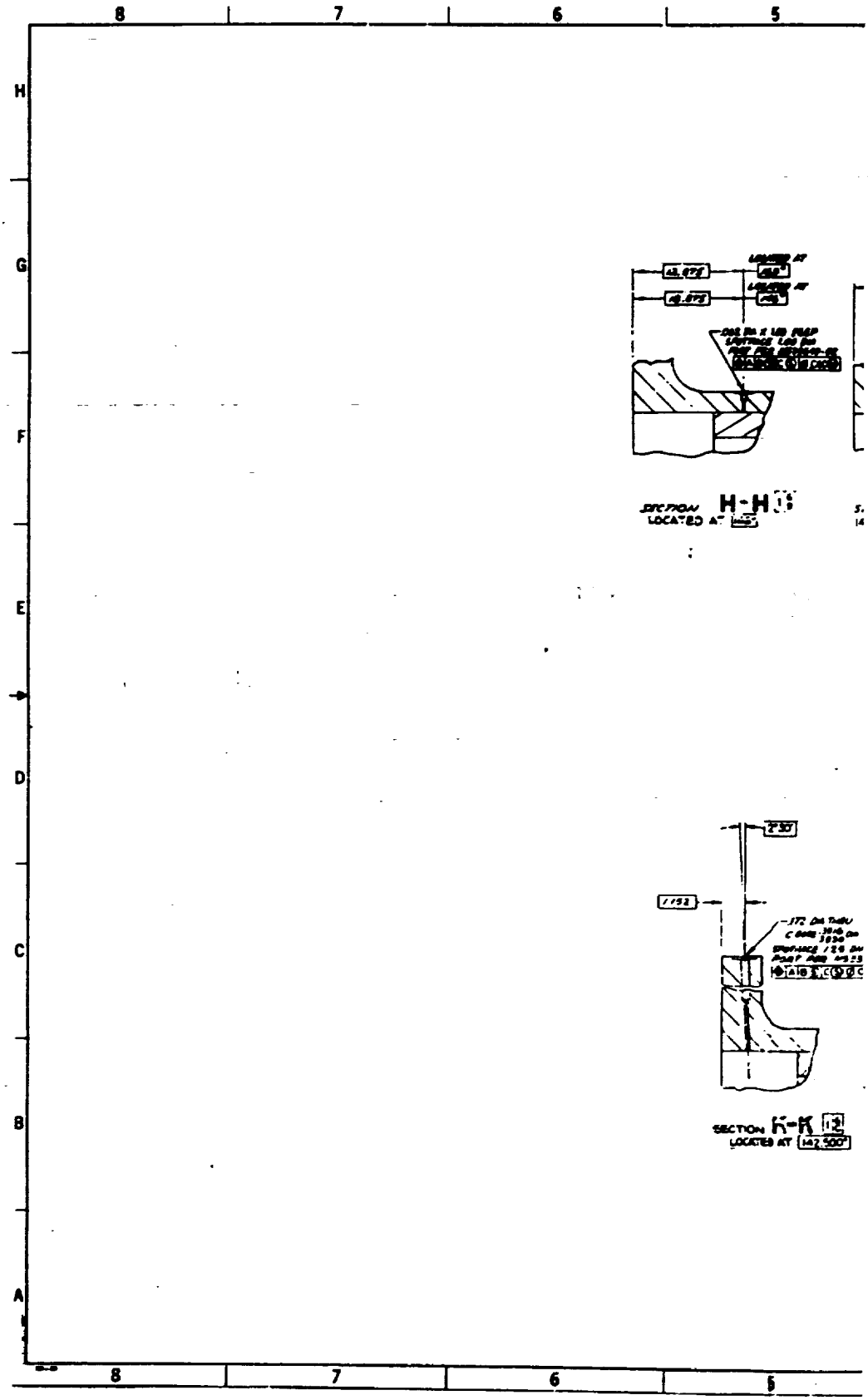

/.

FOLDOUT FRAME

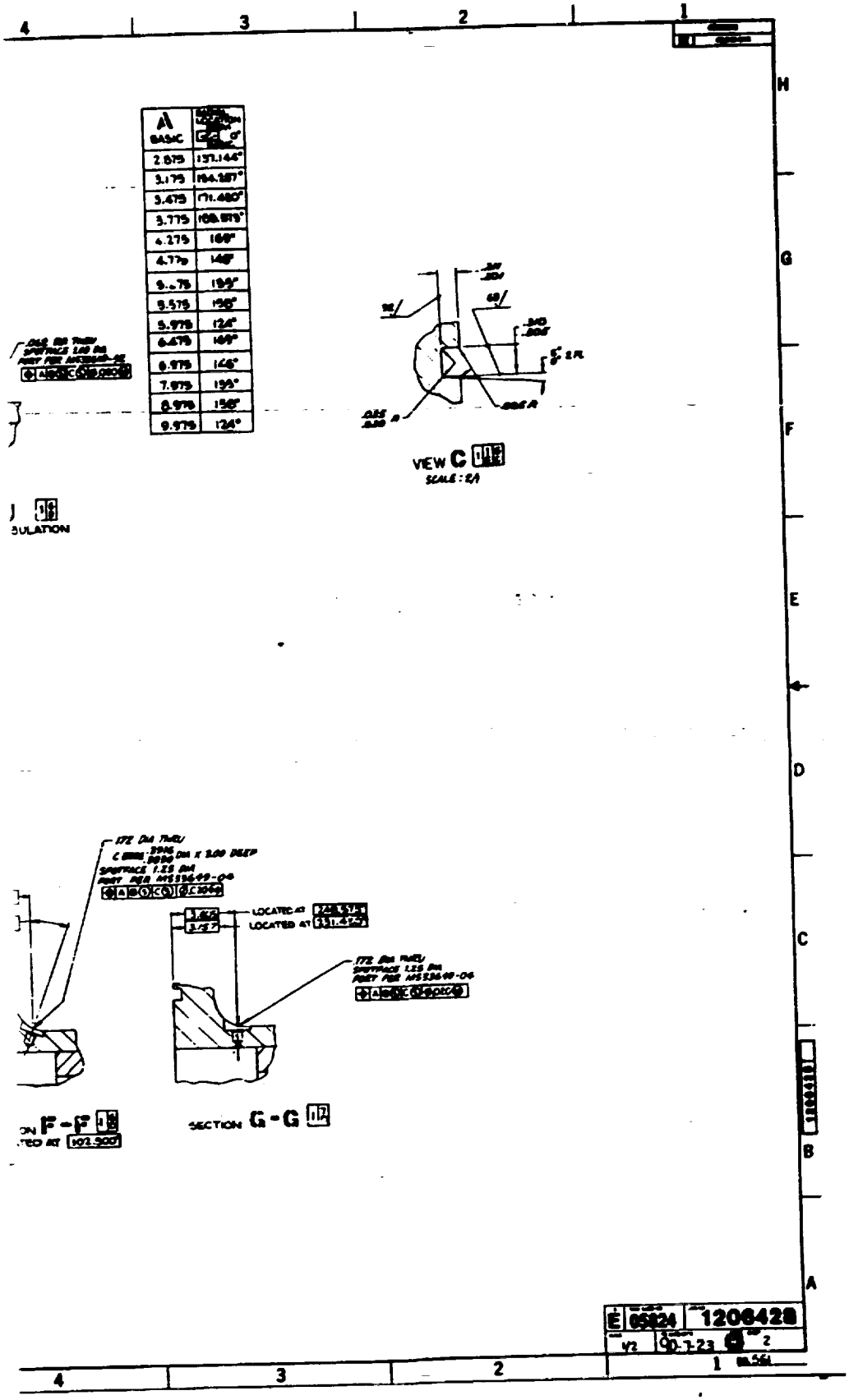

Figure D-17 D-19 2.

FOLDOUT FRAME

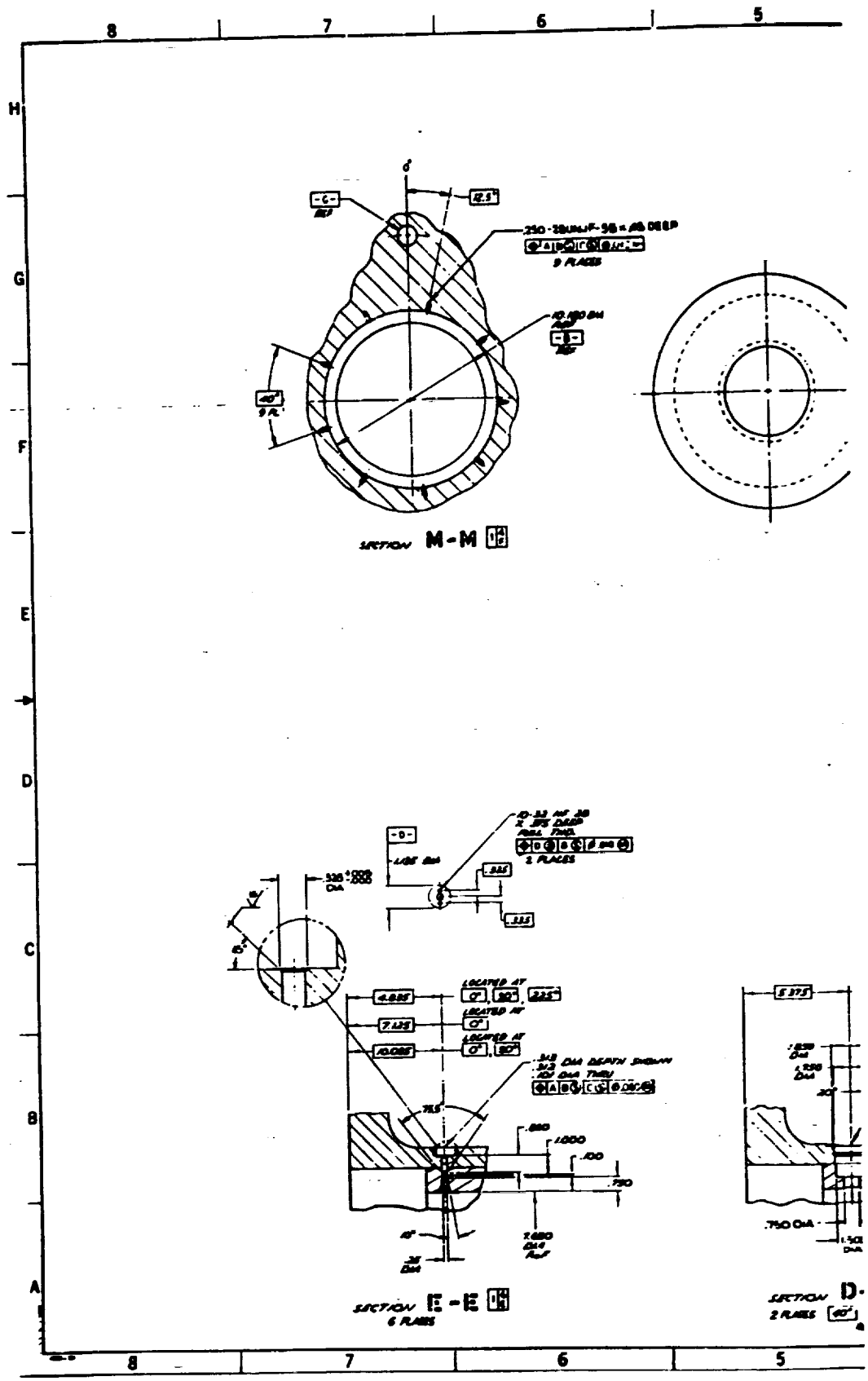

FOLDOUT FRAME

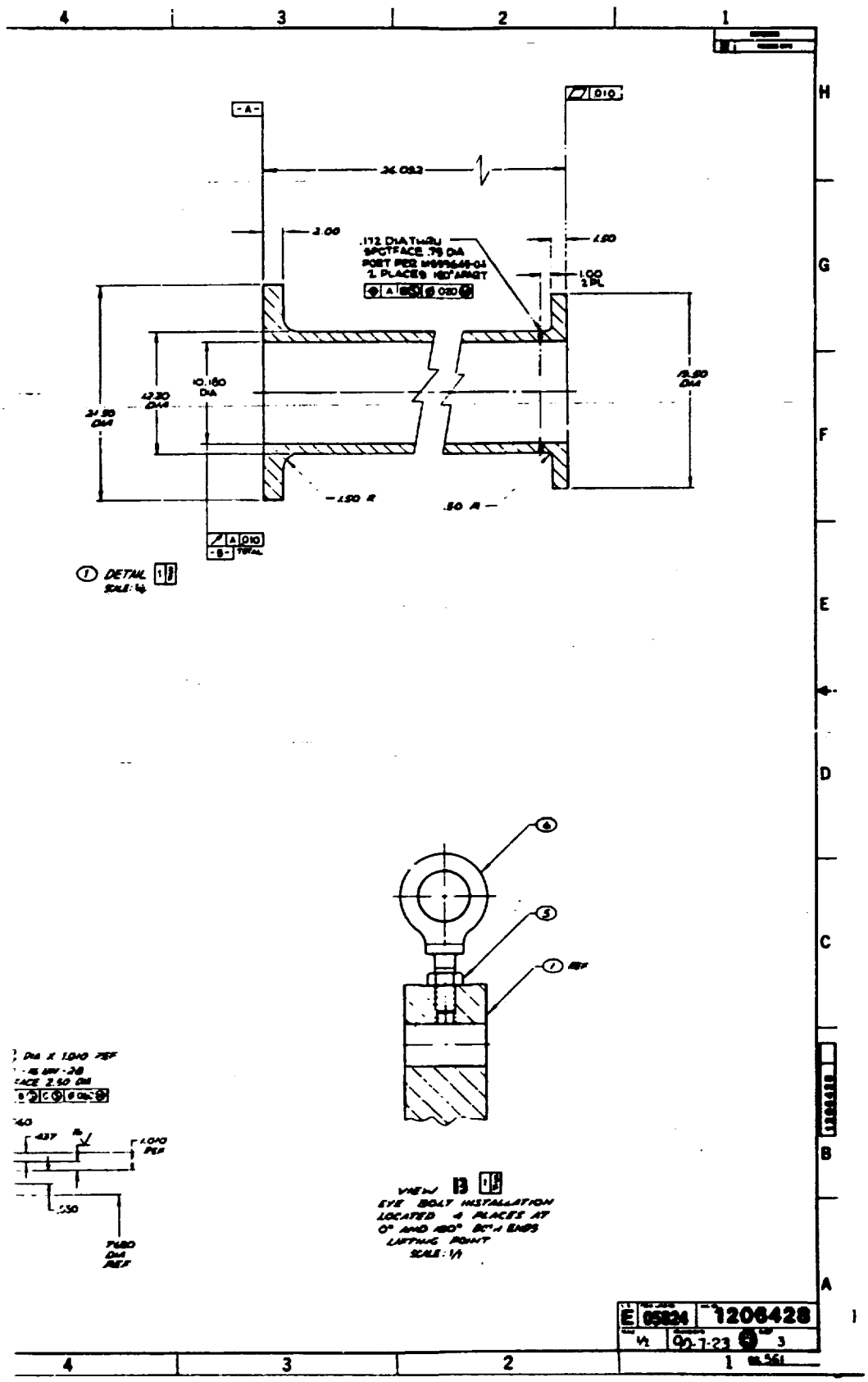

Figure D-18

FOLDOUT FRAME 2

NOTES:

1. INTERPRET DRAWING PER ATC-STD-0006.
2. MADE PER A5470-04 WITH FORGING 12004XE AND APPLICABLE DASH NO.
3. NORMALIZE AND TEMPER FORGE TO HRC30 MACHINING AS FOLLOWS:
   A. NORMALIZE AT 1800°F TO 1900°F FOR ONE HOUR. AIR COOL TO ROOM TEMPERATURE.
   B. TEMPER AT 1200°F ± 25°F FOR 6 HOURS. AIR COOL TO ROOM TEMPERATURE.
   C. FURNACE CONTROLS AND GENERAL PROCEDURES PER MIL-H-6875.
4. ROUGH MACHINED FORGING TO BE SUBSEQUENTLY HEAT TREATED AND FINAL MACHINED ALL OVER.
5. ULTRASONIC INSPECT PER ATC-STD-4010. ACCEPTANCE CRITERIA PER ATC-STD-4006, CLASS II.
6. 3 TENSILE SPECIMEN BLANKS SHALL BE TAKEN FROM FORGING DURING ROUGH MACHINING. BLANKS SHALL BE SUBSEQUENTLY HEAT TREATED WITH THE FORGING, MACHINED INTO 0.250 INCH ROUND TENSILE SPECIMENS, AND TENSILE TESTED AT ROOM TEMPERATURE PER ASTM E8-79.

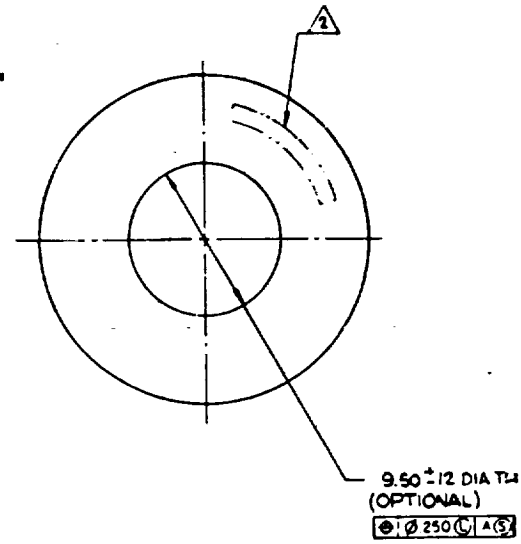

FOLDOUT FRAME

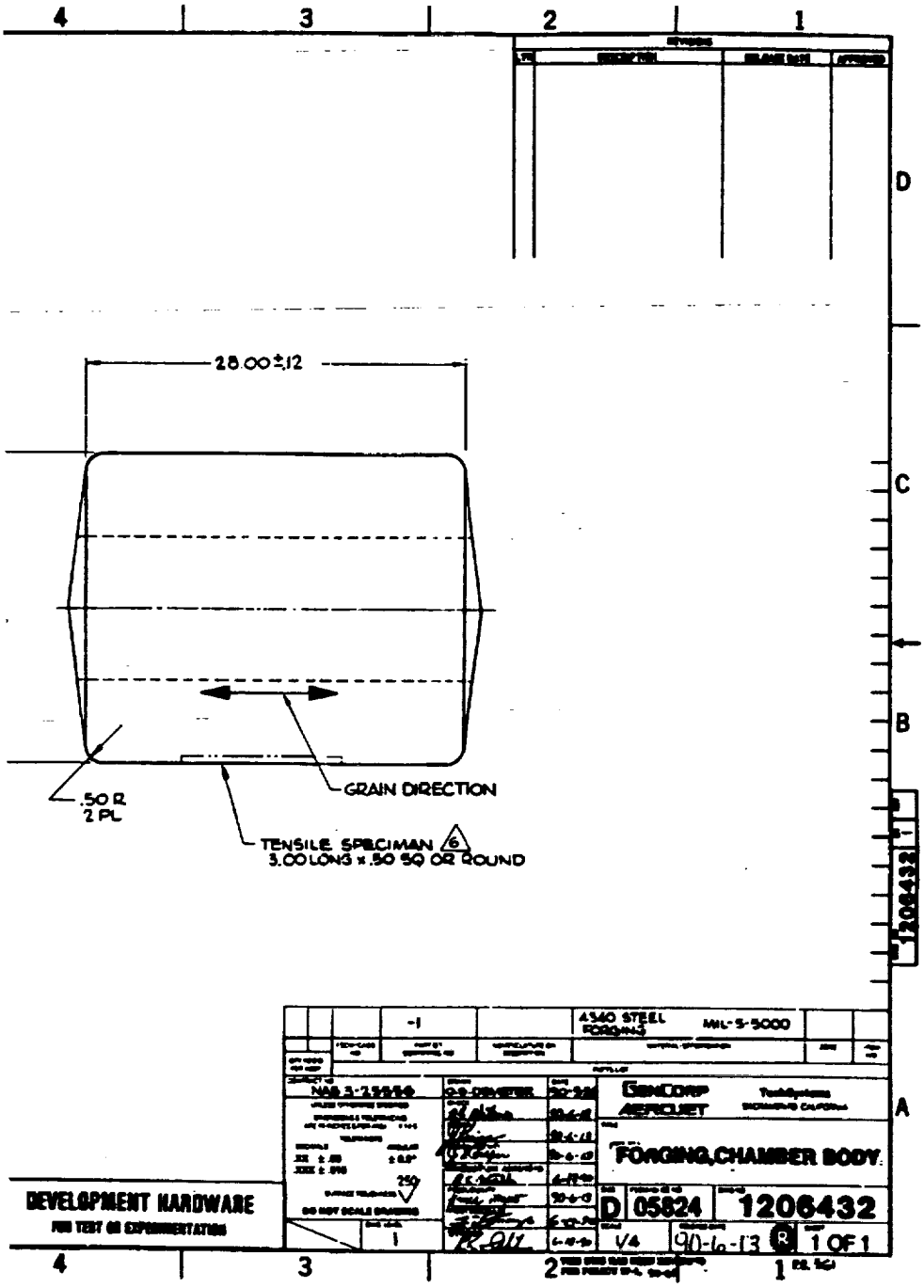

Figure D-19

FOLDOUT FRAME 2

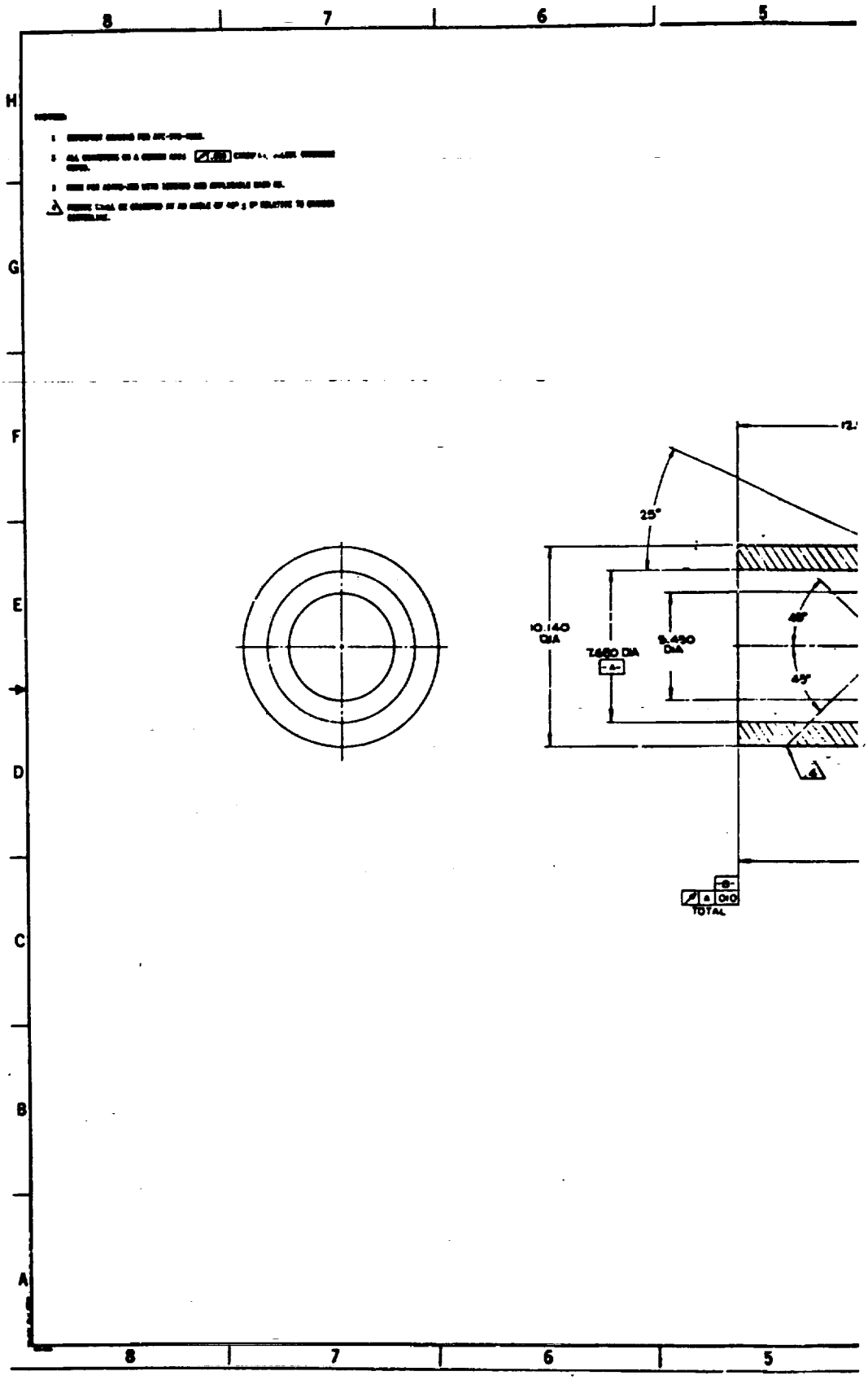

FOLDOUT FRAME

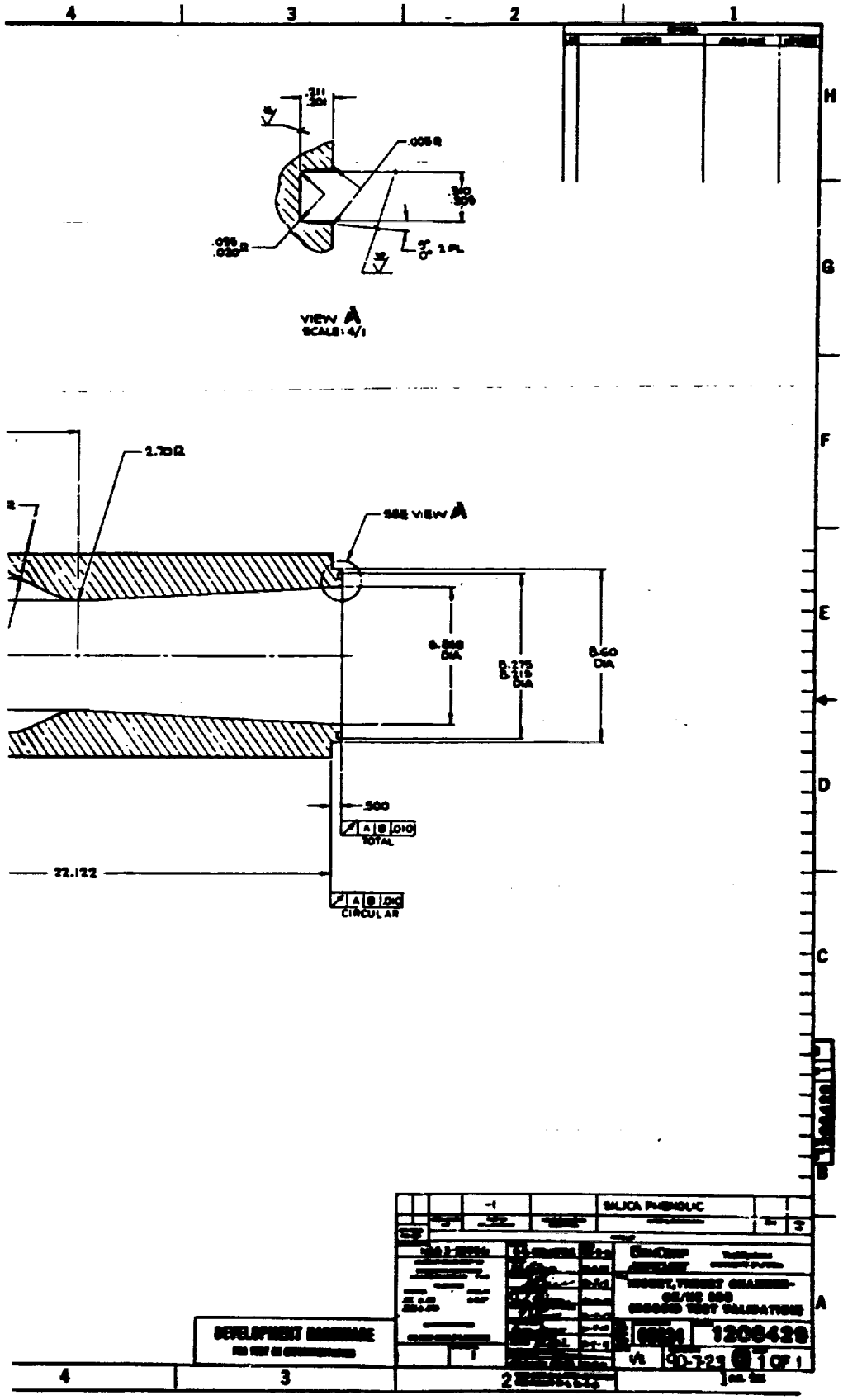
VIEW A
SCALE: 4/1
2.70R
SEE VIEW A
6.860 DIA
8.275
8.215 DIA
8.60 DIA
.500
.010 TOTAL
22.122
.010 CIRCULAR
SILICA PHENOLIC
DEVELOPMENT HARDWARE
1206420
90-7-23
1 OF 1

Figure D-20

NOTES:

1. INTERPRET DRAWING PER ATC-STD-4026.
2. CLEANLINESS PER ATC-STD-4040, LEVEL VC.
3. MARK PER ASA70-MS WITH 1200076 AND APPLICABLE DASH NO.
4. SURFACE FINISH TO BE WITHIN DIAMETER SHOWN.

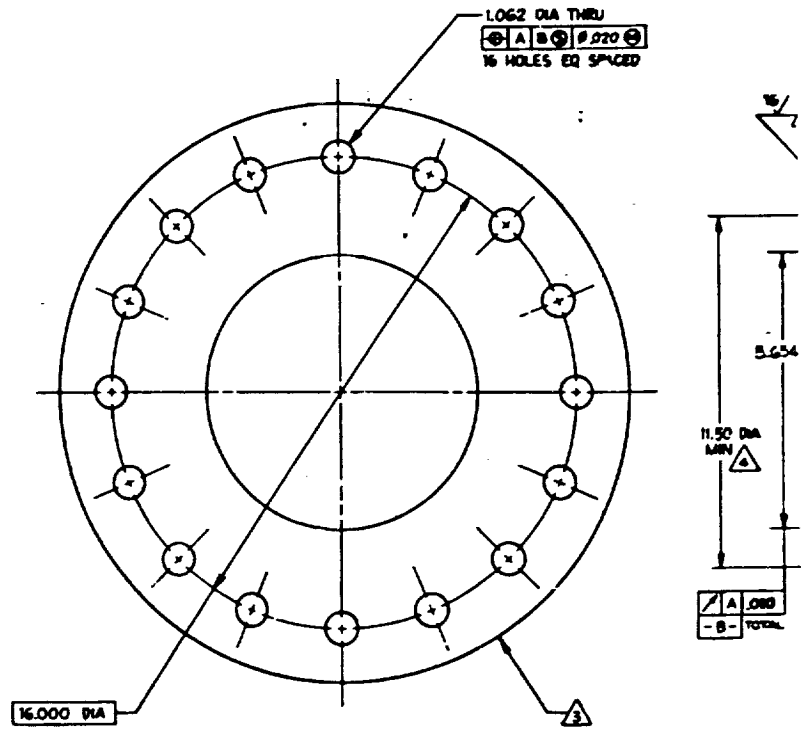

FOLDOUT FRAME

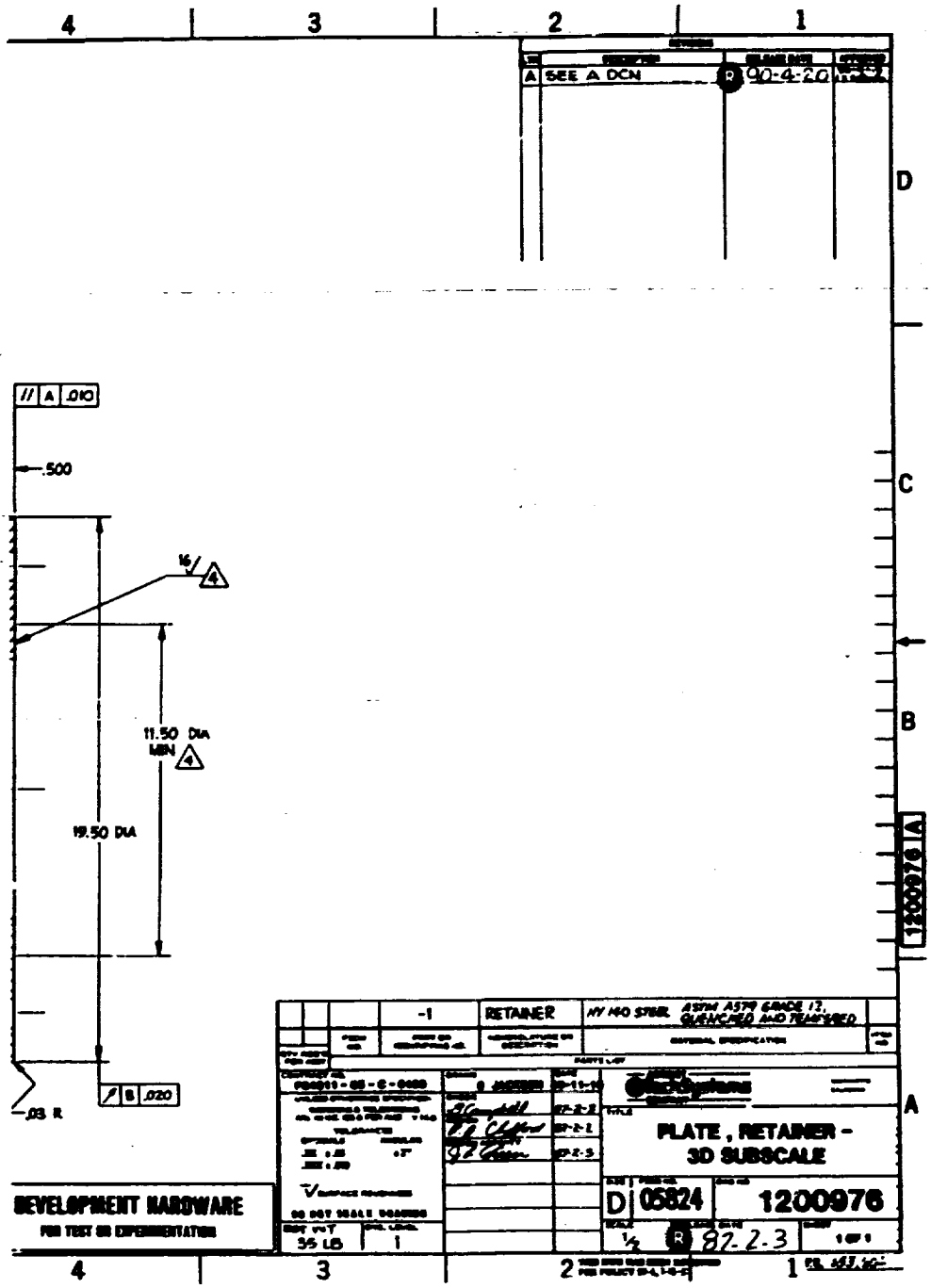

Figure D-21

2

FOLDOUT FRAME

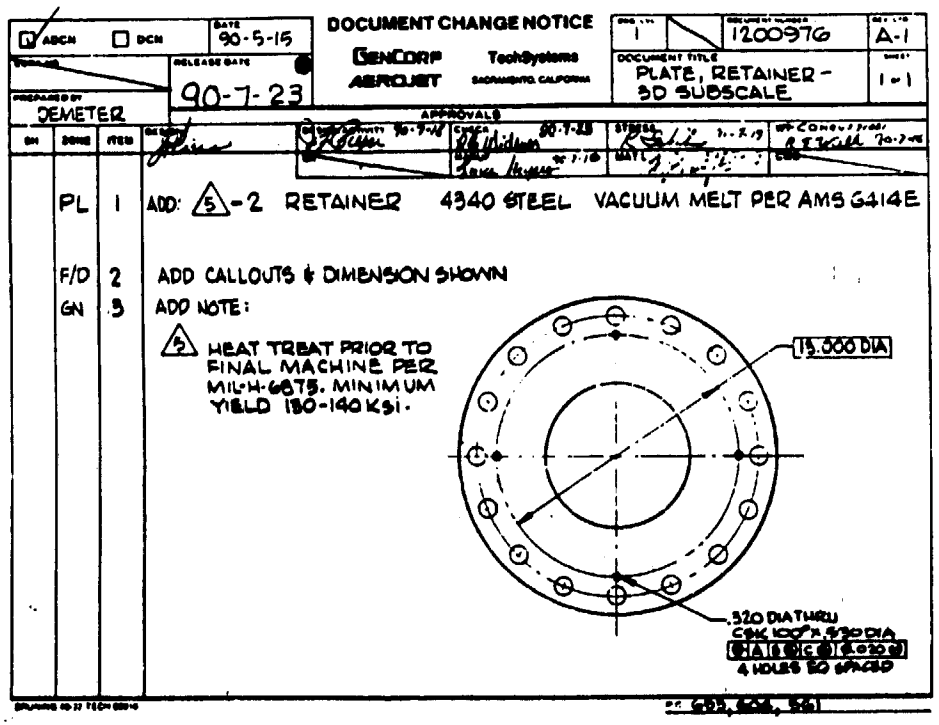
ABCN
DCN
DATE 90-5-15
DOCUMENT CHANGE NOTICE
GENCORP AEROJET
TechSystems
SACRAMENTO, CALIFORNIA
1
1200976
A-1
PLATE, RETAINER - 3D SUBSCALE
1 of 1
RELEASE DATE 90-7-23
PREPARED BY DEMETER
APPROVALS
PL 1 ADD: 5-2 RETAINER 4340 STEEL VACUUM MELT PER AMS 6414E
F/D 2 ADD CALLOUTS & DIMENSION SHOWN
GN 3 ADD NOTE:
5 HEAT TREAT PRIOR TO FINAL MACHINE PER MIL-H-6875. MINIMUM YIELD 130-140 KSI.
15.000 DIA
.520 DIA THRU
4 HOLES 90 SPACED

Figure D-22

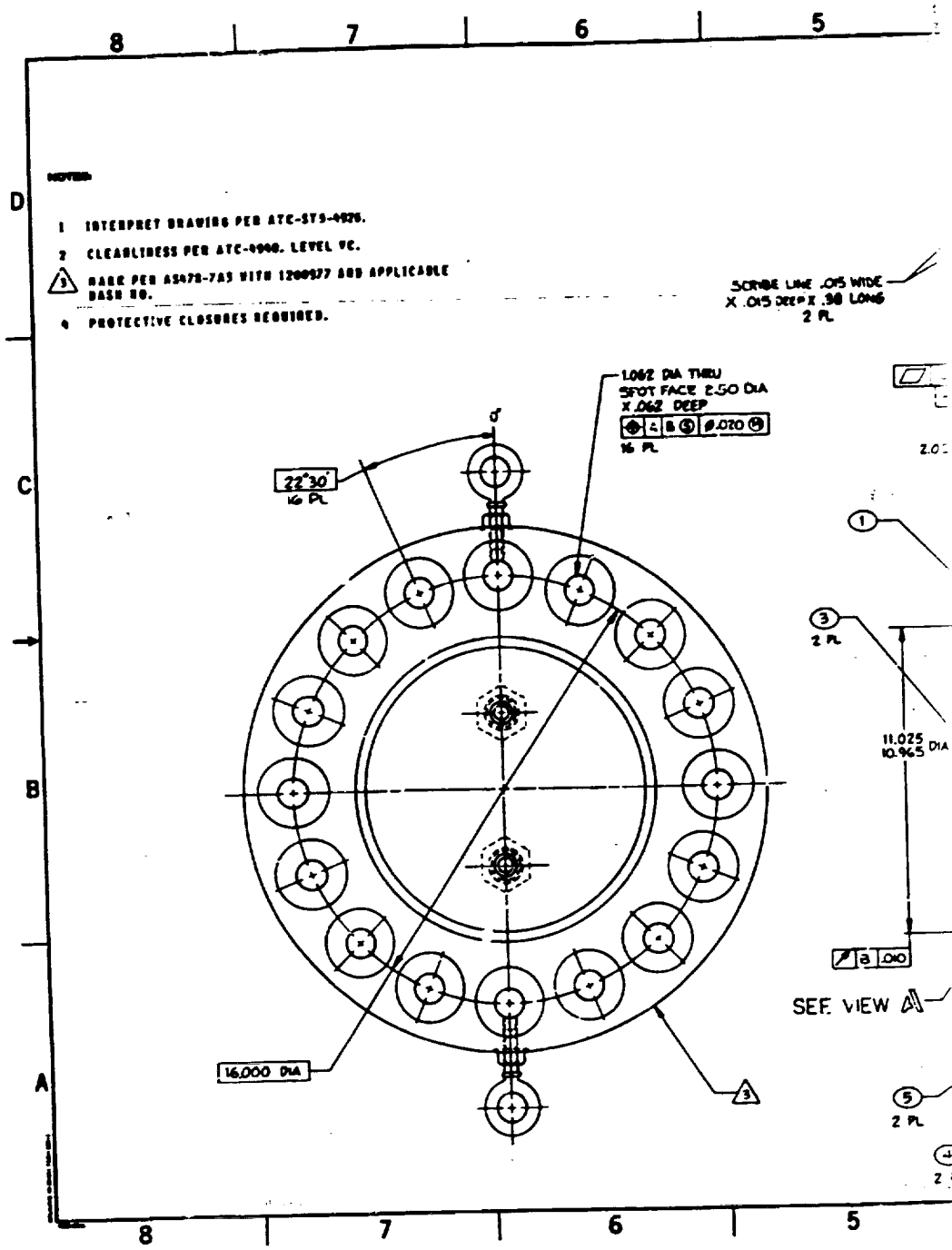

FOLDOUT FRAME

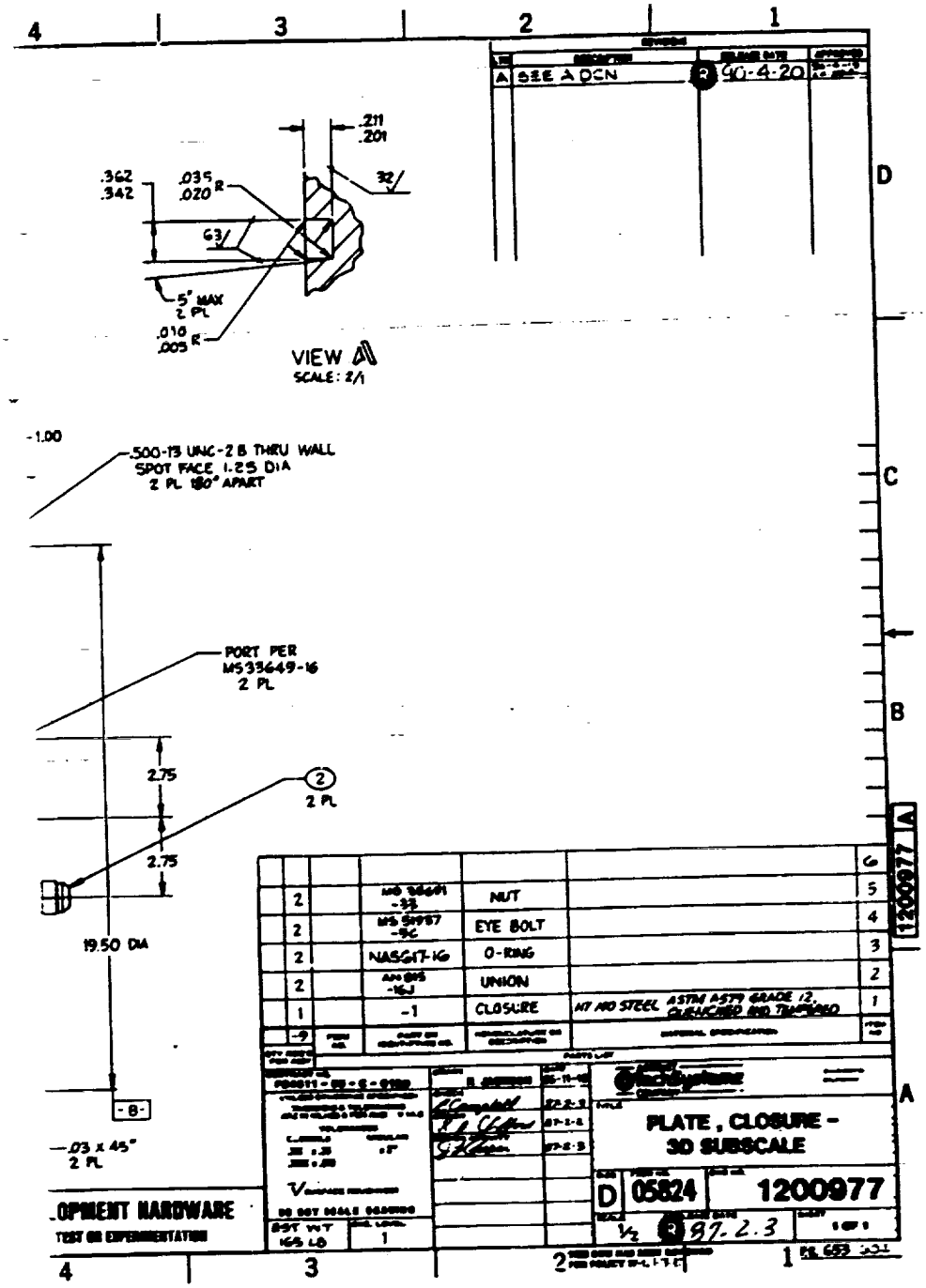

Figure D-23

2

FOLDOUT FRAME

☑ ADCN ☐ DCN

DATE 90-8-15

DOCUMENT CHANGE NOTICE

GenCorp Aerojet — TechSystems, Sacramento, California

DOCUMENT NUMBER 1200977 — REV LTR A-1

DOCUMENT TITLE: PLATE, CLOSURE - 3D SUBSCALE — SHEET 1-1

RELEASE DATE 90-7-23

PREPARED BY DEMETER

APPROVALS

SH	ZONE	ITEM	DESCRIPTION
	PL	1	ADD -19 ASSY AS SHOWN

5	1		-2	CLOSURE	4340 STEEL VACUUM MELT PER AMS6414	6
	2		MS35691 -13	NUT		5
	2		MS24597 -5C	EYE BOLT		4
	2		NAS617-16	O-RING		3
	2		AN919 -16	UNION		2
						1
-19						

	GN	2	ADD NOTE 5 HEAT TREAT PRIOR TO FINAL MACHINE PER MIL-H-6875. MINIMUM YIELD 150-140 KSI.
	SC	3	ADD CALLOUT: 1 2 WAS 1

Figure D-24

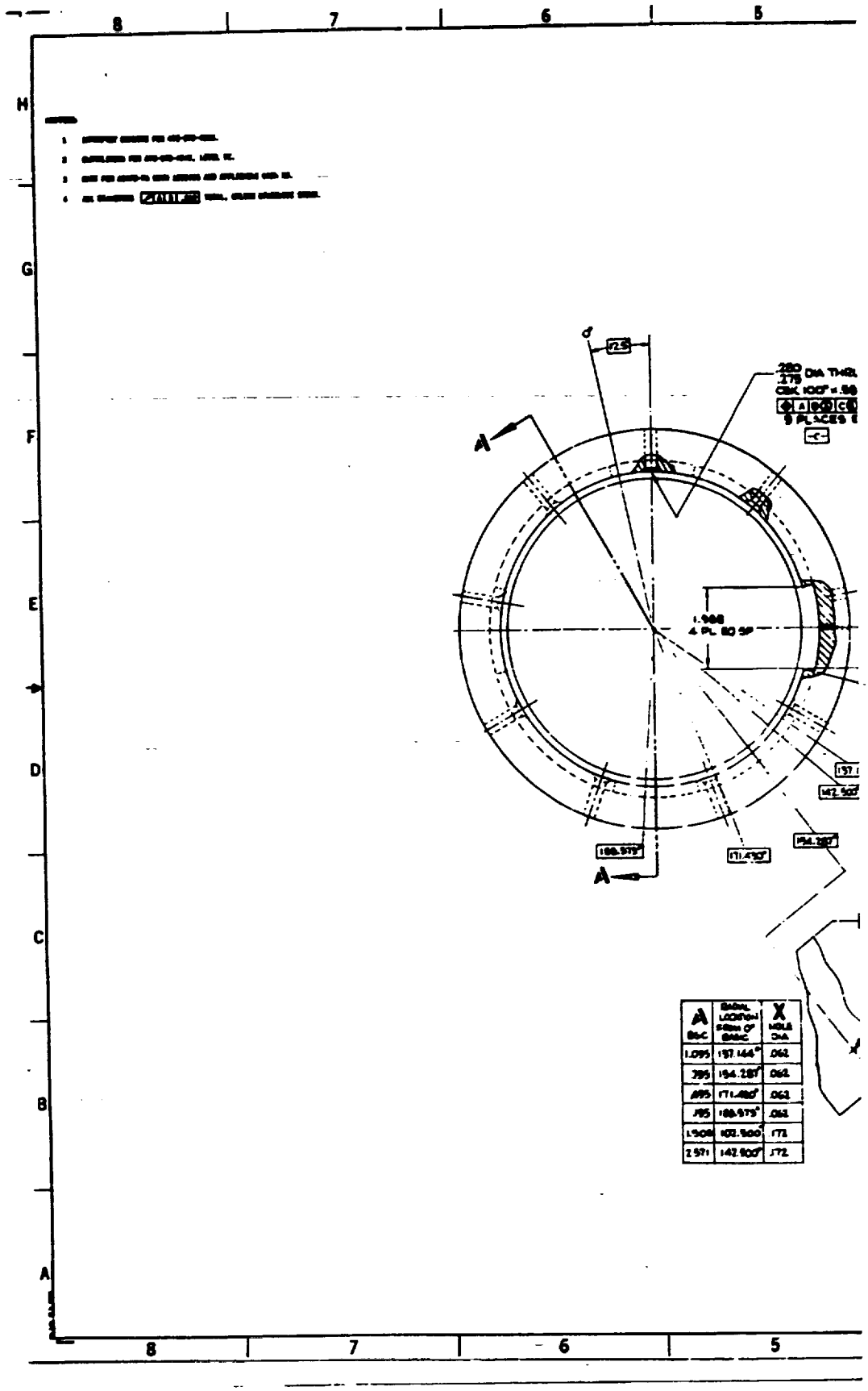

FOLDOUT FRAME

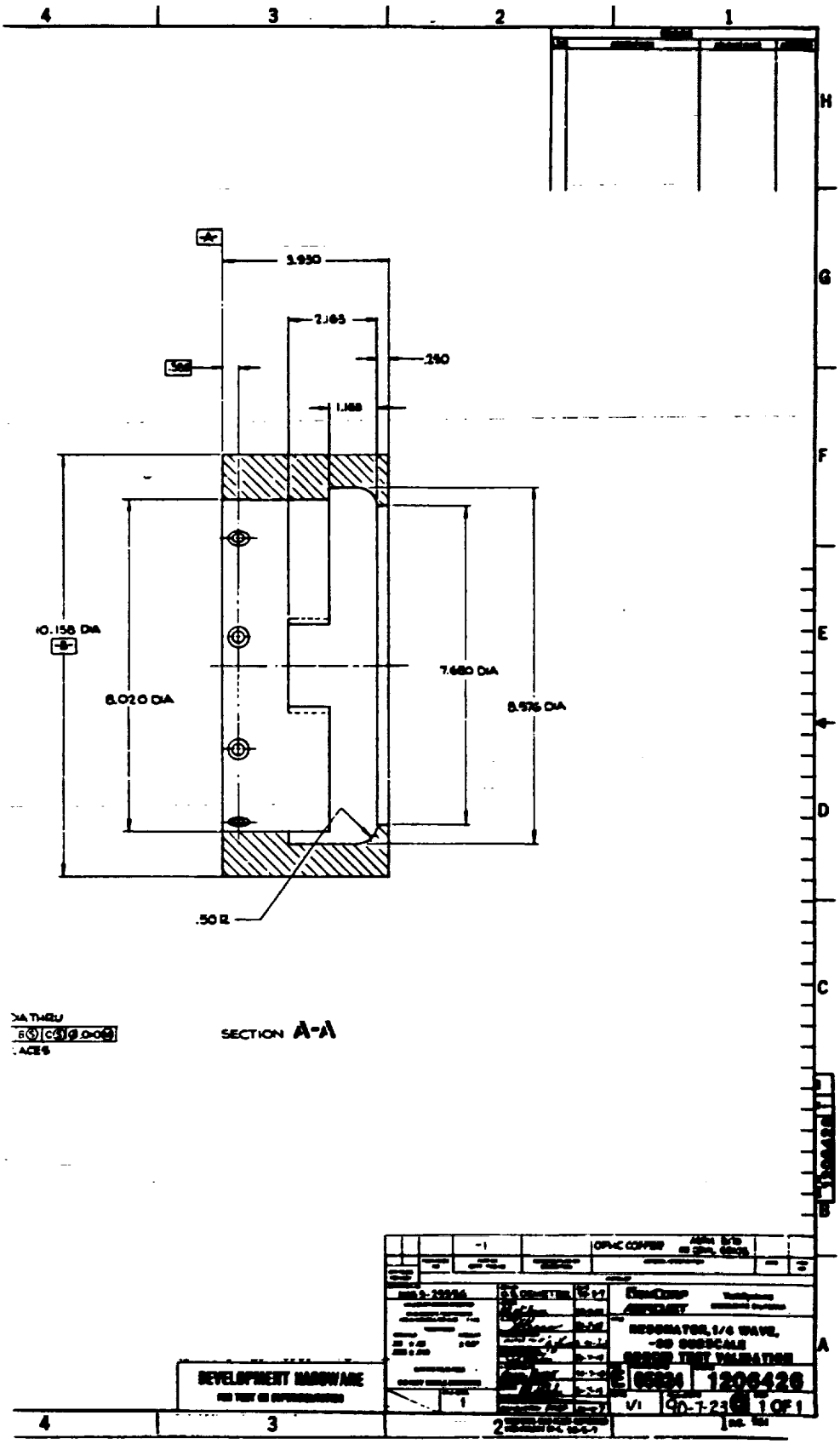

Figure D-25

FOLDOUT FRAME

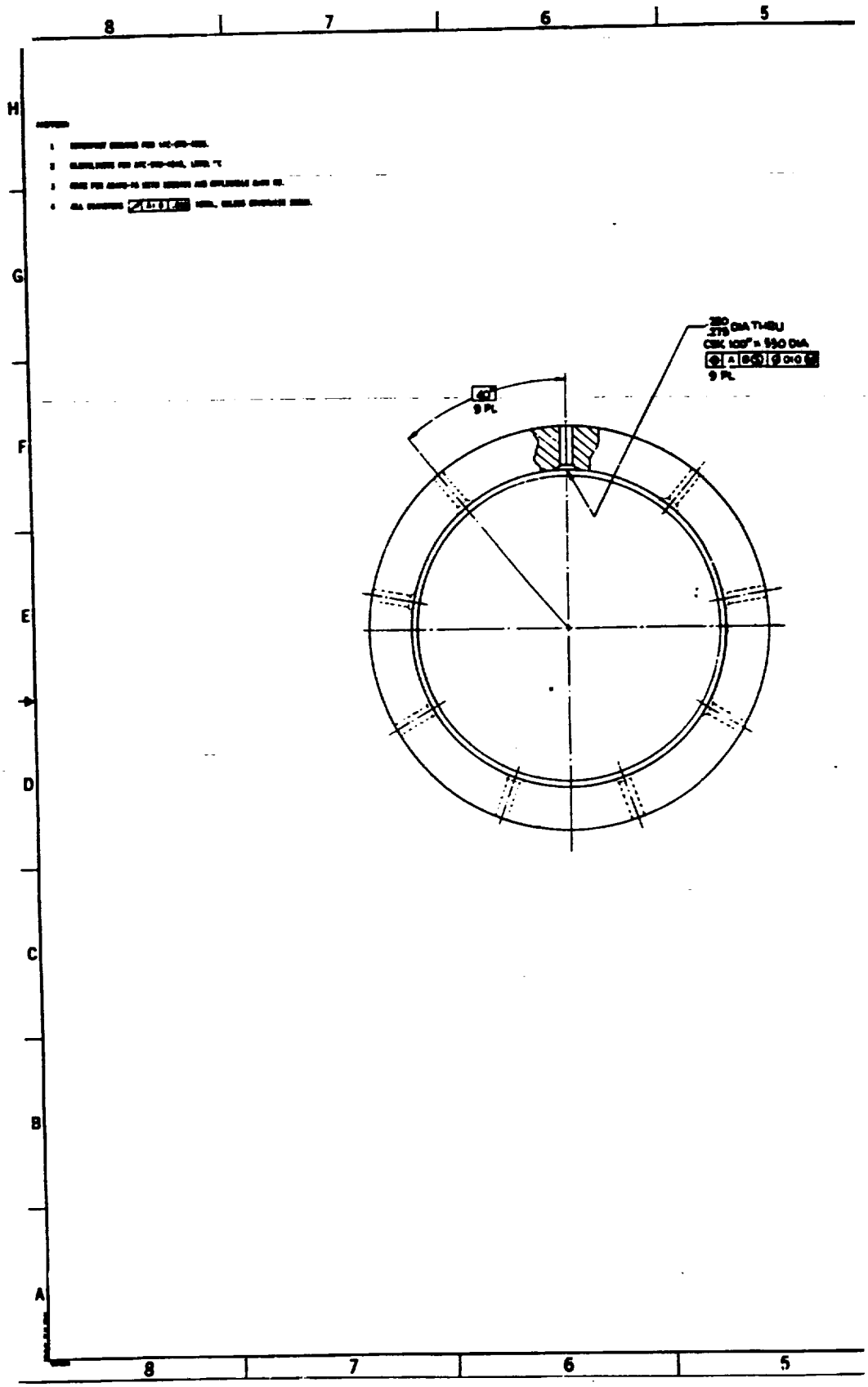

FOLDOUT FRAME

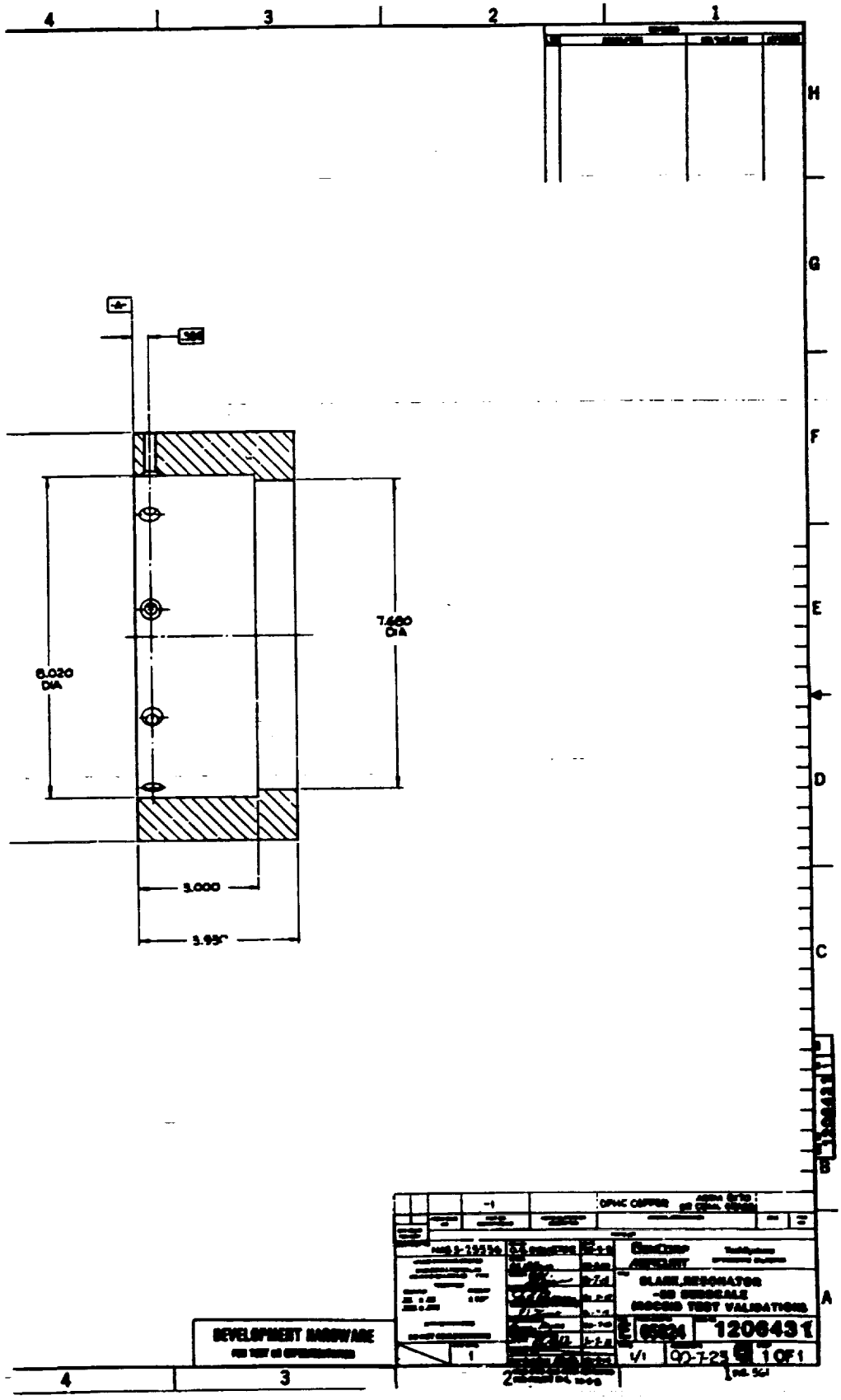

Figure D-26

FOLDOUT FRAME

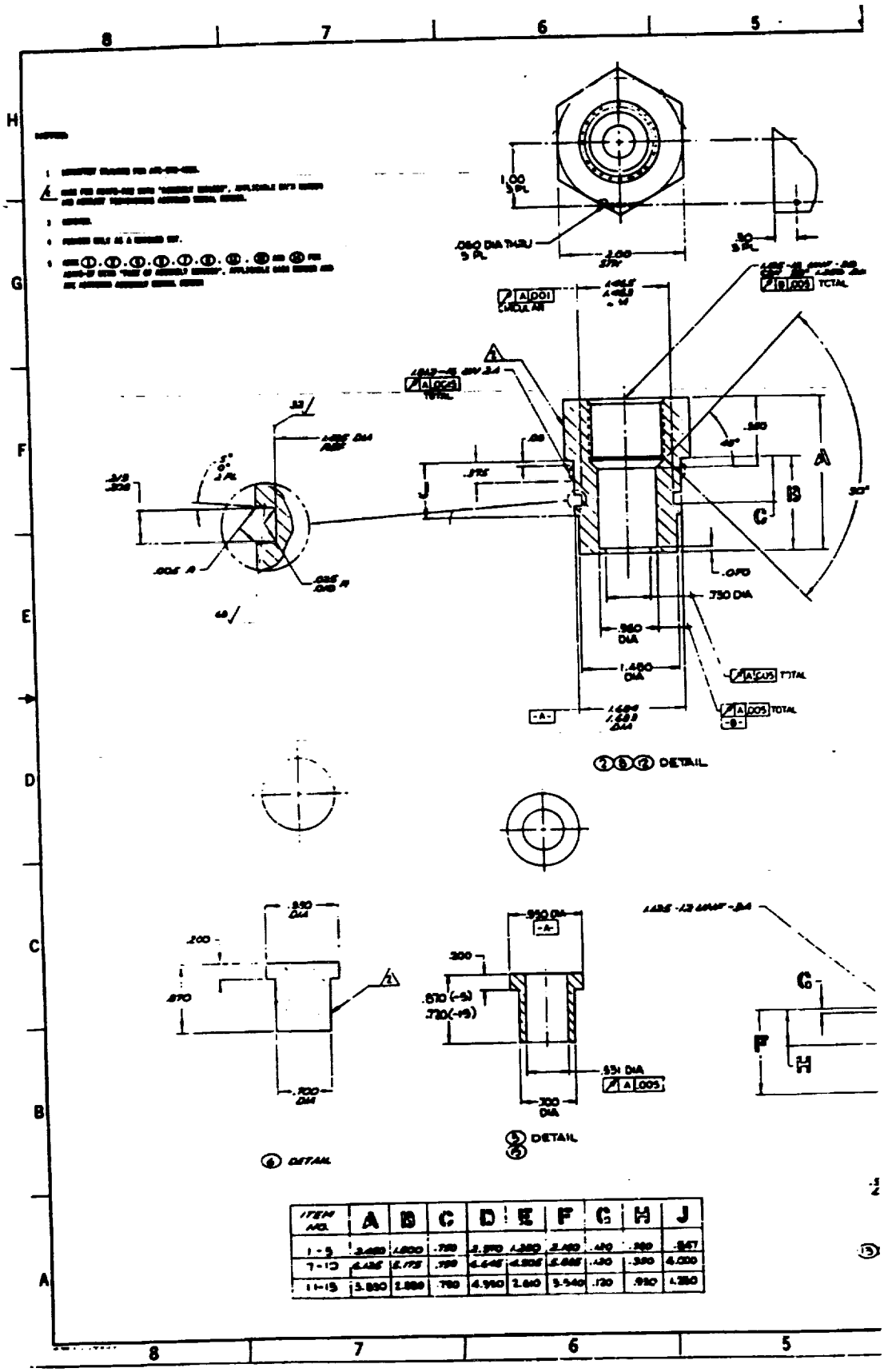

ITEM NO.	A	B	C	D	E	F	G	H	J
1-5	3.480	1.800	.750	2.970	1.280	2.480	.410	.980	.867
7-10	4.125	2.175	.750	4.640	1.505	5.885	.130	.980	4.000
11-15	3.880	2.880	.750	4.960	2.610	3.540	.120	.910	1.280

FOLDOUT FRAME

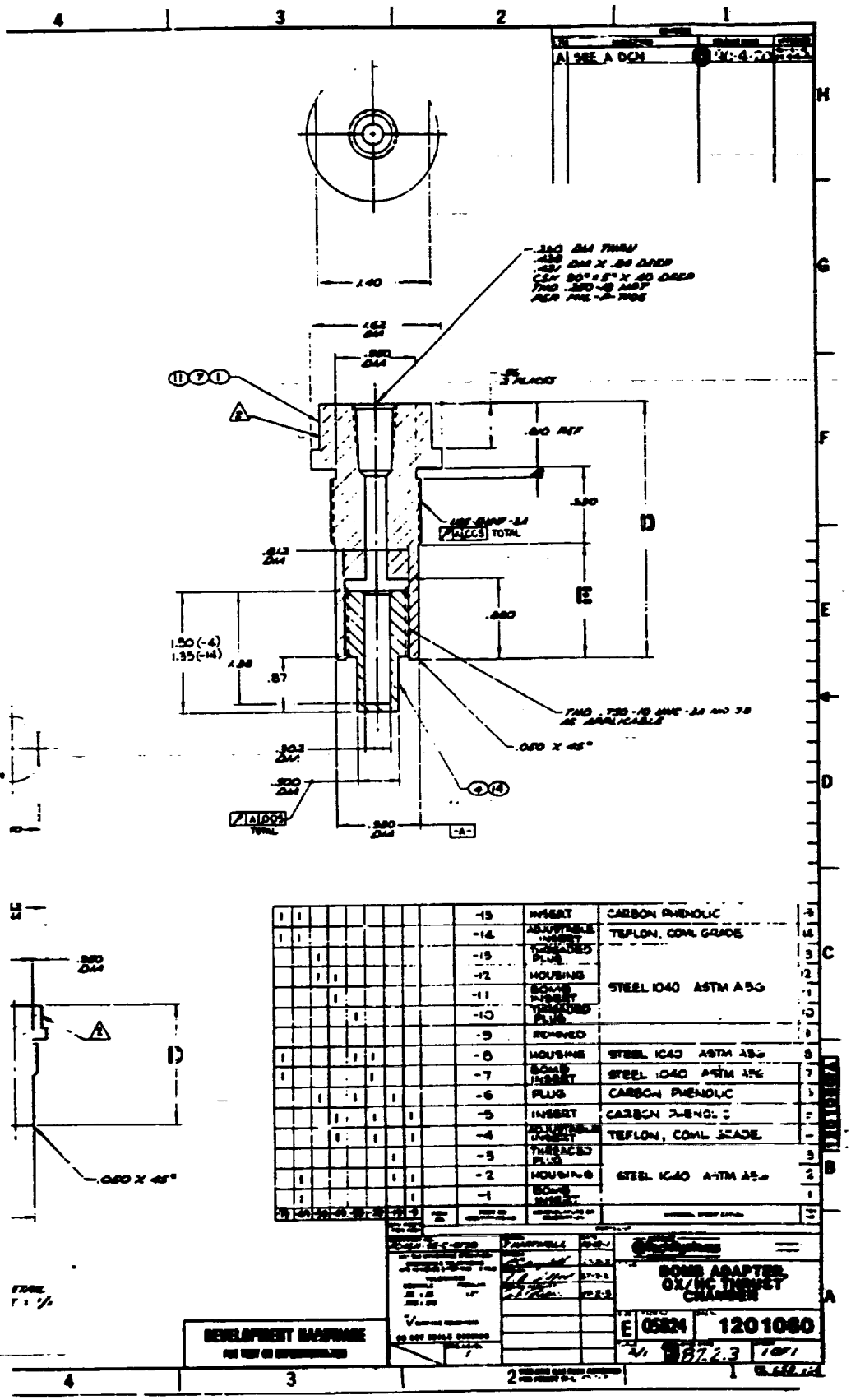

Figure D-27

2

FOLDOUT FRAME

APPENDIX E

ADVANCED DOCUMENT CHANGE NOTICES FOR THE ROCCID DESIGN DISCLOSURE

■ ADCN	☐ DCN	DATE 91-3-8	DOCUMENT CHANGE NOTICE	DWG LVL 1		DOCUMENT NUMBER 1206427	REV LTR A-1
ECRA NO		RELEASE DATE	GENCORP AEROJET TechSystems SACRAMENTO, CALIFORNIA	DOCUMENT TITLE INJECTOR ASSY, OX/HC			SHEET 1 OF 3
PREPARED BY L. MYERS							

APPROVALS

DESIGN	DESIGN ACTIVITY	CHECK	STRESS	WT
91-03-18	15 MAR 91			
QA	MANUF	MAT'L	CMO	
	91-3-15			

SH	ZONE	ITEM
1	6 B	1

IS;

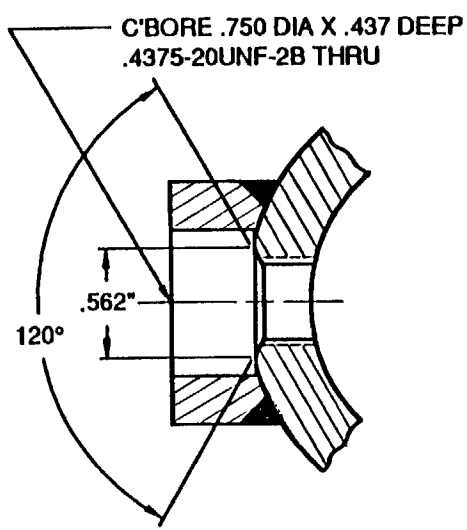

WAS;

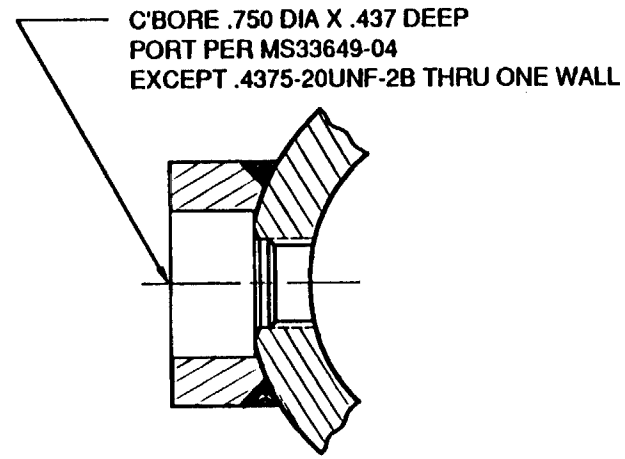

■ ADCN	☐ DCN	DATE	DWG LEVEL	DOCUMENT NUMBER	REV LTR	SHEET
		91-3-8	1	1206427	NC-1	2 OF 3

SH	ZONE	ITEM	
1	GN	2	IS; NOTE 9 TEST ASSEMBLY IN THE FOLLOWING ORDER:

A. LEAK TEST ASSEMBLY PER ATC-47063, METHOD II, USING CLEAN DRY NITROGEN AT 50 ±5 PSIA. HOLD FOR 5 MINUTES MINIMUM. NO LEAKAGE ALLOWED.

B. FLOW TEST WITH CLEAN WATER (PER ATC-STD-4940, LEVEL 1000) AS FOLLOWS:

1. PERFORM VISUAL PATTERN CHECK PER COGNIZANT DESIGN ACTIVITY.

2. THE OXIDIZER AND FUEL CIRCUITS SHALL BE FLOWED SEPARATELY AT SEVERAL FLOWRATES BELOW CAVITATION ONSET (~ 50 PSIG ΔP). FOR EACH DATA POINT RECORD THE MANIFOLD ΔP, FLOWRATE, NOMINAL WATER FLOW TEMPERATURE AND ACTUAL OUTPUT FREQUENCY OF FLOWMETER. CALCULATE Kω:

$$Kw = \frac{\dot{w}}{(\Delta P)\,(Sg)}$$

WHERE: $\dot{w}$ = FLOWRATE, LB/SEC
ΔP = INLET - OUTLET PRESSURE, PSI
Sg = SPECIFIC GRAVITY OF WATER AT FLOW TEMPERATURE

PC

DOCUMENTATION CHANGE NOTICE
CONTINUATION SHEET

GENCORP AEROJET — TechSystems, SACRAMENTO, CALIFORNIA

FSCM NO. 05824

■ ADCN	☐ DCN	DATE	DWG LEVEL	DOCUMENT NUMBER	REV LTR	SHEET
		91-3-8	1	1206427	NC-1	3 OF 3

SH	ZONE	ITEM	
1	GN	2	**WAS;** NOTE 9 TEST ASSEMBLY IN THE FOLLOWING ORDER:

A. ULTRASONIC INSPECT BRAZE JOINT PER ATC-STD-4819, TYPE I. ACCEPTANCE PER COGNIZANT DESIGN ACTIVITY.

B. PROOF TEST BRAZE JOINT BY FLOWING CLEAN WATER (PER ATC-STD-4940, LEVEL 1000) SIMULTANEOUSLY THRU THE OXIDIZER AND FUEL CIRCUITS TO ATMOSHERE. HOLD FOR APPROXIMATELY FIVE MINUTES.

OXIDIZER CIRCUIT:
MANIFOLD P = 750 ±10 PSI; APPROX FLOW = 175 LB/SEC

FUEL CIRCUIT:
MANIFOLD P = 710 ±10 PSI; APPROX FLOW = 85 LB/SEC

C. REPEAT ULTRASONIC INSPECT OF BRAZE JOINT PER ATC-STD-4819, TYPE I. NOTE ANY DIFFERENCES. ACCEPTANCE PER COGNIZANT DESIGN ACTIVITY.

D. LEAK TEST ASSEMBLY PER ATC-47063, METHOD II, USING CLEAN DRY NITROGEN AT 50 ±5 PSIA. HOLD FOR 5 MINUTES MINIMUM. NO LEAKAGE ALLOWED.

E. FLOW TEST WITH CLEAN WATER (ATC-STD-4940, LEVEL 1000) AS FOLLOWS:

1. PERFORM VISUAL PATTERN CHECK PER COGNIZANT DESIGN ACTIVITY.

2. THE OXIDIZER AND FUEL SHALL BE FLOWED SEPARATELY AT THE FOLLOWING FLOW RATES: OXIDIZER: 25, 35, 45, 55, 65; FUEL: 20, 25, 35, 40, 45. FOR EACH DATA POINT RECORD THE MANIFOLD ΔP, FLOWRATE, NOMINAL WATER FLOW TEMPERATURE AND ACTUAL OUTPUT FREQUENCY OF FLOWMETER. CALCULATE Kω:

$$Kw = \frac{\dot{w}}{(\Delta P)(Sg)}$$

WHERE: $\dot{w}$ = FLOWRATE, LB/SEC
ΔP = INLET - OUTLET PRESSURE, PSI
Sg = SPECIFIC GRAVITY OF WATER AT FLOW TEMPERATURE

PC

■ ADCN ☐ DCN	DATE 91-2-25	DOCUMENT CHANGE NOTICE	DWG LVL 1	DOCUMENT NUMBER 1206428	REV LTR NC-1
ECRA NO	RELEASE DATE	GENCORP AEROJET TechSystems SACRAMENTO, CALIFORNIA	DOCUMENT TITLE INJECTOR CORE ASSY,OX/HC		SHEET 1 OF 3
PREPARED BY L. MYERS					

APPROVALS

DESIGN	DESIGN ACTIVITY	CHECK	STRESS	WT
91-03-18	15MAR91			
QA	MANUF	MAT'L	CMO	
	Janice Myers 91-2-28			

SH	ZONE	ITEM	
2	5 F	1	**ADDED;**
2	5 C	1	**REMOVED;** SECTION K-K LOCATED AT 142.500°

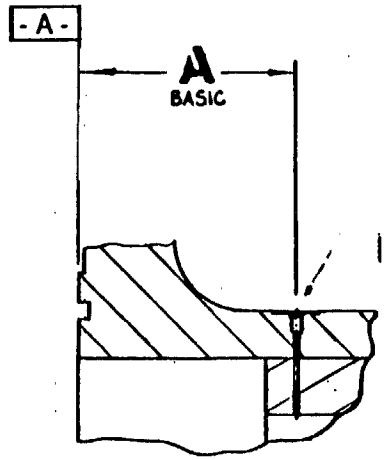

WAS;

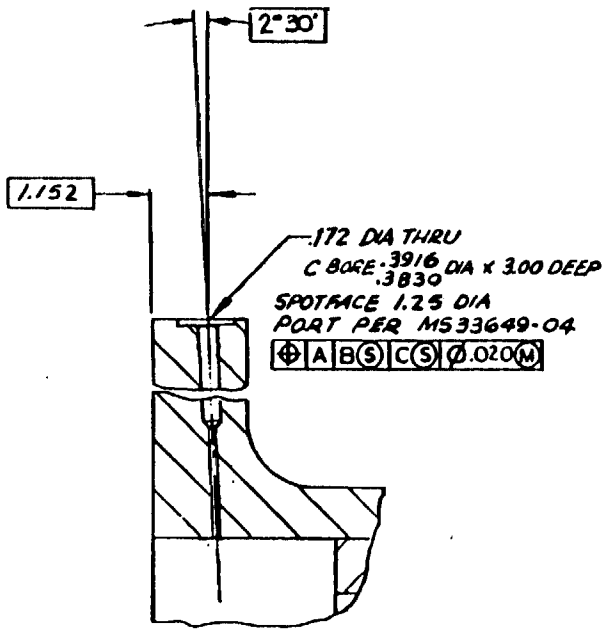

SECTION **K-K** 1 6/2
LOCATED AT 142.500°

PC _____

DOCUMENTATION CHANGE NOTICE
CONTINUATION SHEET

GENCORP AEROJET

TechSystems
SACRAMENTO, CALIFORNIA

FSCM NO. 05824

■ ADCN ☐ DCN	DATE	DWG LEVEL	DOCUMENT NUMBER	REV LTR	SHEET
	91-2-25	1	1206428	NC-1	2 OF 3

SH	ZONE	ITEM				
2	4 F	3	IS;	.172 DIA THRU SPOTFACE 1.25 DIA PORT PER MS33649-04 ⊕ A B Ⓢ C Ⓢ ∅.020 Ⓜ	WAS;	.172 DIA THRU C'BORE .3916/.3830 DIA X 3.00 DEEP SPOTFACE 1.25 DIA PORT PER MS33649-04 ⊕ A B Ⓢ C Ⓢ ∅.020 Ⓜ
1	6 F	4	IS;	1.062 DIA THRU 18 HOLES ⊕ A B Ⓢ C Ⓢ ∅.010 Ⓜ	WAS;	1.062 DIA THRU SPOTFACE 2.50 DIA FAR SIDE ONLY, 18 HOLES ⊕ A B Ⓢ C Ⓢ ∅.010 Ⓜ
1	1 C	5	IS;	1.062 DIA THRU ⊕ D B Ⓢ C Ⓢ ∅.020 Ⓜ 16 PL EQ SP	WAS;	1.062 DIA THRU SPOTFACE 2.50 DIA FAR SIDE ONLY ⊕ D B Ⓢ C Ⓢ ∅.020 Ⓜ 16 PL EQ SP

PC

DOCUMENTATION CHANGE NOTICE
CONTINUATION SHEET

GENCORP AEROJET

TechSystems
SACRAMENTO, CALIFORNIA

FSCM NO. 05824

■ ADCN	☐ DCN	DATE	DWG LEVEL	DOCUMENT NUMBER	REV LTR	SHEET
		91-2-25	1	1206428	NC-1	3 OF 3

SH	ZONE	ITEM
1	2 A	6

IS;

-19	-9	FSCM/CAGE NO.	PART OR IDENTIFYING NO.	NOMENCLATURE OR DESCRIPTION	MATERIAL/SPECIFICATION	ZONE		ITEM NO.
4			NAS334CPA10	BOLT				10
1			-9	ASSY				9
1			1200976-2	RETAINER				8
	AR	00426	RTV GE 627	SILICON SEALANT				7
	4		M551937-6C	BOLT, EYE		2	3D	6
	4		M535691-41	NUT, HEX		2	3C	5
								4
	1		1206429-1	INSERT		1	3F	3
								2
6	1		-1	CHAMBER	MAKE FROM 1206432-1	1	3F	1

QTY REQ'D PER ASSY — PARTS LIST

WAS;

-9	FSCM/CAGE NO.	PART OR IDENTIFYING NO.	NOMENCLATURE OR DESCRIPTION	MATERIAL/SPECIFICATION	ZONE		ITEM NO.
AR	00426	RTV GE 560	SILICON SEALANT				7
4		M551937-6C	BOLT, EYE		2	3D	6
4		M535691-41	NUT, HEX		2	3C	5
							4
1		1206429-1	INSERT		1	3F	3
							2
6 1		-1	CHAMBER	MAKE FROM 1206432-1	1	3F	1

QTY REQ'D PER ASSY — PARTS LIST

PC

■ ADCN	☐ DCN	DATE 91-2-25
ECRA NO.	RELEASE DATE	
PREPARED BY L. MYERS		

DOCUMENT CHANGE NOTICE

GENCORP AEROJET — TechSystems — SACRAMENTO, CALIFORNIA

DWG LVL 1		DOCUMENT NUMBER 1200729	REV LTR A-1
DOCUMENT TITLE INJECTOR CORE ASSY,OX/HC			SHEET 1 OF 1

APPROVALS

DESIGN	DESIGN ACTIVITY	CHECK	STRESS	WT
91-03-18	15 MAR 91			
QA	MANUF	MAT'L	CMO	
	91-3-15			

SH	ZONE	ITEM
1	GN	1

IS; RADIUS THE ORIFICE INLETS USING ONE OF THE FOLLOWING PROCESS:

A. ELECTROPOLISH INDICATED SIDE USING A SOLUTION OF 50% PHOSPHORIC ACID/50% DEIONIZED WATER AND 100 AMPS/FT^2 CURRENT. CONTINUE PROCESS UNTIL 0.001-0.0015 INCHES OF MATERIAL IS REMOVED AND ORIFICE INLETS HAVE A SLIGHT RADIUS.

B. MICRO BLAST INDICATED SIDE USING 100 MICRON SILICON CARBIDE GLASS BEADS FOR ≈10 SEC. CONTINUE PROCESS UNTIL ALL BURRS ARE REMOVES AND A 0.001-0.0015 INCH RADIUS IS ACHIEVED ON THE ORIFICE INLETS.

WAS; ELECTROPOLISH INDICATED SIDE USING A SOLUTION OF 50% PHOSPHORIC ACID/50% DEIONIZED WATER AND 100 AMP/FT^2 CURRENT. CONTINUE PROCESS UNTIL 0.001-0.0015 INCHES OF MATERIAL IS REMOVED AND ORFICE INLETS HAVE A SLIGHT RADIUS.

PC _____

■ ADCN	☐ DCN	DATE 2-27-91	DOCUMENT CHANGE NOTICE	DWG LVL 1	DOCUMENT NUMBER 1200773	REV LTR A-2
ECRA NO.	RELEASE DATE		GENCORP AEROJET — TechSystems, SACRAMENTO, CALIFORNIA	DOCUMENT TITLE INJECTOR FLANGE ASSY, OXYGEN/HYDROCARBON		SHEET 1 OF 2
PREPARED BY L. MYERS						

APPROVALS

DESIGN	DESIGN ACTIVITY	CHECK	STRESS	WT
	J. Culper 3-7-91			
	QA	MANUF Lance Myers 2-27-91	MAT'L	CMO

SH	ZONE	ITEM	
1	1A	1	IS;

-49	-39	-29	-19	-9	FSCM NO.	PART OR IDENTIFYING NO.	NOMENCLATURE OR DESCRIPTION	MATERIAL SPECIFICATION		ZONE	ITEM NO.
1		1				-39	ASSY				12
	1					-8	BOSS	CRES QQ-S-763 CL 304, COND A			11
	AR			AR			WELD ROD	ER316 AWS A5.9			10
			1			-9	ASSY		1	4G	9
AR	AR	AR	AR	AR			WELD ROD	ER308 AWS A5.9			8
	1			1	14713	52823	BUTT WELD HUB	2" GR 20 SCH 160 SA182-F316	3	3C	7
	1			1		-4	TUBE	2.0 SCHED 160 CRES PIPE ASTM-A312 TYPE 304	3	6C	6
	1			1		-3	BOSS	CRES QQ-S-763 CL304 COND A	3	6C	5
	18	1				-6	OUTER RING	CRES ASTM A473 OR ASTM A167 TYPE 304	1	6F	4
	18	1				-5	INNER RING	CRES ASTM A473 OR ASTM A167 TYPE 304	1	3F	3
1			1			-2	OUTER RING	CRES ASTM A473 OR ASTM A167 TYPE 304	1	6F	2
1			1			-1	INNER RING	CRES ASTM A473 OR ASTM A167 TYPE 304	1	3F	1

QTY REQ'D PER ASSY — PARTS LIST

PC _____

DOCUMENTATION CHANGE NOTICE
CONTINUATION SHEET

GENCORP AEROJET

TechSystems
SACRAMENTO, CALIFORNIA

FSCM NO. 05824

■ ADCN	□ DCN	DATE	DWG LEVEL	DOCUMENT NUMBER	REV LTR	SHEET
		2-27-91	1	1200773	A-2	2 OF 2

SH	ZONE	ITEM	
1	1A	1	WAS;

-29	-19	-9	FSCM NO.	PART OR IDENTIFYING NO.	NOMENCLATURE OR DESCRIPTION	MATERIAL SPECIFICATION	ZONE	ITEM NO.
		AR			WELD ROD	ER316 AWS A5.9		10
1	1			-9	ASSY		1 4G	9
AR	AR	AR			WELD ROD	ER308 AWS A5.9		8
		1	14713	52823	BUTT WELD HUB	2"GR 20 SCH 160 SA182-F316	3 3C	7
		1		-4	TUBE	2.0 SCHED 160 CRES PIPE ASTM-A312 TYPE 304	3 6C	6
		1		-3	BOSS	CRES QQ-S-763 CL304 COND A	3 6C	5
18 1				-6	OUTER RING	CRES ASTM A473 OR ASTM A167 TYPE 304	1 6F	4
18 1				-5	INNER RING		1 3F	3
	1			-2	OUTER RING	CRES ASTM A473 OR ASTM A167 TYPE 304	1 6F	2
	1			-1	INNER RING	CRES ASTM A473 OR ASTM A167 TYPE 304	1 3F	1
	QTY REQ'D PER ASSY							

PARTS LIST

PC

APPENDIX F

NONCONFORMANCE REPORTS

AEROJET TechSystems COMPANY

PRINT OR TYPE IN BLACK INK

NONCONFORMANCE REPORT

G.F.M. ☐ NO. V21175

PAGE 1 OF 1

AREA: Supplier

1. PART NUMBER	DASH	REV.	2. NOMENCLATURE	3. SERIAL NO.	4. PROGRAM	5. LOT SIZE	6. ACC.	7. DISC.
1206432	1		Forging- Chamber Body	N/A		1	0	1

8. WORK ORDER	9. SHOP ORDER	10. OPER. NO.	11. SUPPLIER NAME NUMBER	12. P.O. NUMBER	13. DISTRIBUTION NO.	PREVIOUS NR NUMBER
KFN 600	N/A	N/A	Viking Metallurgical	L823696H	N/A	N/A

ITEM	14. NONCONFORMANCE (A) DWG. ZONE, SPEC., PARA., SHOP ORDER OPER., ETC AS APPLICABLE (B) STATE REQUIREMENT (C) INSPECTION RESULTS	15. (A) CAUSE C/C	15. (B) FREQ. OCCUR	☐ MRB ITEMS ____ 16. DISPOSITION/COMMENTS ☐ ERB ITEMS ____
	B/P note 5 requires ultrasonic inspection to ATC- STD-4819 with acceptance to ATC-Std 4006 Class II. Forging is rejected to Class II and Class III. Forging is acceptable to Class IV.			Accept As Is providing the forging will meet Ultrasonic Inspection per ATC-STD-4819 with acceptance to ATC-STD-4006 Class IV. Also, provide all available records substantiating the material meets Mil-S-5000E requirements.

17. INITIATOR IDENTITY [signature] DATE 10/9/90 18. REVIEWED BY [signature] DATE 10-29-90 19. PROC. [signature] DATE 10/11/90

20. REINSPECT QTY ACC. DISC. NEW NR NO. INSPECTOR DATE

21. MRB/ERB APPROVALS

ENG REPR. [signature] DATE 10/29/90 QA REPR. DATE CUST REPR. DATE

[signature] DATE 10-16-90 DATE DATE

22. MRB/ERB RESUBMIT DECISIONS

ENG REPR. [signature] DATE 10-16-90 QA REPR. DATE RESUBMIT FOR

CUST REPR. DATE [signature] 10-16-90

23. CAUSE

The heat of 4340AQ used was not adequate for Class II sonic requirement.

24. CORRECTIVE ACTION

Purchase better quality stee;- Next Purchase Order.

C CA SIGNATURE DATE

25. EFFECTIVITY: (DATE/SERIAL NUMBER/ETC.)

DISCREPANT MATERIAL DISPOSITION	RESPONSIBILITY: ☐ G&M ☐ SUPPLIER ☐ ATC	QTY	RTS	SHIPPER NO	SALVAGE	PROC/MFG/IS REPR	DATE	QA REPR.	DATE	NO. V21175

AEROJET TechSystems COMPANY

PRINT OR TYPE IN BLACK INK

NONCONFORMANCE REPORT

G.F.M. ☐ NO. V21264

AREA: Supplier

PAGE 1 OF ____

1. PART NUMBER	DASH	REV.	2. NOMENCLATURE	3. SERIAL NO.	4. PROGRAM	5. LOT SIZE	6. ACC.	7. DISC.
1206429		N/C	INSERT THRUST CHAMBER	2873-1-001		1	D	1

8. WORK ORDER	9. SHOP ORDER	10. OPER. NO.	11. SUPPLIER NAME	NUMBER	12. P.O. NUMBER	13. DISTRIBUTION NO.	PREVIOUS NR NUMBER
			AAE		L823865H		

ITEM	14. NONCONFORMANCE (A) DWG. ZONE, SPEC., PARA., SHOP ORDER OPER., ETC AS APPLICABLE (B) STATE REQUIREMENT (C) INSPECTION RESULTS	15. (A) CAUSE C/C	(B) FREQ. OCCUR	☐ MRB ITEMS ____ 16. DISPOSITION/COMMENTS ☐ ERB ITEMS ____
1	RESIN CONTENT 31±4% is			Us As Is; the higher resin content will not
	36.83 FWD			affect the preformance of the liner in the hot fire
	36.61 AFT			enviroment.

17. INITIATOR IDENTITY	DATE	18. REVIEWED BY	DATE	19. [illegible]	DATE	20. REINSPECT QTY	ACC.	DISC.	NEW NR NO.	INSPECTOR	DATE
B. McCAMMENT	1-4-91	[illegible]	1-14-91	[illegible]	1/14/91						

21. MRB/ERB APPROVALS						22. MRB/ERB RESUBMIT DECISIONS				RESUBMIT FOR
ENG REPR	DATE	QA REPR.	DATE	CUST REPR	DATE	ENG REPR	DATE	QA REPR.	DATE	
[illegible]	1-14-91									
[illegible]	DATE 1-14-91		DATE		DATE	CUST REPR	DATE			

23. CAUSE	24. CORRECTIVE ACTION
BURNOUT METHOD FOR SILICA PHENOLIC MATERIALS HISTORICALLY HAS BEEN HIGHER THAN THE RAW MATERIAL CERTIFICATIONS (IN THIS CASE THE FIBERITE CERTS REPORT 32%) ALSO THE REQ'D CURE CYCLE REDUCES RESIN FLOW DURING CURE	RAISE PART RESIN CONTENT LIMITS, OR PROCURE MX2600 WITH A LOWER RESIN CONTENT WHICH WOULD NOT BE THEIR STANDARD [redacted] PRODUCT.
	C.A. NAME [illegible] DATE 1-4-91
	25. EFFECTIVITY: (DATE/SERIAL NUMBER/ETC.)

DISCREPANT MATERIAL DISPOSITION	RESPONSIBILITY: ☐ GFM ☐ SUPPLIER ☐ ATC	QTY	RTS	SHIPPER NO.	SALVAGE	PROC/MFG/ENG REPR	DATE	QA REPR.	DATE	NO.

AEROJET TechSystems COMPANY

PRINT OR TYPE IN BLACK INK

NONCONFORMANCE REPORT

G.F.M. ☐ NO. V21274

PAGE 1 OF ____

AREA: ____

1. PART NUMBER	DASH	REV.	2. NOMENCLATURE	3. SERIAL NO.	4. PROGRAM	5. LOT SIZE	6. ACC.	7. DISC.
1206429		N/C	INSERT THRUST CHAMBER	2873-1-002		1	0	1

8. WORK ORDER	9. SHOP ORDER	10. OPER. NO.	11. SUPPLIER NAME NUMBER	12. P.O. NUMBER	13. DISTRIBUTION NO.	PREVIOUS NR NUMBER
			AAE	L823865 H ~~L0224~~.		

ITEM	14. NONCONFORMANCE (A) DWG. ZONE, SPEC., PARA., SHOP ORDER OPER., ETC AS APPLICABLE (B) STATE REQUIREMENT (C) INSPECTION RESULTS	15. (A) CAUSE C/C	15. (B) FREQ OCCUR	16. DISPOSITION/COMMENTS ☐ MRB ITEMS ____ ☐ ERB ITEMS ____
1	RESIN CONTENT 31 ± 4% IS			Us As Is; the higher resin content will not
	36.89 FWD			affect the performance of the Insert in the hot fire
	36.23 AFT			enviroment.

17. INITIATOR IDENTITY	DATE	18. REVIEWED BY	DATE	19. PROC ENGR	DATE	20. REINSPECT QTY / ACC. / DISC.	NEW NR NO.	INSPECTOR	DATE
B. McCAMMENT	1-14-91			[signature]	1/17/91				

21. MRB/ERB APPROVALS

ENG REPR	DATE	QA REPR.	DATE	CUST REPR.	DATE
[signature]	2-1-91				
[signature]	2-1-91				

22. MRB/ERB RESUBMIT DECISIONS

ENG REPR	DATE	QA REPR.	DATE	CUST REPR.	DATE	RESUBMIT FOR

23. CAUSE

BURNOUT METHOD FOR SILICA PHENOLIC MATERIALS HISTORICALLY HAS BEEN HIGHER THAN THE RAW MATERIAL CERTIFICATIONS (FIBERITE CERTS REPORT 32%) ALSO THE REQUIRED CURE CYCLE REDUCES RESIN FLOW DURRING CURE.

24. CORRECTIVE ACTION

RAISE PART RESIN CONTENT LIMITS, OR PROCURE MX2600 WITH A LOWER RESIN CONTENT WHICH WOULD NOT BE THEIR STANDARD PRODUCT.

C.C.A. MANAGER [signature] DATE 1-14-91

25. EFFECTIVITY: (DATE/SERIAL NUMBER/ETC.)

DISCREPANT MATERIAL DISPOSITION	RESPONSIBILITY: ☐ GFM ☐ SUPPLIER ☐ ATC	QTY	RTS	SHIPPER NO	SALVAGE	PROC/MFG/ILS REPR.	DATE	QA REPR.	DATE	NO.

TECH 00035A (REV 9/87)

AEROJET TechSystems COMPANY

PRINT OR TYPE IN BLACK INK

NONCONFORMANCE REPORT

G.F.M. ☐ NO. V2284

AREA: _____

PAGE 1 OF 1

1. PART NUMBER	DASH	REV.	2. NOMENCLATURE	3. SERIAL NO.	4. PROGRAM	5. LOT SIZE	6. ACC.	7. DISC.
1200729	-1	A	INJECTOR CORE		3D SUBSCALE	1	ø	1

8. WORK ORDER	9. SHOP ORDER	10. OPER. NO.	11. SUPPLIER NAME	NUMBER	12. P.O. NUMBER	13. DISTRIBUTION NO.	PREVIOUS NR NUMBER
	S/O 4444		MARTINEZ & TUREK		L823839		

ITEM	14. NONCONFORMANCE (A) DWG. ZONE, SPEC., PARA., SHOP ORDER OPER., ETC AS APPLICABLE (B) STATE REQUIREMENT (C) INSPECTION RESULTS	15. (A) CAUSE Q/C	15. (B) FREQ. OCCUR	☐ MRB ITEMS ____ 16. DISPOSITION/COMMENTS ☐ ERB ITEMS ____
1	REF. DWG. SHEET 4/7, ZONE: F-8 SHOULD BE: ø11.336±.000 .002 IS: ø11.331 at 68° F			Us As Is; the smaller diametrical dimension will not affect the assembly nor will it jeopardize the seal of the o-ring.
2	REF. DWG SHEET 3/7, ZONE: A-3 SHOULD BE: .022 + .001 @ 8 places, (BRAZE CHANNEL DEPTH) IS: ACCEPTABLE AT (7) LOCATIONS, (1) LOCATION (ø 1.888) FOUND TO BE .024" DEEP.			Us As Is; the difference of .001" in channel depth will not change the flow charactoristics to detriment the hardware performance.

17. INITIATOR IDENTITY	DATE	18. REVIEWED BY	DATE	19. PROC/REPR	DATE	20. REINSPECT QTY / ACC. / DISC.	NEW NR NO.	INSPECTOR	DATE
S. NICKERSON		[signature]	2/4/91	[signature]	1/25/91				

21. MRB/ERB APPROVALS

ENG REPR	DATE	QA REPR.	DATE	CUST REPR.	DATE
[signature]	2-1-91				
[signature]	2-1-91				

22. MRB/ERB RESUBMIT DECISIONS

ENG REPR	DATE	QA REPR.	DATE	RESUBMIT FOR
CUST REPR.	DATE			

23. CAUSE

Items 1&2: OPERATOR ERROR

24. CORRECTIVE ACTION

OPERATOR HAD PROPER INSTRUCTIONS AND DID NOT FOLLOW. THIS OPERATOR HAS BEEN COUNSELED ON CRITICAL NATURE OF THIS ASSEMBLY. VERBAL WARNING ISSUED.

C.A. SIGNATURE [signature] DATE 1/23/91

25. EFFECTIVITY: (DATE/SERIAL NUMBER/ETC.) 1/23/91

DISCREPANT MATERIAL DISPOSITION	RESPONSIBILITY: ☐ GFM ☐ SUPPLIER ☐ ATC	QTY	RTS	SHIPPER NO.	SALVAGE	PROC/MFG/ILS REPR	DATE	QA REPR.	DATE	NO.

TECH 00035A (REV 9/87)

AEROJET TechSystems COMPANY

PRINT OR TYPE IN BLACK INK

NONCONFORMANCE REPORT

G.F.M. ☐ NO. V21221

PAGE 1 OF 2

AREA:

1. PART NUMBER	DASH	REV.	2. NOMENCLATURE	3. SERIAL NO.	4. PROGRAM	5. LOT SIZE	6. ACC.	7. DISC.
1200729	-1	A	INJECTOR CORE			1	Ø	1

8. WORK ORDER	9. SHOP ORDER	10. OPER. NO.	11. SUPPLIER NAME	NUMBER	12. P.O. NUMBER	13. DISTRIBUTION NO.	PREVIOUS NR NUMBER
KFN 600	Vendor S/O 4444		MARTINEZ & TUREK	MA255	L823839	—	

ITEM	14. NONCONFORMANCE (A) DWG. ZONE, SPEC., PARA., SHOP ORDER OPER., ETC AS APPLICABLE (B) STATE REQUIREMENT (C) INSPECTION RESULTS	15. (A) CAUSE C/C	15. (B) FREQ. OCCUR	☐ MRB ITEMS ☐ EFB ITEMS 16. DISPOSITION/COMMENTS
1	REF: DWG. SHEET -4, Zone: D-5 Should be: Ø .156 $^{+.005}_{-.001}$, 7-Holes Eq. Spaced ⊕ A C(S) D(S) ⌀.005(S) 9 Equal Spaces IS: True position varies up to .020, (See Attached for Discrepant locations)7 pls.			Accept as is providing all metal chips have been deburred so there will be nothing dislodged during testing.

17. INITIATOR IDENTITY	DATE	18. REVIEWER	DATE	19. PINK TAG	DATE	20. RE-INSPECT QTY	ACC.	DISC.	NEW NR NO.	INSPECTOR	DATE
[illegible]	10-31-90	[illegible]	11-12-90	[illegible]	11/8/90						

21. MRB-ERB APPROVALS	DATE		DATE		DATE	22. MRB/ERB RESUBMIT DECISIONS	DATE		DATE	RESUBMIT FOR
ENG REPR. [illegible]	1/8/91	QA REPR.		CUST REPR.		ENG REPR.		QA REPR.		
[illegible]	12-21-90					CUST REPR.				

23. CAUSE

Due to the length of the drill ~~xx~~ required to complete this configuration (Approx. 5" Long) Deflection occured thus causing drilled hole to be off location.

24. CORRECTIVE ACTION

Operator has been instructed to pilot drill holes first and then bore to size.

25 EFFECTIVITY: (DATE/SERIAL NUMBER/ETC.)

CLASSIFICATION [illegible] DATE 10/31/90

DISCREPANT MATERIAL	RESPONSIBILITY	☐ GFM	QTY	RTS	SHIPPER NO	SALVAGE	PROC MFG ES REPR	DATE	QA REPR	DATE	NO.
	—										

F-6

ATC PN# 1200729
-1 INJECTOR CORE
P.O.# L823839

V 2/221

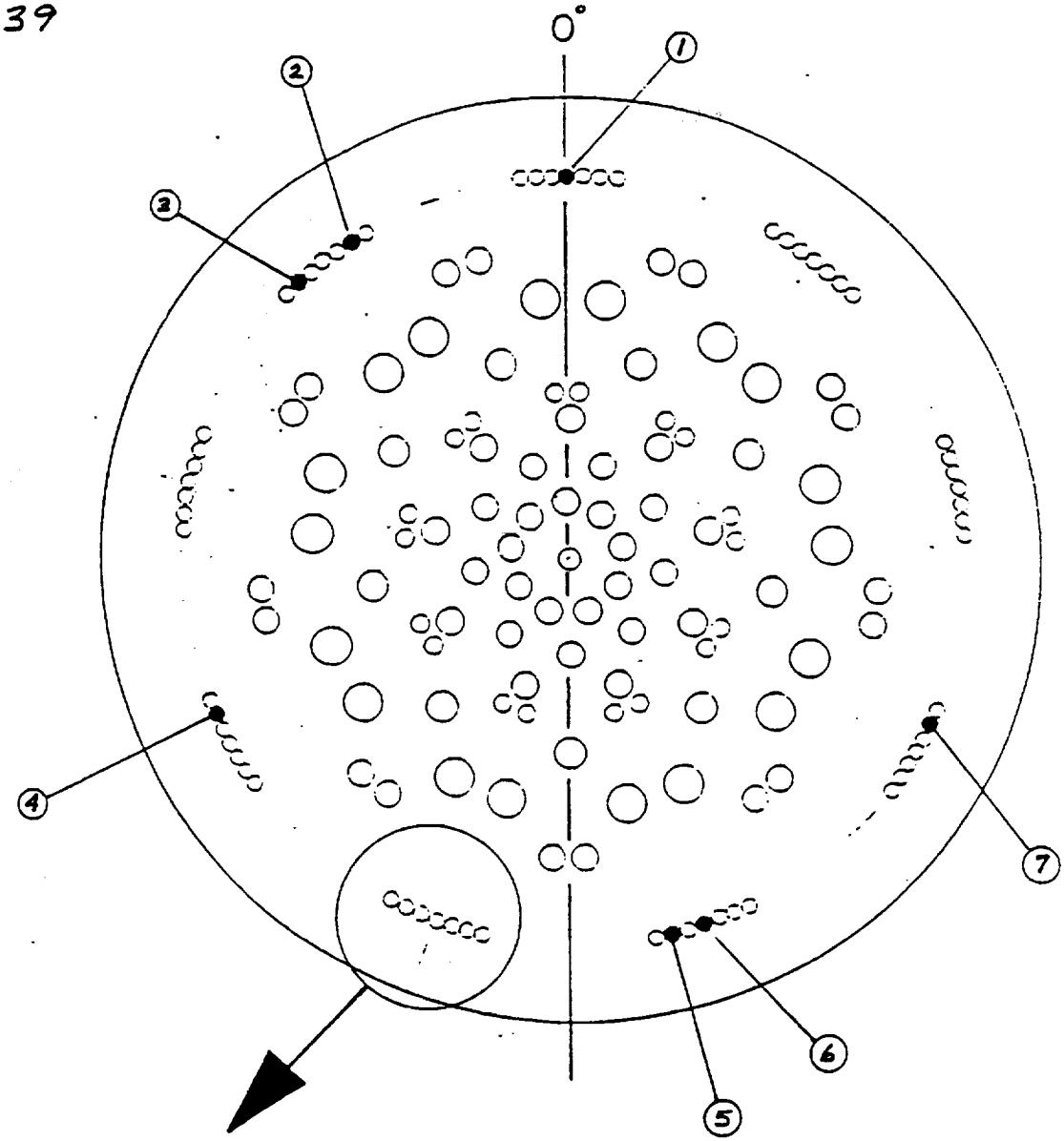

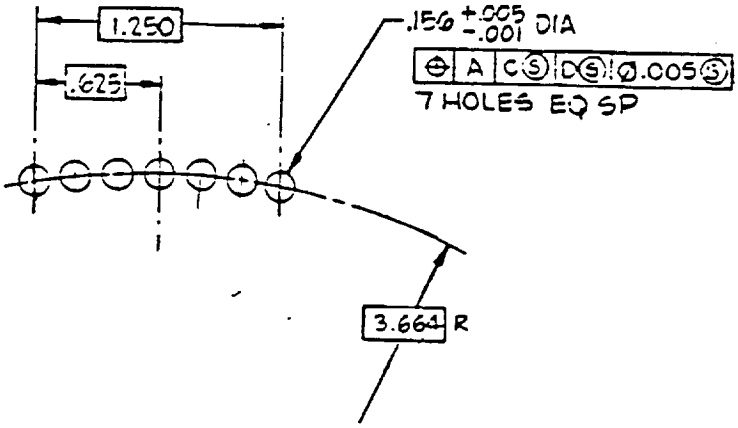

VIEW Ⓢ 4 2 6
9 PL THRU EQ SP
SCALE: 2/1

HOLE NO.#	TRUE POSITION
1	.006
2	.020
3	.006
4	.006
5	.012
6	.007
7	.0085

AEROJET TechSystems COMPANY

PRINT OR TYPE IN BLACK INK

AREA:

NONCONFORMANCE REPORT

G.F.M. [ ] NO.

1. PART NUMBER	DASH	REV.	2. NOMENCLATURE	3. SERIAL NO.	4. PROGRAM	5. LOT SIZE	6. ACC.	7. DISC.
1206423	-9	A-2	INJECTOR CORE ASSY	S/N-01		1	Ø	1

8. WORK ORDER	9. SHOP ORDER	10. OPER. NO.	11. SUPPLIER NAME	NUMBER	12. P.O. NUMBER	13. DISTRIBUTION NO.	PREVIOUS NR NUMBER
	VENDOR S/O 4444		martinez & Turek		L823839		

ITEM	14. NONCONFORMANCE (A) DWG. ZONE, SPEC., PARA., SHOP ORDER OPER., ETC AS APPLICABLE (B) STATE REQUIREMENT (C) INSPECTION RESULTS	15. (A) CAUSE C/C	15. (B) FREQ. OCCUR	[ ] MRB ITEMS ____ 16. DISPOSITION/COMMENTS [ ] ERB ITEMS ____
1	REF. DWG. # 1200729, Sht #1, Zone: F-6			Us As Is; the difference in length will be
				accomodated between the seal and the test stand
	SHOULD BE: 10.75 ± .030			interface.
	IS: 10.685			

17. INITIATOR IDENTITY	DATE	18. REVIEWED BY	DATE	19. PROC REPR.	DATE	20. REINSPECT QTY / ACC. / DISC.	NEW NR NO.	INSPECTOR	DATE
S. NICKERSON	2-11-91								

21. MRB/ERB APPROVALS						22. MRB/ERB RESUBMIT DECISIONS				RESUBMIT FOR
ENG REPR.	DATE	QA REPR.	DATE	CUST REPR.	DATE	ENG REPR.	DATE	QA REPR.	DATE	
Lance Myers	2-28-91		DATE		DATE	CUST REPR.	DATE			

23. CAUSE

This is attributed to Weld Shrinkage during the welding of -19 Assembly unto -1 Assembly

24. CORRECTIVE ACTION

This problem has been presented to M&T Engineering & Mfg. Engineer for solution on all XXX future projects

C.G.A. SIGNATURE: [signature] DATE 2/4/91

25. EFFECTIVITY: (DATE/SERIAL NUMBER/ETC.) FEB. 11, 91

DISCREPANT MATERIAL DISPOSITION	RESPONSIBILITY: [ ] GFM [ ] SUPPLIER [ ] ATC	QTY	RTS	SHIPPER NO.	SALVAGE	PROC/MFG/ILS REPR.	DATE	QA REPR.	DATE	NO.

F-8

REPORT DOCUMENTATION PAGE

Form Approved
OMB No. 0704-0188

Public reporting burden for this collection of information is estimated to average 1 hour per response, including the time for reviewing instructions, searching existing data sources, gathering and maintaining the data needed, and completing and reviewing the collection of information. Send comments regarding this burden estimate or any other aspect of this collection of information, including suggestions for reducing this burden, to Washington Headquarters Services, Directorate for Information Operations and Reports, 1215 Jefferson Davis Highway, Suite 1204, Arlington, VA 22202-4302, and to the Office of Management and Budget, Paperwork Reduction Project (0704-0188), Washington, DC 20503.

1. AGENCY USE ONLY (*Leave blank*)

2. REPORT DATE
May 1993

3. REPORT TYPE AND DATES COVERED
Final Contractor Report

4. TITLE AND SUBTITLE
LOX/Hydrocarbon Rocket Engine Analytical Design Methodology Development and Validation

5. FUNDING NUMBERS
WU–590–21–21
C–NAS3–25556

6. AUTHOR(S)
Karen E. Niiya and Richard E. Walker

7. PERFORMING ORGANIZATION NAME(S) AND ADDRESS(ES)
Aerojet Propulsion Division
P.O. Box 13222
Sacramento, California 95813

8. PERFORMING ORGANIZATION REPORT NUMBER
E–7827

9. SPONSORING/MONITORING AGENCY NAME(S) AND ADDRESS(ES)
National Aeronautics and Space Administration
Lewis Research Center
Cleveland, Ohio 44135–3191

10. SPONSORING/MONITORING AGENCY REPORT NUMBER
NASA CR–191059 -VOL-2

11. SUPPLEMENTARY NOTES
Project Manager, Mark D. Klem, Space Propulsion Technology Division, (216) 977–7473.

12a. DISTRIBUTION/AVAILABILITY STATEMENT
Unclassified - Unlimited
Subject Category 20

12b. DISTRIBUTION CODE

13. ABSTRACT ***(Maximum 200 words)***

This final report includes a discussion of the work accomplished on contract NAS 3-25556 during the period from December 1988 through November 1991. The objective of the program was to assemble existing performance and combustion stability models into a usable design methodology capable of designing and analyzing high-performance and stable LOX/Hydrocarbon booster engines. The methodology was then used to design a validation engine. The capabilities and validity of the methodology were demonstrated using this engine in an extensive hot fire test program. The engine used LOX/RP-1 propellants and was tested over a range of mixture ratios, chamber pressures and acoustic damping device configurations. This volume contains time domain and frequency domain stability plots which indicate the pressure perturbation amplitudes and frequencies from approximately 30 tests of a 50K thrust rocket engine using LOX/RP-1 propellants over a range of chamber pressures from 240 to 1750 psia with mixture ratios of from 1.2 to 7.5. The data is from test configurations which used both bitune and monotune acoustic cavities and from tests with no acoustic cavities. The engine had a length of 14 inches and a contraction ratio of 2.0 using a 7.68 inch diameter injector. The data was taken from both stable and unstable tests. All combustion instabilities were spontaneous in the first tangential mode. Although stability bombs were used and generated over pressures of approximately 20%, no tests were driven unstable by the bombs. The stability instrumentation included six high-frequency Kistler transducers in the combustion chamber, a high-frequency Kistler transducer in each propellant manifold, and tri-axial accelerometers. Performance data is presented, both characteristic velocity efficiencies and energy release efficiencies, for those tests of sufficient duration to record steady state values.

14. SUBJECT TERMS
Combustion stability; Combustion efficiency; Rocket engine design; Combustion chambers; Rocket thrust chambers; Design analysis; Injectors

15. NUMBER OF PAGES
160

16. PRICE CODE
A08

17. SECURITY CLASSIFICATION OF REPORT
Unclassified

18. SECURITY CLASSIFICATION OF THIS PAGE
Unclassified

19. SECURITY CLASSIFICATION OF ABSTRACT
Unclassified

20. LIMITATION OF ABSTRACT