22414.000

DETAILED TECHNICAL REPORT
VOLUME I

SHUTTLE LAUNCH SITE OPERATIONAL CONCEPTS FOR CERTAIN SORTIE MISSIONS

NAS 10-8043

17 October 1972

Prepared for
National Aeronautics and Space Administration
John F. Kennedy Space Center
Kennedy Space Center, Florida

DETAILED TECHNICAL REPORT
VOLUME I

SHUTTLE LAUNCH SITE OPERATIONAL CONCEPTS FOR CERTAIN SORTIE MISSIONS

17 October 1972

Prepared under:
Contract NAS 10-8043

APPROVALS:

V. A. DULOCK, JR.
Study Manager
TRW Systems Group

R. L. NORMAN
NASA Technical Monitor
Kennedy Space Center

SHUTTLE LAUNCH SITE OPERATIONAL CONCEPTS FOR CERTAIN SORTIE MISSIONS

TRW
SYSTEMS GROUP

FOREWORD

This document is submitted in accordance with the requirements stated in Section 7.0 of the Statement of Work for KSC Contract NAS 10-8043.

[redacted]

TABLE OF CONTENTS

Section		Page
1.0	INTRODUCTION	1-1
2.0	REVIEW OF OTHER PAYLOAD PROGRAMS	2-1
3.0	SURVEY, ASSEMBLE AND ORGANIZE PAYLOAD DATA	3-1
4.0	GROUND OPERATIONS REQUIREMENTS	4-1
4.1	PRE-LAUNCH OPERATIONS	4-13
4.2	LAUNCH OPERATIONS	4-43
4.3	MISSION SUPPORT OPERATIONS	4-47
4.4	RECOVERY OPERATIONS	4-51
4.5	REFURBISHMENT OPERATIONS	4-57
4.6	SUMMARY	4-63
5.0	INTERFACE ASSESSMENT	5-1
5.1	PHYSICAL INTERFACE ASSESSMENT	5-3
5.2	PIM/SID ASSESSMENT	5-27
6.0	OTHER REQUIREMENTS AND FACTORS	6-1
6.1	LAUNCH CENTER INVOLVEMENT PRIOR TO HARDWARE DELIVERY	6-5
6.2	LAUNCH CENTER IMPACT AND FACTORS RELATED TO DOD, COMMERCIAL AND FOREIGN USERS	6-17
7.0	SUMMARY	7-1

PAGE IV INTENTIONALLY BLANK

PRECEDING PAGE BLANK NOT FILMED

1.0 INTRODUCTION

STUDY OBJECTIVES

The basic study premise is a Quick-Reaction Sortie Mission, i.e. a user oriented operational concept to afford a window into space for a wide spectrum of users.

The overall study objectives are:

- Define the launch site operational/systems philosophies and hardware/software requirements for a selected set of experiments which lend themselves to a minimum integration, low cost, customer responsive, Quick-Reaction operation.

- Perform a trade study to determine the time/cost perturbations introduced by accomplishing these activities at locations other than the launch site.

The facing page shows the study activities to be divided into three phases. This report presents the results of Phase 1. The purpose of this first phase has been to lay the groundwork for developing the Quick-Reaction concept during Phase 2. The site trade study will be performed in Phase 3.

OVERALL STUDY ACTIVITIES

PHASE 1	PHASE 2	PHASE 3
ANALYSIS	OPERATIONAL CONCEPTS	REQUIREMENTS AND SCHEDULES
DETERMINE LAUNCH SITE REQUIREMENTS AND INTERFACES	DEVELOP QUICK-REACTION SORTIE MODE OPERATIONAL CONCEPT	• ASSESS LAUNCH SITE IMPACT • PERFORM SITE TRADE STUDY
3 MONTHS	3 MONTHS	2 1/2 MONTHS

TRW SYSTEMS GROUP

AGENDA

This first quarterly review covers the following tasks defined for Phase 1:

Task 1 - Survey, Assemble, and Organize Payloads Data

Task 2 - Define Preparation and Integration Requirements

Task 3 - Perform Functional Interface Assessment

Task 4 - Review Other Payload Programs

The facing page shows the agenda for this review.

PRESENTATION AGENDA

INTRODUCTION -
VIC DULOCK

REVIEW OF OTHER PAYLOAD PROGRAMS -
VIC DULOCK

QUICK-REACTION EXPERIMENT BASELINE DEFINITION
GEORGE SPENGLER

GROUND OPERATIONS REQUIREMENTS ANALYSIS -
JACK GREGORY

INTERFACE ASSESSMENT -
JACK GREGORY

OTHER REQUIREMENTS AND FACTORS -
VIC DULOCK

SUMMARY -
VIC DULOCK

TRW

PHASE 1 TASKS

ANALYSIS

The Phase 1 tasks were principally analysis tasks oriented toward establishing baseline data for use in developing a Quick-Reaction operational concept in Phase 2.

Phase 1 also included a review of other currently operating payload programs. The purpose of this review was to provide information and recommendations from which to formulate optimum concepts for the Quick-Reaction Operational Concept in the succeeding study effort.

PHASE I - ANALYSIS

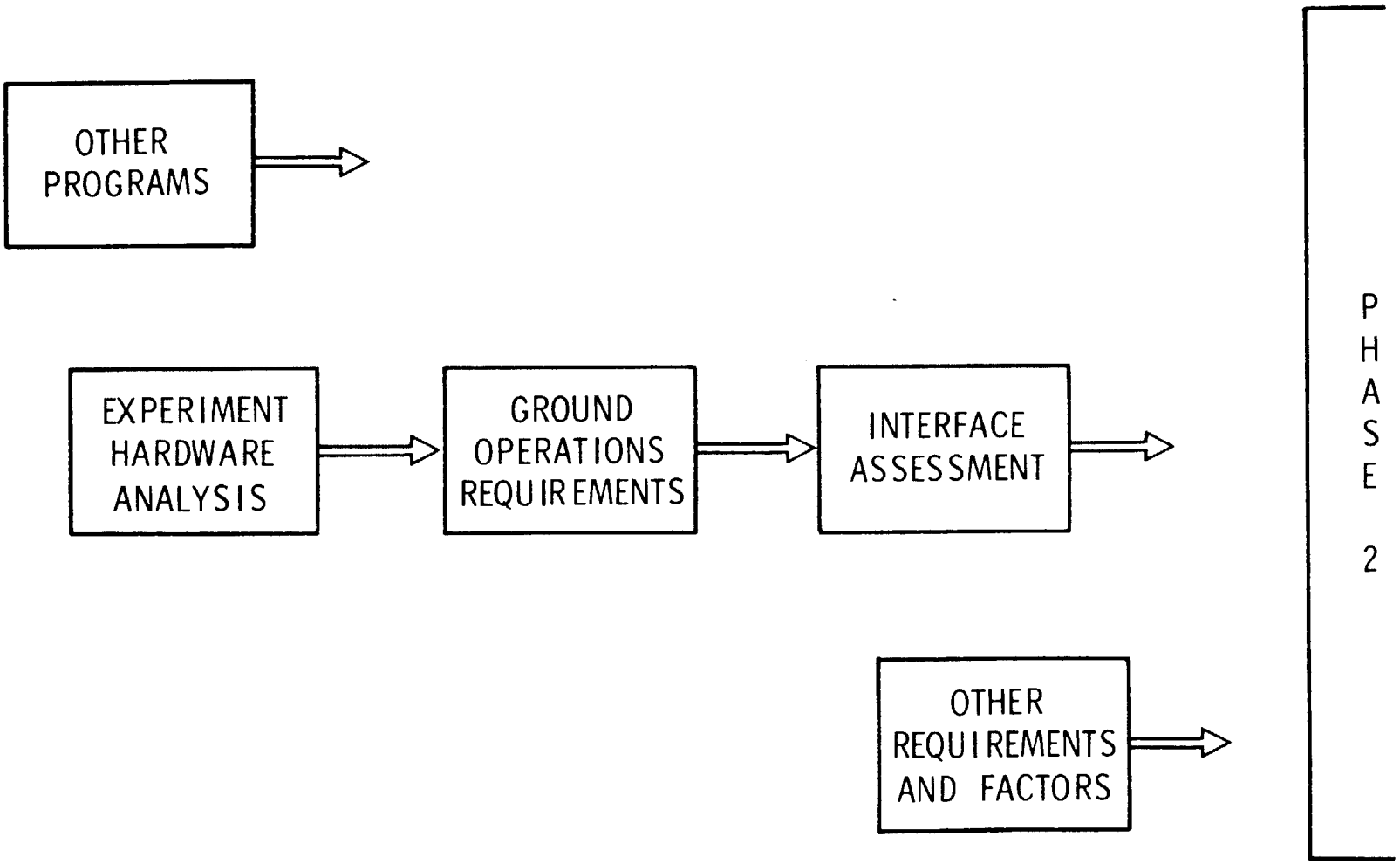

TRW SYSTEMS GROUP

PHASE 1 OBJECTIVES

The Phase 1 objectives are oriented toward developing the baselines and data required for Phases 2 and 3. The baseline concept assumes that the Quick-Reaction integration activity is located at the Shuttle launch site.

PHASE I OBJECTIVES

DEFINE AN
EXPERIMENT HARDWARE
BASELINE

TO

DEVELOP LAUNCH
SITE REQUIREMENTS
AND INTERFACES

AND

DEVELOP
OTHER
REQUIRED DATA

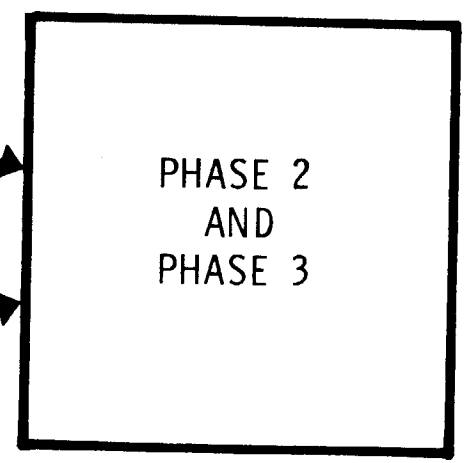

TRW
SYSTEMS GROUP

DESCRIPTION OF QUICK-REACTION

The term "Quick-Reaction" is defined for purposes of this study. No implication is intended that other definitions of Quick-Reaction are not valid.

The definition is not in the dictionary sense, but rather consists of a description of the principal elements. When taken collectively, these descriptions constitute our definition of Quick-Reaction.

This definition is derived from the Statement of Work, the Martin Marietta Corporation (MMC) report (Contract NAS 10-7685), conversations with KSC and TRW personnel, and ideas developed by the study team.

The key elements used to describe Quick-Reaction are: the user or Principal Investigator (PI); the span time; cost; experiment simplicity; and documentation requirements.

- Time: For this study, the time span covers from experiment flight hardware delivery at the launch site to data return. The goal is one to three months, based on the time spans observed in other Quick-Reaction type programs. This goal should, in turn, encourage overall short span times from experiment concept to data return. The total time, including flight hardware development, might run from 12 to 15 months.

- Cost: This refers to low cost for integration and checkout operations at the launch site. Low cost experiment hardware development is to be encouraged.

- Simplicity: The experiment hardware must be simple to check out, to integrate onto the carriers, and to operate and maintain. This does not imply that the experiment or its hardware is necessarily simple or unsophisticated.

- Documentation: The concept must provide management systems which result in minimum documentation requirements for the integration process. This suggests the use of standard user's handbooks and a reliance on verbal and informal communications. Minimum documentation requirements for the overall program is to be encouraged.

- User (PI): The Quick-Reaction concept must put high reliance on and faith in the user's sense of responsibility. The user is allowed and encouraged to be highly involved throughout the entire process. Finally, the attitude is: *The user is a customer.*

DESCRIPTION OF QUICK REACTION

FOR THIS STUDY THE QUICK-REACTION CONCEPT

- IS COMPOSED OF THE FOLLOWING ELEMENTS
  - USER OR PRINCIPAL INVESTIGATOR (PI)
  - TIME
  - COST
  - SIMPLICITY
  - DOCUMENTATION
- IS NOT RAPID RESPONSE TO UNEXPECTED EVENTS OR UNPREDICTED TARGETS OF OPPORTUNITY

TRW SYSTEMS GROUP

DESCRIPTION OF QUICK-REACTION

"SPECIFICALLY, WE MUST LEARN TO GIVE THE USER WHAT HE WANTS, AND NOT WHAT WE THINK HE SHOULD WANT"

George M. Low, 31 July 1972

TRW SYSTEMS GROUP

PRECEDING PAGE BLANK NOT FILMED

2.0 REVIEW OF OTHER PAYLOAD PROGRAMS

OTHER PAYLOAD PROGRAMS

Eight current payload programs were reviewed to determine the feature or features of the programs applicable to or desirable for incorporation into the Quick-Reaction concept to enhance its appeal. The key attributes are summarized for each program. The features recommended for incorporation into the Quick-Reaction concept are then summarized.

REVIEW OF OTHER PAYLOAD PROGRAMS

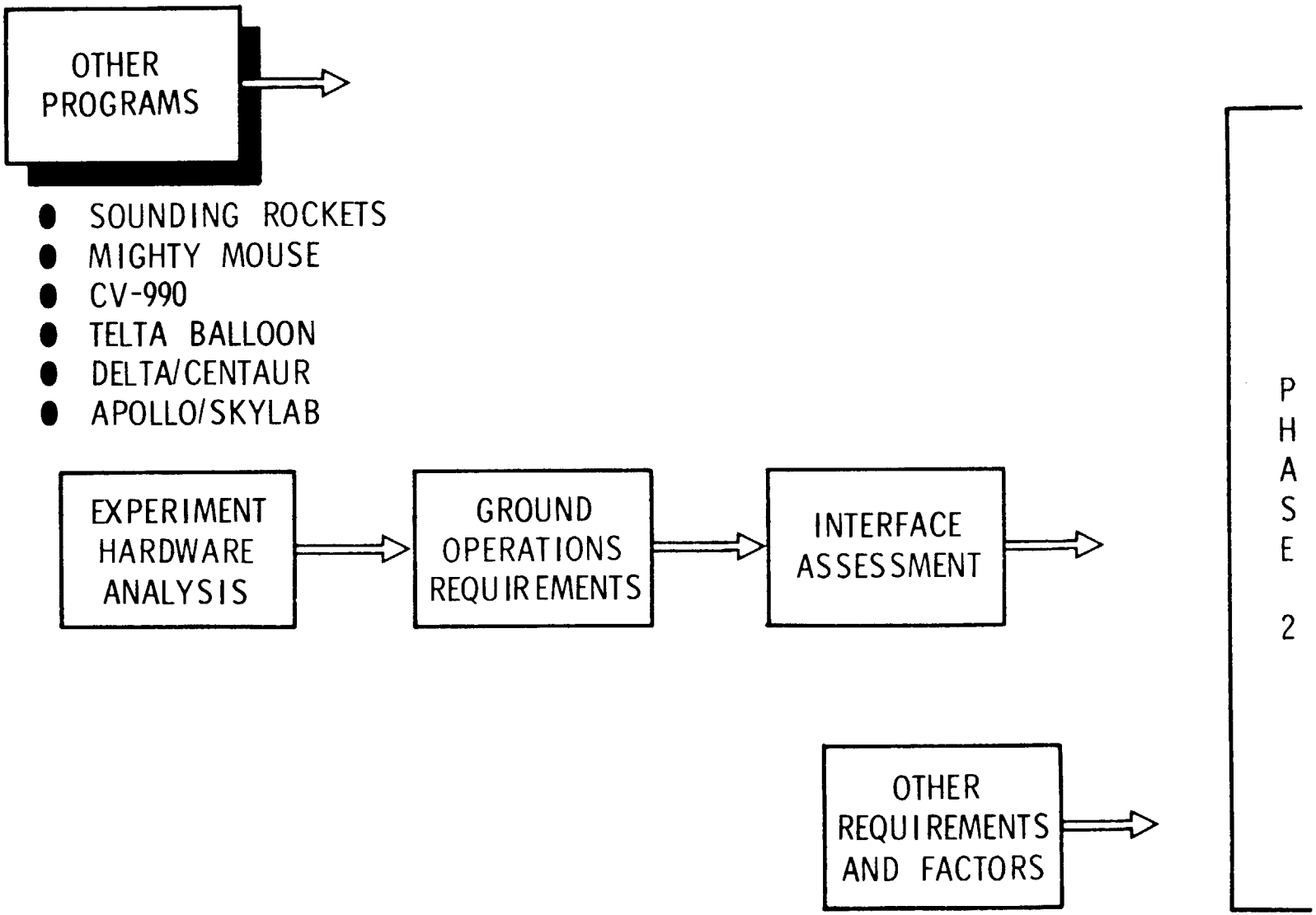

TRW SYSTEMS GROUP

APPROACH

To perform this review, information was extracted from the following sources: program documentation from the programs concerned; the MMC review of some of the same programs; and interviews with program personnel. The information on each program was then evaluated in terms of the Quick-Reaction philosophy and a summary of desirable features developed.

APPROACH

OBJECTIVE: DETERMINE WHAT THESE OTHER PROGRAMS HAVE TO OFFER THE QUICK-REACTION CONCEPT

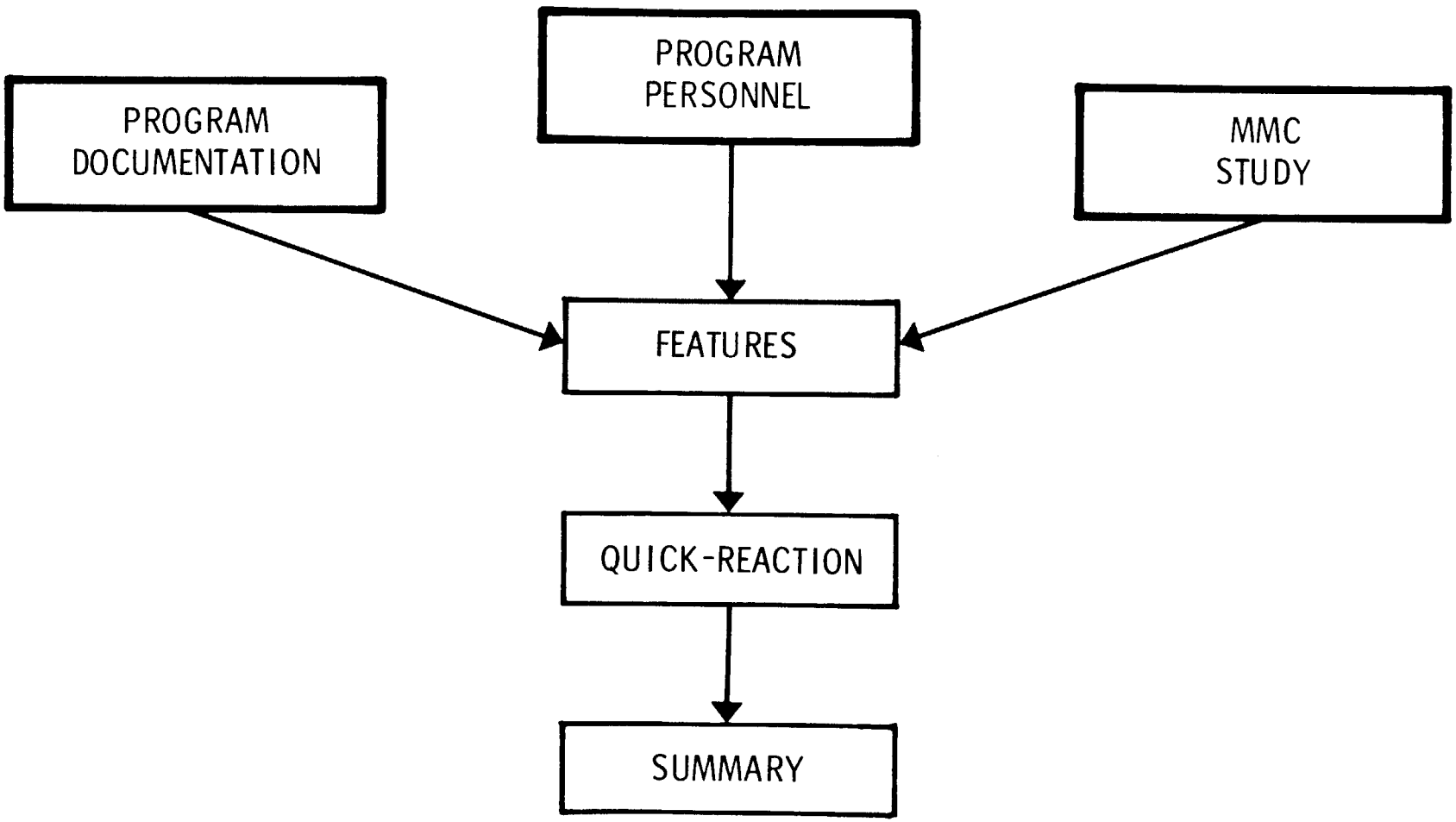

WALLOPS ISLAND SOUNDING ROCKET PROGRAM

The sounding rocket program is a multi-discipline research program conducted for the benefit of the scientific community.

Operational responsibility rests with the program manager, who arbitrates disagreements and makes real-time decisions. The PI is heavily involved through the entire project cycle.

The program uses a minimal documentation system. The PI states his requirements and constraints through a Payload Description Document. The program office states its constraints on the PI by means of standard handbooks. These handbooks also specify to the PI the facilities and services available to him. They also define the operational and payload envelopes within which he must operate. Early in the program cycle, the PI and the program manager together establish a minimum success criteria. This tends to moderate PI enthusiasm during launch operations, and it precludes the compromise of scientific data. Each launch is devoted to a single user or user group rather than accommodating a diverse set of users at one time.

SOUNDING ROCKET

TYPICAL BOOST ASCENT AND PAYLOAD INJECTION INTO ORBIT

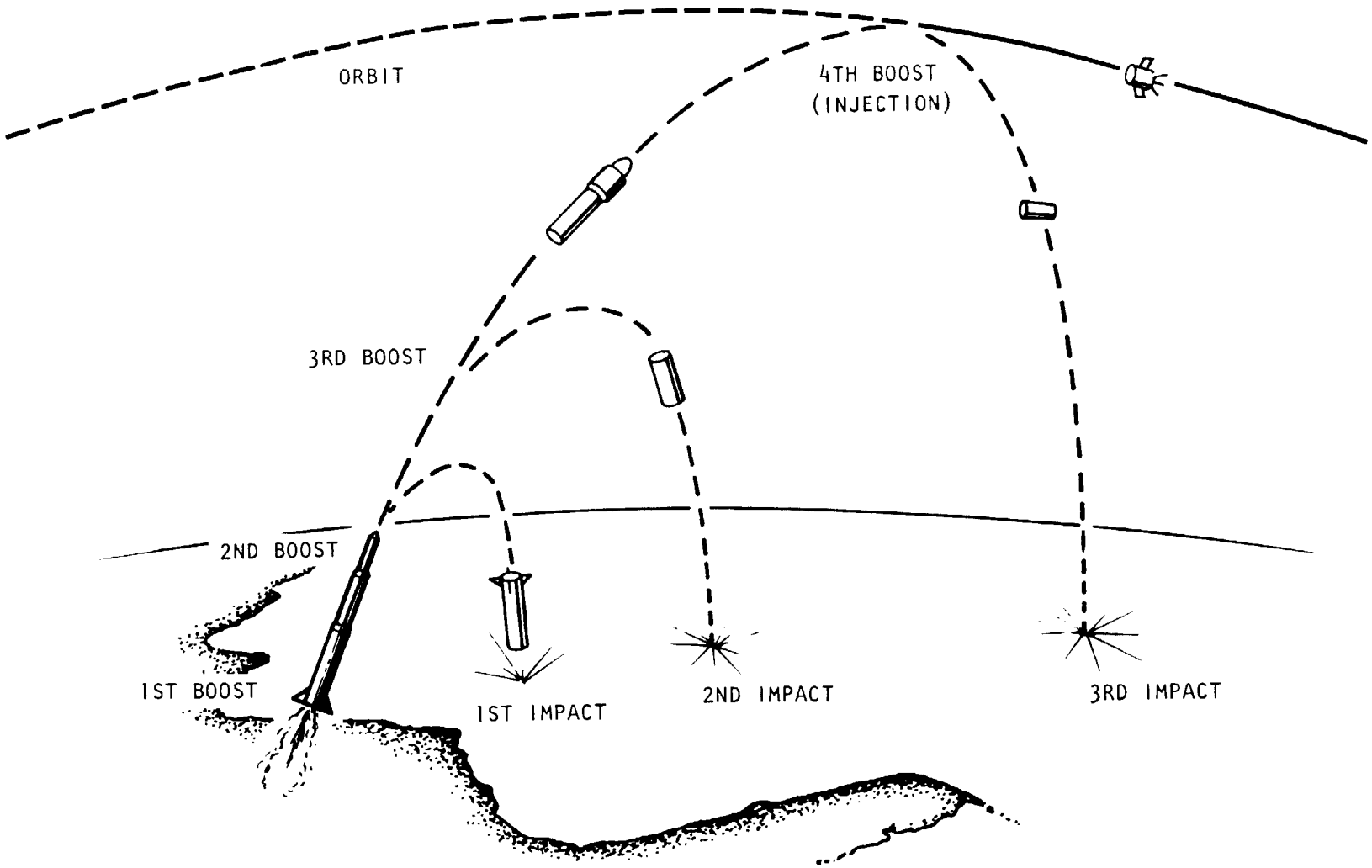

WALLOPS ISLAND SOUNDING ROCKET PROGRAM (Continued)

A typical project cycle in this program proceeds as follows:

- PI proposal
- Proposal acceptance
- Project initiation, i.e., establishment of constraints and requirements, identification of potential problem areas, and interface definitions
- Develop schedules and milestones
- Payload test and payload/launch vehicle integration
- Flight readiness review and establishment of minimum success criteria
- Launch operations
- Recovery, if required
- Data analysis - PI responsibility

Features of the Wallops Island Sounding Rocket Program which apply to the Shuttle Quick-Reaction concept include: the minimum documentation requirements; the high degree of PI involvement, participation and responsibility; the use of minimum success criteria; and single-point operational responsibility.

WALLOPS ISLAND SOUNDING ROCKETS

ATTRIBUTES

- MULTI-DISCIPLINE RESEARCH
- SINGLE EXPERIMENT/LAUNCH
- HIGH USER INVOLVEMENT
- SINGLE-POINT RESPONSIBILITY
- MINIMAL DOCUMENTATION
- 8 TO 12 MONTH SPAN TIME
- USER ORIENTED

TRW SYSTEMS GROUP

MIGHTY MOUSE PROGRAM

The Mighty Mouse Program is a lightning research program. It is conducted by KSC, and has been in operation for approximately two years. It is a single objective program which uses standard launch vehicles and payloads. The PI has little involvement at the launch site. Operational procedures are well defined, but allow for real-time decisions and changes, thus providing adequate flexibility.

A program manager has overall program responsibility. During a typical operation, the launch director has complete authority and responsibility for the operation. A typical operation involves approximately fifty people, including two five-man launch crews.

The operational aspects of the program are streamlined. The program manager assures that sufficient payloads and launch vehicles are on hand for a minimum of two days' operation. The launch vehicles are supplied by the Office of Naval Research and the payloads are supplied and calibrated by the National Oceanographic and Atmospheric Agency (NOAA).

A typical operation is as follows:

- If possible, AFETR and KSC meteorological staffs provide the program manager (PM) and launch director (LD) with an alert of possible thunderstorms over the Cape the next day.
- On the day of a storm opportunity, the meteorologists track the storm and alert the LD as to direction and timing.
- The LD chooses two of three possible sites to be manned and alerts the launch crews.
- The PM schedules the NASA-6 aircraft, which is equipped to make electric field intensity measurements. (Note: This aircraft was recently withdrawn from the program, so that this support is no longer available.)

MIGHTY MOUSE VEHICLE CONFIGURATION

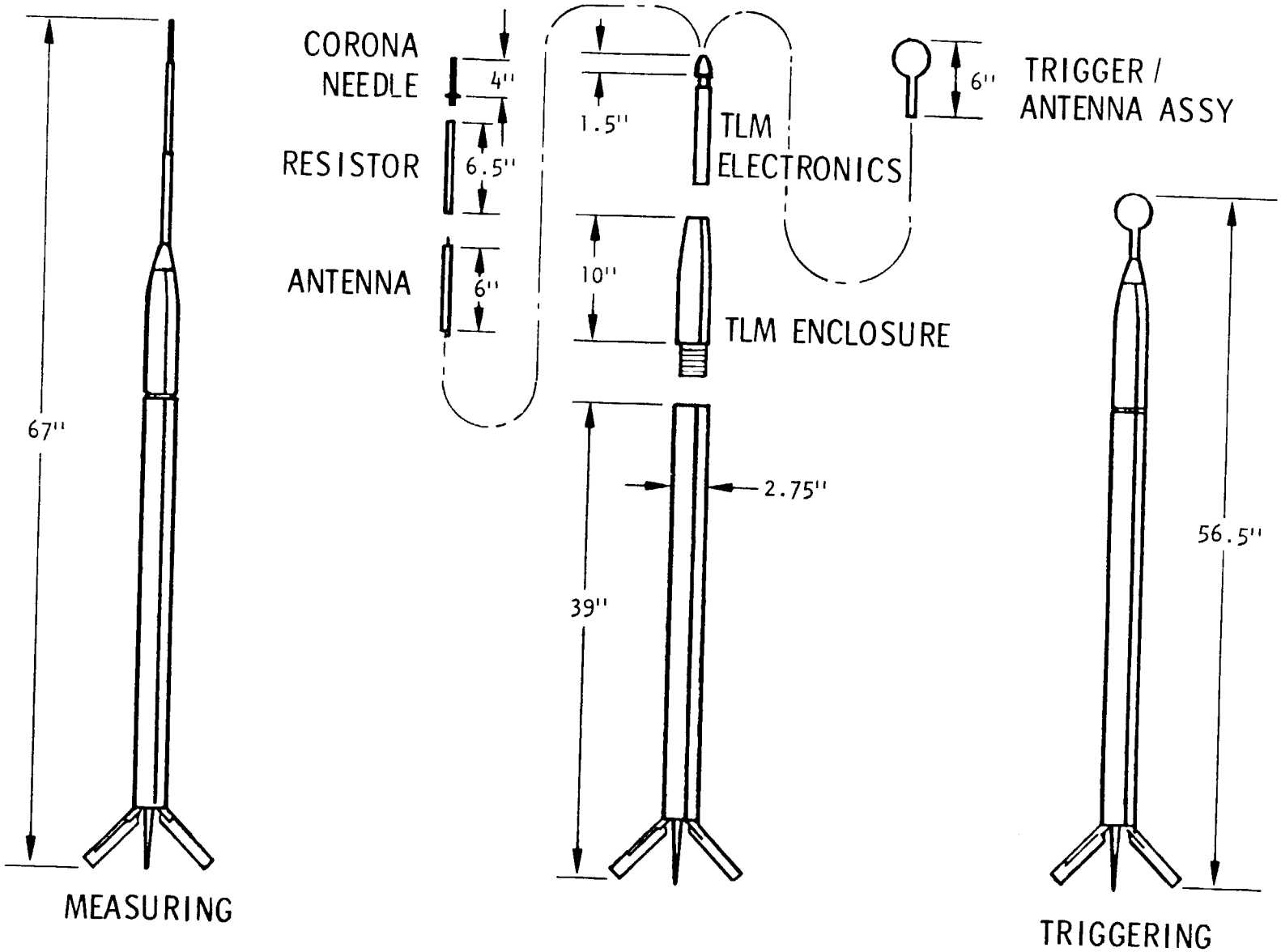

- The LD directs the aircraft near the approaching storm to make electric field measurements.
- Radar tracks aircraft position, and the aircraft telemeters data to the LD.
- Given sufficient field strength, the aircraft is directed away from the area. Sensor payloads are then fired into the storm from the appropriate site, with the telemetered data again available to the LD.
- Based on this data, the LD directs the firing of lightning discharge payloads into the storm.

  (Since deletion of the aircraft support, the LD makes his launch decisions on the basis of ground-based field-intensity measurements.)

The program documentation consists mainly of requirements and specification documents. These are updated only as required.

Several features of this program apply to the Shuttle Quick-Reaction concept. These are: the limited number of decision-makers and single-point responsibility in the program operation; the use of well-defined operational procedures with built-in capability for real-time decisions; and the development of good communication lines to allow the use of verbal requests and communications. The use of standard payloads obviously does not apply; however, some elements of the Quick-Reaction hardware might be standardized, e.g., carriers, racks, recorders, and other experiment support hardware. The minimal PI involvement and the fact that this is a single-objective program are not compatible with the Shuttle Quick-Reaction Sortie mode, which has a basic objective of flying a wide variety of experiment hardware, and which encourages PI participation at the launch site.

MIGHTY MOUSE

ATTRIBUTES

- SINGLE OBJECTIVE
- SINGLE PI/LOW INVOLVEMENT
- STANDARD HARDWARE
- WELL DEFINED OPERATIONAL PROCEDURES
- RELIANCE ON VERBAL COMMUNICATIONS
- EXTREMELY RAPID RESPONSE

TRW SYSTEMS GROUP

CV-990 PROGRAM

NASA's Ames Research Center operates the CV-990 Aircraft Program. It uses a Convair Model 990 aircraft, converted for use as a flying experimental laboratory, for research in astronautics and space sciences.

This multi-disciplinary program is conducted for the benefit of outside experimenters in astronautics and space sciences. The program places a high reliance on the PI for experiment management, development, and operation. The PI is fully responsible for data analysis. The program has very little formal documentation. Technician support and facilities support is provided to the PI at Ames for checkout, repair, and installation of experiment hardware.

A typical project cycle proceeds as follows:

- Proposal submission by PI
- Evaluation and approval by NASA
- Experiment design and fabrication by PI
- Stress analysis by PI
- Integration and installation at Ames by PI and support personnel
- Flight
- Data analysis by PI

Most of the attributes of this program are compatible with the Quick-Reaction concept as defined for this study.

CV-990

ATTRIBUTES

- MULTI-DISCIPLINE RESEARCH
- HIGH USER INVOLVEMENT
- USER OPERATED EXPERIMENTS
- SINGLE-POINT RESPONSIBILITY
- MINIMAL DOCUMENTATION
- 9 TO 12 MONTH SPAN TIME
- USER ORIENTED

TELTA BALLOON PROGRAM

The TELTA tethered balloon program is operated at the Cape Kennedy Air Force Station (CKAFS) by RCA under contract to the Advanced Research Projects Agency (ARPA/DOD). RCA is responsible for balloon operations and payload/balloon integration. Westinghouse is the payloads contractor for several DOD classified payloads.

RCA employs approximately thirty people for management, engineering, maintenance, and administration. Westinghouse employs three to five for the payload installation, depending on the payload complexity.

This is an R&D program for both balloon and payload. The payloads usually are classified and originate from within DOD. However, when space permits, additional unclassified payloads from non-DOD users may be flown. If they are relatively small and simple, they are flown piggyback with larger payloads.

The program uses very little formal documentation. Requests for flight time are directed to the ARPA office at Patrick AFB or to the Washington ARPA office. Approval is generally verbal, and RCA is verbally directed to fly the payload. The time from ARPA approval to flight can be as little as two days if the experiments are simple. Larger payloads require informal RCA time and cost estimates if additional manpower or materials are required above that normally provided for in the contract.

TELTA BALLOON

ATTRIBUTES

- BALLOON AND PAYLOAD RESEARCH
- SMALL AND SIMPLE EXPERIMENTS
- INFORMAL COMMUNICATIONS
- MINIMAL DOCUMENTATION
- DOD ORIENTED
- NOT GENERALLY OPEN TO OTHER USERS
- QUICK AND FLEXIBLE

TRW SYSTEMS GROUP

DELTA/CENTAUR PROGRAMS

The Delta and Centaur Programs refer to the launch vehicles used to launch automated scientific and operational spacecraft. These vehicles are launched from the Eastern Test Range by KSC/ULO.

The launch vehicles approach an operational status in the sense that the GSE, procedures, launch crews, and program interfaces are well established through years of operation.

The payloads mostly are one-of-a-kind. They are not recoverable and must be self-sufficient when in orbit; therefore, they tend to be relatively large and complex with dedicated subsystems and experiments. As a result, extreme attention is given to high reliability to assure mission success. This, in turn, requires a formal documentation system which involves detailed coordination, many review cycles, and many formal sign-offs.

These programs generally involve several NASA centers, program offices, and contractors. NASA Headquarters assigns responsibilities by means of directives, and these responsibilities are implemented through interface agreements. A typical project involves a spacecraft management center, a stage management center, and the launch center (KSC/ULO).

The spacecraft management center is responsible for management, development, and integration of the spacecraft. The experimenters and PI's interface with this center. The hardware is usually fabricated and integrated by a spacecraft contractor for the spacecraft center.

The launch vehicle management center is responsible for launch vehicle management, which includes procurement of the launch vehicles from the stage contractors. Payload/launch vehicle interfaces are coordinated through KSC/ULO.

The launch center provides the necessary facilities, GSE, and other support needed for vehicle integration, checkout, and launch. This includes such functions as test planning, scheduling, direction of contractor launch crews, and coordination of range support. The launch center also imposes safety requirements.

In addition to the NASA organizations, the AFETR, the AFETR Range Contractor, and a number of contractor organizations participate in the launch site activities.

The program cycle generally runs from three to five years. Payload and experiment design, fabrication, and integration occupy most of this time. Although these payloads are very complex, the launch site stay time generally runs only from four to seven weeks. This results from the fact that detailed integration and test has been performed at the factory, and the launch site activity is limited to verification of flight readiness and integration with the launch vehicle. The facilities required for support during the launch stay time are generally scheduled years in advance.

Compared to the sounding rocket and CV-990 programs, the PI involvement at the launch site is rather low. He may be on hand to review verification test data to assure that his experiment is flight ready.

PRECEDING PAGE BLANK NOT FILMED

DELTA/CENTAUR

ATTRIBUTES

- MULTI-DISCIPLINE SATELLITE PLACEMENT
- MINIMUM RISK PHILOSOPHY
- LITTLE USER INVOLVEMENT AT LAUNCH SITE
- MULTIPLE MANAGEMENT RESPONSIBILITIES
- LAUNCH CENTER/CONCERNED HOST
- FORMAL DOCUMENTATION REQUIREMENTS
- 3 TO 5 YEAR SPAN TIME

TRW SYSTEMS GROUP

APOLLO/SKYLAB PROGRAMS

The Apollo and Skylab Programs are the most complex and formal payload programs reviewed for this study. Because both are manned programs, the experiment hardware must satisfy the same rigid requirements and specifications as imposed on the spacecraft hardware. The overriding factors are crew safety and performance. These rigid requirements and specifications lead to extensive and detailed formal management controls, documentation requirements, and test procedures. This minimum risk philosophy has a high-cost impact.

The organizational interfaces, while slightly different for each program, are extensive. Responsibilities are overlapping and sometimes fragmented. This results in a complex documentation system and in a number of hardware turnovers. In the case of Skylab, these effects are compounded because of program redefinition and early experiment selection. The span time for the Apollo experiments, while initially quite long, has decreased for the later missions due to increased confidence and experience with the spacecraft hardware.

In general, the Apollo/Skylab operating modes are not compatible with the Quick-Reaction concept. However, it should be noted that certain features of these programs, particularly those which deal with crew safety, may become constraints on the Quick-Reaction mode of operation.

APOLLO/SKYLAB

ATTRIBUTES

- MULTI-DISCIPLINED/MANNED
- EMPHASIS ON PERFORMANCE
- MINIMUM RISK/MAXIMUM SAFETY
- LOW USER INVOLVEMENT
- MULTIPLE MANAGEMENT RESPONSIBILITIES
- FORMAL DOCUMENTATION REQUIREMENTS
- ONE-OF-A-KIND HARDWARE
- 3 TO 5 YEAR SPAN TIME

TRW SYSTEMS GROUP

QUICK-REACTION ELEMENTS IN OTHER PAYLOAD PROGRAMS

The matrix on the facing page shows that some current payload programs do operate successfully in a Quick-Reaction mode.

QUICK-REACTION ELEMENTS IN OTHER PROGRAMS

QUICK-REACTION ELEMENTS \ OTHER PAYLOAD PROGRAMS	SOUNDING ROCKETS	MIGHTY MOUSE	CV-990	TELTA BALLOON	DELTA/CENTAUR	APOLLO/SKYLAB
SHORT SPAN TIME	X	X	X	X		
LOW COST	X	X	X	X		
SIMPLE	X	X	X	X		
MINIMAL DOCUMENTATION	X	X	X	X		
HIGH USER INVOLVEMENT	X		X			

TRW
SYSTEMS GROUP

SUMMARY OF RECOMMENDATIONS/OTHER PAYLOAD PROGRAMS

Those payload programs reviewed which exhibit Quick-Reaction characteristics have several features in common. These features are: PI involvement at the launch site; operational flexibility; simple documentation systems; single-point authority and responsibility in program management; and well-defined operational procedures.

The extremely short reaction-time programs (Balloon, Mighty Mouse) also have these features: standardized support hardware and even experiment hardware, real-time decision capability, and well-established communications lines with much use of verbal communications.

A single-objective program with standardized hardware and operational procedures can be extremely Quick Reaction. In the Shuttle era, this might apply to quick-response flight to some unexpected catastrophic event or unpredictable target of opportunity.

These key features are summarized on the facing page. They will be used as a guide in developing the operational concept in Phase 2.

SUMMARY OF KEY FEATURES

- FUNCTIONAL SYSTEMS THAT
  - -RESULT IN MINIMAL DOCUMENTATION
  - -PROVIDE SINGLE POINT RESPONSIBILITY
  - -ARE FLEXIBLE
- STANDARD SUPPORT HARDWARE
- USER ORIENTED
- HIGH USER INVOLVEMENT
- VERBAL AND INFORMAL COMMUNICATIONS

TRW SYSTEMS GROUP

3.0 SURVEY, ASSEMBLE AND ORGANIZE PAYLOAD DATA

PRECEDING PAGE BLANK NOT FILMED

SURVEY, ASSEMBLE AND ORGANIZE PAYLOAD DATA

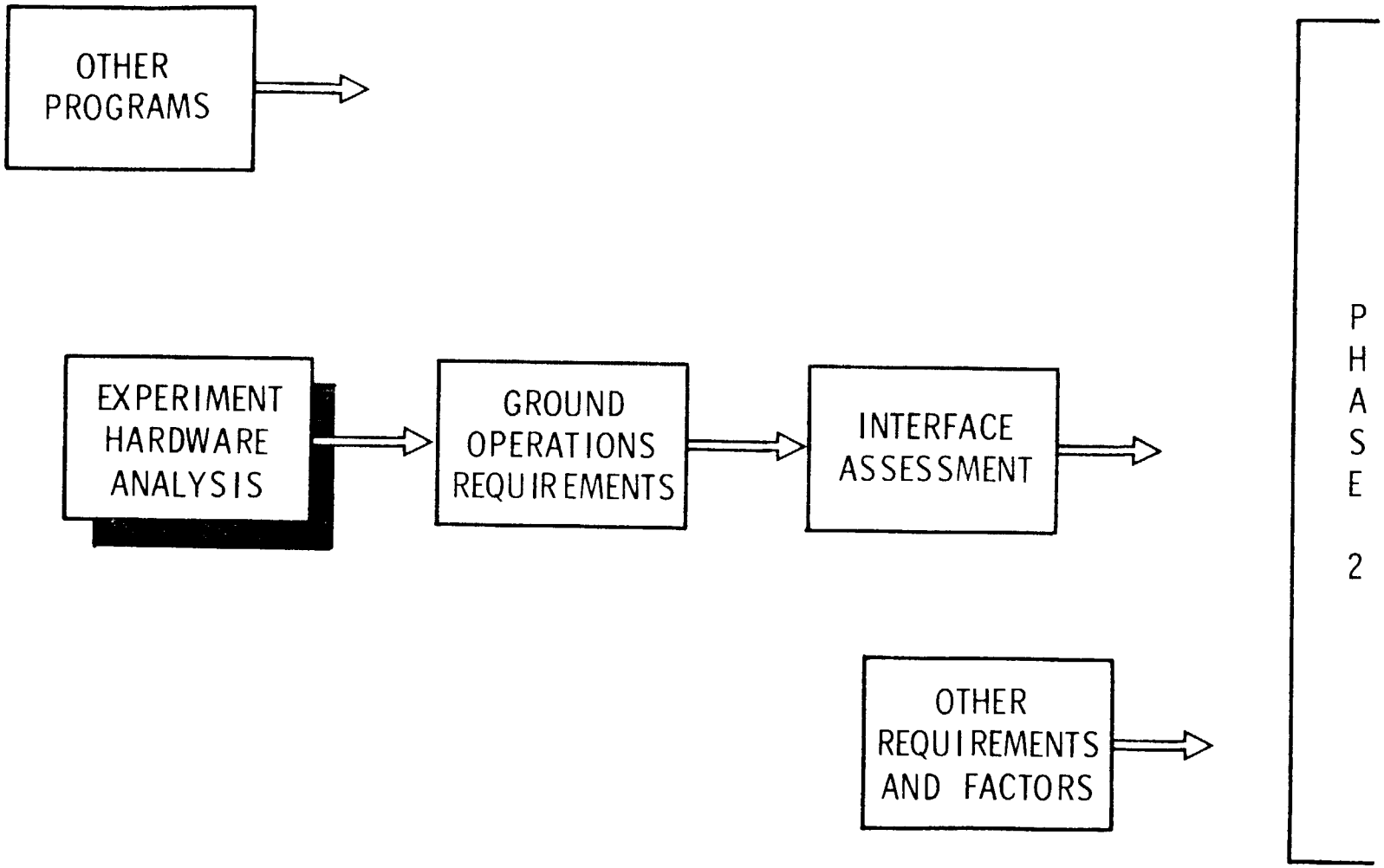

TRW

PRECEDING PAGE BLANK NOT FILMED

SURVEY, ASSEMBLE, AND ORGANIZE PAYLOAD DATA

The objective of this task is to define a baseline list of experiment hardware for the Quick-Reaction Sortie mode. This list is derived from Appendix A of the statement of work plus limited additional sources.

The baseline list of experiment hardware is organized into groups, or envelopes, in terms of launch site operational requirements. These groups of representative experiment hardware are the basis for developing ground operations requirements for the Quick-Reaction integration concept.

SURVEY, ASSEMBLE AND ORGANIZE PAYLOAD DATA

OBJECTIVE:

- DEFINE A TYPICAL SET OF EXPERIMENT HARDWARE FOR QUICK-REACTION PAYLOADS
- CLASSIFY THE EXPERIMENT HARDWARE FOR GROUND OPERATIONS REQUIREMENTS

TRW SYSTEMS GROUP

STUDY APPROACH

The facing page shows the approach used to define the groups of Quick-Reaction instruments. Primary considerations for Quick-Reaction payloads are: (1) The experiment hardware requirements must be compatible with the sortie lab baseline, and (2) that the payloads must be simple to integrate. A selection criteria is defined with which the payload market (Appendix A of the statement of work) is reviewed. This results in a list of candidate Quick-Reaction experiment hardware. The candidate list is then classified in terms of integration requirements into six groups. These groups provide the basis for the development of ground operations requirements.

APPROACH

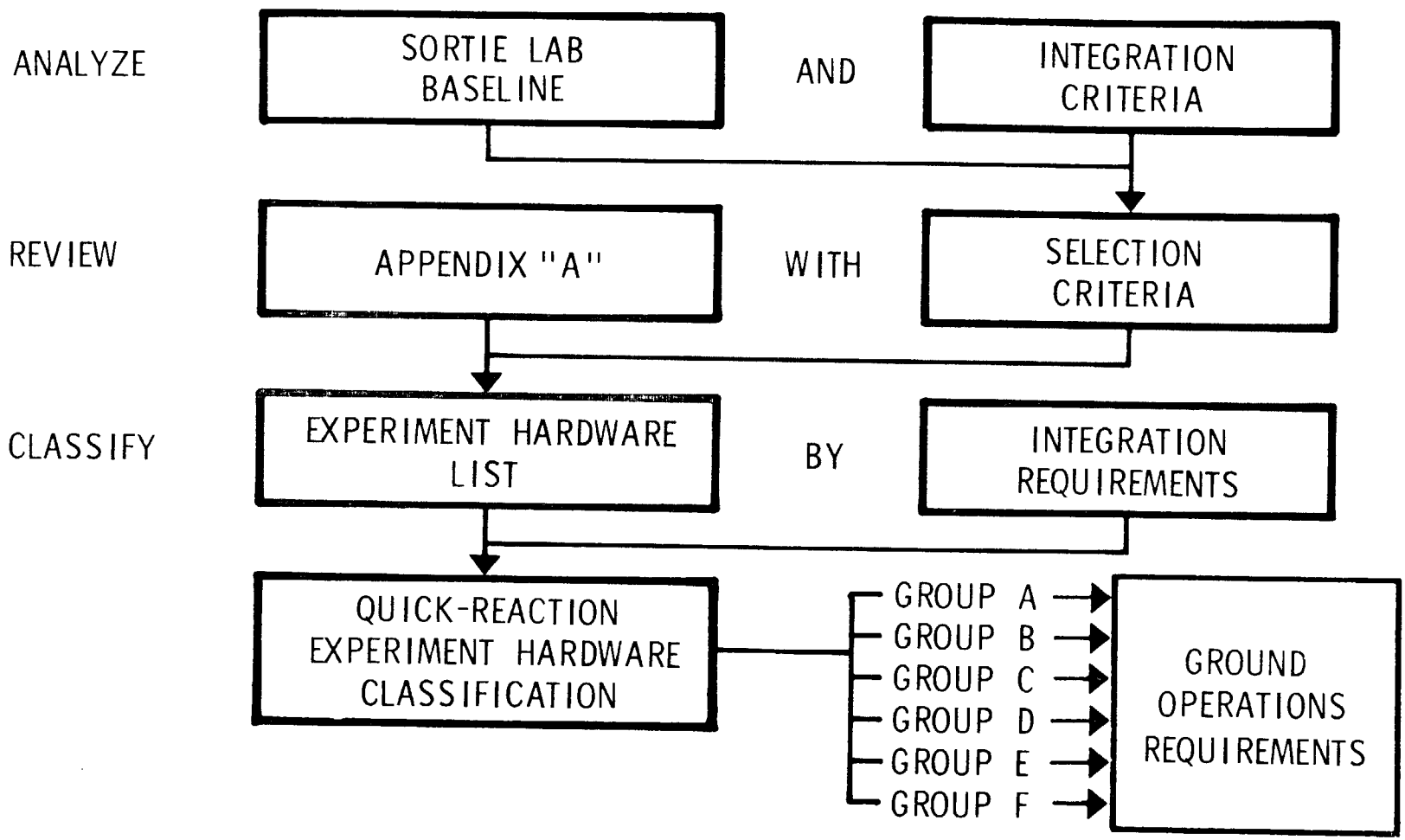

TRW

SORTIE LAB BASELINE

Payload sizing (weight and volume) is derived from the estimates of sortie lab mission configurations defined in the MSFC "Sortie Can Conceptual Design" document, dated March 1, 1972. The figures shown on the facing page represent approximate maximums for space physics and astronomy missions. Electrical power is supplied by an autonomous fuel cell system supplying 1.5 kW average and 3.0 kW peak power to instruments. The environmental control/life support system provides a shirt sleeve environment for two crew members (for seven days) and a Class 100,000 contamination level. Pointing accuracies are a function of the orbiter stability and control, and is included here as an instrument constraint. The data management subsystem provides control and display consoles and data recording capability for low-rate digital data (< 100 KBPS), high-rate digital data (> 100 KBPS), and high-frequency analog data. In addition, this subsystem provides for multiplexing and formatting for telemetering via the Shuttle telemetry system.

SORTIE LAB BASELINE
MSFC "SORTIE CAN CONCEPTUAL DESIGN" 3-72

- WEIGHT OF EXPERIMENT HARDWARE ~ 5000 POUNDS
- AVAILABLE PRESSURIZED VOLUME ~ 400 CU. FT
- ELECTRICAL POWER ~ 1.5 KILOWATTS AVG.
  ~ 3.0 KILOWATTS PEAK
- CONTAMINATION LEVEL CLASS 100,000
- SHIRT SLEEVE ENVIRONMENT FOR 2 MAN CREW
- DATA MANAGEMENT SYSTEM
- COMMUNICATIONS VIA SHUTTLE TELEMETRY
- POINTING ACCURACY $\pm 0.5^{0}$

TRW SYSTEMS GROUP

INTEGRATION CRITERIA

To be consistent with the Quick-Reaction concept, experiment hardware not only must be compatible with the Sortie Lab but also must be simple to integrate.

Integration operations are governed by complexity in operation and time. Therefore, "simple to integrate" involves:

- Handling and transportation - must be capable of being handled by standard commercial equipment. Large instruments should be easily dismantled for ease in transportation. Environment sensitivities (acceleration, G-loading, etc.) must not exceed the launch environment.

- Tolerances - must be easily verified by standard test methods and equipment. Tolerances must be consistent with orbiter capabilities; e.g., pointing accuracy $\pm 0.5°$.

- Maintainability - modular design should be incorporated for ease of maintenance.

- Level of test - level of test is the amount or detail of testing to satisfy a requirement. The requirement should be easily satisfied in minimum time and simplicity of operation. Flight readiness or launch status is most critical.

- Man-tended operations - manual operations should be minimized to preclude excessive test and crew familiarization time. Manual operations should be consistent with two-man flight operation.

- Real-time telemetry - real-time operational telemetry requirements should be minimized to be consistent with Shuttle telemetry availability.

SIMPLE TO INTEGRATE

- HANDLING AND TRANSPORTATION
  - UTILIZE STANDARD COMMERCIAL EQUIPMENT
  - ENVIRONMENTAL SENSITIVITIES NO GREATER THAN LAUNCH ENVIRONMENT
- TOLERANCES
  - EASILY VERIFIED BY STANDARD TECHNIQUES
  - CONSISTENT WITH ORBITER/LAB CAPABILITIES
- MAINTAINABILITY
  - MODULAR DESIGN
- LEVEL OF TEST - COMPLEXITY VS. REQUIREMENT
  - EASILY ATTAINED IN MINIMUM TIME AND OPERATION
  - FLIGHT READINESS OR LAUNCH STATUS MOST CRITICAL
- MAN-TENDED OPERATIONS
  - MINIMIZE CREW FAMILIARIZATION TIME
  - CONSISTENT WITH 2 MAN CREW FLIGHT OPERATIONS

TRW SYSTEMS GROUP

PAYLOAD CONFIGURATION BASELINE

To select the experiment hardware packages that will be typical for Quick-Reaction payloads, consideration must be given to the number of experiment packages that compose these payloads. Payload configuration may vary from five to fifteen instruments for any one mission. This is consistent with those mission configurations analyzed in the MSFC "Sortie Can Conceptual Design" document. In general, integration time increases with the number of instruments being integrated. In addition, as the number of instruments composing a payload increases, the size and power requirements of the individual instrument decreases in order to maintain compatibility with the Sortie Lab. Therefore, for the purpose of this analysis - to define typical or representative experiment hardware for Quick-Reaction - it is assumed that five instruments would be typical of a Quick-Reaction payload configuration. This allows a wide range of experiment hardware selection and imposes minimum impact on integration time.

BASELINE PAYLOAD

- PAYLOAD = SUM OF EXPERIMENT HARDWARE
- NUMBER OF EXPERIMENT HARDWARE SHOULD:
  - ALLOW FOR WIDE SELECTION OF EXPERIMENT HARDWARE
  - BE WITHIN RANGE OF SORTIE LAB PAYLOADS
  - HAVE MINIMUM IMPACT ON INTEGRATION TIME SPAN (4 TO 12 WEEKS)

ASSUMPTION: FOR THE PURPOSE OF THIS STUDY THE NUMBER OF EXPERIMENT HARDWARE FOR A BASELINE PAYLOAD CONFIGURATION HAS BEEN ESTABLISHED AT 5.

TRW SYSTEMS GROUP

SELECTION CRITERIA

The selection criteria defines those basic elements which pertain to Quick-Reaction experiment hardware and which allow a reasonably wide selection.

The criteria are used during the review of Appendix A to finalize a set of instruments typical of experiment hardware configuring a Quick-Reaction Sortie mission.

SELECTION CRITERIA FOR BASELINE QUICK-REACTION EXPERIMENT HARDWARE

- WEIGHT ~ 1000 lbs
- VOLUME ~ 80 CU. FT
- POWER ~ 300 w AVG & 600 w PEAK
- CLASS 100,000
- POINTING ACCURACY NO BETTER THAN $\pm 0.5^{0}$
- MINIMUM REALTIME TELEMETRY REQUIREMENTS
- MINIMUM MANUAL OPERATIONS
- COMPATIBLE WITH 7 DAY FLIGHT
- SIMPLE TO INTEGRATE

TRW SYSTEMS GROUP

PAYLOAD MARKET

For the purpose of this study, the payload market is the list of experiments and experiment hardware specified in Appendix A of the statement of work. In reality, the payload market is a large source of experiment hardware. No attempt was made to review all sources; however, the cited documents were used to select several experiments to supplement Appendix A to provide a more complete representation.

PAYLOAD MARKET

- APPENDIX A STATEMENT OF WORK
  - MSFC/GDC RESEARCH AND APPLICATIONS MODULE (RAM)
  - MSFC/MDAC SHUTTLE ORBITER APPLICATIONS AND REQUIREMENTS (SOAR)
  - SKYLAB PROGRAM, OPERATIONAL DATA BOOK, VOL. I EXPERIMENT PERFORMANCE DATA
  - KSC/MMC STUDY FOR IMPLEMENTATION OF RESEARCH AND APPLICATIONS PAYLOADS AT THE SHUTTLE LAUNCH SITE
  - MMC EXPERIMENTS REQUIREMENTS SUMMARY FOR MODULAR SPACE STATION AND SPACE SHUTTLE ORBITAL APPLICATIONS AND REQUIREMENTS (GREEN BOOK)

TRW

QUICK-REACTION CANDIDATE EXPERIMENT HARDWARE

The review of the payload market, using the selection criteria as a screen, resulted in 24 candidates. Of these 24, 16 are from Appendix A. The remaining 8 candidates were selected from the supporting documentation to round out the scientific disciplines. This list of experiment hardware is representative of most scientific disciplines and reflects typical integration requirements. The candidates are compiled with their associated functional and integration requirements.

CANDIDATE EXPERIMENT HARDWARE

EXPERIMENT HARDWARE	WT lbs	POWER - w		POINT. ACCUR. DEG	ENVIRONMENTAL REQ.				DATA REQ	HANDLING STORAGE	SPECIAL FACILITIES	C/O AREA
		AVG	PEAK		CLEAN CLASS	PRESS	HUM PCT	TEMP				
SMALL UV TELESCOPE	750	20	45	± 0.5	MOD	0-15	50	14-77	FILM	FILM VAULT	OPTICAL LAB PHOTO LAB	1000
PHOTOMETRIC CLUSTER	30	25	110	± 0.5	100 K	0-15	50	60-80	DIGITAL 82 KBPS		OPTICAL LAB	300

- 24 TYPICAL EXPERIMENT HARDWARE PACKAGES
  - 16 FROM APPENDIX A
  - 8 FROM OTHER SOURCES

TRW SYSTEMS GROUP

EXPERIMENT HARDWARE CLASSIFICATION

Review of the candidate list for commonality in integration requirements resulted in six envelopes or groups. In general, the common factor resulting in the classification was facility or laboratory oriented requirements. For example, Class A and Class B instruments both use optics, but Class A instruments use cameras as their data acquisition system. Therefore, a unique requirement exists for photographic darkroom access.

This generation of candidate experiment hardware and its classification is only the preparatory phase for developing ground operations requirements and, ultimately, launch site operational concepts.

EXPERIMENT HARDWARE CLASSIFICATION

GROUP A - INSTRUMENTS UTILIZING CAMERAS FOR DATA ACQUISITION

GROUP B - ELECTROMAGNETIC RADIATION SENSORS

GROUP C - ELECTROSTATIC & MAGNETIC ENVIRONMENT SENSORS

GROUP D - RF SENSORS

GROUP E - AMBIENT ENVIRONMENT SENSORS

GROUP F - BIOLOGICAL EXPERIMENTS

TRW SYSTEMS GROUP

SUMMARY

The next two charts summarize the results of the experiment hardware analysis task. The typical experiment hardware is shown in appropriate categories or groups. These groupings are a result of commonality in integration operations and requirements. Some of these requirements are shown with their respective groups. These requirements are the input for the development of the ground operations requirements analysis task.

EXPERIMENT HARDWARE GROUPS A, B & C

GROUP A	REQUIREMENTS
SMALL UV TELESCOPE IMAGE ISOCON TV UV AIRGLOW HORIZON PHOTOGRAPHY UV X-RAY SOLAR PHOTOGRAPHY	CLASS 100,000; OPTICAL LAB; PHOTO LAB; POINTING ACCURACY $\pm 0.5^{0}$; GN_2
GROUP B	
MULTISPECTRAL RADIOMETER SURFACE MOISTURE PHOTOPOLARIMETER OPTICAL METEOROID DETECTOR PHOTOMETRIC CLUSTER MULTISPECTRAL SCANNER	CLASS 100,000; OPTICAL LAB; POINTING ACCURACY $\pm 0.5^{0}$; GN_2
GROUP C	
ELECTROSTATIC PROBE ELECTRIC FIELD PROBE FLUX GATE MAGNETOMETER	CLASS MODERATE; GENERAL PURPOSE LAB

TRW SYSTEMS GROUP

EXPERIMENT HARDWARE GROUPS D E & F

	REQUIREMENTS
GROUP D	
MICROWAVE SCANNER L-BAND RADIOMETER MICROWAVE RADIOMETER	CLASS MODERATE; POINTING ACCURACY $\pm 0.5^0$; RF LAB WITH SCREEN ROOM
GROUP E	
PLASTIC/NUCLEAR EMULSION IN-FLIGHT AEROSOL ANALYSIS DOSIMETERS (PASSIVE & ACTIVE) THERMAL COATINGS MASS SPECTROMETER ION TRAP	CLASS 100,000; GENERAL PURPOSE LAB; FILM VAULT; CONTROL & STORAGE FOR RADIATION SOURCES
GROUP F	
CIRCADIAN RHYTHM EFFECT OF ZERO G ON SINGLE HUMAN CELL	BIOLOGICAL LAB. CLASS 100,000

TRW

4.0 GROUND OPERATIONS REQUIREMENTS

GROUND OPERATIONS REQUIREMENTS

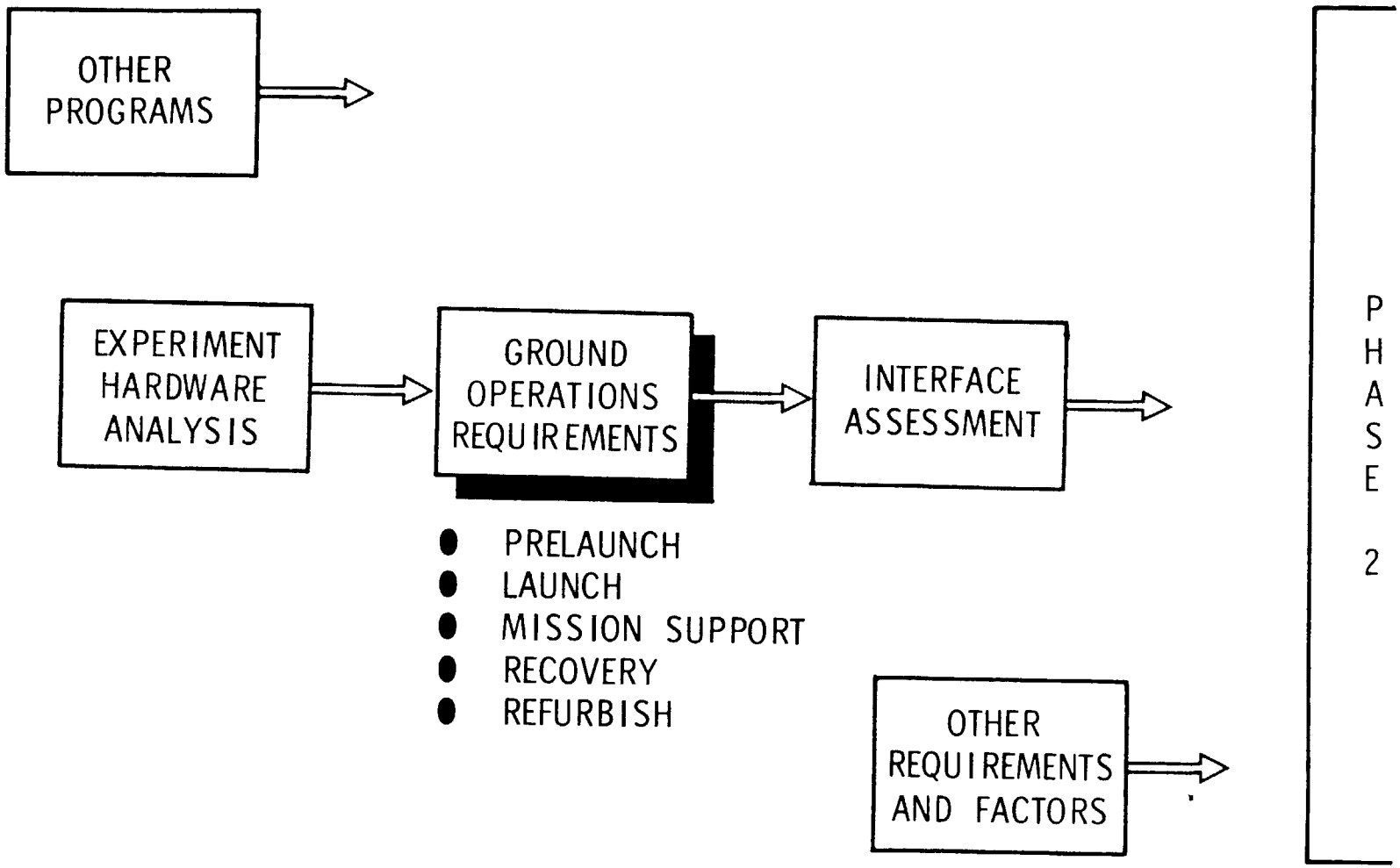

TRW SYSTEMS GROUP

4-2

GROUND OPERATIONS REQUIREMENTS

The primary objective of the Ground Operations Requirements Analysis is to determine the operational and functional requirements and resources necessary to accommodate the assembly, test, checkout, integration, launch, recovery and refurbishment of the Quick-Reaction payloads and carriers at the launch site.

GROUND OPERATIONS REQUIREMENTS

OBJECTIVE:

- DETERMINE THE GROUND OPERATIONS REQUIREMENTS FOR THE QUICK-REACTION ASSEMBLY, TEST, CHECKOUT, AND INTEGRATION INTO THE PAYLOAD CARRIER.

- BASELINE: THE QUICK-REACTION INTEGRATION ACTIVITY IS LOCATED AT THE LAUNCH SITE.

TRW SYSTEMS GROUP

GROUND OPERATIONS REQUIREMENTS (Continued)

The Ground Operations Requirements Analysis considers:

- Experiment hardware group integration requirements:

  Group A: Cameras with Optics

  Group B: Electromagnetic Radiation Sensors

  Group C: Electrostatic and Magnetic Field Sensors

  Group D: Radio Frequency (RF) Sensors

  Group E: Ambient Environment Sensors

  Group F: Biological Instruments

- Sortie Lab refurbishment and checkout requirements.
- Experiment hardware/carrier integration and test requirements.
- Orbiter/Carrier integration, test and checkout requirements.

A Ground Operations Plan was developed for Quick-Reaction activities at the launch site. This plan provides a means of logically organizing the wide variety of ground operations and payload elements necessary to build up and process a Quick-Reaction payload at the launch site. The plan presents the ground operations requirements associated with the various experiment hardware groups first. Each group is considered separately. The integration requirements for the groups are then analyzed and the integration operations are defined.

Pre-integration functional requirements for each of the experiment hardware groups are then analyzed, and processing timelines developed. These timelines show activities from arrival to moving to an Integration and Test Facility (ITF), where they are installed in the Carrier.

GROUND OPERATIONS REQUIREMENTS

APPROACH:

ANALYSIS BASED ON -

- EXPERIMENT HARDWARE REQUIREMENTS
- CARRIER REQUIREMENTS
- INTEGRATED EXPMT HDW/CARRIER RQMTS
- GROUND OPERATIONS PLAN
  - PRELAUNCH OPERATIONS
  - LAUNCH OPERATIONS
  - MISSION SUPPORT OPERATIONS
  - RECOVERY OPERATIONS
  - REFURBISHMENT OPERATIONS

TRW

GROUND OPERATIONS REQUIREMENTS (Continued)

QUICK-REACTION SORTIE GROUND OPERATIONS REQUIREMENTS FUNCTIONAL FLOW DIAGRAM

The functional flow diagram shown on the facing pages delineates the major functions performed during experiment hardware, Carrier and Shuttle ground operations. Alternate functions that may be necessary in some instances are also presented.

GROUND OPERATIONS REQUIREMENTS – FUNCTIONAL FLOW

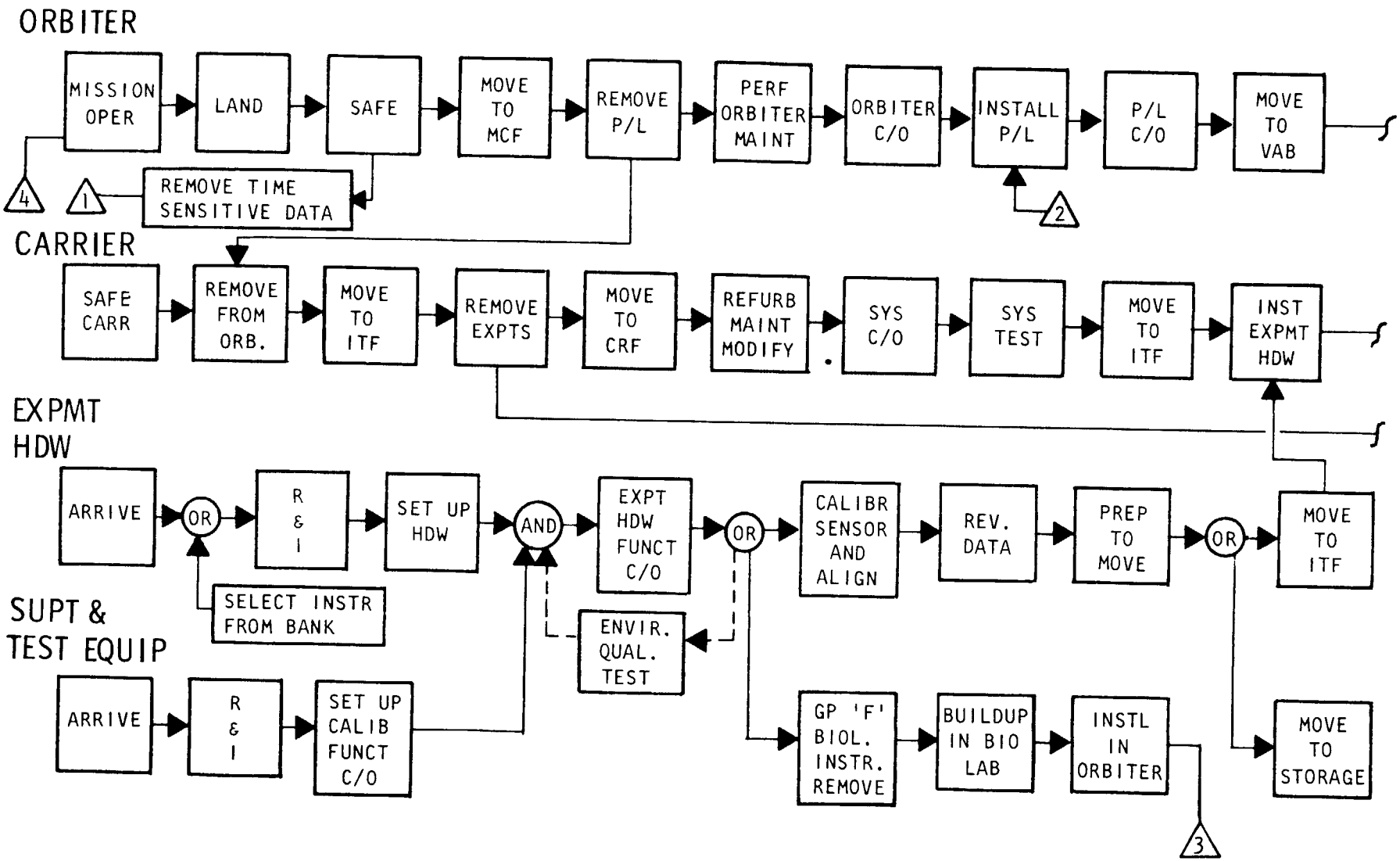

TRW SYSTEMS GROUP

GROUND OPERATIONS REQUIREMENTS - FUNCTIONAL FLOW

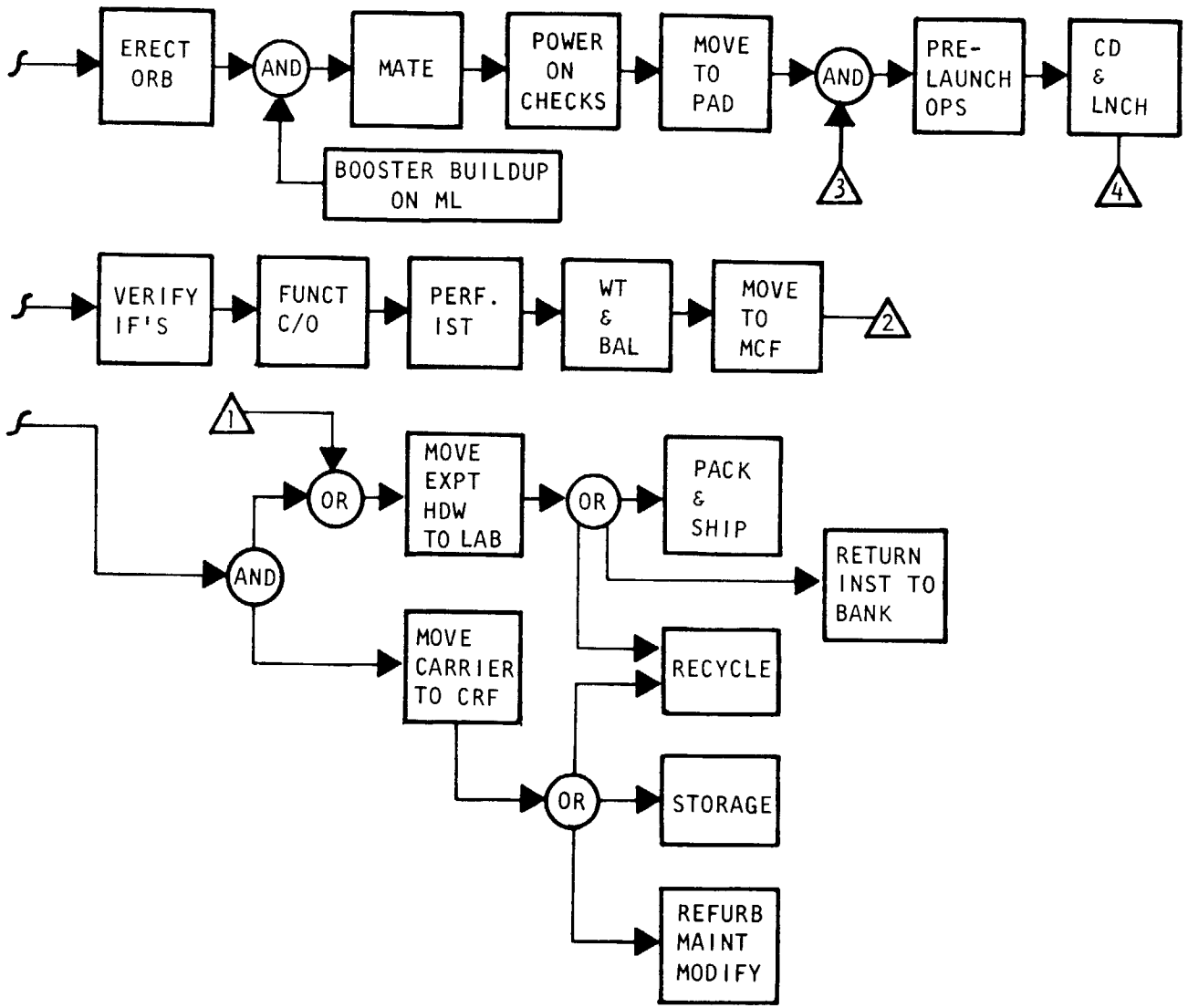

PRECEDING PAGE BLANK NOT FILMED

TRW SYSTEMS GROUP

4-10

4.1 PRE-LAUNCH OPERATIONS

GROUND OPERATIONS REQUIREMENTS

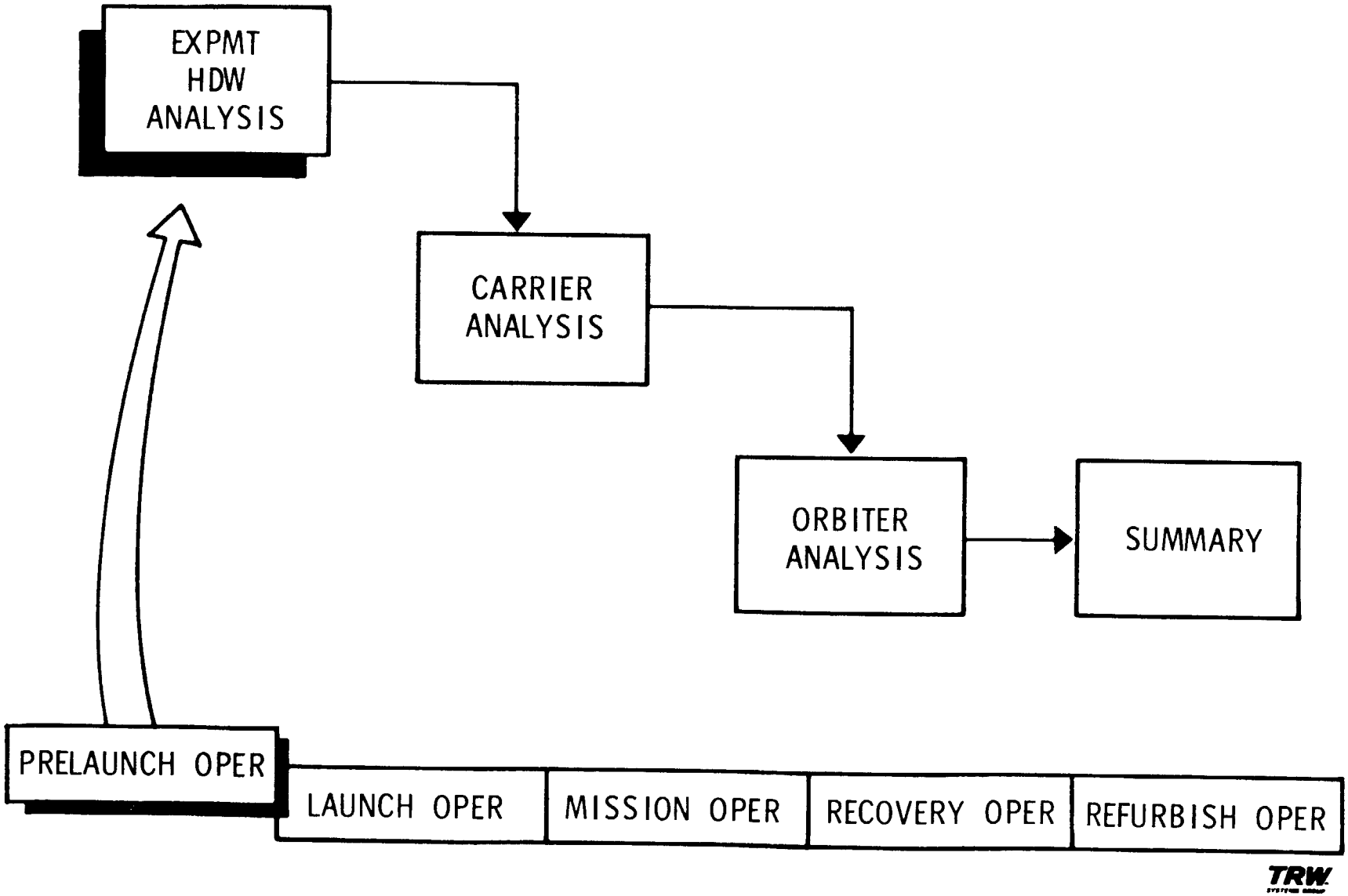

PRECEDING PAGE BLANK NOT FILMED

GROUND OPERATIONS REQUIREMENTS (Continued)

To enable the reader to more easily follow the functional flow diagram, an excerpt is shown that depicts only the flow of the experiment hardware and the support and test equipment. This abbreviated flow is utilized as an example to show the interrelationship of the experiment hardware and the support and test activities in preparing the experiment hardware for integration into the payload carrier. The flow indicates an alternate path if the experiment hardware requires environmental qualification tests.

GROUND OPERATIONS REQUIREMENTS

EXPERIMENT HARDWARE & TEST EQUIPMENT FLOW

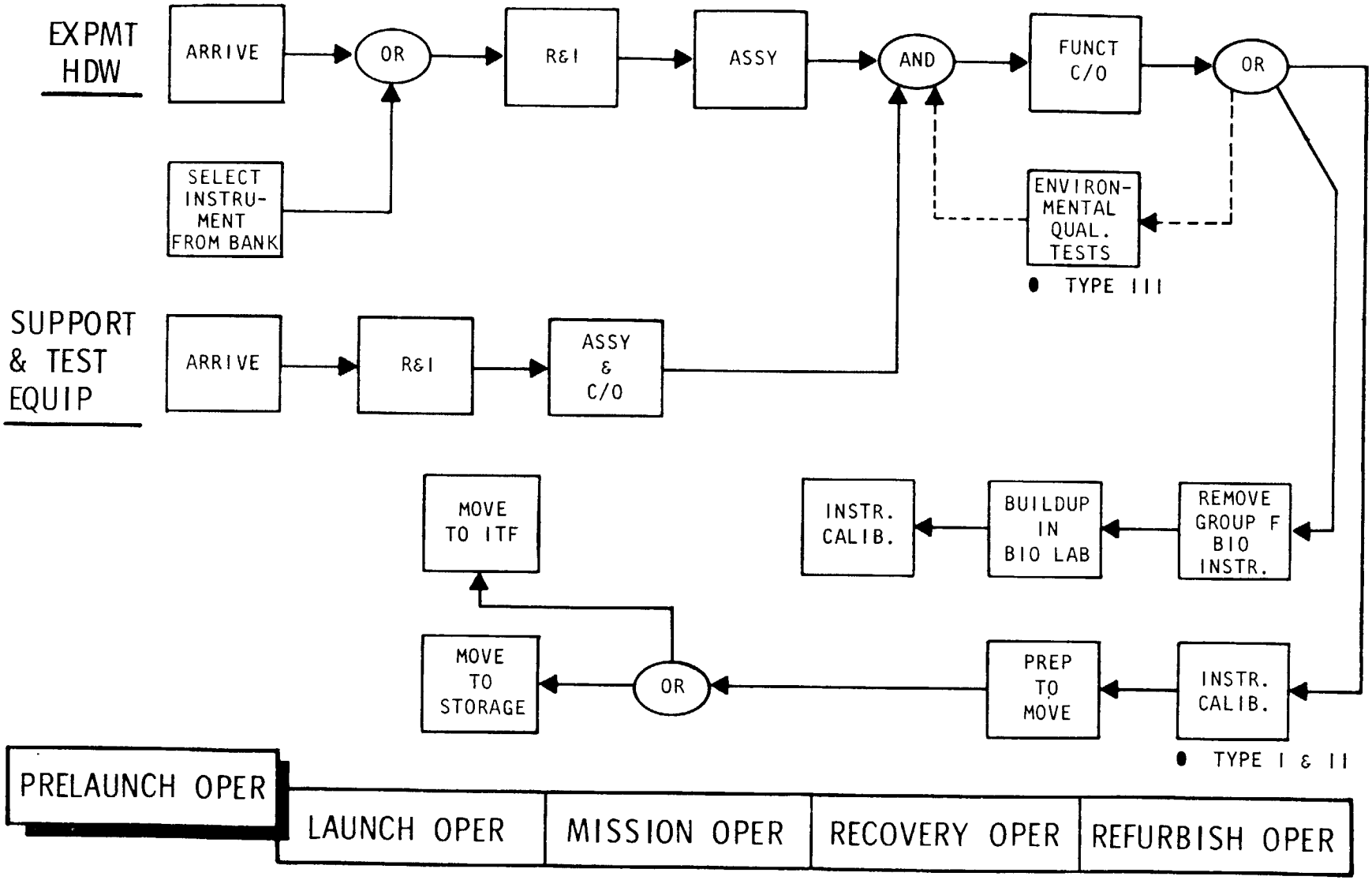

TRW

GROUND OPERATIONS REQUIREMENTS (Continued)

Each of the six groups of experiments can contain a mixture of Type I, II, or III experiment hardware, which is defined as follows:

- Type I: This experiment hardware has flown satisfactorily in space before.
- Type II: This hardware has not flown before but is flight certified by NASA, DOD, commercial laboratory or other acceptable source.
- Type III: This hardware has not flown, nor is it certified.

Because its environment-sensitive behavior is an unknown quantity, Type III hardware must undergo environmental qualification tests to demonstrate that it is capable of withstanding the mission environment. These tests are not intended to demonstrate that the hardware will operate under all possible conditions, but simply to assure that any anomolies that may show up do not jeopardize other objectives of the mission or pose crew or Orbiter safety problems.

GROUND OPERATIONS REQUIREMENTS

EXPERIMENT HARDWARE TYPES

TYPE I: FLOWN SATISFACTORILY BEFORE

TYPE II: FLIGHT CERTIFIED

TYPE III: NEVER FLOWN AND NOT FLIGHT CERTIFIED

PRELAUNCH OPER	LAUNCH OPER	MISSION OPER	RECOVERY OPER	REFURBISH OPER

TRW

GROUND OPERATIONS REQUIREMENTS (Continued)

GROUP "A" EXPERIMENT HARDWARE TIMELINE

The timeline shown on the facing page depicts, as an example, the ground operations, sequence of performance, and length of time estimated for typical Group "A" experiment hardware processing for the period from arrival until it is moved to the ITF. Eighty-eight (88) working hours are necessary to perform this phase of pre-launch operations. In the event a Group "A" instrument is a Type III, i.e., one that has not been flight certified, it must be subjected to the environmental qualification test series and certified before integration. Upon completion of this testing, the instrument is recycled through the functional checkout. This will reveal whether or not there has been any functional deterioration due to the environmental tests. It is estimated that an average of sixty-eight (68) working hours is required to perform the environmental qualification tests.

GROUND OPERATIONS REQUIREMENTS

TYPICAL EXPERIMENT HARDWARE TIMELINE

GROUP 'A' EXPERIMENT HARDWARE (TYPES I & II)

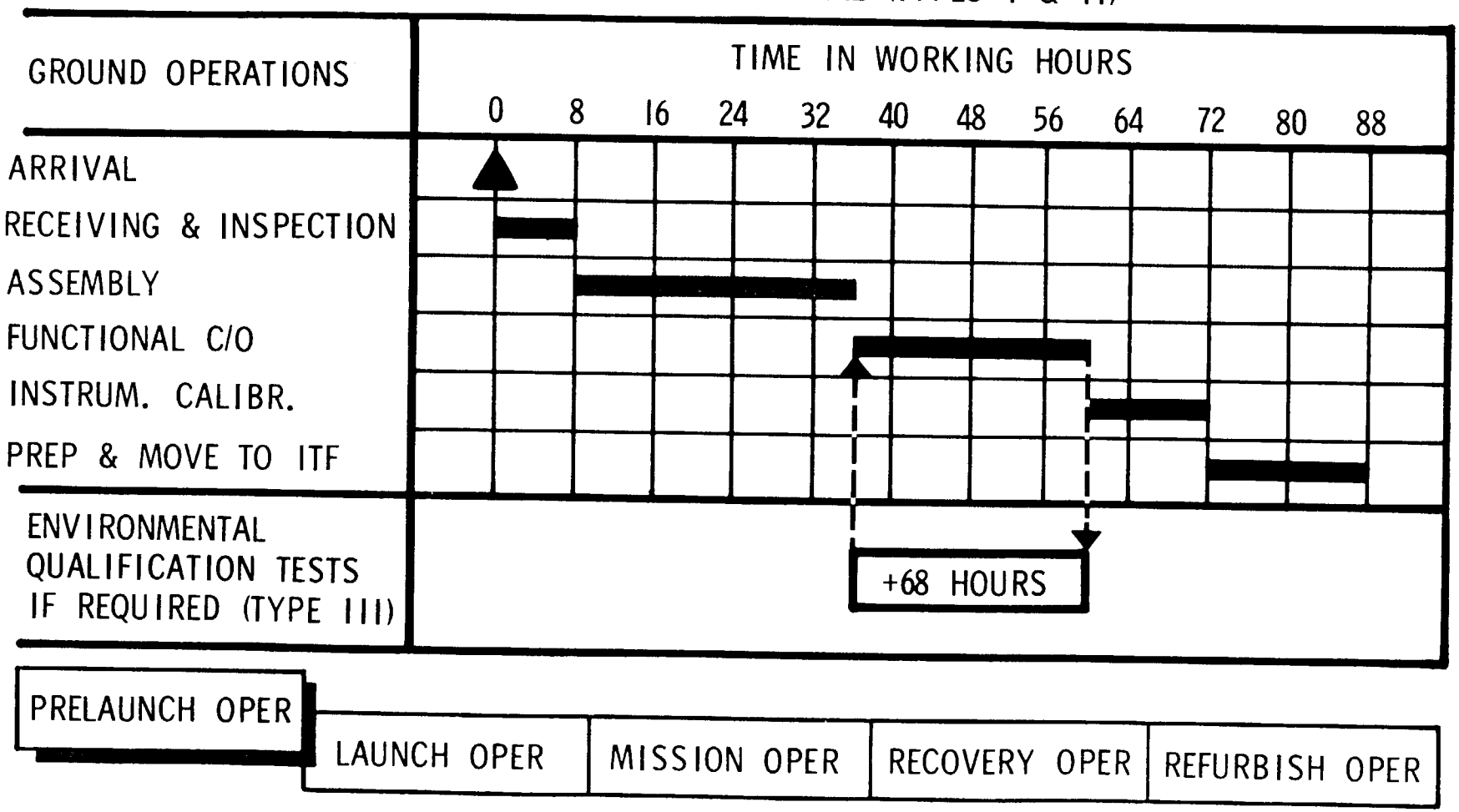

TRW

GROUND OPERATIONS REQUIREMENTS (Continued)

TYPICAL TIMELINE FOR THE ENVIRONMENTAL QUALIFICATION TESTS

The timeline pictorially shows the functions that comprise the environmental qualification tests on typical experiment hardware. It is not necessary that these tests be performed at the launch site, since they can be performed by any qualified laboratory.

GROUND OPERATIONS REQUIREMENTS

TYPICAL FLOW FOR TYPE III EXPMT ENVIRONMENTAL QUAL. TESTS

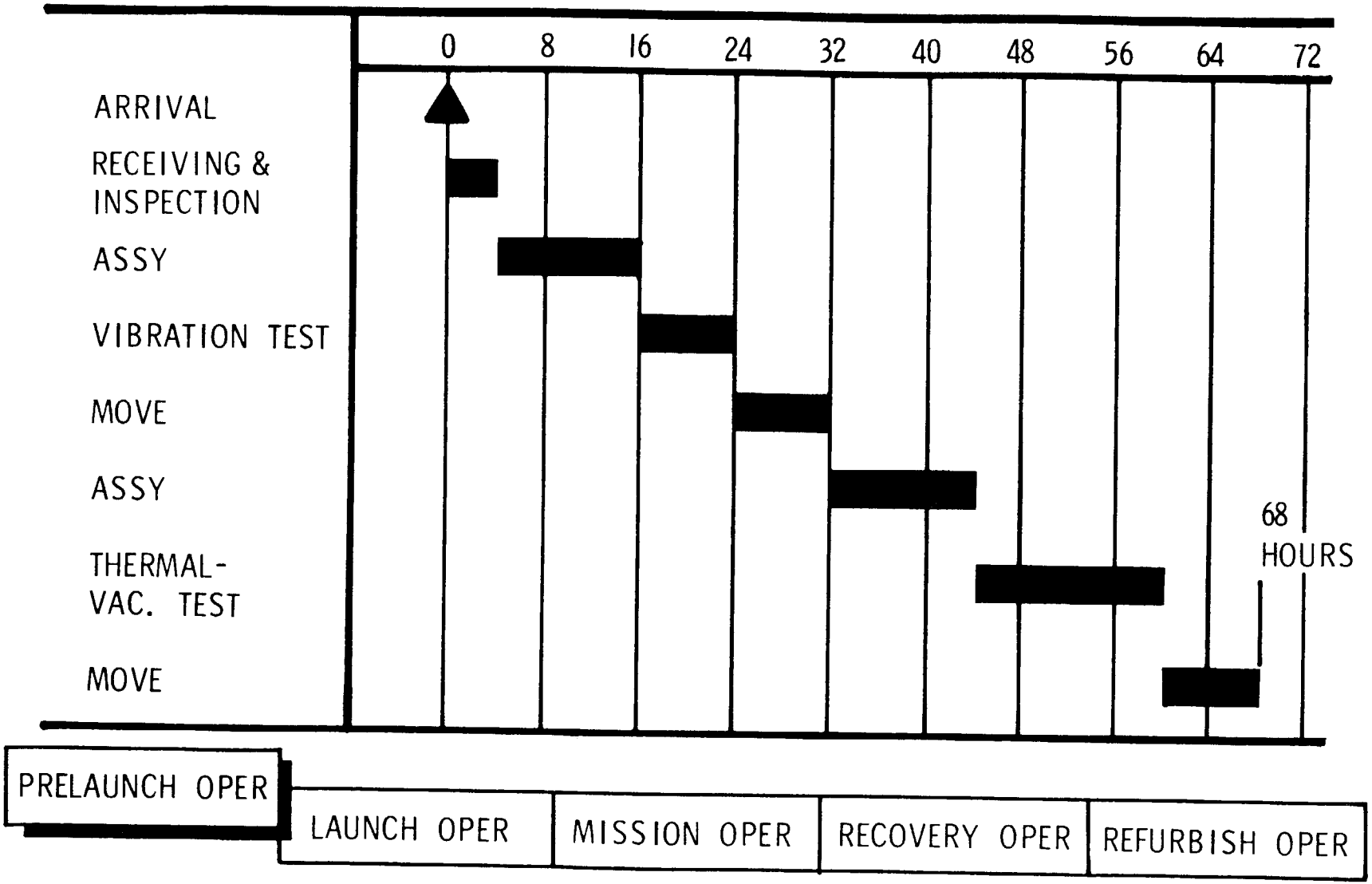

TRW

GROUND OPERATIONS REQUIREMENTS (Continued)

The charts on the facing page show the timelines for experiment hardware groups B through F for pre-integration activities at the launch site.

GROUND OPERATIONS REQUIREMENTS

EXPERIMENT HARDWARE TIMELINES

PRELAUNCH OPERATIONS

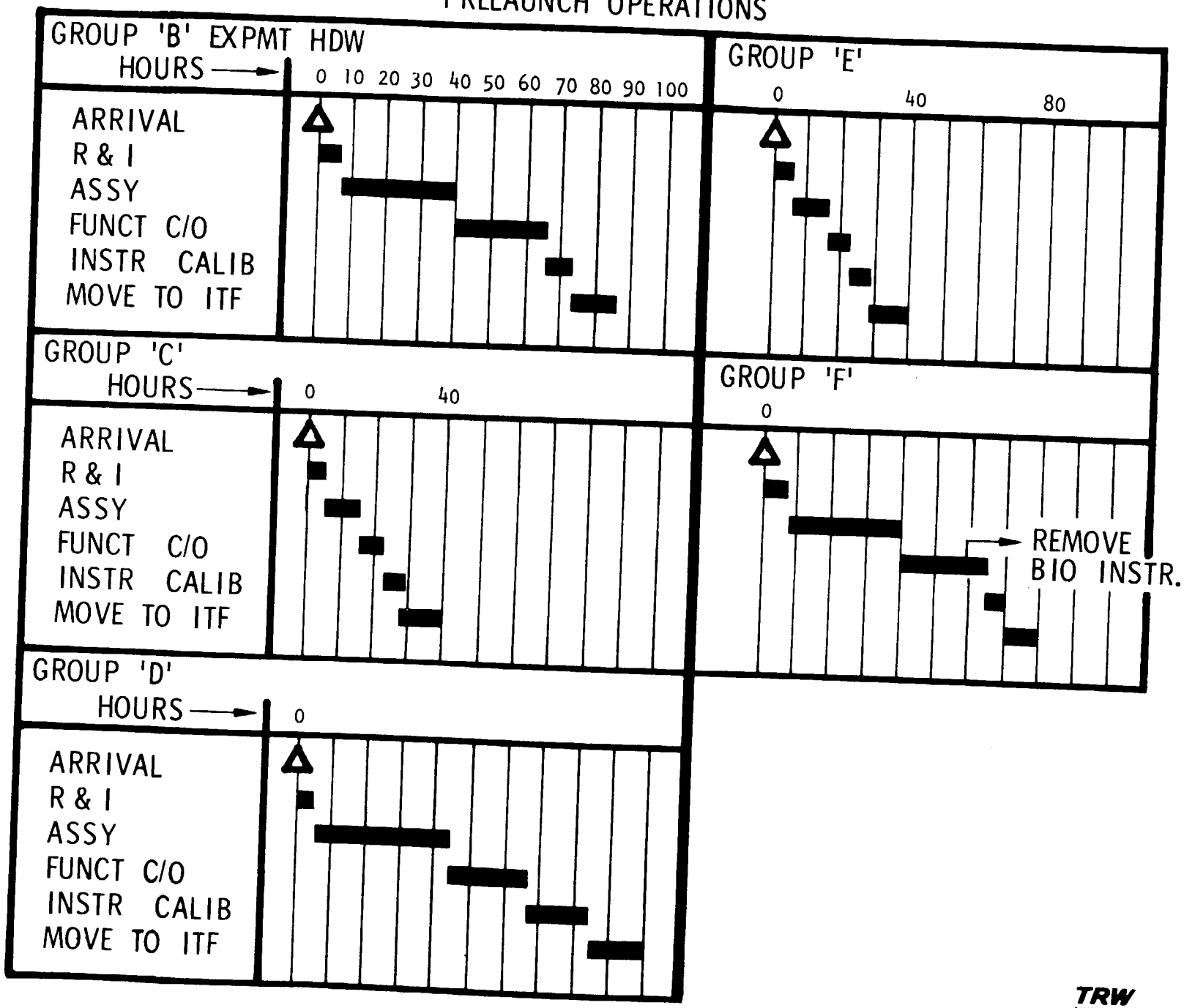

GROUND OPERATIONS REQUIREMENTS (Continued)

ENVELOPES FOR EXPERIMENT GROUPS

The time required for the various ground operations varies somewhat between the experiment hardware groups. While the variations are generally not great, they do establish an envelope for each requirement. For example, the chart on the facing page shows that the time required for "Assembly" varies between the groups, the envelope for this particular requirement being 12 to 36 working hours. The envelopes for the other ground operations were established in a similar manner.

A summary of the time variation for the activities in pre-launch operations (pre-integration) shows an interval of from 40 to 100 working hours.

GROUND OPERATIONS REQUIREMENTS

ACTIVITIES	EXPERIMENT HARDWARE GROUP						PRE-INTEGRATION GROUND OPER. RQMTS ENVELOPE
	A	B	C	D	E	F	
RECEIVING & INSPECTION	8	8	4	8	4	8	4 - 8 WORKING HOURS
ASSY	28	32	12	36	12	32	12 - 36
FUNCT. C/O	24	24	8	24	4	24	4 - 24
INSTR. CALIB	12	8	4	16	8	4	4 - 16
PREP & MOVE TO ITF	16	16	12	16	12	12	12 - 16

EXPERIMENT HARDWARE PRE-INTEGRATION
TIME SUMMARY:
40 HRS. TO 100 HRS

PRELAUNCH OPER	LAUNCH OPER	MISSION OPER	RECOVERY OPER	REFURBISH OPER

TRW

GROUND OPERATIONS REQUIREMENTS

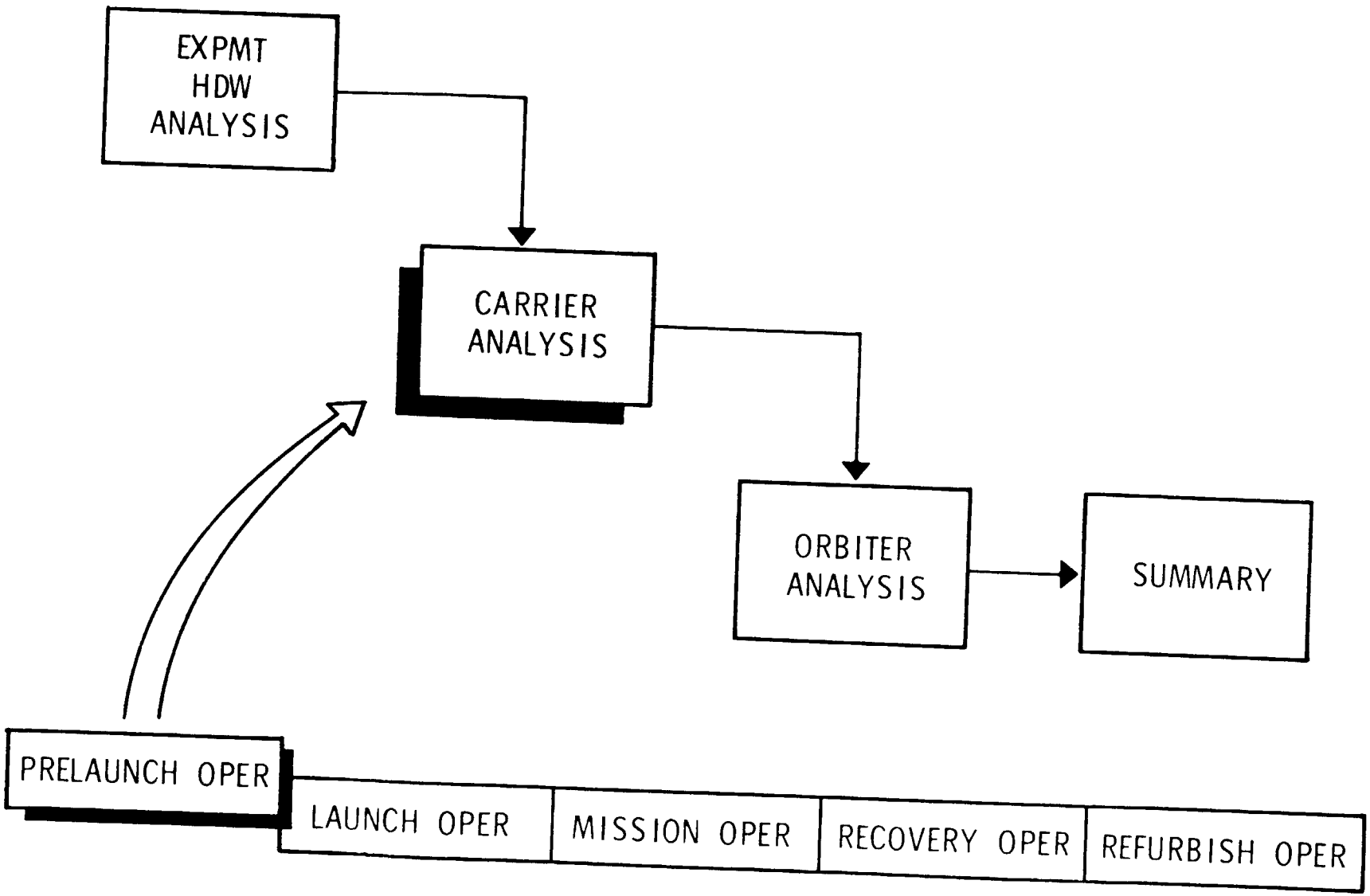

TRW

GROUND OPERATIONS REQUIREMENTS FOR THE EXPERIMENT CARRIER

A Sortie Lab is shown and features that must be considered in this study are cited. Briefly, the Sortie Lab is a manned, pressurized experiment carrier. It contains a fuel cell system for generating electrical power to operate its own systems as well as providing electrical power to operate the experiment hardware. An unpressurized pallet is attached to one end of the Sortie Lab where experiment hardware (such as antennas) can be mounted.

The Ground Operations Plan organizes the experiment carrier ground operations into a logical sequence. For this study, it is assumed that the carrier is a fully operational vehicle, in contrast to the installed experiment hardware which is R&D in nature. This plan describes the configuration of the Sortie Lab, then describes the activities from landing to the subsequent launch. The time required to perform the various activities is estimated, based on other studies and on experience in checkout and integration of experiment hardware and carriers. A timeline of the carrier ground operations is included in the plan.

GROUND OPERATIONS REQUIREMENTS

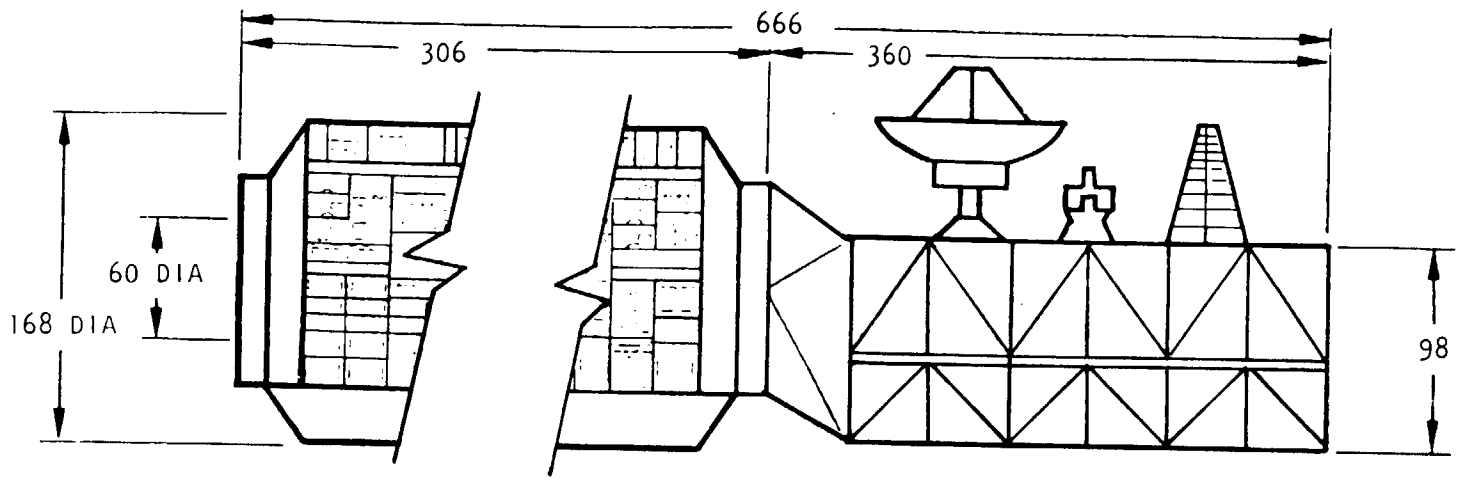

STANDARD SORTIE LAB
(DIMENSIONS IN INCHES)

- MANNED, PRESSURIZED CARRIER
- SELF CONTAINED SUB-SYSTEMS: THERMAL, LIFE SUPPORT, ENVIRONMENTAL CONTROL, FUEL CELLS, GAS
- EXPERIMENT HARDWARE CONTROL PANELS
- SHORT PALLET

PRELAUNCH OPER	LAUNCH OPER	MISSION OPER	RECOVERY OPER	REFURBISH OPER

TRW

GROUND OPERATIONS REQUIREMENTS (Continued)

The Sortie Lab timeline shown on the facing page was synthesized by TRW for this phase of the study, since no activity descriptions nor time interval data were available on the Sortie Lab at the time. Later phases of this study will utilize NASA planning data.

The timeline for the carrier contains the ground activities from landing of the previous mission through movement to the Orbiter Maintenance and Checkout Facility (MCF). The Integrated Systems Test (IST) indicated is performed using a Shuttle Integration Device (SID).

GROUND OPERATIONS REQUIREMENTS

SORTIE LAB TIMELINE - PRELAUNCH OPERATIONS

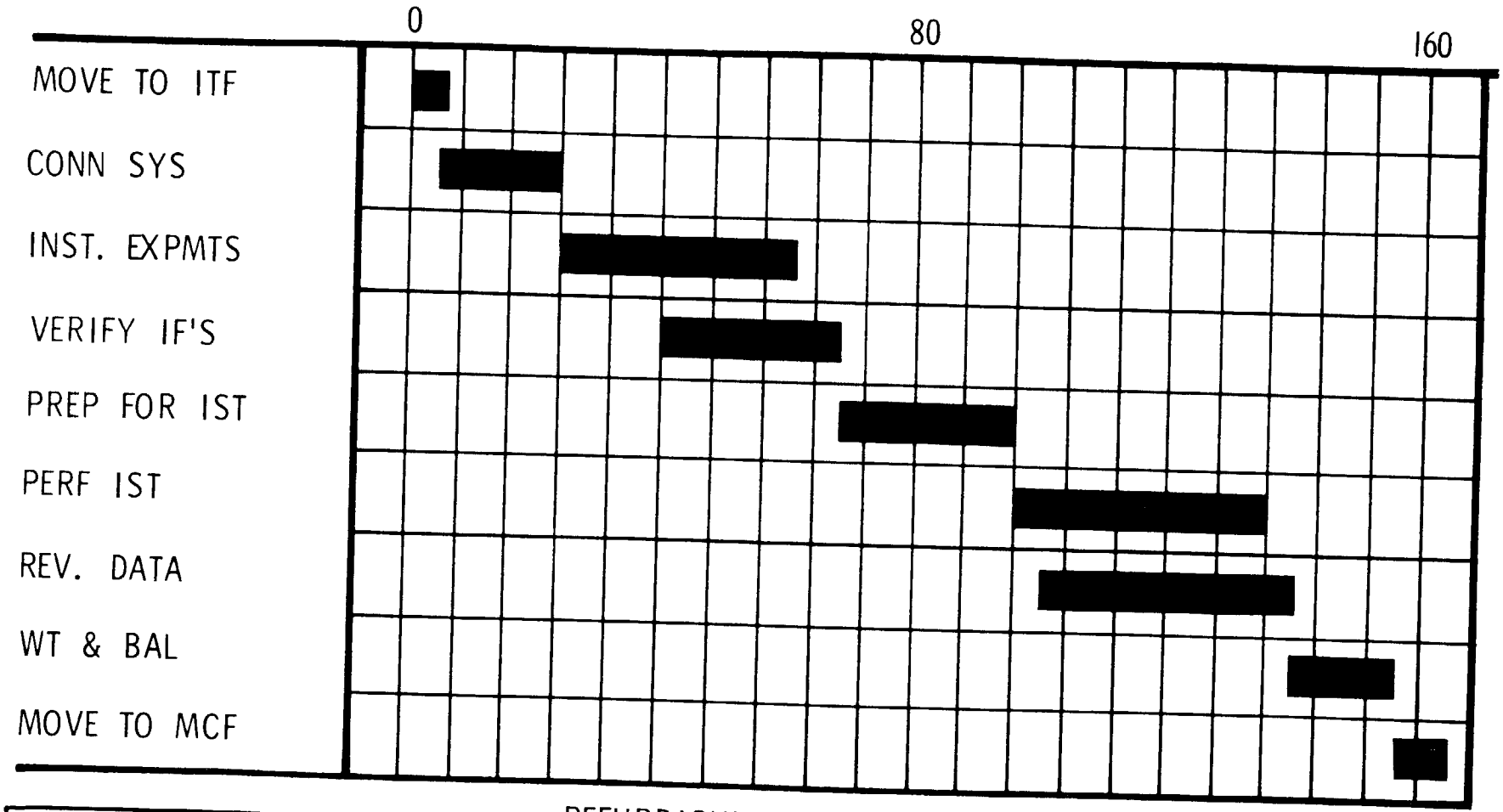

REFURBISHMENT / RECYCLE TIME FLOW SHOWN ELSEWHERE

PRELAUNCH OPER	LAUNCH OPER	MISSION OPER	RECOVERY OPER	REFURBISH OPER

TRW

GROUND OPERATIONS REQUIREMENTS

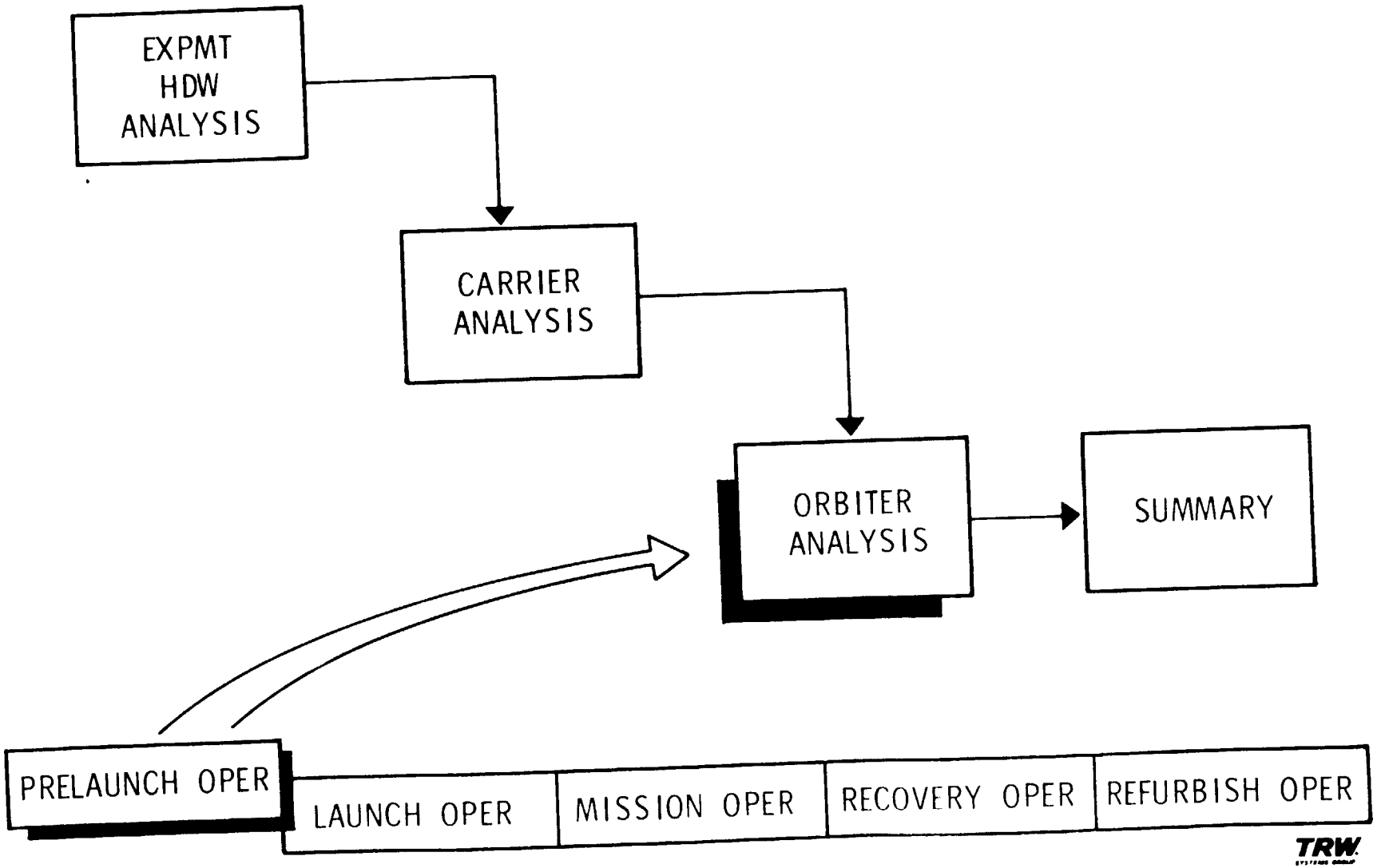

TRW

4-34

GROUND OPERATIONS REQUIREMENTS (Continued)

The Orbiter ground operations and the time intervals required to perform them were obtained from the unofficial KSC Space Shuttle Processing Chart dated 4 May 1972. The timeline provided in this plan is simply a condensed, reformated version of the KSC chart. The timeline covers the period from Orbiter landing through all of the activities up to and including launch of the Quick-Reaction Sortie mission.

C-2

GROUND OPERATIONS REQUIREMENTS

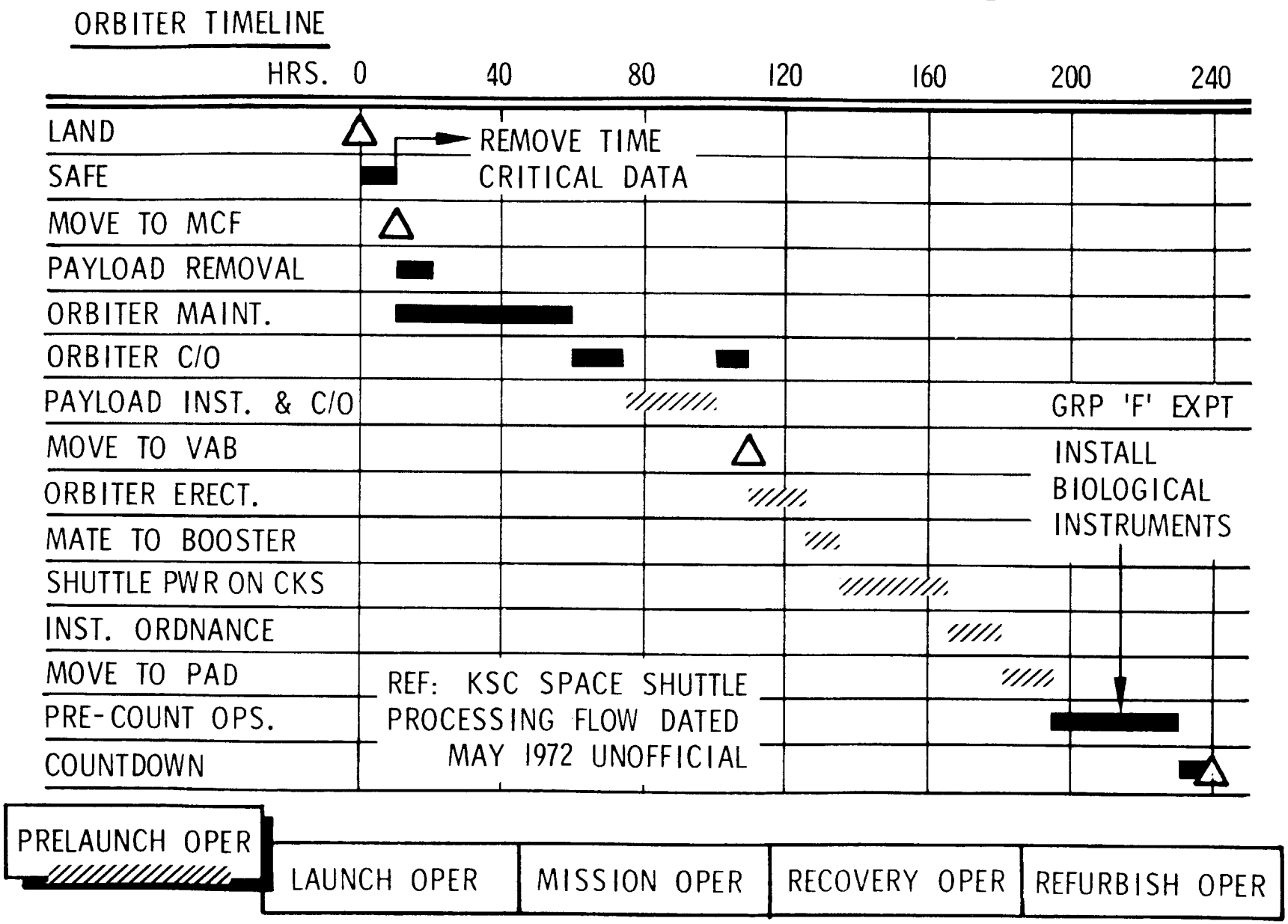

TRW

GROUND OPERATIONS REQUIREMENTS

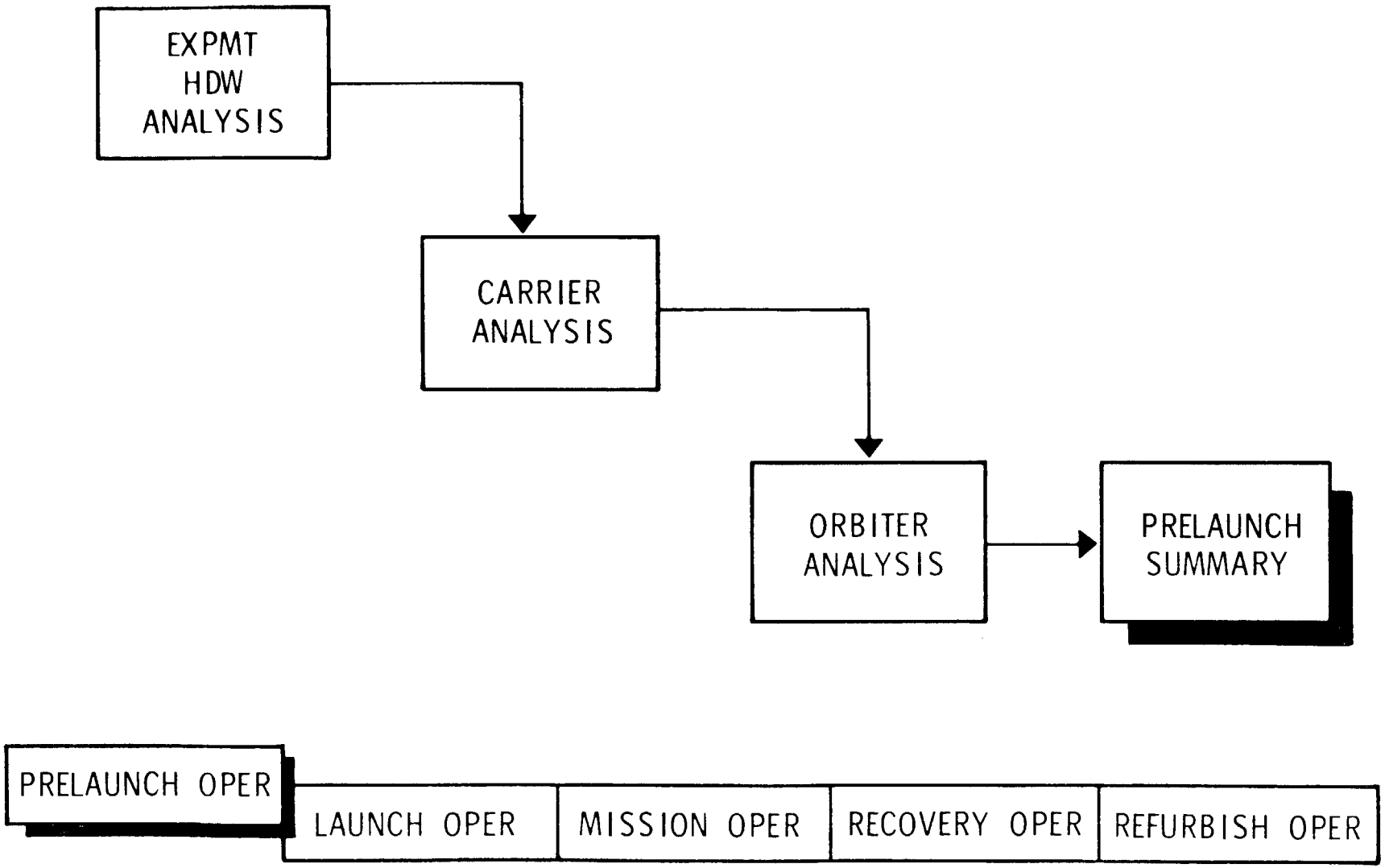

ORIGINAL PAGE IS OF POOR QUALITY

GROUND OPERATIONS REQUIREMENTS (Continued)

A SUMMARY OF THE PRE-LAUNCH OPERATIONS

A summary chart of the ground operations for the experiment hardware, the Carrier, and the Orbiter during pre-launch operations is shown. These operations create certain resource requirements at the launch site to accommodate Quick-Reaction payloads. At this stage of the study, only a general description of the resource requirements is developed. A later phase of this study requires the specific impact of the Quick-Reaction concept on KSC facilities, equipment, manpower and funding.

GROUND OPERATIONS REQUIREMENTS

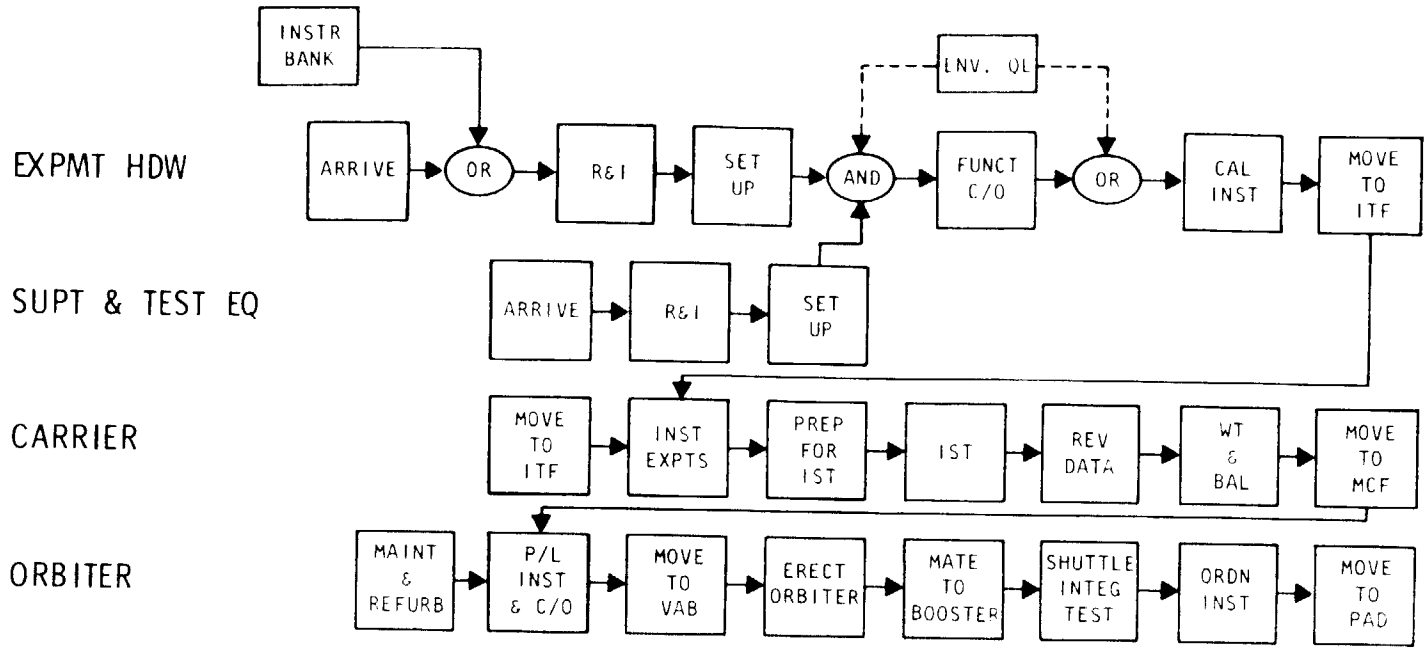

RESOURCE REQUIREMENTS

- SHIPPING TERMINAL
- LOCAL PI LAB
- BIOLOGICAL LAB
- ENVIRONMENTAL QUALIFICATION FACILITY & EQUIPMENT
- OPTICAL LAB
- MOBILE ENVIRONMENTAL CONTROL
- INTEGRATION & TEST FACIL

- SUPPORT EQUIP
- TEST EQUIP
- ALIGNMENT FIXTURES & INSTRUMENTS
- DATA MGMT SUPT
- FILM STORAGE & DK RM
- SHUTTLE INTEG. DEVICE

- INSTITUTIONAL SUPT
- UTILITIES
- COMMODITIES
- STORAGE
- CRANES, HOISTS, TRANSPORTERS, DOLLIES
- TRUCKS, LIFTING FIXTURES
- RF SCREEN ROOM

(NOTE: QUICK-REACTION PAYLOAD RESOURCES ONLY)

PRELAUNCH OPER	LAUNCH OPER	MISSION OPER	RECOVERY OPER	REFURBISH OPER

TRW

4.2 LAUNCH OPERATIONS

GROUND OPERATIONS REQUIREMENTS (Continued)

The major resources necessary to support Quick-Reaction payload activities at the launch site during launch operations are shown. The abbreviated functional flow across the top of the page indicates the mission activities that are being performed during this period.

GROUND OPERATIONS REQUIREMENTS

SUMMARY FOR LAUNCH OPERATIONS

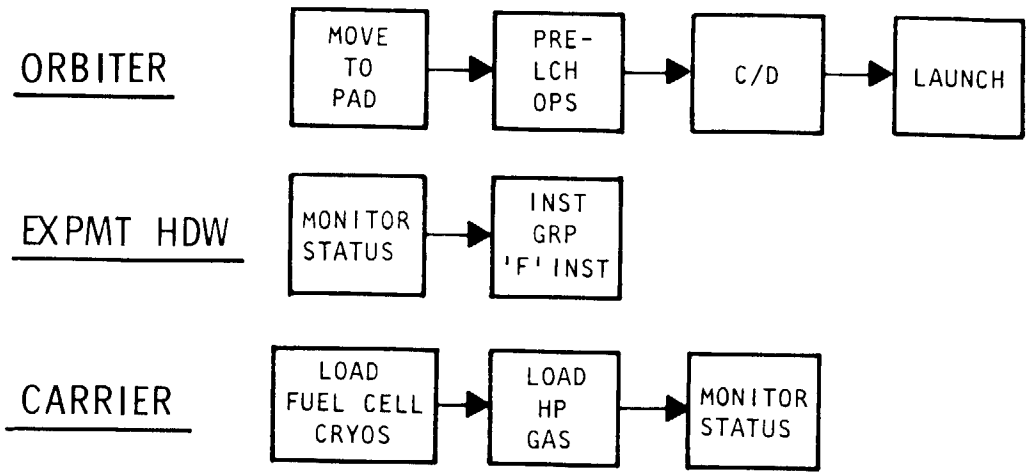

RESOURCE REQUIREMENTS

- GROUND SUPPORT SYSTEMS
  - GASES
  - CRYOGENICS
  - PURGES
  - ENVIRON. CTL
  - GRD ELECT.
  - DATA
- BIOLOGICAL LAB & STORAGE
- UTILITIES
- DATA MGMT SUPPORT
- INSTITUTIONAL SUPPORT
- LAUNCH SYSTEMS
- TRANSPORTER, HANDLING DEVICE
- COMMODITIES

(NOTE: QUICK-REACTION PAYLOAD RESOURCES ONLY)

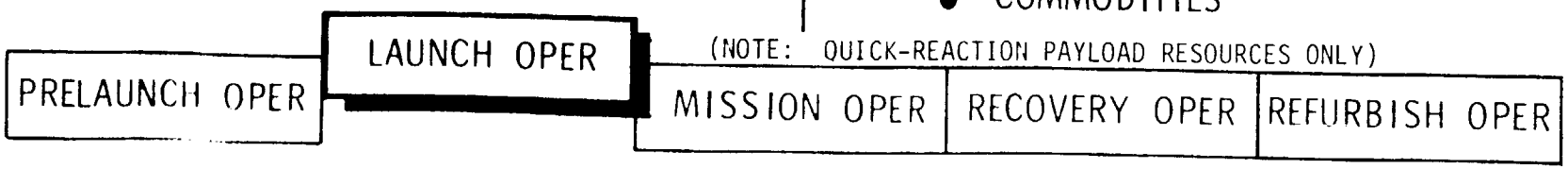

4.3 MISSION SUPPORT OPERATIONS

PRECEDING PAGE BLANK NOT FILMED

GROUND OPERATIONS REQUIREMENTS (Continued)

The major resources necessary to support the Quick-Reaction payload activities at the launch site during mission operations are shown. The abbreviated functional flow at the top of the chart indicates the mission activities that are being performed during this period.

GROUND OPERATIONS REQUIREMENTS

SUMMARY FOR MISSION SUPPORT OPERATIONS

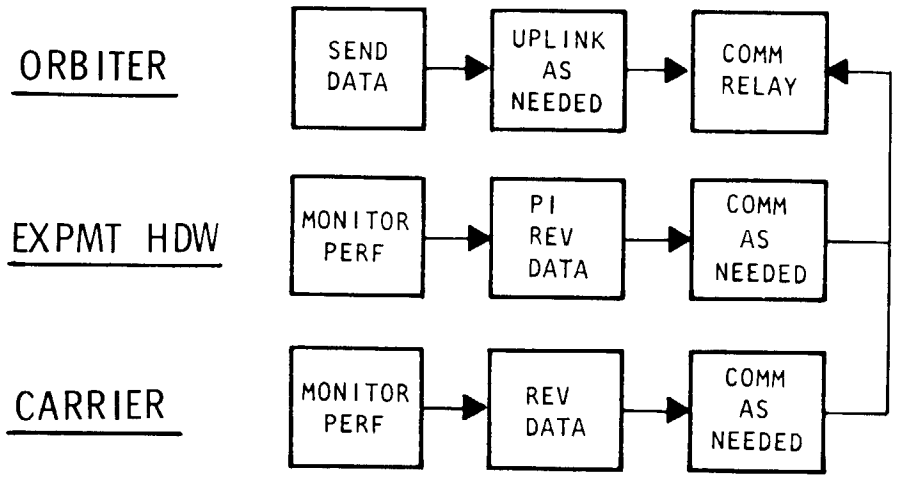

RESOURCE REQUIREMENTS

- DATA MGMT SUPPORT
  - SEPARATE EXPMT DATA
  - TAPE COPIES
  - PROVIDE PRINTOUTS
  - READOUTS
- INSTITUTIONAL SUPPORT

(NOTE: QUICK-REACTION PAYLOAD RESOURCES ONLY)

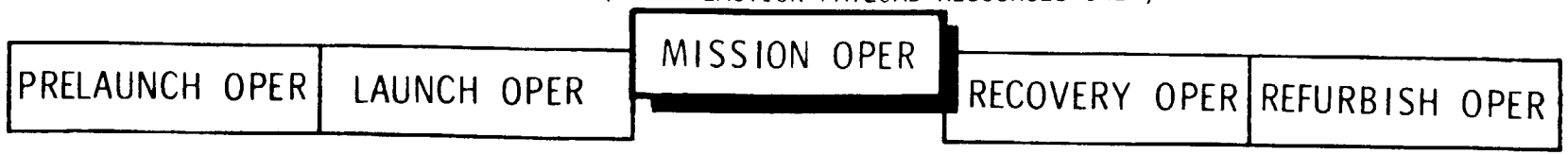

TRW SYSTEMS GROUP

4.4 RECOVERY OPERATIONS

PRECEDING PAGE BLANK NOT FILMED

GROUND OPERATIONS REQUIREMENTS (Continued)

The various activities that occur during recovery operations are shown and their relationship to each other are indicated.

GROUND OPERATIONS REQUIREMENTS

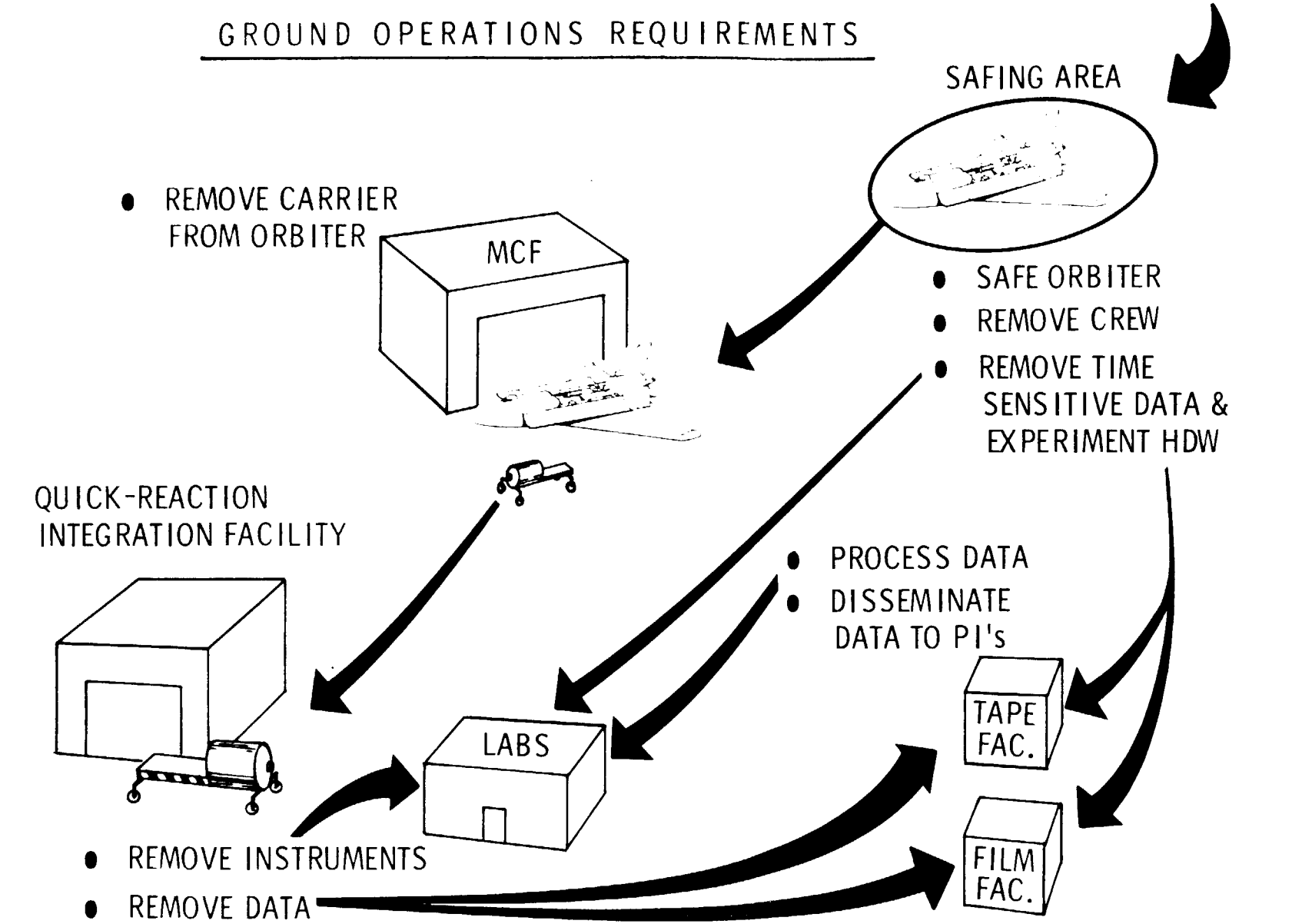

PRELAUNCH OPER	LAUNCH OPER	MISSION OPER	RECOVERY OPER	REFURBISH OPER

TRW

GROUND OPERATIONS REQUIREMENTS (Continued)

The major resources necessary to support Quick-Reaction payload activities at the launch site during recovery operations are shown. The abbreviated functional flow at the top of the chart indicates the mission activities that are being performed during this period.

GROUND OPERATIONS REQUIREMENTS

RECOVERY OPERATIONS

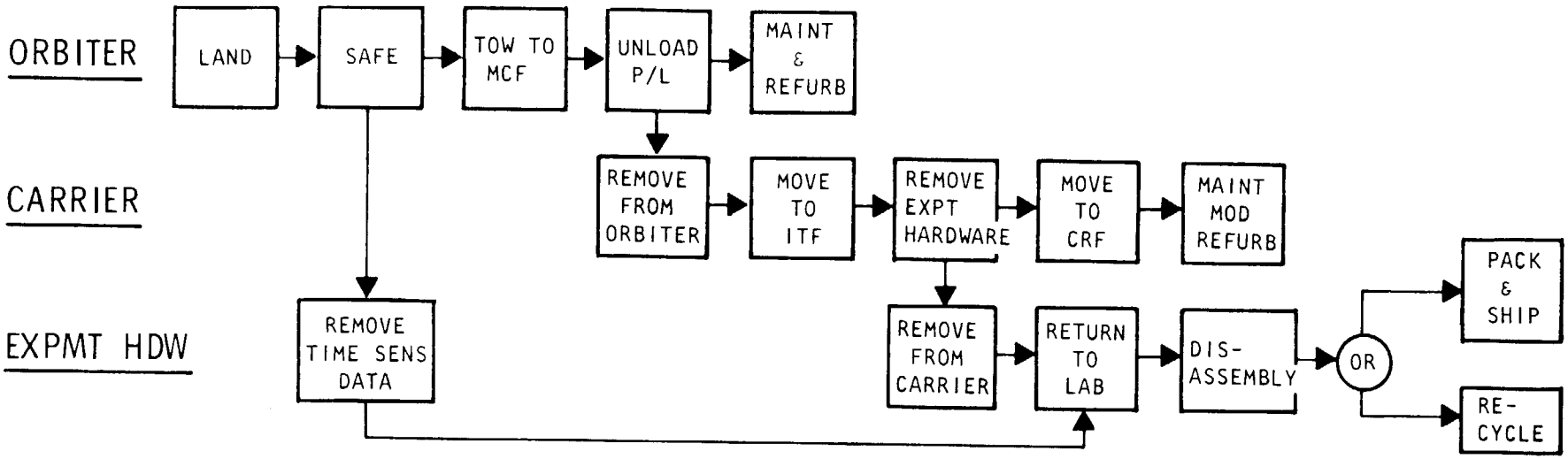

RESOURCE REQUIREMENTS

- INTEGRATION & TEST FACIL
- CARRIER MAINT & REFURB FACILITY
- BIOLOGICAL LAB & STORAGE
- SHIPPING TERMINAL
- SUPPORT SYSTEMS
  - VENT, PURGE & DRAIN
  - GRD ELECT PWR
  - ENVIRONMENTAL
  - DATA
- CRANES, HOISTS, FIXTURES
- LOCAL PI LAB
- INSTITUTIONAL SUPPORT
- TRUCKS, TRANSPORTERS, DOLLIES
- UTILITIES
- COMMODITIES
- STORAGE

(NOTE: QUICK-REACTION PAYLOAD RESOURCES ONLY)

PRELAUNCH OPER	LAUNCH OPER	MISSION OPER	RECOVERY OPER	REFURBISH OPER

TRW

4.5 REFURBISHMENT OPERATIONS

PRECEDING PAGE BLANK NOT FILMED

GROUND OPERATIONS REQUIREMENTS (Continued)

The timeline for refurbishment of the Sortie Lab is shown. This is a synthesized timeline, since NASA planning information was not available. This is now available and will be used for the remainder of the study.

GROUND OPERATIONS REQUIREMENTS

REFURBISHMENT OPERATIONS

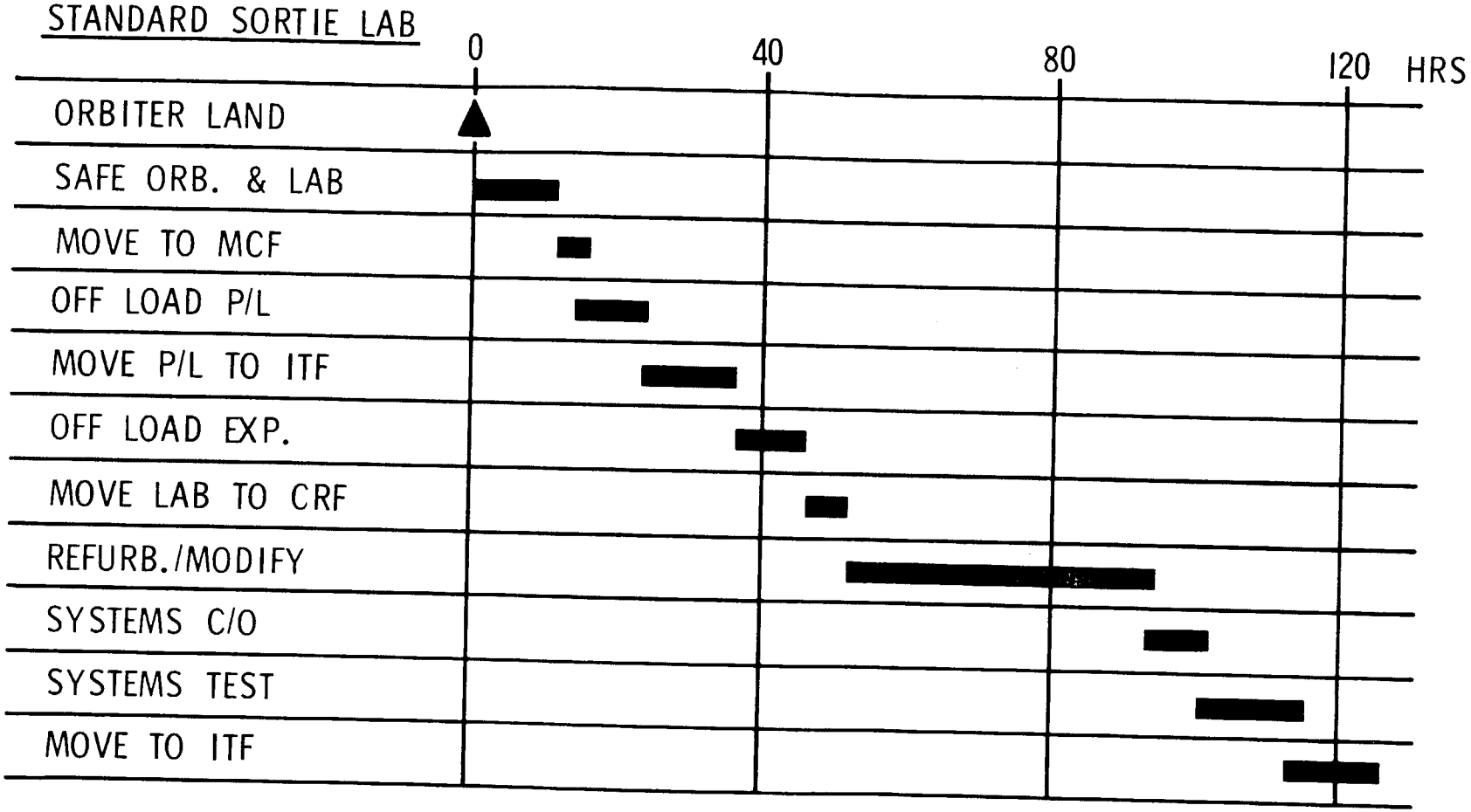

PRELAUNCH OPER	LAUNCH OPER	MISSION OPER	RECOVERY OPER	REFURBISH OPER

TRW SYSTEMS GROUP

GROUND OPERATIONS REQUIREMENTS (Continued)

The major resources required to support Quick-Reaction payload activities at the launch site during refurbishment operations are shown. The abbreviated functional flow at the top of the cahrt indicates the mission activities that are being performed during this period.

GROUND OPERATIONS REQUIREMENTS

REFURBISHMENT OPERATIONS

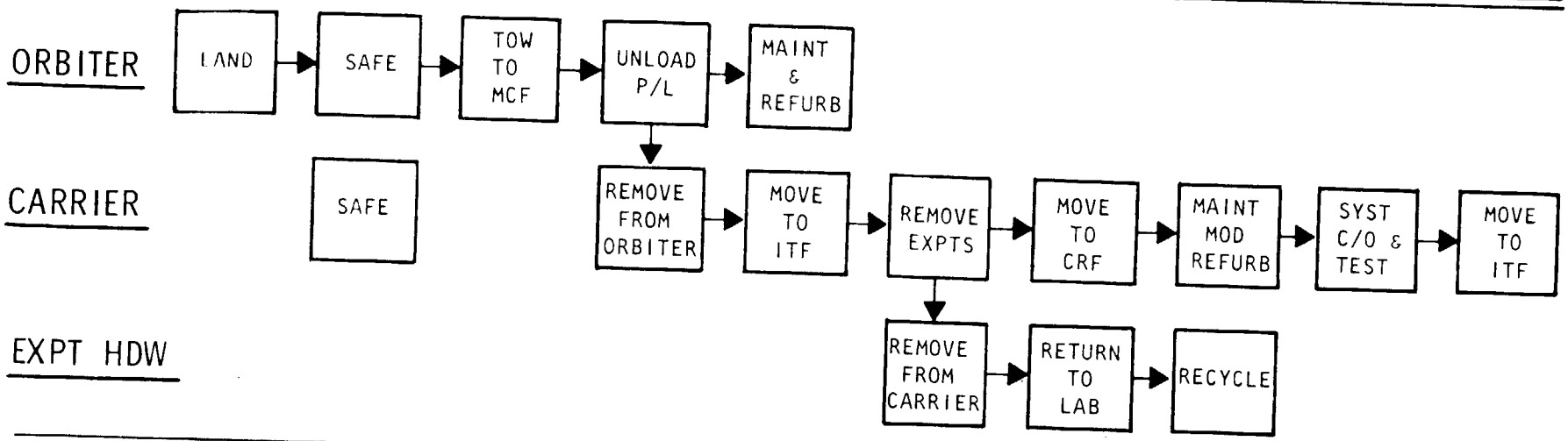

RESOURCE REQUIREMENTS

- CARRIER REFURBISHMENT FACILITY
- BIOLOGICAL LAB & STOR
- LOCAL PI LAB

- SUPPORT EQUIPMENT
- TEST EQUIPMENT
- ALIGNMENT FIXTURES/ INSTRUMENTS
- DATA MGMT SUPPORT
- MOBILE ENVIRONMENTAL CONTROL

- INSTITUTIONAL SUPPORT
- UTILITIES
- COMMODITIES
- STORAGE
- CRANES, HOISTS, SLINGS
- TRUCK, TRANSPORTERS, DOLLIES

TRW SYSTEMS GROUP

(NOTE: QUICK-REACTION PAYLOAD RESOURCES ONLY)

PRELAUNCH OPER	LAUNCH OPER	MISSION OPER	RECOVERY OPER	REFURBISH OPER

4.6 SUMMARY

PRECEDING PAGE BLANK NOT FILMED

GROUND OPERATIONS REQUIREMENTS

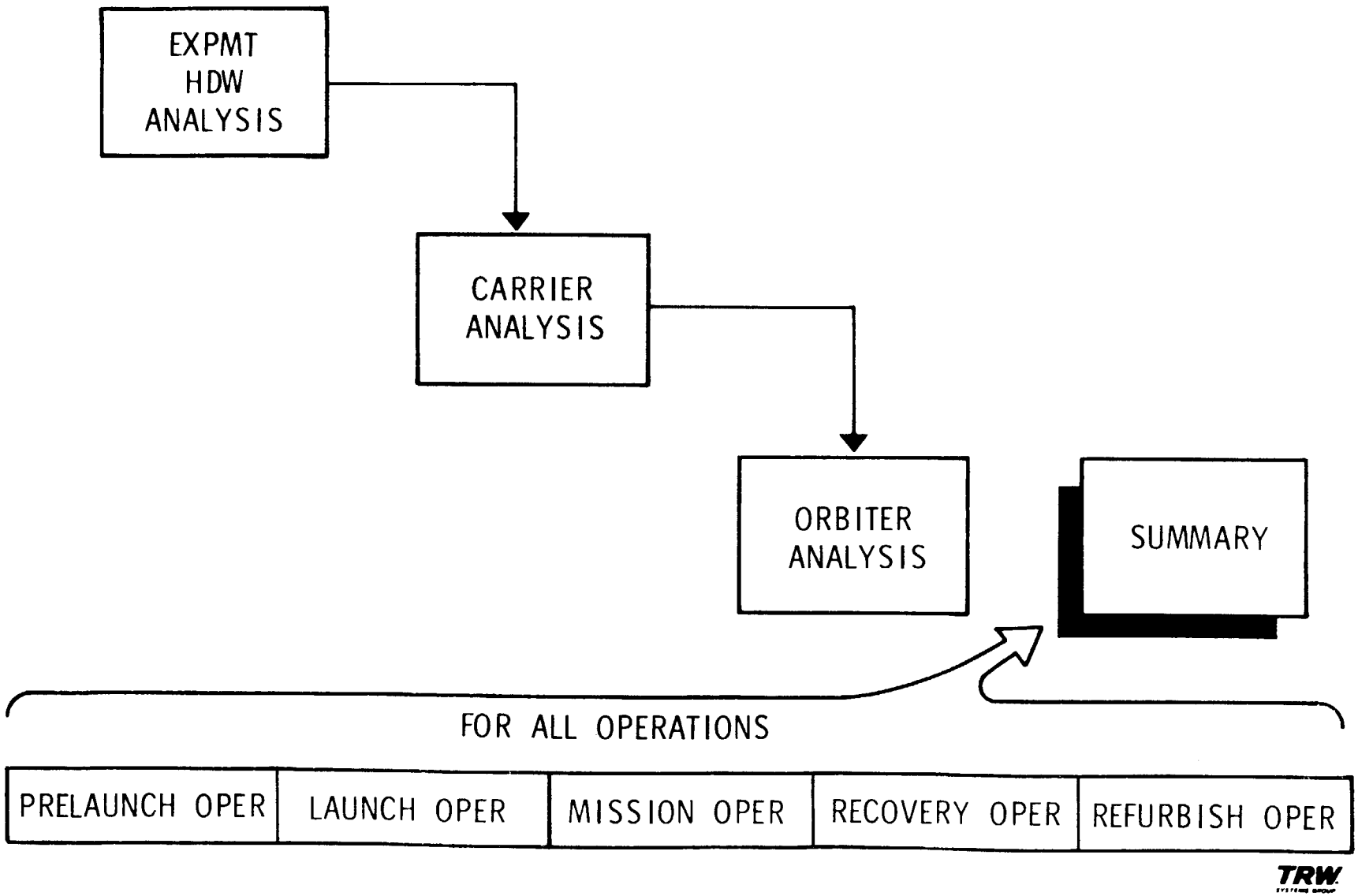

TRW

The resource requirements developed during analysis of the pre-launch, launch, mission support, recovery, and refurbishment operations at the launch site are summarized. Pre-launch operations was described previously. A brief description of each of the remaining operations is presented below.

Launch Operations

During the launch operations phase, the experiment hardware and the carrier are essentially passive, except that fuel cell cryogenics and high pressure gas must be loaded on board the Sortie Lab during the Orbiter pre-countdown. For the Group F experiment packages the biological instrument and/or specimens must be installed. This is performed as late as possible, probably just prior to cabin closeout during the countdown. Except for these activities, ground operations during this period of time consist primarily of monitoring the status of pressure, temperature and other measurements as the data is fed back through the Orbiter data system.

Mission Support Operations

Launch site support of the mission operations generates some ground operations requirements, particularly in the area of data retrieval, reduction and duplication. The experiment and carrier data are sent through the Orbiter downlink to the ground station on a periodic rather than a continual basis. This data must be separated and displayed in some manner so that the PI's that have experiments operating on board can review the data. It is likely that after reviewing the data the PI will want to converse with the crewman who is performing his experiment to instruct him to do something differently, make some adjustment to the equipment or simply get a firsthand impression of the experiment operation. Similarly, the owner/operator of the Sortie Lab wants information via the data link as to how the on-board systems are performing. A central data center at the launch site is needed that will provide data review rooms, voice communications capability with the Shuttle crew and other supporting services.

GROUND OPERATIONS REQUIREMENTS

SUMMARY OF RESOURCE REQUIREMENTS

- SHIPPING TERMINAL
- LOCAL PI LAB
- BIOLOGICAL LAB & STORAGE
- ENVIRONMENTAL QUALIFICATION FACILITY AND EQUIP
- OPTICAL LAB
- INTEGRATION & TEST FACILITY
- CARRIER REFURB-ISHMENT FACIL.

- SUPPORT EQUIPMENT
- TEST EQUIPMENT
- ALIGNMENT FIXTURES & INSTRUMENTS
- DATA MGMT SUPPORT
- FILM STORAGE & DARKRM
- SHUTTLE INTEGRATION DEVICE
- LAUNCH SYSTEMS & FACILITIES
- MOBILE ENVIRON. CONTROL

- INSTITUTIONAL SUPT.
- UTILITIES
- COMMODITIES
- STORAGE
- CRANES, HOISTS, LIFTING FIXTURES
- TRANSPORTERS, DOLLIES
- RF SCREEN ROOM
- GROUND SUPPORT SYSTEMS -
  - GASES
  - CRYOS
  - PURGES
  - ENVIR. CTL
  - GRND ELECT
  - VENT, DRAINS

(NOTE: QUICK-REACTION PAYLOAD RESOURCES ONLY)

PRELAUNCH OPER	LAUNCH OPER	MISSION OPER	RECOVERY OPER	REFURBISH OPER

TRW

GROUND OPERATIONS REQUIREMENTS (Continued)

Recovery Operations

The ground operations requirements for performing recovery and postflight operations are based on the landing, safing and payload removal activities.

Refurbishment Operations

Refurbishment activities for the carrier include maintenance, test and check-out. Relatively minor modifications may be required to accommodate the experiment hardware to be flown on the next Quick-Reaction Sortie mission.

GROUND OPERATIONS REQUIREMENTS (Continued

The charts shown on the next two facing pages provide some descriptive detail on two of the major Quick-Reaction payload support facilities. These descriptions are presented as examples of the level of detail that will be provided for each of the major resources in the Appendix to this study.

The size of the Carrier Refurbishment Facility will be determined by the density of Quick-Reaction missions. Since this has not been established, it has been assumed for study purposes that the facility should accommodate two carriers simultaneously. This subject will be addressed in Task 7 of this study, where the sensitivity of various program elements to mission density will be analyzed.

If two carriers are processed simultaneously, it is estimated that about 30,000 SF of floor space will be required. An overhead bridge crane of about 35 tons capacity and a working hook height of 40 to 50 feet is necessary for handling the carrier and other equipment. The environment in this facility should be class 100,000 clean, or nearly so, with temperature and humidity controlled to $73^{o} \pm 3^{o}$ F and 50% RH. The lighting should be high intensity to provide about 70 to 100 foot candles at the work and test levels. The Sortie Lab requires support stands to hold it during these activities. It should be surrounded by the necessary work and access stands for performing the various tasks on the carrier. Mechanics work areas, tool and spare parts storage cribs, handling fixture storage areas, and other usual areas provided for these kinds of activities must be designated. For the Sortie Lab, certain functional support systems and commodities are required and furnished for test and checkout. Institutional support for machine shop, electrical cable shop, electronics lab, calibration lab, etc., is required in support of these activities.

PRECEDING PAGE BLANK NOT FILMED

GROUND OPERATIONS REQUIREMENTS

- CARRIER REFURBISHMENT FACILITY
  - CLASS 100^k CLEAN ROOM
  - PERSONNEL & EQUIP AIR LOCKS
  - TEMP & RH CONTROL TO $73^0 \pm 3^0$F & 50% RH
  - 30,000 SF FLOOR SPACE
  - OH BRIDGE CRANE TO 35T.
  - HOOK ht. OF 40 TO 50 FT
  - HIGH INTENSITY LIGHTS
  - VACUUM SOURCE
  - GENERAL UTILITIES
  - STORAGE AREAS
  - OFFICE AREA
  - SUPPORT STANDS FOR SORTIE LAB & PALLET
  - WORK & ACCESS STANDS
  - TECHNICIAN WORK AREAS
  - SPARE PARTS & MAT'LS STORAGE
  - LIFTING FIXTURES, CABLES
  - WORK BENCHES
  - STORAGE CABINETS
  - CARRIER ORIENTED GSE
    - TEST EQUIP
    - SUPPORT SYSTEMS
    - PRESSURE CARTS
    - ELECT PWR SUPPLIES
    - TEST & C/O PANELS

TRW SYSTEMS GROUP

GROUND OPERATIONS REQUIREMENTS

- LOCAL PI LAB

  - CLASS 100^k CLEAN ROOM
  - PERSONNEL & EQUIP AIR LOCK
  - TEMP & RH CONTROL TO $73^{0\pm}3^0$F & 50% RH
  - 500 SF TO 2000 SF FLOOR SPACE
  - 8 FT TO 15 FT CEILING
  - OH CRANE TO 1 TON
  - VARIABLE CONTROL LIGHTS
  - VACUUM SOURCE
  - DARK ROOM
  - REFRIG. FILM VAULT
  - GENERAL UTILITIES
  - STORAGE AREA
  - OFFICE AREA
  - GEN'L LAB EQUIPMENT
    - POWER SUPPLIES
    - OSCILLOSCOPES
    - RHEOSTAT
    - CAMERA EQUIPMENT
    - SERIES FUSE BOX
    - TEST CONTROL PANELS
    - OPTICAL ALIGNMENT EQUIP
    - FILM DEVELOPMENT EQUIP
    - FILM VIEWERS
    - DATA RECORDERS
  - WORK BENCHES
  - LIFTING FIXTURE & CABLES
  - TEST SUPPORT FIXTURE
  - OPTICAL BENCH
  - STORAGE CABINETS

PRECEDING PAGE BLANK NOT FILMED

GROUND OPERATIONS REQUIREMENTS (Continued)

The time phased relationship between the various Quick-Reaction Sortie elements are shown from the time the experiment hardware arrives until liftoff of the Orbiter. The experiment hardware activities vary from a maximum time period of 100 hours to a minimum of 40 hours. The scale of the block shown in the chart is for 100 hours. The time scale for the carrier is slightly longer than the time interval for an average Sortie Lab because of the time required for integrating the experiment hardware packages. The time shown for the Orbiter is based on a KSC Shuttle Processing Study dated May, 1972. The overall estimated time interval for experiment hardware from arrival at the launch site through launch is 414 working hours.

GROUND OPERATIONS REQUIREMENTS

SUMMARY OF EXPERIMENT HARDWARE TIME AT LAUNCH SITE

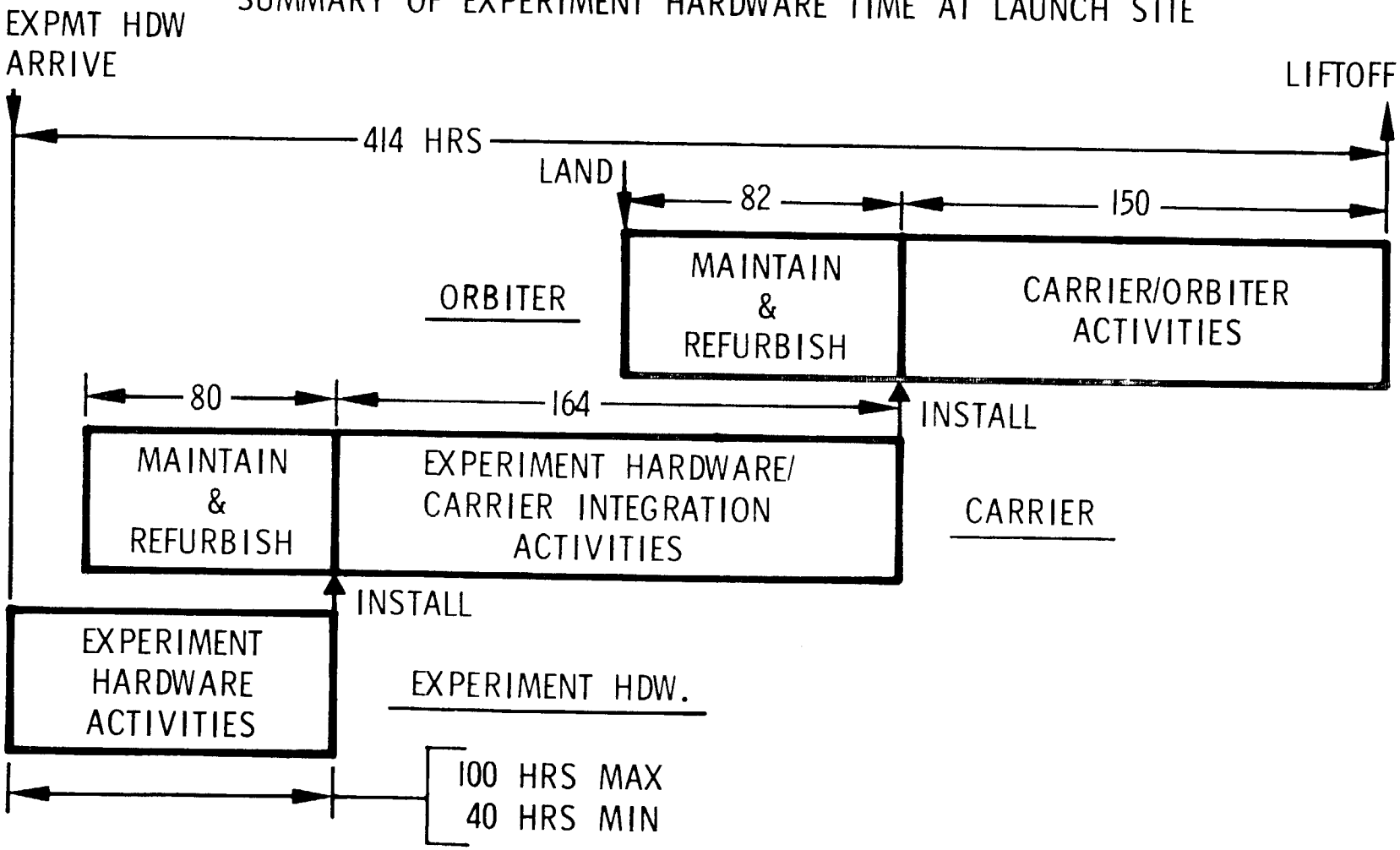

TRW

5.0 INTERFACE ASSESSMENT

PRECEDING PAGE BLANK NOT FILMED

5.1 PHYSICAL INTERFACE ASSESSMENT

PRECEDING PAGE BLANK NOT FILMED

INTERFACE ASSESSMENT

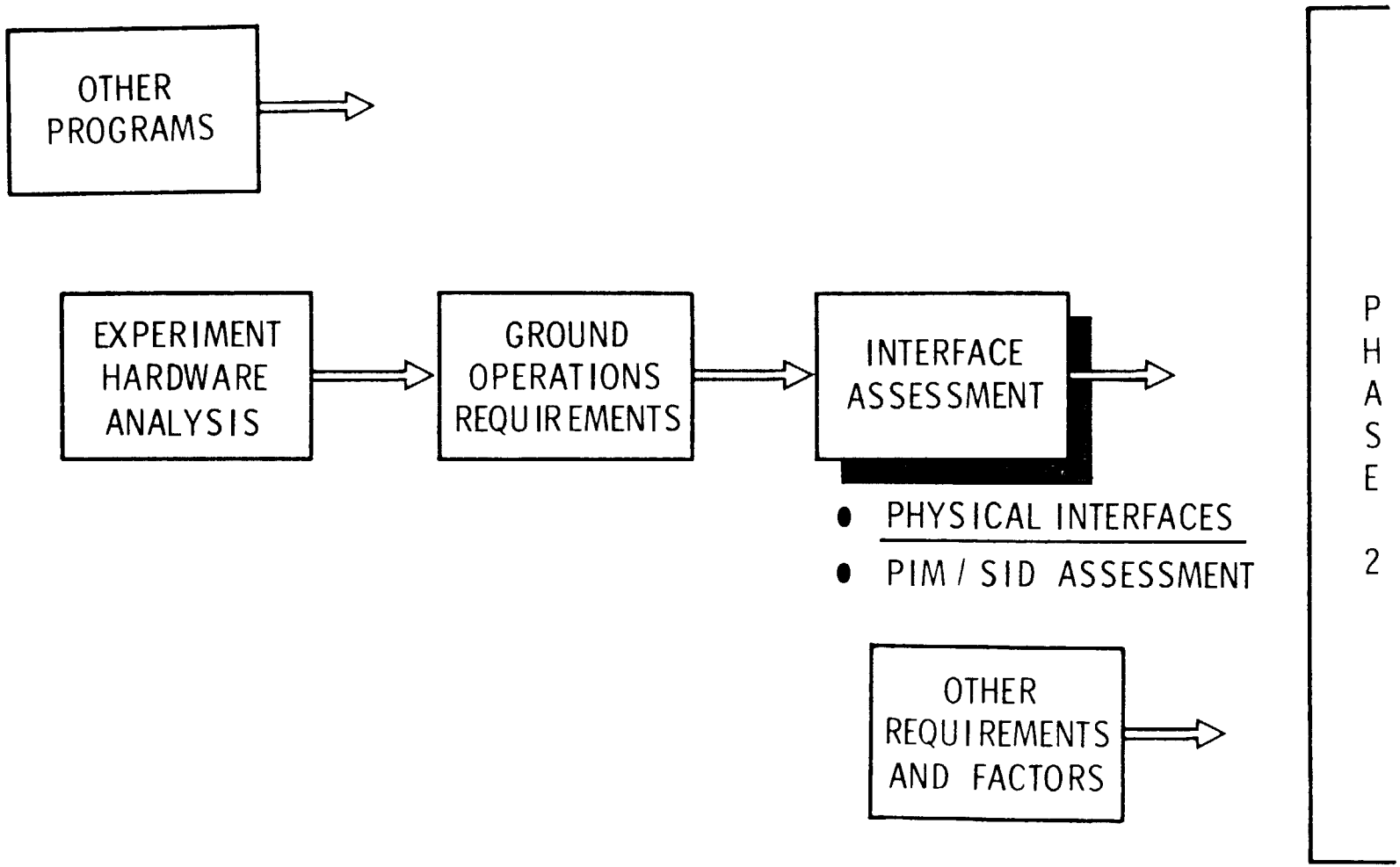

TRW

INTERFACE ASSESSMENT

The two primary objectives of the Interface Assessment are:

- Determine both the nature and the magnitude of the potential physical interfaces between the payload, payload carrier, Orbiter and the support systems.

- Develop, based on the determination above, criteria and rationale which can be used to evaluate the effects of alternative types and levels of interfaces when considered in relation to their potential effect/impact upon all levels of pre-launch and launch activities, recovery operations, and refurbishment/recycle requirements.

INTERFACE ASSESSMENT

OBJECTIVES:

- DETERMINE NATURE AND MAGNITUDE OF POTENTIAL INTERFACES
- DEVELOP CRITERIA AND RATIONALE FOR EVALUATING THE EFFECT OF ALTERNATIVE TYPES OF PHYSICAL INTERFACES AND THEIR IMPACT ON LAUNCH SITE ACTIVITIES.

TRW SYSTEMS GROUP

INTERFACE ASSESSMENT (Continued)

An analysis of the potential interfaces between the various elements under consideration (i.e., experiment hardware, Sortie Lab, Orbiter, and ground support systems) was performed. Interfaces between each of the flight elements were identified and arranged into a matrix for comparative purposes.

INTERFACE ASSESSMENT

INTERFACE MATRIX

	SORTIE LAB	EXPMT HDW	ORBITER
SORTIE LAB			
GRND SUPT SYSTS			
ORBITER			

NATURE OF POTENTIAL INTERFACES

- ELECTRICAL POWER
- STRUCTURAL
- CREW
- COMMUNICATIONS
- DEPLOYMENT MECHANISM
- STABILITY AND CONTROL
- TUNNEL HATCH
- FLUIDS
- GASES

TRW SYSTEMS GROUP

INTERFACE ASSESSMENT (Continued)

Interface analysis sheets were prepared for each major interface identified on the matrix. These sheets are presented on subsequent pages. They will be updated as required during the course of the study.

POTENTIAL INTERFACES

CARRIER: SORTIE LAB
ELEMENTS: CARRIER/ORBITER

NATURE OF INTERFACE	MAGNITUDE & CHARACTERISTICS
ELECTRICAL POWER	● 500 WATTS ● 28 VDC ● BULKHEAD CONNECTOR
STRUCTURAL ATTACHMENT	● 3 POINT ATTACHMENT, 2 FORWARD - 1 AFT, ON ℄ ● EXTERNAL - LATCHED FROM ORBITER
CREW	● 2 CREW ● STOWAGE
COMMUNICATIONS	● VOICE ● DIGITAL ● ANALOG ● 5KBS MAX
DEPLOYMENT MECHANISM	● ORBITER PROVIDED
STABILITY & CONTROL	● $\pm 0.5^{0}$ ATTITUDE CONTROL FROM ORBITER
TUNNEL HATCH	● CLOSED HATCH OPERATION ● 60 IN. DIA. HATCH
FLUIDS	● FUEL CELL REACTANTS FILL & DRAIN LINES
GASES	● HP GN_2 FILL & VENT LINE ● FUEL CELL VENTS & PURGE ● EXPERIMENT VENT

TRW SYSTEMS GROUP

POTENTIAL INTERFACES

CARRIER: SORTIE LAB
ELEMENTS: STANDARD SORTIE LAB/EXPERIMENTS

NATURE OF INTERFACE	MAGNITUDE
STRUCTURAL ATTACHMENT	• MOUNTING PLATES BOLTED TO LONGERONS • RACK MOUNTING ON DECK • INTERNAL & EXTERNAL TO PRESSURE SHELL
ELECTRICAL POWER	• 28 VDC • 1.5 kw (AV) • STANDARD CONNECTORS OR LUGGED CABLES
GASES	• GN_2 PURGE
THERMAL CONTROL	• EXPERIMENT COLD PLATES • CRYOGENIC COOLING
ENVIRONMENTAL	• 40^0 TO 90^0 F • MODERATE TO CLASS 100,000
SENSOR DEPLOYMENT MECHANISM	• TELESCOPING • MECHANICAL ATTACHMENT
COMMUNICATIONS	• DIGITAL • ANALOG • STANDARD CONNECTORS • COAX, TWISTED PAIR, SHIELDED

TRW

PRECEDING PAGE BLANK NOT FILMED

POTENTIAL INTERFACES

CARRIER: SORTIE LAB
ELEMENTS: CARRIER/SUPPORT SYSTEMS

NATURE OF INTERFACE	MAGNITUDE
ELECTRICAL POWER	• 5 kw (AV) • STANDARD CONNECTORS
COMMUNICATION	• VOICE • ANALOG • DIGITAL • DISCRETE • TWISTED PAIR, COAX, SHIELDED STANDARD CONNECTORS
HANDLING & TRANSPORT	• HARD POINTS & LIFTING EYES • GUIDES & PINS FOR ALIGNMENT
GASES	• HP GN_2 • FUEL CELL VENTS & PURGE • EXPERIMENT VENT
FLUIDS	• FUEL CELL REACTANTS FILL & DRAIN • EXPERIMENT CRYO COOLING FILL & DRAIN

TRW SYSTEMS GROUP

POTENTIAL INTERFACES

CARRIER: SORTIE LAB
ELEMENTS: EXPERIMENTS/ORBITER

NATURE OF INTERFACE	MAGNITUDE
STABILITY & CONTROL	● ORBITER PROVIDED $\pm .5^0$ ATTITUDE CONTROL
COMMUNICATIONS	● DISCRETE ● ANALOG ● DIGITAL
GASES	● VENTING FOR EXPERIMENTS

TRW
SYSTEMS GROUP

POTENTIAL INTERFACES

CARRIER: SORTIE LAB
ELEMENTS: EXPERIMENTS/SUPPORT SYSTEMS

NATURE OF INTERFACE	MAGNITUDE
ELECTRICAL POWER	• 28 VDC • 1.5 kw (AV) • STANDARD CONNECTOR OR LUGGED CABLE
GASES	• GN_2 PURGE • EXPERIMENT VENTS
COMMUNICATIONS	• DIGITAL • ANALOG • COAX, TWISTED PAIR, SHIELDED • STANDARD CONNECTORS
HANDLING & TRANSPORT	• 5 TO 1000 LBS • 0.1 TO 70 CF
ENVIRONMENTAL	• MODERATE TO CLASS 100,000 • 40^0 TO 90^0 F

TRW

PRECEDING PAGE BLANK NOT FILMED

POTENTIAL INTERFACES

CARRIER: SORTIE LAB
ELEMENTS: ORBITER/SUPPORT SYSTEMS

NATURE OF INTERFACE	MAGNITUDE
ELECTRICAL POWER	• 28 VDC • 5 kw (AV) • STANDARD CONNECTOR
FLUIDS	• FUEL CELL REACTANTS FILL & DRAIN • EXPERIMENT CRYO COOLANT
GASES	• HP GN_2 • GN_2 PURGE • FUEL CELL & EXPERIMENT VENTS

TRW

PRECEDING PAGE BLANK NOT FILMED

PAGE 5-20 INTENTIONALLY BLANK

INTERFACE ASSESSMENT (Continued)

The second objective of this analysis is to develop criteria and rationale for evaluation of alternative types and levels of interfaces. These goals were established for the development of interface criteria.

INTERFACE ASSESSMENT

GOALS

- LOW COST
- SHORT INTEGRATION AND C/O TIME
- REDUCE PAPERWORK
- CONVENIENCE OF USER
- ENCOURAGE INTEREST OF SCIENTIFIC COMMUNITY

TRW
SYSTEMS GROUP

These interface criteria, if accepted by the vehicle, carrier and experiment hardware developers, will result in achievement of the goals. For example, if off-the-shelf, standard components are available and can be utilized rather than constructing special, one-time order components, then each of the goals can be satisfied:

- Satisfaction of the low cost aspect is accomplished because off-the-shelf components are generally less expensive than special-make items and spare parts for off-the-shelf items are generally available when needed.

- Short integration and checkout time is satisfied because off-the-shelf components are usually proven items with established test and checkout procedures.

- Off-the-shelf components greatly reduce the quantity and variety of procedures, specifications and reports normally associated with single-order special designs.

- Off-the-shelf components satisfy the important consideration of user convenience because these components tend to be standard throughout the nation with many sources of supply for the components and spare parts.

- Use of off-the-shelf components for interfaces will encourage the interest of the scientific community that is interested in the Quick-Reaction Sortie missions because . . . and we can start over again -- low cost, user convenience, etc.

Each item shown as criteria can be approached in the same manner. In each instance, the desired goals are satisfied.

INTERFACE ASSESSMENT

CRITERIA	RATIONALE
• OFF SHELF, STANDARD COMPONENTS	READILY AVAILABLE FROM SEVERAL SOURCES
• SIMPLE TO INTEGRATE, OPERATE, C/O	QUICKER PROCESSING AT QRIA
• ACCESSIBILITY	EASE OF REPAIR, ADJUSTMENT, REMOVAL
• MINIMUM MAINTAINABILITY REQUIREMENTS	HIGH MAINTENANCE REQUIREMENTS IMPACT SCHEDULES
• MINIMUM DOCUMENTATION	LESS MANPOWER, QUICKER PROCESSING
• MINIMUM CARRIER MODS TO ACCOMMODATE INTERFACE	PREVENTS EXTENSIVE TESTS ON OPERATIONAL SYSTEMS
• NO ORBITER CHANGES TO ACCOMMODATE INTERFACES	DOES NOT TIE UP ORBITER OPERATIONAL SCHEDULE
• SATISFY MANDATORY SAFETY AND COMPATIBILITY REQMTS	ASSURE PAYLOADS DO NOT VIOLATE ESTABLISHED SAFETY MEASURES AND MEET MIN. COMPATIBILITY WITH ORBITER
• MINIMIZE INTERFACES	FEWER CONNECTIONS HENCE FEWER TROUBLE SPOTS

TRW SYSTEMS GROUP

5.2 PIM/SID ASSESSMENT

PRECEDING PAGE BLANK NOT FILMED

INTERFACE ASSESSMENT

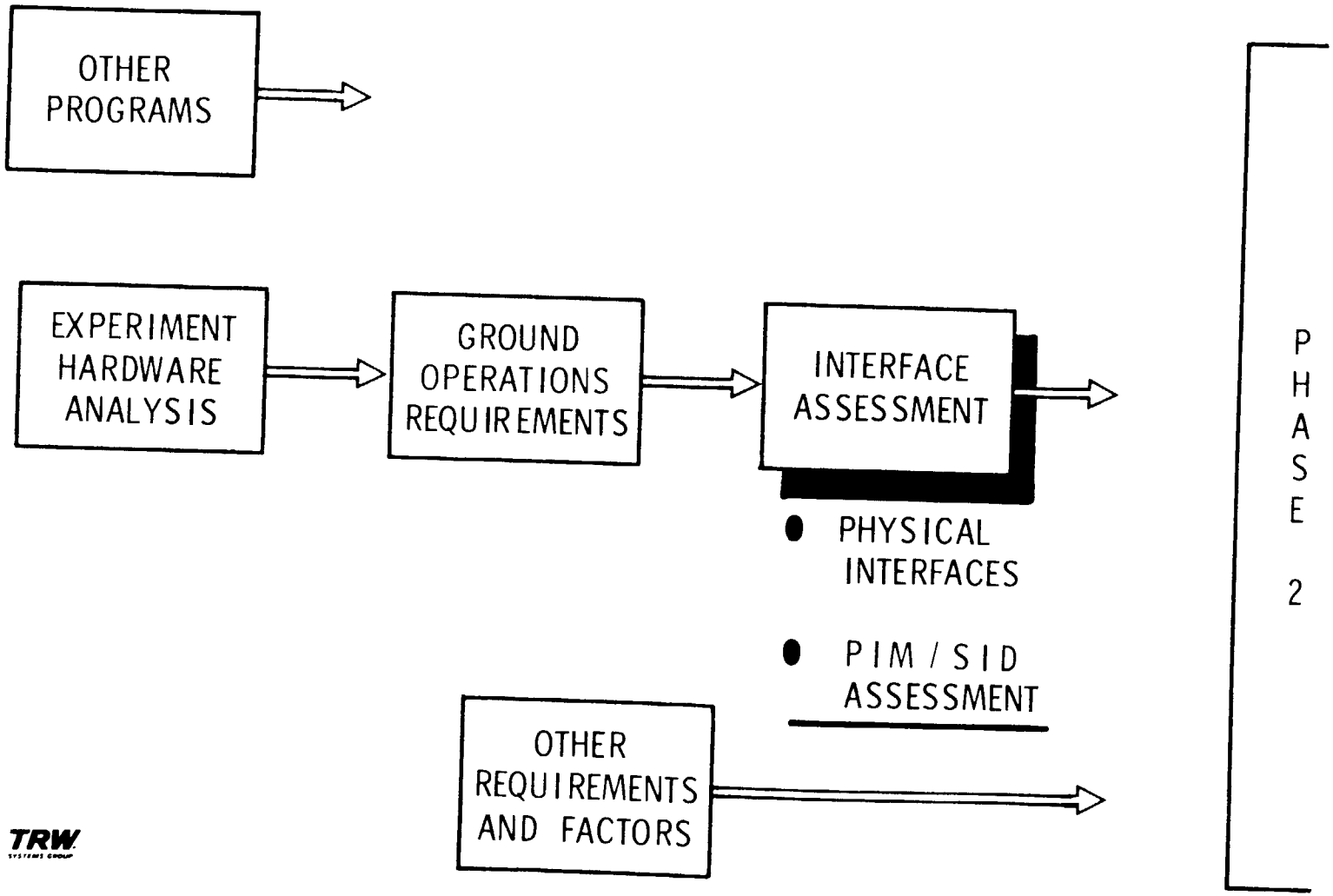

TRW SYSTEMS GROUP

PAYLOAD INTEGRATION MOCKUP (PIM)/ SHUTTLE INTEGRATION DEVICE (SID) ASSESSMENT

The PIM and SID are defined as follows:

- PIM - Payload Integration Mockup

  This is a ground-based, operating replica of a specific payload that is utilized to support all phases of mission operations.

- SID - Shuttle Integration Device

  A device that presents (1) a physical replica of the Orbiter structure and equipment that interfaces with the payload and (2) a functional replica of the Orbiter flight systems that interface with the payload.

These definitions are in consonance with the descriptions contained in the MMC Payload Implementation Study and the MDAC SOAR Study, respectively.

PAYLOAD INTEGRATION MOCKUP AND SHUTTLE INTEGRATION DEVICE ASSESSMENT

- PIM — PAYLOAD INTEGRATION MOCKUP

  A GROUND-BASED OPERATING REPLICA OF A PAYLOAD FOR SUPPORTING ALL PHASES OF MISSION OPERATIONS

- SID — SHUTTLE INTEGRATION DEVICE

  A DEVICE THAT PROVIDES A PHYSICAL REPLICA OF THE ORBITER STRUCTURES AND EQUIPMENT INTERFACES TO THE PAYLOAD AND A FUNCTIONAL REPLICA OF THE INTERFACING FLIGHT SYSTEMS.

TRW SYSTEMS GROUP

PIM/SID ASSESSMENT (Continued)

Three principal objectives of the PIM and SID assessments in this study are:

- Determine the need for a PIM and SID at the launch site to be utilized for the purpose of payload and carrier preparation and integration into the Orbiter. If it is determined that a need exists, then:

- Identify the basic functional and physical characteristics based on the above factors, and

- Determine the gross resource requirements based on the anticipated activities corresponding to the individual elements being considered, i.e., the experiment hardware, the carrier and the combination of the two.

PIM/SID ASSESSMENT

OBJECTIVE:

- DETERMINE NEED FOR PIM/SID
  - IF NEEDED
- IDENTIFY FUNCTIONAL CHARACTERISTICS
- DETERMINE GROSS REQUIREMENTS

TRW SYSTEMS GROUP

PIM ASSESSMENT (Continued)

The PIM is useful for providing support principally during mission operations. It is used to support the following functions:

- Configuration Control
- Fault Isolation
- Physical/Functional Integration
- Training
- Mission Control Interfaces
- Maintenance Plans and Procedures

Criteria for determining the need for a PIM was condensed from other contractor studies:

- Long term payload operation in orbit.
- Payload cannot be readily returned for updating the configuration.
- The risk of failure and the consequences of the failure with a high cost or one-of-a-kind payload justify the PIM cost.

PIM ASSESSMENT

PURPOSE OF A PIM:

SUPPORTS MISSION OPERATIONS IN —

- CONFIGURATION CONTROL
- FAULT ISOLATION
- PHYSICAL/FUNCTIONAL INTEGRATION
- TRAINING
- MISSION CONTROL INTERFACES
- MAINTENANCE PLANS & PROCEDURES

TRW

PIM ASSESSMENT (Continued)

A comparison between the Quick-Reaction Sortie operating criteria and the criteria for determining the need for a PIM is shown. The two sets of criteria are, for all practical purposes, exact opposites. A PIM can be justified if the payload has a long term operation in space, but the Quick-Reaction concept is for a relatively short term of operation (seven days). If a payload cannot be readily returned for configuration updating, a PIM could be of benefit, but this is not applicable to the seven day Sortie mission. A high cost or one-of-a-kind payload can justify a PIM under certain circumstances, but the Quick-Reaction concept is primarily one of low payload cost. A PIM can be used for fault isolation and correction analysis on the ground for payloads on long journeys in space or in earth orbit when a malfunction occurs. The Quick-Reaction approach, however, is to bring the experiment back, fix the problem and fly it again later.

It is therefore concluded that the PIM is not required for the Quick-Reaction concept.

PIM ASSESSMENT

QUICK-REACTION CRITERIA

- LOW INTEGRATION COST
- SHORT TERM OF OPERATION
- SIMPLE TO OPERATE
- EASY TO MAINTAIN
- SHORT INTEGRATION & C/O TIME

COMPARE

PIM CRITERIA

- LONG TERM P/L OPERATION
- P/L NOT READILY RETURNED FOR CONFIGURATION UPDATE
- HIGH P/L COST OR ONE OF A KIND
- USED FOR FAULT ISOLATION AND CORRECTION ANALYSIS

CONCLUSION

A PIM IS NOT REQUIRED FOR QUICK REACTION SORTIE PAYLOADS AT THE LAUNCH SITE.

TRW SYSTEMS GROUP

SID ASSESSMENT

An assessment of the need for a Shuttle Integration Device was performed. This analysis was approached from the viewpoint of whether or not such a device is required at the launch site for the purpose of preparing and integrating the Quick-Reaction payloads and carriers into the Orbiter.

The SID provides the level of confidence necessary to assure that the Orbiter vehicle and crew safety is not compromised and that the experiment package/carrier operational requirements are satisfied within the accepted degree of risk. It reduces the risk of encountering Orbiter/Carrier/payload compatibility problems when the Carrier is installed in the flight vehicle. The SID also provides operational familiarization for the payload specialist or the experiment hardware operator who will perform the experiment in orbit.

SID ASSESSMENT

PURPOSE OF A SID:

- ORBITER/CREW SAFETY CONFIDENCE
- SIMULATE INTERFACES
- OPERATIONAL FAMILIARIZATION
- PHYSICAL/FUNCTIONAL INTEGRATION
- FAULT ISOLATION BEFORE MATING
- INTERFACE CONFIGURATION CONTROL

TRW
SYSTEMS GROUP

SID ASSESSMENT (Continued)

The SID would be a valuable and indispensable tool for preparing and integrating the Quick-Reaction payloads at the launch site. There are several reasons:

- The use of a SID can effectively reduce the possibility of Orbiter schedule slippage by reducing the list of potential problem areas prior to mating the payload to the Orbiter.

- The mix of experiments that are to be flown on the same Sortie mission varies widely. Each Sortie mission is very likely to require Carrier modifications to accommodate the experiment packages. These modifications to the Carrier should be thoroughly checked out before installation in the Orbiter.

- It is probable that the several experiment packages on board the Sortie Carrier have never flown nor operated together before. Consequently, it is important to the mission to assure that there is no mutual interference between the experiments and the Carrier and the Orbiter.

- Most importantly, the many interfaces created by the variety of PI's, contractors, NASA, DOD, foreign users, etc. require that the Carrier and all installed experiment hardware be thoroughly tested in as near its flight configuration as possible prior to installation into the Orbiter.

For these reasons, TRW considers an Integration Device necessary at the launch site for the Quick-Reaction Sortie payloads.

SID ASSESSMENT

INTEGRATION CONSIDERATIONS

- QUICK-REACTION PAYLOADS ARE GENERALLY R&D
- RAPID INTEGRATION - GROSS ANALYSIS - MIN. UNIT TESTING
- MAX. OF ONE DAY PAYLOAD INSTALLATION AND C/O IN ORBITER
- COMPATIBILITY PROBLEMS COULD CAUSE MISSION AND PROGRAM SLIPS

COMPARE

SID CRITERIA

- VERIFY SAFETY AND COMPATIBILITY OF PAYLOAD WITH ORBITER
- PRECLUDE INTERFACE FIT AND ALIGNMENT PROBLEMS
- SIMULATE FUNCTIONS ACROSS INTERFACES
- WORK MUTUAL INTERFERENCE PROBLEMS BEFORE MATING

CONCLUSION

A SID IS DESIRABLE FOR QUICK-REACTION SORTIE PAYLOADS AT THE LAUNCH SITE

TRW

Since an Integration Device is considered necessary, consideration is given now to the functional characteristics that must be provided by such a device for the Quick-Reaction Sortie payloads. The device should:

- Simulate the required inputs (i.e., electric power, gases, monitor and control, etc.) and outputs (i.e., data, caution and warning, communications, etc.) across the Carrier/Orbiter interfaces.
- Simulate the Orbiter software interface.

The intent here is not to exactly duplicate the Orbiter functions but to simulate them to the degree necessary to provide an acceptable degree of confidence that the payload will perform satisfactorily. It is not intended either that actual flight hardware be used since the costs of such items are usually high. Heavier, bulkier and less expensive equipment can be used for these simulations.

TRW envisions an Integration Device or a Shuttle Simulator that might consist of the following general physical characteristics:

- A support stand that will hold the Carrier during the time the integration activities are taking place.
- Orbiter to payload interface panels in the proper locations and including the connectors and the necessary systems to provide the commodities required across the interface.
- A simulation of the Orbiter payload bay envelope.
- Support equipment, including a computer and the necessary peripheral equipment, to simulate the inputs that will normally be sent from the Orbiter to the payload.
- Support equipment that will accept the output from the Quick-Reaction Sortie payload and simulate whatever Orbiter response is required.
- Support equipment that will provide for the necessary sub-system operation required by the Carrier.

SID ASSESSMENT

FUNCTIONAL & PHYSICAL CHARACTERISTICS REQUIRED:

FUNCTIONAL

- SIMULATE INPUTS TO PAYLOAD
- RESPOND TO PAYLOAD OUTPUTS
- SIMULATE SOFTWARE INTERFACE
- SIMULATE PROCEDURAL INTERFACE

PHYSICAL

- CARRIER SUPPORTS
- INTERFACE PANELS
- PAYLOAD BAY ENVELOPE
- SUPPORT EQUIPMENT FOR CARRIER SYSTEMS
- SUPPORT EQUIPMENT FOR INPUTS AND OUTPUTS

TRW SYSTEMS GROUP

SID ASSESSMENT (Continued)

To accommodate this Integration Device, certain support must be provided:

- About 6000 SF of floor space is required for the payload support stand, work and access stands, and the support equipment that simulates the Orbiter and performs the integration function.
- This space must be environmentally controlled and conditioned to meet class 100,000 clean room requirements as well as temperatures and humidity specifications.
- An overhead bridge crane is necessary for positioning the payload and equipment. The capacity of the crane is estimated to be 35 tons with a working hook height of 40 to 50 feet.
- Electric power is required in this area for the wide variety of equipment located here. There is no estimate at present for the load expected.
- High pressure gases of the variety used in the Carrier and payloads and those that the Orbiter provides must be supplied in the necessary quantities and pressures.
- Data management support such as cables, recorders, CCTV, etc., is required. The LPS will probably be tied into this station.
- Standard utilities are required in support of the operations that will take place here.
- Institutional support is required in the form of food services, telephones, offices, maintenance of facilities, etc.

SID ASSESSMENT

RESOURCE REQUIREMENTS:

- ~ 6000 SF FLOOR SPACE
- 35 TON, 50 FT HOOK HT CRANE
- COMMODITIES - GN_2, H_e
- ELECTRIC POWER
- INSTITUTIONAL SUPPORT
- SUPPORT EQUIPMENT - INPUTS
- CLASS 100,000 ENVIRONMENT
- ACCESS AND WORK STANDS
- FLUIDS - SORTIE LAB
- UTILITIES
- DATA MANAGEMENT SUPPORT
- SUPPORT EQUIPMENT - OUTPUTS

TRW SYSTEMS GROUP

6.0 OTHER REQUIREMENTS AND FACTORS

OTHER REQUIREMENTS AND FACTORS

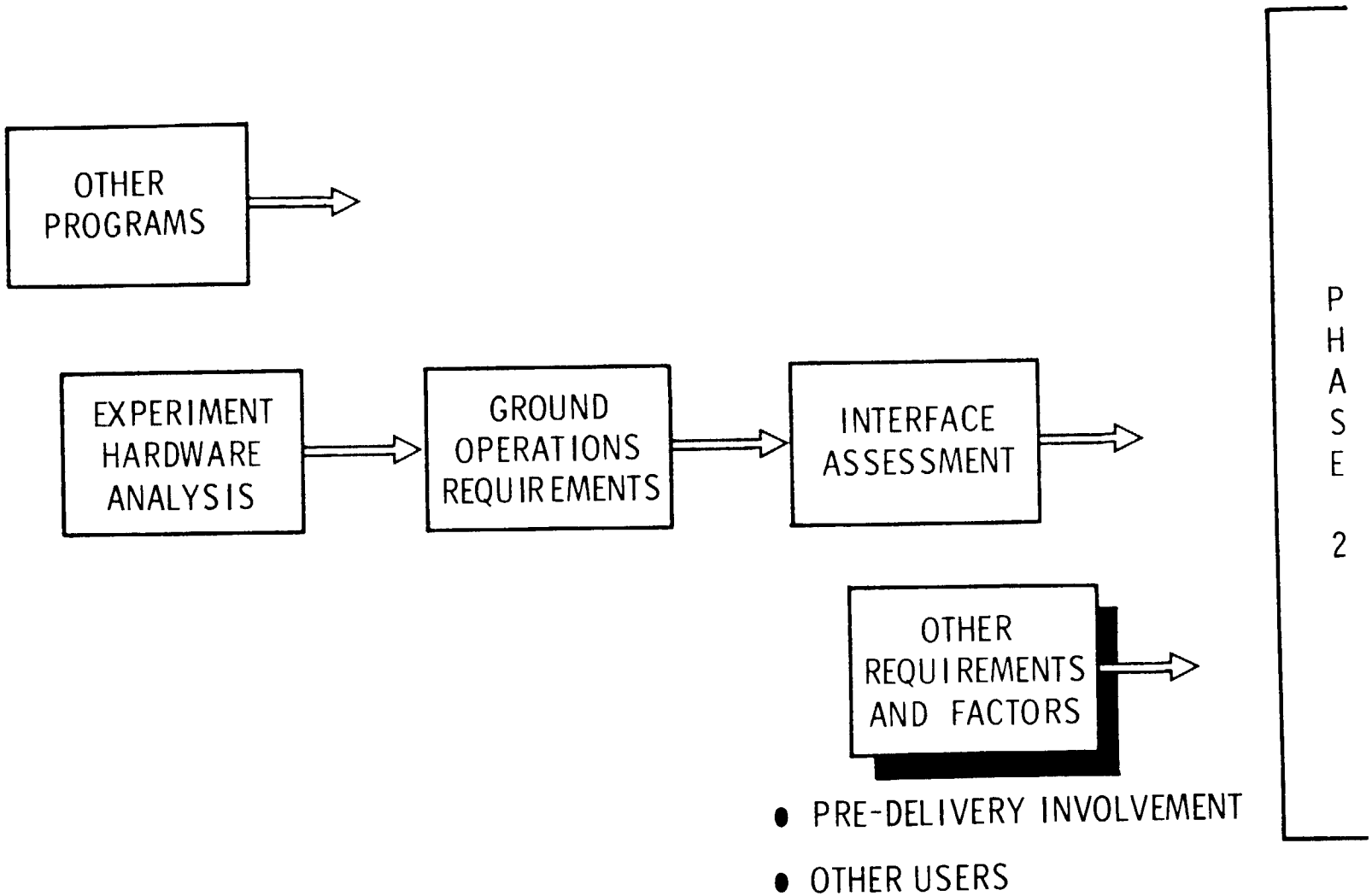

TRW

PRECEDING PAGE BLANK NOT FILMED

PRECEDING PAGE BLANK NOT FILMED

6.1 LAUNCH CENTER INVOLVEMENT PRIOR TO HARDWARE DELIVERY

PRECEDING PAGE BLANK NOT FILMED

LAUNCH CENTER INVOLVEMENT PRIOR TO HARDWARE DELIVERY

The assumptions made in assessing the launch center involvement prior to hardware delivery are listed on the facing page.

The sponsoring agency for an experiment may be NASA, another government agency, or a commercial organization. This agency funds the PI, and, in that respect, is responsible for hardware development and pre-delivery testing. It may also impose requirements and constraints on the PI and his experiment hardware consistent with its own objectives. However, these are of no direct concern to the Quick-Reaction Integration Activity (QRIA).

The QRIA will provide the PI with the necessary criteria and specifications to enable him to assure that his hardware is compatible with the Sortie Lab and can readily be integrated. The QRIA also will impose on the PI those requirements necessary to assure safety and compatibility with the Shuttle vehicle.

The QRIA pre-delivery functions described are those for new experiment hardware. These functions would be substantially reduced for previously flown hardware.

PRE-DELIVERY INVOLVEMENT

ASSUMPTIONS

- THE QUICK-REACTION INTEGRATION ACTIVITY (QRIA) IS LOCATED AT THE LAUNCH SITE.
- THE AGENCY SPONSORING THE PI IS NOT LIMITED TO NASA.
- THE SPONSORING AGENCY LEVIES DEVELOPMENT REQUIREMENTS ON THE PI.
- THE QRIA LEVIES INTEGRATION AND CARRIER/ORBITER RELATED REQUIREMENTS.

TRW SYSTEMS GROUP

LAUNCH CENTER INVOLVEMENT PRIOR TO HARDWARE DELIVERY (Continued)

The criteria and approach used to assess the pre-delivery QRIA involvement are given on the next two pages.

PRE-DELIVERY INVOLVEMENT

CRITERIA

- MINIMIZE DOCUMENTATION
- MAXIMIZE PI INVOLVEMENT AND RESPONSIBILITY
- SATISFY MANDATORY SAFETY AND COMPATIBILITY REQUIREMENTS

TRW
SYSTEMS GROUP

PRE-DELIVERY INVOLVEMENT

APPROACH

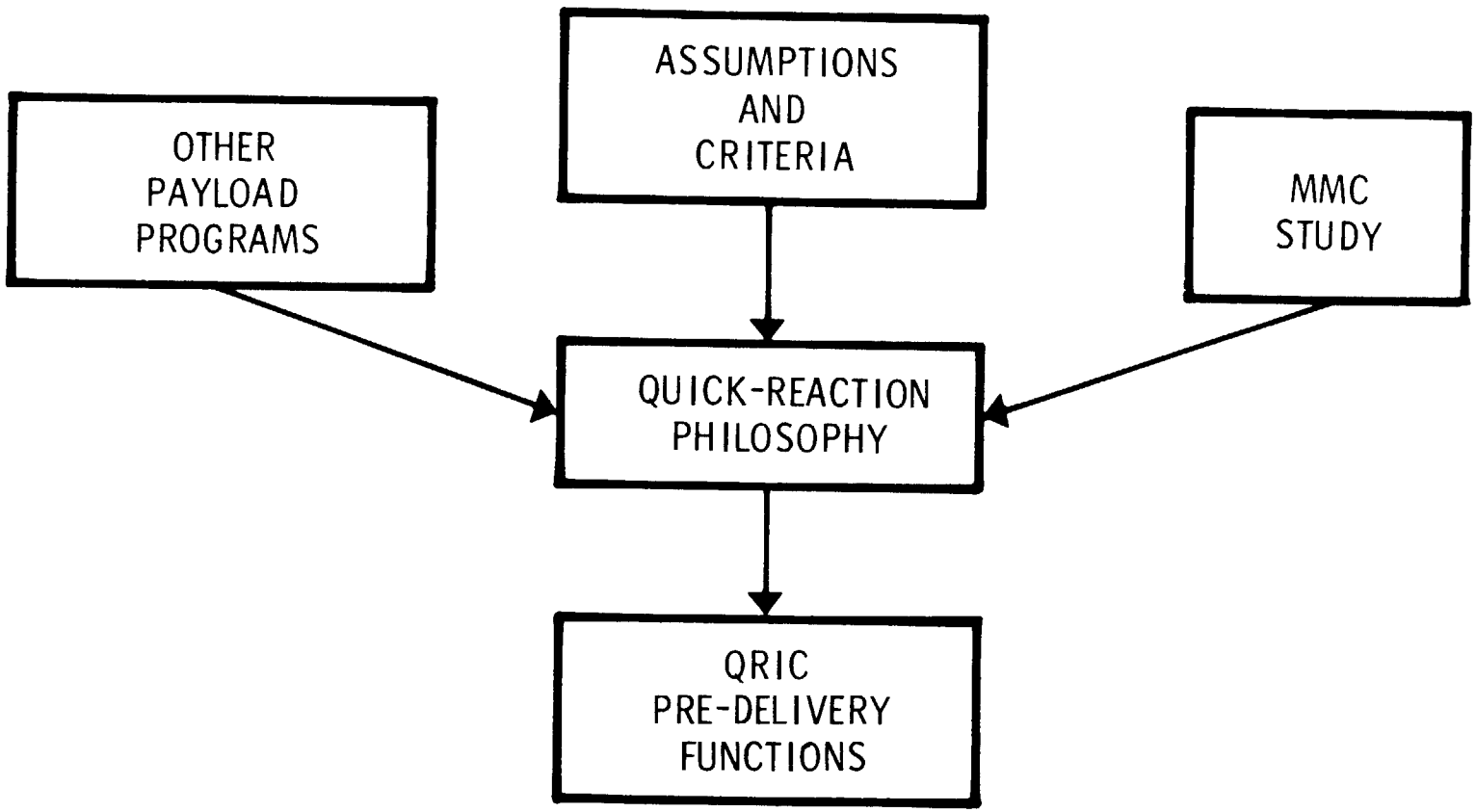

TRW SYSTEMS GROUP

PRECEDING PAGE BLANK NOT FILMED

6-10

LAUNCH CENTER INVOLVEMENT PRIOR TO HARDWARE DELIVERY (Continued)

The QRIA functions prior to hardware delivery are summarized on the facing page.

Those functions which directly involve the PI may be performed very informally with a minimum of documentation. A key document is the Quick-Reaction Sortie User's Guide (QR-SUG), which provides the PI with all the information he needs to make his experiment hardware compatible with the Quick-Reaction mode. Except for the Integrated Systems Test Plan, which may require a degree of formality, most of the additional interface which the QRIA has with the PI may be very informal. There is much emphasis on providing informal assistance to and coordination with the PI on an as-needed basis.

Certain functions, such as assurance that safety requirements are met, may require formal documentation specified by organizations other than the QRIA.

LAUNCH CENTER FUNCTIONS PRIOR TO HARDWARE DELIVERY

PRE-DEVELOPMENT OR PROPOSAL PHASE	DEVELOPMENT PHASE
• DISTRIBUTE QR-SUG • PROPOSAL REVIEW AND APPROVAL PARTICIPATION	• RESPOND TO PI'S EXPT. REQMTS • MONITOR STATUS • PREPARE INTEGRATED SYSTEMS TEST PLAN • COORDINATE AND SCHEDULE EXPTS., CARRIERS, INTEGRATION, USERS

- PROVIDE ASSISTANCE AND CONSULTATION TO PI
  - COORDINATE FLIGHT ASSIGNMENTS, SCHEDULES, PLANS
  - COORDINATE INTERFACE REQUIREMENTS
- COORDINATE OTHER LAUNCH CENTER SUPPORT
  - ASSURE COMPATIBILITY AND SAFETY
  - ESTABLISH ENVIRONMENTAL TOLERANCE REQUIREMENTS

TRW SYSTEMS GROUP

POTENTIAL QRIA INTERFACES PRIOR TO HARDWARE DELIVERY

Potential interfaces between the QRIA and other functional activities prior to hardware delivery are identified. These potential interfaces are identified on the facing page. The extent and nature of these interfaces will be determined in Phase 2.

POTENTIAL PRE-DELIVERY QRIA INTERFACES

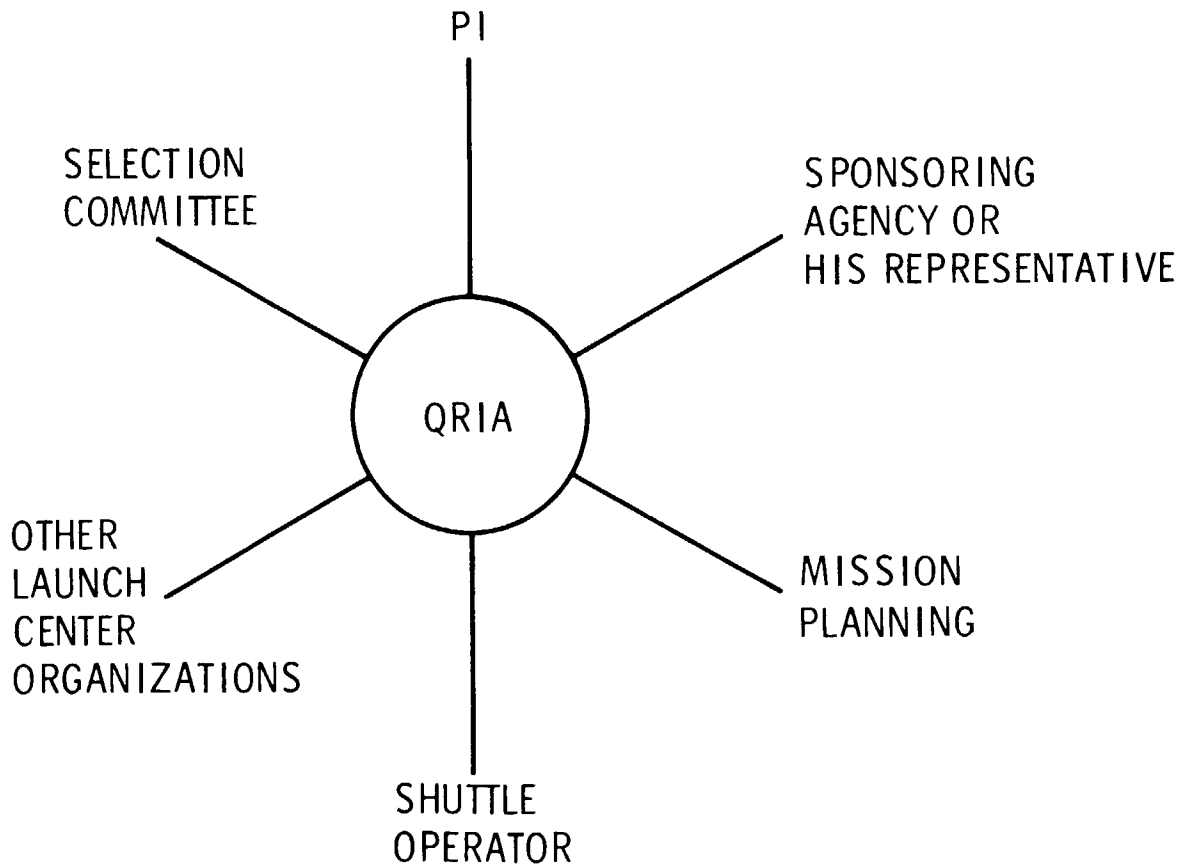

TRW SYSTEMS GROUP

6.2 LAUNCH CENTER IMPACT AND FACTORS RELATED TO DOD, COMMERCIAL AND FOREIGN USERS

PRECEDING PAGE BLANK NOT FILMED

POTENTIAL IMPACT OF DOD, COMMERCIAL, AND FOREIGN USERS OF QUICK-REACTION MODE

The MMC assessment contained in the study, "Implementation of Research and Application Payloads at the Shuttle Launch Site" (Contract No. NAS 10-7685), was quite detailed and generally applies to this study. The MMC results were reviewed in the context of the Quick-Reaction concept. Only minor changes to those results are needed. Certain other aspects not previously considered are also reported.

The assumptions and approach used in the identification of the potential impact of DOD, commercial, and foreign users of the Quick-Reaction Sortie mode are shown.

OTHER USERS

APPROACH

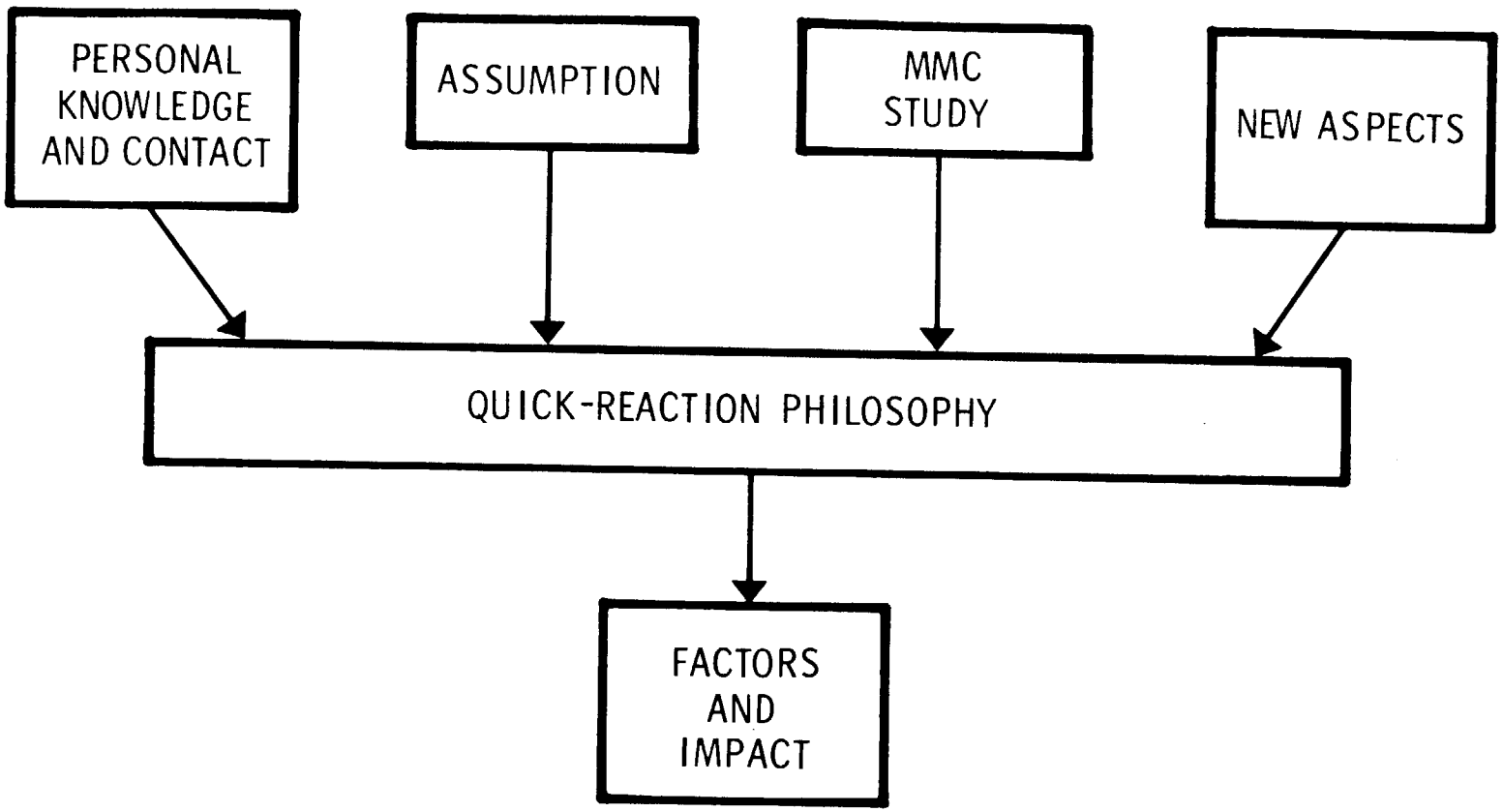

ASSUMPTION: QUICK-REACTION REQUIREMENTS AND CONSTRAINTS APPLY EQUALLY TO ALL POTENTIAL USERS

TRW

DOD FACTORS

As the MMC assessment shows, DOD hardware is not different from NASA payload hardware with respect to integration, test, and launch requirements. Thus, unclassified experiments have no impact.

Classified experiments will require security measures. Possible solutions are indicated, and will be considered during Phase 2.

PHASE 2 PLANS

- QUICK-REACTION SORTIE OPERATIONAL CONCEPT
  - PROGRAMMATIC IMPACTS
  - SENSITIVITY TO MISSION DENSITY
- INITIATE SITE TRADE STUDY
  - GUIDELINES
  - SCENARIOS
  - PRINCIPAL PARAMETERS
  - WEIGHTING FACTORS

TRW SYSTEMS GROUP

PHASE 2 PLANS

During the next phase the Quick-Reaction Sortie Operational concept will be developed in detail. Programmatic impacts will be identified and the sensitivity of the operational concept to perturbations in mission density ascertained.

Effort will also be initiated on the site trade study to the extent that quidelines and scenarios will be developed and the principal parameters and their weighting factors identified. The actual trade study will be performed in Phase 3.

SUMMARY

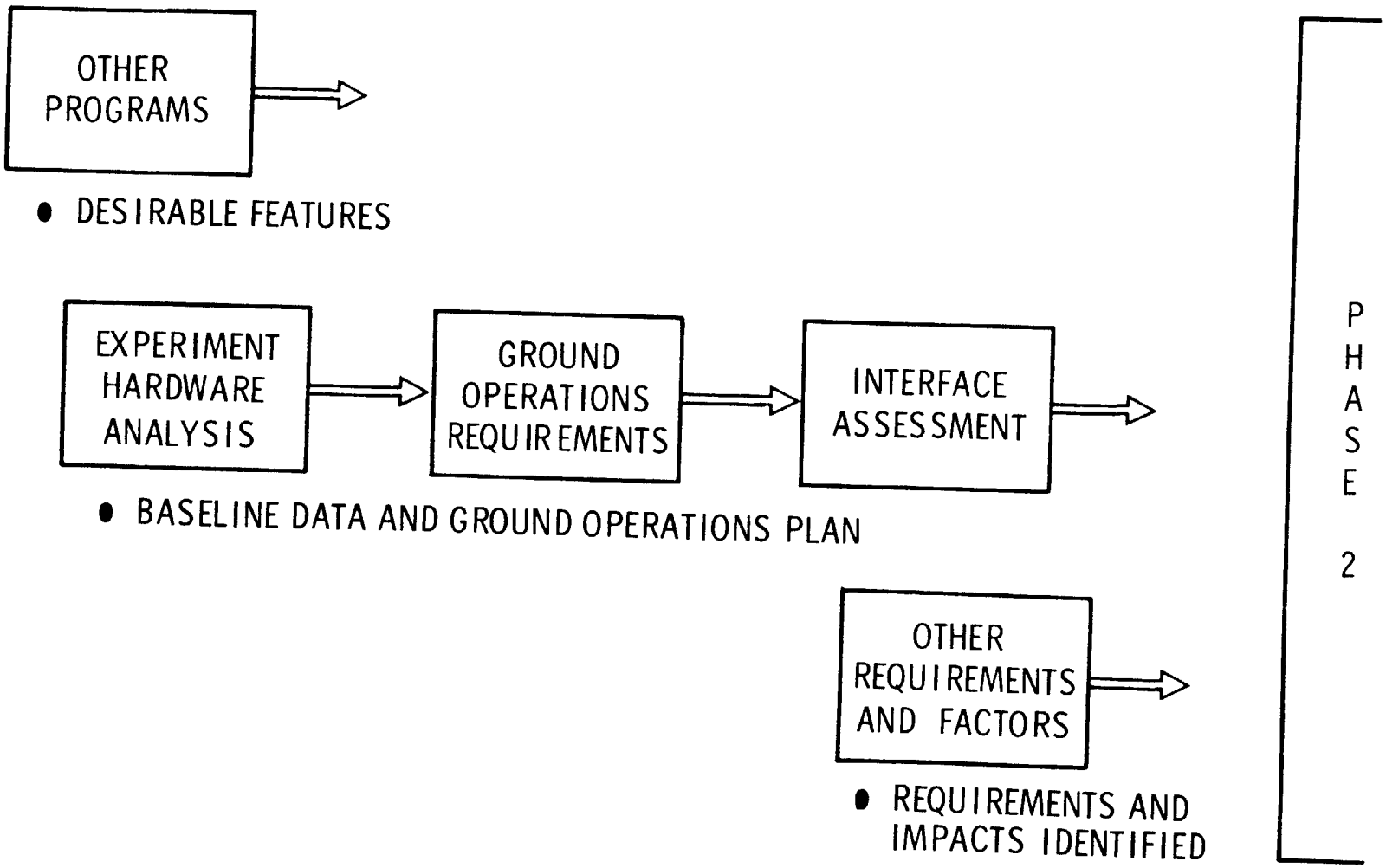

- DATA AND BASELINE FOUNDATION COMPLETED FOR DEVELOPMENT OF QUICK-REACTION OPERATIONAL CONCEPT IN NEXT PHASE.

SUMMARY

This phase of the study (Phase 1) has laid the basic groundwork and developed the necessary data and baselines from which to begin developing the operational framework for a multi-disciplinary Quick-Reaction Sortie mode of operations during the Shuttle era.

The basic results are in three categories:

1. Necessary or desirable features from other payload programs have been summarized.

2. A baseline ground operations plan for handling Quick-Reaction experiment hardware was developed and the associated launch site resource requirements identified.

3. The requirements for pre-hardware delivery and post-launch support as well as the potential impact due to DOD, commercial and foreign users of the Quick-Reaction mode were identified.

7.0 SUMMARY AND PHASE 2 PLANS

FOREIGN FACTORS AND IMPACT

"DEVELOPED" NATIONS

- MINOR IMPACT AS INDICATED BY MMC

"EMERGING" NATIONS

- POLITICAL INSTABILITY HINDERS LONG-TERM PROJECTS
- ACADEMICALLY STRONG
- WEAK IN PRACTICAL ASPECTS

} LOWER INSTRUMENT INTEGRITY

- IMPACT
  - DELIVERY DELAYS
  - INCREASED C/O AND INTEGRATION TIME
  - INCREASED ASSISTANCE/EQUIPMENT

TRW SYSTEMS GROUP

IMPACT OF FOREIGN USERS

The results of the MMC assessment apply equally to the Quick-Reaction mode. Some additional consideration was given to potential impact of potential users from the so-called "emerging" nations.

The political instability of many of these nations hinders long-term projects; hence, Quick-Reaction is well suited. Typically, their scientists are academically strong, having been educated in the United States or Europe, but are weak in the practical aspects of fabrication and testing. Also, there is generally a lack of high quality test equipment. This will result in generally lower experiment hardware integrity and therefore increased checkout and integration times and delays at the launch site. These factors will be considered in Phase 2.

COMMERCIAL FACTORS AND IMPACT

- QUICK- REACTION CONCEPT WELL SUITED TO MOST POTENTIAL USERS
- SPECIAL AGREEMENTS
  - FIXED PRICE SERVICES
  - LIABILITY
- PROPRIETARY FACTORS
  - HARDWARE
  - SOFTWARE
  - RETURNED DATA

TRW SYSTEMS GROUP

IMPACT OF COMMERCIAL USERS

The Quick-Reaction concept appears to be ideal for commercial users, as it satisfies their desire for cost-effectiveness and minimum external controls.

Experience to date has been with quasi-commercial users (e.g., COMSAT Corporation), and there is no direct experience with true commercial users. If the latter are to be encouraged to be Quick-Reaction users, special agreements may be required to establish fixed costs for services and to establish liability for damage or delay.

One aspect not considered previously is that of commercial user proprietary data or hardware. Special procedures are needed to safeguard such data and equipment.

These impacts are summarized on the facing page, and they will be addressed in the development of the operational concept in Phase 2.

DOD FACTORS AND IMPACT

HARDWARE FACTORS

- NOT SIGNIFICANT

NON-HARDWARE FACTORS

- NONE FOR UNCLASSIFIED EXPERIMENTS
- CLASSIFIED EXPERIMENTS REQUIRE SPECIAL CONSIDERATION

POSSIBLE SOLUTIONS

- SHARED QUICK-REACTION FACILITIES
- DEDICATED DOD FACILITIES
- DEDICATED DOD QUICK-REACTION MISSIONS

TRW SYSTEMS GROUP