NASA-TM-108258

(NASA-TM-108258) TECHNOLOGY FOR SPACE STATION EVOLUTION: PROCEEDINGS, VOLUME 1 (NASA) 452 p

N93-72672

Unclas

Z9/18 0176491

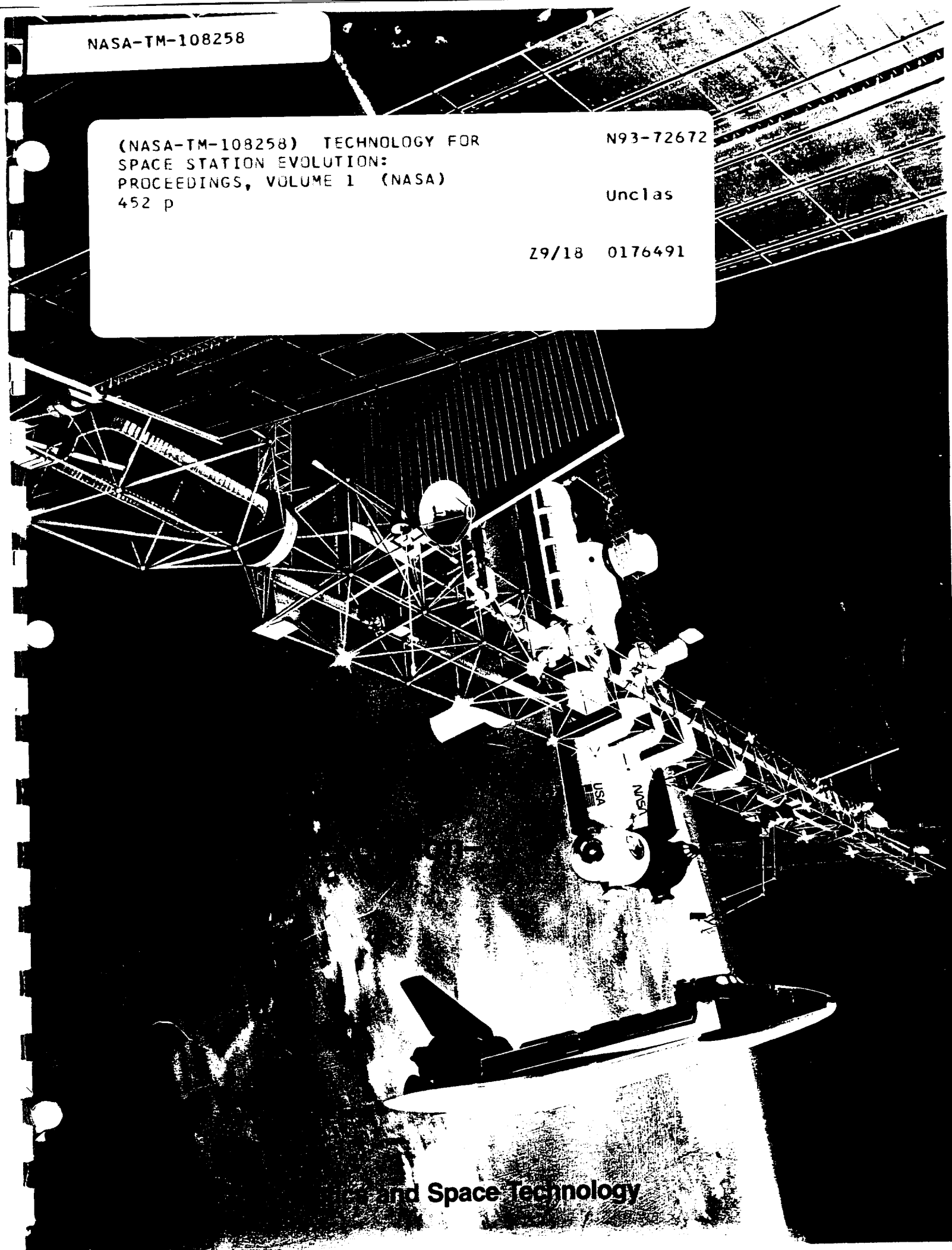

and Space Technology

STAND-ALONE TRANSPORTATION NODE OPTIONS

THE EVOLUTIONARY DEFINITION OFFICE HAS CONSIDERED TWO GENERAL OPTIONS FOR STAND-ALONE TRANSPORTATION NODES (TNS). ONE OPTION IS A PERMANENTLY MANNED STAND-ALONE TN, WHOSE ACS PERFORMANCE REQUIREMENTS ARE TUNED TO PROVIDING A STABLE BASE FOR SPACE CONSTRUCTION AND TRANSPORTATION VEHICLE SERVICING, WITHOUT THE CONSTRAINTS OF ATTITUDE POINTING OR MICRO-GRAVITY ENVIRONMENT. THIS OPTION DOES NOT PRESENT MAJOR TECHNOLOGY DRIVERS FOR THE ACS DESIGN. THE PERFORMANCE DRIVERS WILL BE ASSURING STABLE ATTITUDE CONTROL WITH WIDELY VARYING MASS PROPERTIES CONFIGURATIONS, WHICH IS NOT EXPECTED TO REQUIRE NEW TECHNOLOGY. THE FOCUS WOULD BE ON ROBUST CONTROL WITH THE MINIMIZATION OF REQUIREMENTS FOR RESTORABLE CONSUMABLES.

THE SECOND OPTION IS AN UNMANNED STAND-ALONE TN, WHICH AGAIN PROVIDES A STABLE BASE FOR SPACE CONSTRUCTION AND SERVICING OF TRANSPORTATION VEHICLES WITH MANNED OPERATIONS PROVIDED BY FLIGHT CREWS WHO ARE BASED AT THE SSMB. ALTHOUGH THIS OPTION DOES NOT PRESENT TECHNOLOGY DRIVERS FOR THE ACS, IT DOES REQUIRE THE DEVELOPMENT OF TRAFFIC CONTROL TECHNOLOGIES. THIS OPTION AND ASSOCIATED TECHNOLOGIES ARE THE TOPIC OF THE SUBSEQUENT DISCUSSION.

BACKGROUND

- O BASELINE ATTITUDE CONTROL SYSTEM (ACS) PERFORMANCE REQUIREMENTS
  - KEYED TO MEETING USERS' POINTING AND MICRO-GRAVITY NEEDS
  - HIGHLY DEPENDENT ON SPACE STATION MANNED BASE (SSMB) CONFIGURATION
- O MAJOR IMPACT OF ADDING TRANSPORTATION NODE ACTIVITIES TO SSMB
  - POTENTIAL FOR HIGHLY VARIABLE CONFIGURATION
  - DISTURBANCES DUE TO SPACE CONSTRUCTION/SERVICING
- O PROGRAM ALTERNATIVES ON TRANSPORTATION NODE IMPLEMENTATION
  - REVISE SSMB ACS PERFORMANCE REQUIREMENTS (EVOLUTION)
  - DEVELOP SEPARATE PLATFORM FOR TRANSPORTATION NODE (REVOLUTION)

BACKGROUND

THE PERFORMANCE REQUIREMENTS LEVIED AGAINST THE BASELINE SPACE STATION MANNED BASE (SSMB) ATTITUDE CONTROL SYSTEM (ACS) FOCUS ON SUPPORT TO THE USERS. THESE INCLUDE ATTITUDE HOLD RELATIVE TO LOCAL-VERTICAL/LOCAL HORIZONTAL (LVLH) AND MAINTENANCE OF THE MICRO-GRAVITY ENVIRONMENT. THE ACS ATTEMPTS TO MEET THE LVLH ATTITUDE HOLD REQUIREMENT USING CONTROL MOMENT GYROS (CMGS) SINCE THEY DON'T REQUIRE RESTORABLE CONSUMABLES AND ALLOW MAINTENANCE OF THE MICRO-GRAVITY ENVIRONMENT. HOWEVER, THE ACS MOMENTUM MANAGER PROVIDES CONTROL RELATIVE TO THE TORQUE-EQUILIBRIUM-ATTITUDE (TEA), WHOSE RELATION TO THE LVLH ATTITUDE IS HIGHLY DEPENDENT ON THE MASS AND AERODYNAMIC PROPERTIES OF THE SSMB CONFIGURATION. A PREVIOUS PRESENTATION DISCUSSES THE ALTERNATE CONTROL EFFECTORS WHICH WERE EVALUATED FOR REDUCING THIS DEPENDENCY.

THE DIFFICULTY OF MEETING THE PERFORMANCE REQUIREMENTS IS AGGRAVATED WITH THE INCLUSION OF TRANSPORTATION NODE ACTIVITIES TO THE SSMB. WITH INFLIGHT SPACE CONSTRUCTION AND SERVICING OF TRANSPORTATION VEHICLES, THE MASS AND AERODYNAMIC PROPERTIES OF THE SSMB COULD BECOME HIGHLY VARIABLE. FURTHERMORE, THE CONSTRUCTION AND SERVICING OPERATIONS COULD IMPART SIGNIFICANT DYNAMICS ON THE SSMB, OBVIATING THE MAINTENANCE OF THE MICRO-GRAVITY ENVIRONMENT.

THEREFORE, THE TRANSITION OF THE SPACE STATION TO A TRANSPORTATION NODE WOULD REQUIRE THE CONSIDERATION OF TWO PROGRAM ALTERNATIVES: EITHER AN EVOLUTION OF CAPABILITIES OR A REVOLUTION. AN EVOLUTION WOULD INVOLVE REVISION OF THE PERFORMANCE REQUIREMENTS ON THE SSMB AWAY FROM POINTING AND MICRO-GRAVITY TO A STABLE BASE FOR SPACE CONSTRUCTION AND VEHICLE SERVICING. A REVOLUTION WOULD INVOLVE THE DEVELOPMENT OF A SEPARATE PLATFORM TO SERVE AS THE TRANSPORTATION NODE. THIS WOULD ALLOW THE RETENTION OF THE ORIGINAL SSMB ACS PERFORMANCE, WHILE ESTABLISHING A DIFFERENT SET OF PERFORMANCE REQUIREMENTS FOR THE STAND ALONE TRANSPORTATION NODE.

PAGE 104 INTENTIONALLY BLANK

PRECEDING PAGE BLANK NOT FILMED

TRW

TECHNOLOGY FOR SPACE STATION EVOLUTION - A WORKSHOP

16 - 19 JANUARY 1990

DALLAS, TEXAS

ATTITUDE CONTROL AND STABILIZATION

ATTITUDE CONTROL FOR SPACE STATION TRANSPORTATION NODE EVOLUTION OR REVOLUTION?

ROSCOE LEE
TRW SYSTEMS INTEGRATION GROUP
HOUSTON, TEXAS

THIS PAGE INTENTIONALLY BLANK

CONCLUDING REMARKS

- No enabling (mandatory) Space Station ACS technology development required for Lunar/Mars initiatives

- Potentially desirable ACS development areas is identified:
  - New momentum storage device
  - Modal select and model reduction for multi-flexible body nonlinear dynamic system
  - Symbolic manipulation for simulation of multi-flex body dynamic system

```
&+(S2TJ1(10,1))*(M2JLJ1(1,5,3))+(S2TJ1(10,2))*(M2JLJ1(2,5,3))
&+(S2TJ1(10,3))*(M2JLJ1(3,5,3))
  M3JLJ(10,6,3) = 3.015649700D-02*(T014(1,6))
& - 6.141462300D-03*(T014(2,6)) + 9.927245000D-03*(T014(3,6))
&+(S2TJ1(10,1))*(M2JLJ1(1,6,3))+(S2TJ1(10,2))*(M2JLJ1(2,6,3))
&+(S2TJ1(10,3))*(M2JLJ1(3,6,3))
  M3JLJ(10,7,3) = 3.015649700D-02*(T014(1,7))
& - 6.141462300D-03*(T014(2,7)) + 9.927245000D-03*(T014(3,7))
&+(S2TJ1(10,1))*(M2JLJ1(1,7,3))+(S2TJ1(10,2))*(M2JLJ1(2,7,3))
&+(S2TJ1(10,3))*(M2JLJ1(3,7,3))
  M3JLJ(10,8,3) = 3.015649700D-02*(T014(1,8))
& - 6.141462300D-03*(T014(2,8)) + 9.927245000D-03*(T014(3,8))
&+(S2TJ1(10,1))*(M2JLJ1(1,8,3))+(S2TJ1(10,2))*(M2JLJ1(2,8,3))
&+(S2TJ1(10,3))*(M2JLJ1(3,8,3))
  M3JLJ(10,9,3) = 3.015649700D-02*(T014(1,9))
& - 6.141462300D-03*(T014(2,9)) + 9.927245000D-03*(T014(3,9))
&+(S2TJ1(10,1))*(M2JLJ1(1,9,3))+(S2TJ1(10,2))*(M2JLJ1(2,9,3))
&+(S2TJ1(10,3))*(M2JLJ1(3,9,3))
  M3JLJ(10,10,3) = 3.015649700D-02*(T014(1,10))
& - 6.141462300D-03*(T014(2,10)) + 9.927245000D-03*(T014(3,10))
&+(S2TJ1(10,1))*(M2JLJ1(1,10,3))+(S2TJ1(10,2))*(M2JLJ1(2,10,3))
&+(S2TJ1(10,3))*(M2JLJ1(3,10,3))
```

```
&+(S2TJ1(9,3))*(M2JLJ1(3,7,3))
  M3JLJ(9,8,3) =  - 2.274907000D-03*(T014(1,8))
& + 3.677798000D-03*(T014(2,8)) - 7.062383000D-04*(T014(3,8))
&+(S2TJ1(9,1))*(M2JLJ1(1,8,3))+(S2TJ1(9,2))*(M2JLJ1(2,8,3))
&+(S2TJ1(9,3))*(M2JLJ1(3,8,3))
  M3JLJ(9,9,3) =  - 2.274907000D-03*(T014(1,9))
& + 3.677798000D-03*(T014(2,9)) - 7.062383000D-04*(T014(3,9))
&+(S2TJ1(9,1))*(M2JLJ1(1,9,3))+(S2TJ1(9,2))*(M2JLJ1(2,9,3))
&+(S2TJ1(9,3))*(M2JLJ1(3,9,3))
  M3JLJ(9,10,3) =  - 2.274907000D-03*(T014(1,10))
& + 3.677798000D-03*(T014(2,10)) - 7.062383000D-04*(T014(3,10))
&+(S2TJ1(9,1))*(M2JLJ1(1,10,3))+(S2TJ1(9,2))*(M2JLJ1(2,10,3))
&+(S2TJ1(9,3))*(M2JLJ1(3,10,3))
  M3JLJ(10,1,3) = 3.015649700D-02*(T014(1,1))
& - 6.141462300D-03*(T014(2,1)) + 9.927245000D-03*(T014(3,1))
&+(S2TJ1(10,1))*(M2JLJ1(1,1,3))+(S2TJ1(10,2))*(M2JLJ1(2,1,3))
&+(S2TJ1(10,3))*(M2JLJ1(3,1,3))
  M3JLJ(10,2,3) = 3.015649700D-02*(T014(1,2))
& - 6.141462300D-03*(T014(2,2)) + 9.927245000D-03*(T014(3,2))
&+(S2TJ1(10,1))*(M2JLJ1(1,2,3))+(S2TJ1(10,2))*(M2JLJ1(2,2,3))
&+(S2TJ1(10,3))*(M2JLJ1(3,2,3))
  M3JLJ(10,3,3) = 3.015649700D-02*(T014(1,3))
& - 6.141462300D-03*(T014(2,3)) + 9.927245000D-03*(T014(3,3))
&+(S2TJ1(10,1))*(M2JLJ1(1,3,3))+(S2TJ1(10,2))*(M2JLJ1(2,3,3))
&+(S2TJ1(10,3))*(M2JLJ1(3,3,3))
  M3JLJ(10,4,3) = 3.015649700D-02*(T014(1,4))
& - 6.141462300D-03*(T014(2,4)) + 9.927245000D-03*(T014(3,4))
&+(S2TJ1(10,1))*(M2JLJ1(1,4,3))+(S2TJ1(10,2))*(M2JLJ1(2,4,3))
&+(S2TJ1(10,3))*(M2JLJ1(3,4,3))
  M3JLJ(10,5,3) = 3.015649700D-02*(T014(1,5))
& - 6.141462300D-03*(T014(2,5)) + 9.927245000D-03*(T014(3,5))
```

```
&+(S2TJ1(8,3))*(M2JLJ1(3,9,3))
  M3JLJ(8,10,3) =  - 1.792039490D-02*(T014(1,10))
& + 1.436032600D-03*(T014(2,10)) + 7.100194100D-03*(T014(3,10))
&+(S2TJ1(8,1))*(M2JLJ1(1,10,3))+(S2TJ1(8,2))*(M2JLJ1(2,10,3))
&+(S2TJ1(8,3))*(M2JLJ1(3,10,3))
  M3JLJ(9,1,3) =  - 2.274907000D-03*(T014(1,1))
& + 3.677798000D-03*(T014(2,1)) - 7.062383000D-04*(T014(3,1))
&+(S2TJ1(9,1))*(M2JLJ1(1,1,3))+(S2TJ1(9,2))*(M2JLJ1(2,1,3))
&+(S2TJ1(9,3))*(M2JLJ1(3,1,3))
  M3JLJ(9,2,3) =  - 2.274907000D-03*(T014(1,2))
& + 3.677798000D-03*(T014(2,2)) - 7.062383000D-04*(T014(3,2))
&+(S2TJ1(9,1))*(M2JLJ1(1,2,3))+(S2TJ1(9,2))*(M2JLJ1(2,2,3))
&+(S2TJ1(9,3))*(M2JLJ1(3,2,3))
  M3JLJ(9,3,3) =  - 2.274907000D-03*(T014(1,3))
& + 3.677798000D-03*(T014(2,3)) - 7.062383000D-04*(T014(3,3))
&+(S2TJ1(9,1))*(M2JLJ1(1,3,3))+(S2TJ1(9,2))*(M2JLJ1(2,3,3))
&+(S2TJ1(9,3))*(M2JLJ1(3,3,3))
  M3JLJ(9,4,3) =  - 2.274907000D-03*(T014(1,4))
& + 3.677798000D-03*(T014(2,4)) - 7.062383000D-04*(T014(3,4))
&+(S2TJ1(9,1))*(M2JLJ1(1,4,3))+(S2TJ1(9,2))*(M2JLJ1(2,4,3))
&+(S2TJ1(9,3))*(M2JLJ1(3,4,3))
  M3JLJ(9,5,3) =  - 2.274907000D-03*(T014(1,5))
& + 3.677798000D-03*(T014(2,5)) - 7.062383000D-04*(T014(3,5))
&+(S2TJ1(9,1))*(M2JLJ1(1,5,3))+(S2TJ1(9,2))*(M2JLJ1(2,5,3))
&+(S2TJ1(9,3))*(M2JLJ1(3,5,3))
  M3JLJ(9,6,3) =  - 2.274907000D-03*(T014(1,6))
& + 3.677798000D-03*(T014(2,6)) - 7.062383000D-04*(T014(3,6))
&+(S2TJ1(9,1))*(M2JLJ1(1,6,3))+(S2TJ1(9,2))*(M2JLJ1(2,6,3))
&+(S2TJ1(9,3))*(M2JLJ1(3,6,3))
  M3JLJ(9,7,3) =  - 2.274907000D-03*(T014(1,7))
& + 3.677798000D-03*(T014(2,7)) - 7.062383000D-04*(T014(3,7))
&+(S2TJ1(9,1))*(M2JLJ1(1,7,3))+(S2TJ1(9,2))*(M2JLJ1(2,7,3))
```

```
& + 1.436032600D-03*(T014(2,2)) + 7.100194100D-03*(T014(3,2))
&+(S2TJ1(8,1))*(M2JLJ1(1,2,3))+(S2TJ1(8,2))*(M2JLJ1(2,2,3))
&+(S2TJ1(8,3))*(M2JLJ1(3,2,3))
  M3JLJ(8,3,3) =  - 1.792039490D-02*(T014(1,3))
& + 1.436032600D-03*(T014(2,3)) + 7.100194100D-03*(T014(3,3))
&+(S2TJ1(8,1))*(M2JLJ1(1,3,3))+(S2TJ1(8,2))*(M2JLJ1(2,3,3))
&+(S2TJ1(8,3))*(M2JLJ1(3,3,3))
  M3JLJ(8,4,3) =  - 1.792039490D-02*(T014(1,4))
& + 1.436032600D-03*(T014(2,4)) + 7.100194100D-03*(T014(3,4))
&+(S2TJ1(8,1))*(M2JLJ1(1,4,3))+(S2TJ1(8,2))*(M2JLJ1(2,4,3))
&+(S2TJ1(8,3))*(M2JLJ1(3,4,3))
  M3JLJ(8,5,3) =  - 1.792039490D-02*(T014(1,5))
& + 1.436032600D-03*(T014(2,5)) + 7.100194100D-03*(T014(3,5))
&+(S2TJ1(8,1))*(M2JLJ1(1,5,3))+(S2TJ1(8,2))*(M2JLJ1(2,5,3))
&+(S2TJ1(8,3))*(M2JLJ1(3,5,3))
  M3JLJ(8,6,3) =  - 1.792039490D-02*(T014(1,6))
& + 1.436032600D-03*(T014(2,6)) + 7.100194100D-03*(T014(3,6))
&+(S2TJ1(8,1))*(M2JLJ1(1,6,3))+(S2TJ1(8,2))*(M2JLJ1(2,6,3))
&+(S2TJ1(8,3))*(M2JLJ1(3,6,3))
  M3JLJ(8,7,3) =  - 1.792039490D-02*(T014(1,7))
& + 1.436032600D-03*(T014(2,7)) + 7.100194100D-03*(T014(3,7))
&+(S2TJ1(8,1))*(M2JLJ1(1,7,3))+(S2TJ1(8,2))*(M2JLJ1(2,7,3))
&+(S2TJ1(8,3))*(M2JLJ1(3,7,3))
  M3JLJ(8,8,3) =  - 1.792039490D-02*(T014(1,8))
& + 1.436032600D-03*(T014(2,8)) + 7.100194100D-03*(T014(3,8))
&+(S2TJ1(8,1))*(M2JLJ1(1,8,3))+(S2TJ1(8,2))*(M2JLJ1(2,8,3))
&+(S2TJ1(8,3))*(M2JLJ1(3,8,3))
  M3JLJ(8,9,3) =  - 1.792039490D-02*(T014(1,9))
& + 1.436032600D-03*(T014(2,9)) + 7.100194100D-03*(T014(3,9))
&+(S2TJ1(8,1))*(M2JLJ1(1,9,3))+(S2TJ1(8,2))*(M2JLJ1(2,9,3))
```

```
  M3JLJ(7,4,3) =  - 4.720669400D-03*(T014(1,4))
& + 8.065818000D-03*(T014(2,4)) + 1.178526200D-02*(T014(3,4))
&+(S2TJ1(7,1))*(M2JLJ1(1,4,3))+(S2TJ1(7,2))*(M2JLJ1(2,4,3))
&+(S2TJ1(7,3))*(M2JLJ1(3,4,3))
  M3JLJ(7,5,3) =  - 4.720669400D-03*(T014(1,5))
& + 8.065818000D-03*(T014(2,5)) + 1.178526200D-02*(T014(3,5))
&+(S2TJ1(7,1))*(M2JLJ1(1,5,3))+(S2TJ1(7,2))*(M2JLJ1(2,5,3))
&+(S2TJ1(7,3))*(M2JLJ1(3,5,3))
  M3JLJ(7,6,3) =  - 4.720669400D-03*(T014(1,6))
& + 8.065818000D-03*(T014(2,6)) + 1.178526200D-02*(T014(3,6))
&+(S2TJ1(7,1))*(M2JLJ1(1,6,3))+(S2TJ1(7,2))*(M2JLJ1(2,6,3))
&+(S2TJ1(7,3))*(M2JLJ1(3,6,3))
  M3JLJ(7,7,3) =  - 4.720669400D-03*(T014(1,7))
& + 8.065818000D-03*(T014(2,7)) + 1.178526200D-02*(T014(3,7))
&+(S2TJ1(7,1))*(M2JLJ1(1,7,3))+(S2TJ1(7,2))*(M2JLJ1(2,7,3))
&+(S2TJ1(7,3))*(M2JLJ1(3,7,3))
  M3JLJ(7,8,3) =  - 4.720669400D-03*(T014(1,8))
& + 8.065818000D-03*(T014(2,8)) + 1.178526200D-02*(T014(3,8))
&+(S2TJ1(7,1))*(M2JLJ1(1,8,3))+(S2TJ1(7,2))*(M2JLJ1(2,8,3))
&+(S2TJ1(7,3))*(M2JLJ1(3,8,3))
  M3JLJ(7,9,3) =  - 4.720669400D-03*(T014(1,9))
& + 8.065818000D-03*(T014(2,9)) + 1.178526200D-02*(T014(3,9))
&+(S2TJ1(7,1))*(M2JLJ1(1,9,3))+(S2TJ1(7,2))*(M2JLJ1(2,9,3))
&+(S2TJ1(7,3))*(M2JLJ1(3,9,3))
  M3JLJ(7,10,3) =  - 4.720669400D-03*(T014(1,10))
& + 8.065818000D-03*(T014(2,10)) + 1.178526200D-02*(T014(3,10))
&+(S2TJ1(7,1))*(M2JLJ1(1,10,3))+(S2TJ1(7,2))*(M2JLJ1(2,10,3))
&+(S2TJ1(7,3))*(M2JLJ1(3,10,3))
  M3JLJ(8,1,3) =  - 1.792039490D-02*(T014(1,1))
& + 1.436032600D-03*(T014(2,1)) + 7.100194100D-03*(T014(3,1))
&+(S2TJ1(8,1))*(M2JLJ1(1,1,3))+(S2TJ1(8,2))*(M2JLJ1(2,1,3))
&+(S2TJ1(8,3))*(M2JLJ1(3,1,3))
  M3JLJ(8,2,3) =  - 1.792039490D-02*(T014(1,2))
```

```
&+(S2TJ1(6,1))*(M2JLJ1(1,6,3))+(S2TJ1(6,2))*(M2JLJ1(2,6,3))
&+(S2TJ1(6,3))*(M2JLJ1(3,6,3))
  M3JLJ(6,7,3) =  - 1.681209600D-03*(T014(1,7))
& + 2.969459000D-03*(T014(2,7)) + 3.553941400D-03*(T014(3,7))
&+(S2TJ1(6,1))*(M2JLJ1(1,7,3))+(S2TJ1(6,2))*(M2JLJ1(2,7,3))
&+(S2TJ1(6,3))*(M2JLJ1(3,7,3))
  M3JLJ(6,8,3) =  - 1.681209600D-03*(T014(1,8))
& + 2.969459000D-03*(T014(2,8)) + 3.553941400D-03*(T014(3,8))
&+(S2TJ1(6,1))*(M2JLJ1(1,8,3))+(S2TJ1(6,2))*(M2JLJ1(2,8,3))
&+(S2TJ1(6,3))*(M2JLJ1(3,8,3))
  M3JLJ(6,9,3) =  - 1.681209600D-03*(T014(1,9))
& + 2.969459000D-03*(T014(2,9)) + 3.553941400D-03*(T014(3,9))
&+(S2TJ1(6,1))*(M2JLJ1(1,9,3))+(S2TJ1(6,2))*(M2JLJ1(2,9,3))
&+(S2TJ1(6,3))*(M2JLJ1(3,9,3))
  M3JLJ(6,10,3) =  - 1.681209600D-03*(T014(1,10))
& + 2.969459000D-03*(T014(2,10)) + 3.553941400D-03*(T014(3,10))
&+(S2TJ1(6,1))*(M2JLJ1(1,10,3))+(S2TJ1(6,2))*(M2JLJ1(2,10,3))
&+(S2TJ1(6,3))*(M2JLJ1(3,10,3))
  M3JLJ(7,1,3) =  - 4.720669400D-03*(T014(1,1))
& + 8.065818000D-03*(T014(2,1)) + 1.178526200D-02*(T014(3,1))
&+(S2TJ1(7,1))*(M2JLJ1(1,1,3))+(S2TJ1(7,2))*(M2JLJ1(2,1,3))
&+(S2TJ1(7,3))*(M2JLJ1(3,1,3))
  M3JLJ(7,2,3) =  - 4.720669400D-03*(T014(1,2))
& + 8.065818000D-03*(T014(2,2)) + 1.178526200D-02*(T014(3,2))
&+(S2TJ1(7,1))*(M2JLJ1(1,2,3))+(S2TJ1(7,2))*(M2JLJ1(2,2,3))
&+(S2TJ1(7,3))*(M2JLJ1(3,2,3))
  M3JLJ(7,3,3) =  - 4.720669400D-03*(T014(1,3))
& + 8.065818000D-03*(T014(2,3)) + 1.178526200D-02*(T014(3,3))
&+(S2TJ1(7,1))*(M2JLJ1(1,3,3))+(S2TJ1(7,2))*(M2JLJ1(2,3,3))
&+(S2TJ1(7,3))*(M2JLJ1(3,3,3))
```

```
& - 2.737324510D-02*(T014(2,8)) - 3.463808960D-02*(T014(3,8))
&+(S2TJ1(5,1))*(M2JLJ1(1,8,3))+(S2TJ1(5,2))*(M2JLJ1(2,8,3))
&+(S2TJ1(5,3))*(M2JLJ1(3,8,3))
  M3JLJ(5,9,3) = 2.625695070D-02*(T014(1,9))
& - 2.737324510D-02*(T014(2,9)) - 3.463808960D-02*(T014(3,9))
&+(S2TJ1(5,1))*(M2JLJ1(1,9,3))+(S2TJ1(5,2))*(M2JLJ1(2,9,3))
&+(S2TJ1(5,3))*(M2JLJ1(3,9,3))
  M3JLJ(5,10,3) = 2.625695070D-02*(T014(1,10))
& - 2.737324510D-02*(T014(2,10)) - 3.463808960D-02*(T014(3,10))
&+(S2TJ1(5,1))*(M2JLJ1(1,10,3))+(S2TJ1(5,2))*(M2JLJ1(2,10,3))
&+(S2TJ1(5,3))*(M2JLJ1(3,10,3))
  M3JLJ(6,1,3) =  - 1.681209600D-03*(T014(1,1))
& + 2.969459000D-03*(T014(2,1)) + 3.553941400D-03*(T014(3,1))
&+(S2TJ1(6,1))*(M2JLJ1(1,1,3))+(S2TJ1(6,2))*(M2JLJ1(2,1,3))
&+(S2TJ1(6,3))*(M2JLJ1(3,1,3))
  M3JLJ(6,2,3) =  - 1.681209600D-03*(T014(1,2))
& + 2.969459000D-03*(T014(2,2)) + 3.553941400D-03*(T014(3,2))
&+(S2TJ1(6,1))*(M2JLJ1(1,2,3))+(S2TJ1(6,2))*(M2JLJ1(2,2,3))
&+(S2TJ1(6,3))*(M2JLJ1(3,2,3))
  M3JLJ(6,3,3) =  - 1.681209600D-03*(T014(1,3))
& + 2.969459000D-03*(T014(2,3)) + 3.553941400D-03*(T014(3,3))
&+(S2TJ1(6,1))*(M2JLJ1(1,3,3))+(S2TJ1(6,2))*(M2JLJ1(2,3,3))
&+(S2TJ1(6,3))*(M2JLJ1(3,3,3))
  M3JLJ(6,4,3) =  - 1.681209600D-03*(T014(1,4))
& + 2.969459000D-03*(T014(2,4)) + 3.553941400D-03*(T014(3,4))
&+(S2TJ1(6,1))*(M2JLJ1(1,4,3))+(S2TJ1(6,2))*(M2JLJ1(2,4,3))
&+(S2TJ1(6,3))*(M2JLJ1(3,4,3))
  M3JLJ(6,5,3) =  - 1.681209600D-03*(T014(1,5))
& + 2.969459000D-03*(T014(2,5)) + 3.553941400D-03*(T014(3,5))
&+(S2TJ1(6,1))*(M2JLJ1(1,5,3))+(S2TJ1(6,2))*(M2JLJ1(2,5,3))
&+(S2TJ1(6,3))*(M2JLJ1(3,5,3))
  M3JLJ(6,6,3) =  - 1.681209600D-03*(T014(1,6))
& + 2.969459000D-03*(T014(2,6)) + 3.553941400D-03*(T014(3,6))
```

```
  M3JLJ(5,1,3) = 2.625695070D-02*(T014(1,1))
& - 2.737324510D-02*(T014(2,1)) - 3.463808960D-02*(T014(3,1))
&+(S2TJ1(5,1))*(M2JLJ1(1,1,3))+(S2TJ1(5,2))*(M2JLJ1(2,1,3))
&+(S2TJ1(5,3))*(M2JLJ1(3,1,3))
  M3JLJ(5,2,3) = 2.625695070D-02*(T014(1,2))
& - 2.737324510D-02*(T014(2,2)) - 3.463808960D-02*(T014(3,2))
&+(S2TJ1(5,1))*(M2JLJ1(1,2,3))+(S2TJ1(5,2))*(M2JLJ1(2,2,3))
&+(S2TJ1(5,3))*(M2JLJ1(3,2,3))
  M3JLJ(5,3,3) = 2.625695070D-02*(T014(1,3))
& - 2.737324510D-02*(T014(2,3)) - 3.463808960D-02*(T014(3,3))
&+(S2TJ1(5,1))*(M2JLJ1(1,3,3))+(S2TJ1(5,2))*(M2JLJ1(2,3,3))
&+(S2TJ1(5,3))*(M2JLJ1(3,3,3))
  M3JLJ(5,4,3) = 2.625695070D-02*(T014(1,4))
& - 2.737324510D-02*(T014(2,4)) - 3.463808960D-02*(T014(3,4))
&+(S2TJ1(5,1))*(M2JLJ1(1,4,3))+(S2TJ1(5,2))*(M2JLJ1(2,4,3))
&+(S2TJ1(5,3))*(M2JLJ1(3,4,3))
  M3JLJ(5,5,3) = 2.625695070D-02*(T014(1,5))
& - 2.737324510D-02*(T014(2,5)) - 3.463808960D-02*(T014(3,5))
&+(S2TJ1(5,1))*(M2JLJ1(1,5,3))+(S2TJ1(5,2))*(M2JLJ1(2,5,3))
&+(S2TJ1(5,3))*(M2JLJ1(3,5,3))
  M3JLJ(5,6,3) = 2.625695070D-02*(T014(1,6))
& - 2.737324510D-02*(T014(2,6)) - 3.463808960D-02*(T014(3,6))
&+(S2TJ1(5,1))*(M2JLJ1(1,6,3))+(S2TJ1(5,2))*(M2JLJ1(2,6,3))
&+(S2TJ1(5,3))*(M2JLJ1(3,6,3))
  M3JLJ(5,7,3) = 2.625695070D-02*(T014(1,7))
& - 2.737324510D-02*(T014(2,7)) - 3.463808960D-02*(T014(3,7))
&+(S2TJ1(5,1))*(M2JLJ1(1,7,3))+(S2TJ1(5,2))*(M2JLJ1(2,7,3))
&+(S2TJ1(5,3))*(M2JLJ1(3,7,3))
  M3JLJ(5,8,3) = 2.625695070D-02*(T014(1,8))
```

```
&+(S2TJ1(4,1))*(M2JLJ1(1,2,3))+(S2TJ1(4,2))*(M2JLJ1(2,2,3))
&+(S2TJ1(4,3))*(M2JLJ1(3,2,3))
  M3JLJ(4,3,3) = 2.535855060D-02*(T014(1,3))
& + 8.674423000D-03*(T014(2,3)) + 3.911077300D-02*(T014(3,3))
&+(S2TJ1(4,1))*(M2JLJ1(1,3,3))+(S2TJ1(4,2))*(M2JLJ1(2,3,3))
&+(S2TJ1(4,3))*(M2JLJ1(3,3,3))
  M3JLJ(4,4,3) = 2.535855060D-02*(T014(1,4))
& + 8.674423000D-03*(T014(2,4)) + 3.911077300D-02*(T014(3,4))
&+(S2TJ1(4,1))*(M2JLJ1(1,4,3))+(S2TJ1(4,2))*(M2JLJ1(2,4,3))
&+(S2TJ1(4,3))*(M2JLJ1(3,4,3))
  M3JLJ(4,5,3) = 2.535855060D-02*(T014(1,5))
& + 8.674423000D-03*(T014(2,5)) + 3.911077300D-02*(T014(3,5))
&+(S2TJ1(4,1))*(M2JLJ1(1,5,3))+(S2TJ1(4,2))*(M2JLJ1(2,5,3))
&+(S2TJ1(4,3))*(M2JLJ1(3,5,3))
  M3JLJ(4,6,3) = 2.535855060D-02*(T014(1,6))
& + 8.674423000D-03*(T014(2,6)) + 3.911077300D-02*(T014(3,6))
&+(S2TJ1(4,1))*(M2JLJ1(1,6,3))+(S2TJ1(4,2))*(M2JLJ1(2,6,3))
&+(S2TJ1(4,3))*(M2JLJ1(3,6,3))
  M3JLJ(4,7,3) = 2.535855060D-02*(T014(1,7))
& + 8.674423000D-03*(T014(2,7)) + 3.911077300D-02*(T014(3,7))
&+(S2TJ1(4,1))*(M2JLJ1(1,7,3))+(S2TJ1(4,2))*(M2JLJ1(2,7,3))
&+(S2TJ1(4,3))*(M2JLJ1(3,7,3))
  M3JLJ(4,8,3) = 2.535855060D-02*(T014(1,8))
& + 8.674423000D-03*(T014(2,8)) + 3.911077300D-02*(T014(3,8))
&+(S2TJ1(4,1))*(M2JLJ1(1,8,3))+(S2TJ1(4,2))*(M2JLJ1(2,8,3))
&+(S2TJ1(4,3))*(M2JLJ1(3,8,3))
  M3JLJ(4,9,3) = 2.535855060D-02*(T014(1,9))
& + 8.674423000D-03*(T014(2,9)) + 3.911077300D-02*(T014(3,9))
&+(S2TJ1(4,1))*(M2JLJ1(1,9,3))+(S2TJ1(4,2))*(M2JLJ1(2,9,3))
&+(S2TJ1(4,3))*(M2JLJ1(3,9,3))
  M3JLJ(4,10,3) = 2.535855060D-02*(T014(1,10))
& + 8.674423000D-03*(T014(2,10)) + 3.911077300D-02*(T014(3,10))
&+(S2TJ1(4,1))*(M2JLJ1(1,10,3))+(S2TJ1(4,2))*(M2JLJ1(2,10,3))
&+(S2TJ1(4,3))*(M2JLJ1(3,10,3))
```

```
&+(S2TJ1(3,3))*(M2JLJ1(3,4,3))
  M3JLJ(3,5,3) =  - 1.460319760D-02*(T014(1,5))
& - 1.816594000D-03*(T014(2,5)) - 1.874512950D-02*(T014(3,5))
&+(S2TJ1(3,1))*(M2JLJ1(1,5,3))+(S2TJ1(3,2))*(M2JLJ1(2,5,3))
&+(S2TJ1(3,3))*(M2JLJ1(3,5,3))
  M3JLJ(3,6,3) =  - 1.460319760D-02*(T014(1,6))
& - 1.816594000D-03*(T014(2,6)) - 1.874512950D-02*(T014(3,6))
&+(S2TJ1(3,1))*(M2JLJ1(1,6,3))+(S2TJ1(3,2))*(M2JLJ1(2,6,3))
&+(S2TJ1(3,3))*(M2JLJ1(3,6,3))
  M3JLJ(3,7,3) =  - 1.460319760D-02*(T014(1,7))
& - 1.816594000D-03*(T014(2,7)) - 1.874512950D-02*(T014(3,7))
&+(S2TJ1(3,1))*(M2JLJ1(1,7,3))+(S2TJ1(3,2))*(M2JLJ1(2,7,3))
&+(S2TJ1(3,3))*(M2JLJ1(3,7,3))
  M3JLJ(3,8,3) =  - 1.460319760D-02*(T014(1,8))
& - 1.816594000D-03*(T014(2,8)) - 1.874512950D-02*(T014(3,8))
&+(S2TJ1(3,1))*(M2JLJ1(1,8,3))+(S2TJ1(3,2))*(M2JLJ1(2,8,3))
&+(S2TJ1(3,3))*(M2JLJ1(3,8,3))
  M3JLJ(3,9,3) =  - 1.460319760D-02*(T014(1,9))
& - 1.816594000D-03*(T014(2,9)) - 1.874512950D-02*(T014(3,9))
&+(S2TJ1(3,1))*(M2JLJ1(1,9,3))+(S2TJ1(3,2))*(M2JLJ1(2,9,3))
&+(S2TJ1(3,3))*(M2JLJ1(3,9,3))
  M3JLJ(3,10,3) =  - 1.460319760D-02*(T014(1,10))
& - 1.816594000D-03*(T014(2,10)) - 1.874512950D-02*(T014(3,10))
&+(S2TJ1(3,1))*(M2JLJ1(1,10,3))+(S2TJ1(3,2))*(M2JLJ1(2,10,3))
&+(S2TJ1(3,3))*(M2JLJ1(3,10,3))
  M3JLJ(4,1,3) = 2.535855060D-02*(T014(1,1))
& + 8.674423000D-03*(T014(2,1)) + 3.911077300D-02*(T014(3,1))
&+(S2TJ1(4,1))*(M2JLJ1(1,1,3))+(S2TJ1(4,2))*(M2JLJ1(2,1,3))
&+(S2TJ1(4,3))*(M2JLJ1(3,1,3))
  M3JLJ(4,2,3) = 2.535855060D-02*(T014(1,2))
& + 8.674423000D-03*(T014(2,2)) + 3.911077300D-02*(T014(3,2))
```

```
&+(S2TJ1(2,3))*(M2JLJ1(3,6,3))
  M3JLJ(2,7,3) =  - 9.116472000D-04*(T014(1,7))
& - 4.209420000D-04*(T014(2,7)) - 1.691804000D-03*(T014(3,7))
&+(S2TJ1(2,1))*(M2JLJ1(1,7,3))+(S2TJ1(2,2))*(M2JLJ1(2,7,3))
&+(S2TJ1(2,3))*(M2JLJ1(3,7,3))
  M3JLJ(2,8,3) =  - 9.116472000D-04*(T014(1,8))
& - 4.209420000D-04*(T014(2,8)) - 1.691804000D-03*(T014(3,8))
&+(S2TJ1(2,1))*(M2JLJ1(1,8,3))+(S2TJ1(2,2))*(M2JLJ1(2,8,3))
&+(S2TJ1(2,3))*(M2JLJ1(3,8,3))
  M3JLJ(2,9,3) =  - 9.116472000D-04*(T014(1,9))
& - 4.209420000D-04*(T014(2,9)) - 1.691804000D-03*(T014(3,9))
&+(S2TJ1(2,1))*(M2JLJ1(1,9,3))+(S2TJ1(2,2))*(M2JLJ1(2,9,3))
&+(S2TJ1(2,3))*(M2JLJ1(3,9,3))
  M3JLJ(2,10,3) =  - 9.116472000D-04*(T014(1,10))
& - 4.209420000D-04*(T014(2,10)) - 1.691804000D-03*(T014(3,10))
&+(S2TJ1(2,1))*(M2JLJ1(1,10,3))+(S2TJ1(2,2))*(M2JLJ1(2,10,3))
&+(S2TJ1(2,3))*(M2JLJ1(3,10,3))
  M3JLJ(3,1,3) =  - 1.460319760D-02*(T014(1,1))
& - 1.816594000D-03*(T014(2,1)) - 1.874512950D-02*(T014(3,1))
&+(S2TJ1(3,1))*(M2JLJ1(1,1,3))+(S2TJ1(3,2))*(M2JLJ1(2,1,3))
&+(S2TJ1(3,3))*(M2JLJ1(3,1,3))
  M3JLJ(3,2,3) =  - 1.460319760D-02*(T014(1,2))
& - 1.816594000D-03*(T014(2,2)) - 1.874512950D-02*(T014(3,2))
&+(S2TJ1(3,1))*(M2JLJ1(1,2,3))+(S2TJ1(3,2))*(M2JLJ1(2,2,3))
&+(S2TJ1(3,3))*(M2JLJ1(3,2,3))
  M3JLJ(3,3,3) =  - 1.460319760D-02*(T014(1,3))
& - 1.816594000D-03*(T014(2,3)) - 1.874512950D-02*(T014(3,3))
&+(S2TJ1(3,1))*(M2JLJ1(1,3,3))+(S2TJ1(3,2))*(M2JLJ1(2,3,3))
&+(S2TJ1(3,3))*(M2JLJ1(3,3,3))
  M3JLJ(3,4,3) =  - 1.460319760D-02*(T014(1,4))
& - 1.816594000D-03*(T014(2,4)) - 1.874512950D-02*(T014(3,4))
&+(S2TJ1(3,1))*(M2JLJ1(1,4,3))+(S2TJ1(3,2))*(M2JLJ1(2,4,3))
```

```
& + 9.967833000D-04*(T014(2,9)) + 2.847609000D-03*(T014(3,9))
&+(S2TJ1(1,1))*(M2JLJ1(1,9,3))+(S2TJ1(1,2))*(M2JLJ1(2,9,3))
&+(S2TJ1(1,3))*(M2JLJ1(3,9,3))
  M3JLJ(1,10,3) = 9.417614430D-04*(T014(1,10))
& + 9.967833000D-04*(T014(2,10)) + 2.847609000D-03*(T014(3,10))
&+(S2TJ1(1,1))*(M2JLJ1(1,10,3))+(S2TJ1(1,2))*(M2JLJ1(2,10,3))
&+(S2TJ1(1,3))*(M2JLJ1(3,10,3))
  M3JLJ(2,1,3) =  - 9.116472000D-04*(T014(1,1))
& - 4.209420000D-04*(T014(2,1)) - 1.691804000D-03*(T014(3,1))
&+(S2TJ1(2,1))*(M2JLJ1(1,1,3))+(S2TJ1(2,2))*(M2JLJ1(2,1,3))
&+(S2TJ1(2,3))*(M2JLJ1(3,1,3))
  M3JLJ(2,2,3) =  - 9.116472000D-04*(T014(1,2))
& - 4.209420000D-04*(T014(2,2)) - 1.691804000D-03*(T014(3,2))
&+(S2TJ1(2,1))*(M2JLJ1(1,2,3))+(S2TJ1(2,2))*(M2JLJ1(2,2,3))
&+(S2TJ1(2,3))*(M2JLJ1(3,2,3))
  M3JLJ(2,3,3) =  - 9.116472000D-04*(T014(1,3))
& - 4.209420000D-04*(T014(2,3)) - 1.691804000D-03*(T014(3,3))
&+(S2TJ1(2,1))*(M2JLJ1(1,3,3))+(S2TJ1(2,2))*(M2JLJ1(2,3,3))
&+(S2TJ1(2,3))*(M2JLJ1(3,3,3))
  M3JLJ(2,4,3) =  - 9.116472000D-04*(T014(1,4))
& - 4.209420000D-04*(T014(2,4)) - 1.691804000D-03*(T014(3,4))
&+(S2TJ1(2,1))*(M2JLJ1(1,4,3))+(S2TJ1(2,2))*(M2JLJ1(2,4,3))
&+(S2TJ1(2,3))*(M2JLJ1(3,4,3))
  M3JLJ(2,5,3) =  - 9.116472000D-04*(T014(1,5))
& - 4.209420000D-04*(T014(2,5)) - 1.691804000D-03*(T014(3,5))
&+(S2TJ1(2,1))*(M2JLJ1(1,5,3))+(S2TJ1(2,2))*(M2JLJ1(2,5,3))
&+(S2TJ1(2,3))*(M2JLJ1(3,5,3))
  M3JLJ(2,6,3) =  - 9.116472000D-04*(T014(1,6))
& - 4.209420000D-04*(T014(2,6)) - 1.691804000D-03*(T014(3,6))
&+(S2TJ1(2,1))*(M2JLJ1(1,6,3))+(S2TJ1(2,2))*(M2JLJ1(2,6,3))
```

```
  M3JLJ(1,1,3) = 9.417614430D-04*(T014(1,1))
& + 9.967833000D-04*(T014(2,1)) + 2.847609000D-03*(T014(3,1))
&+(S2TJ1(1,1))*(M2JLJ1(1,1,3))+(S2TJ1(1,2))*(M2JLJ1(2,1,3))
&+(S2TJ1(1,3))*(M2JLJ1(3,1,3))
  M3JLJ(1,2,3) = 9.417614430D-04*(T014(1,2))
& + 9.967833000D-04*(T014(2,2)) + 2.847609000D-03*(T014(3,2))
&+(S2TJ1(1,1))*(M2JLJ1(1,2,3))+(S2TJ1(1,2))*(M2JLJ1(2,2,3))
&+(S2TJ1(1,3))*(M2JLJ1(3,2,3))
  M3JLJ(1,3,3) = 9.417614430D-04*(T014(1,3))
& + 9.967833000D-04*(T014(2,3)) + 2.847609000D-03*(T014(3,3))
&+(S2TJ1(1,1))*(M2JLJ1(1,3,3))+(S2TJ1(1,2))*(M2JLJ1(2,3,3))
&+(S2TJ1(1,3))*(M2JLJ1(3,3,3))
  M3JLJ(1,4,3) = 9.417614430D-04*(T014(1,4))
& + 9.967833000D-04*(T014(2,4)) + 2.847609000D-03*(T014(3,4))
&+(S2TJ1(1,1))*(M2JLJ1(1,4,3))+(S2TJ1(1,2))*(M2JLJ1(2,4,3))
&+(S2TJ1(1,3))*(M2JLJ1(3,4,3))
  M3JLJ(1,5,3) = 9.417614430D-04*(T014(1,5))
& + 9.967833000D-04*(T014(2,5)) + 2.847609000D-03*(T014(3,5))
&+(S2TJ1(1,1))*(M2JLJ1(1,5,3))+(S2TJ1(1,2))*(M2JLJ1(2,5,3))
&+(S2TJ1(1,3))*(M2JLJ1(3,5,3))
  M3JLJ(1,6,3) = 9.417614430D-04*(T014(1,6))
& + 9.967833000D-04*(T014(2,6)) + 2.847609000D-03*(T014(3,6))
&+(S2TJ1(1,1))*(M2JLJ1(1,6,3))+(S2TJ1(1,2))*(M2JLJ1(2,6,3))
&+(S2TJ1(1,3))*(M2JLJ1(3,6,3))
  M3JLJ(1,7,3) = 9.417614430D-04*(T014(1,7))
& + 9.967833000D-04*(T014(2,7)) + 2.847609000D-03*(T014(3,7))
&+(S2TJ1(1,1))*(M2JLJ1(1,7,3))+(S2TJ1(1,2))*(M2JLJ1(2,7,3))
&+(S2TJ1(1,3))*(M2JLJ1(3,7,3))
  M3JLJ(1,8,3) = 9.417614430D-04*(T014(1,8))
& + 9.967833000D-04*(T014(2,8)) + 2.847609000D-03*(T014(3,8))
&+(S2TJ1(1,1))*(M2JLJ1(1,8,3))+(S2TJ1(1,2))*(M2JLJ1(2,8,3))
&+(S2TJ1(1,3))*(M2JLJ1(3,8,3))
  M3JLJ(1,9,3) = 9.417614430D-04*(T014(1,9))
```

AN EXAMPLE - SHIFT TERM
Body j Flexibility Effects Shifted to Body L(j)

$$
\begin{aligned}
\left[M^{j\,3}_{L(j)}\right] &= [S2TJ1][M^{j\,2}_{L(j)_1}] + [S2TJ2][I^{j\prime}_{21}][S2TJ1]^T \\
&+ [I^{j\prime}_{22}][S2TJ2]^T
\end{aligned}
$$

Code:

```
  TV15(1) = (CJL(1,1,3))*(RJFDOT(1,3))+(CJL(2,1,3))*(RJFDOT(2,3))
&+(CJL(3,1,3))*(RJFDOT(3,3))
  TV15(2) = (CJL(1,2,3))*(RJFDOT(1,3))+(CJL(2,2,3))*(RJFDOT(2,3))
&+(CJL(3,2,3))*(RJFDOT(3,3))
  TV15(3) = (CJL(1,3,3))*(RJFDOT(1,3))+(CJL(2,3,3))*(RJFDOT(2,3))
&+(CJL(3,3,3))*(RJFDOT(3,3))
  XXX5(1) = (TV15(3))*(RJC(2,3))-(TV15(2))*(RJC(3,3))
  XXX5(2) = -(TV15(3))*(RJC(1,3))+(TV15(1))*(RJC(3,3))
  XXX5(3) = (TV15(2))*(RJC(1,3))-(TV15(1))*(RJC(2,3))
```

$\underline{r}_c^j \times \dot{\underline{R}}_f^j$

```
  ANGMOM(1,3) = 3.724550948D+01*(XXX5(1))
& + 4.306601078D+00*(ETADJ(1,3)) + 3.829702253D+03*(ETADJ(2,3))
& + 1.888128651D+02*(ETADJ(3,3)) - 5.261955802D+00*(ETADJ(4,3))
& + 1.456527407D+01*(ETADJ(5,3)) + 3.652314628D+02*(ETADJ(6,3))
& - 2.225841034D-02*(ETADJ(7,3)) + 7.534184393D-05*(ETADJ(8,3))
& - 7.946172089D-02*(ETADJ(9,3)) + 5.331604866D+02*(ETADJ(10,3))
& - 6.186767988D+01*(ETADJ(11,3)) - 5.971218707D+03*(ETADJ(12,3))
& + 4.501282365D+02*(ETADJ(13,3)) + 8.348706635D+00*(ETADJ(14,3))
& - 2.907274834D+03*(ETADJ(15,3)) + 1.241600408D+08*(WJ(1,3))
& + 5.129257918D+04*(WJ(2,3)) + 1.670256433D+04*(WJ(3,3))
```

H_x^j

FLEX CONTRIBUTION

RIGID

```
  ANGMOM(2,3) = 3.724550948D+01*(XXX5(2))
& - 2.200909615D+03*(ETADJ(1,3)) + 3.247034449D+00*(ETADJ(2,3))
& + 3.140280946D-01*(ETADJ(3,3)) + 3.587167466D-02*(ETADJ(4,3))
& - 1.066955760D+01*(ETADJ(5,3)) - 1.889170112D+02*(ETADJ(6,3))
& + 5.460942074D-03*(ETADJ(7,3)) - 7.534184708D-05*(ETADJ(8,3))
& + 4.293358210D-02*(ETADJ(9,3)) + 2.243620584D+00*(ETADJ(10,3))
& - 3.034925966D-01*(ETADJ(11,3)) - 6.682411178D+01*(ETADJ(12,3))
& - 5.297279910D+02*(ETADJ(13,3)) + 4.109854243D+00*(ETADJ(14,3))
& - 1.444428623D+01*(ETADJ(15,3)) + 5.129257918D+04*(WJ(1,3))
& + 5.393792292D+06*(WJ(2,3)) - 4.250956278D+05*(WJ(3,3))
```

H_y^j

```
  ANGMOM(3,3) = 3.724550948D+01*(XXX5(3))
& + 2.445448842D+01*(ETADJ(1,3)) + 1.994911676D+00*(ETADJ(2,3))
& + 6.154927776D-01*(ETADJ(3,3)) - 8.496736201D-02*(ETADJ(4,3))
& + 3.974454416D+03*(ETADJ(5,3)) + 7.400456346D+02*(ETADJ(6,3))
& + 3.590005603D-01*(ETADJ(7,3)) + 2.187289761D-04*(ETADJ(8,3))
& + 6.560427020D-01*(ETADJ(9,3)) - 7.491879013D+00*(ETADJ(10,3))
& + 1.615354572D+00*(ETADJ(11,3)) + 1.067459109D+02*(ETADJ(12,3))
& + 1.197995296D+02*(ETADJ(13,3)) - 8.689958163D+03*(ETADJ(14,3))
& + 2.742408183D+01*(ETADJ(15,3)) + 1.670256433D+04*(WJ(1,3))
& - 4.250956278D+05*(WJ(2,3)) + 1.292526347D+08*(WJ(3,3))
```

H_z^j

Symbolic Manipulation Process

Vector Equation:

$$\underline{H}^j = m_j\, \underline{r}_c^j \times \dot{\underline{R}}_f^j + \underline{\underline{I}}' \cdot \underline{\omega}^j + \sum_i^{NM} \left[\underline{h}^j + \sum_k^{NM} \underline{Y}_{ik}^j\, \eta_k^j \right] \dot{\eta}_i^j$$

$$\underline{h}^j = \int \underline{r} \times \underline{\phi}(\underline{r})\, dm$$

$$\underline{Y}_{ik} = \int \underline{\phi}_i \times \underline{\phi}_k\, dm$$

$$\underline{\underline{I}}' = \underline{\underline{I}}_{RIGID} + \text{FLEX CONTRIBUTION}$$

Scalar Equation:

$$\begin{aligned}
H_x^i &= m_j\, r_{cy}^j\, \dot{R}_{fz}^j - m_j\, r_{cz}^j\, \dot{R}_{fy}^j + I_{11}'^j\, \omega_x^j + I_{12}'^j\, \omega_y^j + I_{13}'^j\, \omega_z^j \\
&+ h_{x1}^j\, \dot{\eta}_1^j + h_{xz}^j\, \dot{\eta}_2^j + h_{x3}^j\, \dot{\eta}_3^j + \ldots + \left(h_{x_{NM}}^j\, \dot{\eta}_{NM}^j \right) \\
&+ Y_{11}^j\, \eta_1^j\, \dot{\eta}_1^j + Y_{12}^j\, \eta_1^j\, \dot{\eta}_2^j + \ldots + \left(Y_{NM,NM}^j\, \eta_{NM}^j\, \dot{\eta}_{NM}^j \right) \\
H_y^j &= - - - - - \\
H_z^j &= - - - - -
\end{aligned}$$

Angular Momentum Equation for a Multi-Flexible Body System

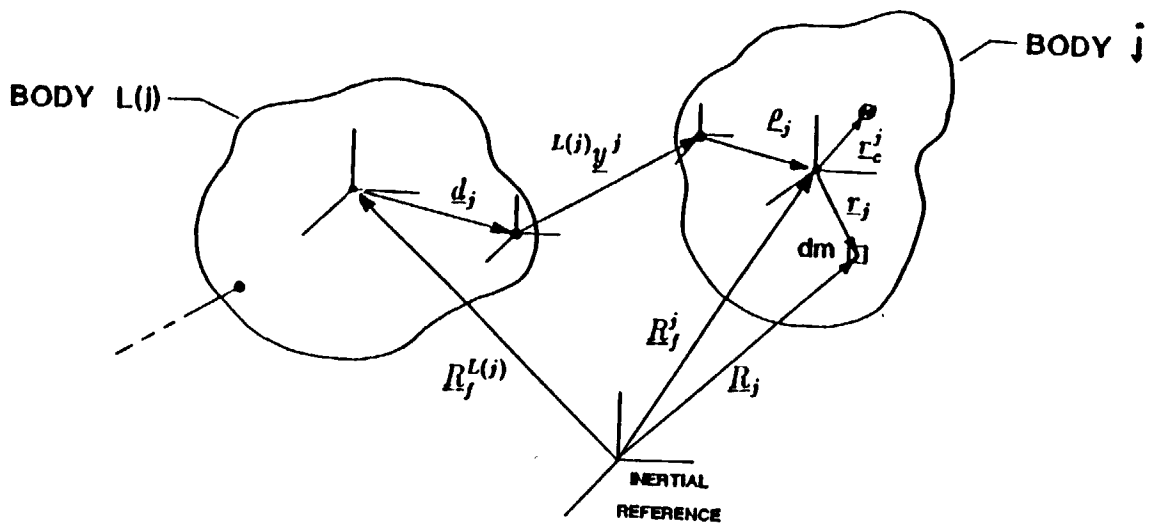

SYMBOLIC MANIPULATION FOR MULTI-FLEXIBLE BODY DYNAMIC SYSTEM

- Symbolic manipulation algorithm/program is available for generating equations of motion of multi-rigid body dynamic system.

- Need to develop a symbolic manipulation algorithm/program for multi-flexible body dynamic system, to convert a user-supplied description of multi-flexible body dynamic system into a set of computational efficient subprograms which represent the equations of motion of the original system. The developed programs should be able to directly plugged into the existing control system for performance assessment by simulation.

- Advantages of symbolic manipulation to generate computer code:
  - User only need to specify the topological description of dynamic system, and leave the laborious derivation and checkout of detail equations of motion to the computer program. Hence, correctness is assured.
  - All equations are explicitly scalar and problem specific. Thus, code can be highly optimized, program memory use is reduced, and accuracy is assured. Furthermore, computer program runtime should grow linearly with the degree-of-freedom (Order n formulation).

MOD. COMP. COST ANALYSIS(COMP.)

- Given a system: $\dot{\underline{x}} = A\,\underline{x} + B\,\underline{u}$; $\left|\begin{matrix} y \\ f \end{matrix}\right| = C\,\underline{x}$
- Define Scalar Cost Function

$$V = \int_0^\infty (Y^* Q\, Y)dt = \int_0^\infty (y^* Q_y\, y + f^* Q_f\, f)\, dt$$

$$Q = \begin{vmatrix} Q_y & 0 \\ 0 & Q_f \end{vmatrix}$$

where $Y = [\,(y|f)_{ss}, (y|f), (y|f)^{(1)}, \ldots, (y|f)^{(q-1)}]^T$

$= [\,CA^{-p}, C, CA, \ldots, CA^{q-1}]^T\,\underline{x}$

$= O_{pq}\,\underline{x}$

and $V = \sum_{i=1}^{nx} [\,X\,O^*_{pq}\,Q\,O_{pq}\,]_{ii}$; V is not necessarily diagonal.

$$0 = XA^* + AX + BB^*$$

COMPONENT MODEL REDUCTION via MOD. COMP.COST

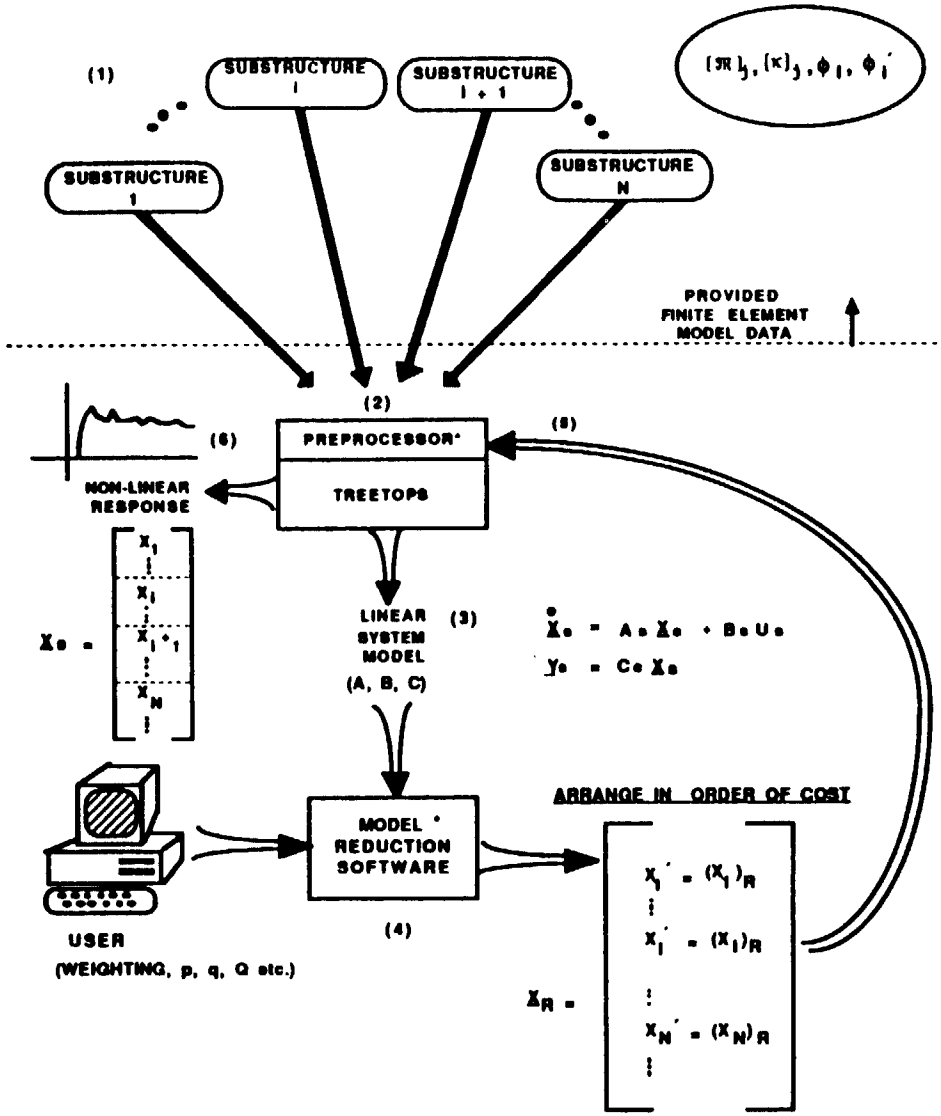

COMPONENT COST ANALYSIS (SYSTEM)

- Given a system: $\dot{\underline{x}} = A\,\underline{x} + B\,\underline{u}$
  $\underline{y} = C\,\underline{x}$

- Define scalar cost function V, as a measure of system performance

$$V = \int_0^{\infty} (Y^* Q\, Y)dt$$

where $Y = [\, y_1, \ldots, y_n, y_e, \text{etc.}]^T$, $Q = Q^T > 0$
and y_i is output due to $u_i(t) = \mu_i\, \delta(t)$

- Transform to Cost Decoupled Coordinates

$$V = \sum_{i=1}^{nx} [\, XC^*QC\,]_{ii} = \sum_{i=1}^{nx} V_{xi}$$

$$0 = XA^* + AX + BB^*$$

where V_{xi} is i th component cost.

- Arrange Cost Decoupled States in decreasing Cost & Truncate

MODAL SELECTION & MODEL REDUCTION FOR MULTI-FLEXIBLE BODY DYNAMIC SYSTEM

- Modal selection & model reduction is required due to
  - Cost effective controller analysis and design for large order system
  - Nonlinear time domain simulation requires to select a small number of significant flexible modes in order to be computational efficient and cost effective

- Status
  - Methods are available for single flexible body modal selection and model reduction, such as, modal cost, component cost analysis, balanced realization.
  - Modified component cost analysis menhod was developed for Space Station applications. The method is based on quasi-linearization at discrete points (e.g., discrete a-gimbal angles of power boom for solar arrays) and component approach to retain the modal identity at sub-structure level. Detail is included.

- Advanced technology need:
  - Multi-flex body dynamic system modal selection and model reduction for non-linear dynamic system (e.g., considerating large angular rotation of a-gimbal angle)

POTENTIAL CMG DEVELOPMENT AREAS

- Replacement of Metal Rotor with High-Speed Fluid Moment Loop Could Potentially Improve:
  - CMG Safety Characteristics (Failure Effects)
  - Power, Weight & Cost

POTENTIAL CMG DEVELOPMENT AREAS

- Larger, More Efficient Shell Rotor Designs (WP-02 CMG Trade Study Results)
  - 5,000 Ft-Lb-Sec CMG Rotor More Cost Effective than Current 3,500 Ft-Lb-Sec CMG Design; 4 Rather Than 6 CMGs Could Satisfy Space Station Basic Momentum Storage Requirement of 20,000 Ft-Lb-Sec
  - Shell Rotor Designs Have Superior Mass Distribution Properties than Baseline One-Piece I-Web Rotor Design; Shell Rotor Has Most of Its Mass at Rim
    Two Shell Rotor Types:
    - Welded Multi-Piece (5) Shell
    - Bi-Metal Thermally Fitted Rim, No Welds (e.g. Hubble Space Telescope Reaction Wheel Design)
  - Space Station Selection of 3,500 Ft-Lb-Sec, One-Piece Rotor CMG Based of Design Maturity; Baseline SSF CMG Modification of Prototype CMG Developed by Bendix for Marshall Flight Control Center (MSFC)
- Electro-Magnetically Suspended Rotor Can Significantly Reduce High-Frequency Induced Vibrations; Existing Russian MIR CMG Has Electro-Magnetic Rotor Bearing System

LUNAR/MARS INITIATIVE
POTENTIAL ACS DEVELOPMENT AREAS FOR SSF

- Control Moment Gyros (CMGs)
  - Larger, More Efficient Shell Rotor Designs
  - Electro-Magnetically Suspended Rotor
  - Fluid Moment Loop Replacing Spinning Rotor Designs
- Multi-Flexible Body Model Reduction Techniques
- Symbolic Manipulation Software Development
  - Simulation Algorithm (Program Development) for Multi-Flexible Body Dynamic Systems
  - Flight Software Development

LUNAR/MARS INITIATIVE
INCREASED ACS MOMENTUM STORAGE

- Lunar/Mars Initiative Most Likely Require Additional ACS Momentum Storage Capability
- Methods of Providing Increased ACS Momentum Storage
  - Add More Double-Gimbal CMGs (DGCMG) of the Same Design as the Existing CMGs (Wheel Momentum: 3500 Ft-Lb-Sec, Each)
  - Add New or Existing DGCMGs of Different Design to Existing CMG Set
  - Add Single-Gimbal CMGs (SGCMG), Either New or Existing Design, to Original DGCMG Configuration
- New CMG Steering Law Would Have to be Developed for SGCMG Option; Existing Steering Law can Accommodate the Additional DGCMG Options, Even If the New CMGs Have a Different Wheel Momentum Value
- All New or Existing CMGs Added to Original CMG Set Would Have to Meet Stringent SSF Manned Safety Requirements (i.e. Material Stress Corrosion Cracking Requirements, etc.)

LUNAR INITIATIVE
ACTIVE SSF MASS PROPERTY MANAGER NEEDED

■ Problem

- SSF Mass Properties Radically Modified During Propellant Loading of Lunar Vehicles
- Minimum Axis of Inertia Migrates from Y to Z Axis Causing Baseline ACS/Momentum Management System to Go Through Region of Instability When $I_{yy} \approx I_{zz}$; Adding Mass Along Z Axis During Propellant Loading Causes I_{yy} To Increase While I_{zz} Remains Basically Unchanged
- When $I_{yy} \approx I_{zz}$, No Roll Gravity Gradient Torque Along X (Roll) Axis Can Be Generated for Controlling CMG System Momentum

■ Potential Solution

- Develop Active SSF Mass Properties Management System Consisting of a Series of Ballast Tanks Containing SSF Consumables (Water, Propellant, etc) that Can Be Pumped Around the Station From Tank to Tank For the Purpose of Managing SSF Mass Properties
- Modifiy SSF Mass Properties Such That Z Axis Remains the Minimum Axis of Inertia Before, During and Following Propellant Loading

LUNAR/MARS INITIATIVE
LUNAR SSF CONFIGURATION
TORQUE EQUILIBRIUM ATTITUDE (TEA)

Estimated Roll TEA Versus Lunar Vehicle Mass

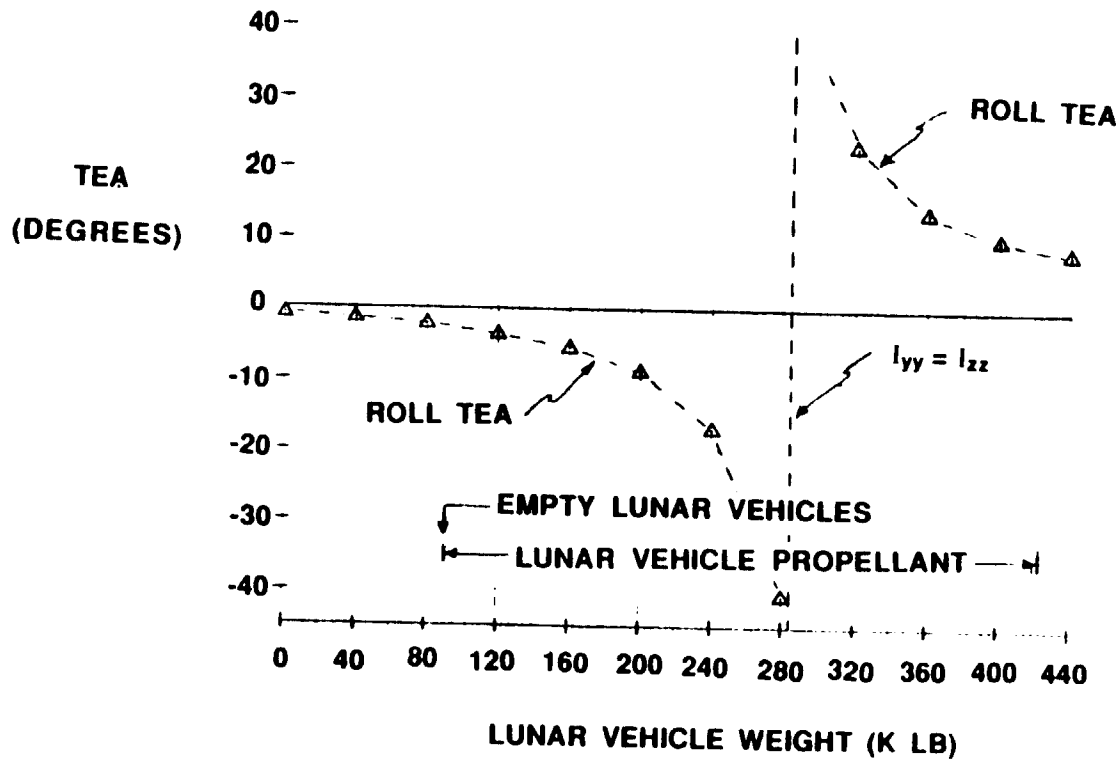

LUNAR/MARS INITIATIVE
LUNAR SSF CONFIGURATION
TORQUE EQUILIBRIUM ATTITUDE (TEA)

Estimated Pitch & Yaw TEA Versus Lunar Vehicle Mass

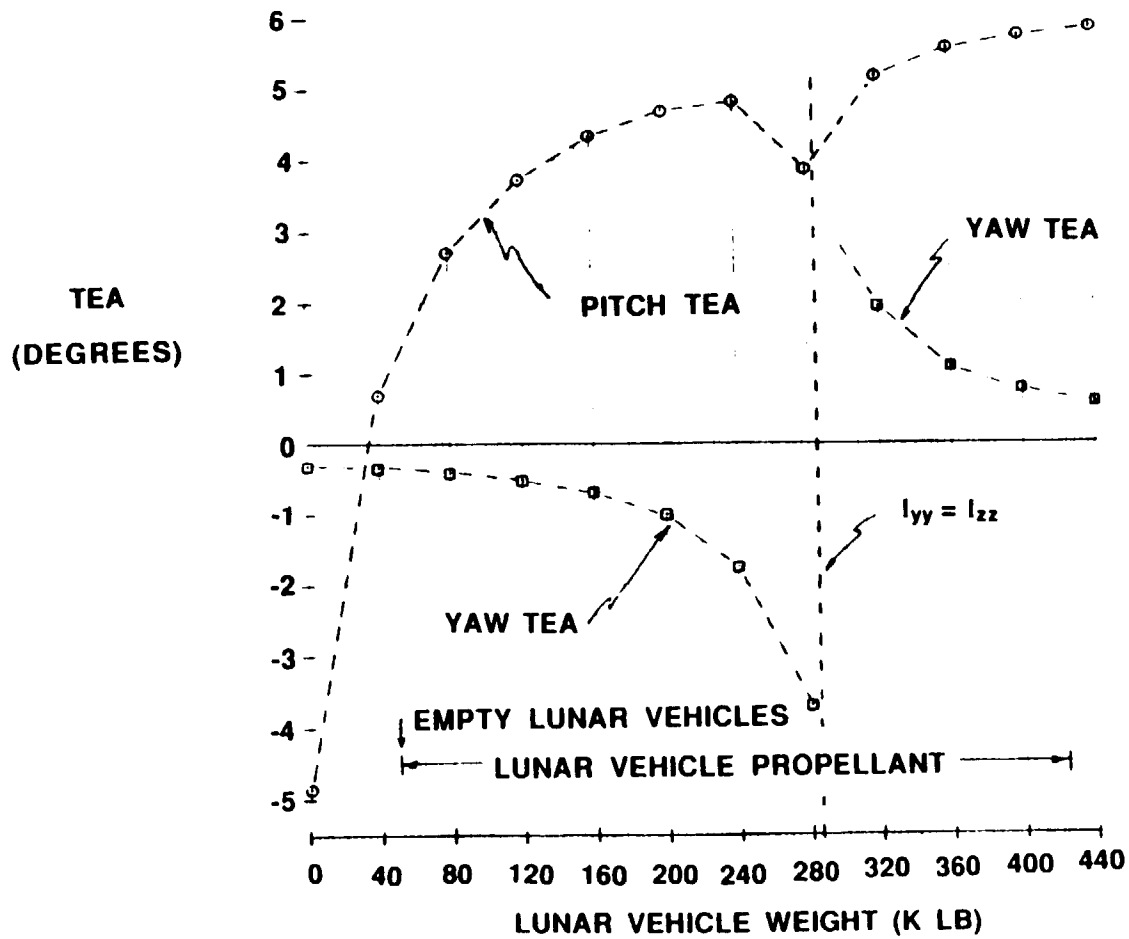

LUNAR/MARS INITIATIVE
LUNAR SPACE STATION CONFIGURATION

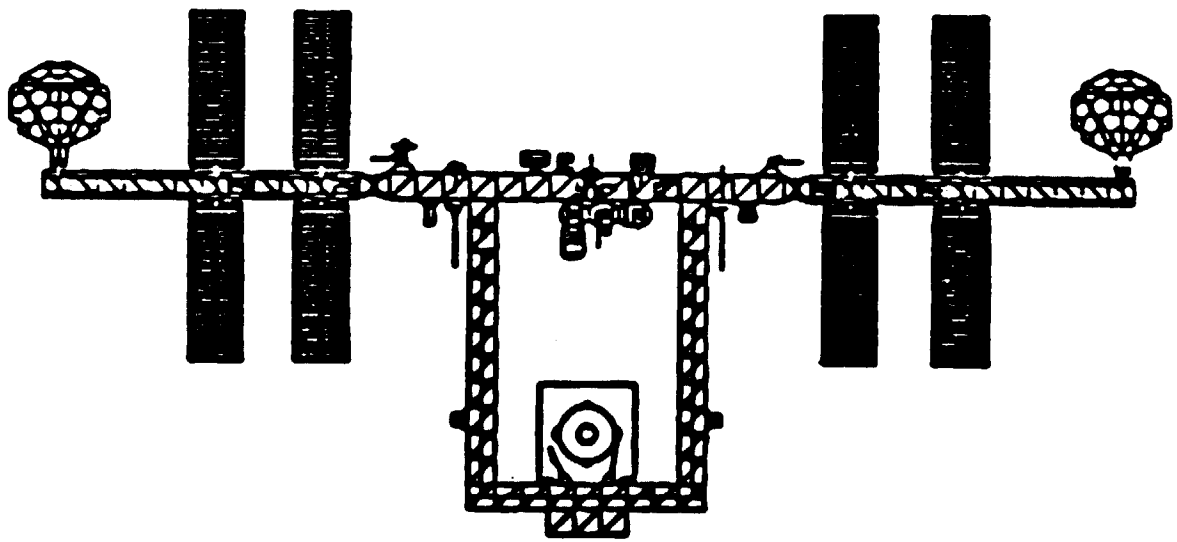

SSF without Lunar Vehicles

Mass: 510,000 Lb
Principal Moments of Inertia:
$I_{xx} = 1.9 \times 10^8$ Slug-Ft^2
$I_{yy} = 0.5 \times 10^8$ Slug-Ft^2
$I_{zz} = 1.6 \times 10^8$ Slug-Ft^2
Center of Gravity:
X: -15.5 Ft
Y: -2.9 Ft
Z: 21.9 Ft

SSF with Lunar Vehicles & Propellant

Mass: 941,000 Lb
Principal Moments of Inertia:
$I_{xx} = 3.3 \times 10^8$ Slug-Ft^2
$I_{yy} = 1.9 \times 10^8$ Slug-Ft^2
$I_{zz} = 1.6 \times 10^8$ Slug-Ft^2
Center of Gravity:
X: -24.3 Ft
Y: -1.6 Ft
Z: 83.4 Ft

LUNAR/MARS INITIATIVE
ACS CONTROLLER OPERATING MODES

- **Momentum Emphasis Mode**
  - Minimizes CMG Momentum Excursions Primarily using Second-Order Aerodynamic Rejection Filters
  - Tracks Natural Torque Equilibrium Attitude (TEA) in All Three Axes
  - Centers CMG Momentum in All Axes
  - Switch Positions: In-Plane, SW1 thru SW5 = 0
    Out-of-Plane, SW6 & SW7 = 0

LUNAR/MARS INITIATIVE
ACS CONTROLLER OPERATING MODES

- **Attitude Emphasis Mode**
  - Minimizes Attitude Excursions (Pointing Stability) Primarily using Second-Order Aerodynamic Rejection Filters
  - Tracks Torque Equilibrium Attitude (TEA)
    - In-Plane (Roll, Yaw) TEA Selectable within CMG Momentum Storage Capability
  - Normally, Roll and Yaw Axes Aligned with LVLH Frame (In-Plane Momentum Bias Generated such that CMG Gyroscopic Bias Torque $-\underline{\omega}_o \times \underline{H}_{CMG}$ Balances Net Disturbance Torques)
  - Centers Pitch Axis CMG Momentum
  - Switch Positions: In-Plane, SW1 thru SW5 = 1
    Out-of-Plane, SW6 & SW7 = 1

BASELINE IN-PLANE ACS/MOMENTUM CONTROL SYSTEM

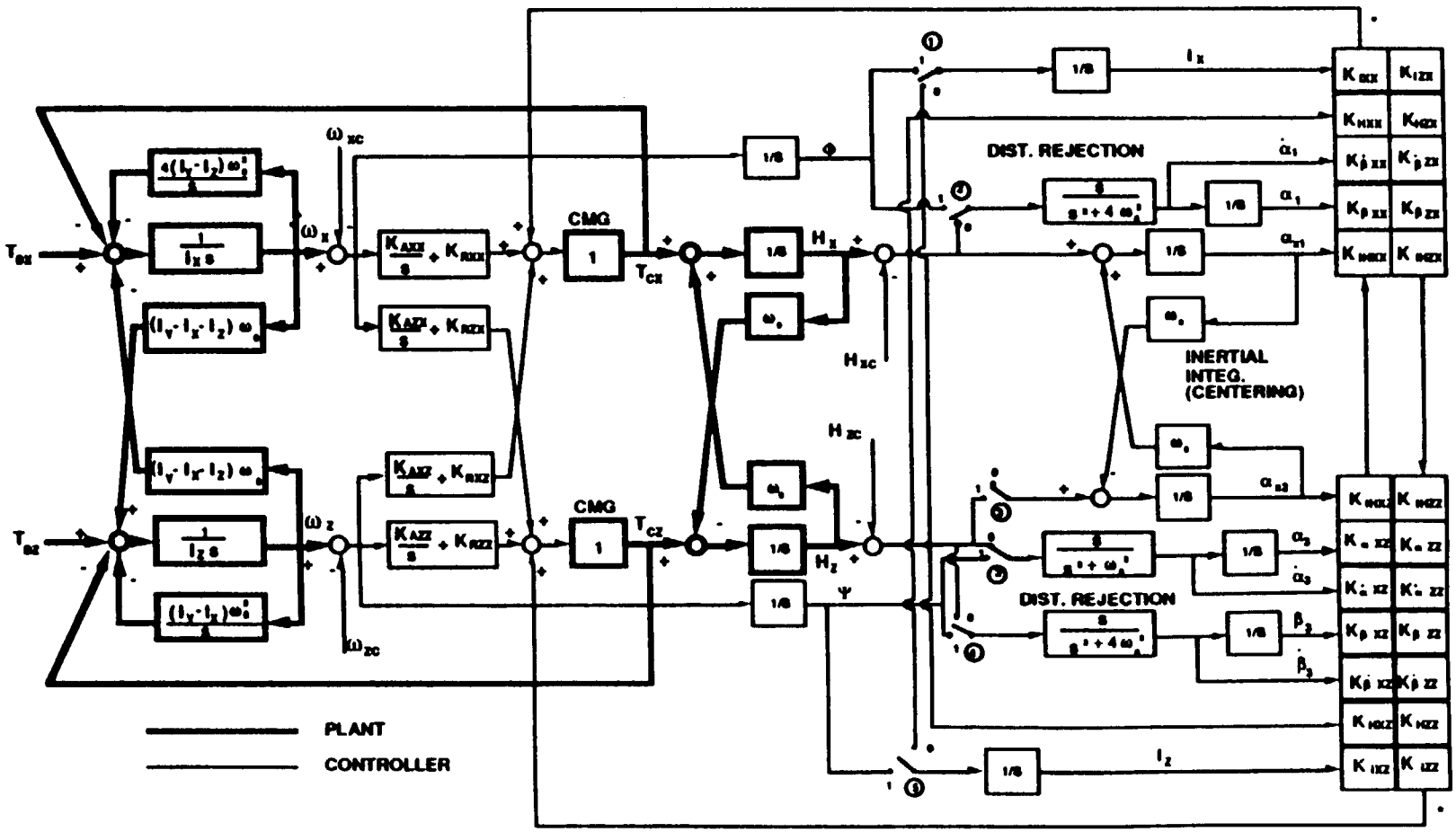

• SUMMATION OF THE 12 GAIN-STATE PRODUCTS

BASELINE OUT-OF-PLANE ACS/MOMENTUM CONTROL SYSTEM

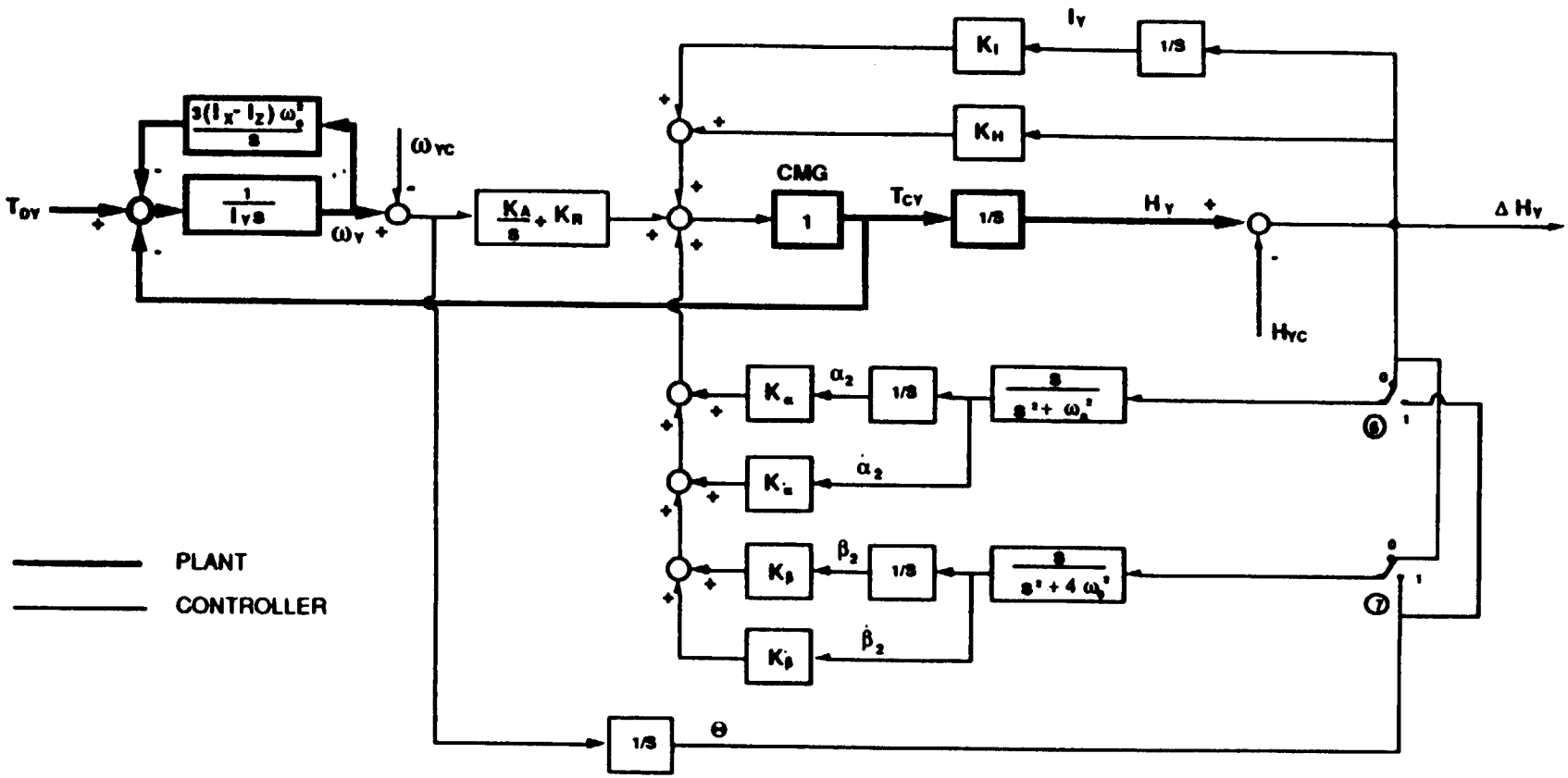

LUNAR/MARS INITIATIVE
BASELINE SSF ATTITUDE CONTROL SYSTEM (ACS)

- Baseline ACS Architecture Consists of Two De-Coupled Controllers:
  - Out-of-Plane (Pitch) Axis Controller
  - In-Plane (Roll/Yaw) Controller
- ACS Controllers Have Two Primary Modes of Operation:
  - Attitude Emphasis
  - Momentum Emphasis
- ACS Controllers Can Also Operate in Mixed Mode: One Controller in Attitude Emphasis While Other in Momentum Emphasis
- Controller Gains Can Be Computed Using Various Techniques: Linear Quadratic Regular (LQR) Synthesis , H Infinity ($H_{-\infty}$) Control, Regional Pole Placement, and Optimal Eigen-Structure Assignment

LUNAR/MARS INITIATIVE
SSF BASELINE ATTITUDE CONTROL SYSTEM (ACS)

- Baseline ACS Designed to Accommodate Attitude Requirements for Wide Range of SSF Configurations: Assembly, Permanently Manned (PMC), Phase I Assembly Complete (AC), and Growth (Proposed Lunar/Mars Initiative?)

- Attitude Control Effectors

  - Primary: Six (6) Double-Gimbaled Control Moment Gyros (CMGs) with Spherical Momentum Storage Capabilities for 21,000 Ft-Lb-Sec
  - Backup: Reaction Control Thrusters

- Active Momentum Management Using Natural SSF Gravity Gradient Torque Environment to Maintain CMG System Momentum Within Limited Momentum Envelope - Only Small Continuous Attitude Adjustments Required about TEA

- Space Station Attitude Controlled about Torque Equilibrium Attitude (TEA) to Prevent Secular CMG System Momentum Buildup Due to Unbalanced External Torques

- Primary Configuration Design Issue: Managing SSF Mass Property Growth to Ensure Adequate Gravity Gradient Torque Environment for Momentum Management

IMPACT OF LUNAR/MARS MISSIONS TO SSF ACS

- Potential Impact
  - ACS to accommodate mass of 60/140 tonnes
  - TEA impact & mass property management
  - Docking/berthing of lunar transfer vehicle of 30/? tonnes
  - Large flexible structures

LUNAR/MARS MISSIONS PROFILES

Lunar Mission Profile

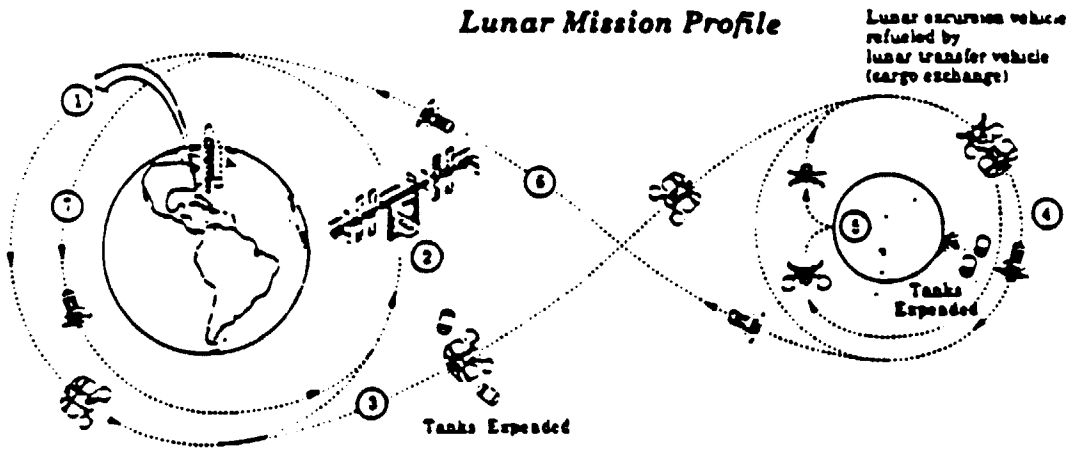

1. Payload delivered to Space Station Freedom
2. Lunar transfer vehicle mated with payload at Freedom
3. Trans-lunar phase with lunar transfer vehicle
4. Lunar transfer vehicle rendezvous with lunar excursion vehicle from Moon
5. Excursion vehicle returns to Moon with payload
6. Trans-Earth phase with transfer vehicle
7. Transfer vehicle aerobrake maneuver and return to Freedom

Mars Mission Profile

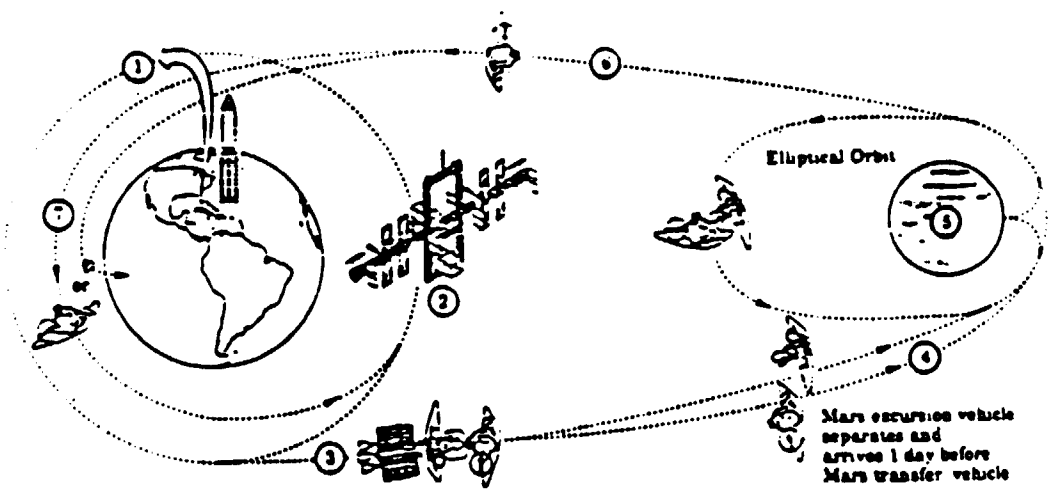

1. Payload delivered to Space Station Freedom
2. Mars transfer vehicle mated with payload at Freedom
3. Trans-Mars phase with Mars transfer vehicle
4. Mars transfer vehicle remains in Mars orbit; Mars excursion vehicle descends to surface
5. Excursion vehicle to/from Mars surface
6. Trans-Earth phase with transfer vehicle
7. Transfer vehicle aerobrake maneuver and return

Synopsis

This presentation discusses SSF attitude control system current capabilities, and identifies and discusses design issues and technologies required to support the Lunar/Mars mission. The SSF primary control moment gyro (CMG) attitude control and momentum management system is briefly described. Particular emphasis is given on how to accommodate construction of Lunar and Mars assembly facilities at SSF and to support Lunar/Mars missions. Some design issues include: (1) impact of Lunar/Mars assembly facilities on SSF torque equilibium attitude (TEA), (2) anticipated need for additional CMG momentum storage and means of providing this additional storage, (3) multi-flexible body model reduction, and (4) application of symbolic manipulation, e.g., symbolic generated multi-flexible body equations of motion, dynamic modelling, and symbolic flight software.

PAGE 62 INTENTIONALLY BLANK

PRECEDING PAGE BLANK NOT FILMED

SSF ATTITUDE CONTROL SYSTEM ASSESSMENT TO SUPPORT LUNAR/MARS INITIATIVES*

John F. L. Lee, PhD
Sr Engineering Fellow

John A. Yeichner
Project Staff Engineer

Honeywell, Inc.
Space Systems Group
Space Station Department
Clearwater, Florida

* Prepared for NASA/OAST sponsored "Technology for Space Station Evolution - A Workshop"
Jan. 16-19, 1990, Dallas, Texas

THIS PAGE INTENTIONALLY BLANK

Attitude Control and Stabilization

Invited Presentations

PRECEDING PAGE BLANK NOT FILMED

PAGE 60 INTENTIONALLY BLANK

THIS PAGE INTENTIONALLY BLANK

PAGE 58 INTENTIONALLY BLANK

EVOLUTION AREAS FOR GN&C BEYOND PHASE II

- ADDITION OF TETHERS AND THEIR CONTROL MECHANISMS
  - MUST RESERVE COMPUTATION CAPABILITY IN TM SDP
  - MUST PROVIDE WIRING INTERFACES ON THE DMS BUS
- INCREASED STORED MOMENTUM LEVELS (I.E. NUMBER OF CMG'S)
  - MUST PROVIDE HARDWARE PROCUREMENT
  - MUST PROVIDE MOUNTING SLOTS ON PALLET
  - MUST PROVIDE HOOKS IN STEERING ALGORITHMS
- POSSIBLE NEW TORQUE EFFECTORS TO HANDLE SECULAR TORQUES WITHOUT DISTURBING ENVIRONMENT
- POSSIBLE NEW MASS DISTRIBUTION EFFECTORS TO CONTROL GRAVITY GRADIENT TORQUES
- POSSIBLE ARTICULATION EFFECTORS TO CONTROL NEW APPENDAGES OR PAYLOADS
- POSSIBLE NEW ATTITUDE TRANSFER SYSTEM TO SUPPORT PAYLOADS
- INCREASED LEVEL AND SOPHISTICATION OF FAULT ISOLATION TECHNIQUES
- IMPROVED ALGORITHMS FOR MANY GN&C FUNCTIONS
  - IMPROVED GPS ABSOLUTE AND RELATIVE STATE VECTOR DETERMINATION
  - OPTIMUM MOMENTUM MGMT SCHEMES

PRECEDING PAGE BLANK NOT FILMED

THIS PAGE INTENTIONALLY BLANK

IMPACT OF AUTOMATION

AREAS FOR AUTOMATION	BENEFIT
• TRAFFIC MGMT.	CAPABILITY TO MONITOR & CONTROL MULTIPLE VEHICLES
• DOCKING (IMPLEMENTATION TBD)	REDUCE CREW WORK LOAD
• COLLISON MONITORING	REDUCE CREW & GND. CONTROLLER WORK LOAD
• FDIR	REDUCE CREW WORK LOAD & DECREASE RECOVERY TIME
• NAVIGATION - GPS	IMPROVED STATE ACCURACY W/O CREW INVOLVEMENT
• ADAPTIVE ATT. CONTROL	IMPROVED SYSTEM PERFORMANCE IN THE PRESENCE OF VARYING VEHICLE CONFIG.
• PLANT CHARACTERIZATION & MODELING	STRUCTURAL FAILURE DETECTION

PAGE 56 INTENTIONALLY BLANK

PRECEDING PAGE BLANK NOT FILMED

THIS PAGE INTENTIONALLY BLANK

REQUIRED PHYSICAL IMPROVEMENTS (size, mass, etc.)

- NONE REQUIRED

PAGE 52 INTENTIONALLY BLANK

PRECEDING PAGE BLANK NOT FILMED

THIS PAGE INTENTIONALLY BLANK

REQUIRED PERFORMANCE IMPROVEMENTS

- NONE REQUIRED FOR CURRENT REQUIREMENTS
- PROGRAM HAS NOT YET ACCEPTED NEED FOR SSMB DIRECT RELATIVE RANGE RENDEZVOUS/DOCKING SENSOR (EG LASER RANGER)

PAGE 52 INTENTIONALLY BLANK

PRECEDING PAGE BLANK NOT FILMED

THIS PAGE INTENTIONALLY BLANK

PAGE 50 INTENTIONALLY BLANK

LOGISTICS: REPAIR AND RESUPPLY

- NOMINAL 90 DAY RESUPPLY CYCLE
- MINIMUM/MAXIMUM RESUPPLY INTERVALS OF 45 AND 135 DAYS
- SENSOR AND EFFECTOR MOUNTING TO BE DESIGNED TO FACILITATE REMOVAL/REPLACEMENT VIA EVA OR TELEROBOTIC MANIPULATORS WITH NO SPECIAL ALIGNMENT TOOLS
- ORU'S DESIGNED FOR 10 - 20 YEAR LIFE
- CMG ARRAY CONTAINS 1-2 READY TO USE ON-ORBIT SPARES OVER WHAT IS REQUIRED FOR NOMINAL OPERATIONS.
- CMG ELECTRONICS BOXES ARE ON THE OUTSIDE OF THE CMG MECH. ASSEMBLY TO FACILITATE EVA REMOVAL/REPLACEMENT WITHOUT AFFECTING MECH. ASSEMBLY
- CMG MECH. ASSEMBLY WILL NOT BE REPAIRABLE ON-ORBIT
- DMS STANDARD DATA PROCESSORS LOCATED INTERNAL TO HABITABLE MODULES TO FACILITATE REPLACEMENT
- PROP. RCS TANKS ARE REPLACED WHEN EMPTY AS A PART OF LOCATION SPECIFIC PROP. MODULES (IE. EACH MODULE IS AN INDEPENDENT ENTITY WITH TANKS, JETS, AND ELECTRONICS). ON-ORBIT SPARE MODULES WILL BE MAINTAINED IN SOME SPECIFIC LOCATIONS, READY FOR USE.

PRECEDING PAGE BLANK NOT FILMED

THIS PAGE INTENTIONALLY BLANK

PAGE 48 INTENTIONALLY BLANK

RESOURCE BUDGET OVER TIME

ORU	QUANT(HOT/COLD)	TOTAL AVG PWR (WATTS)
NOMINAL ACTIVITY		
STAR TRACKER	2/1	40
ISA	2/1	50
OMG	4/2	480
GRAND TOTAL AVG PWR 570		
CRITICAL ACTIVITY		
STAR TRACKER	3/0	60
ISA	3/0	75
OMG	5/1	600
GRAND TOTAL AVG PWR 735		
TRANSIENT VEHICLE CONFIGURATION		
STAR TRACKER	2/1	40
ISA	2/1	50
OMG	6/0	720
GRAND TOTAL AVG PWR 810		

PRECEDING PAGE BLANK NOT FILMED

THIS PAGE INTENTIONALLY BLANK

PAGE 46 INTENTIONALLY BLANK

PARTS DESCRIPTION, COUNT & CHARACTERISTICS

(unit mass, volume, & power)

ORU	QUANT.	UNIT WT.(LBS.)	AVG.PWR.(WATTS)	MAX PWR.(WATTS)	SIZE(CU. IN.)
STAR TRACKER	3	20	20	25 ?	≈1210
ISA	3	25	25	40	660-700
CMG	6	600	120-260	300	≤48X48X48
NAV BASE	1	≈130	- -	- -	≈34X40X3
WEIGHT TOTAL		**1930**			

PRECEDING PAGE BLANK NOT FILMED

THIS PAGE INTENTIONALLY BLANK

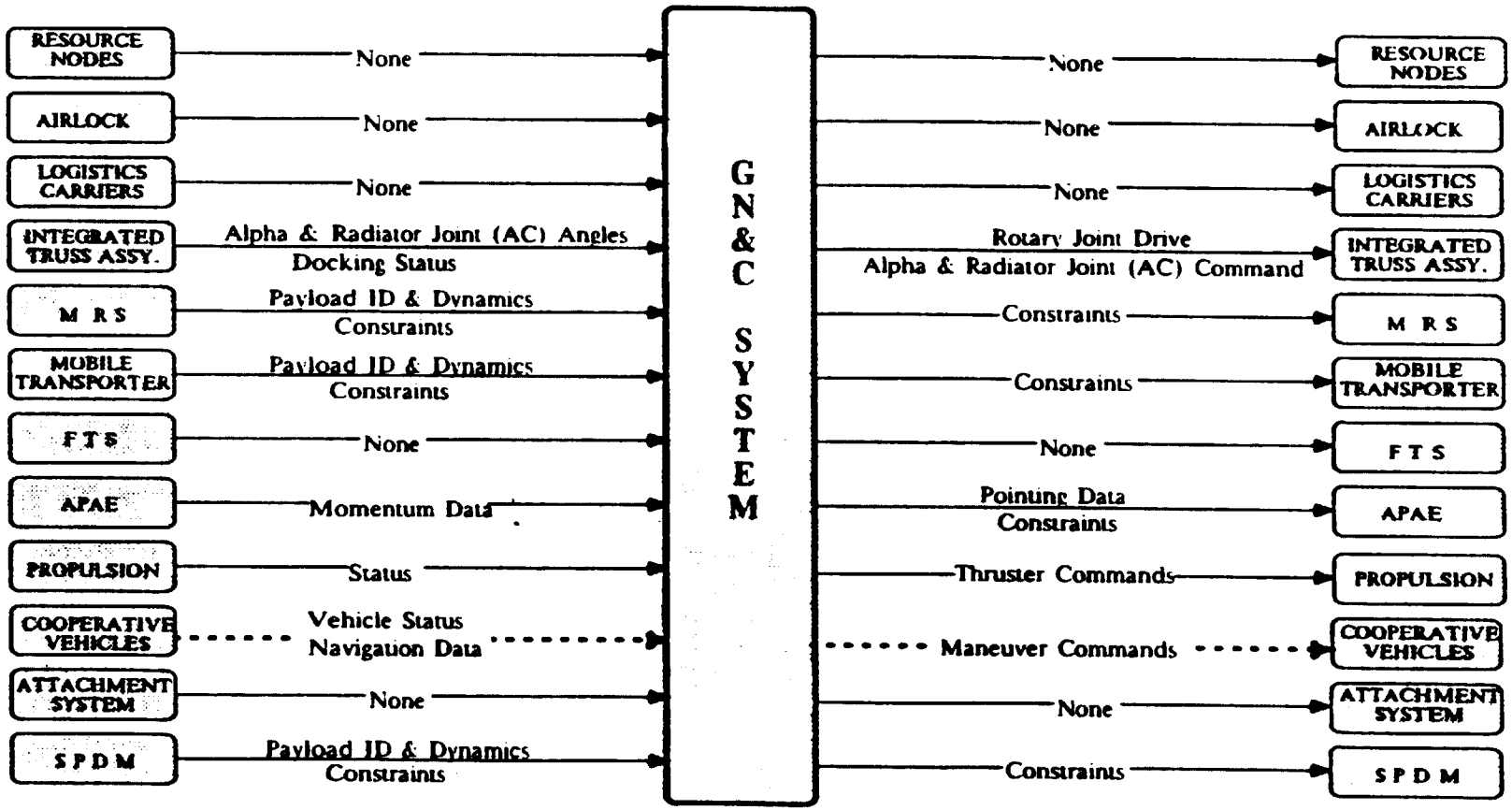

CONTINUED GN&C SYSTEM MAJOR FUNCTIONAL INTERFACES SHOWING PMC (SOLID LINES) AND AC (DASHED LINES)

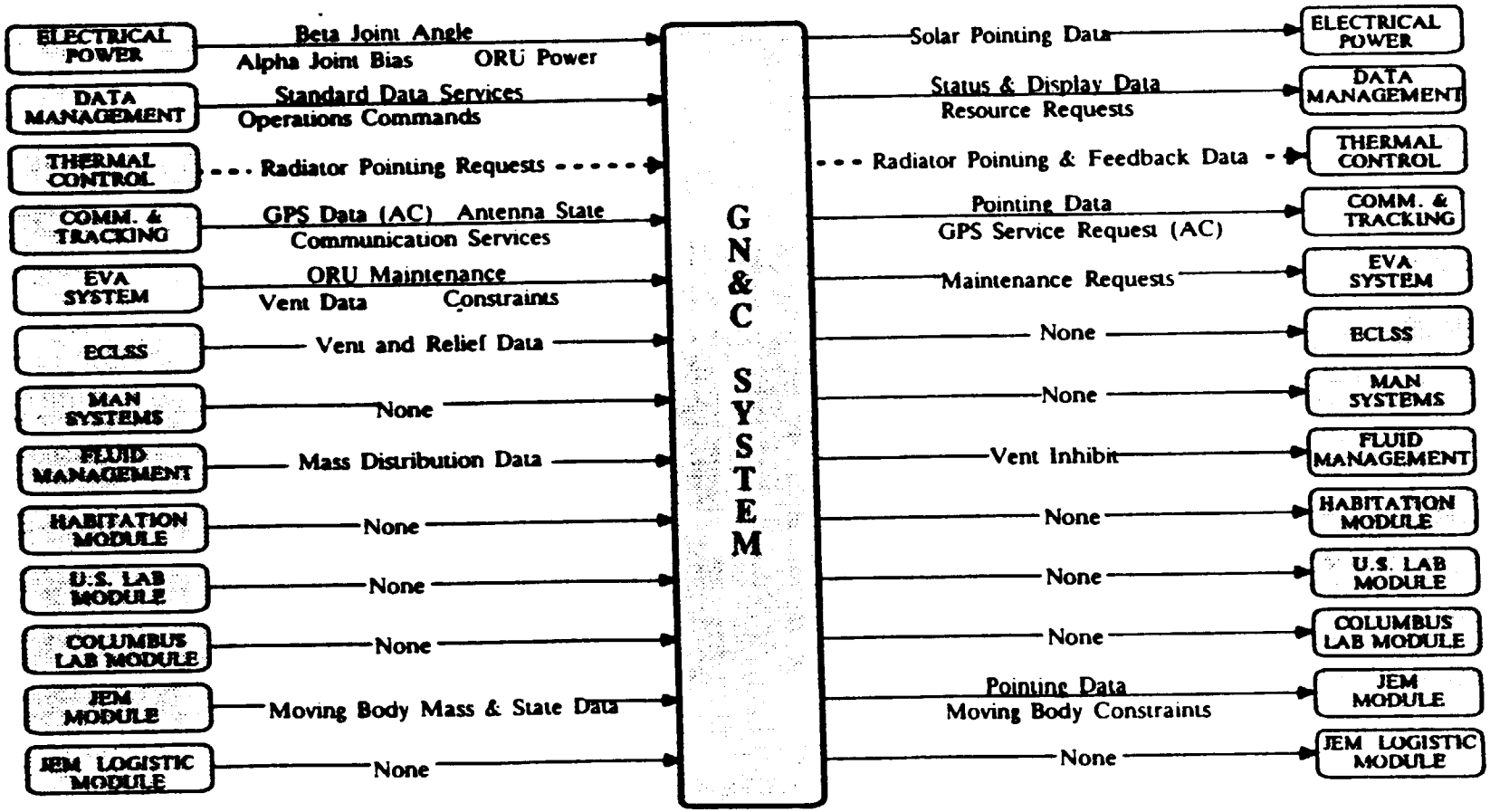

GN&C SYSTEM MAJOR FUNCTIONAL INTERFACES SHOWING PMC (SOLID LINES) AND AC (DASHED LINES)

- NAVIGATION:
  - GPS
  - TDRSS (GRD DETERMINATION)
- SERVICES TO USERS: ATTITUDE VECTOR, ATTITUDE RATE VECTOR, STATE VECTOR, PROPAGATED STATE VECTORS AND EPHEMIRIDES

OPERATIONAL DESCRIPTION

- SOURCES OF CONTROL INPUT:
  - AUTO SEQUENCING
  - CREW
  - UPLINK
- MODES:
  - ATTITUDE CONTROL:
    - LVLH TORQUE EQUILIBRIUM ATTITUDE SEEKER USING CMG'S WITH OR WITHOUT RCS IN OUTER LOOP
    - COMMANDED ATTITUDE MANEUVERS USING CMG'S OR RCS
    - REBOOST LVLH ATTITUDE HOLD USING RCS OFF-PULSING
    - LVLH ATTITUDE HOLD USING RCS SELECTABLE BY AXES
    - INERTIAL ATTITUDE HOLD USING RCS SELECTABLE BY AXES
    - RATE DAMPING WITH RCS SELECTABLE BY AXES
    - FREE DRIFT SELECTABLE BY AXES
    - VEHICLE DYNAMIC RESPONSE TESTING
  - GUIDANCE:
    - COASTING FLIGHT
      - UNPOWERED COAST
      - RESISTOJET FIRING
    - POWERED FLIGHT
      - REBOOST GUIDANCE TARGETING
        - IGNITION AND CUTOFF CMDS
        - STEERING CMDS DURING REBOOST
      - COLLISION AVOIDANCE
      - STATION REORIENTATION

PAGE 40 INTENTIONALLY BLANK

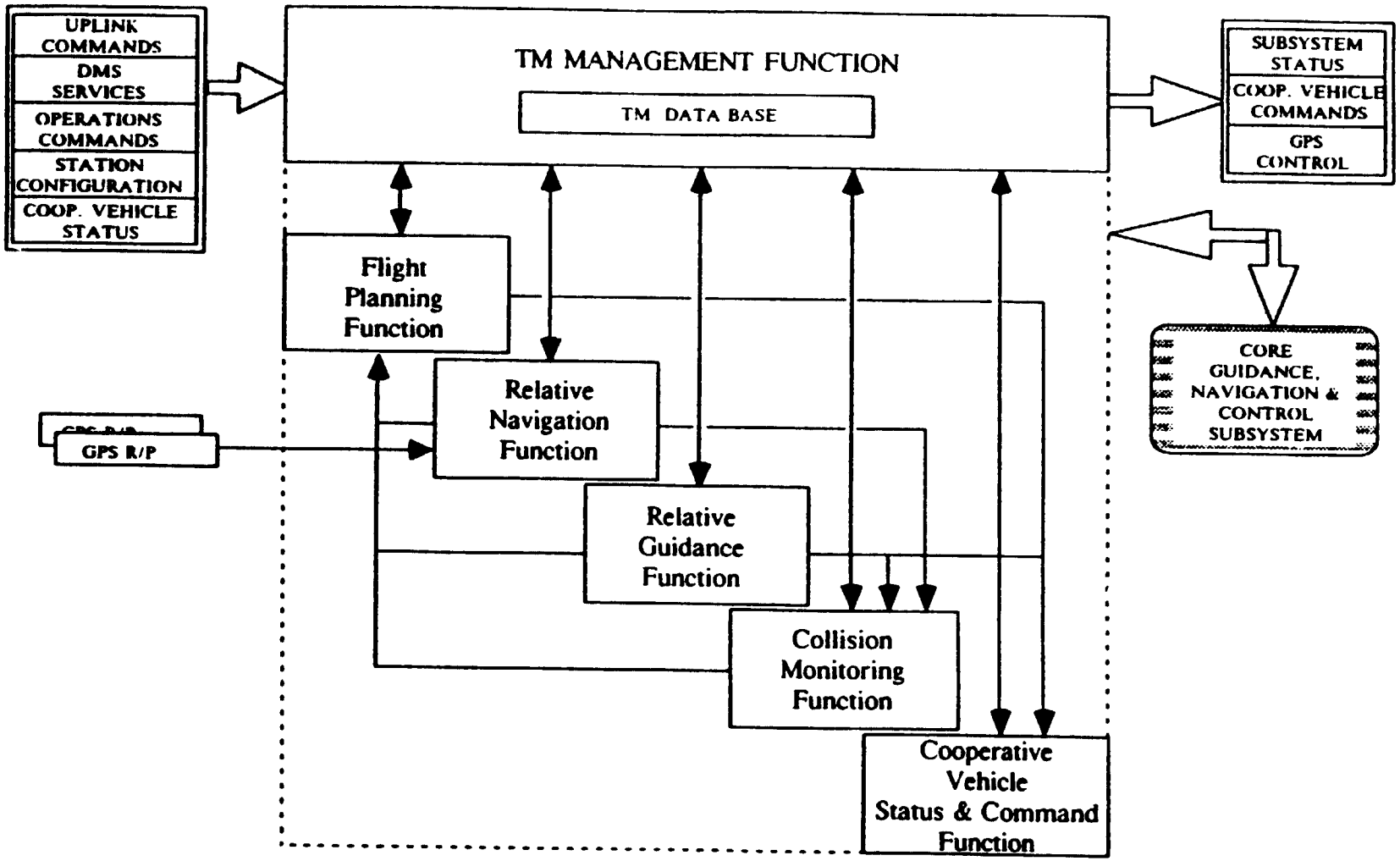

TRAFFIC MANAGEMENT SUBSYSTEM FUNCTIONAL SCHEMATIC (AC)

PRECEDING PAGE BLANK NOT FILMED

THIS PAGE INTENTIONALLY BLANK

ATTITUDE DETERMINATION AND CONTROL SYSTEM
ADCS OVERVIEW

FUNCTIONAL BLOCK DIAGRAM

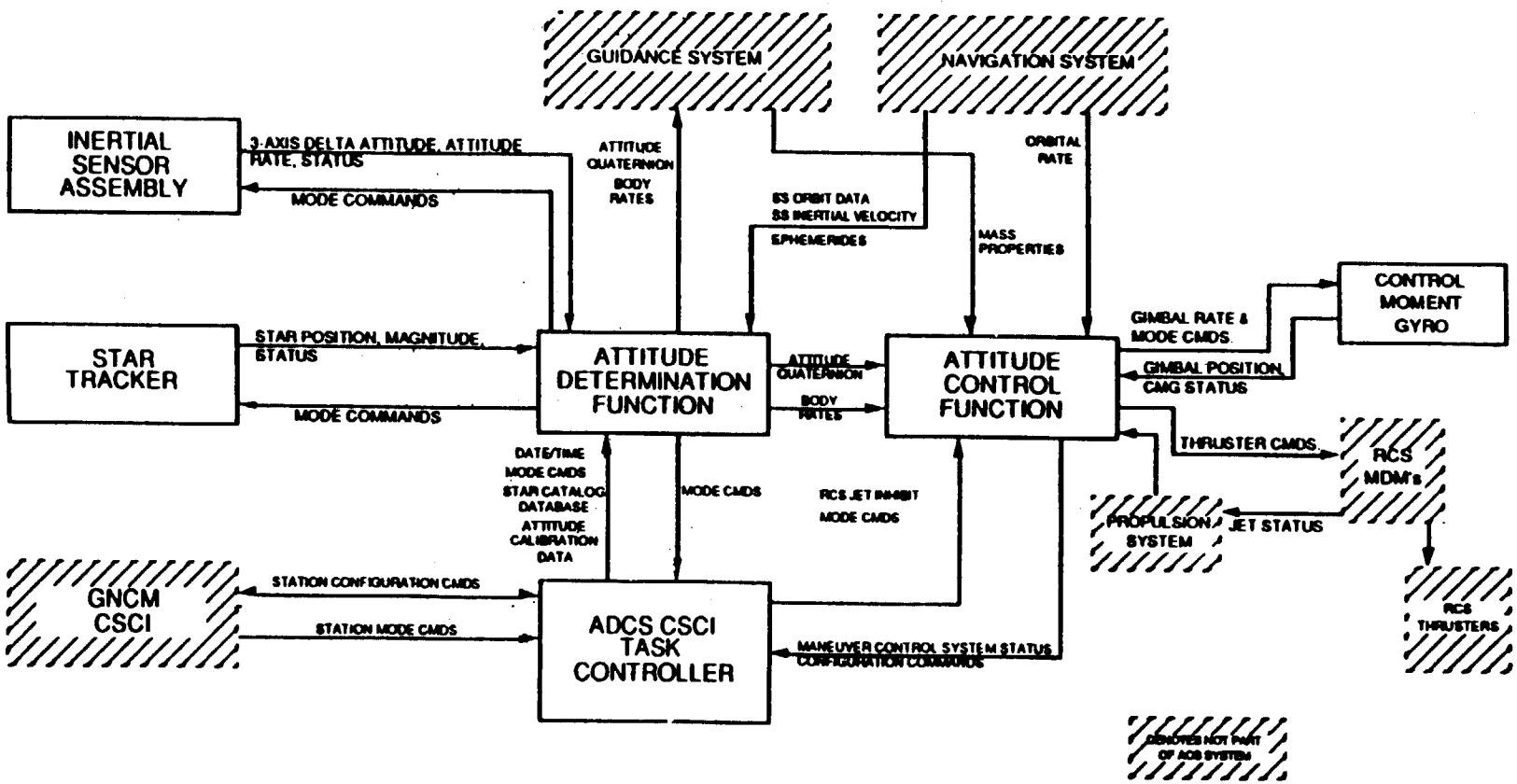

PAGE 38 INTENTIONALLY BLANK

PRECEDING PAGE BLANK NOT FILMED

THIS PAGE INTENTIONALLY BLANK

PAGE 36 INTENTIONALLY BLANK

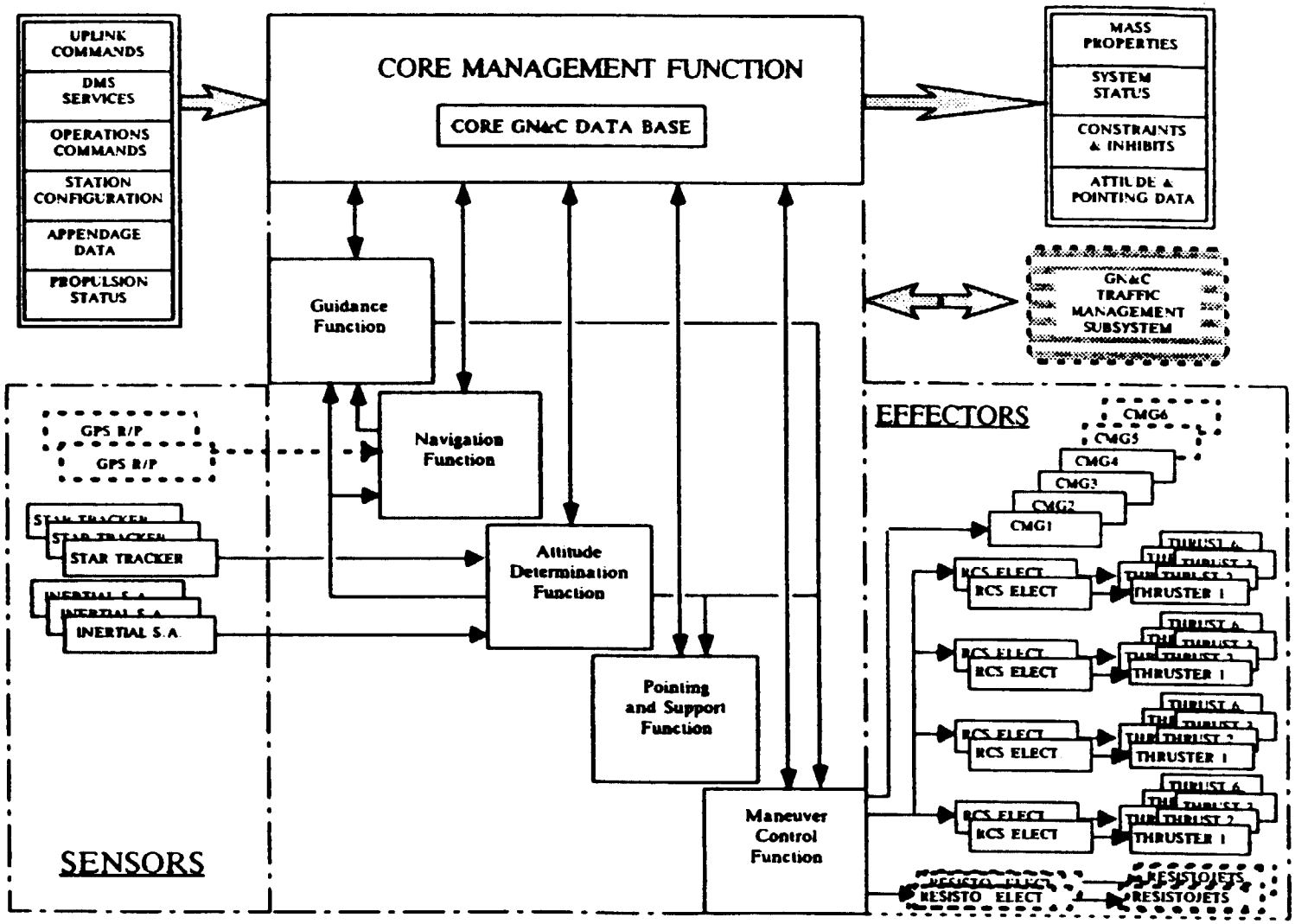

CORE GUIDANCE, NAVIGATION & CONTROL SUBSYSTEM FUNCTIONAL SCHEMATIC SHOWING PMC (SOLID LINES) & AC (DASHED LINES)

PRECEDING PAGE BLANK NOT FILMED

THIS PAGE INTENTIONALLY BLANK

PAGE 34 INTENTIONALLY BLANK

GN&C SYSTEM FUNCTIONAL ORGANIZATION

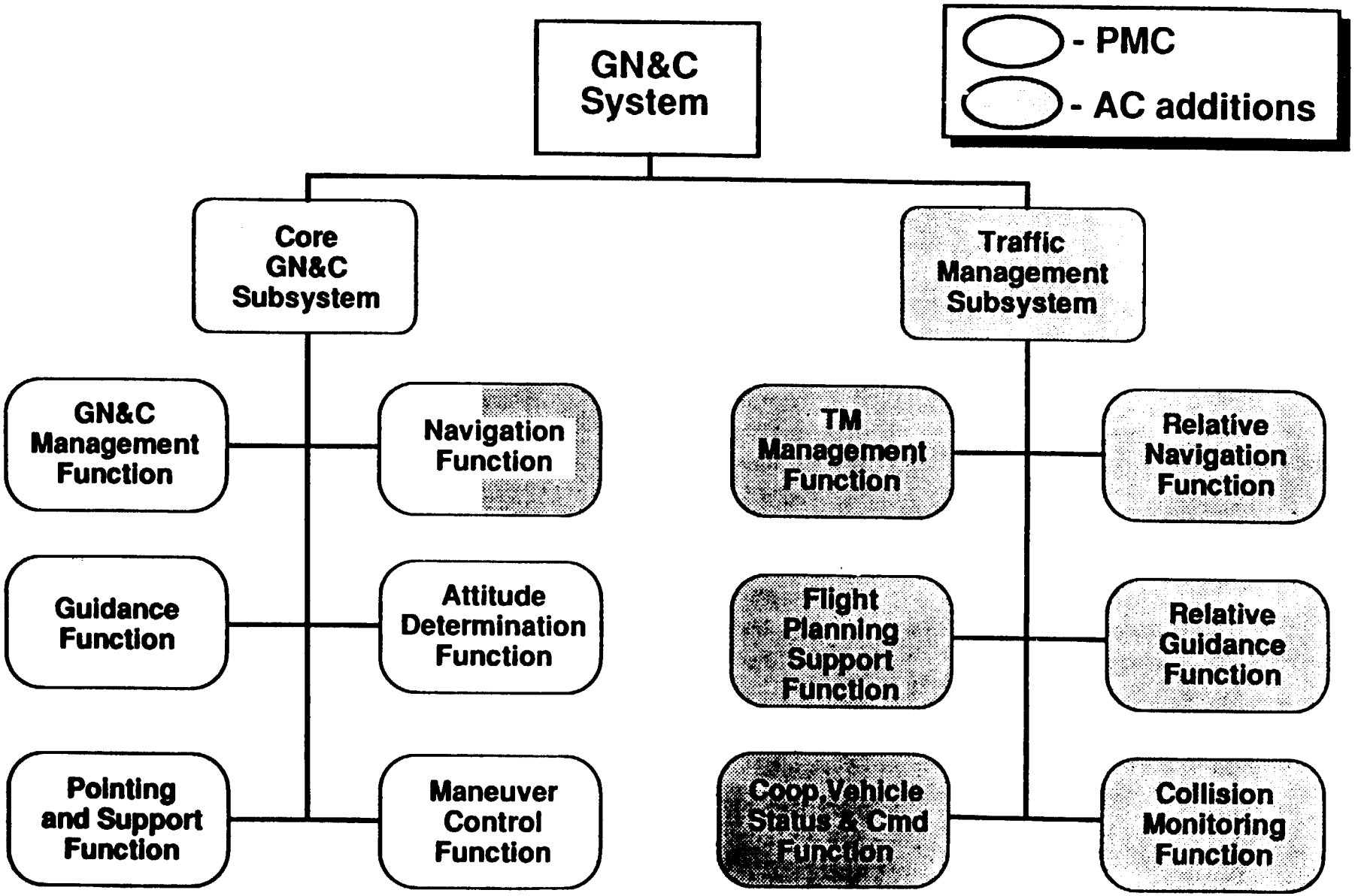

Space Station Freedom

PRECEDING PAGE BLANK NOT FILMED

THIS PAGE INTENTIONALLY BLANK

PRECEDING PAGE BLANK NOT FILMED

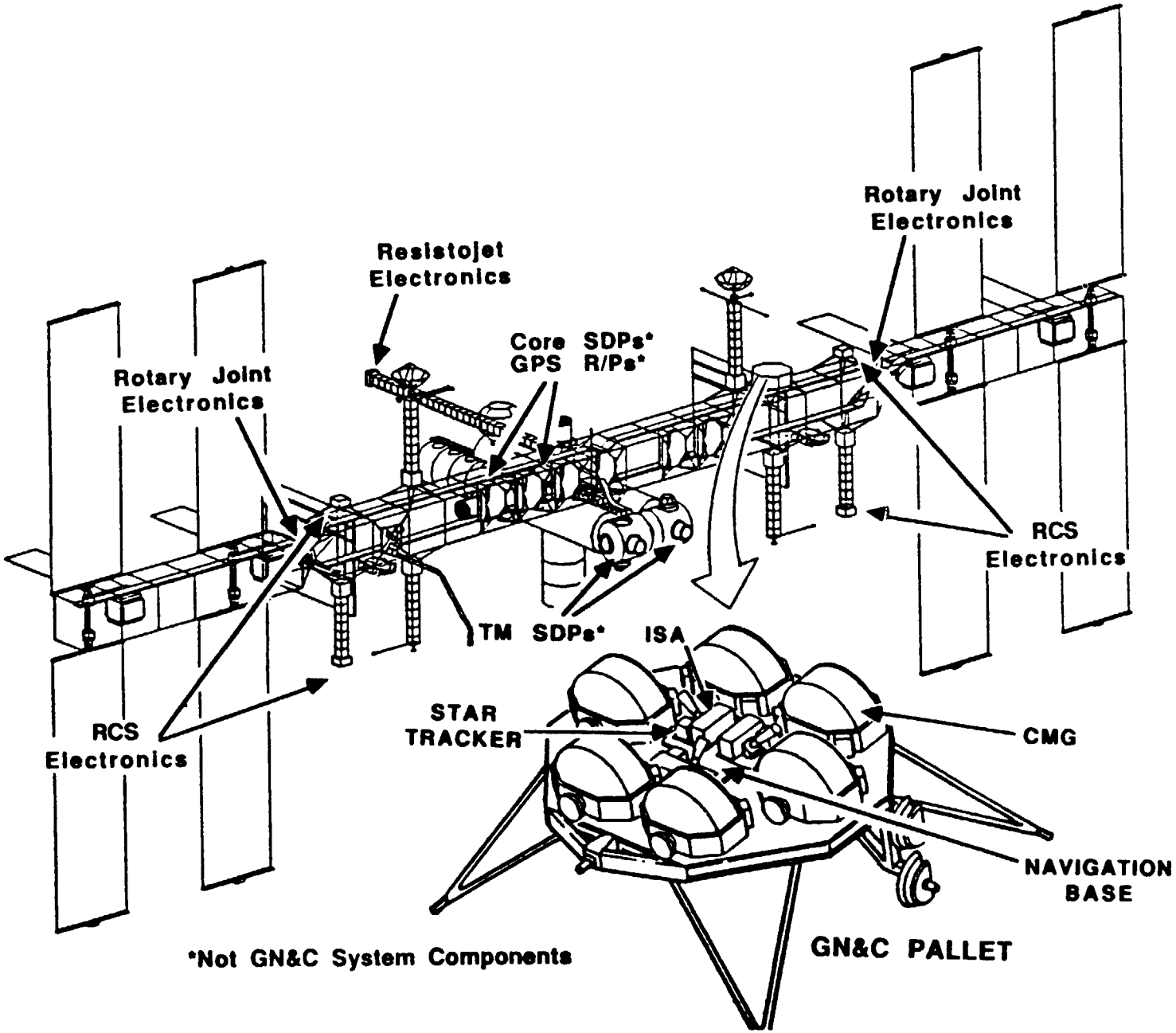

GN&C SYSTEM COMPONENT LOCATIONS

PAGE 32 INTENTIONALLY BLANK

THIS PAGE INTENTIONALLY BLANK

GN&C SYSTEM HARDWARE SCHEMATIC

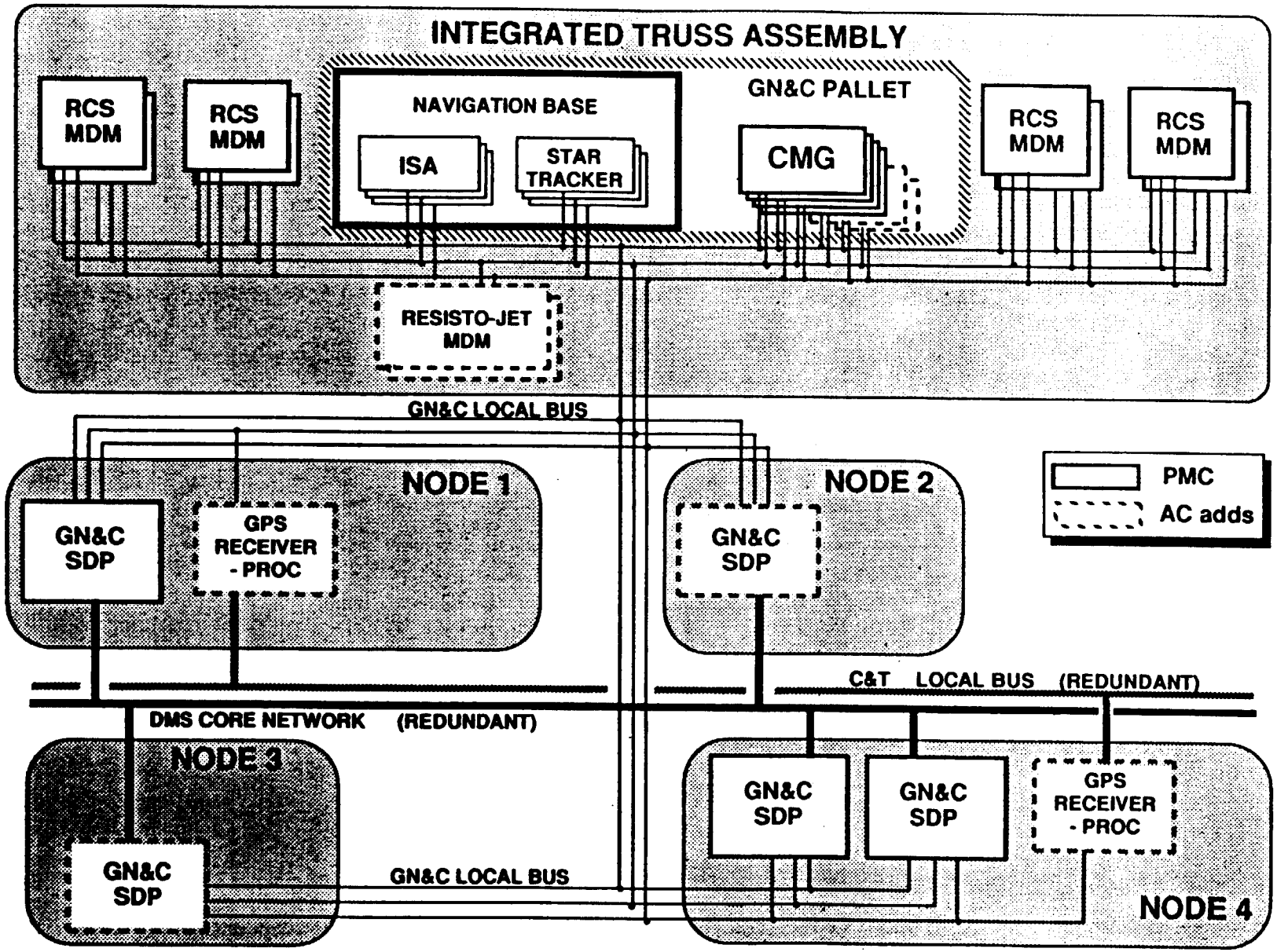

Space Station Freedom

PRECEDING PAGE BLANK NOT FILMED

PAGE 30 INTENTIONALLY BLANK

THIS PAGE INTENTIONALLY BLANK

PAGE 28 INTENTIONALLY BLANK

FUNCTIONAL DESCRIPTION

- ATTITUDE AND ATTITUDE RATE DETERMINATION USING STAR TRACKERS AND STRAP-DOWN RING LASER GYROS (INERTIAL SENSOR ASSEMBLY)
- COASTING FLT. ATTITUDE CONTROL USING CONTROL MOMENT GYROS NOMINALLY AND RCS FOR CONTINGENCIES
- ATTITUDE CONTROL SYSTEM USES PREDEFINED GAIN CHANGES TRIGGERED BY IDENTIFIED VEHICLE CONFIG. CHANGES
- GUIDANCE TO ACHIEVE DESIRED ALTITUDE PROFILE
- NAVIGATION USES GPS WITH TDRSS GROUND COMPUTATIONS PROVIDING BACKUP
- TRAFFIC MANAGEMENT PROVIDES:
    - RELATIVE STATE VECTORS (POSITION, VELOCITY, & TIME) FOR OTHER VEHICLES IN THE COMMAND/CONTROL ZONE
    - CONTROL AND/OR MONITORING OF REMOTE VEHICLE TRAJECTORY
    - COORDINATION OF MANEUVERS

PRECEDING PAGE BLANK NOT FILMED

THIS PAGE INTENTIONALLY BLANK

PAGE 26 INTENTIONALLY BLANK

DESCRIPTION OF THE CURRENT GUIDANCE, NAVIGATION & CONTROL SUBSYSTEM FOR SPACE STATION FREEDOM

BY GN&C SYSTEM DEVELOPMENT MANAGER
JOSEPH E. YEO
NASA/JOHNSON SPACE CENTER
JANUARY 16, 1990

PRECEDING PAGE BLANK NOT FILMED

TECHNOLOGY FOR SPACE STATION EVOLUTION - A WORKSHOP
JANUARY 16-19, 1990
DALLAS, TEXAS

THIS PAGE INTENTIONALLY BLANK

Attitude Control and Stabilization

Level III

Subsystem Presentation

OFFICE OF SPACE STATION PROGRAM MILESTONES AND BUDGET

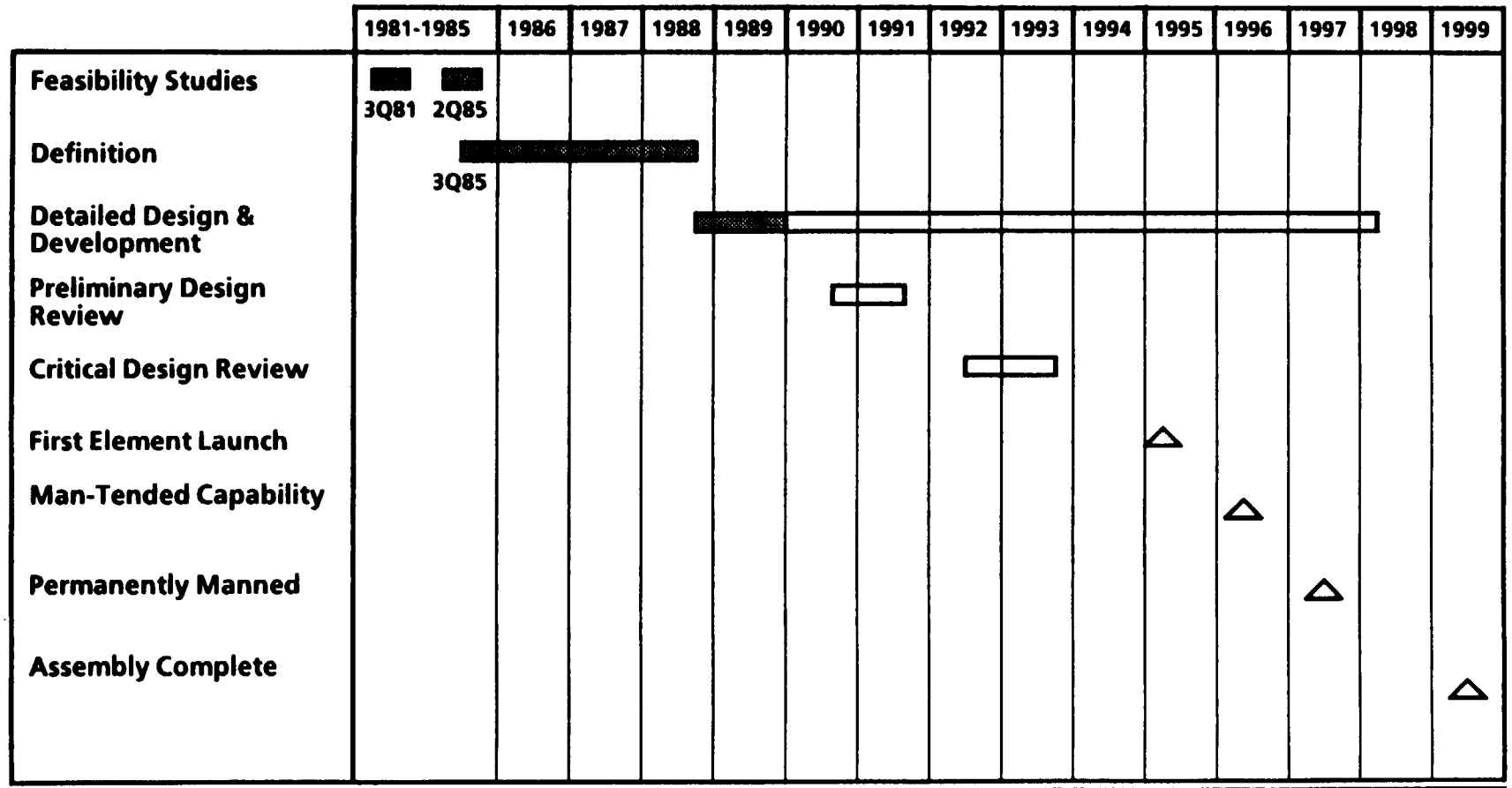

(Real Year $ in Millions)

	PRIOR	FY1989	FY1990
TOTAL	1166	900	1755

NASA SPACE STATION FREEDOM PROGRAM ORGANIZATION

LEVEL I

Office of Space Station, Washington, D.C.

POLICY AND OVERALL PROGRAM DIRECTION

ENGINEERING AND INTEGRATION CONTRACTOR

Reston, Virginia

GRUMMAN

LEVEL II

Space Station Program Office, Reston, VA

PROGRAM MANAGEMENT AND TECHNICAL CONTENT

LEVEL III

Various NASA Centers

PROJECT MANAGEMENT: ELEMENT DEFINITION AND DEVELOPMENT

CONTRACTORS

Multiple Locations

DETAILED DESIGN, MANUFACTURING, INTEGRATION AND TEST, PLUS ENGINEERING AND TECHNICAL SERVICES

WORK PACKAGE 1 MARSHALL	• Lab Module • Hab Module • Node Structure • Logistics Carriers • Environmental Control & Life Support Systems • Certain Module Outfitting & Distributed Systems	Boeing
WORK PACKAGE 2 JOHNSON	• Truss Structure and Utility Runs • Propulsion System • Data Management • Thermal Control • Communication & Tracking • Attitude Control • Extra Vehicular System	McDonnell Douglas
WORK PACKAGE 3 GODDARD	• Polar Platform • Payload Attach Points & Pointing Systems	General Electric
	• Flight Telerobotic Servicer	Martin Marietta
WORK PACKAGE 4 LEWIS	• Power Generation • Power Management and Distribution	Rocketdyne

SPACE STATION FREEDOM EVOLUTION (Continued)

- Future efforts will focus on definitizing
  - -- Assembly Complete evolution design accommodations
  - -- Phase II configuration and phasing
  - -- Lunar/Mars Transportation Node configuration, technology requirements, and phasing
  - -- Additional emphasis on Advanced Development tasks in enabling technology for station evolution

SPACE STATION FREEDOM EVOLUTION (Continued)

- Good progress is being made
  - -- User needs and resource requirements have been identified for a range of advanced mission scenarios
  - -- Primary evolution design accommodations (hooks & scars) have been identified
  - -- Preliminary reference configurations for evolution have been established
  - -- Advanced Development Program tasks have transitioned OAST-developed technology to the baseline station
  - -- Direct participation in the Human Exploration Initiative Tiger Team established preliminary Transportation Node requirements

SPACE STATION FREEDOM EVOLUTION (Continued)

- Evolution is a key design consideration
  - -- To meet anticipated user needs and advanced mission requirements
  - -- To improve the productivity and efficiency of flight/ ground systems
  - -- To avoid component and system obsolescence
- A Space Station evolution program is in place
  - -- Level I Strategic Plans and Programs Division
  - -- Advanced Programs budget line; $12M in FY90
  - -- LaRC Space Station Freedom Office technical lead
  - -- On-going involvement of 8 NASA Centers

SPACE STATION FREEDOM EVOLUTION

- Freedom is a permanent facility
  - -- Upgrades and configuration changes will take place on-orbit
- During the operational life of the Space Station
  - -- National priorities will change
  - -- User needs and mission requirements will change
  - -- Technology will evolve and components will become obsolete

TECHNOLOGY DEVELOPMENT

FREEDOM

MATERIALS AND STRUCTURES

- Materials performance and processing, deployment/assembly/construction, and structural dynamics

ENERGY CONVERSION

- Solar concentrator, laser power transmission/reception, waste heat rejection, and power subsystems

COMMUNICATIONS AND ELECTRONICS

- Space antenna, telecommunication systems, space interferometer systems, and Earth observations

PROPULSION

- Fluid management and low thrust propulsion

CONTROLS AND HUMAN FACTORS

- Flight controls and devices, information systems, teleoperation, and interactive human factors

SYSTEMS OPERATIONS

- Environmental effects, habitation, medical, tether systems, satellite and OTV servicing, and systems operations

SPACE STATION FREEDOM COMMERCIAL ACTIVITIES

- Administration Initiatives
  - -- FTS
    - NASA and OMB agreed to remove; not a viable candidate
  - -- Space Station Docking Systems
    - NASA developed
  - -- Neutral Buoyancy Facility at Johnson Space Center
    - Draft RFP was released; industry response was neutral
  - -- Space Station Processing Facility at Kennedy Space Center
    - Draft RFP was released; industry response was neutral
- Boeing Space Station Commercial Logistics Proposal
  - -- Under Agency review
- Memoranda of Understanding signed with:
  - -- Corabi International - telemedicine services
  - -- Coca Cola Company - liquid dispensing and monitoring

SPACE STATION SCIENCE

LIFE SCIENCES

- Space Biology
- Space Medicine
- Exobiology

ASTRONOMICAL SCIENCES

- Plasma Physics
- Solar Physics
- Astrometric Observations

MATERIALS SCIENCES

- Electronic Materials
- Biotechnology
- Combustion Science
- Metal, Alloy, Glass and Ceramics Processing

EARTH SYSTEM SCIENCES

- Global Hydrology
- Global Biogeochemistry
- Climatology
- Geophysics

SPACE STATION FREEDOM UTILIZATION

- Science
  - -- Provide opportunities for Life Science, Materials Science, Astronomical Science, and Earth System Science
  - -- Office of Space Science and Applications (OSSA) has selected for definition Earth Observation System investigations
    - Over 500 principal investigations and co-investigations were selected world-wide
  - -- OSSA has also selected for definition 13 Attached Payload investigations
- Commercial Utilization
  - -- Provide opportunities for commercial users (i.e. industrial researchers)
- Technology Development
  - -- Provide on-orbit demonstrations in: materials and structures, energy conversion, communications and electronics, propulsion, automation and robotics, and systems operations

SPACE STATION UTILIZATION ALLOCATIONS

	U.S.	CANADA	ESA	JAPAN
MANNED BASE				
1. Utilization Resources	71.4%	3.0%	12.8%	12.8%
2. User Accommodations				
a. NASA Lab Module	97%	3%		
b. NASA Attached Payload Accommodations Equipment	97%	3%		
c. ESA Attached Pressurized Module (APM)	46%	3%	51%	
d. ESA Man-Tended Free Flyer (MTFF)	(25%) (Option to use)		100%	
e. Japanese Experiment Module (JEM), consisting of a pressurized module, an exposed facility & experiment logistics modules	46%	3%		51%
PLATFORMS				
a. NASA Polar Platform	*	3%	*	
b. ESA Polar Platform	*	3%	*	

* Shared on a balanced reciprocal basis. Users may propose specific splits on actual payloads.

SCHEDULE

	Rephased Baseline	Prior
First Element Launch	March 95	(March 95)
Manned Tended Capability	April 96	(Nov 95)
Permanent Manned	July 97	(Dec 96)
Japanese Experimental Module (JEM)	Feb 98	(June 97)
ESA Module	July 98	(Aug 97)
Assembly Complete	Aug 99	(Feb 98)

SPACE STATION FREEDOM BASELINE (Continued)

FREEDOM

Major Studies

- Lab support equipment requirements
- Ultra-pure water availability
- Payload pointing
- ASTS (Animal Specimen Transport System)
- Electromagnetic interference monitoring
- Acceleration mapping system

SPACE STATION FREEDOM BASELINE (Continued)

Major Deferrals

- Full 75 kilowatt power from Feb 97 to Nov 97
- Crew Habitability
- Closed loop Oxygen and Carbon Dioxide
- Washer, dryer, freezer, etc; until 75 kW power available
- User ultra-pure water
- KSC 8 flight/year processing from March 95 to Jan 97
- Three 0-100 MBPS lines to single bus increased to 300 MBPS dual bus system at Assembly Complete
- Global Position System deferred until required to support ESA man-tended free flyer

SPACE STATION FREEDOM BASELINE

FREEDOM

Major Changes

- All direct current power system
- Shuttle suits exclusively
- Hydrazine propulsion
- One airlock (Hyperbaric)
- Passive cooling of external payloads
- Lab support equipment
- Solar dynamic power generated system test deleted
- Polar Platform unique hardware

INTERNATIONAL PARTICIPANTS IN THE SPACE STATION FREEDOM PROGRAM

	WHAT
EUROPEAN SPACE AGENCY (ESA) BELGIUM, DENMARK, FRANCE, GERMANY, ITALY, THE NETHERLANDS, NORWAY, SPAIN, SWEDEN, UNITED KINGDOM	ATTACHED PRESSURIZED MODULE POLAR PLATFORM MAN-TENDED FREE FLYER
JAPAN SCIENCE AND TECHNOLOGY AGENCY OF JAPAN	JAPANESE EXPERIMENT MODULE
CANADA CANADIAN SPACE AGENCY	MOBILE SERVICING CENTER SPECIAL PURPOSE DEXTEROUS MANIPULATOR MSC MAINTENANCE DEPOT

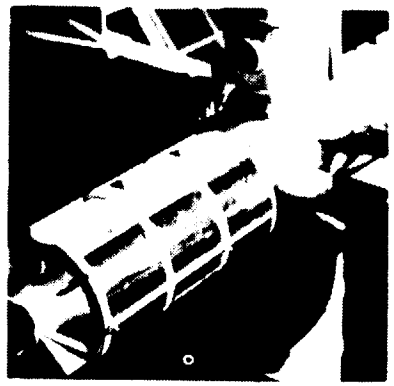

COLUMBUS

MOBILE SERVICE CENTRE

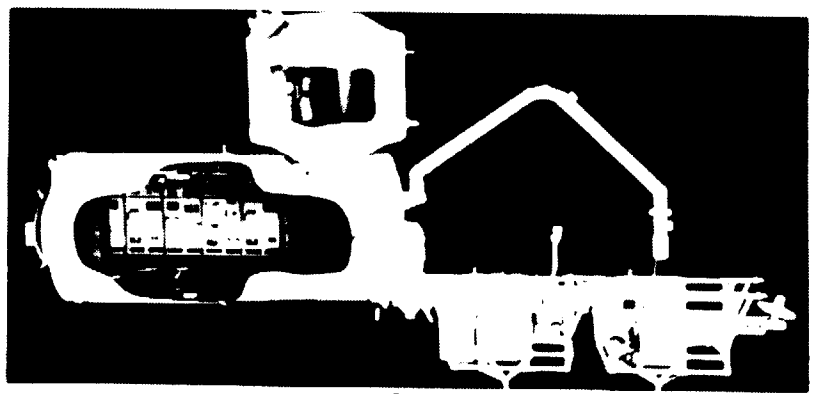

JAPANESE EXPERIMENT MODULE

ORIGINAL PAGE
BLACK AND WHITE PHOTOGRAPH

U.S. SPACE STATION PRESSURIZED MODULES

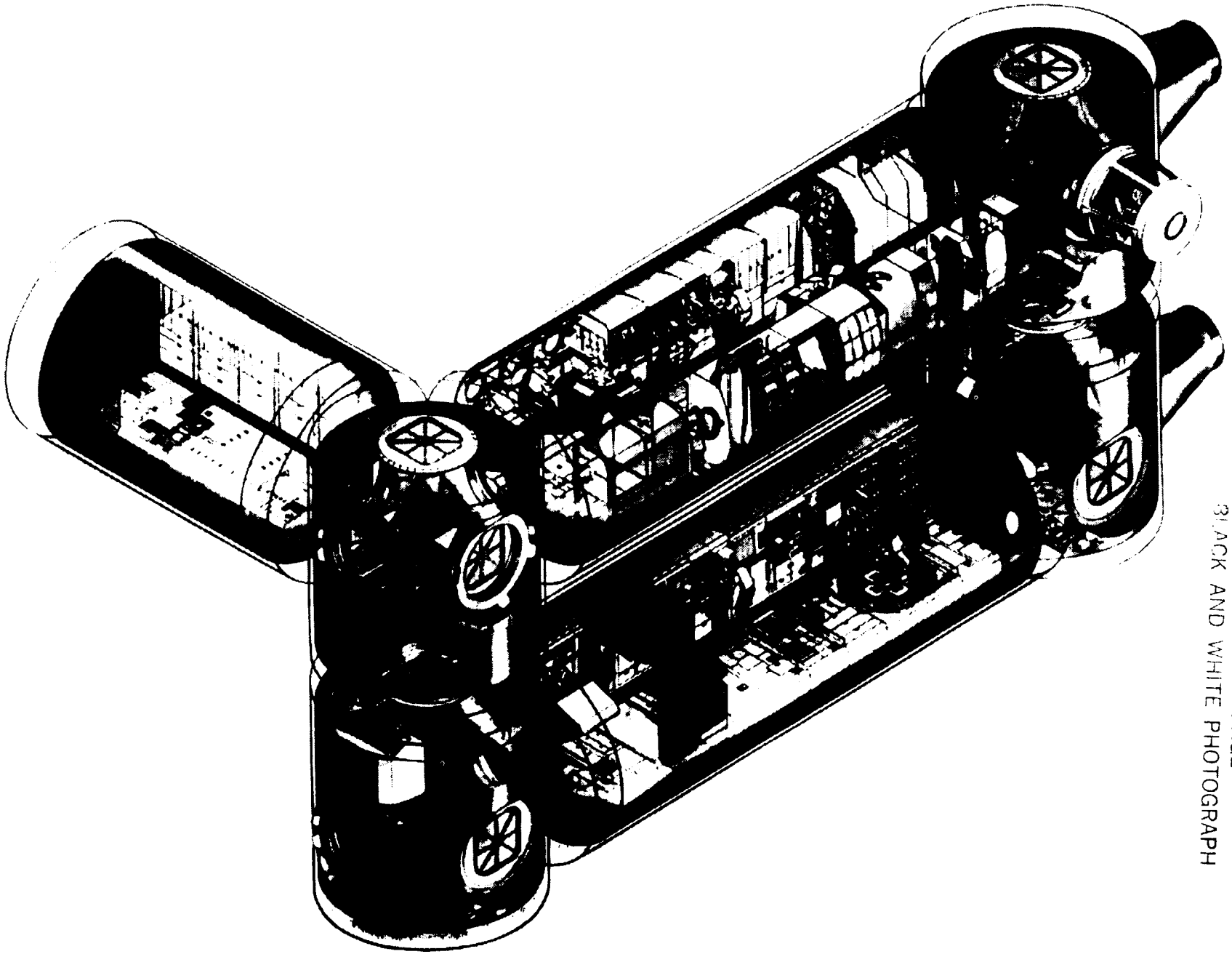

ORIGINAL PAGE
BLACK AND WHITE PHOTOGRAPH

SPACE STATION FREEDOM

ESA

ELEMENTS
- PRESSURIZED LABORATORY MODULE
- POLAR PLATFORM
- MANNED-TENDED FREE FLYER (MTFF)

JAPAN

ELEMENTS:
- PRESSURIZED LABORATORY MODULE & EXPOSED FACILITY
- EXPERIMENT LOGISTICS MODULE

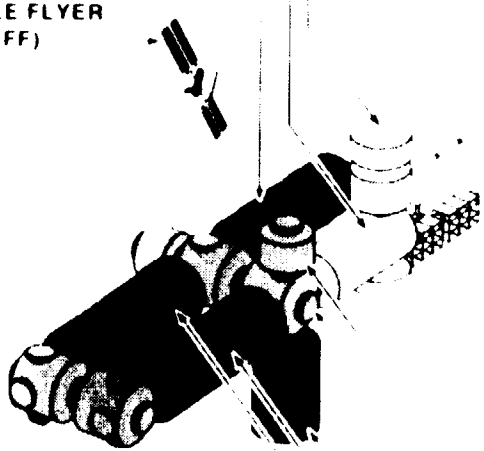

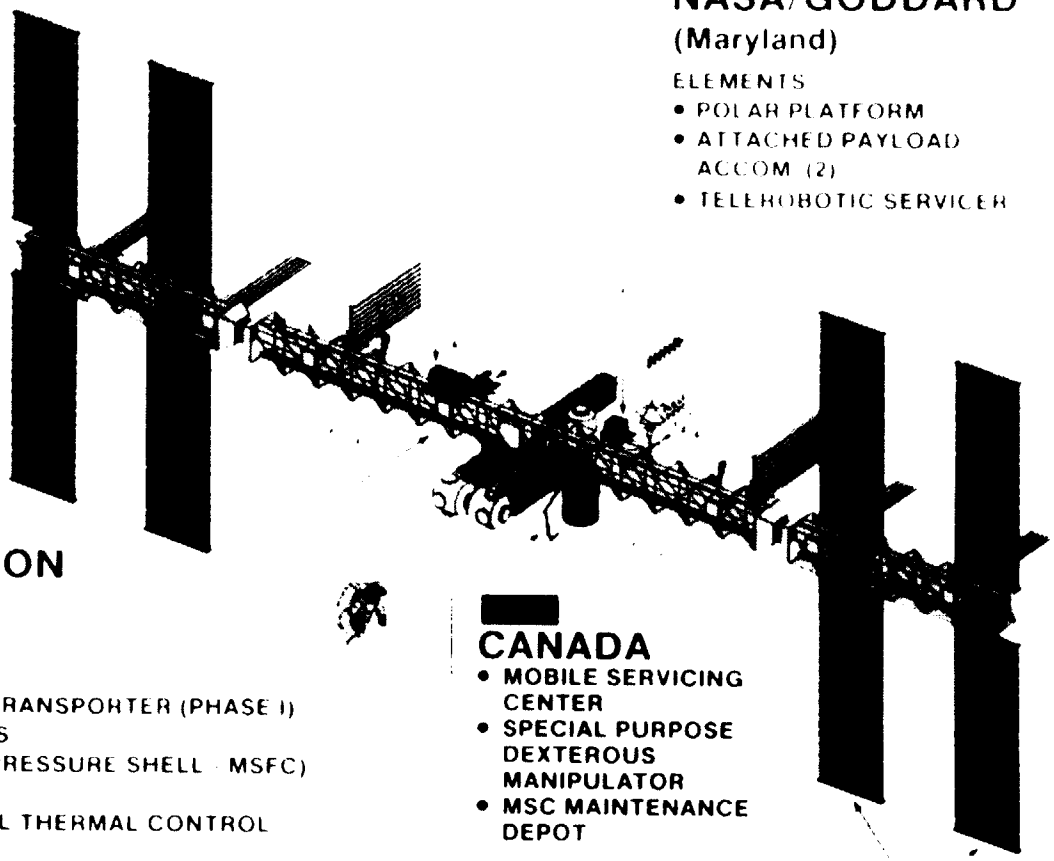

NASA/GODDARD (Maryland)

ELEMENTS
- POLAR PLATFORM
- ATTACHED PAYLOAD ACCOM (2)
- TELEROBOTIC SERVICER

NASA/ JOHNSON (Texas)

ELEMENTS
- TRUSS
- MOBILE TRANSPORTER (PHASE I)
- AIRLOCKS
- NODES (PRESSURE SHELL - MSFC)

SYSTEMS
- EXTERNAL THERMAL CONTROL
- EVA
- DATA MANAGEMENT
- COMMUNICATIONS & TRACKING
- GUIDANCE, NAVIGATION & CONTROL
- PROPULSION (THRUSTER TD BY MSFC)
- NSTS SS ATTACHMENT SYSTEMS

CANADA

- MOBILE SERVICING CENTER
- SPECIAL PURPOSE DEXTEROUS MANIPULATOR
- MSC MAINTENANCE DEPOT

NASA/MARSHALL (Alabama)

ELEMENTS
- PRESSURE SHELLS FOR NODES
- LABORATORY MODULE
- HABITATION MODULE (OUTFITTING TD BY JSC)
- LOGISTICS MODULE (PRESS & UNPRESS)

SYSTEMS
- ECLSS
- INTERNAL THERMAL CONTROL
- INTERNAL AUDIO & VIDEO

NASA/LEWIS (Ohio)

ELEMENTS
- POWER MODULES - PV SYSTEM
- ELECTRICAL POWER DISTRIBUTION

SPACE STATION FREEDOM PROGRAM OBJECTIVES

- Provide a permanently manned presence in space
- Enhance capabilities for space science and applications
- Stimulate advanced technologies
- Promote international cooperation
- Encourage private sector participation and utilization
- Provide options for future endeavors in space

ORIGINAL PAGE
BLACK AND WHITE PHOTOGRAPH

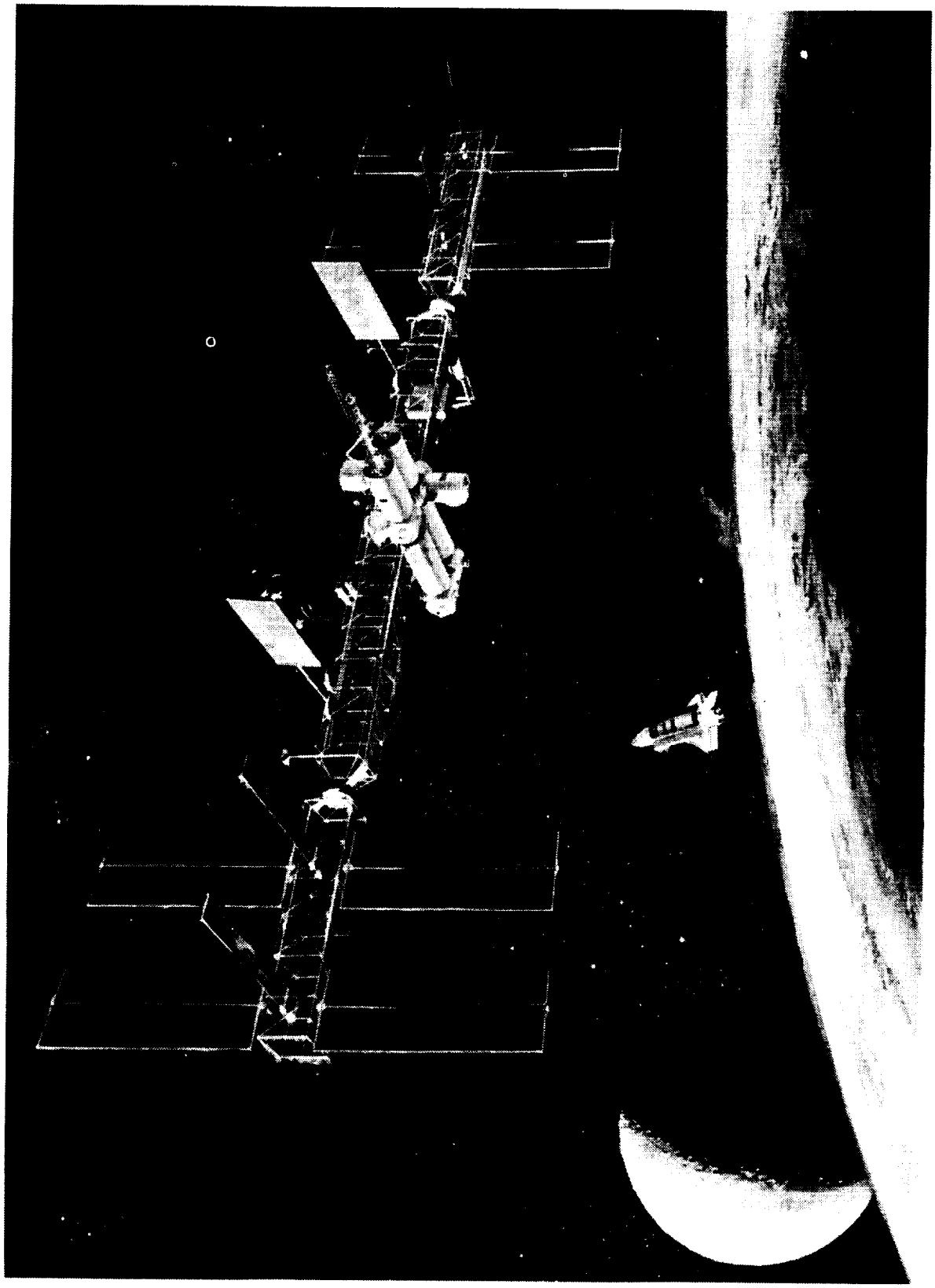

INTERNATIONAL SPACE STATION COMPLEX

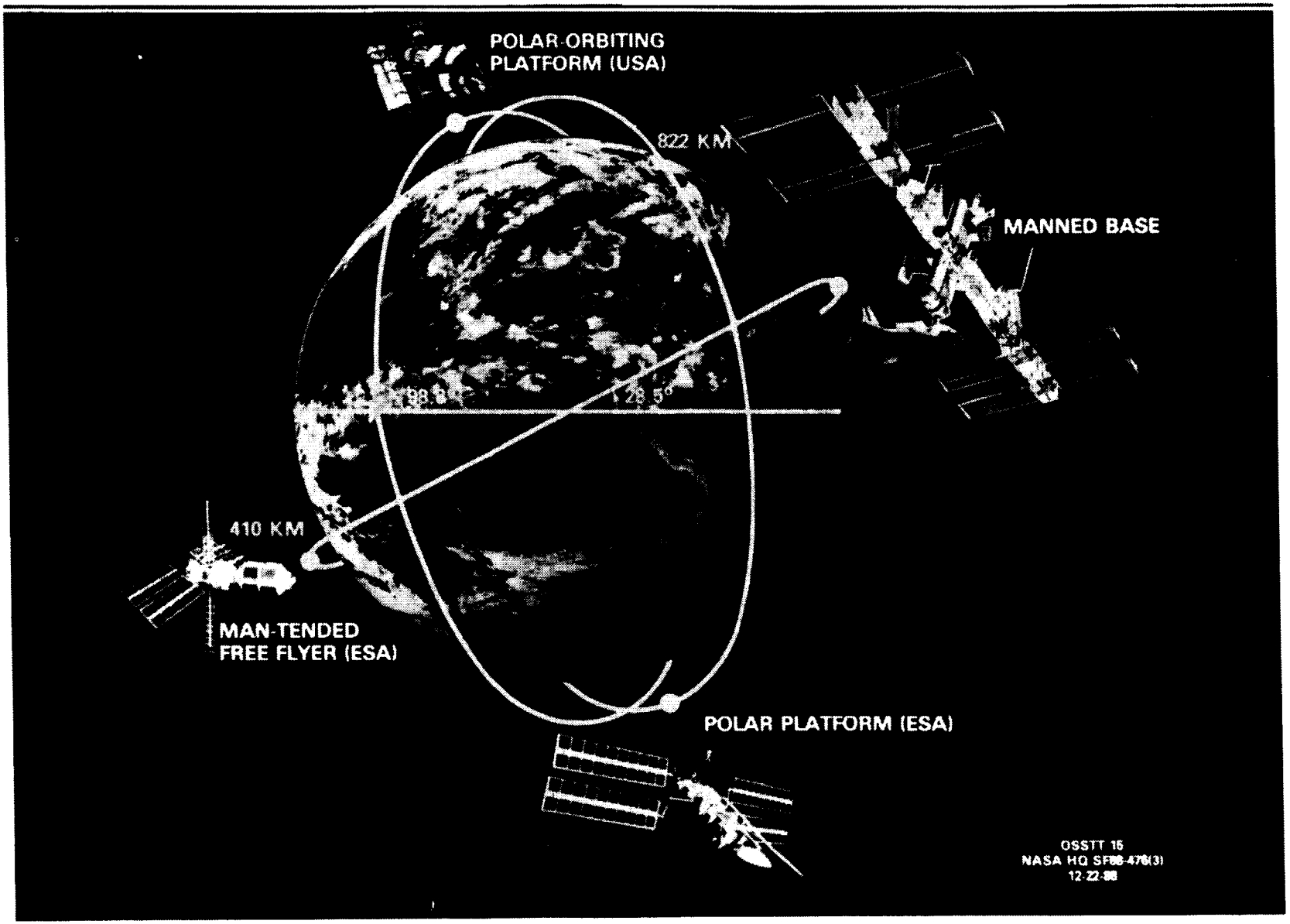

ORIGINAL PAGE
BLACK AND WHITE PHOTOGRAPH

ORIGINAL PAGE
BLACK AND WHITE PHOTOGRAPH

National Aeronautics and
Space Administration

FREEDOM

TECHNOLOGY FOR SPACE STATION EVOLUTION

A WORKSHOP

SPACE STATION PHASE I CONFIGURATION

RICHARD H. KOHRS
Director
Space Station Freedom

January 16, 1990

overall discipline summary, recommendations and issues, and proposed development plans for specific technology areas within the discipline. These technology discipline summary packages were later supplemented by the chairmen and their panels to include the impact of varied funding levels on the maturity of the selected technologies. OAST will review the program plans and recommended funding levels based on available funding and overall NASA priorities and incorporate them into a new OAST initiative advocacy package for space station evolution technology.

These proceedings are organized into an Executive Summary and Overview and five volumes containing the Technology Discipline Presentations.

Volume I consists of the overview presentation given by Richard Kohrs and technology discipline sections for Attitude Control and Stabilization and Communications and Tracking. Mr. Kohrs' presentation describes the Space Station *Freedom* Phase I configuration and some areas of technology development that will be required for station evolution. For each technology discipline in this volume, there is a Level 3 subsystem description, along with the invited papers for that discipline.

INTRODUCTION

NASA's Office of Aeronautics and Space Technology (OAST) conducted a workshop on technology for space station evolution January 16-19, 1990, in Dallas, Texas. The purpose of this workshop was to collect and clarify Space Station *Freedom* technology requirements for evolution and to describe technologies that can potentially fill those requirements. OAST will use the output of the workshop as input for planning a technology program to serve the needs of space station evolution. The main product of the workshop is a set of program plans and descriptions for individual technology areas. These plans are the cumulative recommendations of the more than 300 participants, which included researchers, technologists, and managers from aerospace industries, universities, and government organizations.

The identification of the technology areas to be included, as well as the development of the program plans, was initiated by assigning NASA chairmen to the eleven technology disciplines under consideration. The disciplines are as follows:

- Attitude Control and Stabilization (ACS)
- Communications and Tracking (C&T)
- Data Management System (DMS)
- Environmental Control and Life Support Systems (ECLSS)
- Extravehicular Activity/Manned Systems (EVA/MANSYS)
- Fluid Management System (FMS)
- Power System (POWER)
- Propulsion (PROP)
- Robotics (ROBOTICS)
- Structures/Materials (STRUCT)
- Thermal Control System (THERM)

Each chairman worked with a panel of experts involved in research and development in the particular discipline. The chairmen, with the assistance of their panels, were responsible for selecting invited presentations, identifying and inviting Space Station *Freedom* Level III subsystem managers, and focusing the discussion of the participants. In each discipline session, presentations describing status of the current programs were made by the Level III subsystem managers and by OAST program managers. After invited presentations by leading industry, university, and NASA researchers, the sessions were devoted to identifying technology requirements and to planning programs for development of the identified technology areas. Particular attention was given to the potential requirements of the Human Exploration Initiative (HEI). The combined inputs of the participants in each session were incorporated into a package including an

Space Station Evolution and Technology Considerations for Tracking and Optical Communications - William Culpepper, JSC 373
Millimeter Wave Communications Technology for Evolutionary Space Station - D. J. Connolly, et al, LeRC 413
System Enhancement with Millimeter Wave MMIC and Optoelectronics Technology - Jyoti Mondal and Mark Bendett, Honeywell 457
Optical Communications for Space Station Freedom - Robert Zimmerman, GSFC 491

TECHNOLOGY FOR SPACE STATION EVOLUTION - A WORKSHOP
Technology Disciplines (ACS - C&T)

VOLUME I

Foreword i
Contents iii
Introduction to Volume I 1
Space Station Phase I Configuration - Richard H. Kohrs, Director, Space Station Freedom 3

Attitude Control and Stabilization
Level III Subsystem Presentation:
Description of the Current Guidance, Navigation, and Control Subsystem for Space Station Freedom - Joseph E. Yeo, JSC 27
Invited Presentations:
Space Station Freedom Attitude Control System Assessment to Support Lunar/Mars Initiatives - Dr. John F. L. Lee, Honeywell, and John Yeichner 63
Attitude Control for Space Station Transportation Node, Evolution or Revolution? - Dr. Roscoe Lee, TRW Defense Systems Group 105
Parallel Processing for Space Station Computational Control - Dr. Ravi Venugopal and Manoj N. Kumar, DYNACS Engineering, Inc. 127
Robust Adaptive Control of an Evolutionary Space Station - Dr. Bong Wie, Arizona State University 137
System Identification Technology for the Evolutionary Space Station - Janet A. Lepanto and Dr. G. Dudley Shepard, Charles Stark Draper Lab 139
Control/Structures Interaction Considerations for Space Station Transportation Node Concepts - Dr. Paul A. Cooper, LaRC, Zoran N. Martinovic, Analytical Mechanics Associates, and Zeen C. Kim, Lockheed Missiles and Science Co. 173
Computationally Efficient Algorithm for Multi-Flexible Body Space Station Dynamics - B. Schubele and Dr. Ramen P. Singh, DYNACS Engineering, Inc. 235
A Coherent CSI Technology Plan for Evolutionary Space Station - Prof. Ed Crawley, MIT 251
Middeck Active Control Experiment (MACE) in Support of Evolutionary Space Station - Prof. Ed Crawley, MIT 259

Communications and Tracking
Level III Subsystem Presentation:
Communications and Tracking System Baseline - R. H. Dietz, JSC 273
Invited Presentations:
Communications Technology for Space Station Evolution - Dr. G. Dickey Arndt, JSC 355

CLARIFICATION

Since the workshop was conducted in January of 1990, there have been some organizational changes throughout the agency. The Office of Aeronautics and Space Technology (OAST) has been reorganized to include the former Office of Exploration and is now called the Office of Aeronautics, Exploration, and Technology (OAET). Also, the Human Exploration Initiative (HEI) has been expanded and renamed the Space Exploration Initiative (SEI). Some of the materials in these proceedings were prepared after the workshop, and, therefore, references to new organizational entities and new programs may be found in certain sections.

FOREWORD

Space Station *Freedom*, now under development, is a manned low Earth orbit facility which will become part of the space infrastructure. Starting in the mid 1990s, *Freedom* will support a wide range of activities, including scientific research, technology development, commercial ventures and, eventually, serve as a transportation node for space exploration. While the initial facility will not be capable of meeting all requirements, the space station will evolve over time as requirements and on-board activities mature and change. The space station design, therefore, allows for evolution to:

- expand capability,
- increase efficiency, and
- add new functions.

It is anticipated that many of the evolutionary changes will be accomplished through on-orbit replacement of systems, subsystems, and components as technology advances. Therefore, technology development is critical to ensure the continuing operation and expansion of the facility.

The Office of Aeronautics, Exploration and Technology (OAET) has sponsored development of many of the technologies that are now part of Space Station *Freedom*' s baseline design. Evolutionary and operational aspects of *Freedom* continue to be an important thrust of OAET's Research and Technology (R&T) efforts.

This workshop has been an important step in our understanding of the space station's baseline systems, the evolutionary scenarios including the station's role in space exploration, and the technologies that will be necessary to meet evolutionary and growth requirements.

It is anticipated that application of the information acquired through the workshop will lead to further technology development efforts to benefit *Freedom* and will lead to continued collaboration between the Space Station *Freedom* Program and the technology development community.

Arnold D. Aldrich
Associate Administrator for Aeronautics, Exploration and Technology

STAND-ALONE TRANSPORTATION NODE OPTIONS

- TWO GENERAL OPTIONS HAVE BEEN CONSIDERED BY THE EVOLUTIONARY DEFINITION OFFICE FOR STAND-ALONE TRANSPORTATION NODE (TN)
  - PERMANENTLY MANNED STAND-ALONE TN
  - UNMANNED STAND-ALONE TN, WITH CREW VISITS FROM SSMB
- PERMANENTLY MANNED STAND-ALONE TN IS NOT TECHNOLOGY DRIVER FOR ACS
- UNMANNED STAND-ALONE TN REQUIRES DEVELOPMENT OF TRAFFIC CONTROL TECHNOLOGIES

LOCATION OF STAND-ALONE TRANSPORTATION NODE

A REQUIRED MAJOR TECHNOLOGY STUDY IS THE DETERMINATION OF THE "OPTIMUM" ORBITAL PLACEMENT OF THE UNMANNED, STAND-ALONE TN. THE DETERMINATION OF THIS LOCATION IS DRIVEN BY THE REQUIRED FREQUENCY OF TRAFFIC BETWEEN THE SSMB AND TN.

IF THE TRAFFIC IS INFREQUENT, THE TN MIGHT BE PLACED IN "BOOMERANG ORBITS" RELATIVE TO THE SSMB, WHERE THE TN/SSMB ORBITS ARE MATCHED AT SPECIFIED INTERVALS, SUCH AS 90 DAYS OR 180 DAYS. EFFECTIVE RENDEZVOUS AND PROXIMITY OPERATIONS FROM THE SSMB TO TN CAN OCCUR ONLY AT THESE INTERVALS. THIS IS THE APPROACH BEING CONSIDERED BY THE EUROPEAN SPACE AGENCY FOR SPACE STATION SERVICING SUPPORT OF THE MAN-TENDED FREE FLYER.

IF THE TRAFFIC IS EXPECTED TO BE FREQUENT, THEN SOME FORM OF STATIONKEEPING WILL BE REQUIRED. ONE OPTION IS TO STATIONKEEP THE TN IN AN ELLIPSE ON THE SSMB V-BAR LINE. THIS TECHNIQUE RESULTS IN ONE-WAY TRANSIT TIMES BETWEEN THE SSMB AND TN OF ONE ORBITAL PERIOD OR LESS. ANOTHER OPTION IS TO STATIONKEEP THE TN AT A POINT ON THE SSMB V-BAR LINE ("BEAD-ON-A-STRING"), WHICH RESULTS IN ONE-WAY TRANSIT TIME BETWEEN THE TN AND SSMB EQUAL TO ONE ORBITAL PERIOD.

HOWEVER, STATIONKEEPING PLACEMENT OF THE TN MUST ALSO CONSIDER TRAFFIC PATTERNS FOR VEHICLES VISITING THE SSMB. AT A MINIMUM, THE SSMB WILL BE VISITED BY THE NSTS AND ESA MAN-TENDED FREE FLYER. IT IS ANTICIPATED THAT, DURING ITS LIFETIME, THE SSMB WILL BE VISITED BY OTHER VEHICLES, WITH INCREASING FREQUENCY. THEREFORE, THE TN SHOULD NOT BE LOCATED IN AN AREA WHICH MIGHT RESULT IN INTERFERENCE WITH THIS TRAFFIC OR INCREASE THE COSTS (PROPULSION PROPELLANTS AND/OR TIME) FOR THE OPERATIONS OF THIS TRAFFIC.

ANOTHER MAJOR FACTOR IN THE DESIGN OF THE ORBITAL PLACEMENT OF THE TN IS THE OPPORTUNITIES AND TECHNIQUES FOR RESUPPLY OF THE TN. THE RESUPPLY (E.G., PROPELLANT, TRANSPORTATION VEHICLE COMPONENTS) COULD BE PROVIDED EITHER BY DIRECT RESUPPLY BY GROUND BASED DELIVERY VEHICLES OR BY RELAY FROM THE SSMB. CONSEQUENTLY, THE ORBITAL PLACEMENT OF THE TN MUST CONSIDER BOTH ITS RELATIVE POSITIONING WITH RESPECT TO THE SSMB AND ITS ABSOLUTE PLACEMENT WITH RESPECT TO RENDEZVOUS AND PROXIMITY OPERATIONS BY GROUND-BASED DELIVERY VEHICLES. ONCE AGAIN, THE MAJOR DRIVERS FOR THE DESIGN OF THE ORBITAL PLACEMENT WILL BE PROPELLANT REQUIREMENTS AND TIME, ASSOCIATED WITH THE RENDEZVOUS AND PROXIMITY OPERATIONS.

LOCATION OF STAND-ALONE TRANSPORTATION NODE

- OPTIMUM TN ORBITAL PLACEMENT IS DRIVEN BY REQUIRED FREQUENCY OF TRAFFIC BETWEEN SSMB AND TN
  - INFREQUENT TRAFFIC COULD BE SUPPORTED BY "BOOMERANG ORBITS", WHERE TN/SSMB ORBITS ARE MATCHED AT SPECIFIED INTERVALS (E.G., 90 DAYS OR 180 DAYS)
  - FREQUENT TRAFFIC WILL REQUIRE SOME FORM OF STATIONKEEPING
- STATIONKEEPING OPTIONS
  - TN STATIONKEEPING ON V-BAR LINE
    - TRANSIT TIMES EQUAL TO ONE ORBITAL PERIOD
  - STATIONKEEPING IN AN ELLIPSE ON V-BAR LINE
    - VARIABLE TRANSIT TIME (CAN BE LESS THAN ONE ORBITAL PERIOD)
- STATIONKEEPING OPTIONS MUST ACCOUNT FOR OTHER TRAFFIC TO SSMB
- MUST ACCOMMODATE EFFICIENT RESUPPLY OF TRANSPORTATION NODE

THIS PAGE INTENTIONALLY BLANK

PAGE 112 INTENTIONALLY BLANK

DESCRIPTION OF TN STATIONKEEPING OPTIONS

TN STATIONKEEPING AT POINT ON SSMB V-BAR LINE

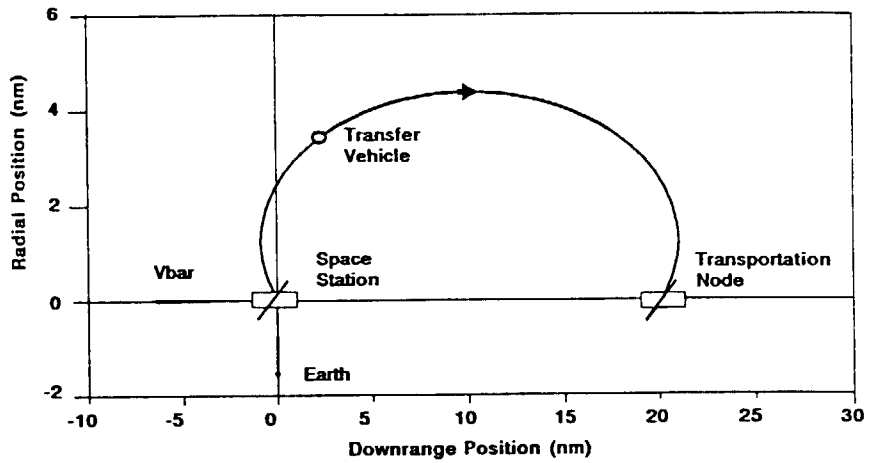

TN STATIONKEEPING ON ELLIPSE ON SSMB V-BAR LINE

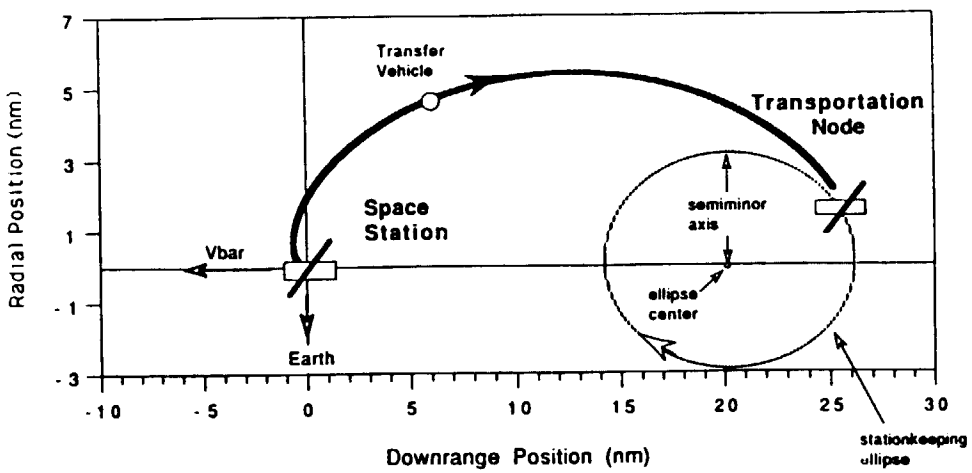

PRECEDING PAGE BLANK NOT FILMED

COASTING FLIGHT STATIONKEEPING CONSIDERATIONS

FOR TN STATIONKEEPING AT A POINT ON THE SSMB V-BAR LINE, THE ONE-WAY TRANSIT TIMES BETWEEN THE SSMB AND TN ARE FIXED AT ONE ORBITAL PERIOD (APPROXIMATELY 90 MINUTES). THE ORBITAL PHASING BETWEEN THE SSMB AND TN IS CONSTANT, WHICH SUPPORTS "ANY TIME" RENDEZVOUS AND PROXIMITY OPERATIONS BETWEEN THE SSMB AND TN. MAINTENANCE OF THIS STATIONKEEPING POSITION WILL BE REQUIRED SINCE THE TN AND SSMB WILL HAVE DIFFERENT BALLISTIC COEFFICIENTS. MODERATE PROPELLANT REQUIREMENTS ARE ANTICIPATED AND WILL BE DEPENDENT UPON THE "DEADBANDS" SELECTED FOR CONTROLLING THE RELATIVE POSITION.

FOR TN STATIONKEEPING IN AN ELLIPSE ON THE SSMB V-BAR LINE, THE ONE-WAY TRANSIT TIMES CAN BE REDUCED TO LESS THAN ONE-ORBITAL PERIOD. THIS IS DEPENDENT UPON THE SIZE OF THE ELLIPSE AND THE LOCATION OF ITS CENTER RELATIVE TO THE SSMB. THIS RELATION IS SHOWN BELOW IN TERMS OF AN ELLIPTICAL TRANSFER RATIO (CENTER LOCATION/SEMI-MINOR AXIS).

A DISADVANTAGE OF THIS OPTION IS THE FACT THAT THE PHASING BETWEEN THE SSMB AND TN IS VARIABLE, WHICH RESULTS IN FINITE TIME WINDOWS FOR EFFECTIVE RENDEZVOUS OPPORTUNITIES. THIS OPTION MIGHT BE SOMEWHAT MORE PROPELLANT ECONOMICAL, DEPENDING UPON THE "DEADBANDS" SELECTED FOR CONTROLLING THE SIZE AND CENTER OF THE ELLIPSE.

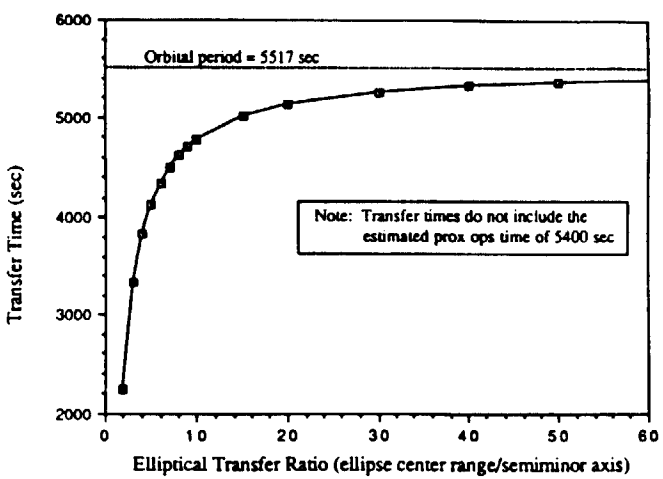

EXTRACTED FROM LESC-27244,
"TRAFFIC MANAGEMENT EVOLUTION REPORT"
28 SEPTEMBER 1989

COASTING FLIGHT STATIONKEEPING CONSIDERATIONS

- TN STATIONKEEPING AT POINT ON SSMB V-BAR LINE
  - ONE-WAY TRANSIT TIMES BETWEEN SSMB AND TN ARE FIXED AT ONE ORBITAL PERIOD
  - PHASING BETWEEN SSMB AND TN IS CONSTANT
  - MODERATE PROPELLANT REQUIREMENTS FOR STATIONKEEPING
- TN STATIONKEEPING IN ELLIPSE ON SSMB V-BAR LINE
  - ONE-WAY TRANSIT TIMES CAN BE REDUCED TO LESS THAN ONE ORBITAL PERIOD, BASED ON SIZE OF ELLIPSE AND LOCATION OF ITS CENTER
  - VARIABLE PHASING BETWEEN SSMB AND TN
  - REDUCED STATIONKEEPING PROPELLANT REQUIREMENTS

REBOOST CONSIDERATIONS DURING STATIONKEEPING

PERIODIC REBOOSTS OF THE SSMB AND TN WILL BE REQUIRED TO MAINTAIN THEIR DESIRED ORBITAL ALTITUDE PROFILES. THE SSMB WILL FOLLOW A VARIABLE ALTITUDE PROFILE, TUNED TO THE EXPECTED ATMOSPHERIC ENVIRONMENT AND IS EXPECTED TO REBOOST APPROXIMATELY EVERY 90 DAYS. THE STATIONKEEPING AND REBOOST OPERATIONS OF THE TN MUST BE COORDINATED WITH THE SSMB COASTING FLIGHT AND REBOOST ACTIVITIES.

THE SSMB AND TN ARE EXPECTED TO HAVE DIFFERENT BALLISTIC COEFFICIENTS, WHICH WILL RESULT IN DIFFERING DECAY RATES. TECHNOLOGY STUDIES MUST BE CONDUCTED TO DETERMINE THE "OPTIMUM" APPROACH FOR COORDINATING THE TN ORBITAL POSITIONING RELATIVE TO THAT OF THE SSMB.

IF FREQUENT (E.G., DAILY) TRAFFIC BETWEEN THE SSMB AND TN IS REQUIRED, THE TN WILL HAVE TO MAINTAIN CLOSE STATIONKEEPING WITH THE SSMB FOR BOTH COASTING FLIGHT AND REBOOST OPERATIONS. THIS APPROACH COULD RESULT IN NEAR-CONTINUOUS ORBIT ADJUSTMENTS BY THE TN TO MATCH THE ORBITAL DECAY OF THE SSMB, DURING COASTING FLIGHT, AND A COORDINATED REBOOST, WHENEVER THE SSMB PERFORMS A REBOOST. THIS TECHNIQUE COULD BE PROPELLANT EXPENSIVE.

IF LESS FREQUENT TRAFFIC IS REQUIRED, THE TN COULD BE ALLOWED TO HAVE LARGER DIVERGENCES IN ITS LOCATION RELATIVE TO THE SSMB. SOME PROPELLANT SAVINGS MIGHT BE ACCRUED FROM NOT FOLLOWING THE SSMB TOO CLOSELY. AS AN EXAMPLE, IF THE TN DECAYS AT A SLOWER RATE THAN THE SSMB, REBOOST PROPELLANT BUDGETS COULD BE REDUCED BY NOT FOLLOWING THE SSMB TO ITS LOWEST ALTITUDE. HOWEVER, THIS APPROACH COULD INTRODUCE PHASING DIFFERENCES BETWEEN THE SSMB AND TN ORBITS AND REDUCE THE OPPORTUNITIES FOR EFFECTIVE RENDEZVOUS AND PROXIMITY OPERATIONS.

REBOOST CONSIDERATIONS DURING STATIONKEEPING

- PERIODIC REBOOSTS OF SSMB AND TN MUST BE ACCOMMODATED
- COORDINATED REBOOSTS OR PERIODIC ORBITAL ADJUSTMENTS?
  - DIFFERENCES IN SSMB AND TN BALLISTIC COEFFICIENT CHARACTERISTICS
  - REQUIRED FREQUENCY OF SSMB CREWMEMBER VISITS

TRANSFER TECHNIQUES BETWEEN SSMB AND TN

ONCE THE PLACEMENT OF THE TN RELATIVE TO THE SSMB IS DECIDED, TECHNOLOGY STUDIES ARE THEN NEEDED TO ESTABLISH THE BEST TECHNIQUE(S) FOR TRANSFERRING BETWEEN THE SSMB AND TN. THE SELECTION OF THE TECHNIQUE MUST BE BASED ON SEVERAL FACTORS, INCLUDING TRANSFER TIME, REQUIRED PROPELLANT, AND SAFETY. THE POTENTIAL FOR COLLISIONS DURING THE RENDEZVOUS AND PROXIMITY OPERATIONS AFFECT BOTH FLIGHT CREW AND VEHICLE/FACILITY SAFETY.

THERE ARE A NUMBER OF TRANSFER TECHNIQUES WHICH HAVE VARIOUS ATTRIBUTES AND DEMERITS.

THE TWO-IMPULSE TRANSFER IS THE SIMPLEST RENDEZVOUS TECHNIQUE AND USES A PHASING BURN TO INITIATE THE TRANSFER AND A PHASING BURN TO NULL THE APPROACH RATES. THESE BURNS ARE IN THE LVLH X-AXIS DIRECTION. SMALL MIDCOURSE BURNS WILL PROBABLY BE REQUIRED TO ACCOMMODATE DISPERSIONS IN RELATIVE NAVIGATION AND BURN PERFORMANCE. THE TWO-IMPULSE TRANSFER DOES NOT PROVIDE PASSIVE COLLISION AVOIDANCE. A POTENTIAL FOR A COLLISION WILL EXIST IF THE TRANSFER VEHICLE LOSES TRANSLATIONAL CONTROL CAPABILITY AFTER THE INITIAL DEPARTURE MANEUVER HAS BEEN INITIATED, SINCE THE TRANSFER VEHICLE WILL BE ON AN INTERCEPT TRAJECTORY WITH THE TARGET VEHICLE.

THE MINIMUM TIME TRANSFER IS SIMILAR TO THE TWO-IMPULSE TRANSFER, EXCEPT THAT THE INITIAL AND FINAL DELTA V MANEUVERS ARE IN THE RADIAL DIRECTION (Z LVLH). THIS TECHNIQUE HALVES THE TRANSFER TIME BUT AT THE COST OF A FIVE TIME INCREASE IN PROPELLANT REQUIREMENT. IT ALSO DOES NOT SUPPORT PASSIVE COLLISION AVOIDANCE.

THE PASSIVE COLLISION AVOIDANCE TRANSFER TECHNIQUE IS MORE COMPLICATED AND NOMINALLY CONSISTS OF SIX MANEUVERS. THIS APPROACH RESULTS IN ORBITAL SEPARATION BETWEEN THE TRANSFER VEHICLE AND THE TARGET VEHICLE IN THE EVENT OF LOSS OF TRANSLATIONAL CAPABILITY FOLLOWING EACH OF THE MANEUVERS. HOWEVER, THE TRANSFER TIME IS INCREASED.

TRANSFER TECHNIQUES BETWEEN SSMB AND TN

- OPTIONS FOR TRANSFER TECHNIQUES BETWEEN SSMB AND TN MUST BE EVALUATED
  - TRANSFER TIME
  - PROPELLANT REQUIREMENTS
  - SAFETY
- CANDIDATE TRANSFER TECHNIQUES
  - TWO-IMPULSE TRANSFER (LVLH X-AXIS MANEUVERS)
  - MINIMUM TIME TRANSFER (LVLH Z-AXIS MANEUVERS)
  - PASSIVE COLLISION AVOIDANCE TRANSFER

THIS PAGE INTENTIONALLY BLANK

DESCRIPTIONS OF CANDIDATE TRANSFER TECHNIQUES

TWO-IMPULSE TRANSFER

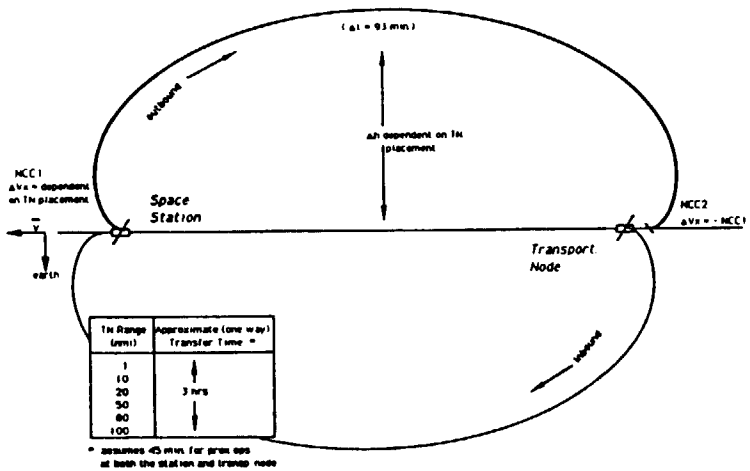

MINIMUM TIME TRANSFER

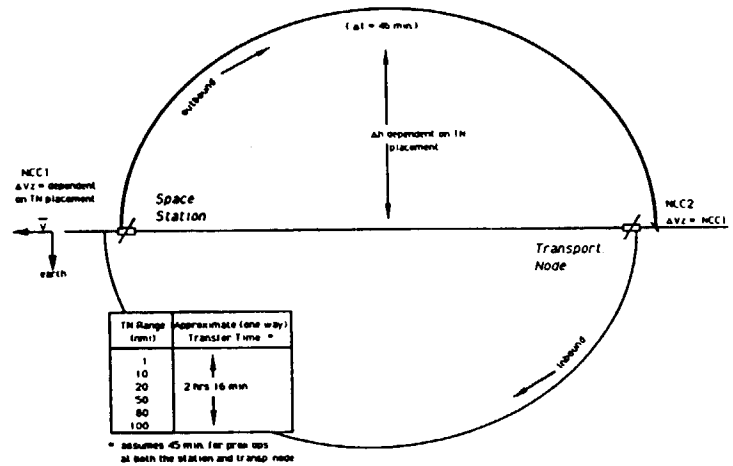

PASSIVE COLLISION AVOIDANCE TRANSFER

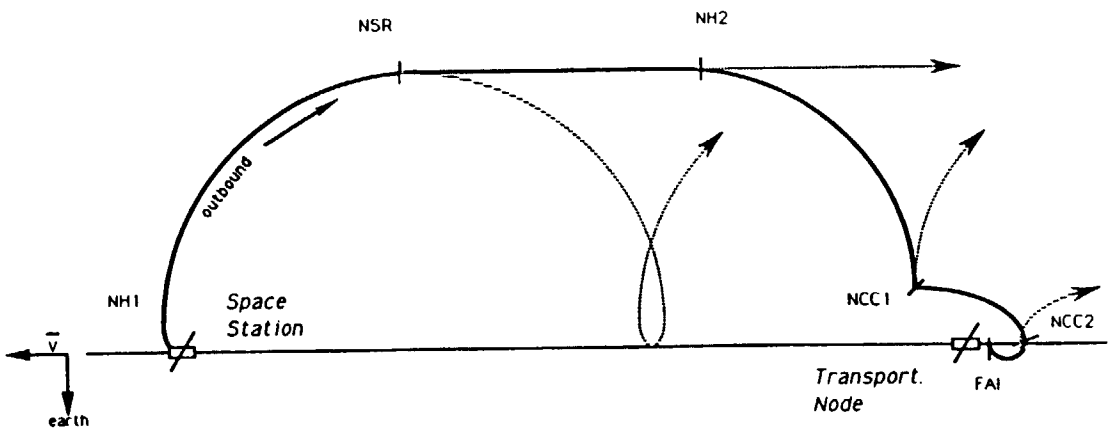

EXTRACTED FROM LESC-27224, "TRAFFIC MANAGEMENT EVOLUTION"

PAGE 120 INTENTIONALLY BLANK

PRECEDING PAGE BLANK NOT FILMED

IMPLEMENTATION OF RENDEZVOUS AND PROXIMITY OPERATIONS

ANOTHER MAJOR DESIGN DECISION IS THE IMPLEMENTATION OF THE RENDEZVOUS AND PROXIMITY OPERATIONS. CURRENTLY, THESE OPERATIONS ARE PERFORMED BY FLIGHT CREWS FOR MANNED VEHICLES OR REMOTE PILOTS ON THE GROUND FOR UNMANNED VEHICLES. FOR SSMB TO TN TRAFFIC, THE TRANSFER VEHICLES WILL BE MANNED.

CONSIDERATION SHOULD BE GIVEN TO IMPLEMENTING AUTOMATIC RENDEZVOUS AND PROXIMITY OPERATIONS FOR THESE MANNED TRANSFER VEHICLES. THE SSMB FLIGHT CREW WILL HAVE MANY TASK OVER EXTENDED MISSION DURATIONS. MAINTAINING THEIR PROFICIENCY FOR MANUAL RENDEZVOUS AND DOCKING OPERATIONS WOULD BE A SIGNIFICANT ON-ORBIT FLIGHT TRAINING TASK. THIS TRAINING TIME WOULD DETRACT FROM THE TIME SPENT IN THE PREPARATIONS FOR AND CONDUCT OF OTHER SPACE STATION TASKS, INCLUDING SERVICING WORK IN SUPPORT OF THE TN.

THE PATHFINDER PROGRAM, UNDER SPONSORSHIP OF THE OFFICE OF AERONAUTICS AND SPACE TECHNOLOGY (OAST), IS FUNDING THE DEVELOPMENT OF AUTONOMOUS RENDEZVOUS AND DOCKING TECHNOLOGIES. MAXIMUM SYNERGISM SHOULD BE EMPLOYED FOR POTENTIAL APPLICATION TO THE SPACE STATION EVOLUTION TO A TRANSPORTATION NODE.

IMPLEMENTATION OF RENDEZVOUS AND PROXIMITY OPERATIONS

- MANUAL OR AUTOMATIC RENDEZVOUS AND PROXIMITY OPERATIONS?
  - CURRENT CAPABILITY IS MANUAL
  - AUTOMATIC RENDEZVOUS AND PROXIMITY OPERATIONS WOULD ENHANCE OPERATIONS OF MANNED VEHICLES
    - REDUCE REQUIREMENT FOR MAINTAINING PILOT PROFICIENCY OVER EXTENDED MISSION DURATIONS
    - ALLOW SSMB CREWMEMBERS TO FOCUS ON SERVICING WORK IN SUPPORT OF TN
- OAST PATHFINDER PROGRAM IS FUNDING AUTONOMOUS RENDEZVOUS AND DOCKING TECHNOLOGY DEVELOPMENT
  - MAXIMIZE SYNERGISM TO SPACE STATION EVOLUTION

OVERVIEW OF PATHFINDER AR&D STUDIES

PROGRAM PATHFINDER IS ENTERING ITS SECOND YEAR OF FUNDING OF TECHNOLOGY STUDIES FOR AUTONOMOUS RENDEZVOUS AND DOCKING. THE STUDIES HAVE INCLUDED ACTIVITIES AT JPL, JSC, AND MSFC.

A MAJOR THRUST IS THE IDENTIFICATION AND EVALUATION OF CANDIDATE RELATIVE NAVIGATION SENSORS. THESE SENSORS INCLUDE LASER AND OPTICAL SYSTEMS. HARDWARE PROTOTYPES ARE IN DEVELOPMENT AND NEAR-TERM PLANS WILL FOCUS ON GROUND DEMONSTRATIONS. NAVIGATION ALGORITHMS INCORPORATING THE OUTPUTS OF THESE SENSORS ARE UNDER DEVELOPMENT.

GUIDANCE AND CONTROL ALGORITHMS ARE UNDER DEVELOPMENT AND INCLUDE DESIGNS OF TRAJECTORY TECHNIQUES, COOPERATIVE CONTROL PRE- AND POST-DOCKING, AND THE DEVELOPMENT AND EVALUATION OF THE BENEFITS OF APPLICATIONS OF ARTIFICIAL INTELLIGENCE, INCLUDING FUZZY LOGIC AND NEURAL NETWORKS. THESE ALGORITHMS WILL BE INTEGRATED INTO CLOSED-LOOP GROUND DEMONSTRATIONS, WHICH USE HARDWARE SENSORS.

BASIC RESEARCH IN DOCKING MECHANISM TECHNOLOGIES SUCH AS SEALS, LUBRICANT, AND MATERIALS FOR THE ENVIRONMENTS ASSOCIATED WITH MARS MISSIONS IS UNDER WAY. TEST BEDS ARE BEING CONFIGURED TO SUPPORT GROUND DEMONSTRATION OF CLOSED-LOOP DOCKING OPERATIONS WITH SENSOR HARDWARE AND FLIGHT-TYPE SOFTWARE.

A MAJOR TECHNOLOGY CHALLENGE IS THE SYSTEMS INTEGRATION OF THE AR&D COMPONENTS. SPECIFIC, HIGH-PROBABILITY MISSIONS MUST BE ESTABLISHED BASED ON THE VARIOUS ADVANCED PROGRAMS STUDIES AND AR&D CAPABILITY REQUIREMENTS DEFINED FOR THESE MISSIONS. GROUND DEMONSTRATIONS WILL SERVE AS ONE MEANS TO INTEGRATE THE AR&D COMPONENTS AND PROVIDE PROOF-OF-CONCEPT. COST-EFFECTIVE FLIGHT DEMONSTRATIONS ARE ALSO BEING CONSIDERED FOR PROVIDING PROOF-OF-DESIGN.

OVERVIEW OF PATHFINDER AR&D STUDIES

- RELATIVE NAVIGATION SENSOR TRADE STUDY/DEMONSTRATION
  - LASER SYSTEMS
  - OPTICAL SYSTEMS
- GUIDANCE, NAVIGATION & CONTROL ALGORITHM DEVELOPMENT/DEMONSTRATION
  - TRAJECTORY TECHNIQUES
  - COOPERATIVE CONTROL
  - ARTIFICIAL INTELLIGENCE APPLICATIONS (FUZZY LOGIC, NEURAL NETWORKS)
- DOCKING MECHANISM BASIC RESEARCH
- SYSTEM INTEGRATION
  - MISSION SPECIFIC APPLICATIONS
  - GROUND DEMONSTRATIONS
  - COST-EFFECTIVE FLIGHT DEMONSTRATIONS

THIS PAGE INTENTIONALLY BLANK

Parallel Processing for Space Station Computational Control

Ravi Venugopal and Manoj Kumar
Dynacs Engineering, Inc.
Clearwater, FL

Technology for Space Station Evolution
WORKSHOP

January 16-19, 1990
Dallas, TX

PRECEDING PAGE BLANK NOT FILMED

PAGE 126 INTENTIONALLY BLANK

Computational efficiency in these simulations can be achieved through a variety of methods. The use of the frontal solution algorithm leads to Order(n) type behavior which by itself is a significant improvement. In addition, the algorithm lends itself easily to parallelization. The use of special canonical forms further reduces the number of computations needed. Since the choice of the reference axes is a critical element in the formulation of the equations, an appropriate choice can reduce the complexity of the resulting equations.

The Problem

"A Designer's Productivity is Lower than necessary because of Difficulties Caused by Complex Interactions and Inefficient Code for Analysis and Simulation of Control Systems for Structures which are Flexible and Articulate"

The controller design process for flexible articulating space structures could be streamlined if:

a. A fast processing package (hardware/software) operating as a self-contained unit were available.

b. A complete set of computational control tools were available on a single hardware platform.

Proposed Solution

Provide:

1. Fast, Self-Contained Processing Package (Hardware/Software)

2. Complete Computational Control Toolkit on a Common platform and a Sophisticated, User-Friendly Interface.

Such a system is proposed, combining a high performance parallel processing architecture with a complete set of computational control tools and a user-friendly window and mouse-based interface. The computational control toolkit will include a sophisticated dynamics module with gravity gradient, magnetic field and atmospheric models. A special features module will bring in the dynamics associated with CMGs, RCS, joint-nonlinearities etc. The toolkit will also include classical and modern control design tools and a 3D graphics visualization facility.

Computational Control Toolkit

- High-Speed Dynamics Module
- Environmental Module
  (Gravity, Magnetic, Atmospheric)
- Computational Control Tools
- Interfaces
  (Modeling, Analysis, etc)

In conclusion, the proposed solution brings together the various tools that a designer might need in during the design and analysis process on a single platform. In addition it provides a friendly user interface that automates the interaction between the different tools in order to make it transparent to the user.

THIS PAGE INTENTIONALLY BLANK

Concluding Remarks

- Control Designer's Productivity is Lower than is Necessary.

- Specially Designed Software/ Hardware can bring to the Workstation all of the Needed Tools and Capabilities.

PAGE 136 INTENTIONALLY BLANK

Robust Adaptive Control of an Evolutionary Space Station

Dr. Bong Wie
Department of Mechanical and Aerospace Engineering
Arizona State University
Tempe, AZ 85287-6106
(602) 965-8674

Technology for Space Station Evolution Workshop
January 16-19, 1990
Dallas, Texas

PRECEDING PAGE BLANK NOT FILMED

PAPER UNAVAILABLE AT TIME OF PUBLICATION

SYSTEM IDENTIFICATION TECHNOLOGY FOR THE EVOLUTIONARY SPACE STATION

Janet A. Lepanto
617-258-4237

G. Dudley Shepard
617-258-2206

NASA OAST Evolutionary Space Station Workshop
Dallas, TX
16 January 1990

The Charles Stark Draper
Laboratory, Inc.
Cambridge, MA 02139

PRECEDING PAGE BLANK NOT FILMED

138

OVERVIEW

System identification is one of the major technology areas that will support attitude control and stabilization for the evolutionary space station. The following presentation will define system identification as an engineering problem and will justify the need for further development of several facets of this technology. Previous experience with system identification of space structures from on-orbit data will be described, and the relevance of this experience to the evolutionary space station will be demonstrated. The specific requirements and constraints that characterize system identification of the evolutionary space station will be discussed, as well as the supporting technologies that are required to address the problem. Finally, recommendations for future development and implementation of the supporting technologies are presented.

OVERVIEW

System Identification: What Is It and Why Do We Need It?

Experience With System Identification of Space Structures

System Identification for the Evolutionary Space Station: Requirements and Constraints

System Identification for the Evolutionary Space Station: Supporting Technologies

Recommendations for Future Technology Development

CSDL

SYSTEM IDENTIFICATION: WHAT IS IT AND WHY DO WE NEED IT?

System identification of structural dynamics for operational spacecraft is an **engineering** problem that encompasses several technology areas, including: sensor placement, design of excitations, monitoring of structural integrity, design of test procedures, and data analysis. The following discussion focuses on the former three areas, since these technologies require the longest lead times for development and implementation. Thus, the emphasis is on how to obtain on-orbit data for system identification rather than the analysis of the data.

In its role as a transportation node, the evolutionary space station will support advanced manned and unmanned space missions (e.g. lunar base, Mars exploration). Reliability, adaptibility, and operational flexibility will be key requirements for all space station subsystems, including attitude control and stabilization (ACS), since all aplications of the station will not be known a priori. As the space station evolves and its configuration changes, knowledge of the system's changing dynamics and structural characteristics will be required to evaluate the effect of these changes on the ACS system design and performance. In addition, the dynamics and structural integrity of the evolutionary space station must be monitored to detect anomolies in a timely manner such that the station ACS system can be evaluated with respect to these anomolies and, if necessary, reconfigured to assure that at least a degraded mission is achieved.

SYSTEM IDENTIFICATION: WHAT IS IT AND WHY DO WE NEED IT?

- System identification of structural dynamics for spacecraft on-orbit is an **engineering** problem that encompasses several technology areas
  - ❒ Sensor placement
  - ❒ Design of excitations
  - ❒ Evaluation of structural integrity
  - ❒ Design of test procedures
  - ❒ Data management, processing, analysis
- System identification of spacecraft dynamics from flight data is required to enhance reliability, adaptability, and operational flexibility ofevolutionary space station

CSDL

EXPERIENCE WITH SYSTEM IDENTIFICATION OF SPACE STRUCTURES

There has been only limited experience with on-orbit testing and data acquisition for system identification of space structures. Well known examples include the Solar Array Flight Experiment (SAFE), the Canadian Telecommunications Satellite (CTS), and the shuttle-attached Remote Manipulator System (RMS).

The Solar Array Flight Experiment was a shuttle-based experiment to demonstrate solar array technology and system identification of a flexible structure on-orbit. This experiment included dedicated instrumentation for system identification and the analysis of the data obtained on-orbit was done post-flight. Results of the analysis supported comparisons with predictions of modal characteristics from analytical models.

The Canadian Telecommunications Satellite was a satellite with flexible solar arrays that was instrumented as a target of opportunity for system identification of a flexible spacecraft. The data obtained on-orbit was analyzed on the ground (non-real time) and the results supported comparisons with predictions of modal characteristics from analytical models and ground tests.

CSDL

EXPERIENCE WITH SYSTEM IDENTIFICATION OF SPACE STRUCTURES

- Experience with on-orbit testing for system identification is limited; examples include

  - ❒ Solar Array Flight Experiment (SAFE)
    - NSTS based experiment to demonstrate solar array technology, system identification of flexible structure dynamics on-orbit
    - Dedicated instrumentation for system identification
    - Post-flight data analysis
    - Results supported comparisons with analytical models

  - ❒ Canadian Telecommunications Satellite (CTS)
    - Communications satellite with flexible solar arrays
    - Instrumented as target of opportunity for system identification
    - Ground based (non-real time) data analysis
    - Results supported improvement of analytical model (frequency, damping), comparison with ground test results

CSDL

EXPERIENCE WITH SYSTEM IDENTIFICATION OF SPACE STRUCTURES (CONT'D)

The Remote Manipulator System (RMS) is a flexible robotic manipulator that is used to deploy and retrieve space shuttle payloads. Although the RMS has no dedicated instrumentation for system identification, on-orbit data has been obtained from operational instrumentation, and the post-flight analysis of this flight data has supported improvement of analytical models and validation of simulations. The resulting high fidelity simulation has supported evaluations of proposed operational scenarios to enhance and expand the operational envelope of the RMS. In several instances this has permitted use of the RMS in applications that were not envisioned during the design phase for this system.

The system identification problem for the evolutionary space station most closely resembles that of the RMS, since both are operational structures with evolving missions. Clearly, all potential missions and applications of the evolutionary space station cannot be currently anticipated. The use of system identification to maintain accurate models of the evolutionary space station configurations will enable mission planners to predict **with confidence** that the station can safely and successfully meet performance requirements for attitude control and stabilization under contingency and/or unplanned operating conditions.

EXPERIENCE WITH SYSTEM IDENTIFICATION OF SPACE STRUCTURES (CONT'D)

- Remote Manipulator System (RMS)
  - NSTS flexible robotic manipulator
  - No dedicated instrumentation for system identification
  - Post-flight data analysis
  - Results have supported
    - ▲ Improvement of analytical model (frequency, damping)
    - ▲ Validation of simulation
    - ▲ Definition of enhanced operational envelope
    - ▲ Evaluation of proposed operational scenarios

- System identification of evolutionary space station most closely resembles that of RMS, since both are operational space structures with evolving mission scenarios

CSDL

SYSTEM IDENTIFICATION FOR EVOLUTIONARY SPACE STATION: REQUIREMENTS AND CONSTRAINTS

The system identification problem for the evolutionary space station is characterized by specific requirements and constraints. The approach to system identification must accommodate the limitations imposed by the on-orbit environment and by the fact that the space station is an operational spacecraft. For example, the number of structural dynamics sensors is limited compared to earth laboratory standards. There are few actuators or sources of excitation and, furthermore, the actuators that are available are placed for rigid body ACS, not system identification of structural dynamics. The number and the duration of on-orbit tests for system identification are limited by available energy and consumables. In addition, free decay identification techniques are likely to be curtailed by spacecraft operations.

One of the primary prerequisites for system identification of space station structural dynamics is dedicated instrumentation; sufficient modal information cannot be obtained from ad hoc measurements using operational GN&C sensors.

SYSTEM IDENTIFICATION FOR EVOLUTIONARY SPACE STATION: REQUIREMENTS AND CONSTRAINTS

- Requires dedicated instrumentation
- Must accommodate limitations imposed by on-orbit environment
  - ❒ Few actuators, sources of excitation (eg. thrusters, CMGs, MRMS transients)
  - ❒ Actuators not placed to support system identification of structural dynamics
  - ❒ Number of sensors is limited compared to earth laboratory standards
  - ❒ Number, duration of system identification tests limited by available energy, consumables
  - ❒ Free decay identification techniques curtailed by spacecraft operations

CSDL

SYSTEM IDENTIFICATION FOR EVOLUTIONARY SPACE STATION: REQUIREMENTS AND CONSTRAINTS (CONT'D)

The results of system identification are required to support model validation, localization of structural flaws, definition of the changing operational envelope, and the evaluation of proposed mission scenarios. Configuration changes must be monitored so that the effects on the performance of the ACS system can be assessed. Updated, reliable models of the space station's dynamics must be maintained to support ACS design changes, and an assessment of the impact of ACS failures on system performance. In addition, these models can be used to predict preferrable locations for payloads, experiments, and antennas that are sensitive to vibration.

System identification for the evolutionary space station may require real time implementation to satisfy requirements for autonomous operations. In the event that a structural flaw is detected by on-line monitoring of structural integrity, the ACS can be reconfigured to avoid further damage and achieve at least a degraded mission. One aspect of real time system identification is the need to accommodate anomalies that can occur in flight data, including drop-outs, spurious spikes, and noise.

Note that regardless of the approach taken for system identification, the monitoring of structural dynamics must have minimal impact on spacecraft operations, timelines, hardware requirements, and software requirements.

REQUIREMENTS AND CONSTRAINTS (CONT'D)

- Results required to support model validation, localization of structural flaws, definition of changing operational envelope, evaluation of proposed mission scenarios
  - ❒ Monitor configuration changes and assess impact on ACS performance
  - ❒ Maintain updated models of system dynamics to support
    - ACS design changes
    - Evaluation of ACS design changes
    - Assessment of impact of ACS failures
  - ❒ Predict preferrable (i.e. low vibration) locations for payloads, experiments, antennas, etc.
- May require real-time implementation to meet requirements for system autonomy
  - ❒ Accommodation of anomalies in data including: noise, drop-outs, spikes, etc.
  - ❒ Reconfiguration of ACS
- Monitoring of space station structural dynamics must have minimal impact on spacecraft operations, timelines, H/W and S/W requirements

CSDL

SYSTEM IDENTIFICATION FOR EVOLUTIONARY SPACE STATION: SUPPORTING TECHNOLOGIES

Sensor Placement

The placement of sensors to obtain structural dynamics data poses a special challenge for the evolutionary space station. Only a finite complement of sensors is practical for the space station due to the cost of hardware and its installation, the limited capability for on-orbit data processing and analysis, and the limiations of telemetry to support ground based data processing and analysis. Furthermore, data is required to facilitate system identification of a series of build-up, operational, and evolutionary configurations of the station. Therefore, from the first build-up flight, the placement of sensors must anticipate subsequent configurations The modal characterisitcs of a spacecraft may change considerably as additional structure is added. In particular, the shift in mode shapes must be considered when placing structural dynamics sensors. For example, a sensor that is located at the site of significant structural deflection for the first build-up flight may be at a modal node for some subsequent evolutionary configuration. Similarly, a sensor location that is of marginal benefit on the first flight may provide data that is useful in identifying modal characteristics at a later stage of the station's evolution. In addition, the trade-offs in selecting specific sensor locations must be evaluated. The modal characteristics that can be identified for any given configuration are a function of the number and placement of sensors. Redundant sources may be required to obtain data for critical modes, and some locations may be precluded by payload placement.

SYSTEM IDENTIFICATION FOR EVOLUTIONARY SPACE STATION: SUPPORTING TECHNOLOGIES

- Sensor placement
  - ❒ Sensor placement to obtain structural dynamics data poses a special challenge for evolutionary space station
    - Finite number of sensors due to H/W cost and installation, limitations of data processing and telemetry
    - Data required from a series of build-up, operational, and evolutionary configurations, so placement of initial sensors must anticipate subsequent configurations and associated structural dynamics
    - Trade-offs in selecting specific sensor locations must be evaluated
      - ▲ Redundant data required for dominant/target modes
      - ▲ Modal characteristics that can be identified are function of number and placement of sensors
      - ▲ Some locations precluded by payload placement

CSDL

SYSTEM IDENTIFICATION FOR EVOLUTIONARY SPACE STATION: SUPPORTING TECHNOLOGIES (CONT'D)

Design of Excitations

Accurate and reliable system identification requires adequate modal response to insure good signal-to-noise ratios. On the other hand, the response levels must not be large enough to interfere with the nominal operations of the ACS system, or to endanger the safety of the spacecraft.

The usual methods for controlling the response levels of a test structure are to optimally position the exciting actuators and to customize the amplitude and the frequency content of the input waveform. Unfortunately, for system identification, the space station actuators (most likely the ACS acuators) are positioned to provide rigid body control and stabilization rather than to excite flexural mode response.

The problem of poor actuator placement can be solved by adding actuators at locations which are optimal for system identification. A more attractive option is to design optimal excitations for the existing ACS actuators. These excitations must adequately but safely drive the dominant/target modes, must minimize the expenditure of energy and consumables, yet be compatible with actuator performance.

SUPPORTING TECHNOLOGIES (CONT'D)

- Design of excitations

  - ❒ Accurate and reliable system identification requires adequate, but safe, levels of modal response
    - Excitations too conservative ➠ insufficient response levels
    - Excitations not conservative enough ➠ interference with nominal ACS and safety requirements

  - ❒ Modal response levels are dependent on the location of actuators on the structure and the input waveforms generated by the actuators

  - ❒ Space station actuators (eg. RCS, CMG) positioned for rigid body ACS ➠ not optimally positioned for system identification

  - ❒ Options include
    - Add actuators for system identification
    - Design excitations to enhance system identification using ACS actuators
      - ▲ Safely excite dominant/target modes
      - ▲ Minimize expenditure of energy, consumables
      - ▲ Be compatible with actuator performance

CSDL

SYSTEM IDENTIFICATION FOR EVOLUTIONARY SPACE STATION: SUPPORTING TECHNOLOGIES (CONT'D)

Evaluation of Structural Integrity

The probability of loss of the mechanical integrity of a space craft grows directly with the size of the structure and the duration of its mission. The larger the space craft, the larger target it offers to orbiting debris. And the larger the spacecraft, the more likely it is to be of a low redundancy, truss-like design. Any damage to a low redundancy structure is more likely to be serious. Large space structures are more likely to have extended missions, and are therefore less likely to be thought of as short term and expendable. With extended missions comes the increased probability of damage due to impacts with orbiting debris, as well as material degradation caused by cumulative effects such as fatigue.

SUPPORTING TECHNOLOGIES (CONT'D)

- Evaluation of structural integrity
  - ❒ Probability of loss of structural integrity increases with size of spacecraft and duration of its mission
    - The **larger** the spacecraft
      - ▲ The larger the target for orbiting debris
      - ▲ The more likely the structure is erectable
        - ➠ low redundancy, truss-like design
        - ➠ the more serious the implications of any sustained damage
    - The **longer** the mission
      - ▲ The higher the probability of damage due to impact or collision
      - ▲ The more severe the effects of fatigue and material degradation

SYSTEM IDENTIFICATION FOR EVOLUTIONARY SPACE STATION: SUPPORTING TECHNOLOGIES (CONT'D)

Evaluation of Strucutral Integrity: Advantages

The advantages of monitoring structurall integrity is the potential it offers to enhance mission success. Once damage is located, mission requirements can be redefined to avoid operations that will cause further damage or to limit the effects of cumulative damage. Alternatively, the ACS system can be reconfigured in such a way that dynamic loads in the damaged area can be reduced. And, the localization of damage is a required first step in any attempt to repair the structure.

SUPPORTING TECHNOLOGIES (CONT'D)

- Advantages of monitoring structural integrity

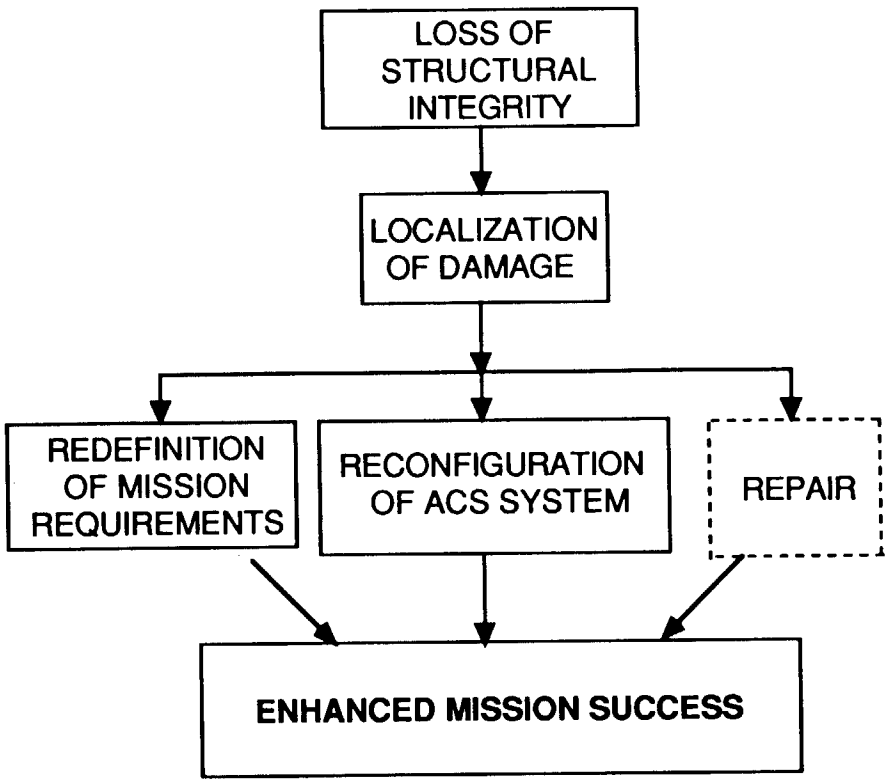

SYSTEM IDENTIFICATION FOR EVOLUTIONARY SPACESTATION: SUPPORTING TECHNOLOGIES (CONT'D)

Evaluation of Structural Integrity: Localization Technology

Localization technology can be used to monitor structural integrity. Localization depends on ground based modelling and on on-orbit measurements. The ground based modelling starts with a finite element model backed up by component tests and scale model tests. On-orbit measurements consist of mode shapes and mode frequencies. The structural model database, and the measured changes in mode frequencies and mode shapes are input to the localization procedure to identify which part(s) of the spacecraft may be structurally flawed.

SUPPORTING TECHNOLOGIES (CONT'D)

- Localization technology

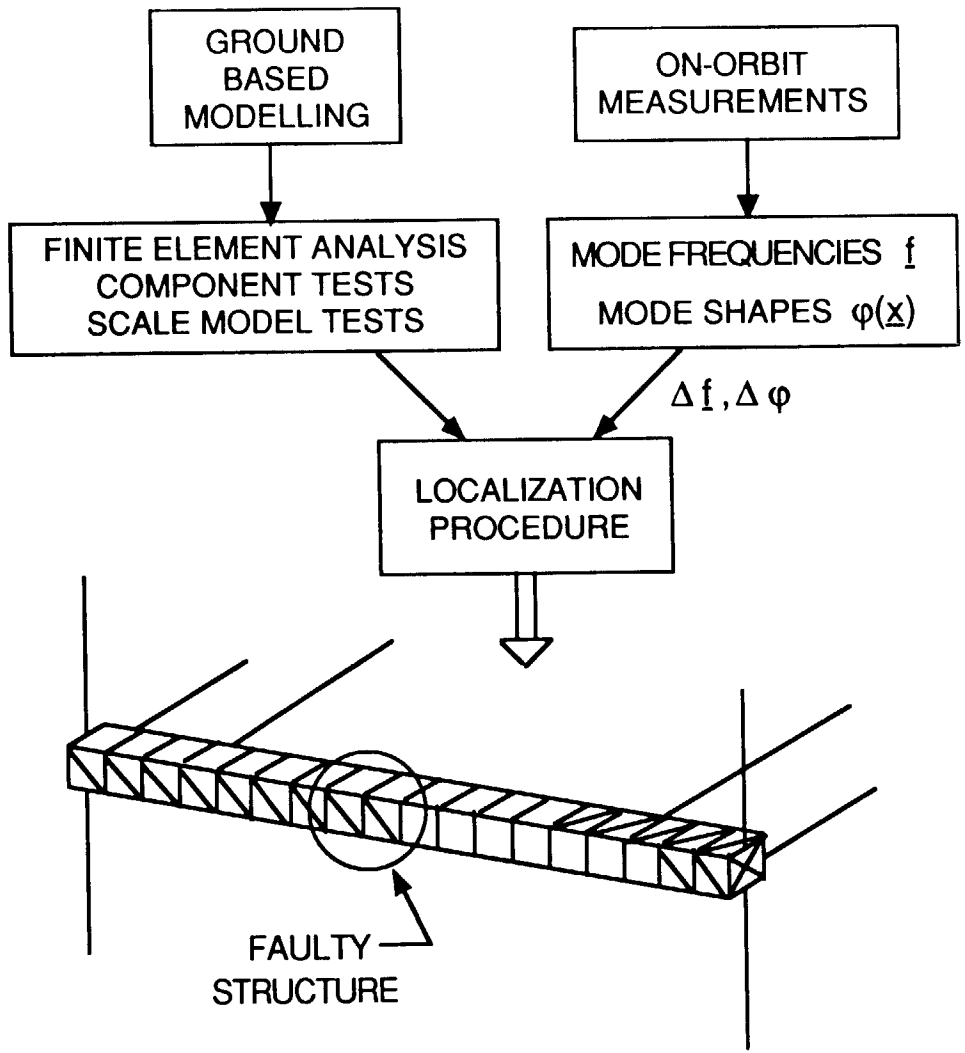

SYSTEM IDENTIFICATION FOR EVOLUTIONARY SPACE STATION: SUPPORTING TECHNOLOGIES (CONT'D)

Evaluation of Structural Integrity: Status of Localization Technology

At present localization technology includes hybrid and frequency based techniques. Both of these techniques require a realistic structural dynamic model obtained from a combination of finite element modelling and ground testing. The hybrid localization technique requires additional on-orbit measurements of any changes in the mode frequencies and the mode shapes of the structure. In contrast, frequency based localization requires only on-orbit measurements of changes in driving point transfer function pole and zero frequencies. No mode shape measurements are required. This greatly reduces the requirements for sensors, data processing, and data analysis.

SUPPORTING TECHNOLOGIES (CONT'D)

- Current status of localization technology
  - Hybrid localization
    - ▲ Requires analytical mode frequencies and mode shapes, predicted by finite element analysis and ground tests
    - ▲ Requires experimental measurements of mode **frequencies** and mode **shapes**
  - Frequency based localization
    - ▲ Requires analytical mode frequencies and mode shapes, predicted by finite element analysis and ground tests
    - ▲ Requires experimental measurements of driving point transfer function pole and zero **frequencies** only

CSDL

SYSTEM IDENTIFICATION FOR EVOLUTIONARY SPACE STATION: SUPPORTING TECHNOLOGIES (CONT'D)

Evaluation of Structural Integrity: Strategy

First, it is desirable to use the available ACS actuators (eg. CMGs, RCS) and operational disturbances (eg. MRMS transients) to provide excitation of the structure. This choice requires no additional actuators, and minimizes the use of additional energy and consumables. Equally important, using the ACS actuators and operational disturbances leads to the localization of flaws or failures in portions of the structure which are actually stressed during spacecraft operations and are therefore likely to suffer structural degradation.

Next, the integrity of the main truss structure is monitored by using a frequency-based localization technique. No mode shape measurements are required, only force and acceleration measurements at the actuators. The resulting requirements for the number and placement of sensors are consistent with other system identification requirements.

Finally, the structural integrity of the appendages is monitored by placing one sensor on each appendage (eg. solar array boom). Again, this placement is consistent with the other system identification requirements. No localization procedure is required, since loss of integrity of a particular appendage can be detected simply by monitoring changes in the pole frequency of the local mode of the particular appendage.

CSDL

SUPPORTING TECHNOLOGIES (CONT'D)

- Strategy for monitoring structural integrity of evolutionary space station
  - Use available ACS actuators (eg. CMGs, RCS) and appropriate operational disturbances (eg. MRMS transients) to provide excitations
    - ▲ No additional actuators, modest energy/consumables required
    - ▲ Enables localization of flaws/failures in portions of structure that are actually stressed during spacecraft operations
  - Apply frequency based localization techniques to monitor structural integrity of truss
    - ▲ Sensor requirements (number, placement) consistent with other system identification requirements
    - ▲ No mode shape measurements required
    - ▲ Force, acceleration measurements required at driving point only
  - Monitor structural integrity of appendages
    - ▲ One sensor on each appendage (eg. solar array) to measure local appendage modes
    - ▲ Sensor placement consistent with other system identification requirements

CSDL

SYSTEM IDENTIFICATION FOR EVOLUTIONARY SPACE STATION: SUPPORTING TECHNOLOGIES (CONT'D)

Evaluation of Structural Integrity: Effect of High Modal Density

The nature of structural design for the evolutionary space station (eg. large truss, slender elements, numerous appendages) results in high modal density. This is because the appendages introduce many new structural degrees of freedom which respond in the same low frequency bandwidth as the truss itself. These local mode frequencies, when crowded into the response spectrum along with the global truss mode frequencies, cause closely spaced modes which are difficult to resolve.

High modal density causes increased pole/zero cancellations, since the driving points are more likely to coincide with modal nodes. This lowers the percentage of resonances and antiresonances that are significantly excited, i.e. that can be reliably measured, which in turn limits the spatial resolution of the localization technique. Note that this problem plagues **all** localization techniques.

SUPPORTING TECHNOLOGIES (CONT'D)

- Effect of high modal density on localization
  - Nature of structural design for evolutionary space station (eg. large truss, slender elements, numerous appendages) results in high modal density
  - High modal density yields increased pole/zero cancellations, since driving points are more likely to coincide with modal nodes
    - ▲ Lowers percentage of resonances and antiresonances that are sufficiently excited
    - ▲ Limits spatial resolution of localization technique

CSDL

SYSTEM IDENTIFICATION FOR EVOLUTIONARY SPACE STATION: SUPPORTING TECHNOLOGIES (CONT'D)

Evaluation of Structural Integrity: Effect of High Modal Density (cont'd)

To illustruate the effect of high modal density for evolutionary space station in more detail, the density of significant driving point resonances and antiresonances are plotted against the corresponding poles and zeros for space stations MB1 and MB2. The driving point pole and zero densities are obtained from a NASTRAN eigenanalysis. The significant driving point resonances and antiresonances are obtained from NASTRAN frequency response plots. If every pole and zero were widely separated from its neighbors , then all resonances and antiresonances would be fully developed, and the plot would follow the dashed straight line drawn through the origin. Instead, crowding of the poles and zeros due to high modal density limits the number of resonances and antiresonances that are significantly developed, and that can be reliably measured. This in turn limits the spatial resolution of the localization procedure.

SUPPORTING TECHNOLOGIES (CONT'D)

Space Station NASTRAN Model
$\zeta = 0.005$

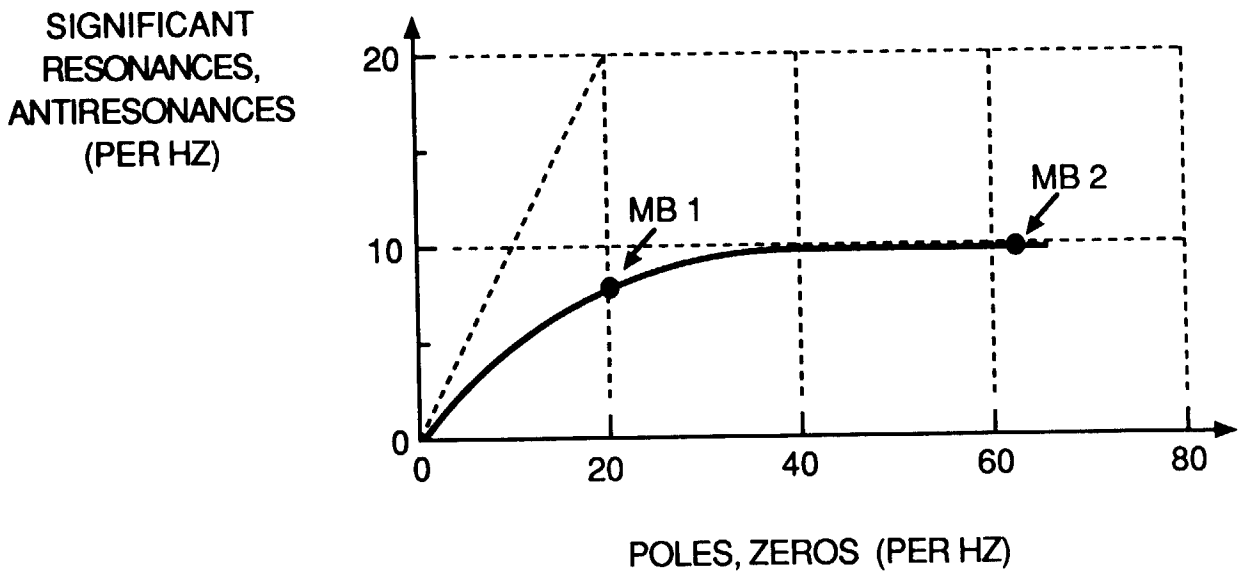

RECOMMENDATIONS FOR FUTURE TECHNOLOGY DEVELOPMENT

The technology areas that require enhancement and/or further development to support practical, efficient, and accurate system identification for the evolutionary space station include: ground test methods, modeling techniques, localization techniques, real-time system identification, and methods of on-orbit modal testing. Advances in methods for ground testing flexible spacecraft will support sensor placement, design of excitations, monitoring of structural integrity, and on-orbit verification of the space station's changing structural dynamics. Improvements in modeling techniques are required for sensor placement, design of excitations, and monitoring of structural integrity. Refinement of localization techniques will enhance the capability to monitor structural integrity, to verify structural dynamics of the space station in zero-g, and to reconfigure the space station's ACS system to forestall structural failures and enhance mission success. The development of practical approaches to real-time system identification will support on-orbit verification of structural dynamics, providing timely updates to the structural models which are required for reconfiguration of the ACS system. Finally, further development of, and experience with, methods of on-orbit modal testing will influence current approaches to sensor placement, design of excitations, monitoring of structural integrity, and verification of on-orbit structural dynamics.

CSDL

THIS PAGE INTENTIONALLY BLANK

RECOMMENDATIONS FOR FUTURE TECHNOLOGY DEVELOPMENT

	APPLICATIONS				
TECHNOLOGY DEVELOPMENT/ ENHANCEMENT	Sensor Placement	Design of Excitations	Monitoring of Structural Integrity	On-Orbit Verification of Structural Dynamics	Reconfiguration of ACS
Ground Test Methods	✸	✸	✸	✸	
Modeling Techniques	✸	✸	✸		
Localization			✸	✸	✸
Real-Time System Identification				✸	✸
Methods of On-Orbit Modal Testing	✸	✸	✸	✸	

CSDL

CONTROL/STRUCTURES INTERACTION CONSIDERATIONS FOR SPACE STATION TRANSPORTATION NODE CONCEPTS

Paul A. Cooper
NASA Langley Research Center

Zoran N. Martinovic
Analytical Mechanics Associates,Inc.

and

Zeen C. Kim
Lockheed Engineering and Sciences Company

Presented at
Technology for Space Station Evolution - a Workshop
January, 1990
Dallas, TX

PRECEDING PAGE BLANK NOT FILMED

PAGE 172 INTENTIONALLY BLANK

Introduction

One concept for a manned mission to Mars uses an evolutionary version of Space Station Freedom (SSF) as a transportation node. The station is modified by the addition of dual keels, an upper and lower boom, additional laboratory and habitation modules, increased power and an assembly platform. With these modifications the station is called the Mars Evolution Reference Configuration (MERC). The mass of the station is 65 percent greater than the mass of SSF. Over a period of months, several flights from Earth to low-Earth-orbit carry the components of a manned Mars piloted vehicle (MPV) to the MERC where the vehicle is constructed on the assembly platform. After each flight the station is reboosted to an appropriate altitude, such that the orbit decay due to atmospheric drag forces lowers the spacecraft to the proper altitude at the appropriate time for rendezvous with the next assembly flight. When the assembly process is completed, the MPV, which has a mass of approximately 200,000 lbm, is situated on the evolutionary station. The mass increase of the MERC with MPV system over SSF is 112 percent. When the MPV is assembled, inspected and verified, the mission is ready to proceed and the MPV is moved from the station to a staging area and mated with fueled trans-Mars injection stages for the flight to Mars.

Presentation Coverage

This presentation describes a finite element model of the MERC formulated to investigate the expected low frequency modes and its variation with the addition of a large payload. A basic reboost procedure using near-continuous firing of reaction control system jets is proposed with off-modulation of the jets used to control flight attitude. The reboost procedure is described with the closed-loop attitude control dictating jet on/off cycling based on feedback signals which contain both the rigid body rotation information and the elastic rotations local to the attitude sensor. The presentation also contains a description of the dynamic response of the structure at critical points of the station during the reboost. The presentation concludes with a preliminary comparison of a basic attitude control system for Space Station Freedom and MERC using control moment gyro's controlled by feedback signals compensated to remove influence of the elastic response of the structure.

INTRODUCTION

THE PRESENTATION REVIEWS THE STRUCTURAL, DYNAMIC AND CONTROL CHARACTERISTICS OF AN EVOLUTIONARY CONFIGURATION CONSISTENT WITH TRANSPORTATION NODE CONCEPTS IN THE HUMAN EXPLORATION INITIATIVE PROGRAM.

PRESENTATION COVERAGE

- O DEFINITION OF THE MARS EVOLUTIONARY REFERENCE CONFIGURATION (MERC).
- O LOW FREQUENCY STRUCTURAL DYNAMIC CHARACTERISTICS OF MERC.
- O REBOOST OF MERC USING OFF-MODULATION OF RCS JETS TO CONTROL ATTITUDE.
- O STRUCTURAL RESPONSE AND STRUCTURAL INTERACTION WITH CONTROLS DURING REBOOST.
- O COMPARISON OF ATTITUDE CONTROL USING CONTROL MOMENT GYROS OF FLEXIBLE SSF AND FLEXIBLE MERC.

MERC Additions to Space Station Freedom

The MERC is an evolutionary version of Space Station Freedom configured to provide assembly and verification facilities for the Mars evolution mission. The SSF is modified by the addition of dual keels, an upper and lower boom, additional laboratory and habitation modules, the customer servicing facility (CSF), a trans-Mars injection stage (TMIS) hangar, increased power, and a MPV assembly platform with a mobile service center (MSC) as shown in the figure. The planar dimensions of the MERC are approximately 215 m by 135 m. The primary truss structure is constructed using 5 m square orthogonal tetrahedral truss bays. The truss structure supports the pressurized modules, a combined photovoltaic (PV) and solar dynamic (SD) power generation system, the vehicle assembly and verification subsystems, and a central thermal radiator system. The habitable area of the MERC is located at the center of the transverse boom and consists of seven modules: the US habitation module, the US laboratory module, the European Space Agency module, the Japanese experiment module, the life science lab, the closed environmental life support lab (CELSS), and a dedicated Mars habitation module. The lower keels and the MPV assembly platform provide docking/berthing areas for Mars mission vehicles and their associated equipment.

MERC Additions to Space Station Freedom

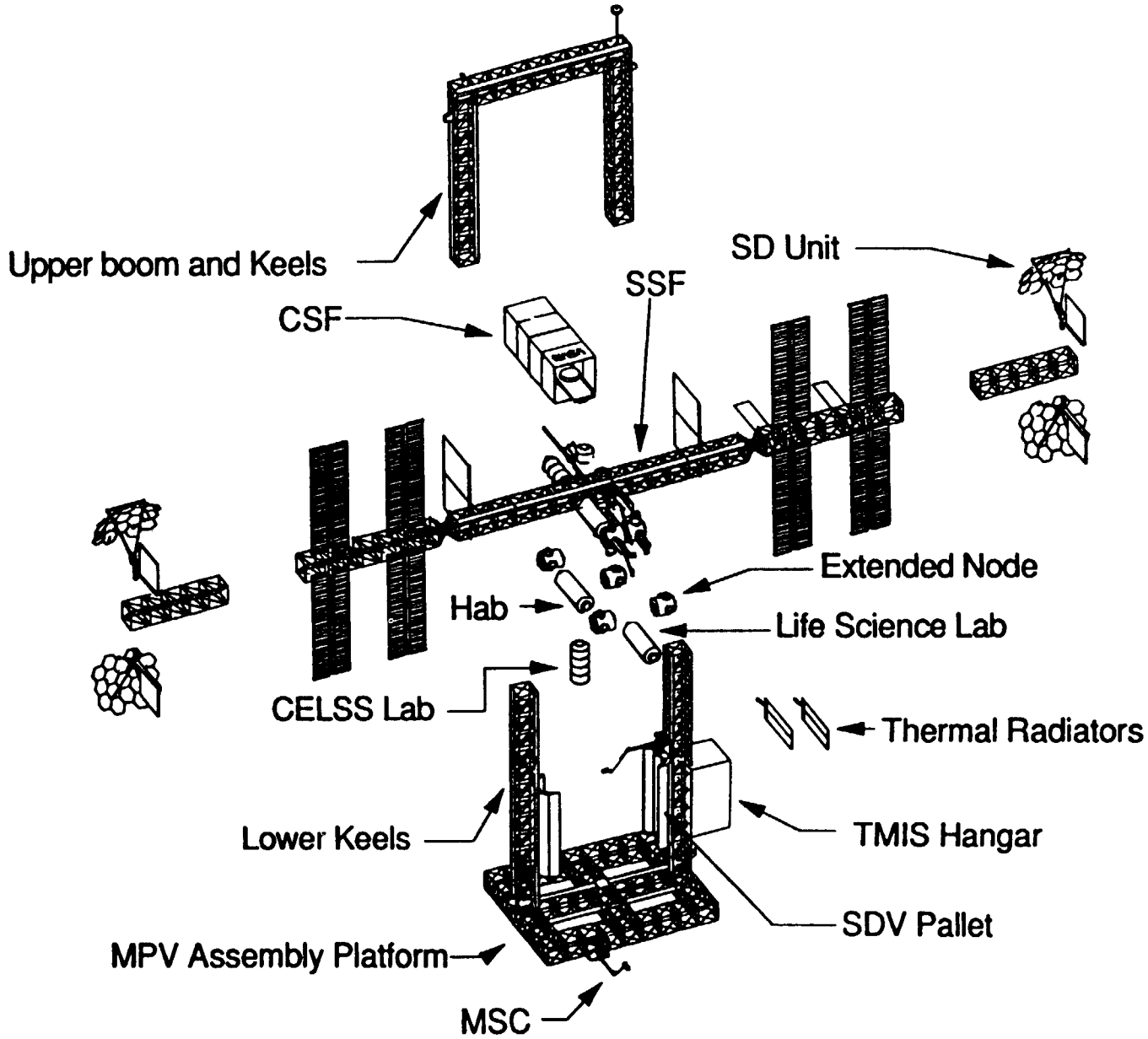

MERC with MPV

In the months prior to the launch of the second flight in the Mars evolution scenario several flights from Earth to low-Earth-orbit carry the components of the MPV to the MERC and the vehicle is constructed and verified on the assembly platform

Mars Evolution Reference Configuration (MERC) with Mars Piloted Vehicle (MPV)

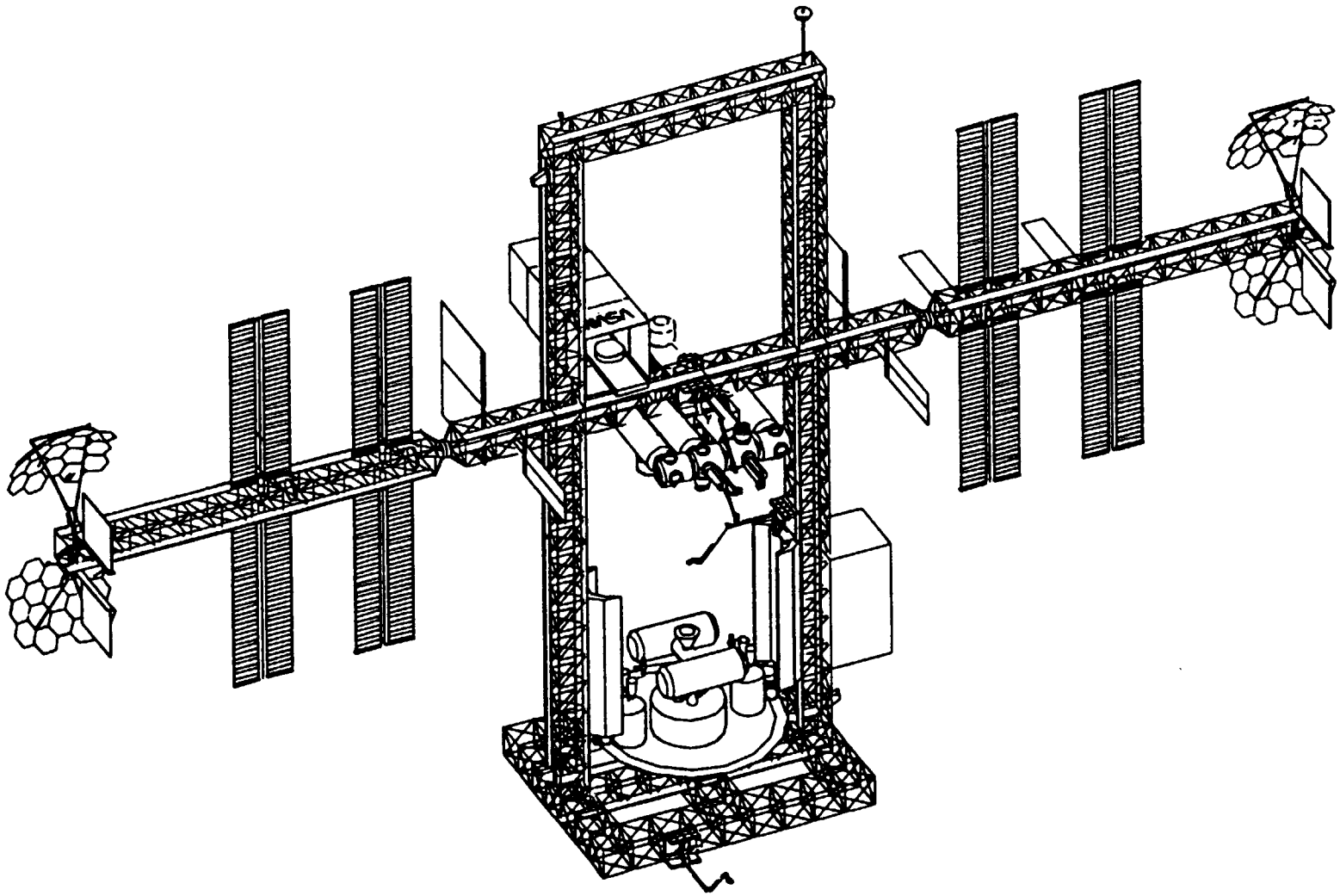

Locations of RCS Jets, Sensors, and Center of Mass

Three different coordinate systems are employed to characterize the geometry, dynamics, and orientation and location on orbit of the station. As shown in the figure, the geometrical coordinate system (X-Y-Z) has its origin at the center of the center truss bay. A body-fixed coordinate system ($\underline{X}$-$\underline{Y}$-$\underline{Z}$) at the center of mass with axes parallel to the geometrical coordinate system is used to describe the dynamics and the orientation of the station with respect to the local vertical, local horizontal (LVLH) coordinate system. The LVLH coordinate system is used to describe the position of the station on orbit with respect to an earth-fixed inertial coordinate system. The LVLH system is defined as follows: X_{LVLH} is parallel to the flight direction and coincides with the $\underline{X}$ axis, Z_{LVLH} is directed toward the center of the earth, and Y_{LVLH} is normal to the orbit plane composing a right handed coordinate system. Attitude control for the MERC is provided by a combination of control moment gyros and a reaction control system (RCS). The gyros are located outboard of the starboard keel on the guidance, navigation, and control (GN&C) pallet as shown in the figure. The four clusters of on/off type RCS thrusters, used for control moment gyro spin-up and desaturation, and altitude reboost, are located on the upper and lower keels and provide a total of 200 lbf thrust in the flight direction.

Locations of RCS Jets, Sensors, and Center of Mass

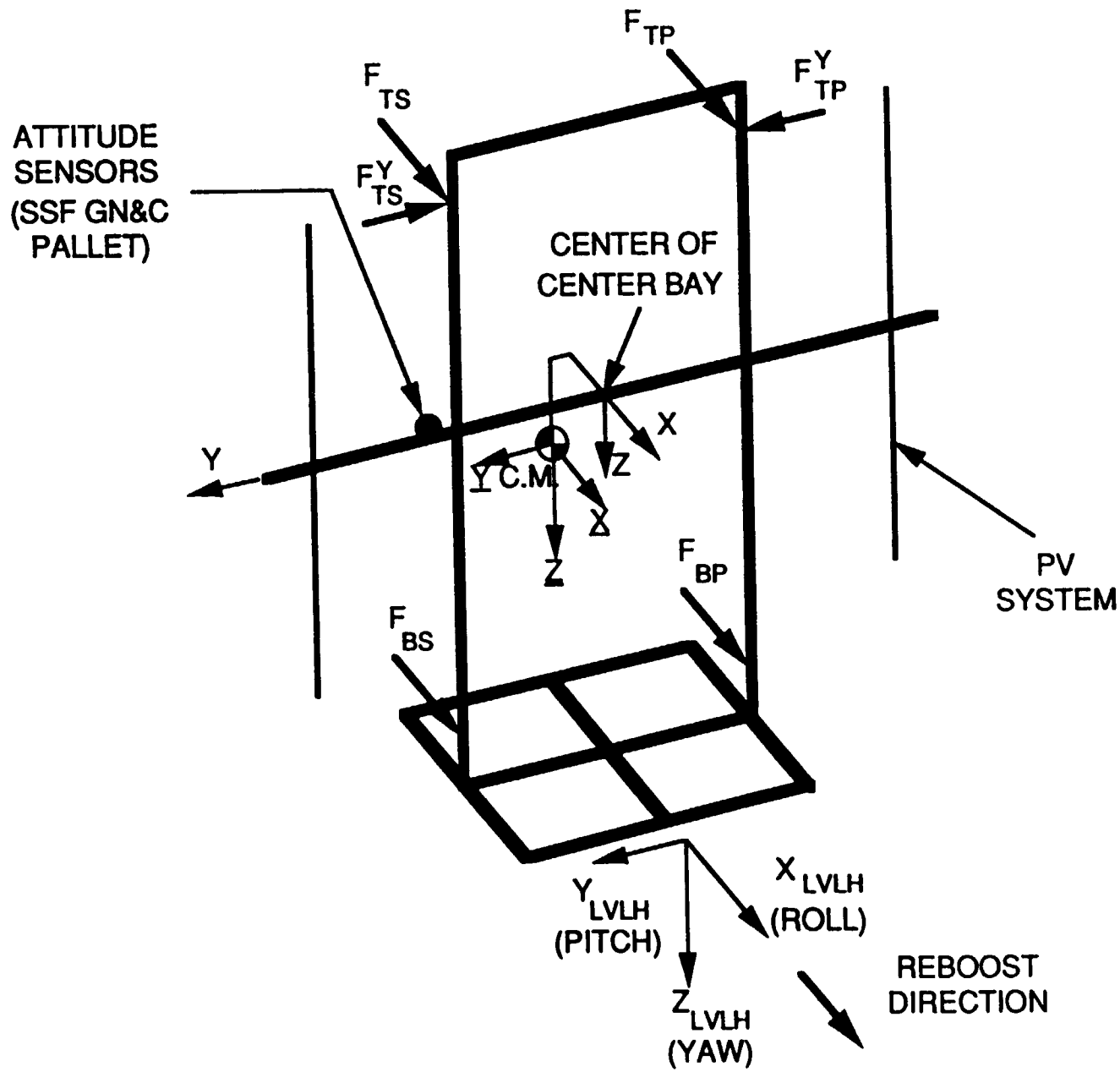

Mars Evolution Reference Configuration Finite Element Model

Detailed finite element models of the MERC and the MERC with MPV were developed. The MERC finite element model is shown in the figure. These models were based on a recent NASA baseline structural model of SSF. The truss members are aluminum coated graphite-epoxy tubes with a 2.0 inch outside diameter, a wall thickness of 0.067 inches, a modulus of elasticity of 13.77×10^6 psi, and a material density of 4.05×10^4 lbf-s^2/in^4. These members are represented by beam elements. Joint effect stiffness reduction is accounted for by modulus reduction. The pressurized modules are located on the positive z side of the center of the transverse boom. The modules are modeled as beam elements with structural and non-structural mass distributions. The local module mass inertias are represented by concentrated masses. The module interconnects are represented by translational and rotational springs which model the properties of the module berthing mechanisms. The pressurized module cluster is connected to the transverse boom by a series of truss tube members, utilizing rigid-link offsets from the elastic centerline of the modules. The alpha gimbals, which provide solar vector tracking, are located symmetrically about the z axis on the transverse boom. The gimbals are modeled as beam elements using lineal mass distribution (equal mass per unit length). The central station thermal radiators and PV systems are located symmetrically about the z axis on the port and starboard transverse boom. These components are modeled with beam elements using lineal mass distribution, and a bending stiffness tuned for a first bending natural frequency of 0.15 Hz for the radiators and 0.10 Hz for the PV system assuming a clamped-free boundary condition. The solar dynamic units are located on the positive and negative z faces at the outer edges of the port and starboard transverse boom. The units are modeled as rigid elements with discrete mass representations of the receiver, collector, and deployment mechanisms.

Various other structures, which include RCS, GN&C pallet, MPV, trans-Mars injection stage hangar, shuttle derived vehicle (SDV) pallets, and communications antennas, are represented as offset masses with inertia matrices about their centers of mass. Other non-structural components (utility trays, thermal control system, joint nodal clusters, and RCS tank farms) are represented by concentrated masses applied at the appropriate model nodes. The MERC finite element model has 2420 beam elements, 434 concentrated mass elements, 57 rigid elements, 1000 nodes, and approximately 5800 dynamic degrees of freedom. The addition of the MPV to the MERC model adds two concentrated mass elements, two rigid elements, and twelve dynamic degrees of freedom.

Mars Evolution Reference Configuration Finite Element Model

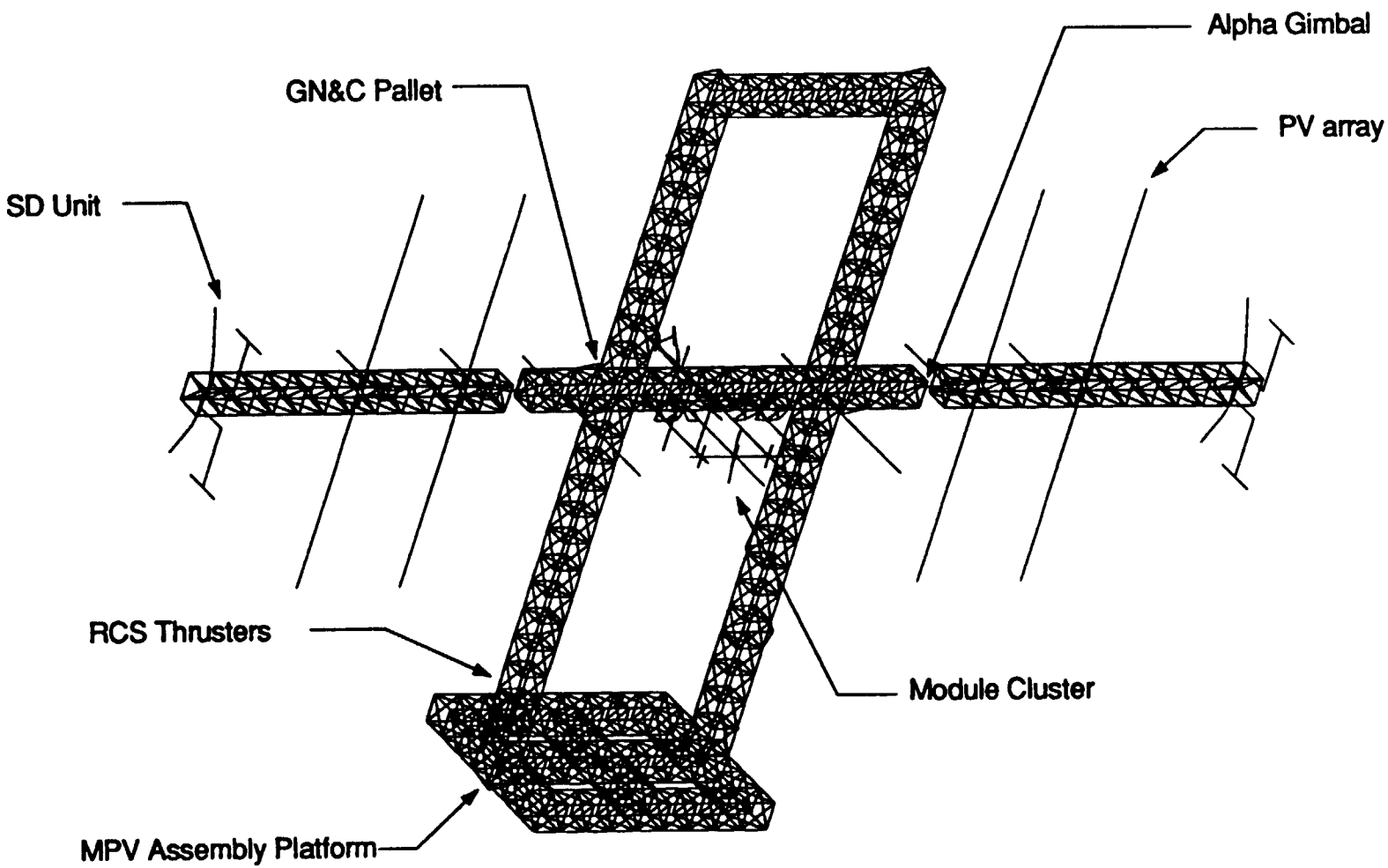

Rigid Body Properties of Finite Element Models

The mass characteristics and rigid body properties comparisons between the MERC, MERC with MPV, and SSF are shown in the Table. The mass of the MERC is 65 percent greater than the mass of SSF and its moments of inertia through the mass center are greater by approximately a factor of four. The mass increase of the MERC with MPV system over SSF is 112 percent and the moments of inertia about axes through the mass center increase by up to a factor of 12.

Rigid Body Properties of Finite Element Models

Configuration	Mass (lbf-sec ^{2}/in) (Wt. on Earth, lbf)	Center of Mass (in) *			Moment of Inertia (10^6 lbf-sec ^{2}-in) **			Product of Inertia (10^6 lbf-sec ^{2}-in) **		
		X	Y	Z	I_{xx}	I_{yy}	I_{zz}	I_{xy}	I_{xz}	I_{yz}
SSF	1,548 (598,000)	-78.7	25.1	132.6	1132	299	1214	6.0	-8.3	-9.7
MERC	2,552 (986,000)	-44.6	10.3	270.9	4801	1302	4045	23.5	-40.5	73.1
MERC with MPV	3,282 (1,268,000)	-39.4	-16.4	714.7	7202	3615	4182	18.7	-82.7	177.7

*Measured from the center of center bay. ** About the center of mass.

Natural Frequency Comparison of MERC and MERC with MPV

The finite element code MSC/NASTRAN, with the Lanczos method of eigenvalue extraction, was used to obtain the undamped natural frequencies of the MERC and the MERC with MPV below 2.0 Hz. The distributions of natural frequencies for the MERC and the MERC with MPV are shown in the figure. The attachment of the MPV to the MERC system adds three natural frequencies below 2.0 Hz and causes a general lowering of most frequencies above 0.25 Hz.

UNDAMPED NATURAL FREQUENCY COMPARISON OF MERC AND MERC WITH MPV

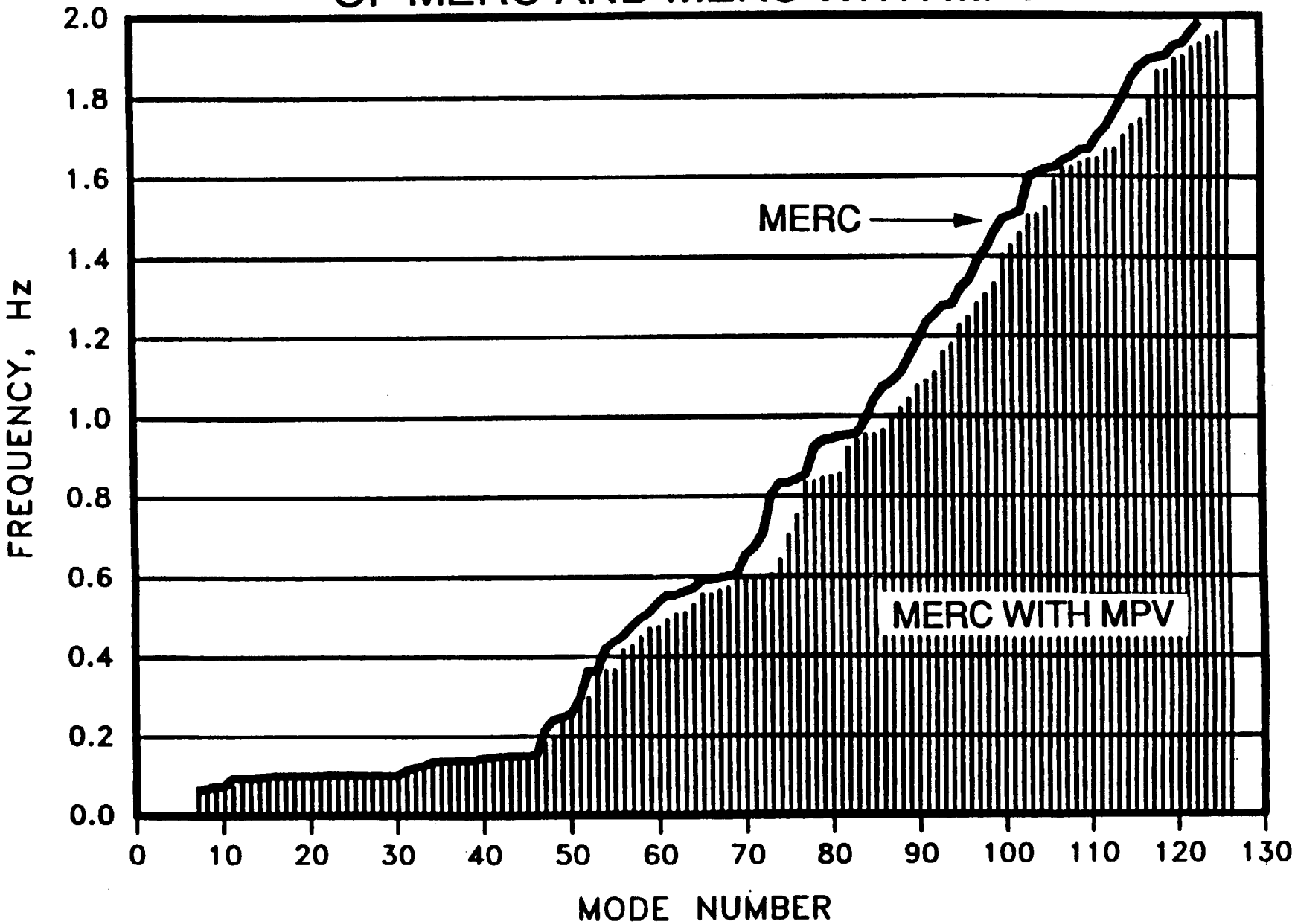

Undamped Natural Modes

The fundamental modes for both configurations (first flexible mode) occur at 0.064 Hz. The MERC with MPV fundamental mode is shown in the figure. An example of an appendage mode, in this case MERC photovoltaic array first bending, is also shown. The first occurrence of MPV assembly platform bending of the MERC with MPV system occurs at 0.36 Hz and is shown. In general the modes show a complex motion with strong coupling of the truss structure with various power, radiator, and payload components. The majority of the modes exhibit similar behavior in that the module cluster region, which has the bulk of the mass, acts as a node point for most modes and the stiff MPV assembly platform moves as a rigid body.

Typical Modes of the MERC and the MERC with MPV

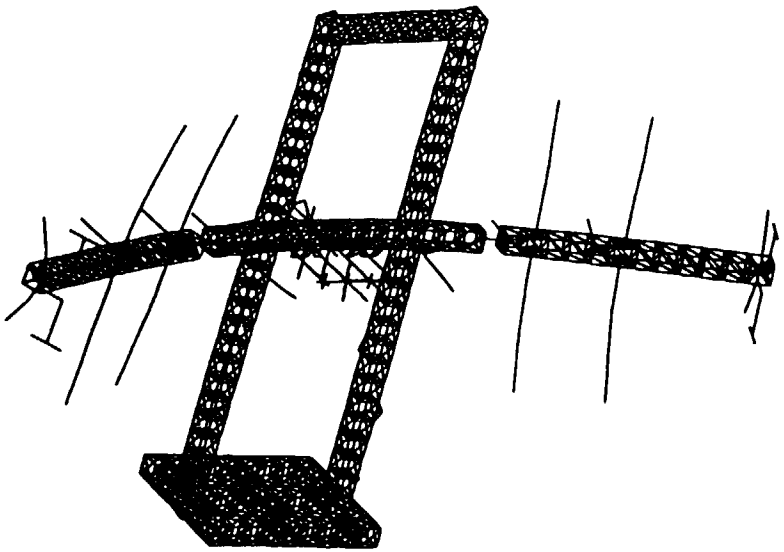

MERC with MPV Fundamental Framework Mode Shape at 0.064 Hz

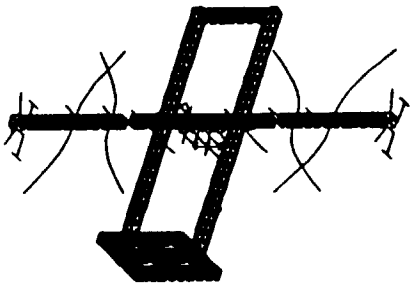

MERC Appendage Mode Shape at 0.099 Hz

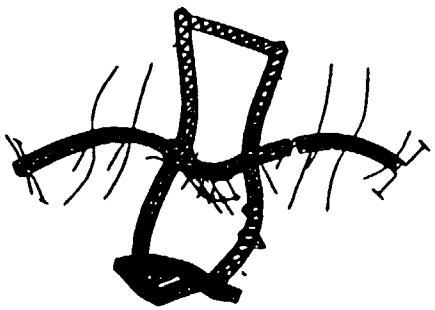

MPV Assembly Platform Bending Mode Shape at 0.36 Hz

Lowest Frequency Occurrence of Component Modes

A comparison of component mode occurrences between MERC, MERC with MPV, and SSF is shown in the table. The undamped frequencies of the major truss framework modes are significantly reduced with the addition of the MPV.

Lowest Frequency Occurrence of Component Modes

Mode Shape	SSF Frequency (Hz)	MERC Frequency (Hz)	MERC/MPV Frequency (Hz)
PV Bending	0.090	0.099	0.095
Transverse Boom Bending	0.144	0.064	0.064
Lower Keel Bending	N/A	0.155	0.111
Lower Keel Torsion	N/A	0.219	0.103
MPV Assembly Platform Bending	N/A	0.672	0.362

Reboost Analysis

To reboost the MERC and the MERC with MPV, the RCS composed of four clusters of jets, located on the dual keels, fires its jets in the negative X_{LVLH} direction to accelerate the station in the flight direction. Since the jets are not located the same distance from the center of mass, the station will begin to yaw about the Z_{LVLH} axis and pitch about the Y_{LVLH} axis. Inertia coupling will also cause a roll motion about the X_{LVLH} axis. For the current study the station is required to maintain a rigid body flight attitude to within three degrees of the nominal flight path, i.e. about the LVLH axes. The attitude and attitude rate are sensed at the GN&C pallet. An error signal, composed of the measured attitude summed with the measured attitude rate, is used with a Schmitt trigger to off- or on-modulate the jets at the appropriate locations to control the attitude. A 50 lbf RCS jet force is used in a given direction at each RCS cluster. It is assumed that the station is assembled in a 220 nautical mile (NM) circular orbit. Altitude changes due to RCS jet firings for reboost in one orbit were studied. Orbital mechanics are incorporated to compute the orbit trajectory subject to time varying jet firings for the attitude control during reboost.

The dynamic characteristics of the MERC and the MERC with MPV are represented as a combination of rigid body and flexible structural dynamics. In order to obtain the equations of motion for the rigid body dynamics, a few assumptions are made. Environmental torques generated by atmospheric drag, solar radiation, and gravitational gradient are assumed to be negligible compared to torques generated by RCS firings during the reboost maneuver. Also, since the attitude change maintained is small, the orientation of the station is represented by a time integral of angular rate. Flexible structural dynamics are modeled by incorporating all flexible modes below 2 Hz. One-half percent of critical damping is assumed for modal damping for each mode. Based on laboratory tests of similar structures, the damping levels assumed are probably lower than the actual damping which will occur so that computed response levels at the sensor location should be conservative.

REBOOST ANALYSIS

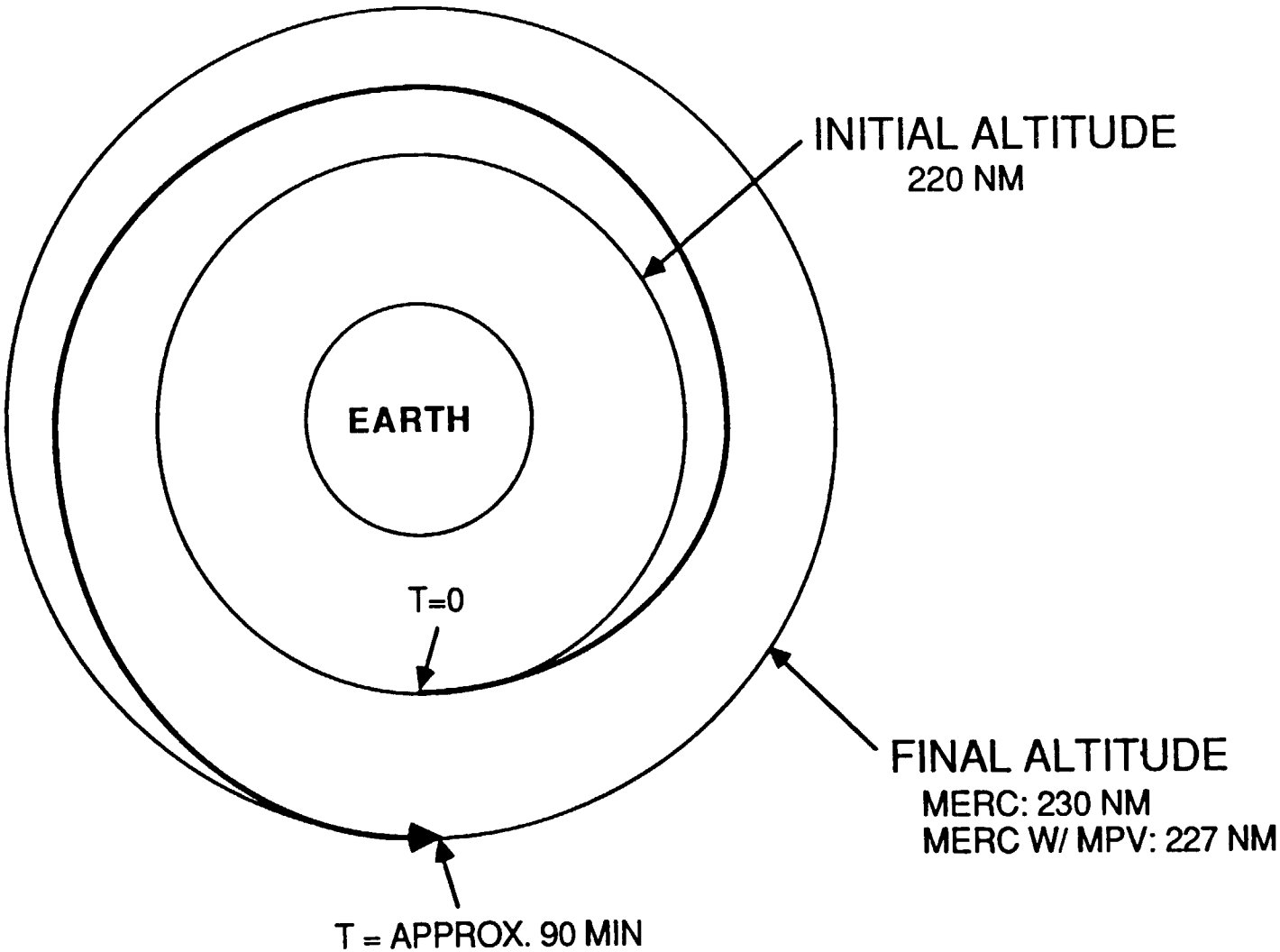

Attitude Control System

Closed-loop attitude control using the RCS jets is performed in order to maintain the attitude of the station within ± 3 degrees. Schematic diagrams of the closed-loop attitude control systems are shown in the figure for the MERC and the MERC with MPV, respectively. The sensors located at the GN&C pallet measure the total attitude and the attitude rate about each axis. This measured motion is the sum of rigid body motion and flexible structural responses at the sensor location. A proportional-derivative feedback control is employed. The error signal drives the Schmitt trigger logic to produce an on-off modulation of the RCS jets.

Since there were significant changes in the inertia properties and center of mass locations, due to assembling the MPV on the MERC , the MERC and the MERC with MPV require different attitude control logics. The changes in the control logic involve not only the adjustment of the control parameters such as deadband and hysteresis but also the complete reorganization of the firing sequences. Therefore, control systems using RCS jets for the MERC should be designed to accommodate control logic changes as the MPV is assembled on the MERC.

When the error exceeds the deadband plus hysteresis, the jet is turned off until the error becomes smaller than the deadband. This modulation creates an eventual limit cycling of jet firings. The deadband and the hysteresis are designed so as to keep the attitude excursion within the required bounds and to reduce the frequency of limit cycling without losing stability of the attitude control system. As the separation between the limit cycle frequency and the fundamental frequency increases, the elastic response caused by the jet firing modulation decreases. Also, the hysteresis is adjusted so that the flexible component of the error signal will not cause an RCS jet chattering instability when the error signal approaches the boundary of the deadband. An iterative design procedure is employed to select control parameters which satisfies the design objectives.

Block Diagram of Closed Loop Attitude Control During Reboost

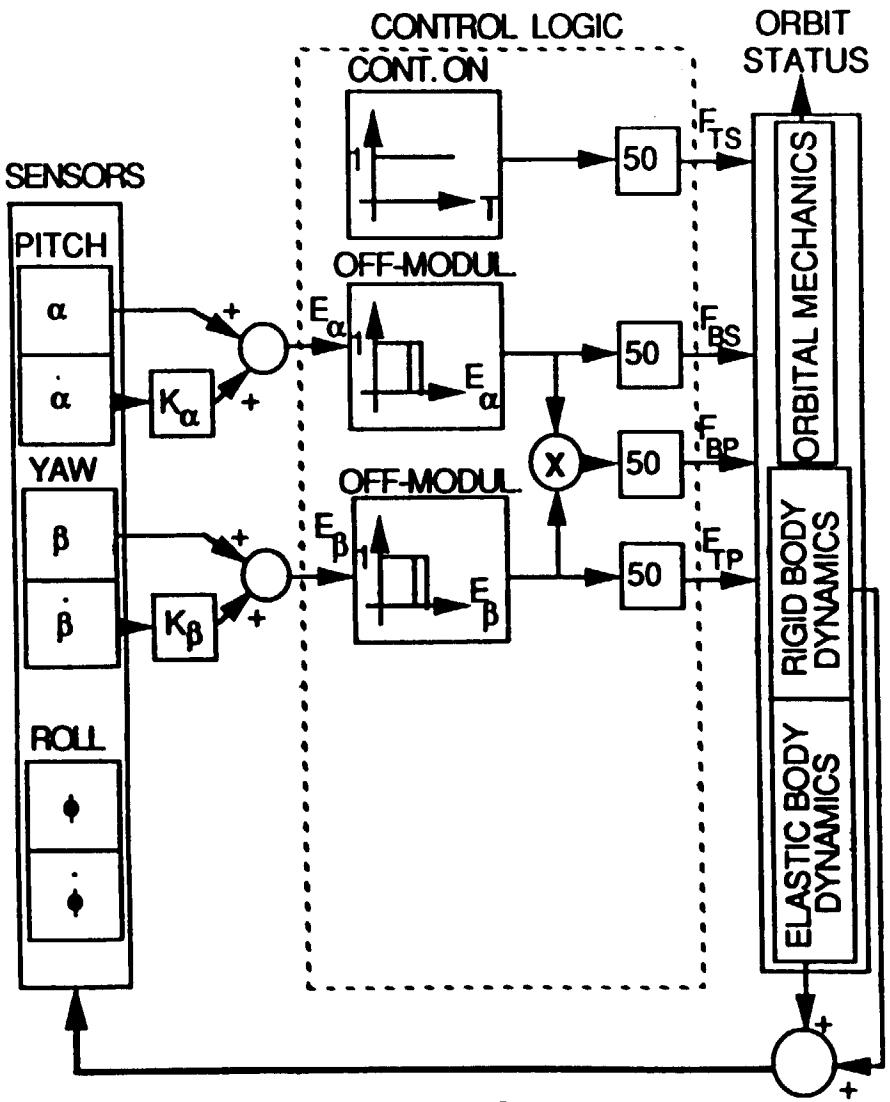

(a) MERC

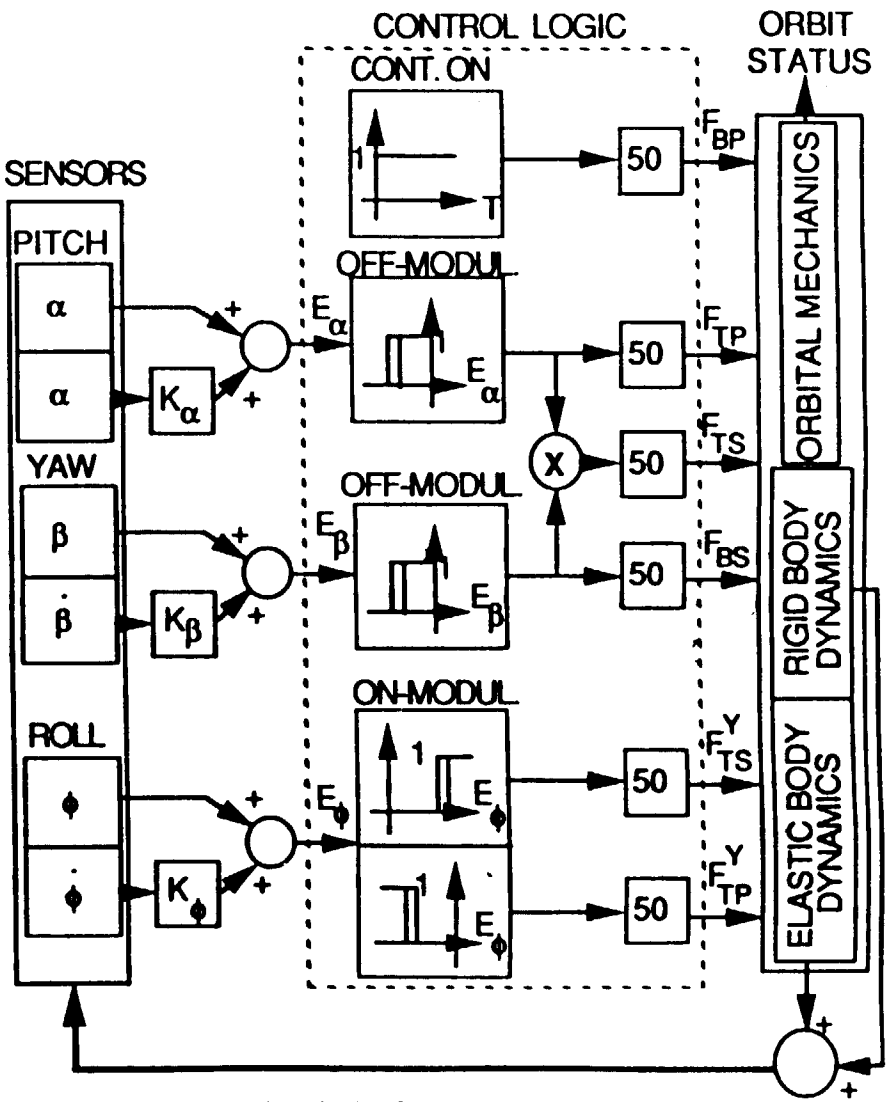

(b) MERC with MPV

Reboost Results

The resultant RCS firing sequences for the first 1000 seconds of the reboost maneuver of the MERC and the MERC with MPV are shown in the figure. To prevent a chattering instability, which could be caused by elastic rotation in the vicinity of the sensors, the hysteresis of the Schmitt trigger was made as large as possible while maintaining rigid body attitude control stability. Although attitude rate is not controlled, the magnitude of the rate is maintained small and never exceeds 0.09 deg/sec and 0.094 deg/sec about each axis for the MERC and the MERC with MPV, respectively. The approximate limit cycle frequencies of 0.0010 Hz and 0.0018 Hz in the yaw axis and 0.0062 Hz and 0.0063 Hz in the pitch axis for the MERC and the MERC with MPV, respectively, are well below the fundamental structural frequency of the MERC and the MERC with MPV which is 0.064 Hz. With this separation of frequencies, the dynamic loadings due to jet cycling should not cause excessive structural response during the reboost.

Reboost Results

RCS Jet Firings During the First 1000 Sec Reboost

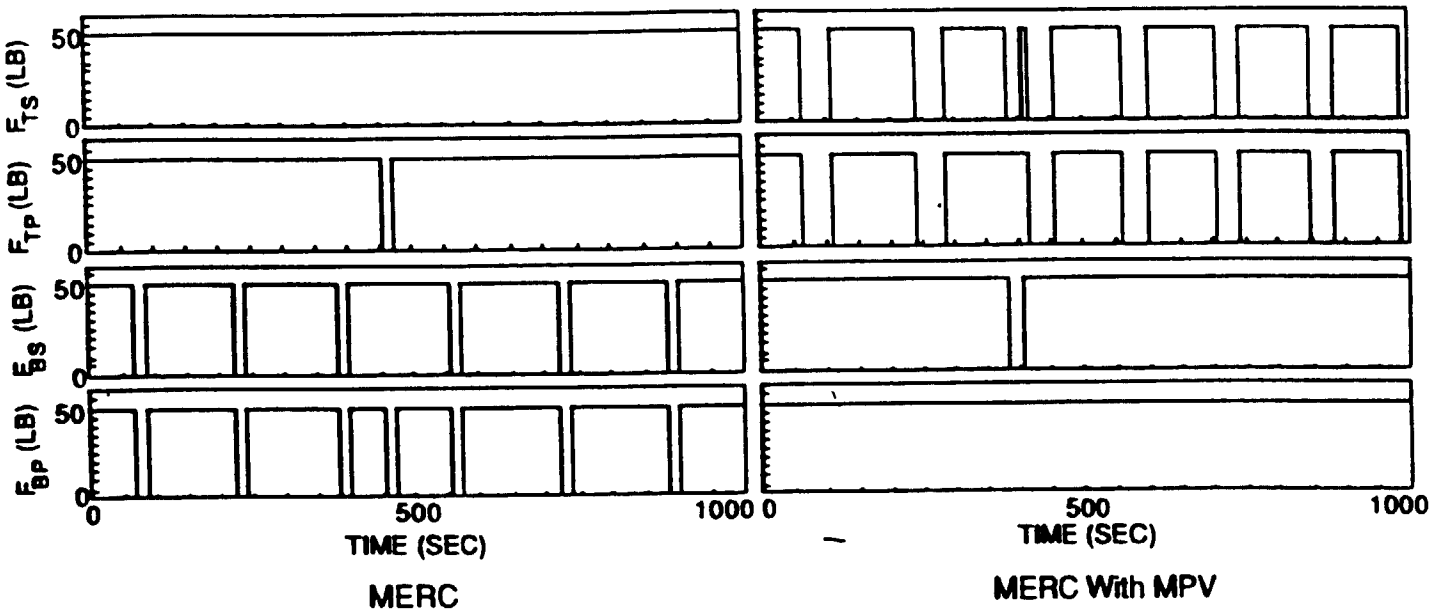

Total Error at the Sensor Location

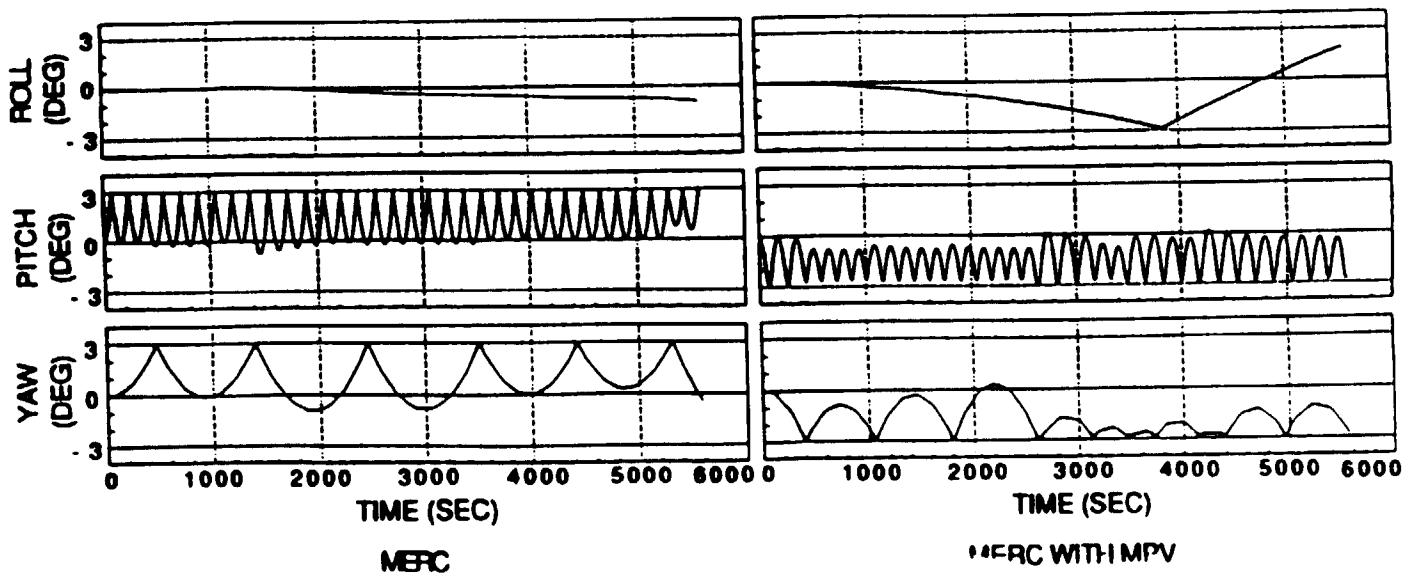

Dynamic Response

The elastic dynamic behavior of certain critical points of the MERC and the MERC with MPV during reboost are summarized in the table. These results indicate that the MERC with MPV is more responsive in certain areas than the MERC, to the reboost forcing function. There are several factors which lead to this result. The responses are driven by totally different reboost pulses, due to configurational mass distribution differences. The primary MERC reboost pulse is from the lower RCS jets and excites the lower regions of the station to a greater extent than do the MERC with MPV system RCS pulses. The primary MERC with MPV RCS pulses are from the upper jets and excite the transverse boom area components to a greater extent than the MERC RCS pulses.

Maximum Displacements and Accelerations at Critical Points

Location	MERC		MERC with MPV	
	Displacement (inches)	Acceleration (milli-G's)	Displacement (inches)	Acceleration (milli-G's)
GN&C Pallet	0.24	0.89	0.34.	0.70
SD Collector	0.88	1.75	2.26	2.14
PV base	0.37	1.49	0.96	1.05
PV tip	1.90	2.48	4.97	6.47
Hab Center	0.19	0.32	0.28	0.36
MPV Assembly Platform	1.05	2.60	0.48	1.44

Elastic Response at the Solar Dynamic Power System

An area of particular concern is the elastic rotation local to the SD systems at the port and starboard tips of the transverse boom. The SD system uses a concentrator to focus solar radiation energy on a receiver assembly which increases the pressure of a gas working fluid. The fluid drives a turbine connected to an electrical alternator and compressor. The concentrator requires a ± 0.1 degree solar vector pointing accuracy during orbital daylight. A combination of alpha and beta joint rotational control is provided to accomplish this pointing accuracy during nominal orbital operations. Since the station is allowed a ± 3.0 degree rigid body rotation during reboost, a local SD pointing control system is used to maintain pointing. The low frequency rigid body excursions from the LVLH axes (± 3 degrees at 0.006 Hz) for the MERC and the MERC with MPV system are easily controllable and should present no pointing problems. The higher frequency local elastic motions of the SD systems were investigated to determine the extent of elastic motion which must be countered by active control. As a measure of elastic motion, plots of the flexible component of sun line variation in the YZ plane over the time of the reboost maneuver were generated. The MERC with MPV system result, shown in the figure, exhibited greater motion than the MERC configuration since the top RCS jets located closer to the SD were cycled to control attitude. The local elastic motion of the SD location never exceeded the 0.1 degree requirement and should present no control problems.

Results indicate no excessive displacements or accelerations at the critical points investigated. These results are based on the current mass distributions and elastic representations and are highly dependent on the NASA baseline alpha joint stiffness used in the structural modeling. This stiffness is subject to change as the design of SSF approaches maturity.

Flexible Component of Sun Line Variation at Solar Dynamic Collector

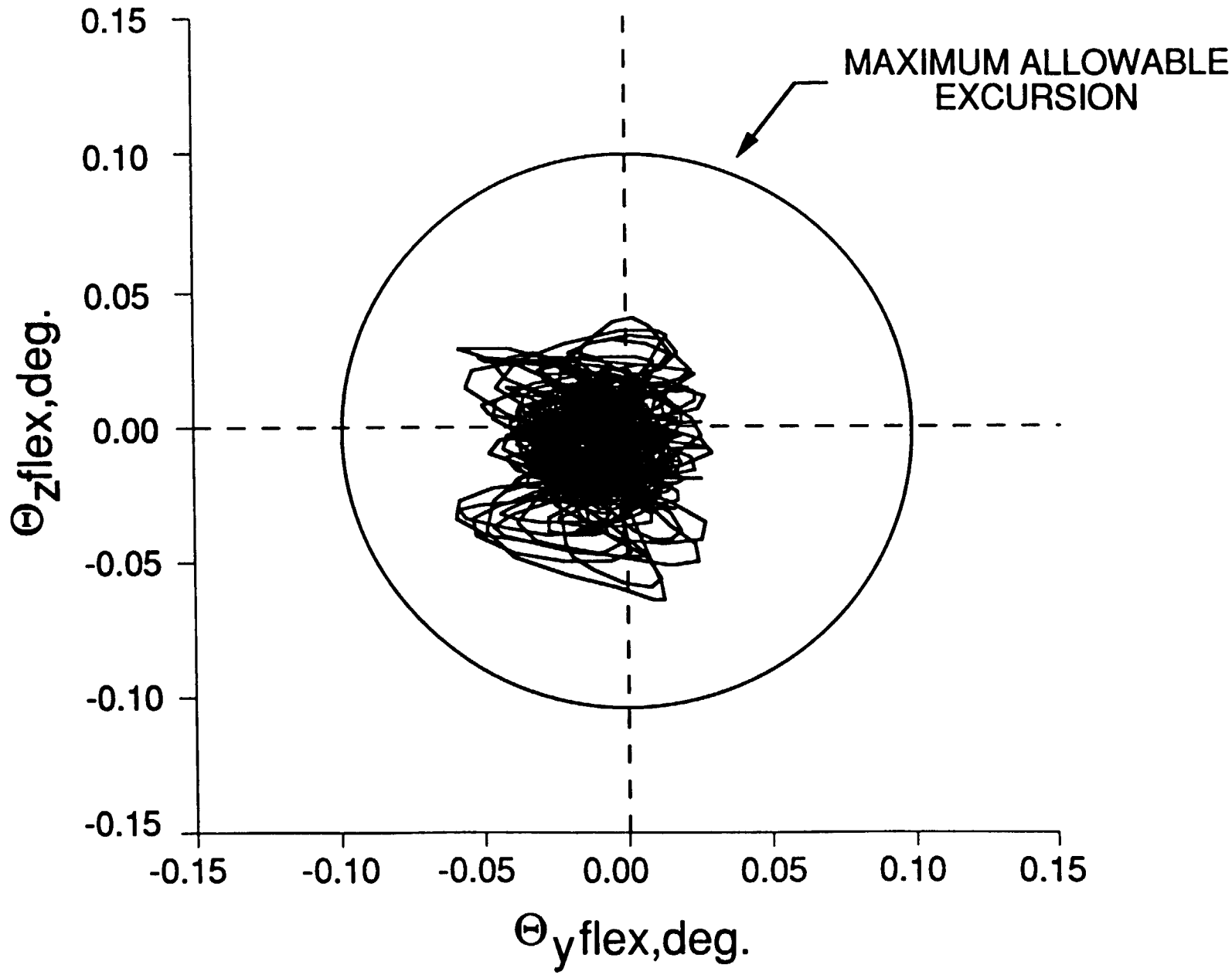

Elements at Stbd Keel-Boom Interface Which Require Stiffening to Prevent Buckling During Reboost

A transient analysis was performed to calculate member loads at selected critical locations during a reboost maneuver. Critical buckling loads were calculated for longerons, battens and diagonals, and compared to the maximum compressive axial force in the selected truss members. Assuming a safety factor of 1.5, four diagonals and one longeron at the starboard keel-boom interface should be stiffened to prevent buckling during the reboost. One method of stiffening the tubes would be to increase the tube wall thickness from the nominal 0.067 inches to 0.153 inches or increase the thickness a lessor amount but increase the percent of axial fibers in the composite layup. The outside diameter must remain at 2 inches since that is the maximum diameter which allows for comfortable handling by an astronaut in a space suit.

ELEMENTS AT STBD KEEL-BOOM INTERFACE WHICH NEED STIFFENING TO PREVENT BUCKLING DURING REBOOST

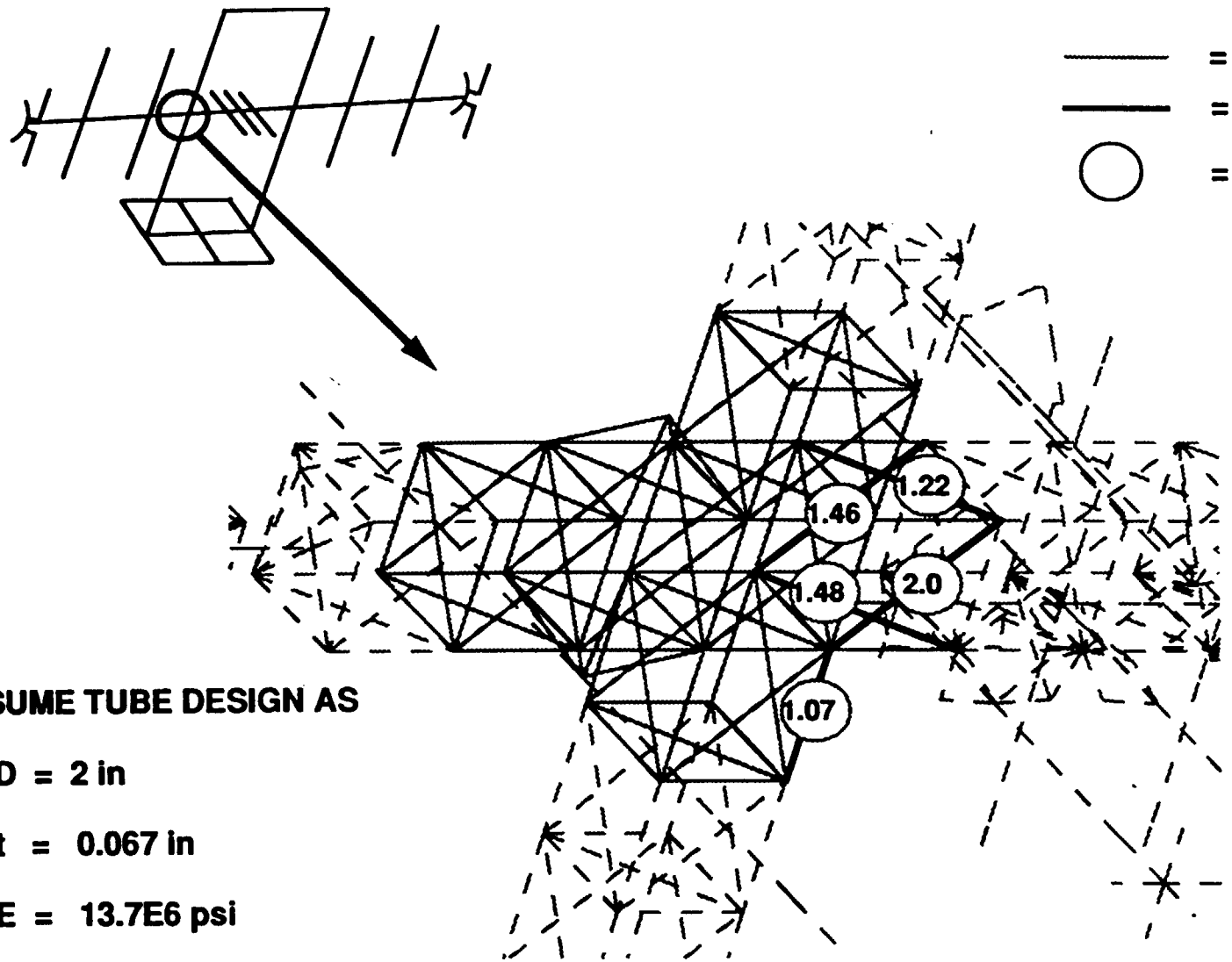

= INSPECTED

= BUCKLED

= $1.5P / P_{CR}$

ASSUME TUBE DESIGN AS

D = 2 in

t = 0.067 in

E = 13.7E6 psi

Safety Factor = 1.5

Continuous Attitude Control for Short Period Disturbances Using Control Moment Gyro's

A basic continuous attitude control system was designed to regulate the rigid-body angular orientation of the "assembly complete" space station Freedom and the MERC. The control system is based on a proportional-derivative feedback law using compensated sensor information measured at the CMG pallet. The system is designed to control the rigid body attitude about each axis such that the dominant poles will have a closed-loop system damping of 70.7% of critical damping. This damping ratio provides a rapid return to zero without excessive initial overshoot. The system is designed to have a closed-loop bandwidth frequency of 0.01 Hz (where a bandwidth frequency is defined as that frequency of an harmonic input above which the steady state amplitude of the closed-loop response is less than 0.707 times the amplitude of the input). The bandwidth is a measure of the responsiveness of the control system. The frequency defining the bandwidth was selected to be almost a decade below the structural dynamic fundamental frequency of the assembly complete space station Freedom and well over a decade above the orbital frequency.

To minimize the noise in the feedback signal due to the elastic motion in the vicinity of the sensors, the feedback signal is adjusted using a low pass filter. The filter is selected and located to attenuate the open-loop response by at least 20 dB in the frequency range which includes the structural response, without reducing the phase margin below 50 degrees. This amount of gain stabilization and phase margin should provide enough robustness in the control system to absorb errors in the predicted structural damping, structural frequencies, and mode shapes, parasitic signals in the electronics, and aging and subsequent parameter changes of the various components of the control system actuators and sensors and data management systems. The system should be able to tolerate substantial mass and center-of-mass location changes as well. The passband frequency of the filter must be selected high enough so as not to corrupt the rigid body performance of the plant but low enough to provide the required gain roll-off at the higher frequencies.

To simplify the design process, the plant dynamics are assumed to be uncoupled about each axis of interest and the axes are assumed to be principal axes. Further, the plant behavior is assumed to be linear and time invariant. After the gains are derived and the filter selected and located such that the control system meets the performance criteria listed above, simulations to disturbances are computed using coupled rigid body dynamics, non-principal axis formulations and all elastic plant modes below 5 Hz for the assembly complete configuration and 2 Hz for MERC. The plant is still assumed to be linear and time invariant during the simulations.

DEFINITION OF THE BASIC SYSTEM USED FOR CONTINUOUS ATTITUDE CONTROL IN THE CURRENT STUDY

SIMPLIFYING ASSUMPTIONS DURING CONTROL SYSTEM DESIGN:

- O ASSUME RIGID PLANT DYNAMICS ARE UNCOUPLED ABOUT EACH AXIS.
- O ASSUME THAT PRINCIPAL AXES COINCIDE WITH ROLL, PITCH AND YAW AXES.
- O ASSUME AN INDEPENDENT PD CONTROL LAW ABOUT EACH AXIS.
- O ASSUME PLANT PROPERTIES ARE LINEAR AND TIME INVARIANT.

ASSUMED PERFORMANCE REQUIREMENTS:

- O CONTROL BANDWIDTH SET AT 0.01 HZ.
- O CONTROL DAMPING SET AT 70.7%.
- O AT LEAST 20 DB APPARENT LOOP GAIN MARGIN IN STRUCTURAL FREQUENCY RANGE AND PHASE MARGIN NO LESS THAN 50 ^{0}.

DYNAMIC SIMULATION

- O ASSUME THE PLANT IS LINEAR AND TIME INVARIENT.
- O RETAIN ALL RIGID BODY DYNAMIC COUPLING TERMS, NON-PRINCIPAL AXES, AND ALL ELASTIC MODES BELOW 2 HZ.

Attitude Control System Block Diagram

The frequency response of the control moment gyros and the rate and position sensors are assumed to be an order of magnitude higher than the frequencies of interest in control study so that the transfer functions for these components are assumed to be unity. A saturating amplifier is placed in the circuit to limit each CMG output to 200 ft-lb so that simulations must be computed using numerical integration since the control system can be nonlinear. A Butterworth filter was selected as the low pass filter for the compensator since the Butterworth filter has a monotonically decreasing transfer function as frequency is increased minimizing ripple behavior in the passband.

SPACE STATION

ATTITUDE CONTROL SYSTEM BLOCK DIAGRAM

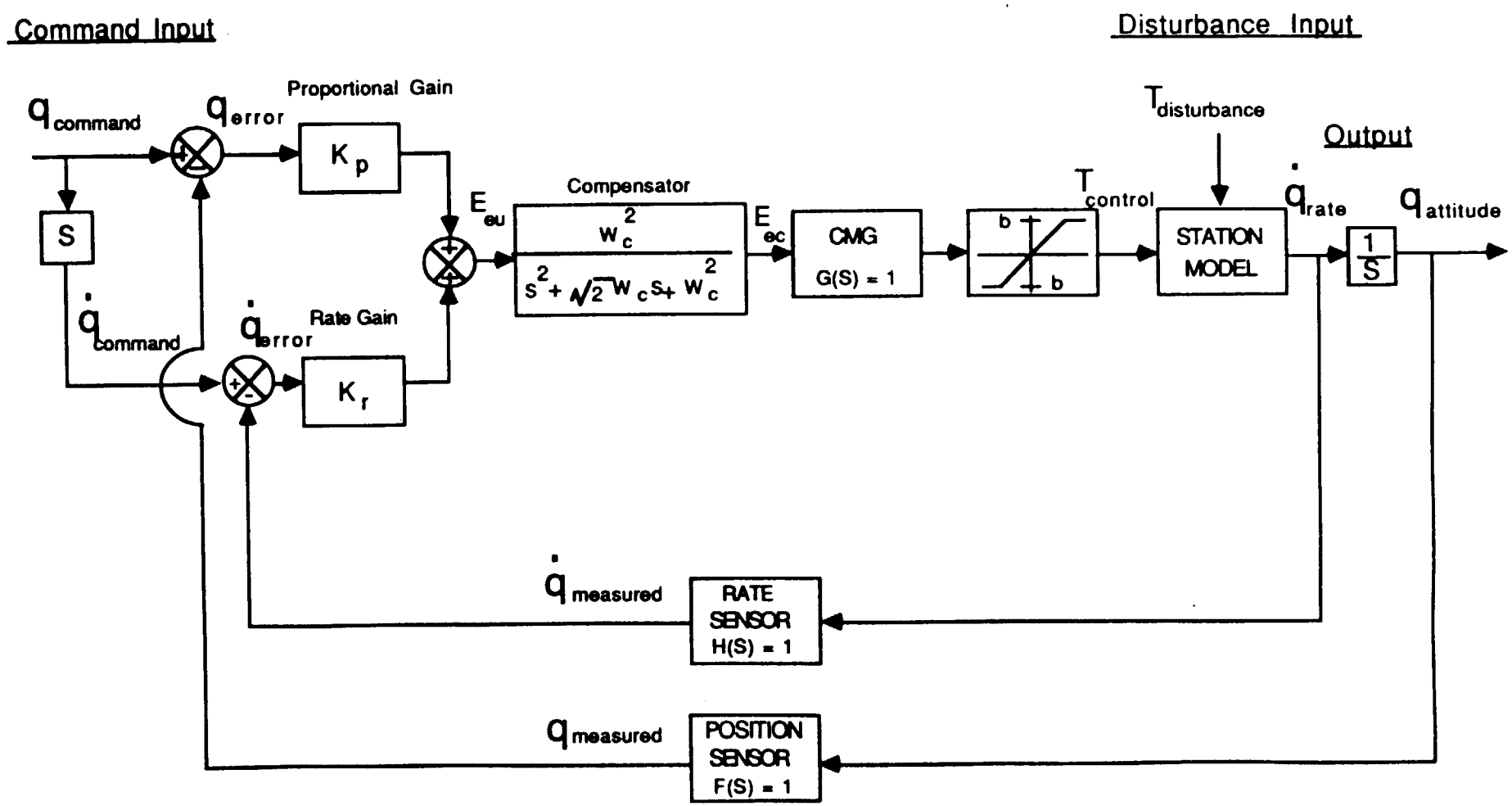

Bode Gain Plot of Pitch Control of Assembly Complete Station

With the PD gains selected to provide the required closed-loop control characteristics, the loop gain for the pitch control circuit of the assembly complete station described with rigid modes only is as shown in the Bode gain plot with a gain crossover frequency at approximately 0.0075 Hz. With the addition of 154 elastic modes below 5 Hz in the mathematical dynamic description of the plant, the Bode gain plot is modified as shown in the figure with a considerable increase in gain starting at about 0.01 Hz. The elastic modes of most concern as influencing the control system are the modes which cause large gains close to the initial gain crossover frequency. For this system the modes are modes number 29 and 31.

BODE GAIN PLOT OF PITCH CONTROL OF ASSEMBLY COMPLETE STATION WITHOUT COMPENSATION

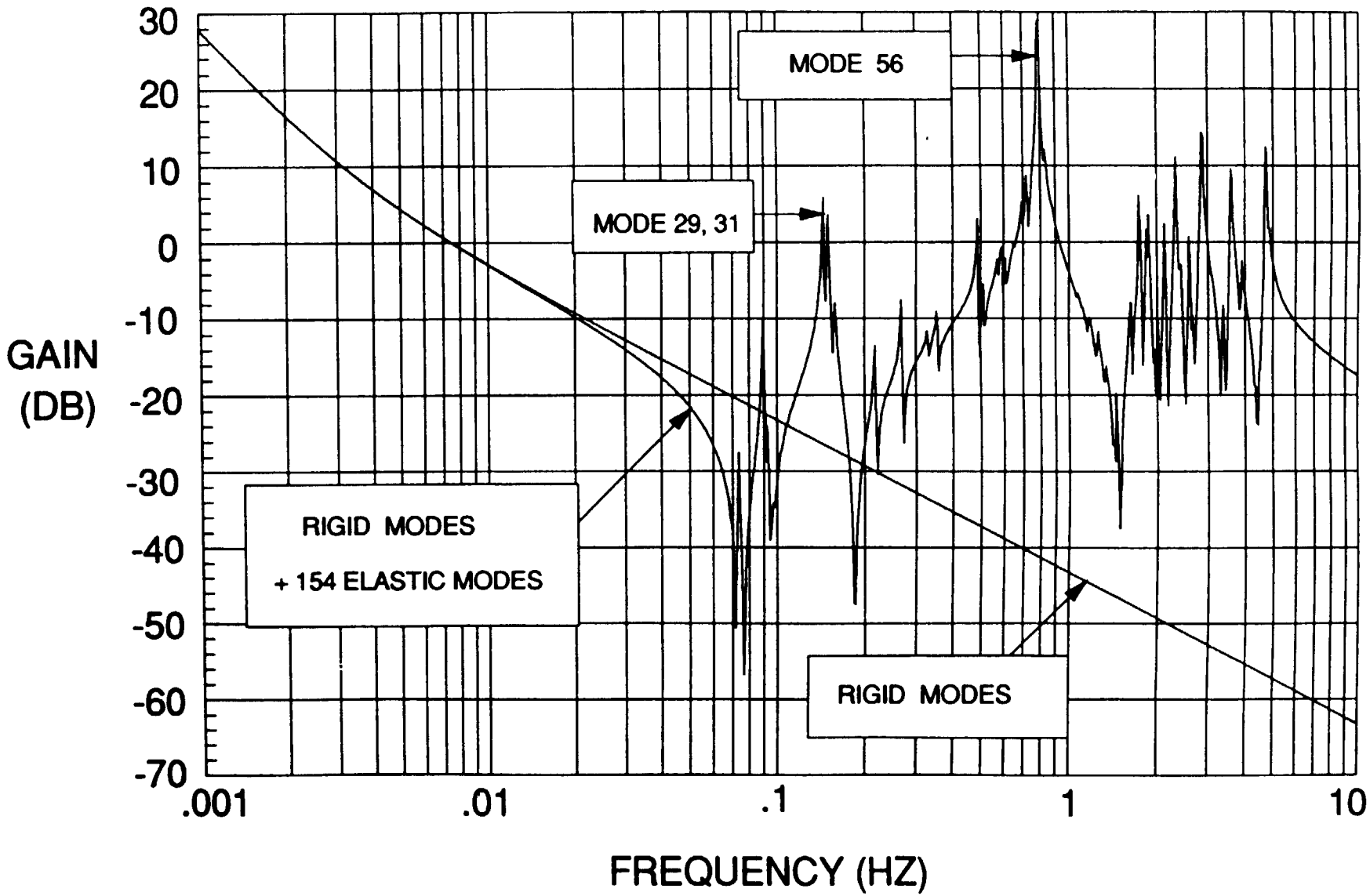

Mode 29 of the Assembly Complete Configuration

One of the modes which most influence the rigid body pitch attitude control system is shown in the figure. The mode and a similar mode 31 occur at approximately 0.14 Hz. The mode is a torsion of the starboard transverse boom. The mode influences the pitch control since the sensors are located on the starboard boom and would interpret the local rotation caused by the boom torsion as a change in pitch of the station.

ASSEMBLY COMPLETE STATION

MODE 29 - 0.144 Hz

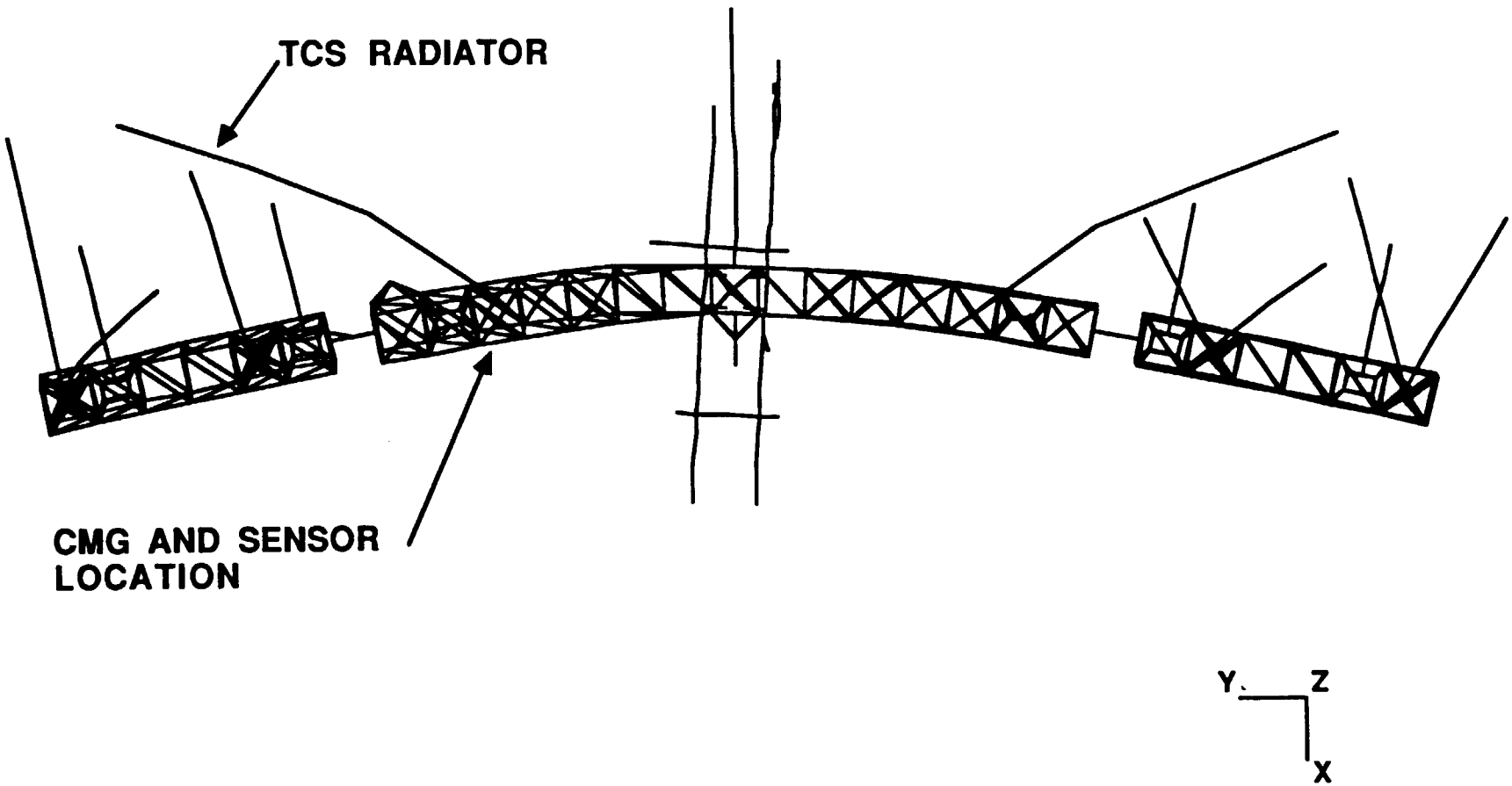

AES-122889

Bode Gain Plot of Compensated Pitch Control of the Assembly Complete Station

As discussed previously, we desire to reduce the influence of the elastic dynamic response of the station on the control system by compensating the feedback signal using a Butterworth low pass filter. The compensation should be designed to roll off the gain in the frequency range of the elastic response to less than 20 dB without influencing the response in the rigid body control frequency range. We have at our disposal the selection of both the location of the filter and the order of the filter. For a Butterworth filter, as the order increases, the gain magnitude of the filter is closer to unity (0 dB) in the passband, the transition band is narrower and the magnitude of the filter gain in the stopband is closer to zero. These are all desirable effects in reducing structural noise without influencing rigid body response; however, the phase margin decreases with increasing filter order, reducing the robustness of the control system. The addition of a second order Butterworth filter with a passband frequency of approximately 0.032 Hz was sufficient to increase the apparent gain margin in the structural frequency range to the required 20 dB as shown in the figure. The PD gains were increased to provide the same rigid body control characteristics as the uncompensated system which reduced the initial gain crossover frequency slightly to 0.006 Hz.

BODE PLOT OF COMPENSATED PITCH CONTROL OF ASSEMBLY COMPLETE STATION

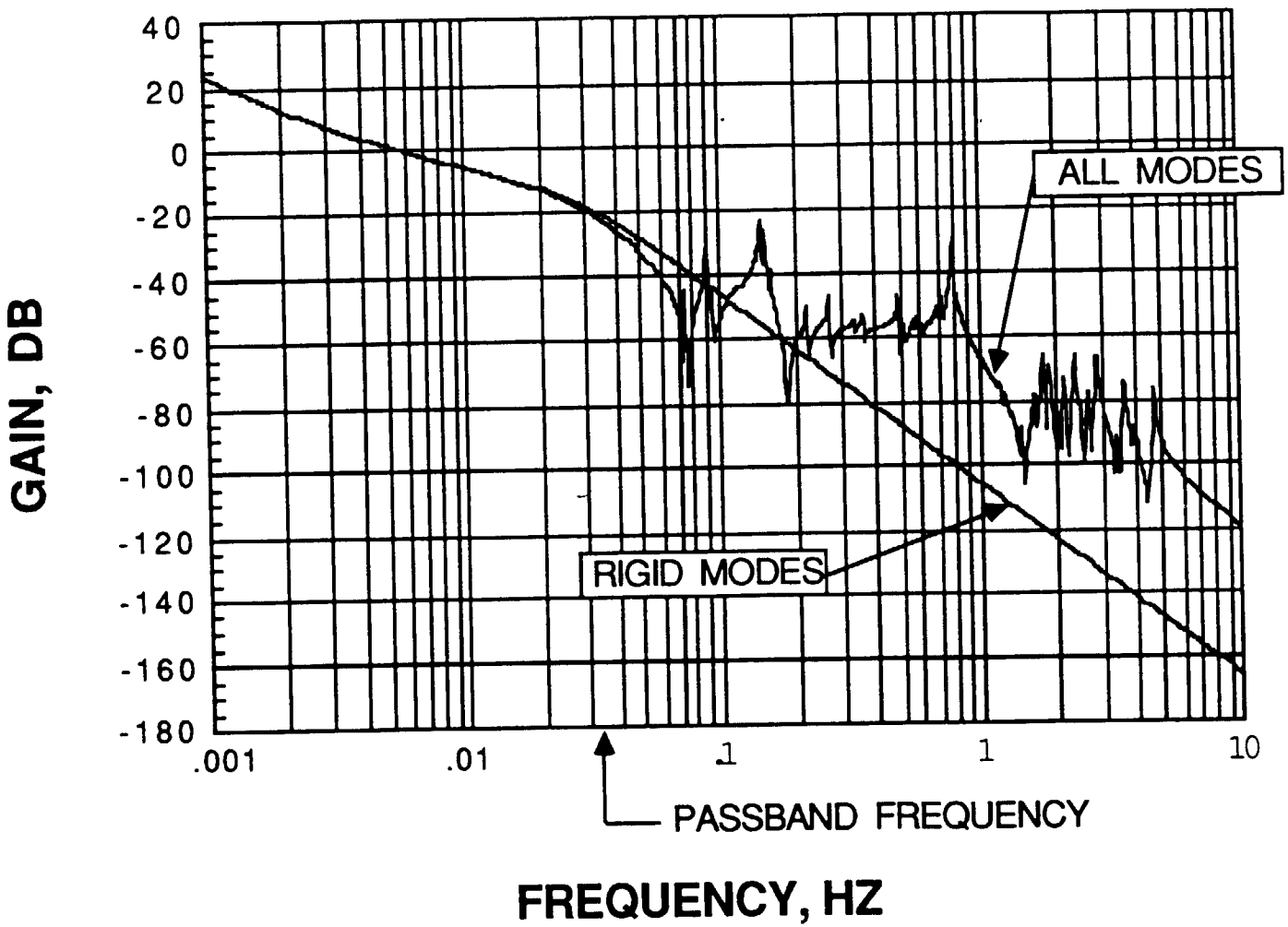

2ND ORDER BUTTERWORTH FILTER WITH A PASSBAND FREQUENCY OF 0.0318 HZ

Bode Phase Plot of Pitch Control of the Assembly Complete Station

With the addition of the Butterworth filter, the phase margin was reduced from 65.6 degrees to 50.7 degrees. This reduced margin still provides enough robustness to be acceptable

BODE PLOT OF PITCH CONTROL OF ASSEMBLY COMPLETE STATION

PHASE MARGINS

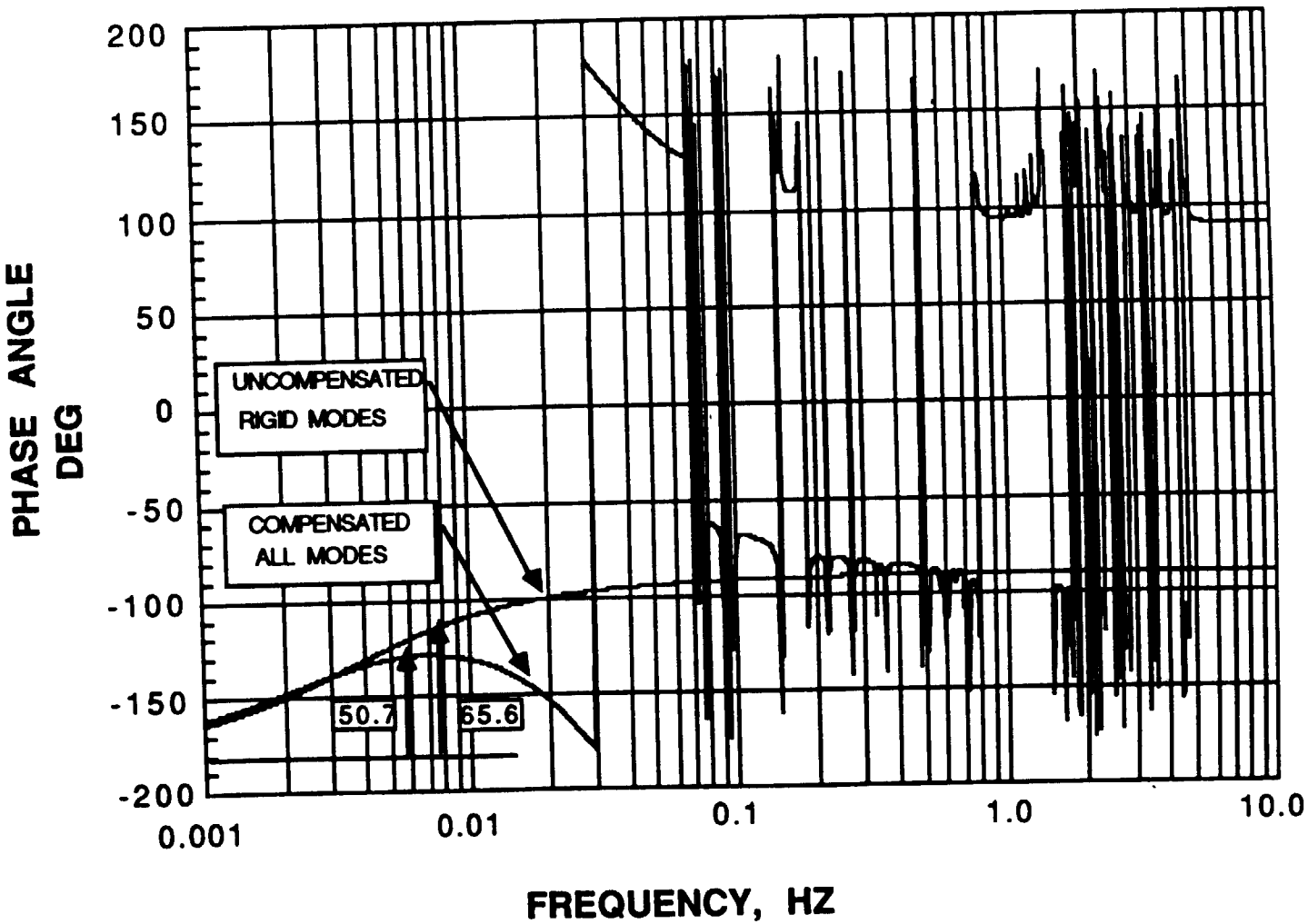

Response of Assembly Complete Station to A Pulse Applied at the Docking Port

A pulse of 500 lbf was applied at the docking port for one second as shown in the figure and a dynamic simulation was computed for both the compensated and uncompensated control systems with both rigid body and elastic modes below 5 Hz included in both simulations.

CLOSED-LOOP TIME-HISTORY RESPONSE OF ASSEMBLY COMPLETE STATION TO A PULSE APPLIED AT THE DOCKING PORT

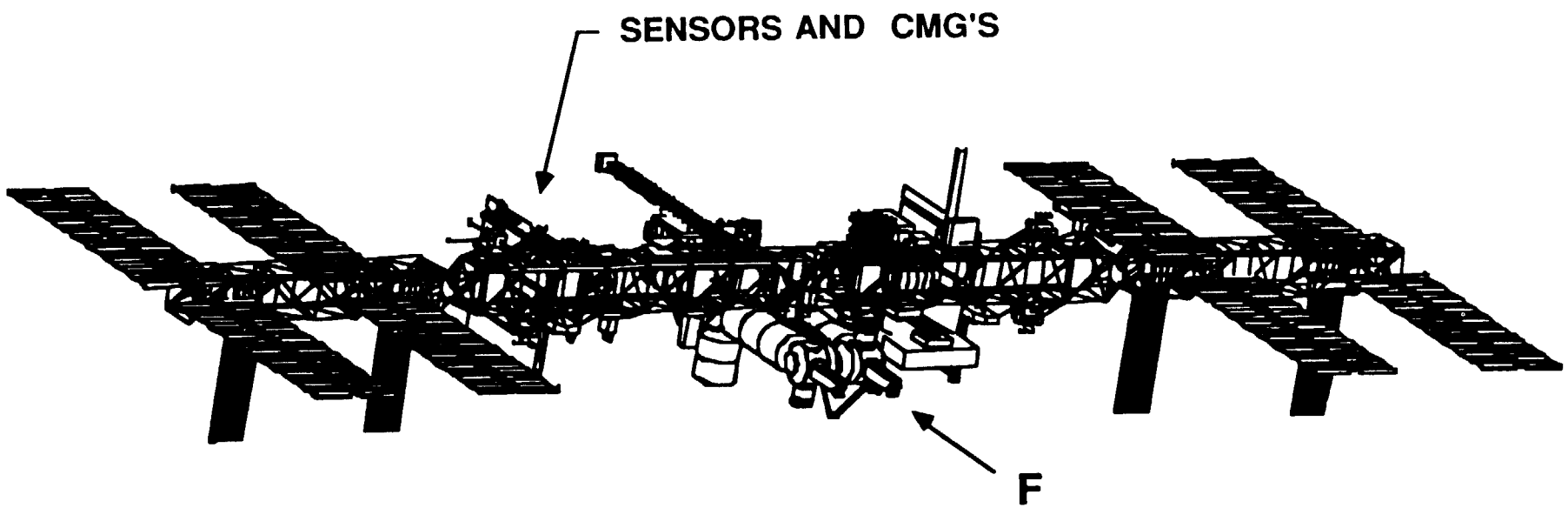

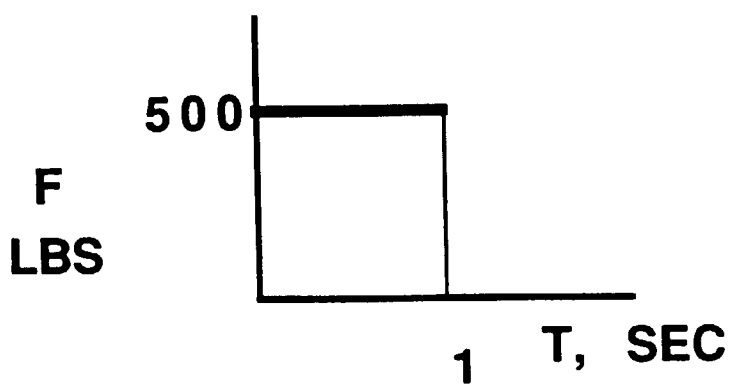

Moment-Time History for Pitch Control of Assembly Complete Station Subject to a Short Pulse - Uncompensated

The control torque time history required to bring the system back to equilibrium from the disturbed state caused by the disturbance torque created by the pulse applied at the docking port is shown in the figure for the uncompensated closed-loop pitch control system. The response of the CMG to the pulse is immediate since perfect dynamics are assumed for the CMG's and the signal acquisition system. The maximum torque requirement is slightly over 200 ft-lb which would be easily available with two CMG's acting about the pitch axis. The control torque varies at a frequency near the structural frequency indicating the strong influence of the structure on the control torques.

CMG MOMENT-TIME HISTORY FOR PITCH CONTROL OF ASSEMBLY COMPLETE STATION (UNCOMPENSATED)

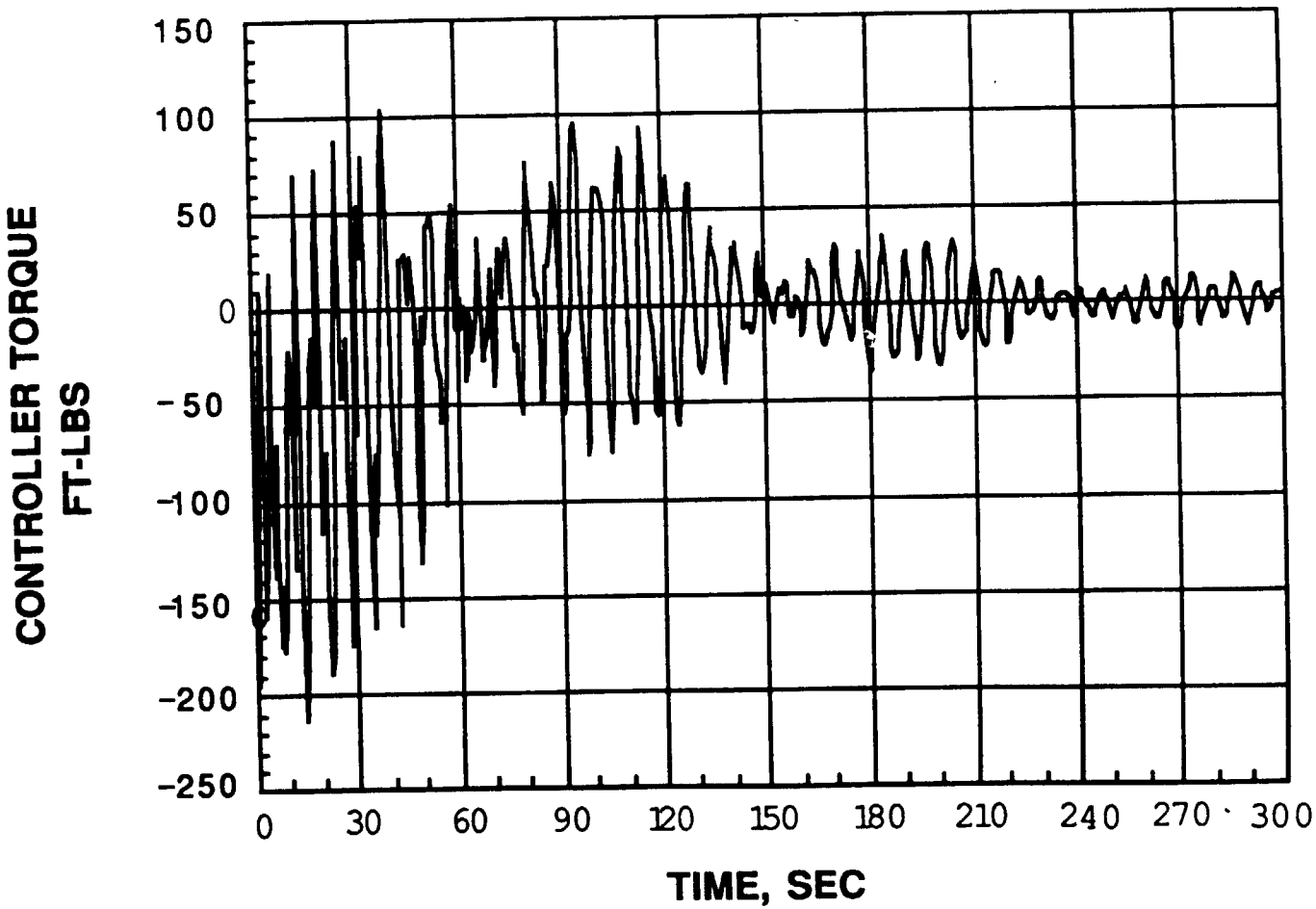

RESPONSE DUE TO 500 LBS APPLIED AT DOCKING PORT FOR 1 SEC

Moment-Time History for Pitch Control of Assembly Complete Station Subject to a Short Pulse - Compensated

The control torque time history required to bring the system back to equilibrium from the disturbed state caused by the disturbance torque created by the pulse applied at the docking port is shown in the figure for the compensated closed-loop pitch control system. Since a lag filter has been placed in the control circuit, there is now a delay in the response of the CMG to the applied pulse. The maximum control torque requirement is reduced to approximately 100 ft-lb, half of the maximum required for the uncompensated case. The control torque excursions at the structural frequency are reduced considerably.

CMG MOMENT-TIME HISTORY FOR PITCH CONTROL OF ASSEMBLY COMPLETE STATION (COMPENSATED)

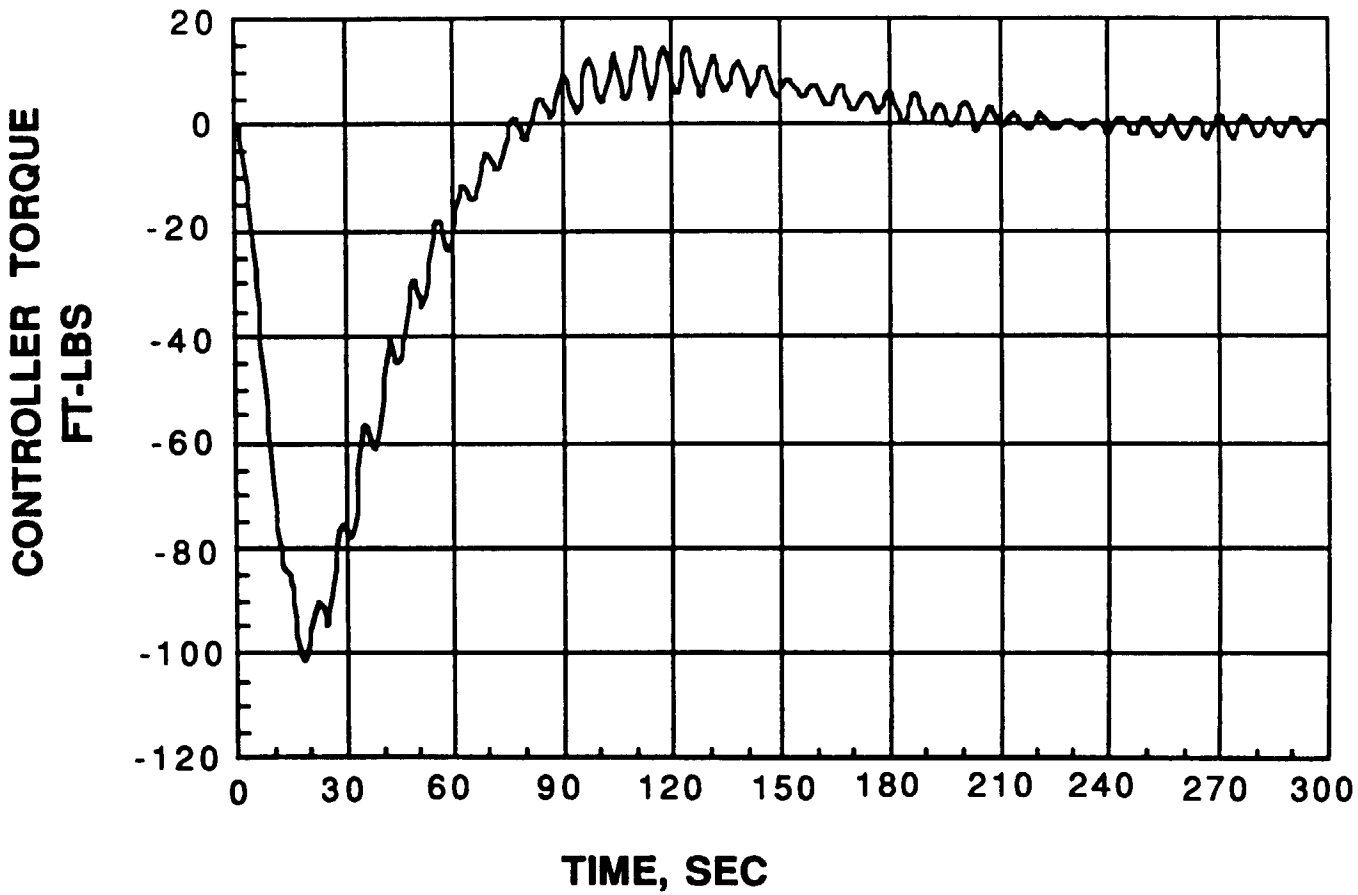

RESPONSE DUE TO 500 LBS APPLIED AT DOCKING PORT FOR 1 SEC

Pitch Time-History At the Attitude Control Sensor Location of the Assembly Complete Station

The figure contains the apparent pitch attitude change (rigid body plus local elastic motion) at the sensor location for both the uncompensated and compensated control systems. The initial overshoot is 50 % greater for the compensated control system but the time to return to zero is very nearly the same for both cases since gains were adjusted in the compensated circuit to keep the poles associated with the rigid body motion at approximately the same location as for the uncompensated case. There is a small lag in response apparent in the compensated case. There is slightly more elastic motion evident in the response for the compensated case.

PITCH TIME-HISTORY AT ATTITUDE CONTROL SENSOR LOCATION OF ASSEMBLY COMPLETE STATION

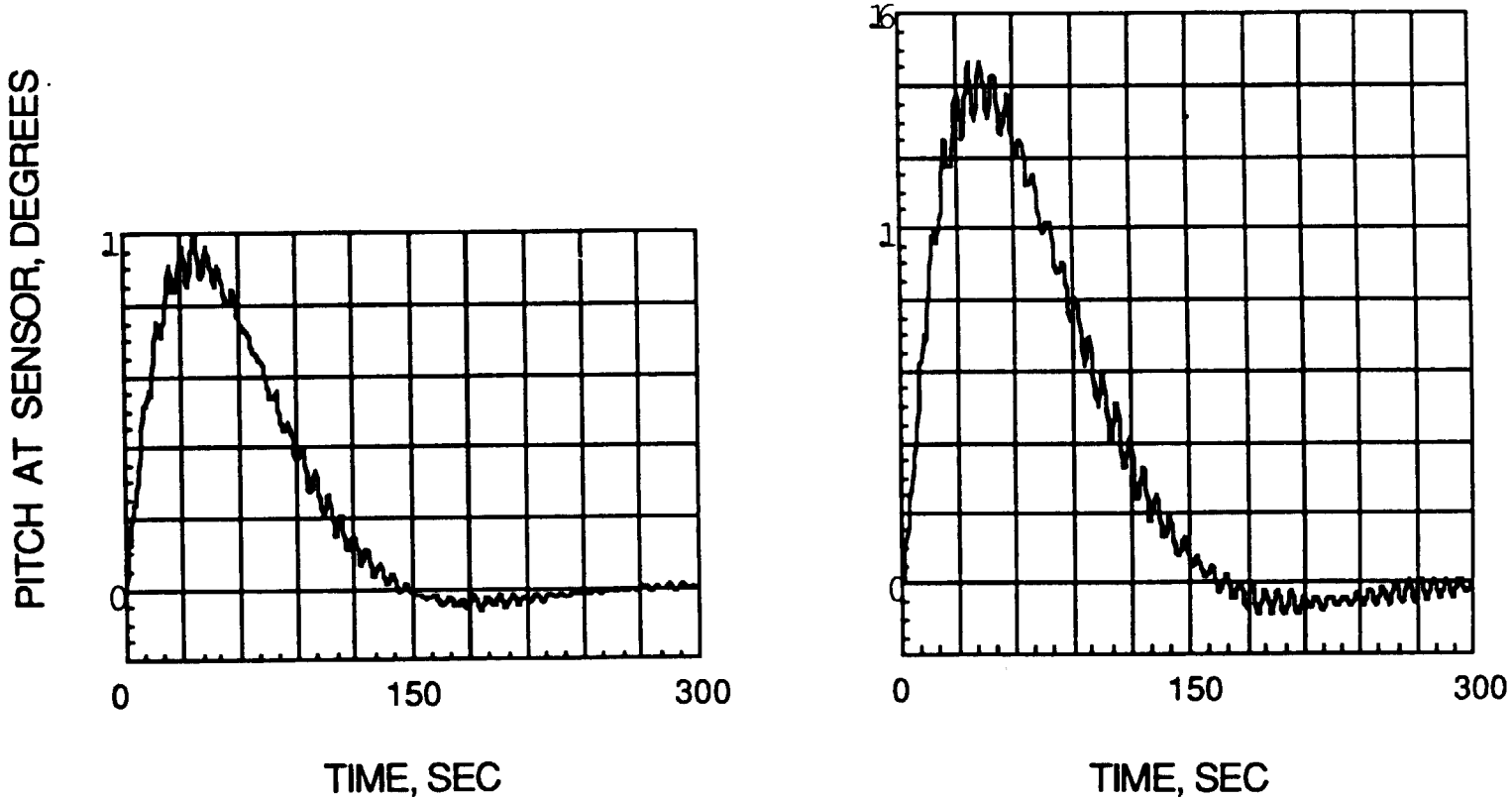

UNCOMPENSATED

COMPENSATED WITH 2ND ORDER BW

PITCH RESPONSE AT SENSOR DUE TO PULSE OF 500 LBS APPLIED AT THE DOCKING PORT

Response of MERC to A Pulse Applied at the Docking Port

A pulse of 500 lbf was applied at the docking port for one second as shown in the figure and a dynamic simulation of the control torque was computed for the uncompensated control system with first only rigid body modes used to represent the MERC motion and then with both rigid body and all elastic modes below 2 Hz included to inspect the influence of the elastic modes on the control torque.

CLOSED LOOP TIME-HISTORY RESPONSE OF MERC TO A PULSE APPLIED AT THE DOCKING PORT

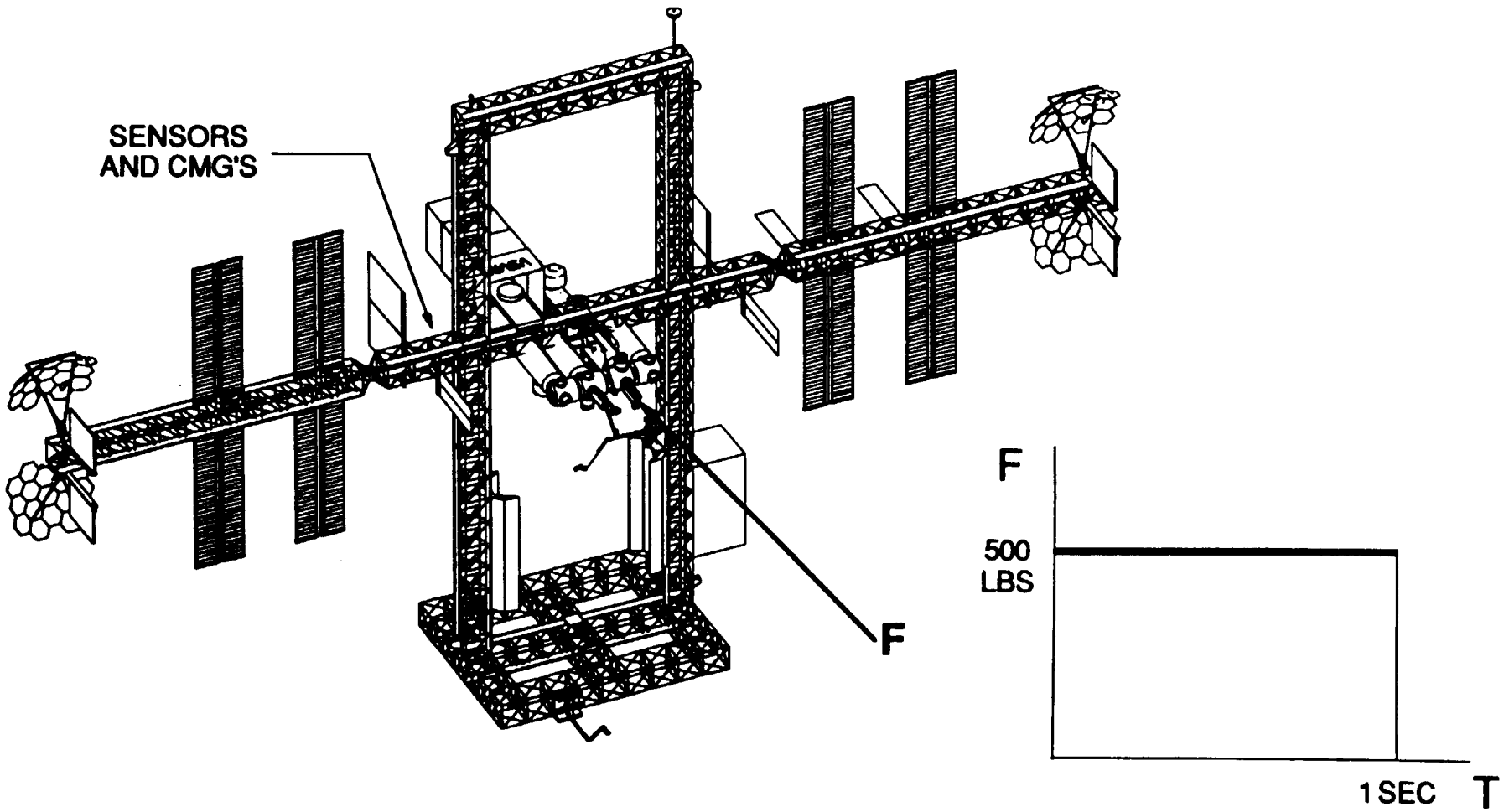

Uncompensated Yaw Control Torque Responding to an Impulse Applied at the Docking Port.

For the rigid body simulation, the peak control torque required to return the station to its initial location about the yaw axis was about 200 ft-lb and decreased to approximately zero torque in about one and 1/2 minutes. When the simulation included the elastic modes of the station below 2 Hz, the peak torque was five times larger and the settling time extended to approximately four minutes. The control torque responded to local elastic variations near the sensor so that the control torque oscillated at approximately the fundamental frequency of the station of 0.064 Hz. This particular mode is a transverse beam bending mode bending in the x-y plane so that the elastic motion would be interpreted as yaw motion by the sensor.

UNCOMPENSATED YAW CONTROL TORQUE RESPONDING TO IMPULSE APPLIED AT DOCKING PORT

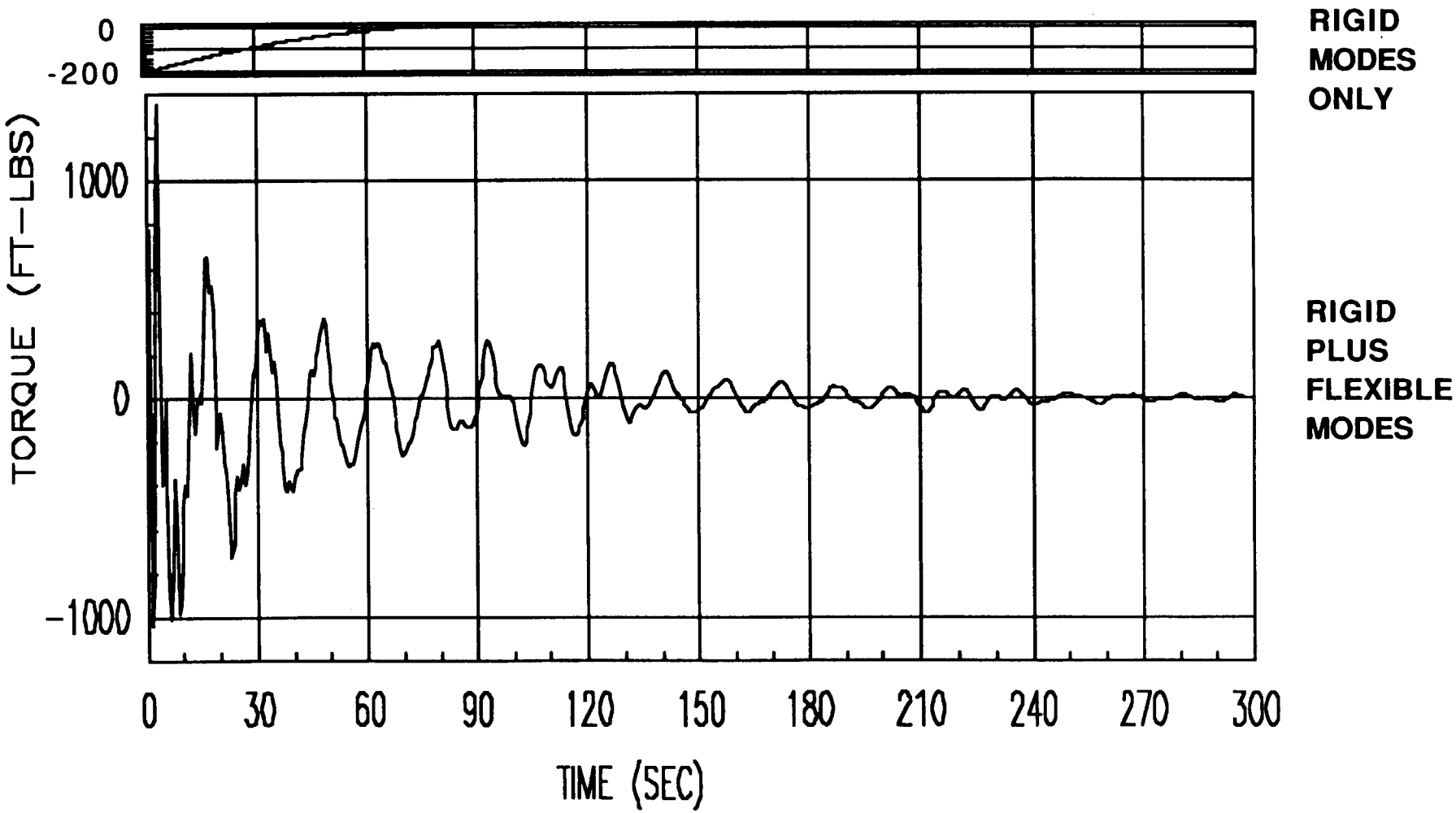

YAW CONTROL TORQUE

Bode Gain Plot of Yaw Control of Mars Evolutionary Reference Concept

The figure contains the Bode gain plots for yaw of the rigid body MERC without compensation and with compensation and the gain plot for yaw of the system with all elastic modes below 2 Hz included with the rigid body modes to describe the plant dynamics. Since the spread between the crossover frequency and the fundamental structural frequency has been reduced for the MERC due to the decrease in the transverse boom frequency, a 3rd order Butterworth filter was required as a compensation filter to obtain sufficient attenuation to obtain the desired apparent gain margin of 20 dB in the region of structural response.

BODE GAIN PLOT OF YAW CONTROL OF MARS EVOLUTIONARY REFERENCE CONCEPT

PRELIMINARY

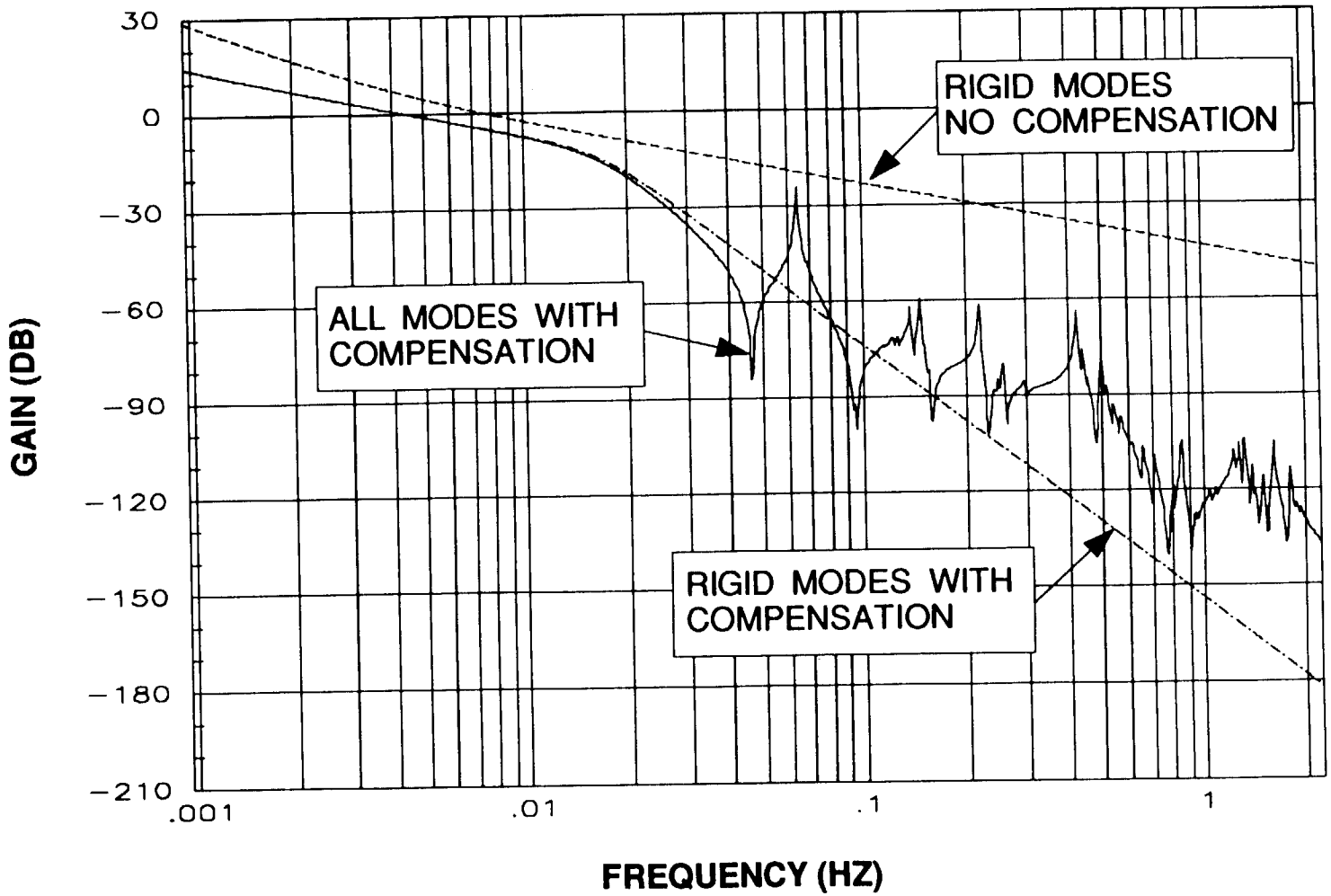

PD CONTROL WITH 3RD ORDER BUTTERWORTH FILTER

FILTER BREAK FREQUENCY AT 0.0167 HZ

Bode Phase Plot of Yaw Control of Mars Evolutionary Reference Concept

The figure contains the Bode phase plots for the rigid body MERC without compensation and with compensation and the phase plot for the system with all elastic modes below 2 Hz included with the rigid body modes to describe the plant dynamics. The addition of the compensation filter caused a reduction in phase margin of 13 degrees, reducing the phase margin for the compensated system to 53 degrees. This margin provides sufficient robustness to the control system.

BODE PHASE PLOT OF YAW CONTROL OF MARS EVOLUTIONARY REFERENCE CONCEPT

PRELIMINARY

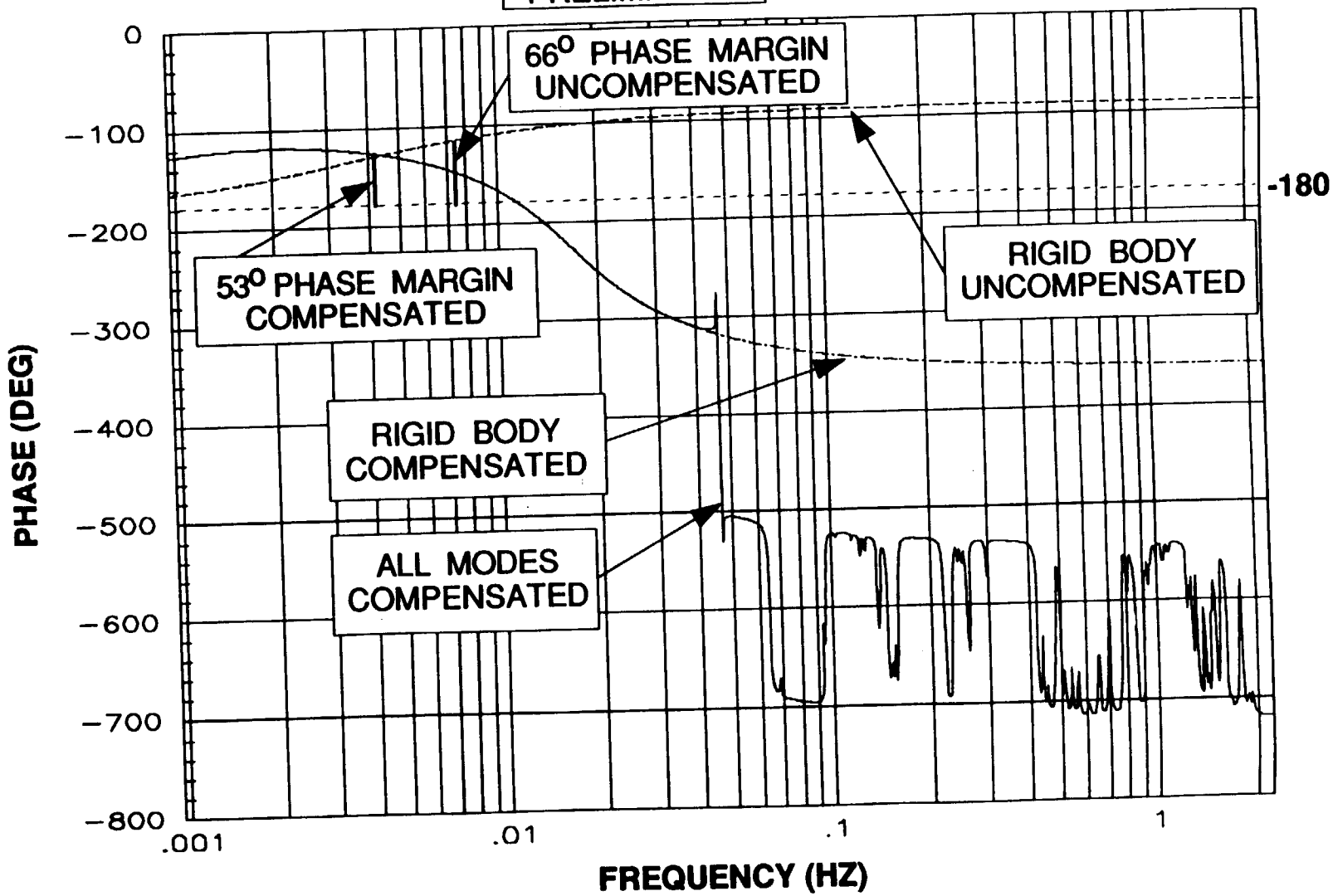

PD CONTROL WITH 3RD ORDER BUTTERWORTH FILTER

CONCLUDING REMARKS

- LOWEST TRANSVERSE BEAM FREQUENCY REDUCED 40% WITH INSTALLATION OF SD SYSTEM.
- JET PULSING DURING REBOOST CAUSED NO SERIOUS ELASTIC DYNAMIC RESPONSES.
- THE CURRENT BASELINE TUBE DESIGN IS NOT STIFF ENOUGH TO PREVENT BUCKLING OF TRUSS MEMBERS DURING REBOOST.
- OFF-MODULATION PULSING OF JETS PROVIDES SUFFICIENT CONTROL TO MAINTAIN ATTITUDE DURING REBOOST.
- ATTITUDE CONTROL SYSTEM FOR SHORT PERIOD DISTURBANCES USING CMG'S MUST BE DESIGNED TO ROLL OFF STRUCTURAL NOISE.
- LARGE VARIATIONS IN MASS AND STIFFNESS PARAMETERS DURING STATION OPERATIONS REQUIRE HIGHLY ADAPTIVE CONTROL SYSTEMS.
- THE LOW STRUCTURAL FREQUENCIES OF THE EVOLUTIONARY STATION AND THE REQUIREMENT FOR ADAPTABILITY TO LARGE PARAMETER CHANGES COMPLICATE THE ATTITUDE CONTROL DESIGN FOR BOTH CMG AND RCS CONTROL PROCEDURES.
- CONTROL PERFORMANCE REQUIREMENTS FOR EVOLUTIONARY CONFIGURATIONS MIGHT HAVE TO BE RELAXED BECAUSE OF PRACTICAL LIMITATIONS IN AVAILABLE CONTROL AUTHORITY.

REFERENCES

Material in this report concerning the dynamics and reboost of MERC is drawn from the following report:

Ayers, K. J., Lim,T. W., and Cooper,P. A.; Dynamic Characteristics of a Space Station Freedom Mars Evolution Reference Configuration. AIAA Paper No. 90-0746. Presented at the AIAA 28th Aerospace Sciences Meeting, Reno, Nevada; Jan 8-11, 1990.

THIS PAGE INTENTIONALLY BLANK

PRECEDING PAGE BLANK NOT FILMED

Computationally Efficient Algorithm for Multi-Flexible Body Space Station Dynamics

B. Schubele and Ramen Singh
Dynacs Engineering, Inc.
Clearwater, Florida

Technology for Space Station Evolution
WORKSHOP

January 16-19, 1990
Dallas, TX

PRECEDING PAGE BLANK NOT FILMED

PAGE 234 INTENTIONALLY BLANK

The simulation of the full non-linear dynamics of flexible, articulating structures is a computationally intensive task. Traditional algorithms that solve the dynamics of such systems exhibit Order(n^3) type behavior (where n is the number of degrees of freedom), which leads to a heavy computational burden when large-dimensional systems are to be simulated. The n-cubed type behavior usually arises from the inversion of a n by n mass matrix.

The Problem

"The Computational Burden of Simulating Systems involving the Structural Dynamic of Flexible and Articulating Configurations is Excessive"

Computational efficiency in these simulations can be achieved through a variety of methods. The use of the frontal solution algorithm leads to Order(n) type behavior which by itself is a significant improvement. In addition, the algorithm lends itself easily to parallelization. The use of special canonical forms further reduces the number of computations needed. Since the choice of the reference axes is a critical element in the formulation of the equations, an appropriate choice can reduce the complexity of the resulting equations.

The Solution

- Employ Order(n) Algorithim
- Use Parallel or Array Processors
- Use Special Canonical Forms
- Use Mass Related Reference Axes

The frontal solution technique was first proposed for finite element modelling. The technique avoids the assembly of an explicit system mass matrix by solving each body's equations of motion in terms of its inboard body's equations. In an open loop topology, this means starting from the "leaf" bodies and continuing on to the "core" body. This is followed by the explicit solution of the equations by starting from the core body and working outward to the leaves. Closed loop topologies are handled by cutting the loop and writing constraints to satisfy the two sides of the cut.

Frontal Solution

1. Express equations of motion in terms of adjacent bodies.
2. Start with Core body, work out toward Leaf bodies.
3. Cut closed loops.
4. Satisfy both sides of cuts.

The frontal solution algorithm can in general be applied to open as well as closed loop topologies. The diagram shows a typical closed loop topology which can be reduced to an open loop topology by cutting at the points shown. This is followed by the writing of constraint equations which need to be satisfied in order to simulate the joints which have been cut. Depending on the topology, branches of the tree may be processed independently upto a the point at which they meet. The algorithm therefore has some inherent parallelism.

Topology

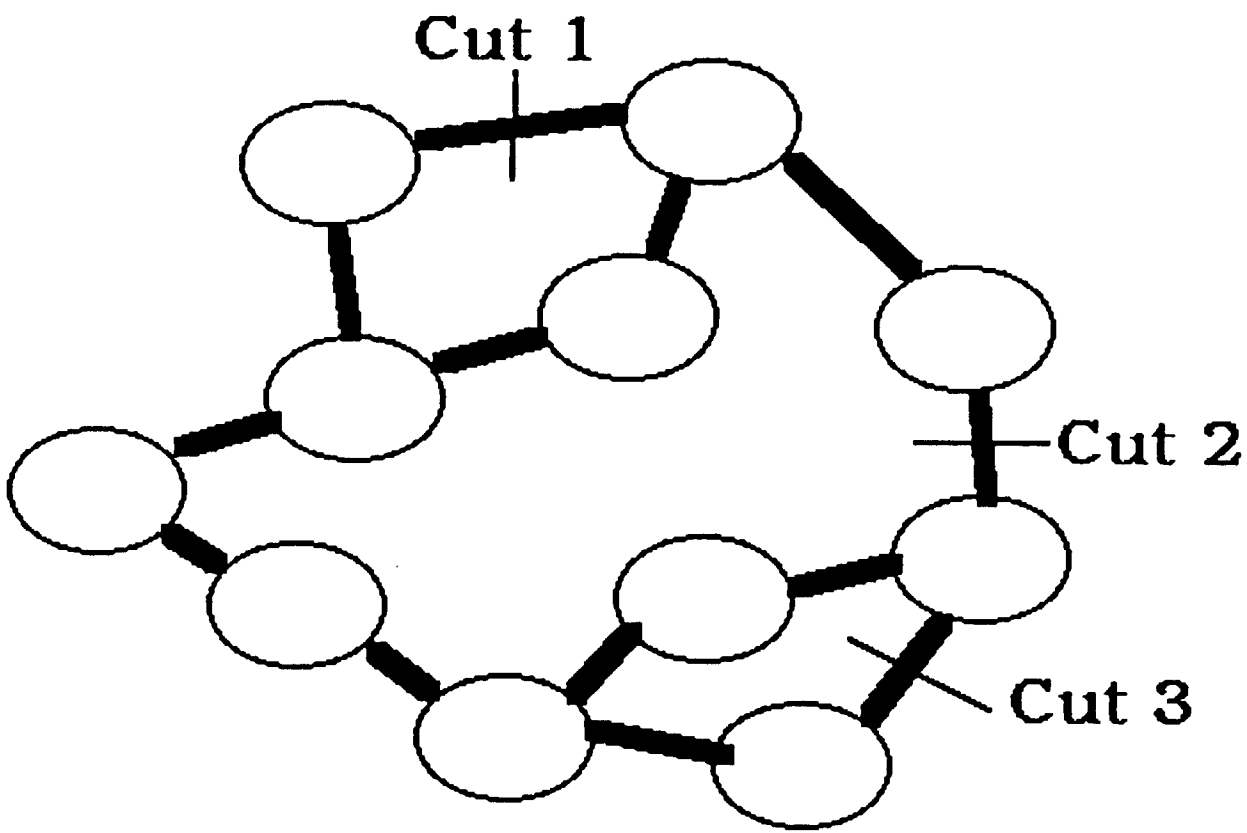

The figure shows a model of the assembly complete configuration of the space station. Note the solar panels which form the leaf bodies of the structure, and body 1, which is the core body. Using the frontal solution algorithm, the solution sequence would be to solve the leaf body equations first (bodies 4,5,6,7) then bodies 2 and 3, and finally the core body. The back substitution process (explicit solution) will follow the reverse order. Note that when the frontal solution algorithm is applied, bodies 4,5,6 and 7 can be processed independently, after which bodies 2 and 3 can be processed independently. This also applies to the back substitution process. The parallelism described above was used to obtain the results shown on the next chart.

Space Station Model

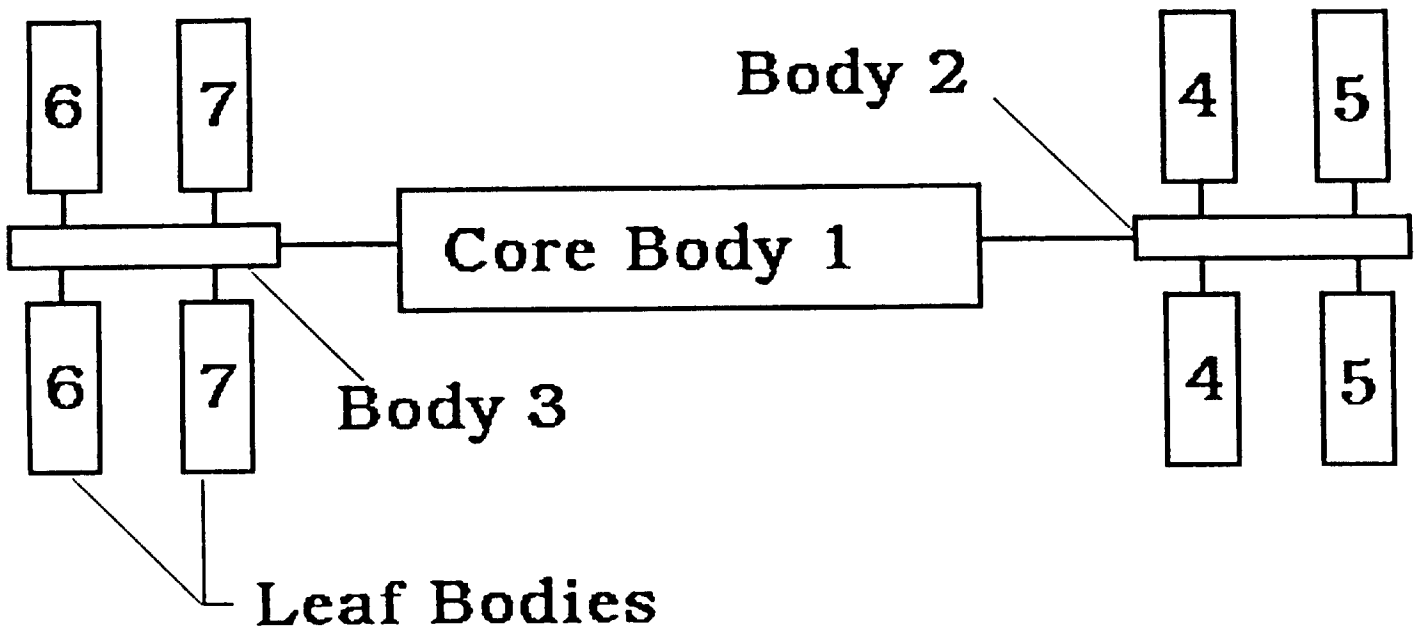

The chart shows the results from the parallelization of the frontal solution algorithm as applied to the space station model shown earlier. A factor of 3 improvement is seen in going from one processor to four for this configuration. The tasking algorithm needed minimal effort because of the inherently parallel nature of the algorithm.

Computational Burden

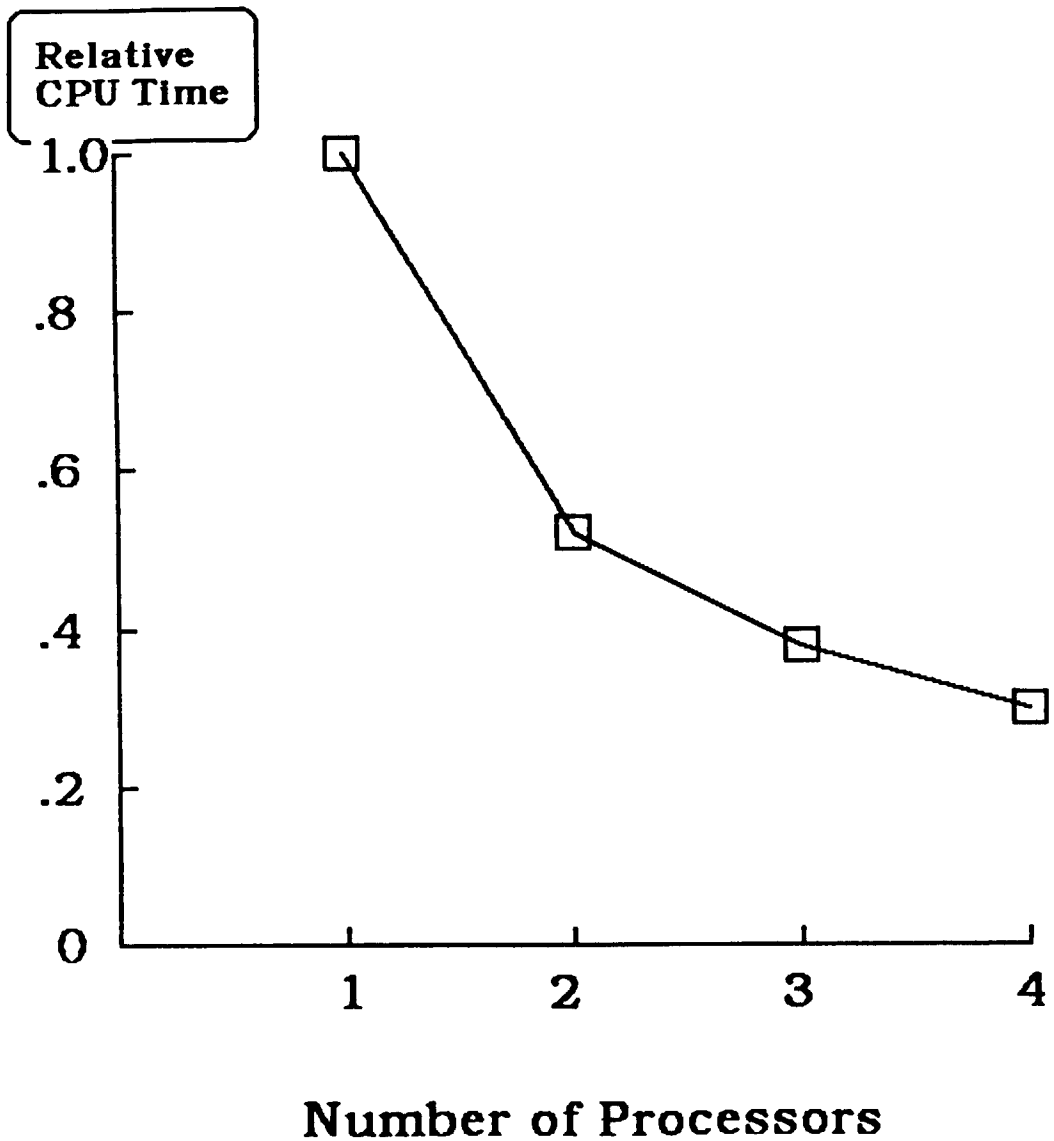

In conclusion, efficient simulation of complex dynamical systems can be achieved through a combination of the following methods:

1. Efficient solution algorithm.
2. Use of parallel processing techniques.
3. Simplification of the equations through the use of canonical forms.
4. Use of efficient code that exploits model-specific simplifications.

Concluding Remarks

- Computionally Efficient Algorithms can result in Significant Reduction in the Computational Burden.

- Frontal Solution has been Successful in Simulation of Articulating Space Station.

THIS PAGE INTENTIONALLY BLANK

PAGE 250 INTENTIONALLY BLANK

A Coherent CSI Technology Plan for Evolutionary Space Station

Professor Ed Crawley

Space Engineering Research Center

Massachusetts Institute of Technology

17 January 1990

PRECEDING PAGE BLANK NOT FILMED

Control Structures Interaction on Space Stations

- Importance and nature of the controlled structural performance
- Understanding the origin of the problem:
  - It has happened
  - It can happen
  - It (probably) will happen
- Formulating a Technology Plan
  - Development of analytical tools
  - On-orbit characterization of IOC station
  - Ground testing of evolving station
  - Extrapolation from ground testing to on-orbit behavior

Importance and Nature of the Controlled Structural Performance

The controlled structural performance is important because of:

- Possibility of closed loop instability
- Interference with microgravity environment
- Interference with pointing experiments
- Crew comfort
- Interference with normal operations
- Couping to the dynamics on attached controlled manipulators and payloads

CSI on Space Stations - It can Happen

For the usual "appendage" modes of a flexible spacecraft, gain stabilization occurs when the ratio of the flexible mode frequency to the bandwidth is

$$\frac{\omega_f}{\omega_c} = \sqrt{\frac{1}{2\zeta}}$$

For current design values of ζ of 0.005, this is consistent with an order of magnitude separation, but is near the edge

However current estimates of ζ are as low as 0.001, which requires a separation of 20

Furthermore, for non-colocated control, which leads to pole-pole-zero in-the-loop minimum phase modes, flexible mode frequency to bandwidth ratios as high as 100 are required for assured stability of lightly damped modes

CSI on Space Stations-It has Happened

During the first orbital reboost of the Mir station, the following unanticipated events occurred:

The reboost engines fired, causing a large transient response of the solar arrays.

The fiction and joint dominated damping of the arrays yielded a low equivalent damping ration of the arrays at high amplitude.

The (now) lightly damped first bending mode of the arrays coupled to the roll of the station to created a system mode at about 0.5 Hz..

The (now) lightly damped system mode became unstable, forcing the shut down and redesign of the controller.

CSI on Space Station - It (probably) will Happen

- As the station evolves, grows and ages:
  - the performance requirements and therefore bandwidth will probably increase
  - the damping will probably change
  - the mass ratio of the "appendages" will probably increase
  - the structural frequencies will probably be lowered
  - the authority and number of independent controllers for robotic devices and pointing systems will probably grow
  - the mass properties and geometry will change more frequently

- All of these changes will cause the CSI issues to become more urgent

Objective

The Objective of the MACE experiment is to investigate and validate the modeling of the dynamics and performance of an actively controlled, articulating, multibody platform, typical of Space Station, free floating in zero gravity.

Formulating a Technology Plan for On-orbit Characterization

"There is an extensive and perhaps excessive reliance on modeling of systems....for verification in lieu of ground or flight testing.*"

"Initial mathematical models are not likely to be be accurate representations of the Space Station's dynamic behavior. Each stage of the constructions should be used to learn how to better model the behavior.*"

A necessary technology development program would include:

- The development of the analytical approaches to on-orbit characterization
- The emplacement of the instrumentation to be used in that characterization plan
- The development of ground testbeds to experimentally develop closed loop controllers
- The development of the tools to predict the on-orbit behavior based on the analysis and closed loop ground tests.

* NRC Report "Space Station Engineering Design Issues"

Middeck Active Control Experiment (MACE) in Support of Evolutionary Space Station

Professor Ed Crawley

Space Engineering Research Center

Massachusetts Institute of Technology

17 January 1990

Experimental Requirements

Primary requirement:

- Test article must exhibit sufficient gravity (suspension) dependent changes in plant to cause measurable control performance variation between 1- and 0-g environments.

Derived requirements:

- Natural frequencies below 2 Hz.
- Closely coupled bending/torsion modes
- Reconfigurable
- Nominal damping below 1% (variable)
- Linear joints
- Rigid and flexible payloads
- "Flyable" in Shuttle Middeck.

Rationale

- New NASA missions envision vehicle architecture with numerous payloads and articulating appendages on a common structural bus. Mission to Planet Earth, Evolutionary Space Station, and Exploration Initiative.
- Large, complex, flexible platforms with high authority control of large mass fraction payloads necessitates the existence of a well verified set of CST tools.
- Since the model fidelity required for stability and performance robustness is intimately related to the level of control authority, *open loop testing is not sufficient*. Closed-loop testing is required.
- Because of concern for safety, closed loop developmental testing will most likely occur on the ground where suspension and direct gravity effects will cause the 1-g and 0-g dynamics to differ.
- Therefore it is essential to perform careful ground and on-orbit closed-loop tests on a reference test article to verify the analytic tools for extrapolation of closed-loop performance from 1-g to 0-g testing.

Experiment Approach

Based upon this rationale for conducting 1-g and 0-g closed-loop testing, the development of CST tools must include:

- Development of a comprehensive analytical framework for the design and analysis of controlled multibody platforms. It must allow the addition and removal of suspension and direct gravity effects.
- Validation of the analytical framework by comparison with a set of ground based experiments. The test article must incorporate the essential physical characteristics of a multibody platform.
- Validation of the analytical framework by comparison with a set of on-orbit, zero-gravity experiments.

Capturing the Essential Physics

The simulation of a vehicle with payloads and articulating appendages with pointing and positioning requirements, necessitates a test article with the following attributes:

- appropriately scaled to fit in the middeck while preserving the essential performance requirements.
- two gimballing payloads to enable implementation of multiple interacting control systems with independent objectives.
- two rigid payloads and a flexible appendage, representative of compact high mass fraction devices and a robotic servicer.
- flexible bus with resonances within the controller bandwidth and to exhibit suspension coupling, gravity stiffening and droop.
- sufficiently low structural damping representative of structures incorporating typical aerospace materials.
- sufficiently complex geometry such that the test article undergoes full 3-D kinematic and coupled flexible motion.

MACE Flight Hardware Elements

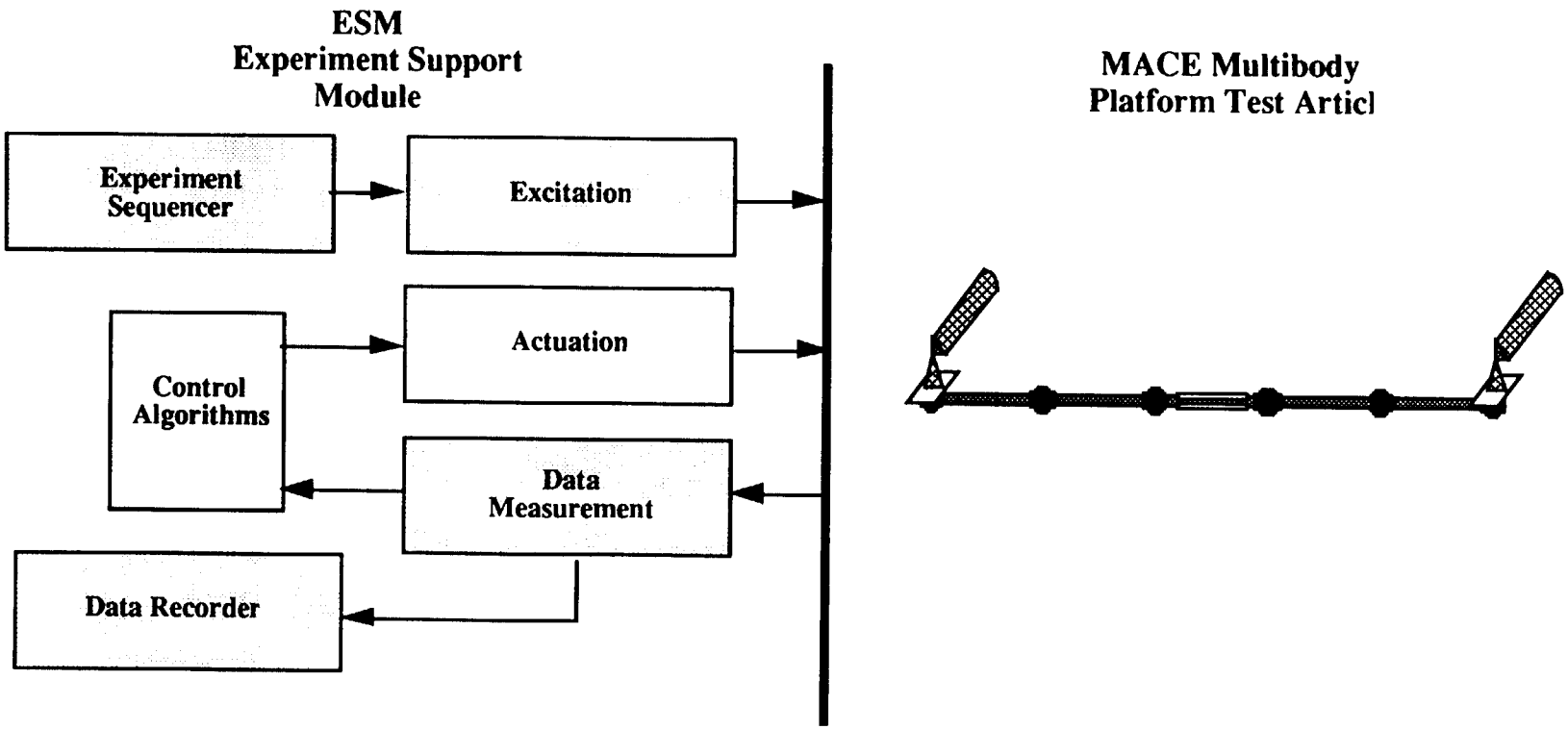

- Substantial commonality of hardware/software to the MODE flight experiment
- Significant savings in integration/certification process.

MACE Key Features

- Free-floating test article eliminates suspension constraints
- 2 pointing/tracking payloads .
- 3 rate gyro packages for attitude sensing
- Active strut ant 2 axis gimbals for actuation
- Reconfigurable structure with simultaneous electrical-mechanical connections
- 1.5 m flexible bus with modes < 2 Hz.
- Performance metric is the stability and jitter of payloads. Goal is to point payloads to within 1 arcsec.

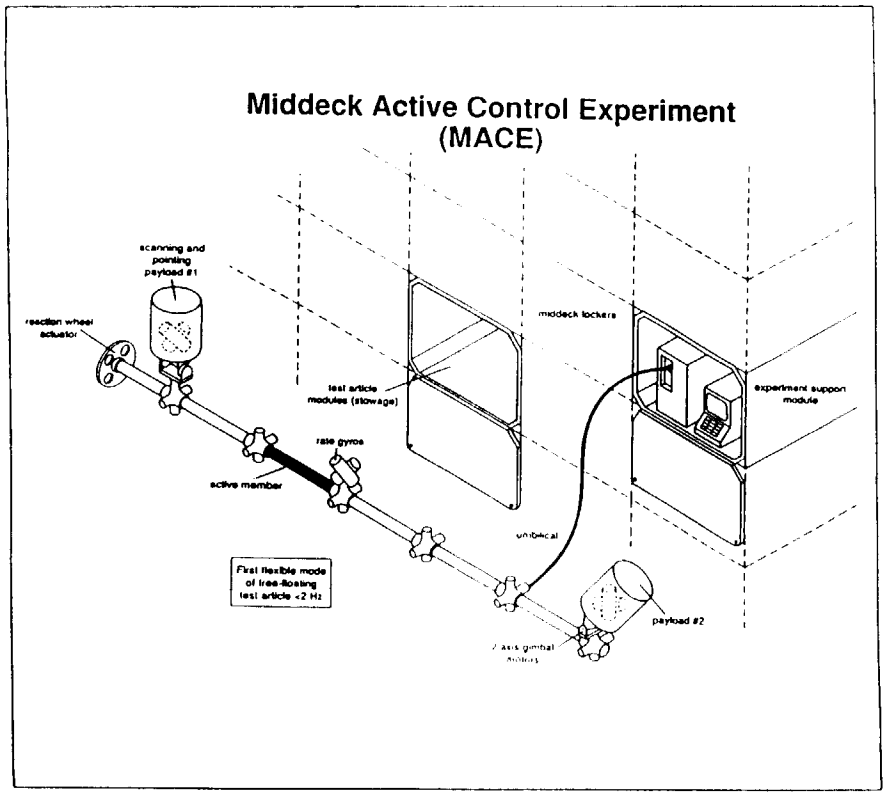

MACE Configurations

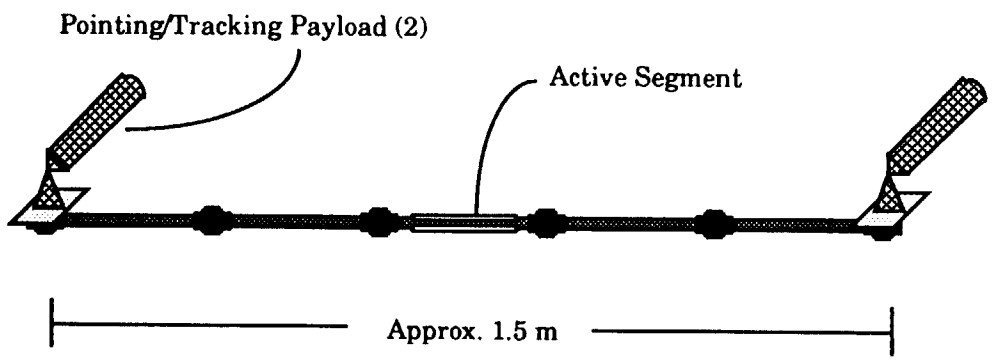

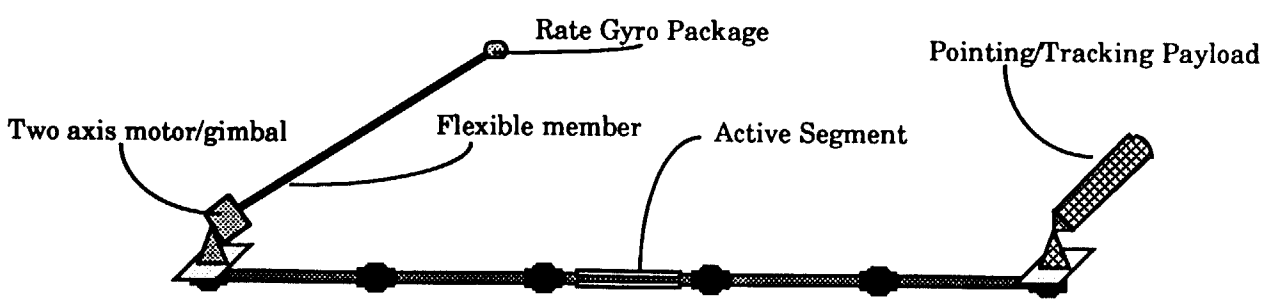

Control Approaches

Single payload pointing and tracking:

Intervening flexibility between payload and inertial reference.

Payload mounted inertial reference. Payload reacts off flexible base.

Multiple payload pointing and tracking:

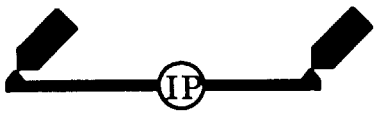

Sharing of utilities requires estimate or measurement of flexibility induced rotations.

Redundant utilities may prove to be more robust but inefficient use of utilities.

Summary- A CSI Verification Plan For Space Station

- Develop accurate analytical models of Station
- Verify these models for "existing" Station by on-orbit experiments
- Verify these models open and closed loop behavior of growth Station by ground experimentation
- Extrapolate ground experimental results to on-orbit behavior

This process results in high confidence controllers to be implemented on Station

Validation of Analytical Framework

Goal is to improve pointing/tracking performance by 40 dB over open-loop value in the presence of realistic scaled disturbances.

Regular and singular perturbations in gravity influences will be identified by comparing closed-loop performance in 1-g and 0-g as a function of control authority.

To maximize scientific return, desirable to have gravity perturbations manifest themselves at half of the performance range of interest (20 dB).

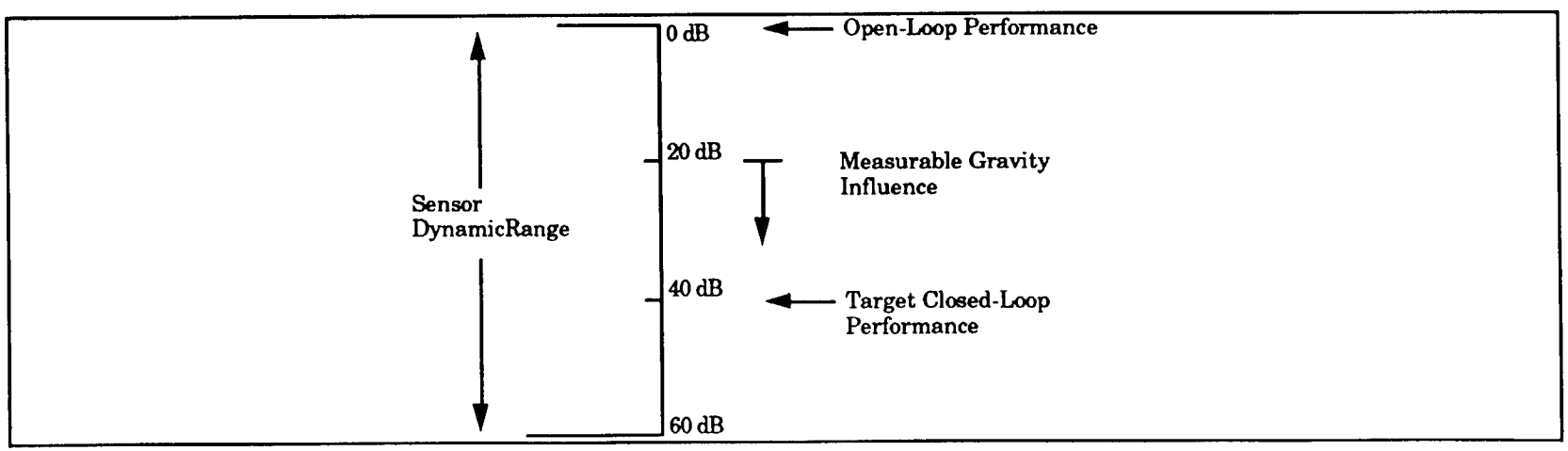

THIS PAGE INTENTIONALLY BLANK

THIS PAGE INTENTIONALLY BLANK

Communications and Tracking

Level III

Subsystem Presentation

PRECEDING PAGE BLANK NOT FILMED

PAGE 270 INTENTIONALLY BLANK

COMMUNICATIONS AND TRACKING SYSTEM BASELINE

TECHNOLOGY FOR SPACE STATION EVOLUTION
JANUARY 16-19, 1990
DALLAS, TEXAS

R.H. Dietz
Johnson Space Center
Tracking & Communications Division

PRECEDING PAGE BLANK NOT FILMED

PAGE 272 INTENTIONALLY BLANK

CONTENTS

- Introduction
- Requirements
- Functional Description
- Operational Description/Interfaces
- Resource Allocation/Status
- Logistics: Repair and Resupply
- Possible Evolution Items

INTRODUCTION

ISOMETRIC VIEW - PMC

This chart shows the isometric view of the Space Station for the Permanently Manned Configuration (PMC). Two Ku-Band high-gain antennas (for the Space-to-Ground Subsystem) are shown on the port and starboard sides. Also two S-Band antennas (for the Assembly/Contingency Subsystem are shown on the starboard side. Upper and lower UHF antennas are shown on both the port and starboard sides.

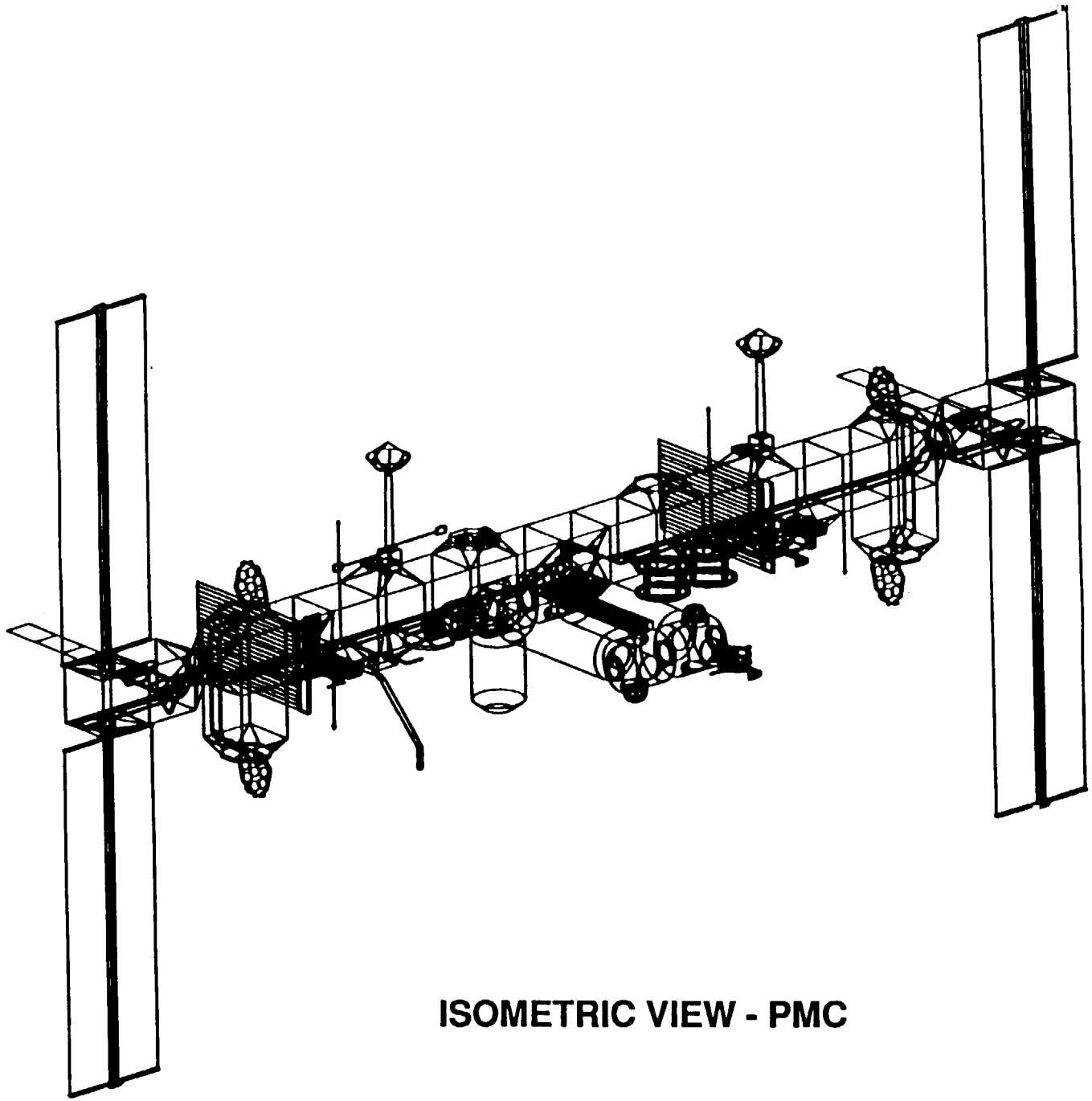

ISOMETRIC VIEW - PMC

FRONT VIEW - PMC

This chart shows the front view of the Space Station for the Permanently Manned Configuration (PMC). Two Ku-Band high-gain antennas (for the Space-to-Ground Subsystem) are shown on the port and starboard sides. Also two S-Band antennas (for the Assembly/Contingency Subsystem are shown on the starboard side. Upper and lower UHF antennas are shown on both the port and starboard sides.

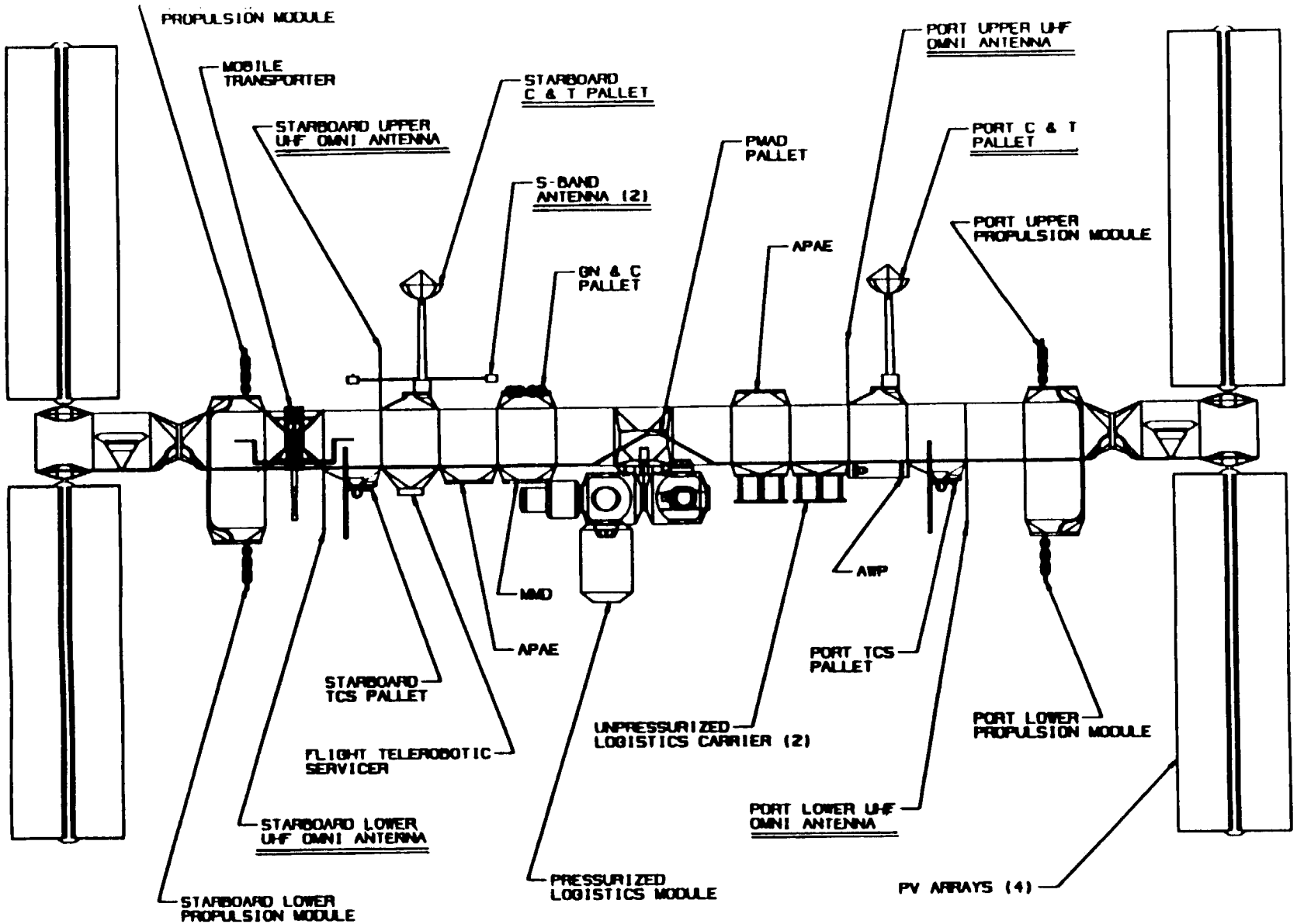

FRONT VIEW - PMC

ISOMETRIC VIEW - AC

This chart shows the isometric view of the Space Station for the Assembly Complete (AC) configuration. Two Ku-Band high- gain antennas (for the Space-to-Ground Subsystem) are shown on the port and starboard sides. Also two S-Band antennas (for the Assembly/Contingency Subsystem are shown on the starboard side. Upper and lower UHF antennas are shown on both the port and starboard sides. Added for the AC configuration (but not shown clearly on the drawing) are the GPS antennas and the Ku-Band antennas for the Space-to-Space Subsystem.

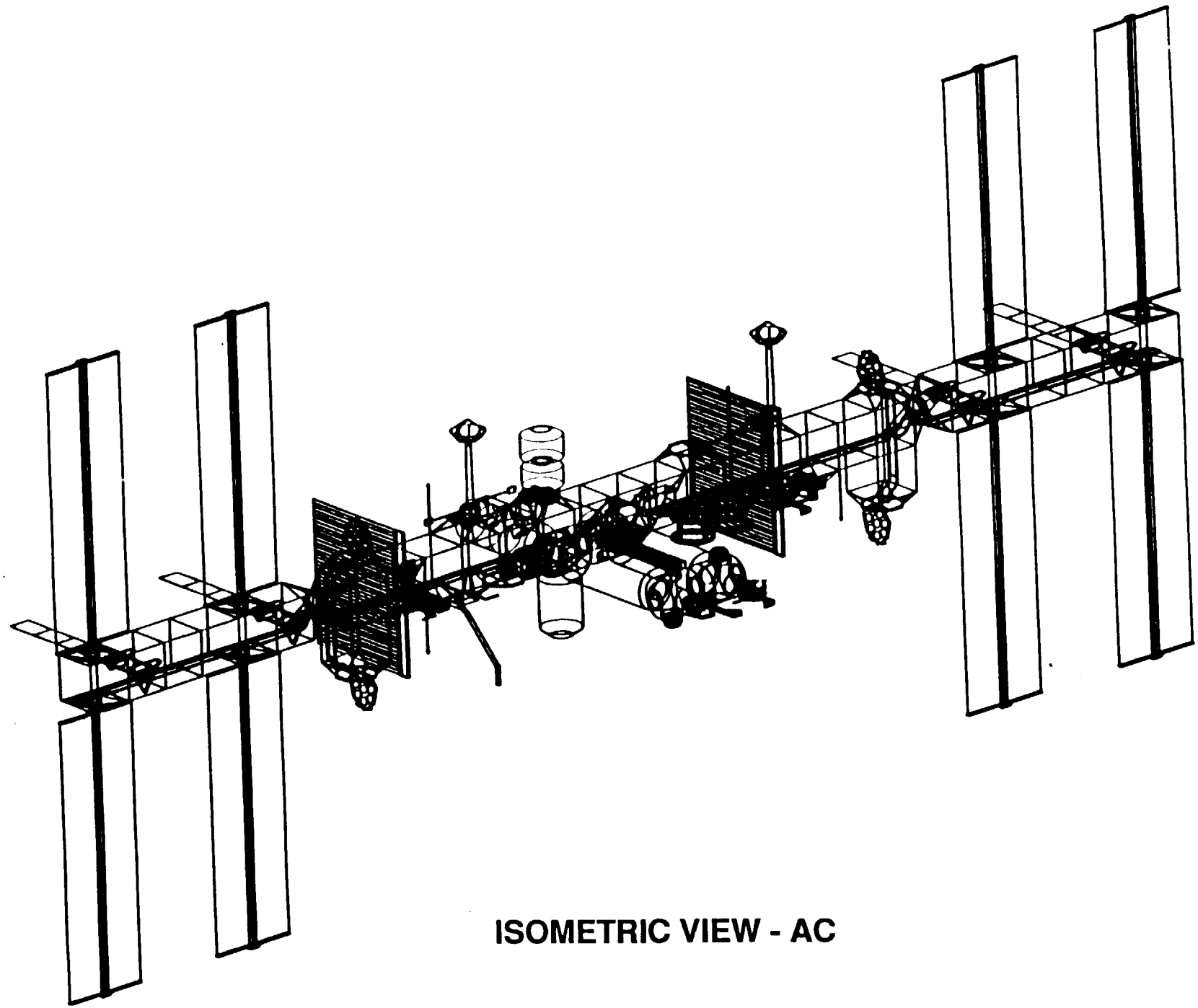

ISOMETRIC VIEW - AC

FRONT VIEW - AC

This chart shows the front view of the Space Station for the Assembly Complete (AC) configuration. Two Ku-Band high-gain antennas (for the Space-to-Ground Subsystem) are shown on the port and starboard sides. Also two S-Band antennas (for the Assembly/Contingency Subsystem are shown on the starboard side. Upper and lower UHF antennas are shown on both the port and starboard sides. Added for the AC configuration are the GPS antennas and the Ku-Band antennas for the Space-to-Space Subsystem.

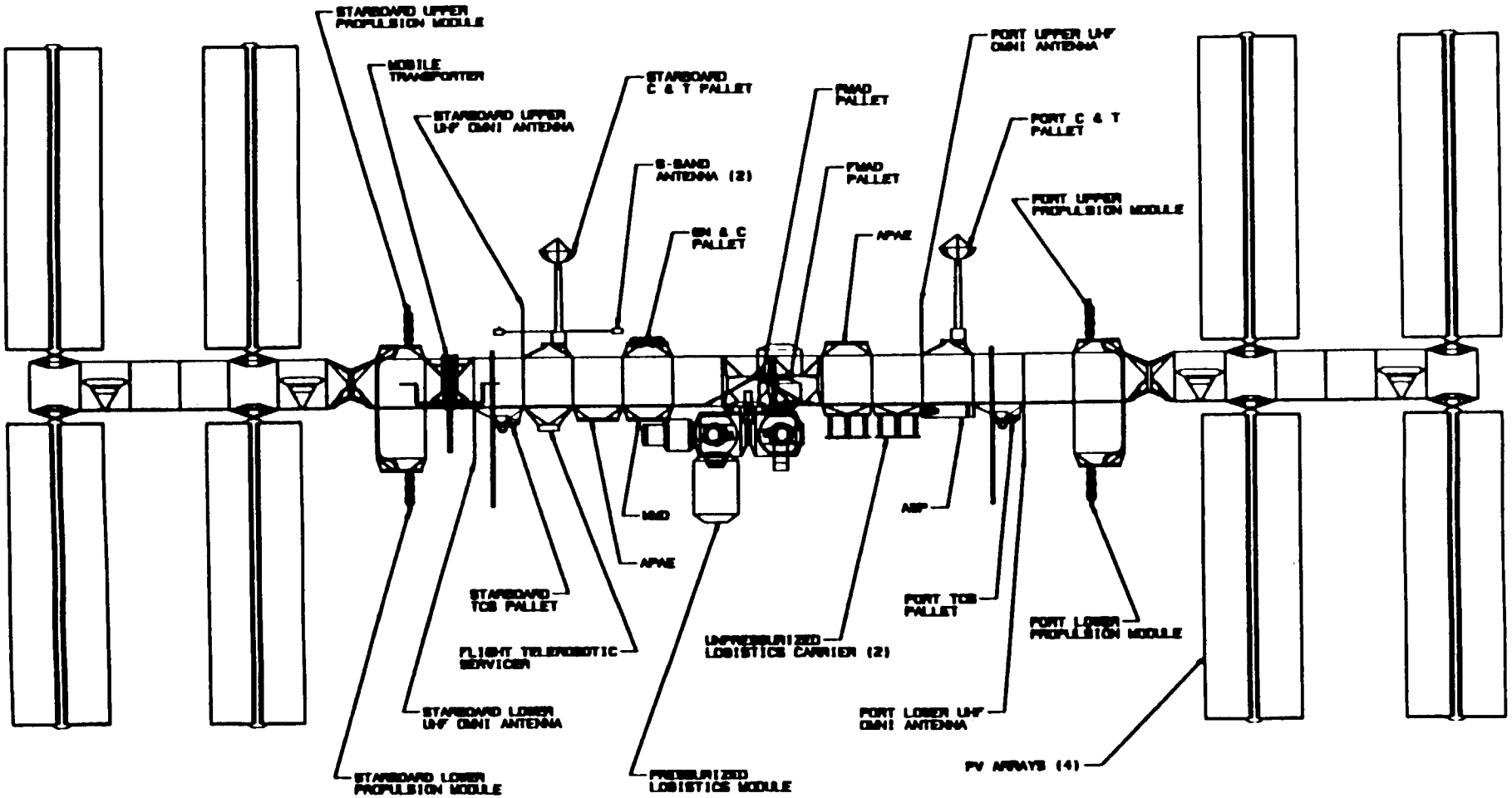

FRONT VIEW - AC

THIS PAGE INTENTIONALLY BLANK

PRECEDING PAGE BLANK NOT FILMED

REQUIREMENTS

PAGE 284 INTENTIONALLY BLANK

FUNCTIONAL REQUIREMENTS

The basic requirements for the Communications and Tracking System are shown on the next two charts. These are excerpts from the Level II Program Definition and Requirements Document (PDRD), SSP 30,000. This chart shows the C&T System level requirements and requirements for the Space-to-Ground Subsystem, the Assembly/Contingency Subsystem, and the Space- to-Space Subsystem (UHF only for PMC - Ku-band links are added for the AC configuration.)

FUNCTIONAL REQUIREMENTS (PMC)

- System Level
  - Intent to adopt appropriate standards for bidirectional space/ground data transfer. SSP standard document TBD. Shall be compatible with the CCSDS recommendation for Advanced Orbiting Systems (3.2.6.2.8.3).
  - Data Security - prevent unauthorized access to operational links (shall include data and command privacy) (3.2.6.1.13).
- Space-to-Ground Links - duplex communications with ground data networks via TDRSS (3.2.6.1.11)
- Asembly/Contingency Links - limited duplex - provide contingency voice, command and telemetry link between the ground and SSMB (3.2.6.1.15.1.1).
- Space-to-Space Links - provide communications between Space Station and the orbiter and EVA crew (UHF) (3.2.6.1.8).

FUNCTIONAL REQUIREMENTS (AC)

- System Level

  Same

  Same

- Space-to-Ground Links
  Same
- Assembly/Contingency Links
  Same
- Space-to-Space Links
  Same plus simultaneous duplex communications and tracking with other space vehicles (FTS, MSS).

FUNCTIONAL REQUIREMENTS

The basic requirements for the Communications and Tracking System continue on this chart. These are excerpts from the Level II Program Definition and Requirements Document (PDRD), SSP 30,000. This chart shows requirements for the Tracking Subsystem, the Video Subsystem, the Audio Subsystem, and the Control and Monitoring Subsystem.

FUNCTIONAL REQUIREMENTS (PMC)

- Tracking Services

  No requirements

- Video - on-board core Station, reception and display from ground and transmission to the ground (3.2.6.1.2.1).

- Audio - Multiple duplex intercomm, on-board and EVA, hardline & wireless.

  - Provide interfaces with RF link processors, docked NSTS & internationals.

  - Provide multiple simultaneous conferencing, private voice channels where required, on-board recording and playback (3.2.6.1.1.1-2).

- System Control and Monitoring - manage all C&T resources, gather and report C&T equipment status information (3.2.6) (3.2.6.2.3).

FUNCTIONAL REQUIREMENTS (AC)

- Tracking Services - provide acquisition and tracking of all cooperative detached vehicles for: rendezvous, approach, berthing, and departure (3.2.6.1.10)

- Video - on-board core station, reception and display from ground and transmission between core element and cooperative co-orbiting elements as required and transmission to the ground (3.2.6.1.2.1).

- Audio
  Same

- System Control and Monitoring
  Same

THIS PAGE INTENTIONALLY BLANK

FUNCTIONAL DESCRIPTION

PRECEDING PAGE BLANK NOT FILMED

PAGE 290 INTENTIONALLY BLANK

FUNCTIONAL DESCRIPTION

The C&T System functional block diagram is shown. It shows the internal connections between the various subsystems that make up the C&T System, and also shows the major interfaces with the DMS System and the GN&C System. Payload (P/L) interfaces are shown for those that directly interface with the C&T System. ESA, NASDA, and Canadian interfaces are primarily with the Video and Audio Subsystems.

RF interfaces are also shown. EVA crew communications links and NSTS communications are shown using the UHF Subsystem.
At AC, the Ku-band links are added for the Mobile Transporter (MT), the Flight Telerobotic Servicer (FTS), and other free- flyers.

THIS PAGE INTENTIONALLY BLANK

C&T FUNCTIONAL BLOCK DIAGRAM

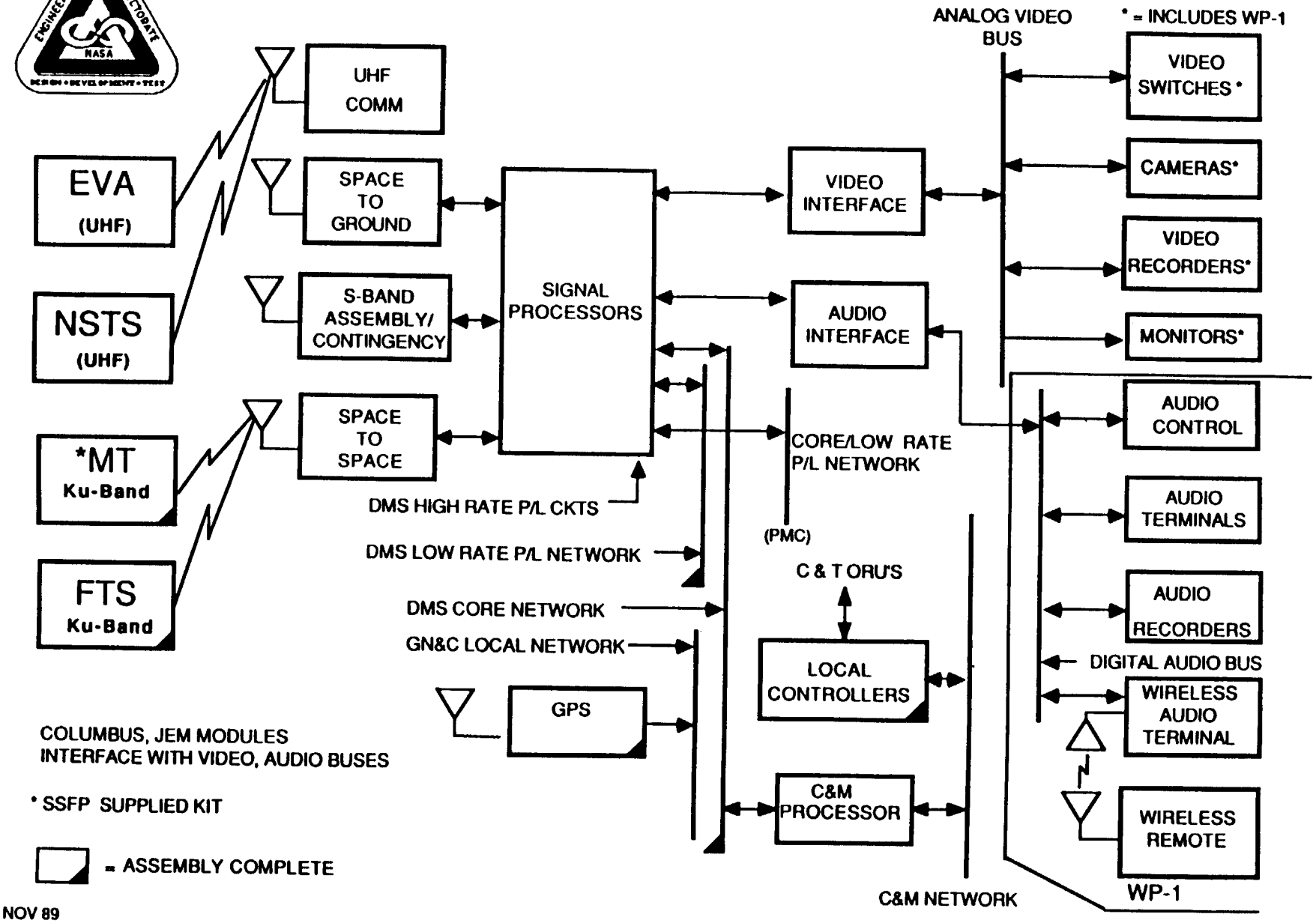

PRECEDING PAGE BLANK NOT FILMED

OPERATIONAL DESCRIPTION/INTERFACES

PAGE 294 INTENTIONALLY BLANK

OPERATIONAL DESCRIPTION/INTERFACES - C&T SYSTEM

The next charts show the basic operational capabilities and interfaces for the C&T System and each of the Subsystems.

This chart shows the overall System capabilities and content for both the PMC and the AC configurations. Hardline and RF links are shown for the SSFP identifiable entities.

COMMUNICATIONS AND TRACKING

FUNCTION	BASELINE CONTENT	
	PMC	AC
C&T System		
• NSTS Communications	• UHF	• UHF
• MT Communications	• None	• Ku-band
• FTS Communications	• None	• Ku-band
• FTS hardline video	• 8 FTS ports, 3 video channels per port	• Same as PMC
• MSS/FTS shared video	• 13 MSS/FTS shared video ports, 3 video channels per port	• Same as PMC

OPERATIONAL DESCRIPTION/INTERFACES - C&T SYSTEM

This chart shows the overall C&T System block diagram, together with the internal and external interfaces. Major internal interfaces shown are with the DMS network users' bus and the payload users' bus. The DMS time generation system (TGS) is shown interfacing with the Control and Monitoring Subsystem. Internal interfaces also shown are the interfaces between the Tracking Subsystem and the GN&C System. Interfaces with the ESA, JEM, IVA users are also shown.

External RF interfaces are shown on the right side for the Space-to-Ground Subsystem, the Assembly/Contingency Subsystem, the Tracking Subsystem, the Space-to-Space Subsystem, and the UHF Communications Subsystem.

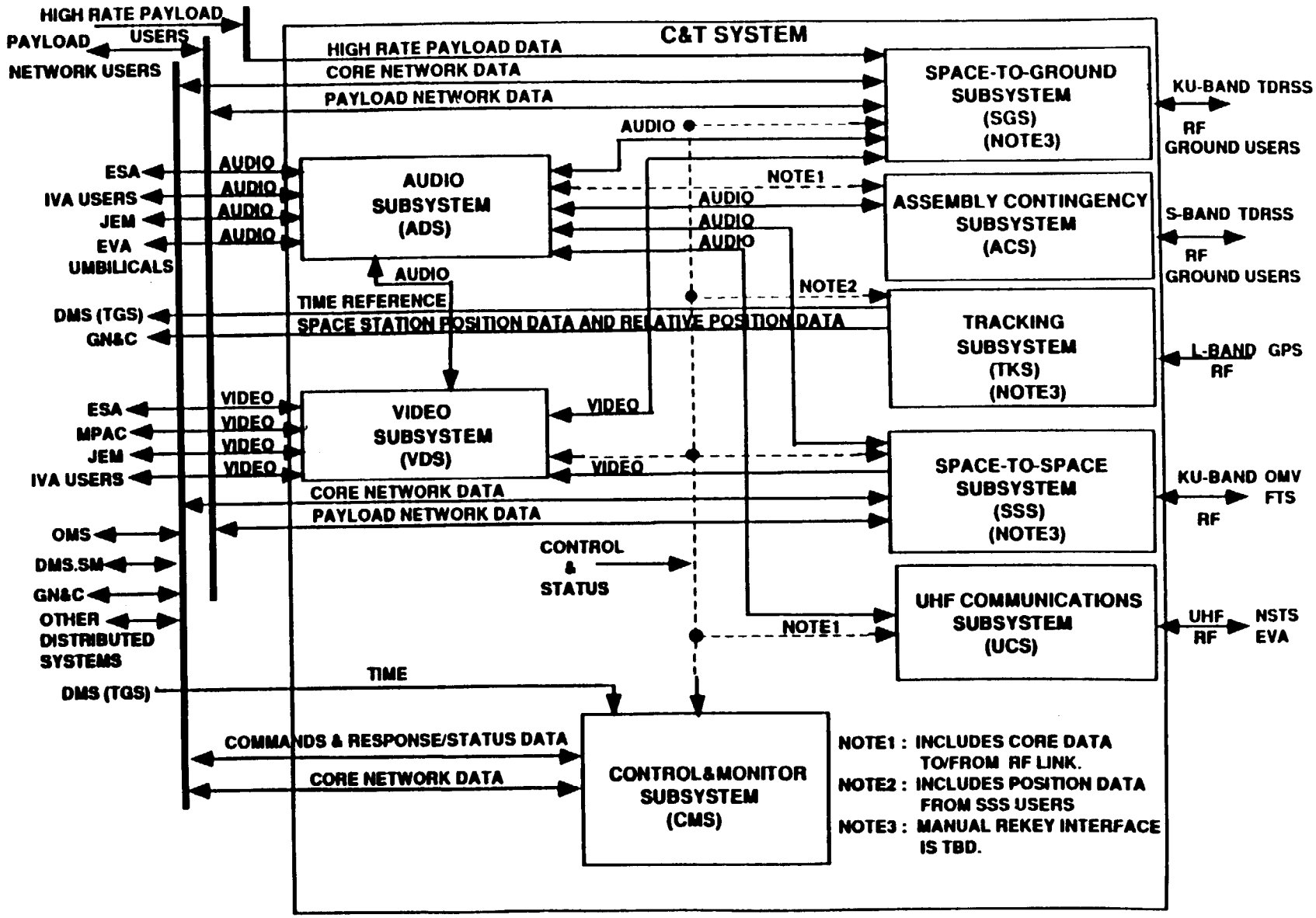

C&T SYSTEM BLOCK DIAGRAM

OPERATIONAL DESCRIPTION/INTERFACES

SPACE-TO-GROUND SUBSYSTEM

This chart shows the Space-to-Ground Subsystem capabilities and content for both the PMC and the AC configurations. High-rate Payload capabilities, DMS LAN capabilities, video and audio capabilities are shown.

COMMUNICATIONS AND TRACKING

FUNCTION	BASELINE CONTENT	
	PMC	AC
Space -to-Ground Subsystem		
• Hi-Rate Payload Data Ports	• 3 Hi-Rate Payload Data Ports	• 8 Ports
• DMS LAN interfaces	• 1 Payload/Core LAN interface	• 2 Payload LAN interfaces • 1 Core LAN interface
• Video channels down	• 2 video channels down + teleconference	• 3 video channels down + teleconference
• Video channels up	• 1 video channel up + teleconference	• 1 video channel up + teleconference
• Audio channels	• 2 duplex audio channels	• TBD

OPERATIONAL DESCRIPTION/INTERFACES

SPACE-TO-GROUND SUBSYSTEM

The data rate functional requirements are shown for the space-to-ground and ground-to-space functions. There are four data rates for each link, beginning with the maximum capability that the TDRSS can accommodate. The Bit Error Rate (BER) is shown with the accompanying RF margins.

SPACE-TO-GROUND SUBSYSTEM

PROVIDING COMMUNICATIONS WITH GROUND DATA SYSTEMS VIA THE TRACKING AND DATA RELAY SATELLITE SYSTEM

FUNCTIONAL REQUIREMENTS

SPACE-TO-GROUND DATA RATES

- SG1 300 MBPS
- SG2 150 MBPS
- SG3 100 MBPS
- SG4 50 MBPS

GROUND-TO-SPACE DATA RATES

- GS1 25 MBPS
- GS2 12.5 MBPS
- GS3 6.25 MBPS
- GS4 3.125 MBPS

PERFORMANCE REQUIREMENTS

BASIC 1/10-5 BIT ERROR RATE WITH AN R-F MARGIN OF 3 DB TO 6 DB. GRADE OF SERVICE WILL ALSO BE SUPPORTED.

OPERATIONAL DESCRIPTION/INTERFACES

SPACE-TO-GROUND SUBSYSTEM

The basic hardware schematic is shown for the Permanently Manned Configuration. Hardware connectivity is shown, indicating cross-strapping, and equipment location in the nodes and on the truss is also shown. Basic channel capacities for each type of data handled is also shown.

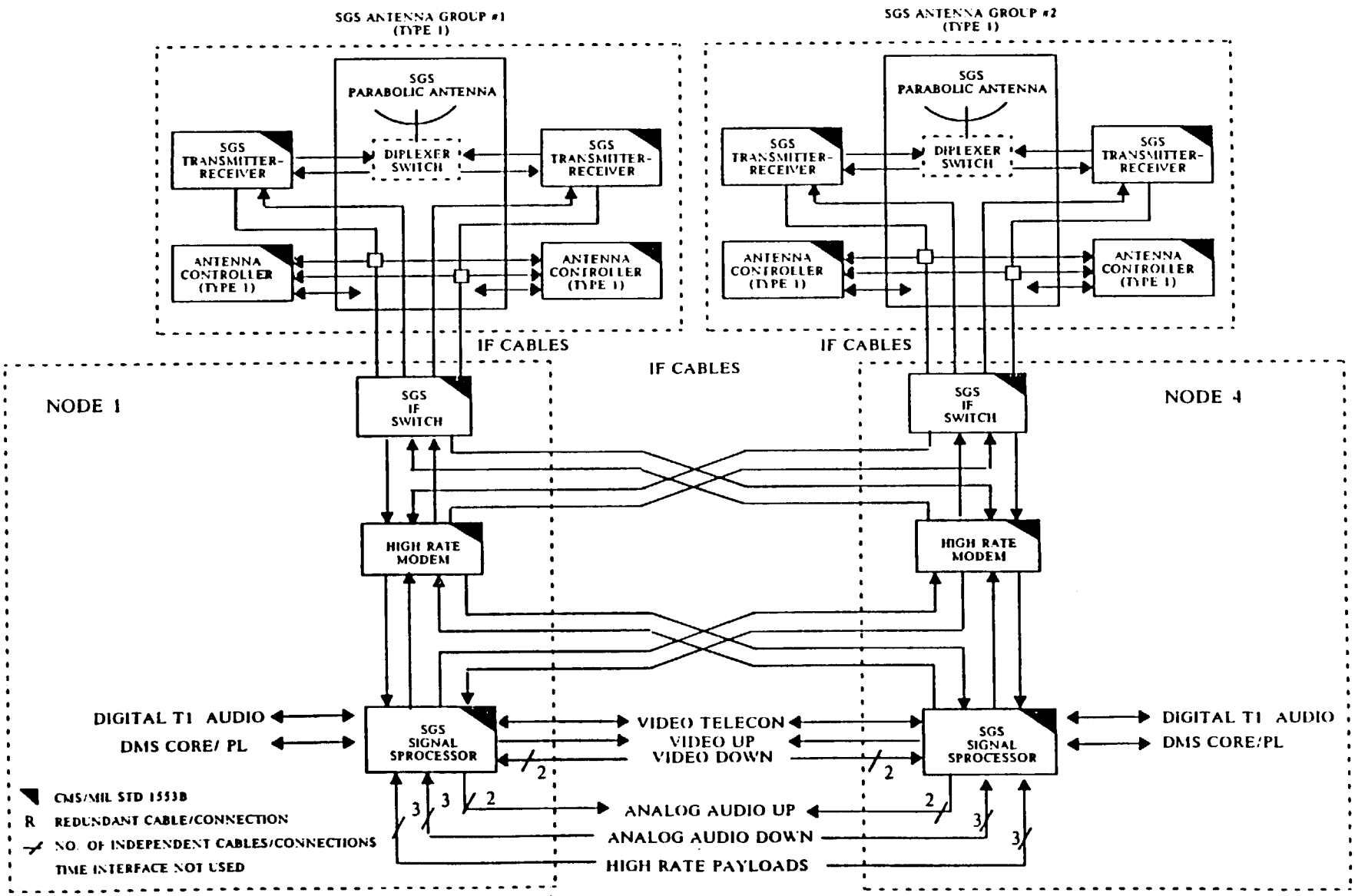

(PMC) SPACE-TO-GROUND SUBSYSTEM HARDWARE SCHEMATIC

OPERATIONAL DESCRIPTION/INTERFACES

SPACE-TO-GROUND SUBSYSTEM

The basic hardware schematic is shown for the Assembly Complete configuration. Hardware connectivity is shown, indicating cross-strapping between ORUs, and equipment location in the nodes and on the truss. Basic channel capacities for each type of data processed is also shown.

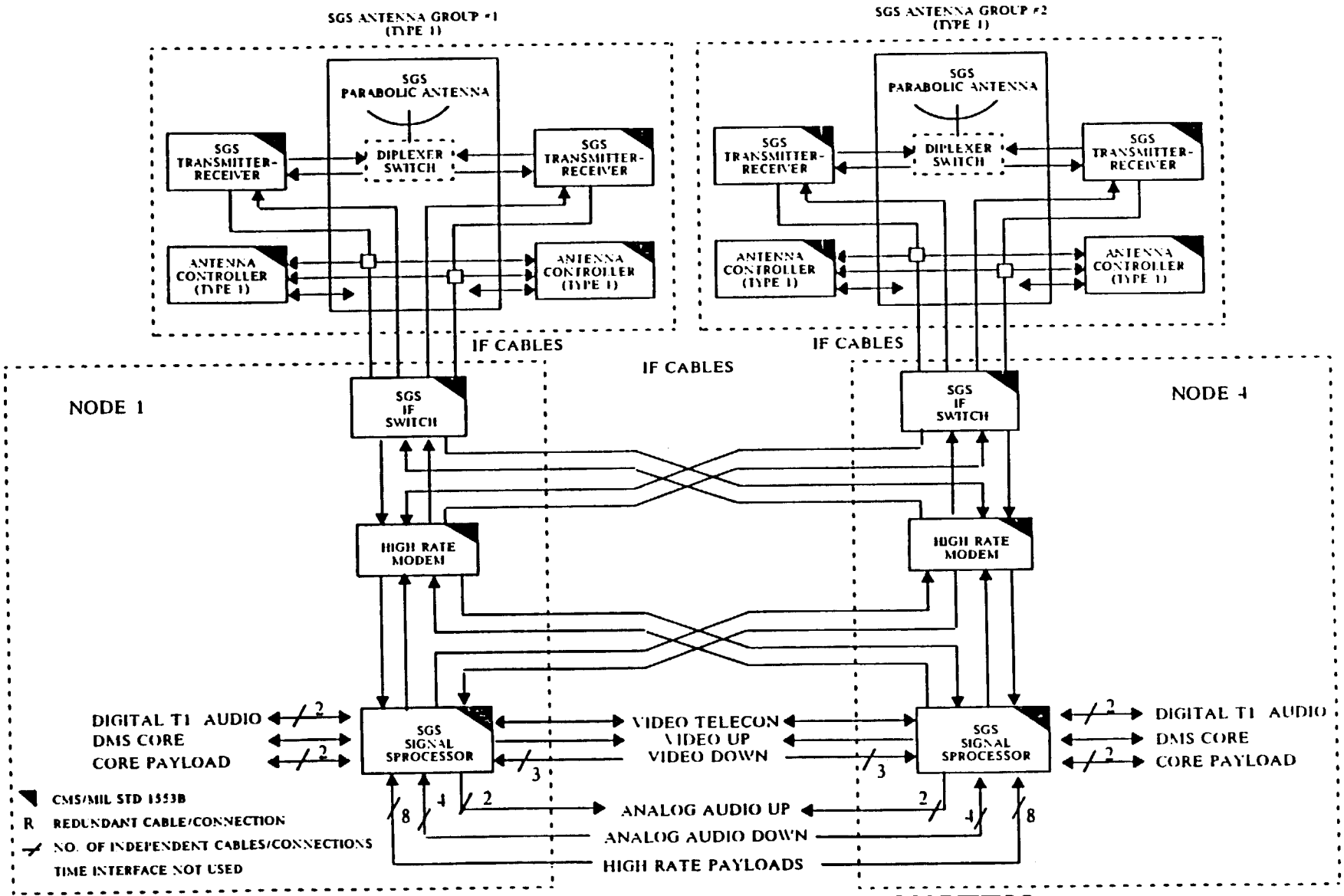

(AC) SPACE-TO-GROUND SUBSYSTEM HARDWARE SCHEMATIC

OPERATIONAL DESCRIPTION/INTERFACES

SPACE-TO-SPACE SUBSYSTEM

This chart shows the overall capabilities and content of the Space-to-Space Subsystem, the UHF Communications Subsystem, the Tracking Subsystem, and the Assembly/Contingency Subsystem for both the PMC and the AC configurations.

COMMUNICATIONS AND TRACKING

FUNCTION	BASELINE CONTENT	
	PMC	AC
Space-to-Space Subsystem • Ku-band multi-access	• Deferred	• Ku-band for MT/FTS/ Free-Flyers
UHF Communications Subsystem (Voice and limited data)	• NSTS compatible UHF for EVA, NSTS comm (MT comm requirements under study)	• Same UHF as PMC
Tracking Subsystem • GPS for SSF position, timing, and tracking free-flyers	• GPS deferred • Ground tracking provided through Assembly/ Contingency Subsystem	• GPS
Assembly/Contingency Subsystem • S-band through TDRSS	• Added ground tracking (timing under study)	• Same as PMC

OPERATIONAL DESCRIPTION/INTERFACES

SPACE-TO-SPACE SUBSYSTEM

This chart shows the basic functional block diagram for the Space-to-Space Subsystem. Interfaces with other systems, both external and internal is also shown.

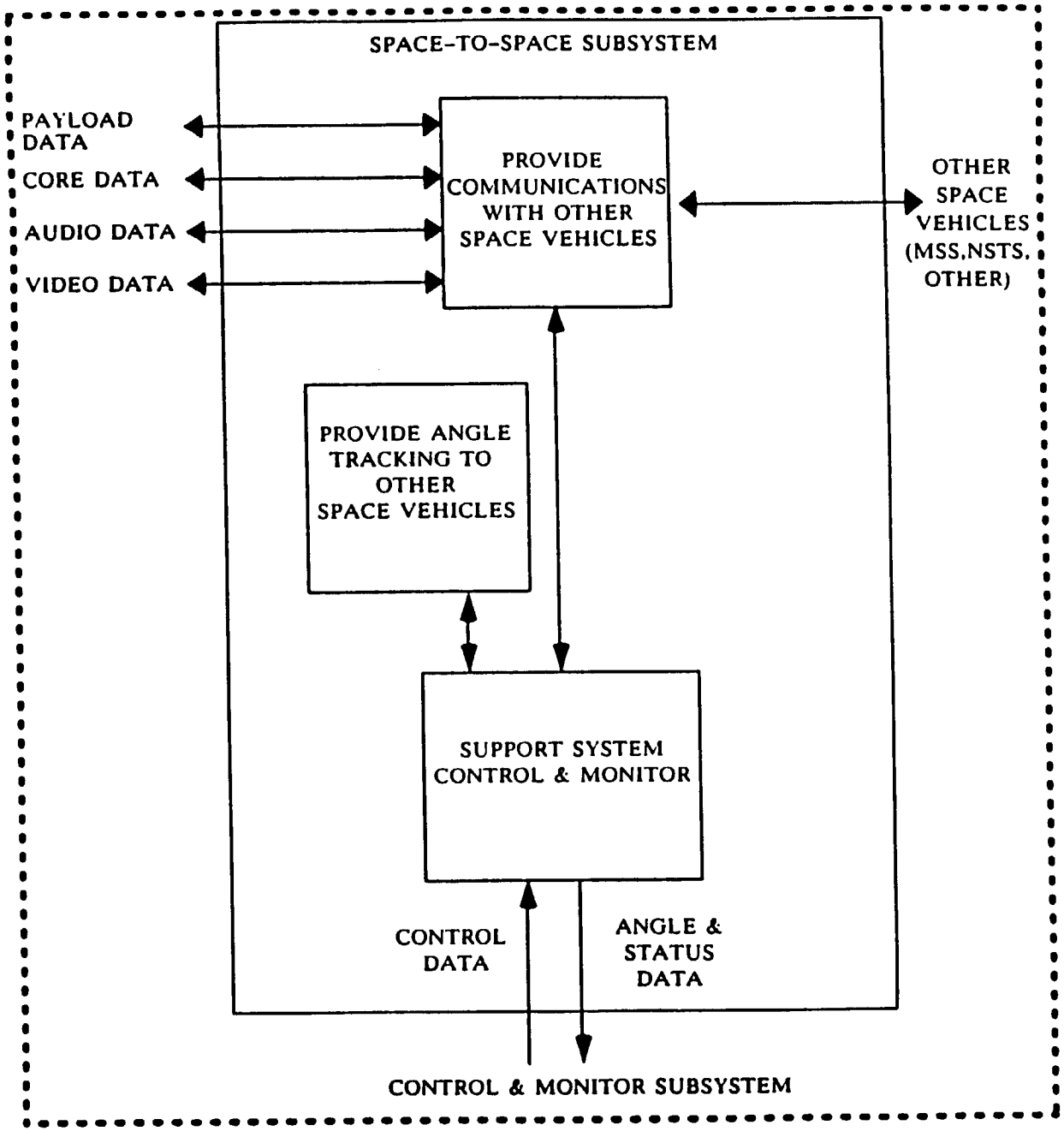

(AC) SPACE-TO-SPACE SUBSYSTEM FUNCTION BLOCK DIAGRAM

OPERATIONAL DESCRIPTION/INTERFACES

SPACE-TO-SPACE SUBSYSTEM

The basic hardware schematic is shown for the Assembly Complete configuration. Hardware connectivity is shown, indicating cross-strapping between ORUs, and equipment location in the nodes and on the truss. Basic channel capacities for each type of data processed is also shown.

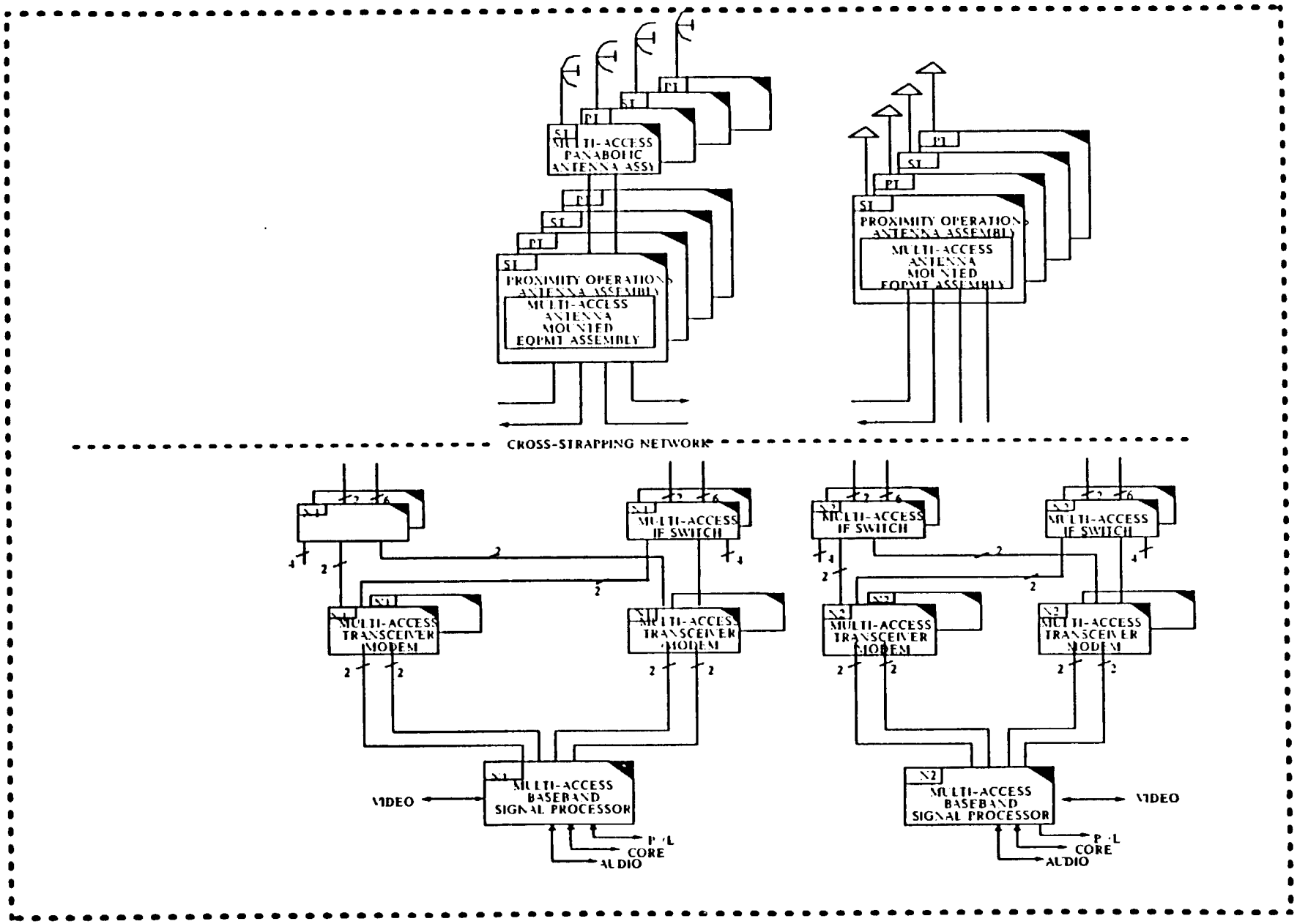

(AC) SPACE-TO-SPACE SUBSYSTEM HARDWARE SCHEMATIC

OPERATIONAL DESCRIPTION/INTERFACES

UHF COMMUNICATIONS SUBSYSTEM

This chart shows the basic functional block diagram for the UHF Communications Subsystem. RF interfaces are shown between the Space Station base, the NSTS Shuttle and two EVA astronauts. The three frequencies of 298.6 MHz, 259.7 MHz, and 279 MHz are used to communicate between the terminals.

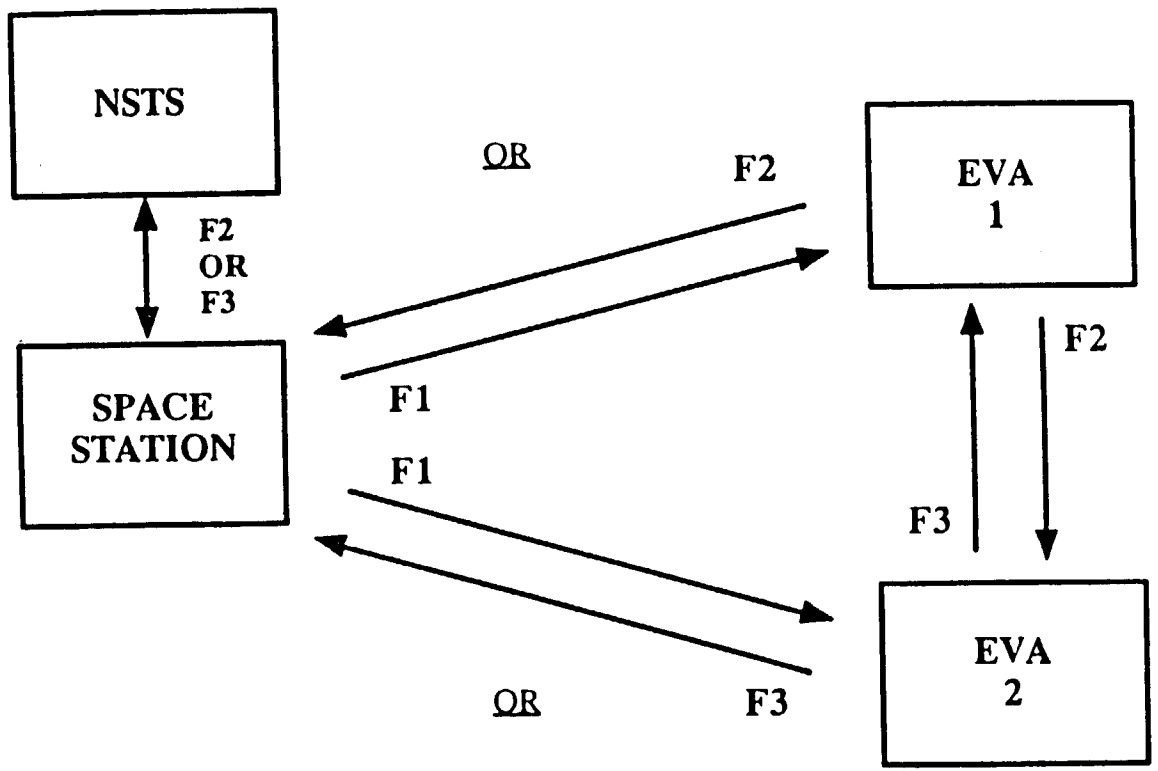

UHF COMMUNICATIONS SUBSYSTEM FUNCTIONAL BLOCK DIAGRAM

OPERATIONAL DESCRIPTION/INTERFACES

UHF COMMUNICATIONS SUBSYSTEM

This chart shows the interface block diagram for the UHF Communications Subsystem. Interfaces with other systems, both external and internal is also shown.

UHF COMMUNICATIONS SUBSYSTEM

UHF INTERFACE BLOCK DIAGRAM

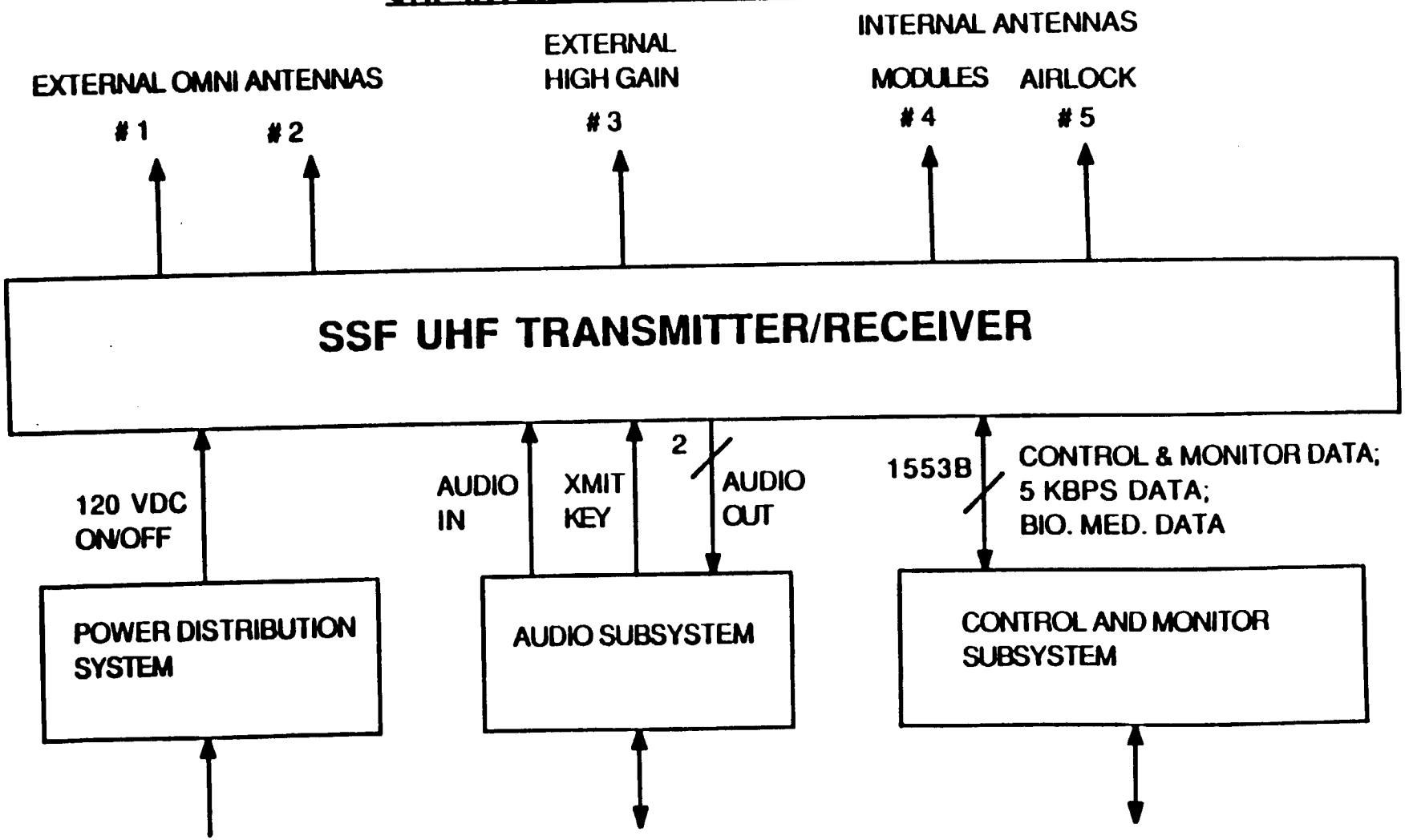

CD4

OPERATIONAL DESCRIPTION/INTERFACES

TRACKING SUBSYSTEM

This chart shows the basic functional block diagram for the Tracking Subsystem. Interfaces with other systems, both external and internal is also shown.

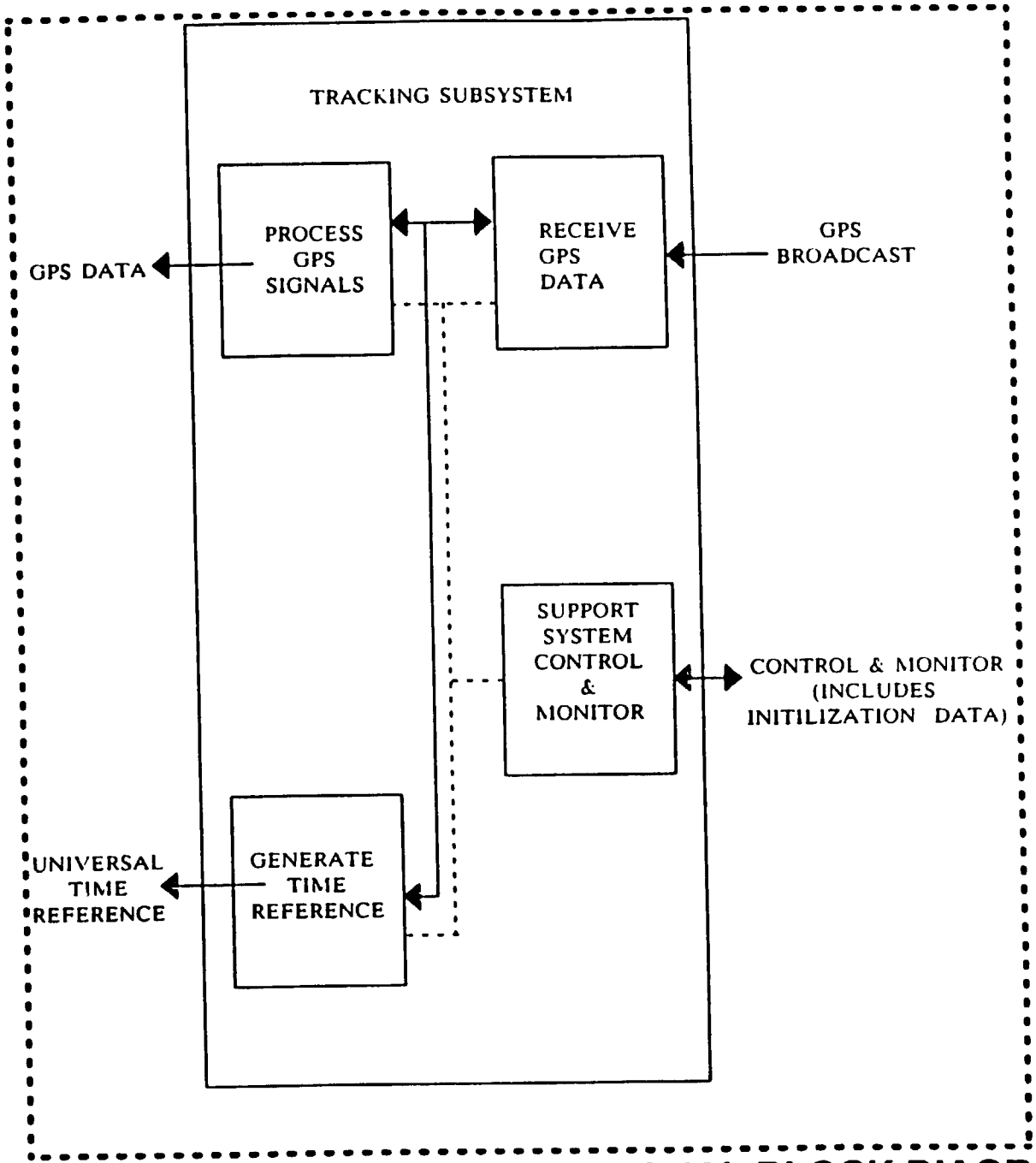

(AC) TRACKING SUBSYSTEM FUNCTIONAL BLOCK DIAGRAM

OPERATIONAL DESCRIPTION/INTERFACES

TRACKING SUBSYSTEM

The basic hardware schematic is shown for the Assembly Complete configuration. Hardware connectivity is shown, indicating cross-strapping between ORUs, and equipment interfaces with other systems.

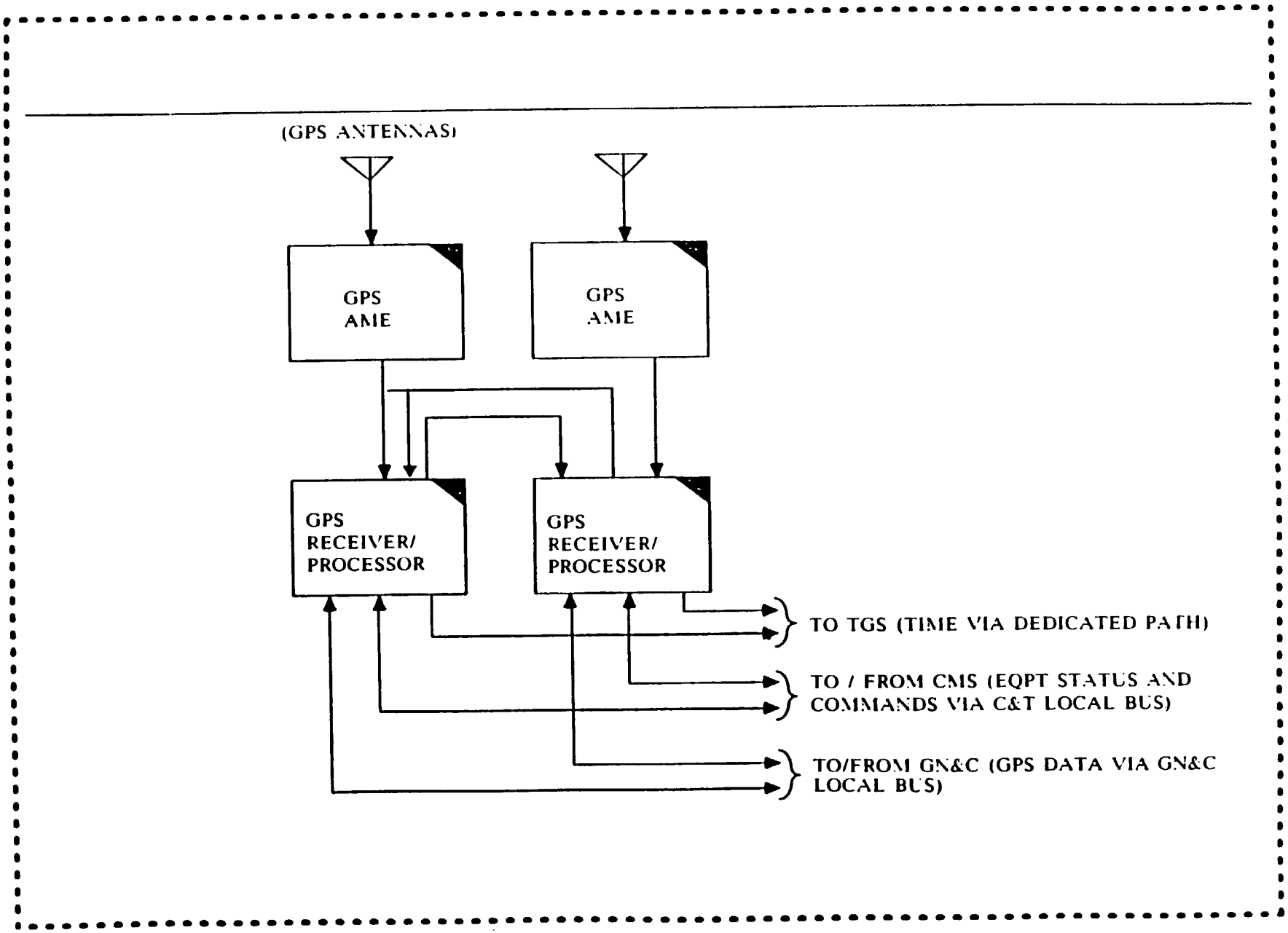

(AC) TRACKING SUBSYSTEM HARDWARE SCHEMATIC

OPERATIONAL DESCRIPTION/INTERFACES

ASSEMBLY/CONTINGENCY SUBSYSTEM

Maximum channel bit rates and net data rates are shown for both the forward and return links. The maximum channel bit rate for core data can be two different rates depending on whether audio is part of the link. The net data rates do not include synchronization and header overheads.

ASSEMBLY/CONTINGENCY SUBSYSTEM

ASSEMBLY/CONTINGENCY CHANNEL CONNECTIVITY CAPABILITIES WITH DUAL REDUNDANCY

TDRSS CHANNEL	ACTUAL LINK DATA RATES
SSA FORWARD SSA RETURN	3 kbps 16 kbps

CHANNEL TYPE	NET DATA RATE (1) (kbps)	MAXIMUM CHANNEL BIT RATE (kbps)
AUDIO SSA FORWARD	2.900	2.4
SSA RETURN	15.467	2.4
CORE SSA FORWARD	2.900	2.900/0.500
SSA RETURN	15.467	15.467/13.067

NOTE (1): NET DATA RATE IS EQUAL TO THE ACTUAL LINK BIT RATE MINUS HEADER OVERHEAD IN TRANSFER FRAME

OPERATIONAL DESCRIPTION/INTERFACES

ASSEMBLY/CONTINGENCY SUBSYSTEM

The basic hardware schematic is shown indicating hardware connectivity, and equipment interfaces with other systems.

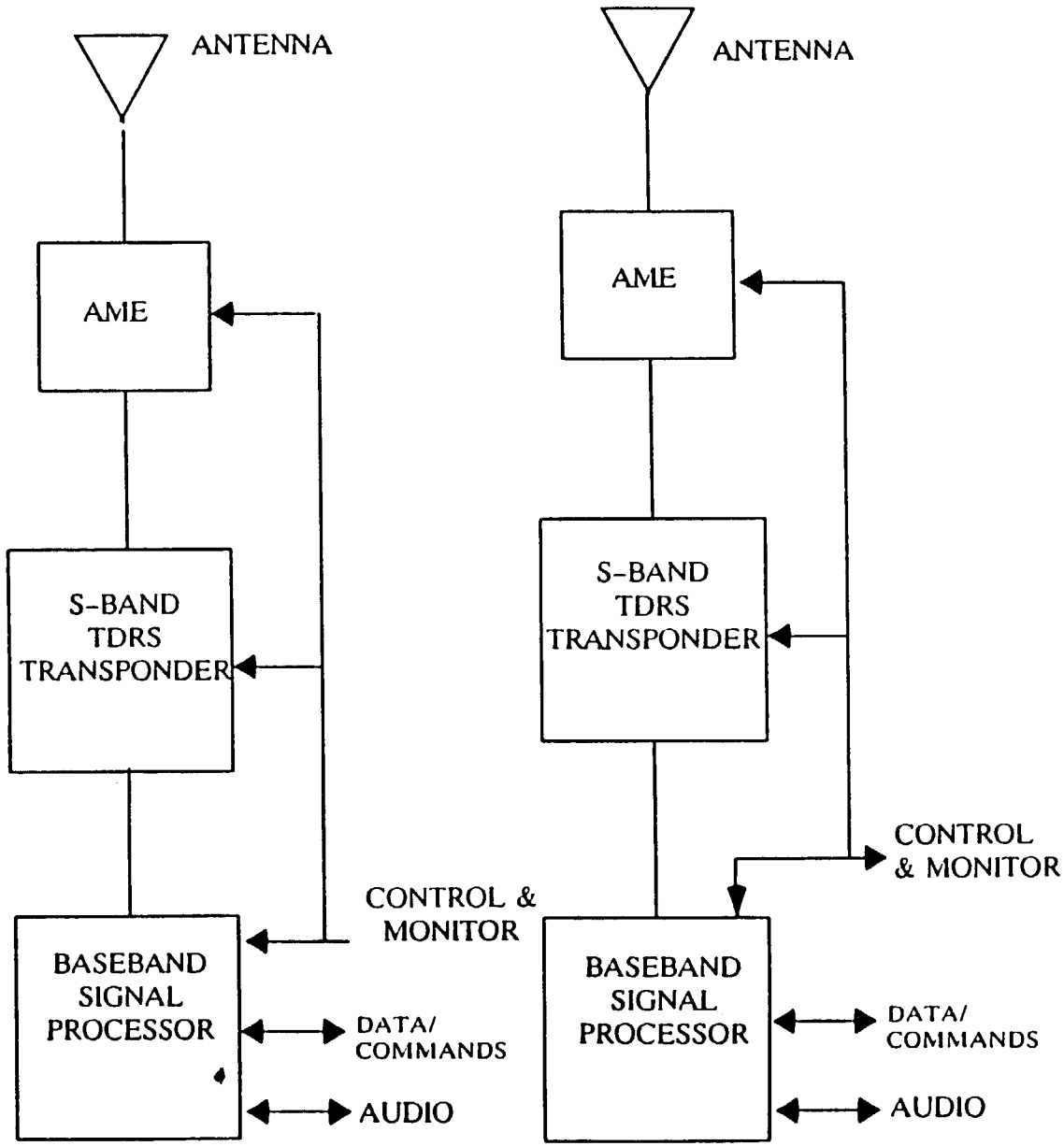

ASSEMBLY/CONTINGENCY SUBSYSTEM HARDWARE SCHEMATIC

OPERATIONAL DESCRIPTION/INTERFACES

This chart shows the capabilities and content of the Control and Monitoring Subsystem, the Audio Subsystem, and the Video Subsystem for both the PMC and the AC configurations.

COMMUNICATIONS AND TRACKING

FUNCTION	BASELINE CONTENT	
	PMC	AC
Control & Monitoring Subsystem • Uses DMS SDPs • Local buses control all C&T ORUS	• Limited capability (SDP requirements under study)	• SDPs for C&T System with FDDI network
Audio Subsystem • Digital distribution onboard	• 26 Terminals • 10 Wireless Units • 2 Recorders	• 32 Terminals • 10 Wireless Units • 4 Recorders
Video Subsystem • NTSC • Analog distribution onboard	• 6 external cameras • 18 internal cameras • Monitors - 2 fixed, 4 portable • 2 recorders	• 8 external cameras • 18 internal cameras • Monitors - 2 fixed, 4 portable • 4 recorders

OPERATIONAL DESCRIPTION/INTERFACES

CONTROL AND MONITORING SUBSYSTEM

This chart shows the Control and Monitoring hardware architecture for the Permanently Manned Configuration. Primary interface between the Standard Data Processors (SDPs)(provided by the DMS System) and the C&T System ORUs is via the 1553B bus.

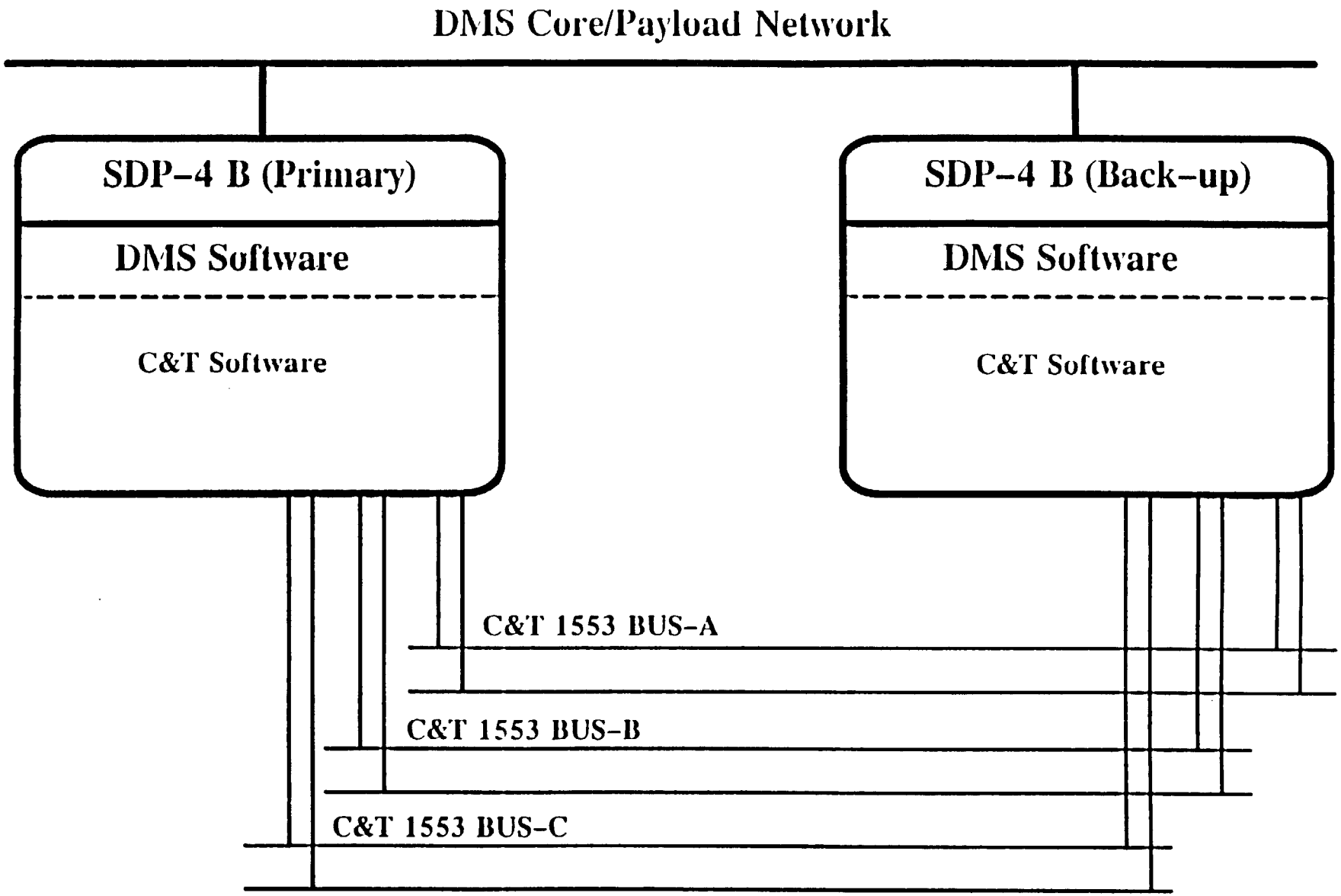

(PMC) CONTROL AND MONITOR SUBSYSTEM HARDWARE SCHEMATIC

OPERATIONAL DESCRIPTION/INTERFACES

CONTROL AND MONITORING SUBSYSTEM

This chart shows the Control and Monitoring hardware architecture for the Assembly Complete configuration. In this configuration, the Control and Monitoring Subsystem has a dedicated local bus, connecting to local controllers located throughout the station. As shown, the C&T ORUs are located in every area of the Station, both internally and externally.

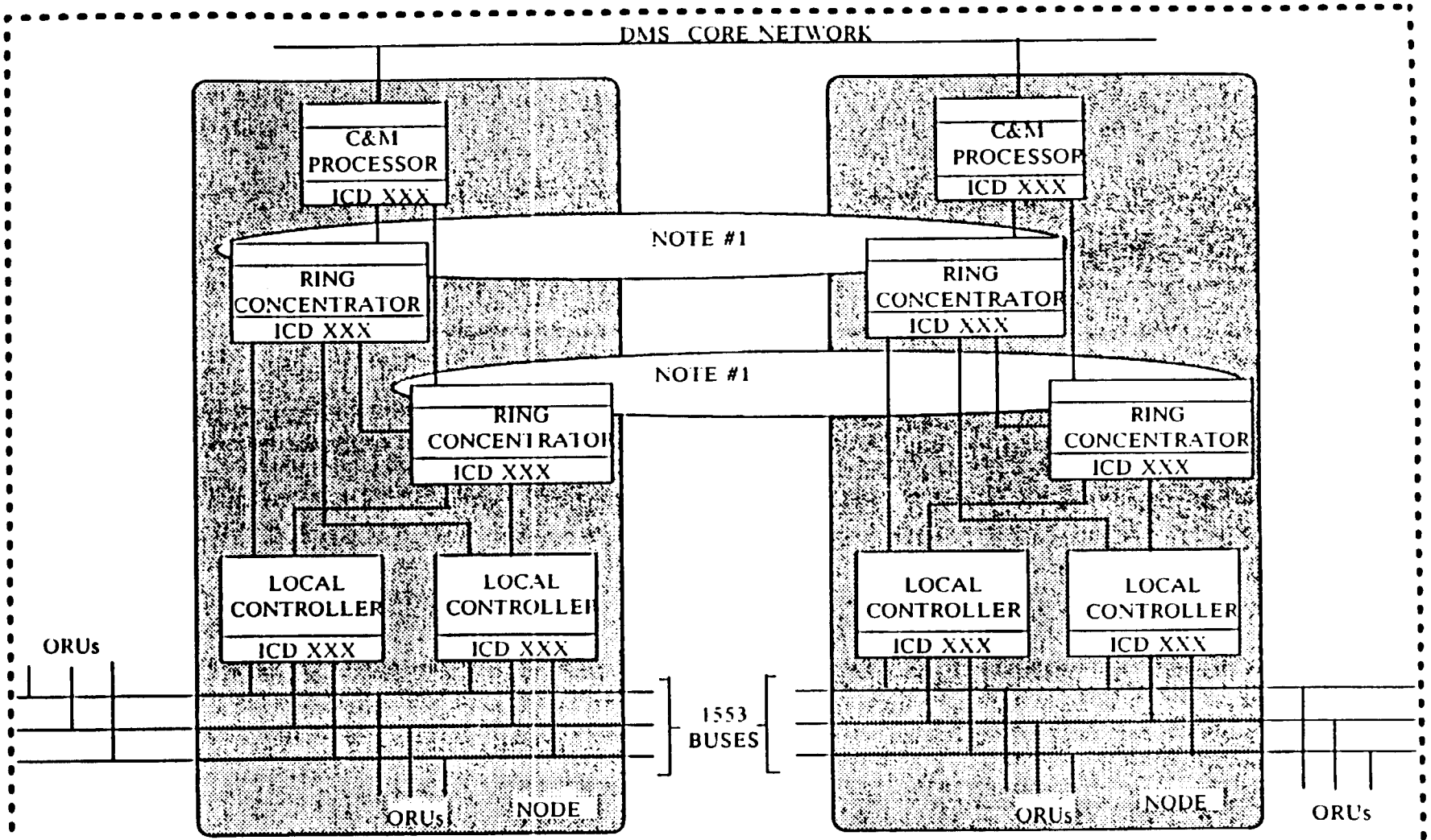

NOTE #1. The bus to be used by the C&M system is still under consideration. Both an 802.4 bus, running at 10 MBPS, or a dedicated FDDI network, running at 100 MBPS are under consideration. An FDDI network is shown.

(AC) CONTROL AND MONITOR SUBSYSTEM HARDWARE SCHEMATIC

OPERATIONAL DESCRIPTION/INTERFACES

AUDIO SUBSYSTEM

This functional block diagram of the Audio Subsystem shows basic hardware components, and their interfaces with each other, and with other systems.

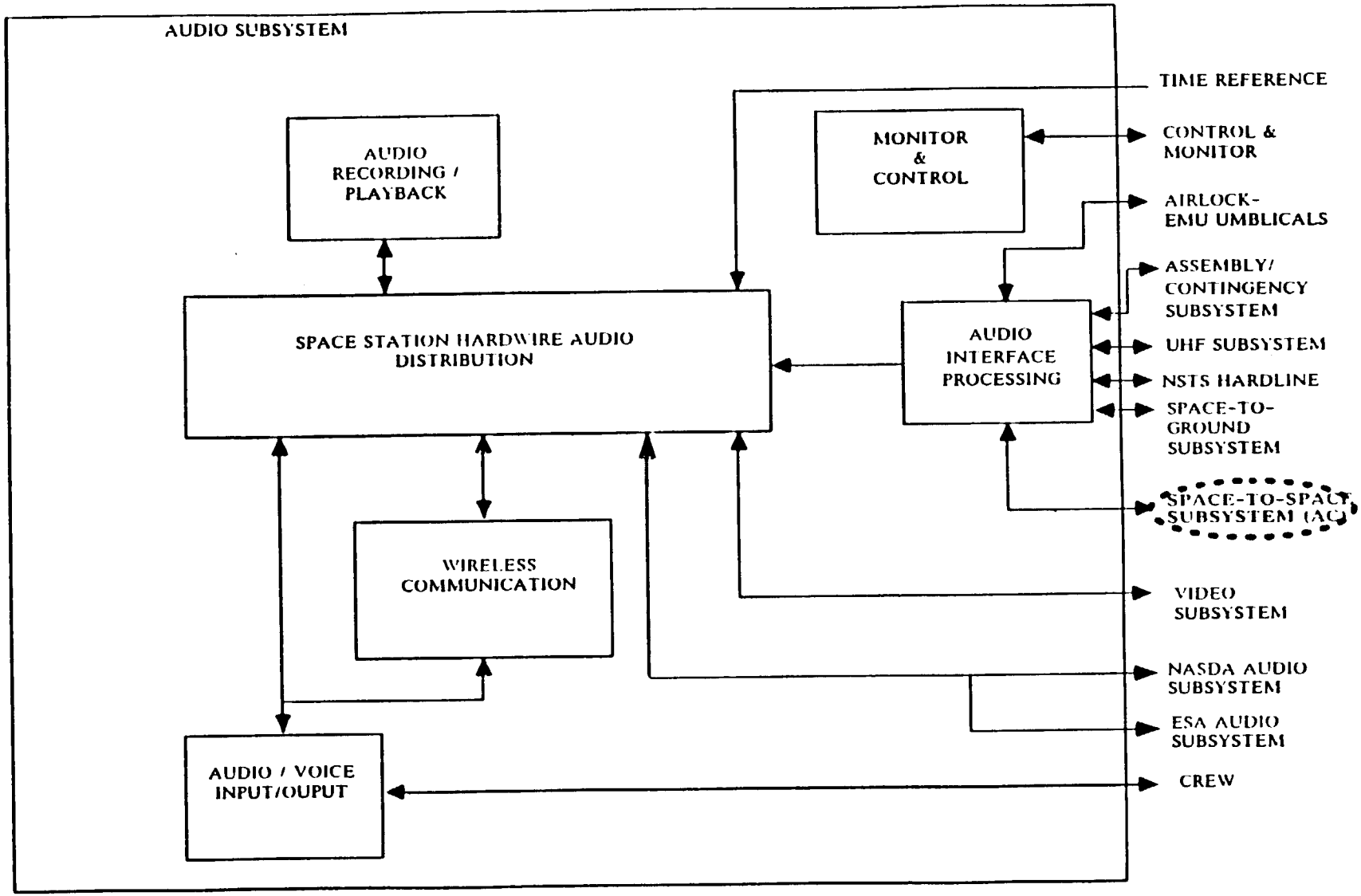

SPACE STATION AUDIO SUBYSTEM FUNCTIONAL BLOCK DIAGRAM

OPERATIONAL DESCRIPTION/INTERFACES

AUDIO SUBSYSTEM

This Audio Subsystem schematic shows physical location with- in the nodes and modules. Numbers of units are also indicated.

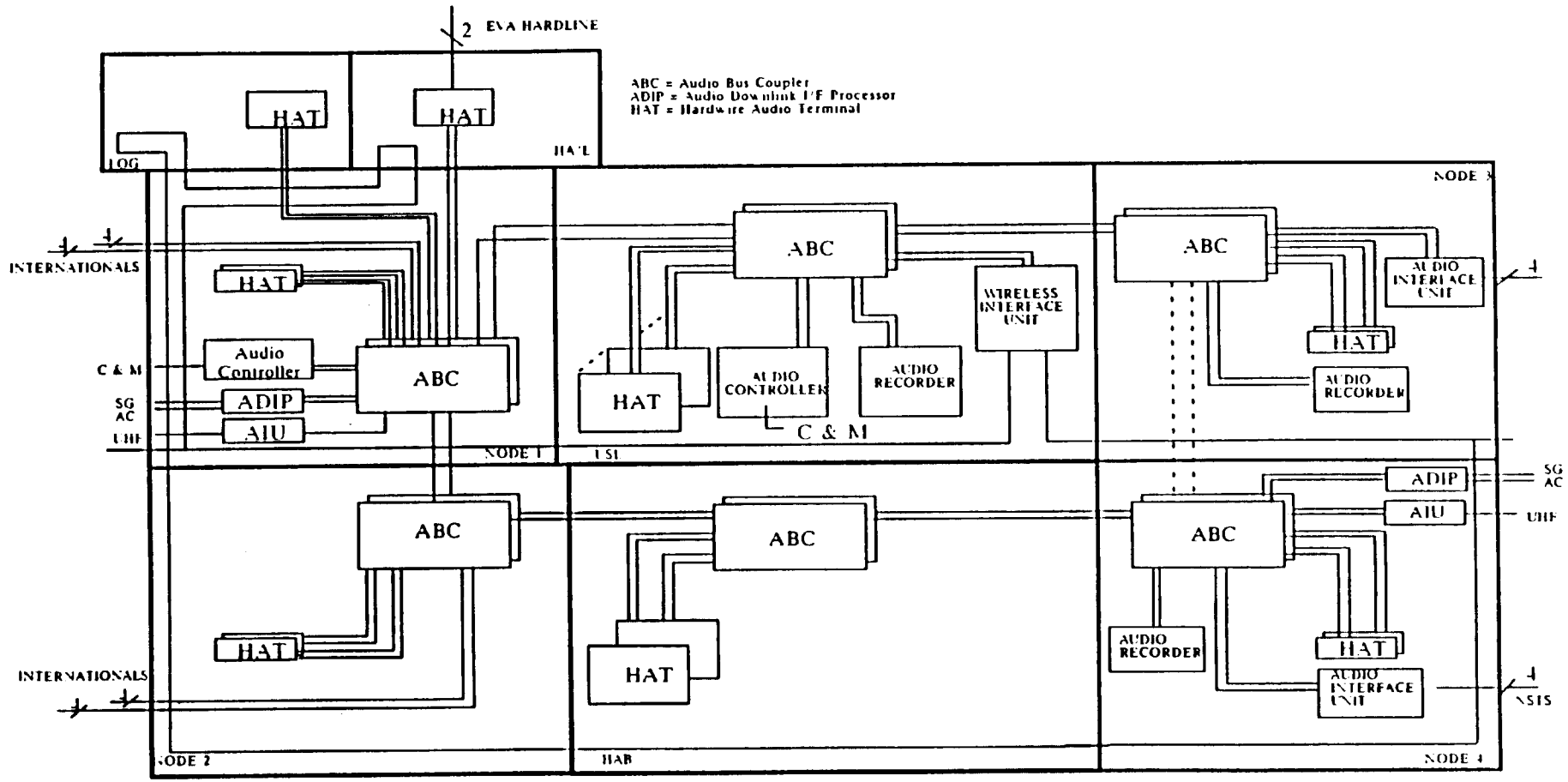

AUDIO SUBSYSTEM HARDWARE SCHEMATIC

OPERATIONAL DESCRIPTION/INTERFACES

VIDEO SUBSYSTEM

This functional block diagram of the Video Subsystem shows the basic functions and the interfaces with other C&T Subsystems and other Systems on board the station.

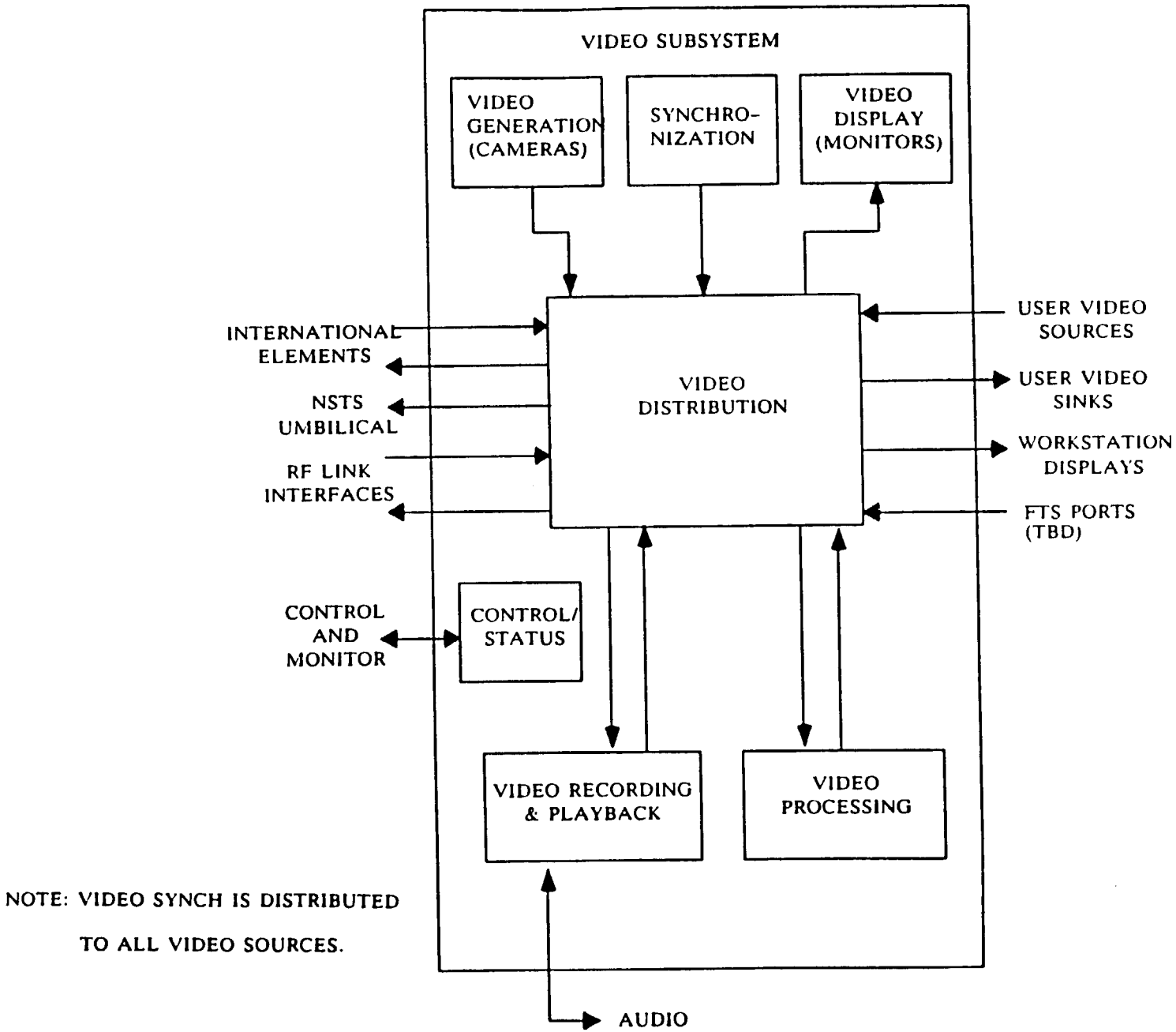

NOTE: VIDEO SYNCH IS DISTRIBUTED TO ALL VIDEO SOURCES.

VIDEO SUBSYSTEM FUNCTIONAL BLOCK DIAGRAM

OPERATIONAL DESCRIPTION/INTERFACES

VIDEO SUBSYSTEM

This Video Subsystem schematic shows physical location with- in the nodes, modules, logistics module, airlock, and truss. Numbers of units are also indicated together with basic connectivity within the Subsystem.

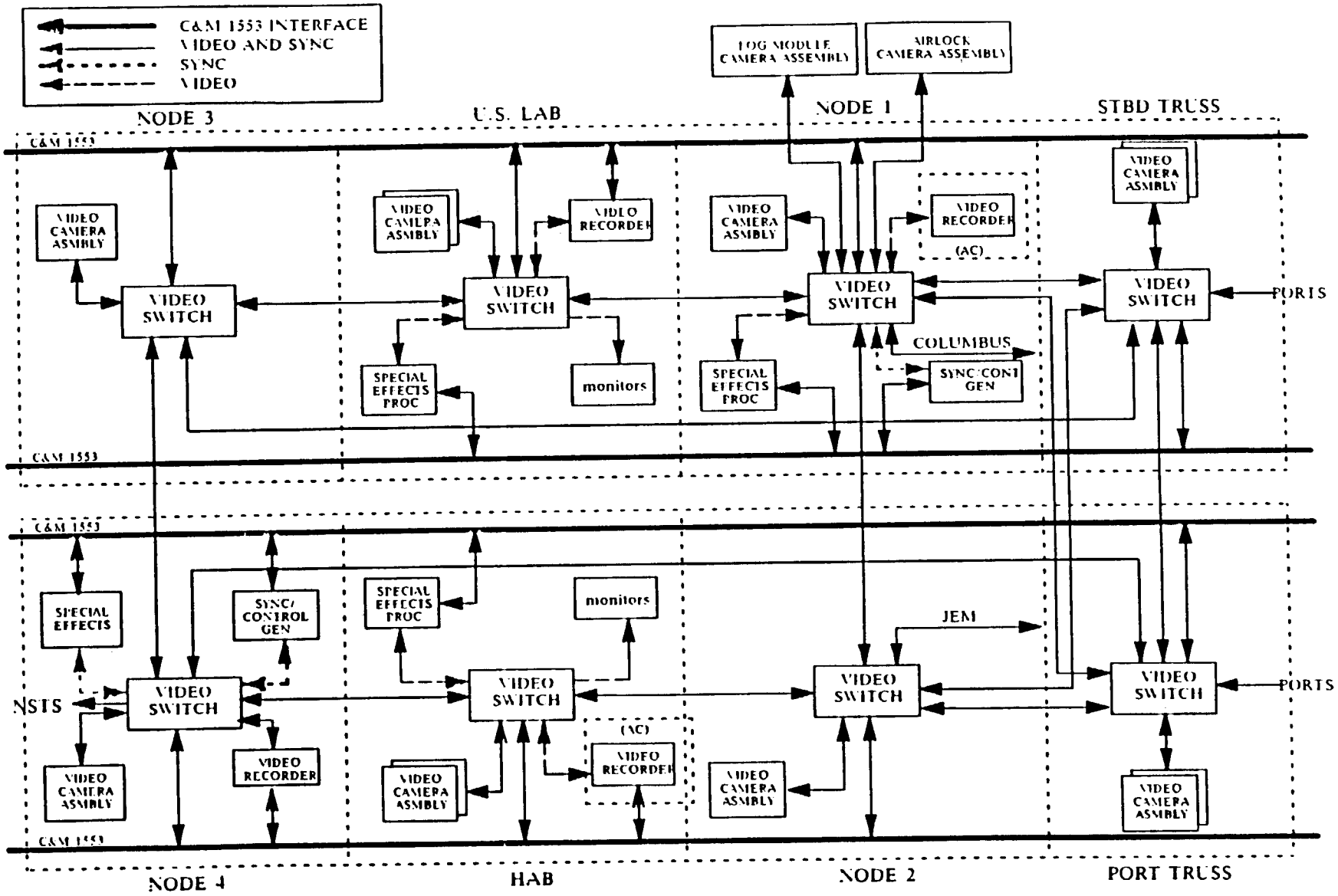

VIDEO SUBSYSTEM ARCHITECTURE

THIS PAGE INTENTIONALLY BLANK

PRECEDING PAGE BLANK NOT FILMED

RESOURCE ALLOCATION/STATUS

PAGE 340 INTENTIONALLY BLANK

RESOURCE ALLOCATION/STATUS

The current estimate of average power required by the C&T System is shown together with the assumptions for determination of this average power. Also shown is the current estimate for weight. These data are shown for both the PMC and AC configurations.

C&T RESOURCE ALLOCATION

	AVE POWER (WATTS)	WEIGHT (LBS)
PMC	2202	3767
AC	2622	6657

Power allocation is based on a 7 day average under the following assumptions:

- Single string SGS operating
- Single CMS operating
- Three external cameras operating
- 10% duty cycle for UHF communications with EVA with hot backup
- 10% duty cycle for SSS Ku-band with MSC, single string operating
- Single string GPS operating
- 5% duty cycle for ACS, single string operating

THIS PAGE INTENTIONALLY BLANK

PRECEDING PAGE BLANK NOT FILMED

LOGISTICS
REPAIR AND RESUPPLY

PAGE 344 INTENTIONALLY BLANK

LOGISTICS: REPAIR AND RESUPPLY

This chart shows the current thinking on how the C&T System will be maintained over the life of the Station.

LOGISTICS: REPAIR AND RESUPPLY

- Station -- 30-year life with maintainability
- Robotics capability for replacing failed external ORUs and assemblies.
- Maintainability, on-orbit spares, and resupply requirements currently being defined.

THIS PAGE INTENTIONALLY BLANK

PRECEDING PAGE BLANK NOT FILMED

POSSIBLE EVOLUTION ITEMS

PAGE 348 INTENTIONALLY BLANK

POSSIBLE EVOLUTION ITEMS

This chart indicates some possible areas in which the C&T System might evolve. Some are based on the need for going to higher, less-congested frequency bands. Others are based on possible increases in communications requirements and tracking requirements as the Space Station evolves. The Lunar/Mars initiatives may also provide requirements for new communications systems on board. Technology advancement will certainly cause evolution in some areas of the System. For example, the coming of high definition television (HDTV) will cause changes in the way the video signals are distributed and processed on board.

THIS PAGE INTENTIONALLY BLANK

POSSIBLE EVOLUTION ITEMS

(NOT ALL INCLUSIVE)

- **SPACE-TO-SPACE SUBSYSTEM**
  - Different frequency
    - From Ku-band to Ka-band, optical, etc.
  - Greater communications range
    - From 37 km to 2000 km
    - Different antenna types
- **SPACE-TO-GROUND AND SPACE-TO-SPACE SUBSYSTEM**
  - Upgraded signal processing to accommodate HDTV
- **CONTROL AND MONITORING SUBSYSTEM**
  - More autonomous
  - Expert system
- **VIDEO SUBSYSTEM**
  - Component distribution for HDTV
- **TRACKING SUBSYSTEM**
  - Addition of docking and berthing sensors - e.g., a laser-docking system to detect range, range rate, angle, and angle rate.
- **POSSIBLE ADDITIONAL COMMUNICATIONS**
  - To accommodate limited Lunar/Mars communications from the Space Station.

Communications and Tracking

Invited Presentations

PRECEDING PAGE BLANK NOT FILMED

PAGE 352 INTENTIONALLY BLANK

THIS PAGE INTENTIONALLY BLANK

COMMUNICATIONS TECHNOLOGY FOR SPACE STATION EVOLUTION

G. DICKEY ARNDT

ELECTROMAGNETIC SYSTEMS BRANCH, EE3

NASA/JOHNSON SPACE CENTER

PRECEDING PAGE BLANK NOT FILMED

PAGE 354 INTENTIONALLY BLANK

COMMUNICATIONS EVOLUTION	ELECTROMAGNETIC SYS. BRANCH	
	G. DICKEY ARNDT	1/90

- TOPICS
  - GROWTH SPACE STATION MULTIPLE ACCESS (MA) SYSTEM
  - LONG RANGE FREE-FLYERS
  - ORBITAL DEBRIS RADAR SYSTEM
  - LUNAR/MARS COMM SYSTEMS

MULTIPLE ACCESS COMM SYSTEM FOR SPACE STATION (GROWTH)	ELECTROMAGNETIC SYS. BRANCH	
	G. DICKEY ARNDT	1/90

- SERVICES
  - 22 MBPS TELEVISION
  - 100 KBPS VOICE AND TELEMETRY FOR FORWARD AND RETURN LINKS
  - 400 KBPS HEADS-UP-DISPLAY (TEXT, GRAPHICS) FOR FORWARD LINK
- CHARACTERISTICS
  - FDMA
  - 7 CHANNELS (MINIMUM) FOR GROWTH STATION
  - OQPSK MODULATION
  - POWER CONTROL FOR USERS
  - ORDER WIRE CHANNEL
- USERS
  - EVA, OMV, OTV, SHUTTLE, FREE-FLYERS, ROBOTIC DEVICES
- SPACE STATION ANTENNAS
  - INITIAL (UHF ONLY)
    - OMNIS
  - GROWTH (UHF AND KU- OR KA-BAND)
    - PARABOLIC ANTENNAS WITH 37 DB GAIN (4)
    - MULTIBEAM, WIDE-SCAN ARRAYS FOR 37 KM CONTROL ZONE
    - MULTIBEAM, NARROW-SCAN ARRAYS FOR LONG-RANGE FREE-FLYERS

POSSIBLE CHANGES TO GROWTH SPACE STATION COMMUNICATIONS	ELECTROMAGNETIC SYS. BRANCH	
	G. DICKEY ARNDT	1/90

- KA-BAND OPERATION AS A PRIMARY USER
  - 25.25 -> 25.55 GHZ ON FORWARD LINK
  - 27.1 -> 27.5 GHZ ON REVERSE LINK
    - REQUIRES DEVELOPMENT OF VARIABLE POWER AMPLIFIERS (1 WATT MAX.) FOR USERS. TEXAS INSTRUMENTS BUILT FOR LERC 4 STAGE KU-BAND VPA WITH 28% EFFICIENCY
    - CONTINUE TO USE UHF FOR VOICE LINKS
- MODIFY STATION'S HIGH GAIN ANTENNAS (HGA) FOR LOWER GAIN
  - OMNI/OMNI LINKS ARE VERY LIMITED IN RANGE AT KU-BAND; KA-BAND MAKES PROBLEM WORSE
  - HGA MAIN PROBLEM IS POINTING, NOT LINK CIRCUIT MARGINS
- EXPAND COMM TO INCLUDE LONG RANGE (2000 KM) SATELLITE
- LATER, MAY USE MICROWAVE POWER TRANSFER TO BEAM POWER BETWEEN SATELLITE AND SATELLITES
  - 2.45 GHZ, 5.6 GHZ, OR LASERS

KU-BAND INTERFERENCE	ELECTROMAGNETIC SYS. BRANCH	
	G. D. ARNDT	1/90

- WITHIN 14.0 - 14.89 GHZ FREQUENCY BANDS, FIXED SATELLITE SERVICES (FSS), RADIO NAVIGATION, AND MOBILE SERVICES ARE PRIMARY USERS
- FSS WILL HAVE NUMEROUS VERY SMALL APERATURE TERMINALS (VSAT) WITH 40 DBW EIRP; FEWER (400) HIGH POWER TERMINALS WITH 56 DBW EIRP. STUDIES USED 1200 INTERFERORS
  - RF CONCERNS
    - FSS USERS INTERFERING WITH MA SYSTEM
      - OVERDRIVE FRONT-END ELECTRONICS
      - FALSE LOCK OF SWITCHABLE OMNIS ON USER
      - TRACKING OF INTERFERERS BY STATION'S HGA
      - RANDOM INTERRUPTIONS VARYING FROM A FEW SECONDS TO SEVERAL MINUTES
      - INTERFERENCE VARIES FROM INSTANTANEOUS BLACKOUT TO SLOW, NOISY DEGRADATION
      - HITS PER ORBIT TO INCREASE WITH TIME
    - STATION INTERFERING WITH PRIMARY USERS
      - HAVE TO SHUT DOWN MA SYSTEM TRANSMITTERS WHEN POINTING NEAR EQUATORIAL ORBITS
      - ANY COMPLAINT BY PRIMARY USER COULD SHUT DOWN MA SYSTEM UNTIL RESOLVED; POSSIBILITY OF ABUSE

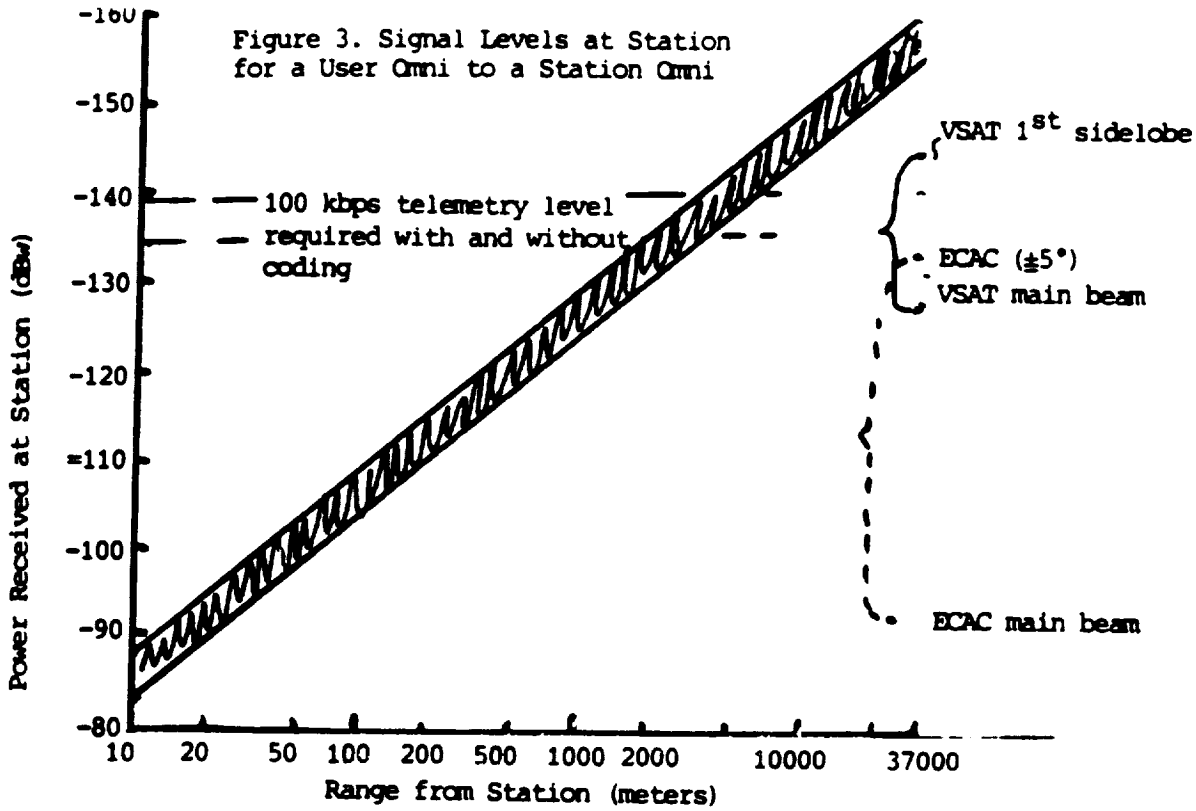

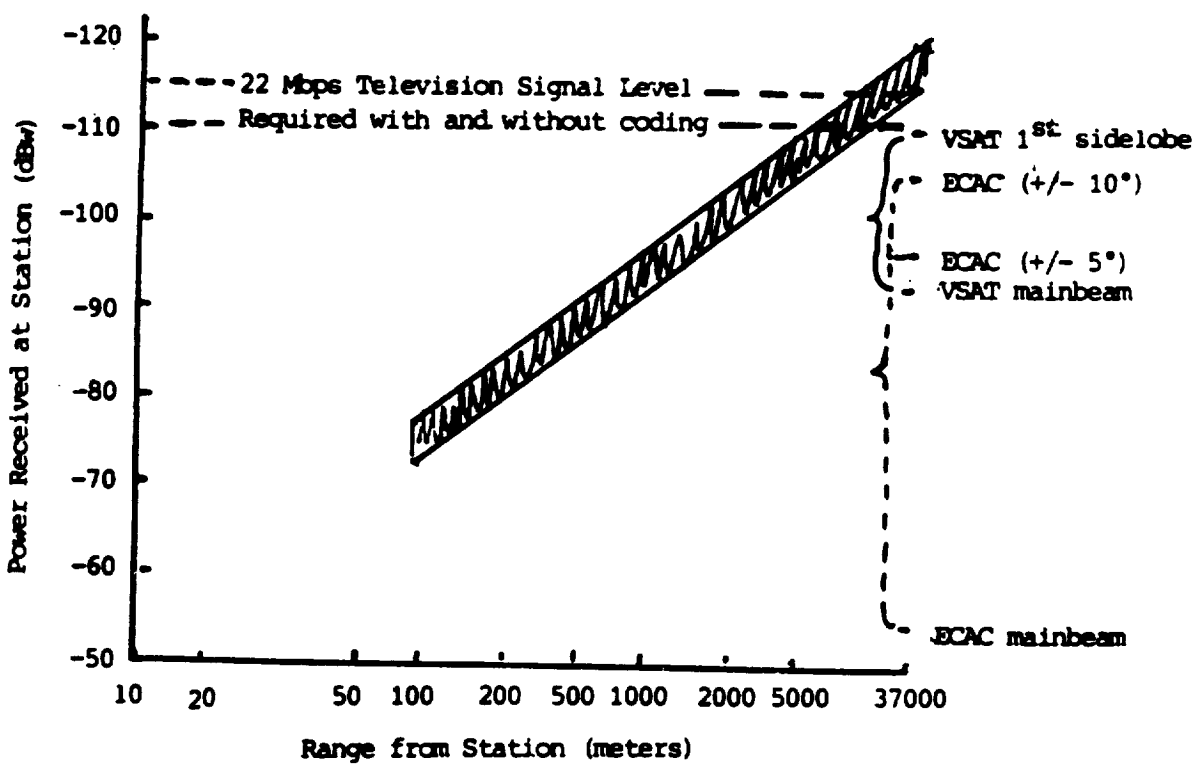

Figure 4. Signal Levels at Station for a User Omni to a Station High Gain Antenna

LONG-RANGE FREE-FLYER ANTENNA SYSTEM	ELECTROMAGNETIC SYS. BRANCH	
	G. DICKEY ARNDT	1/90

- RANGE: 185 KM TO 2000 KM (ZONES 5 AND 6)
- SCAN ANGLES: 14 DEGREES ELEVATION; 5.6 DEGREES AZIMUTH
- ANTENNA GAIN: 40 TO 43 DB TO SUPPORT TELESCIENCE EXPERIMENTS
- 6 USERS

ORBITAL DEBRIS RADAR	ELECTROMAGNETIC SYS. BRANCH	
	G. DICKEY ARNDT	1/90

- PROBLEM
  - ACCUMULATION OF ORBITAL DEBRIS PARTICLES IN LEO PRESENTS INCREASING THREAT TO SPACE STATION
- PARTICLE SIZE
  - < 1 CM - PROTECT MODULES BY SHIELDING
  - 1 TO 10 CM - NO TRACKING PRESENTLY AVAILABLE
  - > 10 CM - USSPACECOM TRACKING
- PRESENT STATUS
  - LONG-TERM MONITORING OF 1 - 10 CM DEBRIS POPULATION
  - RFP TO DEFINE OPTICAL TELESCOPE EXPERIMENT FROM ORBITER
  - ANTENNA BREADBOARD BEING BUILT AND TESTED
    - PRECURSOR TO GROUND TESTBED ANTENNA
- ORBITAL CHARACTERISTICS
  - USE PASSIVE OPTICAL SCANNING FOR 1 - 10 CM PARTICLES
  - USE USSPACECOM PREDICTIONS FOR > 10 CM PARTICLES
  - SPATIAL REGION OF INTEREST IS 30 DEGREES SECTOR OFF EACH SIDE OF VELOCITY VECTOR
  - CLOSING VELOCITY CAN BE 10 KM/SEC
  - $\dot{\Theta}_{MAX}$ = 33 DEGREES/SEC FOR 10 NM RANGE AND ϕ = 90 DEGREES
  - DESIRED ALTITUDE PREDICTION IS 100 METERS AT .5 REVOLUTION LATER
  - RANGE ERROR < 20 FEET, ANGLE ERROR < 10^{-4} RADIANS
  - RECENT CALCULATIONS SHOW 17 CLOSE ENCOUNTERS PER YEAR

GROUND TESTBED STUDY	ELECTROMAGNETIC SYS. BRANCH	
	G. D. ARNDT	1/90

- OBJECTIVE
  - TEST BED FOR TRACKING SMALL PARTICLES AT HIGH ANGULAR RATES
- HARDWARE
  - 144 SUBARRAYS FOR DETECTING AND TRACKING HIGH SPEED PROJECTILE (~ 1 CM) AT 1 KM
- SOFTWARE
  - VERY ACCURATE TRAJECTORY PREDICTIONS
- STATUS
  - 4 SUBARRAYS ARE BEING DESIGNED AND BUILT IN-HOUSE.

    KU-BAND PARASITIC MICROSTRIP ANTENNA ELEMENTS

Orbital Debris Radar Ground Study (Concluded)

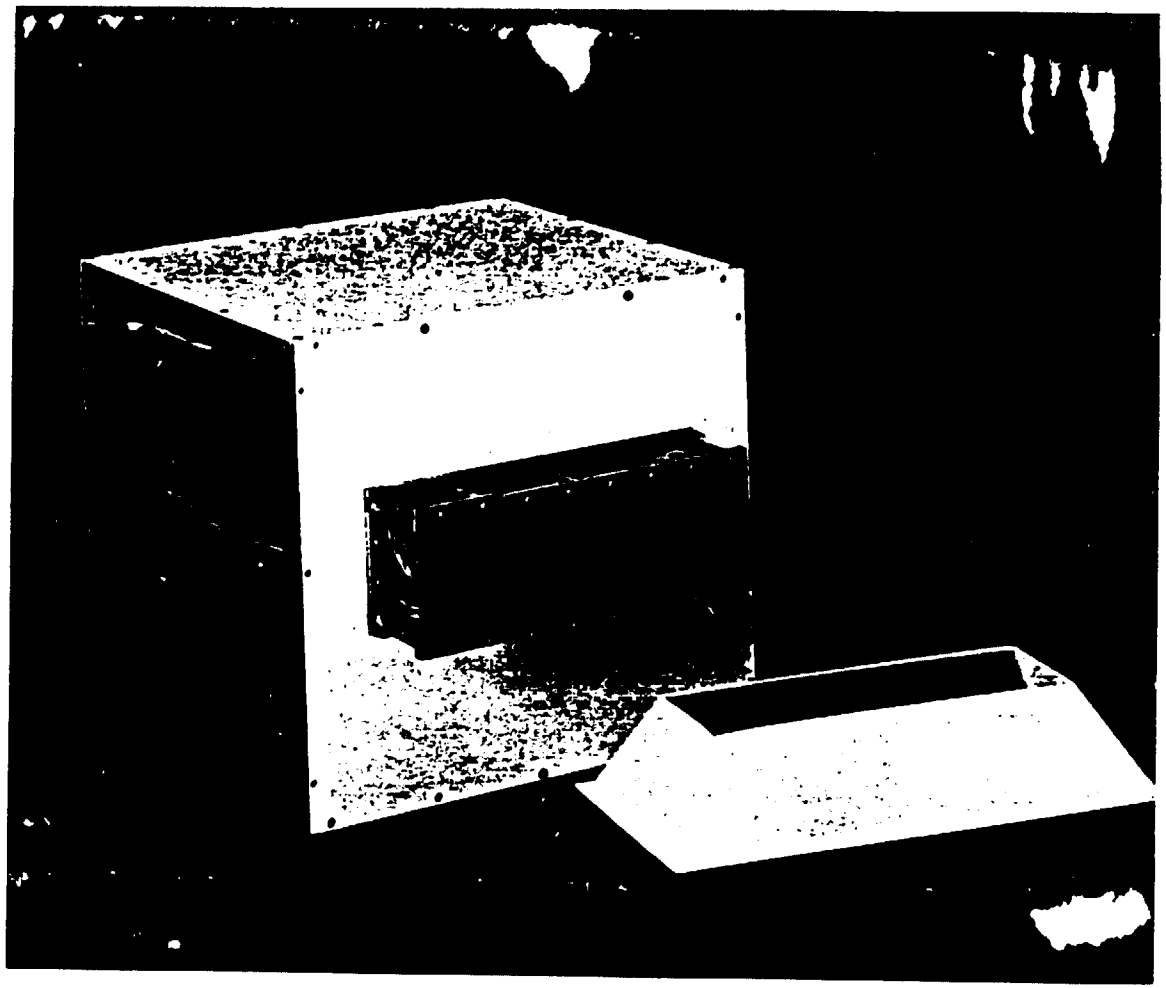

Orbital Debris Antenna Breadboard

ORIGINAL PAGE
BLACK AND WHITE PHOTOGRAPH

LUNAR/MARS/EARTH RF LINKS

ELECTROMAGNETIC SYS. BRANCH	
G. D. ARNDT	1/90

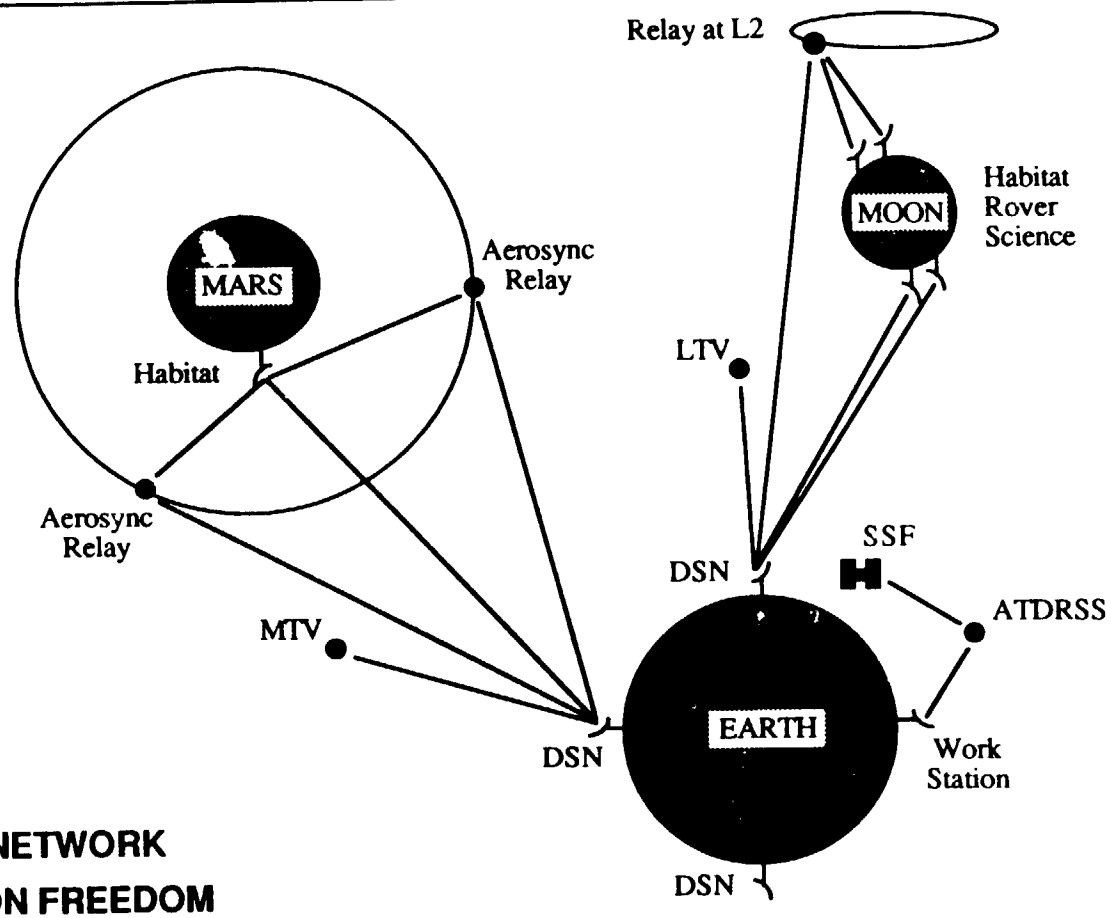

- DSN = DEEP SPACE NETWORK
- SSF = SPACE STATION FREEDOM
- ATDRSS = ADVANCED TRACKING DATA RELAY SATELLITE SYSTEM
- LTV = LUNAR TRANSPORTATION VEHICLE
- MTV = MARS TRANSPORTATION VEHICLE

LUNAR COMM SYSTEM PARAMETERS	ELECTROMAGNETIC SYS. BRANCH	
	G. DICKEY ARNDT	1/90

- FORWARD LINKS: EARTH -> NEARSIDE MOON

  EARTH -> L2 RELAY SATELLITE -> BACKSIDE MOON
  - 100 MBPS DATA RATE
  - KA-BAND (34 GHZ) OR X-BAND (8.4 GHZ)
- RETURN LINKS: NEARSIDE MOON -> EARTH

  BACKSIDE MOON -> L2 RELAY SATELLITE -> EARTH
  - 110 MBPS FOR NEARSIDE LUNAR OUTPUT
  - 100 MBPS FOR B ACKSIDE OUTPOST
  - 350 MPBS FOR LUNAR GROWTH
  - KA-BAND (32.4 GHZ)

OPTIONS: L1 RELAY SATELLITE

EARTH RELAY SATELLITE (ATDRSS)

EQUIPMENT: 34 METER DSN ANTENNAS AT 55% EFFICIENCY (78.55 DB GAIN)

3.8 METER LUNAR NEARSIDE ANTENNAS (57.5 DB GAIN)

2 WATT POWER AMPLIFIER

LUNAR RECEIVER NOISE FIGURE: .15 DB

REFERENCE: PLANETARY SURFACE SYSTEMS - TELECOMMUNICATIONS, NAVIGATION, AND INFORMATION MANAGEMENT. JSC 90 DAY STUDY REPORT, NOV. 1989

LSR LUNAR SURFACE RETURN

84-00791 NASA

RADIO TELESCOPE

Lyndon B. Johnson Space Center

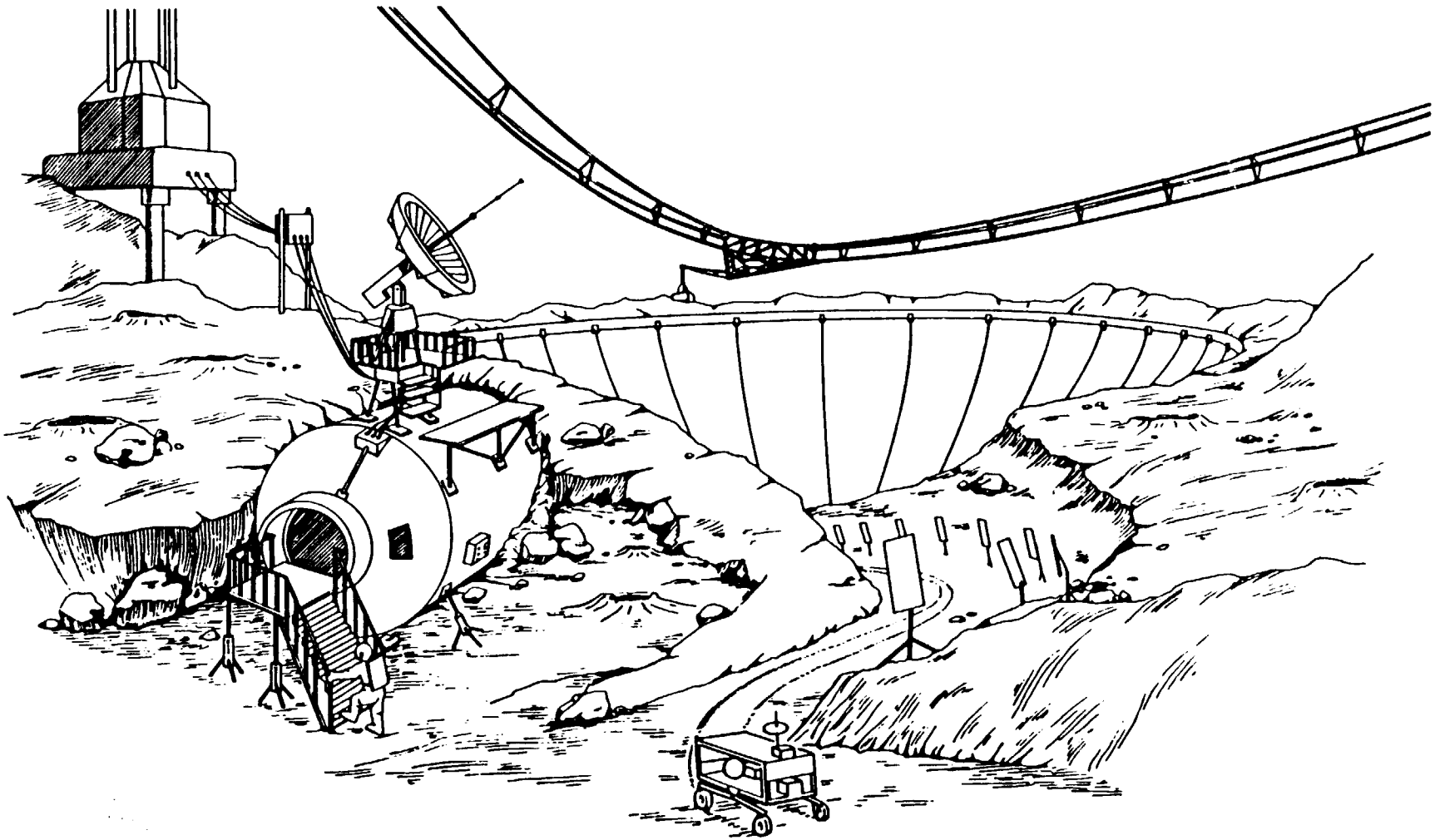

LSR LUNAR SURFACE RETURN

84-00793 NASA

OBSERVATORY

Lyndon B. Johnson Space Center

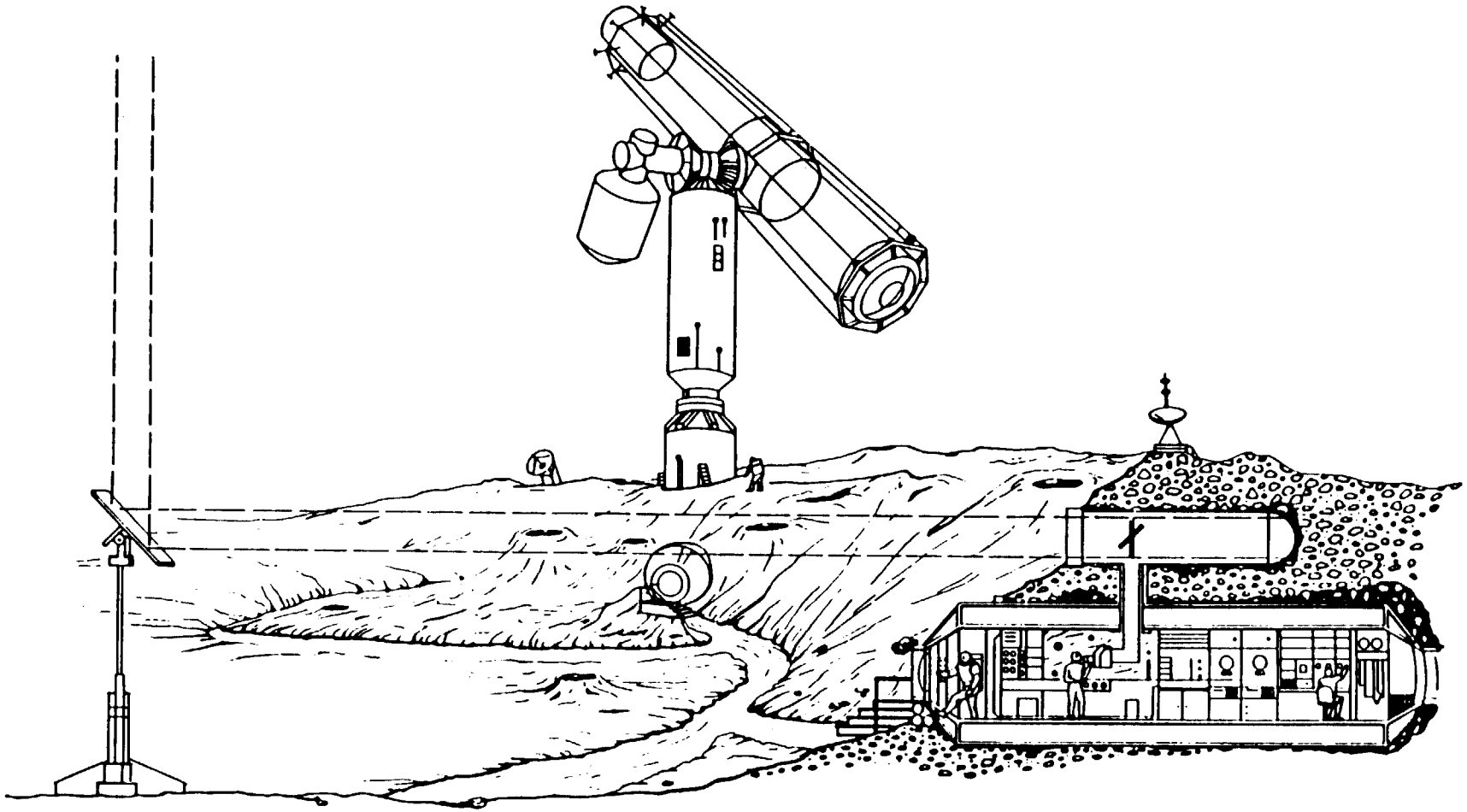

MARS COMM SYSTEM PARAMETERS	**ELECTROMAGNETIC SYS. BRANCH**	
	G. DICKEY ARNDT	**1/90**

- FORWARD LINKS: EARTH -> MARS RELAY SATELLITE -> MARS SURFACE
  - 10 MBPS DATA RATE
  - KA-BAND (34 GHZ) OR X-BAND (8.4 GHZ)
- RETURN LINKS: MARS SURFACE -> MARS RELAY SATELLITE -> EARTH
  - 10 MBPS DATA RATE (COMPRESSED VIDEO)
  - KA-BAND (32.4 GHZ)\
  - ROUND TRIP DELAY TIME = 40 MINUTES

OPTIONS: EARTH RELAY SATELLITE (TRW PRESENTATION)

EQUIPMENT:

- MARS RELAY SATELLITE
  - 60 WATT TRANSMITTER
  - 5 METER ANTENNA AT 55% EFFICIENCY (62.2 DB GAIN)
  - RECEIVER NOISE FIGURE = 2.5 DB
- EARTH (DSN) SYSTEM
  - 70 METER ANTENNA AT 55% EFFICIENCY (85 DB GAIN)
  - MASER NOISE FIGURE = .15 DB
  - RAIN DEGRADATION = 2.7 DB
  - 350 WATT TRANSMITTER
  - POINTING ACCURACY = .002 DEGREES

LOCAL LUNAR/MARS LINKS WITHIN 10 KM RANGE	ELECTROMAGNETIC SYS. BRANCH	
	G. DICKEY ARNDT	1/90

- TYPES: BASE STATION <-> ROVERS, EVA'S AND SCIENCE PACKAGES

  BEYOND 10 KM, LUNAR USERS <-> EARTH, BASE STATION VIA L1, L2 SATELLITES

  - 200 KBPS FOR CREW ROVERS (AUDIO, TELEMETRY)
  - 200 MBPS FOR LUNAR ROBOTIC ROVERS
  - 20 MBPS FOR MARS ROBOTIC
  - UHF, KA-BAND FREQUENCY

- EQUIPMENT: 30 METER TOWER FOR UHF

  UHF OMNI ANTENNAS AT BOTH ENDS

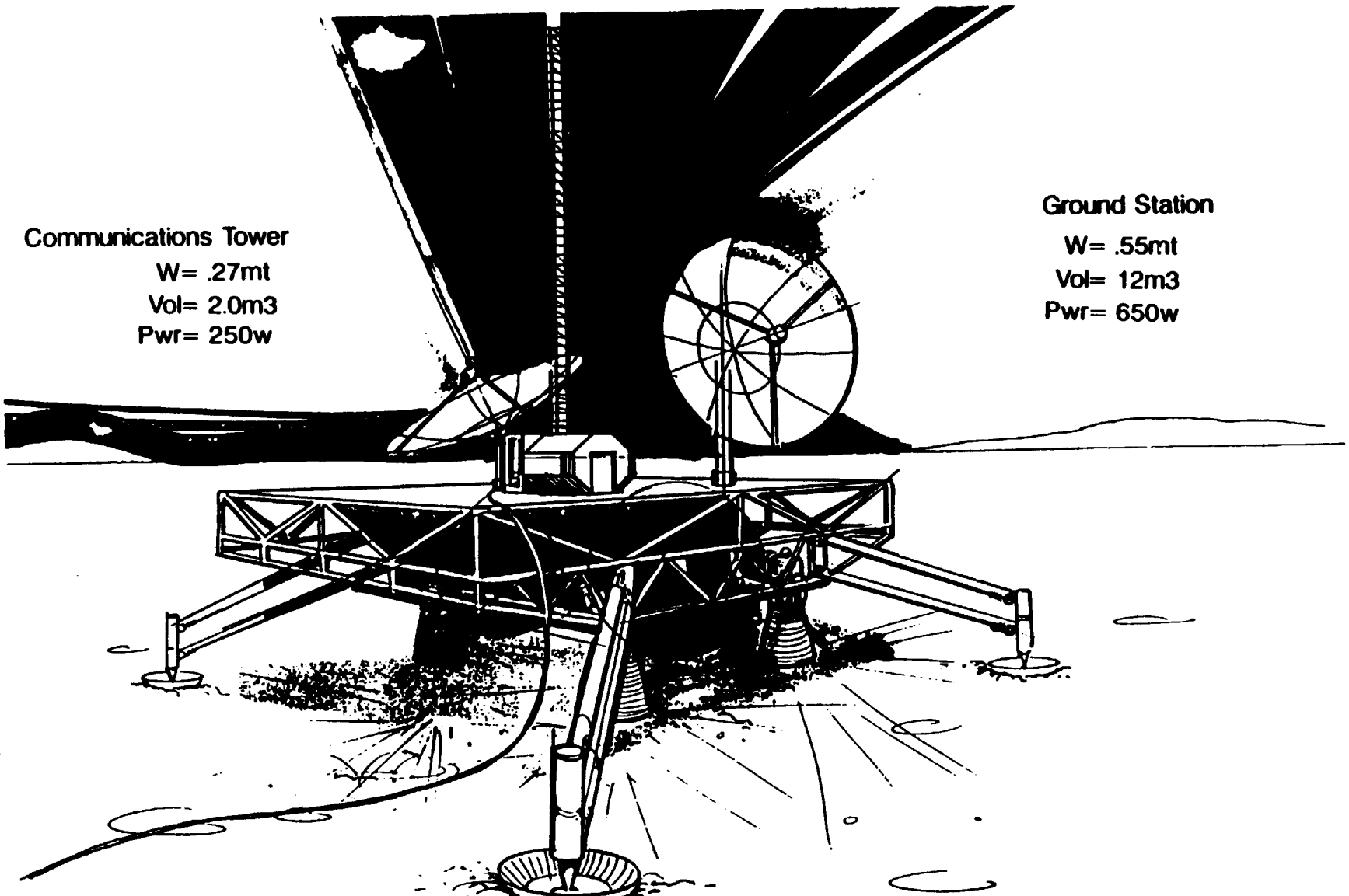

Comm/Nav Equipment

NASA 90 Day Lunar/Mars Study

NASA

MARS DATA TYPE AND DATA RATE REQUIREMENTS

Data Type	Data Rate (MBPS)	Comments
* Video	100 1.0	High rate video - single channel, color, 512 x 512 pixels, 8 bits/pixel, 30 frames/sec Low rate video - single channel, monochrome, 1024 x 1024, 8 bits/pixel, 0.1 frames/sec
Voice	0.02	Single channel links with manned vehicles, rovers or base sites
* Science	1.0 to 1.0 to 300	Low rate imagery - single channel, monochrome, 1024 x 1024, 8 bits/pixel, 0.1 frames/sec Low duty cycle spectral scanning or SAR imaging with data storage available No data storage, spectral scanning or SAR imaging
Engineering	0.2 0.002	Per manned spacecraft Per manned spacecraft
Telerobotics	0.2 200	Command channel per rover Stereo video, color, 512 x 512 pixels, 8 bits/pixel, 30 frames/sec
Command	to 0.002	Per spacecraft or science platform/site
Data Load	to 1.0	Earth to manned vehicles or manned outposts, access to Earth data bases

NOTES:

1. Data rates listed above are maximum raw data rates per data type. Total data requirements per link depend on the number of data types required per link, data compression techniques employed and the schemes used for multiplexing intermittent data streams onto a single link.

2. Data storage capacity on high rate science instruments allows reduction of required data rate by allowing intermittent high rate data to be transmitted over a longer period.

3. 2-way high rate video channels and voice channels are required between Earth and the MPV and outposts where humans will be spending longer than TBD-weeks. This is primarily for personal communications with family/friends, news and entertainment.

THIS PAGE INTENTIONALLY BLANK

TITLE PAGE	TRACKING AND COMMUNICATIONS DIVISION	
	WILLIAM X. CULPEPPER	January 12, 1990

SS EVOLUTION AND TECHNOLOGY CONSIDERATIONS FOR TRACKING AND OPTICAL COMMUNICATIONS

PAGE 374 INTENTIONALLY BLANK

OUTLINE

TRACKING SENSORS

Introduction

Rendezvous & Docking

Robotic Operations

Orbital Debris Detection & Warning

MULTIPLE SENSOR RESOURCE MANAGEMENT

OPTICAL COMMUNICATIONS

PRECEDING PAGE BLANK NOT FILMED

Text for Tracking Sensors, Introduction:

The SS should provide the primary tracking information for all vehicles within the Command and Control Zone (CCZ). Currently, the CCZ is defined as an elliptic sphere 37 km by 9 km. The primary tracking sensor for rendezvous and tracking should be GPS, though additional ladar/radar system should be anticipated.

Docking instrumentation capable of handling both unmanned and manned approaches will play vital roles, especially in the last 33 meters before contact with the SS. Robotic and proximity operations will involve multiple sensors including machine vision.

Since total shielding from orbital debris is not possible, some form of detection and warning device will be required to alert the SS to expected impacts while on orbit.

The multiplicity of tracking systems expected on the SS will require a unifying resource management system (tracking processor) to efficiently utilize the resources.

TRACKING SENSORS INTRODUCTION	TRACKING AND COMMUNICATIONS DIVISION	
	WILLIAM X. CULPEPPER	January 12, 1990

- RENDEZVOUS & DOCKING SENSOR
- ROBOTIC SYSTEMS
- ORBITAL DEBRIS DETECTION & WARNING SYSTEM
- GPS IS ASSUMED ON SS AND ALL ASSOCIATED VEHICLES

Text for Rendezvous & Docking. Capabilities Needed:

Once within the sphere of influence of the SS, i.e., the CCZ, the easiest way to accomplish rendezvous will be via GPS. The continuation of the mission after rendezvous will be based on the docking sensor. Its anticipated region of operation will be from 1 km to actual contact. Approach to the station from 1 km will proceed using range, bearing angles and rate information. Relative attitude information becomes necessary at least by 33 m and is required from that point on into docking. Today's estimates of performance requirements are indicating that the more accurate measurement required is the range rate measurement. This quantity should be measured to the order of 3 mm/second.

RENDEZVOUS & DOCKING CAPABILITIES NEEDED	TRACKING AND COMMUNICATIONS DIVISION	
	WILLIAM X. CULPEPPER	January 12, 1990

- RENDEZVOUS TO THE ORDER OF 1 km VIA GPS
- DOCKING SENSOR OPERATION FROM 2 km TO CONTACT
  - RANGE, BEARING AND RATES ONLY TO 33 m
  - RANGE RATE ACCURACY OF 3 mm/sec 1 sigma
  - RANGE, BEARING, ATTITUDE AND RATES FROM 33 m TO DOCK

Text for Rendezvous & Docking, Technology Challenges:

The vast majority of docking sensor designs considered over the years have been based on range and angle measurements from a form of ladar/radar system to a known target array. The development of high resolution TV and vision systems, along with improvements in the laser systems with high spatial resolution, has broadened the design alternatives. Indeed, the concept of a fused docking system consisting of a vision sensor and a more orthodox tracking system has tremendous potential. This potential is being exploited in today's efforts.

The real technology challenges lie in maturing the vision and tracking systems, including all the increased processing requirements inherent, and integrating these capabilities into a mature system. More than one generation of docking sensor hardware should be expected to be required before convenient operational systems can be expected.

For the SS, the availability of hardware to do the approach and docking task is not enough. Challenges of equal importance lie in developing the protocols to handle the unmanned and the manned approaches. This protocol development must be verified in space in the proper environment.

RENDEZVOUS & DOCKING TECHNOLOGY CHALLENGES	TRACKING AND COMMUNICATIONS DIVISION	
	WILLIAM X. CULPEPPER	January 12, 1990

- MATURATION OF HIGH RESOLUTION/IMAGING LADAR/RADAR
- MATURATION OF VISION SYSTEMS & HDTV
- INTEGRATION OF MATURE TECHNOLOGY INTO A DOCKING SENSOR
- DEVELOPMENT OF OPERATIONAL PROTOCOLS TO ALLOW SS TO:
  - MONITOR, WITH OVERRIDE CAPABILITY, MANNED VEHICLE DOCKING
  - CONTROL & MONITOR UNMANNED VEHICLE DOCKING

Text for Rendezvous & Docking, Current Developments:

McDonnell Douglas is under contract to NASA to develop a laser docking sensor (LDS). This sensor is to fly on the Orbital Maneuvering Vehicle (OMV) in the demonstration of satellite servicing under the Satellite Servicer System Flight Demonstration (SSSFD) program. This is the first scheduled flight demonstration of autonomous rendezvous and docking. The LDS is designed to operate from 185 km in range to a range of 0.3 meters. Range rate accuracy is 0.003 meters/second at close range.

Under the OAST Pathfinder project, a sensor trade study is being concluded which has looked at sensor types that are applicable to the autonomous rendezvous and docking (AR&D) scenario. This effort is moving into an inhouse docking demonstration using hardware being developed under SBIR contracts, a new inhouse precision 6 degree-of-freedom (DOF) lab facility at JSC, and onsite JSC shuttle simulation capabilities. This is a several year project.

Cooperative NASA/SDI SBIR efforts include development of a 3-D imaging ladar with vision processing by Autonomous Technologies. Loral Defense Systems is also building a vision processor for this system. In a separate effort Applied Research Corporation is under contract to build a Laser Orientation Transceiver which can establish relative orientation of a single retro-reflector using a single laser.

RENDEZVOUS & DOCKING CURRENT DEVELOPMENTS	TRACKING AND COMMUNICATIONS DIVISION	
	WILLIAM X. CULPEPPER	January 12, 1990

- FLIGHT EXPERIMENT WITH OMV AS PART OF SSSFD
- OAST PATHFINDER AR&D SENSOR TRADE STUDY
- SEVERAL SBIR PROJECTS
- SEVERAL INHOUSE DEVELOPMENT EFFORTS

Text for Robotic Operations, Capabilities Needed:

Many of the SS operations will be performed with robotic devices. While it would be less complex to use tele-operated techniques, the ultimate goal is to incorporate as much autonomy as possible. This autonomy is not possible without a vision system. Today's technology in vision systems does not allow as much autonomy as would be liked and extensions of today's limits must be achieved to make SS operational tasks more effective and efficient and safer.

Some of the tasks envisioned are satellite servicing such as module replacement or fuel and power transfer; retrieval of equipment or a disabled crewman that is drifting away from the station; guidance for manipulator end-effectors toward their targets and/or grasping points; establishing target orientation for grappling; routine or contingency inspections of remote parts of the station for preventative maintenance or damage assessment; automation of certain phases of the station structure assembly; mating of utility lines; and an "astronaut helper" during EVA that could stabilize equipment, direct a light source, supply tools, or provide an extra hand.

ROBOTIC OPERATIONS CAPABILITIES NEEDED	TRACKING AND COMMUNICATIONS DIVISION	
	WILLIAM X. CULPEPPER	January 12, 1990

- MACHINE VISION SYSTEMS FOR AUTONOMOUS ROBOTIC OPERATIONS
  - SATELLITE SERVICING
  - CREW AND EQUIPMENT RETRIEVAL
  - MANIPULATOR GUIDANCE AND GRAPPLING
  - AUTOMATIC DOCKING/BERTHING
  - REMOTE INSPECTIONS
  - EQUIPMENT/STRUCTURE ASSEMBLY
  - ASTRONAUT HELPER

Text for Robotic Operations, Technology Challenges:

The greatest challenge of machine vision today is to provide a system that is capable of recognizing objects independent of orientation, range, lighting conditions, background clutter, and partial occlusion. Many organizations around the country are diligently seeking the solutions to the problems in developing recognition systems; however, the goal is still in the far distant future. The current systems are very limited to specific target shapes under restricted, controlled conditions.

In addition to providing recognition, a vision system should also determine relative position and orientation of the object. Ideally this needs to be accomplished without any special marking or target enhancement features.

Machine vision technology needs to improve in areas such as increased data rate, both sensor hardware and processing software; scanning techniques; resolution; accuracy; sensor field of view; multiple target capability; reliability; and reductions in size, weight and power.

Because the conditions under which a machine vision system must perform are so varied, it is difficult to design a single sensor that can cover all the extremes. Therefore, it becomes necessary to fuse sensor types such as video, ladar, radar and IR, and utilize the capabilities of each to obtain the desired overall performance. The challenges are to determine the proper mix of sensor types for the task and then to integrate and develop them into an efficient system.

The software that processes the sensor data is the key to a successful vision system. Much needs to be done to improve processing time, to develop complex algorithms for target recognition and tracking, and to investigate the use of artificial intelligence and neural network techniques.

ROBOTIC OPERATIONS TECHNOLOGY CHALLENGES	TRACKING AND COMMUNICATIONS DIVISION	
	WILLIAM X. CULPEPPER	January 12, 1990

- TARGET IDENTIFICATION/RECOGNITION
- TARGET LOCATION AND ORIENTATION
- DATA PROCESSING IMPROVEMENTS
  - NEURAL NETWORKS
  - HONN
  - OPTICAL COMPUTING
- PERFORMANCE IMPROVEMENTS
  - RESOLUTION
  - ACCURACY
  - FIELD OF VIEW
  - SIZE, WEIGHT, & POWER
- COMBINING ADVANTAGES OF SENSOR TYPES (SENSOR FUSION)
- MATERIALS, DEVICES & ALGORITHMS FOR VISION SYSTEMS & OPTICAL COMPUTING

Text for Robotic Operations, Current Developments:

A ground demonstration model of a robotic space retrieval system (EVA Retriever) was completed and demonstrated in the spring of 1988. The Phase I version of this robot consisted of a Manned Maneuvering Unit (MMU), a body with robotic arms, and a dual-sensor vision system. The vision system consisted of a video camera with its target recognition and tracking processor and a 3-D imaging ladar. This system provided for simple automatic target discrimination using height-to-width aspect ratio and size along with robot guidance commands for rendezvous with the target for grappling and retrieval.

The Phase II version of the EVA Retriever is currently being integrated in preparation for testing on the Precision Air-Bearing Facility floor at NASA/JSC. The vision system video has been expanded to six cameras, and a panning turntable has been added to rotate the 3-D laser scanner to allow the robot to "look around" for obstacles while moving towards the target to be retrieved. Software has been developed to provide a world model for path planning and obstacle avoidance. Also, software utilizing the 3-D data has been developed to determine grasping points on the target and guidance for the robotic arms and hands.

The Phase III EVA Retriever will utilize a new 3-D laser system being developed by Autonomous Technologies which will combine both laser ranging and video capability with co-located optics. The laser system will have programmable multiple fields of view and will include intensity and doppler-based range rate data in addition to range. Two new video processing systems (APA-512 and the Aspex P.I.P.E.) are being evaluated for potential use on the EVA Retriever. Either one can accept video from the multiple cameras and perform extensive processing to provide shape, attitude, and position information of many targets simultaneously. This along with the 3-D laser data can perform simple object recognition tasks and provide tracking information for rendezvous guidance, and grappling. A contract with Loral Defense Systems will supply algorithms that take the current 3-D laser data and provide object recognition. This software will also be adapted to use the data from the new laser system.

Advance work is underway at JSC in the area of log polar transforms via a programmable remapper which converts optical flow in a moving image into a translation display. An implementation of this is being done at the chip level at the University of Pennsylvania. Spatial light modulator (SLM) work is also being done at JSC which has application in both machine vision and optical computing (e.g. matrix inversion). Work with the SLM is also concerned with developing filters that have robustness in estimating target orientation.

ROBOTIC OPERATIONS CURRENT DEVELOPMENTS	TRACKING AND COMMUNICATIONS DIVISION	
	WILLIAM X. CULPEPPER	January 12, 1990

- EVA RETRIEVER GROUND DEMONSTRATION
  - MANNED MANEUVERING UNIT (MMU)
  - ROBOTIC ARMS
  - SYSTEM COMPUTER
  - VISION SYSTEM -- VIDEO & 3-D IMAGING LADAR
- NEW LADAR SENSOR HARDWARE BEING DEVELOPED
- NEW VIDEO PROCESSORS INHOUSE
  - APA-512
  - ASPEX P.I.P.E.
- TARGET RECOGNITION SOFTWARE DEVELOPMENT
- JSC STATE OF THE ART EFFORTS IN:
  - LOG POLAR TRANSFORMS
  - SLM APPLICATIONS
  - PATTERN RECOGNITION ALGORITHMS

THIS PAGE INTENTIONALLY BLANK

EVA RETRIEVER

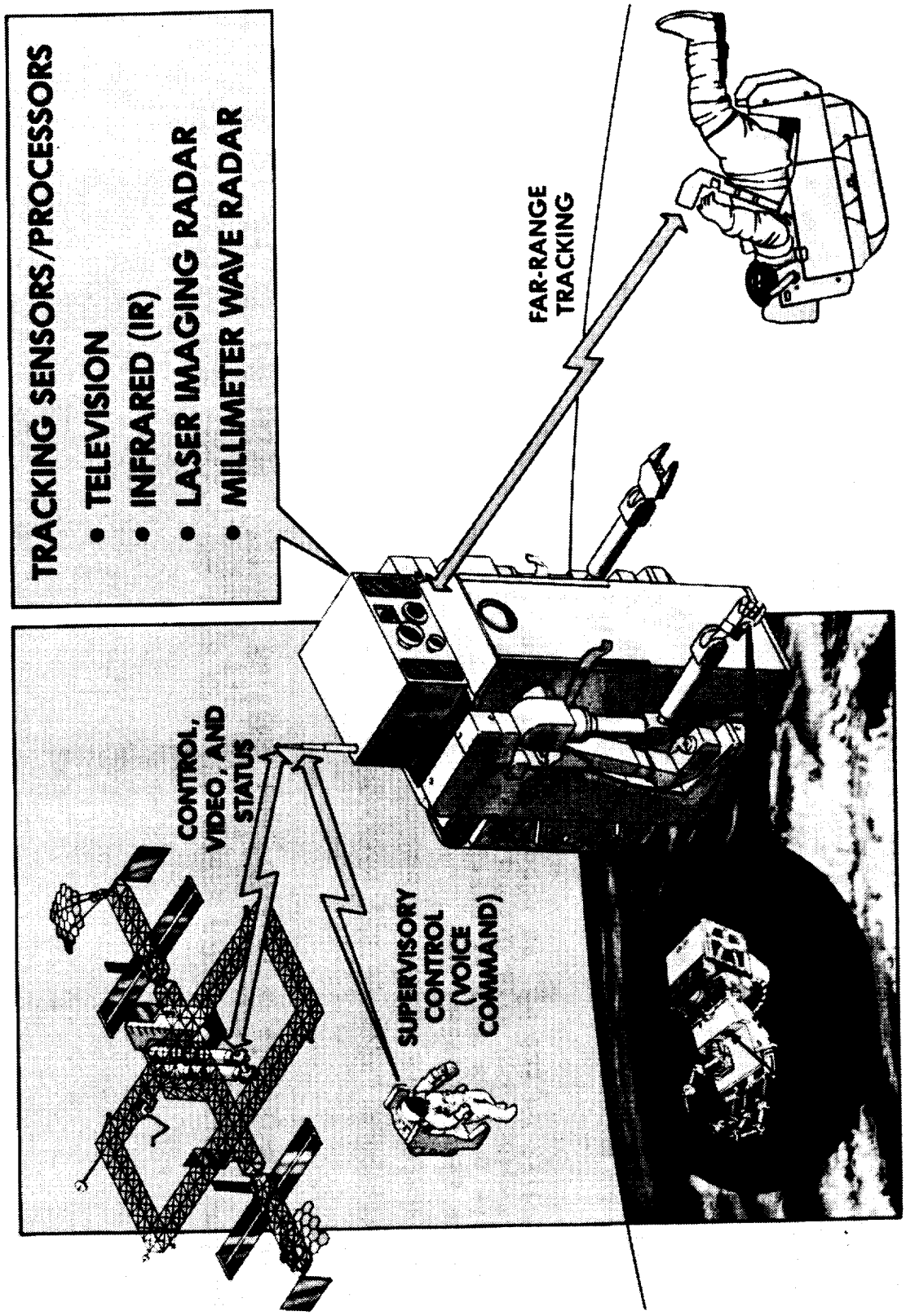

PAGE 390 INTENTIONALLY BLANK

Text for Orbital Debris, Capabilities Needed:

The current capabilities for orbital debris detection and tracking is limited to the Space Surveillance Network (SSN). This net uses ground-based radars to detect and track objects in both LEO and GEO. Optical sensors are used to track objects in GEO. The smallest size being tracked is 10 cm. Considering that a 1 cm aluminum sphere moving at 10 km/sec is equivalent to a 400 lb safe moving at 60 mph, a minimum tracking ability of 10 cm is not sufficient. Ref: REPORT ON ORBITAL DEBRIS, Interagency Group(Space), February, 1989.

It is mandatory that the knowledge and data base of the orbital debris be expanded to encompass the debris sizes to the level of threat to the SS. This can be done by expanding the capability of earth-based tracking to include targets to 1 cm, especially in the altitudes associated with SS operation. On orbit flight experiment data should also be gathered to document as much of the debris environment as possible.

Operationally on the SS, an onboard debris detection and warning system is needed. It can be used in conjunction with ground tracking, but it should not be dependent on the ground data input. It must be able to alert the crew to a probable collision condition with enough time to assess the condition and

1. take appropriate evasive maneuvers, if warranted, (first choice)

2. or institute "safe haven" procedures to protect the crew and survive the impact (second choice).

Even with a debris detection and warning sensor, shielding of SS is mandatory and improvements in materials ands methods are necessary. Better shielding will both relax requirements for the onboard sensor and slow down the overall erosive process for the life of SS.

ORBITAL DEBRIS CAPABILITIES NEEDED	TRACKING AND COMMUNICATIONS DIVISION	
	WILLIAM X. CULPEPPER	January 12, 1990

- EXPANDED DATA BASE FOR DEBRIS ENVIRONMENT
- ONBOARD DEBRIS DETECTION AND WARNING SYSTEM
  - COLLISION PREDICTION/AVOIDANCE (first choice)
  - "SAFE HAVEN" PROCEDURES (second choice)
- EARTH-BASED TRACKING TO 1 cm
- BETTER SHIELDING MATERIALS

Text for Orbital Debris, Technology Challenges:

Studies are underway to determine the proper philosophy for orbital detection. One general approach looks for debris objects with trajectories that imply impact within minutes. Reaction to that philosophy will be limited to the "safe haven" approach of "battening down the hatches and riding it through". It is not immediately obvious that this approach could give sufficient warning time to maneuver to safety.

A second method or philosophy is to look to try to establish those objects that will be present one or more revolutions later. This method will give more time to maneuver, but questions arise as to how well the collisions predictions can be made. Inaccurate predictions will result in wasted fuel and even possibly moving into a true collision course with the object you were moving to avoid.

A philosophy that is compatible with sensor system capability must be evolved.

Hardware component performance must be improved in all areas of transmitters and receiver systems. This is true for visible, near-IR and thermal IR wavelengths. This work should include performance of passive IR sensors also. They offer good and efficient operation without having to radiate energy via a transmitter.

The sum of all these challenges, and then some, is to design , develop and fly a debris detection and warning system to break the ice on system evolution. Sufficient generations should follow to insure operation to the level necessary for the SS long term success and safety.

ORBITAL DEBRIS TECHNOLOGY CHALLENGES	TRACKING AND COMMUNICATIONS DIVISION	
	WILLIAM X. CULPEPPER	January 12, 1990

- DEVELOPMENT OF SYSTEM PHILOSOPHY FOR DEBRIS DETECTION
- IMPROVE RECEIVER/DETECTOR PERFORMANCE
- IMPROVE PERFORMANCE OF OPTICAL SOURCES
- DEVELOP PASSIVE IR AND LADAR SYSTEMS FOR DEBRIS TRACKING
- DESIGN, DEVELOP AND FLY A DEBRIS DETECTION SYSTEM

Text for Orbital Debris, Current Developments:

An encouraging effort, funded by OAST, is underway at JSC in the Space Science Branch. Phase A of a system development has been concluded and responses to a Phase B RFP are expected now if they are not already in. This system is a flight experiment with the objectives of obtaining visible photometry (0.56 micron), thermal infrared radiometry at 5 and 10 microns, and relative angular velocity data on a large sample of orbital debris 1 mm or greater in size. These data will be used to determine the albedo and diameter of individual pieces, the mean albedo or albedos of different size regimes of debris, the flux distribution of debris with altitude above the Earth, noise or false signals caused by very small debris particles which could effect the detection of incoming debris, the thermal behavior of debris in low Earth orbit, the performance of detectors as collision warning devices, and the optimal spectral range to use for a collision warning system. The experiment can be reflown in order to monitor the debris population temporally or to test other detector combinations for use as collision warning sensors. Ref: DEBRIS COLLISION WARNING SENSORS, PHASE A STUDY REPORT, JSC 23784, JULY, 1989.

Additionally a feasibility study is underway in the Tracking Techniques Branch, JSC, to determine if a space-based ladar is applicable to the debris detection problem. This study fuses together a passive IR acquisition sensor, the ladar and onboard GPS to create a multiple sensor system for debris detection and tracking.

ORBITAL DEBRIS CURRENT DEVELOPMENTS	TRACKING AND COMMUNICATIONS DIVISION	
	WILLIAM X. CULPEPPER	January 12, 1990

- SHUTTLE FLIGHT EXPERIMENT AT JSC
- INHOUSE STUDY FOR SPACE BASE LADAR

Text for Multi-Sensor Management, Capabilities Needed:

The multiple tracking tasks for the SS can be expected to produce a suite of sensors to fulfill the needs. Coordination of both the data from and the actions of these sensors is mandatory. A central tracking processor is the method recommended. This processor will take inputs from ladars, radars, television, GPS, IR sensors, ground tracking updates, radio direction finding, etc and process them singularly or in groups. The results should be better overall tracking performance. In addition since all sensors will be controlled via this processor, resource management can be invoked to allocate, by priority or pre-arranged scenario, tracking capability to current tasks. This will result in improved operational efficiency, safety and better sensor fault tolerance.

With the burden of the detail operations under tracking processor control, crew workload is lessened with crew-monitoring and status checking only, required. Realtime crew override capability will be required.

Finally, in the case of emergency, e.g. "man overboard!", all tracking resources can be re-routed automatically to support the corrective action. Re-establishment of normal tracking functions after the excitement would also be automatic. Again human override to dictate sensor allocation will be required.

SENSOR MANAGEMENT CAPABILITIES NEEDED	TRACKING AND COMMUNICATIONS DIVISION	
	WILLIAM X. CULPEPPER	January 12, 1990

- COORDINATION OF DATA FROM MULTIPLE TRACKING SENSORS
- AUTOMATED MANAGEMENT OF TRACKING RESOURCES
- DECREASED CREW TIME INVOLVEMENT
- DECREASED GROUND SUPPORT FOR TRACKING
- INCREASED OPERATIONAL EFFICIENCY, SAFETY & FAULT TOLERANCE

Text for Multi-Sensor Management, Technology Challenges:

The final challenge is the development of the tracking processor. To accomplish this, smaller challenges must be met. One of the more important is the development of standard interfaces to allow all types of sensors to be tied into the processor (see the figure). These interfaces will accommodate ladar, television, RF tracking devices, GPS, etc. More than one type of interface maybe required. It is currently thought that the standard television/video interface could be adapted for other tracking sensors such as ladars and radars. The downstream processing would appropriately handled the data by type and content. Other interfaces, say for GPS and uplink ground track could be accessed through a standard digital interface.

An issue also under consideration is the advantages to having standard sensor mounts, with standard interfaces, located at strategic sites on the SS structure such that, if maintenance, repairs, prolonged EVA activities, etc. were scheduled, appropriate sensors could quickly be installed and calibrated into the system via local fiduciaries and common tracking targets. When the activities are complete, the sensor ensemble could be removed and relocated elsewhere as needed.

At the lower subsystem and hardware level, much development is needed in high data volume interfacing, routing and processing. Algorithm development is also necessary, especially in the area of how to "fuse and use" multiple sensors.

THIS PAGE INTENTIONALLY BLANK

SENSOR MANAGEMENT TECHNOLOGY CHALLENGES	TRACKING AND COMMUNICATIONS DIVISION	
	WILLIAM X. CULPEPPER	January 12, 1990

- DEVELOPMENT OF INTEGRATED TRACKING PROCESSOR
- DEVELOPMENT OF STANDARD INTERFACES
- HIGH DATA VOLUME PROCESSORS
  - PIPELINE
  - PARALLEL
  - OPTICAL IMAGE
  - VECTOR
- ALGORITHM DEVELOPMENT
  - SENSOR FUSION
  - IMAGE CORRELATION
  - MULTI-CAMERA PROCESSING
  - STEREO-MATCHING SURFACE MODELING

SENSOR MANAGEMENT TRACKING PROCESSOR	TRACKING AND COMMUNICATIONS DIVISION	
	WILLIAM CULPEPPER	January 12, 1990

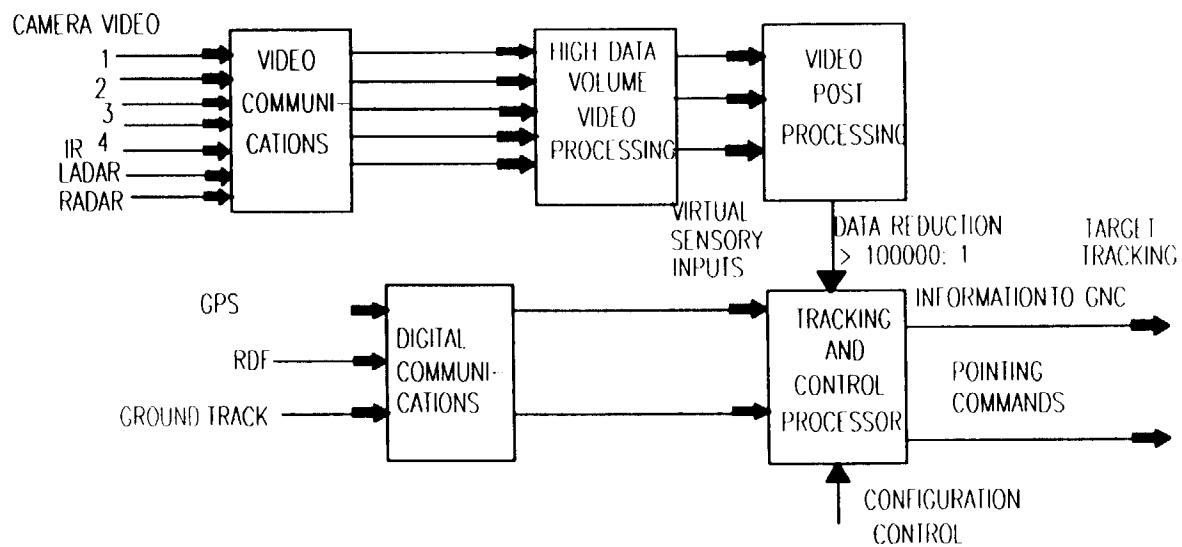

PRECEDING PAGE BLANK NOT FILMED

PAGE 402 INTENTIONALLY BLANK

Text for Multi-Sensor Management, Current Development:

As has been indicated in earlier parts of the presentation, activity does exist in many areas applicable to the tracking processor concept. This information is not be repeated here.

Unfortunately, there is no known activity on the concepts of the standard interfaces, multiple hardware/sensor mounts or the tracking processor.

SENSOR MANAGEMENT CURRENT DEVELOPMENTS	TRACKING AND COMMUNICATIONS DIVISION	
	WILLIAM X. CULPEPPER	January 12, 1990

- ACTIVITY EXISTS IN MANY AREAS, e.g.
  - PIPELINE, VECTOR AND PARALLEL PROCESSING
  - OPTICAL CORRELATION
  - ALGORITHM DEVELOPMENT
- NO ACTIVITY IS KNOWN IN THE AREAS OF
  - STANDARD MULTI-SENSOR INTERFACES
  - DEVELOPMENT OF MULTI-SENSOR TRACKING PROCESSOR

Text for Optical Communications, Capabilities Needed:

While it is preferable to have continuous communications from low-earth orbit (LEO) to ground, it is not always possible. SS communications needs will be characterized by high volume, multiplexed data serving both SS operational needs and onboard experiments. Current near term estimates for SS downlinks are 34 Tb/day, while TDRSS data capabilities are 27 Tb/day for the same time frame. Part time (burst) transmissions at a multi-gigabit rate with an optical system could possibly eliminate the deficit. The optical link could be directly to the ground when in view of the ground receiving station, or it could be from the SS through a geosynchronous relay and then to a single ground station located for optimal climate conditions. The latter approach will increase the SS time aperature for channel use.

Data rates associated with lunar and Mars exploration are already running from 10 to 100 Mbps for Mars and 650 Mbps for the moon activities. At least for the Mars case, an optical approach seems about the only possibility to achieve such performance. Of course, pointing will be a problem for the optical system. While the separation for the lunar case is not that great, the LEO to Mars case can approach 2.6 AU.

Optical communications can also offer a solution to proximity operational problems in the areas of frequency allocation, minimum co-channel interference and high data rates. A major consideration would be an optical multiple access system that provides a standard set of services. Omni-directional coverage at the optical wavelength is required, especially for the 1 km spherical zone about the SS.

OPTICAL COMMUNICATIONS CAPABILITIES NEEDED	TRACKING AND COMMUNICATIONS DIVISION	
	WILLIAM X. CULPEPPER	January 12, 1990

- LEO TO GROUND
- MARS DIRECT LINK
- LUNAR RELAY LINK
- PROXIMITY OPERATIONS

Text for Optical Communications, Technology Challenges:

It has been estimated that in the Mars communications case pointing accuracy required for the link is on the order of 0.1 microradians. This would be the requirement from a perfectly stable platform. The effects of SS dead banding, flexing, etc. are additional problems. There are indications that other space programs have pointing requirements even more severe and can solve them. None of these programs are part of a structure as large as SS, however. Whatever the level of severity on the SS, the technology needs to be advanced in the area of pointing and dynamic pointing/tracking.

There is work in progress on the equivalent of omnidirectional optical transmission. This work needs to be continued with the goal of having a reasonable and reliable system. Use will naturally follow the better device.

Technological development of optical sources and receivers must be advanced. It appears today to be marginally feasible to get a 10's of Megabit link to Mars using optimistic best estimates for today's components. Other than pointing, the limits are source power and spectrum, receiver sensitivity and noise levels.

Finally, all must be space qualified.

OPTICAL COMMUNICATIONS TECHNOLOGY CHALLENGES	TRACKING AND COMMUNICATIONS DIVISION	
	WILLIAM X. CULPEPPER	January 12, 1990

- POINTING (to 0.1 microradian)
- MAINTAINING TRACK
- OMNIDIRECTIONAL COVERAGE
- HIGHER POWER, MORE EFFICIENT SOURCES
- HIGHER EFFICIENCY RECEIVERS
- COMPONENT/ SYSTEM SPACE QUALIFICATION

Text for Optical Communications, Current Development:

Work is being done in areas of interest for optical communications. The universities and companies listed in the viewgraph are some known to be involved. Since new products are likely to come out of technological advancement in these areas, a lot of commercial work is currently maintained as company proprietary. Such work is also encouraging, however.

THIS PAGE INTENTIONALLY BLANK

OPTICAL COMMUNICATIONS CURRENT DEVELOPMENT	TRACKING AND COMMUNICATIONS DIVISION	
	WILLIAM X. CULPEPPER	January 12, 1990

- UNIVERSITY EFFORTS
  - RICE UNIVERSITY
  - NEW MEXICO STATE UNIVERSITY
- COMMERCIAL EFFORTS
  - TRW
  - MARTIN MARIETTA
  - LOCKHEED ENGINEERING & SCIENCES CO.
- PROPRIETARY EFFORTS

THIS PAGE INTENTIONALLY BLANK

PAGE 412 INTENTIONALLY BLANK

Millimeter Wave Communications Technology for Evolutionary Space Station

D. J. Connolly, J. A. Dayton, Jr., and R. F. Leonard
Space Electronics Division
NASA Lewis Research Center
Cleveland, OH 44135

Technology for Space Station Evolution Workshop
January 16-19, 1990
Dallas, Texas

PRECEDING PAGE BLANK NOT FILMED

THIS PAGE INTENTIONALLY BLANK

ADVANTAGES OF MM WAVE COMMUNICATIONS

- TECHNOLOGY RELATIVELY MATURE
- REDUCED WEIGHT AND POWER CONSUMPTION FOR PREDICTED DATA TRANSMISSION RATES
- REDUCED INTERFERENCE WITH OTHER TRANSMISSIONS
- SOA ACCEPTABLE FOR S/C STABILITY AND ANTENNA POINTING ACCURACY

PRECEDING PAGE BLANK NOT FILMED

PAGE 414 INTENTIONALLY BLANK

PROGRAMS UTILIZING MM WAVE COMMUNICATIONS

- ADVANCED TDRS
- ACTS
- MARINER II
- MILSTAR
- OLYMPUS
- CS

PRECEDING PAGE BLANK NOT FILMED

PAGE 416 INTENTIONALLY BLANK

The Advanced Communications Technology Satellite (ACTS), now under development and scheduled for launch in the 1992 time frame, is a major focus of NASA's communications program. Key technologies on ACTS include electronically hopped spot-beam antennas, onboard baseband processing and switching, and Ka-band transmission.

ACTS is designed to provide multiple voice channels to very small aperture terminals (VSATs) and to do so in a single satellite hop - neither of which is possible with current VSAT networks. It provides two switching modes, IF frequency switching for trunked high volume traffic and baseband processing for lower volume customer premises terminals. System access is based on time division multiple access (TDMA) and demand assignment by the network master control station.

ACTS uses Ka-band receivers and transmitters. A noise figure of better than 5 dB is achieved across the 1-GHz receive band using a GaAs FET receiver.

The 20 GHz TWTAs on ACTS produce 46 W of output with a DC input of 163 W for an efficiency of 28%. The TWTAs have a 1-GHz bandwidth and use solid-state drivers.

The baseband processor can accept channel rates of 13.75, 27.5, 55, or 110 Mbps. It allows both time and space switching on board the satellite by incorporating memories. The baseband processor allows satellite networks that are suited to applications with many customer premises terminals carrying light traffic.

The ACTS project uses 60 W 30-GHz TWTAs for terrestrial transmitters.

ACTS

- o LAUNCH IN 1992
- o ELECTRONICALLY HOPPING SPOT BEAM ANTENNA
- o ONBOARD SIGNAL PROCESSING
- o 20 GHz DOWNLINK/30 GHz UPLINK
- o TIME DIVISION MULTIPLE ACCESS

THIS PAGE INTENTIONALLY BLANK

ADVANCED COMMUNICATIONS SATELLITE SYSTEM PROOF-OF-CONCEPT MODELS

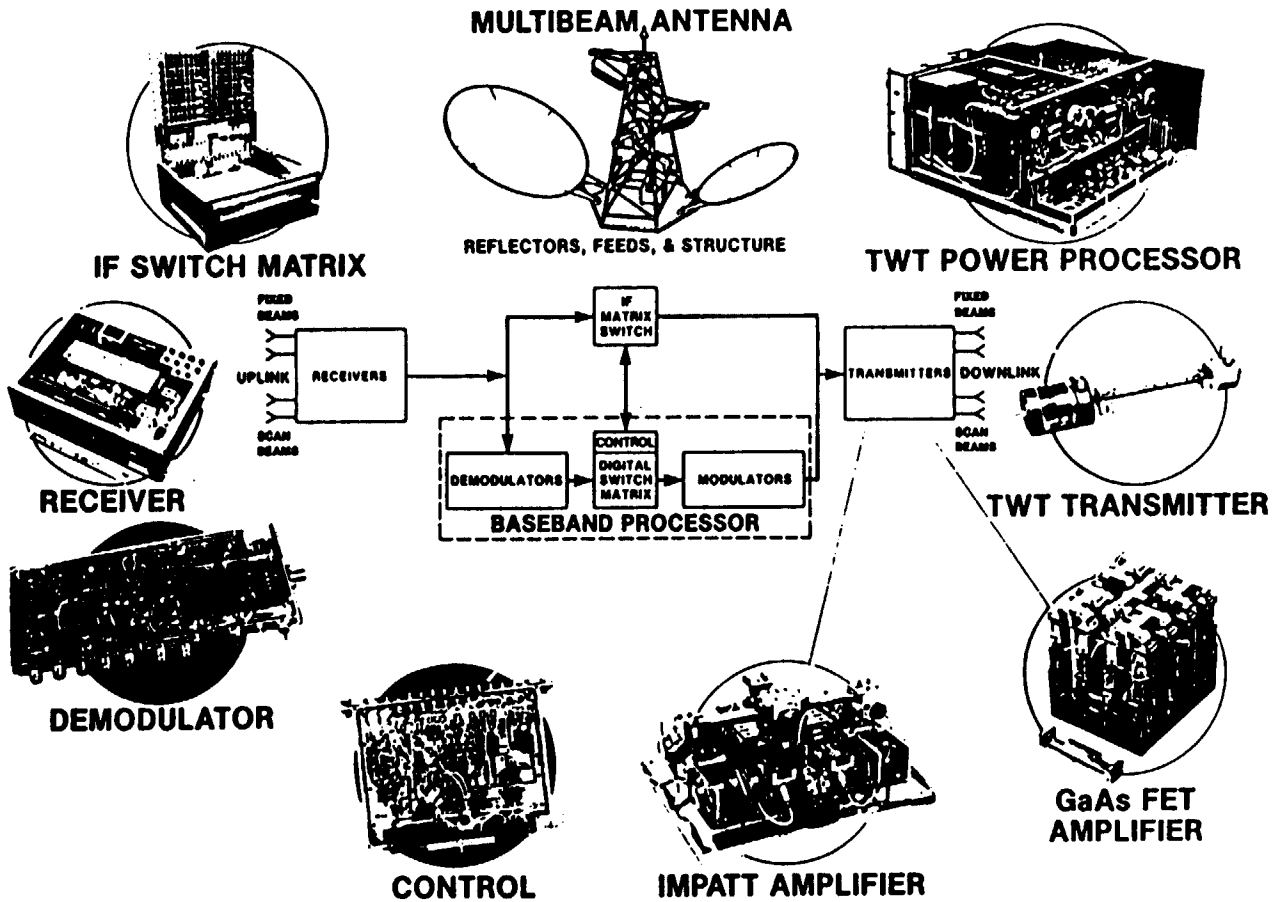

PAGE 420 INTENTIONALLY BLANK

PRECEDING PAGE BLANK NOT FILMED

High-Efficiency K-Band Traveling Wave Tube

In recent years, a number of techniques have been developed at NASA Lewis that substantially improve the electrical efficiency of traveling wave tubes (TWTs). These enhancement techniques, in conjunction with a novel fabrication process developed by Hughes Aircraft Company, are simultaneously being incorporated into a unique, high-efficiency, 20-GHz TWT amplifier with application in future space communications systems.

Two TWTs are being fabricated as part of a multi-year research and development contract with Hughes. Each tube utilizes a helix-type slow wave circuit with a dynamic velocity-tapered helix. The electron beam is transmitted down the axis of the helix to a multistage depressed collector (MDC), fabricated from high-purity, isotropic graphite material with low secondary emission properties. Additionally, the surfaces of the electrodes were ion-textured to further reduce electron reflections and re-emmisions.

The helix is supported by 0.005 inch thick diamond segments that remove heat from the helix by direct, high-pressure contact between the helix and an outer sleeve. A new fabrication technique is used to hold the helix and diamond rod assembly together using a precise compression fit. The assembly technique is readily adaptable to higher frequency tubes that possess smaller internal structures. It was this new fabrication technique that allowed diamonds to be used in such an application, where previous attempts at using diamonds had failed.

The objectives of the program include an overall electrical efficiency of at least 60% with 75 watts of continuous wave radiofrequency output power at 20-GHz. The first TWT fabricated acheived an unprecedented 54% efficiency figure with 100 watts of RF output power, representing nearly a 10 point efficiency improvement over similar devices currently being developed for space missions. A second TWT is now being constructed that has been further enhanced through additional computer simulation. This analysis indicates that the 60% efficiency goal is likely realizable. The transfer of these new capabilities and technologies to NASA missions and industry is underway, offering significant performance improvements and substantial cost benefits.

20-GHz, High-Efficiency Traveling Wave Tube

PERFORMANCE GOALS:

To develop a state-of-the-art TWT incorporating the latest technology features to maximize the dc-to-rf efficiency.

- 17.7-20.2 GHz frequency range
- 75 watts continuous wave RF output power
- 60 % overall electrical efficiency
- 40 dB saturated RF power gain
- 30 dB maximum noise figure
- 90% collector efficiency
- space qualifiable

THIS PAGE INTENTIONALLY BLANK

953H Design Features

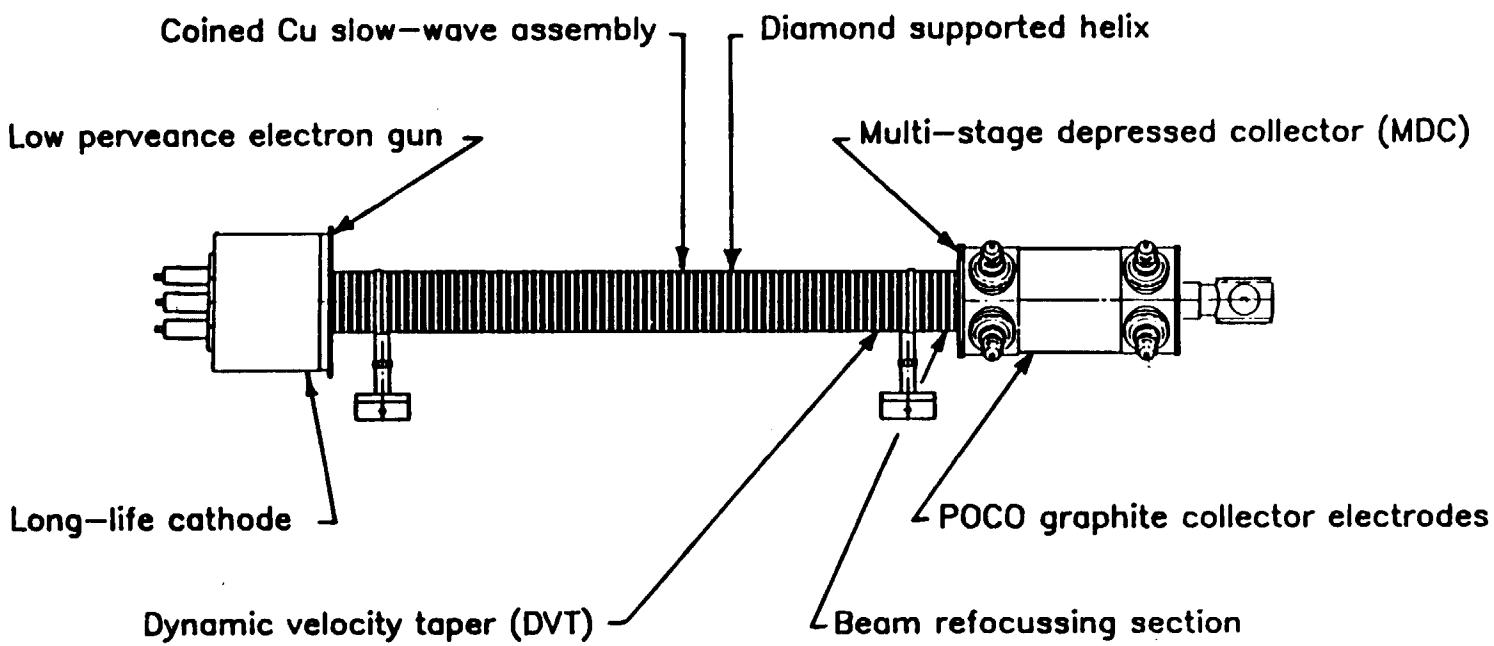

PRECEDING PAGE BLANK NOT FILMED

PAGE 424 INTENTIONALLY BLANK

THIS PAGE INTENTIONALLY BLANK

PRECEDING PAGE BLANK NOT FILMED

PAGE 426 INTENTIONALLY BLANK

THIS PAGE INTENTIONALLY BLANK

COUPLED CAVITY TWT DISTORTION REDUCTION

- MATCHING AT COUPLERS AND TERMINATION
- IMPROVED TOLERANCES
- BWO SUPPRESSION
- CATHODE MAGNETIC FLUX INTERCEPTION
- MAGNETIC FOCUSING (PPM OR SOLENOIDAL)

PAGE 428 INTENTIONALLY BLANK

PRECEDING PAGE BLANK NOT FILMED

LOW DISTORTION HIGH POWER 29 GHZ TWT

High data rate ground terminals for future space communications require high power traveling wave tubes (TWT's) operating in the neighborhood of 30 GHz. At this frequency, high power can best be achieved by using a coupled cavity TWT, but these devices inherently introduce greater signal distortion and are more costly than the more common helical TWT's used at lower power and lower frequency.

The primary purpose of this research is to experimentally study methods of reducing signal distortion and cost in coupled-cavity TWT's with power and frequency characteristics compatible with 30 GHz ground station transmitters. This experimental program was conducted on contract with Hughes Electron Dynamics Division in parallel with a LeRC in-house computational effort.

Three 29 GHz, 400 watt coupled-cavity traveling-wave tubes (TWT's) with low cost ferruleless cavities have been built and tested under the research and development contract with Hughes. Measurements made by Hughes and computations made at LeRC both indicate that the most important factor in reducing the small signal gain ripple, which causes signal distortion, is the design of a good output match. Excellent low-reflection matches were obtained in these TWT's. This led the way to outstanding low distortion characteristics. The small signal gain ripple for the TWT's was less than 0.5 dB, which is a significant improvement over any known high-power TWT at this frequency. The small signal gain ripple over the 1 GHz bandwidth for the second TWT is shown in the figure compared to the ripple for a typical high-power coupled cavity TWT (Hughes model 914H) at a similar frequency. The improvement in reducing small signal gain ripple is from 6 dB to 0.4 dB. This technology is available for high power TWT's for space as well as terrestrial applications.

HIGH POWER TWT DISTORTION REDUCTION

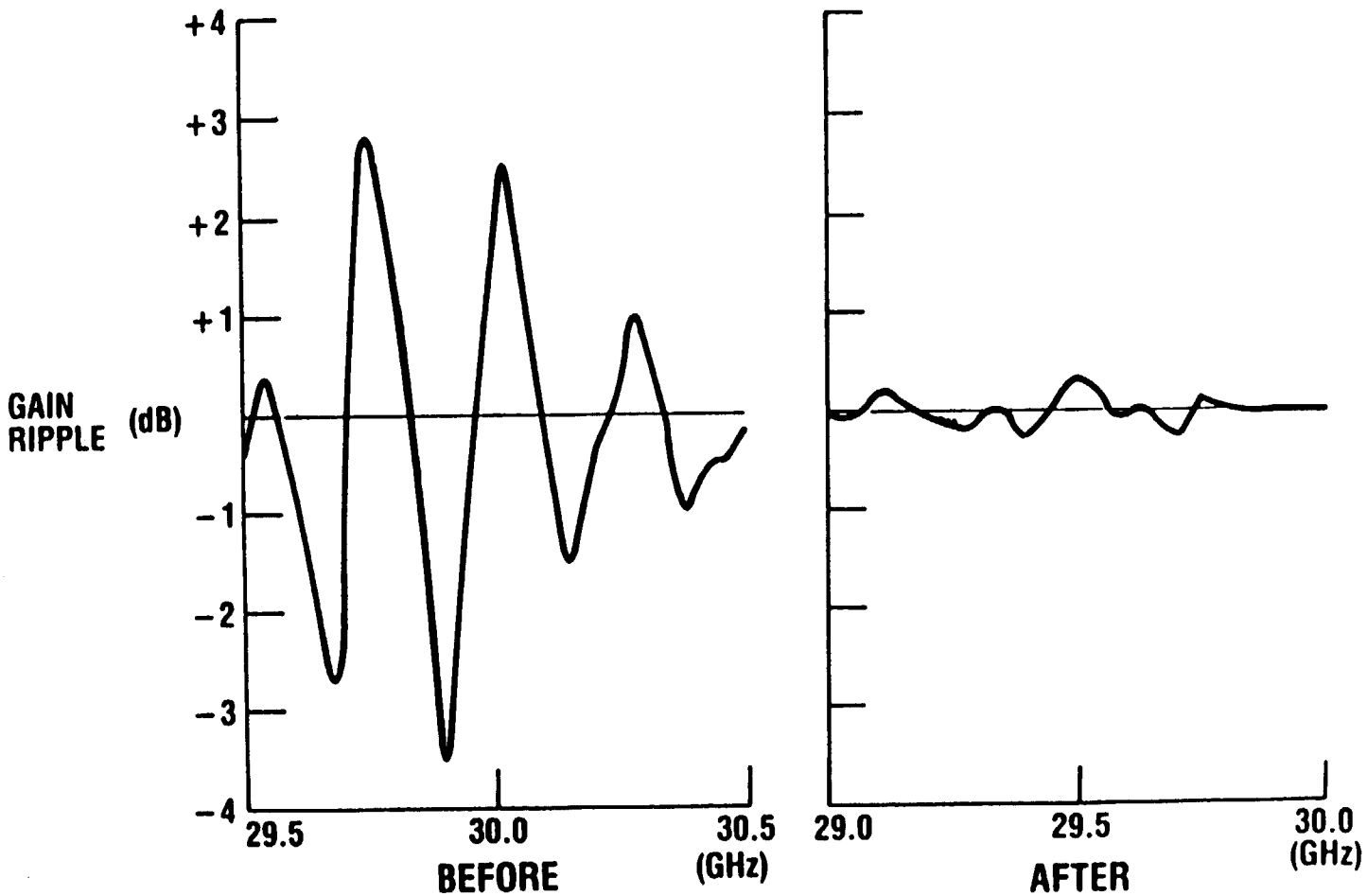

914 H SMALL SIGNAL GAIN RIPPLE

951 H SMALL SIGNAL GAIN RIPPLE

CD-88-34682

PHASE-ADJUSTED TAPER FOR INCREASING EFFICIENCY IN COUPLED-CAVITY TWT'S

This 29 GHz TWT is the first to employ a phase-adjusted taper (PAT) which was recently developed by J. Wilson of LeRC to increase efficiency in coupled-cavity TWT's.

In the PAT, the phase between the RF wave and the electron bunch is adjusted for optimal energy extraction from the beam. The NASA Lewis coupled-cavity TWT computer code has been programmed to automatically generate the cavity lengths needed to maintain the desired phase relationships.

Experimental output power is shown in the figure for the PAT TWT and the baseline TWT. The PAT increases peak output power from 410W to 1000W. The RF efficiency is increased by a factor of 2.5 from 9.0% to 23%, a striking improvement for such a highly evolved device. RF efficiency is defined as the ratio of RF power output to electron beam power. The RF efficiency of 23% is the highest ever reported in the literature for a TWT at this frequency. With the addition of a multistage depressed collector, the overall tube efficiency would be well over 50%.

AEROSPACE TECHNOLOGY DIRECTORATE

SPACE ELECTRONICS DIVISION

NASA
Lewis Research Center

COUPLED CAVITY TWT WITH PHASE ADJUSTED TAPER

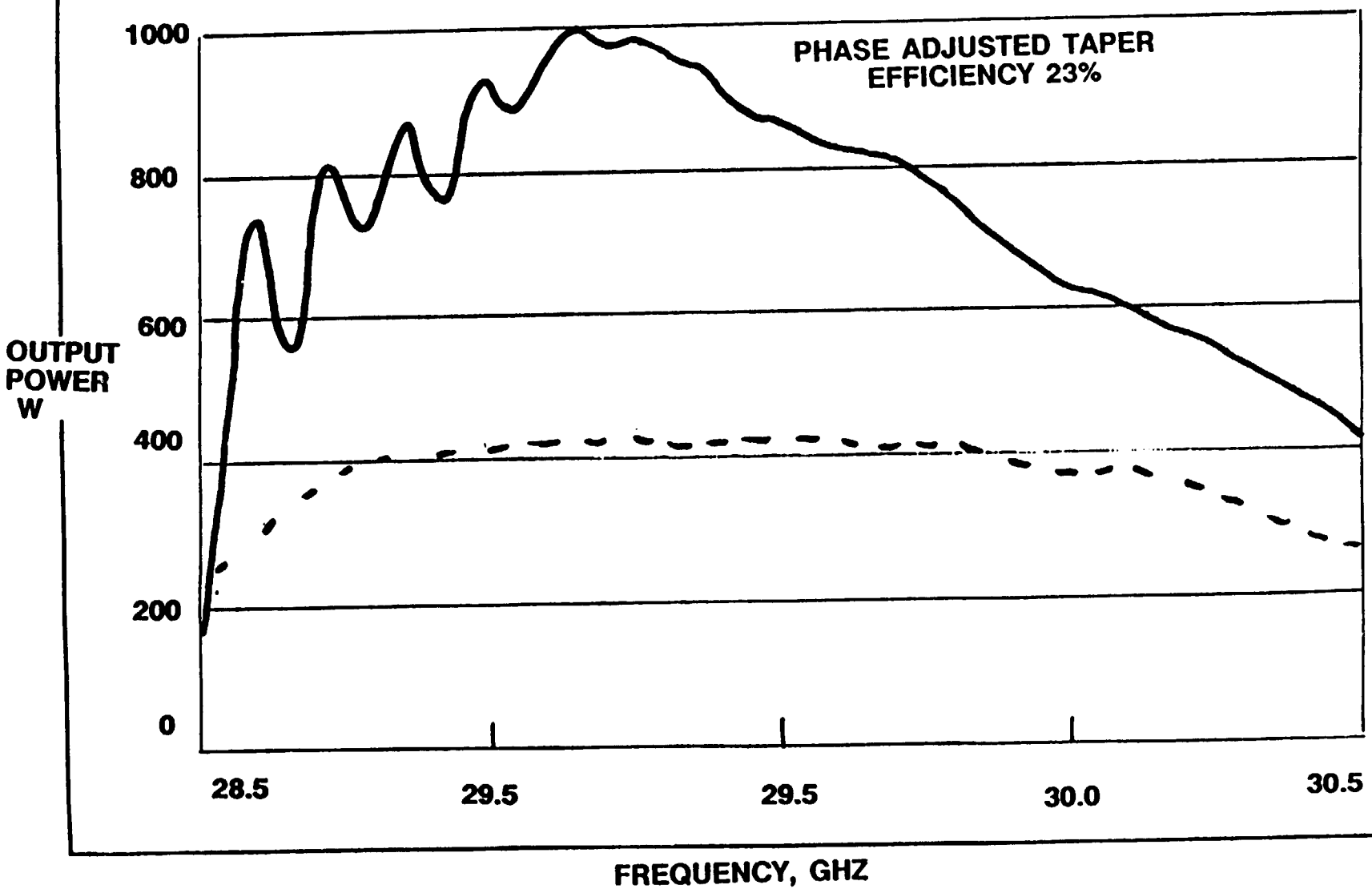

HIGH EFFICIENCY TWTA'S FOR DEEP SPACE COMMUNICATIONS

THE TWT EFFICIENCY ENHANCEMENT PROGRAM AT LEWIS RESEARCH CENTER IS PROVIDING THE TECHNOLOGY NEEDED FOR HIGH EFFICIENCY MILLIMETER WAVE COMMUNICATIONS AMPLIFIERS FOR FUTURE NASA MISSIONS IN DEEP SPACE.

THE TWT SHOWN IN THE FIGURE IS A 20 WATT X-BAND TWT WITH A HIGH EFFICIENCY SLOW WAVE CIRCUIT DESIGNED BY LeRC PERSONNEL AND FABRICATED BY WATKINS-JOHNSON. THE CIRCUIT DEVELOPED FOR THIS TWT WAS ADOPTED FOR USE ON THE TWT THAT WILL BE FLOWN ON THE MARS OBSERVER, EXCEEDING THE MISSION REQUIREMENTS FOR EFFICIENCY.

EFFICIENCY ENHANCEMENT TECHNOLOGIES APPLY THROUGHOUT THE TWT AND INCLUDE IMPROVING THE INTERACTION BETWEEN THE ELECTRON BEAM AND THE ELECTROMAGNETIC WAVE, RECOVERING THE ENERGY IN THE SPENT ELECTRON BEAM, IMPROVING ELECTRON BEAM TRANSMISSION, REDUCING CATHODE HEATER POWER, AND REDUCING SECONDARY ELECTRON EMISSION FROM COLLECTOR ELECTRODES. THE WORK INVOLVES BOTH COMPUTER-AIDED DESIGN AND ANALYSIS AS WELL AS EXPERIMENTAL VERIFICATION.

THE NEXT OBJECTIVE OF THIS PROGRAM IS TO PRODUCE A VERY EFFICIENT 32-GHz TWTA WHICH PRODUCES 7 WATTS OF RF OUTPUT POWER WITH DC POWER INPUT TO THE POWER SUPPLY OF ONLY 20 WATTS. ACHIEVING THIS GOAL WOULD MORE THAN DOUBLE THE EFFICIENCY OF 30 GHz TWTA'S NOW AVAILABLE AT THIS POWER LEVEL. THE PROGRAM OBJECTIVES WERE CHOSEN AFTER CONSULTATION WITH JPL WITH APPLICATION TO THE CASSINI MISSION.

THE TWT IS TO INCORPORATE AN ADVANCED HELIX INTERACTION SECTION (DYNAMIC VELOCITY TAPER) DESIGN AND A HIGH-EFFICIENCY MULTISTAGE DEPRESSED COLLECTOR, AS WELL AS A SPENT BEAM REFOCUSING SECTION. LeRC PERSONNEL ARE AGAIN RESPONSIBLE FOR THE DESIGN OF THE COLLECTOR AND SLOW WAVE CIRCUIT TO BE FABRICATED BY THE CONTRACTOR VARIAN ASSOCIATES.

HIGH EFFICIENCY TWT TECHNOLOGY FOR DEEP SPACE

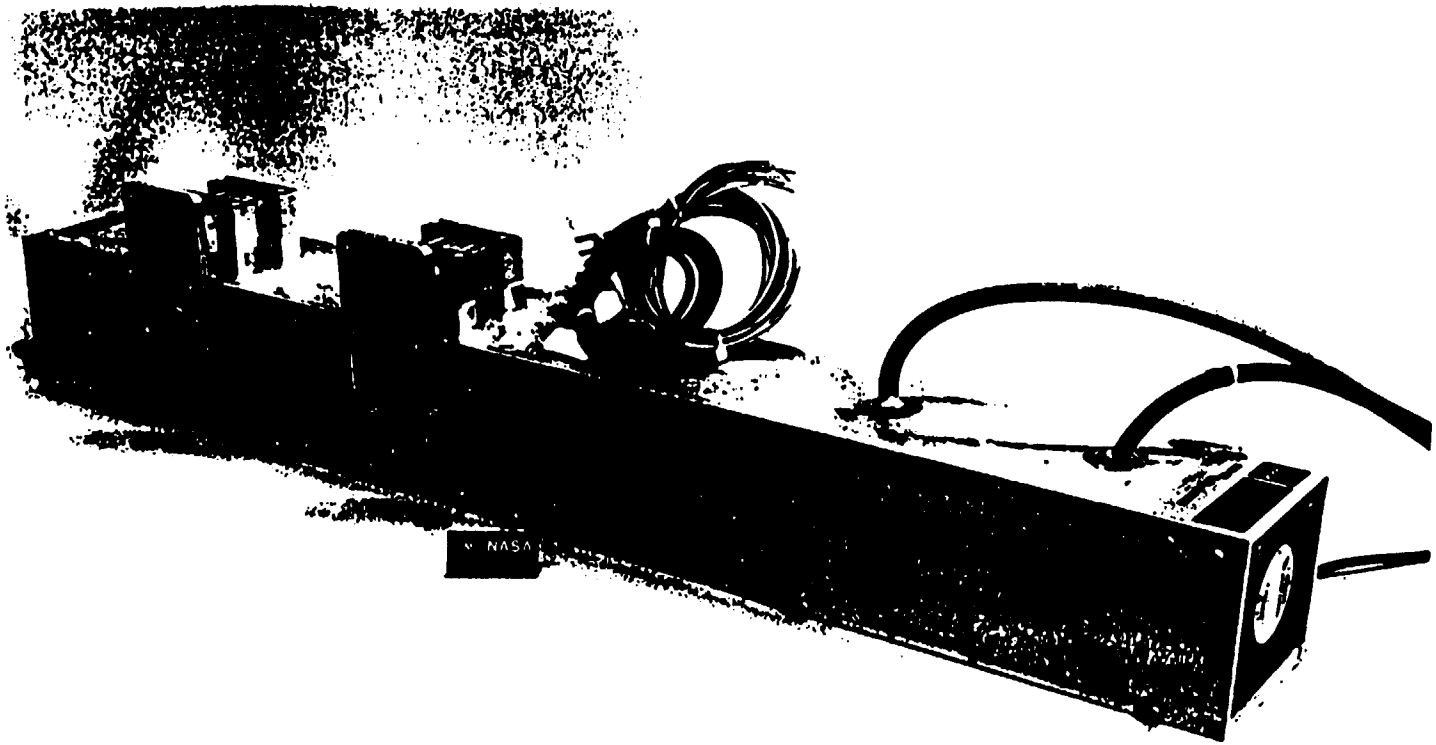

ORIGINAL PAGE
BLACK AND WHITE PHOTOGRAPH

THIS PAGE INTENTIONALLY BLANK

HIGH EFFICIENCY TWT TECHNOLOGY FOR DEEP SPACE

ACCOMPLISHMENTS

- INCREASED TWT EFFICIENCIES
  (IEEE RAPPAPORT PRIZE 1986)
- LOWEST REPORTED SECONDARY ELECTRON EMISSION
  (LEWIS DISTINGUISHED PAPER 1986)
- APPLICATION TO KU-BAND BROADCAST SATELLITES
  (EMMY 1987)
- APPLICATION TO UHF TELEVISION TRANSMISSION
  (R&D AWARD 1989)
- APPLICATION TO MARS OBSERVER

IMPACT

- ENABLES EXPLOITATION OF 32 GHz BAND FOR DEEP SPACE
- TECHNOLOGY AVAILABLE TO EVOLUTIONARY SPACE STATION

PAGE 436 INTENTIONALLY BLANK

PRECEDING PAGE BLANK NOT FILMED

THIS PAGE INTENTIONALLY BLANK

32 GHz TWTA FOR MARINER II

- COLLABORATIVE EFFORT WITH JPL & ASI
- LERC DESIGNED COLLECTOR & SLOW WAVE CIRCUIT
- 7 WATTS RF OUT/20 WATTS DC IN
  (DOUBLES EXISTING SOA EFFICIENCY)
- 12 YEAR LIFE
- TRIPLES DATA TRANSMISSION CAPABILITY FOR CASSINI

PAGE 438 INTENTIONALLY BLANK

PRECEDING PAGE BLANK NOT FILMED

60 GHz TWT FOR INTERSATELLITE LINKS

A coupled cavity traveling wave tube (TWT) is being developed on contract with Hughes Electron Dynamics Division that has exhibited sufficient broad band capability to permit coverage of the entire 59 to 64 GHz intersatellite communications band with a single amplifier. The tube has been designed with a permanent magnet focusing system and a four stage depressed collector to achieve light weight and high efficiency, while the coupled cavity slow wave circuit has demonstrated operation at rf power output in excess of 75 watts over the entire frequency band.

A dual mode 75/30 watt version of this tube with a NASA designed collector is presently in fabrication. Predicted overall efficiency for this TWT is 42% at 75 watts and 40% at 30 watts.

This research was conducted to provide candidate technology for advanced TDRS and has attracted interest throughout the communications satellite industry as well as DoD. One company, using IR&D funds (TRW), has built and tested a vacuum insulated power processor designed to operate with this tube. These are indications that USAF Rome Air Development Center will space qualify a 30 watt TWT based on this technology.

THIS PAGE INTENTIONALLY BLANK

60 GHz TWT FOR INTERSATELLITE LINKS

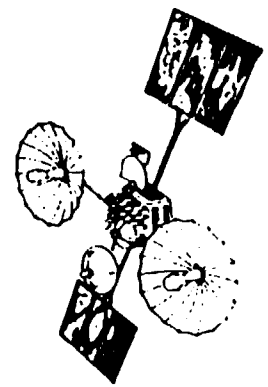

ACCOMPLISHMENT

- 10% BANDWIDTH AT 60 GHz
- 75W RATED OUTPUT POWER
- EFFICIENCY ABOVE 30%
- LONG LIFE, LIGHT WEIGHT

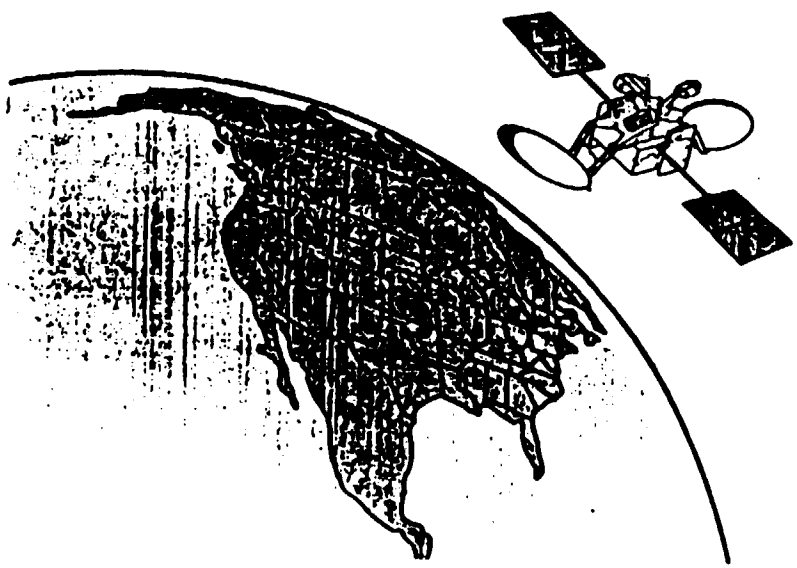

IMPACT

- ENABLES HIGH DATA RATE MM WAVE LINKS
- PERMITS USE OF SMALLER ANTENNAS
- ENABLES MULTICHANNEL LINKS
- SAVES S/C WEIGHT & POWER

CURRENT PROGRAM (HUGHES 961 HA)

- DUAL MODE 75/30 WATT
- LERC-DESIGNED MDC; POCO GRAPHITE; BASEPLATE COOLED
- PREDICTED EFFICIENCY 41.7/40.2%
- 10% BANDWIDTH (59 TO 64 GHz)
- EXPERIMENTAL RESULTS IN 1990
- OPTION FOR 2 ADDITIONAL TUBES

PAGE 442 INTENTIONALLY BLANK

PRECEDING PAGE BLANK NOT FILMED

THE PHASED ARRAY SCANNING BEAM CONCEPT ILLUSTRATED HERE UTILIZES AN ARRAY OF RADIATING ELEMENTS WHOSE PHASES MAY BE VARIED TO SCAN AN ANTENNA BEAM WHOSE SIZE IS DETERMINED BY THE MAIN REFLECTOR SIZE. THE SYSTEM HAS THE ADVANTAGE OF PROVIDING HIGH SCAN SPEEDS WITH NO MECHANICAL MOTION, AS WELL AS PERMITTING THE USE OF MULTIPLE POWER SOURCES, WHICH ALLOWS GRACEFUL DEGRADATION AS THE SYSTEM AGES. ITS IMPLEMENTATION IS FACILITATED BY THE USE OF MMIC CIRCUITRY, WHICH SATISFIES THE SIZE CONSTRAINTS IMPOSED AT MICROWAVE AND MILLIMETER WAVE FREQUENCIES.

MMIC PHASED ARRAY SCANNING BEAM CONCEPT

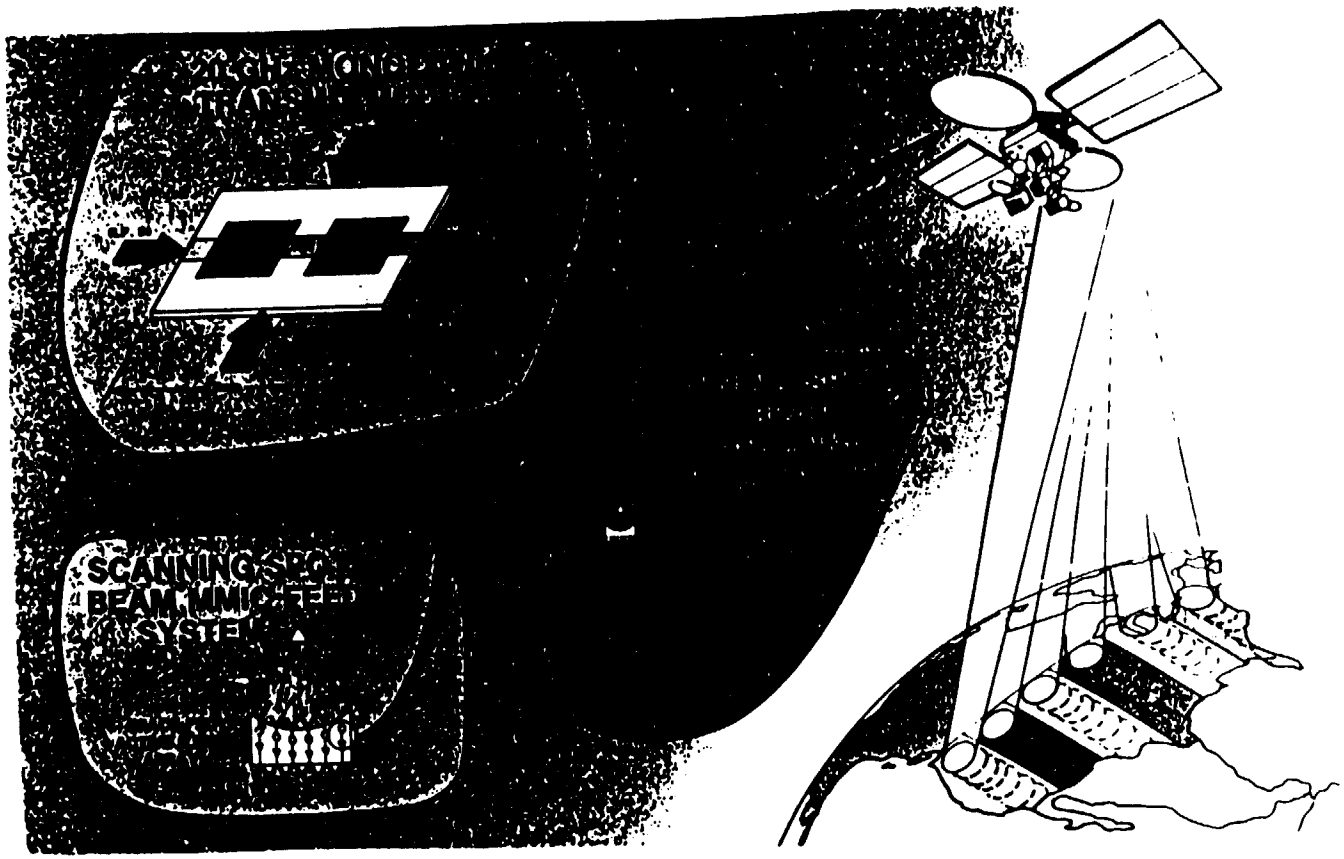

THE TWO MONOLITHIC AMPLIFIERS SHOWN HERE WERE DEVELOPED BETWEEN APPROXIMATELY 1981 AND 1985 BY TEXAS INSTRUMENTS RESEARCH LABS. BOTH UTILIZED CONVENTIONAL GaAs MESFET TECHNOLOGY. THE HIGH POWER MODULE PICTURED ABOVE WAS INTENDED TO PRODUCE THE HIGHEST POSSIBLE OUTPUT POWER. THE 3-STAGE CHIP ACHIEVED OVER 2 WATTS OF POWER AT 18 DB GAIN. IT HAD A FINAL STAGE GATE PERIPHERY OF 3.6 MM. THE VARIABLE POWER AMPLIFIER USED DUAL GATE FETS TO ACHIEVE GAIN CONTROL. IT HAD AN OUTPUT POWER OF APPROXIMATELY 250 mW AND A GAIN OF APPROXIMATELY 20 DB PRODUCED BY 4-STAGES OF AMPLIFICATION. ALTHOUGH BOTH CHIPS REPRESENT BENCHMARKS IN POWER, GAIN, AND COMPLEXITY, BOTH HAD EFFICIENCIES ON THE ORDER OF 15 TO 18%, THEREBY LIMITING THEIR USEFULNESS FOR SPACE APPLICATIONS.

20 GHZ MONOLITHIC POWER AMPLIFIERS

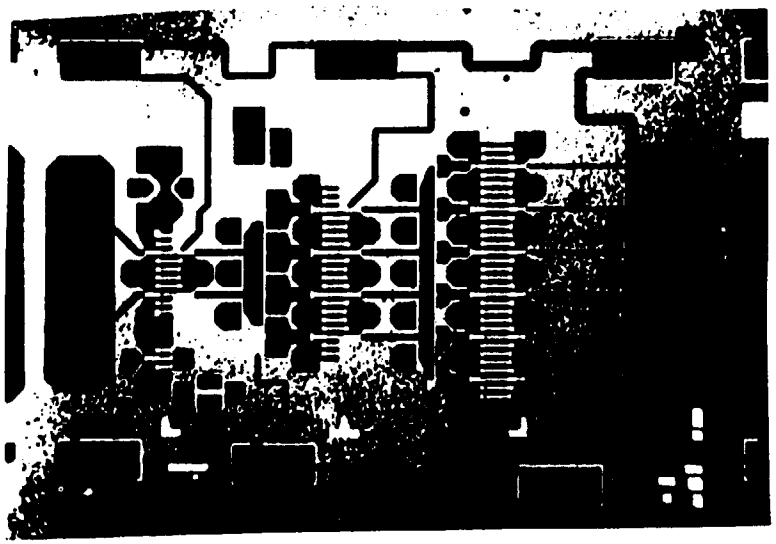

HIGH POWER AMPLIFIER

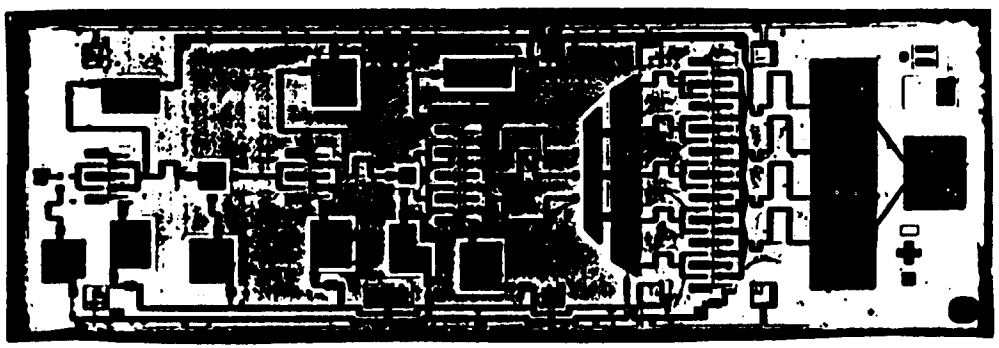

VARIABLE POWER AMPLIFIER

THE 20 GHZ TRANSMITTER MODULE PICTURED HERE WAS DEVELOPED BY ROCKWELL. IT INCORPORATES IN A SINGLE CHIP ALL THE ESSENTIAL ELEMENTS OF AN ARRAY MODULE. AS SHOWN, IT CONTAINS A FIVE BIT, DIGITALLY CONTROLLED PHASE SHIFTER, A BUFFER AMPLIFIER TO COMPENSATE FOR PHASE SHIFTER LOSSES, AND AN OUTPUT POWER STAGE. THE CHIP ACHIEVED APPROXIMATELY 120 mW OF OUTPUT POWER WITH 15 DB OF GAIN. THE PHASE SHIFTERS ARE SWITCHED LINE, TRUE TIME DELAY DEVICES. THE CHIP HAS A BANDWIDTH OF 2.5 GHZ. IT UTILIZES GaAs MESFET TECHNOLOGY.

20 GHZ MONOLITHIC TRANSMITTER MODULE

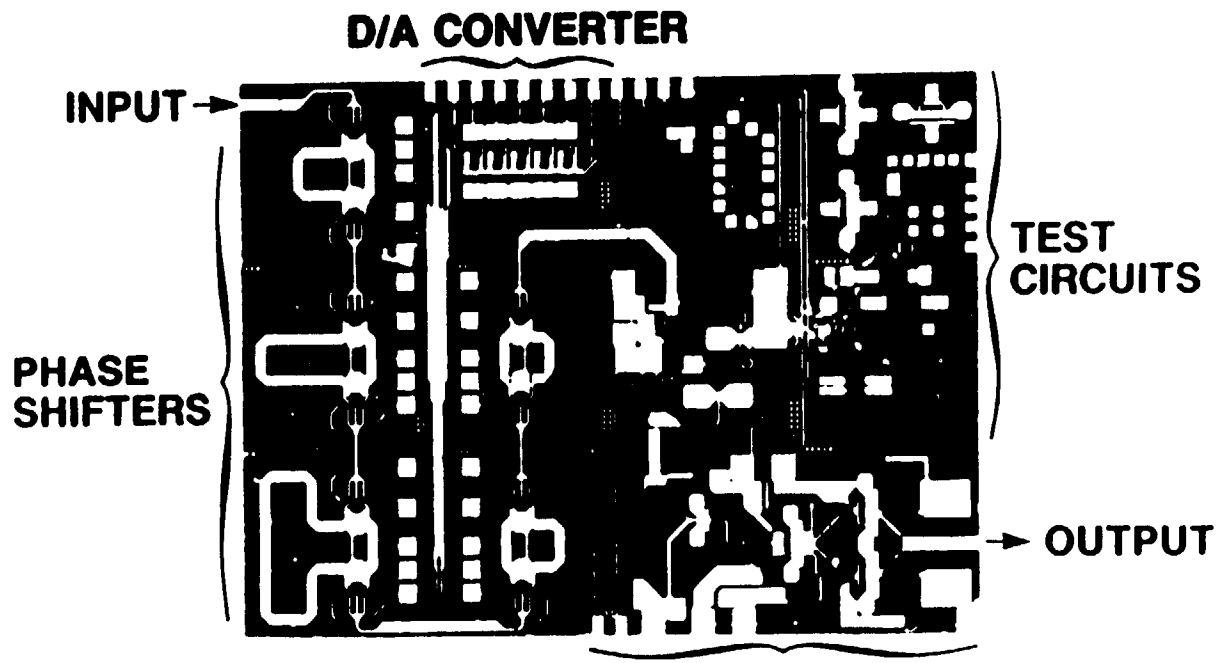

CHIP SIZE
4.8 mm x 6.4 mm x 0.127 mm

THE DEVELOPMENT OF A FULLY MONOLITHIC RECEIVER MODULE SUCH AS MIGHT BE UTILIZED IN A PHASED ARRAY ANTENNA WAS UNDERTAKEN UNDER PARALLEL CONTRACTS WITH HONEYWELL AND HUGHES. AS INDICATED IN THE SCHEMATIC SHOWN HERE, THE MODULE WAS TO INCLUDE A LOW NOISE RF AMPLIFIER, PHASE SHIFTERS, GAIN CONTROL, DOWNCONVERSION TO IF, AND IF AMPLIFICATION. BOTH CONTRACTORS COMPLETED A SET OF FOUR SUBMODULES, WHICH PERFORMED ALL OF THE REQUIRED FUNCTIONS. THE FINAL INTEGRATION WAS NOT COMPLETED, HOWEVER, DUE TO FUNDS LIMITATIONS. PHASE SHIFTER MODULES FROM THE PROGRAM ARE PRESENTLY BEING USED IN BREADBOARD PHASED ARRAY EXPERIMENTS AT JPL. BOTH CONTRACTORS ACHIEVED APPROXIMATELY 6.5 DB NOISE FIGURES, WHILE HONEYWELL'S UNIT HAD 6 DB, HUGHES' 14 DB OF RF TO IF GAIN. ALSO SHOWN HERE IS A HONEYWELL PHASE SHIFTER MODULE IN A TEST FIXTURE.

30 GHZ MONOLITHIC LOW NOISE RECEIVER

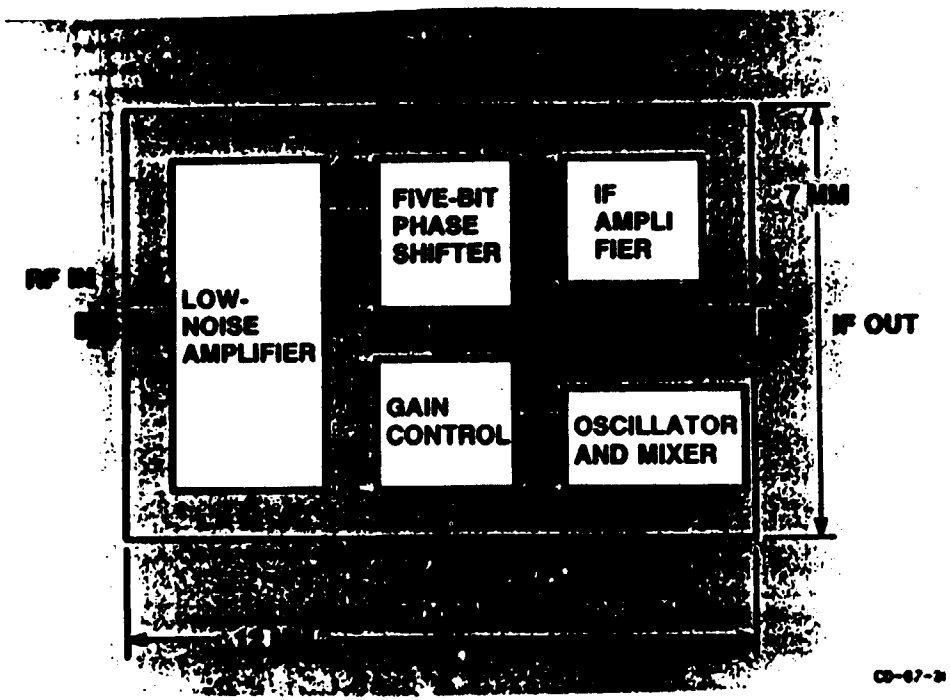

RECEIVER SCHEMATIC

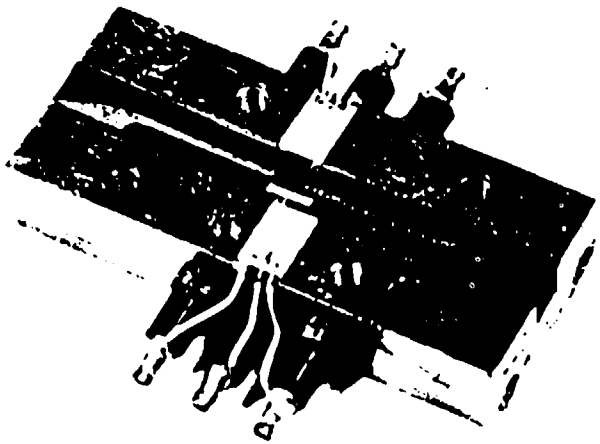

PHASE SHIFTER SUBMODULE IN TEST FIXTURE

JD4

THE TWO MONOLITHIC AMPLIFIERS SHOWN HERE WERE DEVELOPED BY TEXAS INSTRUMENTS FOR OPERATION AT 32 GHZ. THEY UTILIZE A NEW MATERIAL AND DEVICE STRUCTURE. BASED ON AN ACTIVE LAYER OF InGaAs DEPOSITED ON A GaAs SUBSTRATE. THIS "PSEUDO-MORPHIC" DEVICE PROVIDES PREVIOUSLY IMPOSSIBLE EFFICIENCY AND FREQUENCY RESPONSE. THE ONE-STAGE AMPLIFIER SHOWN HERE ACHIEVED 460 mW OF OUTPUT POWER, 4.6 DB GAIN, AND 24% EFFICIENCY. THE 3-STAGE CHIP EXHIBITED A GAIN OF 23 DB, AN OUTPUT POWER OF 190 mW, AND AN EFFICIENCY OF 30%. BOTH CHIPS UTILIZED FETS WITH A GATE LENGTH OF 0.25 MICRONS. THE GATE PERIPHERY OF THE SINGLE STAGE DEVICE IS 0.25 mm.

32 GHZ MONOLITHIC POWER AMPLIFIERS

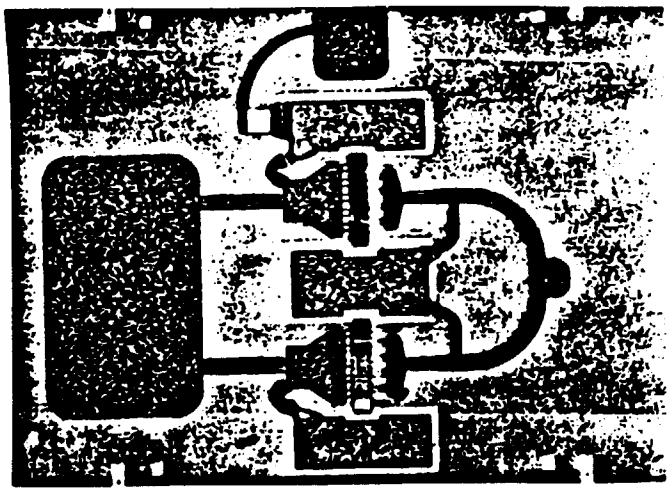

ONE-STAGE HIGH POWER, HIGH EFFICIENCY AMPLIFIER

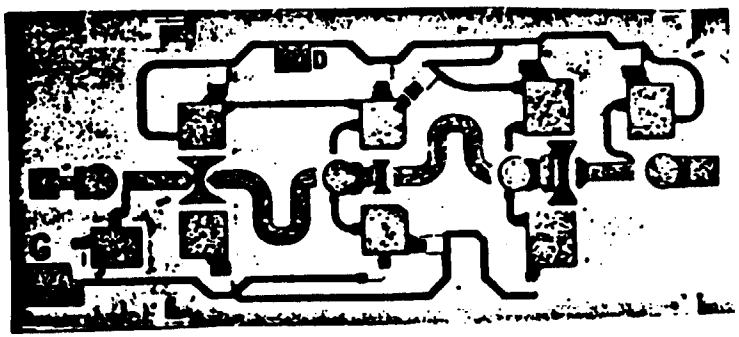

3-STAGE HIGH EFFICIENCY AMPLIFIER

THE V-BAND PSEUDOMORPHIC AMPLIFIER PICTURED HERE IS A INTENDED TO BE UTILIZED AS THE FINAL STAGE IN A 3-STAGE POWER AMPLIFIER BEING DEVELOPED UNDER NASA LEWIS' SPONSORSHIP AT HUGHES. THE DESIGN GOALS FOR THE 3-STAGE MODULE ARE 100 mW OF OUTPUT POWER, 15 DB OF GAIN, AND 30% EFFICIENCY. THE PROGRAM UTILIZES AN InGaAs/GaAs PSEUDOMORPHIC STRUCTURE. GATE LENGTHS FOR THE 60 GHZ FETS ARE BETWEEN 0.1 AND 0.15 MICRONS. ALSO UNDER DEVELOPMENT ARE THE ASSOCIATED PHASE SHIFTERS REQUIRED FOR PHASED ARRAY APPLICATIONS. THE PROGRAM IS SCHEDULED FOR COMPLETION IN MID CY91.

V-BAND PSEUDOMORPHIC HEMT MMIC AMPLIFIER

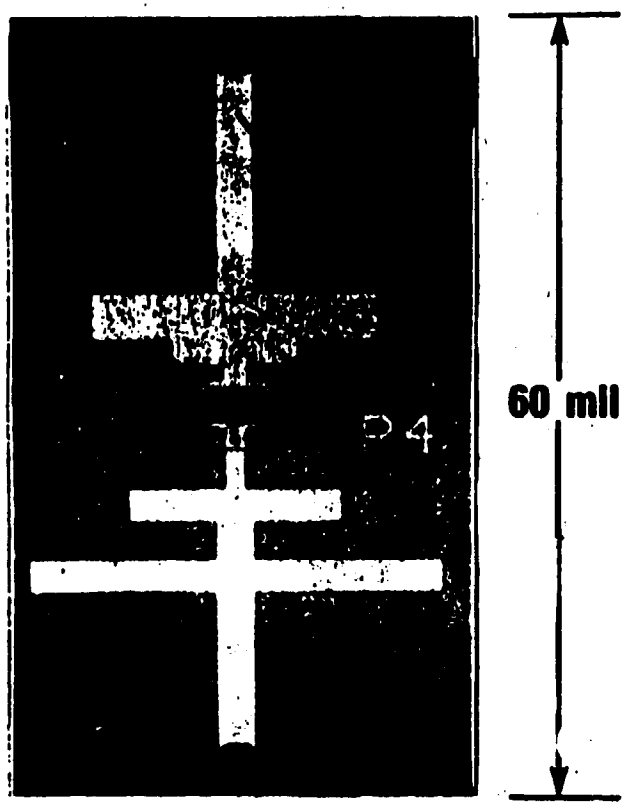

$f = 60$ GHz

$P_{OUT} = 112$ mW

GAIN = 6 dB

$\eta_{PA} = 26\%$

CD-89-43734

UNDER CONTRACT—HUGHES AIRCRAFT CO.

THIS PAGE INTENTIONALLY BLANK

SYSTEM ENHANCEMENT WITH MILLIMETER WAVE MMIC AND OPTOELECTRONICS TECHNOLOGY

J. Mondal and M. Bendett

SRC, Honeywell Inc.

10701 Lyndale Avenue S.

Bloomington, MN 55420

PAGE 456 INTENTIONALLY BLANK

PRECEDING PAGE BLANK NOT FILMED

THIS PAGE INTENTIONALLY BLANK

DISCUSSION WILL BRIEFLY COVER THE FOLLOWING:

1. MMIC Component Requirement
2. Future System Applications
3. Practical System Demonstration with Opto-Electronics
4. System Enhancement with Integration of Various Functions

PAGE 458 INTENTIONALLY BLANK

PRECEDING PAGE BLANK NOT FILMED

THIS PAGE INTENTIONALLY BLANK

MMIC COMPONENT REQUIREMENTS FOR SPACE BORNE APPLICATIONS

- Low Loss
- High Efficiency
- Integration
- Compact
- Lightweight
- Radiation Immunity

PRECEDING PAGE BLANK NOT FILMED

PAGE 460 INTENTIONALLY BLANK

THIS PAGE INTENTIONALLY BLANK

FUTURE SYSTEM (ON BOARD) APPLICATIONS

1. Phase Array Technology - Debris Radar
   - o Efficient Ka-band Phase Array Realizable with MMW MMIC Technology
   - o Very Low Loss MMIC Phase Shifters for Ka-band (1.5 dB/bit)
   - o High Efficiency Ka-band Power MMICs (≈15% over 10-20% BW)
   - o Less Elaborate Cooling System

2. On-Board Optoelectronics Control for Phased Array
   - o Compact
   - o Control Lines Easily Routable
   - o Integrable with Necessary Digital and MMIC Circuits
   - o Immune to EMI Radiation

3. On-Board Communication with Optical/Digital Links
   - o Control Different Parts of Space Station with Optical/ Digital Links

PAGE 462 INTENTIONALLY BLANK

PRECEDING PAGE BLANK NOT FILMED

30 GHz Monolithic Receive Module

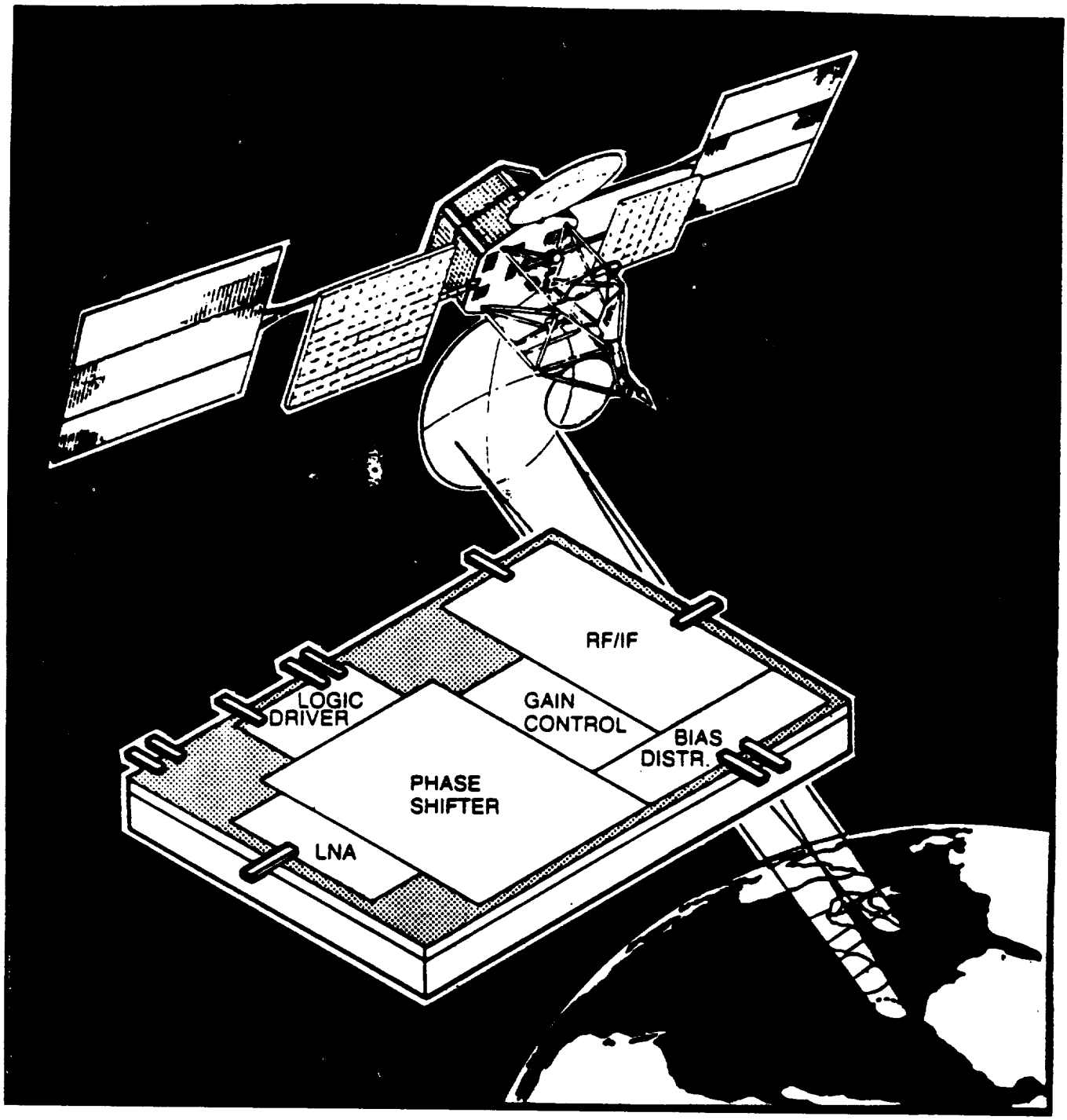

30 GHz Monolithic Receive Module

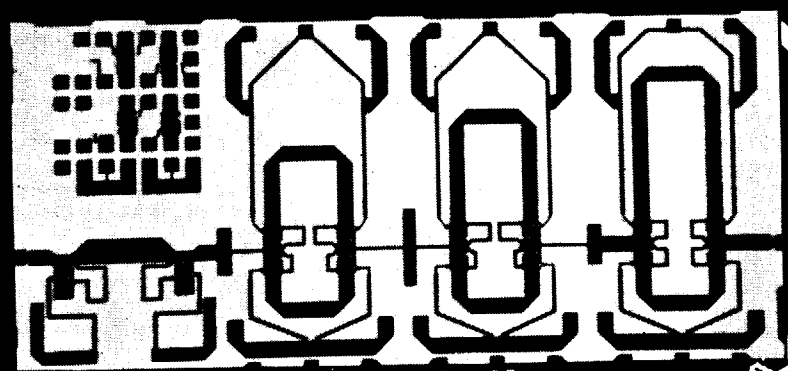

5-bit Phase Shifter

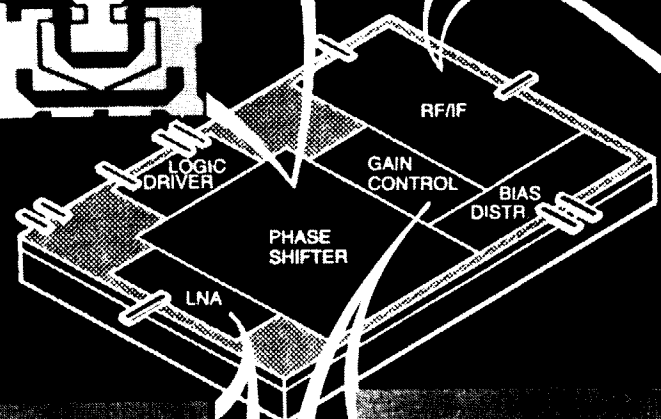

Ion-Implanted Planar Monolithic Mixer

2-stage Low Noise Amplifier

2-stage Dual Gate FET Amplifier

Honeywell

PHYSICAL SCIENCES CENTER

THIS PAGE INTENTIONALLY BLANK

PRECEDING PAGE BLANK NOT FILMED

Honeywell Censor/E-Beam Process for Millimeter Wave ICs

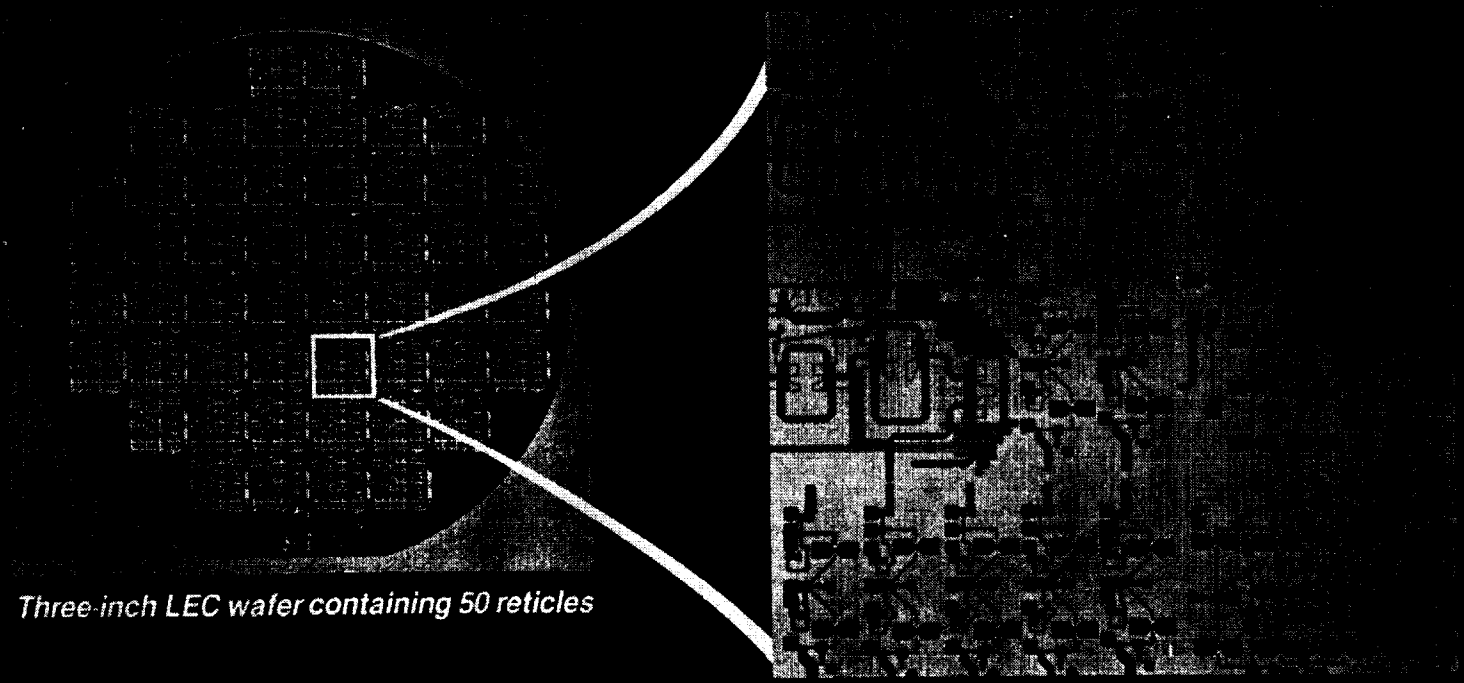

Three-inch LEC wafer containing 50 reticles

8mm x 8mm Censor reticle

- Control Logic
- Phase Shifters
- Low Noise Amplifiers
- Process Monitors

Honeywell

SENSORS AND SIGNAL PROCESSING LABORATORY

71765

PAGE 466 INTENTIONALLY BLANK

THIS PAGE INTENTIONALLY BLANK

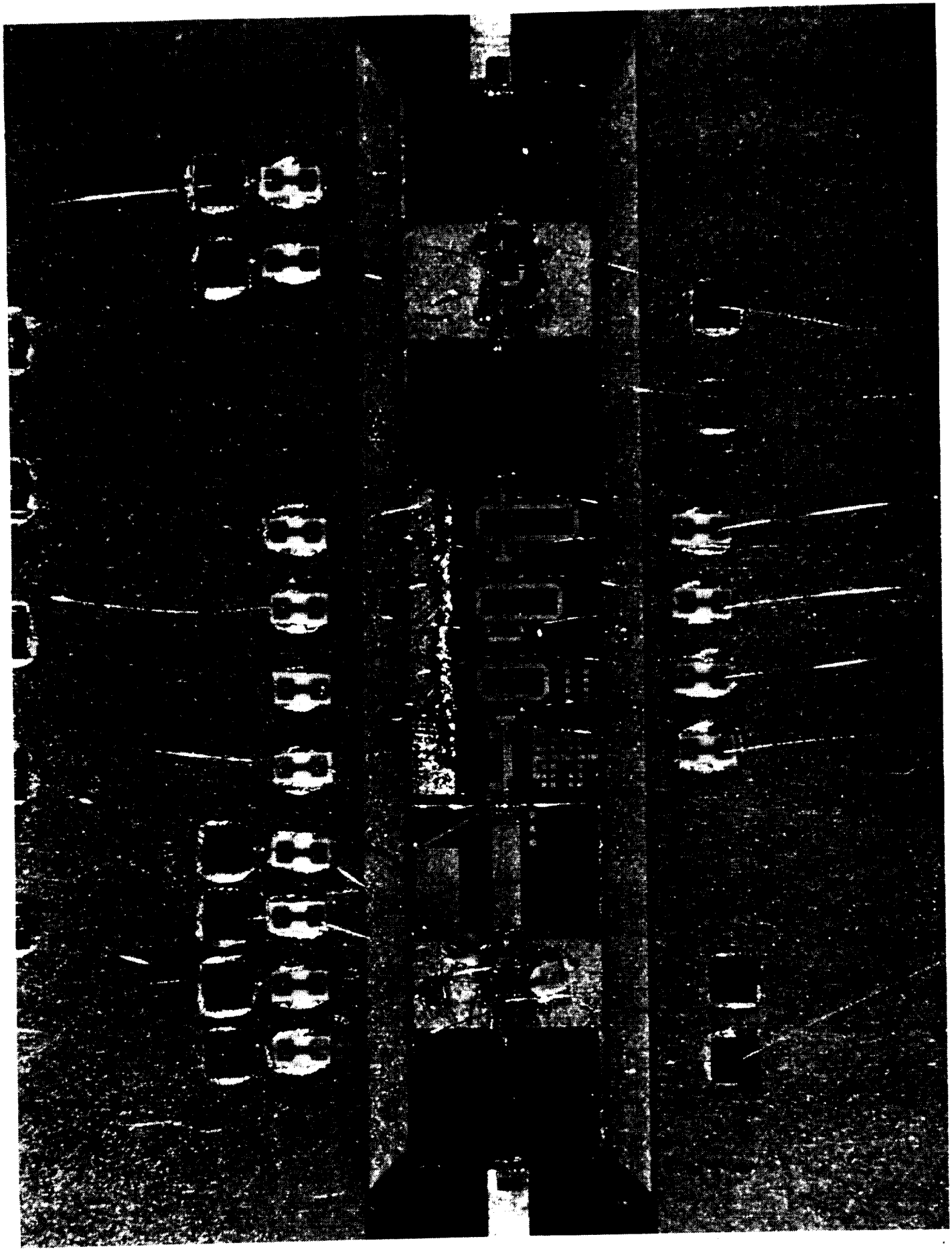

PAGE 468 INTENTIONALLY BLANK

Optically Controlled Phased Array Antenna

FUNCTION:

- Control information is provided to the phase and gain elements via an optical fiber

FEATURES:

- Reduced number of control lines: smaller, simplified assembly
- Optical distribution: easier fanout, EMI immunity, remoting capability

KEY ELEMENT:

- Optical Receiver/Controller Chip

Optically Controlled Phased Array Antenna

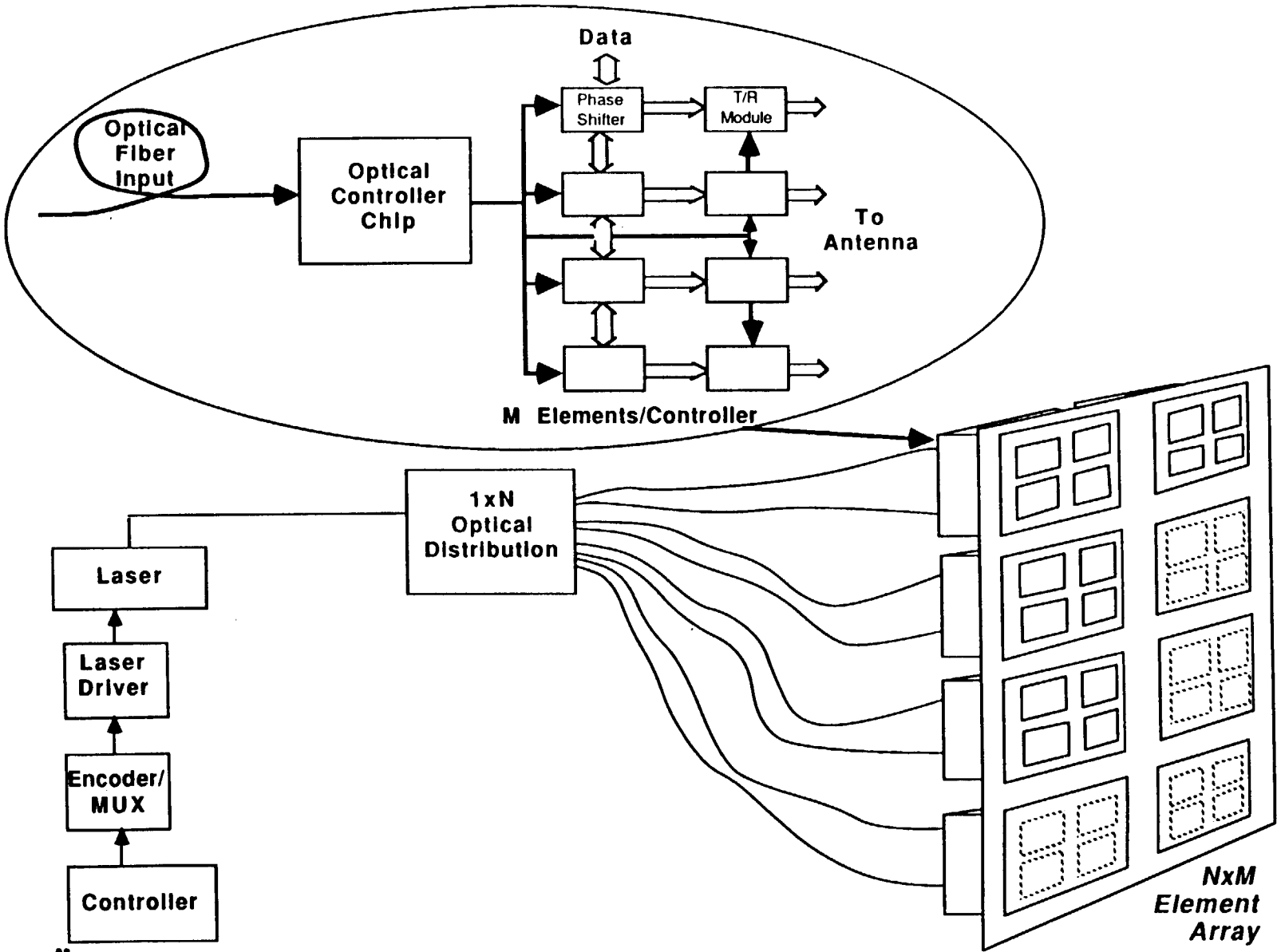

Honeywell

Sensors and Signal Processing Laboratory

THIS PAGE INTENTIONALLY BLANK

Monolithic Optical Receiver

FUNCTION:

- A compact, low power device to receive and distribute the optical control signals

FEATURES:

- Monolithic optoelectronic integrated chip (optical, analog, digital): small size, high reliability, simplified assembly, high speed (fewer parasitics)
- E/D MESFET GaAs: low power, high speed
- PIN photdiode: high optical sensitivity (which reduces required amplification)

PRECEDING PAGE BLANK NOT FILMED

PAGE 472 INTENTIONALLY BLANK

THIS PAGE INTENTIONALLY BLANK

GIGABIT MONOLITHIC OPTICAL INTEGRATED RECEIVER

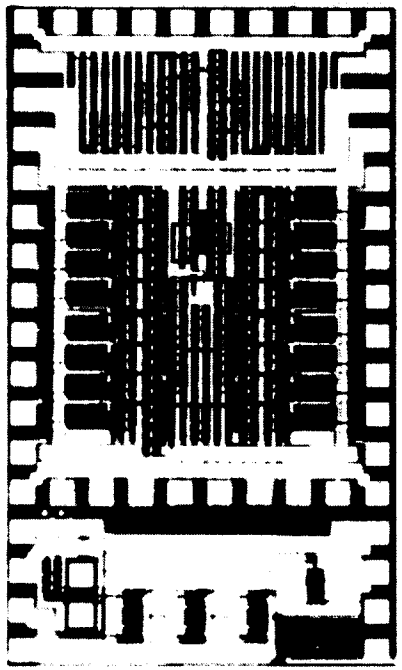

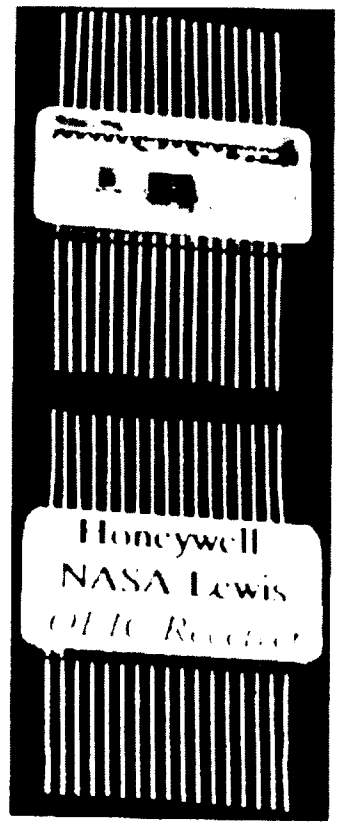

MONOLITHICALLY INTEGRATES:
PIN PHOTODIODE
THREE-STAGE AMPLIFIER
1:16 DEMULTIPLIXER

CONTAINS 1200 FETS (200 GATES)

FABRICATED USING E/D MESFET GaAs TECHNOLOGY

AREA: 0.110'' × 0.060''

POWER DISSIPATION: 270 mW

SERIAL DATA RATE: 1 Gbps

SENSITIVITY: 30 dBm

WAVEFORMS FROM 5 DMCX OUTPUTS AT 280 Mbps

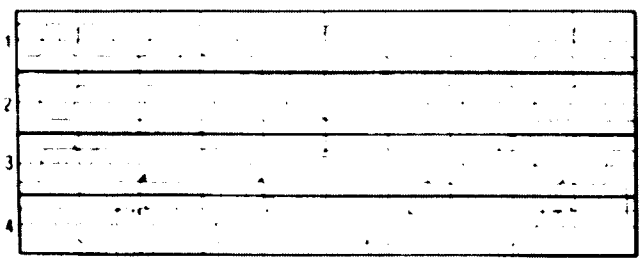

Ch 1 200.0 mVolts/div OUTPUT CLOCK
Ch 2 200.0 mVolts/div
Ch 3 200.0 mVolts/div DATA CHANNEL OUTPUTS
Ch 4 200.0 mVolts/div
Timebase 100 ns/div
INPUT DATA RATE 280 Mb/sec

BLOCK DIAGRAM OF OIC CHIP

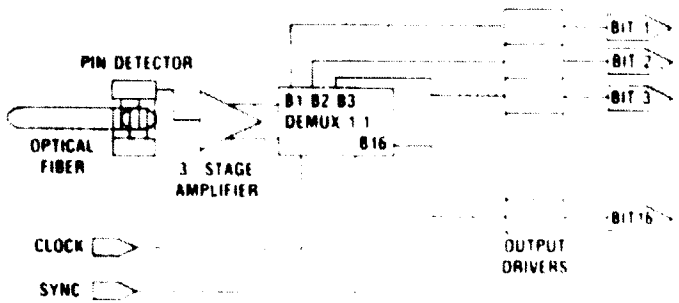

PRECEDING PAGE BLANK NOT FILMED

INTENTIONALLY BLANK

Evolution of monolithic integration

TRENDS:

- From the initial demonstration of the proof-of-concept the development of this technology is now concentrated on higher levels of integration and tailoring the chip functions to specific applications.

FEATURES:

- Digital electronics: The addition of clock recovery and perhaps some modification to the DMUX will eliminate all but the optical input and reduce the on-chip power consumption.
- Interface electronics: The modification of the output buffers of the chip to drive specific phase shifters and gain control amplifiers eliminates the need for external electronics. This reduces size and power.
- The development of a optical/digital/MMIC compatible process would allow significant reduction of the total area of a phased array element.

Monolithic Component Development

Current Technology

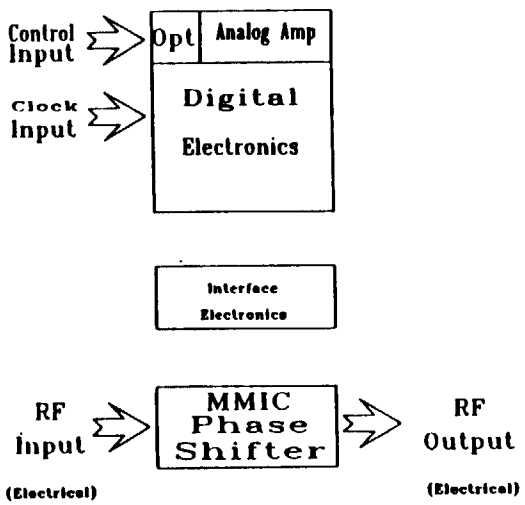

Integrated Controller
Discrete Phase Shifter

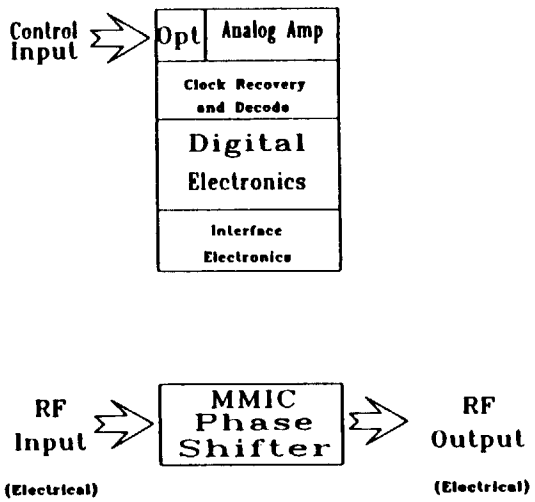

Fully Integrated
MMIC Controller

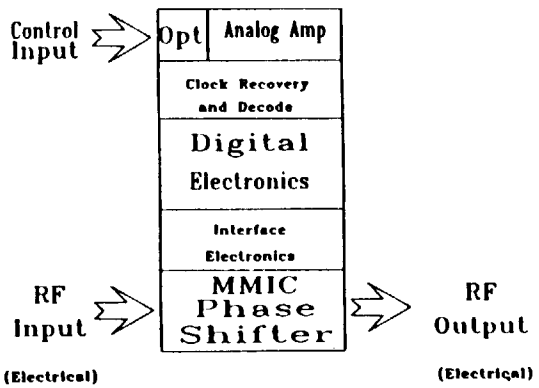

THIS PAGE INTENTIONALLY BLANK

Optical Digital Data Distribution

FUNCTION:

- Optical data links can provide control information, data relay from sensors, local area network services, internal communications, etc.

FEATURES:

- Interfaces: Transition of light to/from electronics (e.g. 16 bit parallel ECL) contain protocols, clock recovery, frame sync., etc. which are transparent to the user.
- Optical distribution: easier fanout, EMI immunity, lighter weight distribution media, high speed
- Integration: power and size reduction

PRECEDING PAGE BLANK NOT FILMED

PAGE 478 INTENTIONALLY BLANK

THIS PAGE INTENTIONALLY BLANK

Optical Network 1.1 Gbps Transmitter/Receiver Technology Partitioning

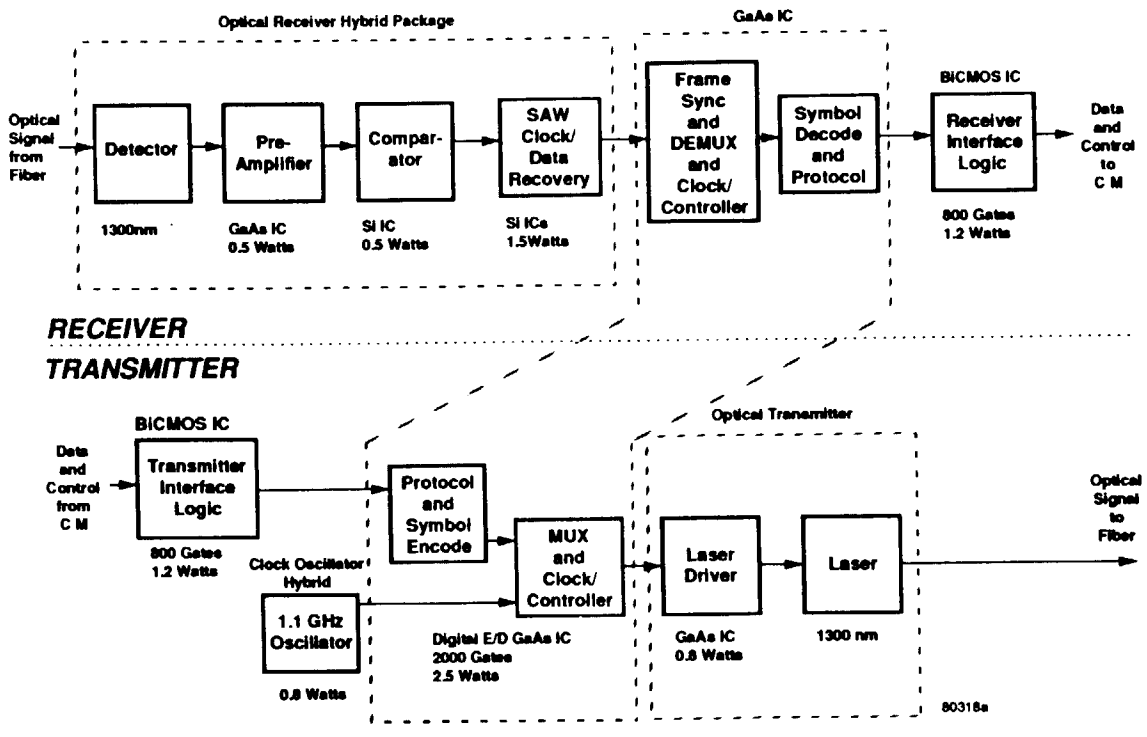

Block Diagram

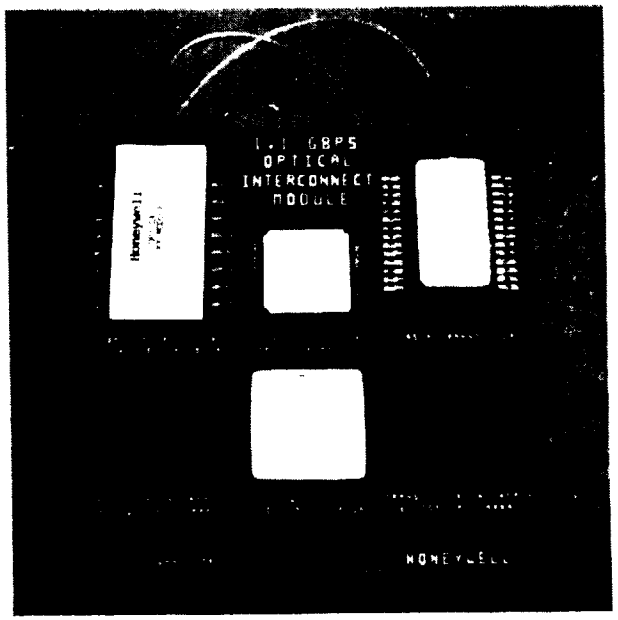

Module Implementation

PAGE 480 INTENTIONALLY BLANK

PRECEDING PAGE BLANK NOT FILMED

THIS PAGE INTENTIONALLY BLANK

Development of Optical Tx/Rx

TRENDS:

- In order to make optical technology widely applicable the size and power of the interface electronics must be reduced without sacrificing functionality.

FEATURES:

- Figure of merit: speed/ (size x power)
- Dramatic power and size reductions are being made by basic integration of electronic components into gate arrays and GaAs IC's to get a 100x improvement over commercial technology.
- Next generation technologies (12-24 months) will result in a factor of 2000x improvement.
- Ultimate power and size reduction lies with monolithic integration

PRECEDING PAGE BLANK NOT FILMED

PAGE 482 INTENTIONALLY BLANK

THIS PAGE INTENTIONALLY BLANK

Development of Multigigabit Optical Transmitters/Receivers

	Connection Machine Breadboard Mar. 1989	Connection Machine Link Dec. 1989	Optical Interconnect Module	Single Monolithic IC	Portion of GaAs IC or GaAs-on-Si
System Application	- Computer networks - Connect computer subsystems	- Computer networks - Connect computer subsystems	- Connect computer subsystems - Computer backplane - Board-to-board	- Computer backplane - Board-to-board - MCM-to-MCM - Provide I/O for MCM	- Board-to-board - MCM-to-MCM - Chip-to-chip - Provide I/O for chip
Optical Media	Fiber	Fiber	Fiber or planar waveguides	Fiber or planar waveguides	Fiber or planar waveguides
Technology	- Standard TTL, ECL and GaAs ICs - GaAs PLL - Laser xmtr & optical rcvr hybrids - Packaged on PWB	- Standard cell GaAS IC - Silicon gate arrays - Clock osc, laser xmtr & optical rcvr - Hybrids packaged on PWB	- GaAs and BiCMOS custom ICs with mixed analog/ digital circuitry - Laser and detector die - Packaged on hybrid substrate	- All electronic circuitry on single GaAs IC packaged on hybrid substrate to perform I/O for MCM	- All electronic circuitry and optical components on portion of die
Data Rate Size Power Dissipation	400 Mbps 9"x16" 75 Watts	1.1Gbps 5"x 5" 10 Watts	2.0 Gbps 2"x 2" 6 Watts	2.0 Gbps .5"x .5" 4 Watts	2.0 Gbps .25"x .25" 2 Watts
Figure of Merit $\left(\frac{\text{Mbps}/}{\text{in}^2 - \text{Watt}}\right)$	0.04	4.9	83	2000	16000
Approximate Improvement Factor	–	x100	x1500	x40,000	x320,000

B90125.1h

Honeywell

SRC

PRECEDING PAGE BLANK NOT FILMED

THIS PAGE INTENTIONALLY BLANK

TECHNOLOGY RECOMMENDATION FOR MMIC AND OPTOELECTRONICS

- SAG (Self-Aligned Gate) Process

  Advantage: Digital Optical Receiver and MMIC (Phase Shifters, TR Switches) Easily Integrable

  Disadvantage: Power Amplifier and LNA are not Easily Integrable

PAGE 486 INTENTIONALLY BLANK

PRECEDING PAGE BLANK NOT FILMED

THIS PAGE INTENTIONALLY BLANK

SUMMARY

- MMIC/Optoelectronic Technologies are Maturing
- Proof of Concept Demonstration of Functions and Device Integration have been Accomplished
- As the Technologies Evolve, Space Borne System Like Communication and Tracking Will Benefit from Their Size, Weight and Performance Advantages

PAGE 488 INTENTIONALLY BLANK

PRECEDING PAGE BLANK NOT FILMED

THIS PAGE INTENTIONALLY BLANK

OPTICAL COMMUNICATIONS FOR SPACE STATION FREEDOM

January 1990

Robert K. Zimmerman, Jr.
NASA/GSFC Code 723

PRECEDING PAGE BLANK NOT FILMED

PAGE 490 INTENTIONALLY BLANK

Optical Communication roles envisioned by GSFC for Space Station Freedom:

1.) Cluster Communications
(Proximity Operations)

2.) Extremely High Data Rate Links

CLUSTER COMMUNICATIONS

(Prox Ops)

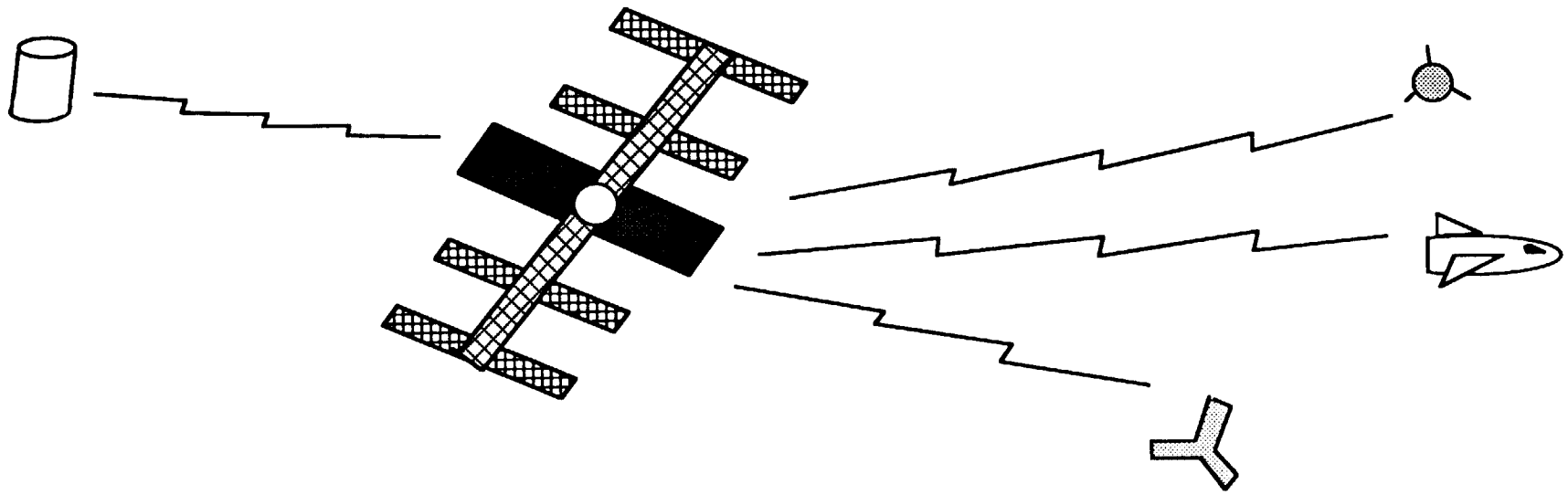

REQUIREMENTS:

* 4 remote vehicles initially
* 10 remote vehicles in growth phase
* 22 MBPS digital video from each vehicle
* 0.1 MBPS duplex lifeline links

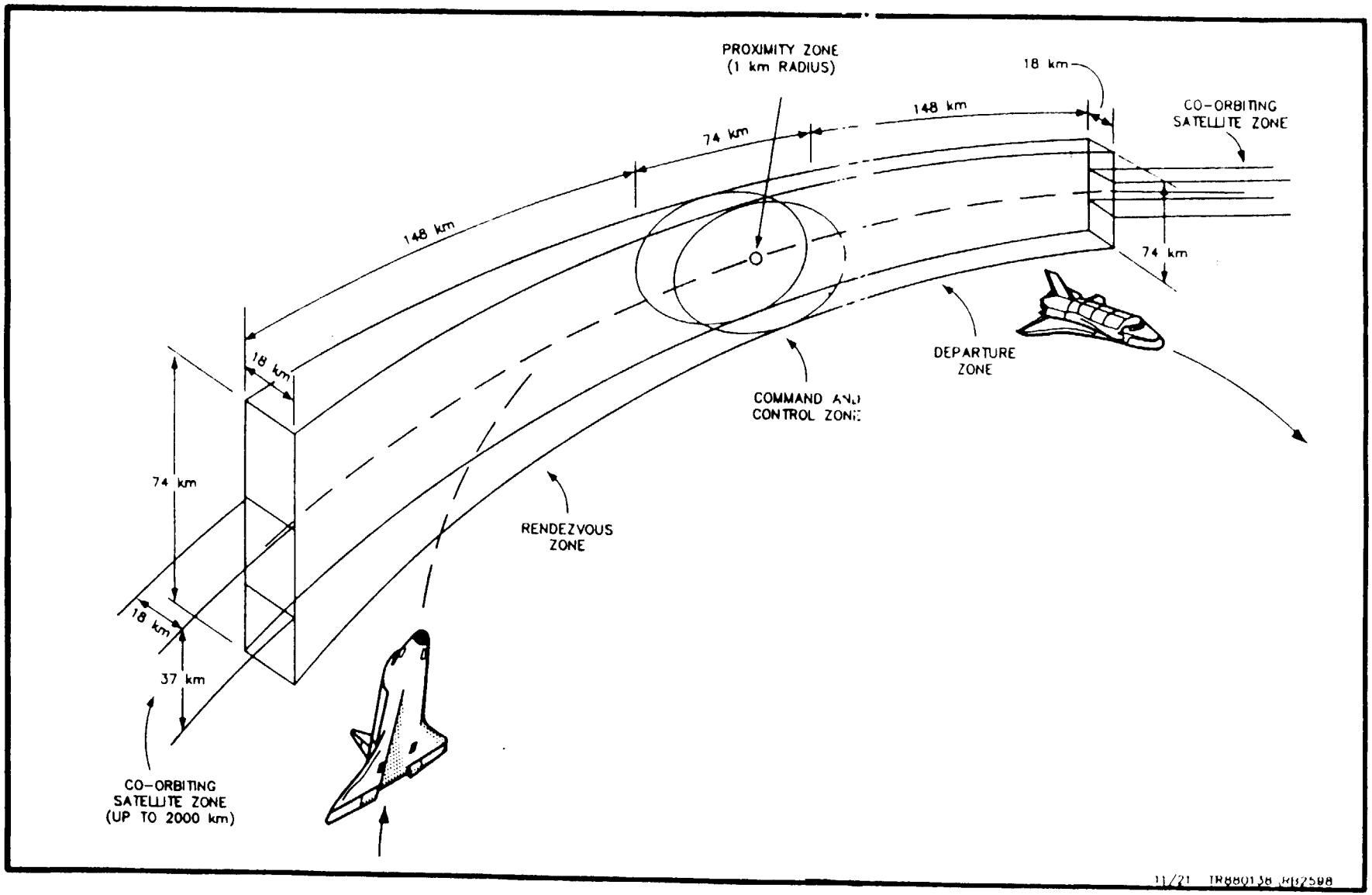

SPACE STATION ZONES OF COMMUNICATION

SS CLUSTER COMMUNICATIONS REQUIREMENTS

VEHICLE/PLATFORM	COMMUNICATION REQUIREMENTS	DATA RATE
OMV	• Forward - CMD • Return - TLM, GPS DATA - VIDEO	100 Kbps 100 Kbps 22 Mbps
Co-Orbiting Free Flyer	• Forward - CMD • Return - TLM, GPS DATA - VIDEO, PAYLOAD DATA	100 Kbps 100 Kbps 22 Mbps
STS	• Forward - VOICE, TLM • Return - VOICE, CMD - VIDEO (GROWTH)	100 Kbps 100 Kbps 22 Mbps
MSC/FTS	• Forward - CMD - VIDEO • Return - TLM - VIDEO	160 Kbps 22 Mbps 160 Kbps 22 Mbps
EVA/MMU	• Forward - CMD, Vehicle - Heads Up Displays • Return - Voice, TLM - Video	100 Kbps 400 Kbps 100 Kbps 22 Mbps

EXTREMELY HIGH DATA RATE LINKS

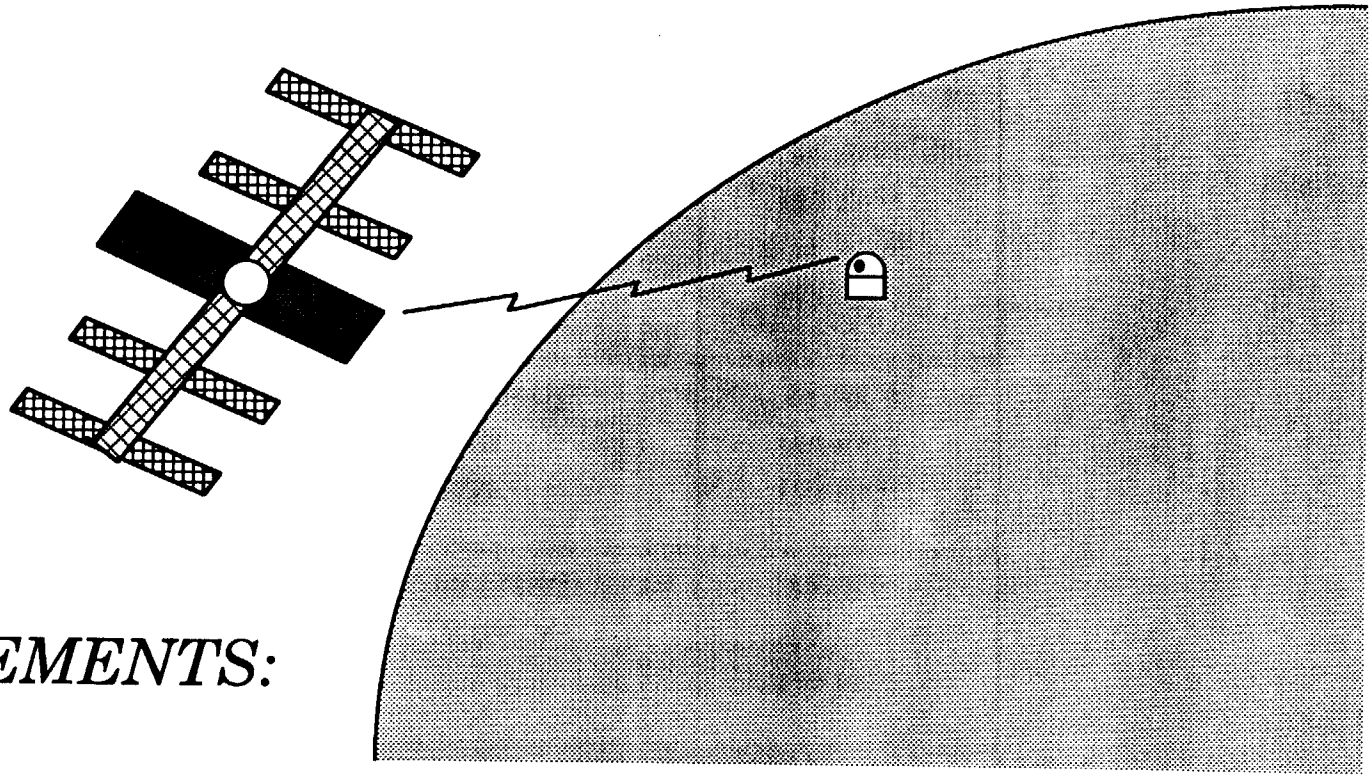

REQUIREMENTS:

* Intermittent links to ground
  (coordinated with onboard experiments)

* Data rates as high as 3 GBPS

Technology areas supporting space based laser communications:

* Laser diode lifetimes
* Pointing, Acquisition, and Tracking progress
* Sensitive direct detection receivers
* Diode current driver circuitry
* Wavelength multiplexing (power combining)

LASER CHARACTERIZATION AND LIFE TESTING

- COMMERCIAL GRADE AlGaAs LASERS / GSFC IN-HOUSE

(CHARACTERIZATION)

— PI CURVE
— POLARIZATION
— FAR FIELD PATTERN*
— SPECTRA*

(LIFE TESTING)

— 22 STATION FACILITY
— PULSED OPERATION, 200 MHZ, 50% DUTY CYCLE
— AMBIENT TEMPERATURE
— CONSTANT CURRENT
— DAILY MEASUREMENTS OF POWER, WEEKLY FOR POL., FAR FIELDS, SPECTRA

- FLIGHT QUALIFIED AlGaAs LASERS / TRW-MATSUSHITA LASERS

— BURIED TWIN RIDGE SUBSTRATE (BTRS) LASERS
— 35 mW AVE., 70 mW PEAK
— BURN IN FOR 100 HR AT 70°C, 40 mW CW
— LIFE TESTS AT 20°C (8 UNITS), 40°C (8 UNITS), 70°C (8 UNITS)
— PULSED OPERATION AT 10 MHZ, 50% DUTY CYCLE
— CURRENT ADJUSTED FOR CONSTANT PEAK POWER

* CW AND PULSED (200 MHZ, 50% DUTY CYCLE), 25 mW AVE.

NASA GSFC DIODE LIFE TEST FACILITY

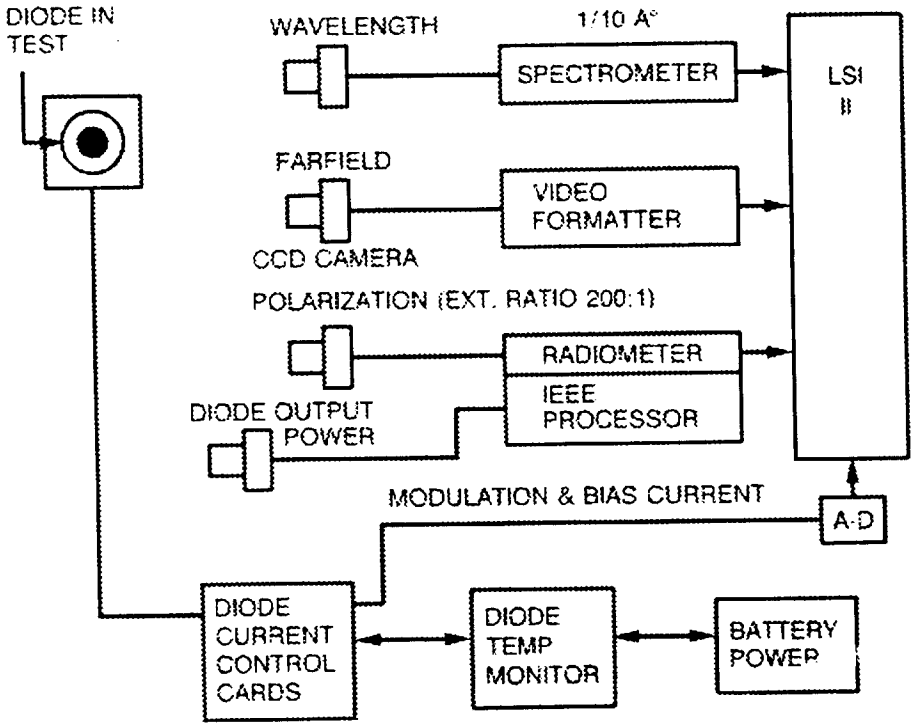

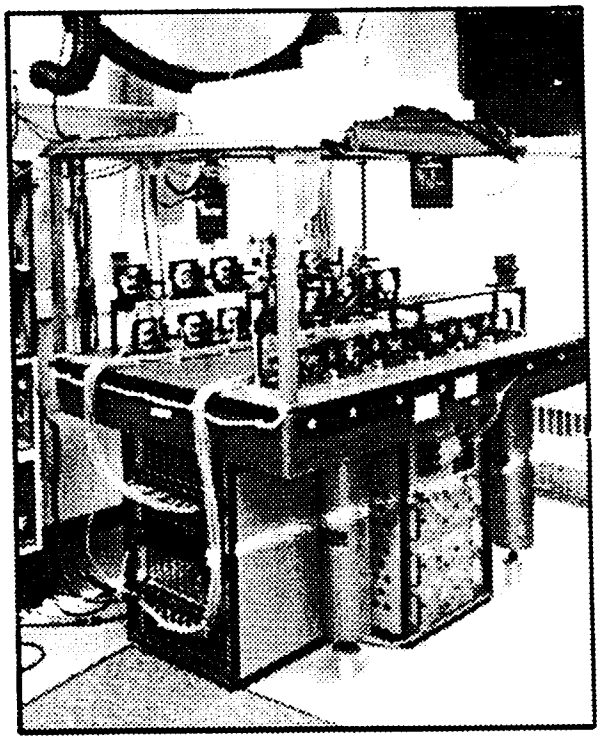

ORIGINAL PAGE
BLACK AND WHITE PHOTOGRAPH

- DIODES IN TEST; RCA, SHARP, TOSHIBA, HITACHI & SDL
- POWER LINE PROTECTED AND BATTERY BACKUP
- ADAPTABLE TO ANY DIODE CONFIGURATION
- CONSTANT CURRENT, 100 MHz MODULATION
- REPEATABILITY OF SENSOR POSITION

AlGaAs CHARACTERIZATION AND LIFE TEST RESULTS

LIFE TEST POWER DEGRADATION

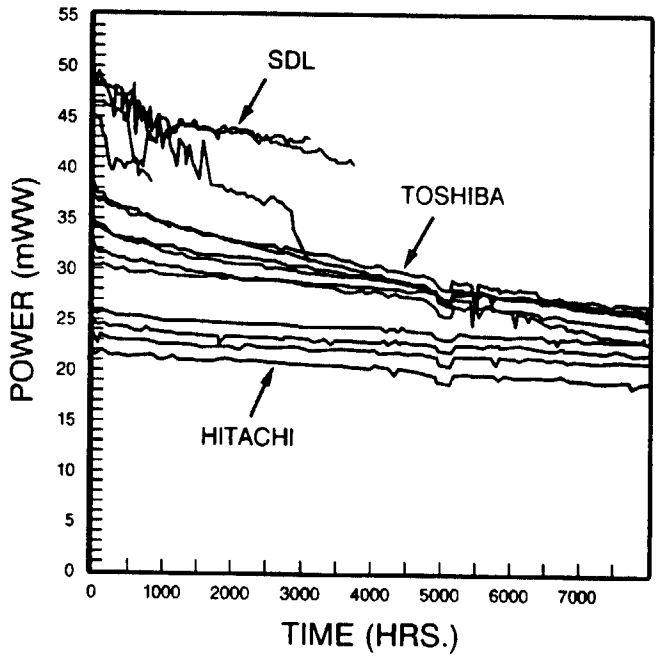

- HITACHI, SHARP AND TOSHIBA LASERS TESTED TO 7-10 KHr AVERAGE DEGRADATION RATE OF .4mW/KHr. INDICATES ABOUT 25 KHr. TO HALF POWER
- DEGRADATION RATE HIGHEST DURING FIRST 500 TO 2,000 HRS.
- DRIFT IN BEAM CENTROID 0.1 BEAM WIDTHS PER 11 KHr.,FARFIELD WIDTH CHANGES ARE NEGLIGIBLE (<.1°/KHr.)
- FURTHER TESTING WILL BE DONE ON SDL LASERS AT 100 mW.

FLIGHT QUALIFIED AlGaAs LASERS
LIFE TEST RESULTS

- TESTS INITIATED IN APRIL 1988 AND WILL CONTINUE UNTIL 50% OF EACH POPULATION HAS FAILED - TEST PROGRAM NOW EXCEEDS 10,000 HR

- RESULTS TO DATE

  <u>20°C GROUP</u>

  - 2 FAILURES AT 25 HRS (ESD?)
  - 1 FAILURE AT 8800 HOURS

  <u>40°C GROUP</u>

  - 1 FAILURE AT 7500 HOURS, OTHERS STILL OPERATING

  <u>70°C GROUP</u>

  - 6 UNITS HAVE FAILED
  - MEAN TIME TO FAILURE IS 5400 HOURS

POINTING, ACQUISITION, AND TRACKING SUBSYSTEM

- DEVELOP BRASSBOARD SYSTEM TO EVALUATE ALTERNATE METHODOLOGIES AND IMPLEMENTATIONS
  - ACQUISITION, RE-ACQUISITION, TRACKING
  - QUADRANT PHOTODIODES, CCD, CID DETECTORS

- DEVELOP DETAILED COMPUTER MODEL
  - CC
  - TUTSIM
  - ACSL

- COMPARE MEASURED PERFORMANCE TO COMPUTER PREDICTIONS
  - OPTIMIZE PERFORMANCE
  - REFINE COMPUTER MODEL

OPTICAL COMMUNICATIONS POINTING TECHNOLOGY

OBJECTIVE:

REDUCE SYSTEM COMPLEXITY BY DEVELOPING MULTIFUNCTION CCD ARRAY FOR ACQUISITION, TRACKING, AND POINT AHEAD

EASTMAN-KODAK CCD ARRAY

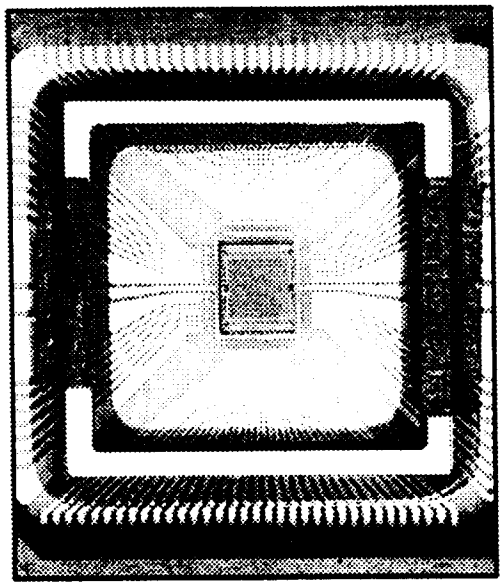

DETECTOR PERFORMANCE GOALS

FRAME RATE	40,000 Hz
ARRAY SIZE	128 X 128
PIXEL SIZE	32 μm
NOISE LEVEL	20 e RMS

STATUS:

(1) DETECTOR ARRAY IN ASSEMBLY
(2) DELIVERY TO GSFC IN NOVEMBER '89
(3) ARRAY TO BE TESTED IN GSFC "FULL-UP" BRASSBOARD SYSTEM

GSFC IN-HOUSE BRASSBOARD

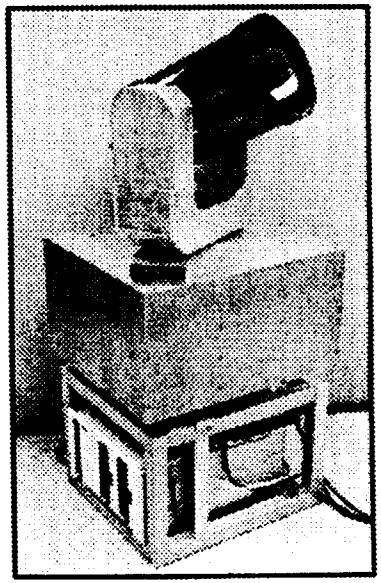

SYSTEM PERFORMANCE GOALS

ACQUISITION FIELD	200 ARC-SEC
ACQUISITION TIME	30 SEC (MAX)
POINTING ACCURACY	0.2 ARC-SEC RMS
SENSITIVITY	1 PICOWATT

ORIGINAL PAGE
BLACK AND WHITE PHOTOGRAPH

ULTRA-SENSITIVE RECEIVERS

- GSFC EMPHASIS ON DIRECT DETECTION
- SILICON AVALANCHE PHOTODIODE DETECTOR
- INITIAL WORK USED NRZ MODULATION
- CURRENT ACTIVITIES USE PULSE POSITION MODULATION

ULTRA-SENSITIVE RECEIVERS
— RESULTS —

1. NRZ, 325 MBPS, 10 BEP → 80 PHOTONS/BIT (PLESSCOR)

2. PPM (Q = 4), 25 MBPS, 10^{-6} BEP → 55 PHOTONS/BIT*(JHU/GSFC)

3. PPM (Q = 4), 50 MBPS, 10^{-6} BEP → 57 PHOTONS/ BIT *(JHU/GSFC)

4. PPM (Q = 4), 220 MBPS , RECEIVER NOW BEING BUILT (JHU/GSFC)

* MODULATOR DRIVER LIMITED

HIGH-SENSITIVITY DIRECT DETECTION OPTICAL COMMUNICATION RECEIVER

- 4-SLOT PULSE POSITION MODULATION (4-PPM)
- MAXIMUM LIKELIHOOD RECEIVER (COMPARES FOUR SLOTS OF EACH FRAME) WITH AUTONOMOUS CLOCK RECOVERY BUILT BY DAVIDSON AND SUN AT JOHNS HOPKINS UNIVERSITY
- AlGaAs LASER DIODE (830nm) AND Si APD DETECTOR
- 50 MBPS RECEIVER HAS BEEN COMPLETED, 220 MBPS IS BEING BUILT

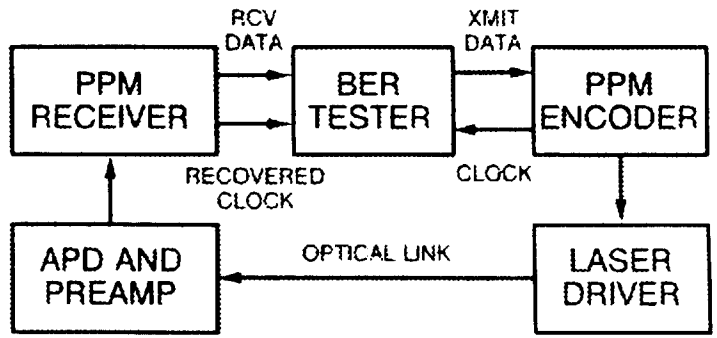

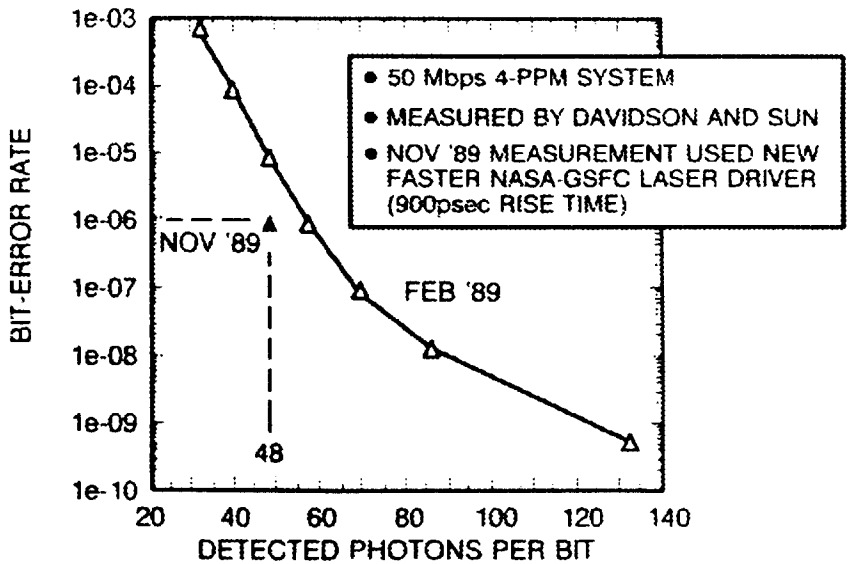

Hybrid Laser Diode Current Driver

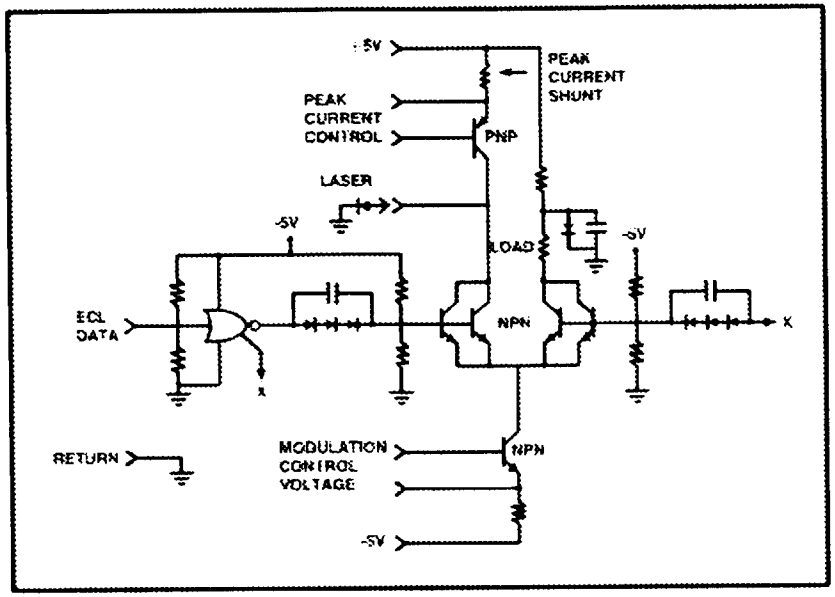

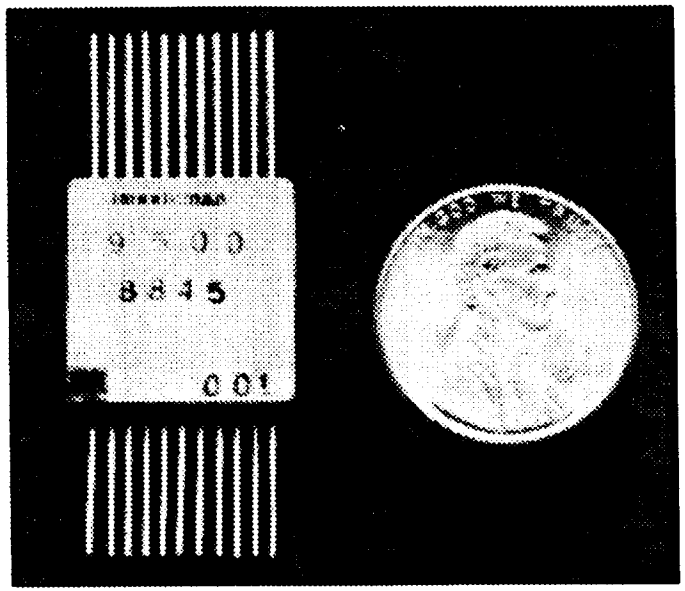

ORIGINAL PAGE
BLACK AND WHITE PHOTOGRAPH

FEATURES:

- Drives Positive Current
- ECL 50Ω Data Input
- Bias & Modulation Current
- Independently Adjustable
- 100 mA Peak Current
- Excellent 200 Mbit/s NRZ Response

Optical Response 100 MHz Square Wave

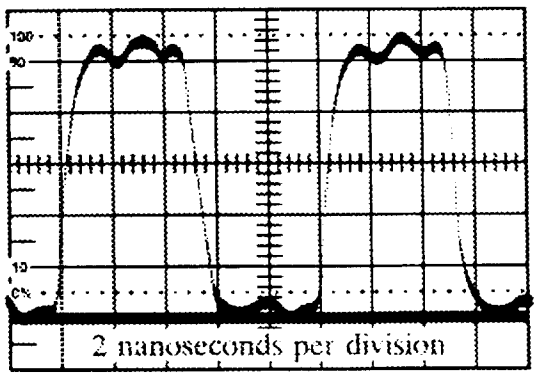

R. K. Zimmerman Dec. 89 Code 723

Developmental Contract
Hybrid Laser Diode Current Driver

FEATURES:

- Drive 300 mA (total) negative current
- Good definition current pulses at 440 Mbit/s (Non-Return-to-Zero)
- Bias current adjustable to 100 mA
- Modulation current adjustable to 300 mA
- ECL 50Ω data input
- Current steering topology
- Silicon or Gallium Arsenide implementation

TIME LINE: 6 month contract

0 to 2 months
Selection of active devices and circuits.

2 to 4 months
Computer circuit simulation with SPICE models

4 to 6 months
Construction of hybrid driver in accordance with computer model

Incoherent Power Combining

Power Combiners (WDM) are a basic Tx/Rx building block for direct detection laser communications requiring 3-5 watts of source diode power

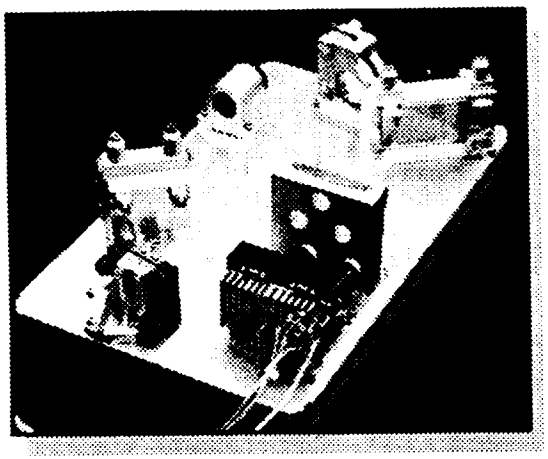

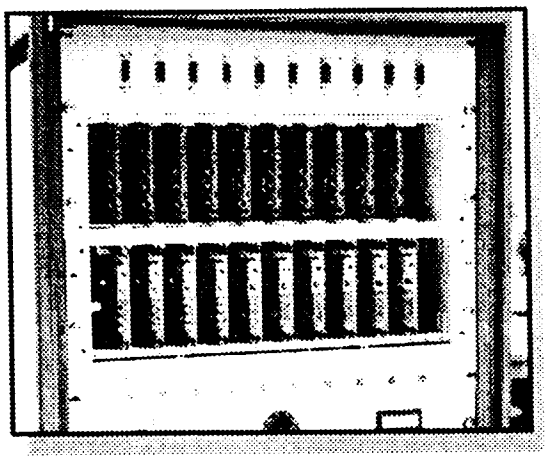

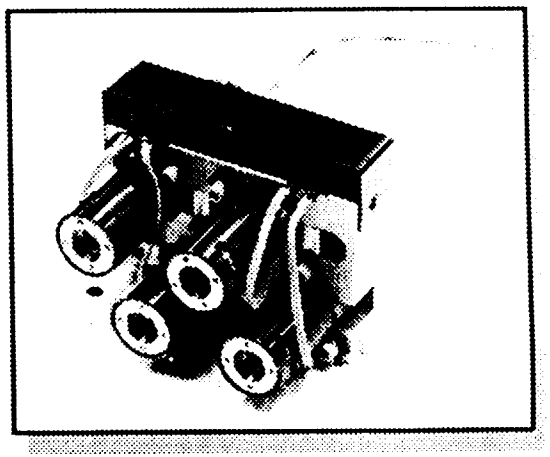

Grating Laser Beam Combiner (GLBC)

- 0.25 Watt ouput, 50% duty cycle; scalable to 0.5 - 1.0 Watt
- Electronics can run at a submultiple of full data rate
- Graceful degradation, each laser coherently fills aperture
- Lightweight/compact design possible
- Performance is insensitive to laser diode instabilities, i.e. wavelength

ORIGINAL PAGE
BLACK AND WHITE PHOTOGRAPH

LASER COMMUNICATIONS TRANSCEIVER (LCT) AS AN ATTACHED PAYLOAD FOR THE SPACE STATION FREEDOM

HIGHLIGHTS:

* 180 day attached payload mission
* demonstrate rapid beacon signal acquisition
* demonstrate fine tracking & pointing (submicroradian accuracy)
* demonstrate wideband communications (GBPS rate with BER < 10**-9)

* U.S. GOVERNMENT PRINTING OFFICE: 1990--730-163/E4549