NAS8-37459

AUTOMATED FLUID INTERFACE SYSTEM (AFIS) DEVELOPMENT PROGRAM

FINAL REPORT

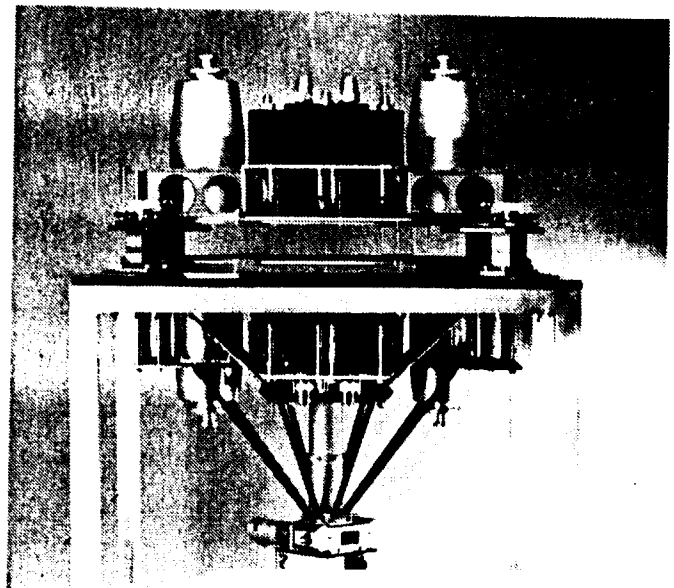

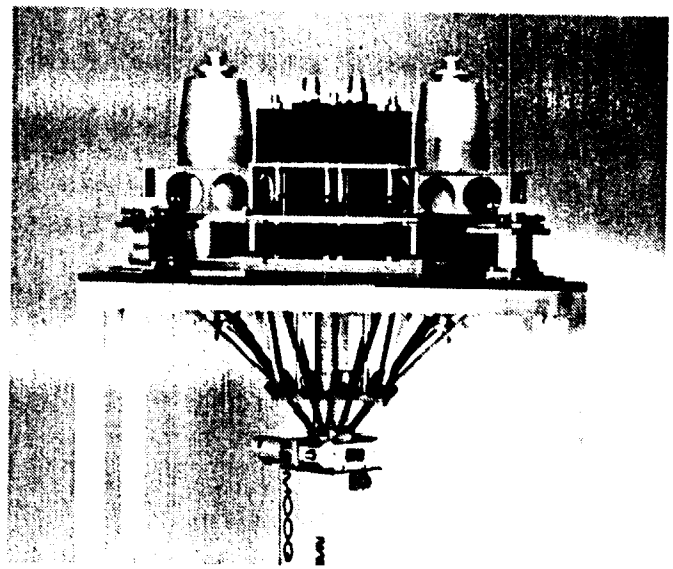

(NASA-CR-192546) AUTOMATED FLUID INTERFACE SYSTEM (AFIS) DEVELOPMENT PROGRAM Final Report (Moog) 81 p

N93-72797

Unclas

Z9/34 0166336

SEPTEMBER 12, 1990

MOOG
SPACE PRODUCTS DIVISION

NASA
MARSHALL SPACE FLIGHT CENTER

AFIS PROGRAM OVERVIEW

CUSTOMER:	ADVANCED PROGRAMS OFFICE NASA, MARSHALL SPACE FLIGHT CENTER HUNTSVILLE, ALABAMA
CONTRACT TYPE:	FIXED PRICE RESEARCH AND DEVELOPMENT CONTRACT
SCHEDULE:	FIFTEEN MONTHS (CLOSE-OUT BY 30 SEPT 90)
DELIVERABLES:	ONE FULL SCALE AFIS PROTOTYPE ONE TANKER/SPACECRAFT SIMULATOR REPORTS OF WORK

PROGRAM OBJECTIVE

OVERALL OBJECTIVE:

- DEVELOP AND DEMONSTRATE AN AUTOMATED FLUID TRANSFER INTERFACE SYSTEM FOR USE WITH FUTURE TANKERS AND SPACECRAFT.

GOALS:

- COMPLIANCE WITH ALL DESIGN REQUIREMENTS
- COMPATIBILITY WITH OMV AND OSCRS AS POTENTIAL TANKERS
- COMMON AFIS COMPATIBLE WITH BOTH RGDM AND TPDM
- REUSABLE FOR GROUND LAUNCHED SERVICING TO ALL ORBITS
- MINIMIZE LIFE CYCLE COSTS
- MAXIMIZE RELIABILITY
- RECONFIGURABLE FOR MONOPROP, BIPROP AND CRYOGENIC RESUPPLY

AFIS PROGRAM TEAM

PROGRAM MANAGER/PROJECT ENGINEER:	JOE CARDIN (716) 687-4417
CONTRACT ADMINISTRATOR:	BILL MORRISH
DESIGN ENGINEERING SUPPORT:	
MECHANICAL DESIGN ENGINEER:	RICH MEINHOLD
ELECTRICAL DESIGN ENGINEER:	JERRY NEUHAUSER
DEVELOPMENT LAB SUPPORT:	
MECHANICAL A&T TECHNICIAN:	DAN ERTL ED MADAR

PROGRESS STATUS AND CLOSE OUT

- HARDWARE SHIPPED 30 AUGUST 1990
- VERBAL FINAL REPORT 12 SEPTEMBER 1990
- DEMONSTRATION OF DELIVERABLE HARDWARE 12 SEPTEMBER 1990
- NARRATIVE FINAL REPORT 30 SEPTEMBER 1990
  - SUMMARY OF RESULTS
  - RECOMMENDATIONS & CONCLUSIONS
  - EXPERIENCE AND RESULTS OBTAINED
  - PROTOTYPE AFIS DESIGN DOCUMENTATION
  - INTERFACE DESCRIPTIONS
  - OPERATING REQUIREMENTS/ PROCEDURES
  - SYSTEM EVALUATION CRITERIA

NASA/MOOG AFIS

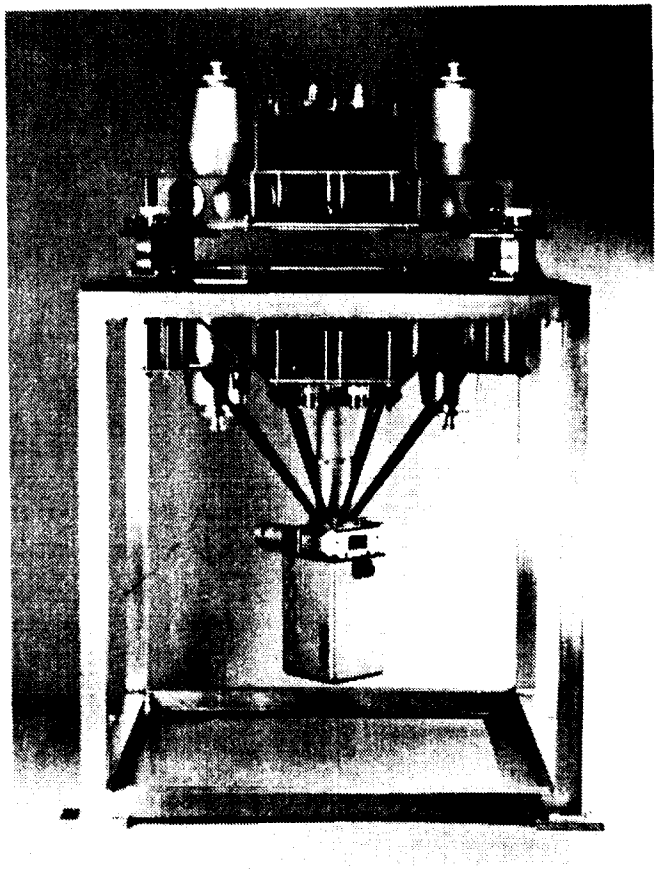

DEMATED

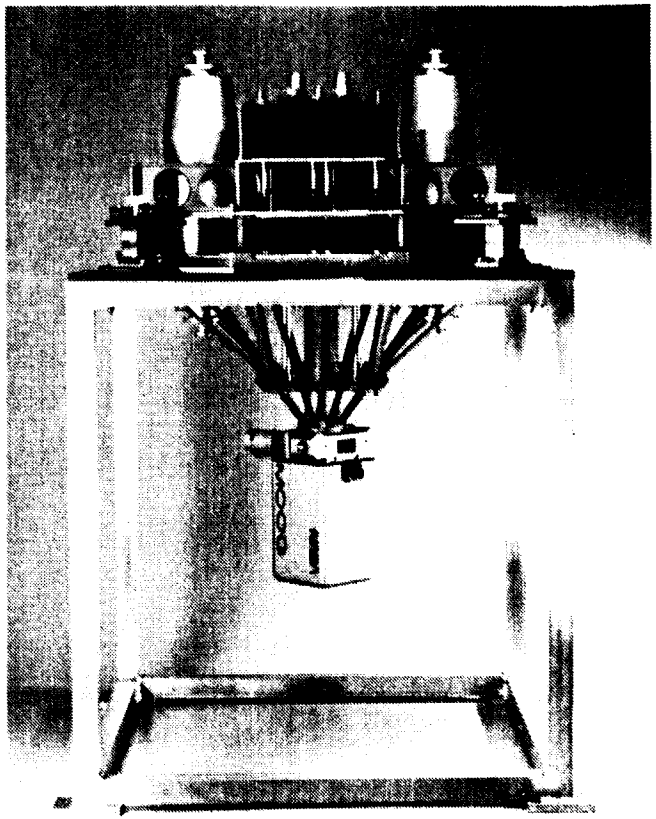

MATED

AFIS SYSTEM COMPONENTS

- MODEL 50E629 TYPE I HALF
  - USUALLY MOUNTS ON THE TANKER SPACECRAFT
  - REQUIRES POWER AND CONTROL
  - OPERATED BY (1) MOOG MODEL 50E265 EM ACTUATOR
  - ELECTRICALLY REDUNDANT
  - CONTROL ELECTRONICS BUILT-IN
  - REDUNDANT MANUAL OVERRIDES
  - CONTAINS BULK OF COMPLEXITY AND WEIGHT
  - ACCOMODATES TANKER/SPACECRAFT MISALIGNMENTS
  - ROTARY COVER PROTECTS COUPLINGS

- MODEL 50E630 TYPE II HALF
  - USUALLY MOUNTS ON SPACECRAFT TO BE RESUPPLIED
  - ELECTRICALLY PASSIVE
  - SIMPLE RUGGED DESIGN
  - SMALL AND LIGHTWEIGHT
  - ROTARY COVER PROTECTS COUPLINGS
  - EASILY SCALABLE

PRECEDING PAGE BLANK NOT FILMED

AFIS TYPE I HALF

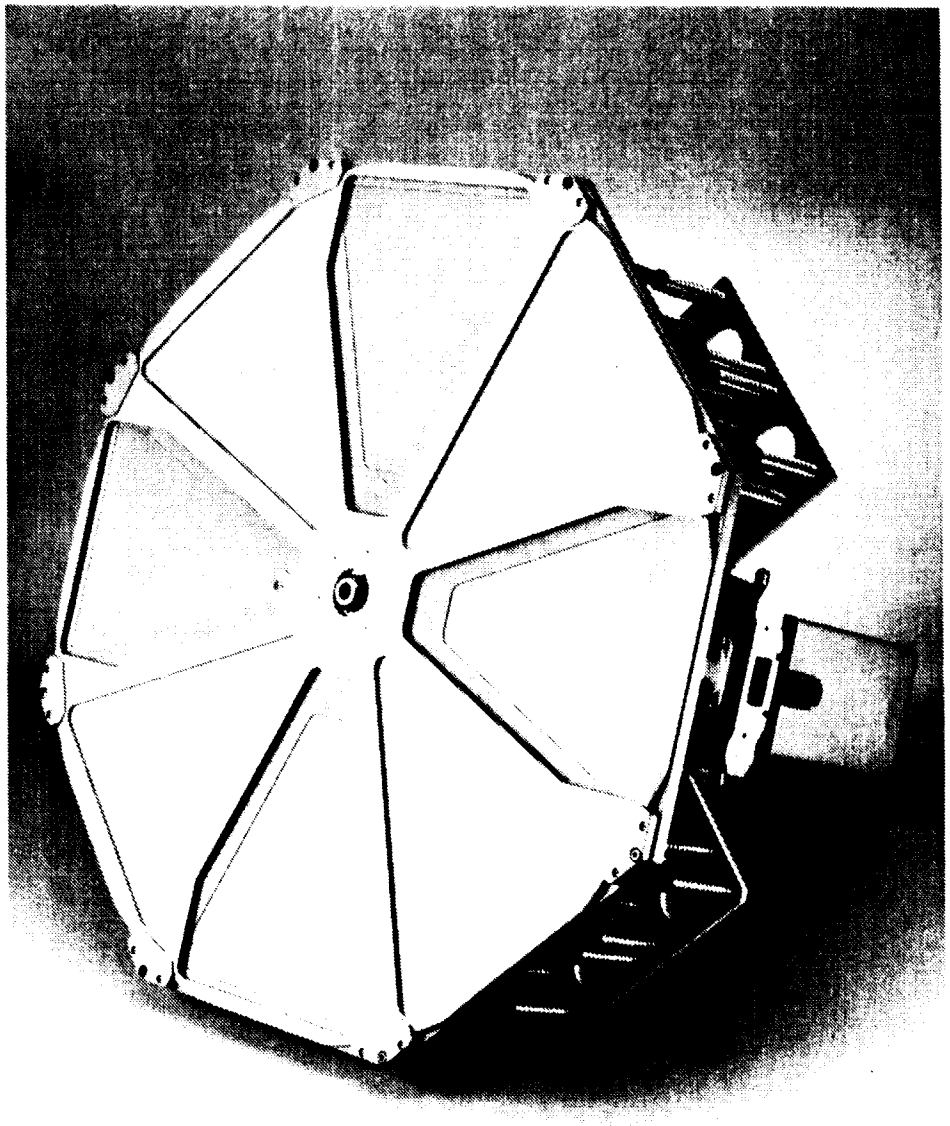

TYPE I HALF EXPLODED

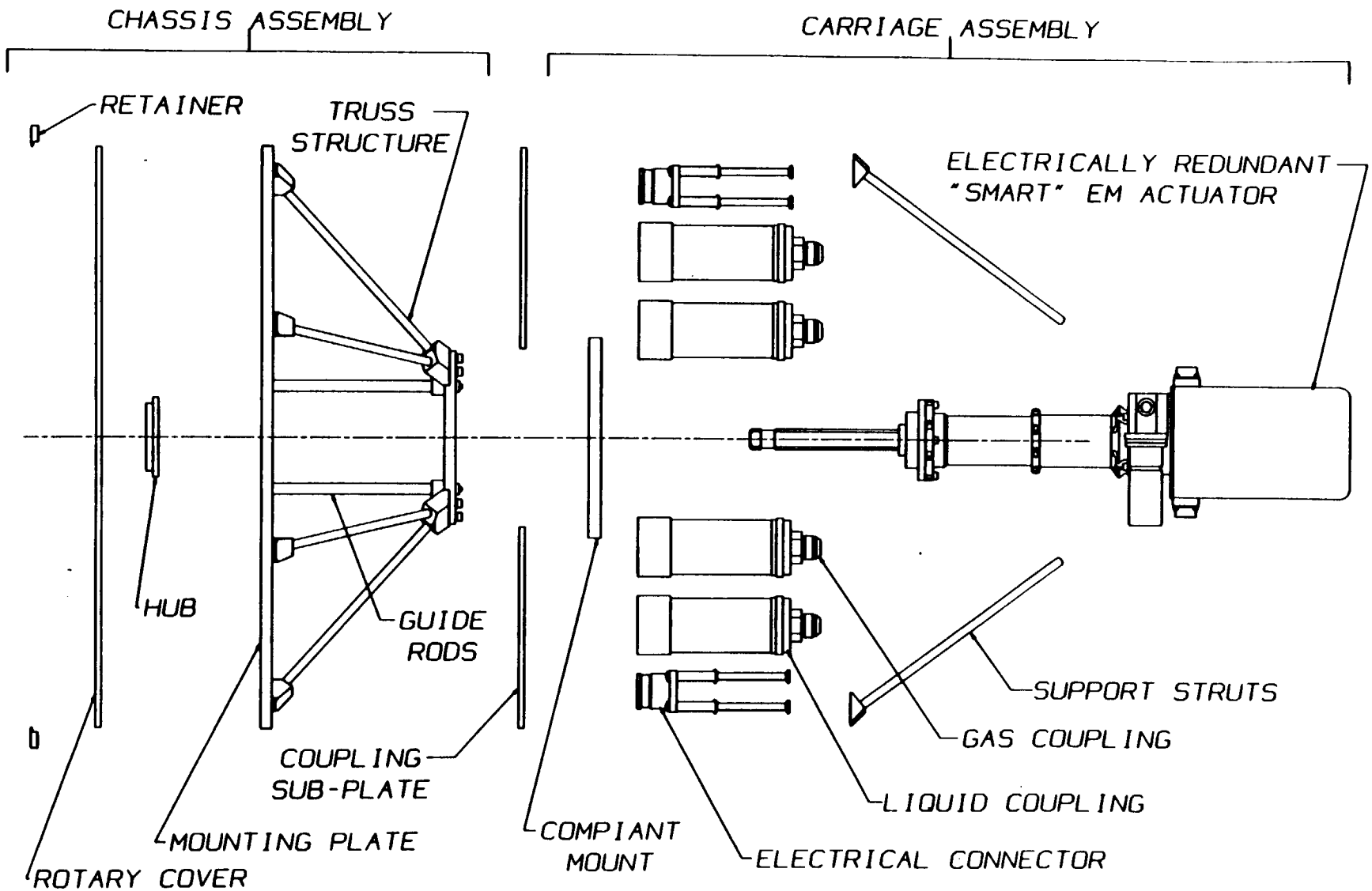

AUTOMATED FLUID INTERFACE SYSTEM

MOOG
SPACE PRODUCTS DIVISION

NASA
MARSHALL SPACE FLIGHT CENTER

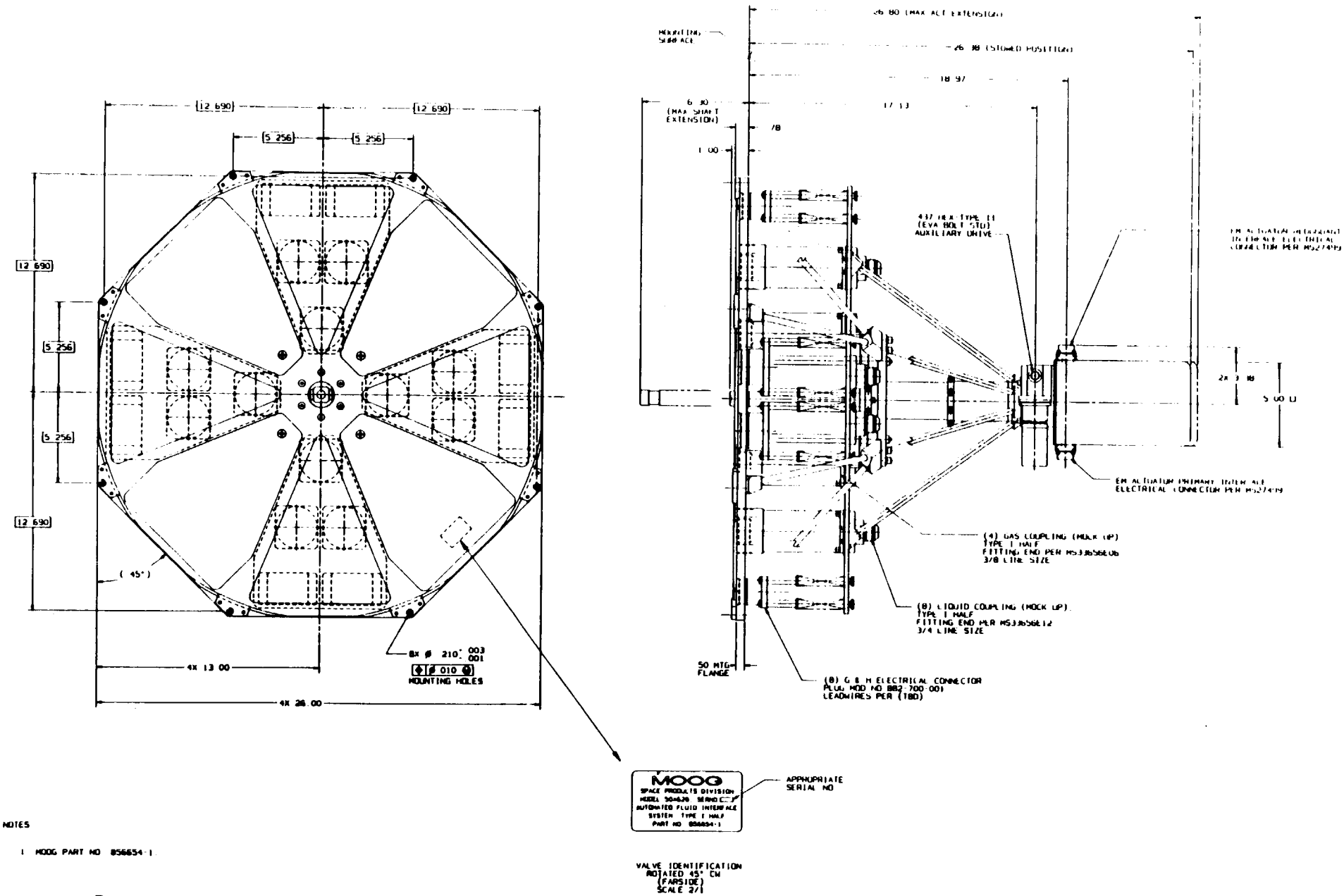

NOTES

1. MOOG PART NO 856654-1

ORIGINAL PAGE IS OF POOR QUALITY

MOOG

TANKER HALF TYPE I INSTALLATION MOD 50X629

E 94697 856653

ORIGINAL PAGE IS
OF POOR QUALITY

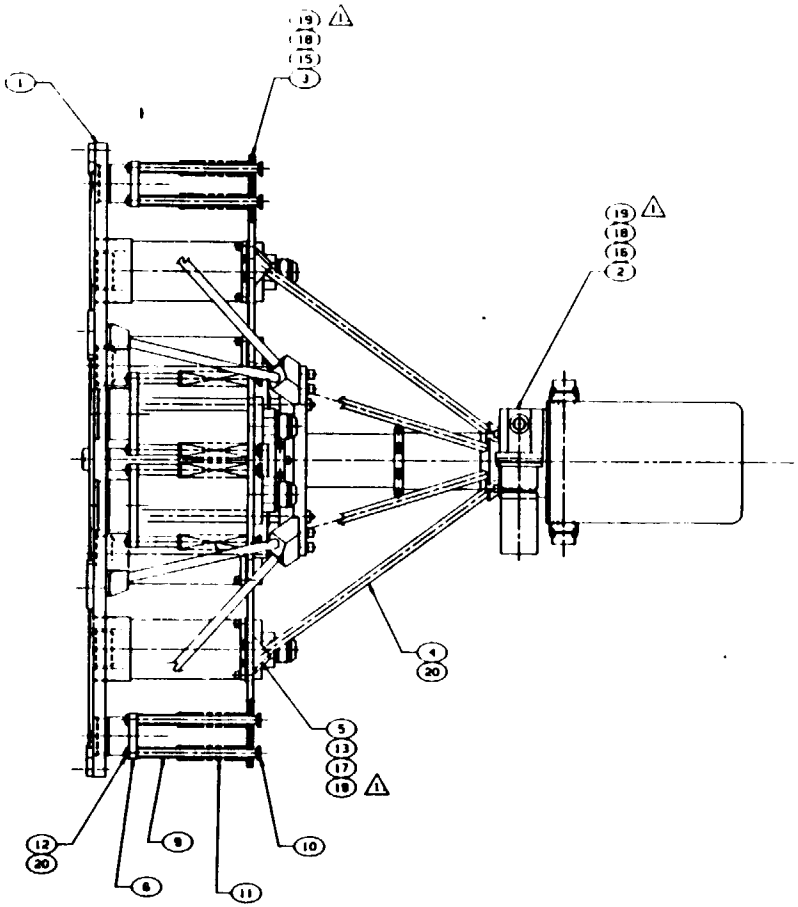

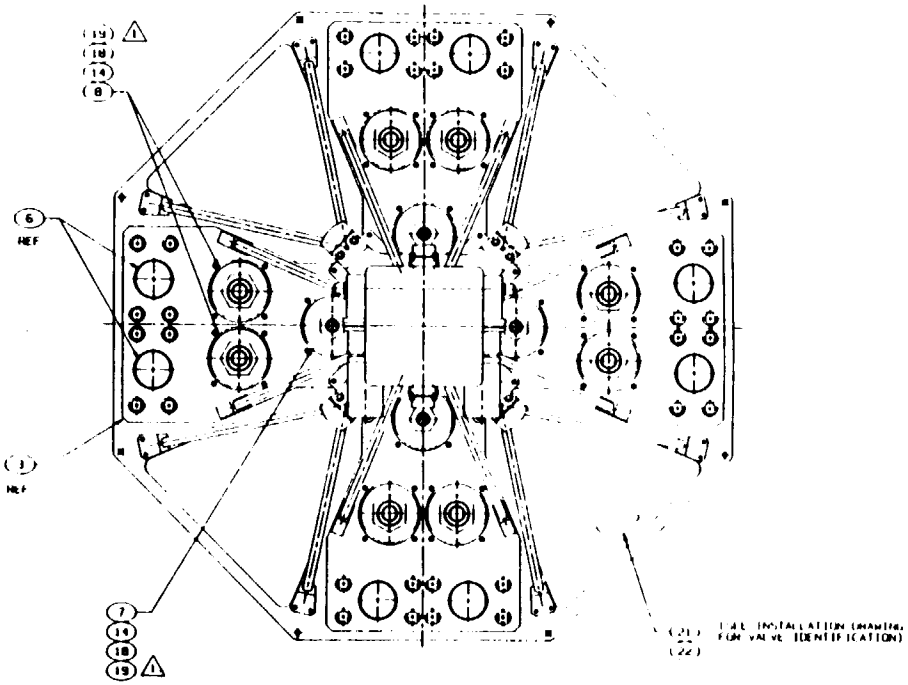

NOTES

1. SAFETY WIRE PER MS33540
2. PARAENTHETICAL IDENTITIES ARE FOR REFERENCE ONLY

20	A50743	COATING, COMPOUND	
1	B46[illegible]	NAMEPLATE	
20	[illegible]	RIVET AND SEAL (Ref. CHART)	
20	[illegible]	[illegible] (034 [illegible])	
16	[illegible]	WASHER, FLAT	
16	[illegible]	WASHER, FLAT	
4	A01407 316	SCREW, [illegible] HD CAP	
16	A01407 310	SCREW, [illegible] HD CAP	
40	A01407 308	SCREW, [illegible] HD CAP	
16	A01407 308	SCREW, [illegible] HD CAP	
12	A01576 310	NUT, [illegible]	
2	B46[illegible]	CENTRAL COMPONENT, FLAT	
2	B46[illegible]	ROD, COMPENSATOR	
2	B46[illegible]	SEAT, SPRING	
8	B46[illegible]	COVER, [illegible]	
4	B46[illegible]	COVER, [illegible]	
8	B46[illegible]	ELECTRICAL [illegible]	
5	B46[illegible]	[illegible]	
4	B46[illegible]	SUBASSEMBLY, [illegible]	
4	B46[illegible]	SUBASSEMBLY, [illegible]	
1	B46[illegible]	FRAME, [illegible]	
1	B46[illegible]	CHASSIS, [illegible]	
—	B46[illegible]	ASSEMBLY	

MOOG

TANKER HALF TYPE I
ASSEMBLY MOD 50X629

E 94697 856654

12

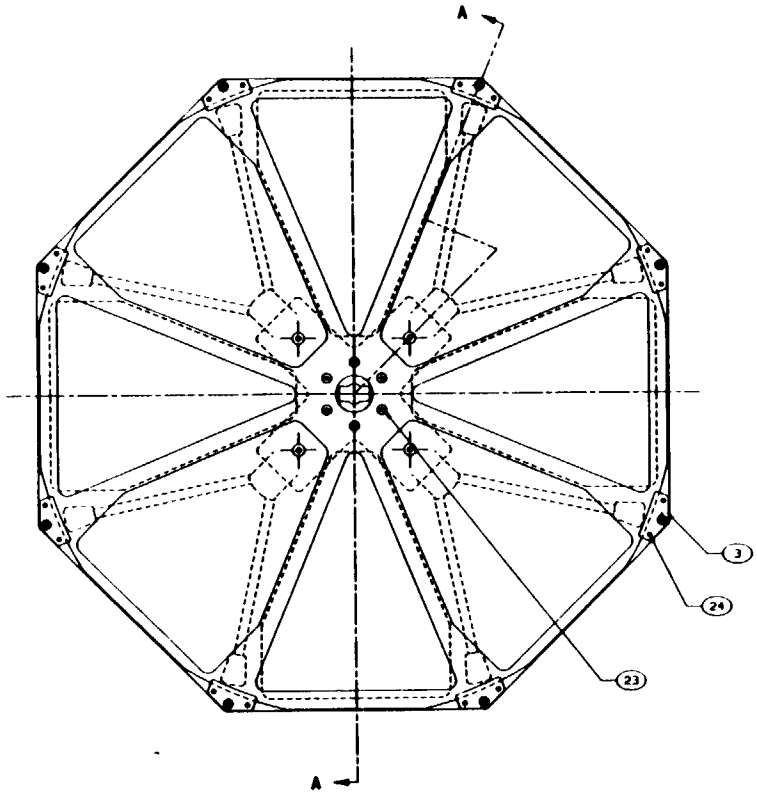

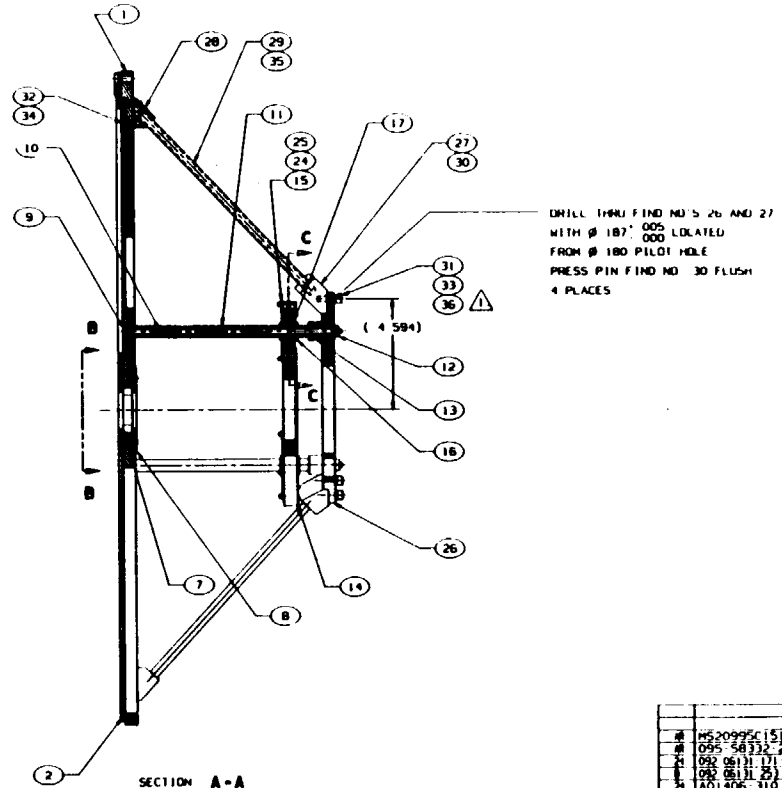

SECTION A-A

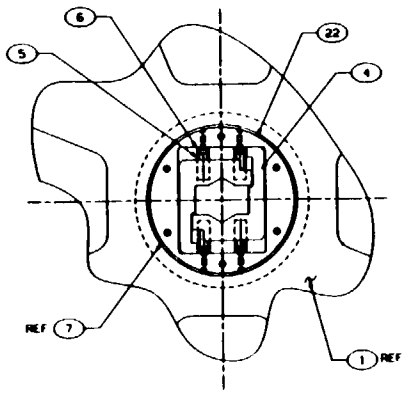

SECTION B-B
SCALE 1/1
(SHOWN WITH COVER REMOVED)

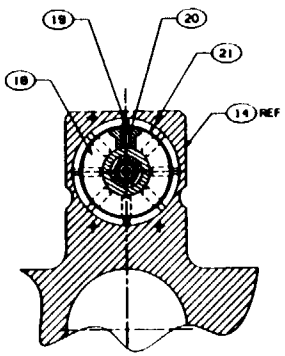

SECTION C-C
SCALE 1/1

NOTES

1. SAFETY WIRE PER MS33540
2. PARAENTHETICAL IDENTITIES ARE FOR REFERENCE ONLY

48	MS20995C1515	LOCKWIRE (094 20120C15)
48	095-58332-222	RET AND SEALING CMPD
24	092 06131 171 270 2	WASHER FLAT
8	092 06131 253 375 2	WASHER FLAT
24	A01406 310	SCREW SOC HD CAP
8	A01408 412	SCREW SOC HD CAP
4	MS16562 234	PIN SPRING (A05342 234)
8	866052 1	TRUSS SUPPORT
8	866051 1	BLOCK TRUSS TERMINAL
4	866050 1	BLOCK TRUSS TERMINAL
1	866049 1	PLATE TRUSS BASE
16	092 06131 113 187 2	WASHER FLAT
32	A01404 304	SCREW SOC HD CAP
6	A31384 212P	SCREW SOC HD FLAT
1	856576 1	HUB COMPLIANT
4	856575 1	RING RETAINER
32	856574 1	SPRING COMP HELICAL
32	856573 1	PIN DETENT
4	856572 1	DISK FLOTING
4	856571 1	BEARING SPHERICAL
4	856570 1	BEARING COMPLIANT JOINT
4	856569 1	PLATE RETAINER
1	856568 1	PLATE COMPLIANT MOUNT
4	856567 2	WASHER STOP
4	A31276 310	NUT HEX
4	856566 1	SLEEVE TENSION
4	856565 2	ROD TENSION
1	856564 1	NUT ROD
1	856563 1	RETAINER HUB
1	856562 1	RING GLIDE
4	856561 1	PIN SPRING SEAT
4	856560 1	SPRING COMP HELICAL
2	856559 1	SLIDE DETENT
8	856558 1	RETAINER COVER
1	856557 1	PLATE COVER
1	856556 1	PLATE MOUNTING TYPE I
	856652 1	CHASSIS TYPE I

856654	50E629

MOOG

CHASSIS TYPE I
ASSEMBLY MOD 50E629

E 94697 856652

PROPRIETARY RIGHTS

MOOG MODEL 50X625 ELECTROMECHANICAL ACTUATOR

- APPLICATION ENGINEERED VERSION OF AUC ACTUATOR DESIGNED AND BUILT UNDER MOOG IR & D

- INCORPORATES REDUNDANT CONTROLS AND MOTOR DRIVE ELECTRONICS DESIGNED AND BUILT UNDER MOOG IR & D

- ONLY INSTALLATION DRAWING WILL BE SUBMITTED TO NASA MSFC, DETAIL DRAWINGS AVAILABLE FOR REVIEW ON EYES ONLY BASIS

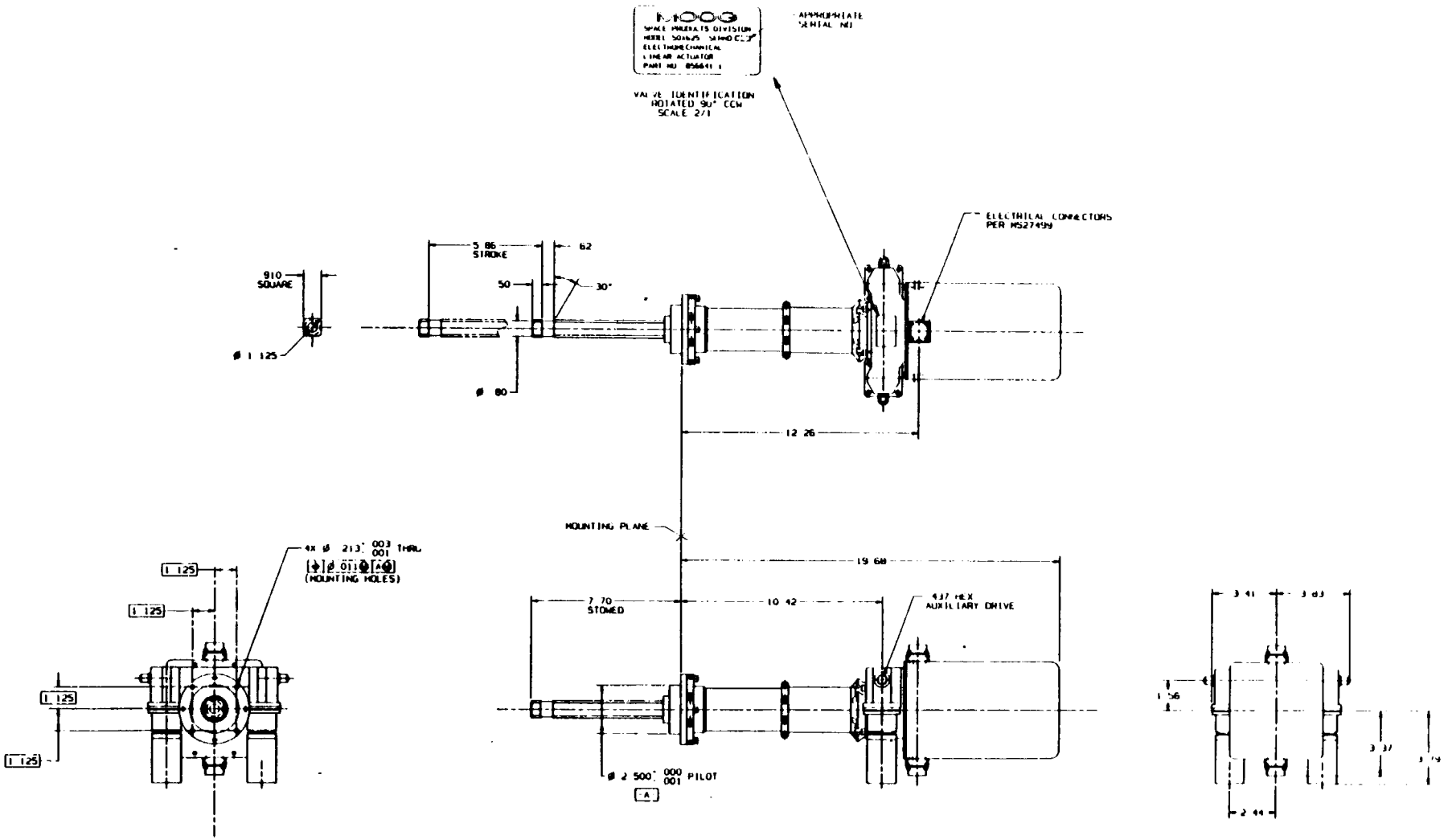

NOTES

1 SYSTEM SCHEMATIC SEE AFIS SYSTEM INTERCONNECT (EM ACTUATOR) DIAGRAM DRAWING 856736

MOOG
EM ACTUATOR INSTALLATION
MODEL 50X625
E 94697
856489

ORIGINAL PAGE IS OF POOR QUALITY

DC PERMANENT MAGNET GEARMOTORS

- TRW GLOBE TYPE BL PART #102A178-9
  - HIGH TEMP MOTOR COILS
  - BRAKKO 660 LUBRICANT IN GEARBOX
  - SPECIAL BRUSHES RATED FOR 1,000 HOURS VAC OPERATION
  - NO CADNIUM PLATING
  - MODIFIED OUTPUT SHAFT

	MAX CONTINUOUS	MAX REQ'D.	NO LOAD	STALL
MOTOR SPECS (28 VDC)				
SPEED (RPM)	6,500	6,800	8,000	0
TORQUE (OZ-IN)	5.0	4.1	0	27
CURRENT (AMPS)	1.4	1.2	0.25	8.9
GEARBOX SPECS				
OUTPUT SPEED (RPM)	126	123	145	0
OUTPUT TORQUE (IN-LBS)	14.7	12.0	0	79

"SMART ACTUATOR CONTROL DRIVE ELECTRONICS BOARD

- REDESIGNED DUE TO MOTOR CHANGE.
- ONE ENTIRE MOTOR DRIVE (LOGIC, 5 VDC POWER SUPPLY, POWER TRANSISTORS) INTEGRATED INTO EACH BOARD.
- NEW DESIGN HAS BEEN VERIFIED BY TESTING OF A BREADBOARDED UNIT USING AN EXISTING AUC ACTUATOR.
- ALL COMPONENTS ARE STANDARD AND AVAILABLE "OFF THE SHELF."
- ALL COMPONENTS ARE AVAILABLE IN JAN S CLASS IF REQUIRED IN FUTURE FLIGHT UNITS.
- DELIVERABLE PC BOARDS ARE 4 LAYER, WAVE SOLDRED PC UNITS.
- BOARDS ARE WELL SUPPORTED AND EASILY ACCESSIBLE FOR REMOVAL/INSTALLATION OR TESTING IN PLACE.
- BORDS ARE THERMALLY PROTECTED BY HEAT SINKING AND REDUNDANT HEATERS

"SMART" ACTUATOR CONTROL DRIVE ELECTRONICS BOARD

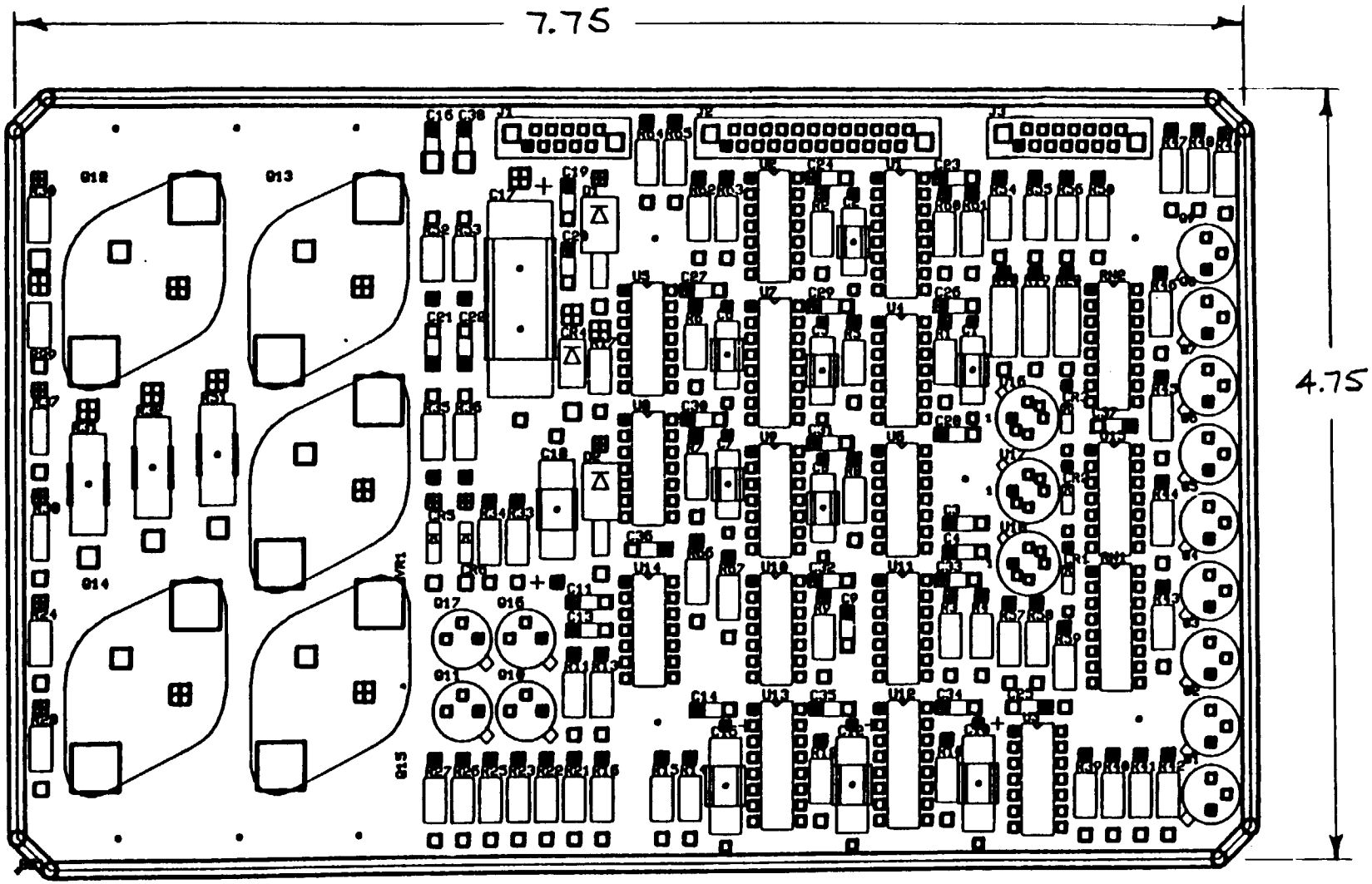

POWER AND CONTROL REQUIREMENTS

- POWER (WATTS @ 28 VDC):

	PEAK	AVERAGE
- ENGAGING/DISENGAGING	34	28
- STANDBY	5	5
- HEATERS (SEPARTE SOURCE)	10	1

- CONTROL (5 VDC CONTINUOUS INPUT SIGNAL)
  - "ENGAGE"
  - "DISENGAGE"
  - "ENABLE/RESET" (ABSENCE = "STOP")

OUTPUT DATA

- STATUS SIGNALS (5 VDC BINARY OUTPUT SIGNAL)

  - "ENGAGED"
  - "DISENGAGED"
  - "STOPPED"
  - "SPILLAGE VENT"
  - "INITIAL CONTACT"
  - "LOCKED"
  - "UNLOCKED"
  - "ENGAGEMENT IN PROCESS"
  - "DISENGAGEMENT IN PROGRESS"
  - "HEATERS ON"

- TEMPERATURE SENSORS (ANALOG THERMOCOUPLE SIGNALS)

  - MOTOR
  - HEATER
  - IC CHIP FIELD
  - POWER TRANSISTORS

ALL	A	ADD NOTES	08/08/90
4 5	B	CONNECT WIRING FOR SWITCH SWAP	08/01/90

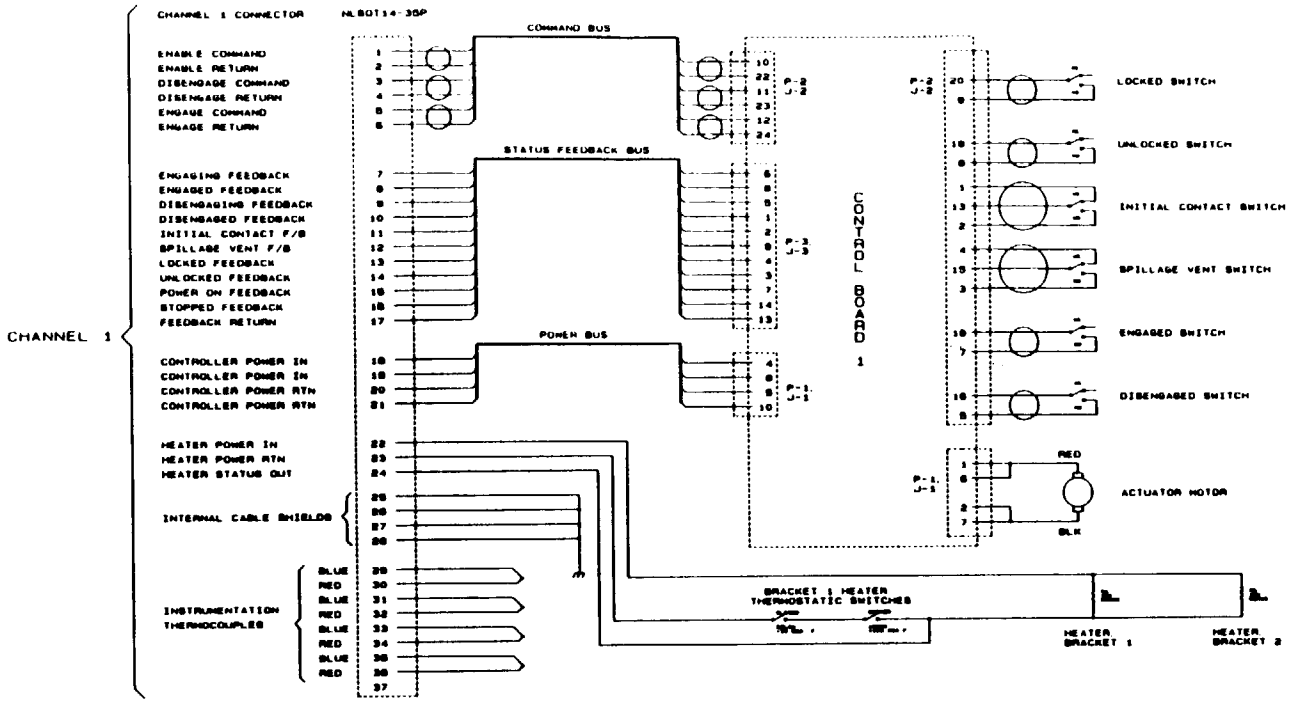

NOTES

1 CIRCLED WIRE GROUPS REPRESENT TWISTED PAIRS OR TRIPLES

2 WIRES SHOWN AS BUBBLE REPRESENT INDIVIDUAL WIRE BUNDLES

3 USE 24 GAGE WIRE FOR ALL SIGNAL WIRING HEATER WIRING MAY ALSO BE 24 GAGE

4 POWER WIRING IS 22 GAGE THIS INCLUDES THE MOTOR OUTPUT WIRING

5 WIRE TYPE SHALL BE (TBD)

6 ALL CRIMP CONNECTIONS SHALL BE PER MIL - (TBD)

7 ALL SOLDERED CONNECTIONS SHALL BE PER MIL-STD 454

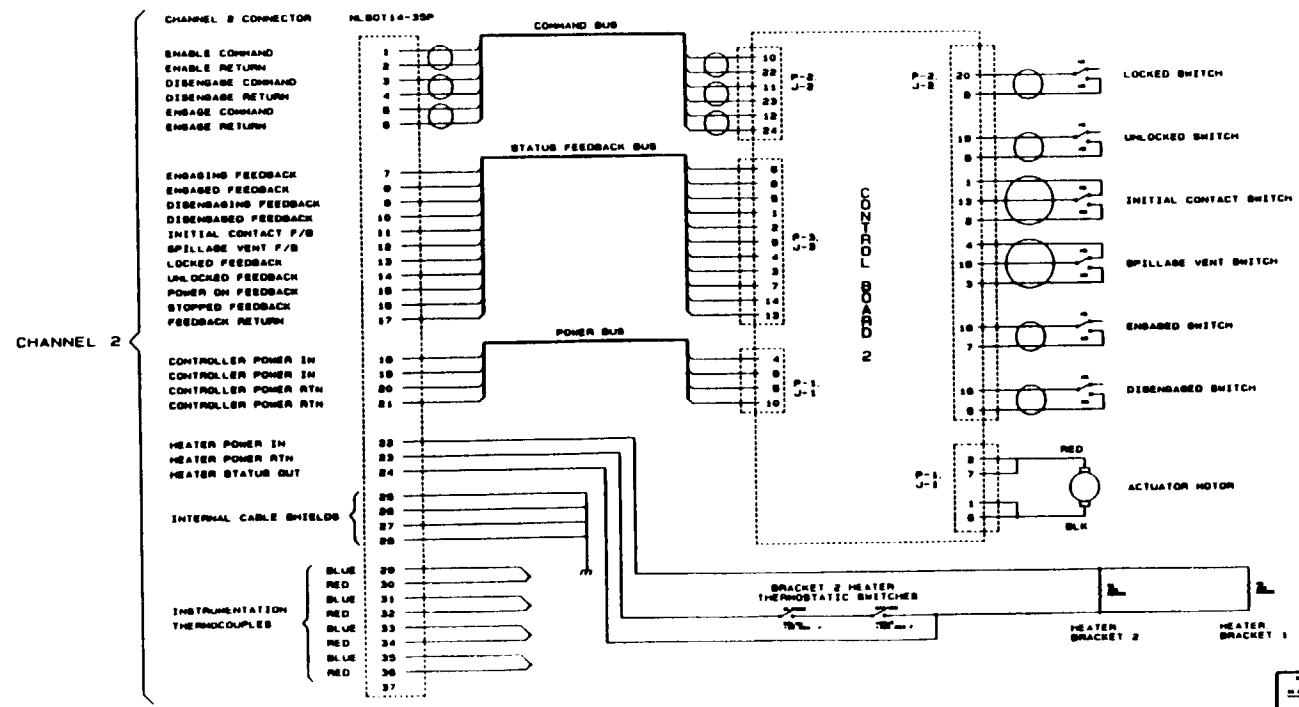

MOOG

AFIS SYSTEM INTERCONNECT DIAGRAM

E 94697

ORIGINAL PAGE IS OF POOR QUALITY

31

AFIS TYPE II HALF

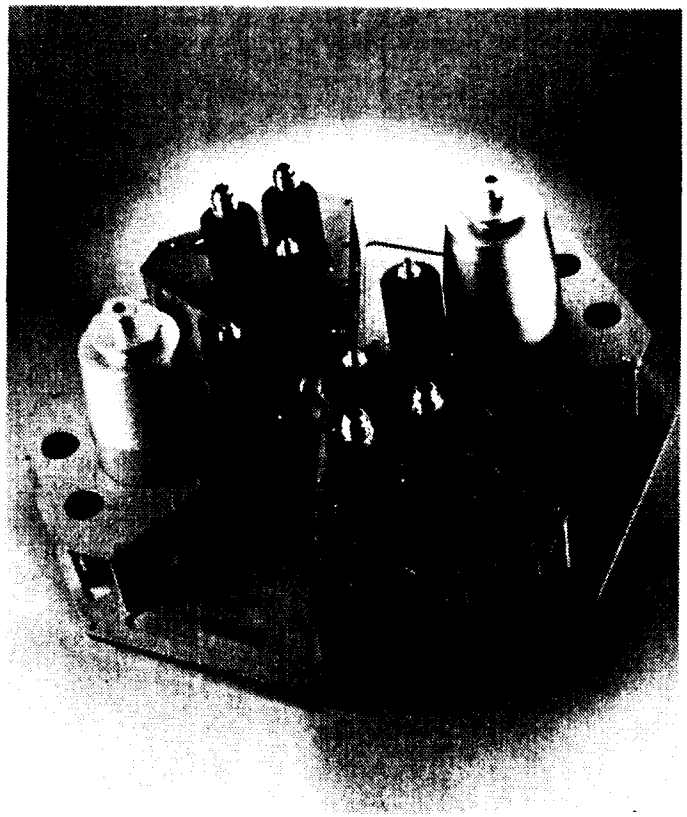

ROTARY COVERS PROTECT COUPLINGS

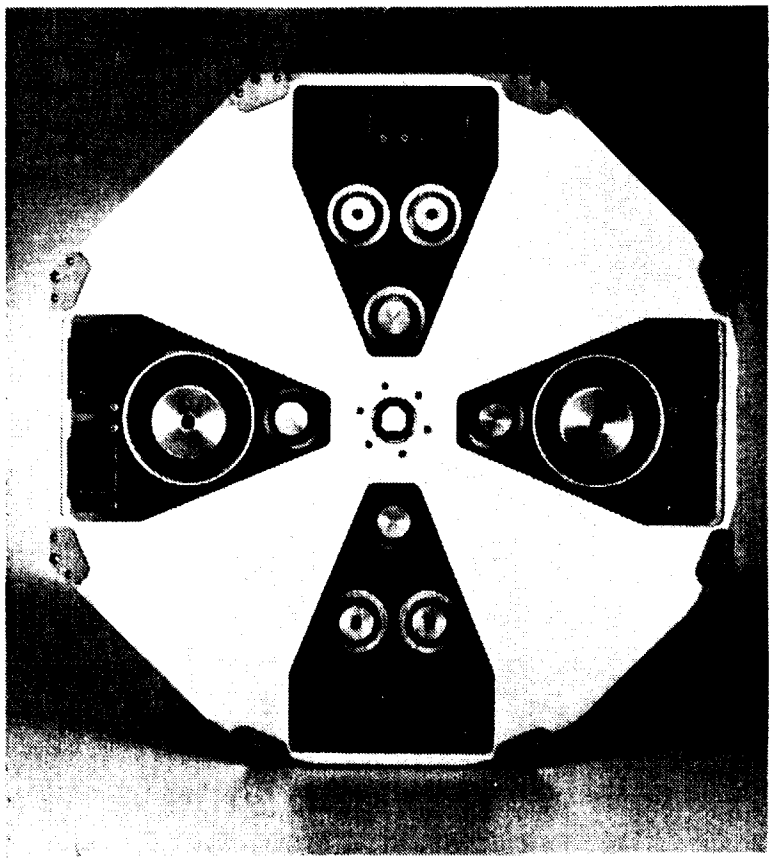

OPEN

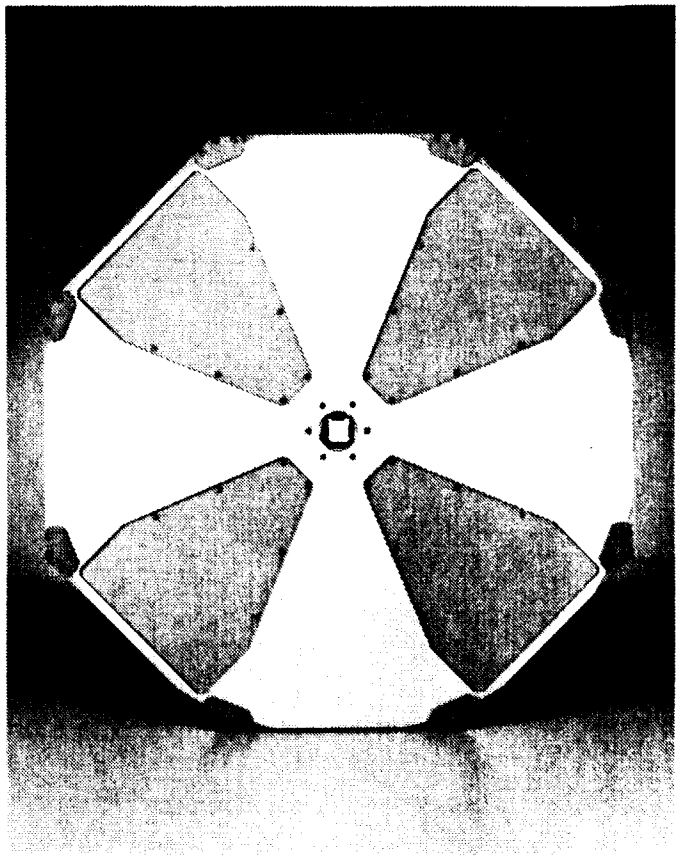

CLOSED

TYPE II HALF EXPLODED

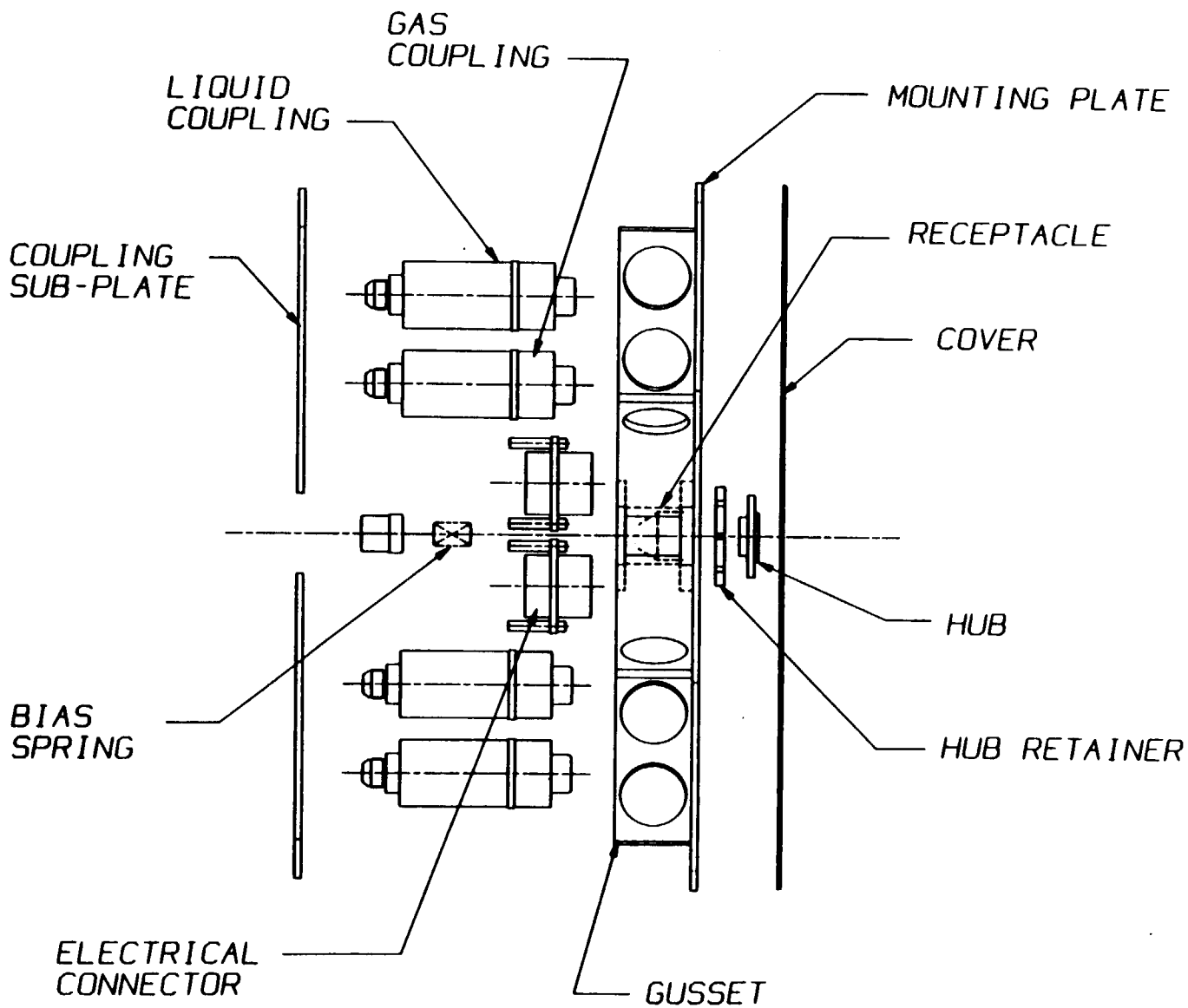

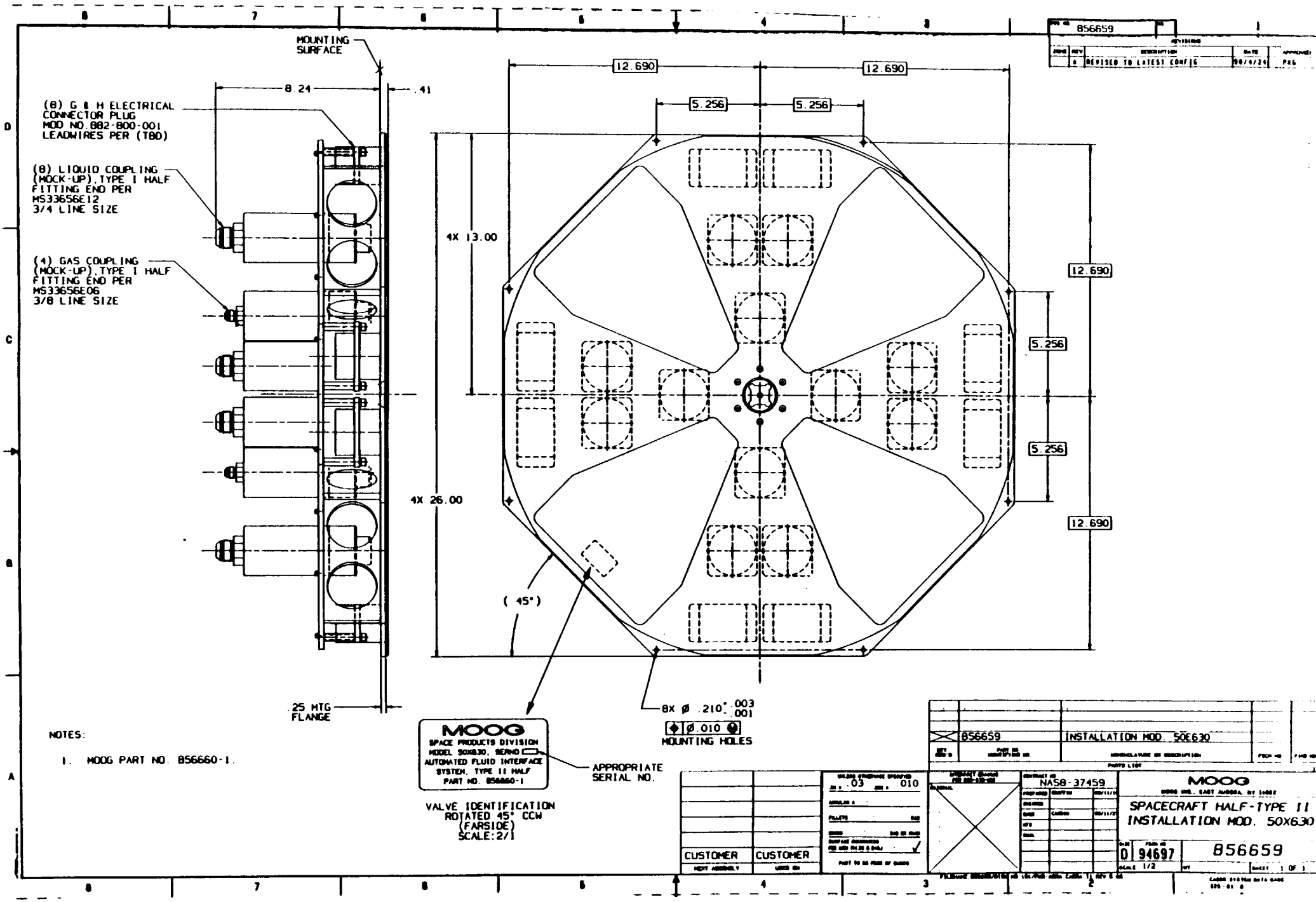
MOUNTING SURFACE
8.24
.41
(8) G & H ELECTRICAL CONNECTOR PLUG MOD NO.882-800-001 LEADWIRES PER (TBD)
(8) LIQUID COUPLING (MOCK-UP),TYPE I HALF FITTING END PER MS33656E12 3/4 LINE SIZE
(4) GAS COUPLING (MOCK-UP),TYPE I HALF FITTING END PER MS33656E06 3/8 LINE SIZE
.25 MTG FLANGE
12.690
12.690
5.256
5.256
4X 13.00
4X 26.00
12.690
5.256
5.256
12.690
(45°)
8X Ø .210 +.003 -.001
Ø.010
MOUNTING HOLES
MOOG
SPACE PRODUCTS DIVISION
MODEL 50X630, SERIAL
AUTOMATED FLUID INTERFACE SYSTEM, TYPE II HALF
PART NO. 856660-1
APPROPRIATE SERIAL NO.
VALVE IDENTIFICATION ROTATED 45° CCW (FARSIDE) SCALE:2/1
NOTES:
1. MOOG PART NO. 856660-1.
856659
REVISED TO LATEST CONFIG
856659
INSTALLATION MOD. 50E630
CUSTOMER
CUSTOMER
NAS8-37459
MOOG
SPACECRAFT HALF-TYPE II
INSTALLATION MOD. 50X630
D 94697
856659
SCALE 1/2
SHEET 1 OF 1

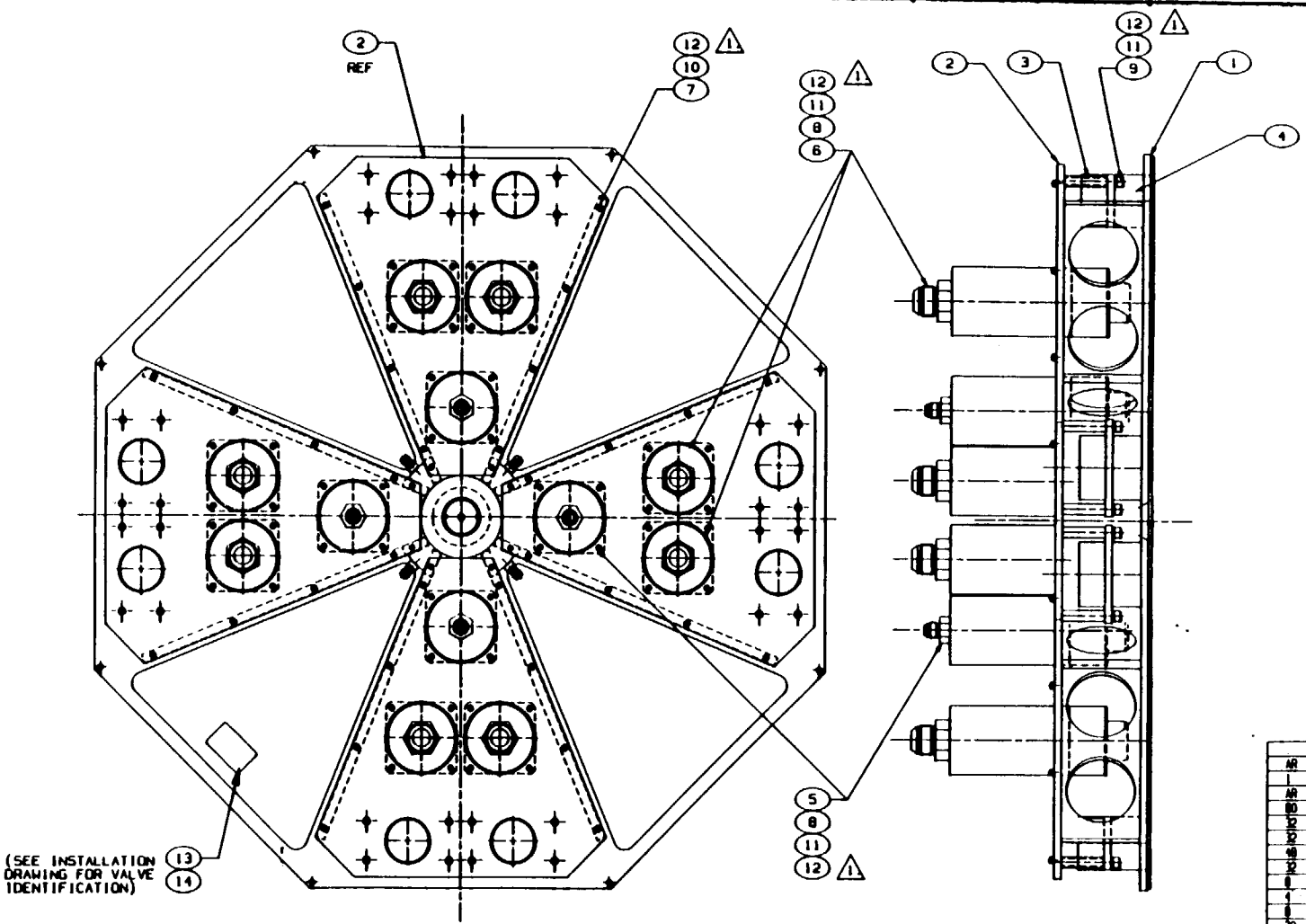

AR	A20743	COATING COMPOUND	14
1	856729-1	NAMEPLATE	13
AR	MS20995C15	LOCKWIRE (MS20995C15)	12
80	06131-195-313-2	WASHER, FLAT	11
32	06131-144-226-2	WASHER, FLAT	10
32	NAS1351C030H034P	SCREW SOC HD CAP(090-42559C030H034P	9
48	A01407-308	SCREW SOC HD CAP	8
32	A01405-310	SCREW SOC HD CAP	7
8	856663-1	COUPLING, LIQUID (MOCK-UP)	6
4	856662-1	COUPLING, GAS (MOCK-UP)	5
8	856661-1	ELECTRICAL CONNECTOR, RCPT	4
32	856599-1	SPACER, ELECT CONN	3
1	856598-1	SUB-PLATE, COUPLING, TYPE II	2
1	856658-1	CHASSIS, TYPE II ASSY	1
	856660-1	ASSEMBLY	

NOTES:

1. SAFETY WIRE PER MS33540.
2. PARENTHETICAL IDENTITIES ARE FOR REFERENCE ONLY.

ZONE	REV	DESCRIPTION	DATE	APPROVED
	A	REVISED TO LATEST CONFIG	90/4/24	PEG

856660

CUSTOMER NEXT ASSEMBLY | CUSTOMER USED ON

NAS8-37459

MOOG

SPACECRAFT HALF-TYPE II ASSEMBLY MOD. 50X630

D 94697 856660

SCALE 1/2

26

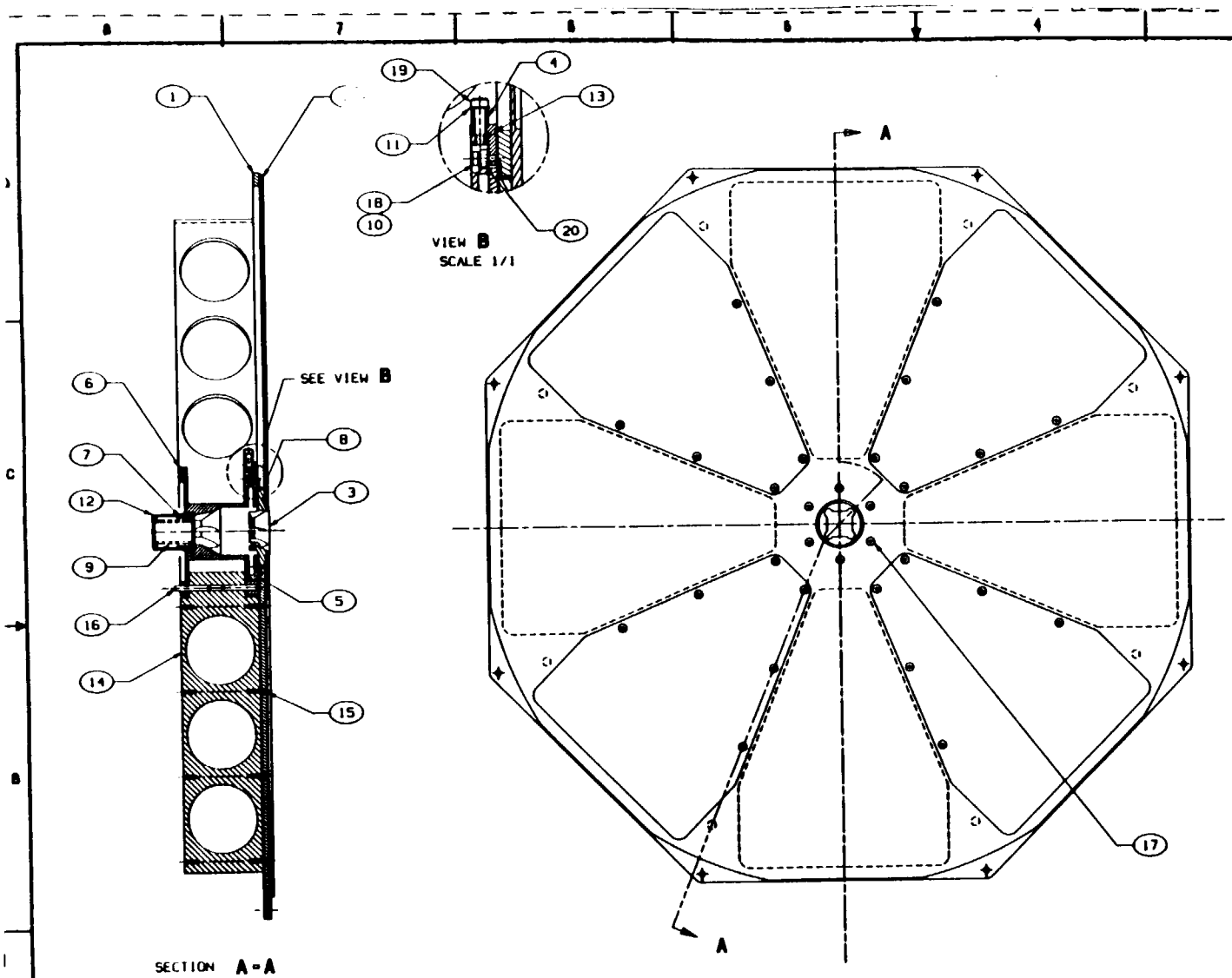

4	856723-1	BEARING, BALL	29440	20
2 4	A05508-013	SCREW, SHOULDER, SOC HD	00141	19
4	A05508-001	SCREW, SHOULDER, SOC HD	00141	18
6	A31384-210P	SCREW, SOC HD FLAT		17
16	MS9390-340	PIN, DOWEL (093-54745-340)		16
32	A31384-208P	SCREW, SOC HD FLAT		15
8	856597-1	GUSSET, SUPPORT		14
4	856596-1	SLIDE, COVER DETENT		13
1	856595-1	RETAINER, SPRING SEAT		12
4	NAS620C10L	WASHER, FLAT (092-45353C010L)		11
4	NAS620C4	WASHER, FLAT (092-45353C004L)		10
1	856593-1	SPRING COMP HELICAL		9
1	856562-1	RING, GLIDE		8
1	856592-1	SPRING SEAT, BIASING		7
1	856591-1	HUB, ENGAGEMENT		6
1	856590-1	RETAINER, HUB		5
4	856589-1	SPRING COMP HELICAL		4
1	856588-1	HUB, COVER		3
1	856587-1	PLATE, COVER, TYPE II		2
1	856586-1	PLATE, MOUNTING, TYPE II		1
	856658-1	ASSEMBLY		

PARTS LIST

NOTES:

1. PARENTHETICAL IDENTITIES ARE FOR REFERENCE ONLY.
2. VENDOR ITEM. SEE SPECIFICATION CONTROL DRAWING.

856660 NEXT ASSEMBLY | 50X630 USED ON

NAS8-37459

MOOG
MOOG INC. EAST AURORA, NY 14052

CHASSIS TYPE II
ASSEMBLY MOD 50X630

D 94697 | 856658

SCALE 1/2 | SHEET 1 OF 1

ACTUAL WEIGHTS

(LBM)	AFIS ONLY	WITH CONNECTOR MOCK-UPS		
		BI-PROP	MONOPROP	CRYOGENIC
Type I (Tanker) Half	36.6	70.6	67.2	73.4
Type II (Spacecraft) Half	17.2	48.8	45.6	62.4
Total	53.8	119.4	112.8	135.8

- CARRIES UP TO 1 1/2 TIMES ITS OWN WEIGHT IN COUPLINGS.
- WEIGHT BIASED 2:1 AWAY FROM SPACECRAFT HALF.
- FLEX HOSES AND ELECTRICAL CABLES NOT INCLUDED.

MATERIAL SELECTION SUMMARY

MATERIAL	USE	SURFACE TREATMENT
Aluminum Alloy 6061-T6 or T651 Per QQ-A-200/8 or QQ-A-225/8 or QQ-A-250/11 or QQ-A-200/11	Actuator Housing, Components	• Anodize per MIL-A-8625 Type II, Class 1 or Class 2 • Zinc Chromate Primer per TT-P-1757 (Threaded insert holes) • Hard Anodize per MIL-A-8635, Type III, Class I (Hot Water Sealed) • Electrofilm 92109) per MIL-L-46010 (MOS_2 Molydisulfide Dry Film Lube)
Bronze per MIL-B-994	Worm Gear	Nickel Plate per MIL-C-26074 (.0003 to .0005 THN)
CRES 303 per ASTM A582	Worm, Shoulder Screw	• Electrofilm (2109) per MIL-L-46010 (MOS2 Molydisulfide Dry Film Lube) • Passivate per QQ-P-35
CRES, Type 15-5 PH per AMS-5659 Heat Treat per MIL-H-6875, Cond H1075 or H1025	Drive Shaft, Thrust Washer, Actuator Shaft, Rollers, Rod	• Passivate per QQ-P-35 • Titanium Nitride Coating per EP3566
Teflon TFE per AMS-3651	Glide Ring	N/A
Teflon TFE per AMS-3756 (75% PTFE/25% Glass)	Journal Bearings, Washers	N/A
CRES, Type 302 or 316 per QQ-S-763 or QQ-S-766	Spacer, Cam	Passivate per QQ-P-35
CRES, Type 17-7PH, Condition C per AMS-5673 or AMS-5678 Heat Treat to CH900 per MIL-H-6875.	Springs	Finish Process per EP 3204
CRES A-286	Fasteners, Clinch Nuts	Silver Plate
Aluminum Bronze per AMS-4635	Journal Bearings, Index Bushing	N/A

MATERIAL SELECTION SUMMARY

MATERIAL	USE	SURFACE TREATMENT
Fiber, Commercial, Blank Vulcanized per MIL-F-1148A Change CH	Washers Washers	N/A
Brass Alloy, Type 377 per QQ-S-626	Shear Pin	N/A
Threaded Locking Compound per MIL-S-46163 Type II or M	Thread Locking	N/A
CRES per FF-S-86	Capscrews	Passivate per QQ-P-35
Copper Alloy per MIL-W-81044/B	Wire	Silver Coated
Solder per QQ-S-571	Solder	N/A
Tefzel (Dupont ETFE Floropolmar)	Cable Tie	N/A
Irradiated Polyolefin Tubing per MIL-R-46846 Type V and MIL-K-817	Shrink Tubing	N/A
Epoxy	Attach Nameplate	N/A
Aluminum Tooling Plate (MIC6)	Sub-Plates, Structure, Covers	• Anodize per MIL-A-8625 Type II, Class 2 • Zinc Chromate Primer per TT-P-1757 (Threaded insert holes)
Teflon (TFF) per MIL-R-8791	Glide Ring, Compliant Joint Bearing	N/A
CRES 18-8 (Type 302/304) per AMS-7245	Threaded Inserts	N/A
CRES 440C	Ball Bearing	N/A
G10 Glass Epoxy	Insulators	N/A

NOTE:

1) Motor and electronics materials not representative of flight unit thus not included here. All materials used are compatiable with thermal vacuum ground testing.

TANKER/SPACECRAFT SIMULATOR

- FRAME
  - SIMULATES TANKER/SPACECRAFT STRUCTURES
  - SIMULATES DOCKING MECHANISM
  - ADJUSTABLE TANKER/SPACECRAFT MISALIGNMENT

- CONTROL BOX
  - MANUAL INTERFACE FOR AFIS
  - INPUT/OUTPUT VISUAL INDICATORS
  - FEEDTHROUGH FOR REMOTE CONTROL
  - SIMULATES TANKER POWER BUS
  - (2) REMOTE EMERGENCY STOP BUTTONS PROVIDED FOR SAFETY

- FLEX HOLES
  - FOR LIQUID AND GAS COUPLING MOCK-UPS
  - ADDRESS INDUCED LOADING ISSUE
  - DEMONSTRATES POTENTIAL ROUTING SCHEMES

31

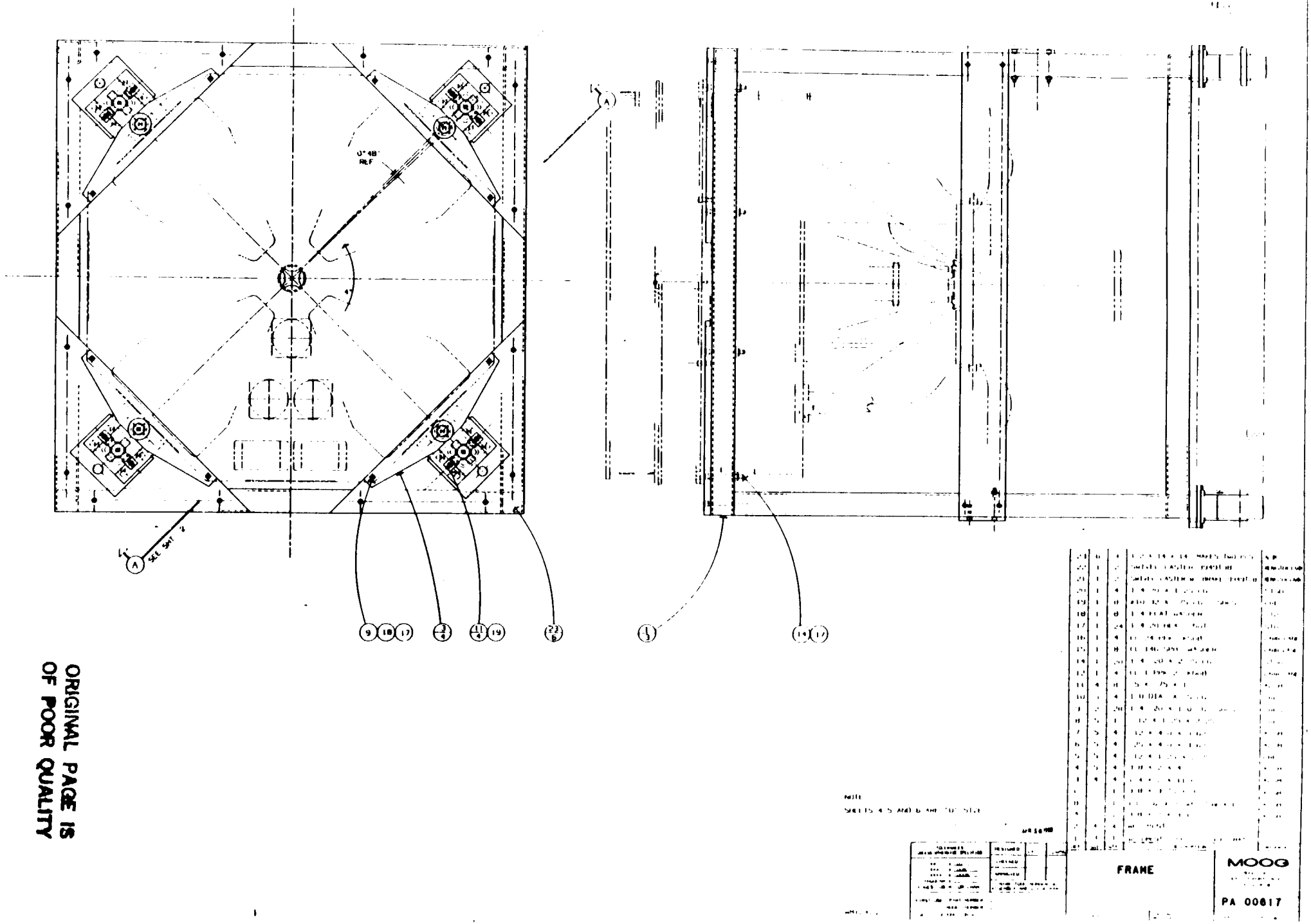

ORIGINAL PAGE IS
OF POOR QUALITY

32

ORIGINAL PAGE IS
OF POOR QUALITY

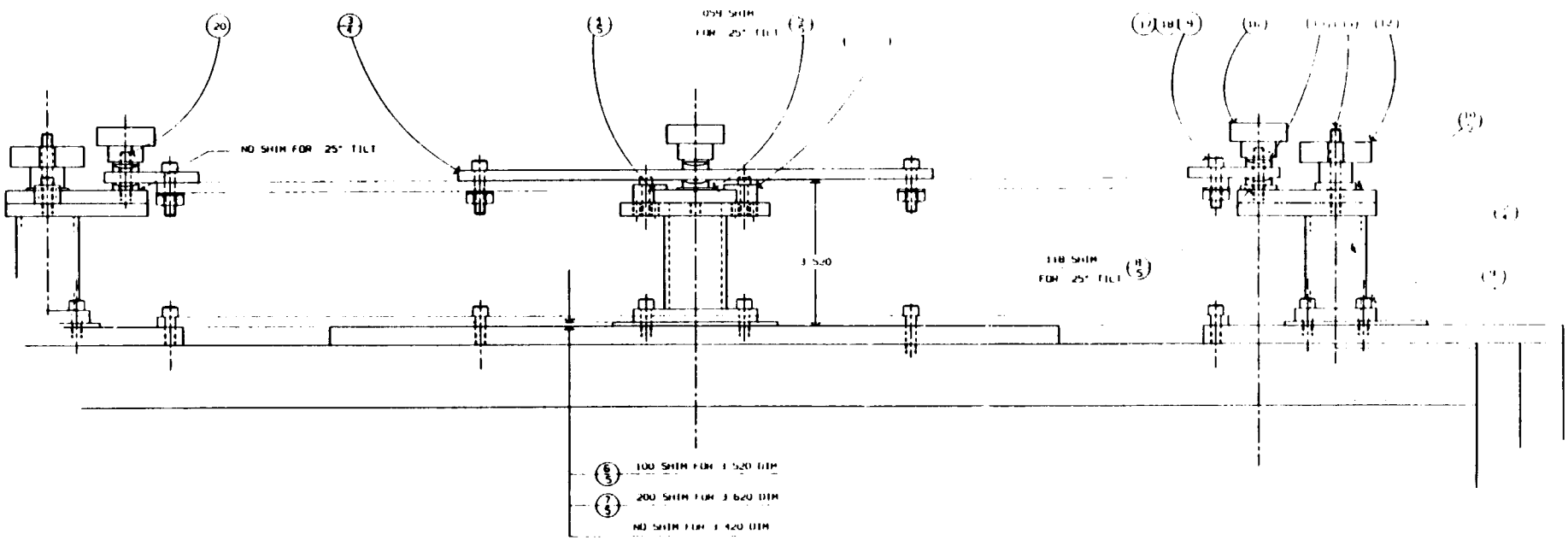

SECTION (A)
FIGURE 1

DETAILS

MOOG

PA 00617

AFIS CONTROL BOX

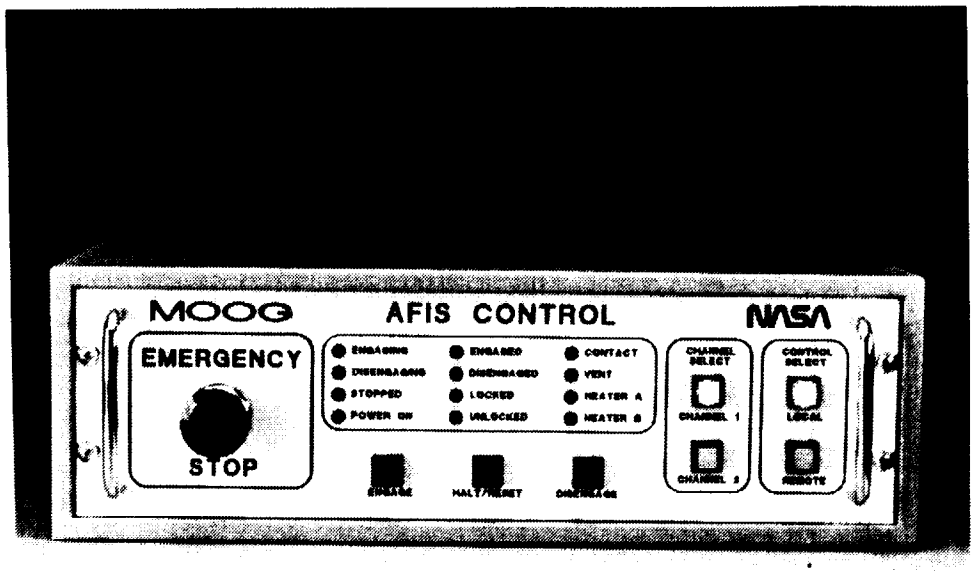

FUNCTONAL DESCRIPTION: TANKER/SPACECRAFT DOCKING

- AFIS IS POWERED DOWN AND PASSIVE
- NO PHYSICAL CONTACT DURING DOCKING
- 2.2" MINIMUM CLEARANCE BETWEEN AFIS HALVES
- DOCKING MECHANISM POSITIONS AFIS WITHIN MISALIGNMENT ENVELOPE:
  - ± .025° ANGULAR
  - ± 0.10" X, Y, Z OFFSET
  - ± 0.40° ROTARY

AFIS MISALIGNMENT ENVELOPE

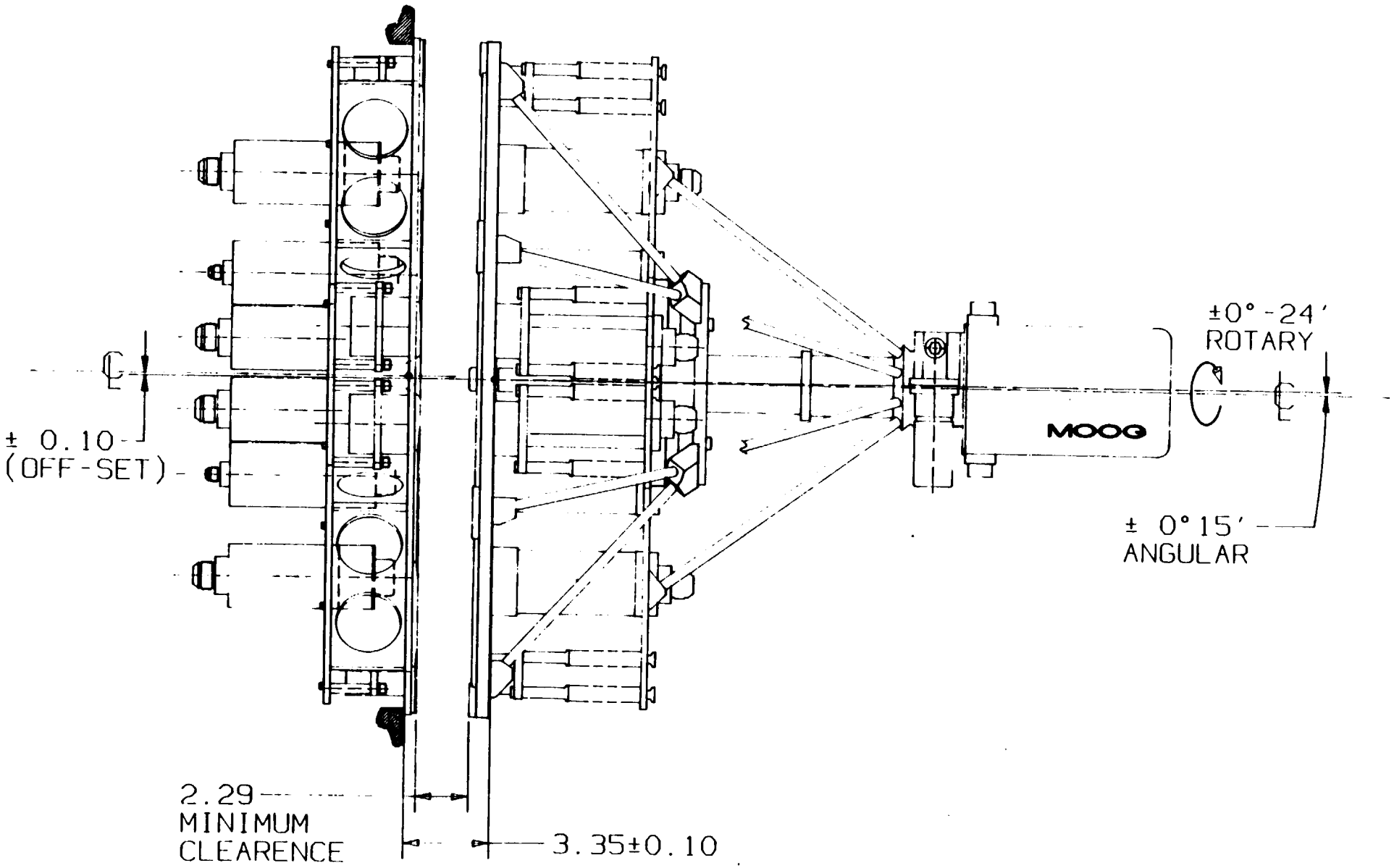

AFIS WITH TPDM

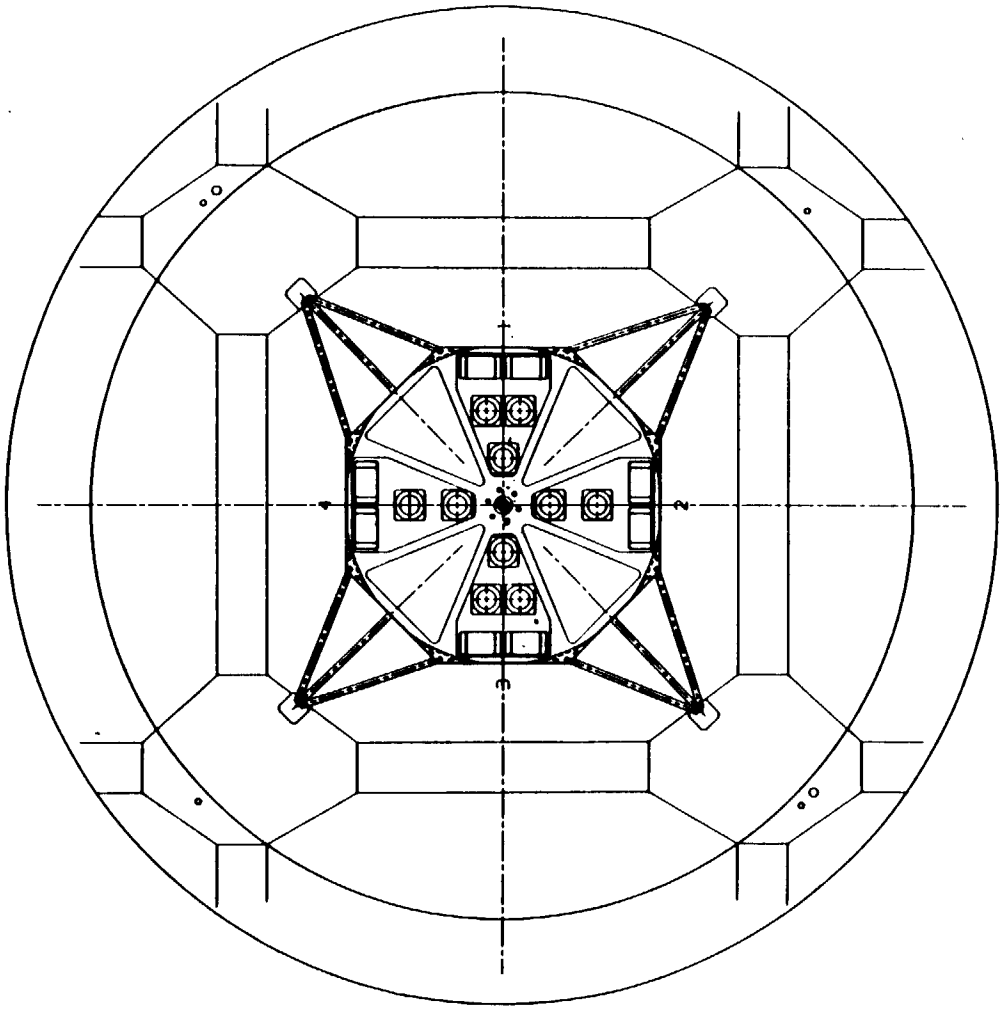

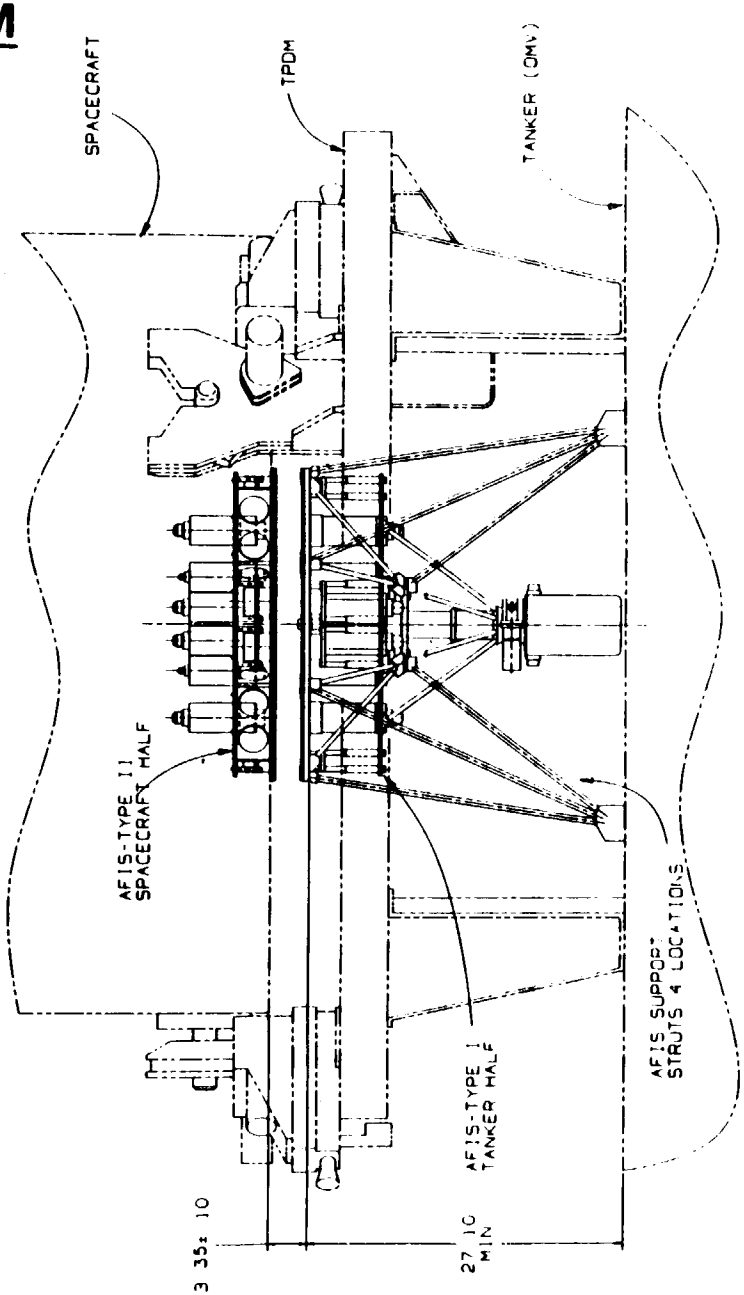

AUTOMATED FLUID INTERFACE SYSTEM

MOOG
SPACE PRODUCTS DIVISION

NASA
MARSHALL SPACE FLIGHT CENTER

AFIS ENGAGEMENT/DISENGAGEMENT SEQUENCE

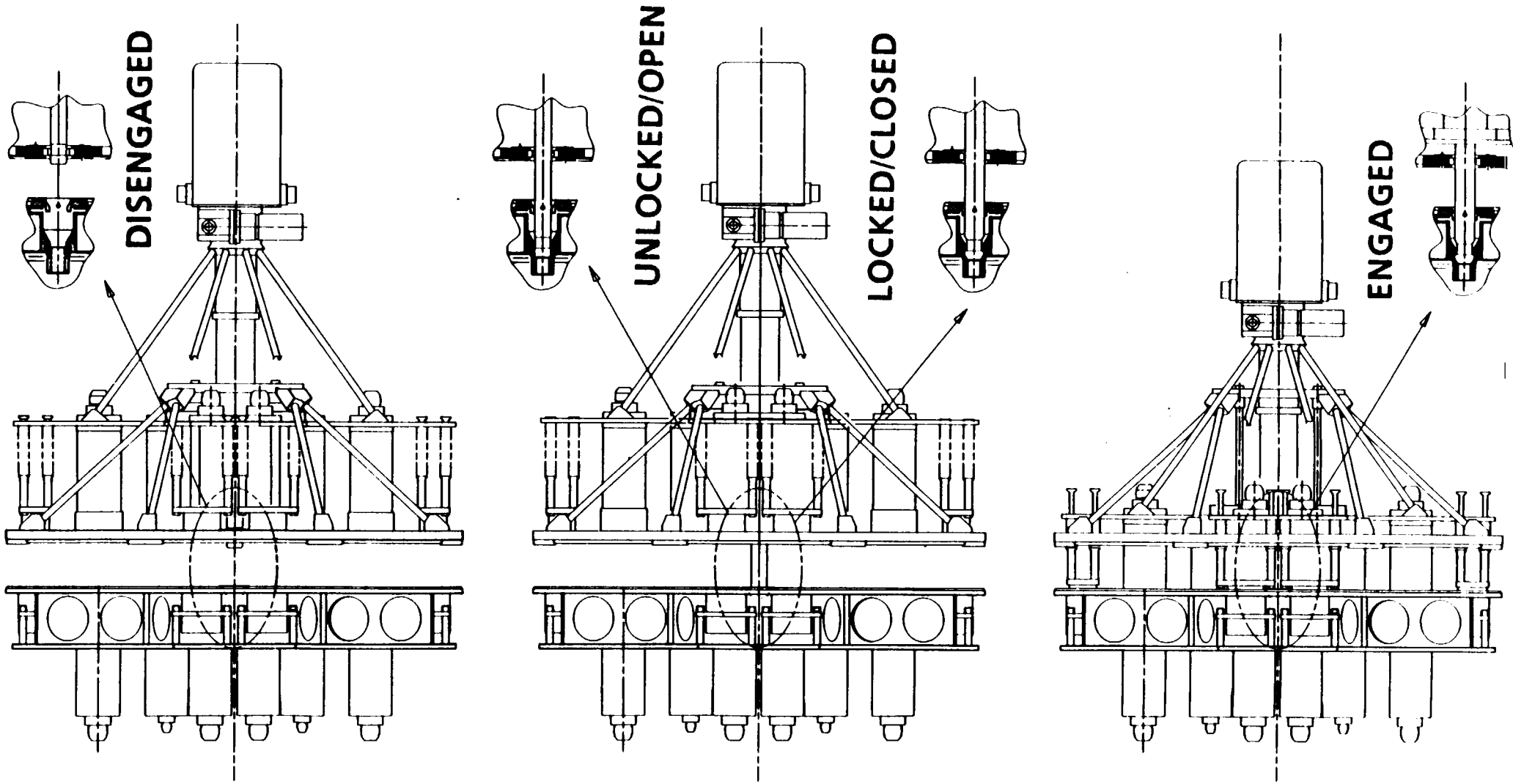

FUNCTIONAL DESCRIPTION; ENGAGEMENT OF ELECTRICAL CONNECTORS

- ISSUE "ENABLE" AND COMMANDS TO AFIS IN "DISENGAGED" POSITION.
- ACTUATOR ROD BEGINS TO EXTEND RELEASING FLOATING CARRIAGE.
- ACTUATOR ROD TRANSLATES ACROSS INTERFACE TO TAPERED HOLE IN TYPE II COVER.
- CARRIAGE IS PARTIALLY ALIGNED AS ROD ENTERS HOLE IN COVER.
- ACTUATOR ROD CONTINUES TO TAPERED HOLE IN RECEPTACLE.
- ALIGNMENT IS COMPLETE AS ROD ENTERS HOLE IN RECEPTACLE.
- ACTUATOR ROD REACHES FULL EXTENSION THEN ROTATES 45° LOCKING TO RECEPTACLE AND ROTATING COVERS OPEN
- ACTUATOR ROD RETRACTS CAUSING CARRIAGE TO TRANSLATE ACROSS EXPOSED INTERFACE.
- ELECTRICAL CONNECTORS ENGAGE FIRST MAKING ELECTRICAL CONTACT.
- ENGAGEMENT STOPS AT "INITIAL CONTACT" POSITION.
- FLUID COUPLINGS INTERFACED, VALVING ELEMENTS REMAIN CLOSED.
- TANKER MAY NOW INTERROGATE SPACECRAFT TO BE RESUPPLIED.
  - REPROGRAM COMPUTER
  - CHECK SENSORS
  - OPERATE VALVES, HEATERS, ETC.
  - CHARGE BATTERIES

FUNCTIONAL DESCRIPTION: ENGAGEMENT OF FLUID COUPLINGS

- REMOVE THEN REAPPLY "ENABLE"COMMAND TO RESET LOGIC
- ISSUE "ENGAGE"COMMAND TO AFIS IN "INITIAL CONTACT" POSITION
- ACTUATOR ROD RETRACTS CAUSING CARRIAGE TO TRANSLATE TOWARD TYPE II HALF
- FLUID COUPLINGS ENGAGE CAUSING VALVING ELEMENTS TO OPEN
- ELECTRICAL CONNECTORS SIMPLY COMPRESS THEIR MOUNTING SPRINGS
- ENGAGEMENT STOPS AT FULLY "ENGAGED" POSITION
- FLUID RESUPPLY MAY NOW COMMENCE:
  - HIGH PRESSURE GAS
  - WATER
  - MONOPROPELLANTS
  - BIPROPELLANTS
  - CRYOGENICS
- AFIS MAY BE POWERED DOWN, WILL HOLD POSITION

FUNCTIONAL DESCRIPTION:
DISENGAGE OF OXIDIZER COUPLINGS

- ISSUE "DISENGAGE" COMMAND TO AFIS IN "ENGAGED" POSITION.
- ACTUATOR ROD EXTENDS CAUSING CARRIAGE TO WITHDRAW FROM TYPE II HALF.
- VALVING ELEMENTS CLOSE IN ALL FLUID COUPLINGS.
- OXIDIZER COUPLINGS BREAK INTERFACE SEALS.
- ENGAGEMENT STOPS AT "SPILLAGE VENT" POSITION.
- FUEL COUPLING INTERFACE SEALS REMAIN SEATED.
- ELECTRICAL CONNECTORS REMAIN ENGAGED.
- OXIDIZER SPILLAGE (< 1.0 CC) IS EXPOSED AND QUICKLY DISSIPATES.
- OXIDIZER SEAL INTEGRITY MAY BE VERIFIED.

FUNCTIONAL DESCRIPTION: DISENGEMENT OF AFIS

- POWER DOWN ALL LINES TO ELECTRICAL CONNECTORS
- REMOVE THEN REAPPLY"ENABLE" COMMAND TO RESET LOGIC
- ACTUATOR ROD EXTENDS CAUSING CARRIAGE TO MOVE AWAY FROM TYPE II HALF
- FUEL COUPLINGS BREAK INTERFACE SEALS EXPOSING FUEL SPILLAGE
- ELECTRICAL CONNECTORS BREAK CONTACTS
- CARRIAGE MOVES TO FULL RETRACTED POSTION CLEAR OF COVER.
- ACTUATOR ROD REACHES FULL EXTENSION THEN ROTATES 45° UNLOCKING FROM RECEPTACLE AND ROTATING BOTH COVERS CLOSED
- ACTUATOR ROD RETRACTS WITHDRAWING FROM THE RECEPTACLE AND TYPE II COVER
- CARRIAGE RELAXES BACK INTO ITS NOMINAL POSITION
- ACTUATOR ROD RETRACTS UNTIL ROD END CATCHES ON TYPE II COVER
- FURTHER RETRACTION CAUSES THE CARRIAGE TO BE SECURELY PRELOADED AGAINST THE TYPE I COVER
- DISENGAGEMENT "STOPS" AT "DISENGAGED" POSITION, AFIS MAY BE POWERED DOWN

AFIS DESIGN ANALYSIS SUMMARY

- ACTUATOR DRIVE ANALYSIS
  - MOTOR SIZING
  - GEAR TRAIN ANALYSIS
- MECHANICAL STRESS ANALYSIS
  - COUPLING SUBPLATES
  - ACTUATOR ROD
- DYNAMIC ANALYSIS
  - FINITE ELEMENT MODEL
  - RANDOM VIBRATION EXCITATION
- THERMAL ANALYSIS
  - MAX DUTY CYCLE
  - LOW TEMPERATURE SOAK

AFIS LOADING SUMMARY

- Balanced loads due to engagement of electrical connectors and unpressurized couplings

	QTY	AXIAL LOAD	TOTAL LOAD
Elect. Conn	8	100 lbf.	800 lbf.
Gas Coup	4	20 lbf.	80 lbf.
Equ. Coup.	8	125 lbf.	1000 lbf.
			1880 lbf.

- Unbalanced loads due to holding electrical connectors, unpressurized couplings and one pressurized coupling together.

	QTY.	AXIAL LOAD	TOTAL AXIAL	MOMENT ARM	TOTAL MOMENT
Elect. Conn	8	100 lbf.	800 lbf.	0	0
Gas Coup.	4	20 lbf.	80 lbf.	0	0
Liq. (Unpres)	8	125 lbf.	1000 lbf.	0	0
Liq. (Pres)	1	494 lbf.	495 lbf.	7.0 in.	3898 in.lbf.
			2375 lbf.		3898 in.lbf.

ACTUATOR DESIGN ANALYSIS SUMMARY

Motor Capabilities:		
Drive Ratio	1	Motor In/Shaft Out
RPM Input	120	rpm
RPM Out	120	rpm
Rated Load	5	in/lbs
Shaft Output	5	in/lbs

Worm Data:		
Number of Threads	2	#
Lead	0.3927	in/rev
Lead Angle	11.4	degs
Pressure Angle	14.5	degs
Pitch Dia of worm	0.625	inches
Sliding Vel at worm/gear	20.03	ft/min
Friction, mu	0.01	
Tangent worm force,Wx	16.00	lbs
Seperating Worm Force,Wy	19.91	lbs
Axial Worm Force,Wz	75.33	lbs
Efficiency	94.9	%
Worm RPM	120	rpm

Worm Gear Data:(page 36.10 ref 1)		
Pitch Diameter	2.5	inches
Number of Teeth	40	#
Face Width of Gear	0.375	inches
Gear tangent force, Wgt	75.33	Wgt
Torque input to ball screw	94.16	in-lbs
Load Constants:		
Ks - Material Factor	800	
Fe - Effec. Face width	0.375	
Km - Ratio Correction Fact	0.820	
Kv - Velocity Factor	0.637	
Estim max load on gear tooth	326.34	lbs
Estim Gear Tooth Safety Margin	3.33	Based on Load
Worm Gear RPM	6.00	rpm

Ball Screw Data:		
Ball Screw Lead	0.5	in/rev
Ball Screw Efficiency	93	%
Aval. Axial Output Force	1100	lbs
Ball Screw Axial Velocity	3.00	in/min
Req'd Ball Screw Travel	8.5	inches
Time For Full Ball Screw Travel	170	seconds

COUPLING SUB-PLATE
STRESS AMD DEFLECTION ANALYSIS

- TYPE I SUBPLATE ANALYZED TO CATILEVERED MOUNTING
- FEA MODEL CREATED AND ANALYZED USING ANSYS 4.4
- STRESS ANALYSIS;
  - 7278 PSI MAX STRESS
  - FACTOR OF SAFETY = 2.7
- DEFLECTION ANALYSIS:
  - 0.075" MAX DISPLACEMENT OF CONNECTOR (ELECTRICAL)
  - WELL WITHIN MISALIGNMENT CAPABILITIES

145

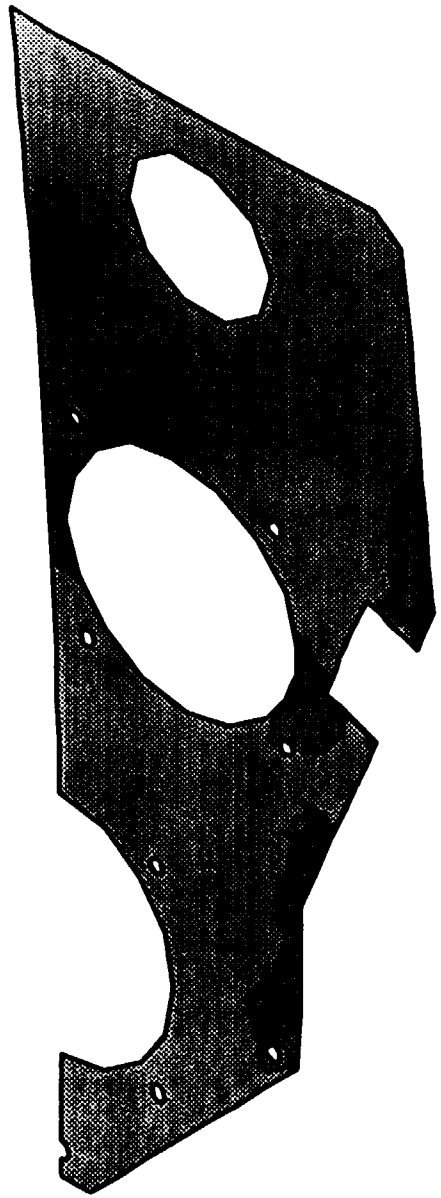

ANSYS 4.4
NOV 27 1989
19:00:06
PLOT NO. 2
POST1 STRESS
STEP=1
ITER=1
SIGE (AVG)
MIDDLE
DMX =0.126904
SMN =27.124
SMX =7278

XV =1
YV =1
ZV =1
DIST=5.896
XF =2.03
YF =7.05
EDGE

27.124
832.779
1638
2444
4055
4861
5667
7278

AFIS II - TEST RUN

46

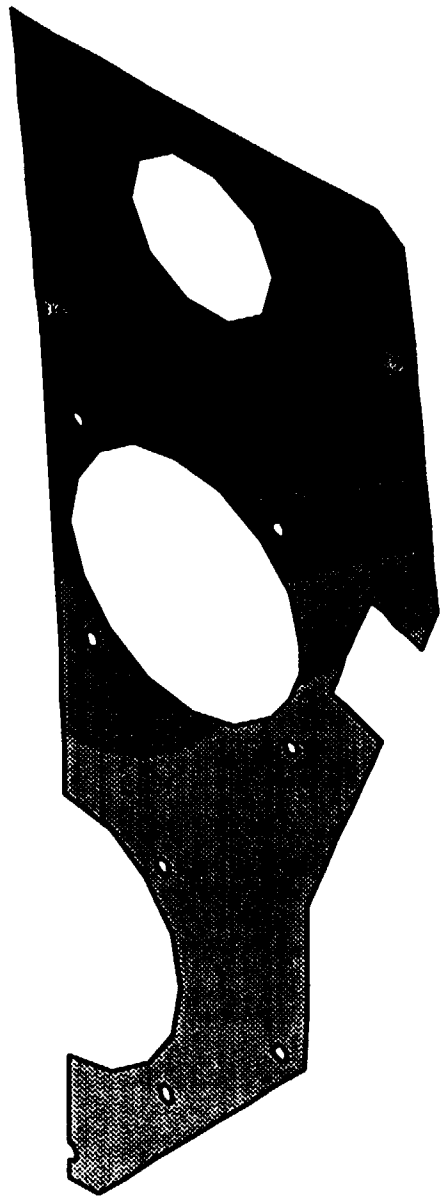

ANSYS 4.4
NOV 27 1989
18:58:36
PLOT NO. 1
POST1 STRESS
STEP=1
ITER=1
UZ
D GLOBAL
DMX =0.126904
SMN =-0.005184
SMX =0.126904

XV =1
YV =1
ZV =1
DIST=5.896
XF =2.03
YF =7.05
EDGE

-0.005184
0.009493
0.024169
0.038845
0.068198
0.082875
0.097551
0.126904

AFIS II - TEST RUN

ACTUATOR ROD DESIGN ANALYSIS SUMMARY

Rod Material		
CRES 15-5, Cond 1075		
Yeild	125	Ksi
Ultimate	145	Ksi
Modulus	28.5	Msi
Poisons	0.27	

Geometry		
Actuator Rod End OD	0.850	in
Actuator Rod End ID	0.500	in
Actuator Rod End Square	0.910	in
Rod Square Thickness	0.5	in

Total Load Applied	#	Load Per	Total Each	
Balanced Loads				
Liquid connector	8	125	1000	lbs
Electrical Connector	8	100	800	lbs
Gas Connector	4	20	80	lbs
Unbalanced Load				
Force	495	lbs	495	lbs
Moment Arm, Lx	1.4	in		
Moment Arm, Ly	7.75	in		
Total Axial Load	2375	lbs		
Moment, Mx	3836.3	in-lbs		
Moment, My	693	in-lbs		

Rod Tube Stresses		
Contact distance on rod	2.4000	in
length of .800 dia	0.7500	in
Moment of Inertia, Square	0.0541	in^4
Moment of Inertia, round	0.0226	in^4
Crossectional Area	0.3711	in^2
Round Section		
Axial Stress	6399.9	psi
Bending stress, Sx	22588	psi
Bending stress, Sy	4080.5	psi
Bending Stress, Max	22954	psi
Combined Stress, von Mise	24881	psi
Sqare Section		
Bending Stress, Max	32800	psi

Stress Concent	Corrected Stress	Factor of Safety	Margin of Safety
4	25599.53	4.882903	3.88290306
2	45176.7	2.766913	1.76691288
2	8160.953	15.31684	14.3168392
2	45907.9	2.722843	1.72284271
2	49761.16	2.511999	1.51199933
1.5	49199.78	2.540662	1.54066178

AFIS

AFIS Dynamic Analysis

Summary

- The intent of this analysis was to identify severe dynamic weaknesses in the AFIS Type I system
- Major component masses and stiffnesses of Type I half included
- Mounting plate simply supported at 8 points about perimeter
- Harmonic response input at base, 0-3000 Hz, .05 inch input along axis of actuator (Z), and transverse to axis of actuator (X,Y)
- The first major resonance in the Z direction was approximately 110 Hz
- The first major resonance in the X,Y Directions was approximately 40 Hz

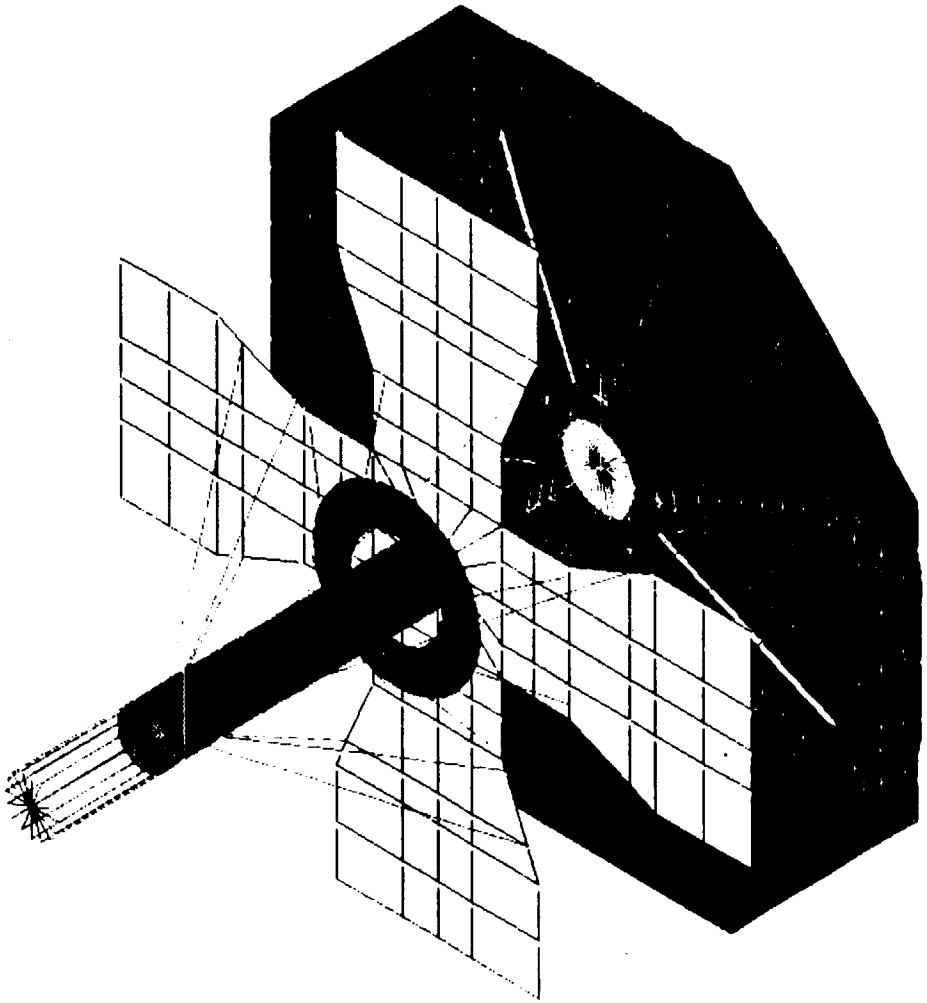

AFIS FINITE ELEMENT MODEL
4/19/90
afis_a.pic

RANDOM VIBRATION SPECTRUM

AFIS Actuator and Assy – Qual levels

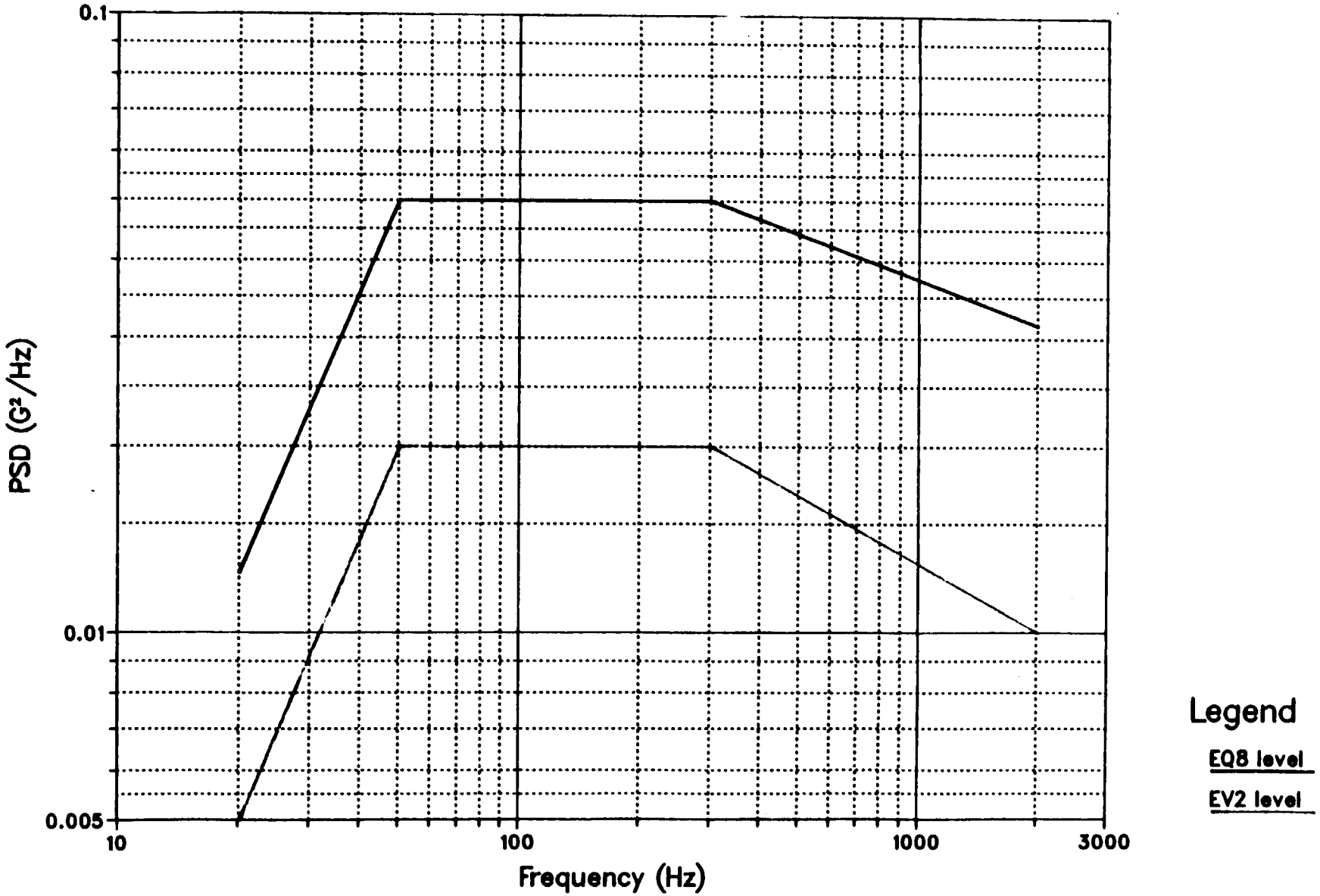

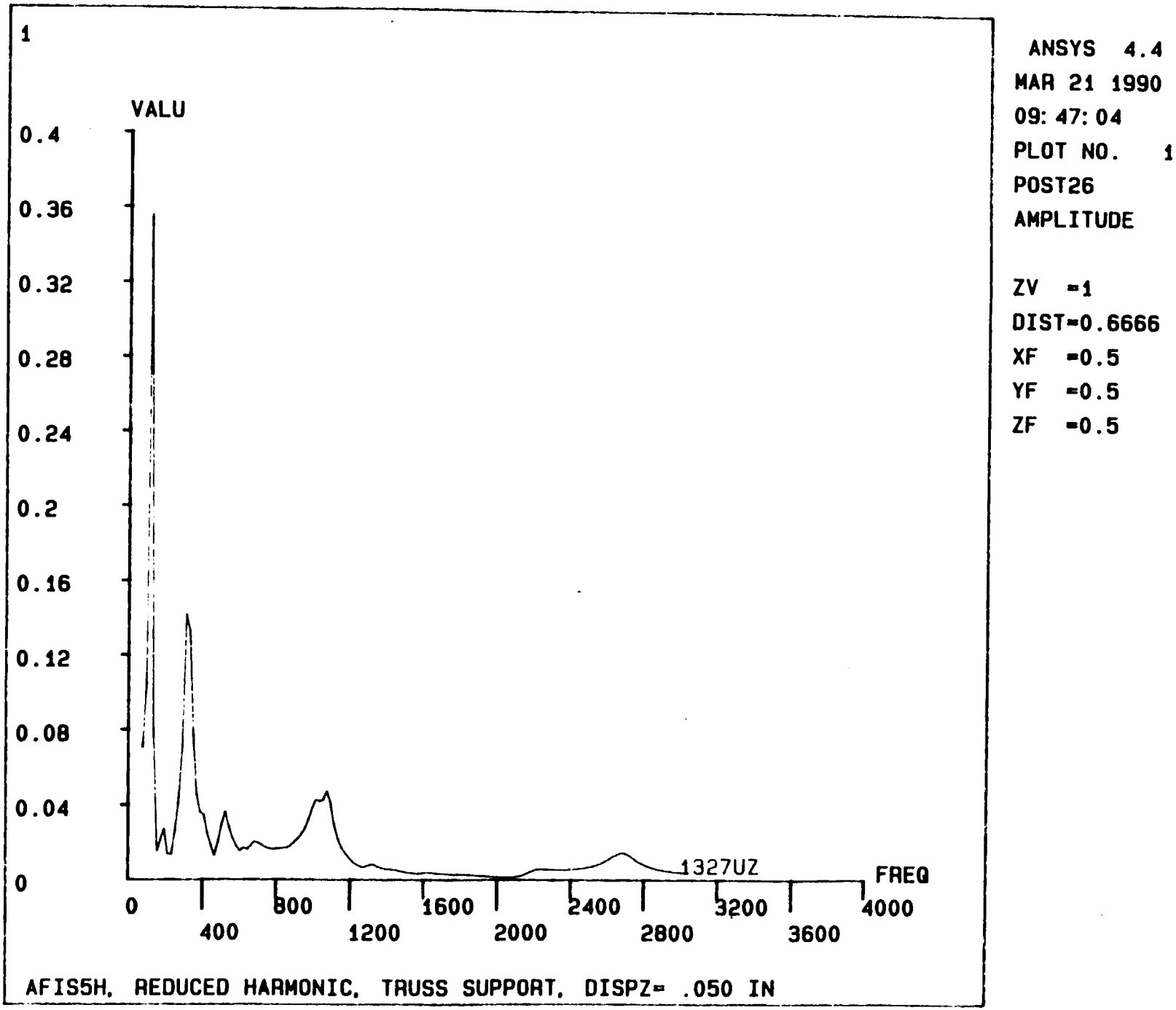

ANSYS 4.4
MAR 21 1990
09: 47: 04
PLOT NO. 1
POST26
AMPLITUDE

ZV =1
DIST=0.6666
XF =0.5
YF =0.5
ZF =0.5

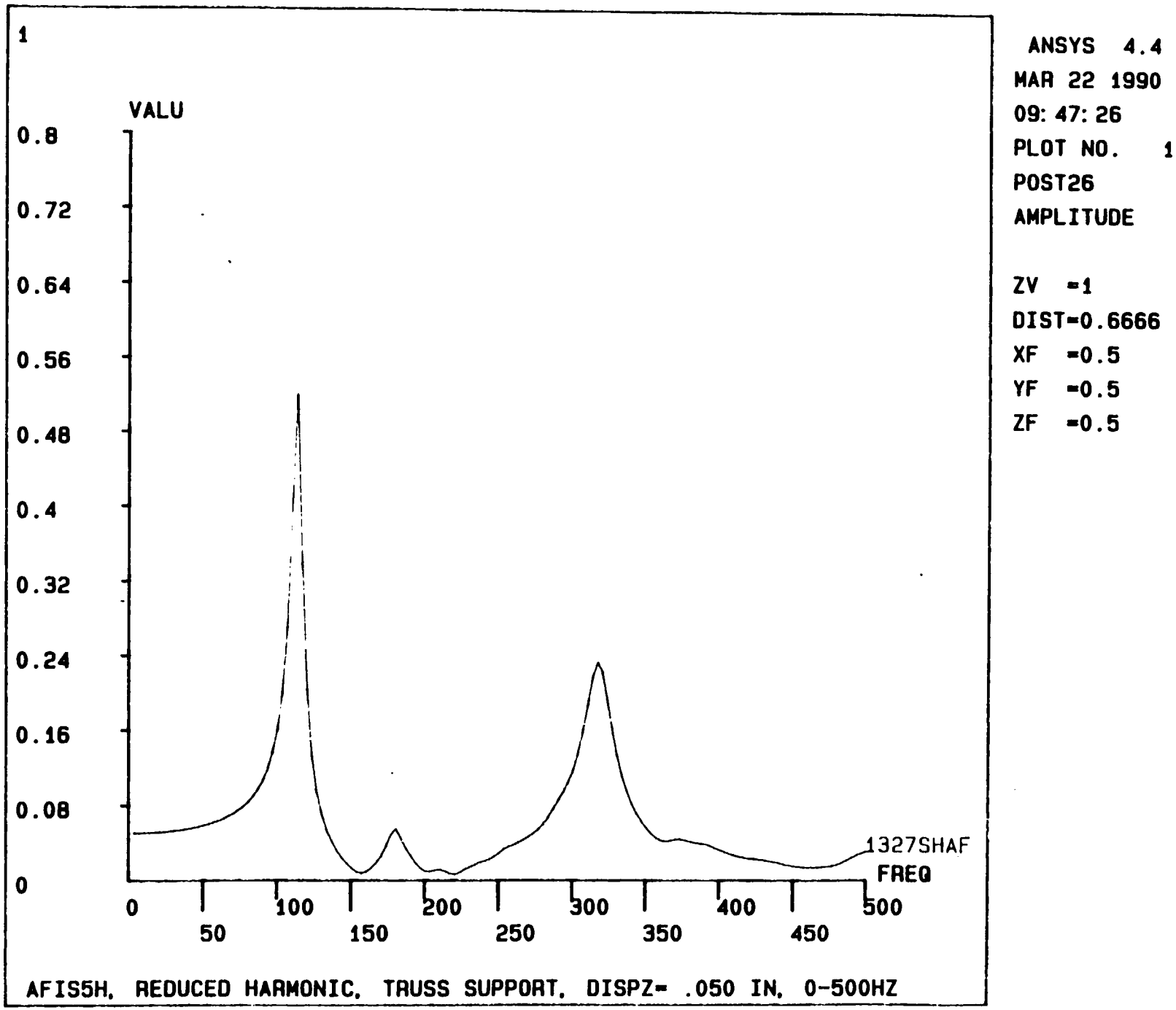

ANSYS 4.4
MAR 22 1990
09: 47: 26
PLOT NO. 1
POST26
AMPLITUDE

ZV =1
DIST=0.6666
XF =0.5
YF =0.5
ZF =0.5

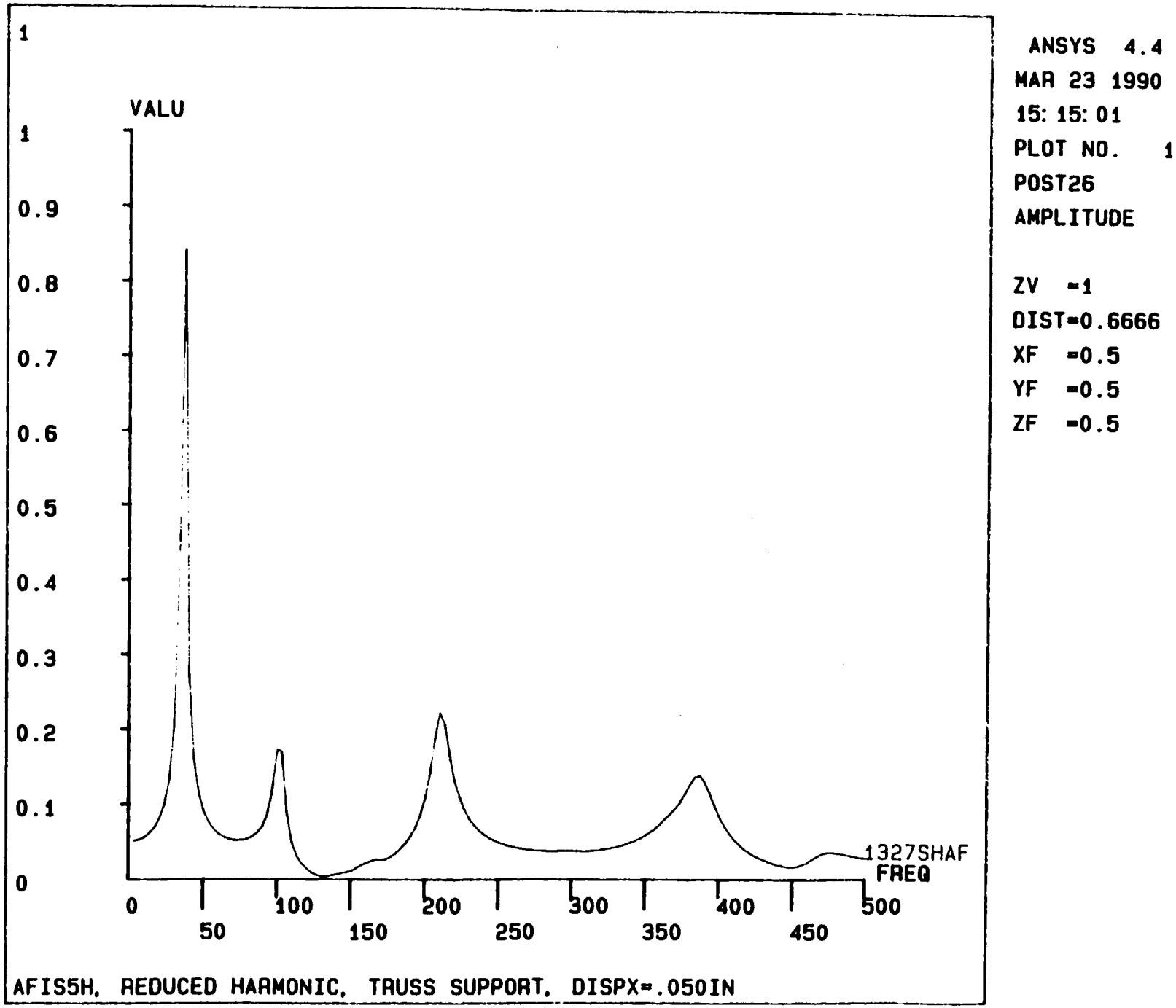

ANSYS 4.4
MAR 23 1990
15: 15: 01
PLOT NO. 1
POST26
AMPLITUDE

ZV =1
DIST=0.6666
XF =0.5
YF =0.5
ZF =0.5

AFIS

AFIS Thermal Model

Approach

- Lumped parameter approach, using TAK-II, of the AFIS Type I half
- Critical thermal paths, masses, and heat sources modelled
- Approximately 40 nodes and 60 linear conductors and radiation links used
- All surfaces assumed insulated against radiation except front cover
- No attachment to craft modelled (thermally isolated except for radiation from cover)
- Primary concern is the temperature of electronics boards and components. Operational temperature range -65 F to 160 F

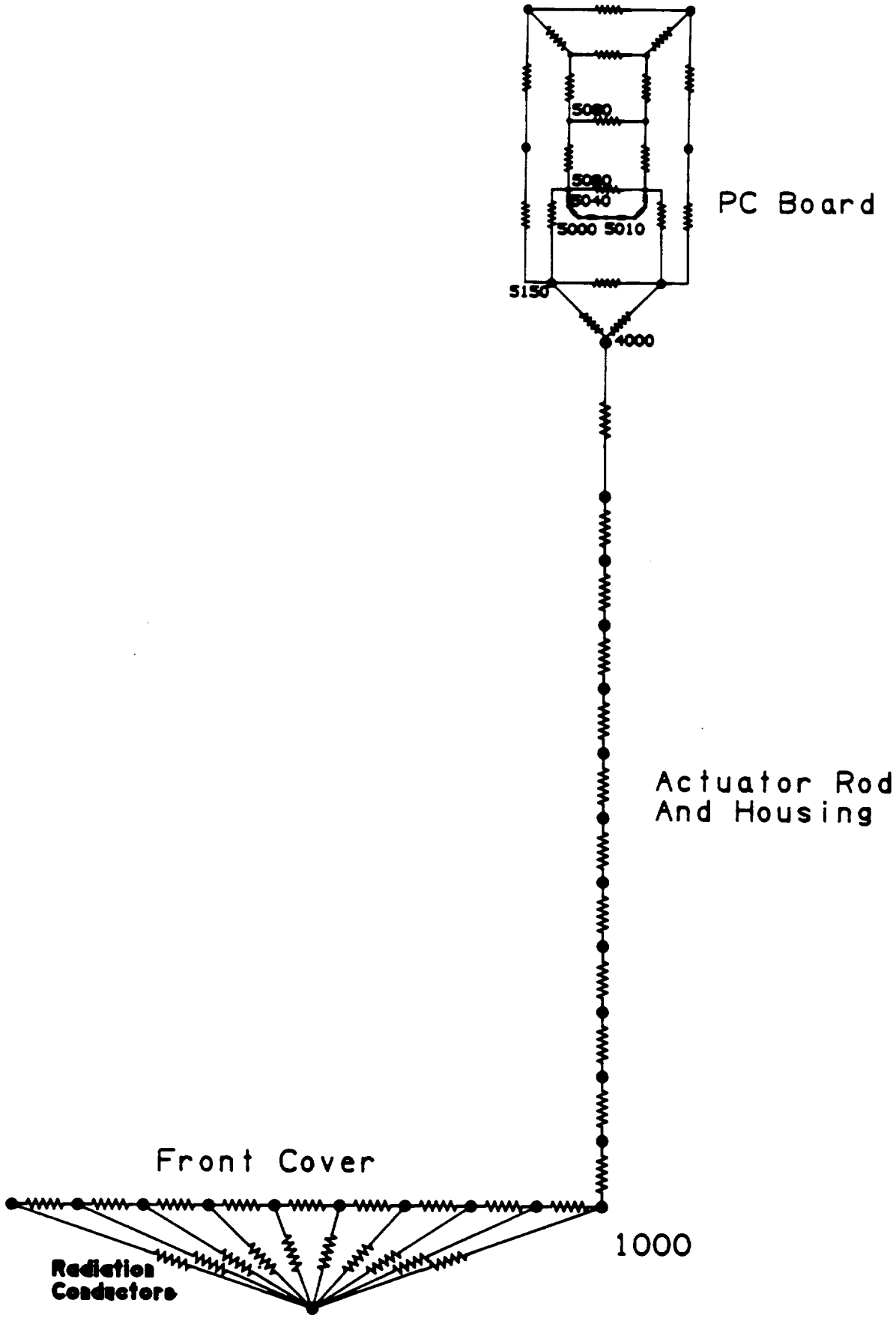

AFIS Type 1 Thermal Model

AUTOMATED FLUID INTERFACE SYSTEM

NASA
MARSHALL SPACE FLIGHT CENTER

MOOG
SPACE PRODUCTS DIVISION

AFIS

AFIS Thermal Model

Case I : Duty Cycle Thermal Analysis

- Duty cycle for Type I half
  (all values in watts)

	Shut Down	Standby	Running
PC Boards	0.0	0.9	0.9
Power Supply	0.0	4.2	10.0
Motor	0.0	0.0	21.0

- Starting temperature for system was 100 F
- No radiation in or out of system
- Maximum temperature of system over cycle was 140 F

MOOG
SPACE PRODUCTS DIVISION

Afis Thermal Analysis
Duty Cycle Run – 100 F Start

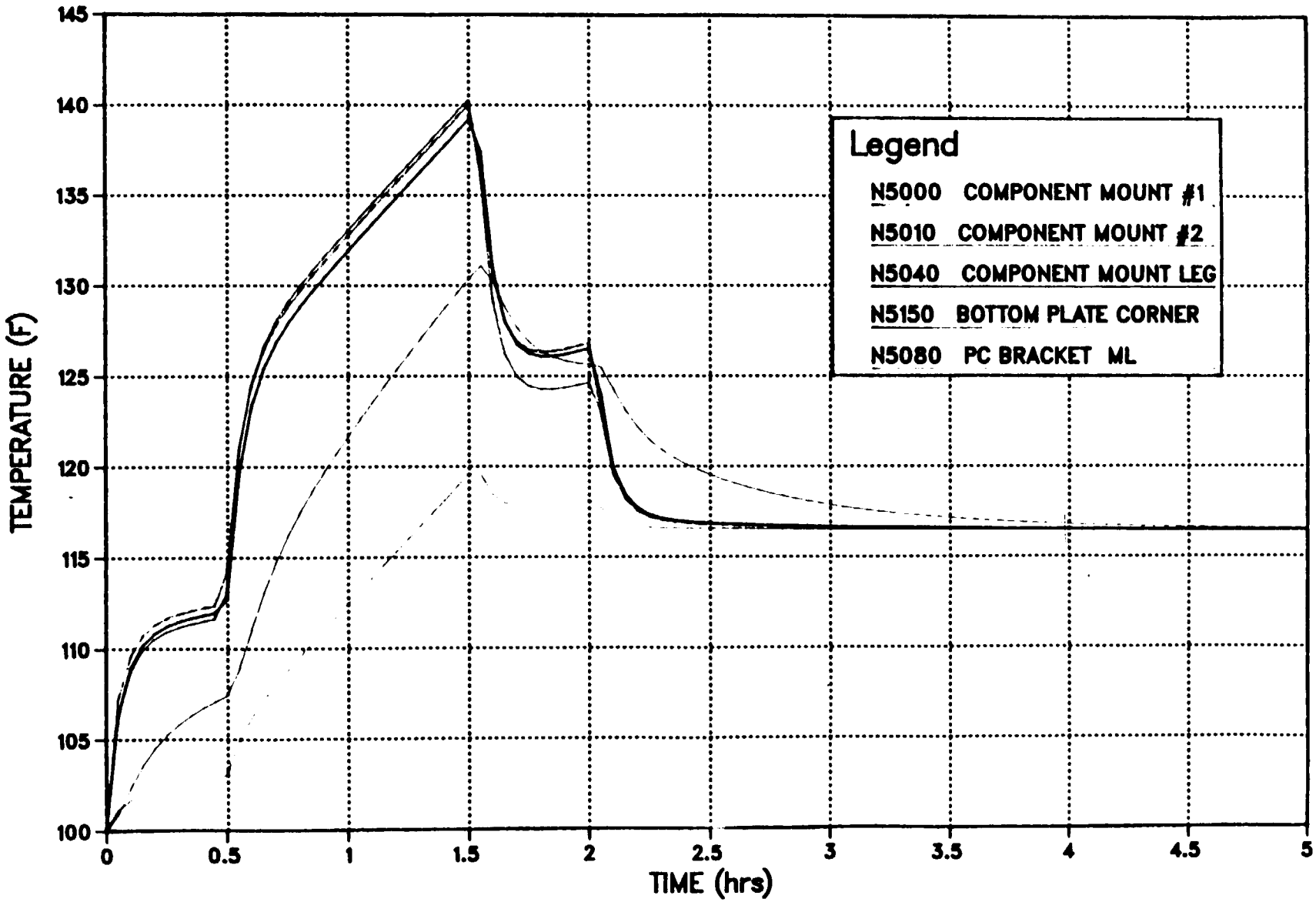

900426
0748:06

AFIS Thermal Model

Case II : Heater Operation and Sizing

- Steady state analysis with cover maintained at -250 F shows a requirement of less than one watt to maintain PC board at 0 F
- 48 hour transient simulation
- 5 watt thermostatic heater turned on at 14 F, off at 50 F
- Thermostat and heater mounted on PC board bracket approximately 3 inches apart
- -50 F uniform system starting temperature
- Radiation from front cover to -250 F source
- After ~~48~~ 96 Hours the front cover is tending toward -160 F and the electronics toward the thermostat range.

MOOG
SPACE PRODUCTS DIVISION

AFIS Thermal Analysis
Transient heating Run – –50 F Start

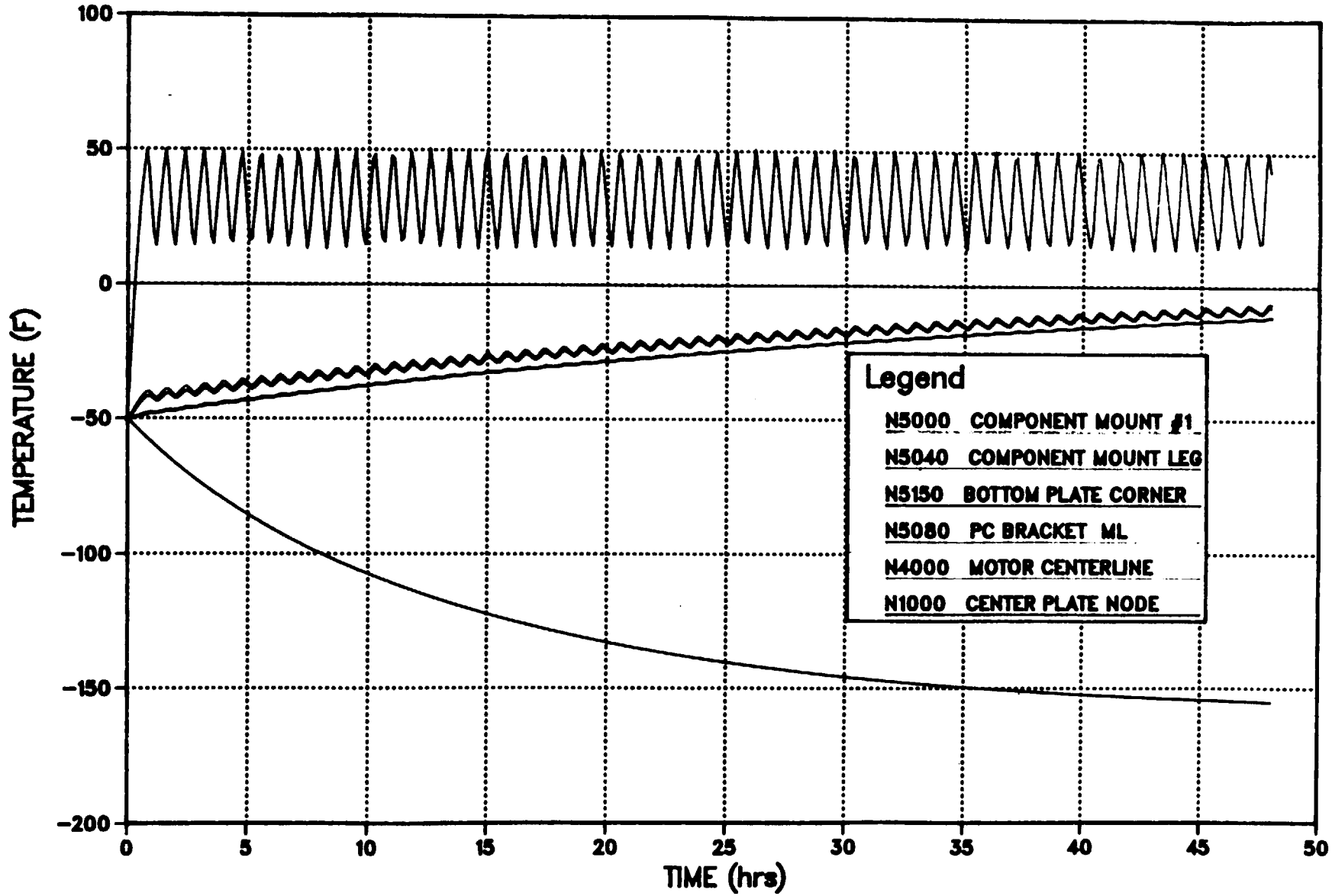

900426
0751:15

60

MOOG
SPACE PRODUCTS DIVISION

AFIS Thermal Analysis
Transient heating Run – –50 F Start

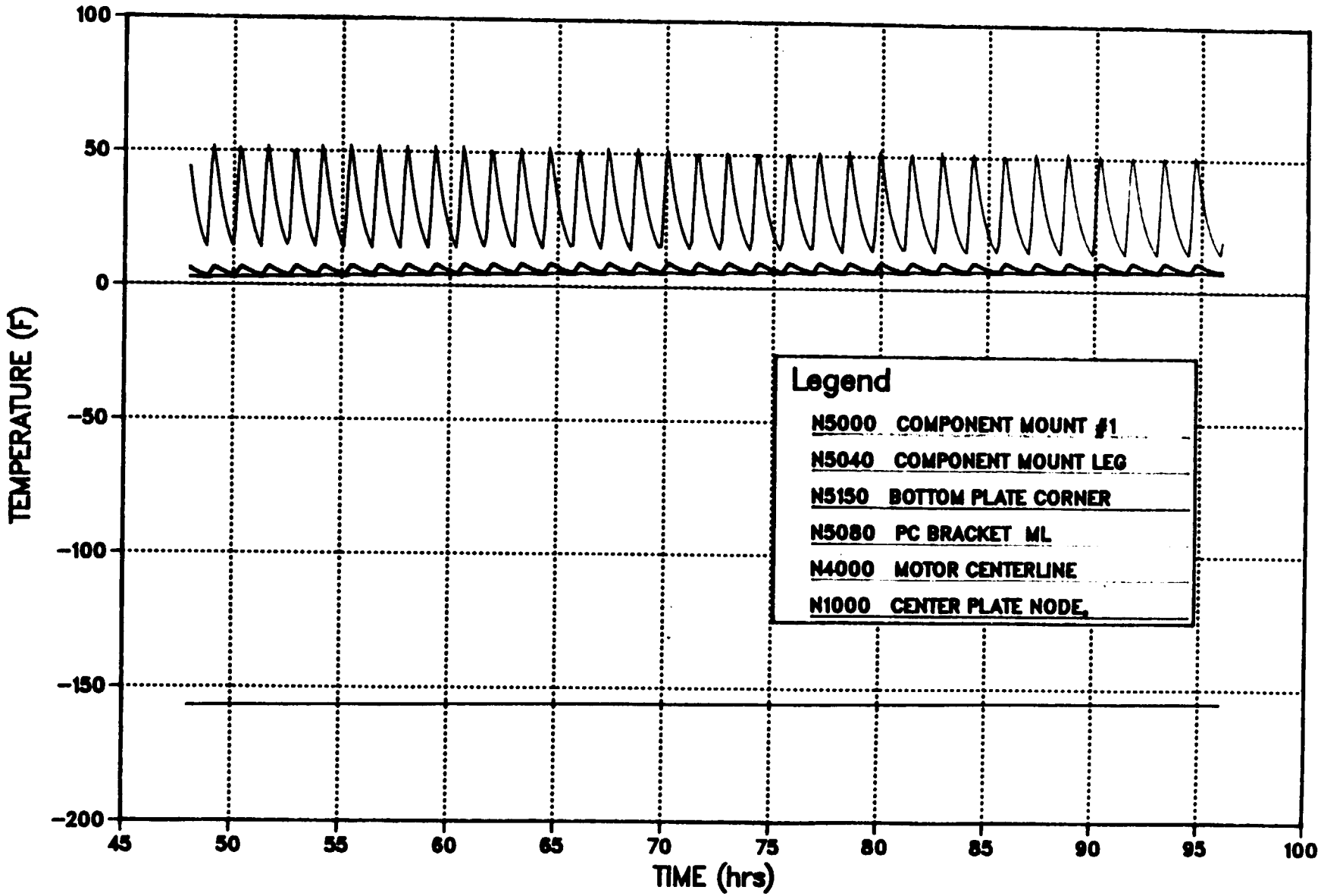

900426
0752:45

61

MOOG
SPACE PRODUCTS DIVISION

AFIS Thermal Analysis
Transient heating Run – –50 F Start

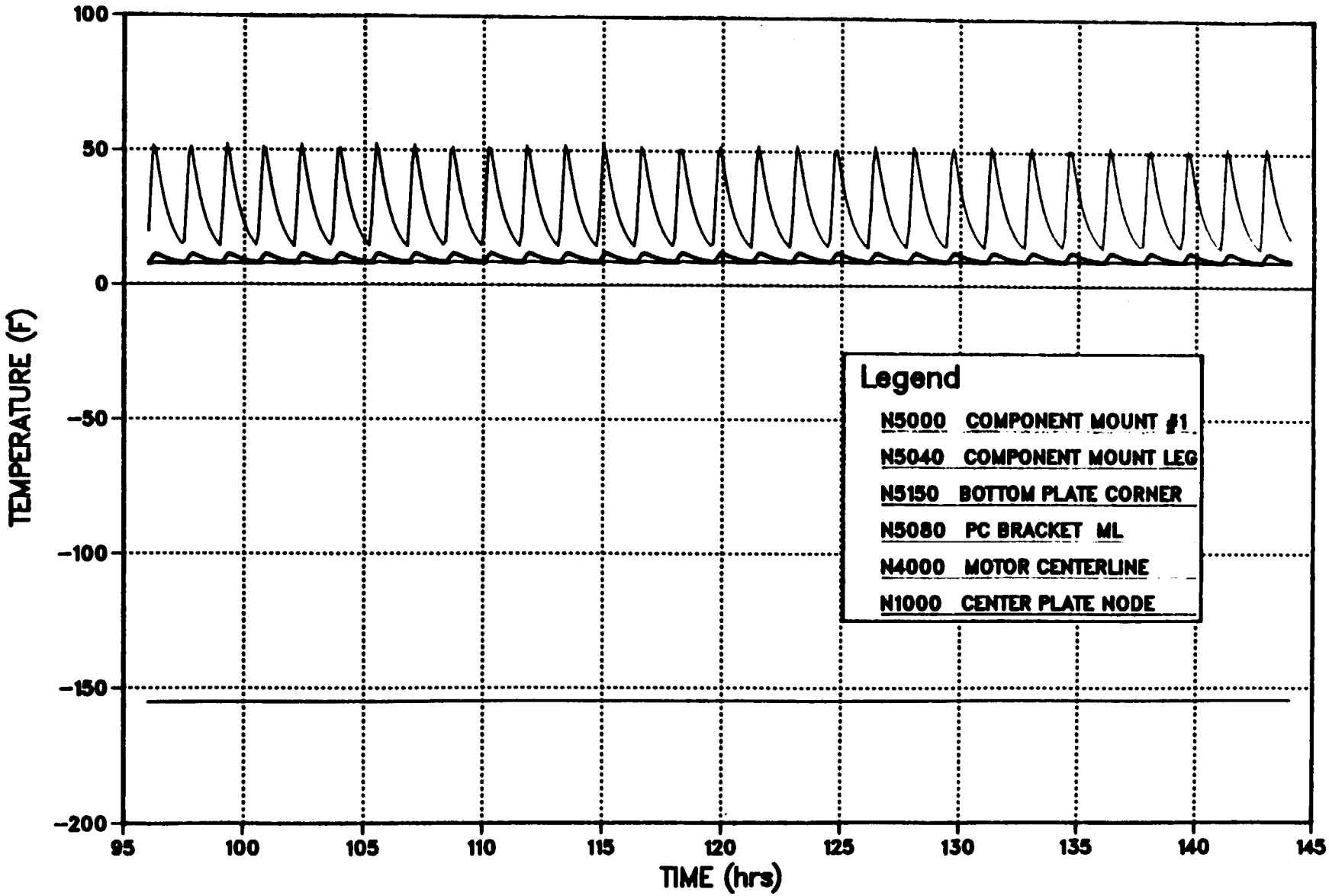

900426
0754:01

DESIGN CHANGES DUE TO ANALYSIS

1) TRUSS STRUCTURE ADDED TO TYPE I CHASSIS

2) TYPE I MOUNTING PLATE INCREASED TO 1/2" THICK

3) TYPE I COVER PLATE INCREASED TO 1/4" THICK

4) REDUNDANT HEATERS AND THERMOSTATS ADDED

5) THERMALLY CONDUCTIVE TAPE ADDED TO BOLTED JOINTS

MISSION SUITABILITY FEATURES: USER FRIENDLINESS

- TYPE II HALF IS ESPECIALLY USER FRIENDLY TO ENCOURAGE UTILIZATION AND ACCEPTANCE BY SPACECRAFT MANUFACTURERS:
  - LIGHTWEIGHT TO LIMIT LAUNCH COSTS
  - ELECTRICALLY PASSIVE REQUIRING NO POWER OR DATA
  - MECHANICALLY SIMPLE AND RUGGED FOR MAXIMUM RELIABILITY
  - SMALL ENVELOPE EFFICIENTLY UTILIZES VOLUME
  - COUPLINGS CAN BE "HARDLINED," FLEX HOLES NOT REQUIRED
  - EASILY OPTIMIZED FOR A SPECIFIC SPACECRAFT
- TYPE I HALF SIMPLE TO OPERATE AND RECONFIGURABLE FOR VARIOUS MISSIONS:
  - ELECTRICALLY ACTUVE REQUIRING 28 VDC POWER AND INPUT MISSIONS
  - (15) STATUS SIGNALS ALLOW CONTINUOUS MONITORIN.
  - POWER CAN BE REMOVED AT ANY TIME
    - -- ACTUATOR WILL STOP AND HOLD POSITION
    - -- IF POWER REAPPLIED, ACTUATOR WILL REMAIN STOPPED AND WAIT FOR A NEW COMMAND
  - FLUID CONNECTORS REQUIRE APPROX. 3 FT. LONG FLEX HOSES
  - UNOBSTRUCTED FLEX HOSE ROUTING
  - MOVING CARRIAGE "LOCKS DOWN" WHEN IN DISENGAGED POSITION

MISSION SUITABILITY FEATURES: RELIABILITY

- EM ACTUATOR BASED ON PROVEN AUC ACTUATOR DESIGN
- POSITION SWITCHES LOCATED INSIDE ACTUATOR, PROTECTED AGAINST DAMAGE OR CONTAMINATION
- SINGLE CENTERLINE ACTUATOR IN LIEU OF MULTIPLE UNITS AROUND PERIPHERY.
- SINGLE MOTOR ALIGNS HALVES, OPERATES COVERS AND ENGAGES/DISENGAGES AFIS
- CAPABLE OF CARRYING COMPLETE SET OF REDUNDANT COUPLINGS.

MISSION SUITABILITY FEATURES: SAFETY

- MEETS REQUIREMENTS OF NHB1700.7B, "SHUTTLE PAYLOAD BAY SAFETY REQUIREMENTS."
- POTENTIAL CATASTROPHIC HAZARD POSED BY BIPROPELLANT MIXING
  - PRIMARY PREVENTED BY DESIGN OF COUPLINGS
  - BIPROPELLANT COUPLING PHYSICALLY SEPARATED
  - AFIS STOPS TO ALLOW OXIDIZER SPILLAGE TO DISSIPATE BEFORE FUEL COUPLING IS EXPOSED.
- POTENTIAL CATASTROPHIC HAZARD POSED BY INABILITY TO DISENGAGE
  - ELECTRICAL SYSTEM IS ONE FAILURE TOLERANT
  - EACH CHANNEL HAS A DRIVE HEX FOR MANUAL DISENGAGEMENT
  - APPROACH PATTERNED AFTER DOCKING MECHANISMS
- POTENTIAL CATASTROPHIC HAZARD POSED BY AFIS COMING LOOSE DURING LAUNCH/RE-ENTRY
  - BOTH HALVES MOUNTED BY EIGHT #10 CAPSCREWS
  - ANY FOUR CAPSCREWS WILL SAFETY SECURE AFIS IN PLACE

MISSION SUITABILITY FEATUES: EMERGENCY SEPARATION

- INTEGRAL MOTORS USED TO SEPARATE COUPLINGS AND SEVER STRUCTURAL LINK BETWEEN TANKER AND SPACECRAFT
- 24 SEC REQUIRED TO CLOSE ALL COUPLINGS
- 110 SEC REQUIRED TO UNLOCK TYPE I AND II HALVES
  - DOCKING MECHANISM CAN NOW UNDOCK
  - AFIS HALVES WILL SLIDE APART
- THIS APPROACH IS FULLY REVERSIBLE
- OTHER EMERGENCY SEPARATION TECHNIQUES POSSIBLE IF SHORTER TIME IS REQUIRED:
  - PYROTECHNIC DEVISES
  - SPRING LOADED, ELECTRICALLY ACTIVATED DEVICES

MISSION SUITABILITY FEATURES: RECONFIGURABILITY

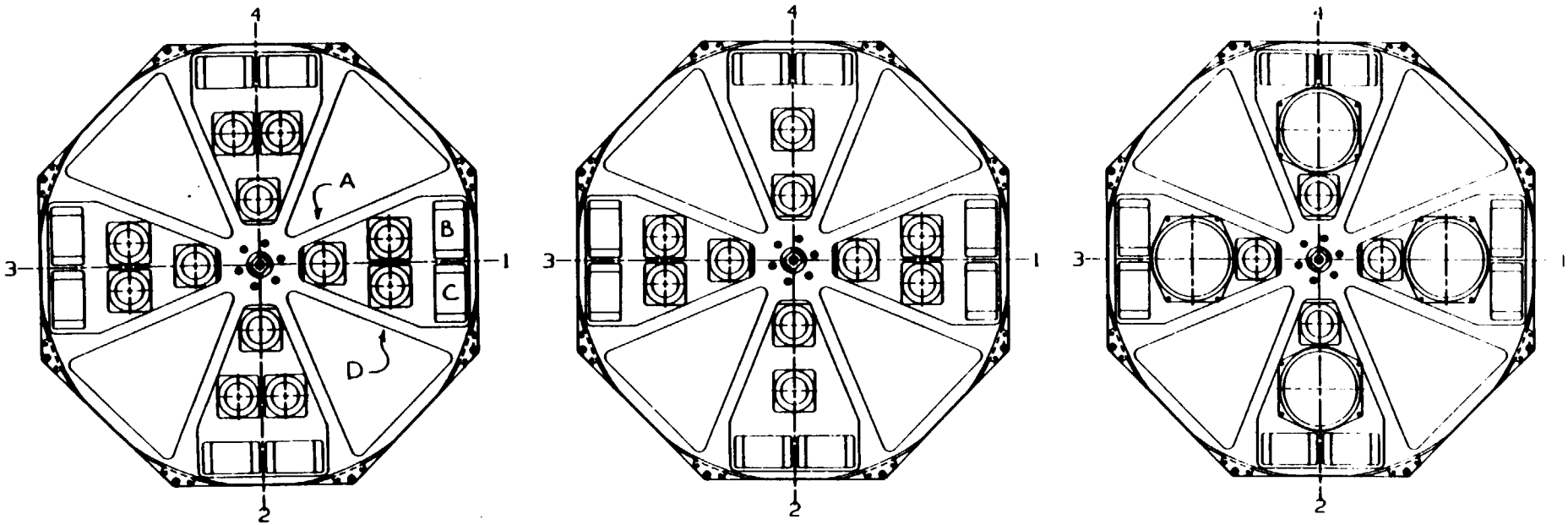

		BIPROPELLANT CONFIGURATION		MONOPROPELLANT CONFIGURATION		CRYOGENIC CONFIGURATION	
Group	Site	Connector Type	Connector Function	Connector Type	Connector Function	Connector Type	Connector Function
1	a	Gas	Primary Helium Transfer	Gas	Primary Helium Transfer	Gas	Primary Helium Transfer
	b	Electrical	Primary Avionics	Electrical	Primary Avionics	Electrical	Primary Avionics
	c	Electrical	Primary Avionics	Electrical	Primary Avionics	Electrical	Primary Avionics
	d	Liquid	Primary Fuel Transfer	Liquid	Primary Fuel Transfer	Cryogenic	Primary LH_2 Transfer
		Liquid	Primary Fuel Ullage	Liquid	Primary Fuel Ullage		
2	a	Gas	Primary Nitrogen Transfer	Gas	Primary NitrogenTransfer	Gas	Primary NitrogenTransfer
	b	Electrical	Primary Power	Electrical	Primary Power	Electrical	Primary Power
	c	Electrical	Primary Power	Electrical	Primary Power	Electrical	Primary Power
	d	Liquid	Redundant Fuel Transfer	Liquid	PrimaryFuel Transfer	Cryogenic	Redundant LH_2 Transfer
		Liquid	Redundant Fuel Ullage	Liquid	Redundant Fuel Ullage		
3	a	Gas	Redundant Helium Transfer	Gas	Redundant Helium Transfer	Gas	Redundant Helium Transfer
	b	Electrical	Redundant Avionics	Electrical	Redundant Avionics	Electrical	Redundant Avionics
	c	Electrical	Redundant Avionics	Electrical	Redundant Avionics	Electrical	Redundant Avionics
	d	Liquid	Primary Oxidizer Transfer	Liquid	Primary Water	Cryogenic	Primary LO_2 Transfer
		Liquid	Primary Oxidizer Ullage				
4	a	Gas	Redundant NitrogenTransfer	Gas	Redundant NitrogenTransfer	Gas	Redundant NitrogenTransfer
	b	Electrical	Redundant Power	Electrical	Redundant Power	Electrical	Redundant Power
	c	Electrical	Redundant Power	Electrical	Redundant Power	Electrical	Redundant Power
	d	Liquid	Redundant Oxidizer Transfer	Liquid	Redundant Water	Cryogenic	Redundant LO_2 Transfer
		Liquid	Redundant Oxidizer Ullage				

MISSION SUITABILITY FEATURES: COUPLING/CONNECTOR ACCOMODATION

- AFIS CAPABLE OF CARRING (12) FLUID AND (8) ELECTRICAL CONNECTORS OR (4) FLUID, (4) CRYOGENIC AND (8) ELECTRICAL CONNECTORS
- ACCOMMODATES BOTH FAIRCHILD AND MOOG FLUD COUPLINGS
- COVERS PROTECT SENSITIVE COUPLING INTERFACES
- FLUID COUPLINGS THERMALLY ISOLATED FROM AFIS
- COUPLINGS/CONNECTORS MOUNTED TO REMOVABLE SUB-PLATES
  - QUICK, SIMPLE, GANGED CHANGE-OUT
  - CUSTOM SUBPLATES CAN ACCOMODATE FUTURE REQUIREMENTS
- PROVIDES 2650 LBF OF FORCE TO ENGAGE AND LATCH COUPLINGS
- LONG (1.4 INCH) STROKE AVAILABLE TO OPERATE COUPLINGS
- AUTOMATICALLY ALIGNS COUPLINGS TO WITHIN THEIR MISALIGNMENT ENVELOPE

MISSION SUITABILITY FEATURES: FLEXIBILITY

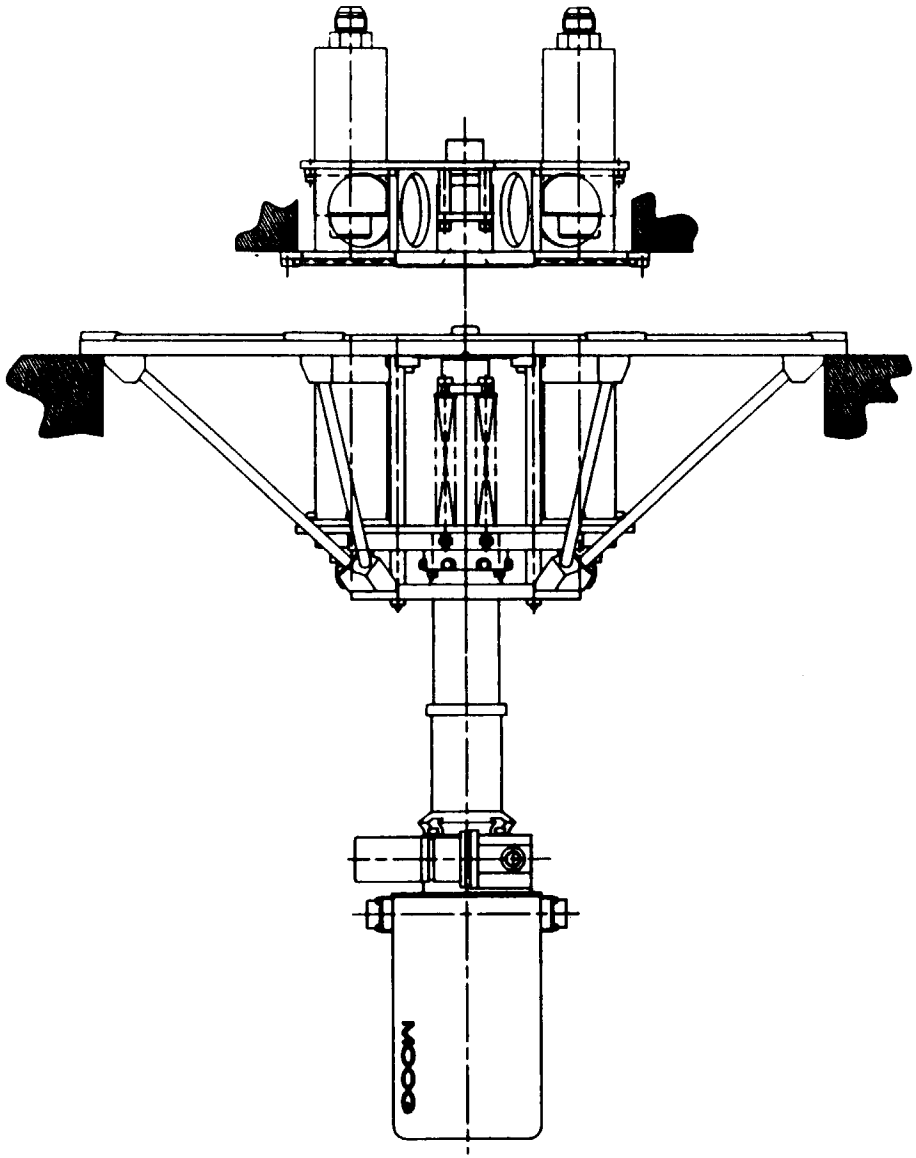

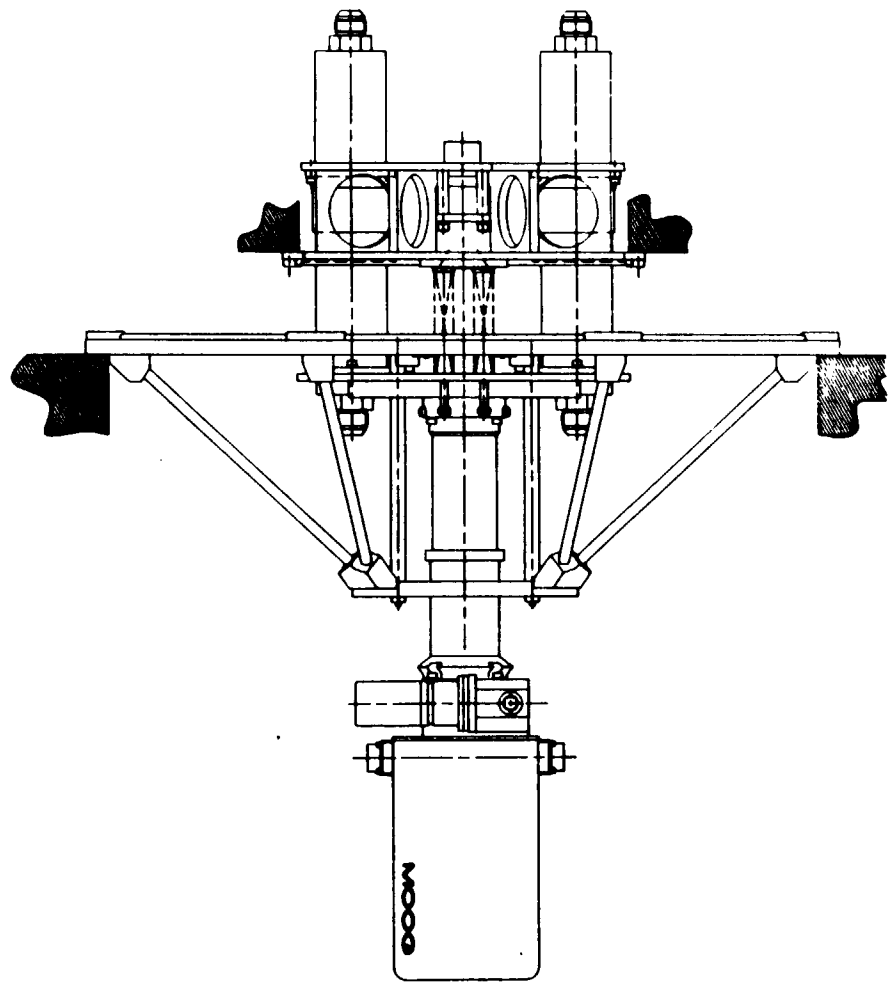

- FULL SIZE TANKER HALF COMPATIBLE WITH DOWNSIZED SPACECRAFT HALF

MISSION SUITABILITY FEATURES: DOCKING MECHANISM COMPATIBILITY

- COMPATIBLE WITH ALL KNOWN DOCKING MECHANISMS
- AFIS COMPATIBLE AS IS, ONLY MOUNTING STRUCTURE CHANGES
- COUPLING LOADS BORNE BY AFIS, TRANSMITTED FORCE LESS THAN 20 LBF.
- WIDE RANGE OF PLACEMENT OPTIONS
- ACCOMMODATES MAX POTENTIAL MISALIGNMENT AFTER DOCKING

MISSION SUITABILITY FEATURES: COST CONTROL

- THE DESIRE TO CONDUCT ON-ORBIT RESUPPLY IS ECONOMICALLY BASED.
- SIMPLE, STRAIGHTFORWARD DESIGN MINIMIZES MANUFACTURING COSTS.
- LIGHTWEIGHT DESIGN LOWERS LAUNCH COSTS.
- BASED ON SUCCESSFUL EXISTING DESIGN TO MINIMIZE SCHEDULE AND COST RISK.
- BUILT-IN ELECTRONICS SIMPLIFIES INTEGRATION COMPARED TO DESIGNS WITH A SEPARATE "BLACK BOX."

TESTING: MOOG AFIS TEST DATA SUMMARY

- **ACTUATOR TESTING:**

	RUNNING	PEAK
- MANUAL OPERATION	5 IN-LB.	7 IN-LB.
- STALL TORQUE:	45 IN-LB.	45 IN-LB.

- **AFIS SYSTEM FUNCTIONAL DEMONSTRATION TESTING:**

  - CONFIGURE FOR BIPROPELLANT RESUPPLY
  - 10 ENGAGE/DISENGAGE CYCLES, FULL COMPOUND MISALIGNMENT
  - INSPECT FOR WEAR OR DAMAGE
  - REPEAT WITH AFIS CONFIGURED FOR MONOPROPELLANT & CRYOGENIC RESUPPLY
  - RESULTS:

-- MANUAL OPERATION	15 IN-LB.	25 IN-LB.
-- FORCE MARGIN	200%	80%
-- POWER DRAW	28 WATTS	56 WATTS
-- TIME REQUIRED TO ENGAGE	3:42 (MINUTES:SEC)	
-- TIME REQUIRED TO DISENGAGE	3:36 (MINUTES:SEC)	

SUGGESTED NASA TESTING

- REPEAT AFIS FUNCTIONAL TESTING PERFORMED BY MOOG
- FLAT FLOOR RESUPPLY DEMONSTRATION
  - CONFIGURE AFIS WITH TWO FUNCTIONAL FLUID COUPLINGS
  - MOUNT TYPE I HALF ON TANKER MOCK-UP
  - MOUNT TYPE II HALF ON SPACECRAFT MOCK-UP
  - FLY TANKER TO SPACECRAFT, DOCK AND ENGAGE AFIS
  - TRANSFER FLUID FROM TANKER TO SPACECRAFT
  - DISENGAGE AFIS, UNDOCK, FLYOFF
- THERMAL VACUUM TESTING
- MEASURE DOCKING SYSTEM LOADING
- RANDOM VIBRATION TESTING
- POTENTIAL UTILIZATION OF AFIS FOR NRA PROGRAM
  - THERMAL VACUUM ENVIRONMENT
  - OUTFITTED WITH (2) CRYOGENIC COUPLINGS
  - PERFORM ACTUAL CRYOGEN TRANSFER

CONCLUSIONS

- THE NASA/MOOG AFIS IS IDEALLY SUITED AS AN AUTOMATED FLUID TRANSFER INTERFACE SYSTEM FOR USE WITH FUTURE TANKERS AND SPACECRAFT
- THE AFIS IS FULLY COMPLIANT WITH ALL DESIGN REQUIREMENTS
- EXTREMELY LIGHTWEIGHT, THE AFIC CARRIES UP TO 2 1/2 TIMES ITS OWN WEIGHT
- THE AFIS IS COMPATIBLE WITH ALL DOCKING MECHANISMS INCLUDING SINGLE AND TRIPLE POINT TYPES
- THE AFIS IS REUSEABLE FOR GROUND SERVICING AND GROUND LAUNCHED SERVICING TO ALL ORBITS
- SIMPLE, STRAIGHT FORWARD DESIGN HAS MINIMIZED LIFE CYCLE COSTS
- RELIABILITY HAS BEEN MAXIMIZED THROUGH SIMPLICITY AND REDUNDANCY
- THE CENTERLINE MOUNTED ACTUATOR DESIGN IS INHERENTLY FLEXIBLE
- MONOP, BIPROP AND CRYOGENIC CONFIGURATIONS HAVE BEEN FUNCTIONALLY DEMONSTRATED

UNIVERSAL RESUPPLY INTERFACE SYSTEM (URIS)

- ONE SYSTEM DESIGNED, BUILT AND TESTED UNDER MOOG IR & D
- USES AFIS ACTUATOR AND RECEPTACLE
  - SAME MISSION SUITABLE FEATURES
  - MUCH SMALLER AND LIGHTER
- COUPLING CLUSTER SCALED FOR APPLICATION
  - TWO TO TWENTY COUPLINGS/CONNECTORS
- SMALL URIS IDEAL FOR S3 FLIGHT EXPERIMENT
  - SUGGEST TWO PROPELLANT COUPLINGS AND TWO ELECTRICAL CONNECTORS
  - LIGHT WEIGHT: 43.9 LBM TOTAL (INCLUDING COUPLINGS)
  - TECHNOLOGY RELEVANT TO EVENTUAL TANKER INTERFACE
- MEDIUM IRIS IDEAL FOR SSF LOGISTIC SUBCARRIER INTERFACE:
  - EIGHT FLUID/ELECTRICAL CONNECTOR SITES
  - LIGHT WEIGHT: 70.2 LBM (INCLUDING COUPLINGS)
  - COULD BE USED AS DOCKING MECHANISM

RELATED IR&D ACTIVITY: URIS

Automated Umbilical Connector (AUC) System
- S/N 001 Furnished to NASA/MSFC
- S/N 003 Designed and devloped under Moog IR&D

Automated Fluid Interface System (AFIS)
- S/N 001 In Development for NASA/MSFC

Universal Resupply Interface System (URIS)
- S/N 001 Being built under Moog IR&D Funding
  - Uses AFIS Smart Actuator
  - Demonstrates flexibility of AFIS design
  - (4) connector sites, (2) elect, (2) fluid
  - Ideal for S3 ground testing
  - Rated for Thermal Vac and Vibration Environments

77

SMALL URIS

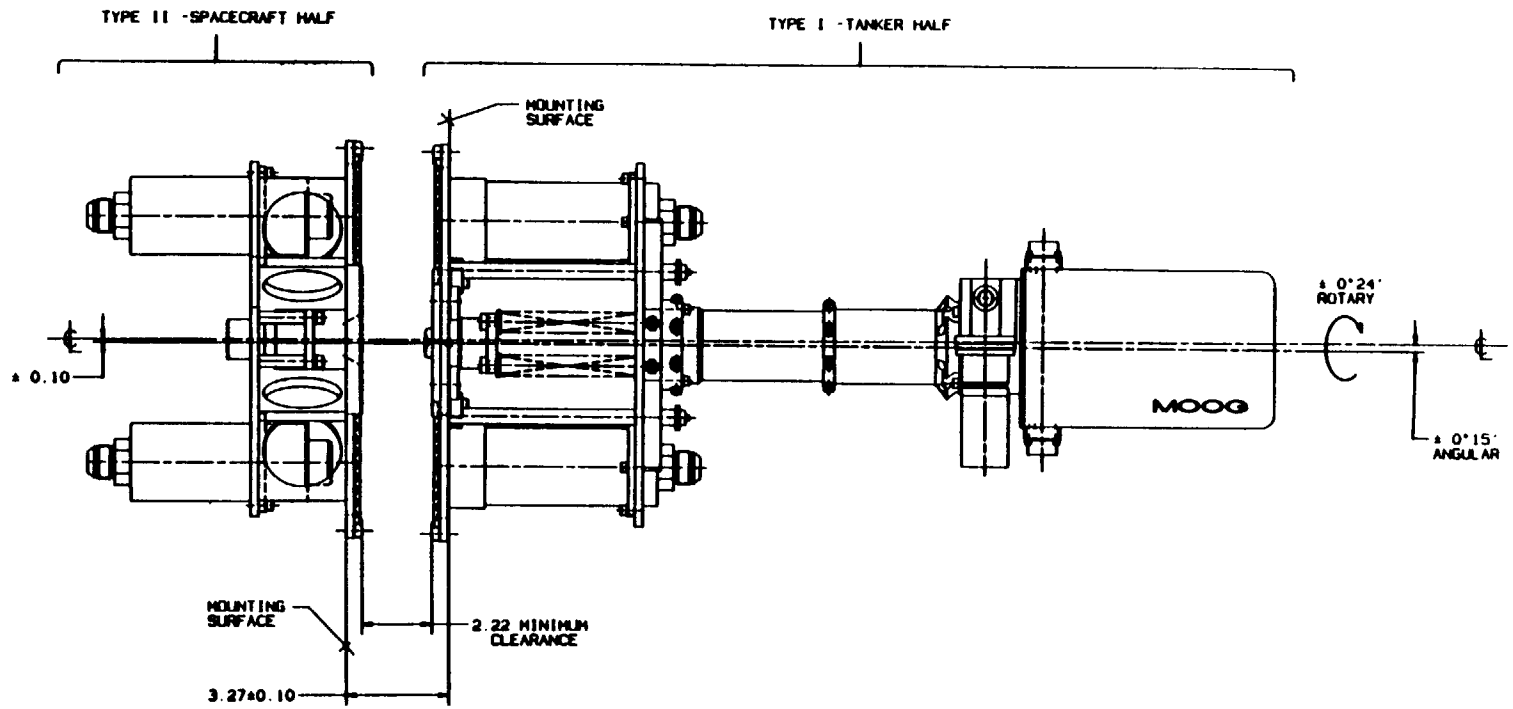

- FOUR CONNECTOR SITES
- IDEAL FOR S^3 FLIGHT EXPERIMENT

MEDIUM URIS

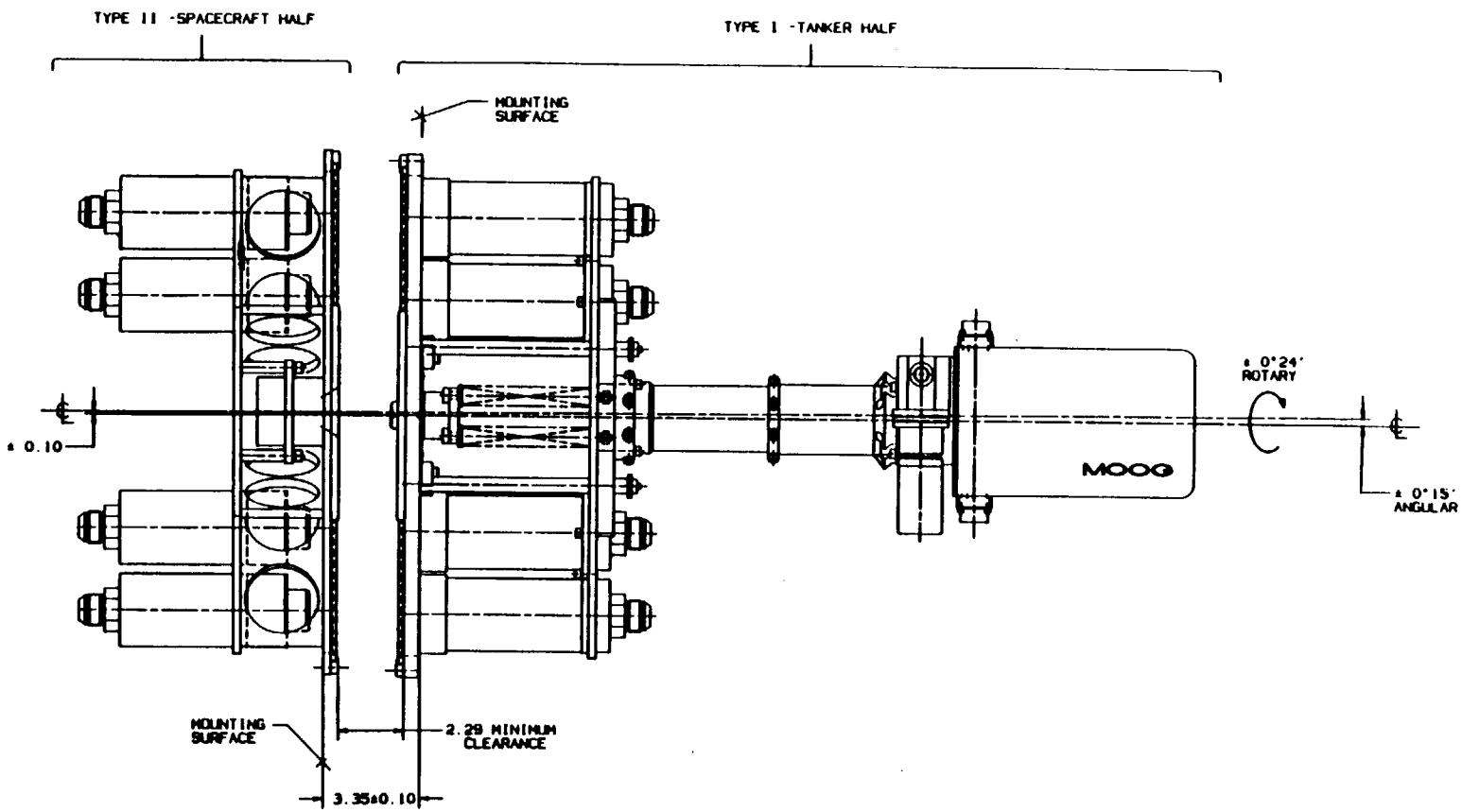

- **TEN CONNECTOR SITES**
- **IDEAL FOR SSF UNPRESSURIZED LOGISTICS MODULE**

MOOG CRYOGENIC URIS

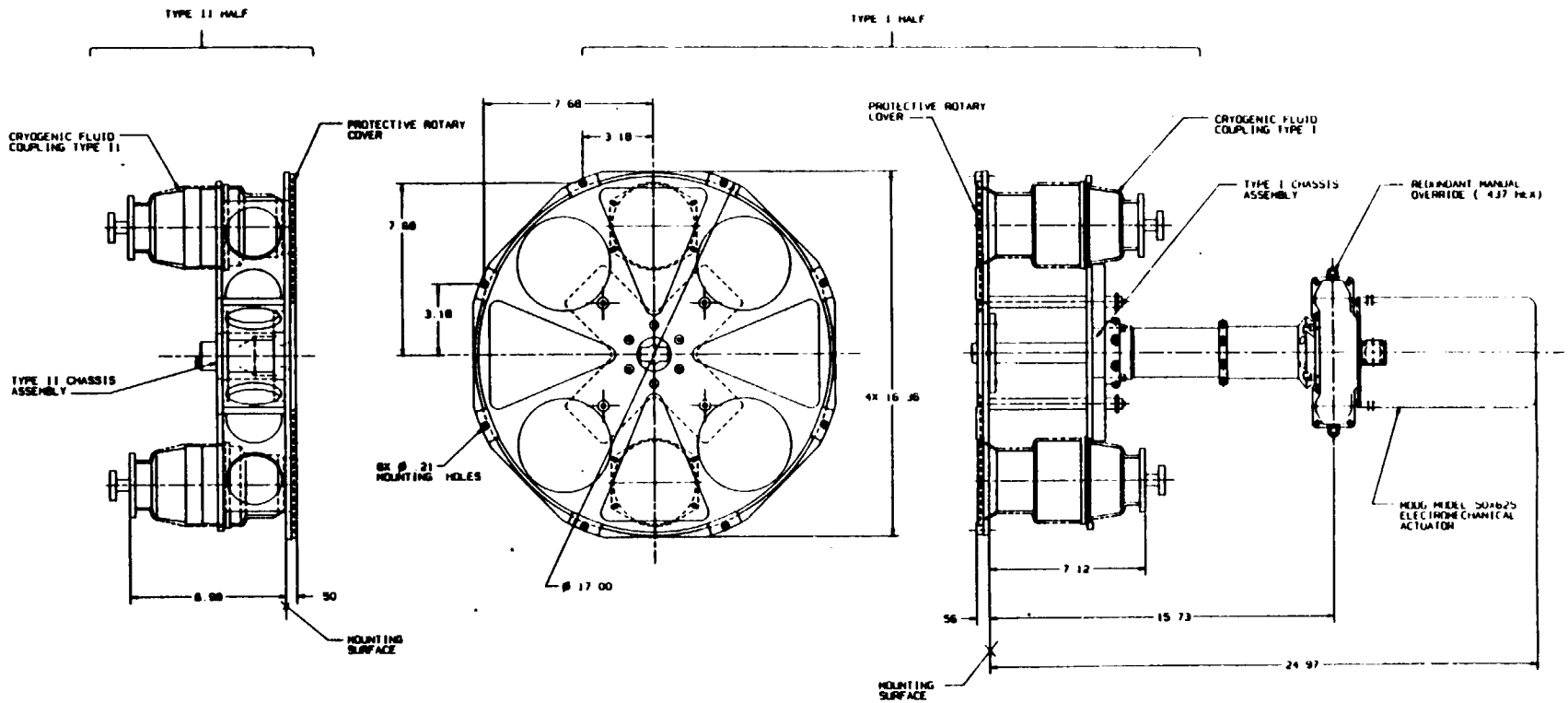

NOTES:

1. URIS AS SHOWN HAS (4) LARGE CONNECTOR SITES. AS AN EXAMPLE THE SYSTEM IS SHOWN CONFIGURED WITH TWO MOOG CRYOGENIC FLUID COUPLINGS. THE REMAINING TWO SITES PROVIDE CAPACITY FOR FUTURE [illegible].

2. WEIGHT (lbs)

	URIS		COUPLINGS		TOTAL
TYPE I HALF	27.0	:	10.0	:	37.0
TYPE II HALF	13.0		10.0		23.0

PROPRIETARY

THIS TECHNICAL DATA/DRAWING IS PROPRIETARY TO MOOG INC. AND SHALL NOT BE REPRODUCED OR DISCLOSED IN WHOLE OR IN PART OR USED FOR ANY PURPOSE WHATSOEVER EXCEPT AS SPECIFICALLY AUTHORIZED IN WRITING BY MOOG INC.

PROPOSAL DRAWING

AUTOMATED FLUID INTERFACE SYSTEM

MOOG
SPACE PRODUCTS DIVISION

NASA
MARSHALL SPACE FLIGHT CENTER

TENTATIVELY PLANNED URIS TESTING

- MOOG FUNCTIONAL DEMONSTRATION

- NASA JSC TRANSFER DEMO:
  - URIS CONFIGURED WITH (1) HYDRAZINE COUPLING
  - MATE/TRANSFER HYDRAZINE/DEMATE

- MARTIN MARIETTA SERVICING DEMO:
  - TO BE PERFORMED IN MMC LAB
  - FLY,DOCK,ENGAGE/DISENGAGE URIS, UNDOCK

- TRW SERVICING DEMO:
  - TO BE PERFORMED AT TRW
  - POSSIBLY A THERMAL/VAC FUNCTIONAL TEST