NACA TN No. 1787

8233

TECH LIBRARY KAFB, NM

0065013

NATIONAL ADVISORY COMMITTEE FOR AERONAUTICS

TECHNICAL NOTE

No. 1787

COMPARISON OF THE STRUCTURAL EFFICIENCY OF PANELS HAVING STRAIGHT-WEB AND CURVED-WEB Y-SECTION STIFFENERS

By Norris F. Dow and William A. Hickman

Langley Aeronautical Laboratory
Langley Field, Va.

Washington
January 1949

TECH LIBRARY KAFB, NM

0065013

NATIONAL ADVISORY COMMITTEE FOR AERONAUTICS

TECHNICAL NOTE NO. 1787

COMPARISON OF THE STRUCTURAL EFFICIENCY OF PANELS HAVING STRAIGHT-WEB AND CURVED-WEB Y-SECTION STIFFENERS

By Norris F. Dow and William A. Hickman

SUMMARY

Comparisons are made of the structural efficiency of panels having straight-web and curved-web Y-section stiffeners. The comparisons show that, in the high-stress region in which failure is at least in part associated with local buckling, panels having curved-web Y-section stiffeners have higher structural efficiencies than panels having straight-web Y-section stiffeners; these higher structural efficiencies are evidenced by higher average stresses at failure, smaller stiffener heights, or wider average spacing of rivet lines, in various combinations depending on the design requirements.

INTRODUCTION

Comparisons of designs of wing compression panels having straight-web Y-section stiffeners with designs of panels having Z-section stiffeners (reference 1) indicated that for some loading conditions the Y-stiffened panels had the higher structural efficiencies. Because curving the webs of the Y-sections (fig. 1) increases the local buckling strength, particularly for large width-to-thickness ratios of the webs, web curvature appears to offer possibilities of increasing even further the structural efficiency of Y-stiffened panels that fail by local buckling. In order to evaluate the effect of web curvature on the structural efficiency, 48 panels having curved-web Y-section stiffeners were tested in the Langley structures research laboratory. The results of these tests are compared herein with the results presented in reference 1 for panels with straight-web Y-section stiffeners.

SYMBOLS

The symbols used to represent the various dimensions of the panels are shown in figures 1 and 2. In addition, the following symbols are used:

A	cross-sectional area, square inches
c	coefficient of end fixity as used in Euler column formula
d	diameter of rivets, inches
$\bar{h}$	distance from outside of skin to axis of center of gravity of cross section, inches
L	length of panel, inches
p	pitch of rivets, inches
P_i	intensity of loading, or compressive load per inch of panel width, kips per inch
R	fillet radius, inches
$\bar{t}$	cross-sectional area per inch of panel width, expressed as an equivalent or average thickness, inches
ρ	radius of gyration, inches
$\bar{\sigma}_f$	average stress at failing load, ksi
σ_{cr}	stress for local buckling of the sheet, ksi
σ_{cy}	compressive yield stress, ksi
$\bar{\epsilon}_f$	unit shortening at failing load

TEST SPECIMENS AND MANNER OF TESTING

The test specimens were constructed with six stiffeners and five bays as shown in figure 1. The nominal values of both the skin thickness t_S and the stiffener thickness t_W were held constant at 0.064 inch $\left(\frac{t_W}{t_S} = 1.00\right)$. Three sizes of stiffeners were used corresponding to values of b_W/t_W of 20, 25, and 30, and the stiffeners were riveted to the sheets with $\frac{5}{32}$-inch-diameter A17S-T4 flat-head rivets (AN442AD) at $\frac{1}{2}$-inch pitch on all panels.

Values of the with-grain compressive yield stress σ_{cy} for the sheet material (Alclad 75S-T6 aluminum alloy) and for the extrusions (75S-T6 aluminum alloy) are given in table 1. Values of the compressive yield stress for the material used to construct the 75S-T6 aluminum-alloy straight-web Y-stiffened panels of references 1 and 2 are also given in table 1 for comparison. The compressive yield stress for the sheet material was essentially the same for both the straight-web and curved-web specimens. The compressive yield stress for the stiffeners, however, was, on the average, 6 percent less for the curved-web Y-sections than for the straight-web Y-sections.

The test procedure was essentially the same as that used in other panel tests in the Langley structures research laboratory. (See references 3 and 4.) The panels were tested flat-ended, without side support, in a hydraulic testing machine having an accuracy of one-half of 1 percent of the load. The stress for local buckling of the sheet was determined by the strain-reversal method (see reference 5). The ends of the panels were ground flat and parallel, and the method of alinement in the testing machine was such as to insure uniform bearings on the ends of the specimens. An end-fixity coefficient of 3.75 has been indicated for such panel tests in this machine, and this value was therefore used in reducing the test data. The unit shortening at failing load $\bar{\epsilon}_f$ was measured as the average of the strains indicated by four, $6\frac{1}{2}$-inch gage length, resistance-type wire strain gages mounted on the quarter points of the second and fifth stiffeners.

Figure 3 has been prepared as a matter of interest to show the failed portions of one of the 75S-T6 aluminum-alloy, curved-web Y-stiffened panels after test, and also of the corresponding 24S-T3 and 75S-T6 aluminum-alloy straight-web panels of reference 1. All of these panels had the same nominal values of t_W/t_S, b_W/t_W, and b_S/t_S (1.00, 30, and 75, respectively), and also, within 6 percent, the same length and cross-sectional area. The loads carried at failure, however, as shown in the figure, varied from 201 kips for the 24S-T3 straight-web panel to 369 kips for the 75S-T6 curved-web panel, and at failure the curved-web panel shattered, whereas the straight-web panels merely wrinkled locally.

RESULTS

The results are presented in table 2 and figure 4. Values of the actual test proportions are given for each specimen in table 2, together with the values of average stress at failure $\bar{\sigma}_f$, the stress for local buckling σ_{cr}, the ratio of intensity of loading to effective length of

panel $\frac{P_i}{L/\sqrt{c}}$, and the unit shortening at failure $\bar{\epsilon}_f$. In figure 4 the values of $\bar{\sigma}_f$ for each panel are plotted against $\frac{P_i}{L/\sqrt{c}}$ and are compared with the corresponding values for the 75S-T6 straight-web Y-stiffened panels of reference 1 to show the effect of web curvature on the panel strength. In general, even though the value of the compressive yield stress σ_{cy} for the curved-web Y-section extrusions was less than for the straight-web sections (see table 1), the average stress at failure for the curved-web panels was greater than that for the corresponding straight-web panels, except in the long-column range $\left(\text{low values of } \frac{P_i}{L/\sqrt{c}}\right)$.

DESIGN CHARTS

Direct-reading design charts based on the test results for curved-web Y-stiffened panels and similar in all respects to the charts of reference 2 for straight-web Y-stiffened panels are presented in figures 5 and 6. Charts of this type may be used to find directly the panel proportions which will carry a given intensity of loading, at a given effective length of panel, with a given sheet thickness. Because only one ratio of stiffener thickness to skin thickness t_W/t_S has been tested with curved-web Y-section stiffeners, only one design chart $\left(\text{for } \frac{t_W}{t_S} = 1.00\right)$ is presented. The panel proportions which have minimum weight for this value of t_W/t_S may be found as those corresponding to the blue curves or regions on the charts. The reason that the curves expand into regions at $\frac{H}{t_W} = 33.8$ or 60.7 is simply that values of H/t_W less than 33.8 or greater than 60.7 are not considered in these charts. Too much importance should not be attached to the exact proportions indicated to have minimum weight because in many cases the proportions may be varied somewhat from those indicated by the blue with little change in the value of the stress that can be carried. The section properties corresponding to the panel proportions covered by the charts may be found in table 3.

COMPARISON OF THE STRUCTURAL EFFICIENCIES OF STRAIGHT-WEB AND CURVED-WEB Y-STIFFENED PANELS

A comparison of the structural efficiency of straight-web and curved-web Y-stiffened panels can logically be divided into two parts: a comparison of panels of such length that failure is primarily by column

bending and a comparison of panels of shorter length such that failure is, at least in part, associated with local buckling of the plate elements of which the panel is composed. The reason for separating the comparison into two parts is that curving the webs of the Y-sections, because it adds material near the axis of the center of gravity, decreases the efficiency of the panel as a column at the same time that it raises the efficiency from the standpoint of local buckling. Web curvature can be accordingly expected to have either an adverse or beneficial effect upon the structural efficiency, the type of effect depending upon the length of the panel.

The beneficial effect of web curvature at the shorter lengths $\left(\text{high values of } \frac{P_i}{L/\sqrt{c}}\right)$ is shown in figure 4 for the particular proportions tested. Web curvature produced the greatest increase in average stress at failure for the largest stiffeners $\left(\frac{b_W}{t_W} = 30\right)$. Comparisons based simply on the increase in stress-carrying ability of these particular proportions due to web curvature are apt to be misleading, however. If a panel has such proportions that it fails at a low stress, the failing stress can be increased without great difficulty by almost any change in proportions. If a panel is efficiently proportioned, on the other hand, to carry a high stress, the same change in proportions may decrease the efficiency.

In order to generalize and to remove the difficulties associated with the particular comparisons of figure 4, an envelope curve of $\bar{\sigma}_f$ against $\frac{P_i}{L/\sqrt{c}}$ for curved-web Y-stiffened panels was prepared and is compared in figure 7 with the envelope curve of reference 1 for 75S-T6 straight-web panels. The fact that little difference exists between the envelopes for the curved-web and straight-web panels at low values of $\frac{P_i}{L/\sqrt{c}}$ (long panels that fail by column bending) but that at higher values of $\frac{P_i}{L/\sqrt{c}}$ (shorter panels) the envelope for the curved-web panels is the higher confirms in a general way the beneficial effect of web curvature at the shorter lengths.

The foregoing remarks should not be interpreted as indicating that a general comparison is always better than a particular comparison. Quite the reverse is true. The designer is interested in the relative merits of various types of construction for his particular application and the comparison between actual designs suitable for that application is the most valid comparison that he can make. The direct-reading design charts (figs. 5 and 6) are useful for making such comparisons because they show directly the panel proportions and the corresponding stresses that can be carried for given values of the principal design conditions.

A systematic series of such particular comparisons, made by studying the curves of the design charts (figs. 5 and 6) and the corresponding charts of reference 2 reveals that, except in the long-column range, the curved-web panels generally have wider average spacings of rivet lines S than the straight-web panels which meet the same values of the design conditions P_i/t_S and $\frac{P_i}{L/\sqrt{c}}$. A typical example is the case for $\frac{P_i}{t_S} = 120$ ksi and $\frac{P_i}{L/\sqrt{c}} = 0.30$ ksi for which the following panel designs are given by the design charts:

	$\bar{\sigma}_f$ (ksi)	H/t_W	S/t_S
Straight web	52.2	33.8	38.7
Curved web	53.0	33.8	42.3

Similarly, study of figures 4 and 6 reveals that in some cases a curved-web Y-stiffened panel can be designed to have less weight, smaller height stiffeners, and a wider average spacing of rivet lines than the lightest corresponding straight-web Y-stiffened panel. For example, at $\frac{P_i}{t_S} = 119$ ksi and $\frac{P_i}{L/\sqrt{c}} = 0.25$ ksi, the following minimum-weight design for $\frac{t_W}{t_S} = 1.00$ is given by the design charts of reference 2 for panels with straight-web stiffeners:

$\bar{\sigma}_f$, ksi 50.0
H/t_W 39.2
S/t_S 41.2

A corresponding design of a panel with curved-web stiffeners is given by interpolation in figure 5 or 6 to be

$\bar{\sigma}_f$, ksi 50.5
H/t_W 36.5
S/t_S 42.5

In other words, the curved-web panel may have higher average stresses at failure, smaller height stiffeners, or wider average spacing of rivet lines, in various combinations depending upon the design conditions.

CONCLUDING REMARKS

Comparisons have been made of the structural efficiency of panels having straight-web and curved-web Y-section stiffeners. The comparisons showed that, in the high-stress region in which failure is at least in part associated with local buckling, panels having curved-web Y-section stiffeners have higher structural efficiencies than panels having straight-web Y-section stiffeners, these higher structural efficiencies being evidenced by higher average stresses at failure, smaller stiffener heights, or wider average spacing of rivet lines, in various combinations depending on the design requirements.

Langley Aeronautical Laboratory
National Advisory Committee for Aeronautics
Langley Field, Va., October 29, 1948

REFERENCES

1. Dow, Norris F., and Hickman, William A.: Design Charts for Flat Compression Panels Having Longitudinal Extruded Y-Section Stiffeners and Comparison with Panels Having Formed Z-Section Stiffeners. NACA TN No. 1389, 1947.

2. Dow, Norris F., and Hickman, William A.: Direct-Reading Design Charts for 75S-T Aluminum-Alloy Flat Compression Panels Having Longitudinal Straight-Web Y-Section Stiffeners. NACA TN No. 1640, 1948.

3. Schuette, Evan H.: Charts for the Minimum-Weight Design of 24S-T Aluminum-Alloy Flat Compression Panels with Longitudinal Z-Section Stiffeners. NACA Rep. No. 827, 1945.

4. Schuette, Evan H., Barab, Saul, and McCracken, Howard L.: Compressive Strength of 24S-T Aluminum-Alloy Flat Panels with Longitudinal Formed Hat-Section Stiffeners. NACA TN No. 1157, 1946.

5. Hu, Pai C., Lundquist, Eugene E., and Batdorf, S. B.: Effect of Small Deviations from Flatness on Effective Width and Buckling of Plates in Compression. NACA TN No. 1124, 1946.

TABLE 1.- VALUES OF THE COMPRESSIVE YIELD STRESS FOR THE MATERIALS USED FOR THE CURVED-WEB Y-STIFFENED PANELS AND THE STRAIGHT-WEB Y-STIFFENED PANELS

	σ_{cy} (ksi)	
	Sheet (Alclad)	Stiffeners (extruded)
Curved web		
Maximum	69.0	81.0
Average	67.4	73.5
Minimum	65.9	62.8
Straight web[1]		
Maximum	69.7	86.5
Average	67.3	78.2
Minimum	64.7	67.6

[1]From reference 1.

NACA

TABLE 2.- TEST DATA AND PROPORTIONS OF CURVED-WEB Y-STIFFENED SPECIMENS HAVING

ALCLAD 75S-T6 SHEET AND 75S-T6 STIFFENERS

[Nominal proportions are given in parentheses; $\frac{b_W}{b_Y} = 0.96$; $\frac{b_W}{b_L} = 1.07$; $\frac{b_W}{b_F} = 1.44$; $\frac{d}{t_S} = 2.44$; $\frac{p}{t_S} = 7.8$]

Proportions of test specimens								Test data			
t_W (in.)	$\frac{t_W}{t_S}$	$\frac{b_S}{t_S}$	$\frac{b_W}{t_W}$	$\frac{b_A}{t_W}$	$\frac{t_W}{t_L}$	$\frac{t_W}{t_F}$	$\frac{L}{b_Y}$ (a)	σ_{cr} (ksi)	$\bar{\sigma}_f$ (ksi)	$\frac{P_1}{L/\sqrt{c}}$ (ksi)	$\bar{\epsilon}_f$
(0.064)	(1.00)	(25)	(20)	(9.3)	(0.89)	(0.47)					
0.0628	0.975	24.8	20.4	9.87	0.876	0.475	14.6	62.3	64.2	1.394	725×10^{-5}
.0622	.915	23.9	20.6	10.05	.870	.450	29.2		67.9	.743	732
.0613	.942	25.3	20.9	10.28	.855	.463	51.0		54.5	.343	528
.0627	.995	24.8	20.4	10.69	.867	.472	87.6		23.6	.086	220
			(25)								
.0634	.980	24.7	25.2	9.42	.851	.457	14.6	53.2	67.8	1.282	825
.0630	.969	26.2	25.4	10.32	.861	.457	29.3	49.5	64.2	.603	705
.0632	.958	25.2	25.3	9.81	.855	.457	51.4	53.3	57.1	.300	550
.0594	.949	27.9	26.9	11.74	.863	.433	88.0		23.7	.072	225
			(30)								
.0629	.978	25.4	30.5	10.14	.874	.452	14.7		67.7	1.117	829
.0626	.984	25.6	30.6	10.50	.887	.453	29.3		63.3	.521	660
.0684	1.071	23.4	28.1	9.44	.934	.496	51.4		50.9	.244	501
.0622	.976	25.4	30.8	10.45	.880	.453	88.0		23.5	.064	215
		(35)	(20)								
.0626	.981	35.1	20.4	10.22	.878	.470	14.5	48.7	62.4	1.223	765
.0631	.986	35.8	20.3	10.14	.863	.471	29.1	50.1	62.2	.560	691
.0588	.930	36.6	21.8	10.20	.956	.440	50.8	52.5	53.4	.286	559
.0628	.968	35.4	20.4	10.83	.878	.475	87.1		23.2	.076	236
			(25)								
.0637	.999	34.7	25.1	9.86	.860	.459	14.6	49.1	64.4	1.075	851
.0633	1.005	36.3	25.3	9.47	.859	.458	29.2	50.9	59.5	.493	688
.0613	.976	35.5	26.1	10.77	.836	.442	51.1	48.5	50.2	.239	515
.0626	.998	35.3	25.6	10.38	.863	.454	87.6		22.7	.063	215
			(30)								
.0599	.868	33.7	32.0	10.52	.868	.432	14.5	37.1	61.7	.886	720
.0611	.946	35.8	31.4	10.36	.895	.442	29.3	44.2	57.4	.408	653
.0584	.918	35.1	32.8	11.30	.859	.419	51.2	34.1	48.3	.197	505
.0592	.927	36.3	32.4	10.81	.874	.427	87.8		24.6	.059	235
		(50)	(20)								
.0682	1.040	49.5	18.8	9.53	.937	.511	14.2	24.9	59.9	1.075	677
.0657	.997	48.5	19.5	9.51	.910	.490	28.7	27.1	60.0	.513	707
.0617	.969	51.4	20.7	10.53	.867	.466	50.2	26.1	49.3	.239	557
.0641	.976	49.4	20.0	10.14	.883	.479	86.0		22.6	.065	220
			(25)								
.0638	.973	50.5	25.1	9.71	.859	.460	14.5	25.5	60.8	.904	863
.0600	.939	51.3	26.7	9.83	.867	.439	29.0	24.5	56.4	.404	716
.0598	.925	50.4	26.8	10.87	.894	.430	50.6	25.9	47.4	.198	535
.0634	1.010	50.1	25.2	10.25	.859	.458	86.9		23.3	.058	222
			(30)								
.0628	.977	51.7	30.5	9.76	.895	.453	14.6	23.4	58.2	.740	726
.0604	.911	48.2	31.8	10.76	.870	.431	29.2	25.7	53.5	.359	632
.0612	.923	47.2	31.3	10.46	.903	.443	50.7	28.4	46.0	.170	508
.0619	.941	47.9	31.0	10.82	.893	.442	87.6		23.7	.051	214
		(75)	(20)								
.0638	.971	74.0	20.0	10.19	.890	.480	12.9	11.2	52.9	.860	715
.0626	.966	74.4	20.4	10.22	.859	.467	28.1	12.8	53.7	.403	729
.0631	.949	73.2	20.3	10.14	.870	.473	49.0	13.6	47.0	.197	527
.0616	.949	74.3	20.8	10.71	.864	.465	84.1	15.9	21.3	.053	209
			(25)								
.0628	.975	75.8	25.5	9.95	.862	.456	14.2	11.4	54.6	.702	818
.0586	.924	75.9	27.3	10.24	.868	.422	28.5	10.0	50.5	.318	677
.0640	1.010	75.7	25.0	9.53	.860	.463	49.9	11.2	44.8	.163	533
.0632	.995	75.5	25.3	10.92	.855	.457	85.4	12.2	21.8	.047	219
			(30)								
.0665	1.005	74.6	28.8	8.96	.924	.479	14.4	10.6	54.5	.614	801
.0597	.911	73.6	32.1	10.72	.863	.429	28.8	11.7	50.7	.279	640
.0611	.931	73.3	31.4	10.80	.884	.440	50.4	12.0	44.7	.141	516
.0594	.905	74.7	32.2	11.11	.861	.430	86.4	12.1	22.1	.041	227

[a]Lengths are for the actual test specimens for which c = 3.75 approximately.

NACA

TABLE 3.- Y-PANEL PROPERTIES $\left[\frac{t_W}{t_S}=1.00;\ \frac{b_A}{t_W}=9.3;\ \frac{b_W}{b_I}=0.96;\ \frac{t_W}{t_L}=0.89;\ \frac{b_W}{b_L}=1.07;\ \frac{t_W}{t_F}=0.47;\ \frac{b_W}{b_F}=1.44;\ \frac{d}{t_S}=2.44;\ \frac{p}{t_S}=7.8\right]$

$\frac{b_W}{t_W}$ / $\frac{b_S}{t_S}$		18	19	20	21	22	23	24	25	26	27	28	29	30	31	32	33
23	$\frac{h}{t_S}$	3.315	3.363	3.410	3.455	3.498	3.539	3.578	3.616	3.652	3.688	3.721	3.754	3.785	3.815	3.845	3.873
24		3.265	3.314	3.361	3.405	3.449	3.490	3.529	3.568	3.604	3.640	3.674	3.706	3.738	3.769	3.798	3.827
25		3.218	3.266	3.313	3.358	3.401	3.440	3.483	3.521	3.558	3.593	3.628	3.661	3.693	3.724	3.753	3.782
26		3.172	3.221	3.268	3.313	3.356	3.397	3.437	3.476	3.513	3.549	3.583	3.617	3.649	3.680	3.710	3.739
27		3.128	3.177	3.224	3.269	3.312	3.354	3.394	3.432	3.470	3.506	3.540	3.574	3.606	3.637	3.668	3.697
28		3.086	3.135	3.182	3.227	3.270	3.312	3.352	3.391	3.428	3.464	3.499	3.532	3.565	3.596	3.627	3.656
29		3.046	3.095	3.141	3.186	3.229	3.271	3.311	3.350	3.387	3.424	3.458	3.492	3.525	3.557	3.587	3.617
30		3.007	3.056	3.102	3.147	3.190	3.232	3.272	3.311	3.348	3.385	3.420	3.453	3.486	3.518	3.549	3.579
31		2.970	3.018	3.065	3.109	3.152	3.194	3.234	3.273	3.310	3.347	3.382	3.416	3.449	3.480	3.511	3.541
32		2.934	2.982	3.028	3.073	3.116	3.157	3.198	3.236	3.274	3.310	3.345	3.379	3.412	3.444	3.475	3.505
33		2.899	2.947	2.993	3.038	3.080	3.122	3.162	3.201	3.238	3.275	3.310	3.344	3.377	3.409	3.440	3.470
34		2.866	2.913	2.959	3.004	3.046	3.088	3.128	3.166	3.204	3.240	3.275	3.309	3.342	3.375	3.406	3.436
35		2.833	2.881	2.926	2.971	3.013	3.055	3.094	3.133	3.171	3.208	3.242	3.276	3.309	3.341	3.372	3.403
36		2.802	2.849	2.895	2.939	2.981	3.022	3.062	3.101	3.138	3.174	3.209	3.244	3.277	3.309	3.340	3.370
37		2.772	2.819	2.864	2.908	2.950	2.991	3.031	3.069	3.107	3.143	3.178	3.212	3.245	3.277	3.309	3.339
38		2.743	2.789	2.834	2.878	2.920	2.961	3.001	3.039	3.076	3.112	3.147	3.181	3.214	3.247	3.278	3.308
39		2.715	2.761	2.806	2.849	2.891	2.932	2.971	3.009	3.047	3.083	3.118	3.152	3.185	3.217	3.248	3.278
40		2.687	2.733	2.778	2.821	2.862	2.903	2.943	2.981	3.018	3.054	3.089	3.123	3.155	3.188	3.219	3.249
42		2.635	2.681	2.725	2.767	2.809	2.849	2.888	2.926	2.962	2.998	3.033	3.067	3.100	3.132	3.163	3.193
44		2.586	2.631	2.674	2.717	2.758	2.797	2.836	2.874	2.910	2.946	2.980	3.014	3.047	3.079	3.110	3.140
46		2.540	2.584	2.627	2.669	2.709	2.749	2.787	2.824	2.861	2.896	2.930	2.964	2.996	3.028	3.059	3.089
48		2.496	2.540	2.582	2.624	2.664	2.703	2.741	2.778	2.814	2.849	2.883	2.916	2.948	2.980	3.011	3.041
50		2.455	2.498	2.540	2.581	2.620	2.659	2.697	2.733	2.769	2.803	2.837	2.870	2.903	2.934	2.965	2.995
52		2.416	2.459	2.500	2.540	2.579	2.617	2.655	2.691	2.726	2.761	2.794	2.827	2.859	2.890	2.921	2.951
54		2.379	2.421	2.462	2.502	2.540	2.578	2.615	2.651	2.686	2.720	2.753	2.786	2.817	2.848	2.879	2.908
56		2.344	2.386	2.426	2.465	2.503	2.540	2.577	2.612	2.647	2.681	2.714	2.746	2.777	2.808	2.838	2.868
58		2.311	2.352	2.391	2.430	2.468	2.505	2.540	2.576	2.610	2.643	2.676	2.708	2.739	2.770	2.800	2.829
60		2.279	2.319	2.358	2.397	2.433	2.470	2.506	2.541	2.574	2.608	2.640	2.672	2.703	2.733	2.763	2.792
63		2.234	2.274	2.312	2.350	2.386	2.422	2.457	2.491	2.524	2.557	2.589	2.620	2.651	2.681	2.710	2.739
66		2.193	2.231	2.269	2.305	2.341	2.376	2.411	2.444	2.477	2.509	2.541	2.572	2.602	2.631	2.660	2.689
69		2.154	2.191	2.228	2.264	2.299	2.334	2.367	2.401	2.433	2.464	2.495	2.526	2.556	2.585	2.613	2.642
72		2.117	2.154	2.190	2.225	2.260	2.294	2.327	2.359	2.391	2.422	2.453	2.483	2.512	2.541	2.569	2.597
75		2.083	2.119	2.154	2.189	2.223	2.256	2.289	2.320	2.352	2.382	2.413	2.442	2.471	2.499	2.527	2.555
78		2.051	2.086	2.121	2.155	2.188	2.220	2.252	2.284	2.315	2.345	2.374	2.403	2.432	2.460	2.488	2.515
81		2.020	2.055	2.089	2.122	2.155	2.187	2.218	2.249	2.279	2.309	2.338	2.367	2.395	2.423	2.450	2.476
84		1.992	2.026	2.059	2.091	2.124	2.155	2.186	2.216	2.246	2.275	2.304	2.332	2.360	2.387	2.414	2.440
23	$\frac{h}{t_S}$	12.43	13.23	14.04	14.84	15.65	16.46	17.27	18.08	18.89	19.71	20.53	21.35	22.17	22.99	23.82	24.64
24		12.36	13.15	13.95	14.75	15.85	16.36	17.19	17.99	18.80	19.61	20.44	21.25	22.07	22.89	23.71	24.54
25		12.28	13.07	13.87	14.67	15.47	16.28	17.09	17.90	18.71	19.52	20.34	21.15	21.98	22.80	23.61	24.44
26		12.20	13.00	13.79	14.59	15.39	16.19	17.00	17.81	18.62	19.43	20.25	21.06	21.88	22.70	23.52	24.34
27		12.13	12.92	13.71	14.51	15.30	16.11	16.92	17.72	18.53	19.34	20.15	20.97	21.78	22.60	23.42	24.24
28		12.05	12.84	13.63	14.42	15.22	16.02	16.80	17.63	18.44	19.27	20.06	20.87	21.69	22.50	23.32	24.14
29		11.98	12.77	13.55	14.34	15.14	15.94	16.74	17.55	18.35	19.16	19.97	20.78	21.59	22.41	23.23	24.04
30		11.91	12.67	13.48	14.27	15.06	15.86	16.66	17.46	18.26	19.07	19.88	20.69	21.50	22.32	23.13	23.95
31		11.84	12.61	13.40	14.19	14.98	15.78	16.58	17.37	18.18	18.98	19.79	20.60	21.41	22.22	23.04	23.85
32		11.77	12.54	13.33	14.11	14.90	15.70	16.49	17.29	18.09	18.90	19.70	20.51	21.32	22.13	22.94	23.76
33		11.69	12.47	13.25	14.04	14.82	15.61	16.41	17.21	18.01	18.81	19.62	20.42	21.23	22.04	22.85	23.66
34		11.63	12.40	13.18	13.96	14.75	15.53	16.33	17.13	17.92	18.73	19.53	20.33	21.15	21.92	22.76	23.57
35		11.56	12.33	13.11	13.88	14.67	15.46	16.25	17.04	17.84	18.64	19.44	20.24	21.04	21.86	22.66	23.48
36		11.49	12.26	13.04	13.81	14.60	15.38	16.17	16.96	17.76	18.55	19.35	20.16	20.96	21.77	22.57	23.38
37		11.42	12.19	12.96	13.74	14.52	15.31	16.09	16.88	17.68	18.47	19.27	20.07	20.88	21.68	22.49	23.29
38		11.36	12.12	12.89	13.66	14.45	15.23	16.01	16.80	17.59	18.39	19.19	19.98	20.79	21.59	22.40	23.20
39		11.30	12.06	12.83	13.60	14.37	15.15	15.94	16.72	17.52	18.31	19.11	19.90	20.70	21.50	22.31	23.11
40		11.23	11.99	12.76	13.53	14.30	15.08	15.80	16.65	17.44	18.23	19.02	19.82	20.61	21.42	22.22	23.03
42		11.10	11.86	12.62	13.39	14.16	14.94	15.71	16.49	17.28	18.07	18.86	19.65	20.45	21.25	22.04	22.85
44		10.98	11.73	12.49	13.25	14.02	14.79	15.56	16.35	17.13	17.91	18.70	19.49	20.28	21.08	21.88	22.68
46		10.86	11.61	12.36	13.12	13.88	14.65	15.42	16.20	16.98	17.76	18.54	19.33	20.12	20.91	21.71	22.51
48		10.74	11.48	12.23	12.98	13.75	14.51	15.28	16.05	16.83	17.61	18.39	19.17	19.95	20.75	21.54	22.34
50		10.63	11.40	12.11	12.86	13.61	14.38	15.14	15.91	16.68	17.46	18.23	19.02	19.80	20.59	21.38	22.17
52		10.52	11.25	11.99	12.74	13.49	14.24	15.01	15.77	16.54	17.31	18.09	18.87	19.65	20.43	21.22	22.01
54		10.41	11.14	11.87	12.61	13.36	14.11	14.87	15.63	16.40	17.17	17.94	18.72	19.50	20.28	21.07	21.85
56		10.30	11.03	11.75	12.49	13.24	13.98	14.74	15.49	16.26	17.03	17.80	18.57	19.34	20.12	20.91	21.69
58		10.19	10.91	11.64	12.37	13.12	13.86	14.61	15.36	16.13	16.89	17.65	18.42	19.20	19.97	20.76	21.54
60		10.09	10.81	11.53	12.26	12.99	13.74	14.49	15.24	15.99	16.75	17.52	18.28	19.05	19.83	20.60	21.39
63		9.942	10.65	11.37	12.09	12.82	13.55	14.29	15.05	15.79	16.55	17.31	18.07	18.84	19.61	20.38	21.16
66		9.795	10.50	11.21	11.93	12.65	13.38	14.12	14.86	15.60	16.35	17.11	17.87	18.63	19.40	20.17	20.94
69		9.656	10.35	11.05	11.77	12.48	13.21	13.93	14.68	15.42	16.16	16.91	17.67	18.43	19.19	19.95	20.72
72		9.518	10.21	10.90	11.61	12.32	13.05	13.77	14.50	15.24	15.97	16.72	17.47	18.22	18.98	19.74	20.51
75		9.386	10.07	10.76	11.46	12.17	12.88	13.60	14.32	15.06	15.79	16.54	17.28	18.03	18.78	19.54	20.31
78		9.259	9.933	10.62	11.31	12.02	12.72	13.44	14.16	14.89	15.62	16.35	17.09	17.84	18.59	19.34	20.10
81		9.129	9.800	10.48	11.17	11.87	12.57	13.28	14.00	14.72	15.44	16.18	16.91	17.65	18.40	19.15	19.90
84		9.011	9.674	10.35	11.03	11.72	12.42	13.12	13.84	14.55	15.27	16.00	16.73	17.47	18.21	18.96	19.70
23	$\frac{p}{t_S}$	13.47	14.19	14.92	15.64	16.38	17.10	17.85	18.57	19.29	20.01	20.75	21.48	22.21	22.93	23.64	24.38
24		13.46	14.19	14.91	15.64	16.36	17.10	17.84	18.56	19.29	20.01	20.75	21.48	22.20	22.92	23.64	24.38
25		13.45	14.17	14.90	15.63	16.37	17.09	17.84	18.56	19.28	20.00	20.74	21.47	22.20	22.92	23.64	24.38
26		13.44	14.17	14.89	15.62	16.36	17.08	17.83	18.55	19.27	20.00	20.74	21.47	22.20	22.92	23.64	24.38
27		13.43	14.16	14.88	15.61	16.35	17.08	17.82	18.55	19.27	19.99	20.74	21.46	22.19	22.91	23.63	24.38
28		13.42	14.16	14.87	15.60	16.34	17.07	17.81	18.54	19.26	19.99	20.73	21.46	22.19	22.91	23.63	24.37
29		13.41	14.14	14.86	15.59	16.33	17.06	17.81	18.53	19.26	19.98	20.73	21.45	22.18	22.91	23.63	24.37
30		13.39	14.12	14.85	15.58	16.33	17.05	17.80	18.52	19.25	19.97	20.72	21.45	22.18	22.90	23.62	24.37
31		13.38	14.11	14.84	15.57	16.32	17.04	17.79	18.52	19.24	19.97	20.71	21.44	22.17	22.90	23.62	24.36
32		13.37	14.10	14.83	15.56	16.31	17.03	17.78	18.51	19.24	19.96	20.71	21.44	22.17	22.89	23.62	24.36
33		13.36	14.09	14.82	15.55	16.30	17.02	17.77	18.50	19.23	19.95	20.70	21.43	22.16	22.89	23.61	24.35
34		13.35	14.07	14.81	15.54	16.29	17.02	17.77	18.49	19.22	19.94	20.69	21.43	22.16	22.88	23.61	24.35
35		13.33	14.06	14.80	15.53	16.28	17.01	17.75	18.48	19.21	19.94	20.69	21.42	22.15	22.88	23.60	24.34
36		13.32	14.05	14.79	15.52	16.26	17.00	17.74	18.47	19.20	19.93	20.68	21.41	22.14	22.87	23.59	24.34
37		13.31	14.04	14.78	15.51	16.25	16.99	17.73	18.46	19.19	19.92	20.67	21.40	22.14	22.86	23.59	24.33
38		13.29	14.03	14.76	15.50	16.24	16.97	17.72	18.46	19.18	19.91	20.66	21.40	22.13	22.86	23.58	24.33
39		13.28	14.02	14.75	15.49	16.23	16.96	17.72	18.45	19.18	19.91	20.65	21.39	22.12	22.85	23.57	24.32
40		13.27	14.00	14.74	15.47	16.22	16.95	17.70	18.44	19.17	19.90	20.64	21.38	22.11	22.84	23.57	24.31
42		13.24	13.98	14.71	15.45	16.20	16.93	17.68	18.42	19.14	19.88	20.63	21.36	22.10	22.83	23.55	24.30
44		13.21	13.95	14.69	15.42	16.17	16.91	17.66	18.39	19.12	19.85	20.61	21.34	22.08	22.81	23.54	24.28
46		13.18	13.92	14.66	15.40	16.15	16.88	17.64	18.36	19.10	19.84	20.59	21.32	22.06	22.79	23.52	24.27
48		13.15	13.91	14.63	15.37	16.12	16.86	17.61	18.35	19.08	19.81	20.57	21.30	22.04	22.76	23.50	24.25
50		13.12	13.86	14.61	15.34	16.09	16.83	17.59	18.32	19.06	19.79	20.54	21.28	22.02	22.75	23.48	24.23
52		13.09	13.84	14.58	15.31	16.07	16.80	17.56	18.30	19.03	19.77	20.52	21.26	22.00	22.73	23.46	24.22
54		13.06	13.81	14.55	15.29	16.04	16.78	17.53	18.27	19.01	19.74	20.50	21.25	21.98	22.71	23.44	24.20
56		13.03	13.78	14.52	15.26	16.01	16.75	17.51	18.25	18.98	19.72	20.47	21.22	21.96	22.69	23.42	24.18
58		13.00	13.75	14.49	15.23	15.98	16.72	17.48	18.22	18.96	19.69	20.45	21.19	21.93	22.67	23.40	24.15
60		12.97	13.72	14.46	15.20	15.95	16.69	17.46	18.19	18.93	19.67	20.42	21.17	21.91	22.65	23.38	24.13
63		12.93	13.67	14.41	15.16	15.91	16.65	17.41	18.15	18.89	19.63	20.39	21.13	21.87	22.61	23.34	24.10
66		12.98	13.62	14.37	15.11	15.86	16.61	17.37	18.11	18.85	19.59	20.35	21.09	21.83	22.59	23.31	24.06
69		12.83	13.57	14.32	15.06	15.82	16.56	17.32	18.06	18.81	19.55	20.30	21.05	21.80	22.53	23.27	24.03
72		12.78	13.53	14.28	15.02	15.77	16.52	17.28	18.02	18.76	19.50	20.26	21.01	21.76	22.49	23.23	23.99
75		12.73	13.48	14.22	14.97	15.73	16.47	17.23	17.97	18.72	19.46	20.22	20.97	21.71	22.45	23.19	23.95
78		12.69	13.43	14.18	14.92	15.68	16.42	17.19	17.93	18.67	19.42	20.18	20.92	21.67	22.41	23.15	23.91
81		12.64	13.38	14.13	14.89	15.63	16.38	17.14	17.87	18.63	19.37	20.13	20.88	21.63	22.37	23.11	23.87
84		12.59	13.34	14.08	14.83	15.59	16.33	17.09	17.84	18.58	19.33	20.09	20.84	21.59	22.33	23.07	23.83

NACA

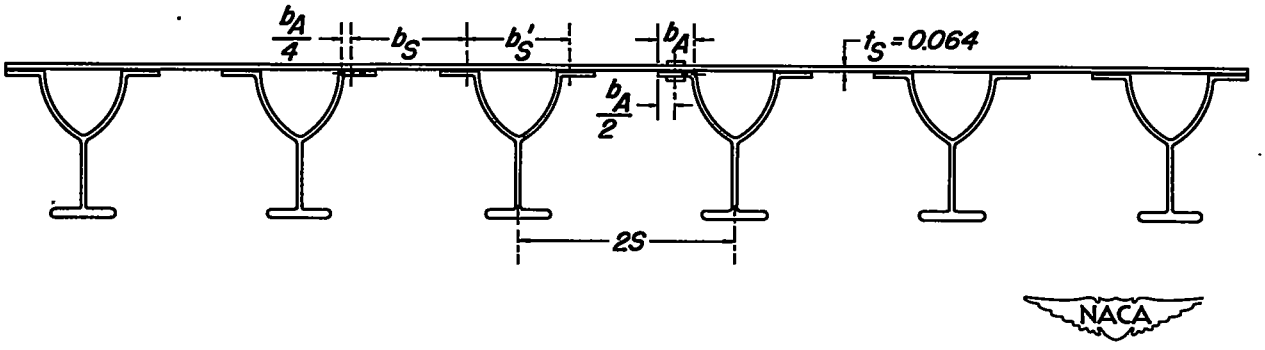

Figure 1.—Cross section of test specimens.

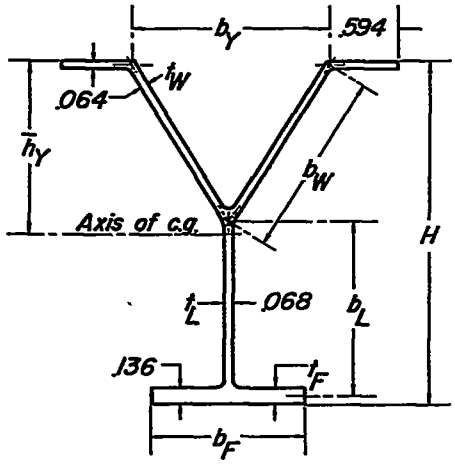

$\frac{b_W}{t_W}$	A (sq in.)	ρ (in.)	$\bar{h}_Y$ (in.)	H (in.)	b_Y (in.)	b_W (in.)	b_L (in.)	b_F (in.)
20	0.446	0.907	1.159	2.392	1.333	1.279	1.200	0.890
25	.538	1.123	1.493	2.966	1.667	1.600	1.500	1.111
30	.629	1.336	1.831	3.537	2.000	1.918	1.800	1.333

Fillets $\frac{1}{16}$R, except as noted.

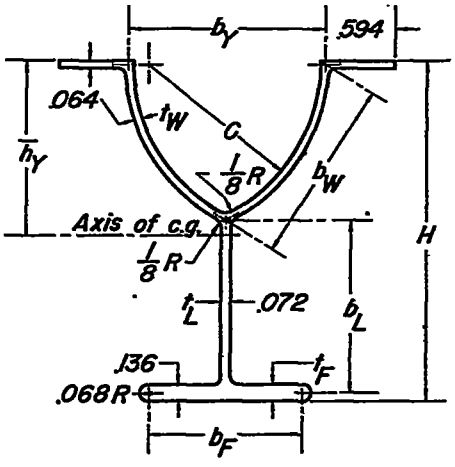

$\frac{b_W}{t_W}$	A (sq in.)	ρ (in.)	$\bar{h}_Y$ (in.)	H (in.)	b_Y (in.)	b_W (in.)	b_L (in.)	b_F (in.)	C (in.)
20	0.474	0.920	1.200	2.392	1.333	1.279	1.200	0.890	1.200
25	.565	1.135	1.514	2.966	1.667	1.600	1.500	1.111	1.500
30	.659	1.342	1.861	3.537	2.000	1.918	1.800	1.333	1.800

Figure 2.—Comparison of proportions of straight-web and curved-web Y-sections.

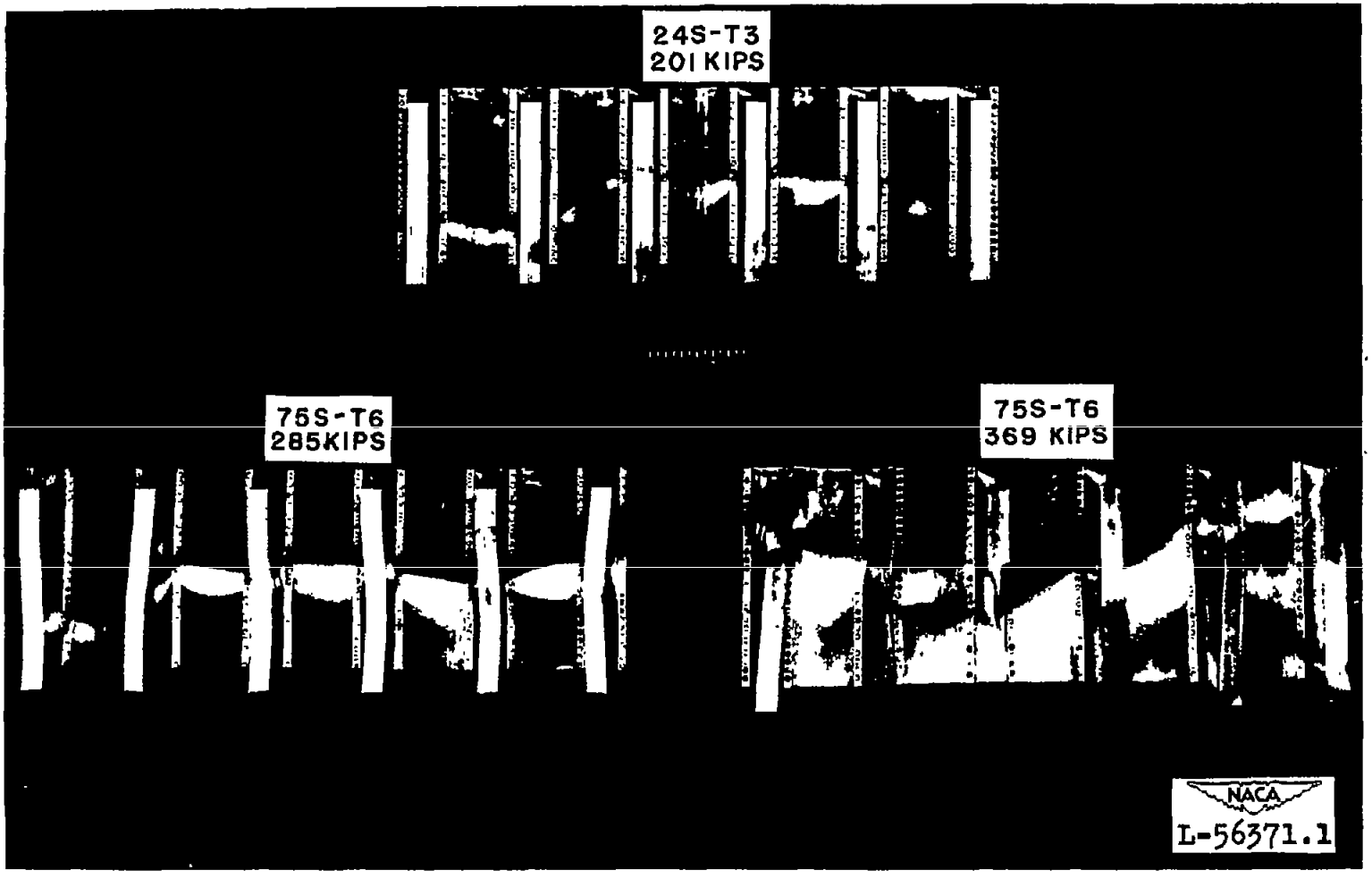

Figure 3.- Comparison of failures of 24S-T3 and 75S-T6 aluminum-alloy straight-web Y-stiffened panels and a 75S-T6 curved-web Y-stiffened panel $\left(\frac{t_W}{t_S} = 1.00;\ \frac{b_W}{t_W} = 30;\ \frac{b_S}{t_S} = 75\right)$.

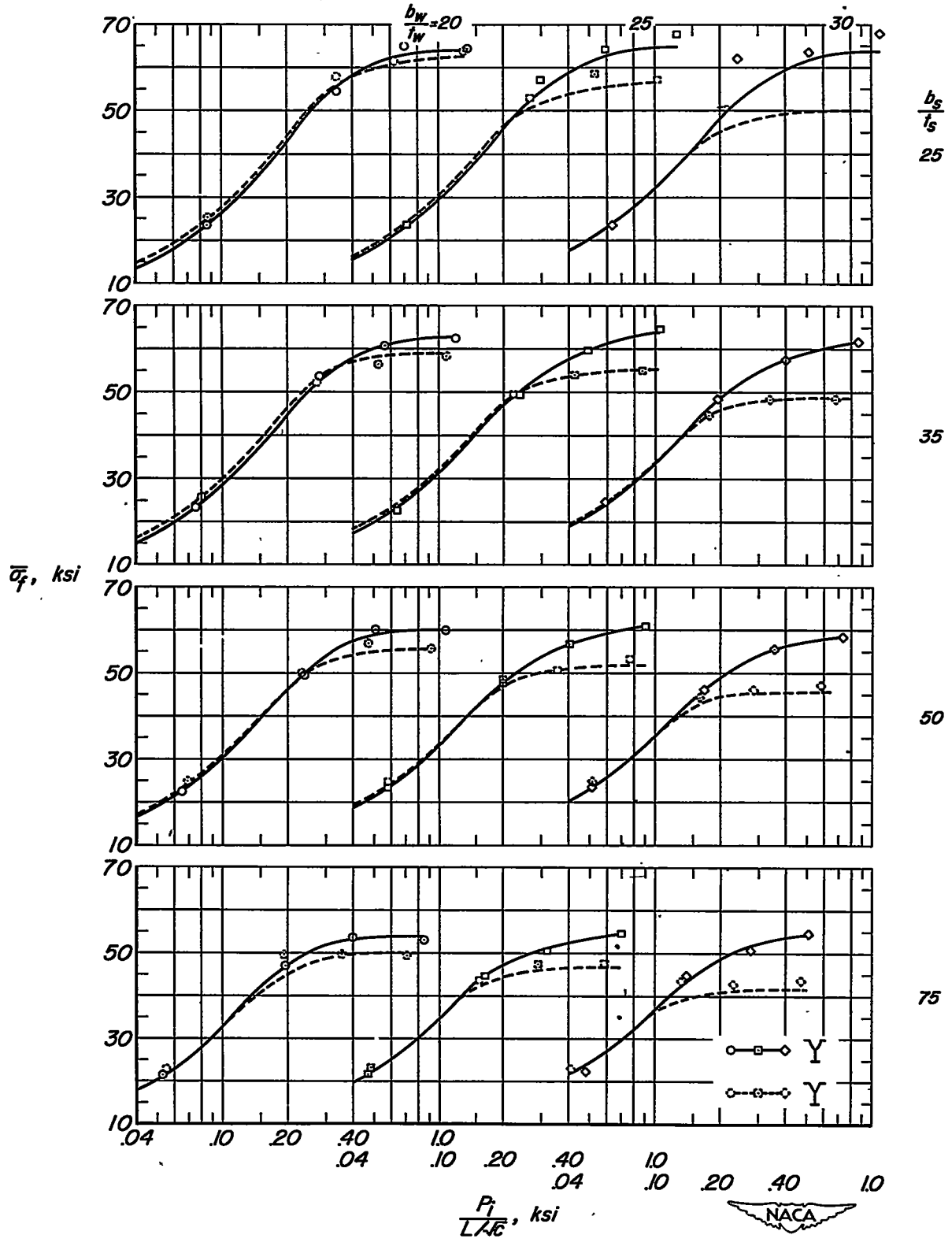

Figure 4.—Comparison of test results for 75S-T6 aluminum-alloy straight-web and curved-web Y-stiffened panels having $\frac{t_w}{t_s}$=1.00. (Data for straight-web panels from reference 1.)

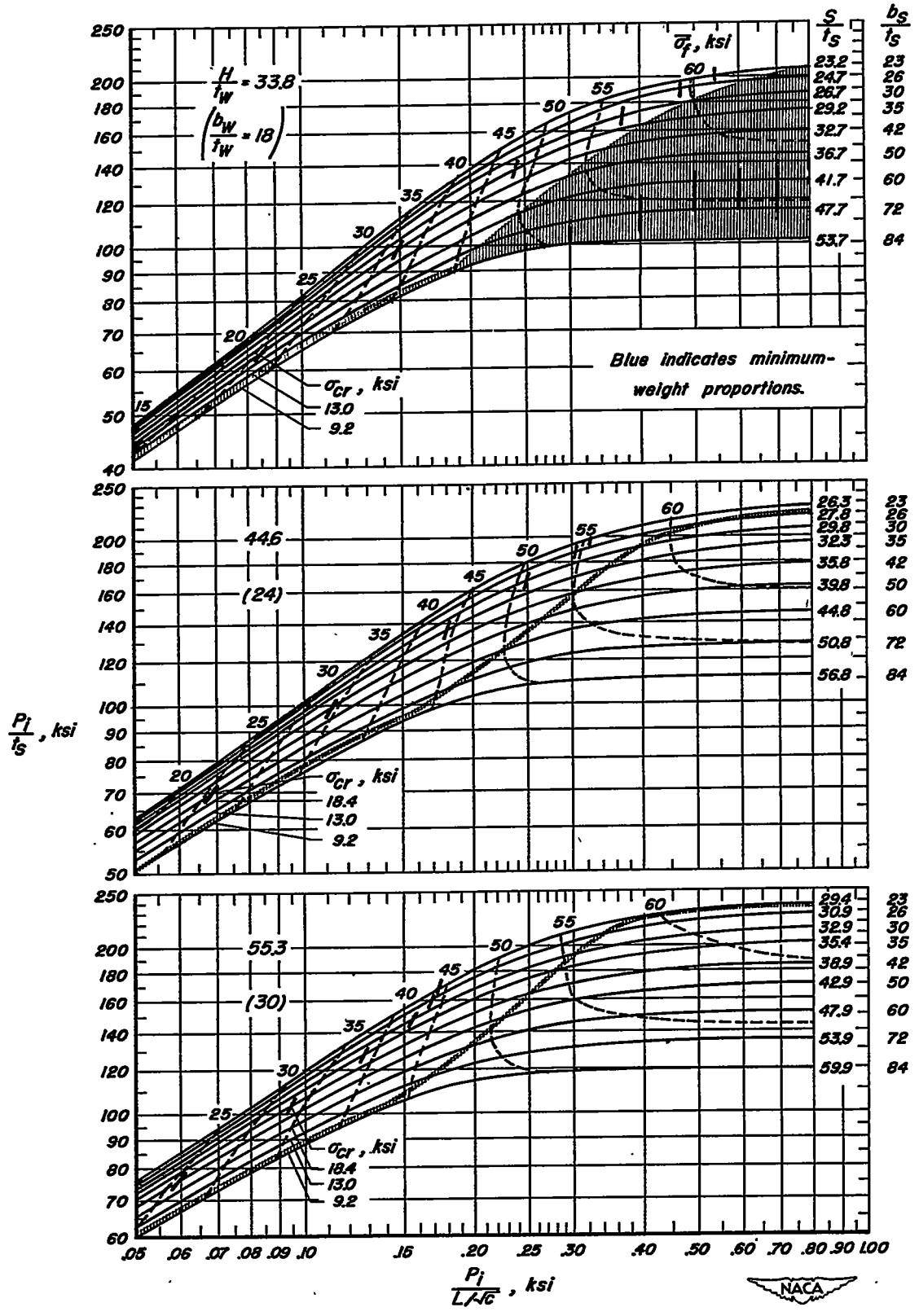

Figure 5.—Direct-reading design chart for flat compression panels of 75S-T6 aluminum alloy with curved-web Y-section stiffeners. $\frac{t_W}{t_S} = 1.00$.

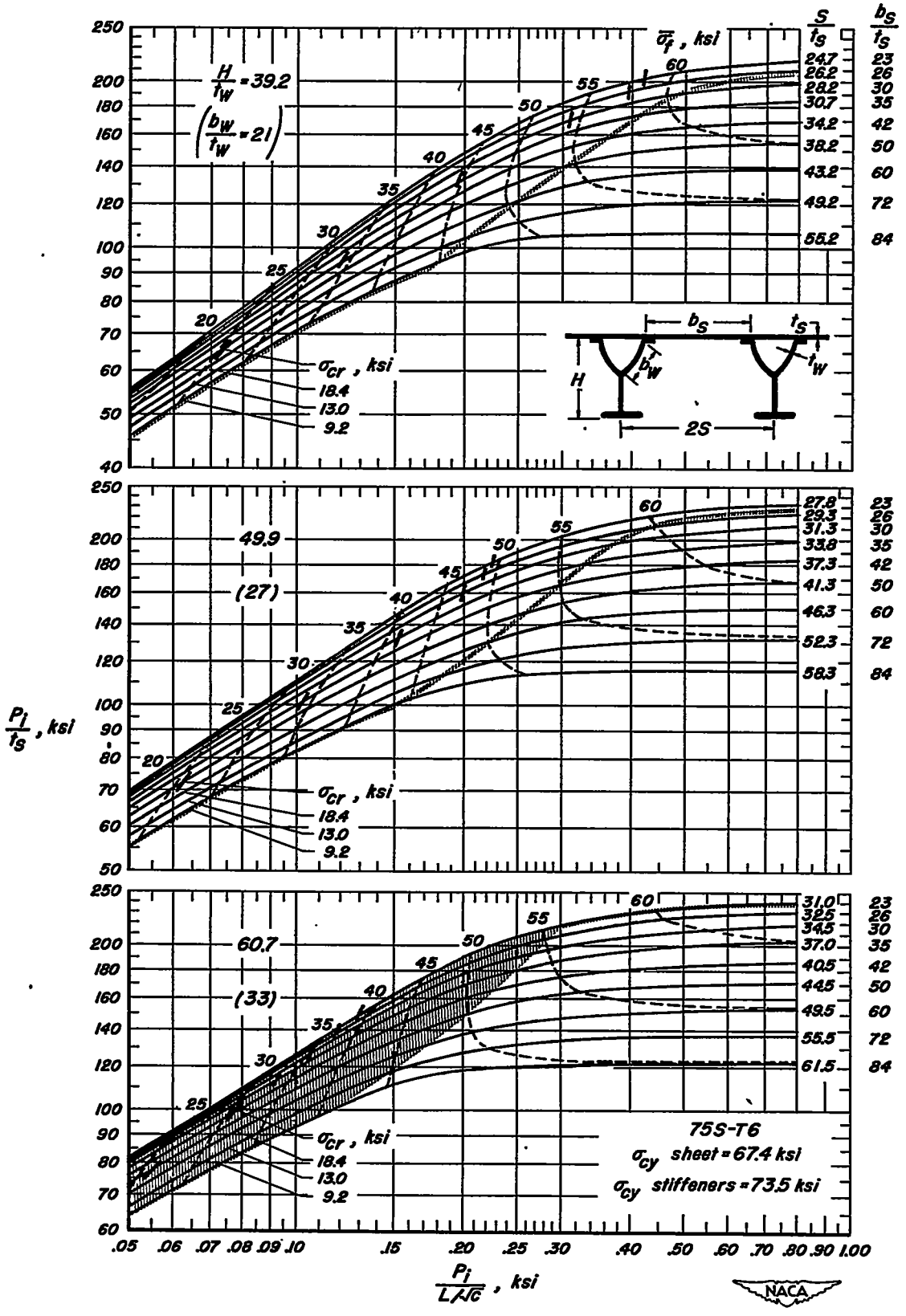

Figure 5.—Concluded. $\left(\frac{t_W}{t_S} = 1.00\right)$

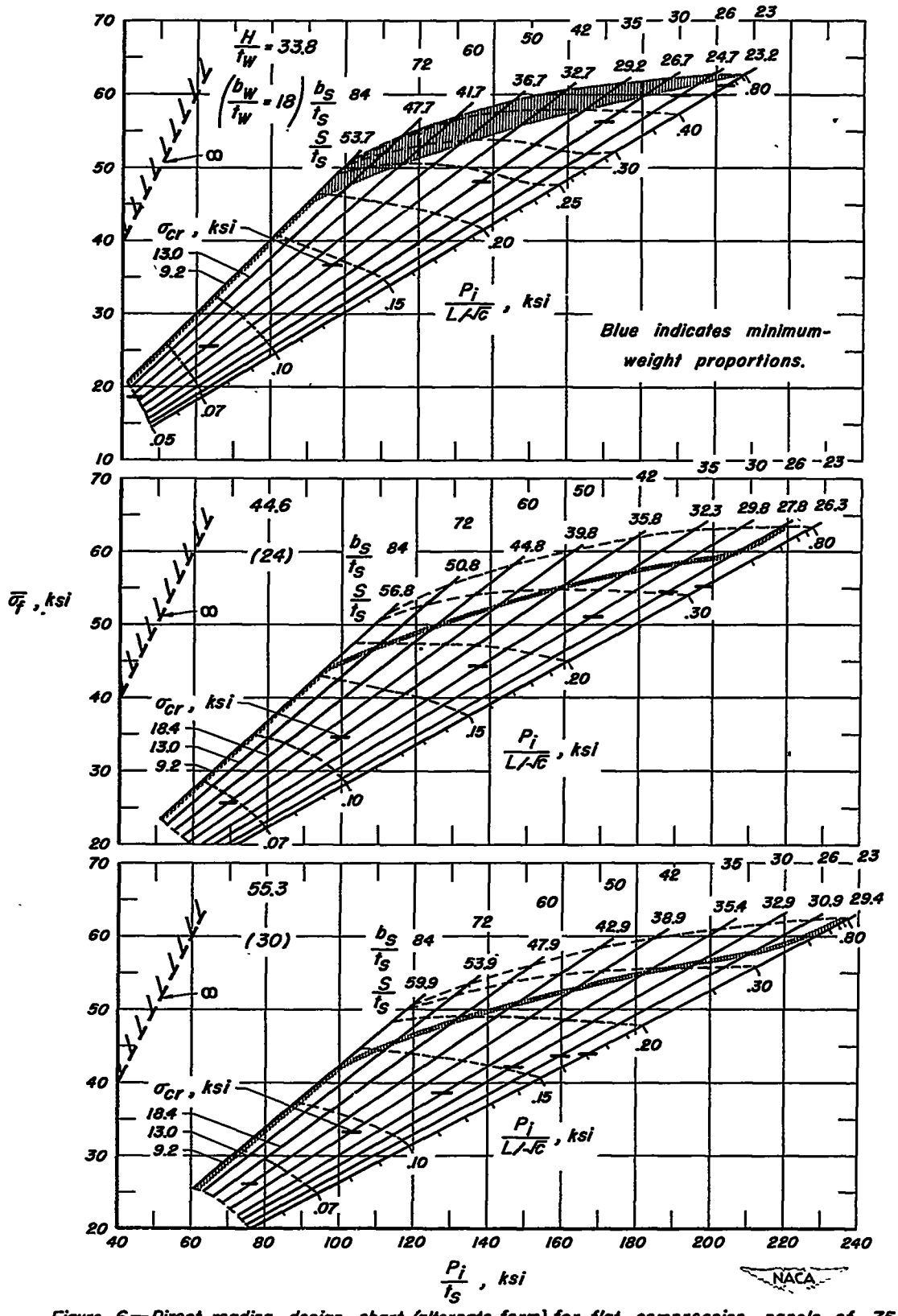

Figure 6.—Direct-reading design chart (alternate form) for flat compression panels of 75S-T6 aluminum alloy with curved-web Y-section stiffeners. $\frac{t_W}{t_S} = 1.00$.

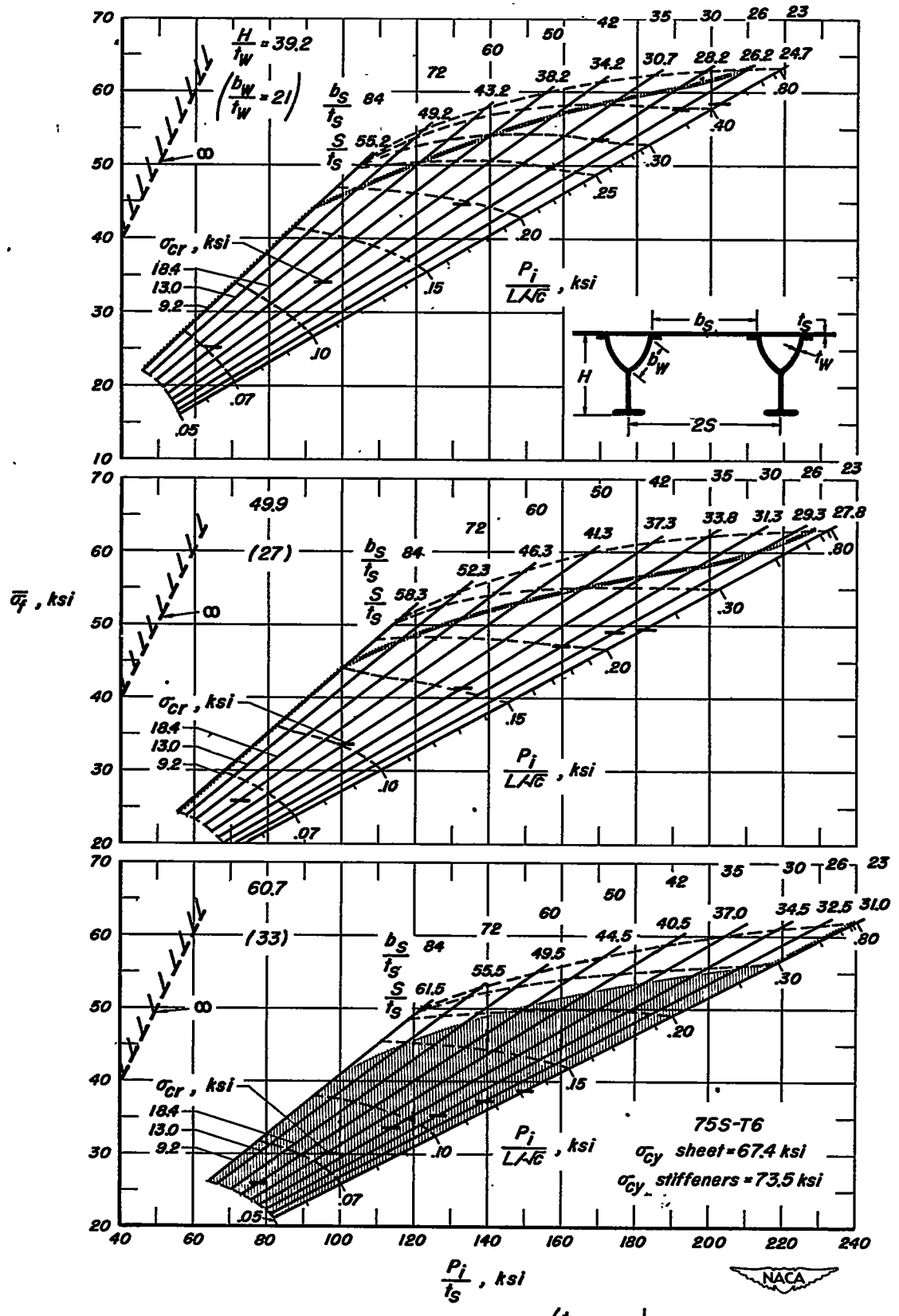

Figure 6.—Concluded. $\left(\frac{t_w}{t_s} = 1.00\right)$

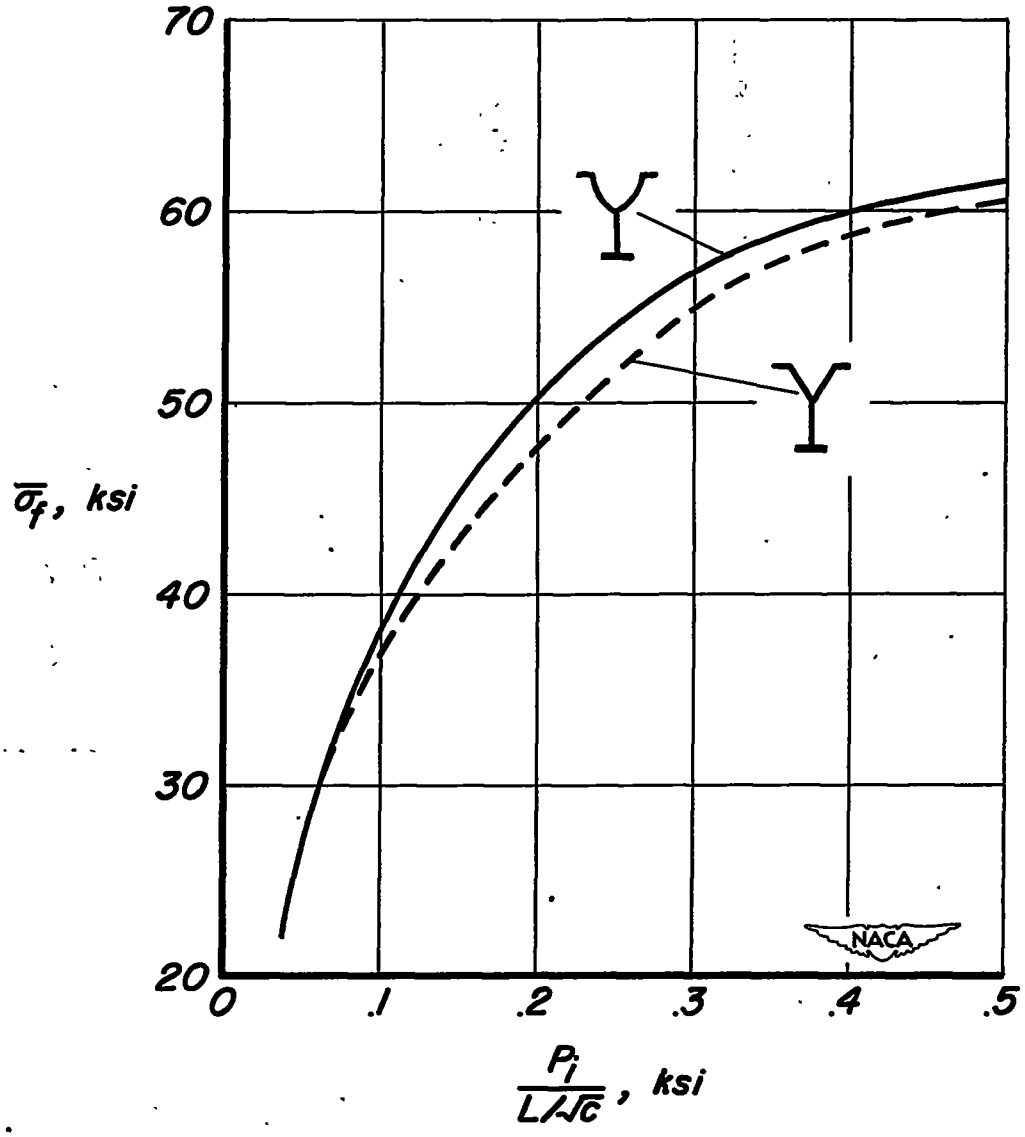

Figure 7.—Comparison of envelope curves for 75S-T6 aluminum-alloy straight-web and curved-web Y-stiffened panels having $\frac{t_w}{t_s} = 1.00$. (Data for straight-web panels from reference 1.)