9210
NACA TN 2880
TECH LIBRARY KAFB, NM
0065799

NATIONAL ADVISORY COMMITTEE FOR AERONAUTICS

TECHNICAL NOTE 2880

A DIGITAL AUTOMATIC MULTIPLE PRESSURE RECORDER

By Bert A. Coss, D. R. Daykin, Leonard Jaffe,
and Elmer M. Sharp

Lewis Flight Propulsion Laboratory
Cleveland, Ohio

Washington
January 1953

AFMDC
TECHNICAL LIBRARY
AFL 2811

313.99/41

TECH LIBRARY KAFB, NM
0065799

1C

NATIONAL ADVISORY COMMITTEE FOR AERONAUTICS

TECHNICAL NOTE 2880

A DIGITAL AUTOMATIC MULTIPLE PRESSURE RECORDER

By Bert A. Coss, D. R. Daykin, Leonard Jaffe, and Elmer M. Sharp

2690

SUMMARY

A machine is described which will automatically measure and record 100 pressures in a range from 5 to 65 inches of mercury, in approximately $2\frac{1}{2}$ minutes, to an accuracy of 0.1 inch of mercury.

The method used is to compare the unknown pressures with a scanning pressure whose value at any instant is known in digitalized form. Sensitive diaphragms indicate balance between the unknown and the scanning pressures. All unknown pressures are compared with the scanning pressure simultaneously and the information is stored temporarily within the machine. During read out, the information is properly sequenced, identified, coded, and punched into paper tape, which is the actual permanent record of the output of the machine, although typewritten tabulated data may also be produced.

The punched paper tape may be used subsequently either to tabulate data or to punch cards automatically for use in punched-card calculators.

INTRODUCTION

Aerodynamic research conducted in wind tunnels, engine research facilities, combustors, and compressor and turbine rigs at the NACA requires the measurement and recording of more than 70,000 pressures daily. These pressures must be used in calculations to obtain lifts, drags, moments, thrusts, flow rates, and pressure profiles.

Visual reading of the tremendous number of pressures from gages or manometers during a test is a practical impossibility. The most widely used equipment for measuring the recording pressures at the NACA consists of multiple-tube glass manometers which are photographed with a camera on 9 by 9 film. These films are read with the aid of magnifying glasses. The desired flow or force parameters are then computed with the aid of desk calculators, slide rules, and tables. This task of reading film and calculating results not only requires a large staff of computers, but also imposes an extremely undesirable delay between the time of the experiment and the completion of the calculations. An urgent need therefore exists for automatic devices which will measure and record pressures in a form suitable to automatic calculation and tabulation.

This report describes equipment that has been developed at the Lewis laboratory of the NACA for this purpose. Some of the considerations which led to the selection of this particular system are:

(1) High accuracy and wide range are necessary for measurements in aerodynamic and power plant research installations at pressures corresponding to operation at altitudes between sea level and 50,000 feet. Readings accurate to within 0.0005 of the full range of the instrument are desired.

2690

(2) Equipment associated with each individual pressure should be simple and inexpensive; the more complicated measuring equipment should serve 100 or more pressures. It was felt that these requirements could be met most easily through digital methods.

(3) Digital computing equipment of the punched-card variety is readily available commercially. This equipment can perform long and complicated computational routines, such as are required in calculating jet engine performance. Punched-card routines are easily adaptable to data reduction tasks.

The pressure measuring and recording system described herein is called the Digital Automatic Multiple Pressure Recorder and is abbreviated DAMPR. The system was designed to meet the following specifications:

Number of pressures	100
Maximum pressure, in. Hg abs	65
Minimum pressure, in. Hg abs	5
Least count, in. Hg	0.02
Time for making measurement, sec	10
Time to read out and clear for next measurement, sec	150

The data are recorded permanently as coded holes in a punched paper tape. The tape also contains codes identifying source and type of data, run number, and numbers identifying each pressure. Provisions are made for inserting error codes when a pressure is known to be in error. The complete recording cycle is automatic. A typewritten record of the pressures along with identification can be prepared simultaneously with the tape.

GENERAL PRINCIPLE OF INSTRUMENT

A simplified explanation of the principle of operation of the instrument with reference to figure 1 follows.

The unknown pressure P_x is fed into one side of a very sensitive differential pressure capsule, where it forces a diaphragm against an electric contact. A scanning pressure P_s which initially is very near a vacuum is fed to the other side from a scanning pressure tank. To record data, P_s is increased smoothly and monotonically through the entire range of the instrument. The differential pressure capsule is adjusted so that when $P_s \geq P_x$ the contact is open. The pressure follower and pulse generator measures P_s and sends out electric pulses marking equal pressure increments. In figure 1(b) the total number of pulses emitted by the pressure follower and pulse generator has been indicated as a function of the tank pressure P_s.

2690

These electric pulses are transmitted through the capsule contact and counted when $P_x < P_s$. Therefore, the count recorded by the counter is a numerical indication of the unknown pressure P_x.

As shown in figure 1(b), the pulses are started at some arbitrary low pressure. It is therefore necessary to measure a known pressure P_R in order to determine the point at which the pulses are started and to correct the individual unknown pressure readings by this amount.

A block diagram of the complete multichannel instrument is shown in figure 2. Unknown pressures P_{x_1}, P_{x_2}, P_{x_3} . . . P_{x_n} are connected to their respective differential pressure capsules. When these pressures are to be measured, air under pressure is allowed to enter the scanning pressure tank. The equal pressure increment pulses generated by the pressure follower and pulse generator are transmitted through the capsule contacts and recorded as a magnetic recording on the magnetic drum. One capsule and magnetic recording channel are required for each pressure being measured.

After the pressure scan is complete, the information is read by speeding up the drum rotation and connecting the recording heads, one at a time, sequentially to an electronic counter. Channel identification and computation codes are blended with the resulting coded count, and the entire piece of information is punched into a paper tape. This tape serves as the permanent record output of the machine.

The machine is entirely automatic in operation with automatic alarms and signals in case of malfunctions. Symbols are punched into the tape if a reading which is in error because of instrument trouble is to be disregarded.

SYSTEM COMPONENTS

Pressure follower and pulse generator. - Because the requirements of range, accuracy, and speed of response imposed on this instrument are not easily met, a somewhat complicated mechanism has resulted. The instrument is essentially a force balance; it is shown schematically in figure 3. Its operation may be explained by applying a step increase in pressure at the inlet and following the action through the instrument. The bellows shown at A provides a flexible link of known area between the pressure tank and the pressure follower. The unbalanced force caused by the increase in tank pressure causes the bellows and the double cantilever spring B to be deflected upward. The deflection is detected by a position-sensing element C, which is sensitive to a displacement of approximately 0.00001 inch (10 microinches). The signal from the position-sensing device is suitably amplified by the servo amplifier D, the output of which is used to run a servomotor E which turns a lead screw through a gear train. A nut F on the lead screw moves the base of the spring G by means of the pantograph linkage until the spring applies a force equal and opposite to the pressure force.

2690

The bellows and position detector are then restored to their normal undeflected positions, the servo error signal becomes zero, and the motor stops. The bellows has an outside diameter of $1\frac{5}{16}$ inches, an inside diameter of 7/8 inch, and an effective area of 0.94 square inch. This 11-convolution bellows has a spring rate of 52.5 pounds per inch. Although the bellows shows a nonlinear force against deflection characteristic, if it is restored to its original undeflected position, its properties do not influence the linear relation between pressure and angular position of the lead screw of the instrument.

The spring rate of the double cantilever spring B is approximately 100 pounds per inch. This particular configuration of double cantilever spring was chosen to prevent the bellows from undergoing angular displacement when pressures were applied. Generous fillets and conservative design have been used to keep stresses in the spring well within the allowable limits for the high grade of tool steel used.

The base of the spring G is displaced parallel to the bellows axis by means of the pantograph linkage. The actual linkage has been designed to move the base of the spring toward the bellows by approximately the same amount as the shortening of the spring when it is deflected. The lateral motion of the head of the spring is thereby reduced to a few thousandths of an inch throughout the entire range of the instrument. Precision ball bearings, end-loaded to reduce play, were used at all pivot points.

In order that pressure forces on the pantograph linkage do not cause variable friction between the lead screw and the nut, a balancing piston H has been incorporated to compensate for the pressure forces. On one side of this piston, it was convenient to use a constant pressure to balance the weight of the pantograph arms and ensure that the force between the lead screw and nut does not reverse direction. Without this balancing piston the force on the nut would vary from approximately zero to 15 pounds; with it, a reasonably constant force of a few ounces is obtained.

2690

The motor is coupled to the lead screw through a gear train having a ratio of about 9:1. The final gear in this train contains 180 teeth and is rigidly coupled to the lead screw shaft. The spring rates, bellows area, lever arm ratios, and pitch of the lead screw have been selected so that a 2° angular displacement of the lead screw corresponds to a 0.01 inch of mercury pressure change. Pulses representing 0.01 inch of mercury pressure increments are generated by allowing the 180 teeth on the driving gear to chop the light beam to a photo cell. These pulses are amplified and supplied to the pressure capsules and recording heads.

Axial displacements of the bellows are detected by a linear variable differential transformer. The primary of this transformer is supplied with a 6000 cycle per second voltage. To maintain the frequency constant within close limits is not necessary. The amplitude is stabilized by means of feedback to remain constant within a few percent for all normal vacuum tube deterioration. Stabilization of this voltage is required because it enters into the servo loop transfer functions and it is desirable to operate the servo at as near optimum conditions as possible. The signal from the secondary of the differential transformer is a 6000 cycle voltage, proportional to the displacement of the bellows from a zero position. Positive and negative displacements are identified by a 180° difference in phase of the carrier voltage in the secondary windings. Figure 4 shows a block diagram of the servo system.

The error signal from the secondary of the differential transformer is amplified in the preamplifier. The gain of this unit is controlled by varying the amount of feedback within the amplifier. The error signal is converted to a direct-current voltage in the phase sensitive detector. For maximum reliability and sensitivity, it is necessary that the carrier voltage of the error signal be either in phase or 180° out of phase with the reference signal from the oscillator. For this reason a phase shifter has been incorporated in the primary of the differential transformer to compensate for phase shift in the error detector and preamplifier. After suitable filtering to remove ripple, a d-c error signal is obtained. The polarity of the error voltage indicates the direction of displacement and the voltage is proportional to the displacement. The d-c error signal is next sent through a resistance-capacitance filter which introduces phase lead to compensate for the phase lags introduced

by the servomotor, mechanical resonance in the spring, and so forth. After this derivative control has been added to the error signal, it is chopped by a 60 cycle per second synchronous chopper, amplified, and supplied to the control phase of a 5-watt, 2-phase, servomotor. The phase of the voltage operating the chopper is adjusted so that the control phase voltage is displaced 90° from the reference phase voltage. 2690

A static calibration of the instrument was obtained by loading the bellows with a steady pressure and noting the lead screw position. The readings thus obtained were compared with the pressure readings from a very clean mercury manometer which was also connected to the system. These data are plotted in figure 5. The difference between the two readings has been plotted as $P-K\theta$, where P is the pressure read by the mercury manometer, θ is the lead screw position, and K is an experimentally determined proportionality constant. This curve shows a deviation from linearity of approximately 0.10 percent of full scale. The scatter in the data is somewhat less than this. Figure 5 does not give a complete picture, however. During the data recording period, the pressure is rising rather smoothly at the rate of approximately 7 inches of mercury per second. The lead screw position lags behind the actual pressure during a scanning run. When the scan is started, the servomotor accelerates from zero to a steady-state speed of approximately 2400 rpm. During this starting period, the servo undergoes a starting transient. After the servo system has attained a steady-state condition, it follows approximately 0.08 inch of mercury behind the actual pressure. Slight fluctuations about this position are present because of rough spots on the lead screw and uneven friction at various places. These variations in following error amount to less than ±0.02 inch of mercury.

A constant following error is not objectionable as it introduces no error in the final result. The same following error is introduced into all unknown pressure channels and into the reference pressure channel. Since the reference pressure is subtracted from all readings, the following error cancels out.

Pressure capsules. - Since the ultimate resolution of the Digital Automatic Multiple Pressure Recorder was set at 0.01 inch of mercury, it is necessary that the differential pressure capsule be capable of opening or closing an electric circuit within this same 0.01 inch of mercury differential pressure. The pressure sensitive element of the capsule shown in figure 6 is the flexible metal diaphragm. These diaphragms are pressed from 0.003 inch thick beryllium copper. Beryllium copper was chosen, after many materials were tested, because of its small zero drift characteristics and its resistance to fatigue when properly heat treated. Over a small range of differential pressures the deflection of the center of the diaphragm is nearly linear at approximately 0.001 inch travel per 0.01 inch of mercury differential pressure.

Because the diaphragm can be subjected to a differential pressure which is equal to or slightly greater than the total pressure range of the instrument, the deflection of the diaphragm is limited in both directions by a pair of bakelite backup plates. These plates limit the total deflection of the diaphragm to approximately 0.005 inch. The single annular corrugation in the diaphragm helps to avoid overstressing the diaphragm at points of maximum bending and thus prevents fatigue failure. Diaphragms of this type, mounted in the prescribed manner, have been subjected to an alternating pressure of approximately 50 pounds per square inch for 50,000 cycles without failure.

2690

To provide for good electric contact with small contact pressures, special alloy contact buttons were used. One button is soldered to the center of the diaphragm and the mating button is mounted in the end of a movable spring loaded probe. This probe is allowed to move to prevent injury to the diaphragm when subjected to large pressures.

The differential adjustment screw sets the position of the limit bracket which in turn limits the travel of the movable probe. This arrangement provides an adjustment for the position of the diaphragm at which contact is broken and thereby compensates for small nonuniformities in diaphragm flatness.

The motion of the diaphragm, during a pressure scan, causes a dynamic pressure increase on the unknown pressure side of the capsule. If the contact is broken at some appreciable time after the diaphragm has started to move, the instrument will not record the desired unknown pressure but rather it will record the exact pressure existing on the unknown pressure side of the capsule at the instant the contact is broken. This effect would not be objectionable for it could be calibrated out if all diaphragms were absolutely uniform in flatness and all contacts were broken at the same relative position in the space between backup plates. This is not the case, however; and in order to minimize this dynamic pressure rise due to diaphragm motion, the volume of the pressure chamber on the unknown pressure side of the capsule was made about 500 times the volume displaced by the diaphragm motion. The volume on the unknown pressure side of the capsules is 10 cubic inches. This volume in conjunction with the rather long tubing runs with tubing of small diameter sometimes results in an objectionably slow response of the system to changes of pressure at the model. For example, in some installations under adverse conditions, time constants as long as 20 seconds have been encountered. This volume is necessary only on the unknown pressure side, but was retained on both sides merely to preserve symmetry.

Pressure tank. - The differential pressure capsules are mounted on a pressure tank as shown in figure 7. This tank was built to accommodate 100 capsules. Ten capsules are spaced equally around the

circumference of the tank, and there are ten rows along the height of the tank. Adjacent rows are staggered to conserve space.

The shell of the tank is made of a 12-inch diameter standard steel pipe about 48 inches long. A flange is welded to each end of the pipe and cover plates are bolted to these flanges.

The variable-area orifice, shown at the bottom of the tank, controls the rate at which air is allowed to enter the tank. To achieve a nearly linear rise in pressure with time, the flow of air through the throat of this orifice is maintained at sonic velocity. 2690

To ensure a uniform pressure distribution over the entire inside surface of the tank, the air velocity is reduced from sonic speed at the orifice to approximately zero at the surface of the tank. This velocity reduction is accomplished by a series of expansions and direction changes. The incoming air is directed up through the center pipe and is admitted to the baffle chamber through the two open ends of a pipe cross. The air leaves this chamber through equal area openings at the top and bottom of the cylinder. Finally the air is diffused alternately through three layers of 120 mesh screen and four layers of 1/4-inch mesh screen in the diffuser.

The prime requisite of the tank is that it deliver the same pressure to all differential pressure capsules at all times during a pressure scan. This was checked by measuring the differential pressure with a water manometer between various capsule positions on the tank during a pressure scan, and no variation in pressures was observed.

The pressure cycle of the tank is controlled as shown in figure 8. When the electrically operated 4-way valve A is not energized, the pressure-operated valve B is closed and the pressure-operated valve C is open, permitting a vacuum pump to exhaust the tank. After the tank has been evacuated and the command to initiate the pressure scan has been given, A is energized. This closes C and opens B. Air from the 125 pounds per square inch service air line is allowed to enter the tank at a rate controlled by the variable-area orifice O until the maximum pressure (approximately 35 lb/sq in. absolute) is reached. At this instant A is deenergized by a limit switch on the pressure follower restoring valves B and C to their initial states and allowing the tank to be exhausted in preparation for the next pressure scan. Shown also is a pneumatically operated safety valve which prevents abnormally high tank pressures in case of limit switch failure.

Magnetic memory. - The magnetic memory is capable of recording the 100 trains of pulses arriving simultaneously from the capsules. Each train contains up to 4000 pulses and its duration is up to 10 seconds.

These pulses arrive at a maximum rate of about 550 per second. The recorder is also capable of playing each of these trains back into a counter without losing any counts. Playback is at a higher speed than recording to cut down the time required before the instrument is ready to record the next group of pressures.

The magnetic recording is on the surface of a plated brass drum. The outside diameter of this drum is 12 inches and the surface available for recording is approximately 4 inches wide. The outer surface of the drum was plated with a magnetic recording alloy.

2690

Signals are recorded around 85 percent of the circumference of the drum. The remaining 15 percent is reserved for switching between channels, reading the electronic counters, and so forth. These operations are synchronized by means of switches operated by a cam which is magnetically locked to the shaft of the drum when the recording cycle starts.

The drum is provided with a 2-speed drive. The low-speed drive takes about 12 seconds per revolution and is used during the scanning cycle when data are being recorded. As soon as the data have been recorded, the drum is automatically speeded up to approximately 43 rpm for the playback and counting operation. On high-speed drive, the low-speed drive mechanism is disconnected by means of an overrunning clutch. On low-speed drive, the high-speed mechanism is driven through its gearing.

The recording heads used have 2 laminations of 0.017-inch material, and the air gap is 0.001 inch. The winding is 900 turns of AWG 40 wire on each leg, or a total of 1800 turns.

Since variations in head to drum spacing have a large effect on the amplitude of the output voltage of the magnetic heads, a close tolerance on concentricity is imposed by the need for a nearly constant recording head to drum spacing even though the heads are spaced less than 0.001 inch from the surface. To achieve this, the outer surface of the drum has been made to run concentric within about 0.0001 inch. An average pulse spacing of the signal recorded on the drum of 150 pulses per inch has been chosen. This provides a usable signal even for the worst speed fluctuations of the pressure follower servo. The magnetic recording heads are mounted on 21 bars with 5 heads per bar. The spacing between heads on each bar is 0.750 inch. Each bar is displaced 0.035 inch sidewise from the preceding bar so that the heads are staggered around the drum.

During the pressure scan the magnetic recording heads are connected through the capsule contacts to the pulse generator. Pulses of approximately 0.7 volt have been found most satisfactory for this recording.

After recording is completed the heads are sequentially switched to the playback amplifier. The gain of this amplifier is stabilized by means of feedback, and in addition, electric filters have been incorporated to compensate for the decreased response of the magnetic recording at higher frequencies. The output from the amplifier is fed simultaneously to three pulse shapers which, in turn, operate three separate electronic counters. The pulse shapers provide a pulse output, suitably shaped to operate the counters, for each input signal greater than a preset threshold value. For signals smaller than this threshold value, no output is obtained. These design and adjustment specifications allow considerable margin for deterioration and aging.

2690

Counters. - The counters just mentioned record the number of pulses in the binary coded decimal form. The coded count is then transferred to a relay register where it is checked against the count in the electronic counters. If the three electronic counters all agree and if the transfer has been made correctly, the counters are reset to zero and the equipment proceeds automatically to print and punch, from the relay register, the channel just counted and to count the next channel. If one of the counters disagrees with the count transferred to the relay register, the equipment prints the value on which the two counters agree and indicates a malfunction for the counter which disagrees. This malfunction is recorded in one of three electromechanical counters, one count for each time a counter disagrees with the count transferred. If two or three of the counters disagree with the count transferred into the relay register, the equipment automatically recounts the channel on which this difficulty was encountered. If a check failure still occurs, an alarm is operated and the automatic read out cycle is locked out until it is manually reset. After resetting following a countercheck failure, the equipment counts the faulty channel for the third time. If a countercheck failure still occurs, an error code is inserted into the reading and the equipment proceeds. Each channel is also checked to see that the count is greater than zero and less than 6000. If the count fails to satisfy these conditions, it is rechecked; if it still does not satisfy the conditions an error code is inserted into the reading, but the automatic cycle is not stopped. The punching operation is suspended while the recounting operation is carried out in all cases.

The data are printed and punched from the relay register. Channel identification, programming code, error code, pressure reading, and typewriter mechanical operation codes are scanned through means of a 5-level, 10-position stepping switch which connects the contacts for each character in turn to the punch selector magnets and to the typewriter distributor. The code used is not the standard teletype code, but has been modified to a new coding which is more convenient for use with electronic counters. Figure 9 shows the NACA (DAMPR) code and the standard teletype code. The 2, 3, 4, and 5 holes of the NACA number codes are the 1, 2, 4, and 8 digits, respectively, for the binary coded decimal

representation of the number. This has been found to simplify greatly the storage register and translation problems. All that is necessary to make the typewriter print the code correctly is to interchange type heads in the typewriter.

Read-out equipment. - The read-out equipment takes the information set up in the counter register, adds numerical and alphabetical identification, adds mechanical function symbols for typewriter operation, and punches the complete information group or "word" into the paper tape. For example, 24C 5827(CR)(LF) means on channel 24 the type of pressure is C and the magnitude is 58.27 inches of mercury above an arbitrary reference point. The symbols for CR and LF would not be typed out but would actuate the "carriage return" and "line feed" functions of the typewriter. If the machine determined that there was an error or a possible error in the reading, a letter would be inserted in the space between the letter C and the reading 5827. This letter indicates that the reading should be disregarded.

2690

The numerical channel identification is put in automatically by the same stepping switch which transfers from one reading head to the next. It sets up relay registers with the proper symbols. The alphabetical identification is set up manually by means of a patch panel. Any one of 16 code characters may be patched into any channel or combination of channels desired. The machine then automatically inserts the characters associated with each channel into the tape.

The tape punch used is wired so as to receive information over five parallel wires, one for each hole across the tape. The high-speed stepping switch previously mentioned momentarily connects a relay register to these five wires, the information is transferred, the punch magnet is energized, and then the stepping switch moves to the next register where the process is repeated. The stepping switch is stepped by a commutator which runs at 450 steps per minute. This particular speed allows simultaneous typewriter and tape punch operation.

Control equipment. - Since this instrument was designed for completely automatic operation after push-button initiation and a great number of different operations are carried out, the control equipment is necessarily complex. Rather than detail the method of performing each operation, an outline of the type of operation controlled will be given.

Assuming that all components are ready and the "ready" light is on, the command to read is received. While the pressure scan is taking place, a preliminary data stepping switch connects manually operated switches containing such information as date, run number, project number, and so forth to the tape punch. At the same time, a magnetic clutch locks a control cam to the drum which is turning at about 5 rpm. The pressure rises in the tank and the pressure follower in a short time

opens a shorting switch which has prevented pulses from reaching the magnetic drum. Recording continues until an upper limit switch is tripped. This switch reverses the vacuum and pressure valves, shorts out the pulse generator, switches magnetic heads from "record" to "playback," speeds up the drum, and after a short time delay steps the channel selector stepping switch to the first channel. The first channel is a record of the total number of pulses emitted during the pressure scan. The count is transferred into a relay register and checked. If the transfer has been made correctly, the electronic counter is reset to zero and the channel selector switch steps to the next channel which is read by the electronic counter. Meantime the high-speed stepping switch is started and runs at a rate which allows it to clear all relay registers while the next channel is counted. These operations continue automatically, one channel being counted while the registers associated with the previous channel are being cleared.

2690

Of particular interest are the operations that take place during the transfer period, which occupies about 15 percent of the total drum revolution time. In this period the pulse shapers are shut off, the counts in the three counters are checked against one another, the count agreed upon is transferred to the relay register, the register is checked back against the counter, the counters are reset, the channel selector switch is stepped, and the pulse shapers are turned back on.

In this manner, all channels are read. Upon completion of the last transfer of information to the tape, the magnetic heads are switched to "erase" and current from an oscillator is fed into all of them in parallel while the drum makes two revolutions. The erasing current is then turned off and the total count channel is read to ensure that all pulses have been removed. If so, the magnetic heads are returned to the "record" position, the drum drive drops back to "record" speed, the channel selector switch steps to "home" position, the magnetic clutch is deenergized, releasing the timing cam which then continues around to its "ready" position, and if all other components are in "ready" condition the "ready" light comes on and a new cycle may be initiated by the "start" button. If all pulses are not removed after the automatic erasing operation, a signal light comes on and a manual erase switch must be operated to complete the cycle.

If all channels are not being used, the patch board may be so plugged that the channel selector stepping switch will skip out at maximum speed without reading the unused channels. This allows the cycle time to be appreciably shortened if the capsules in use are connected to the low numbered channels.

Complete equipment. - The complete recorder is shown in figure 10. On the left side of the picture is the pressure tank with the pressure capsules mounted on the side and the pressure follower and pulse generator

mounted on the top. Adjacent to the tank is the servo rack which contains the amplifiers and power supply for the servomotor and contains also the preliminary data panel plus miscellaneous power supplies. Next to the servo rack is the main rack which contains from top to bottom the electronic counter chassis, the master control panel, the main power supply, the pulse shaper and amplifier chassis, and the magnetic drum compartment. On the back of this rack are mounted control and switching relays. The table on the right side of the picture contains the tape punch and the tape reader. The teletypewriter is set on the table. Underneath is the takeup reel for the punched-paper-tape output.

2690

Over a ten month period, several static and dynamic calibration checks have been made. The static calibrations were performed in the manner described with only the accuracy of the pressure servo being checked. The dynamic calibrations were made by applying known pressures P_m to the pressure capsules through tubing similar to that used to connect to the system for data recording operation. A normal data recording cycle was then taken. Readings P_D were taken from the printed page and punched tape output; thus the operation of the entire system was checked in the dynamic calibration run. In the range of 25 inches below atmospheric pressure to 30 inches above atmospheric pressure, this calibration shows a linear response within ±0.1 inch of mercury. In the range below 25 inches of mercury below atmospheric pressure, the calibration departs from linearity somewhat; at -27 inches of mercury, which is the lowest pressure the equipment can measure, the deviation from linearity reaches 0.2 inch of mercury and is probably a result of the starting transient of the system. This calibration curve is shown in figure 11; it has not changed appreciably since the equipment was first put into service. The recorded data have about the same accuracy as is obtained from conventional mercury manometers in practice.

The rate at which data can be recorded from the 8- by 6-foot supersonic tunnel with this automatic equipment is about 30 percent slower than with photographic techniques; however, calculations on the data are completed in about 2 to 3 working hours after the completion of a series of tests. This is about ten times as fast as is accomplished by manual reading of the films, and about four times as fast as is accomplished with semiautomatic film reading techniques.

Lewis Flight Propulsion Laboratory
National Advisory Committee for Aeronautics
Cleveland, Ohio, October 20, 1952

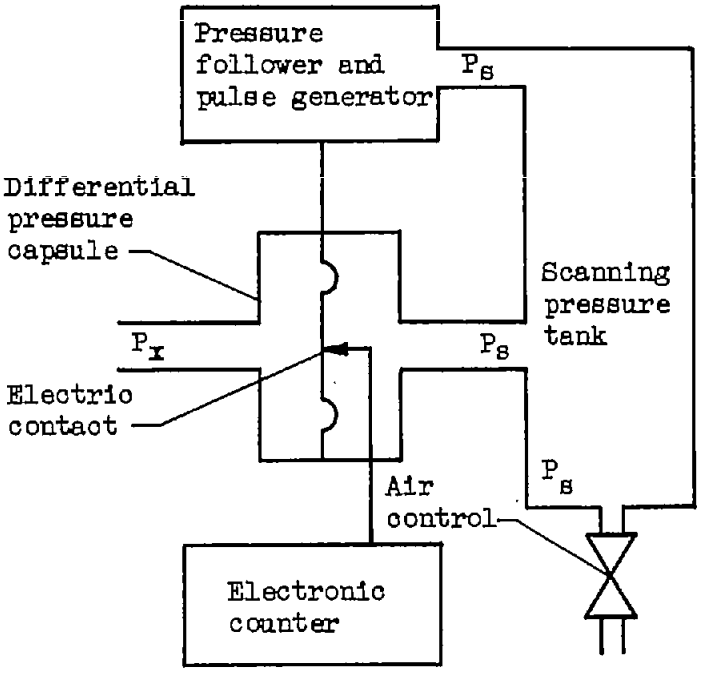

(a) Basic block diagram.

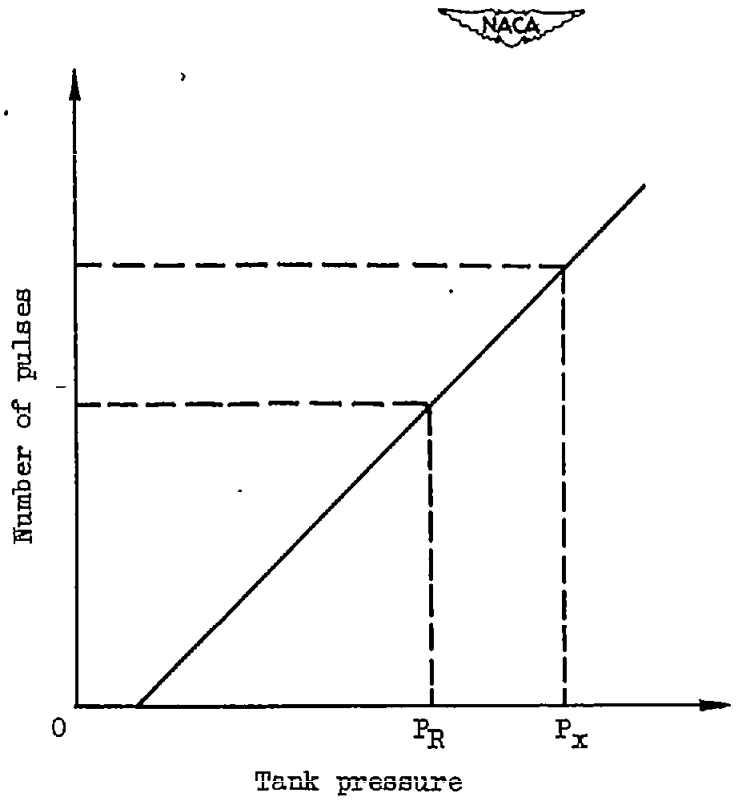

(b) Pressure follower and pulse generator output against tank pressure.

Figure 1. - Basic principle of digital automatic multiple pressure recorder.

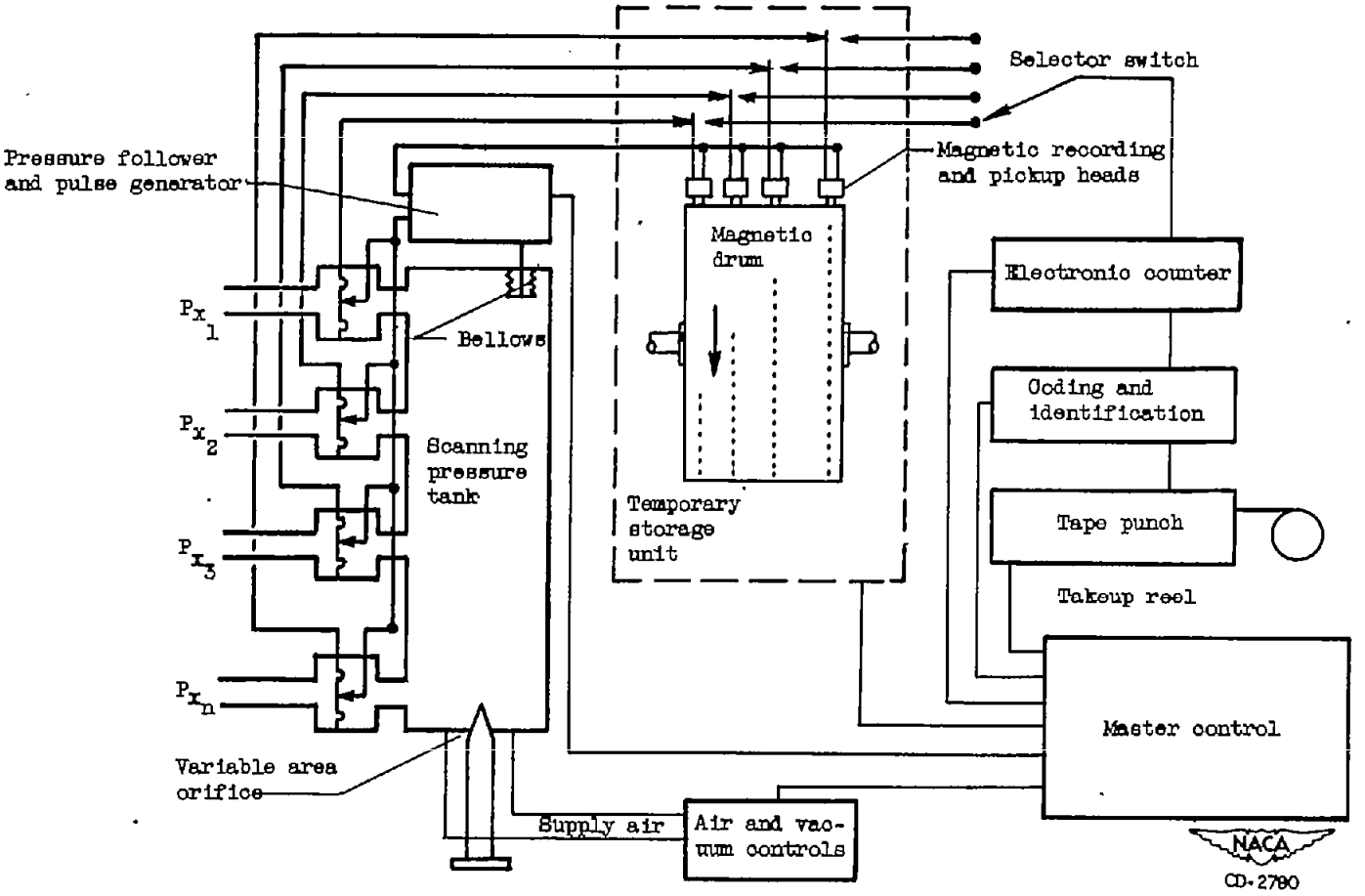

Figure 2. - Block diagram of complete instrument.

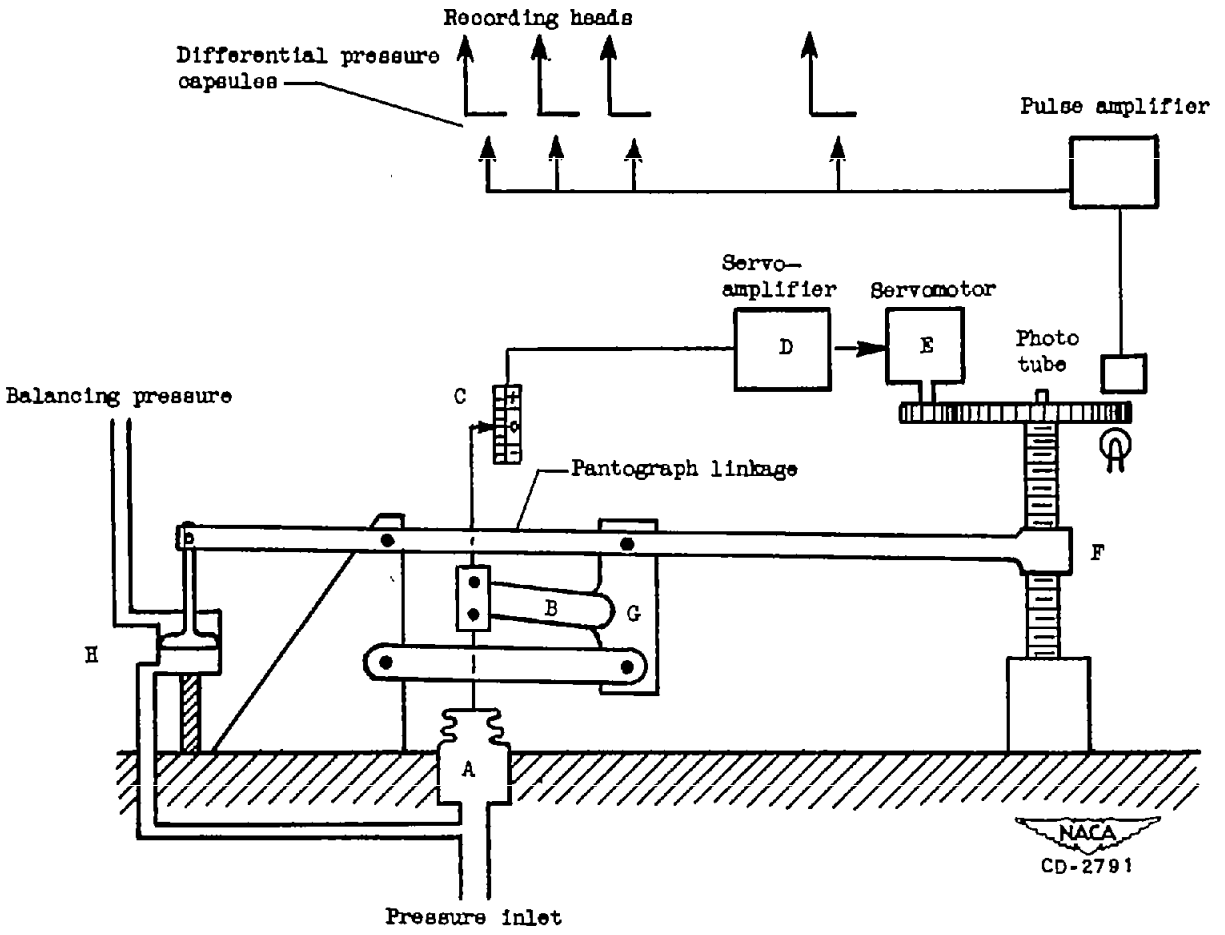

Figure 3. - Schematic diagram of pressure follower and pulse generator.

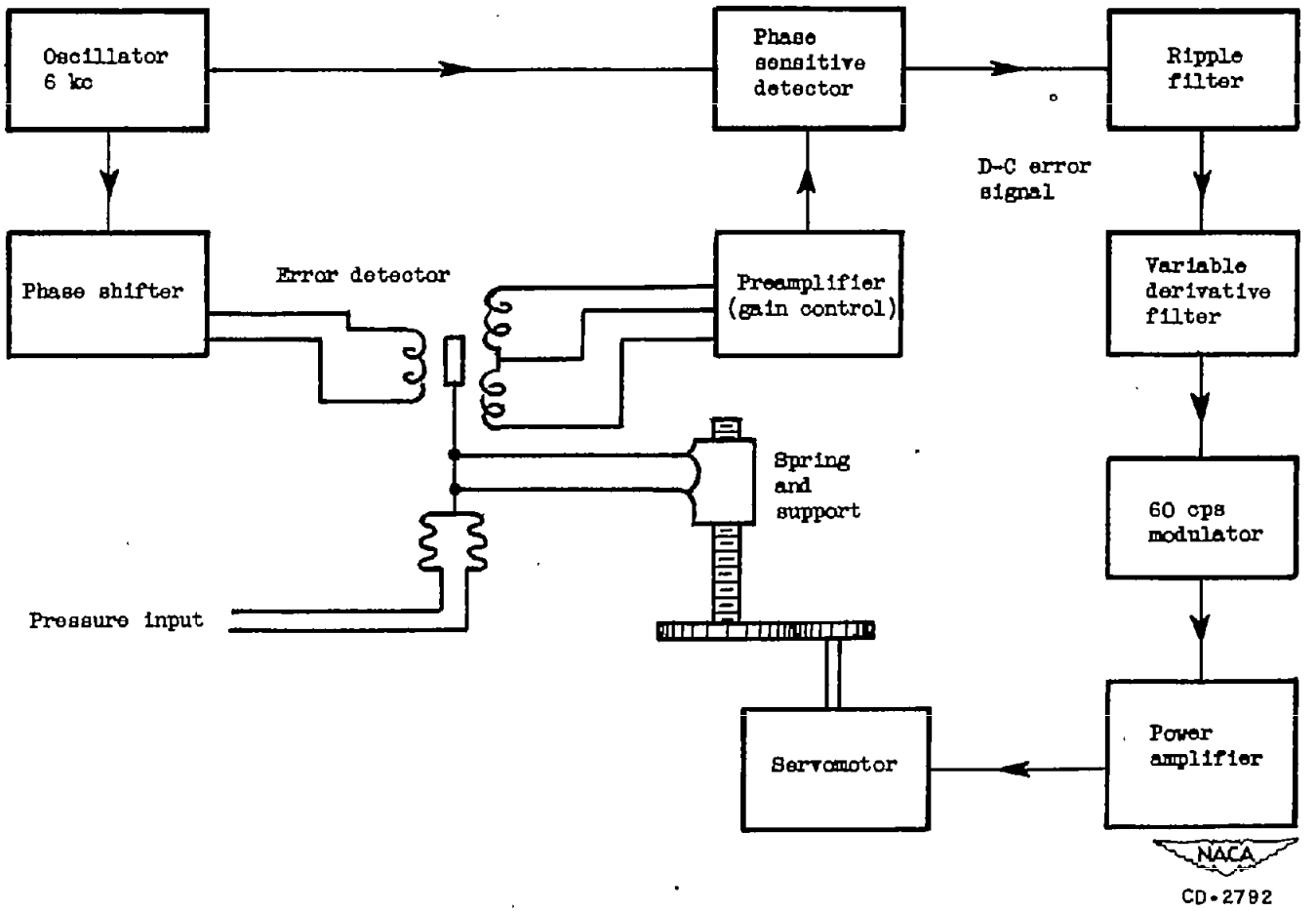

Figure 4. - Block diagram of pressure follower and pulse generator.

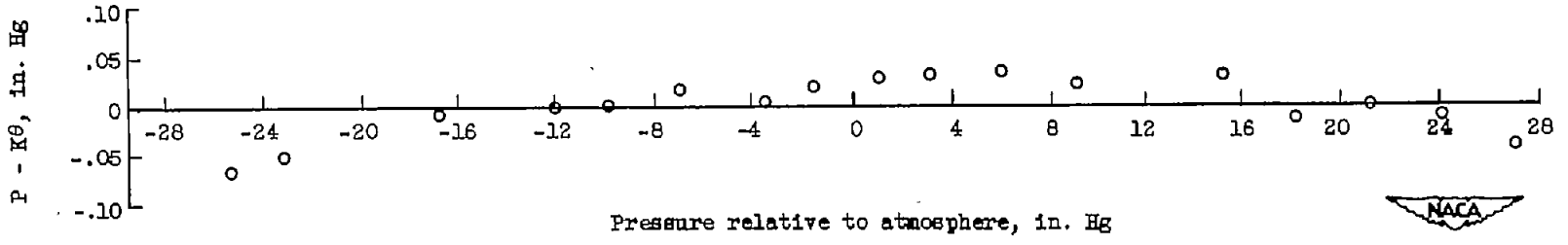

Figure 5. - Static calibration.

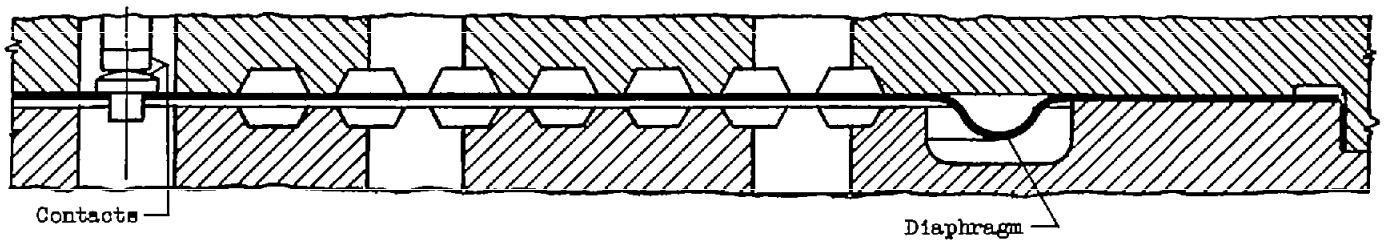

Detail of diaphragm

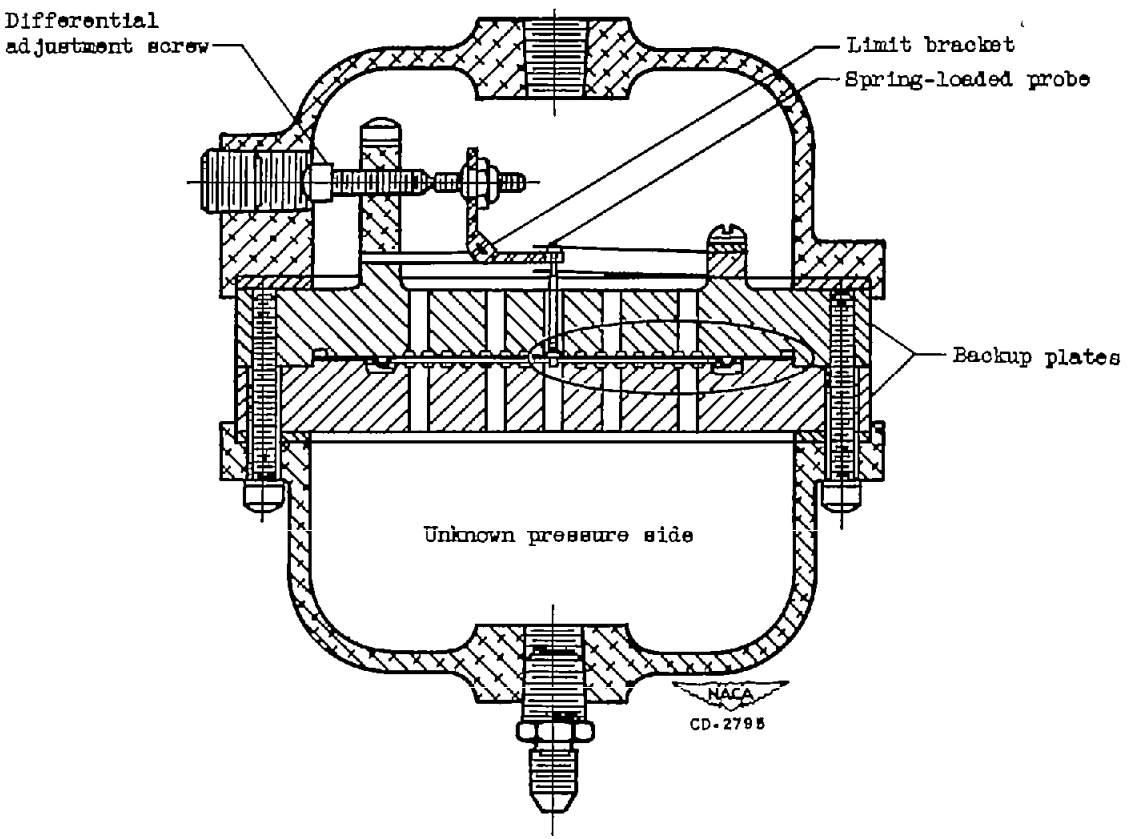

Figure 6. - Pressure capsule.

2690

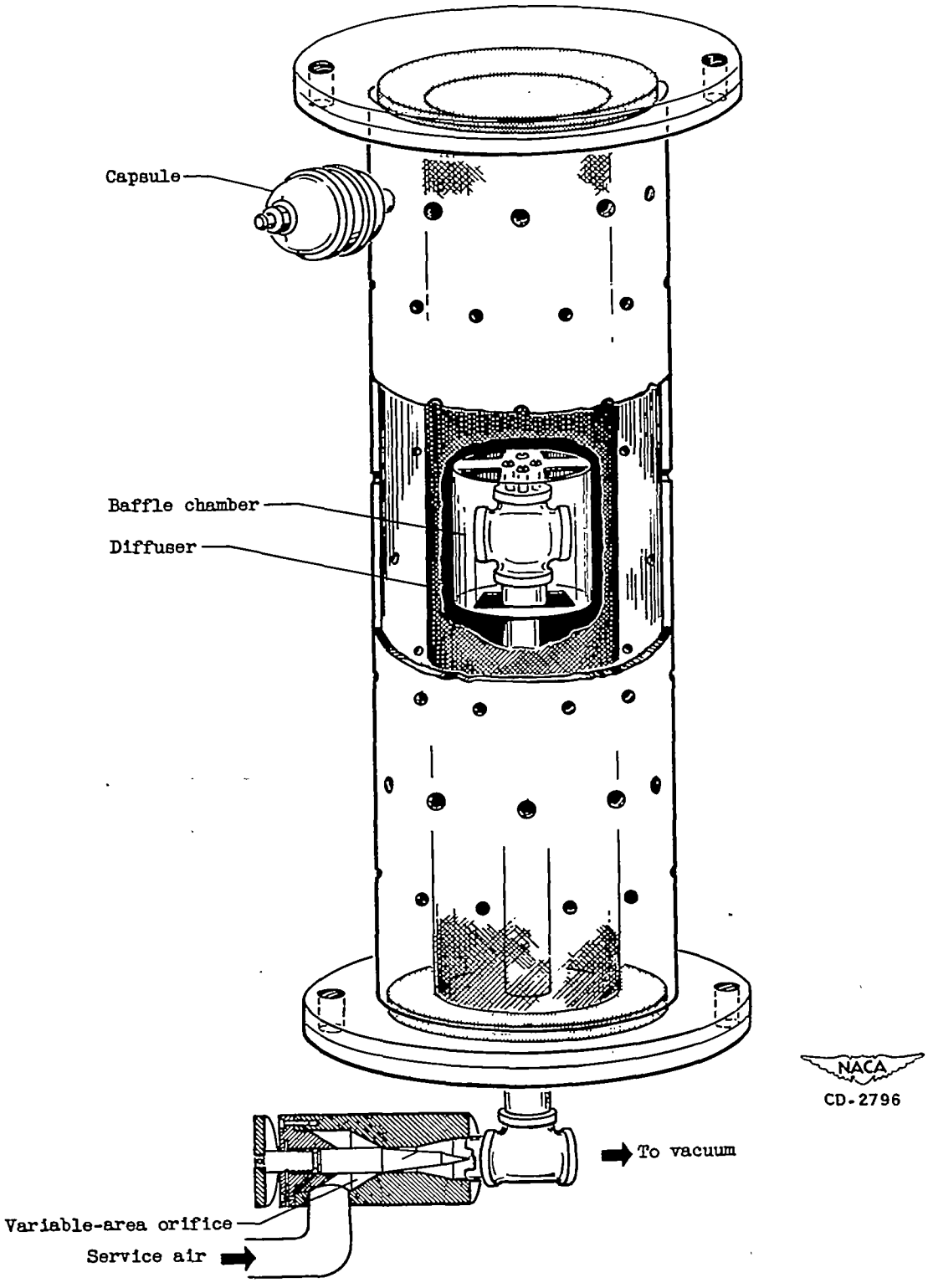

Figure 7. - Pressure tank.

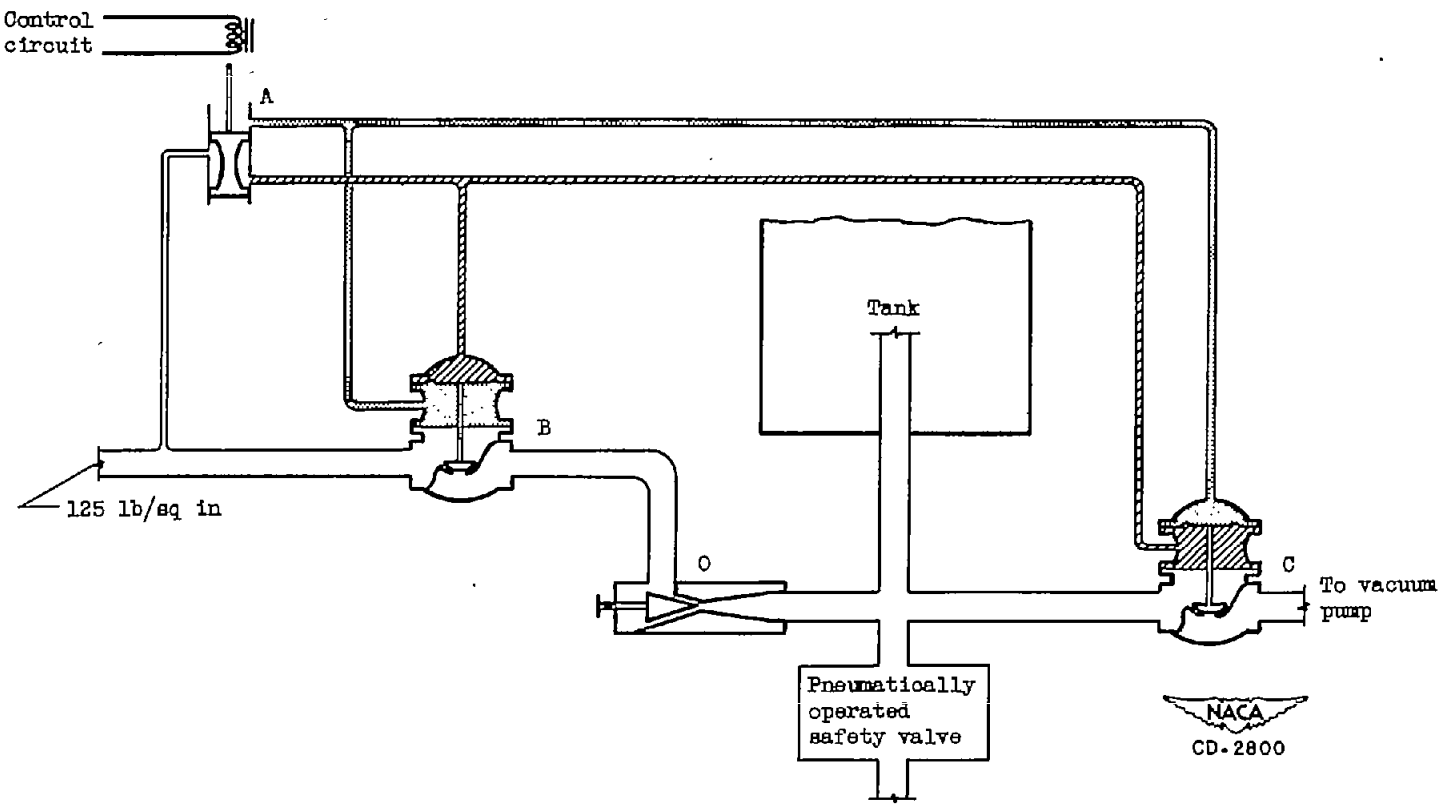

Figure 8. - Reference pressure controls.

Hole position 1	2	3	4	5	NACA code	Teletype code
●					0	E 3
●	●				1	A
●		●			2	S
●	●	●			3	U 7
●			●		4	D
●	●		●		5	J
●		●	●		6	F
●	●	●	●		7	K
●				●	8	Z
●	●			●	9	W 2
●		●		●	A	Y 6
●			●	●	B	B
		●	●		C	N
	●	●	●		D	C
	●	●	●	●	E	V
	●		●	●	G	G
	●	●			H	I 8
	●			●	L	L
		●	●	●	M	M
	●	●		●	N	P 0
	●		●		R	R 4
●	●	●		●	S	Q 1
		●		●	T	H
●		●	●	●	U	X
				●	.	T 5
			●	●	-	O 9
	●				Line feed	Line feed
		●			Space	Space
			●		Carriage return	Carriage return
●	●	●	●	●	Letter shift	Letter shift
●	●		●	●	Figure shift	Figure shift

Figure 9. - Punched-paper-tape code.

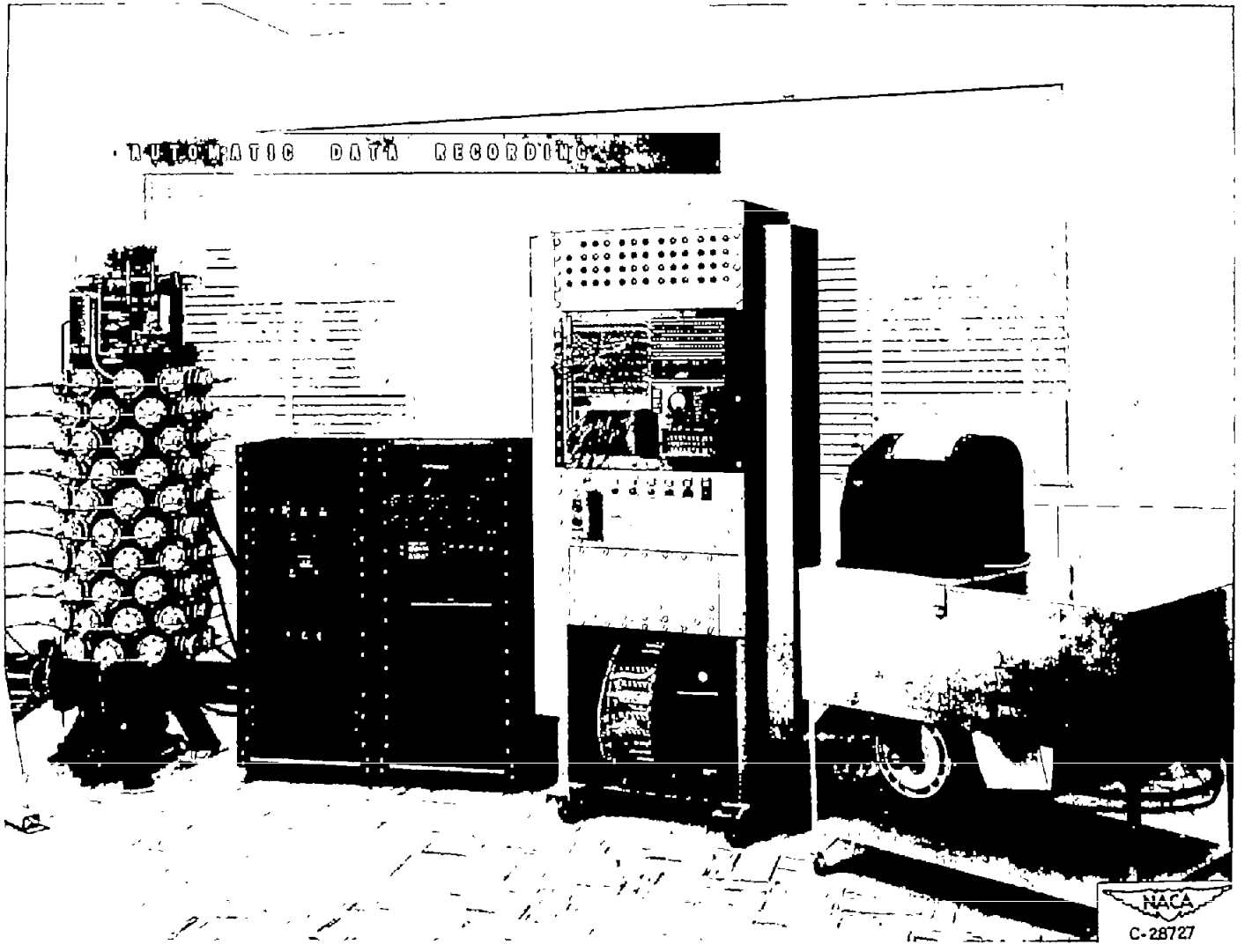

Figure 10. - Digital automatic multiple pressure recorder.

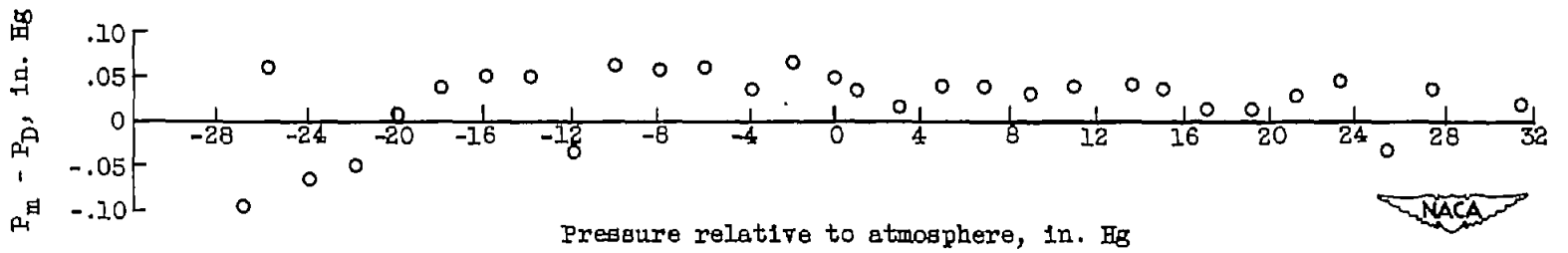

Figure 11. - Dynamic calibration.

NACA-Langley - 1-19-53 - 1000