9586
NACA TN 3293

TECH LIBRARY KAFB, NM
0066231

NATIONAL ADVISORY COMMITTEE FOR AERONAUTICS

TECHNICAL NOTE 3293

CUMULATIVE FATIGUE DAMAGE OF AXIALLY LOADED ALCLAD 75S-T6 AND ALCLAD 24S-T3 ALUMINUM-ALLOY SHEET

By Ira Smith, Darnley M. Howard, and Frank C. Smith

National Bureau of Standards

Washington
September 1955

AFMDC
TECH

TECH LIBRARY KAFB, NM
0066231

F

NATIONAL ADVISORY COMMITTEE FOR AERONAUTICS

TECHNICAL NOTE 3293

CUMULATIVE FATIGUE DAMAGE OF AXIALLY LOADED ALCLAD 75S-T6 AND ALCLAD 24S-T3 ALUMINUM-ALLOY SHEET

By Ira Smith, Darnley M. Howard, and Frank C. Smith

SUMMARY

This report presents the results of cumulative-fatigue-damage tests made on 607 specimens machined from alclad 75S-T6 aluminum-alloy sheet 0.064 inch thick and 198 specimens of alclad 24S-T3 and alclad 75S-T6 aluminum-alloy sheet 0.032 inch thick. The tests of the 0.064-inch-thick specimens consisted of 35 different loading conditions and the tests of the 0.032-inch material consisted of 13 different loading conditions. The stress amplitudes used were nominally ±16,000 and ±17,000 psi, ±16,000 and ±30,000 psi, ±16,000 and ±60,000 psi, ±30,000 and ±40,000 psi, and ±30,000 and ±60,000 psi.

The cumulative-damage ratio was calculated as the sum of the ratios of the numbers of cycles applied at the different stress levels to the number of cycles at the same stress level that would cause failure. Seventy-two percent of the average cumulative-damage ratios were within twenty percent of unity, and forty percent were within ten percent of unity. The smallest average cumulative-damage ratio of a group of four similar specimens was 0.568 and the largest, 1.440. The cumulative-damage ratios for the 0.032-inch-thick material showed no systematic variation from those for the 0.064-inch material.

INTRODUCTION

Aircraft structures in service are subjected to stresses of varying amplitudes. It is desirable, therefore, to include the effect of varying stress amplitude in tests for determining the fatigue life of aircraft. It is known (refs. 1 and 2) that, for some ferrous materials, a sequence of stresses of fluctuating amplitude produces pronounced effects on the fatigue properties of these materials. The effects of understressing, overstressing, "coaxing," and sequence loading have been investigated for ferrous materials (refs. 3 to 7). Relatively little work of this type, however, has been done on high-strength aluminum alloys.

Several theories have been advanced in an effort to obtain a relationship between the number of cycles of stress at different stress levels

and the cumulative fatigue damage. Miner (ref. 8) assumed the amount of cumulative fatigue damage under repeated loads at a given stress level to equal the number of loading cycles applied at that stress level expressed as a percentage of the number of cycles to failure at that stress level. A review of previous work led Richart and Newmark (ref. 9) to assume the existence of a damage - cycle-ratio relation during the process of forming a fatigue crack at any overstress. The relationship, in the form of experimentally determined curves, is used to predict damage and failure. Wallgren (ref. 10) assumed a modified expression of the cumulative-damage hypothesis of reference 8 in considering that the sum of the cycle ratios at failure can exceed or fall below unity depending on the material and cycle pattern.

The National Bureau of Standards, under the sponsorship and with the financial assistance of the National Advisory Committee for Aeronautics, undertook a program of cumulative-fatigue-damage tests on high-strength aluminum-alloy sheet materials to obtain sufficient experimental evidence to determine the usefulness of Miner's method described in reference 8. The present investigation was performed in two parts. The first part consisted of tests of 0.064-inch-thick alclad 75S-T6 aluminum-alloy rolled sheet specimens. The data obtained compare cumulative fatigue damage over a wide range of stress-cycle histories. The second part consisted of tests of 0.032-inch-thick alclad 24S-T3 and 0.032-inch-thick alclad 75S-T6. The results of these tests are included to show the effect on the cumulative damage ratio of:

(1) Stress amplitude
(2) Sheet thickness
(3) Material
(4) Mean stress

The authors wish to express their appreciation to the staff of the Engineering Mechanics Section of the National Bureau of Standards for their assistance on this work. Particular thanks go to Mr. Timothy O'Connor for his assistance on the tests and to Mr. Samuel Levy and the late Mr. A. E. McPherson for their advice, assistance, and encouragement.

DESCRIPTION OF MACHINES

The tests were performed on two nominally identical lever-type fatigue testing machines (fig. 1) designed and constructed at the National Bureau of Standards (ref. 11). These machines operate at a nominal speed of 1,000 rpm and are capable of automatically applying a periodic sequence of loads of two amplitudes for various predetermined loading patterns. The eccentric crank (fig. 2) is placed in either of two predetermined positions by means of a compressed-air actuated linkage. The air valves

are controlled through a suitable circuit closed by microswitches. After the preset number of cycles has been reached, a disk with lugs driven by a gear reduction box (fig. 3) actuates the microswitches. Specimens are tightly clamped between the jaws and are axially loaded. A desired mean stress is obtained by suitably setting the position of the lever relative to the midpoint of its excursion before the specimen is clamped. Load is measured in terms of bending strain in the lever by means of two wire resistance strain gages located near the extreme fibers of the lever. The output from these gages is passed into a modified SR-4 circuit (ref. 12) which drives a cathode-ray oscillograph. This circuit gives a continuous indication of the force-time relationship in the specimen.

SPECIMENS AND TEST PROCEDURE

The specimens for the cumulative-fatigue-damage tests were machined from alclad 75S-T6 aluminum-alloy rolled sheet 0.064 inch thick and from alclad 24S-T3 and alclad 75S-T6 aluminum-alloy sheet 0.032 inch thick. The static properties of the materials are shown in figure 4.

The specimens were machined to the shape shown in figure 5. Lubricated steel guides (ref. 13) were used to prevent the specimens from buckling during the compression half of the loading cycle.

Since the effects of cumulative damage on the fatigue life of aluminum alloys may be small, it was felt that extreme care should be used to obtain as consistent fatigue data as possible. In an effort to achieve consistent data the following fundamental variables affecting scatter were considered:

(a) The homogeneity of the material from which the specimens were made

(b) The consistency of the machining technique used to manufacture the specimens

(c) The actual size of the specimens after machining, with particular emphasis on the area of the reduced section

(d) The general appearance of the surface of the specimen immediately before testing with regard to any scratches, nicks, or other accidentally introduced stress-raisers

(e) The magnitude and distribution of the stress applied to the reduced section of the specimen

In addition to these variables there are, no doubt, many other factors which influence the fatigue life, such as corrosion, systematic

(but unknown) variations in the testing machines, and variations in testing technique. The test program was designed to control the above variables as well as possible.

To minimize variations in the results, all specimens in a given test group were machined from the same sheet of material. A test group consisted of 16 specimens selected from a batch of 22 machined simultaneously. Before testing, each specimen was visually examined for any obvious stress-raisers and if such were found the specimen was rejected. The two outside specimens of each batch, which were burred as a result of machining, were always discarded. Corners of the reduced section of each specimen were rounded lightly by hand with No. 0 emery paper.

The strain distribution across two typical specimens was checked with Tuckerman optical strain gages during the course of the tests and was found uniform to within 1 percent. The calibration of the machines was checked after each test group. The calibration constants did not change more than 1.5 percent between calibrations. The dynamic load was measured on each specimen and on most specimens at least twice during the test. The assembly of specimen, guides, paper, and lubricants was a modification of that described in reference 13. For the first tests, performed at stresses of ±30,000 and ±40,000 psi, the paper was omitted and extreme care taken to eliminate possible binding of the guides with the specimen. This method was discarded and the following procedure adopted for the remaining tests.

Two strips of copy paper 1 inch wide were soaked for 5 minutes in SAE 40 motor oil. The guide blocks and specimen were covered with a thin coat of Andok M-275 cup grease. The greased blocks were clamped against either side of the specimen with the oiled paper between guide and specimen. The clamp was tight enough to prevent the specimen from sliding under normal hand pressure. The assembly remained clamped for at least 5 minutes to allow grease to squeeze out that would otherwise come out during the course of the test. The guides were loosened, adjusted, and locked. Guides on all specimens were adjusted so that when the specimen was held vertically the guide would not slide under its own weight but would slide under the additional weight of a 0.44-pound jig. The weight of the guide assembly was 0.49 pound. Figure 6 shows a typical specimen ready for test.

The cycle pattern for a given group of tests specifies the number of cycles which the testing machine automatically applies at the first of the two amplitudes for which it is set before switching to the other. The order of tests in each complete test group of 16 specimens for a given cycle pattern was as follows:

(1) A test at the higher stress
(2) A dual-load test applying the higher stress first

(3) A test at the lower stress
(4) A dual-load test applying the lower stress first

This sequence of tests was repeated four times. As a check on possible changes in testing technique of a particular operator with time, one out of every four specimens was tested by an alternate operator.

METHOD OF ANALYSIS

Fatigue tests were performed on 805 specimens in 52 test groups. A normal test group consisted of 16 tests, 4 each to failure at the higher and lower stresses and 8 cumulative-fatigue-damage tests, 4 with the higher stress applied first and 4 with the lower stress applied first. In some cases a test group was used to check or duplicate earlier tests and thus show the scatter between groups. In a few other cases a single test group was used for two loading conditions.

The data were analyzed using Miner's theory (ref. 8). This theory assumes a linear relationship between the amount of damage done to the material at a certain fatigue stress and the number of cycles applied at that stress. It assumes that previous stress history has no effect on the linearity of the relationship. It can be shown that, using these assumptions, the amount of damage done to the material by fatigue stressing at various stress amplitudes can be expressed by:

$$\frac{n_1}{N_1} + \frac{n_2}{N_2} + \cdot \cdot \cdot + \frac{n_r}{N_r} = \sum_{i=1}^{i=r} \frac{n_i}{N_i} = D \tag{1}$$

where

n_i total number of cycles of stress applied to material at ith stress

N_i number of cycles at ith stress alone that would cause failure

D cumulative-damage ratio, a value of unity representing failure according to Miner

When only two stresses are considered, equation (1) becomes

$$\left(\sum n_H/N_H\right) + \left(\sum n_L/N_L\right) = D \tag{2}$$

where

$\sum n_H$ total number of cycles of higher stress

$\sum n_L$ total number of cycles of lower stress

N_H cycles to failure at higher stress

N_L cycles to failure at lower stress

n_H cycles at high stress in a cycle pattern

n_L cycles at low stress in a cycle pattern

For these tests N_H and N_L are averaged values of cycles to failure derived from the four tests to failure at the higher and lower stresses, respectively.

RESULTS

Tests of 0.064-Inch-Thick Alclad 75S-T6 Aluminum Alloy

Six hundred and seven specimens of 0.064-inch-thick alclad 75S-T6 aluminum alloy were tested in thirty-nine test groups and thirty-five different loading conditions. The results of these tests are shown in table 1. Table 2 is a summary of these results.

Nominal-stress-amplitude combinations of ±30,000 and ±40,000 psi, ±30,000 and ±60,000 psi, ±16,000 and ±60,000 psi, ±16,000 and ±17,000 psi, and ±16,000 and ±30,000 psi were used for the tests.

The cycle patterns were chosen from the equation

$$\epsilon = \frac{n_H/N_H}{\frac{n_H}{N_H} + \frac{n_L}{N_L}} \tag{3}$$

to cover a range of values of ϵ and thus to show any systematic variation of D with different ratios of high-to-low cycles in a cycle pattern. Figure 7, taken from typical data, shows that there is no systematic variation with different ratios of high-to-low cycles.

The average value of D for similar tests (usually four) in a test group ranged from 0.603 to 1.440. The value of D for individual specimens ranged from 0.373 to 1.911. The average deviation of tests to failure at a single stress was of the same order as the average deviation for the cumulative-damage tests. Test groups 12, 13, 14, and 15 were tested at nominal stress levels of ±30,000 and ±60,000 psi with identical cycle patterns. Average values of D ranged from 0.805 to 0.879 for tests in which the low stress was applied first and from 0.729 to 0.896 for tests in which the high stress was applied first. The scatter of these values for the same cycle pattern suggests that four repetitions (of the sequence of four tests for each test group) are adequate to give consistent average values of D.

Effects of prior dynamic stressing of some aluminum alloys at one stress amplitude on the fatigue strength at a second stress amplitude have been investigated (refs. 14 to 16). The results show a pronounced increase in fatigue life for certain loading conditions. The cycle patterns of test groups 11, 22, 24, 25, 29, and 30 were especially selected to investigate these effects. In test groups 11, 22, 29, and 30, every specimen except one gave cumulative-damage ratios above unity for tests in which the higher stress was applied first. The average values of D ranged from 1.074 to 1.440 and the individual values of D ranged from 0.843 to 1.911; n_H ranged from 35.4 to 82.9 percent of the life of the material. There seems to be no systematic variation of D when the lower stress is applied first or for tests performed at nominal stress levels of ±16,000 and ±17,000 psi.

Test group 23 investigated the cumulative-damage effect of short bursts of a very high stress. These tests were performed at nominal stress levels of ±16,000 and ±60,000 psi. For the first group of cumulative-damage tests $L\text{-}H_a$ (table 1(c)) the cyclic sequence was 100,000 cycles at low stress, plus 500 cycles at high stress, plus 100,000 cycles at low stress, plus 500 cycles at high stress, plus the remaining life of the specimen at the lower stress. The second group of cumulative-damage tests $L\text{-}H_b$ followed the sequence of 100,000 cycles at the low stress plus 100 cycles at the high stress. This sequence was repeated until failure. The value of D was 0.806 and 0.663, respectively.

Figures 8(a) to 8(c) show the effect on D of the length of cycle pattern. For tests in which the higher stress was applied first an increase in the consecutive cycles applied tends to increase the cumulative-damage ratio. There seemed to be no effect on D for tests in which the lower stress was applied first.

Figure 9[1] presents the cumulative-damage ratios for all the tests. Figure 10 is an S-N diagram of the material. The points were plotted from the data summarized in table 2 on specimens tested to failure at one stress amplitude.

[1]The test groups in figure 9 are not listed in numerical order.

Tests of 0.032-Inch-Thick Alclad 24S-T3 and Alclad 75S-T6 Aluminum Alloy

One hundred and ninety-eight specimens of 0.032-inch-thick aluminum alloy were tested in thirteen test groups (thirteen different loading conditions) at nominal-stress-amplitude combinations of ±16,000 and ±30,000 psi. The results of these tests are presented in table 3 and are summarized in table 4. Tests on groups 40 through 45 were made on alclad 24S-T3 and tests on groups 46 through 52 were made on alclad 75S-T6. Figure 11 shows that there is no appreciable variation in the cumulative-damage ratios obtained from the two materials.

The cycle patterns were chosen from equation (3) so that the values of D for the 0.032-inch material could be compared with those for the 0.064-inch material.

The average value of D for these tests varied from 0.568 to 1.218. The value of D for individual specimens in this series ranged from 0.381 to 1.422.

Figure 12 presents an S-N diagram of the materials used. The points were plotted from the data in table 3 for specimens tested at one stress amplitude.

DISCUSSION

A comparison of average values of the cumulative-damage ratio D for the 0.032-inch-thick material with a few average values for the 0.064-inch material is shown in table 5. There is no apparent variation of D with sheet thickness.

Table 5 also shows that, for test groups of comparable cycle patterns, D is about the same for tests performed at mean stresses of 0- and 20,000-psi tension.

The largest average cumulative-damage ratio obtained for a group of four similar specimens was 1.440 in test group 29 and the smallest, 0.568 in test group 41.

From the data of tables 2 and 4, the fatigue life can be predicted, using Miner's cumulative-damage ratio, to within 20 percent 72 percent of the time and to within 10 percent 40 percent of the time regardless of

(1) The stress amplitude
(2) The sheet thickness
(3) The alloy
(4) The mean stress

Although the present tests indicate relatively little deviation from a cumulative-damage ratio of 1 at failure, it must be remembered that all the tests have been conducted under conditions of nominally uniform stress. For specimens having stress concentrations it is likely that high tensile stresses will cause permanent set and result in beneficial residual stresses in the neighborhood of the stress concentration. For subsequent cycling at lower loads of the same type, an improvement in life may therefore be expected.

CONCLUDING REMARKS

Cumulative-fatigue-damage tests were made on 607 specimens of 0.064-inch-thick alclad 75S-T6 aluminum alloy in 35 different loading conditions and on 198 specimens of 0.032-inch-thick alclad 24S-T3 and alclad 75S-T6 aluminum alloy in 13 different loading conditions. The data presented indicate that, when the materials are stressed as described, the life can be predicted to within 20 percent 72 percent of the time and to within 10 percent 40 percent of the time, using the assumption that the damage is proportional to the ratio of the number of cycles applied at any stress to the number of cycles at the same stress that would cause failure.

There does not seem to be any systematic variation of the aforementioned conclusion with

(1) The stress amplitudes used
(2) The sheet thickness used
(3) The alloy used
(4) The mean stress applied

There appears to be an increase in the cumulative-damage ratio with an increase in cycle ratio for tests in which the higher stress was applied first. There seems to be no effect, however, for tests in which the lower stress was applied first. The cumulative-damage ratios for these tests were, in general, less than unity.

National Bureau of Standards,
Washington, D. C., March 16, 1954.

REFERENCES

1. Kommers, J. B.: The Effect of Under-Stressing on Cast Iron and Open-Hearth Iron. Proc. A.S.T.M., vol. 30, pt. II, 1930, pp. 368-383.

2. French, H. J.: Fatigue and Hardening of Steels. Trans. Am. Soc. Steel Treating, vol. 21, no. 10, Oct. 1933, pp. 899-946.

3. Russell, H. W., and Welcker, W. A., Jr.: Damage and Overstress in the Fatigue of Ferrous Materials. Proc. A.S.T.M., vol. 36, pt. II, 1936, pp. 118-138.

4. Kommers, J. B.: The Effect of Overstressing and Understressing in Fatigue. Proc. A.S.T.M., vol. 38, pt. II, 1938, pp. 249-262.

5. Kommers, J. B.: The Effect of Overstressing and Understressing in Fatigue. Proc. A.S.T.M., vol. 43, 1943, pp. 749-762.

6. Kommers, J. B.: The Effect of Overstress in Fatigue on the Endurance Life of Steel. Proc. A.S.T.M., vol. 45, 1945, pp. 532-541.

7. Bennett, J. A.: A Study of the Damaging Effect of Fatigue Stressing on X4130 Steel. Proc. A.S.T.M., vol. 46, 1946, pp. 693-711.

8. Miner, Milton A.: Cumulative Damage in Fatigue. Jour. Appl. Mech., vol. 12, no. 3, Sept. 1945, pp. A-159 - A-164.

9. Richart, F. E., Jr., and Newmark, N. M.: An Hypothesis for the Determination of Cumulative Damage in Fatigue. Proc. A.S.T.M., vol. 48, 1948, pp. 767-798.

10. Wallgren, G.: Fatigue Tests With Stress Cycles of Varying Amplitude. Rep. No. 28, The Aero. Res. Inst. of Sweden (Stockholm), 1949.

11. Smith, Frank C., Howard, Darnley M., Smith, Ira, and Harwell, Richard: Fatigue Testing Machine for Applying a Sequence of Loads of Two Amplitudes. NACA TN 2327, 1951.

12. Howard, Darnley M.: Flexural Fatigue Tests of Wing Beams. Rep. 1350, Nat. Bur. Standards, Dec. 1951.

13. Brueggeman, W. C., and Mayer, M., Jr.: Guides for Preventing Buckling in Axial Fatigue Tests of Thin Sheet-Metal Specimens. NACA TN 931, 1944.

14. Bennett, John A., and Baker, James F.: Effects of Prior Static and Dynamic Stresses on the Fatigue Strength of Aluminum Alloys. Res. Paper RP2157, Jour. Res., Nat. Bur. Standards, vol. 45, no. 6, Dec. 1950, pp. 449-457.

15. Dolan, T. J., and Brown, H. F.: Effect of Prior Repeated Stressing on the Fatigue Life of 75S-T Aluminum. Preprint 91, A.S.T.M., 1952.

16. Stickley, G. W.: Improvement of Fatigue Life of an Aluminum Alloy by Overstressing. NACA TN 857, 1942.

TABLE 1.- CUMULATIVE-FATIGUE-DAMAGE RESULTS FOR 0.064-INCH-THICK ALCLAD 75S-T6 ALUMINUM ALLOY

[Mean stress, 0]

(a) Nominal stresses, ±30,000 and ±40,000 psi

Specimen	Load sequence (a)	High stress, ksi	Low stress, ksi	Cycles to failure	Cumulative-damage ratio, D	Deviation from average D, percent
Test group 1; cycle pattern, 7,000 cycles high and 20,000 cycles low						
n-16	H	±42.4		12,780	0.978	2.2
n-20	H	±43.1		14,920	1.141	14.1
n-24	H	±42.9		11,970	.916	8.4
n-28	H	±43.0		12,620	.965	3.5
		Av. ±42.9		13,070	1.000	±7.1
n-18	L		±30.8	54,430	1.024	2.4
n-22	L		±30.5	51,740	.973	2.7
n-26	L		±31.1	47,980	.903	9.7
n-31	L		±30.5	58,470	1.100	10.0
			Av. ±30.7	53,160	1.000	±6.2
n-17	H-L	±42.1	±30.5	29,550	1.107	2.6
n-21	H-L	±43.2	±31.0	30,710	1.196	5.2
n-25	H-L	±42.9	±30.8	28,150	1.000	12.0
n-30	H-L	±42.1	±30.5	31,350	1.245	9.4
		Av. ±42.6	±30.7	29,940	1.137	±7.3
n-19	L-H	±42.7	±30.8	26,570	.879	4.4
n-23	L-H	±42.8	±30.8	26,590	.880	4.2
n-27	L-H	±43.0	±30.9	26,650	.883	3.7
n-41	L-H	±41.4	±30.0	33,390	1.032	12.3
		Av. ±42.5	±30.6	28,300	.919	±6.2
Test group 2; cycle pattern, 10 cycles high and 40 cycles low						
n-64	H	±42.5		14,820	0.969	3.1
n-72	H	±41.5		14,580	.953	4.7
n-75	H	±41.6		15,640	1.022	2.2
n-78	H	±41.6		16,150	1.056	5.6
		Av. ±41.8		15,300	1.000	±3.9
n-54	L		±31.6	47,550	.988	1.2
n-62	L		±31.5	45,150	.938	6.2
n-76	L		±31.3	46,460	.965	3.5
n-79	L		±31.3	53,410	1.109	10.9
			Av. ±31.4	48,140	1.000	±5.5
n-56	H-L	±43.0	±31.4	26,950	.800	.3
n-60	H-L	±42.3	±31.6	28,940	.859	7.6
n-65	H-L	±42.8	±32.1	25,330	.752	5.8
n-73	H-L	±42.3	±31.6	26,290	.781	2.1
		Av. ±42.6	±31.7	26,880	.798	±4.0
n-71	L-H	±41.4	±31.3	33,500	.995	1.9
n-74	L-H	±42.5	±31.7	31,470	.934	7.9
n-77	L-H	±41.8	±31.4	34,230	1.016	.2
n-81	L-H	±41.7	±31.3	37,380	1.110	9.4
		Av. ±41.8	±31.4	34,150	1.014	±4.9
Test group 3; cycle pattern, 1,000 cycles high and 4,000 cycles low						
n-16	H	±42.4		12,780	0.978	2.2
n-20	H	±43.1		14,920	1.141	14.1
n-24	H	±42.9		11,970	.916	8.4
n-28	H	±43.0		12,620	.965	3.5
		Av. ±42.9		13,070	1.000	±7.1
n-18	L		±30.8	54,430	1.024	2.4
n-22	L		±30.5	51,740	.973	2.7
n-26	L		±31.1	47,980	.903	9.7
n-31	L		±30.5	58,470	1.100	10.0
			Av. ±30.7	53,160	1.000	±6.2
n-40	H-L	±43.1	±31.1	30,220	.927	1.8
n-46	H-L	±42.5	±31.0	33,350	1.031	9.2
n-51	H-L	±42.9	±31.2	27,270	.859	9.0
n-53	H-L	±43.0	±31.4	30,620	.958	1.5
		Av. ±42.9	±31.2	30,370	.944	±5.4
n-38	L-H	±43.2	±31.2	33,540	.977	2.1
n-45	L-H	±42.3	±30.9	29,650	.884	7.6
n-49	L-H	±42.6	±31.5	33,490	.976	2.0
n-52	L-H	±42.9	±31.0	34,040	.989	3.3
		Av. ±42.8	±31.2	32,680	.957	±3.8

[a] H, high stress only; L, low stress only; H-L, high stress first followed by low stress, etc.; L-H, low stress first followed by high stress, etc.

TABLE 1.- CUMULATIVE-FATIGUE-DAMAGE RESULTS FOR 0.064-INCH-THICK ALCLAD 75S-T6 ALUMINUM ALLOY - Continued

(a) Nominal stresses, ±30,000 and ±40,000 psi - Continued

Specimen	Load sequence (a)	High stress, ksi	Low stress, ksi	Cycles to failure	Cumulative-damage ratio, D	Deviation from average D, percent
Test group 4; cycle pattern, 10,000 cycles high and 40,000 cycles low						
m-83	H	±42.1		15,740	1.061	6.1
m-88	H	±42.0		15,180	1.023	2.3
m-91	H	±42.2		14,520	.979	6.4
m-96	H	±42.1		13,890	.936	6.4
		Av. ±42.1		14,850	1.000	±4.2
m-85	L		±31.6	41,550	.919	8.1
m-87	L		±31.4	47,810	1.057	5.7
m-93	L		±31.7	43,570	.964	3.6
m-98	L		±31.5	47,940	1.060	6.0
			Av. ±31.6	45,220	1.000	±5.8
m-84	H-L	±42.0	±31.5	[b]27,150	1.034	2.7
m-89	H-L	±42.4	±31.8	32,580	1.174	16.6
m-92	H-L	±42.1	±31.6	21,980	.939	6.8
m-97	H-L	±42.3	±31.8	19,460	.883	12.3
		Av. ±42.2	±31.7	25,290	1.007	±9.6
m-86	L-H	±42.1	±31.7	[c]39,400	.921	11.0
m-90	L-H	±42.3	±31.7	43,210	1.101	6.4
m-95	L-H	±42.0	±31.6	41,950	1.016	1.8
m-99	L-H	±41.8	±31.5	43,200	1.100	6.3
		Av. ±42.1	±31.6	41,940	1.035	±6.4
Test group 5; cycle pattern, 10 cycles high and 90 cycles low						
m-104	H	±40.4		17,560	1.054	5.4
m-108	H	±40.4		15,770	.946	5.4
		Av. ±40.4		16,670	1.000	±5.4
m-106	L		±30.1	53,300	1.017	1.7
m-110	L		±30.3	51,480	.983	1.7
			Av. ±30.2	52,390	1.000	±1.7
m-105	H-L	±41.0	±30.9	38,530	.893	.3
m-109	H-L	±40.6	±30.4	38,730	.898	.2
		Av. ±40.8	±30.7	38,630	.896	±.3
m-103	L-H	±40.7	±30.7	39,440	.914	1.1
m-107	L-H	±40.9	±30.6	38,530	.893	1.2
		Av. ±40.8	±30.7	38,990	.904	±1.2
Test group 6; cycle pattern, 100 cycles high and 900 cycles low						
x-1a	H	±41.8		15,620	0.966	3.4
x-5a	H	±41.4		16,310	1.009	.9
x-9a	H	±41.4		16,450	1.018	1.8
x-13a	H	±41.7		16,290	1.008	.8
		Av. ±41.6		16,170	1.000	±1.7
x-3a	L		±31.0	50,580	1.012	1.2
x-7a	L		±30.8	54,790	1.097	9.7
x-11a	L		±30.8	43,590	.872	12.8
x-14a	L		±30.9	50,890	1.019	1.9
			Av. ±30.9	49,960	1.000	±6.4
x-2a	H-L	±41.3	±30.9	34,700	.841	6.6
x-6a	H-L	±41.0	±30.6	35,060	.851	5.4
x-10a	H-L	±41.2	±30.7	41,725	1.011	12.3
x-16a	H-L	±41.7	±31.0	37,040	.898	.2
		Av. ±41.3	±30.8	37,130	.900	±6.1
x-4a	L-H	±41.4	±30.9	37,960	.917	7.5
x-8a	L-H	±41.2	±30.7	42,990	1.040	4.9
x-12a	L-H	±41.3	±30.7	44,940	1.085	9.5
x-15a	L-H	±42.0	±31.3	38,010	.920	7.2
		Av. ±41.5	±30.9	40,980	.991	±7.3

[a] H, high stress only; L, low stress only; H-L, high stress first followed by low stress, etc.; L-H, low stress first followed by high stress, etc.

[b] Accidentally changed to low load at 9,560 cycles.

[c] Accidentally changed to high load at 38,300 cycles.

TABLE 1.- CUMULATIVE-FATIGUE-DAMAGE RESULTS FOR 0.064-INCH-THICK ALCLAD 75S-T6 ALUMINUM ALLOY - Continued

(a) Nominal stresses, ±30,000 and ±40,000 psi - Continued

Specimen	Load sequence (a)	High stress, ksi	Low stress, ksi	Cycles to failure	Cumulative-damage ratio, D	Deviation from average D, percent
Test group 7; cycle pattern, 1,000 cycles high and 9,000 cycles low						
x-19a	H	±41.5		12,560	0.949	5.1
x-23a	H	±41.2		13,650	1.031	3.1
x-27a	H	±41.5		12,870	.972	2.8
x-2c	H	±41.4		13,860	1.047	4.7
		Av. ±41.4		13,240	1.000	±3.9
x-17a	L		±30.9	43,670	.858	14.2
x-21a	L		±31.0	52,160	1.025	2.4
x-25a	L		±31.1	54,280	1.066	6.6
x-1c	L		±30.8	53,520	1.051	5.1
			Av. ±31.0	50,910	1.000	±7.1
x-20a	H-L	±41.5	±30.9	43,550	1.135	2.3
x-24a	H-L	±41.8	±31.0	40,160	1.021	7.9
x-28a	H-L	±41.4	±30.8	49,140	1.245	12.3
x-4c	H-L	±41.5	±30.8	40,320	1.034	6.8
		Av. ±41.6	±30.9	43,290	1.109	±7.3
x-18a	L-H	±41.3	±30.8	31,720	.791	1.2
x-22a	L-H	±41.3	±30.8	28,170	.665	17.0
x-26a	L-H	±41.4	±30.8	36,700	.889	11.0
x-3c	L-H	±41.4	±30.8	35,240	.860	7.4
		Av. ±41.4	±30.8	32,960	.801	±9.2
Test group 8; cycle pattern, 20 cycles high and 30 cycles low						
x-1e	H	±41.5		16,360	1.066	6.6
x-5e	H	±41.5		14,120	.920	8.0
x-10e	H	±41.3		17,010	1.108	10.8
x-17e	H	±41.7		16,640	1.084	8.4
x-21e	H	±41.5		12,630	.823	17.7
		Av. ±41.5		15,350	1.000	±10.3
x-3e	L		±30.2	39,680	.834	16.6
x-7e	L		±30.2	41,450	.871	12.9
x-13e	L		±30.3	47,000	.988	1.2
x-16e	L		±30.5	59,250	1.245	24.5
x-19e	L		±30.7	50,550	1.062	6.2
			Av. ±30.4	47,590	1.000	±12.3
x-2e	H-L	±41.4	±30.0	18,230	.705	7.8
x-6e	H-L	±41.7	±30.3	21,250	.822	7.5
x-14e	H-L	±41.5	±30.2	19,450	.752	1.7
x-18e	H-L	±41.4	±30.2	20,240	.783	2.4
		Av. ±41.5	±30.2	19,790	.765	±4.8
x-4e	L-H	±41.1	±30.0	25,630	.990	11.4
x-8e	L-H	±41.4	±30.2	18,820	.727	18.2
x-16d	L-H	±41.3	±30.1	21,880	.845	4.9
x-15e	L-H	±41.5	±30.2	26,130	1.010	13.6
x-20e	L-H	±41.0	±29.8	22,570	.872	1.9
		Av. ±41.3	±30.1	23,010	.889	±10.0
Test group 9; cycle pattern, 200 cycles high and 300 cycles low						
x-13b	H	±42.1		13,720	0.889	11.1
x-17b	H	±41.9		15,140	.981	1.9
x-21b	H	±41.9		17,220	1.116	11.6
x-25d	H	±41.5		15,630	1.013	1.3
		Av. ±41.9		15,430	1.000	±6.5
x-15b	L		±31.2	53,280	.933	6.7
x-19b	L		±31.1	56,330	.987	1.3
x-23b	L		±31.1	59,610	1.044	4.4
x-27b	L		±31.0	59,110	1.036	3.6
			Av. ±31.1	57,080	1.000	±4.0
x-14b	H-L	±41.9	±31.3	19,950	.728	21.6
x-18b	H-L	±41.7	±30.8	28,530	1.040	12.1
x-22b	H-L	±41.6	±31.0	22,600	.826	11.0
x-26b	H-L	±41.8	±30.9	30,620	1.119	20.6
		Av. ±41.8	±31.1	25,430	.928	±16.3
x-16b	L-H	±41.6	±30.9	22,910	.832	4.1
x-20b	L-H	±41.9	±30.8	25,480	.928	6.5
x-24b	L-H	±42.0	±31.2	23,860	.865	.3
x-28b	L-H	±41.6	±30.8	23,340	.846	2.8
		Av. ±41.8	±30.9	23,900	.868	±3.4

[a] H, high stress only; L, low stress only; H-L, high stress first followed by low stress, etc.; L-H, low stress first followed by high stress, etc.

TABLE 1.- CUMULATIVE-FATIGUE-DAMAGE RESULTS FOR 0.064-INCH-THICK ALCLAD 75S-T6 ALUMINUM ALLOY - Continued

(a) Nominal stresses, ±30,000 and ±40,000 psi - Concluded

Specimen	Load sequence (a)	High stress, ksi	Low stress, ksi	Cycles to failure	Cumulative-damage ratio, D	Deviation from average D, percent
Test group 10; cycle pattern, 2,000 cycles high and 3,000 cycles low						
x-1d	H	±42.1		12,000	0.786	21.4
x-9d	H	±41.3		15,910	1.042	4.2
x-13d	H	±41.6		17,980	1.178	17.8
x-11e	H	±41.6		15,190	.995	.5
x-20d	H	±41.3		15,260	.999	.1
		Av. ±41.6		15,270	1.000	±8.8
x-3d	L		±30.8	47,950	.887	11.3
x-7d	L		±31.0	55,470	1.026	2.6
x-11d	L		±30.9	55,580	1.028	2.8
x-15d	L		±30.9	57,370	1.061	6.1
x-18d	L		±31.1	54,050	.999	.1
			Av. ±30.9	54,080	1.000	±4.6
x-2d	H-L	±42.2	±31.2	20,300	.765	2.5
x-6d	H-L	±41.5	±30.8	20,920	.806	8.0
x-10d	H-L	±41.3	±31.0	16,730	.673	9.8
x-14d	H-L	±41.5	±30.8	21,990	.876	17.4
x-21d	H-L	±41.4	±30.9	15,800	.612	18.0
		Av. ±41.6	±30.9	19,150	.746	±11.1
x-4d	L-H	±41.3	±30.8	22,170	.786	16.4
x-8d	L-H	±41.3	±30.9	28,940	1.049	11.6
x-12d	L-H	±41.2	±30.8	28,460	1.018	8.3
x-16d	L-H	±41.3	±30.1	21,880	.781	16.9
x-19d	L-H	±41.5	±30.9	29,190	1.066	13.4
		Av. ±41.3	±30.7	26,130	.940	±13.3
Test group 11; cycle pattern, 11,000 cycles high and low to failure						
x-Ac	H	±41.2		12,510	0.942	5.8
x-Ec	H	±41.8		11,950	.900	10.0
x-10c	H	±41.9		13,840	1.042	4.2
x-13c	H	±42.0		14,840	1.117	11.7
		Av. ±41.7		13,290	1.000	±7.9
x-9c	L		±31.0	48,620	.983	1.7
x-12c	L		±31.2	56,010	1.132	13.2
x-15c	L		±30.9	48,500	.980	2.0
x-17c	L		±30.8	44,770	.905	9.5
			Av. ±31.0	49,480	1.000	±6.6
x-Bc	H-L	±41.3	±31.1	21,990	1.050	4.2
x-Fc	H-L	±41.8	±31.0	20,640	1.023	6.7
x-11c	H-L	±42.0	±31.2	22,470	1.060	3.3
x-16c	H-L	±41.7	±30.9	31,940	1.251	14.1
		Av. ±41.7	±31.1	24,260	1.096	±7.1

[a] H, high stress only; L, low stress only; H-L, high stress first followed by low stress, etc.; L-H, low stress first followed by high stress, etc.

TABLE 1.- CUMULATIVE-FATIGUE-DAMAGE RESULTS FOR 0.064-INCH-THICK ALCLAD 75S-T6 ALUMINUM ALLOY - Continued

(b) Nominal stresses, ±30,000 and ±60,000 psi

Specimen	Load sequence (a)	High stress, ksi	Low stress, ksi	Cycles to failure	Cumulative-damage ratio, D	Deviation from average D, percent
Test group 12; cycle pattern, 10 cycles high and 90 cycles low						
Ald-18	H	±60.4		2,810	0.884	11.6
Ald-6	H	±60.5		2,820	.887	11.3
Ald-7	H	±60.5		3,420	1.076	7.6
Ald-8	H	±61.5		3,660	1.152	15.2
		Av. ±60.7		3,180	1.000	±11.4
Ald-10	L		±29.9	68,480	1.136	13.6
Ald-3	L		±29.7	68,910	1.143	14.3
Ald-13	L		±30.3	53,050	.880	12.0
Ald-16	L		±30.0	50,730	.841	15.9
			Av. ±30.0	60,290	1.000	±14.0
Ald-14	H-L	±60.3	±29.7	19,640	.913	4.2
Ald-15	H-L	±61.2	±29.9	16,940	.788	10.0
Ald-5	H-L	±59.9	±29.5	21,340	.991	13.1
Ald-4	H-L	±61.2	±30.0	17,450	.811	7.4
		Av. ±60.7	±29.8	18,840	.876	±8.7
Ald-19	L-H	±60.5	±29.6	18,140	.840	4.4
Ald-11	L-H	±61.1	±30.1	20,440	.947	7.7
Ald-17	L-H	±60.9	±30.0	17,940	.831	5.5
Ald-12	L-H	±61.1	±29.9	19,340	.896	1.9
		Av. ±60.9	±29.9	18,960	.879	±4.9
Test group 13; cycle pattern, 10 cycles high and 90 cycles low						
1-G	H	±60.0		3,020	1.002	0.2
9-G	H	±59.6		2,810	.932	6.8
5-G	H	±59.1		2,900	.962	3.8
13-G	H	±60.0		2,610	.866	13.4
17-G	H	±60.5		3,730	1.238	23.8
		Av. ±59.8		3,010	1.000	±9.6
3-G	L		±30.5	42,060	.930	7.0
7-G	L		±30.8	47,710	1.054	5.4
11-G	L		±30.6	35,960	.795	20.5
14-G	L		±30.0	55,270	1.221	22.1
			Av. ±30.5	45,250	1.000	±13.8
2-G	H-L	±59.5	±30.0	12,420	.662	9.2
6-G	H-L	±59.6	±29.6	14,530	.773	6.0
10-G	H-L	±59.6	±29.5	12,620	.672	7.8
15-G	H-L	±59.5	±29.1	15,230	.810	11.1
		Av. ±59.6	±29.6	13,700	.729	±8.5
4-G	L-H	±58.8	±29.6	11,500	.610	25.2
8-G	L-H	±60.0	±29.7	15,810	.839	2.9
12-G	L-H	±59.8	±29.6	15,220	.807	1.0
16-G	L-H	±59.1	±29.0	18,910	1.003	23.1
		Av. ±59.4	±29.5	15,360	.815	±13.0
Test group 14; cycle pattern, 10 cycles high and 90 cycles low						
17	H	±57.6		5,810	1.038	3.8
6	H	±57.5		5,280	.944	5.6
18	H	±57.7		6,120	1.094	9.4
15	H	±57.0		5,170	.924	7.6
		Av. ±57.5		5,600	1.000	±6.6
9	L		±28.6	86,565	1.207	20.7
2	L		±28.4	77,250	1.077	7.7
7	L		±28.5	60,580	.845	15.5
19	L		±28.3	68,150	.950	5.0
16	L		±28.3	65,970	.920	8.0
			Av. ±28.4	71,700	1.000	±11.4
13	H-L	±57.2	±28.5	28,720	.873	14.5
10	H-L	±57.8	±28.5	22,820	.696	8.9
3	H-L	±57.0	±28.6	24,520	.747	2.2
12	H-L	±57.3	±28.2	24,220	.738	3.4
		Av. ±57.3	±28.5	25,070	.764	±7.3
5	L-H	±57.3	±28.4	28,700	.873	8.4
14	L-H	±57.6	±28.5	30,400	.925	14.9
11	L-H	±57.0	±28.2	22,100	.672	16.5
4	L-H	±57.4	±28.2	24,610	.749	7.0
		Av. ±57.3	±28.3	26,450	.805	±11.7

[a] H, high stress only; L, low stress only; H-L, high stress first followed by low stress, etc.; L-H, low stress first followed by high stress, etc.

TABLE 1.- CUMULATIVE-FATIGUE-DAMAGE RESULTS FOR 0.064-INCH-THICK ALCLAD 75S-T6 ALUMINUM ALLOY - Continued

(b) Nominal stresses, ±30,000 and ±60,000 psi - Continued

Specimen	Load sequence (a)	High stress, ksi	Low stress, ksi	Cycles to failure	Cumulative-damage ratio, D	Deviation from average D, percent
Test group 15; cycle pattern, 10 cycles high and 90 cycles low						
10	H	±59.5		4,170	1.099	9.9
19	H	±59.9		3,050	.804	19.6
3	H	±59.3		4,360	1.149	14.9
17	H	±59.9		3,600	.949	5.1
		Av. ±59.7		3,800	1.000	±12.4
15	L		±29.9	74,820	1.163	16.3
20	L		±29.2	59,030	.918	8.2
9	L		±29.6	63,300	.984	1.6
11	L		±28.8	60,085	.934	6.4
			Av. ±29.4	64,310	1.000	±8.1
13	H-L	±59.6	±29.6	21,640	.873	2.3
5	H-L	±60.0	±29.6	22,050	.891	.6
12	H-L	±59.6	±29.3	22,940	.927	3.5
4	H-L	±59.7	±29.2	22,045	.891	.6
		Av. ±59.7	±29.4	22,170	.896	±1.8
18	L-H	±59.2	±29.3	21,330	.860	4.5
2	L-H	±59.2	±29.4	21,140	.852	3.5
14	L-H	±59.5	±29.5	21,950	.884	7.4
1	L-H	±57.8	±28.5	17,240	.695	15.6
		Av. ±58.9	±29.2	20,410	.823	±7.8
Test group 16; cycle pattern, 100 cycles high and 900 cycles low						
1	H	±57.9		2,970	0.865	13.5
5	H	±60.5		3,560	1.036	3.6
9	H	±60.8		3,480	1.013	1.3
13	H	±60.4		3,730	1.086	8.6
		Av. ±59.9		3,440	1.000	±6.7
3	L		±29.9	57,800	.992	.8
7	L		±30.0	60,310	1.035	3.5
11	L		±30.2	60,830	1.044	4.4
15	L		±29.9	54,130	.929	7.1
			Av. ±30.0	58,270	1.000	±4.0
2	H-L	±57.9	±28.6	23,050	1.039	0
6	H-L	±60.4	±29.8	23,080	1.048	.9
10	H-L	±60.9	±29.9	20,930	.935	10.0
14	H-L	±61.2	±29.8	25,070	1.130	9.1
		Av. ±60.1	±29.5	23,030	1.039	±5.0
4	L-H	±60.4	±29.9	20,950	.921	9.3
8	L-H	±60.9	±31.8	24,990	1.111	9.5
12	L-H	±60.3	±29.8	25,970	1.150	13.3
16	L-H	±60.4	±29.7	19,960	.880	13.3
		Av. ±60.5	±30.3	22,970	1.013	±11.3
Test group 17; cycle pattern, 1,000 cycles high and 9,000 cycles low						
1	H	±61.3		2,820	0.866	13.4
5	H	±61.2		3,245	.997	.3
10	H	±60.7		3,300	1.014	1.4
15	H	±60.9		3,660	1.124	12.4
		Av. ±61.0		3,260	1.000	±6.9
2	L		±29.9	59,540	.946	5.4
6	L		±30.1	64,240	1.020	2.0
11	L		±29.7	68,250	1.084	8.4
17	L		±29.9	59,820	.950	5.0
			Av. ±29.9	62,960	1.000	±5.2
3	H-L	±60.9	±29.9	20,750	1.130	2.6
7	H-L	±60.5	±29.7	24,110	1.257	8.4
12	H-L	±60.8	±29.7	20,550	1.069	7.8
16	H-L	±61.0	±30.0	20,930	1.186	2.2
		Av. ±60.8	±29.8	21,590	1.160	±3.2
8	L-H	±60.6	±29.7	29,500	1.197	4.1
9	L-H	±60.9	±29.7	29,125	1.081	6.0
13	L-H	±60.8	±29.7	29,220	1.111	3.4
18	L-H	±61.4	±29.7	29,540	1.209	5.1
		Av. ±60.9	±29.7	29,350	1.150	±4.7

[a] H, high stress only; L, low stress only; H-L, high stress first followed by low stress, etc.; L-H, low stress first followed by high stress, etc.

TABLE 1.- CUMULATIVE-FATIGUE-DAMAGE RESULTS FOR 0.064-INCH-THICK ALCLAD 75S-T6 ALUMINUM ALLOY - Continued

(b) Nominal stresses, ±30,000 and ±60,000 psi - Continued

Specimen	Load sequence (a)	High stress, ksi	Low stress, ksi	Cycles to failure	Cumulative-damage ratio, D	Deviation from average D, percent
Test group 18; cycle pattern, 1,000 cycles high and 24,000 cycles low						
3-2	H	±60.0		3,910	1.122	12.2
3-5	H	±60.2		3,020	.866	13.4
3-12	H	±60.4		3,545	1.017	1.7
3-14	H	±60.4		3,470	.995	.5
		Av. ±60.3		3,490	1.000	±6.9
3-1	L		±29.4	73,770	1.112	11.2
3-6	L		±29.4	63,450	.956	4.4
3-11	L		±29.6	74,530	1.123	12.3
3-16	L		±29.7	53,700	.809	19.1
			Av. ±29.5	66,360	1.000	±11.8
3-3	H-L	±60.8	±29.5	29,610	.990	3.2
3-8	H-L	±60.5	±29.6	35,785	1.083	5.9
3-9	H-L	±60.5	±29.5	29,900	.994	2.8
3-17	H-L	±60.3	±29.5	31,965	1.025	.3
		Av. ±60.5	±29.5	31,820	1.025	±3.1
3-4	L-H	±60.5	±29.4	39,710	.870	0
3-10	L-H	±60.6	±29.5	38,770	.856	1.6
3-15	L-H	±60.6	±29.5	37,485	.857	3.8
3-18	L-H	±61.3	±29.7	42,700	.915	5.2
		Av. ±60.8	±29.5	39,670	.870	±2.7
Test group 19; cycle pattern, 100 cycles high and 2,400 cycles low						
4-1	H	±60.1		2,200	1.067	6.7
4-15	H	±59.6		1,960	.951	4.9
4-10	H	±60.3		1,970	.955	4.5
4-13	H	±60.5		2,120	1.028	2.8
		Av. ±60.1		2,060	1.000	±4.7
4-2	L		±29.5	62,765	1.087	8.7
4-6	L		±29.6	58,710	1.017	1.7
4-8	L		±29.4	53,280	.923	7.7
4-12	L		±29.6	56,240	.974	2.6
			Av. ±29.5	57,750	1.000	±5.2
4-3	H-L	±60.2	±29.7	24,540	.892	18.1
4-7	H-L	±60.3	±29.9	30,080	1.119	2.8
4-11	H-L	±61.0	±30.0	30,090	1.124	3.2
4-17	H-L	±58.3	±29.0	32,600	1.219	11.9
		Av. ±60.0	±29.7	29,350	1.080	±9.0
4-4	L-H	±60.2	±29.6	32,430	1.137	.7
4-9	L-H	±60.4	±29.7	27,465	.974	14.9
4-14	L-H	±61.1	±29.8	34,940	1.232	7.6
4-16	L-H	±60.0	±29.3	34,950	1.237	8.0
		Av. ±60.4	±29.6	32,450	1.145	±7.8
Test group 20; cycle pattern, 500 cycles high and 37,500 cycles low						
5-2	H	±61.3		1.965	0.914	8.6
5-6	H	±61.6		2,390	1.112	11.2
5-10	H	±61.1		2,160	1.003	.5
5-14	H	±61.5		2,085	.970	3.0
		Av. ±61.4		2,150	1.000	±5.8
5-3	L		±31.1	43,450	.920	8.0
5-7	L		±31.0	43,810	.928	7.2
5-11	L		±30.8	49,515	1.049	4.9
5-15	L		±30.5	52,055	1.103	10.3
			Av. ±30.9	47,210	1.000	±7.6
5-4	H-L	(b)	±30.7	38,085	1.066	3.2
5-8	H-L	(b)	±30.4	37,820	1.023	1.0
5-12	H-L	(b)	±30.5	38,210	1.125	8.9
5-16	H-L	(b)	±30.5	32,850	.918	11.1
			Av. ±30.5	36,740	1.033	±6.0
5-5	L-H	(b)	±30.6	37,685	.880	3.0
5-9	L-H	(b)	±30.4	37,810	.939	3.5
5-13	L-H	(b)	±30.6	37,800	.934	3.0
5-17	L-H	(b)	±30.6	37,670	.873	3.7
			Av. ±30.6	37,740	.907	±3.3

[a] H, high stress only; L, low stress only; H-L, high stress first followed by low stress, etc.; L-H, low stress first followed by high stress, etc.

[b] Time was insufficient for dynamic reading. Estimated stress is ±61.4 ksi.

TABLE 1.- CUMULATIVE-FATIGUE-DAMAGE RESULTS FOR 0.064-INCH-THICK ALCLAD 75S-T6 ALUMINUM ALLOY - Continued

(b) Nominal stresses, ±30,000 and ±60,000 psi - Concluded

Specimen	Load sequence (a)	High stress, ksi	Low stress, ksi	Cycles to failure	Cumulative-damage ratio, D	Deviation from average D, percent
Test group 21; cycle pattern, 100 cycles high and 7,400 cycles low						
12-1	H	±63.1		2,930	1.074	7.4
12-3	H	±62.7		2,690	.986	1.4
12-9	H	±62.1		2,390	.876	12.4
12-13	H	±61.6		2,900	1.063	6.3
		Av. ±62.4		2,730	1.000	±6.9
12-2	L		±30.9	46,240	.907	9.3
12-6	L		±30.8	48,500	.951	4.9
12-10	L		±31.0	53,810	1.055	5.5
12-15	L		±30.8	55,390	1.086	8.6
			Av. ±30.9	50,990	1.000	±7.1
12-5	H-L	(c)	±30.9	30,040	.742	17.6
12-8	H-L	(c)	±30.3	37,530	.920	2.2
12-12	H-L	(c)	±30.9	40,240	.997	10.8
12-14	H-L	(c)	±30.8	37,590	.942	4.7
			Av. ±30.7	36,350	.900	±8.8
12-4	L-H	(c)	±30.7	49,735	1.184	22.9
12-7	L-H	(c)	±30.8	37,440	.887	7.9
12-11	L-H	(c)	±30.7	29,960	.713	26.0
12-16	L-H	(c)	±31.1	44,940	1.069	11.0
			Av. ±30.8	40,520	.963	±17.0
Test group 22; cycle pattern, 1,500 high + low to failure, H-L, and 40,000 low + high to failure, L-H						
1	H	±60.9		4,175	1.031	3.1
10	H	±60.2		3,860	.953	4.6
11	H	±60.2		3,790	.936	6.4
14	H	±59.9		4,370	1.079	8.0
		Av. ±60.3		4,050	1.000	±5.5
2	L		±29.6	59,980	.835	16.5
6	L		±29.1	75,070	1.045	4.5
9	L		±29.2	77,550	1.079	7.9
15	L		±29.3	74,770	1.041	4.1
			Av. ±29.3	71,840	1.000	±8.2
3	H-L	±60.1	±29.6	53,210	1.090	1.5
7	H-L	±60.9	±29.3	52,280	1.077	.3
12	H-L	±59.9	±29.2	47,090	1.005	6.4
16	H-L	±60.3	±29.4	55,570	1.123	4.6
		Av. ±60.3	±29.4	52,040	1.074	±3.2
4	L-H	(d)	±29.8	40,660	.720	1.7
8	L-H	(d)	±29.3	40,450	.668	5.6
13	L-H	(d)	±29.4	40,650	.717	1.3
17	L-H	±60.5	±29.6	40,685	.726	2.5
			Av. ±29.5	40,610	.708	±2.8

[a] H, high stress only; L, low stress only; H-L, high stress first followed by low stress, etc.; L-H, low stress first followed by high stress, etc.

[c] Time was insufficient for dynamic reading. Estimated stress is ±62.4 ksi.

[d] Time was insufficient for dynamic reading. Estimated stress is ±60.3 ksi.

TABLE 1.- CUMULATIVE-FATIGUE-DAMAGE RESULTS FOR 0.064-INCH-THICK ALCLAD 75S-T6 ALUMINUM ALLOY - Continued

(c) Nominal stresses, ±16,000 and ±60,000 psi

Specimen	Load sequence (a)	High stress, ksi	Low stress, ksi	Cycles to failure	Cumulative-damage ratio, D	Deviation from average D, percent
Test group 23; cycle pattern, 100,000 cycles low + 500 cycles high + 100,000 low + 500 high + low to failure, L-H_a, and 100,000 cycles low + 100 cycles high + repeat to failure, L-H_b						
3-2	H	±60.4		3,030	1.031	3.1
3-9	H	±61.0		3,210	1.093	9.3
3-16	H	±62.3		2,660	.905	9.5
3-14	H	±61.3		3,850	.970	3.0
		Av. ±61.3		2,940	1.000	±6.2
3-4	L		±15.2	905,250	.471	52.9
3-8	L		±15.6	3,260,950	1.696	69.6
3-17	L		±15.2	1,600,710	.833	16.7
			Av. ±15.3	1,922,300	1.000	±46.4
3-5	L-H_a	(b)	±15.0	200,810	.380	52.9
3-10	L-H_a	(b)	±15.6	842,700	.778	3.5
3-12	L-H_a	(b)	±15.4	1,177,780	.953	18.2
3-18	L-H_a	(b)	±15.6	1,484,130	1.112	38.0
			Av. ±15.4	926,360	.806	±28.2
3-7	L-H_b	(b)	±15.6	700,710	.602	9.2
3-18	L-H_b	(b)	±15.3	800,750	.671	1.2
3-13	L-H_b	(b)	±15.7	901,380	.775	16.9
3-15	L-H_b	(b)	±15.6	700,700	.602	9.2
			Av. ±15.6	775,890	.663	±9.1

[a] H, high stress only; L, low stress only; L-H_a and L-H_b, low stress first followed by high stress (these two groups tested to investigate cumulative-damage effect of short bursts of a very high stress).

[b] Time was insufficient for dynamic reading. Estimated stress is ±61.3 ksi.

TABLE 1.- CUMULATIVE-FATIGUE-DAMAGE RESULTS FOR 0.064-INCH-THICK ALCLAD 75S-T6 ALUMINUM ALLOY - Continued

(d) Nominal stresses, ±16,000 and ±17,000 psi

Specimen	Load sequence (a)	High stress, ksi	Low stress, ksi	Cycles to failure	Cumulative-damage ratio, D	Deviation from average D, percent
Test group 24; cycle pattern, 760,000 cycles high to failure at low and 1,350,000 cycles low to failure at high						
6-2	H	±17.1		1,532,990	0.891	10.9
6-6	H	±17.1		1,928,870	1.122	12.2
6-12	H	±17.3		1,182,125	.687	31.3
6-15	H	±17.2		2,234,550	1.299	29.9
		Av. ±17.2		1,719,630	1.000	±21.1
6-4	L		±16.2	2,718,000	1.115	11.5
6-7	L		±16.2	2,012,660	.826	17.4
6-8	L		±16.3	2,436,020	.999	.1
6-10	L		±16.2	2,583,830	1.060	6.0
			Av. ±16.2	2,437,630	1.000	±8.8
6-3	H-L	±17.0	±16.1	1,922,180	.919	21.2
6-9	H-L	±17.2	(b)	642,240	.373	50.8
6-13	H-L	±17.2	±16.3	2,757,270	1.261	66.4
6-17	H-L	±17.4	±16.5	850,155	.479	36.8
		Av. ±17.2	±16.3	1,542,960	.758	±43.8
6-5	L-H	±17.1	±16.1	1,719,880	.769	13.6
6-11	L-H	±17.2	±16.3	2,270,570	1.089	22.4
6-16	L-H	±17.2	±16.5	1,480,430	.630	29.2
6-19	L-H	±17.5	±16.5	2,239,280	1.071	20.3
		Av. ±17.3	±16.4	1,927,540	.890	±21.4
Test group 25; cycle pattern, 500,000 cycles high to failure at low and 1,000,000 cycles low to failure at high						
13-2	H	±17.3		2,285,000	1.615	61.5
13-4	H	±17.2		1,042,680	.737	26.3
13-10	H	±17.3		1,383,520	.978	2.2
13-14	H	±17.3		946,970	.669	33.1
		Av. ±17.3		1,414,540	1.000	±30.8
13-3	L		±16.3	2,084,990	1.077	7.7
13-8	L		±16.3	1,444,320	.746	25.4
13-12	L		±16.4	1,119,280	.578	42.2
13-16	L		±16.4	3,094,980	1.599	59.9
			Av. ±16.4	1,935,890	1.000	±33.8
13-5	H-L	±17.1	±16.3	1,800,850	1.025	12.0
13-7	H-L	±17.3	±16.6	1,603,860	.924	1.0
13-11	H-L	±17.3	±16.3	2,024,170	1.141	24.7
13-17	H-L	±17.3	(c)	919,450	.570	37.7
		Av. ±17.3	±16.4	1,587,080	.915	±18.9
13-6	L-H	±17.3	±16.3	2,371,140	1.486	30.8
13-9	L-H	±17.5	±16.3	1,549,380	.905	20.3
13-13	L-H	(d)	±16.4	968,990	.501	55.9
13-18	L-H	±17.5	±16.5	2,606,560	1.652	45.4
		Av. ±17.4	±16.4	1,874,020	1.136	±38.1

[a] H, high stress only; L, low stress only; H-L, high stress first followed by low stress, etc.; L-H, low stress first followed by high stress, etc.

[b] Specimen failed prior to application of lower load.

[c] Specimen failed at night.

[d] Specimen failed prior to application of higher load.

TABLE 1.- CUMULATIVE-FATIGUE-DAMAGE RESULTS FOR 0.064-INCH-THICK ALCLAD 75S-T6 ALUMINUM ALLOY - Continued

(e) Nominal stresses, ±16,000 and ±30,000 psi

Specimen	Load sequence (a)	High stress, ksi	Low stress, ksi	Cycles to failure	Cumulative-damage ratio, D	Deviation from average D, percent
Test group 26; cycle pattern, 400 cycles high and 9,600 cycles low						
1f	H	±30.2		54,600	1.200	20.0
7f	H	±30.8		38,270	.841	15.9
12f	H	±30.9		48,420	1.064	6.4
16f	H	±30.6		40,680	.894	10.6
		Av. ±30.6		45,490	1.000	±13.2
3f	L		±16.1	1,422,410	.753	24.7
5f	L		±16.2	1,994,020	1.056	5.6
9f	L		±16.2	2,132,800	1.129	12.9
10f	L		±16.3	2,263,680	1.199	19.9
17f	L		±16.3	1,630,680	.863	13.7
			Av. ±16.2	1,888,720	1.000	±15.4
2f	H-L	±30.4	±16.3	760,080	1.056	.7
8f	H-L	±30.6	±16.2	820,090	1.140	7.2
13f	H-L	±30.5	±16.5	750,080	1.042	2.0
18f	H-L	±30.5	±16.3	730,100	1.015	4.5
		Av. ±30.5	±16.3	765,090	1.063	±3.6
4f	L-H	±30.7	±16.3	699,630	.963	6.7
11f	L-H	±30.8	±16.4	739,930	1.025	.7
14f	L-H	±30.4	±16.3	749,900	1.038	.6
19f	L-H	±30.8	±16.4	799,700	1.103	6.9
		Av. ±30.7	±16.4	747,290	1.032	±3.7
Test group 27; cycle pattern, 600 cycles high and 9,400 cycles low						
Ala-18	H	±29.9		75,645	1.039	3.9
Ala-14	H	±29.9		74,845	1.028	2.8
Ala-10	H	±29.8		68,090	.933	6.5
Ala-6	H	±29.6		72,730	.998	.2
		Av. ±29.8		72,830	1.000	±3.4
Ala-16	L		±16.1	1,482,630	1.431	43.1
Ala-4	L		±15.8	789,400	.762	23.8
Ala-5	L		±15.7	656,600	.634	36.6
Ala-21	L		±15.7	1,214,920	1.173	17.3
			Av. ±15.8	1,035,890	1.000	±30.2
Ala-2	H-L	±30.1	±16.2	670,330	1.164	13.3
Ala-11	H-L	±29.9	±16.1	520,030	.901	12.3
Ala-3	H-L	±29.9	±16.0	540,330	.939	8.6
Ala-17	H-L	±30.1	±16.0	634,730	1.103	7.4
		Av. ±30.0	±16.1	591,360	1.027	±10.4
Ala-19	L-H	±30.0	±16.0	629,770	1.088	16.7
Ala-7	L-H	±29.8	±16.0	490,020	.848	9.0
Ala-20	L-H	±29.9	±15.8	539,460	.927	.5
Ala-13	L-H	±30.1	±15.8	500,070	.866	7.1
		Av. ±30.0	±15.9	539,830	.932	±8.3
Test group 28; cycle pattern, 600 cycles high and 9,400 cycles low						
1-1	H	±29.0		60,490	1.032	3.2
1-6	H	±30.1		65,060	1.110	11.0
1-14	H	±29.6		50,258	.858	14.2
		Av. ±29.6		58,600	1.000	±9.5
1-2	L		±15.5	1,364;040	.673	32.5
1-9	L		±15.7	1,913,280	.947	5.3
1-10	L		±15.5	2,786,490	1.379	37.8
			Av. ±15.6	2,021,270	1.000	±25.2
1-3	H-L	±28.9	±15.6	560,260	.838	24.3
1-11	H-L	±29.4	±15.3	410,470	.618	8.3
1-13	H-L	±29.6	±15.4	378,300	.565	16.2
		Av. ±29.3	±15.4	449,680	.674	±16.3
1-8	L-H	±29.8	±15.7	487,000	.718	.3
1-12	L-H	±29.6	±15.5	479,700	.710	.8
1-15	L-H	±30.0	±15.6	489,510	.721	.7
		Av. ±29.8	±15.6	485,400	.716	±.6

[a] H, high stress only; L, low stress only; H-L, high stress first followed by low stress, etc.; L-H, low stress first followed by high stress, etc.

TABLE 1.- CUMULATIVE-FATIGUE-DAMAGE RESULTS FOR 0.064-INCH-THICK ALCLAD 75S-T6 ALUMINUM ALLOY - Continued

(c) Nominal stresses, ±16,000 and ±30,000 psi - Continued

Specimen	Load sequence (a)	High stress, ksi	Low stress, ksi	Cycles to failure	Cumulative-damage ratio, D	Deviation from average D, percent
Test group 29; cycle pattern, 40,000 cycles high to failure at low, H-L, and 500,000 cycles low to failure at high, L-H						
9-1	H	±29.5		53,400	0.939	6.1
9-5	H	±30.0		62,320	1.096	9.6
9-13	H	±29.3		57,640	1.014	1.4
9-17	H	±29.4		54,050	.951	4.9
		Av. ±29.6		56,850	1.000	±5.5
9-3	L		±15.5	973,500	1.136	13.6
9-4	L		±15.6	669,250	.781	21.9
9-8	L		±15.3	928,735	1.084	8.4
9-16	L		±15.3	856,610	1.000	0
			Av. ±15.4	857,020	1.000	±11.0
9-7	H-L	±29.3	±15.4	324,060	1.035	28.1
9-11	H-L	(b)	±15.3	1,060,740	1.895	31.6
9-14	H-L	±29.5	±15.3	159,440	.843	41.5
9-18	H-L	±29.2	±15.3	735,020	1.515	5.2
9-20	H-L	±29.5	±15.5	1,074,840	1.911	32.7
		Av. ±29.4	±15.4	670,820	1.440	±27.8
9-9	L-H	±29.6	±15.5	524,100	1.007	.5
9-12	L-H	±29.3	±15.3	525,080	1.025	2.3
9-15	L-H	±29.1	±15.3	522,370	.977	2.5
9-19	L-H	±29.4	±15.5	523,570	.998	.4
		Av. ±29.4	±15.4	523,780	1.002	±1.4
Test group 30; cycle pattern, 40,000 cycles high to failure at low						
2-1	H	±29.0		60,930	0.855	14.5
2-6	H	±29.2		68,370	.959	4.1
2-10	H	±29.3		85,910	1.205	20.5
2-3	H	±29.3		69,870	.980	2.0
		Av. ±29.3		71,270	1.000	±10.3
2-2	L		±15.5	964,250	.637	36.3
2-7	L		±15.3	1,210,360	.799	20.1
2-13	L		±15.6	892,530	.590	41.0
2-14	L		±15.4	2,988,650	1.974	97.4
			Av. ±15.5	1,513,950	1.000	±48.7
2-4	H-L	±29.4	±15.3	1,265,490	1.371	3.3
2-8	H-L	±29.4	±15.4	1,471,740	1.507	6.3
2-5	H-L	±29.3	±15.3	1,124,040	1.277	9.9
2-9	H-L	±26.3	±15.3	1,488,100	1.518	7.1
		Av. ±28.6	±15.3	1,337,340	1.418	±6.7
Test group 31; cycle pattern, 12,000 cycles high and 188,000 cycles low						
15-2	H	±29.8		78,670	1.137	13.7
15-6	H	±30.0		63,200	.913	8.7
15-11	H	±30.2		69,875	1.010	1.0
15-15	H	±30.3		65,120	.941	5.9
		Av. ±30.1		69,220	1.000	±7.3
15-4	L		±16.2	3,849,310	1.492	49.2
15-9	L		±16.3	2,014,510	.781	21.9
15-13	L		±16.3	2,838,835	1.101	10.1
15-17	L		±16.2	1,615,230	.626	37.4
			Av. ±16.3	2,579,480	1.000	±29.7
15-3	H-L	±29.7	±16.0	1,005,260	1.307	44.1
15-7	H-L	±30.3	±16.3	606,675	.835	7.9
15-12	H-L	±30.3	±16.4	538,665	.715	21.2
16-16	H-L	±30.3	±16.3	602,120	.769	15.2
		Av. ±30.2	±16.3	688,180	.907	±22.1
15-5	L-H	±30.2	±16.6	594,480	.659	9.3
15-10	L-H	±30.2	±16.3	576,500	.561	7.0
15-14	L-H	±30.2	±16.3	590,470	.601	.3
15-18	L-H	±30.2	±16.3	589,840	.592	1.8
		Av. ±30.2	±16.4	587,820	.603	±4.6

[a] H, high stress only; L, low stress only; H-L, high stress first followed by low stress, etc.; L-H, low stress first followed by high stress, etc.

[b] Only static load readings were taken. Estimated stress is ±29.6 ksi.

TABLE 1.- CUMULATIVE-FATIGUE-DAMAGE RESULTS FOR 0.064-INCH-THICK ALCLAD 75S-T6 ALUMINUM ALLOY - Continued

(e) Nominal stresses, ±16,000 and ±30,000 psi - Continued

Specimen	Load sequence (a)	High stress, ksi	Low stress, ksi	Cycles to failure	Cumulative-damage ratio, D	Deviation from average D, percent
Test group 32; cycle pattern, 18,800 cycles low and 1,200 cycles high						
23-3	H	±30.4		55,250	0.970	3.0
23-7	H	±30.3		66,800	1.172	17.2
23-11	H	±30.5		51,690	.907	9.3
23-17	H	±30.5		54,200	.951	4.9
		Av. ±30.4		56,990	1.000	±8.6
23-1	L		±16.4	2,028,330	1.322	32.2
23-5	L		±16.5	2,271,630	1.481	48.1
23-9	L		±16.3	1,014,730	.662	33.8
23-13	L		±16.3	1,218,810	.795	20.5
23-18	L		±16.3	1,136,020	.741	25.9
			Av. ±16.4	1,533,900	1.000	±32.1
23-4	H-L	±30.5	±16.4	600,400	1.006	7.4
23-8	H-L	±30.3	±16.5	616,665	1.031	10.0
23-19	H-L	±30.4	±16.4	435,140	.730	22.1
23-15	H-L	±30.6	±16.6	580,900	.982	4.8
		Av. ±30.5	±16.5	558,280	.937	±11.1
23-2	L-H	±30.4	±16.5	566,030	.937	4.1
23-6	L-H	±30.3	±16.3	585,220	.970	7.8
23-10	L-H	±30.2	±16.2	479,360	.788	12.4
23-14	L-H	±30.1	±16.3	549,620	.906	0.7
		Av. ±30.3	±16.3	545,060	.900	±6.3
Test group 33; cycle pattern, 120 cycles high and 1,880 cycles low						
14-3	H	±30.2		51,830	0.869	13.1
14-7	H	±30.1		59,140	.991	.9
14-10	H	±30.3		64,630	1.083	8.3
14-14	H	±29.9		63,040	1.057	5.7
		Av. ±30.1		59,660	1.000	±7.0
14-1	L		±16.1	2,147,420	1.013	1.3
14-5	L		±16.3	2,822,060	1.331	33.1
14-8	L		±16.2	1,831,830	.864	13.6
14-12	L		±16.1	1,677,290	.791	20.9
			Av. ±16.2	2,119,650	1.000	±17.2
14-4	H-L	±30.0	±16.4	472,160	.686	1.3
14-18	H-L	±29.8	±16.1	400,140	.582	14.0
14-11	H-L	±29.9	±16.0	512,150	.744	9.9
14-15	H-L	±29.9	±16.4	480,080	.697	3.0
		Av. ±29.9	±16.2	466,130	.677	±7.1
14-2	L-H	±29.9	±16.1	569,950	.825	15.7
14-6	L-H	±30.1	±16.2	468,020	.678	4.9
14-9	L-H	±30.2	±16.2	452,000	.655	8.1
14-13	L-H	±29.7	±15.9	479,960	.695	2.5
		Av. ±30.0	±16.1	492,480	.713	±7.8
Test group 34; cycle pattern, 20,000 cycles high and 80,000 cycles low						
22-3	H	±30.5		60,230	1.038	3.8
22-7	H	±30.1		52,110	.898	10.2
22-11	H	±30.4		60,550	1.044	4.4
22-15	H	±30.0		59,160	1.020	2.0
		Av. ±30.3		58,010	1.000	±5.1
22-1	L		±16.4	1,701,580	.726	27.4
22-5	L		±16.2	2,538,730	1.083	8.3
22-9	L		±16.4	3,214,280	1.371	37.1
22-13	L		±16.5	1,922,390	.820	18.0
			Av. ±16.4	2,344,250	1.000	±22.7
22-4	H-L	±30.3	±16.3	202,300	.797	2.6
22-8	H-L	±30.3	±16.2	200,480	.766	1.4
22-12	H-L	±30.4	±16.6	202,840	.807	3.9
22-16	H-L	±29.9	±16.1	153,310	.738	5.0
		±30.2	±16.3	189,730	.777	±5.2
22-2	L-H	±30.4	±16.5	187,830	.548	9.4
22-6	L-H	±30.3	±16.4	193,080	.638	5.5
22-10	L-H	±30.2	±16.3	185,970	.516	14.7
22-14	L-H	±30.1	±16.3	197,600	.716	18.3
		Av. ±30.3	±16.4	191,120	.605	±12.0

[a] H, high stress only; L, low stress only; H-L, high stress first followed by low stress, etc.; L-H, low stress first followed by high stress, etc.

TABLE 1.- CUMULATIVE-FATIGUE-DAMAGE RESULTS FOR 0.064-INCH-THICK ALCLAD 75S-T6 ALUMINUM ALLOY - Continued

(c) Nominal stresses, ±16,000 and ±30,000 psi - Continued

Specimen	Load sequence (a)	High stress, ksi	Low stress, ksi	Cycles to failure	Cumulative-damage ratio, D	Deviation from average D, percent
Test group 35; cycle pattern, 2,000 cycles high and 8,000 cycles low						
20-3	H	±30.4		55,280	1.170	17.0
20-7	H	±30.6		41,330	.875	12.5
20-11	H	±30.7		48,380	1.024	2.4
20-15	H	±30.9		44,020	.932	6.8
		Av. ±30.7		47,250	1.000	±9.7
20-1	L		±16.4	1,471,360	.704	29.6
20-5	L		±16.3	1,674,460	.802	19.8
20-9	L		±16.5	2,511,580	1.203	20.3
20-13	L		±16.4	2,696,790	1.291	29.1
			Av. ±16.4	2,088,550	1.000	±24.7
20-2	H-L	±30.6	±16.5	190,920	.896	6.7
20-8	H-L	±30.3	±16.4	181,350	.859	2.3
20-10	H-L	±30.5	±16.4	160,710	.754	10.2
20-16	H-L	±30.9	±16.8	180,950	.851	1.3
		Av. ±30.6	±16.5	178,480	.840	±5.1
20-4	L-H	±30.1	±16.3	158,070	.698	9.2
20-6	L-H	±30.3	±16.4	176,580	.788	2.5
20-12	L-H	±30.7	±16.4	169,050	.765	.5
20-14	L-H	±31.0	±16.8	179,680	.824	7.2
		Av. ±30.5	±16.5	170,850	.769	±4.9
Test group 36; cycle pattern, 200 cycles high and 800 cycles low						
16-2	H	±30.6		60,920	1.087	8.7
16-8	H	±30.4		58,420	1.043	4.3
16-12	H	±30.4		55,680	.994	.6
16-17	H	±30.3		49,110	.876	12.4
		Av. ±30.4		56,030	1.000	±6.5
16-4	L		±16.6	2,684,050	1.268	26.8
16-10	L		±16.5	2,215,280	1.047	4.7
16-14	L		±16.5	2,275,800	1.076	7.6
16-19	L		±16.6	1,288,480	.609	39.1
			Av. ±16.5	2,115,900	1.000	±19.6
16-5	H-L	±30.5	±16.7	162,120	.642	4.3
16-9	H-L	±30.3	±16.5	170,160	.674	.4
16-13	H-L	±30.1	±16.3	186,140	.737	9.8
16-18	H-L	±30.7	±16.6	159,240	.631	6.0
		Av. ±30.4	±16.5	169,420	.671	±5.1
16-7	L-H	±30.3	±16.5	198,920	.784	14.0
16-11	L-H	±30.3	±16.3	186,900	.736	7.0
16-15	L-H	±30.4	±16.3	168,880	.665	3.3
16-20	L-H	±30.2	±16.3	143,870	.566	17.7
		Av. ±30.3	±16.4	174,640	.688	±10.5
Test group 37; cycle pattern, 4,250 cycles high and 245,480 cycles low						
17-1	H	±30.4		56,580	1.024	2.4
17-5	H	±30.4		54,610	.988	1.2
17-6	H	±30.4		54,080	.979	2.1
17-13	H	±30.1		55,790	1.009	.9
		Av. ±30.3		55,270	1.000	±1.7
17-3	L		±16.2	1,722,320	1.647	64.7
17-7	L		±15.8	552,240	.528	47.2
17-11	L		±16.2	825,150	.789	21.1
17-15	L		±16.0	1,083,980	1.036	3.6
			Av. ±16.1	1,045,920	1.000	±34.2
17-2	H-L	±30.4	±16.3	839,160	1.094	16.2
17-10	H-L	±30.2	±15.8	1,251,210	1.604	22.8
17-14	H-L	±30.1	±16.1	1,004,430	1.325	1.5
17-17	H-L	±30.0	±15.6	951,900	1.201	8.0
		Av. ±30.2	±16.0	1,011,680	1.306	±12.1
17-8	L-H	±30.1	±15.9	1,038,310	1.284	10.2
17-12	L-H	±30.4	±16.2	995,990	1.193	2.4
17-16	L-H	±30.3	±16.0	1,114,830	1.357	16.5
17-18	L-H	±30.1	±16.2	710,210	.825	29.2
		Av. ±30.2	±16.1	964,840	1.165	±14.6

[a] H, high stress only; L, low stress only; H-L, high stress first followed by low stress, etc.; L-H, low stress first followed by high stress, etc.

TABLE 1.- CUMULATIVE-FATIGUE-DAMAGE RESULTS FOR 0.064-INCH-THICK ALCLAD 75S-T6 ALUMINUM ALLOY - Concluded

(e) Nominal stresses, ±16,000 and ±30,000 psi - Concluded

Specimen	Load sequence (a)	High stress, ksi	Low stress, ksi	Cycles to failure	Cumulative-damage ratio, D	Deviation from average D, percent
Test group 38; cycle pattern, 1,750 cycles high and 98,250 cycles low						
5-5	H	±30.3		52,620	0.959	4.1
5-9	H	±30.2		55,400	1.010	1.0
5-13	H	±30.3		55,780	1.017	1.7
5-17	H	±30.4		55,610	1.014	1.4
		Av. ±30.3		54,850	1.000	±2.1
5-6	L		±16.3	792,160	.480	52.0
5-11	L		±16.2	1,238,870	.750	25.0
5-15	L		±16.0	1,858,730	1.126	12.6
5-18	L		±16.1	2,715,180	1.644	64.4
			Av. ±16.2	1,651,240	1.000	±38.5
5-7	H-L	±30.2	±16.1	1,248,660	1.157	2.7
5-10	H-L	±30.1	±16.1	1,458,350	1.346	19.4
5-14	H-L	±30.0	±16.2	1,200,120	1.099	2.5
5-19	H-L	±30.3	±16.4	987,700	.907	19.5
		Av. ±30.2	±16.2	1,223,710	1.127	±11.0
5-8	L-H	±29.9	±16.0	1,236,500	1.119	17.9
5-12	L-H	±30.2	±16.2	946,550	.851	10.3
5-16	L-H	±30.2	±16.1	1,089,110	.968	2.0
5-20	L-H	±30.5	±16.1	957,260	.857	9.7
		Av. ±30.2	±16.1	1,057,360	.949	±10.0
Test group 39; cycle pattern, 483 cycles high and 24,517 cycles low						
19-1	H	±30.6		51,040	0.957	4.3
19-5	H	±30.1		46,090	.864	13.6
19-9	H	±30.2		61,970	1.162	16.2
19-13	H	±29.9		54,180	1.016	1.6
		Av. ±30.2		53,320	1.000	±8.9
19-3	L		±16.4	3,021,420	1.463	46.3
19-7	L		±16.5	2,031,220	.984	1.6
19-11	L		±16.4	1,223,430	.593	40.7
19-15	L		±16.2	1,982,970	.960	4.0
			Av. ±16.4	2,064,760	1.000	±23.2
19-2	H-L	±30.6	±16.4	1,041,980	.875	5.4
19-6	H-L	±30.6	±16.6	1,173,590	.983	6.3
19-10	H-L	±30.1	±16.3	1,049,020	.879	5.0
19-14	H-L	±30.1	±16.3	1,150,030	.963	4.1
		Av. ±30.4	±16.4	1,103,660	.925	±5.2
19-4	L-H	±29.8	±16.2	1,048,270	.869	.9
19-8	L-H	±30.0	±16.6	1,168,500	.972	10.8
19-12	L-H	±30.5	±16.4	1,049,650	.873	.5
19-16	L-H	±30.4	±16.2	950,080	.795	9.4
		Av. ±30.2	±16.4	1,054,130	.877	±5.4

[a] H, high stress only; L, low stress only; H-L, high stress first followed by low stress, etc.; L-H, low stress first followed by high stress, etc.

TABLE 2.- SUMMARY TABLE FOR 0.064-INCH-THICK ALCLAD 75S-T6 ALUMINUM ALLOY

Test group	Cycle pattern: Cycles at higher stress, n_H	Cycle pattern: Cycles at lower stress, n_L	Number of specimens tested	Average stresses, ksi: Single-load specimen: H	Average stresses, ksi: Single-load specimen: L	Average stresses, ksi: Dual-load specimen: H-L[a]	Average stresses, ksi: Dual-load specimen: L-H[b]	Cycles to failure: At high stress, N_H	Cycles to failure: At low stress, N_L	Average deviation of life, percent: High-stress specimens	Average deviation of life, percent: Low-stress specimens	Cumulative-damage ratio, D, $\frac{\sum n_H}{N_H} + \frac{\sum n_L}{N_L}$ (averaged values): H-L[a]	Cumulative-damage ratio, D: L-H[b]	Average deviation of D, percent: H-L[a]	Average deviation of D, percent: L-H[b]
Nominal stress amplitudes, ±30,000 and ±40,000 psi															
1	7,000	20,000	16	±42.9	±30.7	±42.6 ±30.7	±42.5 ±30.6	13,070	53,160	±7.1	±6.2	1.137	0.919	±7.3	±6.2
2	10	40	16	±41.8	±31.4	±42.6 ±31.7	±41.8 ±31.4	15,300	48,140	±5.9	±5.5	.798	1.014	±4.0	±4.9
3	1,000	4,000	8	±42.9	±30.7	±42.9 ±31.2	±42.8 ±31.2	13,070	53,160	±7.1	±6.2	.944	.957	±5.4	±3.8
4	10,000	40,000	16	±42.1	±31.6	±42.2 ±31.7	±42.1 ±31.6	14,830	45,220	±4.2	±5.8	1.007	1.035	±9.6	±6.4
5	10	90	8	±40.4	±30.2	±40.8 ±30.7	±40.8 ±30.7	16,670	52,390	±5.4	±1.7	.896	.904	±.3	±1.2
6	100	900	16	±41.6	±30.9	±41.3 ±30.8	±41.5 ±30.9	16,170	49,960	±1.7	±6.4	.900	.991	±6.1	±7.3
7	1,000	9,000	16	±41.4	±31.0	±41.6 ±30.9	±41.4 ±30.8	13,240	50,910	±5.9	±7.1	1.109	.801	±7.3	±9.2
8	20	30	19	±41.5	±30.4	±41.5 ±30.2	±41.3 ±30.1	15,350	47,590	±10.3	±12.3	.765	.889	±4.8	±10.0
9	200	300	16	±41.9	±31.1	±41.8 ±31.1	±41.8 ±30.9	15,430	57,080	±6.5	±4.0	.928	.868	±16.3	±3.4
10	2,000	3,000	20	±41.6	±30.9	±41.6 ±30.9	±41.3 ±30.7	15,270	54,080	±8.8	±4.6	.746	.940	±11.1	±13.3
11	11,000	To failure at low	12	±41.7	±31.0	±41.7 ±31.1	—— ——	13,290	49,480	±7.9	±6.6	1.096	——	±7.1	——
Nominal stress amplitudes, ±30,000 and ±60,000 psi															
12	10	90	16	±60.7	±30.0	±60.7 ±29.8	±60.9 ±29.9	3,180	60,290	±11.4	±14.0	.876	.879	±8.7	±4.9
13	10	90	17	±59.8	±30.5	±59.6 ±29.6	±59.4 ±29.5	3,010	45,250	±9.6	±13.8	.729	.815	±8.5	±13.0
14	10	90	17	±57.5	±28.4	±57.3 ±28.5	±57.3 ±28.3	5,600	71,700	±6.6	±11.4	.764	.805	±7.3	±11.7
15	10	90	16	±59.7	±29.4	±59.7 ±29.4	±58.9 ±29.2	3,800	64,310	±12.4	±8.1	.896	.823	±1.8	±7.8
16	100	900	16	±59.9	±30.0	±60.1 ±29.5	±60.5 ±30.3	3,440	58,270	±6.7	±4.0	1.039	1.015	±5.0	±11.3
17	1,000	9,000	16	±61.0	±29.9	±60.8 ±29.8	±60.9 ±29.7	3,260	62,960	±6.9	±5.2	1.160	1.150	±5.2	±4.7
18	1,000	24,000	16	±60.3	±29.5	±60.5 ±29.5	±60.8 ±29.5	3,490	66,360	±6.9	±11.8	1.023	.870	±3.1	±2.7
19	100	2,400	16	±60.1	±29.5	±60.0 ±29.7	±60.4 ±29.6	2,060	57,750	±4.7	±5.2	1.089	1.145	±9.0	±7.8
20	500	37,500	16	±61.4	±30.9	[c]±61.4 ±30.5	[c]±61.4 ±30.6	2,150	47,210	±5.8	±7.6	1.033	.907	±6.0	±3.3
21	100	7,400	16	±62.4	±30.9	[c]±62.4 ±30.7	[c]±62.4 ±30.8	2,730	50,990	±6.9	±7.1	.900	.963	±8.8	±17.0
22	(d)	(d)	16	±60.3	±29.3	±60.3 ±29.4	[c]±60.3 ±29.5	4,050	71,840	±5.5	±8.2	1.074	.708	±3.2	±2.8

[a] H-L, loading pattern in which higher stress was applied first.

[b] L-H, loading pattern in which lower stress was applied first.

[c] Time was not sufficient to measure dynamic stresses. Value given is that of single-load specimens of same test group.

[d] 1,500 high to failure at low and 40,000 low to failure at high.

TABLE 2.- SUMMARY TABLE FOR 0.064-INCH-THICK ALCLAD 75S-T6 ALUMINUM ALLOY - Concluded

Test group	Cycle pattern: Cycles at higher stress, n_H	Cycle pattern: Cycles at lower stress, n_L	Number of specimens tested	Average stresses, ksi: Single-load specimen: H	Single-load specimen: L	Dual-load specimen: H-L[a]	Dual-load specimen: L-H[b]	Cycles to failure: At high stress, N_H	Cycles to failure: At low stress, N_L	Average deviation of life, percent: High-stress specimens	Low-stress specimens	Cumulative-damage ratio, D, $\frac{\sum n_H}{N_H} + \frac{\sum n_L}{N_L}$ (averaged values): H-L[a]	L-H[b]	Average deviation of D, percent: H-L[a]	L-H[b]
Nominal stress amplitudes, ±16,000 and ±60,000 psi															
23	(e)	(e)	13	±61.3	±15.3	(f)	(f)	2,940	1,922,300	±6.2	±46.4	——	0.663 .806	——	±9.1 ±28.2
Nominal stress amplitudes, ±16,000 and ±17,000 psi															
24	(g)	(g)	16	±17.2	±16.2	±17.2 ±16.3	±17.3 ±16.4	1,719,630	2,437,630	±21.1	±8.8	0.758	.890	±43.8	±21.4
25	(h)	(h)	16	±17.3	±16.4	±17.3 ±16.4	±17.4 ±16.4	1,414,540	1,935,890	±30.8	±33.8	.915	1.136	±18.9	[i]±38.1
Nominal stress amplitudes, ±16,000 and ±30,000 psi															
26	400	9,600	17	±30.6	±16.2	±30.5 ±16.3	±30.7 ±16.4	45,490	1,888,720	±13.2	±15.4	1.063	1.032	±5.6	±3.7
27	600	9,400	16	±29.8	±15.8	±30.0 ±16.1	±30.0 ±15.9	72,830	1,035,890	±3.4	±30.2	1.027	.932	±10.4	±8.3
28	600	9,400	12	±29.6	±15.6	±29.3 ±15.4	±29.8 ±15.6	58,600	2,021,270	±9.3	±25.2	.674	.716	±16.3	±.6
29	(j)	(j)	17	±29.6	±15.4	±29.4 ±15.4	±29.4 ±15.4	56,850	857,020	±5.3	±11.0	1.440	1.002	±27.8	±1.4
30	40,000	To failure at low	12	±29.3	±15.3	±28.6 ±15.3	—— ——	71,270	1,513,950	±10.2	±48.7	1.418	——	±6.7	——
31	12,000	188,000	16	±30.1	±16.3	±30.2 ±16.3	±30.2 ±16.4	69,220	2,579,480	±7.3	±29.7	.907	.603	±22.1	±4.6
32	1,200	18,800	17	±30.4	±16.4	±30.5 ±16.3	±30.3 ±16.3	56,990	1,533,900	±8.6	±32.1	.937	.900	±11.1	±6.3
33	120	1,880	16	±30.1	±16.2	±29.9 ±16.2	±30.0 ±16.1	59,660	2,119,650	±7.0	±17.2	.677	.713	±7.1	±7.8
34	20,000	80,000	16	±30.3	±16.4	±30.2 ±16.3	±30.3 ±16.4	58,010	2,344,250	±5.1	±22.7	.777	.605	±3.2	±12.0
35	2,000	8,000	16	±30.7	±16.4	±30.6 ±16.5	±30.5 ±16.5	47,250	2,088,550	±9.7	±24.7	.840	.769	±5.1	±4.9
36	200	800	16	±30.4	±16.5	±30.4 ±16.5	±30.3 ±16.4	56,030	2,115,900	±6.5	±19.6	.671	.688	±5.1	±10.5
37	4,250	245,480	16	±30.3	±16.1	±30.2 ±16.0	±30.2 ±16.1	53,270	1,045,920	±1.7	±34.2	1.306	1.163	±12.1	±14.6
38	1,750	98,250	16	±30.3	±16.2	±30.2 ±16.2	±30.2 ±16.1	54,850	1,651,240	±2.1	±38.5	1.127	.949	±11.0	±10.0
39	483	24,517	16	±30.2	±16.4	±30.4 ±16.4	±30.2 ±16.4	53,320	2,064,760	±8.9	±23.2	.925	.877	±5.2	±5.4

[a] H-L, loading pattern in which higher stress was applied first.

[b] L-H, loading pattern in which lower stress was applied first.

[c] $L\text{-}H_a$, 100,000 low + 500 high + 100,000 low + 500 high, then to failure at low; $L\text{-}H_b$, 100,000 low + 100 high + repeat to failure.

[f] ±61.3 and ±15.6 psi with cycle pattern $L\text{-}H_b$ and ±61.3 and ±15.4 psi with cycle pattern $L\text{-}H_a$. The value ±61.3 is that of single-load specimens of same test group, as time was not sufficient for dynamic reading.

[g] 760,000 high to failure at low and 1,350,000 low to failure at high.

[h] 500,000 high to failure at low and 1,000,000 low to failure at high.

[i] Specimen failed prior to application of higher load. (See group 25, table 1(d).)

[j] 40,000 high to failure at low and 500,000 low to failure at high.

TABLE 3.- CUMULATIVE-FATIGUE-DAMAGE RESULTS FOR 0.032-INCH-THICK ALCLAD 24S-T3 AND ALCLAD 75S-T6 ALUMINUM ALLOY

[Nominal stresses, ±16,000 and ±30,000 psi]

(a) Alclad 24S-T3 aluminum alloy

Specimen	Load sequence (a)	High stress, ksi	Low stress, ksi	Cycles to failure	Cumulative-damage ratio, D	Deviation from average D, percent
Test group 40; Mean stress, 0; cycle pattern, 11,960 cycles high and 188,040 cycles low						
5-2	H	±30.20		63,380	1.105	10.5
5-6	H	±30.66		57,630	1.005	.5
5-12	H	±30.01		48,400	.844	15.6
5-16	H	±30.63		60,020	1.046	4.6
		Av. ±30.38		57,360	1.000	±7.8
5-4	L		±16.37	2,717,960	1.245	24.5
5-9	L		±16.31	1,827,370	.837	16.3
5-14	L		±16.26	2,143,430	.982	1.8
5-18	L		±15.90	2,044,240	.936	6.4
			Av. ±16.21	2,185,250	1.000	±12.3
5-3	H-L	±30.01	±15.98	610,410	1.065	34.5
5-8	H-L	±30.46	±16.02	542,380	.858	8.3
5-13	H-L	±30.53	±15.92	397,590	.588	23.8
5-20	H-L	±30.59	±16.29	403,900	.657	17.0
		Av. ±30.40	±16.05	488,570	.792	±21.4
5-5	L-H	±30.66	±16.01	395,840	.516	9.2
5-10	L-H	±30.53	±15.91	564,640	.665	17.1
5-15	L-H	±30.70	±16.13	588,610	.685	20.6
5-17	L-H	±30.50	±15.94	393,450	.475	16.4
5-19	L-H	±30.67	±16.22	588,740	.687	21.0
5-7	L-H	±30.66	±16.05	387,740	.381	32.9
		Av. ±30.62	±16.04	486,500	.568	±19.5
Test group 41; mean stress, 20,000 psi; cycle pattern, 8,260 cycles high and 41,740 cycles low						
6-2	H	±31.73		34,850	1.164	16.4
6-8	H	±31.53		28,680	.958	4.2
6-14	H	±31.70		26,270	.878	12.2
		Av. ±31.65		29,950	1.000	±10.9
6-6	L		±16.66	318,700	1.251	25.1
6-11	L		±16.60	235,150	.923	7.7
6-17	L		±16.75	210,650	.827	17.3
			Av. ±16.67	254,850	1.000	±16.7
6-3	H-L	±31.39	±16.39	104,860	1.042	9.5
6-9	H-L	±31.74	±16.70	102,240	.954	.2
6-12	H-L	±31.65	±16.62	101,190	.919	3.5
6-15	H-L	±31.78	±16.71	100,360	.892	6.3
		Av. ±31.64	±16.61	102,160	.952	±4.9
6-7	L-H	±31.54	±16.28	100,250	.881	3.5
6-10	L-H	±31.70	±16.63	99,550	.865	1.6
6-13	L-H	±31.63	±16.75	99,370	.866	1.8
6-18	L-H	±31.73	±16.49	97,330	.791	7.1
		Av. ±31.65	±16.54	99,180	.851	±3.5
Test group 42; mean stress, 0; cycle pattern, 21,910 cycles high and 78,090 cycles low						
7-3	H	±30.96		53,660	0.996	0.4
7-7	H	±30.96		56,100	1.042	4.2
7-11	H	±31.15		47,090	.874	12.6
7-15	H	±31.29		58,570	1.087	8.7
		Av. ±31.09		53,860	1.000	±6.5
7-5	L		±16.34	1,587,980	.983	1.7
7-9	L		±16.40	1,768,730	1.095	9.5
7-13	L		±16.47	1,949,860	1.208	20.8
7-17	L		±16.47	1,151,800	.713	28.7
			Av. ±16.42	1,614,590	1.000	±15.2
7-4	H-L	±30.96	±15.87	206,370	1.029	15.7
7-8	H-L	±30.54	±16.23	202,650	.959	7.9
7-16	H-L	±31.48	±16.53	121,310	.850	4.4
7-19	H-L	±31.12	±16.53	114,110	.717	19.3
		Av. ±31.03	±16.30	161,110	.889	±11.8
7-6	L-H	±30.82	±16.27	190,590	.756	6.0
7-14	L-H	±30.96	±16.47	195,400	.825	18.9
7-18	L-H	±31.49	±16.57	189,210	.710	2.3
7-2	L-H	±30.56	±16.30	177,980	.504	27.4
		Av. ±30.96	±16.40	188,290	.694	±13.6

[a] H, high stress only; L, low stress only; H-L, high stress first followed by low stress, etc.; L-H, low stress first followed by high stress, etc.

TABLE 3.- CUMULATIVE-FATIGUE-DAMAGE RESULTS FOR 0.032-INCH-THICK ALCLAD 24S-T3 AND ALCLAD 75S-T6 ALUMINUM ALLOY - Continued

(a) Alclad 24S-T3 aluminum alloy - Concluded

Specimen	Load sequence (a)	High stress, ksi	Low stress, ksi	Cycles to failure	Cumulative-damage ratio, D	Deviation from average D, percent
Test group 43; mean stress, 20,000 psi; cycle pattern, 15,110 cycles high and 9,890 cycles low						
12-2	H	±31.55		23,380	0.826	17.4
12-6	H	±31.23		26,090	.922	7.8
12-10	H	±31.39		33,410	1.180	18.0
12-14	H	±31.09		30,360	1.072	7.2
		Av. ±31.32		28,510	1.000	±12.6
12-4	L		±16.28	186,860	.937	6.3
12-8	L		±16.34	199,240	1.000	0
12-12	L		±16.31	202,010	1.013	1.3
12-17	L		±16.37	209,190	1.049	4.9
			Av. ±16.33	199,330	1.000	±3.1
12-3	H-L	±31.41	±16.02	34,500	.919	16.2
12-7	H-L	±31.26	±16.27	38,330	1.055	3.8
12-11	H-L	±31.21	±16.39	51,770	1.229	12.0
12-16	H-L	±31.13	±16.43	50,470	1.185	7.8
		Av. ±31.25	±16.28	43,770	1.097	±10.0
12-5	L-H	±31.41	±16.31	48,120	1.100	6.2
12-9	L-H	±31.09	±16.24	48,370	1.109	5.5
12-13	L-H	±31.08	±16.25	62,900	1.323	12.8
12-18	L-H	±31.34	±16.44	49,820	1.160	1.1
		Av. ±31.23	±16.31	52,300	1.173	±6.4
Test group 44; mean stress, 0; cycle pattern, 25,400 cycles high to failure at low						
11-2	H	±31.59		43,170	1.023	2.3
11-8	H	±31.35		42,610	1.010	1.0
11-14	H	±31.31		42,540	1.008	.8
11-18	H	±31.31		40,490	.959	4.1
		Av. ±31.39		42,200	1.000	±2.1
11-7	L		±16.17	1,767,900	.878	12.2
11-13	L		±15.86	2,603,550	1.293	29.3
11-17	L		±15.98	2,121,510	1.053	5.3
11-20	L		±15.97	1,562,890	.776	22.4
			Av. ±16.00	2,013,960	1.000	±17.3
11-6	H-L	±31.81	±16.11	1,139,140	1.153	5.4
11-9	H-L	±31.48	±16.19	696,690	.955	14.7
11-10	H-L	±31.45	±16.25	788,620	.961	10.5
11-12	H-L	±31.35	±15.97	1,454,840	1.512	19.7
		Av. ±31.52	±16.13	1,019,820	1.096	±12.6
Test group 45; mean stress, 20,000 psi; cycle pattern, 23,560 cycles high to failure at low and 176,440 cycles low to failure at high						
1-2	H	±30.36		32,580	0.840	16.0
1-17	H	±30.54		47,550	1.226	22.6
1-11	H	±30.32		37,190	.959	4.1
1-7	H	±30.22		37,820	.975	2.5
		Av. ±30.36		38,790	1.000	±11.3
1-5	L		±16.12	240,660	.821	17.9
1-15	L		±16.38	285,700	.975	2.5
1-9	L		±16.44	298,630	1.019	1.9
1-19	L		±15.89	347,680	1.186	18.6
			Av. ±16.21	293,170	1.000	±10.2
1-4	H-L	±30.55	±16.54	82,400	.808	22.3
1-12	H-L	±30.45	±16.65	162,630	1.081	3.9
1-8	H-L	±30.48	±16.51	154,480	1.054	1.3
1-18	H-L	±30.58	±16.82	202,370	1.217	17.0
		Av. ±30.52	±16.63	150,470	1.040	±11.1
1-6	L-H	±30.54	±16.57	178,440	.654	11.6
1-10	L-H	±30.42	±16.47	181,710	.738	.3
1-16	L-H	±30.54	±16.64	182,810	.766	3.5
1-20	L-H	±30.79	±16.74	184,190	.802	8.4
		Av. ±30.57	±16.61	181,790	.740	±6.0

[a] H, high stress only; L, low stress only; H-L, high stress first followed by low stress, etc.; L-H, low stress first followed by high stress, etc.

TABLE 3.- CUMULATIVE-FATIGUE-DAMAGE RESULTS FOR 0.032-INCH-THICK ALCLAD 24S-T3 AND ALCLAD 75S-T6 ALUMINUM ALLOY - Continued

(b) Alclad 75S-T6 aluminum alloy

Specimen	Load sequence (a)	High stress, ksi	Low stress, ksi	Cycles to failure	Cumulative-damage ratio, D	Deviation from average D, percent
Test group 46; mean stress, 0; cycle pattern, 9,200 cycles high and 140,800 cycles low						
30-2	H	±30.45		37,270	0.916	8.4
30-6	H	±30.59		38,600	.948	5.2
30-10	H	±30.59		44,270	1.088	8.8
30-20	H	±30.50		42,650	1.048	4.8
		Av. ±30.53		40,700	1.000	±6.8
30-4	L		±16.16	1,019,780	.912	8.8
30-8	L		±16.14	1,022,620	.914	8.6
30-12	L		±16.22	1,313,100	1.174	17.4
			Av. ±16.17	1,118,500	1.000	±11.6
30-7	H-L	±30.70	±16.18	399,140	1.010	8.9
30-11	H-L	±30.26	±15.89	462,520	1.285	16.0
30-15	H-L	±30.45	±16.22	419,990	1.029	7.1
		Av. ±30.47	±16.10	427,220	1.108	±10.7
30-9	L-H	±30.67	±16.37	574,900	1.167	15.8
30-13	L-H	±30.78	±16.26	459.330	1.064	5.6
30-21	L-H	±29.98	±16.07	400,470	.794	21.2
		Av. ±30.48	±16.23	478,250	1.008	±14.2
Test group 47; mean stress, 20,000 psi; cycle pattern, 6,200 cycles high and 68,800 cycles low						
28-2	H	±30.45		34,070	1.000	0
28-8	H	±30.21		34,130	1.001	.1
28-13	H	±30.61		35,240	1.034	3.4
28-18	H	±30.49		32,890	.965	3.5
		Av. ±30.44		34,080	1.000	±1.8
28-5	L		±15.63	587,140	1.246	24.6
28-10	L		±15.59	735,750	1.562	56.2
28-15	L		±15.73	206,250	.438	56.2
28-20	L		±16.09	355,240	.754	24.6
			Av. ±15.76	471,100	1.000	±40.4
28-3	H-L	±30.28	±15.71	226,820	1.037	3.4
28-9	H-L	±30.76	±15.90	156,530	.839	16.4
28-14	H-L	±30.32	±15.78	227,510	1.057	5.4
28-19	H-L	±30.62	±15.98	228,220	1.078	7.5
		Av. ±30.50	±15.84	209,770	1.003	±8.2
28-6	L-H	±30.41	±15.87	298,370	1.264	16.8
28-11	L-H	±30.28	±15.86	251,750	1.041	3.8
28-17	L-H	±30.63	±15.80	223,110	.928	14.2
28-21	L-H	±30.45	±15.70	276,950	1.094	1.1
		Av. ±30.44	±15.81	262,540	1.082	±9.0
Test group 48; mean stress, 0; cycle pattern, 22,500 cycles high and 52,500 cycles low						
33-7	H	±29.40		57,040	1.242	24.2
33-14	H	±31.36		46,110	1.004	.4
33-18	H	±31.18		42,430	.924	7.6
33-13	H	±30.93		27,940	.609	39.1
33-5	H	±30.06		56,050	1.221	22.1
		Av. ±30.59		45,910	1.000	±18.7
33-12	L		±16.02	1,309,440	.968	3.2
33-9	L		±16.17	1,374,520	1.017	1.7
33-16	L		±15.87	1,403,060	1.038	3.8
33-19	L		±16.24	1,321,730	.977	2.3
			Av. ±16.08	1,352,200	1.000	±2.8
33-3	H-L	±31.34	±16.61	92,690	.936	4.1
33-8	H-L	±30.99	±16.50	92,810	.917	2.0
33-15	H-L	±31.03	±15.96	85,440	.756	15.9
33-20	H-L	±31.03	±16.03	95,950	.985	9.6
		Av. ±31.10	±16.28	91,970	.899	±7.9
33-6	L-H	±31.10	±15.92	135,610	.745	5.7
33-11	L-H	±31.03	±15.83	134,500	.720	8.9
33-17	L-H	±30.93	±16.01	142,150	.887	12.3
33-21	L-H	±31.56	±16.21	138,530	.808	2.3
		Av. ±31.16	±15.99	137,700	.790	±7.3

[a] H, high stress only; L, low stress only; H-L, high stress first followed by low stress, etc.; L-H, low stress first followed by high stress, etc.

TABLE 3.- CUMULATIVE-FATIGUE-DAMAGE RESULTS FOR 0.032-INCH-THICK ALCLAD 24S-T3 AND ALCLAD 75S-T6 ALUMINUM ALLOY - Continued

(b) Alclad 75S-T6 aluminum alloy - Continued

Specimen	Load sequence (a)	High stress, ksi	Low stress, ksi	Cycles to failure	Cumulative-damage ratio, D	Deviation from average D, percent
Test group 49; mean stress, 20,000 psi; cycle pattern, 12,320 cycles high and 62,680 cycles low						
26-1	H	±30.50		30,390	0.964	3.6
26-5	H	±30.58		35,400	1.123	12.3
26-12	H	±30.45		33,520	1.063	6.3
26-18	H	±30.25		26,760	.849	15.1
		Av. ±30.45		31,520	1.000	±9.3
26-3	L		±15.84	526,620	1.116	11.6
26-9	L		±15.73	534,740	1.134	13.4
26-14	L		±15.89	328,510	.697	30.3
26-17	L		±15.85	496,770	1.053	5.3
			Av. ±15.83	471,570	1.000	±15.2
26-2	H-L	±30.27	±15.87	153,870	1.171	26.0
26-7	H-L	±30.56	±15.83	87,110	.908	2.3
26-13	H-L	±30.38	±15.83	104,600	.952	2.3
26-19	H-L	±30.60	±15.99	80,080	.683	26.3
		Av. ±30.45	±15.89	106,420	.929	±14.3
26-4	L-H	±30.34	±15.70	147,030	.934	17.8
26-10	L-H	±30.25	±15.69	146,730	.945	16.7
26-15	L-H	±30.41	±15.76	126,960	.634	21.7
26-21	L-H	±30.67	±16.09	139,260	.707	12.7
		Av. ±30.42	±15.81	140,000	.810	±17.2
Test group 50; mean stress, 20,000 psi; cycle pattern, 22,500 cycles high and 52,500 cycles low						
25-3	H	±30.79		20,850	0.737	26.3
25-7	H	±30.28		32,190	1.138	13.8
25-13	H	±30.35		32,150	1.137	13.7
25-17	H	±30.99		27,940	.988	1.2
		Av. ±30.60		28,280	1.000	±13.8
25-8	L		±15.90	408,630	.913	8.7
25-11	L		±16.03	453,610	1.013	1.3
25-15	L		±15.92	498,950	1.114	11.4
25-19	L		±15.78	430,050	.960	4.0
			Av. ±15.91	447,810	1.000	±6.4
25-4	H-L	±30.75	±15.99	78,510	1.037	7.6
25-10	H-L	±30.23	±15.81	83,240	1.204	7.3
25-14	H-L	±30.78	±15.93	89,410	1.422	26.7
25-18	H-L	±30.50	±15.72	55,410	.825	26.5
		Av. ±30.57	±15.87	71,640	1.122	±17.0
25-6	L-H	±30.71	±15.91	129,210	1.092	10.4
25-12	L-H	±30.47	±15.57	132,510	1.200	1.5
25-16	L-H	±30.76	±15.92	133,580	1.245	2.2
25-20	L-H	±30.34	±15.69	136,140	1.333	9.6
		Av. ±30.57	±15.77	132,850	1.218	±5.9
Test group 51; mean stress, 0; cycle pattern, 19,500 cycles high to failure at low						
31-2	H	±30.57		30,710	0.817	18.3
31-5	H	±30.42		37,800	1.006	.6
31-9	H	±30.46		41,640	1.108	10.8
31-17	H	±30.32		40,150	1.069	6.9
		Av. ±30.44		37,580	1.000	±9.2
31-1	L		±16.11	1,341,870	.856	14.4
31-7	L		±15.91	2,028,090	1.294	29.4
31-10	L		±15.86	1,768,320	1.128	12.8
31-12	L		±15.50	1,130,350	.721	27.9
			Av. ±15.83	1,567,160	1.000	±21.1
31-3	H-L	±30.35	±15.86	815,120	1.021	9.8
31-4	H-L	±30.55	±16.06	1,046,570	1.174	3.1
31-6	H-L	±30.64	±16.11	1,040,730	1.171	2.8
31-11	H-L	±30.46	±15.71	715,780	.963	15.5
31-13	H-L	±30.28	±15.51	1,064,180	1.186	4.1
31-14	H-L	±30.32	±15.69	1,362,480	1.376	20.8
31-15	H-L	±30.41	±15.46	1,009,280	1.151	1.1
31-18	H-L	±30.60	±16.16	874,440	1.065	6.5
		Av. ±30.45	±15.83	991,070	1.139	±8.0

[a] H, high stress only; L, low stress only; H-L, high stress first followed by low stress, etc.; L-H, low stress first followed by high stress, etc.

TABLE 3.- CUMULATIVE-FATIGUE-DAMAGE RESULTS FOR 0.032-INCH-THICK ALCLAD 24S-T3 AND ALCLAD 75S-T6 ALUMINUM ALLOY - Concluded

(b) Alclad 75S-T6 aluminum alloy - Concluded

Specimen	Load sequence (a)	High stress, ksi	Low stress, ksi	Cycles to failure	Cumulative-damage ratio, D	Deviation from average D, percent
Test group 32; mean stress 20,000 psi; cycle pattern, 18,900 cycles high to failure at low						
32-3	H	±30.57		28,860	1.118	11.8
32-2	H	±30.61		27,070	1.049	4.9
32-12	H	±30.56		19,150	.742	25.8
32-17	H	±30.47		28,150	1.091	9.1
		Av. ±30.55		25,810	1.000	±12.9
32-5	L		±15.73	489,580	.990	1.0
32-6	L		±15.94	591,950	1.196	19.6
32-10	L		±15.87	441,170	.892	10.8
32-16	L		±15.95	456,380	.922	7.8
			Av. ±15.87	494,770	1.000	±9.8
32-4	H-L	±30.59	±16.04	185,790	1.069	2.3
32-11	H-L	±30.45	±15.94	195,140	1.088	4.1
32-18	H-L	±30.95	±16.00	218,600	1.136	8.7
32-19	H-L	±30.76	±15.86	95,920	.888	15.0
		Av. ±30.69	±15.96	173,860	1.045	±7.5

[a] H, high stress only; L, low stress only; H-L, high stress first followed by low stress, etc.; L-H, low stress first followed by high stress, etc.

TABLE 4.- SUMMARY TABLE FOR 0.032-INCH-THICK ALCLAD MATERIALS

[Nominal stress amplitudes, ±16,000 and ±30,000 psi]

Test group	Nominal mean stress, psi	Cycle pattern: Cycles at higher stress, n_H	Cycle pattern: Cycles at lower stress, n_L	Number of specimens tested	Average stresses, ksi: Single-load specimen: H	Single-load specimen: L	Dual-load specimen: H-L[a]	Dual-load specimen: L-H[b]	Cycles to failure: At high stress, N_H	Cycles to failure: At low stress, N_L	Average deviation of life, percent: High-stress specimens	Average deviation of life, percent: Low-stress specimens	Cumulative-damage ratio, D, $\sum \frac{n_H}{N_H} + \sum \frac{n_L}{N_L}$ (averaged values): H-L[a]	Cumulative-damage ratio, D: L-H[b]	Average deviation of D, percent: H-L[a]	Average deviation of D, percent: L-H[b]
0.032-inch-thick alclad 24S-T3 aluminum alloy																
40	0	11,960	188,040	18	±30.38	±16.21	±30.40 ±16.05	±30.62 ±16.04	57,360	2,183,250	±7.8	±12.3	0.792	0.568	±21.4	±19.5
41	20,000	8,260	41,740	14	±31.65	±16.67	±31.64 ±16.61	±31.63 ±16.54	29,930	254,830	±10.9	±16.7	.952	.851	±4.9	±3.5
42	0	21,910	78,090	16	±31.09	±16.42	±31.03 ±16.30	±30.96 ±16.40	33,860	1,614,590	±6.5	±15.2	.889	.694	±11.8	±13.6
43	20,000	15,110	9,890	16	±31.32	±16.33	±31.25 ±16.28	±31.23 ±16.31	28,310	199,330	±12.6	±5.1	1.097	1.173	±10.0	±6.4
44	0	25,400	To failure at low	12	±31.39	±16.00	±31.52 ±16.13	------ ------	42,200	2,013,960	±2.1	±17.3	1.096	------	±12.6	------
45	20,000	25,560 to failure at low	176,440 to failure at high	16	±30.36	±16.21	±30.52 ±16.63	±30.37 ±16.61	38,790	293,170	±11.3	±10.2	1.040	.740	±11.1	±6.0
0.032-inch-thick alclad 75S-T6 aluminum alloy																
46	0	9,200	140,800	15	±30.53	±16.17	±30.47 ±16.10	±30.48 ±16.23	40,700	1,118,500	±6.8	±11.6	1.108	1.008	±10.7	±14.2
47	20,000	6,200	68,800	16	±30.44	±15.76	±30.50 ±15.84	±30.44 ±15.81	34,080	471,100	±1.8	±40.4	1.003	1.082	±8.2	±9.0
48	0	22,500	52,500	17	±30.59	±16.08	±31.10 ±16.28	±31.16 ±15.99	43,910	1,352,200	±18.7	±2.8	.899	.790	±7.9	±7.3
49	20,000	12,320	62,680	16	±30.43	±15.83	±30.43 ±15.89	±30.42 ±15.81	31,520	471,570	±9.3	±15.2	.929	.810	±14.3	±17.2
50	20,000	22,500	52,500	16	±30.60	±15.91	±30.57 ±15.87	±30.57 ±15.77	28,280	447,810	±13.8	±6.4	1.182	1.218	±17.0	±5.9
51	0	19,500	To failure at low	16	±30.44	±15.83	±30.45 ±15.83	------ ------	37,580	1,567,160	±9.2	±21.1	1.139	------	±8.0	------
52	20,000	18,900	To failure at low	12	±30.33	±15.87	±30.69 ±15.96	------ ------	25,810	494,770	±12.9	±9.8	1.045	------	±7.3	------

[a] H-L, loading pattern in which higher stress was applied first.

[b] L-H, loading pattern in which lower stress was applied first.

TABLE 5.- COMPARISON OF CUMULATIVE-DAMAGE RATIOS D RESULTING FROM TEST GROUPS USING COMPARABLE PATTERN RATIOS ϵ

Test group	Mean stress, psi	Material (alclad aluminum-alloy sheet)	Material thickness, in.	Pattern ratio, ϵ, $\frac{n_H/N_H}{(n_H/N_H) + (n_L/N_L)}$	Cumulative-damage ratio, D, $\frac{\sum n_H}{N_H} + \frac{\sum n_L}{N_L}$ (averaged values)	
					H-L[a]	L-H[b]
31	0	Alclad 75S-T6	0.064	0.704	0.907	0.603
40	0	Alclad 24S-T3	.032	.708	.792	.568
41	20,000	Alclad 24S-T3	.032	.628	.952	.851
46	0	Alclad 75S-T6	.032	.642	1.108	1.008
47	20,000	Alclad 75S-T6	.032	.555	1.003	1.082
34	0	Alclad 75S-T6	.064	.910	.777	.605
42	0	Alclad 24S-T3	.032	.894	.889	.694
43	20,000	Alclad 24S-T3	.032	.915	1.097	1.173
48	0	Alclad 75S-T6	.032	.927	.899	.790
49	20,000	Alclad 75S-T6	.032	.746	.929	.810
30	0	Alclad 75S-T6	.064	56% life at H to failure at L	1.418	----
44	0	Alclad 24S-T3	.032	60% life at H to failure at L	1.096	-----
45	20,000	Alclad 24S-T3	.032	61% life at H to failure at L	1.040	.740
51	0	Alclad 75S-T6	.032	52% life at H to failure at L	1.139	-----
52	20,000	Alclad 75S-T6.	.032	73% life at H to failure at L	1.045	-----

[a] H-L, loading pattern in which higher stress was applied first.

[b] L-H, loading pattern in which lower stress was applied first.

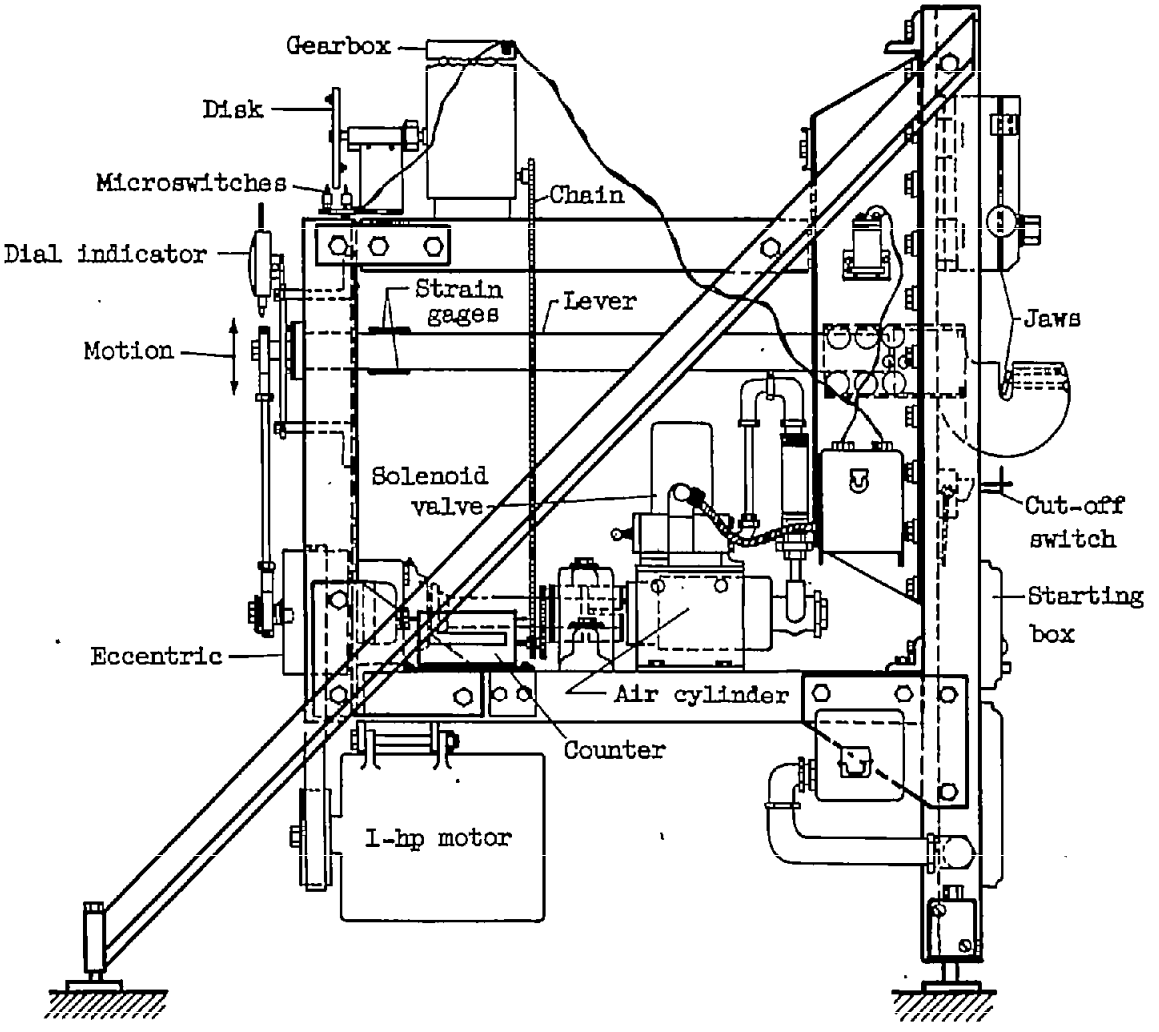

Figure 1.- Schematic diagram of side elevation of fatigue testing machines.

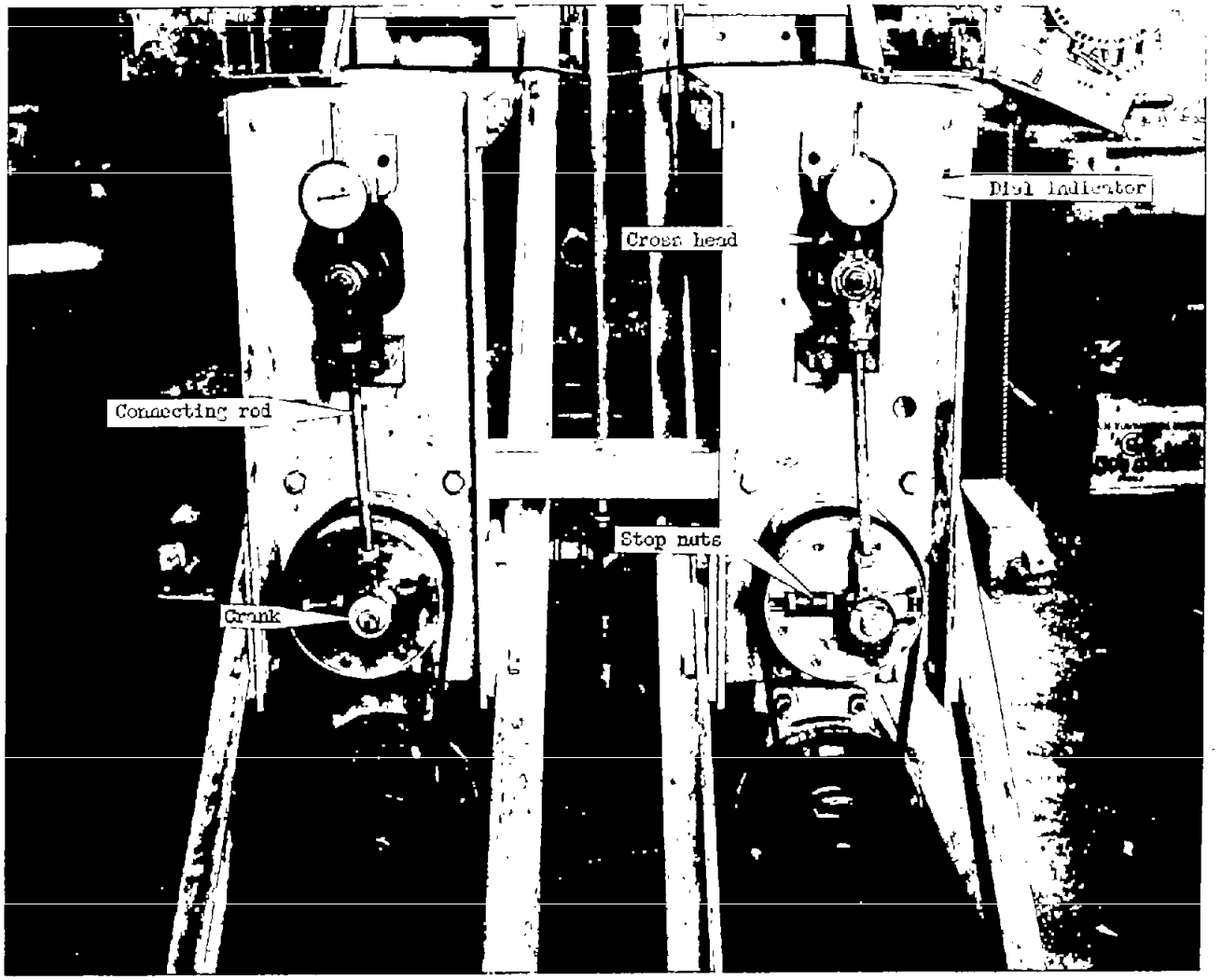

L-87944

Figure 2.- Driving linkages of fatigue testing machines.

L-87945

Figure 3.- Load amplitude control mechanism of fatigue testing machines.

Curve	Material	Young's modulus, psi		Yield stress, psi		Ultimate stress, psi	
		Tension	Compression	Tension	Compression	Tension	Compression
1	0.064-in. alclad 75S-T6	10.21×10^6	10.26×10^6	76.10×10^3	68.40×10^3	77.80×10^3	--------
2	0.032-in. alclad 75S-T6	10.10	10.26	70.75	66.20	78.27	--------
3	0.032-in. alclad 24S-T3	10.47	10.26	50.07	41.27	66.84	--------

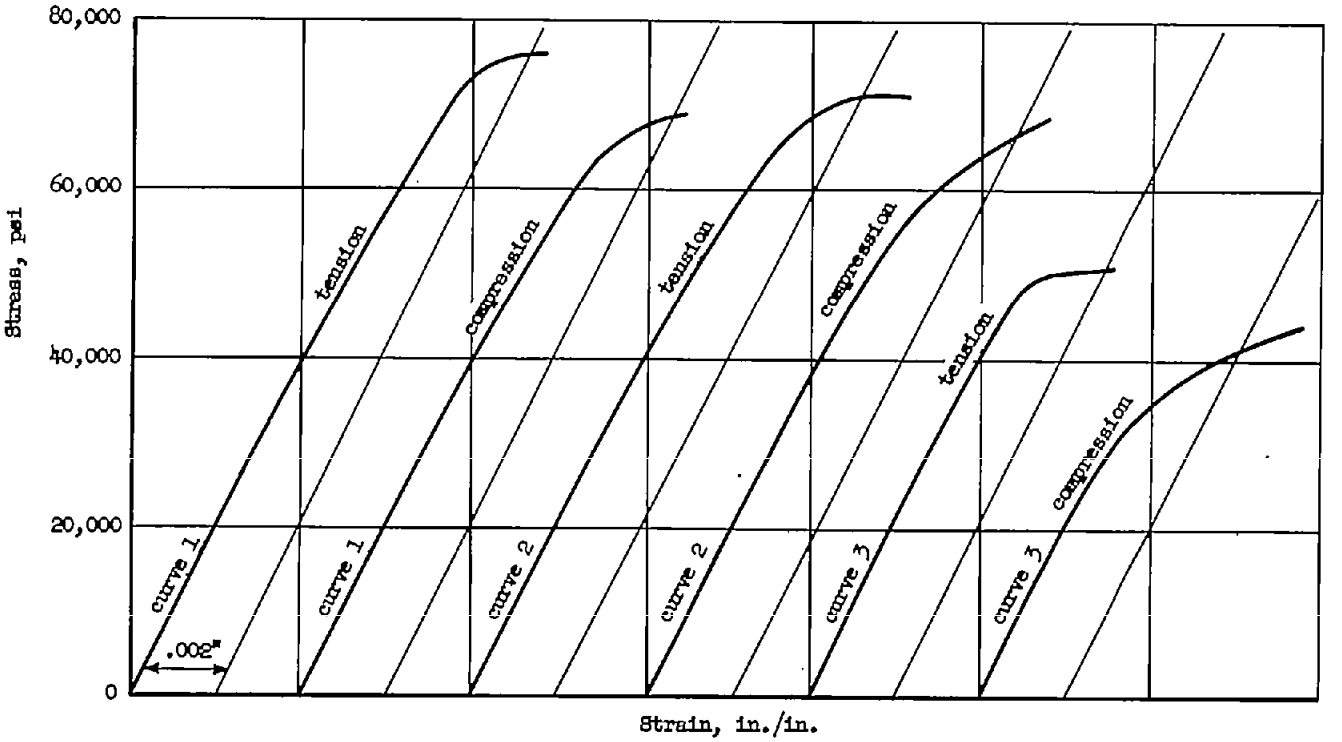

Figure 4.- Stress-strain curves.

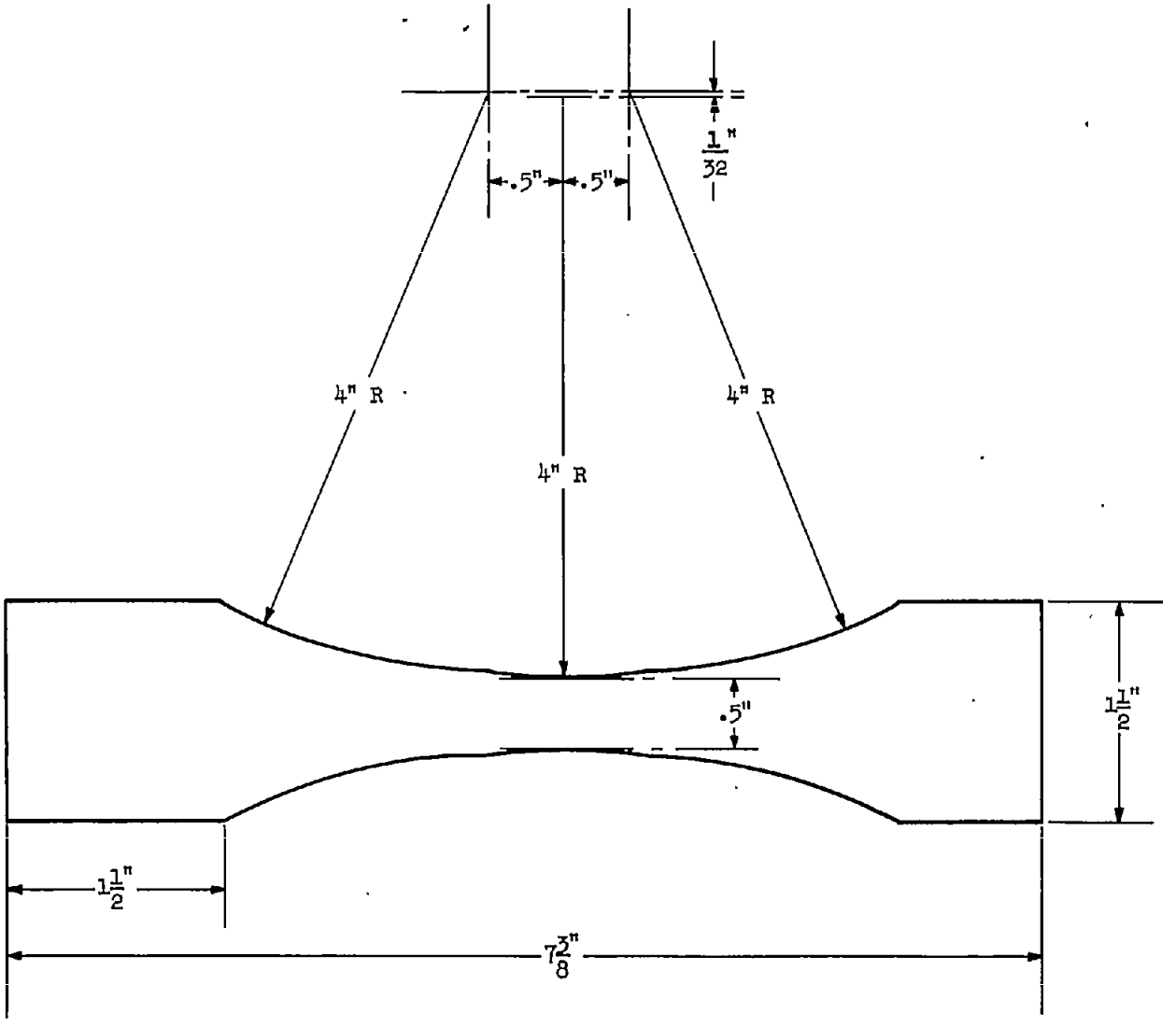

Figure 5.- Design of specimen. All dimensions are in inches.

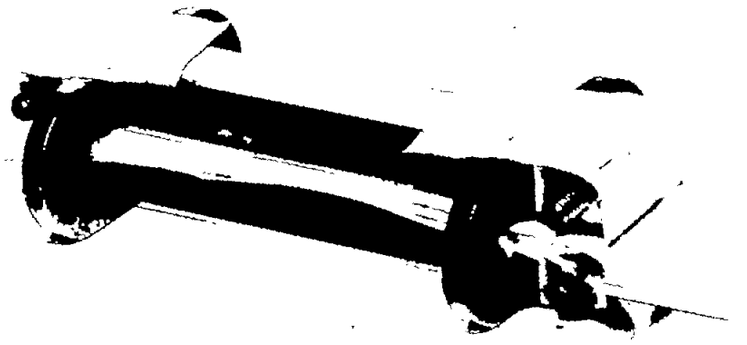

L-87946

Figure 6.- Typical specimen assembled in guides.

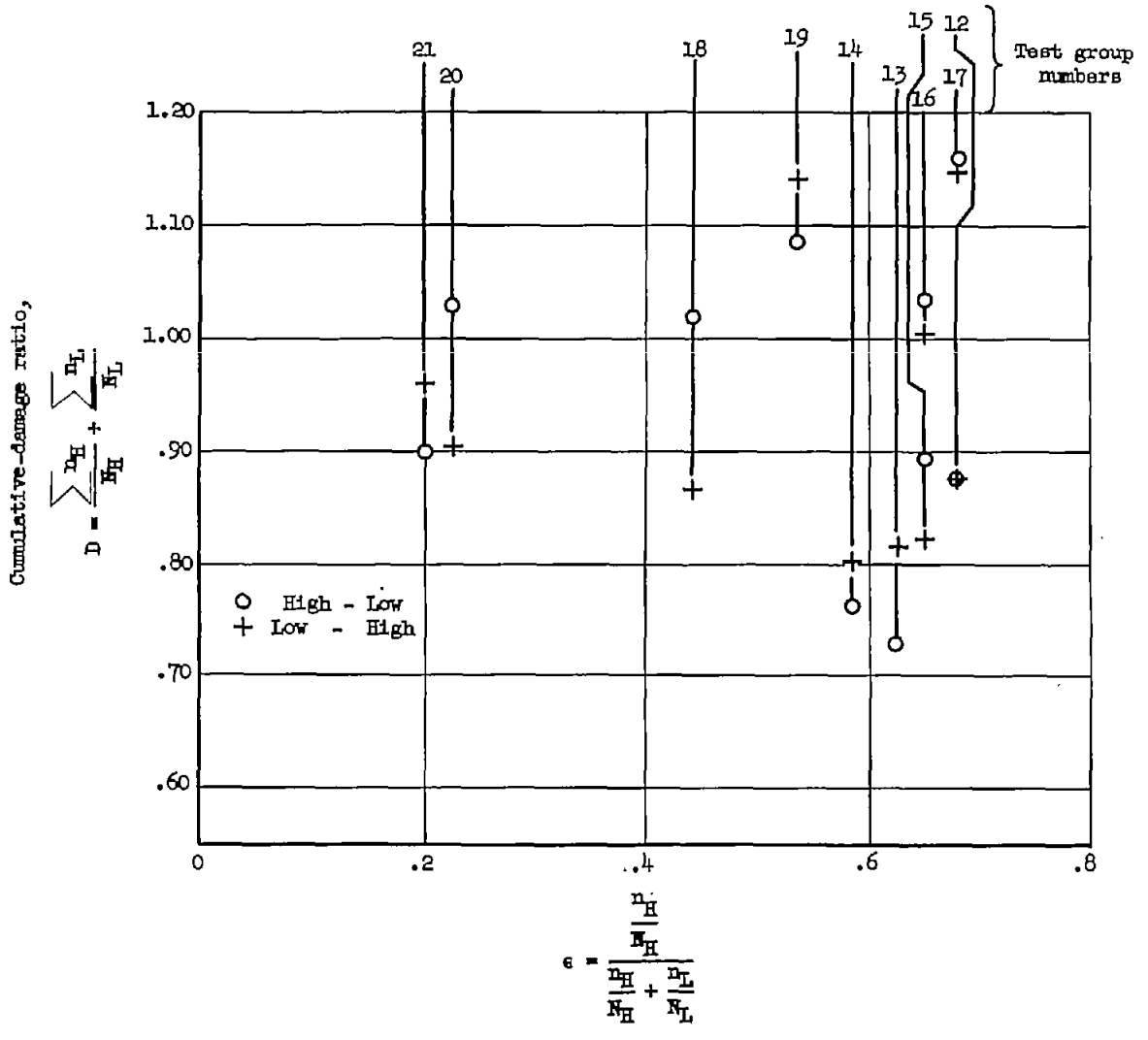

Figure 7.- Cumulative-damage ratio versus cycle-pattern ratio.

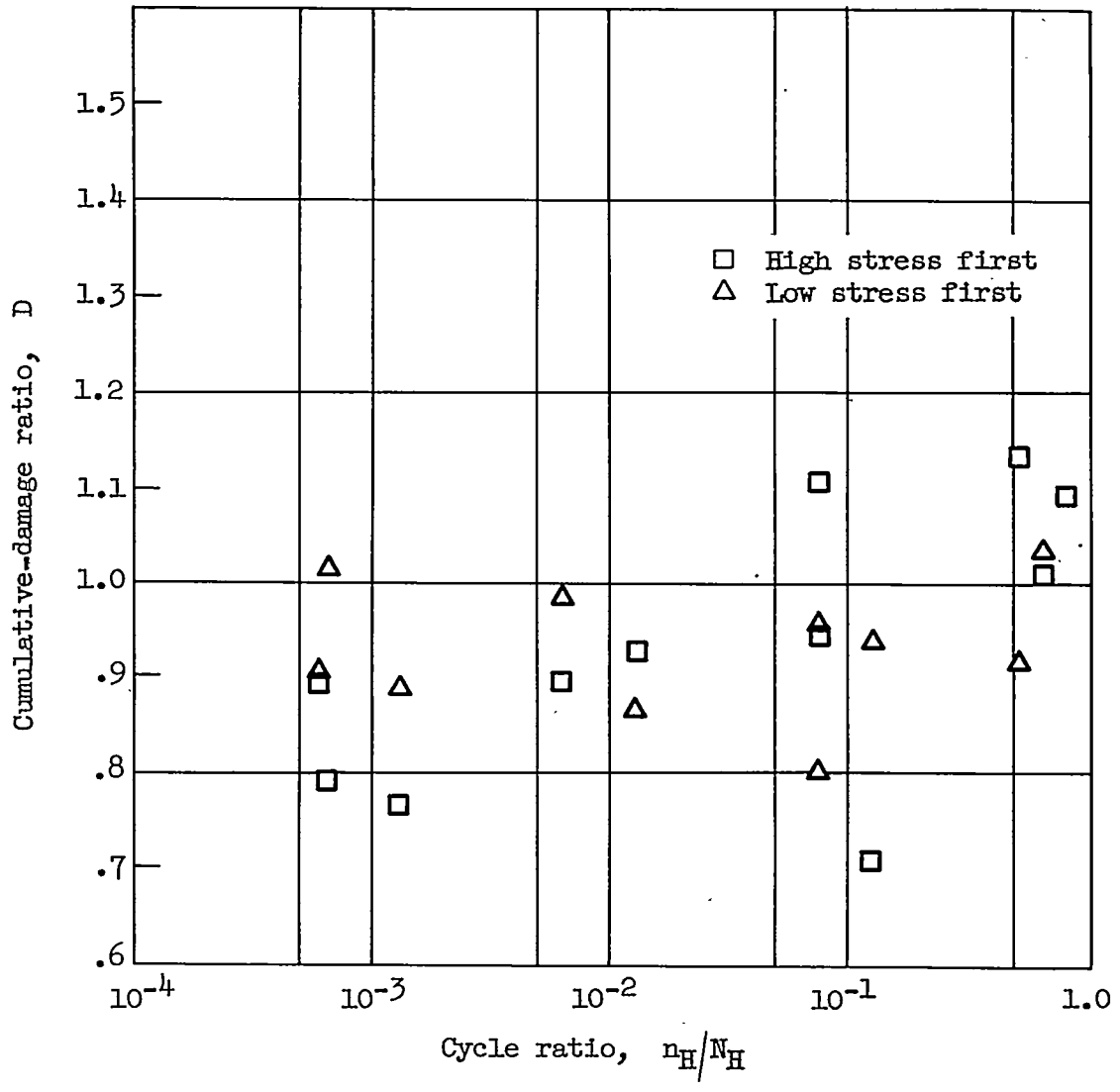

(a) Nominal stresses, ±30,000 and ±40,000 psi.

Figure 8.- Cumulative-damage ratio versus length of cycle pattern. $D = \left(\sum n_H/N_H\right) + \left(\sum n_L/N_L\right)$ where n_H is the number of consecutive cycles applied at the higher stress, n_L is the number of consecutive cycles applied at the lower stress, and N_H and N_L are the averaged cycles to failure at the higher and lower stress levels, respectively.

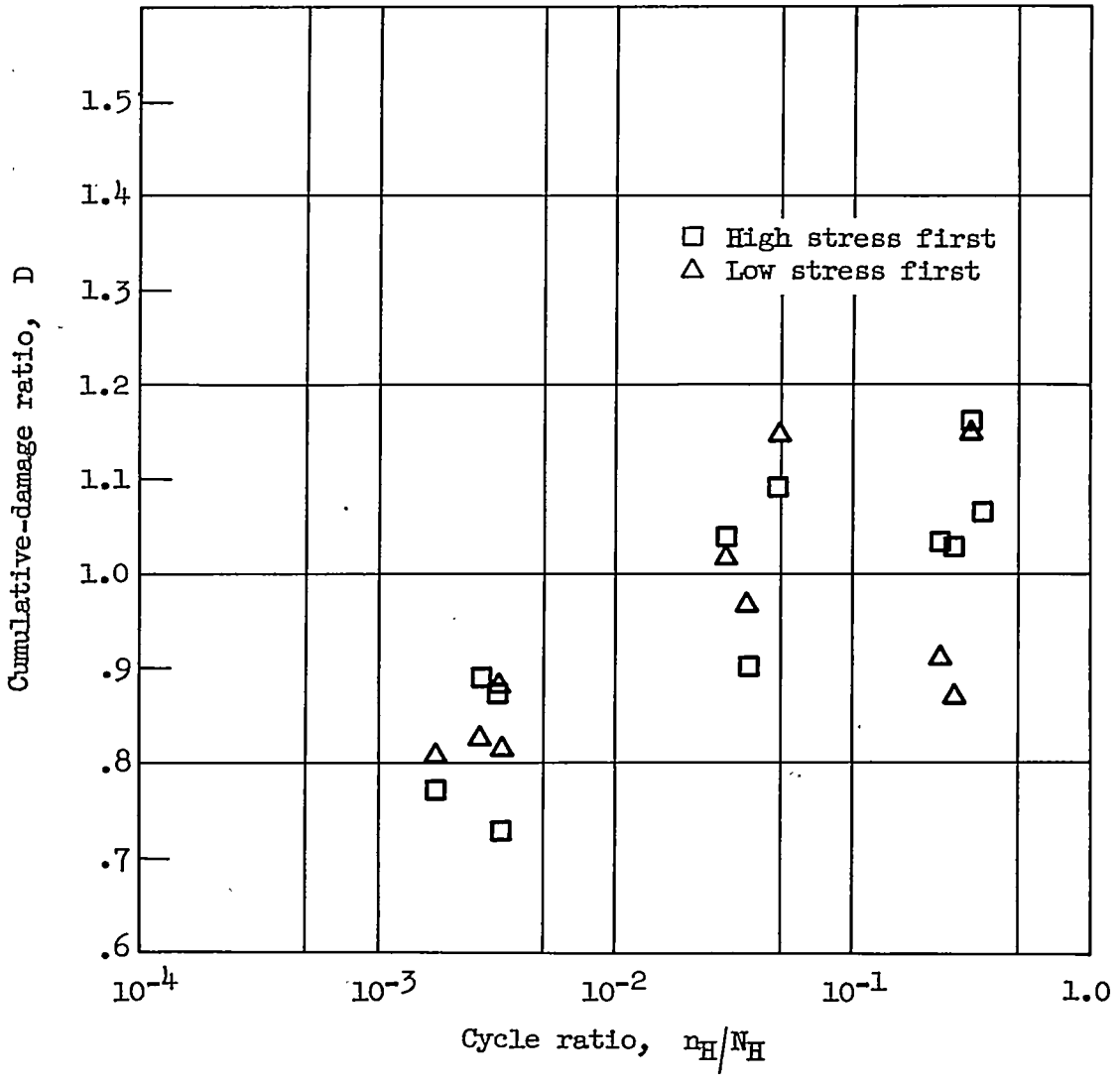

(b) Nominal stresses, ±30,000 and ±60,000 psi.

Figure 8.- Continued.

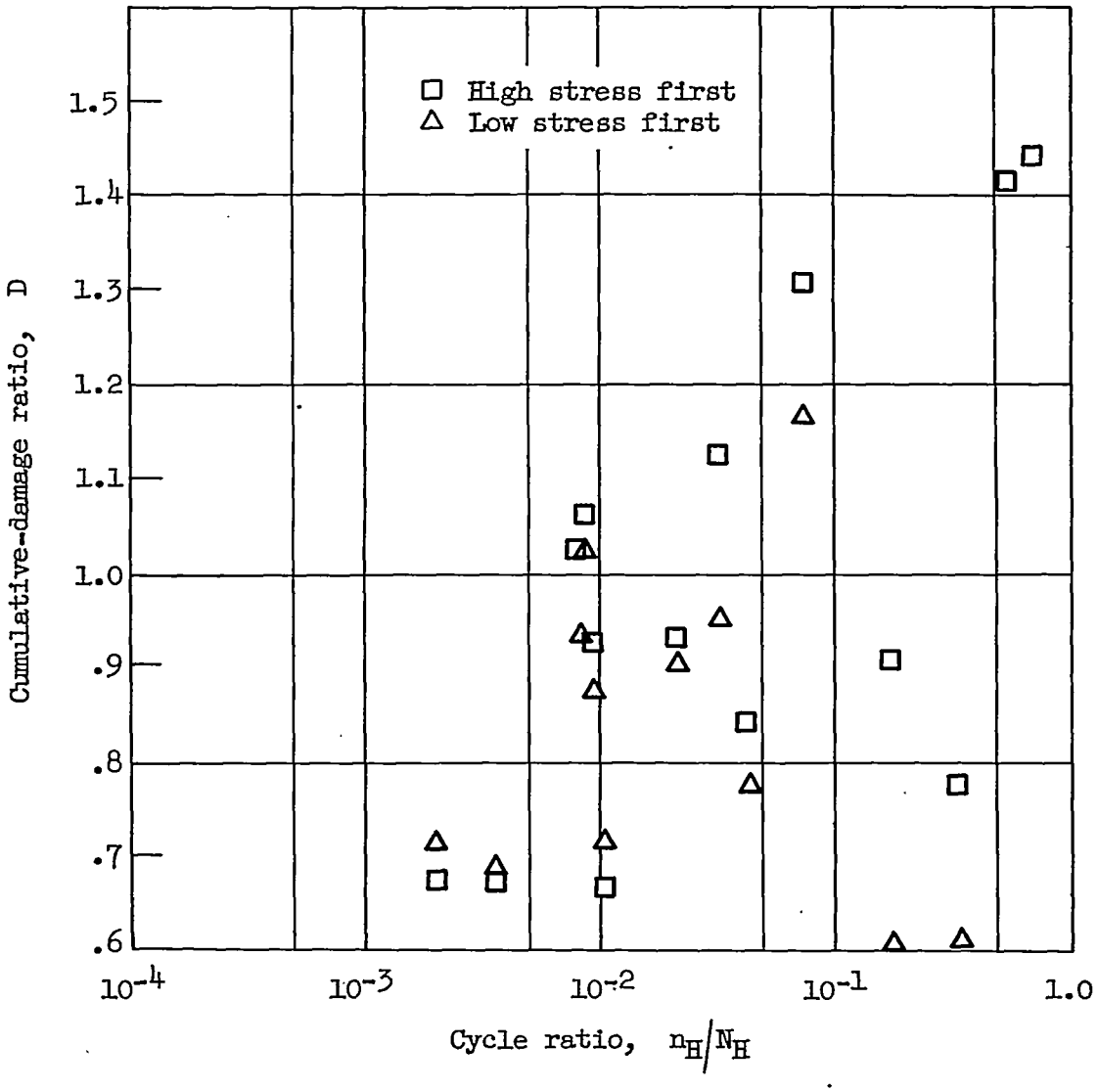

(c) Nominal stresses, ±16,000 and ±30,000 psi.

Figure 8.- Concluded.

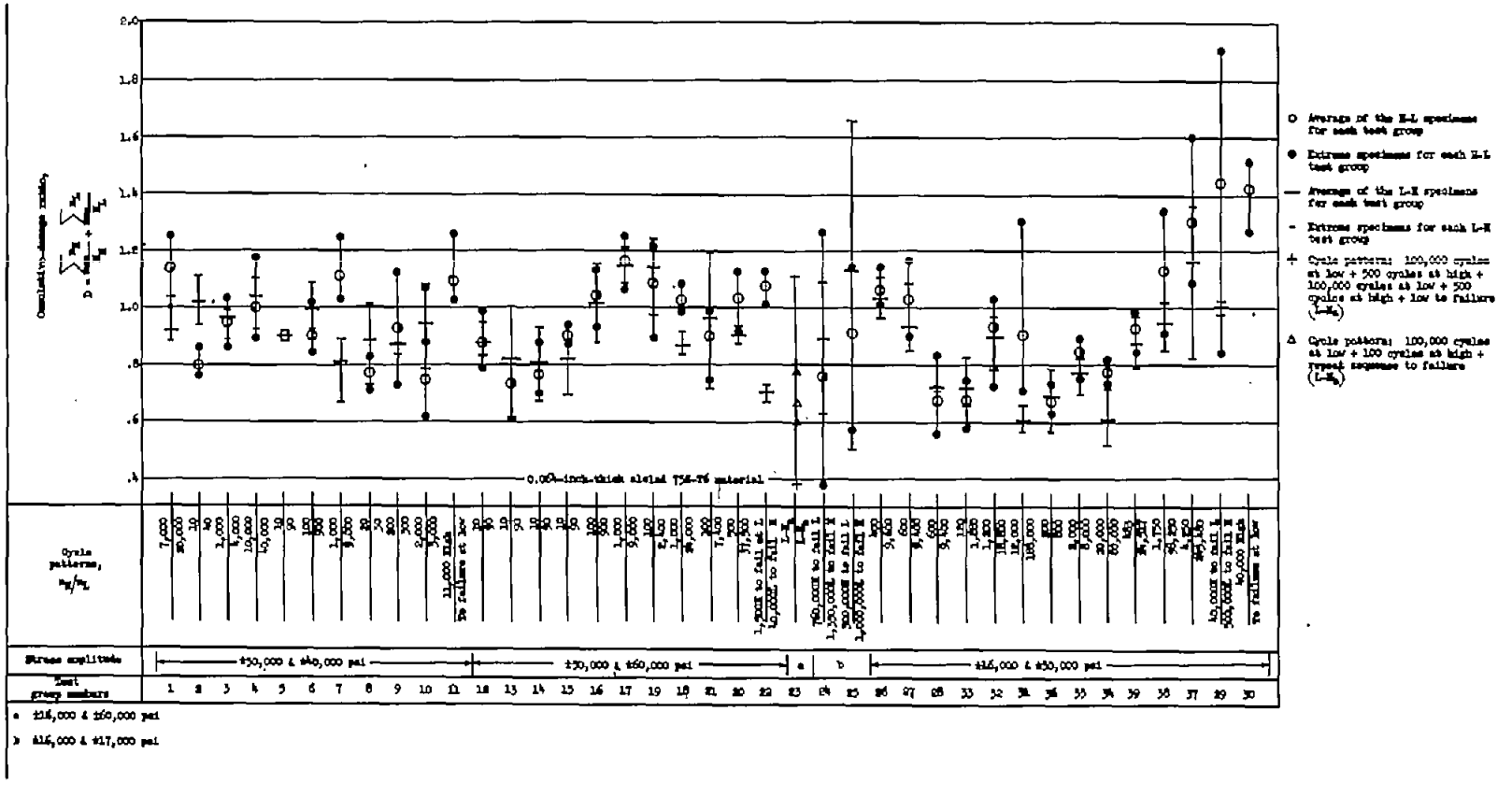

Figure 9.- Cumulative-damage ratio versus cycle patterns for 0.064-inch material.

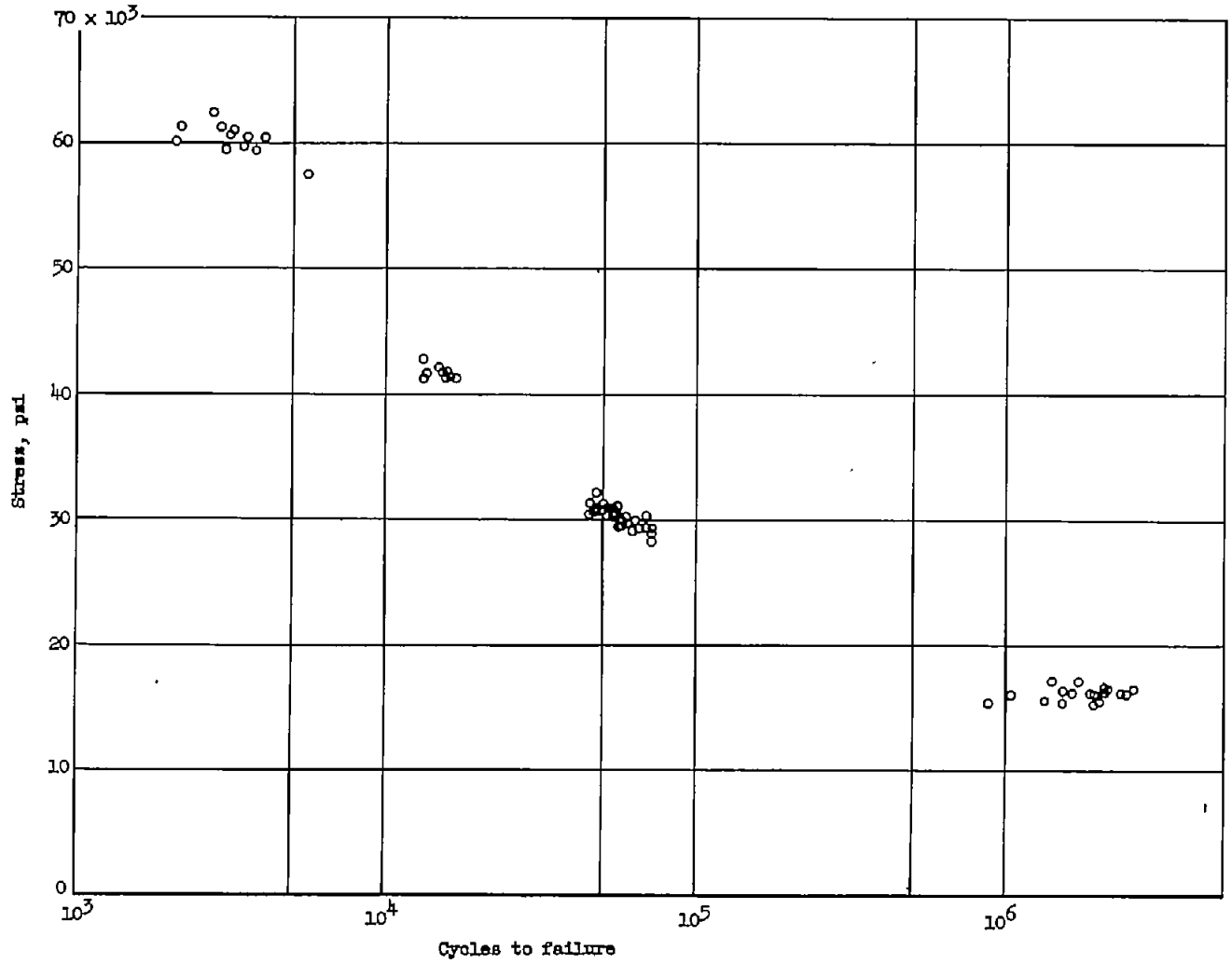

Figure 10.- S-N diagram of 0.064-inch-thick alclad 75S-T6 aluminum-alloy sheet. Each point represents a group of tests, normally four (table 2).

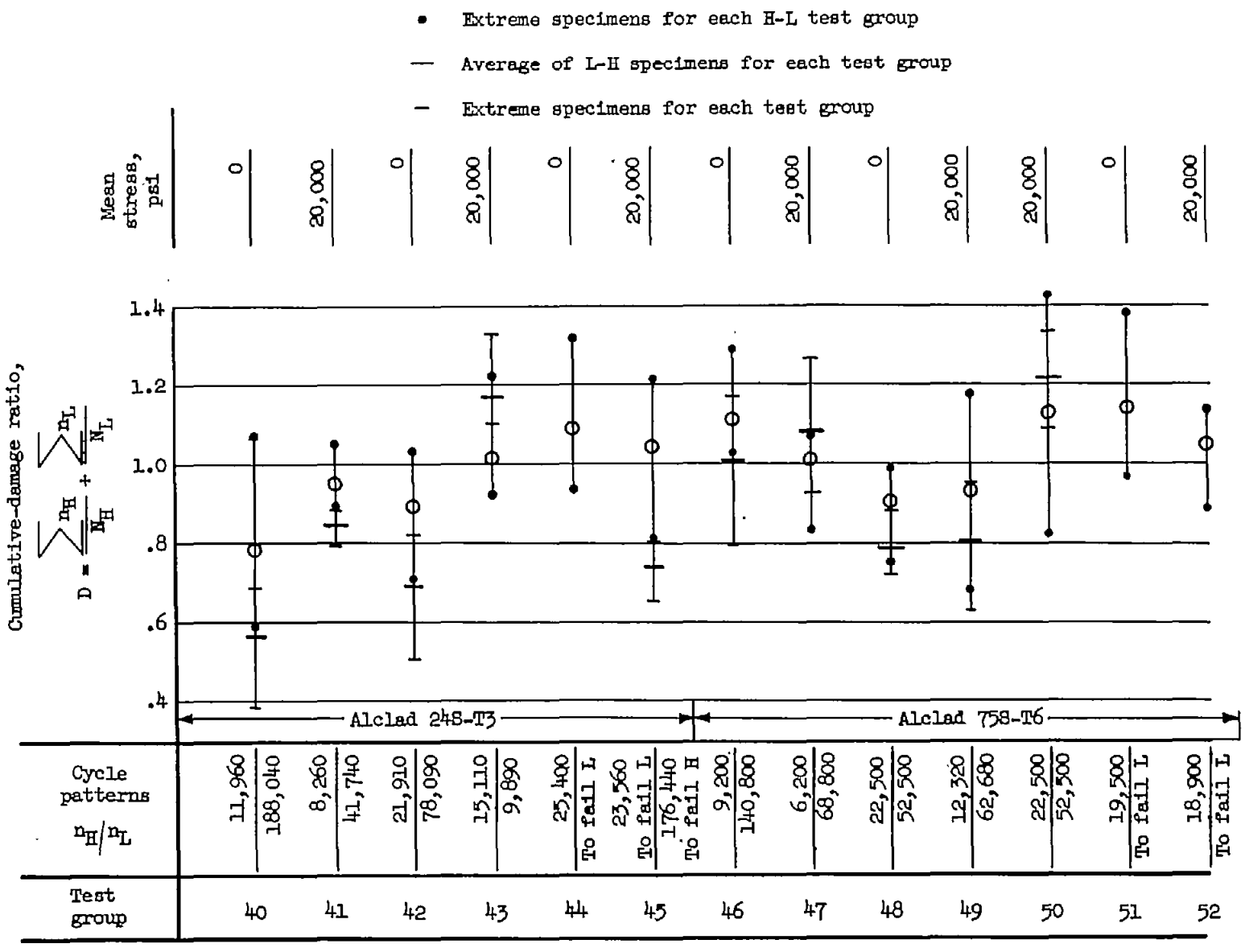

Figure 11.- Cumulative-damage ratio versus cycle patterns for 0.032-inch materials. Nominal stress amplitudes, ±16,000 and ±30,000 psi.

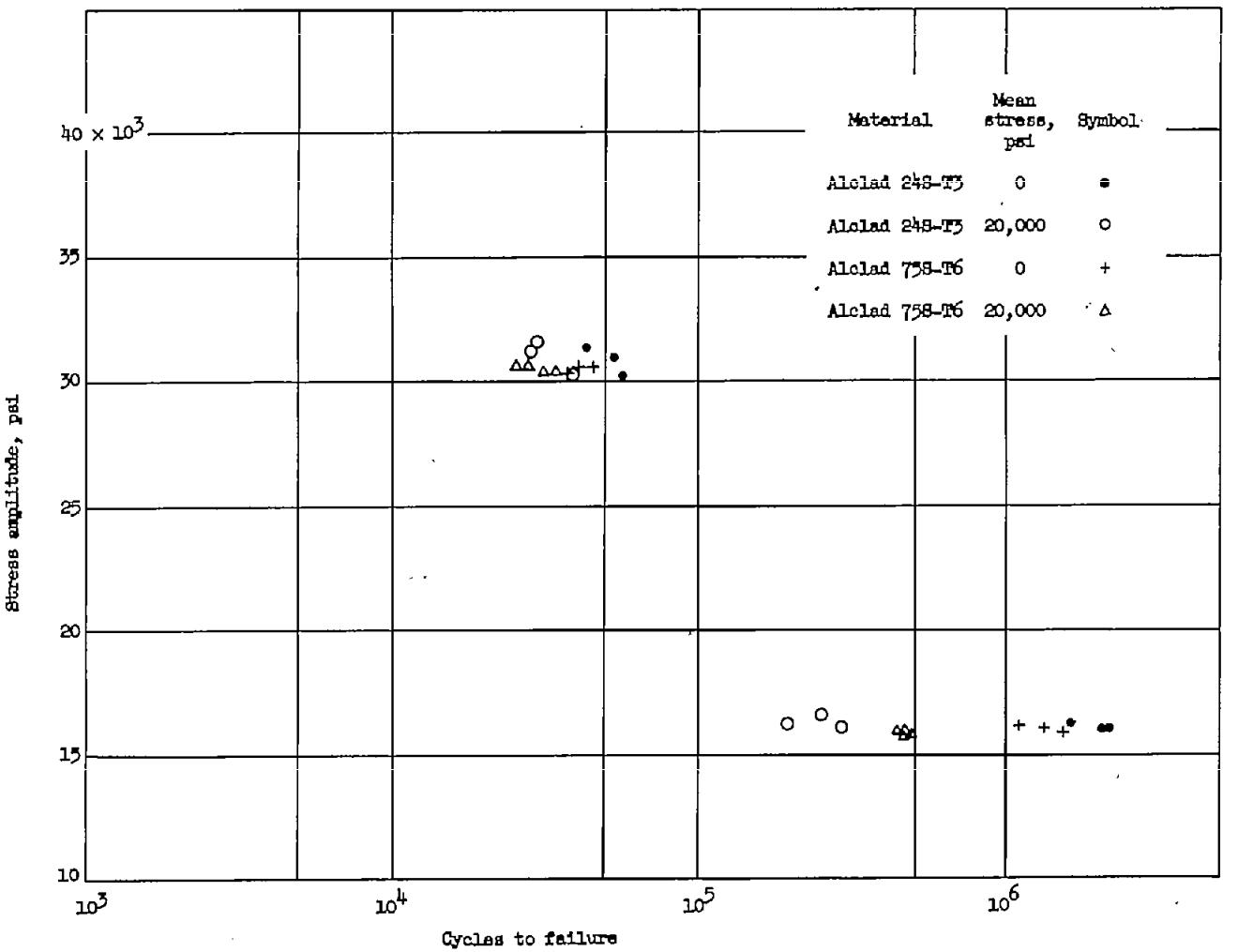

Figure 12.- S-N diagram of 0.032-inch-thick alclad 24S-T3 and alclad 75S-T6 aluminum-alloy sheet. Each point represents a group of tests, normally four (table 4).

NACA - Langley Field, Va.