NACA TN 3693 0000

TECH LIBRARY KAFB, NM
0066367

NATIONAL ADVISORY COMMITTEE FOR AERONAUTICS

TECHNICAL NOTE 3693

PRELIMINARY INVESTIGATION OF THE EFFECTIVENESS OF A SLIDING FLAP IN DEFLECTING A PROPELLER SLIPSTREAM DOWNWARD FOR VERTICAL TAKE-OFF

By Richard E. Kuhn and Kenneth P. Spreemann

Langley Aeronautical Laboratory
Langley Field, Va.

Washington
May 1956

TECH LIBRARY KAFB, NM

0066367

NATIONAL ADVISORY COMMITTEE FOR AERONAUTICS

TECHNICAL NOTE 3693

PRELIMINARY INVESTIGATION OF THE EFFECTIVENESS OF A SLIDING FLAP IN DEFLECTING A PROPELLER SLIPSTREAM DOWNWARD FOR VERTICAL TAKE-OFF

By Richard E. Kuhn and Kenneth P. Spreemann

SUMMARY

An investigation of the effectiveness of a wing equipped with a sliding flap and a leading-edge slat in deflecting a propeller slipstream downward for vertical take-off has been conducted in a static-thrust facility at the Langley Aeronautical Laboratory. The sliding flap, which, in comparison with flap configurations previously tested, makes possible a more forward location of the point at which flow turning begins, was expected to minimize diving moments and, at the same time, to keep a reasonable amount of the wing "fixed" for structural purposes. The results of the investigation indicate that, for a comparable downward deflection of the slipstream, the diving moments associated with the sliding-flap configuration are appreciably smaller than those of the slotted-flap configuration previously investigated. The addition of a leading-edge slat increased the turning angles achieved, particularly in the ground-effect region, and reduced the diving moment further. Extension of the chord of the flaps increased the turning angle achieved but increased the diving moments and caused some loss in turning efficiency.

INTRODUCTION

The 7- by 10-Foot Tunnels Branch of the Langley Aeronautical Laboratory is conducting an investigation of various wing-flap configurations in an effort to develop relatively simple arrangements that can deflect propeller slipstreams downward for vertical take-off. References 1 and 2 present the characteristics of plain and slotted flaps, respectively. Auxiliary vanes, which greatly complicated the arrangement, were required with the plain-flap configuration in order to achieve the desired slipstream deflection. The slotted-flap configuration is somewhat simpler but has the disadvantage of exhibiting rather large diving moments. These large diving moments are caused partly by the fact that as the flaps are extended they move appreciably rearward and the effective axis of the

redirected slipstream is relatively far behind the quarter-chord point of the wing. It would appear desirable to achieve the turning of the slipstream as far forward as possible in order to reduce the diving moments. At the same time it is necessary to keep a reasonable amount of the wing chord "fixed" for structural purposes.

The sliding flap of the present investigation was conceived as a possible means of approaching these objectives more closely than has been possible with flap arrangements previously tested.

SYMBOLS

The positive sense of forces, moments, and angles are indicated in figure 1. The symbols used in this paper are defined as follows:

b	span, ft
c_s	slat chord, ft
c_w	wing chord, ft
D	propeller diameter, ft
F	resultant force, lb
h	height above ground, distance from flap trailing edge to ground board, ft
L	lift, lb
M	pitching moment, ft-lb
T	propeller thrust, lb
X	longitudinal force, Thrust - Drag, lb
δ_f	flap deflection, deg
δ_s	slat deflection, deg
θ	turning angle, inclination of resultant force vector from thrust axis, $\tan^{-1}\frac{L}{X}$, deg

Subscripts:

1	forward, or sliding flap
2	rear, or plain flap
30	30-percent-chord flap (refs. 2 and 3)
60	60-percent-chord flap (refs. 2 and 3)

APPARATUS AND METHOD

A drawing of the model, with pertinent dimensions, is presented as figure 2 and a photograph of the model mounted for testing is shown as figure 3. The geometric characteristics of the model are given in the following table:

Wing:	
Area (semispan), sq ft	3.0
Span (semispan), ft	2.0
Chord, ft	1.5
Airfoil section	NACA 4415
Propeller:	
Diameter, ft	2.0
Nacelle diameter, ft	0.33
Airfoil section	Clark Y
Solidity (each propeller)	0.10

The forward flap, which is referred to as a sliding flap, was hinged near the lower wing surface at the 35-percent-chord station. The sliding-ramp radius was 15 percent of the wing chord and was made tangent to the upper surface of the wing. When the forward flap was deflected, a cavity was formed on the lower surface and was left open for most of the tests. (See figs. 1 and 4.) The rear flap, which was a plain flap, was made by sawing off the rear 25 percent of the wing chord and reattaching it with a piano hinge at the 75-percent-chord station. When the rear flap was deflected, the gap at the hinge line was filled and faired with modeling clay. The end plate (fig. 2) and the flap chord-extension were made of 1/16-inch sheet metal.

The leading-edge slat was rolled from 1/16-inch sheet steel to a contour that corresponded to the upper surface of the wing from the leading edge to the 30-percent-chord point. For these tests the upper surface of the wing was not modified as it would be in a practical application in

order to retract the slat; however, it is believed that this difference would have only a small effect on the results. The slat positions tested are shown in figure 4.

For these tests, the propeller was mounted independently as shown in figure 3. The thrust axis was on the wing chord and the propeller disk was 10 inches ahead of the wing leading edge. The propeller was driven by a variable-frequency electric motor at about 6,000 rpm, which gave a tip Mach number of about 0.58. The motor was mounted inside an aluminum-alloy nacelle by means of strain-gage beams in such a way that the propeller thrust could be measured. The total lift, longitudinal force, and pitching moment of the model were measured on a strain-gage balance at the root of the wing.

The ground was simulated by a sheet of plywood as shown in figure 3. All tests with the ground board were conducted with an angle of 20° between the ground board and the thrust axis of the propeller.

The investigation was conducted in a static-thrust facility at the Langley Aeronautical Laboratory. All data presented were obtained at zero forward velocity with a thrust of 15 pounds from the propeller. Inasmuch as the tests were conducted under static conditions in a large room, none of the corrections that are normally applicable to wind-tunnel tests were applied.

RESULTS AND DISCUSSION

The characteristics of the basic configuration for various combinations of deflections of the two flaps are shown in figure 5. Deflection of the sliding flap alone $\left(\delta_{f_1} = 60^\circ, \delta_{f_2} = 0^\circ\right)$ is seen to rotate the resultant force vector upward to a turning angle of 43°. The combined deflection of both flaps $\left(\delta_{f_1} = 50^\circ, \delta_{f_2} = 40^\circ\right)$ produces turning angles up to 58°.

The effect of fairing the lower surface of the wing when the sliding flap is deflected $\left(\delta_{f_1} = 50^\circ\right)$ is also shown in figure 5. Filling in the cavity formed by deflecting the flap (as shown by the dashed lines on the configuration sketched in fig. 5) is seen to have little effect on the results.

A comparison of the characteristics of the sliding-flap wing with the characteristics of the slotted-flap wing of references 2 and 3 is shown in figure 6. It can be seen that the desired reduction in diving moments is realized. At a given turning angle, the diving moments are reduced by

about one-half to one-third of the values for the slotted-flap wing. Also, for the configuration with the single propeller (which would appear to give the most direct comparison), the ratio of resultant force to thrust is somewhat higher for the sliding-flap wing. Some unpublished data from tests at the static-thrust facility indicate that the large gain in resultant force obtained for the slotted-flap wing when two propellers are used may not be realized for the sliding-flap configuration. It should also be noted that there is also a difference in the plan forms of the test models as shown in figure 7. Both models had the same mean aerodynamic chord; however, the span of the slotted-flap model (refs. 2 and 3) was 70 percent greater than the span of the model of the present investigation. These differences would be expected to have only secondary effects, however.

Characteristics With Leading-Edge Slat

The effect of a leading-edge slat (similar to the one used in ref. 4) on the characteristics of the model out of the ground-effect region is shown in figure 8. At the lower slat deflections and the two high slat positions investigated (positions A and B), the slat effected an increase in turning angle and an increase in resultant force. Also the diving moments were appreciably reduced as the deflection of the slat was increased for all slat positions.

The effect of the slat on the characteristics of the model near the ground is shown in figure 9. Large increases in both turning angle and resultant force are shown for all slat positions tested. Examination of the data of figures 8 and 9 indicate that slat position A is probably the best compromise, inasmuch as large turning angles and high ratios of resultant force to thrust are obtained both in and out of the ground-effect region. Also, at this position, changing deflection causes the smallest overall variation in turning angle and resultant force. If the leading-edge slat is considered for longitudinal control, the possibility of control lag (as discussed in ref. 4) should be considered.

It will be noted that both the slat and the end plate were added to the configuration in figures 8 and 9, and independent effects of these modifications can be assayed from the data of figure 10, which shows the variation of characteristics of the model with height above the ground. It can be seen that for this configuration the effects of the end plate are small. The large increases in turning angle result from the effects of the slat.

Characteristics With Extended Flap Chord

The turning angles achieved with the leading-edge slat on would probably be considered inadequate for most vertically rising airplanes inasmuch as a ground attitude of 25° to 30° would be required for take-off. In an attempt to increase the turning angle reached, the chord of the flap was increased by 10 percent of the wing chord by attaching a piece of 1/16-inch sheet metal to the upper surface at the trailing flap. The characteristics of the modified model out of the ground-effect region are shown in figure 11. With the extended-chord flap installed, a turning angle of 80° was reached; however, the diving moments have been increased somewhat. The variation of the characteristics with height above the ground is shown in figure 12. With the forward flap deflected 60° and the rear flap deflected 20°, a ground attitude of only 15° would be required for take-off. However, the resultant force achieved is down to 80 percent of the thrust for this configuration.

CONCLUSIONS

An investigation of the effectiveness of a sliding flap in deflecting a propeller slipstream downward indicates the following conclusions:

1. For a comparable downward deflection of the slipstream, the diving moments associated with the sliding-flap configuration are appreciably smaller than those of the slotted-flap configuration previously investigated.

2. Addition of a leading-edge slat increased the turning angles achieved and reduced the diving moments, particularly in the ground-effect region.

3. Increasing the chord of the rear flap increased the turning angle achieved, but with some increase in diving moments and with some loss in ratio of resultant force to thrust.

Langley Aeronautical Laboratory,
National Advisory Committee for Aeronautics,
Langley Field, Va., February 17, 1956.

REFERENCES

1. Kuhn, Richard E., and Draper, John W.: An Investigation of a Wing-Propeller Configuration Employing Large-Chord Plain Flaps and Large-Diameter Propellers for Low-Speed Flight and Vertical Take-Off. NACA TN 3307, 1954.

2. Kuhn, Richard E., and Draper, John W.: Investigation of Effectiveness of Large-Chord Slotted Flaps in Deflecting Propeller Slipstreams Downward for Vertical Take-Off and Low-Speed Flight. NACA TN 3364, 1955.

3. Kuhn, Richard E.: Investigation of the Effects of Ground Proximity and Propeller Position on the Effectiveness of a Wing With Large-Chord Slotted Flaps in Redirecting Propeller Slipstreams Downward for Vertical Take-Off. NACA TN 3629, 1956.

4. Kuhn, Richard E.: Investigation at Zero Forward Speed of a Leading-Edge Slat as a Longitudinal Control Device for Vertically Rising Airplanes That Utilize the Redirected-Slipstream Principle. NACA TN 3692, 1956.

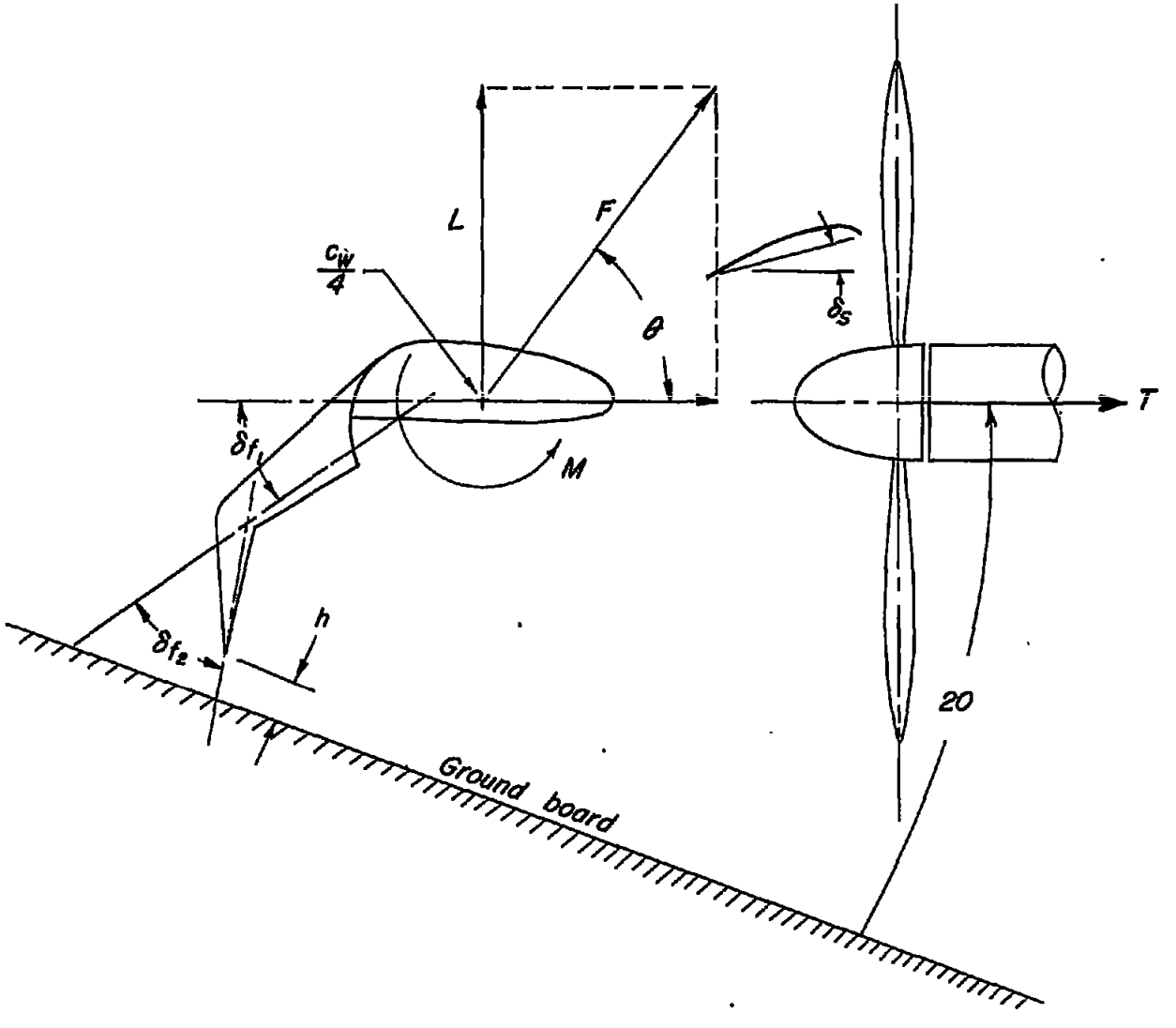

Figure 1.- Convention used to define positive sense of forces, moments, and angles.

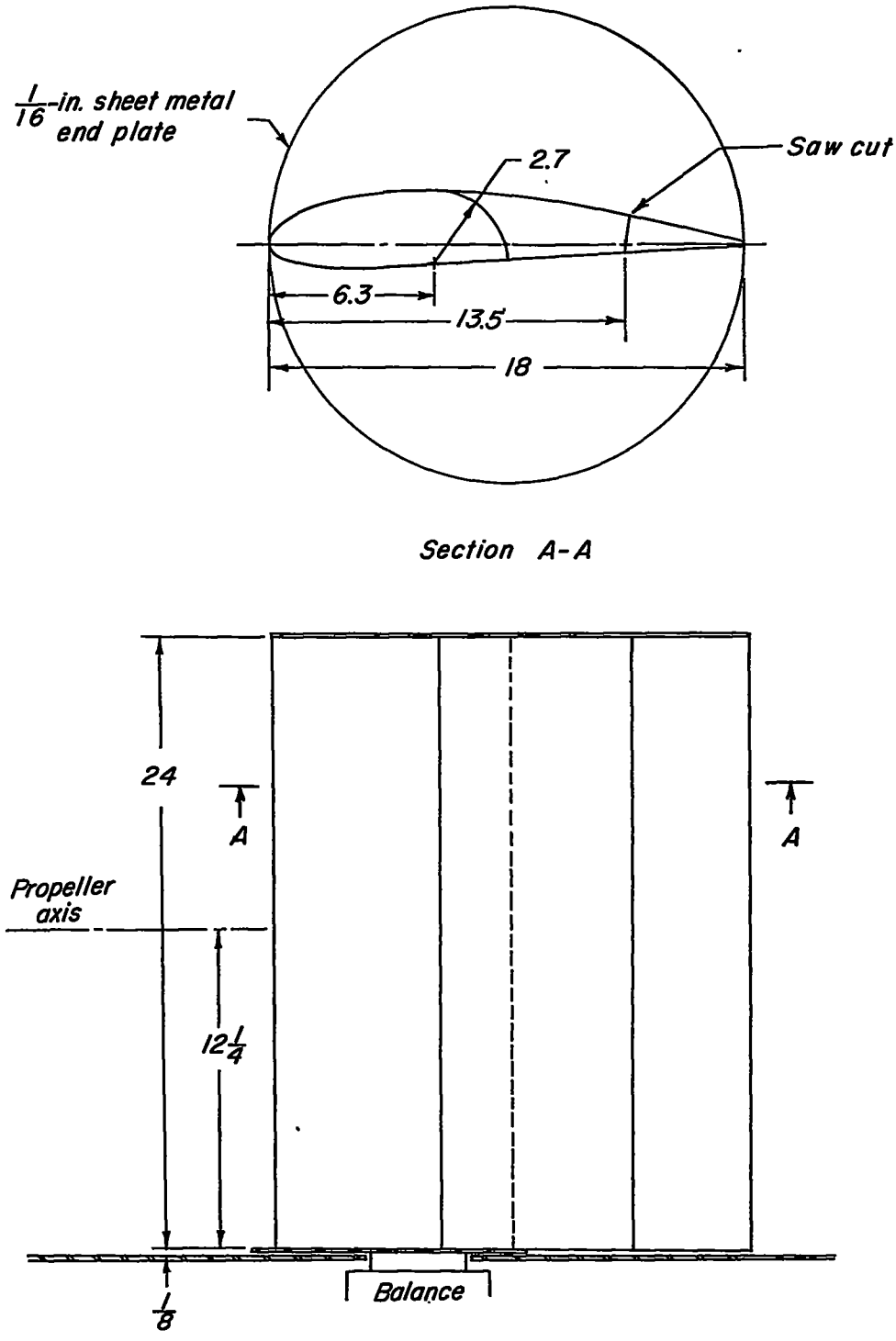

Figure 2.- Drawing of model. All dimensions are in inches.

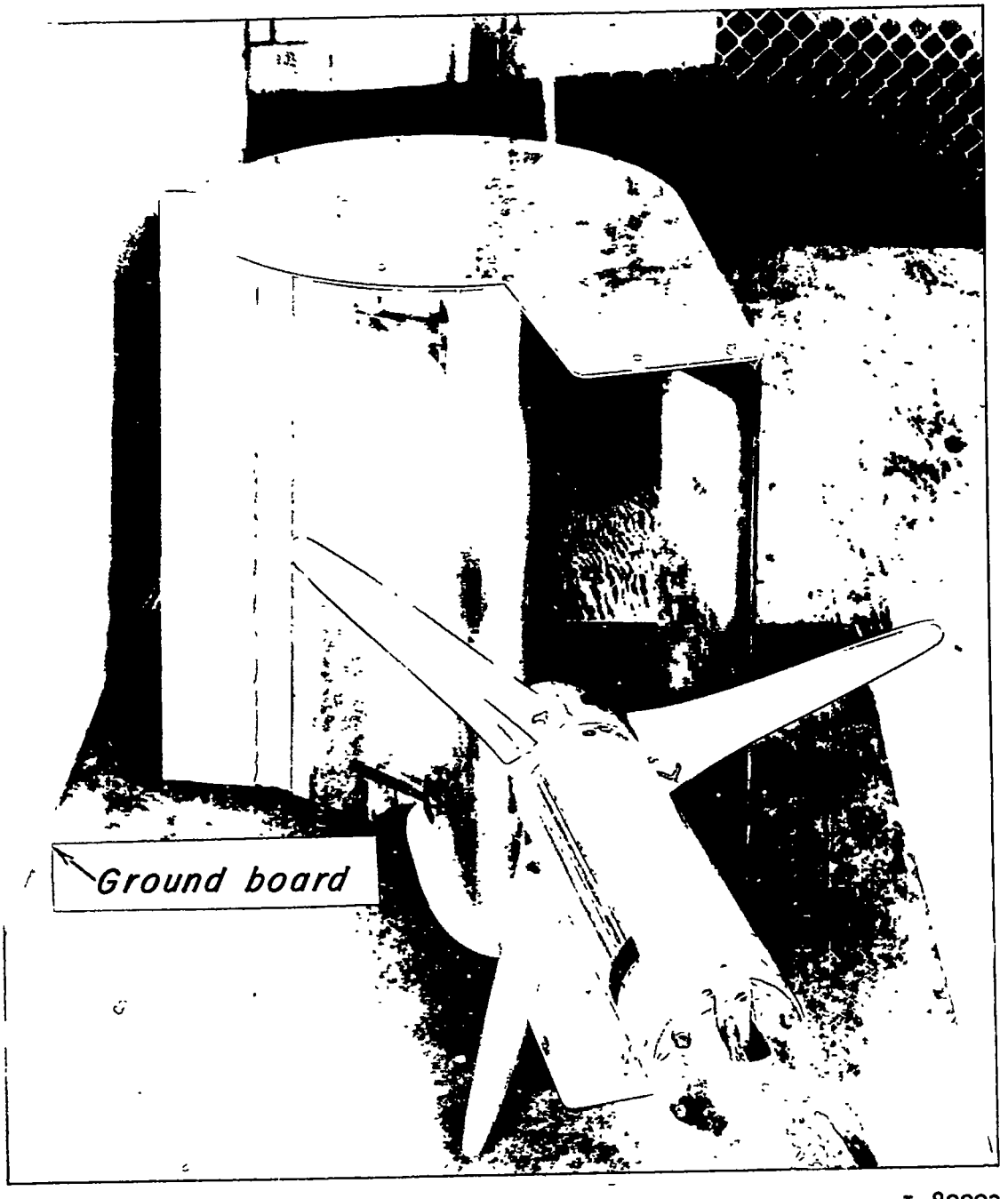

L-89993.1

Figure 3.- Model installed on static-thrust stand with end plane on, slat in position B, and ground board at $h/D = 0.15$.

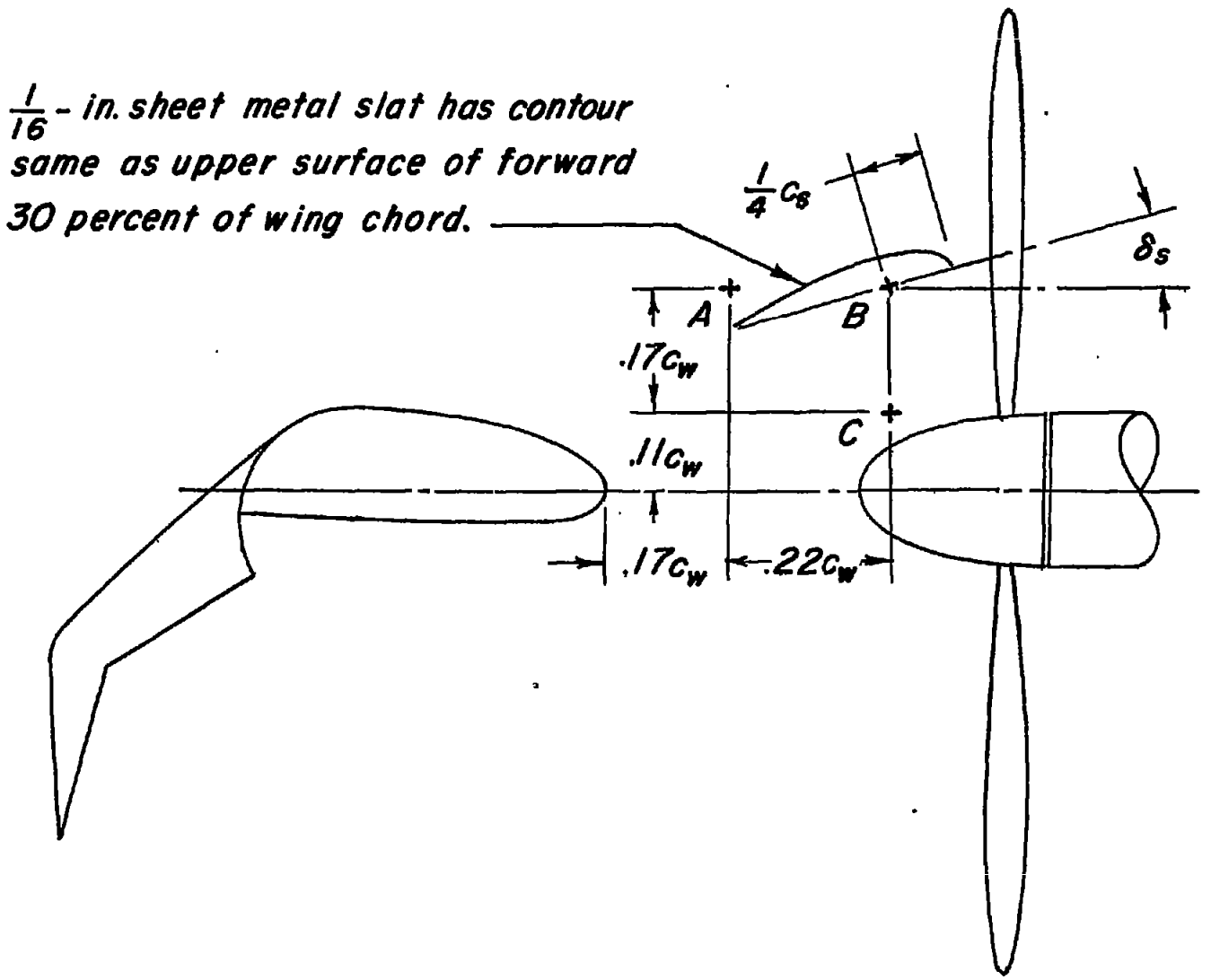

Figure 4.- Slat positions investigated.

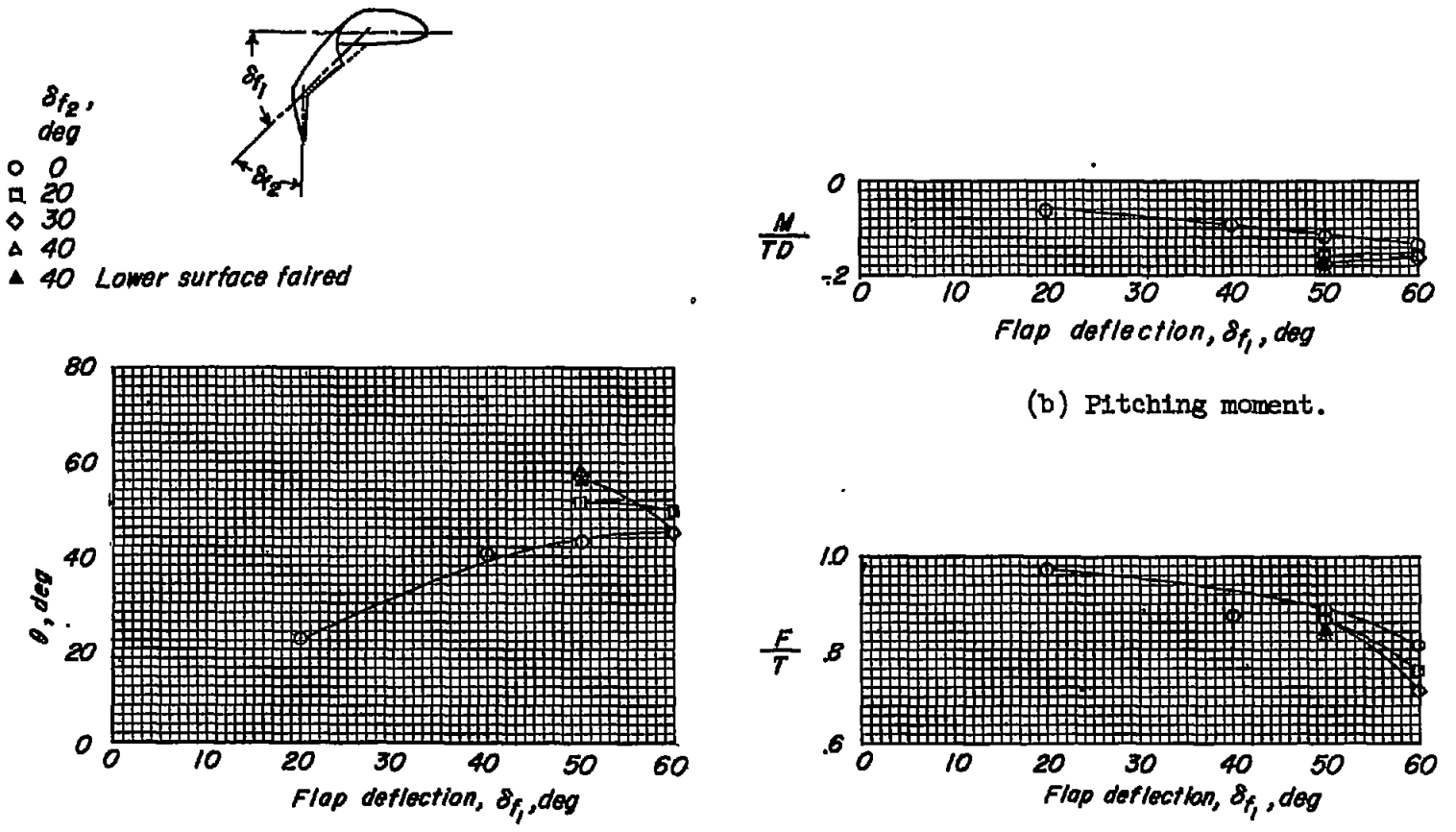

(a) Turning angle.

(b) Pitching moment.

(c) Ratio of resultant force to thrust.

Figure 5.- Aerodynamic characteristics of basic sliding-flap wing. Slat off; end plate off; chord-extension off; no ground board.

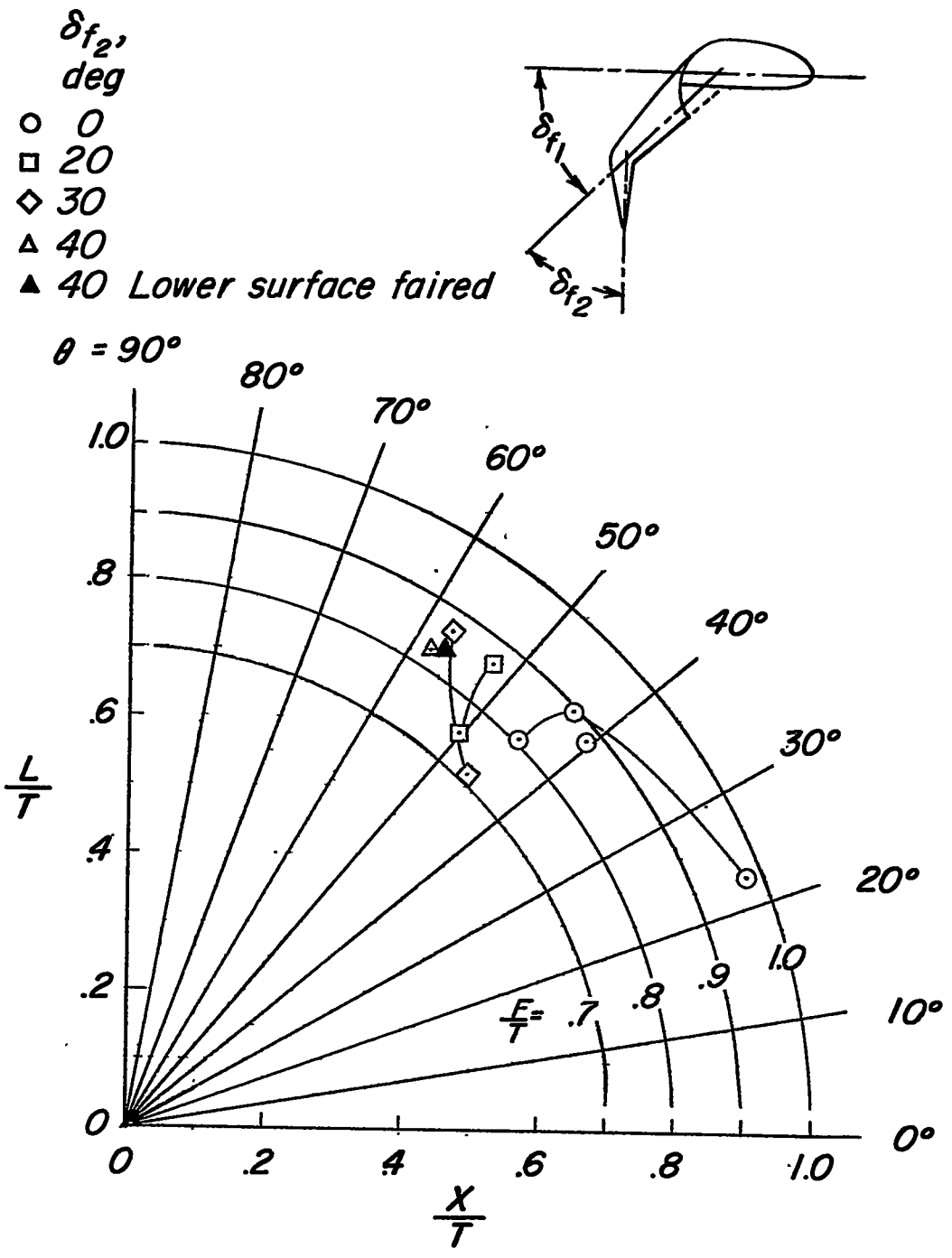

(d) Summary of turning effectiveness. δ_{f_1} variable.

Figure 5.- Concluded.

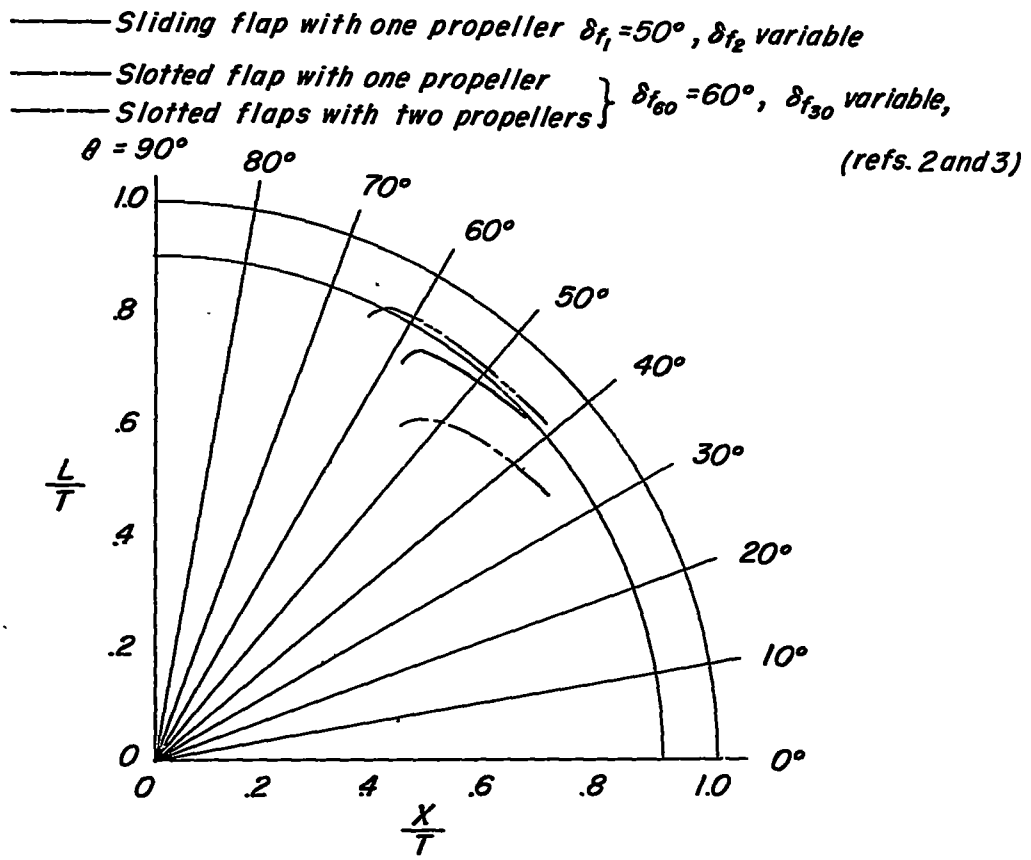

(a) Turning effectiveness.

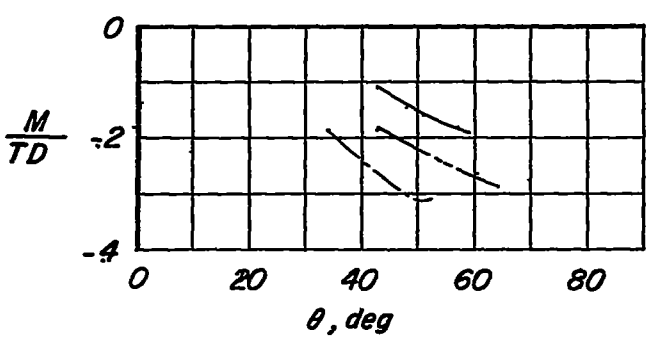

(b) Pitching moment.

Figure 6.- Comparison of characteristics of sliding-flap wing and slotted-flap wing of references 2 and 3. End plate off.

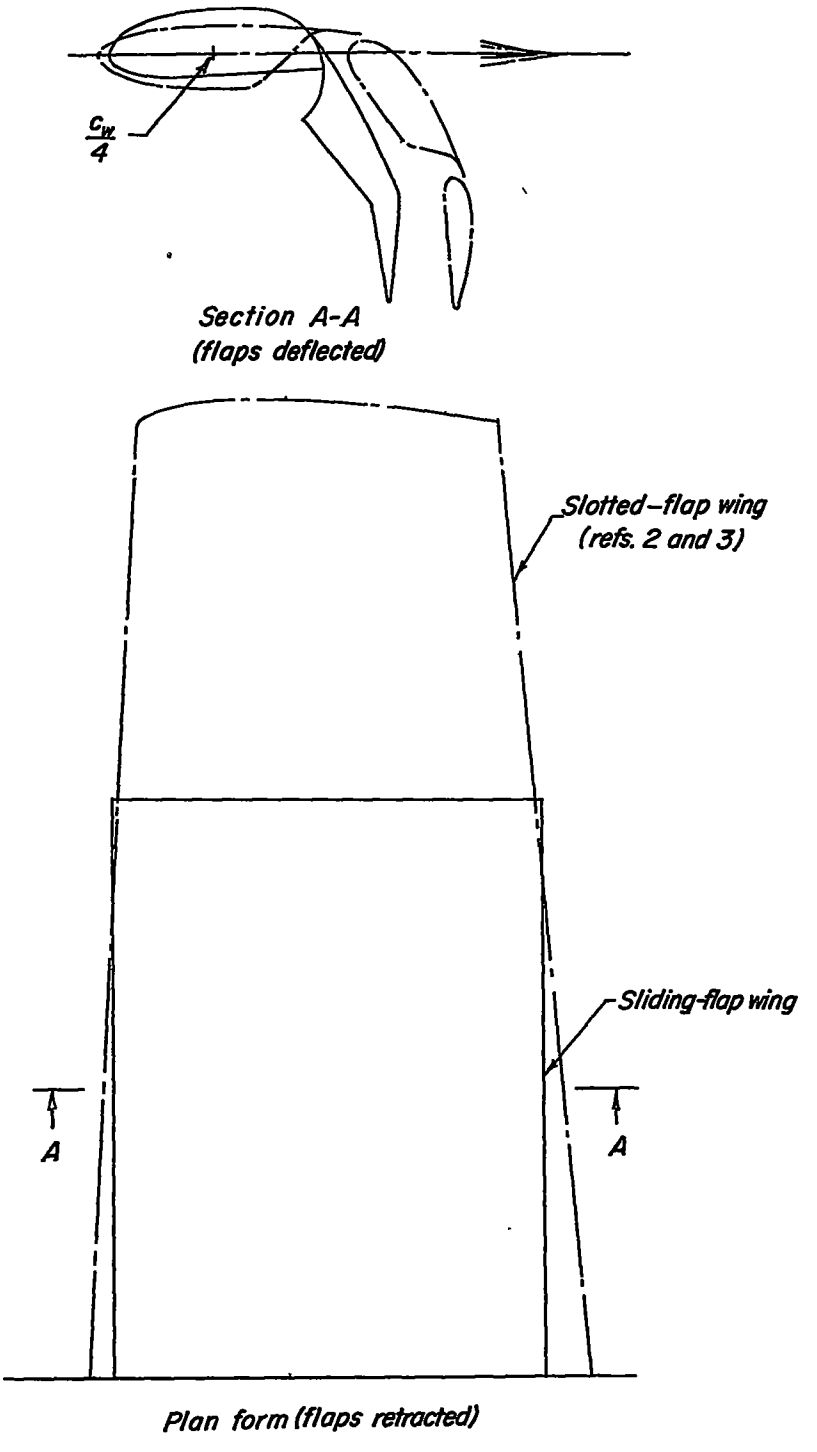

Figure 7.- Comparison of plan form and section of sliding-flap wing and slotted-flap wing of references 2 and 3.

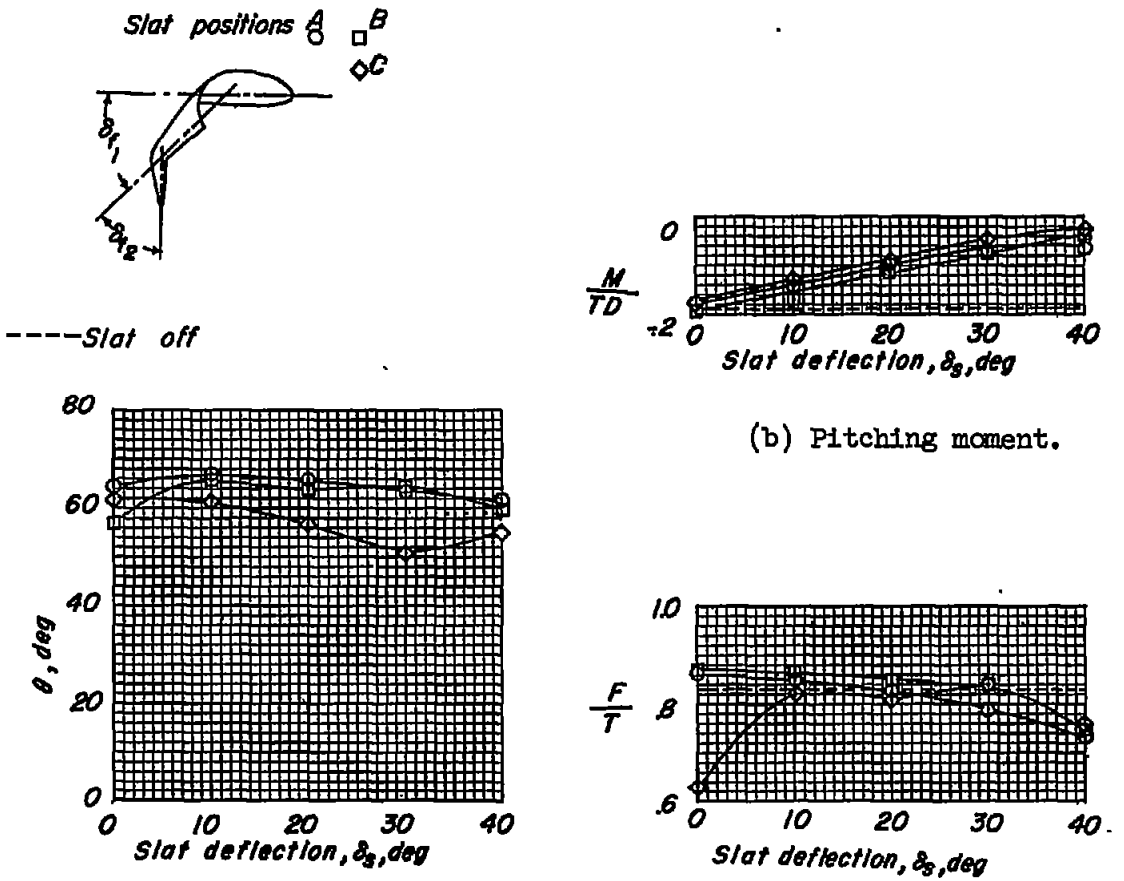

(a) Turning angle.

(b) Pitching moment.

(c) Ratio of resultant force to thrust.

Figure 8.- Effect of slat position and deflection on model out of ground-effect region. End plate on; chord-extension off; no ground board; $\delta_{f_1} = 50^\circ$; $\delta_{f_2} = 40^\circ$.

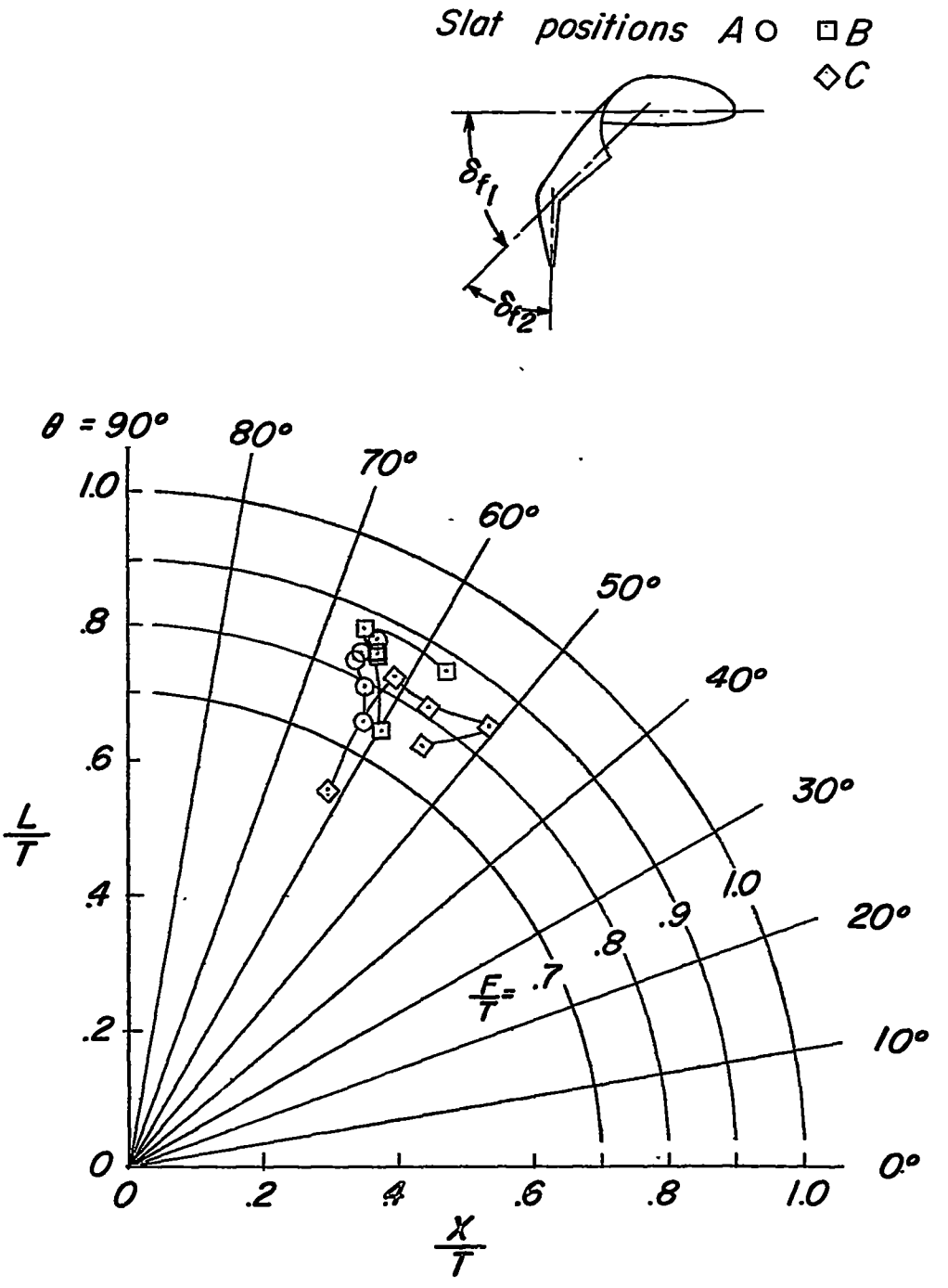

(d) Summary of turning effectiveness. δ_s variable.

Figure 8.- Concluded.

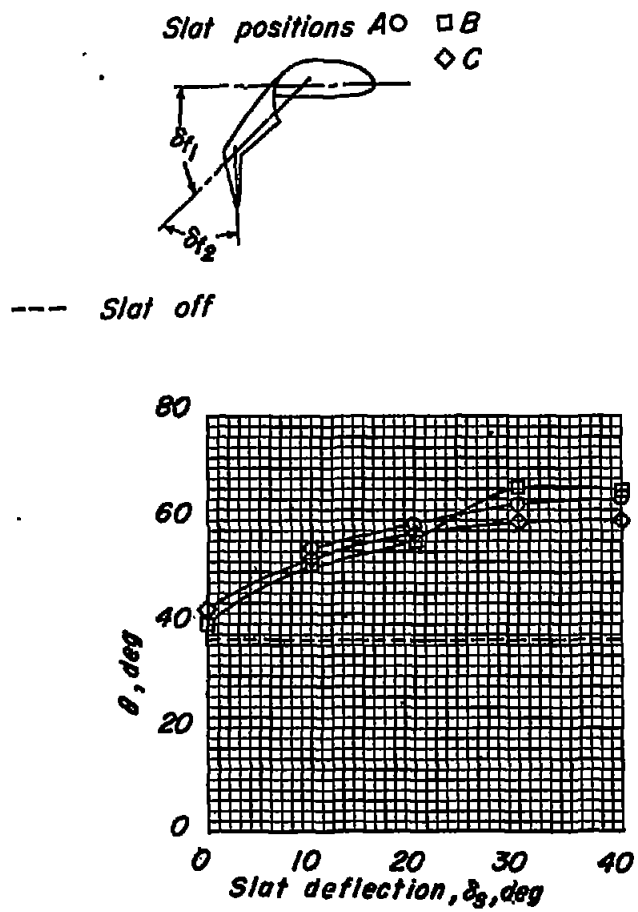

(a) Turning angle.

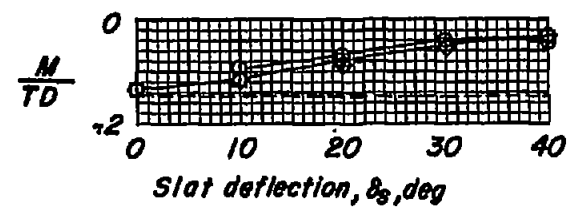

(b) Pitching moment.

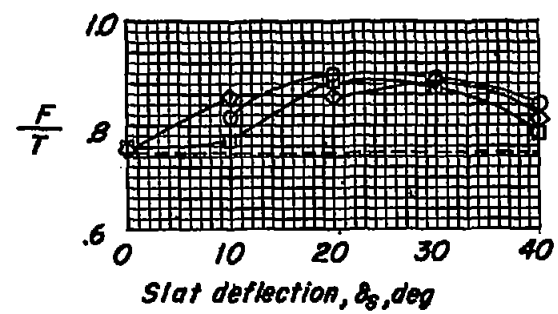

(c) Ratio of resultant force to thrust.

Figure 9.- Effect of slat position and deflection near the ground. End plate on; chord-extension off; ground board at $h/D = 0.08$; $\delta_{f_1} = 50^\circ$; $\delta_{f_2} = 40^\circ$.

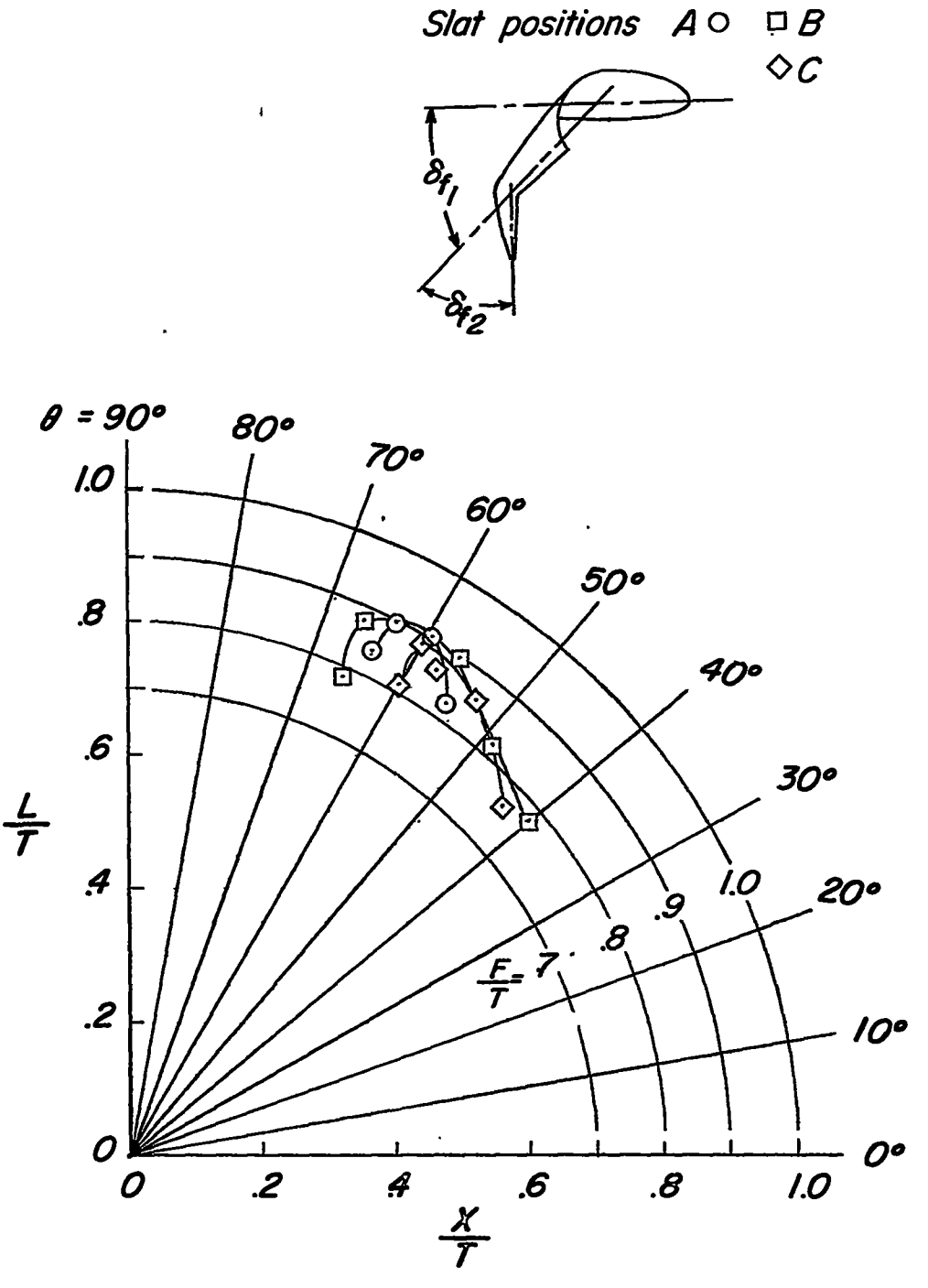

(d) Summary of turning effectiveness. δ_s variable.

Figure 9.- Concluded.

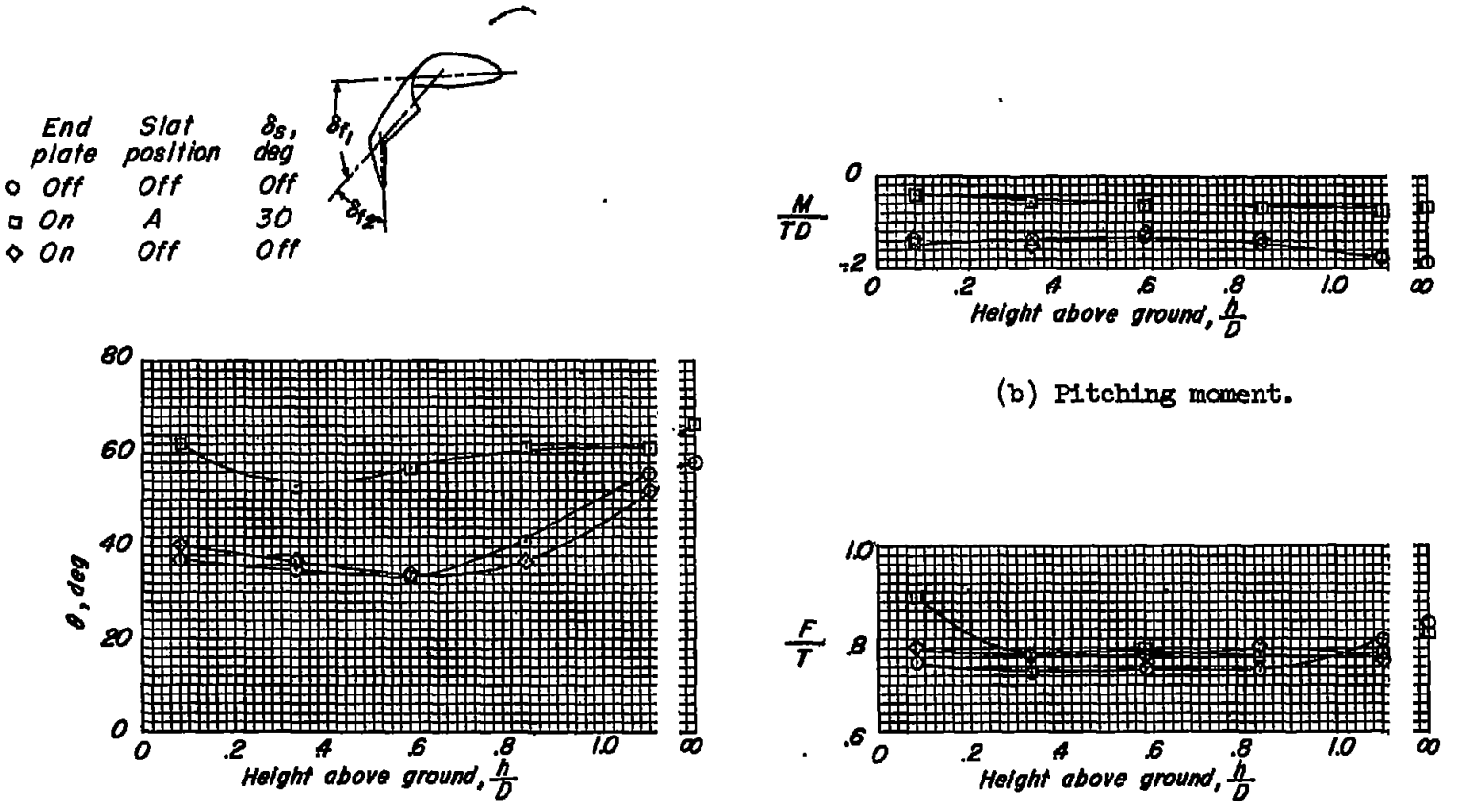

(a) Turning angle.

(b) Pitching moment.

(c) Ratio of resultant force to thrust.

Figure 10.- Comparison of effect of end plate and slot in variation of characteristics with height above ground. Chord-extension off; $\delta_{f_1} = 50^\circ$; $\delta_{f_2} = 40^\circ$.

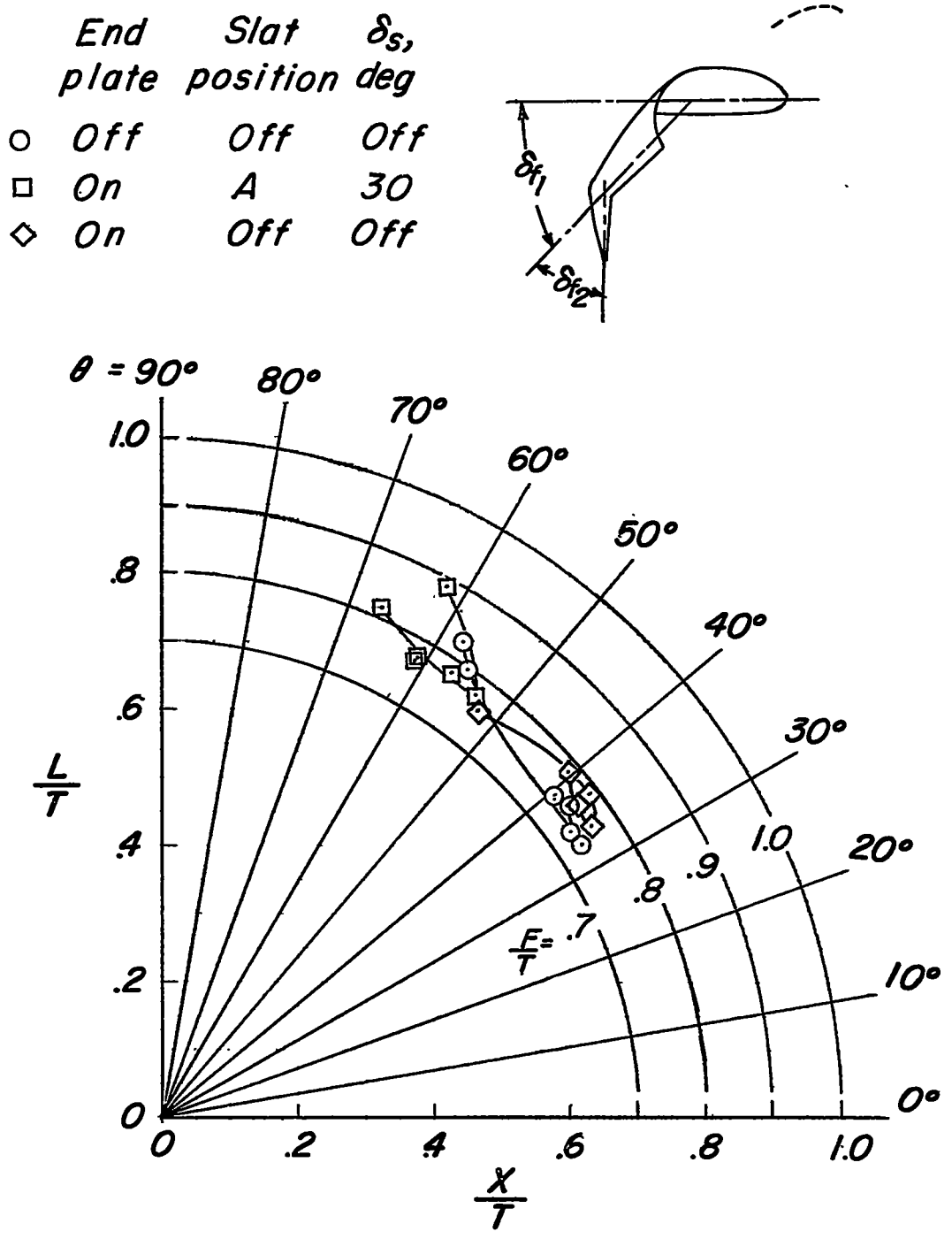

(d) Summary of turning effectiveness. h/D variable.

Figure 10.- Concluded.

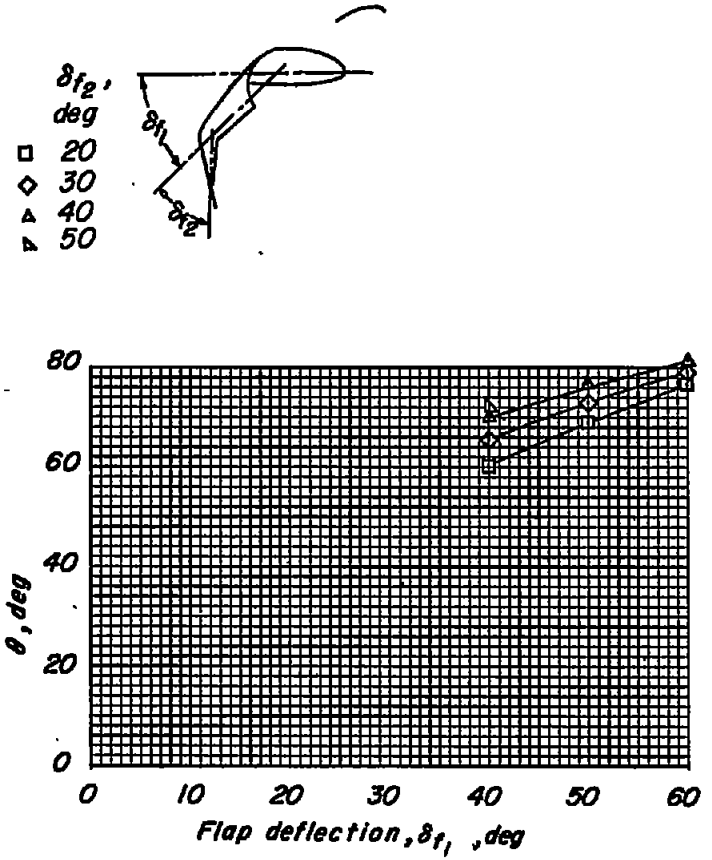

(a) Turning angle.

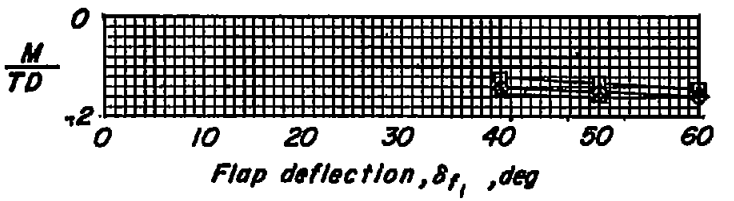

(b) Pitching moment.

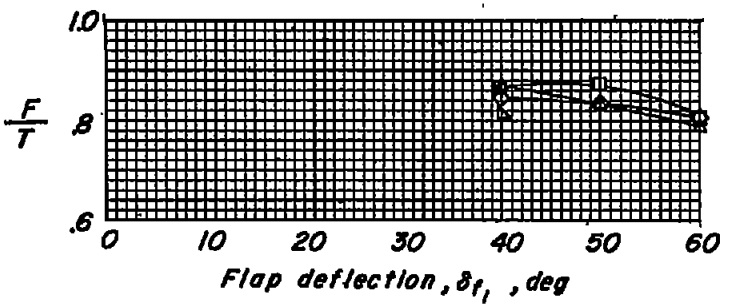

(c) Ratio of resultant force to thrust.

Figure 11.- Effect of flap deflection. Slat position A; end plate on; chord-extension on; no ground board; $\delta_s = 20^{\circ}$.

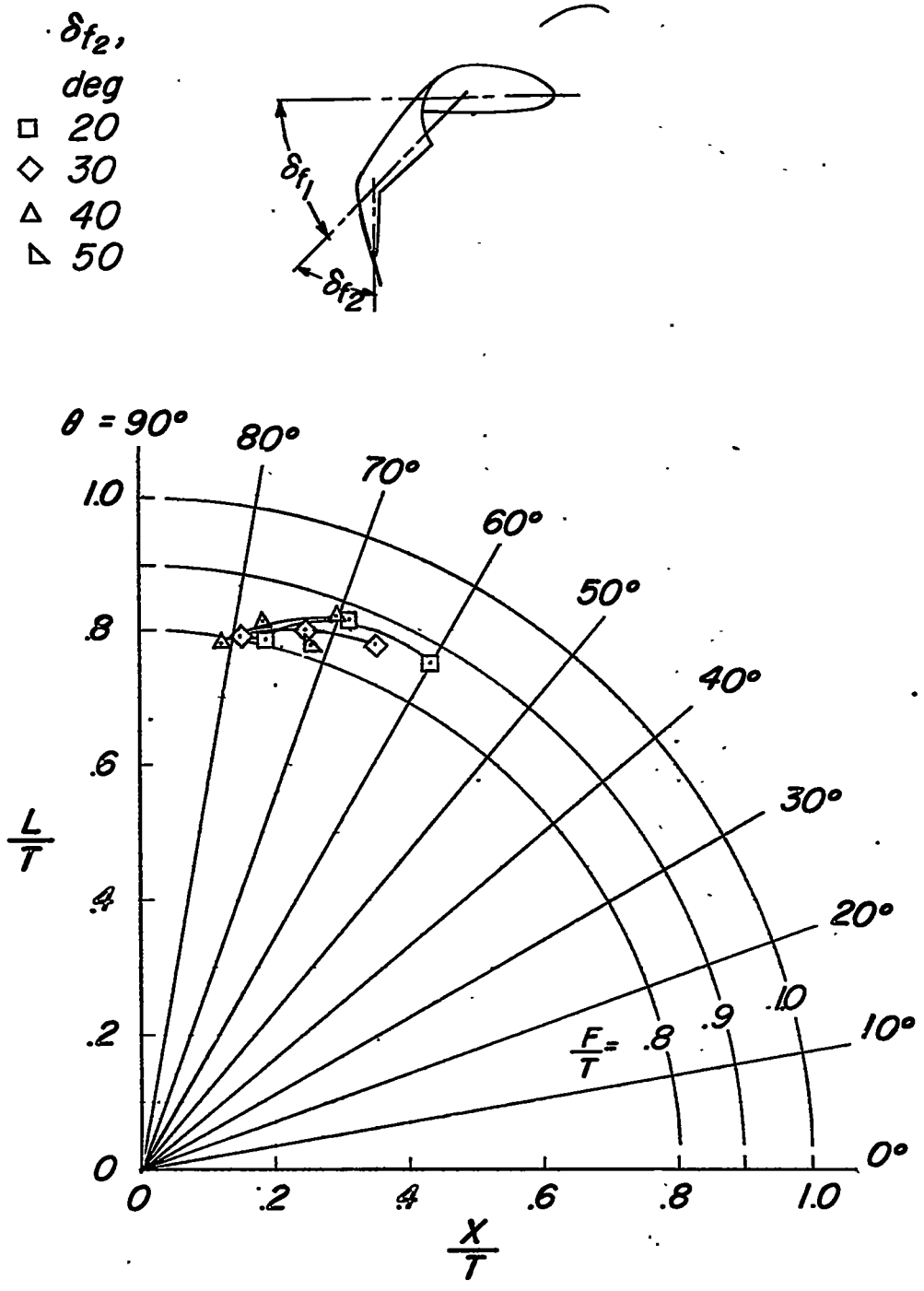

(d) Summary of turning effectiveness. δ_{f_1} variable.

Figure 11.- Concluded.

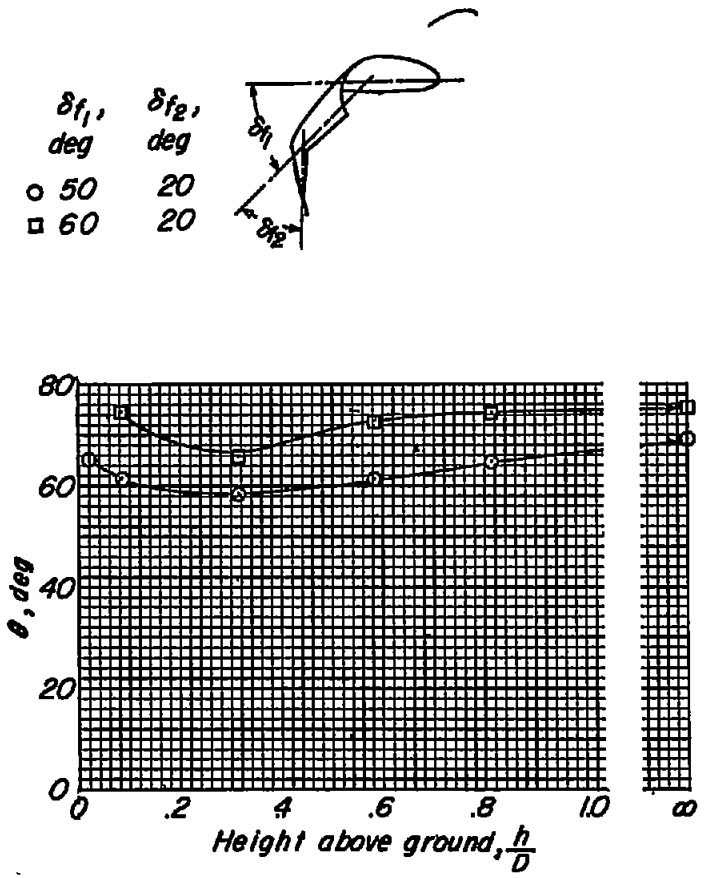

(a) Turning angle.

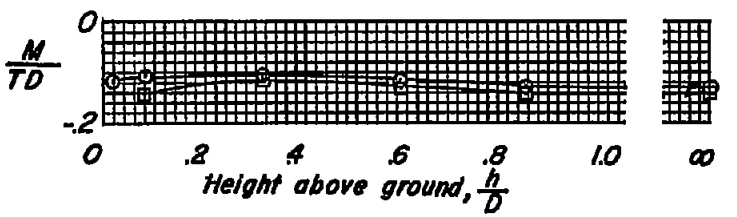

(b) Pitching moment.

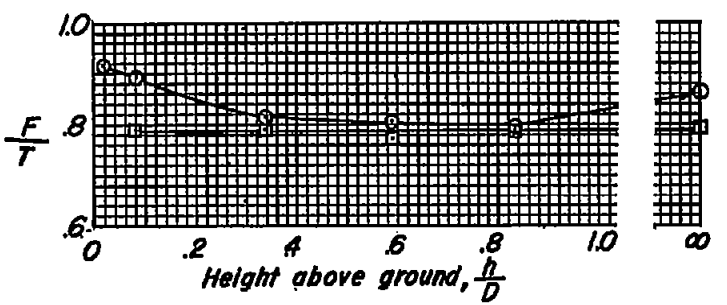

(c) Ratio of resultant force to thrust.

Figure 12.- Effect of height above the ground. Slat position A; end plate on; chord-extension on; $\delta_s = 20^\circ$.

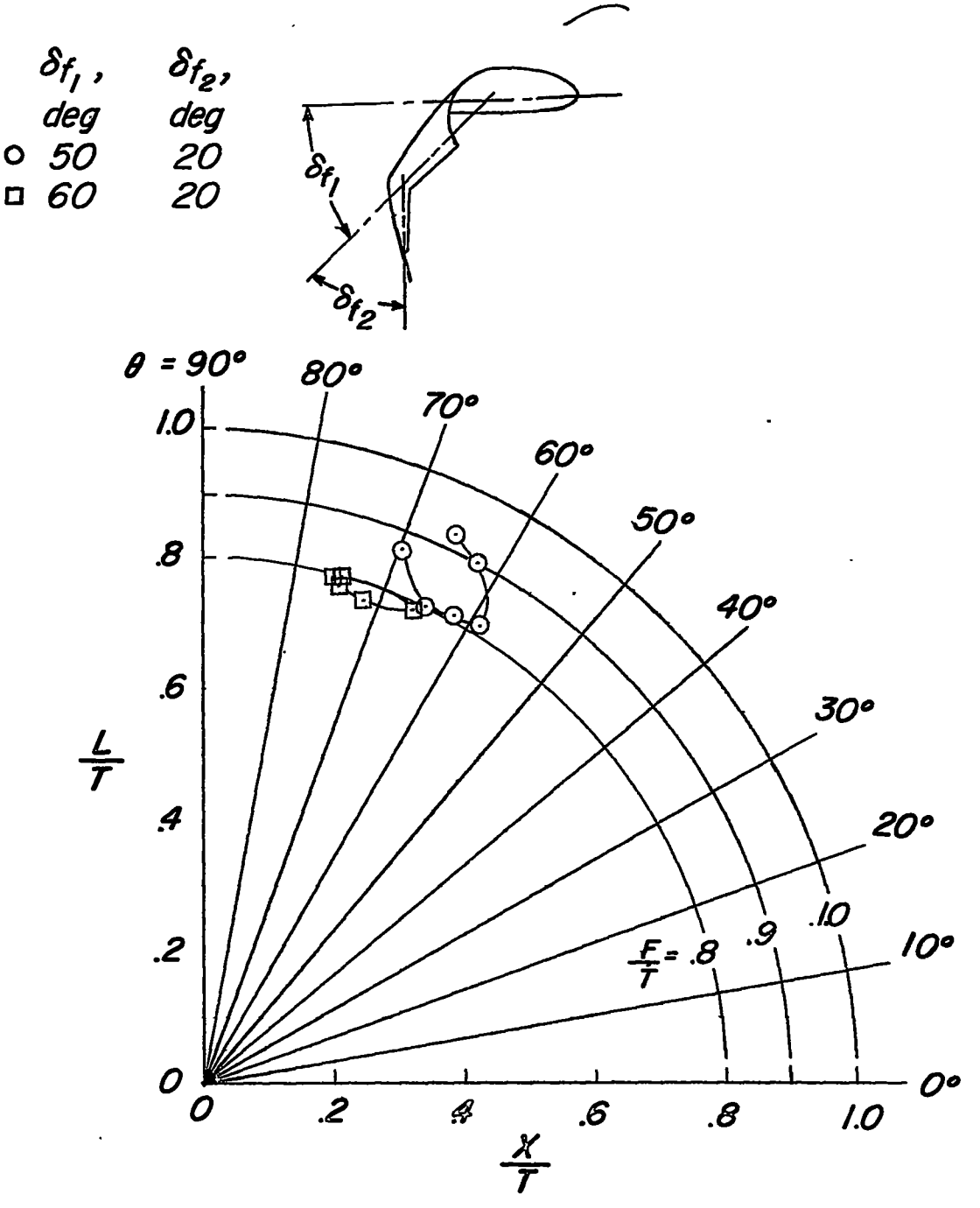

(d) Summary of turning effectiveness. h/D variable.

Figure 12.- Concluded.