3816

[redacted]

Copy 18
RM E55H22

NACA RM E55H22

NACA

CASE FILE COPY

RESEARCH MEMORANDUM

FREE-JET PERFORMANCE OF SEVERAL CONFIGURATIONS OF THE XRJ43-MA-3 RAM-JET ENGINE

By John E. McAulay and Carl E. Campbell

Lewis Flight Propulsion Laboratory
Cleveland, Ohio

CLASSIFICATION CHANGED
To Unclassified
By authority of NASA CCN-2
Date 4/1/63
mo

SPECIAL RELEASE
Transmitted on _____ not to be indexed, referenced, or given further distribution without approval of NACA.

CLASSIFIED DOCUMENT

This material contains information affecting the National Defense of the United States within the meaning of the espionage laws, Title 18, U.S.C., Secs. 793 and 794, the transmission or revelation of which in any manner to unauthorized person is prohibited by law.

NATIONAL ADVISORY COMMITTEE FOR AERONAUTICS

WASHINGTON

[redacted]

DECLASSIFIED

NATIONAL ADVISORY COMMITTEE FOR AERONAUTICS

RESEARCH MEMORANDUM

FREE-JET PERFORMANCE OF SEVERAL CONFIGURATIONS OF THE XRJ43-MA-3 RAM-JET ENGINE

By John E. McAulay and Carl E. Campbell

3816

CK-1

SUMMARY

A free-jet investigation of the performance of the XRJ43-MA-3 ram-jet engine has been conducted in an altitude test chamber at the NACA Lewis laboratory. As part of this investigation the engine performance and rich blow-out limits of the standard engine, several step-flame-holder, and the isentropic-inlet configurations were evaluated. With the standard engine configuration, which employed an annular V-gutter flameholder and a single-50°-cone-inlet diffuser, the effect of yaw, diffuser rotation, and small changes in inlet and exit areas were investigated. The data were obtained primarily at altitudes of 50,000 and 60,000 feet, angles of attack between ±7°, inlet-air temperatures of 816° R (Miami hot day) and 740° R (Miami cold day), and at a Mach number of 2.35.

Engine yaw of ±2° or a diffuser rotation of 45° with the standard engine configuration had no appreciable effect on either engine performance or rich blow-out limits. Small changes in exit or inlet area of the standard engine configuration did not materially increase the maximum thrust available. Screeching combustion was present with this configuration, particularly at the higher pressure levels and fuel-air ratios investigated.

Because of the increased diffuser pressure recovery available with the isentropic inlet, this configuration afforded higher values of internal-thrust coefficient and a wider range of fuel-air ratio operating limits than the standard engine configuration (50°-single-cone inlet). These gains, however, would be reduced measurably as a result of characteristically higher drag associated with isentropic inlets. The step-flameholder configuration had higher rich blow-out limits and combustor pressure ratios than the standard engine configuration. Thus, the peak net-thrust coefficient of the step-flameholder configuration was higher than that of the standard engine configuration, although the former operated at lower combustion efficiencies. Unlike the standard engine or

DECLASSIFIED

isentropic-inlet configuration, the rich blow-out limits of the step-flameholder configuration were nearly unaffected by angle of attack.

INTRODUCTION

A free-jet investigation of the performance of the XRJ43-MA-3 ram-jet engine has been conducted at the NACA Lewis laboratory at the request of the Air Research and Development Command of the U.S. Air Force. The investigation is part of the development program for the "Bomarc" ground-to-air interceptor-type missile. The interim "Bomarc" missile, toward which this investigation was directed, requires engine operation over a range of flight Mach numbers from 2.2 to 2.7, at altitudes from 30,000 to 65,000 feet, and with inlet temperatures corresponding to Miami hot day and Miami cold day. Because the missile is the interceptor type, high thrust, rather than low specific fuel consumption, is of primary interest. Engine specifications require the engine to produce near-maximum thrust over an angle-of-attack range from -4° to $+4^{\circ}$ and be capable of withstanding maneuvers to angles of attack of $\pm 7^{\circ}$ without combustion blow-out.

3816

As part of the investigation, several variations in engine orientation and configuration were evaluated. Because flight installations were to be utilized with the diffuser orientated in two different circumferential positions and because the diffuser innerbody is supported by struts, it was deemed necessary to investigate the effect of diffuser rotation and yaw on the engine performance and rich blow-out limits. In references 1 to 3, which report the performance of the standard engine configuration, the maximum fuel-air ratio and, hence, the maximum thrust were found to be limited by diffuser instability and rich blow-out. In an effort to obtain a quick fix that would extend the operational limits of the engine and thereby increase the maximum thrust, an exit nozzle about 2-percent larger and an inlet about $1\frac{1}{2}$-percent smaller than those of the standard engine configuration were evaluated. An investigation was also made of the performance and operational limits that were obtainable with more extensive changes to the standard engine configuration, namely the use of step-type flameholders and an isentropic inlet.

It is the purpose of this report to compare the performance and rich blow-out limits of the various engine configurations and diffuser orientations with the basic or standard engine configuration. Most of the data were obtained at altitudes of 50,000 and 60,000 feet at nominal inlet-air temperatures of 740° R and 816° R (Miami cold and hot days above the tropopause at a Mach number of 2.35) over a range of angles of attack from $+7^{\circ}$ to -7°. All the data are given in tabular form except for the standard engine configuration. Only the data necessary to make the comparisons are presented in graphical form.

DECLASSIFIED

3816

CX-1 back

APPARATUS

Installation

The installation of the XRJ43-MA-3 ram-jet engine in the altitude test chamber is shown in figure 1. Dried air (approx. 9 grains of moisture per pound of air) entered the plenum chamber at the required temperature and pressure and passed through the various flow equalizers, which smoothed the inlet profiles. The air was accelerated to the desired Mach number by means of a supersonic nozzle. Part of the air entered the engine and the rest was bypassed through the jet diffuser into the test chamber. A shadowgraph was used to observe the engine-inlet shock pattern, and combustion in the engine was observed through a periscope located downstream of the exhaust nozzle.

Angles of attack were simulated by pivoting the supersonic nozzle about an axis on the engine centerline 5-inches upstream of the cowl lip.

Engine

A photograph of the heavy-duty water-cooled engine installed in the test chamber and a sectional view of the engine in the test chamber are shown in figures 2 and 3, respectively. The following table summarizes the various engine configurations and diffuser orientations investigated. The maximum nominal combustion-chamber diameter was 28 inches for all configurations.

Configuration or orientation	Inlet diffuser[a]	Fuel injection system	Flame-holder	Exit
Standard engine	$\frac{A_0}{A_3} = 0.403$; 50° cone 45° main longeron	20 fuel nozzles to inner manifold, 16 fuel nozzles to outer manifold	Annular V-gutter	$\frac{A_5}{A_3} = 0.703$ Convergent-divergent
Standard engine (modified inlet)	Same except inlet is 0.397			
Standard engine (modified exit)	$\frac{A_0}{A_3} = 0.403$; 50° cone 45° main longeron			$\frac{A_5}{A_3} = 0.719$ Convergent-divergent
Standard engine (±2° yaw)				$\frac{A_5}{A_3} = 0.703$ Convergent-divergent
Standard engine (45° diffuser rotation)	Same except 0° main longeron			
Step flame-holder A	$\frac{A_0}{A_3} = 0.403$; 50° cone 45° main longeron	12 fuel nozzles to inner manifold, 24 fuel nozzles to outer manifold	Step flame-holder A	
Step flame-holder B			Step flame-holder B	
Step flame-holder C		Same with outer and inner fuel nozzles moved $2\frac{1}{2}$" and $2\frac{1}{8}$" downstream respectively	Step flame-holder C	
Step flame-holder D		Same with outer fuel nozzles moved $2\frac{1}{2}$" upstream	Step-flame-holder D	
Isentropic inlet	$\frac{A_0}{A_3} = 0.438$; isentropic 45° main longeron	20 fuel nozzles to inner manifold, 16 fuel nozzles to outer manifold	Annular V-gutter	

[a]The so-called "main longeron" is the one which houses the air scoop for the turbine and the fuel lines that pass from the missile to the engine. The circumferential location of this longeron is measured in degrees counter-clockwise from a vertical centerline as viewed from upstream. It was a matter of convenience to rotate the engine only ahead of engine station 96 (just downstream of the flameholder) inasmuch as the combustion chamber and exit nozzle are symmetrical.

DECLASSIFIED

Inlet diffusers. - A photograph of the single-50°-cone-inlet diffuser is shown in figure 4(a). Both the 0.403 and the 0.397 inlets were designed for an intercept Mach number of 2.55. A photograph of the isentropic-inlet diffuser is presented in figure 4(b). The projected area of the inlet for this diffuser was 0.438 of the combustion-chamber area.

The innerbody was supported by three equi-spaced longerons. Approximately 1 percent of the engine air flow was bled overboard by an air scoop through the main longeron whose projected frontal area was less than the other two longerons. This air is intended to drive a turbine fuel pump in the flight engine. A grid, the purpose of which was to improve the uniformity of the diffuser flow, was composed of two-dimensional airfoil sections and had a blockage of about 38 percent. (See figs. 3 and 5.)

3816

Flameholders and fuel-injection systems. - The fuel-system flameholder combination used with all configurations except the step-flameholder configurations is shown schematically in figure 6. This fuel-system flameholder combination employed an annular V-gutter flameholder having a blockage of about 52 percent (fig. 7). The axial location of the flameholder is shown in figures 3 and 6. The fuel system supplied fuel through two manifolds, one which feeds 12 nozzles on the inner ring and four pairs of nozzles mounted at a radius outside the outer ring (figs. 5 and 6). The other manifold feeds 16 nozzles on the outer ring.

The fuel-system flameholder combinations used with all the step-flameholder configurations is shown in figure 8. This figure also shows the axial location of the flameholder and fuel system. The step flameholder for configuration D which has about 35 percent blockage is shown in figure 9. All the step flameholders had a perforated outer skirt. The perforations provided a means of cooling the skirt and also may have aided in suppressing screech. In the fuel system used with the step flameholders, fuel was supplied through two manifolds, one feeding 12 nozzles on the inner ring, and the other feeding 24 nozzles on the outer ring.

All the fuel nozzles were of the spring-loaded pintle-type (i.e., variable area). A propane ignitor was used for ignition and was located in the trailing end of the innerbody.

Combustion chamber and exhaust nozzle. - The combustion chamber had a maximum nominal diameter of 28 inches and was water-cooled from the region of the flameholder to the exhaust-nozzle exit. A converging-diverging exhaust nozzle was employed having a minimum area of 0.703 of the combustion-chamber area, except for the configuration where it was 0.719.

Air-flow calibrator. - In order to obtain an engine air-flow calibration and to determine the diffuser cold-flow pressure recoveries, the engine tail pipe between engine stations 96 and 114 was replaced by a calibrator section 139 inches long. A sectional view of the air-flow calibrator is shown in figure 10. For this configuration the diffuser back pressure was varied by means of a butterfly valve. Screens downstream of the valve were provided to insure flat total-pressure profiles at the exhaust nozzle and thus allow accurate air-flow measurements at that station. The exhaust nozzle was always choked.

3816

Instrumentation

The free-stream total pressure and temperature were measured at the supersonic-nozzle inlet, station 0 (fig. 1). The cross-sectional view of the engine in figure 3 shows the location of total-pressure instrumentation at stations 2 and 5. During the entire investigation, static wall taps were located throughout the length of the diffuser. For the configurations using the V-gutter flameholder the total pressure at the diffuser outlet was obtained from the rakes at station 2. When the step flameholders were installed, it was necessary to remove the station 2 total-pressure rakes. Therefore, for this portion of the investigation, diffuser-outlet total pressure was calculated using measurements of air flow and static pressure at the diffuser outlet (see appendix B).

All pressures were measured by mercury-filled manometers that were referenced to atmospheric pressure. Manometer readings were photographically recorded, and the temperatures were recorded by a self-balancing potentiometer. Fuel flow to each fuel manifold was measured by positive-displacement electronic flow meters, which were calibrated with rotameters.

PROCEDURE

The fuel control of the XRJ43-MA-3 ram-jet engine schedules three modes of operation during flight. These modes are referred to as inner-ring-only, dual-pressure, and single-pressure fuel injection. With the inner-ring-only operation the fuel is injected through the fuel nozzles fed by the inner-ring manifold. At each flight condition, data were usually taken at only a single inner-ring fuel-air ratio which corresponded to the nominal inner-ring setting for dual-pressure fuel injection. With the annular V-gutter flameholder this inner-ring fuel-air setting was either 0.033 or 0.037. With the step-flameholder configurations, the inner-ring fuel-air ratio was set at values from 0.021 to 0.025. With dual-pressure operation the fuel flow to the inner manifold was held at the aforementioned values, and the over-all fuel-air ratio was modulated by varying only the fuel flow to the outer manifold from

DECLASSIFIED

zero to a value that produced equal pressures in the inner and outer manifolds. For single-pressure operation fuel was injected through all the fuel nozzles over a range of fuel flows with equal fuel pressure in the two fuel manifolds. The following table gives the three modes of fuel injection and the approximate fuel-air ratio ranges obtained with each.

3816

Fuel injection	Annular V-gutter flameholder	Step flameholder
	Fuel-air ratio range	Fuel-air ratio range
Inner-ring only	0.033 or 0.037	0.021, 0.023, 0.025
Dual-pressure	0.033 to 0.061 or blow-out 0.037 to 0.067 or blow-out	0.021 to 0.063 or blow-out 0.025 to 0.075 or blow-out
Single-pressure	0.05 to blow-out	0.05 to blow-out

Data were obtained (although not necessarily for each configuration at all the inlet conditions) at a Mach number of 2.35, altitudes of 50,000 and 60,000 feet, nominal inlet temperatures of 816° R (Miami hot day) and 740° R (Miami cold day), and angles of attack of 0°, ±4°, and ±7°. In addition, data were obtained with the step-flameholder configuration D at a similar range of altitudes, inlet temperatures, and angles of attack at a Mach number of 2.50 and at an additional altitude of about 67,000 feet at both 2.35 and 2.50 Mach numbers. The exact conditions at which the data were taken with each configuration are shown in tables I and II.

The rich blow-out data were obtained by slowly increasing the fuel flow and manually recording the parameters at blow-out which were pertinent. In most cases blow-out limits obtained at any given inlet condition were substantiated by two data points.

Clear unleaded gasoline with a hydrogen-carbon ratio of 0.182 and a lower heating value of 18,800 Btu per pound was used. The symbols used and the methods of calculation are listed in appendixes A and B, respectively.

RESULTS AND DISCUSSION

Two combustion phenomena were encountered throughout the investigation and will be discussed before considering each configuration individually. The first of these is combustion screech, which occurred primarily with the V-gutter flameholder. Screech, which had a measured frequency of about 700 cycles per second, caused no noticeable damage to

the heavy-duty engine or its components. The effect of screech on engine performance can best be discussed by considering what happens to a pressure downstream of the diffuser grid as fuel flow is changed. This has been done in figure 11 where a schematic diagram of an XY recorder plot is presented. Pressure is shown as a function of fuel flow for essentially steady-state conditions. At low fuel-air ratios (low fuel flows) the combustor is not in screech (point A), and as fuel-air ratio is raised, the pressure level in the engine increases in a normal manner. A fuel-air ratio is finally reached (point B) at which screech occurs, and almost instantaneously the pressure level in the engine rises to a higher level (point C) without a change in fuel-air ratio. With the combustor in screech a further increase in fuel-air ratio raises the pressure to a condition near blow-out (point D). As fuel-air ratio is decreased, the pressure in the engine retraces its steps to point C. A further reduction in fuel-air ratio below this point, however, does not reduce the pressure level to point B. Instead the combustor continues in screech, and the engine pressure level remains high until the fuel-air ratio is reduced to point E. At this condition the combustor screech ceases, and the pressure decreases to point F, which is back on the original non-screech curve AB. Thus, at the intermediate fuel-air ratios two distinct levels of performance are possible. It also might be pointed out that the fuel-air ratio at which screech commences sometimes varies for identical inlet conditions resulting in occasional inconsistencies in the engine performance and rich blow-out limits.

A second combustor phenomenon which occurred exclusively with the step-flameholder configurations was called combustion buzz and had a frequency of about 90 cycles per second. It occurred particularly with step-flameholder configurations A and B and was largely eliminated from configurations C and D. Combustion buzz generally occurred at fuel-air ratios above 0.050 and did not affect the engine performance in the same discontinuous manner that screech did. However, buzz did result in high-amplitude oscillations in the diffuser normal-shock system which at certain conditions made the diffuser visually appear to be subcritical even though the mean shock position was supercritical. A further mention of this phenomenon, namely shock oscillation due to combustor buzz, will be made in later sections of this report.

Effect of yaw, diffuser rotation, and variations of inlet and exit areas on the performance and rich blow-out limits of the standard engine configuration. - Engine performance with dual-pressure fuel injection is presented in figure 12 showing the effect of yaw, diffuser rotation, and small variations of inlet and exit area on the standard engine configuration at an altitude of 60,000 feet on a Miami cold day at an angle of attack of 0°. These data were obtained by increasing fuel flow successively from low to high values. Combustion efficiency, exhaust-gas total pressure, combustor pressure ratio, diffuser pressure recovery

DECLASSIFIED

and net-thrust coefficient are presented as functions of fuel-air ratio. The cross-hatched bars in this figure indicate the fuel-air ratios at which screech began as fuel flow was increased, and the fuel-air ratios at which rich blow-out occurred. The data show that the effect of yaw (up to 2°) and a diffuser rotation of 45° is negligible except at +2° yaw in the screech region, where the performance is slightly reduced. Increasing the exit-area ratio from 0.703 to 0.719 of the combustion-chamber area had no discernible effect on combustion efficiency at a given fuel-air ratio but did reduce the diffuser pressure recovery and in the screech region reduced the combustor pressure ratio. The lower pressure at the exhaust nozzle resulted in a reduction in the net-thrust coefficient on the order of 0.02 to 0.03. This reduced pressure stems from the increased exit area while maintaining a constant inlet temperature and air flow. Decreasing the inlet area from 0.403 to 0.397 of the combustion-chamber area had no measurable effect on the engine performance.

3816

Engine rich blow-out data for these same engine modifications and orientations for two modes of fuel injection are presented in figure 13 where blow-out engine pressure recovery, diffuser pressure recovery, and fuel-air ratio are plotted against angle of attack. Rich blow-out limits for several different inlet conditions are presented. Inasmuch as the data at all inlet conditions shown in figure 13 show generally the same result, the discussion will center around the data of figure 13(a), which is for an altitude of 50,000 feet on a Miami hot day with single-pressure-fuel injection. Within the reproducibility of the data, the effect of yaw and diffuser rotation on the engine rich blow-out limits were negligible. Increasing the exit area or decreasing the inlet area generally raised the fuel-air ratio at which blow-out occurred. These higher blow-out fuel-air ratios were more prominent at negative angles of attack. Although the above mentioned area changes increased the blow-out fuel-air ratios, the diffuser and engine pressure recoveries at blow-out were not discernibly different from the standard engine configuration. This insensitivity of diffuser and engine pressure recoveries at blow-out to inlet- and exit-area changes can be explained by the fact that blow-out results from subcritical diffuser buzz (ref. 3). Thus for a given angle of attack, changes in inlet and exit area would not be expected to affect the diffuser or engine blow-out recoveries even though an increased fuel-air ratio is required to drive the diffuser into buzz with a smaller inlet or a larger exit.

CX-2

The data of figure 13 also show that there was a marked change in blow-out fuel-air ratio with angle of attack, particularly with single-pressure fuel injection at an altitude of 50,000 feet (figs. 13(a) and (b)). The reduced effect of angle of attack on fuel-air-ratio blow-out shown in figure 13(c) is primarily a result of decreased combustion efficiency which accompanies an increase in altitude.

The significance of the data shown in figures 12 and 13 may be summarized by considering the data in two groups. First, diffuser rotation and small angles of yaw were found to have a negligible effect on both the engine performance and rich blow-out limits. Second, small changes in inlet and exit area, investigated in an attempt to raise the maximum engine thrust, resulted in small changes in the engine rich blow-out limits. However, extending these limits did not sizably (if at all) increase the maximum thrust, inasmuch as thrust is relatively constant with increasing fuel-air ratio in the screeching region.

3816

Comparison of the performance and rich blow-out limits of four step-flameholder configurations. - The performance of four step-flameholder configurations is compared for a Miami cold day with dual-pressure fuel injection in figure 14 where combustion efficiency, combustor total-pressure ratio, and net-thrust coefficient are presented as functions of fuel-air ratio. The data are for an altitude of 50,000 feet at angles of attack of +4° and +7° and an altitude of 60,000 feet at an angle of attack of 0°. As indicated previously, the four configurations differed in flameholder details, and the axial location of the fuel nozzles varied for configurations C and D from that of the first two configurations. The cross-hatched bars in this figure show the fuel-air ratio at which combustor buzz was encountered as fuel-air ratio was increased. Those which are not cross-hatched did not encounter combustor buzz. The bars also indicate the fuel-air ratio at which rich blow-out occurred. The dip in the combustion-efficiency curve at low fuel-air ratios is associated with very poor burning in the outer-fuel-nozzle zone at these fuel-air ratios. Except at low fuel-air ratios at an altitude of 60,000 feet the combustion efficiency and net-thrust coefficient of configuration D were as good or better than those of the other three configurations. More significant however, is the improvement in the rich blow-out limits of configuration D which permitted this configuration to obtain considerably higher maximum efficiencies and thrust coefficients than those possible with configurations A, B, and C. Thus at the conditions for which the data are presented, configuration D resulted in maximum combustion efficiencies between 0.85 and 0.90 as compared with from 0.63 to 0.80 for the other three configurations. Similarly, the maximum net-thrust coefficients were between 0.80 and 0.90 for configuration D as compared with from 0.55 to 0.80 for configurations A, B, and C.

The maximum fuel-air ratio at which data were obtained with configurations A and B are in some cases designated as subcritical in figure 14. These data had lower combustor heat releases than other data obtained with configurations C and D, which were not designated subcritical. An explanation of this can be found in the previous discussion on combustor buzz which indicated that the normal shock system oscillated. This results in the diffuser normal shock positioning itself instantaneously at points of higher recovery than the steady-state values indicate. It is doubtful if the inlet would have operated subcritically with configuration A and B, either transiently or stably, had it not been for combustor buzz.

DECLASSIFIED

Inasmuch as for all step-flameholder configurations the flameholder blockage and the engine temperature ratio were almost identical, the combustor total-pressure ratio was the same for all configurations at a given fuel-air ratio. Combustor pressure ratios are not presented for configuration D at the lower fuel-air ratios because the calculated station 2 total pressure (diffuser outlet) appeared to be unreliable.

Combustor buzz which was prevalent for configurations A and B was all but eliminated with configurations C and D. No screech was encountered with the step-flameholder configurations except inconsistently at high fuel-air ratios with configuration D.

3816

Typical blow-out limits of the step-flameholder configurations are presented in figure 15 for an altitude of 50,000 feet, on a Miami cold day, and dual-pressure fuel injection. Configuration D had marked superiority over the other three configurations having blow-out fuel-air ratios of about 0.01 higher than the best of the other three configurations. Within the accuracy at which blow-out data were obtained, the diffuser and engine pressure recoveries at blow-out for configuration D were approximately the same as those of the annular-V-gutter-flameholder configuration (see fig. 12). This would indicate that, for configuration D, the blow-out resulted from inlet instabilities (diffuser buzz) as did those of the V-gutter-flameholder configuration. The blow-outs of the other three step-flameholder configurations would then seem to be directly attributable to rich combustion blow-out. However, as indicated previously, shadowgraph films revealed the possibility that combustor buzz in the case of configurations A and B and rough burning (a less noticeable buzz) in the case of configuration C resulted in a pulsating normal shock system which may have initiated diffuser buzz at measured steady-state pressure recoveries below those normally expected. Angle of attack had only a minor effect on the blow-out fuel-air ratios for all the configurations.

CX-2 back

Comparison of the performance of the isentropic-inlet diffuser and the 50°-single-cone inlet. - The maximum diffuser pressure recovery and critical air-flow ratio as functions of angle of attack for the isentropic and 50°-single-cone inlets are presented in figure 16. These curves represent values obtained from faired data curves. The critical air-flow ratio is defined as the ratio of actual air flow at the diffuser inlet to the maximum air flow determined from the projected cowl-lip area and free-stream conditions at the Mach number in question. The isentropic inlet had a peak diffuser pressure recovery of from 0.10 to 0.13 higher than the 50°-single-cone inlet depending on the angle of attack. However, the critical air-flow ratio of the isentropic inlet was about 0.04 less than that of the 50°-single-cone inlet. This reduction in critical air-flow ratio (increased spillage) for the isentropic inlet will result in an increase in the diffuser drag. Even if the critical air-flow ratio were the same for the two inlets, the

DECLASSIFIED

isentropic inlet would have greater drag due to the increased projected area of the cowl lip that is necessary to accommodate the increased flow angles associated with this type of inlet. The Mach-number distribution at the diffuser outlet for the isentropic-inlet diffuser did not differ greatly from those for the 50°-single-cone-inlet diffuser.

Experience gained during the investigation indicated that, at angles of attack greater than 4°, the isentropic inlet had only a small margin of stable subcritical operation as compared to that for the 50°-single-cone inlet. In addition, once this small margin of stable operation was exceeded, the recovery of the isentropic inlet decreased discontinuously to very low values, while in the case of the single-cone inlet even though diffuser buzz might be encountered, the average values of pressure recovery remained relatively high.

Comparison of the engine performance and rich blow-out limits of the standard engine, step-flameholder D, and isentropic-inlet configurations. - A comparison of the engine performance of the standard engine, step-flameholder D, and isentropic-inlet configurations is presented in figure 17 where combustion efficiency, diffuser pressure recovery, combustor total-pressure ratio, and net-thrust coefficient are shown as functions of fuel-air ratio. The data are presented for a Miami cold day with dual-pressure fuel injection. The data of figure 17(a) were obtained at an altitude of 60,000 feet at 0° angle of attack, while the data of figure 17(b) were obtained at an altitude of 50,000 feet at a +4° angle of attack.

In general, at a given fuel-air ratio the combustion efficiency, diffuser-pressure recovery, and net-thrust coefficient were highest for the isentropic-inlet configuration and lowest for the step-flameholder configuration. The higher net-thrust coefficient obtained with the isentropic-inlet configuration was due to increase in diffuser-pressure recovery attained with this type of inlet. The step-flameholder configuration had the highest combustor total-pressure ratio of the three configurations, due primarily to the reduced blockage of the step flameholder. Even though the net-thrust coefficient of the standard engine configuration was generally higher at a given fuel-air ratio than that of the step-flameholder configuration, the peak net-thrust coefficient of the latter configuration was higher due to its increased rich blow-out limit and combustor pressure ratio.

The rich blow-out fuel-air ratio and engine pressure recovery of the three configurations are compared in figure 18. These data were obtained at an altitude of 50,000 feet on a Miami cold day. The data are for single-pressure fuel injection except for the step-flameholder configuration which was taken with dual-pressure fuel injection. However, the data are considered comparable inasmuch as the blow-outs for

DECLASSIFIED

this configuration all occurred at a fuel-air ratio of about 0.07, which would give approximately equal fuel pressures in both the inner and outer manifolds. At 0° angle of attack the standard engine and the step-flameholder configuration have approximately the same blow-out fuel-air ratio while the isentropic-inlet configuration has a limit somewhat higher. With the assumption of a symmetrical curve of blow-out fuel-air-ratio for the standard engine configuration similar to the data of figure 12, at angles of attack of ±7° the standard engine fuel-air ratio at blow-out is considerably less than the other two configurations, which are about equal. The blow-out limits are least affected by angle of attack for the step-flameholder configuration while in the case of the standard engine configuration a reduction of over 0.02 in blow-out fuel-air ratio occurred as angle of attack was changed from 0° to -7°.

3816

CONCLUDING REMARKS

The free-jet performance of several configurations of the XRJ43-MA-3 ram-jet engine were obtained in an altitude test chamber at the NACA Lewis laboratory. Data obtained with the standard engine configuration at ±2° yaw and with the diffuser rotated 45° showed that these variations had little or no effect on the performance or rich blow-out limits of the standard engine configuration. Increasing the exit area or decreasing the inlet area of this same configuration resulted in only small improvements in the engine rich blow-out limits. These improvements do not appreciably increase the maximum thrust attainable inasmuch as thrust is relatively constant with increasing fuel-air ratio near the engine blow-out limit.

The comparison of an isentropic-inlet diffuser to the 50°-single-inlet diffuser showed that the diffuser pressure recovery could be improved from 10 to 13 points although the critical air-flow ratio declined about four points; however, the gains in diffuser recovery may be offset by increased drag (due partly to the decreased critical-air-flow ratio).

Comparison of the three main configurations indicates that the isentropic-inlet configuration had the highest peak net-thrust coefficient and the standard engine configuration the lowest. The step-flameholder configuration had higher rich blow-out limits and combustor pressure ratios than the standard engine configuration, but it operated at lower combustion efficiencies. In addition, the step-flameholder configuration, which essentially eliminated combustor screech and buzz, had rich blow-out limits that were far less sensitive to angle of attack than the other two configurations.

Lewis Flight Propulsion Laboratory
National Advisory Committee for Aeronautics
Cleveland, Ohio, August 26, 1955

DECLASSIFIED

APPENDIX A

SYMBOLS

The following symbols are used in this report:

A area, sq ft

C coefficient

F thrust

g acceleration due to gravity, 32.17 ft/sec^2

M Mach number

MCD Miami cold day temperature

MHD Miami hot day temperature

P total pressure, lb/sq ft abs

p static pressure, lb/sq ft abs

R gas constant, 53.34 ft-lb/(lb)($^{\circ}$R)

T total temperature, $^{\circ}$R

V velocity, ft/sec

w weight flow, lb/sec

α angle of attack

γ ratio of specific heats

η efficiency

ρ density, lb/cu ft

Subscripts:

a air

c combustion

d discharge

3816

DECLASSIFIED

F thrust

f fuel

g gas

i inner ring

N nozzle

n net

o outer ring

0 stream tube (at free-stream conditions) having same projected area as engine inlet

1 engine inlet

2 diffuser outlet or combustor inlet (measured at engine station 80)

3 combustion chamber

5 exhaust-nozzle throat

6 exhaust-nozzle exit

APPENDIX B

METHODS OF CALCULATION

Engine air-flow calibration. - The engine air flow was determined during nonburning conditions with the air-flow calibrator (refs. 1 to 3) from the equation

$$w_{a,5} = \frac{P_5}{\sqrt{T_5}} A_5 C_{d,5} \sqrt{\frac{\gamma_5 g}{R}} \left(\frac{2}{\gamma_5 + 1}\right)^{\frac{\gamma_5+1}{2(\gamma_5-1)}}$$

3816

From information supplied by the manufacturer and small-scale nozzle tests, a nozzle-discharge coefficient $C_{d,5} = 0.975$ was used. Also, $A_5 = 2.996$ square feet, and $\gamma_5 = 7/5$. Because $T_0 = T_5$ for cold-flow operation

$$\frac{w_{a,5}\sqrt{T_0}}{P_0} = 1.553 \frac{P_5}{P_0}$$

During supercritical diffuser operation, the value of $w_{a,5}\sqrt{T_0}/P_0$ is a constant at a given angle of attack, inlet temperature, and flight Mach number. The values of this mass-flow constant as a function of these parameters are given in references 1 to 3.

Engine air flow. - Engine air flow during burning conditions was calculated from the values of T_0 and P_0 and the mass-flow constants that were determined during the air-flow calibration. Inasmuch as very little data were obtained in the subcritical operating region and even then the margin was quite small, no corrections in the mass-flow constants were assumed for subcritical diffuser operation.

Diffuser-outlet total pressure. - In the cases where it was necessary to calculate a diffuser-outlet total pressure (step-flameholder configurations and other configurations when they were compared) the total pressure was calculated at engine station 72 using the equation

$$P = p\left(1 + \frac{\gamma - 1}{2} M^2\right)^{\frac{\gamma}{\gamma-1}}$$

DECLASSIFIED

where Mach number was obtained from the following relation

$$M\left(1 + \frac{\gamma - 1}{2} M^2\right)^{1/2} = \sqrt{\frac{R}{\gamma g}} \frac{w_g\sqrt{T}}{pA}$$

Inlet mass-flow ratio. - The inlet mass-flow ratio was calculated to present the diffuser performance. A small quantity of air was bled overboard to simulate that used by the air-turbine-driven fuel pump in flight. The air bleed was determined to be about one percent of the engine air flow, so that

3816

$$\frac{w_{a,5}}{w_{a,1}} = 0.99$$

Since

$$\frac{w_{a,5}}{w_{a,1}} = \frac{1.553 \dfrac{P_5}{\sqrt{T_0}}}{\left(\dfrac{w_{a,1}}{w_{a,0}}\right) A_0 P_0 M_0 \sqrt{\dfrac{\gamma_0 g}{RT_0}} \left[1 + \dfrac{\gamma_0 - 1}{2} M_0^2\right]^{\frac{\gamma_0+1}{2(\gamma_0-1)}}}$$

CX-3

where $A_0 = A_1 = 1.719$ square feet, and $\gamma_0 = 7/5$, then

$$\frac{w_{a,1}}{w_{a,0}} = 0.992 \frac{P_5}{P_0} \frac{\left(1 + 0.2M_0^2\right)^3}{M_0}$$

where values of P_5/P_0 were determined from the air-flow calibration.

Exhaust-gas temperature. - The exhaust-gas temperature was calculated from the following equation:

$$T_5 = \left[\frac{P_5 A_5 C_{d,5} g}{w_{g,5}}\right]^2 \frac{\gamma_5}{gR} \left(\frac{2}{\gamma_5 + 1}\right)^{\frac{\gamma_5+1}{\gamma_5-1}}$$

where $A_5 = 2.996$ square feet, $\gamma_5 = 9/7$, and $C_{d,5} = 0.975$.

DECLASSIFIED

Combustion efficiency. - The combustion efficiency was defined as

$$\eta_c = \frac{T_5 - T_0}{\Delta T_{ideal}}$$

where ΔT_{ideal} was obtained from reference 4, T_0, and the fuel-air ratio.

Net-thrust coefficient. - The net-thrust coefficient defined as

3816

$$C_{F,n} = \frac{F_n}{\frac{\rho_0}{2g} V_0^2 A_3}$$

where the net thrust is defined as

$$F_n = \eta_N \frac{w_{g,6}}{g} V_6 + (\eta_N p_6 - p_0)A_6 - \frac{w_{a,1}}{g} V_0$$

$$= \eta_N p_6 A_6\left(1 + \gamma_6 M_6^2\right) - \frac{\gamma_0 p_0 A_0 M_0^2 w_{a,1}}{w_{a,0}} - p_0 A_6$$

Since

$$\frac{\rho_0 V_0^2}{2g} = \frac{\gamma_0 p_0 M_0^2}{2}$$

then

$$C_{F,n} = \frac{\eta_N p_6 A_6\left(1 + \gamma_6 M_6^2\right) - \frac{\gamma_0 p_0 A_0 M_0^2 w_{a,1}}{w_{a,0}} - p_0 A_6}{\frac{\gamma_0}{2} p_0 M_0^2 A_3}$$

With $A_3 = A_6$ and the assumption that $P_6 = P_5$,

$$C_{F,n} = \left[\frac{2\eta_N}{\gamma_0 M_0^2}\left(\frac{p_6}{P_6}\right)\left(\frac{P_0}{p_0}\right)\left(1 + \gamma_6 M_6^2\right)\right]\frac{P_5}{P_0} - 2\left(\frac{A_0}{A_6}\right)\left(\frac{w_{a,1}}{w_{a,0}}\right) - \frac{2}{\gamma_0 M_0^2}$$

DECLASSIFIED

Since $A_1 = 1.719$ square feet, $A_5 = 2.996$ square feet, $A_6 = 4.276$ square feet, $\gamma_0 = 7/5$, $\gamma_6 = 9/7$, $C_{d,5} = 0.975$, and $\eta_N = 0.97$,

$$C_{F,n} = \left[\frac{1.316}{M_0^2}\left(1 + \frac{\gamma_0 - 1}{2} M_0^2\right)^{\frac{\gamma_0}{\gamma_0 - 1}}\right]\frac{P_5}{P_0} - 0.8042\,\frac{w_{a,1}}{w_{a,0}} - \frac{1.429}{M_0^2}$$

3816

The quantity $w_{a,1}/w_{a,0}$ was assumed to be constant for each inlet temperature, angle of attack, and flight Mach number as previously shown.

REFERENCES

1. Smith, Ivan D., and Prince, William R.: Preliminary Free-Jet Performance of XRJ43-MA-3 Ram-Jet Engine at Mach Number of 2.50. NACA RM E55C28, 1955.

2. Welna, Henry J., and Campbell, Carl E.: Preliminary Free-Jet Performance of XRJ43-MA-3 Ram-Jet Engine at a Mach Number of 2.70. NACA RM E55D08, 1955.

3. Koffel, William K., Farley, John M., and Prince, William R.: Free-Jet Performance of XRJ43-MA-3 Ram-Jet Engine at Simulated Flight Mach Number of 2.35. NACA RM E55E12, 1955.

4. Mulready, Richard C.: The Ideal Temperature Rise Due to the Constant Pressure Combustion of Hydrocarbon Fuels. M.I.T. Meteor Rep. UAC-9, Res. Dept., United Aircraft Corp., July 1947. (BuOrd Contract NOrd 9845.)

CX-3 back

3816

TABLE I. - PERFORMANCE OF

(a) Standard engine (yaw,

Run	Altitude, ft	Angle of attack, α, deg	Free-stream total temperature, T_0, °R	Free-stream total pressure, P_0, lb/sq ft abs	Diffuser outlet total pressure, P_2, lb/sq ft abs	Exhaust-nozzle total pressure, P_5, lb/sq ft abs	Inner-ring fuel flow, $w_{f,i}$, lb/sec	Outer-ring fuel flow, $w_{f,o}$, lb/sec	Total fuel flow, w_f, lb/sec	Combustor critical air flow, $w_{a,5}$, lb/sec	Inner-ring fuel-air ratio, $w_{f,i}/w_{a,5}$	Outer-ring fuel-air ratio, $w_{f,o}/w_{a,5}$
Inner-ring-only												
1	60,000	0	736	2036	1026	840	1.00	0	1.00	27.42	0.0365	0
2		4	736	2027	1012	832	1.02	0	1.02	27.22	.0375	0
Dual-pressure												
3	60,000	0	739	2040	1123	929	1.02	0.18	1.20	27.43	0.0372	0.0066
4			740	2043	1209	1009	1.01	.32	1.33	27.45	.0368	.0117
5			740	2043	1276	1069	1.00	.47	1.47	27.45	.0364	.0171
6			736	2026	1365	1124	1.02	.61	1.63	27.29	.0374	.0224
7			736	2030	1366	1129	1.01	.70	1.71	27.34	.0369	.0256
8		4	736	2032	1105	915	1.00	.18	1.18	27.29	.0366	.0066
9			736	2027	1181	991	1.01	.32	1.33	27.22	.0371	.0118
10			736	2026	1245	1047	1.00	.47	1.47	27.21	.0368	.0173
11			736	2029	1299	1085	1.00	.58	1.58	27.25	.0367	.0213
Single-pressure												
12	50,000	0	822	3281	2219	1817	----	----	3.22	42.29	------	------
13		4	816	3279	2183	1813	----	----	2.60	42.29	------	------
14		-4	817	3285	2234	1853	----	----	2.89	42.42	------	------

(b) Standard engine (yaw,

Run	Altitude, ft	Angle of attack, α, deg	Free-stream total temperature, T_0, °R	Free-stream total pressure, P_0, lb/sq ft abs	Diffuser-outlet total pressure, P_2, lb/sq ft abs	Exhaust-nozzle total pressure, P_5, lb/sq ft abs	Inner-ring fuel flow, $w_{f,i}$, lb/sec	Outer-ring fuel flow, $w_{f,o}$, lb/sec	Total fuel flow, w_f, lb/sec	Combustor critical air flow, $w_{a,5}$, lb/sec	Inner-ring fuel-air ratio, $w_{f,i}/w_{a,5}$	Outer-ring fuel-air ratio, $w_{f,o}/w_{a,5}$
Inner-ring-only												
1	60,000	0	738	2033	1022	836	1.01	0	1.01	27.34	0.0369	0
2		4	736	2041	995	828	1.01	0	1.01	27.41	.0368	0
Dual-pressure												
3	60,000	0	738	2034	1096	900	1.01	0.17	1.18	27.35	0.0369	0.0062
4			739	2033	1198	998	1.01	.33	1.34	27.33	.0369	.0121
5			738	2036	1381	1140	1.00	.49	1.49	27.38	.0365	.0179
6			739	2037	1383	1147	1.01	.63	1.64	27.38	.0369	.0230
7			740	2037	1366	1135	1.01	.74	1.75	27.36	.0369	.0270
8		4	738	2039	1071	876	.99	.16	1.15	27.39	.0361	.0058
9			737	2039	1150	963	1.00	.30	1.30	27.37	.0365	.0110
10			737	2040	----	1023	1.00	.42	1.42	27.38	.0365	.0153
11			737	2040	1271	1072	1.00	.53	1.53	27.38	.0365	.0194
12			737	2040	1283	1078	1.12	.51	1.63	27.38	.0409	.0186
13			737	2042	1321	1120	1.12	.62	1.74	27.41	.0409	.0226
Single-pressure												
14	50,000	0	817	3295	2288	1896	----	----	3.02	42.60	------	------
15		4	813	3274	2187	1835	----	----	2.59	42.32	------	------
16		-4	816	3272	2236	1867	----	----	2.78	42.27	------	------
17		7	815	3275	2081	1728	----	----	2.17	41.87	------	------
18		-7	817	3273	2173	1806	----	----	2.59	41.90	------	------

(c) Standard engine (modified

Run	Altitude, ft	Angle of attack, α, deg	Free-stream total temperature, T_0, °R	Free-stream total pressure, P_0, lb/sq ft abs	Diffuser outlet total pressure, P_2, lb/sq ft abs	Exhaust-nozzle total pressure, P_5, lb/sq ft abs	Inner-ring fuel flow, $w_{f,i}$, lb/sec	Outer-ring fuel flow, $w_{f,o}$, lb/sec	Total fuel flow, w_f, lb/sec	Combustor critical air flow, $w_{a,5}$, lb/sec	Inner-ring fuel-air ratio, $w_{f,i}/w_{a,5}$	Outer-ring fuel-air ratio, $w_{f,o}/w_{a,5}$
Inner-ring-only												
1	60,000	0	736	2053	1014	819	1.01	0	1.01	27.65	0.0365	0
2		4	736	2041	980	802	1.00	0	1.00	27.41	.0365	0
Dual-pressure												
3	60,000	0	737	2021	1061	870	1.01	0.16	1.17	27.20	0.0371	0.0059
4			738	2052	1172	975	1.00	.32	1.32	27.60	.0362	.0116
5			739	2045	1251	1054	.99	.49	1.48	27.49	.0360	.0178
6			739	2025	1374	1113	1.01	.65	1.66	27.22	.0371	.0239
7			737	2036	1390	1126	1.01	.76	1.77	27.40	.0369	.0277
8			734	2040	1384	1126	1.01	.80	1.81	27.51	.0367	.0291
9		4	737	2042	1069	875	1.01	.16	1.17	27.41	.0369	.0058
10			738	2044	1167	976	1.00	.33	1.33	27.41	.0365	.0120
11			739	2043	1229	1028	1.00	.45	1.45	27.39	.0365	.0164
12			739	2042	1290	1071	1.00	.60	1.60	27.38	.0365	.0219
Single-pressure												
13	50,000	4	738	3282	2170	1731	----	----	2.13	44.02	------	------
14			738	3287	2183	1754	----	----	2.24	44.09	------	------
15			738	3285	2185	1766	----	----	2.33	44.06	------	------
16			738	3283	2127	1735	----	----	2.37	44.03	------	------

DECLASSIFIED

3816

SEVERAL ENGINE CONFIGURATIONS

+2°); flight Mach number, 2.35

Over-all fuel-air ratio, $w_f/w_{a,5}$	Diffuser outlet Mach number, M_2	Diffuser total-pressure recovery, P_2/P_0	Engine total-pressure ratio, P_5/P_0	Combustor total-pressure ratio, P_5/P_2	Exhaust-gas total temperature, T_5, °R	Combustion efficiency, η_c	Net thrust coefficient, $C_{F,n}$	Combustor remarks	Diffuser operating point	Run
fuel injection										
0.0365	0.408	0.504	0.413	0.819	1988	0.542	0.320	No screech	Supercritical	1
.0375	.380	.499	.411	.822	1975	.525	.315	No screech	Supercritical	2
fuel injection										
0.0438	0.360	0.551	0.455	0.827	2379	0.610	0.458	No screech	Supercritical	3
.0485	.336	.592	.494	.835	2756	.689	.581	↓	↓	4
.0535	.310	.625	.523	.838	3056	.744	.676	↓	↓	5
.0598	.275	.674	.555	.823	3362	.799	.777	Screech	Subcritical	6
.0625	.258	.673	.556	.827	3349	.783	.782	Screech	Subcritical	7
.0432	.342	.544	.450	.828	2334	.599	.444	No screech	Supercritical	8
.0489	.310	.583	.489	.839	2701	.672	.567	↓	↓	9
.0541	.291	.615	.517	.841	2981	.720	.657	↓	↓	10
.0580	.305	.640	.535	.835	3165	.750	.715	↓	↓	11
fuel injection										
0.0761	0.289	0.676	0.554	0.819	3459	0.795	0.766	Screech	Subcritical	12
.0615	.303	.666	.553	.831	3620	.855	.765	↓	Critical	13
.0681	.282	.680	.564	.830	3684	.856	.800	↓	Critical	14

-2°); flight Mach number, 2.35

Over-all fuel-air ratio, $w_f/w_{a,5}$	Diffuser outlet Mach number, M_2	Diffuser total-pressure recovery, P_2/P_0	Engine total-pressure ratio, P_5/P_0	Combustor total pressure ratio, P_5/P_2	Exhaust-gas total temperature, T_5, °R	Combustion efficiency, η_c	Net thrust coefficient, $C_{F,n}$	Combustor remarks	Diffuser operating point	Run
fuel injection										
0.0369	0.388	0.503	0.411	0.818	1979	0.531	0.316	No screech	Supercritical	1
.0368	.386	.486	.406	.832	1932	.514	.300	No screech	Supercritical	2
fuel injection										
0.0431	0.354	0.539	0.443	0.821	2249	0.569	0.416	No screech	Supercritical	3
.0490	.330	.589	.491	.833	2721	.677	.572	No screech	Supercritical	4
.0544	.265	.678	.560	.826	3487	.877	.794	Screech	Critical	5
.0599	.248	.679	.563	.829	3476	.832	.804	↓	Subcritical	6
.0639	.252	.671	.557	.831	3366	.783	.785	↓	Subcritical	7
0.0419	.365	.525	.430	.818	2132	.536	.377	No screech	Supercritical	8
.0475	.323	.584	.472	.837	2536	.629	.514	↓	↓	9
.0518	-----	-----	.502	-----	2826	.685	.608	↓	↓	10
.0559	.306	.625	.526	.843	3066	.729	.685	↓	↓	11
.0595	.301	.629	.528	.840	3072	.713	.694	↓	↓	12
.0635	.288	.647	.549	.848	3273	.758	.759	↓	↓	13
fuel injection										
0.0709	0.282	0.694	0.575	0.829	3786	0.886	0.835	Screech	Critical	14
.0612	.289	.668	.561	.839	3710	.884	.790	↓	↓	15
.0658	.288	.683	.571	.835	3793	.893	.821	↓	↓	16
.0518	.301	.635	.528	.830	3448	.874	.691	↓	↓	17
.0618	.305	.664	.552	.831	3658	.865	.766	↓	↓	18

exit); flight Mach number, 2.35

Over-all fuel-air ratio, $w_f/w_{a,5}$	Diffuser outlet Mach number, M_2	Diffuser total-pressure recovery, P_2/P_0	Engine total-pressure ratio, P_5/P_0	Combustor total pressure ratio, P_5/P_2	Exhaust-gas total temperature, T_5, °R	Combustion efficiency, η_c	Net thrust coefficient, $C_{F,n}$	Combustor remarks	Diffuser operating point	Run
fuel injection										
0.0365	0.404	0.494	0.399	0.808	1946	0.522	0.299	No screech	Supercritical	1
.0365	.401	.480	.393	.818	1899	.504	.282	No screech	Supercritical	2
fuel injection										
0.0430	0.381	0.526	0.431	0.820	2225	0.559	0.403	No screech	Supercritical	3
.0478	.342	.571	.475	.832	2676	.672	.549	↓	↓	4
.0538	.313	.612	.515	.843	3127	.800	.680	↓	↓	5
.0610	.260	.679	.550	.810	3458	.821	.792	Screech	Subcritical	6
.0646	.245	.683	.553	.810	3456	.808	.804	↓	↓	7
.0658	.248	.678	.552	.814	3410	.791	.800	↓	↓	8
.0427	.367	.524	.429	.819	2217	.559	.398	No screech	Supercritical	9
.0485	.330	.571	.478	.836	2715	.680	.558	↓	↓	10
.0529	.322	.602	.503	.837	2976	.723	.643	↓	↓	11
.0584	.323	.632	.525	.830	3186	.752	.712	↓	↓	12
fuel injection										
0.0484	0.317	0.661	0.527	0.798	3311	0.885	0.722	Screech	Subcritical	13
.0508	.308	.664	.534	.804	3364	.873	.742	↓	↓	14
.0529	.288	.665	.538	.808	3394	.861	.755	↓	↓	15
.0538	.297	.648	.529	.816	3276	.812	.725	Screech flashing	Subcritical buzz	16

3816

TABLE I. - Continued. PERFORMANCE

(d) Standard engine (45° diffuser

Run	Altitude, ft	Angle of attack, α, deg	Free-stream total temperature, T_0, °R	Free-stream total pressure, P_0, lb/sq ft abs	Diffuser-outlet total pressure, P_2, lb/sq ft abs	Exhaust-nozzle total pressure, P_5, lb/sq ft abs	Inner-ring fuel flow, $w_{f,i}$, lb/sec	Outer-ring fuel flow, $w_{f,o}$, lb/sec	Total fuel flow, w_f, lb/sec	Combustor critical air flow, $w_{a,5}$, lb/sec	Inner-ring fuel-air ratio, $w_{f,i}/w_{a,5}$	Outer-ring fuel-air ratio, $w_{f,o}/w_{a,5}$
Inner-ring-only												
1	60,000	0	742	2042	1040	844	1.02	0	1.02	27.39	0.0372	0
2		4	739	2041	1027	834	1.01	0	1.01	27.36	.0369	0
3		7	738	2039	1022	835	1.02	0	1.02	27.09	.0377	0
Dual-pressure												
4	60,000	0	737	2039	1104	907	1.01	0.16	1.17	27.44	0.0368	0.0058
5			734	2038	1203	1005	1.00	.32	1.32	27.49	.0364	.0116
6			736	2037	1297	1094	1.00	.48	1.48	27.43	.0365	.0175
7			737	2043	1408	1153	1.00	.65	1.65	27.50	.0364	.0236
8			737	2039	1399	1153	1.00	.80	1.80	27.44	.0364	.0292
9		4	739	2038	1111	981	1.00	.15	1.15	27.32	.0366	.0055
10			739	2037	1208	1017	.99	.33	1.32	27.31	.0363	.0121
11			739	2039	1284	1075	.99	.49	1.48	27.34	.0362	.0179
12			736	2038	1320	1105	1.00	.58	1.58	27.37	.0365	.0212
13		7	738	2040	1079	894	1.01	.12	1.13	27.10	.0373	.0044
14			738	2037	1143	952	1.01	.22	1.23	27.06	.0373	.0081
15			738	2037	1199	1003	1.01	.32	1.33	27.06	.0373	.0118
16			738	2040	1233	1028	1.00	.39	1.39	27.10	.0369	.0144
17			738	2038	1269	1057	1.00	.46	1.46	27.08	.0369	.0170
Single-pressure												
18	50,000	4	816	3276	2032	1647	----	----	1.83	42.26	------	------
19			816	3275	2095	1705	----	----	2.04	42.24	------	------
20			815	3271	2139	1752	----	----	2.22	42.22	------	------
21			819	3267	2170	1791	----	----	2.44	42.06	------	------
22			820	3261	2184	1812	----	----	2.63	41.96	------	------
23			819	3269	2191	1816	----	----	2.80	42.09	------	------

(e) Standard engine (modified

Run	Altitude, ft	Angle of attack, α, deg	Free-stream total temperature, T_0, °R	Free-stream total pressure, P_0, lb/sq ft abs	Diffuser-outlet total pressure, P_2, lb/sq ft abs	Exhaust-nozzle total pressure, P_5, lb/sq ft abs	Inner-ring fuel flow, $w_{f,i}$, lb/sec	Outer-ring fuel flow, $w_{f,o}$, lb/sec	Total fuel flow, w_f, lb/sec	Combustor critical air flow, $w_{a,5}$, lb/sec	Inner-ring fuel-air ratio, $w_{f,i}/w_{a,5}$	Outer-ring fuel-air ratio, $w_{f,o}/w_{a,5}$
Dual-pressure												
1	60,000	0	738	2048	1105	913	1.00	0.18	1.18	27.11	0.0369	0.0066
2			736	2038	1190	999	1.00	.33	1.33	27.01	.0370	.0122
3			736	2041	1364	1128	.99	.48	1.47	27.05	.0366	.0177
4			736	2045	1387	1142	1.02	.59	1.61	27.11	.0376	.0218
5			736	2044	1394	1153	1.01	.69	1.70	27.09	.0373	.0255
6		4	740	2039	1115	920	1.00	.18	1.18	26.88	.0372	.0067
7			739	2042	1169	975	.99	.31	1.30	26.94	.0367	.0115
8			739	2040	1230	1030	1.00	.43	1.43	26.92	.0371	.0160
9			739	2047	1261	1050	1.01	.48	1.49	27.01	.0374	.0178
10			739	2042	1278	1068	1.00	.53	1.53	26.94	.0371	.0197
Single-pressure												
11	50,000	4	740	3284	2144	1750	----	----	2.13	43.30	------	------
12			740	3275	2155	1763	----	----	2.20	43.18	------	------
13			740	3280	2171	1779	----	----	2.28	43.24	------	------
14			740	3277	2177	1792	----	----	2.38	43.20	------	------
15			740	3277	2163	1796	----	----	2.42	43.20	------	------
16			824	3265	2027	1674	----	----	2.01	41.25	------	------
17			816	3297	2110	1754	----	----	2.25	41.86	------	------
18			810	3289	2150	1789	----	----	2.46	41.91	------	------
19			816	3269	2181	1819	----	----	2.72	41.50	------	------
20			817	3285	2205	1828	----	----	2.89	41.68	------	------

DECLASSIFIED

3816

OF SEVERAL ENGINE CONFIGURATIONS

rotation); flight Mach number, 2.35

Over-all fuel-air ratio, $w_f/w_{a,5}$	Diffuser outlet Mach number, M_2	Diffuser total pressure recovery, P_2/P_0	Engine total-pressure ratio, P_5/P_0	Combustor total-pressure ratio, P_5/P_2	Exhaust-gas total temperature, T_5, °R	Combustion efficiency, η_c	Net thrust coefficient, $C_{F,n}$	Combustor remarks	Diffuser operating point	Run
fuel injection										
0.0372	0.411	0.509	0.413	0.812	2010	0.540	0.323	No screech	Supercritical	1
.0369	.413	.503	.409	.812	1968	.525	.309	↓	↓	2
.0377	.393	.501	.410	.817	2005	.535	.320	↓	↓	3
fuel injection										
0.0426	0.379	0.541	0.445	0.822	2272	0.587	0.424	No screech	Supercritical	4
.0480	.339	.590	.493	.835	2735	.691	.579	↓	↓	5
.0540	.297	.637	.537	.844	3205	.790	.721	↓	↓	6
.0600	.235	.689	.564	.819	3479	.833	.808	Screech	Subcritical	7
.0656	.228	.686	.566	.824	3435	.800	.812	Screech	Subcritical	8
.0421	.372	.545	.451	.826	2352	.619	.444	No screech	Supercritical	9
.0484	.327	.593	.499	.842	2836	.723	.601	↓	↓	10
.0541	.301	.630	.527	.837	3110	.758	.691	↓	↓	11
.0577	.296	.648	.542	.837	3247	.777	.739	↓	↓	12
.0417	.363	.529	.438	.829	2268	.591	.412	↓	↓	13
.0454	.340	.561	.467	.833	2552	.658	.506	↓	↓	14
.0491	.315	.589	.492	.837	2803	.704	.586	↓	↓	15
.0513	.302	.604	.504	.834	2917	.719	.623	↓	↓	16
.0539	.306	.623	.519	.833	3071	.749	.670	↓	↓	17
fuel injection										
0.0433	0.314	0.620	0.503	0.811	3154	0.885	0.604	Screech	Supercritical	18
.0483	.304	.640	.521	.814	3332	.876	.662	↓	Supercritical	19
.0526	.297	.654	.536	.819	3480	.876	.710	↓	Critical	20
.0580	.294	.664	.548	.825	3610	.870	.750	↓	Subcritical	21
.0627	.278	.670	.556	.830	3660	.861	.774	↓	↓	22
.0665	.263	.670	.556	.829	3614	.837	.774	↓	↓	23

inlet); flight Mach number 2.35

Over-all fuel-air ratio, $w_f/w_{a,5}$	Diffuser outlet Mach number, M_2	Diffuser total pressure recovery, P_2/P_0	Engine total-pressure ratio, P_5/P_0	Combustor total-pressure ratio, P_5/P_2	Exhaust-gas total temperature, T_5, °R	Combustion efficiency, η_c	Net thrust coefficient, $C_{F,n}$	Combustor remarks	Diffuser operating point	Run
fuel injection										
0.0435	0.365	0.540	0.446	0.826	2355	0.603	0.439	No screech	Supercritical	1
.0492	.327	.584	.490	.840	2790	.699	.582	No screech	↓	2
.0543	.250	.668	.553	.827	3499	.882	.783	Screech	↓	3
.0594	.227	.678	.558	.823	3519	.850	.801	↓	Subcritical	4
.0628	.222	.682	.564	.827	3556	.845	.819	↓	Subcritical	5
.0439	.343	.547	.451	.825	2426	.624	.459	No screech	Supercritical	6
.0482	.320	.573	.478	.834	2679	.670	.543	↓	↓	7
.0531	.288	.603	.505	.837	2953	.715	.631	↓	↓	8
.0552	.293	.616	.513	.833	3032	.724	.657	↓	↓	9
.0568	.291	.626	.523	.836	3139	.747	.689	↓	↓	10
fuel injection										
0.0492	0.305	0.653	0.533	0.816	3332	0.881	0.722	Screech	Supercritical	11
.0509	.301	.658	.538	.818	3384	.879	.739	↓	Supercritical	12
.0527	.288	.662	.542	.819	3421	.871	.751	↓	Subcritical	13
.0551	.271	.664	.547	.823	3453	.858	.766	↓	↓	14
.0560	.251	.660	.548	.830	3457	.852	.770	↓	↓	15
.0487	.302	.621	.513	.826	3366	.880	.646	↓	Supercritical	16
.0538	.285	.640	.532	.831	3537	.883	.708	↓	↓	17
.0587	.284	.654	.544	.832	3623	.872	.746	↓	↓	18
.0655	.272	.667	.556	.834	3742	.878	.787	↓	Critical	19
.0693	.264	.671	.557	.829	3697	.859	.787	↓	Subcritical	20

3916

TABLE I. - Continued. PERFORMANCE

(f) Step flameholder A;

Run	Altitude, ft	Angle of attack, α, deg	Free-stream total temperature, T_0, °R	Free-stream total pressure, P_0, lb/sq ft abs	Calculated diffuser-outlet total pressure, P_2, lb/sq ft abs	Exhaust-nozzle total pressure, P_5, lb/sq ft abs	Inner-ring fuel flow, $w_{f,i}$, lb/sec	Outer-ring fuel flow, $w_{f,o}$, lb/sec	Total fuel flow, w_f, lb/sec	Combustor critical air flow, $w_{a,5}$, lb/sec	Inner-ring fuel-air ratio, $w_{f,i}/w_{a,5}$	Outer-ring fuel-air ratio, $w_{f,o}/w_{a,5}$
Inner-ring-only												
1	50,000	0	738	3277	1345	1187	0.93	0	0.93	44.07	0.0211	0
2		0	817	3301	1397	1231	1.05	0	1.05	42.68	.0246	0
3		4	740	3288	1335	1174	.94	0	.94	44.05	.0213	0
4		4	819	3285	1337	1172	.90	0	.90	42.30	.0213	0
5		4	821	3288	1394	1227	1.06	0	1.06	42.29	.0251	0
6		-4	737	3281	1343	1180	.93	0	.93	44.11	.0211	0
7		7	737	3279	1237	1079	.93	0	.93	43.60	.0213	0
8	60,000	0	737	2036	676	634	0.57	0	0.57	27.40	0.0208	0
9		4	732	2050	724	651	.59	0	.59	27.61	.0214	0
Dual-pressure												
10	50,000	0	738	3279	1385	1229	0.91	0.32	1.23	44.10	0.0206	0.0073
11			738	3273	1433	1270	.92	.64	1.56	44.02	.0209	.0145
12			738	3268	1603	1436	.93	1.04	1.97	43.95	.0212	.0237
13			739	3275	1917	1700	.93	1.45	2.38	44.03	.0211	.0329
14			739	3273	1935	1705	.93	1.61	2.54	44.00	.0211	.0366
15			819	3259	1419	1255	1.07	.31	1.38	42.07	.0254	.0074
16			816	3281	1459	1294	1.06	.51	1.57	42.43	.0250	.0120
17			817	3296	1498	1331	1.04	.72	1.76	42.61	.0244	.0169
18			818	3302	1590	1426	1.04	.94	1.98	42.66	.0244	.0220
19			817	3280	1719	1532	1.06	1.04	2.10	42.41	.0250	.0245
20			820	3284	1900	1686	1.05	1.25	2.30	42.37	.0248	.0295
21			820	3289	1946	1722	1.06	1.39	2.45	42.43	.0250	.0328
22			821	3283	1960	1740	1.05	1.57	2.62	42.34	.0248	.0371
23		4	740	3289	1375	1213	.91	.33	1.24	44.06	.0207	.0075
24			739	3277	1424	1262	.93	.64	1.57	43.94	.0212	.0146
25			738	3276	1709	1527	.94	1.04	1.98	43.94	.0214	.0237
26			738	3274	1870	1660	.93	1.46	2.39	43.91	.0212	.0332
27			819	3288	1378	1208	.89	.31	1.20	42.33	.0210	.0073
28			818	3275	1412	1247	.89	.51	1.40	42.20	.0211	.0121
29			818	3279	1442	1277	.88	.73	1.61	42.25	.0208	.0173
30			818	3272	1574	1404	.88	.91	1.79	42.16	.0209	.0216
31			818	3275	1759	1566	.90	1.11	2.01	42.20	.0213	.0263
32			818	3272	1871	1660	.89	1.37	2.26	42.16	.0211	.0325
33			818	3271	1879	1659	.89	1.60	2.49	42.15	.0211	.0380
34			821	3278	1424	1256	1.04	.31	1.35	42.16	.0247	.0074
35			816	3288	1463	1293	1.05	.50	1.55	42.41	.0248	.0118
36			813	3290	1503	1334	1.04	.72	1.76	42.52	.0245	.0169
37			813	3289	1663	1484	1.04	.93	1.97	42.51	.0245	.0219
38			812	3289	1814	1618	1.04	1.12	2.16	42.52	.0245	.0263
39			812	3295	1881	1671	1.07	1.31	2.38	42.60	.0251	.0308
40			817	3281	1903	1684	1.06	1.52	2.58	42.30	.0251	.0359
41		-4	737	3277	1387	1215	.91	.35	1.26	44.06	.0207	.0079
42			736	3278	1420	1256	.91	.65	1.56	44.10	.0206	.0147
43			738	3277	1523	1354	.92	1.01	1.93	44.02	.0209	.0229
44			738	3274	1899	1683	.91	1.34	2.25	43.98	.0207	.0305
45			740	3282	1899	1664	.91	1.57	2.48	44.04	.0207	.0356
46			742	3278	1376	1207	.92	.32	1.24	43.92	.0209	.0073
47			742	3273	1407	1241	.92	.51	1.43	43.85	.0210	.0116
48			741	3277	1454	1281	.93	.76	1.69	43.94	.0212	.0173
49			741	3281	1542	1364	.92	1.02	1.94	44.00	.0209	.0232
50			741	3273	1874	1665	.92	1.24	2.16	43.89	.0210	.0283
51			741	3286	1914	1697	.92	1.44	2.36	44.06	.0209	.0327
52		7	737	3286	1311	1144	.91	.32	1.23	43.69	.0208	.0073
53			737	3278	1389	1220	.93	.65	1.58	43.59	.0213	.0149
54			738	3279	1673	1488	.91	1.03	1.94	43.57	.0209	.0236
55			739	3280	1800	1587	.93	1.44	2.37	43.57	.0213	.0331
56	60,000	0	735	2036	830	727	0.57	0.20	0.77	27.44	0.0208	0.0073
57			735	2042	869	764	.57	.38	.95	27.52	.0207	.0138
58			734	2041	893	789	.57	.56	1.13	27.32	.0207	.0203
59			733	2045	967	859	.58	.72	1.30	27.60	.0210	.0261
60			739	2042	1206	1068	.58	.90	1.48	27.45	.0211	.0328
61			740	2043	1223	1087	.59	.96	1.55	27.45	.0215	.0350
62			741	2039	1287	1138	.59	1.14	1.73	27.37	.0216	.0417
63		4	737	2039	842	732	.58	.20	.78	27.37	.0212	.0073
64			738	2042	873	766	.58	.38	.96	27.39	.0212	.0139
65			738	2040	910	808	.57	.56	1.13	27.36	.0208	.0205
66			733	2043	922	817	.57	.57	1.14	27.50	.0207	.0207
67			738	2037	1060	947	.57	.72	1.29	27.32	.0209	.0264
68			738	2035	1139	1008	.58	.90	1.48	27.29	.0213	.0330
69			737	2039	1183	1045	.58	.96	1.54	27.37	.0212	.0351
70			737	2036	1272	1115	.57	1.15	1.72	27.33	.0209	.0421
Single-pressure												
71	60,000	4	737	2046	1103	975	----	----	1.40	27.46	------	------
72			739	2040	1146	1013	----	----	1.50	27.35	------	------
73			741	2037	1199	1053	----	----	1.59	27.27	------	------
74			737	2045	1244	1093	----	----	1.68	27.45	------	------
75			737	2048	1262	1109	----	----	1.77	27.49	------	------

DECLASSIFIED

3816

OF SEVERAL ENGINE CONFIGURATIONS

flight Mach number, 2.35

Over-all fuel-air ratio, $w_f/w_{a,5}$	Diffuser outlet Mach number, M_2	Calculated diffuser total-pressure recovery, P_2/P_0	Engine total-pressure ratio, P_5/P_0	Calculated combustor total pressure ratio, P_5/P_2	Exhaust-gas total temperature, T_5, °R	Combustion efficiency, η_c	Net thrust coefficient, $C_{F,n}$	Combustor remarks	Diffuser operating point	Run
fuel injection										
0.0211	0.499	0.410	0.362	0.883	1623	0.607	0.159	No buzz	Supercritical	1
.0246	.486	.423	.373	.881	1832	.612	.185			2
.0213	.498	.406	.357	.879	1582	.575	.144			3
.0213	.511	.407	.357	.877	1711	.610	.135			4
.0251	.483	.424	.373	.880	1852	.609	.188			5
.0211	.500	.409	.360	.879	1602	.593	.151			6
.0213	.554	.377	.329	.872	1365	.429	.061			7
0.0208	0.712	0.332	0.311	0.938	1194	0.318	-0.004	No buzz	Supercritical	8
.0214	.626	.353	.318	.899	1239	.343	.018	No buzz	Supercritical	9
fuel injection										
0.0279	0.480	0.422	0.375	0.887	1692	0.514	0.199	No buzz	Supercritical	10
.0354	.457	.438	.388	.886	1768	.454	.242			11
.0449	.396	.491	.439	.896	2206	.536	.407			12
.0540	.321	.585	.519	.887	3001	.724	.662	Buzz	Subcritical	13
.0577	.318	.591	.521	.881	2991	.696	.669	Buzz	Subcritical	14
.0328	.467	.435	.385	.884	1908	.517	.234	No buzz	Supercritical	15
.0370	.454	.445	.394	.887	1970	.498	.254			16
.0413	.441	.455	.404	.889	2039	.481	.284			17
.0464	.410	.482	.432	.897	2297	.531	.374			18
.0495	.370	.524	.467	.891	2659	.631	.488			19
.0543	.330	.579	.513	.887	3185	.764	.637	Buzz	Critical	20
.0578	.322	.592	.524	.885	3281	.769	.669		Subcritical	21
.0619	.318	.597	.530	.888	3325	.762	.690		Subcritical	22
.0282	.479	.418	.369	.882	1651	.489	.182	No buzz	Supercritical	23
.0357	.454	.435	.385	.886	1753	.446	.234			24
.0451	.362	.522	.466	.894	2493	.636	.494			25
.0544	.326	.571	.507	.888	2875	.681	.626	Buzz	Subcritical	26
.0283	.490	.419	.367	.877	1774	.515	.170	No buzz	Supercritical	27
.0332	.472	.431	.381	.883	1871	.499	.212			28
.0381	.459	.440	.390	.886	1927	.468	.240			29
.0425	.409	.481	.429	.892	2308	.575	.368			30
.0476	.359	.537	.478	.890	2821	.706	.525	Buzz		31
.0536	.333	.572	.507	.887	3124	.750	.619		Critical	32
.0591	.331	.574	.507	.883	3074	.698	.619		Subcritical	33
.0321	.467	.434	.383	.882	1908	.527	.220	No buzz	Supercritical	34
.0366	.452	.445	.393	.884	1969	.503	.253			35
.0414	.437	.457	.406	.888	2056	.487	.291			36
.0464	.385	.506	.451	.892	2504	.608	.439			37
.0508	.348	.552	.492	.892	2940	.714	.569			38
.0559	.334	.571	.507	.888	3084	.721	.618	Buzz		39
.0610	.328	.580	.513	.885	3129	.707	.638	Buzz	Subcritical	40
.0286	.478	.423	.371	.876	1654	.485	.187	No buzz	Supercritical	41
.0353	.462	.433	.383	.885	1727	.442	.227			42
.0438	.423	.465	.413	.889	1962	.455	.323			43
.0512	.324	.580	.514	.886	2971	.740	.647	Buzz		44
.0563	.325	.579	.507	.876	2855	.661	.625	Buzz	Subcritical	45
.0282	.483	.420	.368	.877	1644	.483	.179	No buzz	Supercritical	46
.0326	.467	.430	.379	.882	1718	.463	.214			47
.0385	.448	.444	.391	.881	1793	.437	.252			48
.0441	.417	.470	.416	.885	1989	.461	.332	No buzz	Supercritical	49
.0493	.329	.573	.509	.889	2935	.747	.631	Buzz	Supercritical	50
.0536	.323	.583	.516	.887	2989	.724	.655	Buzz	Subcritical	51
.0281	.511	.399	.348	.873	1492	.405	.122	No buzz	Supercritical	52
.0362	.469	.424	.372	.878	1658	.402	.200	No buzz		53
.0445	.372	.510	.454	.889	2413	.614	.462	Buzz		54
.0544	.341	.549	.484	.882	2670	.615	.558	Buzz	Subcritical	55
0.0281	0.504	0.408	0.357	0.876	1528	0.425	0.142	No buzz	Supercritical	56
.0345	.474	.426	.374	.879	1644	.411	.197			57
.0410	.458	.438	.387	.884	1720	.390	.237			58
.0471	.414	.473	.420	.888	1988	.440	.345			59
.0539	.318	.591	.523	.886	3049	.742	.669	Buzz		60
.0565	.313	.599	.532	.889	3136	.750	.704			61
.0633	.295	.631	.558	.884	3392	.793	.788		Critical	62
.0285	.492	.413	.359	.869	1556	.436	.150	No buzz	Supercritical	63
.0351	.469	.428	.375	.877	1666	.416	.202			64
.0413	.445	.446	.396	.888	1837	.428	.269			65
.0414	.438	.451	.400	.886	1840	.429	.281			66
.0473	.367	.520	.465	.893	2509	.623	.490			67
.0543	.338	.560	.495	.885	2747	.643	.588	Buzz		68
.0563	.324	.580	.513	.883	2917	.682	.644			69
.0630	.298	.625	.548	.877	3265	.757	.756		Critical	70
fuel injection										
0.0510	0.353	0.539	0.477	0.884	2558	0.604	0.528	Buzz	Supercritical	71
.0548	.336	.562	.497	.884	2755	.637	.592			72
.0583	.319	.589	.517	.878	2966	.685	.658			73
.0612	.307	.608	.535	.879	3129	.723	.714		Subcritical	74
.0644	.302	.616	.542	.879	3182	.728	.737		Subcritical	75

3816

TABLE I. - Continued. PERFORMANCE

(g) Step flameholder B;

Run	Altitude, ft	Angle of attack, α, deg	Free-stream total temperature, T_0, °R	Free-stream total pressure, P_0, lb/sq ft abs	Calculated diffuser-outlet total pressure, P_2, lb/sq ft abs	Exhaust-nozzle total pressure, P_5, lb/sq ft abs	Inner-ring fuel flow, $w_{f,i}$, lb/sec	Outer-ring fuel flow, $w_{f,o}$, lb/sec	Total fuel flow, w_f, lb/sec	Combustor critical air flow, $w_{a,5}$, lb/sec	Inner-ring fuel-air ratio, $w_{f,i}/w_{a,5}$	Outer-ring fuel-air ratio, $w_{f,o}/w_{a,5}$
												Dual-pressure
1	50,000	0	732	3258	1455	1304	0.93	0.75	1.68	43.99	0.0211	0.0171
2			735	3268	1501	1345	.92	.93	1.85	44.05	.0209	.0211
3			734	3265	1732	1555	.92	1.14	2.06	44.04	.0209	.0259
4			738	3262	1816	1620	.92	1.30	2.22	43.87	.0210	.0296
5			735	3259	1793	1599	.93	1.35	2.28	43.92	.0212	.0307
6			820	3285	1410	1258	.89	.55	1.44	42.38	.0210	.0130
7			820	3285	1438	1285	.88	.73	1.61	42.38	.0208	.0172
8			810	3278	1500	1341	.87	.93	1.80	42.56	.0204	.0219
9			815	3278	1786	1598	.88	1.14	2.02	42.43	.0207	.0269
10			815	3285	1873	1654	.88	1.37	2.25	42.43	.0207	.0323
11			815	3270	1918	1694	.88	1.55	2.43	42.32	.0208	.0366
12		4	732	3269	1423	1265	.94	.74	1.68	44.02	.0214	.0168
13			746	3271	1490	1323	.93	.87	1.80	43.64	.0213	.0199
14			740	3295	1675	1493	.93	1.04	1.97	44.14	.0211	.0236
15			733	3265	1716	1533	.92	1.20	2.12	43.95	.0209	.0273
16			740	3262	1758	1574	.91	1.30	2.21	43.70	.0208	.0297
17			739	3269	1820	1619	.91	1.40	2.31	43.83	.0208	.0319
18			816	3274	1405	1247	.90	.54	1.44	42.23	.0213	.0128
19			816	3272	1455	1293	.90	.74	1.64	42.20	.0213	.0175
20			816	3270	1540	1366	.90	.94	1.84	42.18	.0213	.0223
21			816	3275	1735	1541	.89	1.14	2.03	42.24	.0211	.0270
22			813	3269	1836	1620	.89	1.35	2.24	42.25	.0211	.0320
23			812	3276	1863	1644	.88	1.47	2.35	42.36	.0208	.0347
24			735	3260	1456	1305	.94	.79	1.73	43.89	.0214	.0180
25			736	3259	1482	1331	.94	.89	1.83	43.85	.0214	.0203
26			736	3259	1511	1357	.94	1.00	1.94	43.85	.0214	.0228
27			736	3272	1816	1610	.94	1.15	2.09	44.02	.0214	.0261
28			736	3270	1819	1618	.93	1.24	2.17	43.99	.0211	.0282
29			734	3274	1828	1623	.94	1.30	2.24	44.11	.0213	.0295
30			734	3273	1459	1307	.94	.78	1.72	44.10	.0213	.0177
31			734	3269	1482	1334	.94	.90	1.84	44.04	.0213	.0204
32			734	3274	1512	1361	.94	1.00	1.94	44.11	.0213	.0227
33			734	3271	1825	1623	.94	1.14	2.08	44.07	.0213	.0259
34			734	3273	1825	1621	.94	1.24	2.18	44.10	.0213	.0281
35		7	738	3274	1472	1305	.91	.79	1.70	43.50	.0209	.0182
36			737	3276	1546	1367	.91	.94	1.85	43.56	.0209	.0216
37			736	3274	1688	1506	.91	1.14	2.05	43.57	.0209	.0262
38			737	3272	1695	1514	.93	1.25	2.18	43.51	.0214	.0287
39			738	3269	1764	1568	.92	1.30	2.22	43.44	.0212	.0299

DECLASSIFIED

3816

CX-4 back

OF SEVERAL ENGINE CONFIGURATIONS

flight Mach number 2.35

Over-all fuel-air ratio, $w_f/w_{a,5}$	Diffuser outlet Mach number, M_2	Calculated diffuser total-pressure recovery, P_2/P_0	Engine total-pressure ratio, P_5/P_0	Calculated combustor total-pressure ratio, P_5/P_2	Exhaust-gas total temperature, T_5, °R	Combustion efficiency, η_c	Net thrust, coefficient, $C_{F,n}$	Combustor remarks	Diffuser operating point	Run
fuel injection										
0.0382	0.446	0.447	0.400	0.896	1854	0.466	0.281	No buzz	Supercritical	1
.0420	.430	.459	.412	.896	1942	.464	.317	↓	↓	2
.0468	.360	.531	.476	.898	2561	.644	.526	↓	↓	3
.0506	.341	.557	.497	.892	2771	.677	.590	Buzz	↓	4
.0519	.345	.550	.491	.892	2683	.639	.571	Buzz	↓	5
.0340	.477	.429	.383	.892	1912	.507	.218	No buzz	↓	6
.0380	.463	.438	.391	.894	1964	.483	.244	↓	↓	7
.0423	.437	.458	.409	.894	2068	.485	.301	↓	↓	8
.0476	.354	.545	.488	.895	2905	.737	.553	↓	↓	9
.0530	.335	.570	.504	.883	3066	.738	.604	Buzz	Critical	10
.0574	.325	.587	.518	.883	3197	.747	.651	Buzz	Subcritical	11
.0382	.459	.435	.387	.889	1742	.422	.240	No buzz	Supercritical	12
.0412	.432	.456	.405	.888	1919	.459	.296	↓	↓	13
.0447	.377	.508	.453	.891	2366	.596	.453	↓	↓	14
.0482	.363	.526	.470	.893	2489	.606	.505	Buzz	↓	15
.0505	.353	.539	.483	.895	2635	.632	.547	↓	↓	16
.0527	.339	.557	.495	.890	2794	.668	.588	↓	Subcritical	17
.0341	.474	.429	.381	.888	1863	.483	.213	No buzz	Supercritical	18
.0388	.453	.445	.395	.889	1976	.479	.259	↓	↓	19
.0436	.421	.471	.418	.887	2176	.514	.331	↓	↓	20
.0481	.364	.530	.471	.888	2738	.671	.500	Buzz	↓	21
.0531	.341	.562	.496	.882	2966	.705	.581	↓	Critical	22
.0555	.336	.569	.502	.882	3021	.703	.601	↓	Subcritical	23
.0394	.444	.447	.400	.896	1858	.455	.282	No buzz	Supercritical	24
.0417	.435	.455	.408	.898	1923	.459	.308	↓	↓	25
.0442	.424	.464	.416	.898	1982	.461	.334	↓	↓	26
.0475	.341	.555	.492	.887	2742	.701	.577	↓	↓	27
.0493	.341	.556	.495	.890	2758	.686	.585	Buzz	↓	28
.0508	.339	.558	.496	.888	2750	.671	.588	Buzz	↓	29
.0390	.446	.446	.399	.896	1847	.454	.279	No buzz	↓	30
.0417	.436	.453	.408	.900	1911	.454	.307	↓	↓	31
.0440	.426	.462	.416	.900	1974	.460	.332	↓	↓	32
.0472	.339	.558	.496	.889	2785	.720	.590	↓	↓	33
.0494	.339	.558	.495	.888	2754	.684	.587	Buzz	↓	34
.0391	.435	.450	.399	.887	1893	.472	.285	No buzz	↓	35
.0424	.409	.472	.417	.884	2049	.500	.345	No buzz	↓	36
.0471	.368	.516	.460	.892	2453	.643	.482	Buzz	↓	37
.0501	.366	.518	.463	.893	2462	.579	.490	↓	Critical	38
.0511	.348	.540	.480	.889	2645	.632	.545	↓	Subcritical	39

3816

TABLE I. - Continued. PERFORMANCE

(h) Step flameholder C;

Run	Altitude, ft	Angle of attack, α, deg	Free-stream total temperature, T_0, °R	Free-stream total pressure, P_0, lb/sq ft abs	Calculated diffuser-outlet total pressure, P_2, lb/sq ft abs	Exhaust-nozzle total pressure, P_5, lb/sq ft abs	Inner-ring fuel flow, $w_{f,i}$, lb/sec	Outer-ring fuel flow, $w_{f,o}$, lb/sec	Total fuel flow, w_f, lb/sec	Combustor critical air flow, $w_{a,5}$, lb/sec	Inner-ring fuel-air ratio, $w_{f,i}/w_{a,5}$	Outer-ring fuel-air ratio, $w_{f,o}/w_{a,5}$
Inner-ring-only												
1	50,000	0	736	3274	1416	1250	1.10	0	1.10	44.10	0.0249	0
2			732	3275	1420	1253	1.10	0	1.10	44.22	.0249	0
3			732	3276	1444	1269	1.32	0	1.32	44.24	.0298	0
4			732	3274	1404	1237	1.54	0	1.54	44.21	.0348	0
5			732	3275	1387	1219	1.64	0	1.64	44.22	.0371	0
6			815	3266	1384	1216	1.04	0	1.04	42.27	.0246	0
7			816	3274	1397	1228	1.06	0	1.06	42.34	.0250	0
8			815	3273	1425	1247	1.28	0	1.28	42.36	.0302	0
9			816	3264	1403	1220	1.48	0	1.48	42.21	.0351	0
10			816	3264	1373	1194	1.69	0	1.69	42.21	.0400	0
11			816	3281	1345	1176	1.89	0	1.89	42.43	.0445	0
12		4	733	3275	1411	1243	1.10	0	1.10	44.09	.0249	0
13		4	816	3280	1396	1225	1.05	0	1.05	42.30	.0248	0
14		-4	732	3276	1410	1241	1.10	0	1.10	44.19	.0249	0
15		7	733	3277	1378	1210	1.10	0	1.10	43.70	.0252	0
16	60,000	0	733	2044	854	741	0.69	0	0.69	27.59	0.0250	0
17		4	737	2028	839	727	.68	0	.68	27.22	.0250	0
18		4	818	2036	835	725	.67	0	.67	26.23	.0255	0
Dual-pressure												
19	50,000	0	735	3274	1471	1300	1.10	0.48	1.58	44.13	0.0249	0.0109
20			735	3273	1675	1486	1.10	.89	1.99	44.11	.0249	.0202
21			735	3272	1925	1710	1.10	1.31	2.41	44.10	.0249	.0297
22			734	3274	2021	1795	1.10	1.51	2.61	44.16	.0249	.0342
23			816	3280	1453	1283	1.06	.48	1.54	42.42	.0250	.0113
24			816	3278	1545	1365	1.06	.84	1.90	42.39	.0250	.0198
25			816	3281	1906	1681	1.06	1.29	2.35	42.43	.0250	.0304
26			816	3277	2050	1812	1.06	1.70	2.76	42.38	.0250	.0401
27			816	3280	2090	1835	1.06	2.11	3.17	42.42	.0250	.0497
28		4	733	3271	1470	1298	1.10	.48	1.58	44.03	.0250	.0109
29			733	3274	1525	1341	1.10	.67	1.77	44.07	.0250	.0152
30			733	3275	1709	1510	1.10	.89	1.99	44.09	.0249	.0202
31			734	3274	1889	1688	1.10	1.18	2.28	44.04	.0250	.0268
32			734	3274	1919	1702	1.10	1.30	2.40	44.04	.0250	.0295
33			816	3281	1455	1282	1.06	.48	1.54	42.32	.0250	.0113
34			816	3274	1659	1470	1.06	.84	1.90	42.23	.0251	.0199
35			816	3278	1912	1705	1.06	1.28	2.34	42.28	.0251	.0303
36			817	3279	2030	1777	1.05	1.69	2.74	42.28	.0248	.0400
37			817	3279	2033	1789	1.06	2.09	3.15	42.28	.0251	.0494
38		-4	732	3277	1469	1292	1.10	.48	1.58	44.20	.0249	.0109
39			732	3275	1549	1379	1.09	.90	1.99	44.18	.0249	.0204
40			732	3275	1839	1623	1.10	1.10	2.20	44.18	.0249	.0249
41			732	3273	1935	1716	1.10	1.32	2.42	44.15	.0249	.0299
42			732	3276	1977	1744	1.10	1.53	2.63	44.19	.0249	.0346
43		7	733	3276	1444	1273	1.10	.48	1.58	43.69	.0252	.0110
44			733	3271	1469	1294	1.10	.64	1.74	43.62	.0252	.0147
45			734	3274	1693	1498	1.10	.90	2.00	43.63	.0252	.0206
46			734	3271	1817	1619	1.09	1.16	2.25	43.59	.0250	.0266
47			734	3275	1857	1639	1.10	1.31	2.41	43.64	.0252	.0300
48	60,000	0	733	2042	880	764	0.69	0.27	0.96	27.56	.0250	.0098
49			733	2044	917	798	.68	.54	1.22	27.59	.0246	.0196
50			732	2041	1207	1069	.69	.81	1.50	27.56	.0250	.0294
51			732	2039	1307	1144	.69	1.04	1.73	27.53	.0251	.0378
52		4	738	2041	861	770	.69	.27	.96	27.37	.0252	.0099
53			738	2046	930	817	.69	.54	1.23	27.44	.0251	.0197
54			736	2044	1202	1068	.68	.81	1.49	27.45	.0248	.0295
55			736	2044	1301	1140	.69	1.07	1.76	27.45	.0251	.0390
56			736	2042	1309	1148	.69	1.21	1.90	27.43	.0252	.0441
57			818	2035	871	761	.67	.26	.93	26.22	.0255	.0099
58			817	2035	949	828	.67	.52	1.19	26.24	.0255	.0198
59			817	2035	1173	1042	.67	.78	1.45	26.24	.0255	.0297
60			817	2037	1254	1097	.67	1.05	1.72	26.26	.0255	.0400
61			817	2035	1254	1107	.67	1.30	1.97	26.24	.0255	.0495
Single-pressure												
62	50,000	4	734	3282	1769	1570	----	----	2.00	44.15	------	------
63			733	3288	1842	1636	----	----	2.13	44.26	------	------
64			732	3281	1926	1700	----	----	2.31	44.18	------	------
65			733	3286	1994	1761	----	----	2.50	44.23	------	------
66	60,000	4	734	2035	1184	1051	----	----	1.38	27.37	------	------
67			736	2038	1226	1081	----	----	1.51	27.37	------	------
68			736	2035	1272	1119	----	----	1.63	27.33	------	------
69			736	2035	1307	1142	----	----	1.80	27.33	------	------
70			736	2034	1299	1139	----	----	1.93	27.32	------	------

DECLASSIFIED

3816

OF SEVERAL ENGINE CONFIGURATIONS

flight Mach number, 2.35

Over-all fuel-air ratio, $w_f/w_{a,5}$	Diffuser outlet Mach number, M_2	Calculated diffuser total-pressure recovery, P_2/P_0	Engine total-pressure ratio, P_5/P_0	Calculated combustor total-pressure ratio, P_5/P_2	Exhaust-gas total temperature, T_5, °R	Combustion efficiency, η_c	Net thrust coefficient, $C_{F,n}$	Combustor remarks	Diffuser operating point	Run
fuel injection										
0.0249	0.464	0.433	0.382	0.883	1770	0.614	0.221	No buzz	Supercritical	1
.0249	.463	.434	.383	.882	1768	.615	.224			
.0298	.453	.441	.387	.879	1782	.537	.240			3
.0348	.469	.429	.378	.881	1668	.421	.209			4
.0371	.477	.424	.372	.879	1608	.372	.191			5
.0246	.464	.424	.372	.879	1823	.606	.183			6
.0250	.480	.427	.375	.879	1852	.617	.192			7
.0302	.467	.435	.381	.875	1875	.539	.211			8
.0351	.476	.430	.374	.870	1779	.433	.188			9
.0400	.490	.421	.366	.870	1678	.348	.162			10
.0445	.508	.410	.358	.874	1589	.286	.138			11
.0249	.465	.431	.380	.881	1750	.601	.216			12
.0248	.480	.426	.374	.878	1847	.616	.189			13
.0249	.467	.430	.379	.880	1737	.596	.213			14
.0252	.475	.421	.369	.878	1688	.561	.191			15
0.0250	0.486	0.418	0.363	0.868	1588	0.504	0.160	No buzz	Supercritical	16
.0250	.492	.414	.359	.867	1571	.492	.149			17
.0255	.506	.410	.356	.868	1679	.504	.134			18
fuel injection										
0.0358	0.442	0.449	0.397	0.884	1845	0.489	0.271	No buzz	Supercritical	19
.0451	.376	.512	.454	.887	2342	.584	.454	No buzz		20
.0546	.320	.588	.523	.888	3026	.730	.675	Buzz		21
.0591	.303	.617	.548	.888	3279	.777	.757	Buzz	Critical	22
.0363	.457	.443	.391	.883	1942	.495	.244	No buzz	Supercritical	23
.0448	.422	.471	.416	.884	2143	.490	.326			24
.0554	.329	.581	.512	.882	3149	.747	.633			25
.0651	.302	.626	.553	.884	3563	.825	.763		Critical	26
.0747	.296	.637	.560	.878	3528	.814	.784		Supercritical	27
.0359	.440	.449	.397	.883	1846	.488	.272			28
.0402	.420	.466	.410	.879	1941	.463	.313			29
.0451	.366	.522	.461	.884	2419	.612	.479			30
.0518	.326	.577	.516	.894	2974	.735	.653			31
.0545	.320	.586	.520	.887	3004	.722	.667		Critical	32
.0363	.454	.444	.391	.881	1948	.496	.244		Supercritical	33
.0450	.384	.507	.449	.886	2505	.622	.432			34
.0554	.326	.583	.520	.892	3262	.782	.660			35
.0648	.305	.619	.542	.875	3446	.790	.730		Critical	36
.0745	.304	.620	.546	.880	3379	.769	.741		Supercritical	37
.0358	.443	.448	.394	.874	1832	.485	.263			38
.0451	.413	.473	.421	.890	2013	.466	.350			39
.0498	.337	.562	.496	.883	2749	.678	.588			40
.0548	.317	.591	.524	.887	3034	.730	.681			41
.0595	.310	.604	.532	.882	3088	.717	.707		Critical	42
.0362	.446	.441	.389	.882	1805	.467	.253		Supercritical	43
.0399	.436	.449	.396	.881	1846	.446	.275			44
.0458	.366	.517	.458	.885	2429	.608	.474			45
.0516	.337	.556	.495	.891	2792	.677	.594			46
.0552	.329	.567	.501	.883	2830	.661	.613		Critical	47
0.0348	0.467	0.431	0.374	0.868	1638	0.406	0.198	No buzz	Supercritical	48
.0442	.443	.449	.390	.870	1731	.367	.250			49
.0544	.318	.591	.524	.886	3027	.730	.678			50
.0629	.290	.641	.561	.875	3388	.794	.798			51
.0351	.463	.432	.377	.874	1686	.423	.210			52
.0448	.433	.455	.399	.879	1833	.401	.281			53
.0543	.319	.588	.523	.889	3046	.736	.677			54
.0641	.291	.637	.558	.876	3372	.786	.788		Critical	55
.0693	.289	.641	.562	.877	3371	.778	.804		Critical	56
.0354	.477	.428	.374	.874	1794	.439	.191		Supercritical	57
.0453	.426	.466	.407	.873	2053	.452	.296			58
.0552	.331	.576	.512	.888	3163	.751	.634			59
.0655	.307	.616	.539	.875	3401	.776	.719			60
.0750	.306	.616	.544	.883	3350	.761	.737			61
fuel injection										
0.0453	0.353	0.539	0.478	0.888	2607	0.676	0.535	Rough burning	Supercritical	62
.0481	.342	.560	.498	.888	2795	.711	.596		Supercritical	63
.0523	.319	.587	.518	.883	2993	.736	.662		Critical	64
.0565	.308	.607	.536	.883	3167	.759	.718		Critical	65
0.0504	0.332	0.582	0.517	0.888	2995	0.756	0.657	No buzz	Supercritical	66
.0552	.311	.602	.530	.882	3072	.739	.702			67
.0596	.298	.625	.550	.880	3313	.785	.764			68
.0659	.289	.642	.561	.874	3397	.789	.800			69
.0706	.291	.639	.560	.877	3317	.762	.796		Critical	70

TABLE I. - Continued. PERFORMANCE

(i) Step

Run	Altitude, ft	Angle of attack, α, deg	Free-stream total temperature, T_0, °R	Free-stream total pressure, P_0, lb/sq ft abs	Calculated diffuser-outlet total pressure, P_2, lb/sq ft abs	Exhaust-nozzle total pressure, P_5, lb/sq ft abs	Inner-ring fuel flow, $w_{f,i}$, lb/sec	Outer-ring fuel flow, $w_{f,o}$, lb/sec	Total fuel flow, w_f, lb/sec	Combustor critical air flow, $w_{a,5}$, lb/sec	Inner-ring fuel-air ratio, $w_{f,i}/w_{a,5}$	Outer-ring fuel-air ratio, $w_{f,o}/w_{a,5}$
Flight Mach												
Inner-ring-only												
1	50,000	0	744	3264	----	1188	1.02	0	1.02	43.70	0.0233	0
2		0	820	3294	----	1201	.97	0	.97	42.49	.0228	0
3		4	746	3283	----	1196	1.03	0	1.03	43.80	.0235	0
4		-4	742	3276	----	1212	1.02	0	1.02	43.91	.0232	0
5		7	743	3299	----	1191	1.03	0	1.03	43.68	.0236	0
6		7	818	3302	----	1199	.98	0	.98	42.16	.0232	0
7		-7	743	3266	----	1194	1.03	0	1.03	43.36	.0238	0
8	60,000	0	743	2048	----	600	0.64	0	0.64	27.45	0.0233	0
9		0	815	2047	----	709	.59	0	.59	26.49	.0223	0
10		7	745	2053	----	588	.64	0	.64	27.16	.0236	0
11		-7	818	2050	----	739	.58	0	.58	26.23	.0221	0
Dual-pressure												
12	50,000	0	744	3264	----	1396	1.03	0.77	1.80	43.70	0.0236	0.0176
13			745	3286	1932	1685	1.02	1.21	2.23	43.99	.0232	.0275
14			745	3270	2114	1871	1.02	1.64	2.66	43.77	.0233	.0375
15			745	3258	2159	1927	1.03	1.88	2.91	43.63	.0236	.0431
16			745	3257	2220	1958	1.03	2.09	3.12	43.59	.0236	.0479
17			820	3286	----	1374	.98	.72	1.70	42.38	.0231	.0170
18			821	3291	1891	1640	.98	1.13	2.11	42.46	.0231	.0266
19			822	3285	2075	1816	.98	1.57	2.55	42.34	.0231	.0371
20			823	3291	2158	1902	.98	2.00	2.98	42.38	.0231	.0472
21			822	3284	----	1949	.98	2.19	3.17	42.31	.0232	.0517
22		4	747	3265	----	1390	1.03	.78	1.81	43.55	.0237	.0179
23			745	3276	1921	1686	1.03	1.22	2.25	43.73	.0236	.0279
24			744	3275	2108	1868	1.03	1.66	2.69	43.76	.0235	.0379
25			743	3272	2157	1923	1.03	1.88	2.91	43.73	.0236	.0430
26			743	3300	2176	1944	1.02	1.94	2.96	44.13	.0231	.0440
27			743	3291	2180	1920	1.02	2.03	3.05	43.98	.0232	.0462
28		-4	742	3267	----	1414	1.03	.77	1.80	43.76	.0235	.0176
29			743	3276	1947	1703	1.03	1.20	2.23	43.87	.0235	.0274
30			743	3286	2128	1874	1.03	1.65	2.68	43.98	.0234	.0375
31			744	3273	2175	1930	1.03	1.89	2.92	43.80	.0235	.0432
32			744	3281	----	1873	1.03	2.11	3.14	43.91	.0235	.0481
33		7	742	3299	----	1400	1.03	.77	1.80	43.72	.0236	.0176
34			742	3299	1903	1663	1.03	1.21	2.24	43.43	.0237	.0279
35			743	3276	2089	1846	1.03	1.62	2.65	43.50	.0237	.0372
36			742	3286	2097	1856	1.02	1.79	2.81	43.54	.0234	.0411
37			818	3289	----	1386	.98	.73	1.71	41.98	.0233	.0174
38			818	3283	1855	1623	.98	1.14	2.12	41.90	.0234	.0272
39			818	3288	2017	1766	.98	1.57	2.55	41.98	.0233	.0374
40			819	3293	2123	1840	.98	2.01	2.99	42.01	.0233	.0478
41		-7	740	3285	----	1407	1.03	.76	1.79	43.72	.0236	.0174
42			737	3263	1944	1692	1.03	1.20	2.23	43.50	.0237	.0276
43			735	3282	2127	1881	1.03	1.64	2.67	43.83	.0235	.0374
44			740	3295	2174	1921	1.03	1.88	2.91	43.83	.0235	.0429
45	60,000	0	745	2038	----	669	0.64	0.47	1.11	27.29	0.0235	0.0172
46			745	2041	----	997	.64	.75	1.39	27.33	.0234	.0274
47			744	2046	1305	1146	.64	1.03	1.67	27.41	.0233	.0376
48			744	2037	1333	1177	.64	1.17	1.81	27.28	.0235	.0429
49			744	2039	1350	1197	.64	1.30	1.94	27.31	.0234	.0476
50			744	2048	1362	1201	.64	1.45	2.09	27.43	.0233	.0529
51			744	2044	1356	1195	.64	1.58	2.22	27.38	.0234	.0577
52			744	2041	1287	1124	.64	1.85	2.49	27.34	.0234	.0677
53			818	2049	----	851	.59	.46	1.05	26.47	.0223	.0174
54			817	2051	----	986	.59	.70	1.29	26.52	.0222	.0264
55			821	2050	1238	1077	.62	.95	1.57	26.44	.0234	.0359
56			817	2054	1290	1137	.59	.97	1.56	26.56	.0222	.0365
57			817	2046	1360	1187	.59	1.23	1.82	26.45	.0223	.0465
58			816	2043	1350	1188	.59	1.38	1.97	26.42	.0223	.0522
59			816	2046	1333	1184	.59	1.51	2.10	26.46	.0223	.0571
60			815	2044	1271	1103	.59	1.77	2.36	26.45	.0223	.0669
61		7	742	2058	----	784	.64	.47	1.11	27.27	.0235	.0172
62			742	2054	----	977	.64	.75	1.39	27.22	.0235	.0276
63			741	2045	1267	1106	.64	1.02	1.66	27.12	.0236	.0376
64			740	2047	1297	1136	.64	1.16	1.80	27.17	.0236	.0427
65		-7	817	2057	----	826	.58	.46	1.04	26.33	.0220	.0175
66			817	2042	----	980	.58	.70	1.28	26.14	.0222	.0268
67			817	2045	1276	1121	.58	.97	1.55	26.18	.0222	.0371
68			817	2041	1336	1177	.59	1.23	1.82	26.13	.0226	.0471
69			817	2043	1348	1181	.59	1.37	1.96	26.15	.0226	.0524
70			817	2051	1324	1155	.59	1.52	2.11	26.26	.0225	.0579

DECLASSIFIED

3816

OF SEVERAL ENGINE CONFIGURATIONS

flameholder D

Over-all fuel-air ratio, $w_f/w_{a,5}$	Diffuser outlet Mach number, M_2	Calculated diffuser total pressure recovery, P_2/P_0	Engine total-pressure ratio, P_5/P_0	Calculated combustor total-pressure ratio, P_5/P_2	Exhaust-gas total temperature, T_5, °R	Combustion efficiency, η_c	Net thrust coefficient, $C_{F,n}$	Combustor remarks	Diffuser operating point	Run
number, 2.35										
fuel injection										
0.0233	-----	-----	0.364	-----	1637	0.559	0.164	No buzz or screech	Supercritical	1
.0228	-----	-----	.365	-----	1773	.612	.158			2
.0235	-----	-----	.364	-----	1651	.565	.167			3
.0232	-----	-----	.370	-----	1687	.594	.184			4
.0236	-----	-----	.361	-----	1644	.558	.164			5
.0232	-----	-----	.363	-----	1790	.617	.152			6
.0238	-----	-----	.366	-----	1675	.573	.176			7
0.0233	-----	-----	0.293	-----	1058	.197	-0.064	No buzz or screech	Supercritical	8
.0223	-----	-----	.346	-----	1592	.514	.100			9
.0236	-----	-----	.286	-----	1037	.181	-.076			10
.0221	-----	-----	.361	-----	1764	.625	.152			11
fuel injection										
0.0412	-----	-----	0.428	-----	2132	0.543	0.369	No buzz or screech	Supercritical	12
.0507	0.320	0.588	.513	0.872	2980	.745	.643			13
.0608	.288	.647	.572	.885	3608	.867	.833			14
.0667	.280	.663	.592	.893	3782	.900	.895	No buzz screech		15
.0715	.271	.682	.601	.882	3846	.917	.926	No buzz screech	Subcritical	16
.0401	-----	-----	.418	-----	2203	.558	.330	No buzz or screech	Supercritical	17
.0497	.333	.575	.498	.867	3040	.759	.588			18
.0602	.299	.632	.553	.875	3637	.865	.763			19
.0703	.286	.656	.578	.881	3860	.906	.843			20
.0749	-----	-----	.594	-----	3994	.953	.893	No buzz screech	Subcritical	21
.0413	-----	-----	.426	-----	2127	.538	.364	No buzz or screech	Supercritical	22
.0515	.320	.586	.515	.878	3016	.742	.650			23
.0614	.288	.644	.570	.886	3592	.859	.829			24
.0666	.281	.659	.588	.892	3754	.891	.885		Subcritical	25
.0671	.280	.659	.589	.893	3760	.892	.889			26
.0694	.279	.662	.583	.881	3668	.863	.871			27
.0411	-----	-----	.433	-----	2182	.564	.386		Supercritical	28
.0507	.316	.594	.520	.875	3060	.771	.666			29
.0607	.286	.648	.570	.881	3584	.859	.827			30
.0667	.279	.665	.590	.887	3770	.896	.891		Subcritical	31
.0716	-----	-----	.571	-----	3475	.807	.830		Supercritical	32
.0412	-----	-----	.424	-----	2142	.546	.368			33
.0516	.320	.581	.508	.874	2968	.732	.635			34
.0609	.289	.636	.562	.884	3557	.850	.809		Subcritical	35
.0645	.288	.638	.565	.885	3545	.834	.819		Subcritical	36
.0407	-----	-----	.421	-----	2282	.585	.350		Supercritical	37
.0506	.334	.565	.494	.875	3047	.752	.585			38
.0607	.305	.613	.537	.876	3498	.822	.721			39
.0711	.288	.645	.559	.867	3666	.850	.791		Subcritical	40
.0410	-----	-----	.428	-----	2167	.562	.378		Supercritical	41
.0513	.312	.596	.519	.870	3067	.769	.668			42
.0609	.284	.648	.571	.884	3636	.876	.837			43
.0664	.278	.660	.583	.884	3731	.885	.875		Subcritical	44
0.0407	-----	-----	0.328	-----	1257	0.202	0.049	No buzz or screech	Supercritical	45
.0508	-----	-----	.489	-----	2701	.654	.565		Supercritical	46
.0609	0.292	0.638	.560	0.878	3453	.818	.794		Critical	47
.0664	.284	.654	.578	.883	3617	.851	.851		Subcritical	48
.0710	.280	.662	.587	.887	3669	.864	.881			49
.0762	.279	.665	.586	.882	3590	.849	.879			50
.0811	.279	.663	.585	.881	3496	.838	.873			51
.0911	.295	.631	.551	.873	2971	.722	.765		Critical	52
.0397	-----	-----	.415	-----	2168	.548	.321		Supercritical	53
.0486	-----	-----	.481	-----	2823	.695	.531			54
.0593	.314	.604	.525	.870	3289	.763	.675			55
.0587	.301	.628	.554	.881	3636	.874	.765			56
.0688	.282	.665	.580	.873	3879	.914	.851		Subcritical	57
.0745	.284	.661	.582	.880	3813	.900	.855		Subcritical	58
.0794	.289	.652	.569	.873	3580	.844	.815		Supercritical	59
.0892	.304	.622	.540	.868	3084	.732	.720			60
.0407	-----	-----	.381	-----	1728	.389	.228			61
.0511	-----	-----	.476	-----	2613	.619	.532			62
.0612	.298	.620	.541	.873	3279	.766	.742			63
.0663	.290	.634	.555	.876	3393	.785	.787		Subcritical	64
.0395	-----	-----	.402	-----	2065	.509	.284		Supercritical	65
.0490	-----	-----	.480	-----	2868	.707	.535			66
.0593	.300	.624	.548	.879	3637	.873	.755			67
.0697	.284	.655	.577	.881	3896	.919	.847		Subcritical	68
.0750	.282	.660	.578	.876	3844	.909	.851	No buzz screech	Subcritical	69
.0804	.288	.646	.563	.872	3568	.842	.803	No buzz screech	Critical	70

3816

TABLE I. - Continued. PERFORMANCE

(i) Continued.

Run	Altitude, ft	Angle of attack, α, deg	Free-stream total temperature, T_0, °R	Free-stream total pressure, P_0, lb/sq ft abs	Calculated diffuser outlet total pressure, P_2, lb/sq ft abs	Exhaust-nozzle total pressure, P_5, lb/sq ft abs	Inner-ring fuel flow, $w_{f,i}$, lb/sec	Outer-ring fuel flow, $w_{f,o}$, lb/sec	Total fuel flow, w_f, lb/sec	Combustor critical air flow, $w_{a,5}$, lb/sec	Inner-ring fuel-air ratio, $w_{f,i}/w_{a,5}$	Outer-ring fuel-air ratio, $w_{f,o}/w_{a,5}$
Flight Mach												
Dual-pressure												
71	68,000	0	746	1406	----	678	0.44	0.51	0.95	18.81	0.0234	0.0271
72			746	1407	851	742	.44	.71	1.15	18.83	.0234	.0377
73			746	1406	876	771	.44	.81	1.25	18.81	.0234	.0431
74			745	1402	895	785	.44	.90	1.34	18.77	.0234	.0479
75			745	1403	893	785	.44	.99	1.43	18.79	.0234	.0527
76			745	1403	860	773	.44	1.09	1.53	18.79	.0234	.0580
77			822	1399	----	663	.42	.50	.92	18.03	.0233	.0277
78			822	1397	841	737	.42	.68	1.10	18.01	.0233	.0378
79			812	1407	877	771	.42	.84	1.26	18.24	.0230	.0461
80			809	1403	883	778	.42	.91	1.33	18.23	.0230	.0499
81			810	1402	886	781	.42	.95	1.37	18.20	.0231	.0522
82		7	744	1402	----	533	.44	.34	.78	18.55	.0237	.0183
83			744	1404	----	657	.44	.51	.95	18.58	.0237	.0274
84			744	1401	843	728	.44	.70	1.14	18.54	.0237	.0378
85			744	1401	858	744	.44	.81	1.25	18.54	.0237	.0437
86			744	1400	857	744	.44	.90	1.34	18.53	.0237	.0486
87		-7	815	1401	765	666	.42	.48	.90	17.95	.0234	.0267
88			814	1399	822	716	.42	.66	1.08	17.94	.0234	.0368
89			814	1402	854	748	.42	.76	1.18	17.98	.0234	.0423
90			813	1400	871	766	.42	.86	1.28	17.97	.0234	.0479
91			813	1399	873	762	.42	.96	1.38	17.95	.0234	.0535
Flight Mach												
Inner-ring-only												
1	50,000	0	794	4140	----	1397	1.13	0	1.13	48.07	0.0235	0
2		0	878	3895	----	1360	1.07	0	1.07	43.64	.0245	0
3		4	792	4105	----	1382	1.13	0	1.13	47.69	.0237	0
4		-4	792	4135	----	1395	1.13	0	1.13	47.61	.0237	0
5		7	792	4115	----	1373	1.13	0	1.13	47.00	.0240	0
6		7	876	4157	----	1368	1.07	0	1.07	45.78	.0234	0
7		-7	792	4120	----	1374	1.13	0	1.13	46.66	.0242	0
8	60,000	0	792	2577	----	846	0.70	0	0.70	29.96	0.0234	0
9		0	874	2566	----	830	.66	0	.66	28.81	.0229	0
10		7	789	2577	----	817	.69	0	.69	29.49	.0234	0
11		-7	872	2574	----	826	.67	0	.67	28.18	.0238	0
12	66,300	7	790	1917	----	583	0.53	0	0.53	21.93	0.0242	0
13	67,500	0	875	1808	----	567	0.47	0	0.47	20.29	0.0232	0
14		-7	872	1932	----	577	.47	0	.47	21.15	.0222	0
Dual-pressure												
15	50,000	0	788	4139	----	1578	1.12	0.83	1.95	48.26	0.0232	0.0172
16			792	4122	2153	1900	1.13	1.32	2.45	47.93	.0236	.0275
17			792	4136	2387	2119	1.13	1.81	2.94	48.10	.0235	.0376
18			792	4137	2437	2166	1.13	2.06	3.19	48.10	.0235	.0428
19			790	4129	2478	2206	1.12	2.31	3.43	48.07	.0233	.0481
20			790	4130	----	2238	1.12	2.77	3.89	48.07	.0233	.0576
21			878	4143	1787	1569	1.04	.79	1.83	46.40	.0224	.0170
22			878	4136	2094	1847	1.06	1.25	2.31	46.33	.0229	.0270
23			878	4138	2296	2028	1.06	1.72	2.78	46.37	.0229	.0371
24			878	4133	2376	2100	1.06	2.19	3.25	46.30	.0229	.0473
25			878	4141	2546	2190	1.04	2.64	3.68	46.40	.0224	.0569
26		4	792	4106	1840	1600	1.13	.84	1.97	47.69	.0237	.0176
27			792	4126	2140	1890	1.12	1.32	2.44	47.92	.0234	.0275
28			792	4138	2352	2086	1.13	1.82	2.95	48.09	.0235	.0378
29			792	4121	2405	2136	1.13	2.08	3.21	47.88	.0236	.0435
30			792	4127	2446	2162	1.13	2.31	3.44	47.96	.0236	.0482
31		-4	792	4132	1808	1567	1.13	.82	1.95	47.58	.0237	.0172
32			792	4133	2162	1905	1.13	1.32	2.45	47.61	.0237	.0277
33			792	4133	2374	2117	1.13	1.82	2.95	47.61	.0237	.0382
34			792	4119	2416	2155	1.13	2.07	3.20	47.45	.0238	.0436
35			792	4132	2455	2192	1.12	2.30	3.42	47.58	.0235	.0483
36			792	4136	2554	2201	1.13	2.64	3.77	47.64	.0238	.0554
37		7	791	4124	1838	1592	1.13	.83	1.96	47.16	.0240	.0176
38			791	4144	2108	1875	1.13	1.32	2.45	47.39	.0238	.0279
39			792	4134	2309	2048	1.13	1.82	2.95	47.23	.0239	.0385
40			792	4140	2369	2096	1.13	2.06	3.19	47.29	.0239	.0436
41			792	4131	2410	2119	1.13	2.30	3.43	47.20	.0239	.0487
42			875	4143	1810	1578	1.06	.79	1.85	45.69	.0232	.0173
43			874	4147	2059	1818	1.07	1.25	2.32	45.75	.0234	.0273
44			874	4135	2208	1939	1.07	1.71	2.78	45.62	.0235	.0375
45			872	4140	2301	2024	1.07	2.18	3.25	45.72	.0234	.0477
46			873	4137	2315	2046	1.07	2.66	3.73	45.65	.0234	.0583

DECLASSIFIED

3816

CX-5

OF SEVERAL ENGINE CONFIGURATIONS

Step flameholder D

Over-all fuel-air ratio, $w_f/w_{a,5}$	Diffuser outlet Mach number, M_2	Calculated diffuser total-pressure recovery, P_2/P_0	Engine total-pressure ratio, P_5/P_0	Calculated combustor total-pressure ratio, P_5/P_2	Exhaust-gas total temperature, T_5, °R	Combustion efficiency, η_c	Net thrust coefficient, $C_{F,n}$	Combustor remarks	Diffuser operating point	Run
number, 2.35										
fuel injection										
0.0505	-----	-----	0.482	-----	2640	0.635	0.544	No buzz or screech	Supercritical	71
.0611	0.310	0.605	.527	0.872	3066	.702	.690			72
.0665	.300	.623	.548	.880	3263	.746	.757			73
.0713	.291	.638	.560	.877	3337	.766	.794			74
.0761	.292	.637	.560	.879	3279	.756	.794			75
.0814	.298	.627	.551	.878	3110	.721	.765			76
.0510	-----	-----	.474	-----	2744	.647	.509			77
.0611	.315	.602	.528	.876	3306	.758	.682			78
.0691	.303	.623	.548	.879	3442	.784	.747			79
.0729	.300	.629	.555	.881	3454	.791	.768			80
.0753	.298	.632	.557	.882	3462	.797	.777			81
.0420	-----	-----	.380	-----	1724	.380	.225			82
.0511	-----	-----	.468	-----	2542	.599	.508			83
.0615	.308	.602	.520	.864	3038	.692	.674			84
.0674	.301	.612	.531	.867	3120	.702	.710			85
.0723	.301	.612	.531	.868	3063	.685	.711			86
.0501	.349	.546	.475	.871	2799	.675	.521			87
.0602	.320	.588	.512	.871	3152	.718	.638			88
.0657	.308	.609	.534	.876	3369	.766	.708			89
.0713	.301	.622	.547	.879	3472	.793	.751			90
.0769	.300	.624	.545	.873	3365	.770	.744			91
number, 2.50										
fuel injection										
0.0235	-----	-----	0.337	-----	1870	0.674	0.216	No buzz or screech	---------	1
.0245	-----	-----	.349	-----	2139	.764	.247		---------	2
.0237	-----	-----	.337	-----	1858	.663	.214		---------	3
.0237	-----	-----	.337	-----	1900	.689	.223		---------	4
.0240	-----	-----	.334	-----	1885	.672	.215		---------	5
.0234	-----	-----	.329	-----	1977	.696	.189		---------	6
.0242	-----	-----	.334	-----	1914	.685	.222		---------	7
0.0234	-----	-----	0.328	-----	1766	0.615	0.183	No buzz or screech	---------	8
.0229	-----	-----	.324	-----	1840	.620	.155		---------	9
.0234	-----	-----	.317	-----	1699	.570	.155		---------	10
.0238	-----	-----	.321	-----	1901	.644	.165		---------	11
0.0242	-----	-----	0.304	-----	1561	.474	.109	No buzz or screech	---------	12
0.0232	-----	-----	0.314	-----	1730	0.549	0.119	No buzz or screech	---------	13
.0222	-----	-----	.299	-----	1654	.543	.086	No buzz or screech	---------	14
fuel injection										
0.0404	-----	-----	0.381	-----	2240	0.579	0.373	No buzz or screech	---------	15
.0511	0.323	0.522	.461	0.883	3191	.802	.658		---------	16
.0611	.289	.577	.512	.888	3830	.924	.843		---------	17
.0663	.282	.589	.524	.889	3938	.938	.884		---------	18
.0714	.276	.600	.534	.890	4021	.961	.921		---------	19
.0809	-----	-----	0.542	-----	3985	0.978	0.949	No buzz screech	---------	20
.0394	.412	.431	.379	.878	2403	.629	.352	No buzz or screech	---------	21
.0499	.340	.506	.447	.882	3233	.808	.596		---------	22
.0600	.306	.555	.490	.883	3787	.904	.752		---------	23
.0702	.294	.575	.508	.884	3943	.923	.817		---------	24
.0793	.273	.615	.529	.860	4123	.998	.892	No buzz screech	---------	25
.0413	.386	.448	.390	.870	2353	.614	.404	No buzz or screech	---------	26
.0509	.325	.519	.458	.883	3158	.791	.650		---------	27
.0613	.293	.568	.504	.887	3714	.888	.815		---------	28
.0671	.285	.584	.518	.888	3860	.914	.865		---------	29
.0718	.280	.593	.524	.884	3875	.917	.886		---------	30
.0409	.393	.438	.379	.867	2268	.583	.372		---------	31
.0514	.319	.523	.461	.881	3306	.837	.665		---------	32
.0619	.287	.574	.512	.892	3893	.939	.849		---------	33
.0674	.281	.587	.523	.892	3991	.952	.889		---------	34
.0718	.277	.594	.531	.893	4044	.968	.915		---------	35
.0792	.265	.618	.532	.862	3952	.960	.921	No buzz screech	---------	36
.0416	.380	.446	.386	.866	2379	.620	.403	No buzz or screech	---------	37
.0517	.326	.509	.453	.890	3170	.788	.641		---------	38
.0624	.293	.559	.495	.887	3693	.876	.795		---------	39
.0675	.286	.572	.506	.885	3803	.896	.834		---------	40
.0726	.280	.583	.513	.879	3830	.905	.859		---------	41
.0405	.397	.437	.381	.872	2499	.655	.374		---------	42
.0507	.341	.497	.438	.883	3207	.793	.581		---------	43
.0610	.314	.534	.469	.878	3566	.829	.690		---------	44
.0711	.299	.556	.489	.880	3745	.864	.762	No buzz screech	---------	45
.0817	.298	.560	.495	.884	3680	.872	.782	No buzz screech	---------	46

3816

TABLE I. - Continued. PERFORMANCE

(i) Concluded.

Run	Altitude, ft	Angle of attack, α, deg	Free-stream total temperature, T_0, °R	Free-stream total pressure, P_0, lb/sq ft abs	Calculated diffuser-outlet total pressure, P_2, lb/sq ft abs	Exhaust-nozzle total pressure, P_5, lb/sq ft abs	Inner-ring fuel flow, $w_{f,i}$, lb/sec	Outer-ring fuel flow, $w_{f,o}$, lb/sec	Total fuel flow, w_f, lb/sec	Combustor critical air flow, $w_{a,5}$, lb/sec	Inner-ring fuel-air ratio, $w_{f,i}/w_{a,5}$	Outer-ring fuel-air ratio, $w_{f,o}/w_{a,5}$
												Flight Mach
												Dual-pressure
47	50,000	-7	792	4135	1817	1584	1.13	0.84	1.97	46.82	0.0241	0.0179
48			791	4122	2128	1882	1.13	1.32	2.45	46.72	.0242	.0283
49			792	4108	2317	2064	1.13	1.81	2.94	46.53	.0243	.0389
50			792	4127	2312	2065	1.13	1.82	2.95	46.76	.0242	.0389
51			792	4120	2356	2108	1.13	2.06	3.19	46.66	.0242	.0441
52			792	4124	2389	2135	1.12	2.30	3.42	46.72	.0240	.0492
53	60,000	0	792	2574	1083	930	0.69	0.51	1.20	29.93	0.0231	0.0170
54			791	2578	1293	1130	.69	.82	1.51	30.00	.0230	.0273
55			791	2574	1472	1305	.69	1.12	1.81	29.95	.0230	.0374
56			791	2575	1512	1339	.70	1.27	1.97	29.96	.0234	.0424
57			791	2561	1539	1366	.70	1.42	2.12	29.80	.0235	.0477
58			791	2575	1562	1374	.70	1.74	2.44	29.96	.0234	.0581
59			791	2574	1465	1283	.69	2.03	2.72	29.95	.0230	.0678
60			873	2566	1097	959	.67	.50	1.17	28.82	.0232	.0173
61			872	2569	1262	1099	.67	.79	1.46	28.88	.0232	.0274
62			872	2577	1429	1263	.67	1.09	1.76	28.96	.0231	.0376
63			872	2574	1482	1311	.67	1.36	2.03	28.93	.0232	.0470
64			870	2565	1535	1343	.67	1.68	2.35	29.08	.0230	.0578
65			872	2573	1615	1363	.67	1.94	2.61	28.92	.0232	.0671
66		7	788	2584	1135	964	.70	.52	1.22	29.60	.0236	.0176
67			788	2576	1269	1117	.69	.83	1.52	29.50	.0234	.0281
68			788	2574	1411	1229	.69	1.12	1.81	29.48	.0234	.0380
69			788	2578	1467	1285	.69	1.27	1.96	29.53	.0234	.0430
70			788	2569	1496	1300	.69	1.43	2.12	29.42	.0235	.0486
71			788	2576	1456	1287	.70	1.74	2.44	29.50	.0237	.0590
72			789	2579	1379	1229	.70	2.03	2.73	29.52	.0237	.0688
73		-7	872	2580	1084	945	.67	.50	1.17	28.25	.0237	.0177
74			872	2572	1262	1109	.67	.78	1.45	28.16	.0238	.0277
75			873	2575	1385	1238	.67	1.09	1.76	28.17	.0238	.0387
76			872	2571	1430	1277	.67	1.36	2.03	28.15	.0238	.0483
77			872	2578	1455	1279	.67	1.66	2.33	28.22	.0237	.0588
78			872	2578	1431	1288	.67	1.94	2.61	28.22	.0237	.0687
79		0	797	1918	947	820	.52	.60	1.12	22.37	.0232	.0268
80	66,300	0	792	1916	1068	940	0.52	0.83	1.35	22.28	0.0233	0.0373
81			792	1915	1134	1002	.51	1.05	1.56	22.27	.0229	.0472
82			792	1907	1149	1011	.52	1.28	1.80	22.17	.0235	.0577
83		7	790	1912	722	607	.52	.16	.68	21.87	.0238	.0073
84			790	1912	808	697	.52	.38	.90	21.87	.0238	.0174
85			791	1912	932	820	.52	.61	1.13	21.86	.0238	.0279
86			791	1916	1034	904	.52	.83	1.35	21.91	.0237	.0379
87			789	1916	1097	962	.52	1.05	1.57	21.93	.0237	.0479
88			789	1916	1073	950	.52	1.28	1.80	21.93	.0237	.0584
89	67,500	0	875	1810	749	640	0.47	0.36	0.83	20.31	0.0231	0.0177
90			875	1806	867	752	.46	.55	1.01	20.26	.0227	.0271
91			875	1807	992	875	.46	.76	1.22	20.28	.0227	.0375
92			874	1809	1030	907	.47	.94	1.41	20.31	.0231	.0463
93			874	1807	1035	908	.47	1.16	1.63	20.29	.0232	.0572
94			874	1810	1004	875	.47	1.35	1.82	20.32	.0231	.0664
95		-7	874	1808	725	628	.47	.36	.83	19.77	.0238	.0182
96			878	1812	840	729	.46	.55	1.01	19.77	.0233	.0278
97			878	1812	943	836	.47	.76	1.23	19.77	.0238	.0384
98			878	1807	986	873	.47	.94	1.41	19.72	.0238	.0477
99			878	1812	993	870	.47	1.15	1.62	19.77	.0238	.0582
100			878	1804	989	864	.47	1.36	1.83	19.68	.0239	.0691
101	60,000	0	791	2583	1277	1117	----	----	1.37	30.06	------	------
102			791	2581	1371	1210	----	----	1.52	30.03	------	------
103			791	2578	1435	1262	----	----	1.67	30.00	------	------
104			792	2584	1481	1299	----	----	1.81	30.05	------	------
105			792	2584	1498	1322	----	----	1.94	30.05	------	------
106			792	2578	1530	1350	----	----	2.13	29.97	------	------
107			792	2579	1546	1361	----	----	2.28	29.99	------	------
108		7	791	2580	1398	1227	----	----	1.80	29.50	------	------
109			792	2578	1451	1267	----	----	1.97	29.45	------	------
110			792	2577	1484	1282	----	----	2.12	29.44	------	------
111		-7	791	2580	1383	1219	----	----	1.67	29.24	------	------
112			791	2586	1427	1268	----	----	1.82	29.31	------	------
113			791	2579	1452	1297	----	----	1.97	29.23	------	------
114			791	2578	1464	1307	----	----	2.09	29.22	------	------
115			792	2578	1485	1319	----	----	2.23	29.20	------	------

DECLASSIFIED

3816

CX-5 back

OF SEVERAL ENGINE CONFIGURATIONS

Step flameholder D

Over-all fuel-air ratio, $w_f/w_{a,5}$	Diffuser outlet Mach number, M_2	Calculated diffuser total-pressure recovery, P_2/P_0	Engine total-pressure ratio, P_5/P_0	Calculated combustor total-pressure ratio, P_5/P_2	Exhaust-gas total temperature, T_5, °R	Combustion efficiency, η_c	Net thrust coefficient, $C_{F,n}$	Combustor remarks	Diffuser operating point	Run
number 2.50										
fuel injection										
0.0420	0.383	0.439	0.383	0.872	2385	0.617	0.400	No buzz or screech	----------	47
.0524	.318	.516	.457	.884	3283	.819	.663		----------	48
.0632	.287	.564	.502	.891	3859	.924	.827		----------	49
.0631	.289	.560	.500	.893	3827	.914	.820		----------	50
.0683	.283	.572	.512	.895	3939	.936	.859		----------	51
.0732	.279	.579	.518	.894	3959	.944	.882		----------	52
0.0401	0.418	0.421	0.361	0.859	2024	0.494	0.301	No buzz or screech	----------	53
.0503	.338	.502	.438	.874	2884	.705	.578		----------	54
.0604	.291	.572	.507	.887	3753	.904	.824		----------	55
.0658	.283	.587	.520	.886	3884	.924	.871		----------	56
.0712	.276	.601	.533	.888	4017	.959	.919		----------	57
.0815	.273	.607	.534	.880	3857	.941	.920		----------	58
.0908	.293	.569	.499	.876	3232	.794	.793		----------	59
.0405	.417	.428	.374	.874	2317	.582	.335		----------	60
.0506	.352	.491	.428	.871	2838	.671	.529		----------	61
.0607	.307	.555	.490	.884	3635	.852	.752		----------	62
.0702	.294	.576	.509	.885	3939	.922	.820		----------	63
.0808	.284	.594	.520	.875	3923	.944	.858		----------	64
.0903	.267	.628	.530	.844	3920	.997	.894	No buzz screech	----------	65
.0412	.387	.439	.373	.849	2216	.564	.356	No buzz or screech	----------	66
.0515	.338	.493	.434	.880	2904	.703	.574		----------	67
.0614	.300	.548	.478	.871	3425	.801	.731		----------	68
.0664	.287	.569	.499	.876	3678	.862	.806		----------	69
.0721	.280	.582	.506	.869	3714	.871	.833		----------	70
.0827	.290	.565	.500	.884	3469	.829	.810		----------	71
.0925	.308	.535	.477	.891	3031	.739	.728		----------	72
.0414	.412	.420	.366	.872	2056	.469	.328		----------	73
.0515	.342	.491	.431	.879	3143	.764	.561		----------	74
.0625	.308	.538	.481	.894	3797	.894	.739		----------	75
.0721	.297	.556	.497	.893	3919	.917	.796		----------	76
.0825	.292	.564	.496	.879	3745	.898	.794	No buzz screech	----------	77
.0924	.297	.555	.476	.858	3310	.810	.723	No buzz or screech	----------	78
.0500	.345	.494	.428	.866	2736	.668	.539	No buzz or screech	----------	79
0.0606	0.300	0.557	0.491	0.880	3520	0.835	0.765	No buzz or screech	----------	80
.0701	.280	.592	.523	.884	3885	.919	.882		----------	81
.0812	.275	.603	.530	.880	3816	.927	.907		----------	82
.0311	.469	.378	.318	.841	1662	.434	.157		----------	83
.0412	.406	.423	.365	.863	2122	.526	.326		----------	84
.0517	.342	.487	.429	.880	2849	.683	.556		----------	85
.0616	.305	.540	.472	.874	3353	.777	.711		----------	86
.0716	.286	.573	.502	.877	3668	.856	.819		----------	87
.0821	.292	.560	.496	.885	3436	.814	.796		----------	88
0.0408	0.434	0.414	0.354	0.855	2078	0.483	0.262	No buzz or screech	----------	89
.0498	.362	.480	.416	.867	2803	.662	.488		----------	90
.0602	.310	.549	.484	.882	3682	.870	.731		----------	91
.0694	.297	.569	.501	.882	3830	.889	.792	No buzz screech	----------	92
.0804	.296	.573	.503	.881	3695	.869	.797	No buzz or screech	----------	93
.0895	.306	.555	.483	.555	3286	.785	.728		----------	94
.0420	.437	.401	.347	.866	2103	.483	.260		----------	95
.0511	.366	.464	.402	.868	2758	.638	.457		----------	96
.0622	.320	.520	.461	.887	3518	.810	.669		----------	97
.0725	.303	.546	.483	.885	3723	.858	.745		----------	98
.0820	.302	.548	.480	.876	3546	.830	.737		----------	99
.0930	.302	.548	.479	.874	3371	.830	.732	No buzz screech	----------	100
0.0456	0.344	0.494	0.432	0.875	2843	0.743	0.556	No buzz or screech	----------	101
.0506	.317	.531	.469	.883	3298	.844	.686		----------	102
.0557	.300	.557	.490	.879	3578	.887	.761		----------	103
.0602	.291	.573	.503	.877	3672	.881	.815		----------	104
.0646	.287	.580	.512	.883	3777	.894	.841		----------	105
.0711	.280	.594	.523	.882	3877	.917	.931		----------	106
.0760	.277	.600	.528	.880	3864	.922	.898		----------	107
.0610	.303	.542	.476	.878	3416	.799	.724		----------	108
.0669	.291	.563	.492	.873	3587	.833	.781		----------	109
.0720	.284	.576	.498	.864	3612	.839	.803		----------	110
.0571	.304	.536	.473	.881	3529	.858	.720		----------	111
.0621	.295	.552	.490	.888	3683	.875	.784		----------	112
.0674	.288	.563	.503	.893	3812	.899	.830		----------	113
.0715	.285	.568	.507	.893	3819	.900	.844		----------	114
.0781	.281	.576	.512	.888	3794	.908	.860		----------	115

TABLE I. - Continued. PERFORMANCE

(j) Isentropic inlet;

Run	Altitude, ft	Angle of attack, α, deg	Free-stream total temperature, T_0, °R	Free-stream total pressure, P_0, lb/sq ft abs	Diffuser outlet total pressure, P_2, lb/sq ft abs	Exhaust-nozzle total pressure, P_5, lb/sq ft abs	Inner-ring fuel flow, $w_{f,i}$, lb/sec	Outer-ring fuel flow, $w_{f,o}$, lb/sec	Total fuel flow, w_f, lb/sec	Combustor critical air flow, $w_{a,5}$, lb/sec	Inner-ring fuel-air ratio, $w_{f,i}/w_{a,5}$	Outer-ring fuel-air ratio, $w_{f,o}/w_{a,5}$
Inner-ring-only												
1	50,000	0	739	3278	1852	1557	1.72	0	1.72	46.37	0.0371	0
2		0	817	3255	1838	1516	1.63	0	1.63	43.79	.0372	0
3		4	739	3276	1736	1455	1.54	0	1.54	46.10	.0334	0
4			739	3283	1830	1535	1.73	0	1.73	46.22	.0374	0
5			815	3284	1902	1569	1.64	0	1.64	44.00	.0373	0
6		-4	741	3282	1853	1562	1.72	0	1.72	46.26	.0372	0
7	60,000	0	739	2039	1086	911	1.08	0	1.08	28.85	0.0374	0
8		4	733	2043	1029	849	.96	0	.96	28.87	.0333	0
9		4	737	2042	1102	935	1.08	0	1.08	28.78	.0375	0
Dual-pressure												
10	50,000	0	739	3277	2170	1833	1.73	0.34	2.07	46.37	0.0373	0.0073
11			739	3278	2259	1908	1.73	.54	2.27	46.37	.0373	.0116
12			739	3276	2331	1975	1.73	.77	2.50	46.33	.0373	.0166
13			739	3277	2364	2021	1.72	1.00	2.72	46.37	.0371	.0216
14			739	3281	2408	2056	1.72	1.19	2.91	46.41	.0371	.0256
15			740	3282	2454	2088	1.73	1.42	3.15	46.41	.0373	.0306
16			817	3292	2139	1763	1.64	.28	1.92	44.29	.0370	.0063
17			817	3278	2216	1827	1.64	.46	2.10	44.10	.0372	.0104
18			817	3285	2303	1884	1.65	.67	2.32	44.18	.0373	.0152
19			817	3287	2359	1948	1.65	.89	2.54	44.22	.0373	.0201
20			816	3288	2384	1975	1.64	1.00	2.64	44.26	.0371	.0226
21			816	3284	2413	1998	1.64	1.17	2.81	44.18	.0371	.0265
22			816	3291	2451	2023	1.63	1.35	2.98	44.29	.0368	.0305
23		4	740	3274	1876	1582	1.54	.32	1.86	46.07	.0334	.0069
24			740	3275	1979	1689	1.54	.53	2.07	46.07	.0334	.0115
25			740	3281	2276	1914	1.54	.78	2.32	46.14	.0334	.0169
26			740	3270	2324	1980	1.54	1.04	2.58	45.99	.0335	.0226
27			741	3276	2362	2032	1.54	1.30	2.84	46.07	.0334	.0282
28			740	3280	1965	1670	1.72	.35	2.07	46.14	.0373	.0076
29			740	3271	2089	1792	1.73	.64	2.37	46.03	.0376	.0139
30			740	3281	2350	2001	1.73	.95	2.68	46.14	.0375	.0206
31			740	3276	2401	2046	1.73	1.21	2.94	46.07	.0376	.0263
32			740	3271	2429	2065	1.73	1.40	3.13	46.03	.0376	.0304
33			815	3290	1929	1601	1.61	.26	1.87	44.08	.0365	.0059
34			816	3290	2178	1794	1.65	.38	2.03	44.08	.0374	.0086
35			816	3279	2307	1884	1.65	.69	2.34	43.92	.0376	.0157
36			817	3303	2357	1941	1.65	.87	2.52	44.19	.0373	.0197
37			821	3284	2393	1985	1.64	1.17	2.81	43.85	.0374	.0267
38			818	3286	2400	1993	1.65	1.17	2.82	43.96	.0375	.0266
39			814	3302	2445	2021	1.64	1.36	3.00	44.27	.0370	.0307
40		-4	741	3284	2000	1699	1.73	.36	2.09	46.26	.0374	.0078
41			740	3284	2118	1821	1.72	.64	2.36	46.30	.0371	.0138
42			740	3275	2349	1991	1.73	.84	2.57	46.19	.0375	.0182
43			740	3283	2388	2037	1.73	1.06	2.79	46.30	.0374	.0229
44			740	3274	2413	2061	1.69	1.23	2.92	46.19	.0366	.0266
45			740	3285	2419	2067	1.72	1.23	2.95	46.34	.0371	.0265
46			740	3279	2449	2081	1.73	1.42	3.15	46.22	.0374	.0307
47	60,000	0	739	2042	1233	1050	1.08	0.19	1.27	28.89	0.0374	0.0066
48			739	2041	1309	1121	1.08	.35	1.43	28.87	.0374	.0121
49			739	2043	1377	1187	1.08	.53	1.61	28.90	.0374	.0183
50			738	2043	1510	1266	1.08	.71	1.79	28.91	.0374	.0246
51			738	2043	1540	1288	1.08	.87	1.95	28.91	.0374	.0301
52		4	735	2040	1156	973	.96	.20	1.16	28.79	.0333	.0069
53			736	2042	1286	1101	.96	.41	1.37	28.80	.0333	.0142
54			736	2043	1371	1177	.96	.62	1.58	28.81	.0333	.0215
55			736	2039	1483	1254	.96	.79	1.75	28.76	.0334	.0275
56			737	2041	1212	1028	1.08	.18	1.26	28.76	.0376	.0063
57			737	2043	1293	1106	1.08	.35	1.43	28.79	.0375	.0122
58			736	2041	1364	1172	1.08	.53	1.61	28.78	.0375	.0184
59			735	2040	1504	1261	1.08	.71	1.79	28.79	.0375	.0247
60			734	2041	1524	1284	1.08	.87	1.95	28.83	.0375	.0302

DECLASSIFIED

3816

OF SEVERAL ENGINE CONFIGURATIONS

flight Mach number, 2.35

Over-all fuel-air ratio, $w_f/w_{a,5}$	Diffuser outlet Mach number, M_2	Diffuser total-pressure recovery, P_2/P_0	Engine total-pressure ratio, P_5/P_0	Combustor total-pressure ratio, P_5/P_2	Exhaust-gas total temperature, T_5, °R	Combustion efficiency, η_c	Net thrust coefficient, $C_{F,n}$	Combustor remarks	Diffuser operating point	Run
fuel injection										
0.0371	0.349	0.565	0.475	0.841	2386	0.701	0.480	No screech	Supercritical	1
.0372	.353	.565	.466	.825	2536	.737	.450			2
.0334	.355	.530	.444	.838	2132	.649	.384			3
.0374	.340	.557	.468	.839	2330	.673	.460			4
.0373	.320	.579	.478	.825	2690	.803	.493			5
.0372	.366	.565	.476	.843	2413	.710	.484			6
0.0374	0.380	0.533	0.447	0.839	2106	0.578	0.389	No screech	Supercritical	7
.0333	.401	.504	.416	.825	1853	.331	.293			8
.0375	.364	.540	.458	.849	2229	.631	.429			9
fuel injection										
0.0446	0.297	0.662	0.559	0.845	3231	0.915	0.751	Screech	Supercritical	10
.0489	.291	.689	.582	.845	3455	.928	.824			11
.0539	.276	.712	.603	.847	3659	.935	.890			12
.0587	.258	.721	.617	.855	3776	.932	.935			13
.0627	.250	.734	.627	.854	3853	.932	.967			14
.0679	.243	.748	.636	.851	3910	.936	.998			15
.0433	.314	.650	.536	.824	3288	.937	.674			16
.0476	.307	.676	.557	.825	3515	.951	.745			17
.0525	.300	.701	.574	.818	3677	.944	.796			18
.0574	.281	.718	.593	.826	3873	.958	.858			19
.0597	.275	.725	.601	.828	3946	.965	.884			20
.0636	.269	.735	.608	.828	4008	.964	.909			21
.0673	.264	.745	.615	.825	4040	.964	.929			22
.0403	.327	.573	.483	.843	2471	.689	.510	No screech		23
.0449	.307	.604	.516	.854	2777	.743	.614	No screech		24
.0503	.290	.694	.583	.841	3498	.924	.832	Screech		25
.0561	.264	.711	.606	.852	3714	.933	.903			26
.0616	.256	.721	.620	.860	3833	.932	.950			27
.0449	.311	.599	.509	.850	8707	.716	.594	No screech		28
.0515	.304	.639	.548	.858	3070	.768	.718	No screech		29
.0581	.263	.716	.610	.851	3745	.927	.917	Screech		30
.0639	.250	.733	.625	.852	3859	.930	.964		Critical	31
.0680	.241	.743	.631	.850	3888	.929	.986		Subcritical	32
.0424	.322	.586	.487	.830	2746	.745	.521	No screech	Supercritical	33
.0460	.313	.662	.545	.824	3412	.939	.709	Screech		34
.0533	.297	.704	.575	.817	3710	.944	.804			35
.0570	.282	.714	.588	.824	3853	.954	.846			36
.0641	.264	.729	.605	.830	4007	.960	.900			37
.0641	.266	.730	.607	.830	4021	.966	.907		Critical	38
.0677	.261	.741	.612	.827	4027	.958	.924		Critical	39
.0452	.332	.609	.517	.850	2784	.742	.618	No screech	Supercritical	40
.0509	.313	.645	.555	.860	3140	.797	.737	No screech		41
.0557	.275	.717	.608	.848	3725	.939	.909	Screech		42
.0603	.259	.727	.621	.853	3827	.937	.949			43
.0632	.249	.737	.630	.854	3899	.944	.978			44
.0636	.249	.736	.629	.855	3894	.941	.977			45
.0681	.249	.747	.635	.850	3916	.938	.994			46
0.0440	0.323	0.604	0.514	0.852	2738	0.742	0.606	No screech	Supercritical	47
.0495	.304	.641	.549	.856	3072	.789	.718			48
.0557	.286	.674	.581	.862	3381	.832	.820			49
.0620	.282	.739	.620	.838	3775	.914	.945	Screech		50
.0675	.273	.754	.631	.836	3843	.917	.979	Screech		51
.0402	.348	.567	.477	.842	2393	.658	.490	No screech		52
.0475	.308	.630	.539	.856	2993	.785	.690			53
.0548	.285	.671	.576	.859	3351	.830	.808			54
.0609	.268	.727	.615	.846	3755	.913	.934	Screech	Subcritical	55
.0439	.332	.594	.504	.848	2649	.712	.576	No screech	Supercritical	56
.0497	.304	.633	.541	.855	3010	.771	.697			57
.0559	.291	.668	.574	.859	3322	.812	.802			58
.0622	.277	.737	.618	.838	3775	.913	.943	Screech	Subcritical	59
.0677	.268	.747	.629	.843	3839	.916	.979	Screech	Subcritical	60

3816

TABLE I. - Concluded. PERFORMANCE

(j) Concluded. Isentropic inlet;

Run	Altitude, ft	Angle of attack, α, deg	Free-stream total temperature, T_0, °R	Free-stream total pressure, P_0, lb/sq ft abs	Diffuser outlet total pressure, P_2, lb/sq ft abs	Exhaust-nozzle total pressure, P_5, lb/sq ft abs	Inner-ring fuel flow, $w_{f,i}$, lb/sec	Outer-ring fuel flow, $w_{f,o}$, lb/sec	Total fuel flow, w_f, lb/sec	Combustor critical air flow, $w_{a,5}$, lb/sec	Inner-ring fuel-air ratio, $w_{f,i}/w_{a,5}$	Outer-ring fuel-air ratio, $w_{f,o}/w_{a,5}$
												Single-pressure
61	50,000	0	740	3267	2313	1931	----	----	2.35	46.18	------	------
62			739	3274	2353	2002	----	----	2.60	46.33	------	------
63			739	3266	2370	2039	----	----	2.88	46.22	------	------
64			738	3273	2439	2079	----	----	3.13	46.33	------	------
65			742	3286	2495	2103	----	----	3.40	46.37	------	------
66			742	3292	2503	2092	----	----	3.53	46.49	------	------
67			817	3299	2326	1903	----	----	2.36	44.37	------	------
68			817	3302	2355	1971	----	----	2.66	44.41	------	------
69			817	3283	2414	2004	----	----	2.92	44.14	------	------
70			818	3291	2455	2027	----	----	3.13	44.26	------	------
71			818	3278	2481	2046	----	----	3.37	44.06	------	------
72			818	3279	2479	2036	----	----	3.62	44.10	------	------
73		4	740	3273	2307	1924	----	----	2.37	46.03	------	------
74			741	3277	2334	1986	----	----	2.62	46.07	------	------
75			741	3282	2364	2033	----	----	2.87	46.14	------	------
76			741	3277	2424	2065	----	----	3.12	46.07	------	------
77			741	3268	2451	2071	----	----	3.32	45.95	------	------
78			817	3279	2274	1883	----	----	2.35	43.88	------	------
79			817	3278	2297	1940	----	----	2.62	43.88	------	------
80			816	3291	2346	1979	----	----	2.87	44.08	------	------
81			816	3286	2409	2007	----	----	3.10	44.00	------	------
82			816	3280	2429	2011	----	----	3.34	43.92	------	------
83		-4	739	----	----	1934	----	----	2.36	-----	------	------
84			739	----	----	2006	----	----	2.62	-----	------	------
85			739	----	----	2046	----	----	2.88	-----	------	------
86			739	----	----	2083	----	----	3.13	-----	------	------
87			741	3279	2477	2087	----	----	3.40	46.22	------	------
88			741	3276	2471	2086	----	----	3.57	46.19	------	------
89			818	3262	2265	1873	----	----	2.31	43.77	------	------
90			818	3277	2304	1936	----	----	2.58	43.96	------	------
91			817	3273	2343	1973	----	----	2.77	43.92	------	------
92			817	3286	2410	2010	----	----	3.08	44.08	------	------
93			817	3290	2453	2041	----	----	3.38	44.15	------	------
94			817	3290	2461	2037	----	----	3.60	44.15	------	------
95		7	813	3272	2187	1841	----	----	2.27	43.29	------	------
96			813	3288	2238	1904	----	----	2.61	43.48	------	------
97			813	3287	2292	1954	----	----	2.84	43.48	------	------
98			813	3296	2340	1989	----	----	3.06	43.59	------	------
99			812	3290	2375	1994	----	----	3.27	43.52	------	------
100		-7	817	3286	2251	1838	----	----	2.19	43.69	------	------
101			817	3282	2302	1891	----	----	2.45	43.61	------	------
102			818	3276	2346	1936	----	----	2.71	43.50	------	------
103			818	3280	2379	1972	----	----	2.97	43.57	------	------
104			818	3281	2439	1992	----	----	3.24	43.57	------	------
105			818	3282	2421	1996	----	----	3.42	43.61	------	------
106	60,000	0	815	2033	1473	1250	----	----	1.99	27.38	------	------
107		4	739	2044	1462	1206	----	----	1.56	28.77	------	------
108			739	2044	1489	1240	----	----	1.71	28.77	------	------
109			739	2046	1507	1262	----	----	1.84	28.80	------	------
110			737	2045	1521	1267	----	----	1.97	28.82	------	------
111			815	2039	1395	1174	----	----	1.56	27.33	------	------
112			821	2045	1442	1223	----	----	1.83	27.31	------	------
113			812	2048	1469	1243	----	----	2.09	27.49	------	------
114		-4	817	2035	1471	1246	----	----	1.98	27.31	------	------
115		7	820	2042	1408	1189	----	----	1.75	26.89	------	------
116		-7	813	2041	1427	1215	----	----	1.75	27.20	------	------

OF SEVERAL ENGINE CONFIGURATIONS

flight Mach number, 2.35

Over-all fuel-air ratio, $w_f/w_{a,5}$	Diffuser outlet Mach number, M_2	Diffuser total-pressure recovery, P_2/P_0	Engine total-pressure ratio, P_5/P_0	Combustor total-pressure ratio, P_5/P_2	Exhaust-gas total temperature, T_5, °R	Combustion efficiency, η_c	Net thrust coefficient, $C_{F,n}$	Combustor remarks	Diffuser operating point	Run
fuel injection										
0.0509	0.290	0.708	0.591	0.835	3550	0.933	0.852	Screech	Supercritical	61
.0561	.271	.719	.612	.851	3734	.938	.918			62
.0623	.244	.726	.624	.860	3829	.927	.959			63
.0676	.252	.745	.635	.852	3898	.934	.994			64
.0733	.257	.759	.640	.843	3899	.935	1.009		Critical	65
.0759	.265	.760	.636	.836	3799	.911	.995		Subcritical	66
.0532	.300	.705	.577	.818	3709	.944	.807		Supercritical	67
.0599	.270	.713	.597	.837	3903	.950	.872			68
.0662	.270	.735	.610	.830	4006	.955	.915			69
.0707	.260	.746	.616	.826	4011	.953	.933			70
.0765	.255	.757	.624	.825	4037	.972	.959	Screech	Critical	71
.0821	.259	.756	.621	.821	3894	.952	.945		Subcritical	72
.0515	.289	.705	.588	.834	3539	.923	.846		Supercritical	73
.0569	.257	.712	.606	.851	3712	.924	.904			74
.0622	.249	.720	.619	.860	3819	.924	.948			75
.0677	.240	.740	.630	.852	3888	.930	.982		Critical	76
.0723	.236	.750	.634	.845	3864	.923	.993		Subcritical	77
.0536	.307	.694	.574	.828	3711	.943	.803		Supercritical	78
.0597	.277	.701	.592	.845	3873	.942	.859			79
.0651	.259	.713	.601	.844	3930	.936	.889			80
.0705	.268	.733	.611	.833	3970	.942	.920		Critical	81
.0760	.257	.471	.613	.828	3933	.937	.927		Subcritical	82
------	-----	-----	-----	-----	----	-----	-----		Supercritical	83
------	-----	-----	-----	-----	----	-----	-----			84
------	-----	-----	-----	-----	----	-----	-----			85
------	-----	-----	-----	-----	----	-----	-----			86
.0736	.242	.755	.637	.843	3859	.924	1.000		Critical	87
.0773	.247	.754	.637	.844	3799	.916	1.001		Subcritical	88
.0528	.299	.694	.574	.827	3700	.947	.801		Supercritical	89
.0587	.285	.703	.591	.840	3856	.942	.854			90
.0631	.274	.716	.603	.842	3959	.950	.892			91
.0699	.273	.733	.612	.834	3992	.948	.921			92
.0766	.261	.746	.620	.832	3996	.960	.949		Critical	93
.0815	.260	.748	.619	.828	3904	.952	.945		Subcritical	94
.0524	.301	.668	.563	.842	3657	.936	.777	Screech	Supercritical	95
.0600	.251	.681	.579	.851	3793	.915	.829		Supercritical	96
.0653	.260	.697	.595	.853	3935	.936	.879		Critical	97
.0702	.272	.710	.604	.850	3990	.947	.907		Subcritical	98
.0751	.272	.722	.606	.840	3951	.942	.915		Subcritical	99
.0501	.317	.685	.559	.817	3599	.944	.760		Supercritical	100
.0562	.302	.701	.576	.822	3760	.932	.815			101
.0623	.283	.716	.591	.825	3896	.934	.863			102
.0682	.272	.725	.601	.829	3955	.937	.895			103
.0744	.287	.743	.607	.817	3944	.938	.914			104
.0784	.261	.738	.608	.825	3889	.933	.917			105
0.0727	0.284	0.728	0.615	0.849	3959	0.940	0.930	Screech	Critical	106
.0542	.254	.715	.590	.825	3537	.891	.853		Subcritical	107
.0594	.239	.729	.607	.833	3683	.898	.907			108
.0639	.229	.737	.617	.837	3756	.899	.940			109
.0684	.226	.744	.620	.833	3731	.884	.948			110
.0571	.308	.684	.576	.842	3682	.900	.807		Supercritical	111
.0670	.292	.705	.598	.848	3884	.916	.879			112
.0760	.278	.717	.607	.846	3832	.909	.908			113
.0725	.296	.723	.612	.847	3956	.938	.923			114
.0651	.303	.690	.582	.845	3812	.899	.840			115
.0643	.315	.699	.595	.851	3899	.928	.876			116

CONFIDENTIAL

TABLE II. - RICH BLOW-OUT LIMITS OF SEVERAL ENGINE CONFIGURATIONS

(a) Standard engine (yaw, +2°)

Blow-out number	Altitude, ft	Angle of attack, α, deg	Free-stream total temperature, T_0, °R	Free-stream total pressure, P_0, lb/sq ft abs	Combustor critical air flow, $w_{a,5}$, lb/sec	Inner-ring fuel-air ratio, $w_{f,i}/w_{a,5}$	Outer-ring fuel-air ratio, $w_{f,o}/w_{a,5}$	Over-all fuel-air ratio, $w_f/w_{a,5}$	Diffuser total-pressure recovery, P_2/P_0 (a)	Engine total-pressure ratio, P_5/P_0 (a)	Combustor remarks	Diffuser operating point
Dual-pressure fuel injection												
1	60,000	0	740	2045	27.5	0.039	0.028	0.067	0.666, 0.662	0.548, 0.546	Screech	Subcritical
2		4	737	2040	27.4	.037	.015	.052	.641	.528	Screech	Subcritical
3		4	737	2040	27.4	.037	.023	.060	.630	.536	No screech	Supercritical
4		4	737	2040	27.4	.039	.026	.065	.625, .610	.528, .492	No screech	Critical
Single-pressure fuel injection												
5	50,000	0	820	3280	42.3	-----	-----	0.079	0.692, 0.684	0.563, 0.551	Screech	Subcritical
6		0	820	3280	42.3	-----	-----	.080	.671	.551, .545		
7		4	819	3280	42.3	-----	-----	.065	.665	.545		
8		4	817	3280	42.3	-----	-----	.065	.666, .665	.545		
9		-4	817	3280	42.3	-----	-----	.071	.688, .683	.560, .557		Critical
10		-4	817	3280	42.3	-----	-----	.071	.690	.564, .562		Critical
11		7	817	3280	41.9	-----	-----	.058	.632, .616	.517, .512		Subcritical
12		7	817	3280	41.9	-----	-----	.057	.634, .625	.517, .514		Subcritical
13	60,000	4	739	2040	27.4	-----	-----	0.060	0.634	0.546	No screech	Supercritical
14		4	739	2040	27.4	-----	-----	.059	.627	.537	No screech	
15		-4	739	2040	27.4	-----	-----	.058	.638	.540	Screech	
16		-4	739	2040	27.4	-----	-----	.058	.638	.538	Screech	

(b) Standard engine (yaw, -2°)

Blow-out number	Altitude, ft	Angle of attack, α, deg	Free-stream total temperature, T_0, °R	Free-stream total pressure, P_0, lb/sq ft abs	Combustor critical air flow, $w_{a,5}$, lb/sec	Inner-ring fuel-air ratio, $w_{f,i}/w_{a,5}$	Outer-ring fuel-air ratio, $w_{f,o}/w_{a,5}$	Over-all fuel-air ratio, $w_f/w_{a,5}$	Diffuser total-pressure recovery, P_2/P_0 (a)	Engine total-pressure ratio P_5/P_0 (a)	Combustor remarks	Diffuser operating point
Dual-pressure fuel injection												
1	60,000	0	738	2040	27.4	0.037	0.028	0.065	0.663	----------	Screech	Subcritical
2		0	740	2042	27.4	.037	.029	.066	.653	.551	Screech	Subcritical
3		4	736	2042	27.4	.037	.024	.061	.628	.529	No screech	Supercritical
4			736	2042	27.4	.037	.022	.059	----------	----------		
5			738	2042	27.4	.038	.020	.058	----------	----------		
6			736	2042	27.4	.037	.022	.059	----------	.552		
7			737	2042	27.4	.041	.022	.063	.646	.557		
Single-pressure fuel injection												
8	50,000	0	817	3280	42.5	-----	-----	0.081	0.692, 0.669	0.570, 0.552	Screech	Subcritical
9		0	817	3285	42.5	-----	-----	.082	.697, .656	.574, .541		
10		4	814	3265	42.1	-----	-----	.065	.674	.554		
11		4	813	3270	42.2	-----	-----	.065	.678	.562		
12		-4	816	3280	42.5	-----	-----	.069	.671	----------		
13		-4	816	3274	42.4	-----	-----	.070	.686	.571, .569		
14		7	813	3275	41.9	-----	-----	.058	.646, .643	.525		
15		7	815	3280	41.9	-----	-----	.055	.645	.525		
16		7	816	3280	41.9	-----	-----	.056	.640	.519		
17		-7	814	3285	42.1	-----	-----	.065	.657	.556		
18		-7	817	3274	42.0	-----	-----	.064	.660	.559		
19	60,000	4	737	2044	27.4	-----	-----	.060	.637	----------	No screech	Supercritical
20		4	739	2045	27.4	-----	-----	.060	.637	.548	No screech	
21		-4	738	2045	27.4	-----	-----	-----	.656	.524	Screech	
22		-4	738	2040	27.4	-----	-----	.053	.606	.496, .491	Screech	

[a]The first values are peak ones and the second values are those of blow-out. Single values are for blow-out and are usually peak values.

CONFIDENTIAL

CONFIDENTIAL

TABLE II. - Continued. RICH BLOW-OUT LIMITS OF SEVERAL ENGINE CONFIGURATIONS

(c) Standard engine (modified exit)

Blow-out number	Altitude, ft	Angle of attack, α, deg	Free-stream total temperature, T_0, °R	Free-stream total pressure, P_0, lb/sq ft abs	Combustor critical air flow, $w_{a,5}$, lb/sec	Inner-ring fuel-air ratio, $w_{f,i}/w_{a,5}$	Outer-ring fuel-air ratio, $w_{f,o}/w_{a,5}$	Over-all fuel-air ratio, $w_f/w_{a,5}$ (a)	Diffuser total-pressure recovery, P_2/P_0 (a)	Engine total-pressure ratio, P_5/P_0	Combustor remarks	Diffuser operating point
Dual-pressure fuel injection												
1	60,000	0	737	2040	27.4	0.037	0.032	0.069	0.680, 0.663	0.544	Screech	Subcritical
2		0	734	2040	27.4	.036	.034	.070	0.670	.544		
3		4	738	2040	27.4	.036	.026	.062	.636	.547		
4		4	740	2040	27.4	.036	.022	.058	.631	.538		
5		-4	740	2040	27.4	.037	.026	.063	.680, .677	.543		Supercritical
6		-4	738	2040	27.4	.037	.024	.061	.677	.544		Supercritical
7		-4	737	2050	27.5	.037	.025	.063	.669, .677	.539		Critical
8		7	740	2040	27.1	.036	.027	.064	.628	.539		
9		7	739	2040	27.1	.037	.028	.065	.628	.543		
10		-7	735	2050	27.3	.037	.021	.058	.593	-----		Supercritical
11		-7	735	2050	27.3	.036	.019	.055	.597	.510		Supercritical
Single-pressure fuel injection												
12	50,000	0	736	3280	44.1	-----	-----	0.077	0.712, 0.666	0.539	Screech	Subcritical
13			734	3280	44.1	-----	-----	0.067, 0.072	.712, .687	.562		
14			734	3280	44.1	-----	-----	.068, .076	.712, .669	.543		
15			816	3300	42.6	-----	-----	.078, .081	.698, .668	.543		
16			817	3300	42.6	-----	-----	.075, .081	.693, .668	.549		
17		4	738	3280	44.0	-----	-----	.054	.640, .656	-----		
18			736	3280	44.0	-----	-----	.054, .055	.672, .643	.526		
19			818	3310	42.6	-----	-----	.069, .070	.671, .669	.552		
20			817	3310	42.6	-----	-----	.069, .070	.674, .672	.552		
21		-4	738	3280	44.0	-----	-----	.063	.687, .685	.555		
22			738	3280	44.0	-----	-----	.066	.702	.555		
23			738	3280	44.0	-----	-----	.064	.702, .700	.555		
24			812	3310	42.8	-----	-----	.074, .078	.684, .665	.544		
25			820	3270	42.1	-----	-----	.075, .079	.693, .677	.550		
26		7	738	3280	43.6	-----	-----	.053	.540	.479		
27			738	3280	43.6	-----	-----	.055	.547	.488		
28			817	3270	41.7	-----	-----	.058, .060	.636, .632	.524		
29			817	3270	41.7	-----	-----	.058	.636	.524		
30		-7	818	3300	42.2	-----	-----	.068	.646	.549		----------
31			817	3300	42.2	-----	-----	.064	.652	.534		----------
32			819	3300	42.2	-----	-----	.068	.657	.552		----------

[a]The first values are peak ones and the second values are those of blow-out. Single values are for blow-out and are usually peak values.

CONFIDENTIAL

CONFIDENTIAL

TABLE II. - Continued. RICH BLOW-OUT LIMITS OF SEVERAL ENGINE CONFIGURATIONS

(d) Standard engine (45° diffuser rotation)

Blow-out number	Altitude, ft	Angle of attack, α, deg	Free-stream total temperature, T_0, °R	Free-stream total pressure, P_0, lb/sq ft abs	Combustor critical air flow, $w_{a,5}$, lb/sec	Inner-ring fuel-air ratio, $w_{f,i}/w_{a,5}$	Outer-ring fuel-air ratio, $w_{f,o}/w_{a,5}$	Over-all fuel-air ratio, $w_f/w_{a,5}$ (a)	Diffuser total-pressure recovery, P_2/P_0 (a)	Engine total-pressure ratio, P_5/P_0	Combustor remarks	Diffuser operating point
Dual-pressure fuel injection												
1	60,000	4	736	2040	27.4	0.037	0.022	0.059	0.644	0.547	No screech	Supercritical
2		-4	737	2040	27.4	.036	.022	.058	0.694, 0.691	.553	No screech	
3		7	738	2040	27.2	.037	.019	.056	.639	.530	Screech	
4		-7	737	2040	27.2	.037	.024	.060	.649	.559	No screech	
Single-pressure fuel injection												
5	50,000	0	744	3285	44.0	-----	-----	0.072	0.704, 0.682	0.565	Screech	Subcritical
6			737	3275	44.0	-----	-----	0.062, 0.073	.698, .667	.564		
7			812	3280	42.5	-----	-----	.073, .078	.698, .691	.569		
8			816	3280	42.4	-----	-----	.073, .077	.698, .695	.570		
9		4	741	3270	43.9	-----	-----	.054, .055	.662, .658	.541		
10			740	3275	43.9	-----	-----	.054, .056	.666, .661	.539		
11			820	3270	42.0	-----	-----	.067, .071	.674, .668	.561		
12			821	3275	42.1	-----	-----	.071	.667	.548		
13		-4	740	3265	43.9	-----	-----	.056, .058	.695, .693	.561		
14			742	3265	43.9	-----	-----	.059	.695	.561		
15			818	3275	42.1	-----	-----	.070, .071	.688, .686	.570		
16			820	3275	42.1	-----	-----	.071, .073	.705, .703	.571		
17		7	737	3275	43.5	-----	-----	.051	.572	.497		
18			736	3275	43.5	-----	-----	.050	.588	.490		
19			819	3270	41.6	-----	-----	.059	.642	-----		
20			819	3275	41.7	-----	-----	.056, .059	.646, .629	.509		
21		-7	740	3280	43.6	-----	-----	.048	----------	-----		
22			740	3275	43.5	-----	-----	.046	----------	-----		
23			815	3280	42.0	-----	-----	.063	.684	.555		
24			815	3280	42.0	-----	-----	.062	.687	.552		

[a]The first values are peak ones and the second values are those of blow-out. Single values are for blow-out and are usually peak values.

CONFIDENTIAL

CONFIDENTIAL

TABLE II. - Continued. RICH BLOW-OUT LIMITS OF SEVERAL ENGINE CONFIGURATIONS

(e) Standard engine (modified inlet)

Blow-out number	Altitude, ft	Angle of attack, α, deg	Free-stream total temperature, T_0, °R	Free-stream total pressure, P_0, lb/sq ft abs	Combustor critical air flow, $w_{a,5}$, lb/sec	Inner-ring fuel-air ratio, $w_{f,i}/w_{a,5}$	Outer-ring fuel-air ratio, $w_{f,o}/w_{a,5}$	Over-all fuel-air ratio, $w_f/w_{a,5}$	Diffuser total-pressure recovery, P_2/P_0	Engine total-pressure ratio, P_5/P_0	Combustor remarks	Diffuser operating point
Dual-pressure fuel injection												
1	80,000	0	738	2045	27.8	0.036	0.032	0.068	-----	0.561	Screech	Subcritical
2		0	735	2040	27.5	.037	.032	.070	0.678	.582	Screech	Subcritical
3		4	740	2040	27.4	.037	.024	.060	.621	.523	No screech	Supercritical
4		4	739	2040	27.4	.037	.022	.058	.621	.525	No screech	↓
5		-4	739	2040	27.4	.036	.025	.061	.665	.537	Screech	↓
6		-4	736	2040	27.4	.037	.026	.063	.665	.537	Screech	↓
7		7	739	2045	27.2	.036	.020	.056	.600	.507	No screech	↓
8		7	739	2045	27.2	.037	.021	.058	.602	.507	↓	↓
9		-7	736	2040	27.2	.038	.023	.061	.632	.532	↓	↓
10		-7	738	2040	27.2	.036	.024	.060	.629	.532	↓	↓
Single-pressure fuel injection												
11	80,000	0	736	3280	44.1	-----	-----	0.074	0.671	0.583	Screech	Subcritical
12		↓	739	3280	44.1	-----	-----	.072	.690	.570	↓	↓
13		↓	818	3270	42.2	-----	-----	.081	.684	.565	↓	↓
14		↓	818	3270	42.2	-----	-----	.082	.684	.562	↓	↓
15		↓	818	3270	42.2	-----	-----	.081	.684	.564	↓	↓
16		↓	818	3270	42.2	-----	-----	.081	.684	.564	↓	↓
17		4	739	3280	44.0	-----	-----	.058	.667	.548	↓	↓
18		↓	740	3280	44.0	-----	-----	.055	.660	.548	↓	↓
19		↓	820	3280	42.3	-----	-----	.071	.669	.559	↓	↓
20		↓	818	3280	42.3	-----	-----	.071	.669	.561	↓	↓
21		-4	737	3280	44.1	-----	-----	.064	.680	.553	↓	Supercritical
22		↓	737	3280	44.1	-----	-----	.064	.680	.558	↓	Supercritical
23		↓	820	3270	42.2	-----	-----	.082	.681	.549	↓	Subcritical
24		↓	820	3270	42.2	-----	-----	.080	.670	.552	↓	↓
25		7	740	3280	43.6	-----	-----	.051	.611	.508	↓	↓
26		↓	740	3280	43.6	-----	-----	.051	.598	.494	↓	↓
27		↓	815	3280	41.9	-----	-----	.061	.646	.535	↓	Critical
28		↓	818	3280	41.9	-----	-----	.062	.651	.539	↓	Subcritical
29		-7	820	3270	41.9	-----	-----	.067	.661	.552	↓	↓
30		-7	820	3270	41.9	-----	-----	.067	.655	.552	↓	↓

CONFIDENTIAL

CONFIDENTIAL

TABLE II. - Continued. RICH BLOW-OUT LIMITS OF SEVERAL ENGINE CONFIGURATIONS

(f) Step flameholder A

Blow-out number	Altitude, ft	Angle of attack, α, deg	Free-stream total temperature, T_0, °R	Free-stream total pressure, P_0, lb/sq ft abs	Combustor critical air flow, $w_{a,5}$, lb/sec	Inner-ring fuel-air ratio, $w_{f,i}/w_{a,5}$	Outer-ring fuel-air ratio, $w_{f,o}/w_{a,5}$	Over-all fuel-air ratio, $w_f/w_{a,5}$	Calculated diffuser total-pressure recovery, P_2/P_0 (a)	Engine total-pressure ratio, P_5/P_0	Combustor remarks	Diffuser operating point
Dual-pressure fuel injection												
1	50,000	0	739	3275	44.0	0.021	0.038	0.0596	0.595	0.521	Buzz	Subcritical
2		0	739	3275	44.0	.021	.037	.0578	.588	.521		
3		4	738	3280	44.0	.021	.037	.058	.573	-----		
4		4	818	3275	42.2	.021	.041	.062	.581	.511		
5		-4	738	3275	44.0	.021	.036	.056	.576	.506		
6		7	739	3280	43.6	.021	.035	.056	.550	.485		
7		0	819	3275	42.2	.025	.039	.064	.594	.529		
8		0	821	3280	42.3	.025	.041	.066	.603, .597	-----		
9		4	812	3260	42.1	.025	.038	.063	.575	.506		
10		4	818	3280	42.3	.025	.038	.063	.580	.514		
Single-pressure fuel injection												
11	50,000	0	817	3285	42.5	-----	-----	0.067	0.609	0.539	Buzz	Subcritical
12		4	737	3280	44.0	-----	-----	.058	.556	.501		Subcritical
13		-4	817	3285	42.4	-----	-----	.067	.590	.525		Critical
14		7	818	3285	41.7	-----	-----	.065	.569	.503		Subcritical
15		-7	817	3285	42.1	-----	-----	.059	.558	.491		Subcritical
16	60,000	0	733	2040	27.5	-----	-----	0.069	0.635	0.560	Buzz	Subcritical
17		4	733	2040	27.4	-----	-----	.067	.610	.536		Critical
18		4	735	2040	27.4	-----	-----	.068	.619	.539		Subcritical
19		-4	733	2040	27.5	-----	-----	.071	.619	.550		Critical
20		7	739	2040	27.1	-----	-----	.063	.575	.506		Subcritical
21		-7	733	2040	27.3	-----	-----	.062	.569	.518		Supercritical

*The first values are peak ones and the second values are those of blow-out. Single values are for blow-out and are usually peak values.

(g) Step flameholder B

Blow-out number	Altitude, ft	Angle of attack, α, deg	Free-stream total temperature, T_0, °R	Free-stream total pressure, P_0, lb/sq ft abs	Combustor critical air flow, $w_{a,5}$, lb/sec	Inner-ring fuel-air ratio, $w_{f,i}/w_{a,5}$	Outer-ring fuel-air ratio, $w_{f,o}/w_{a,5}$	Over-all fuel-air ratio, $w_f/w_{a,5}$	Calculated diffuser total-pressure recovery, P_2/P_0	Engine total-pressure ratio, P_5/P_0	Combustor remarks	Diffuser operating point
Dual-pressure fuel injection												
1	50,000	0	738	3280	44.1	0.021	0.035	0.054	0.554	0.466	Buzz	Subcritical
2		0	738	3280	44.1	.020	.034	.055	.557	.486		
3		4	737	3280	44.0	.021	.033	.054	.547	.477		
4		4	812	3275	42.3	.021	.036	.057	.564	.505		
5		-4	740	3280	44.0	.021	.033	.054	.561	.480		Critical
6		7	738	3280	43.6	.021	.031	.052	.531	.488		Subcritical
7		-7	741	3280	43.7	.021	.032	.053	.542	.470		Supercritical

CONFIDENTIAL

GTOC

TABLE II. - Continued. RICH BLOW-OUT LIMITS OF SEVERAL ENGINE CONFIGURATIONS

(h) Step flameholder C

Blow-out number	Altitude, ft	Angle of attack, α, deg	Free-stream total temperature, T_0, °R	Free-stream total pressure, P_0, lb/sq ft abs	Combustor critical air flow, $w_{a,5}$, lb/sec	Inner-ring fuel-air ratio, $w_{f,i}/w_{a,5}$	Outer-ring fuel-air ratio, $w_{f,o}/w_{a,5}$	Over-all fuel-air ratio, $w_f/w_{a,5}$	Calculated diffuser total-pressure recovery, P_2/P_0	Engine total-pressure ratio, P_5/P_0	Combustor remarks	Diffuser operating point
Inner-ring-only fuel injection												
1	50,000	0	732	3270	44.0	-----	-----	0.043	0.405	0.361	No buzz	Supercritical
2			732	3270	44.0	-----	-----	.042	.403	.355	↓	↓
3			810	3270	42.4	-----	-----	.048	.399	.355		
Dual-pressure fuel injection												
4	50,000	0	737	3270	44.0	0.025	0.036	0.061	0.618	0.557	No buzz	Subcritical
5		4	734	3270	44.5	.024	.034	.059	.595	.527	Buzz	Subcritical
6		4	817	3280	42.3	-----	-----	.075	-----	-----	-------	----------
7		-4	732	3270	44.0	.025	.040	.065	.637	.561	No buzz	Critical
8		-4	817	3280	42.4	-----	-----	.074	-----	-----	-------	----------
9		7	734	3270	43.5	.025	.035	.060	.571	.497	No buzz	Subcritical
10		7	819	3280	41.9	.025	.039	.064	.584	.512	Buzz	Critical
11		-7	817	3280	42.4	-----	-----	.074	-----	.513	No buzz	Supercritical
12	60,000	0	734	2045	27.6	0.025	0.047	0.072	0.645	0.568	No buzz	Critical
13		4	818	2038	26.3	-----	-----	.075	-----	-----	-------	----------
14		4	740	2040	27.4	.025	.047	.072	.640	.558	No buzz	Critical
15		7	818	2038	26.0	.025	.063	.088	-----	-----	No buzz	----------
Single-pressure fuel injection												
16	50,000	0	734	3270	44.0	-----	-----	0.066	0.657	0.577	No buzz	Critical
17		0	817	3280	42.4	-----	-----	.081	-----	.571		Supercritical
18		4	736	3280	44.6	-----	-----	.060	.630	.539		↓
19		-4	737	3270	44.0	-----	-----	.059	.611	.535		
20		7	733	3275	43.6	-----	-----	.060	.590	.511		Subcritical
21		-7	739	3270	43.5	-----	-----	.060	.611	.531	↓	Critical
22	60,000	4	737	2037	27.7	-----	-----	0.078	0.632	0.565	No buzz	Supercritical

TABLE II. - Continued. RICH BLOW-OUT LIMITS OF SEVERAL ENGINE CONFIGURATIONS

(i) Step flameholder D

Blow-out number	Altitude, ft	Angle of attack, α, deg	Free-stream total temperature, T_0, °R	Free-stream total pressure, P_0, lb/sq ft abs	Combustor critical air flow, $w_{a,5}$, lb/sec	Inner-ring fuel-air ratio, $w_{f,i}/w_{a,5}$	Outer-ring fuel-air ratio, $w_{f,o}/w_{a,5}$	Over-all fuel-air ratio, $w_f/w_{a,5}$	Calculated diffuser total-pressure recovery, P_2/P_0	Engine total-pressure ratio, P_5/P_0 (a)	Combustor remarks	Diffuser operating point
Flight Mach number, 2.35												
Dual-pressure fuel injection												
1	50,000	4	743	3290	44.0	0.023	0.046	0.069	0.662	0.589, 0.583	No buzz or screech	Subcritical
2		-4	744	3280	43.9	.023	.048	.071	-----	.590, .571	↓	----------
3		7	743	3290	43.5	.024	.043	.067	-----	----------		Subcritical
4		7	819	3290	42.0	.023	.052	.075	-----	----------		----------
5		-7	735	3280	43.8	.024	.044	.068	-----	----------		----------
6	60,000	7	740	2050	27.2	0.024	0.047	0.071	-----	----------		Subcritical
7		-7	817	2050	26.3	.022	.065	.087	-----	----------	No buzz; mild screech	----------
Flight Mach number, 2.50												
Dual-pressure fuel injection												
1	50,000	4	792	4130	48.0	0.024	0.054	0.078	-----	----------	No buzz or screech	----------
2		-4	792	4140	47.6	.024	.055	.079	0.618	0.532	No buzz; screech	----------
3		7	792	4130	47.2	.024	.054	.078	-----	----------	No buzz or screech	----------
4		-7	792	4120	46.7	.024	.056	.080	-----	----------	No buzz or screech	----------
Single-pressure fuel injection												
5	60,000	0	792	2580	30.0	-----	-----	0.077	-----	----------	----------	----------
6		7	792	2580	29.4	-----	-----	.076	-----	----------	No buzz or screech	----------
7		-7	792	2580	29.2	-----	-----	.080	-----	----------	No buzz or screech	----------

[a]The first values are peak ones and the second values are those of blow-out. Single values are for blow-out and are usually peak values.

TABLE II. - Concluded. RICH BLOW-OUT LIMITS OF SEVERAL ENGINE CONFIGURATIONS

(j) Isentropic inlet

Blow-out number	Altitude, ft	Angle of attack, α, deg	Free-stream total temperature, T_0, °R	Free-stream total pressure, P_0, lb/sq ft abs	Combustor critical air flow, $w_{a,5}$, lb/sec	Inner-ring fuel-air ratio, $w_{f,i}/w_{a,5}$	Outer-ring fuel-air ratio, $w_{f,o}/w_{a,5}$	Over-all fuel-air ratio, $w_f/w_{a,5}$	Diffuser total-pressure recovery, P_2/P_0 (a)	Engine total-pressure ratio, P_5/P_0	Combustor remarks	Diffuser operating point
Single-pressure fuel injection												
1	50,000	0	740	3275	46.2	-----	-----	0.078	0.757, 0.754	0.630	Screech	Subcritical
2			742	3275	46.5	-----	-----	.078	.758, .750	.602		
3			819	3290	44.2	-----	-----	.088	0.756	.615		
4			820	3280	44.1	-----	-----	.085	.742	.617		
5		4	740	3275	46.0	-----	-----	.075	.754	.624		
6			741	3275	46.0	-----	-----	.076	.761	.624		
7			817	3280	43.9	-----	-----	.083	.745, .744	.611		
8			817	3280	43.9	-----	-----	.081	.744	.611		
9		-4	741	3280	46.2	-----	-----	.082	.761	.628		
10			741	3280	46.2	-----	-----	.078	----------	-----		
11			741	3280	46.2	-----	-----	.078	.753	.598		
12			819	3280	44.0	-----	-----	.085	.757	.615		
13			818	3280	44.0	-----	-----	.084	.757	.615		
14		7	742	3270	45.3	-----	-----	.065	.729	.603		----------
15			741	3270	45.3	-----	-----	.065	.729	.601		----------
16			816	3280	43.2	-----	-----	.079	.721	.596		Subcritical
17			812	3280	43.4	-----	-----	.080	.726	.605		Subcritical
18		-7	740	3285	45.9	-----	-----	.065	.737	.607		Supercritical
19			740	3270	45.7	-----	-----	.066	.742	.610		
20			818	3280	43.6	-----	-----	.081	.739	.609		
21			818	3280	43.6	-----	-----	.081	.724	.608		
22			815	3290	43.7	-----	-----	.080	.722	.601		
23		-8.5	742	3265	45.1	-----	-----	.056	.704	.573		
24	60,000	0	740	2040	28.8	-----	-----	0.078	0.756	0.627	Screech	Subcritical
25			739	2040	28.8	-----	-----	.078	.751	.624		
26			816	2040	27.5	-----	-----	.076	0.723, 0.714	.612		
27		4	740	2045	28.8	-----	-----	.074	.745	.619		
28			732	2045	28.9	-----	-----	.072	----------	.623		
29			813	2050	27.5	-----	-----	.077	.725	.605		----------
30		-4	736	2040	28.8	-----	-----	.079	.757	.624		Supercritical
31			737	2040	28.8	-----	-----	.078	.741	.621		
32			816	2040	27.4	-----	-----	.075	.720	.611		
33		7	734	2039	28.4	-----	-----	.057	.712	.580		Subcritical
34		7	820	2045	27.0	-----	-----	.074	.700	.596		Subcritical
35		-7	736	2038	28.6	-----	-----	.069	.720	.603		Supercritical
36		-7	814	2045	27.2	-----	-----	.074	.706	.599		Supercritical

[a]The first values are peak ones and the second values are those of blow-out. Single values are for blow-out and are usually peak values.

CONFIDENTIAL

CONFIDENTIAL

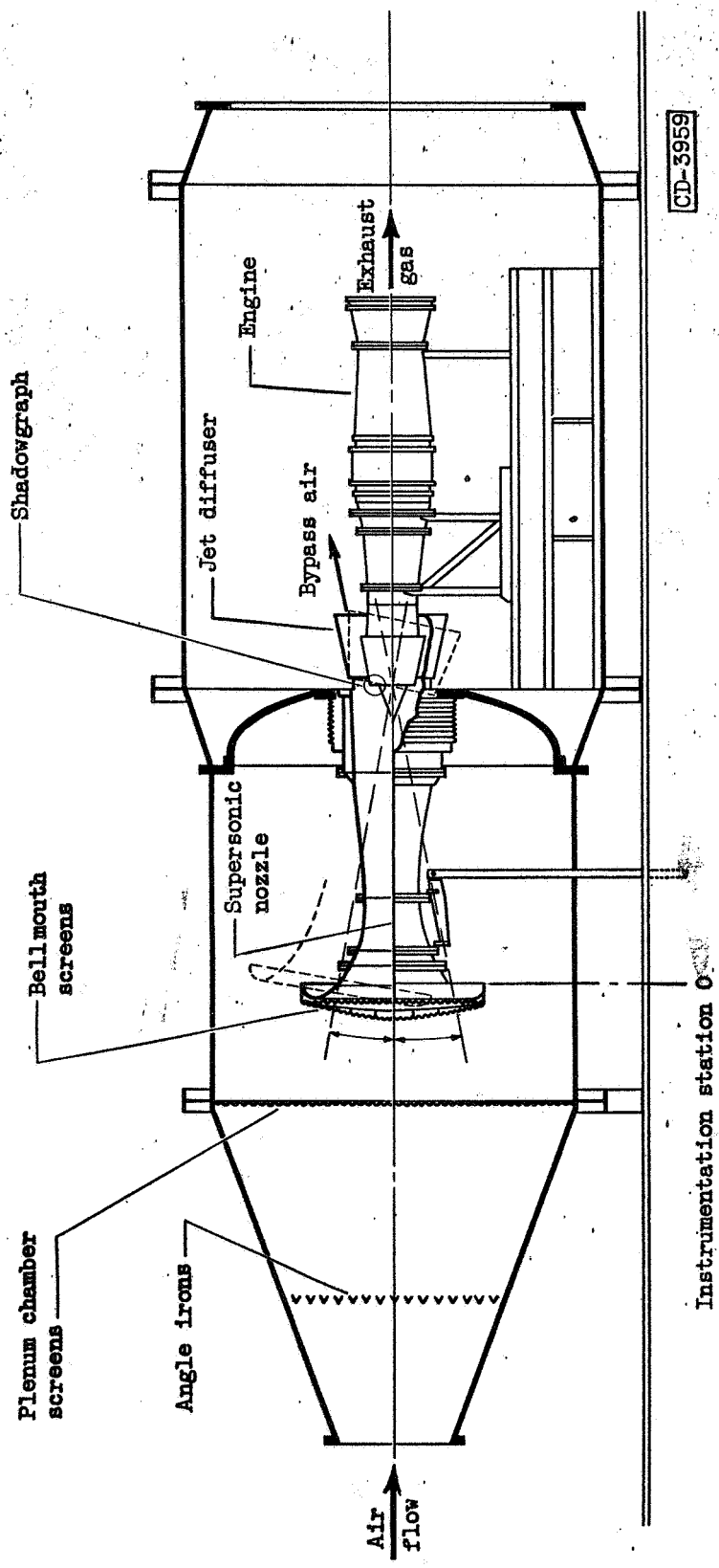

Figure 1. - Installation of XRJ43-MA-3 ramjet engine in altitude test chamber.

2816

DECLASSIFIED

3816

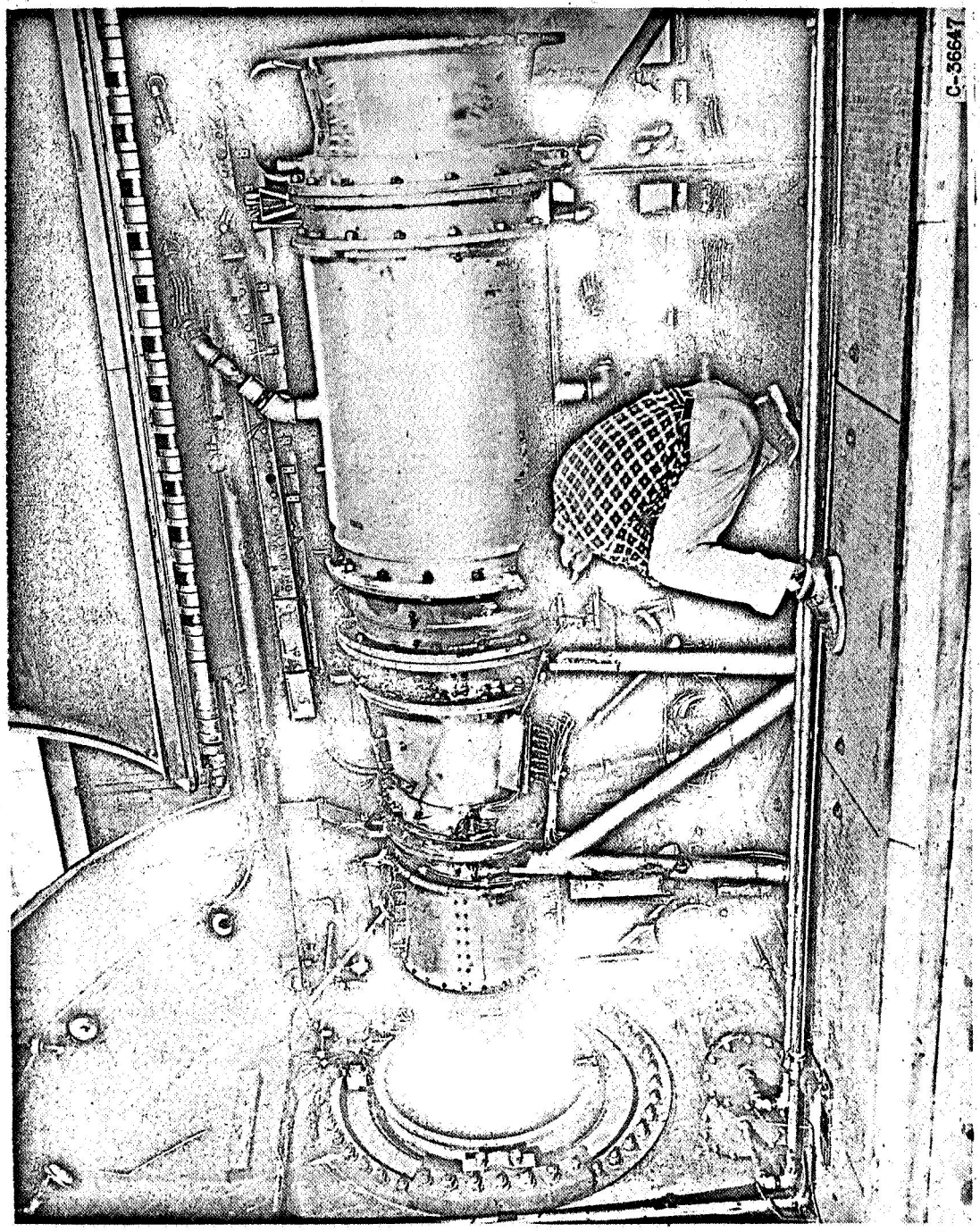

Figure 2. - Installation of XRJ43-MA-3 ram-jet engine in test section (jet diffuser removed).

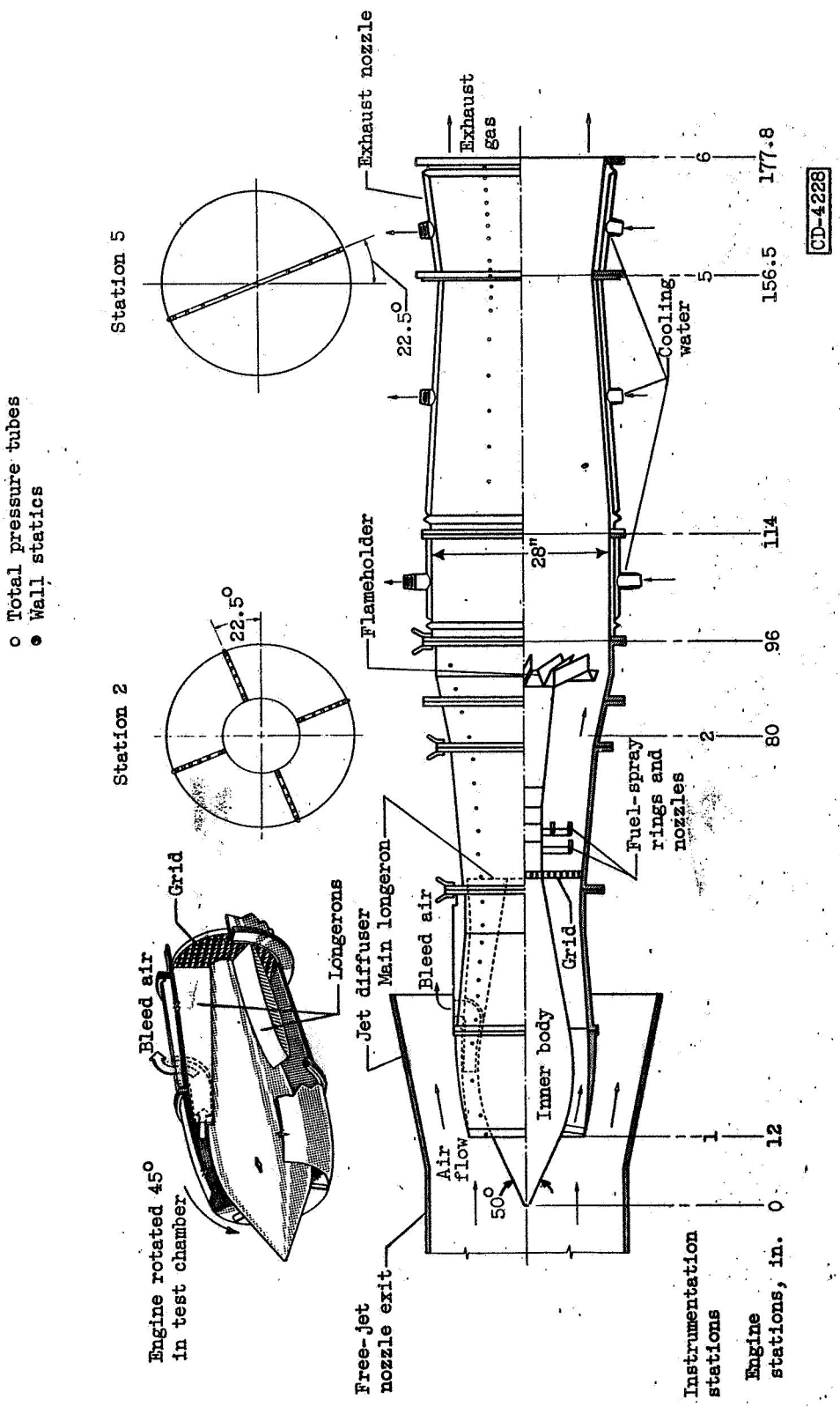

Figure 3. - Cross-sectional view of XRJ43-MA-3 ram-jet engine.

3816

DECLASSIFIED

3816

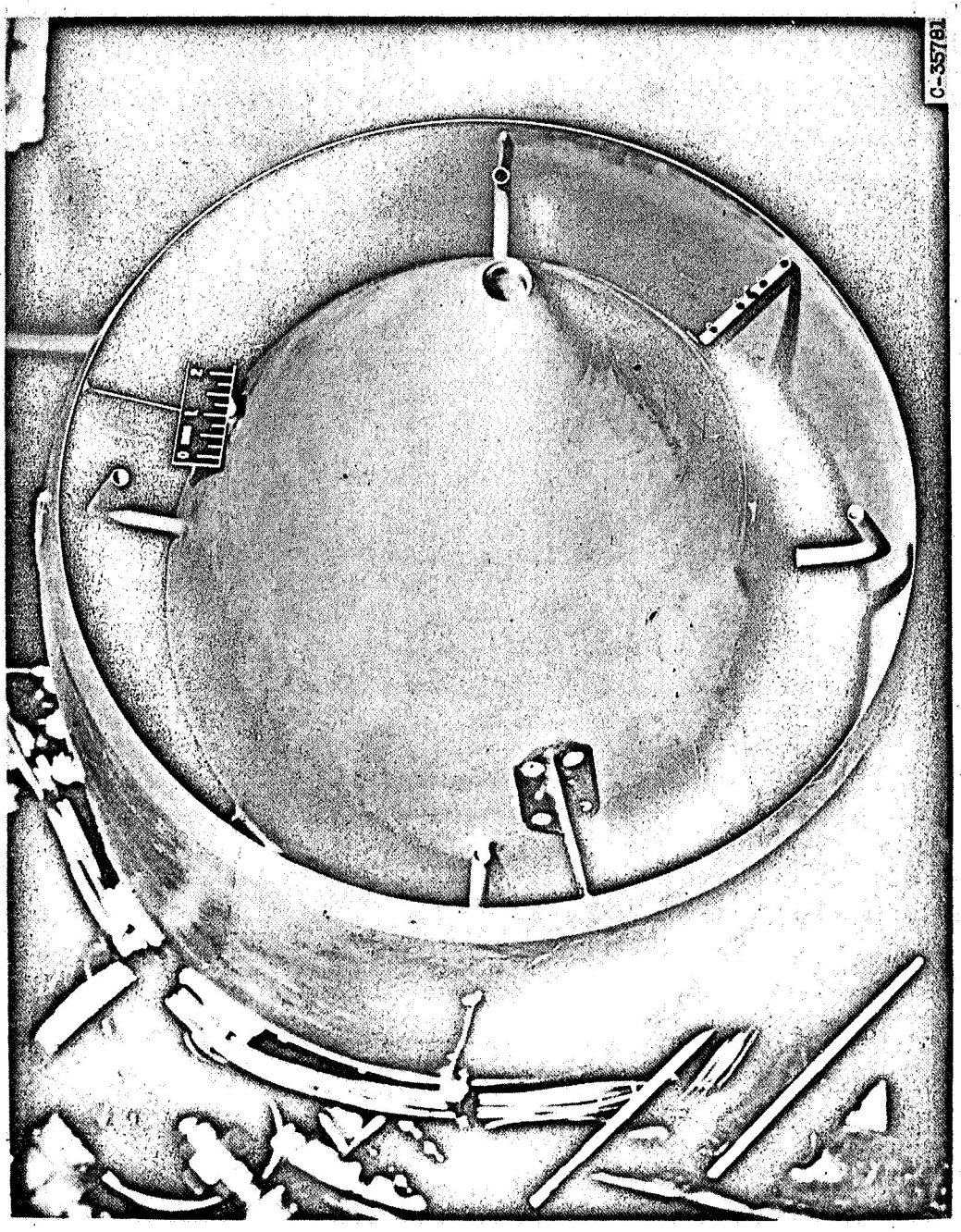

(a) 50°-Single-inlet cone.

Figure 4. - Three-quarter view of inlet of XRJ43-MA-3 ram-jet engine, looking downstream.

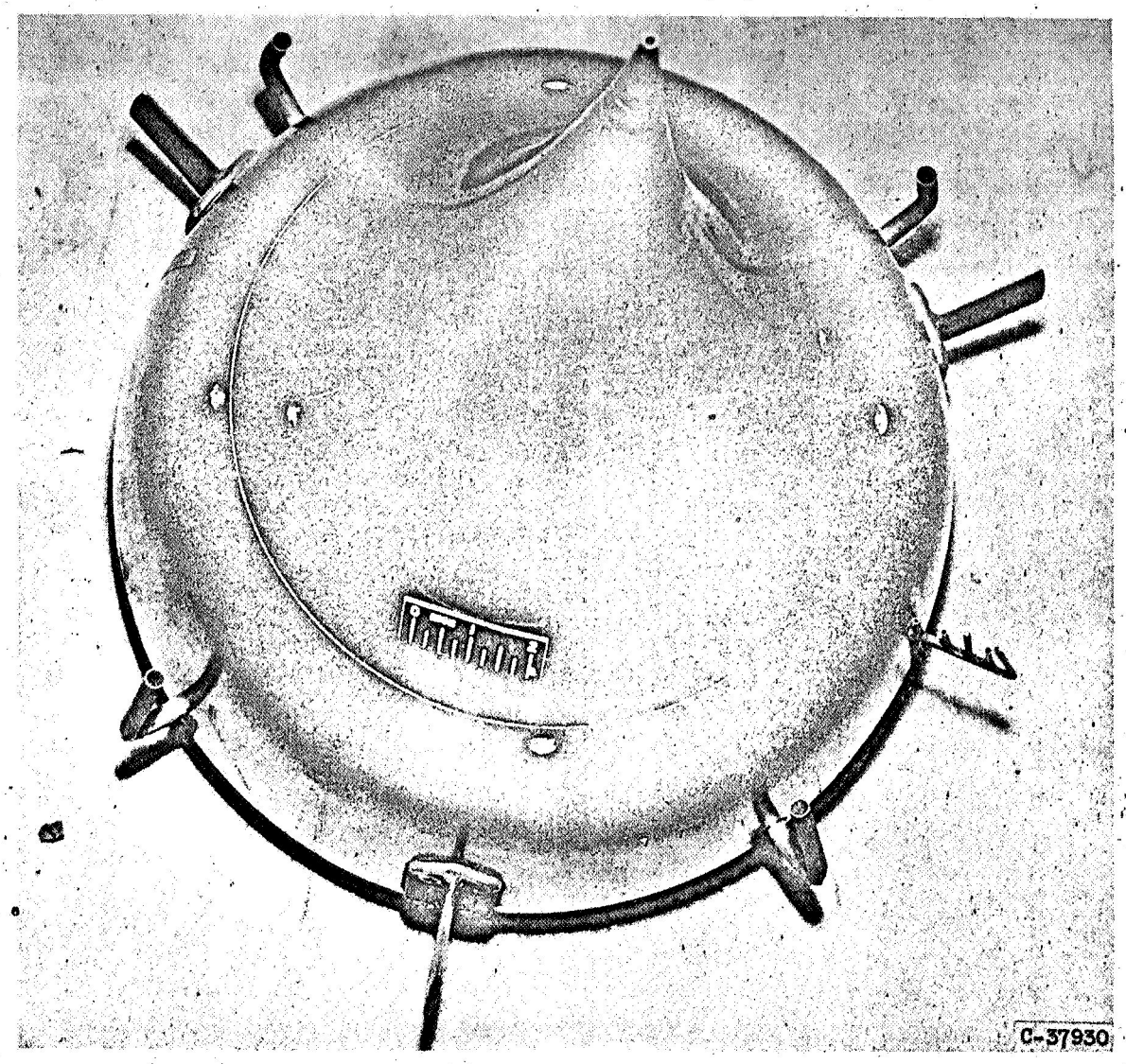

(b) Isentropic inlet.

Figure 4. - Concluded. Three-quarter view of inlet of XRJ43-MA-3 ram-jet engine, looking downstream.

DECLASSIFIED

3816

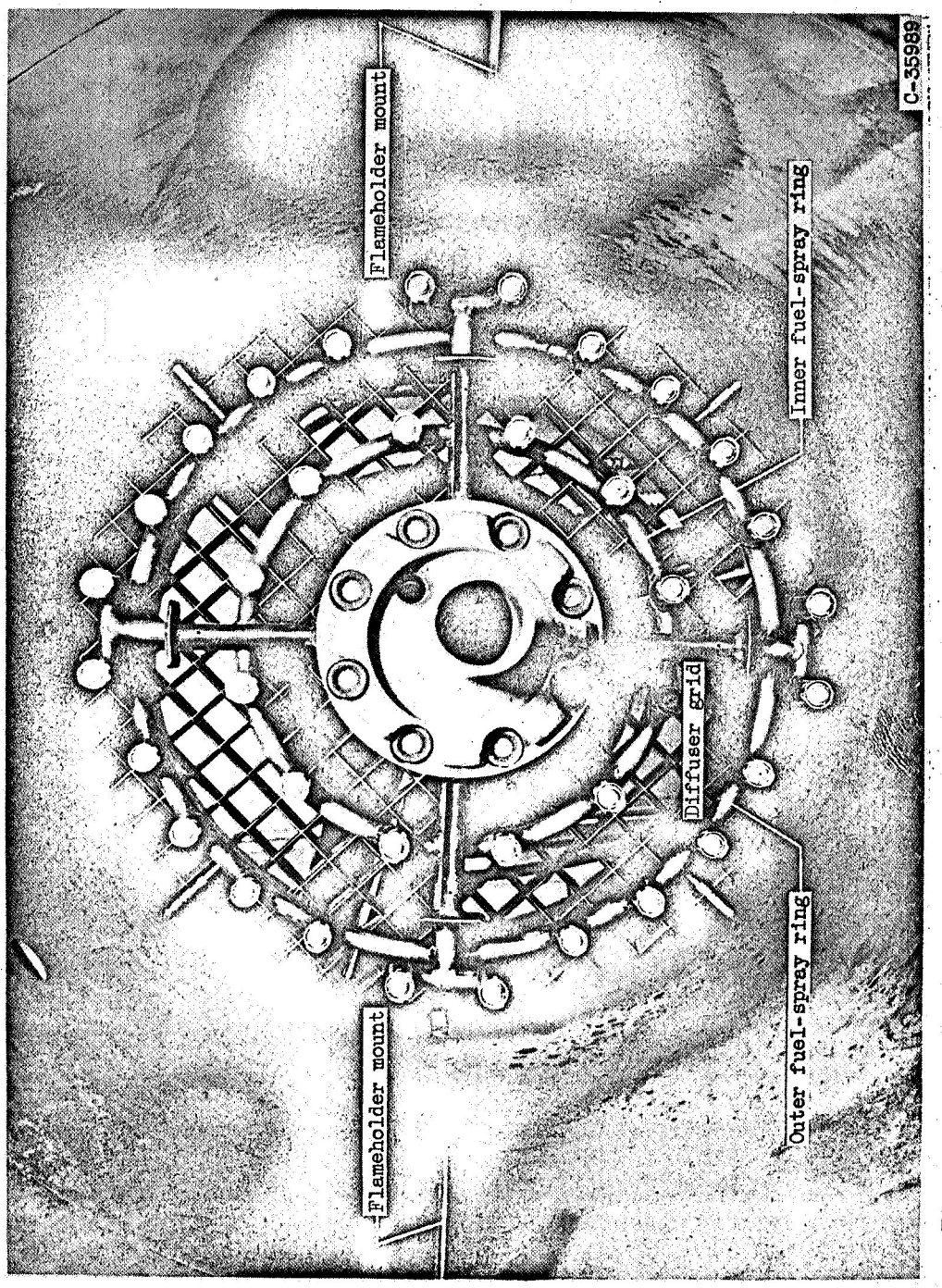

Figure 5. - View looking upstream showing the fuel-spray rings and grid installed in the diffuser.

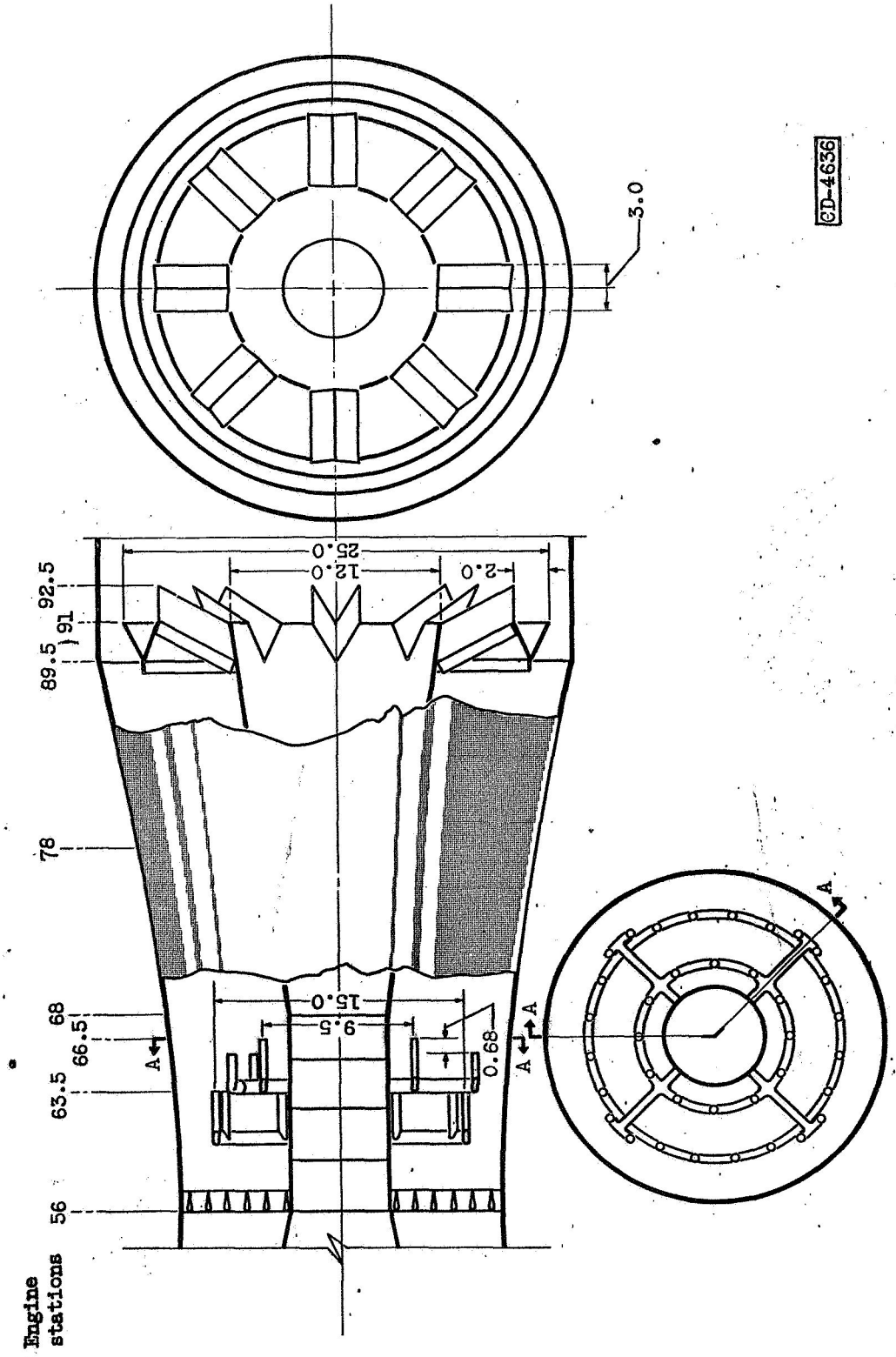

CD-4636

Figure 6. - Schematic diagram showing the annular V-gutter flameholder and its associated fuel system. (All dimensions in inches.)

2816

DECLASSIFIED

3816

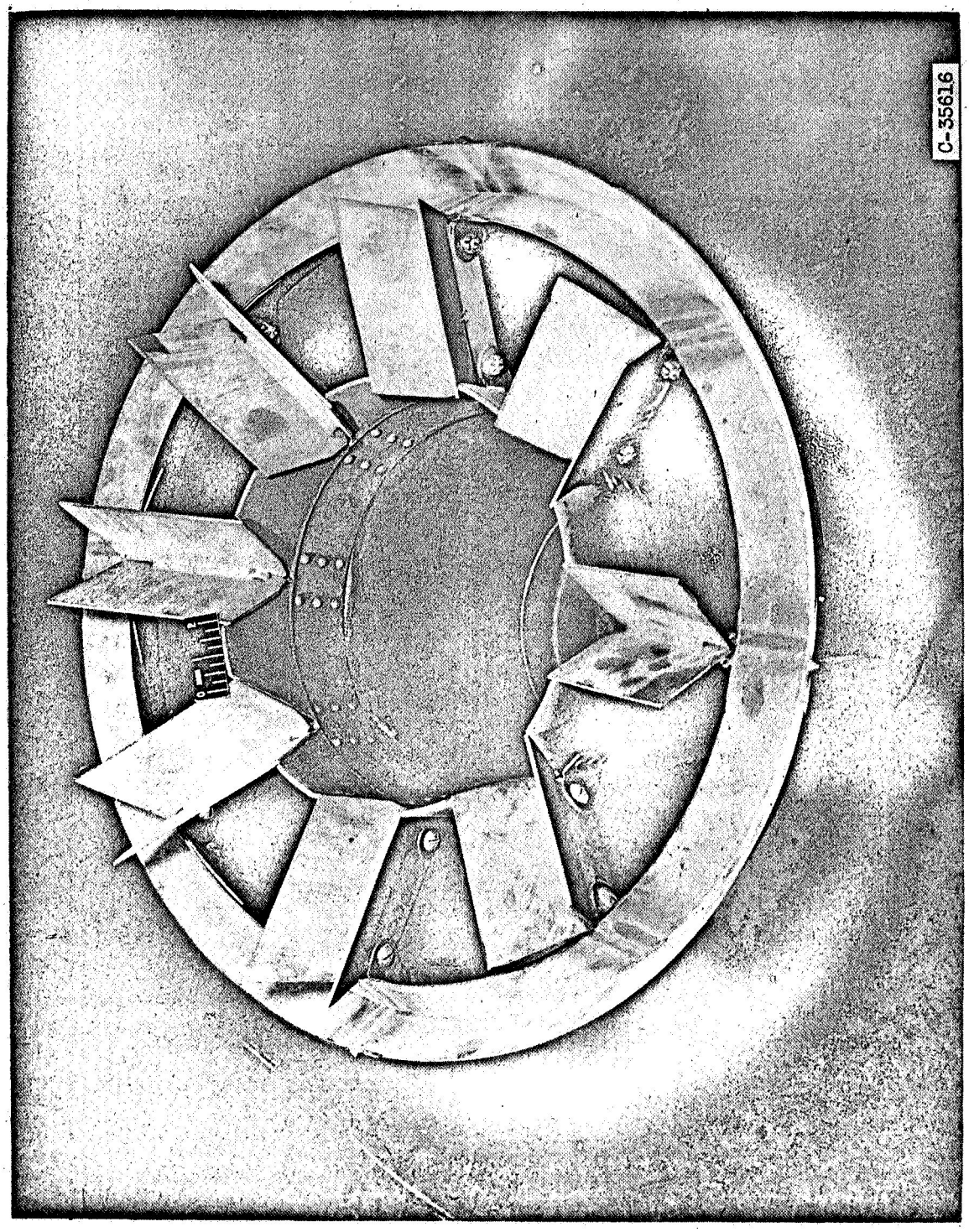

Figure 7. - Three-quarter view of downstream face of annular V-gutter flameholder used in XRJ43-MA-3 ram-jet engine.

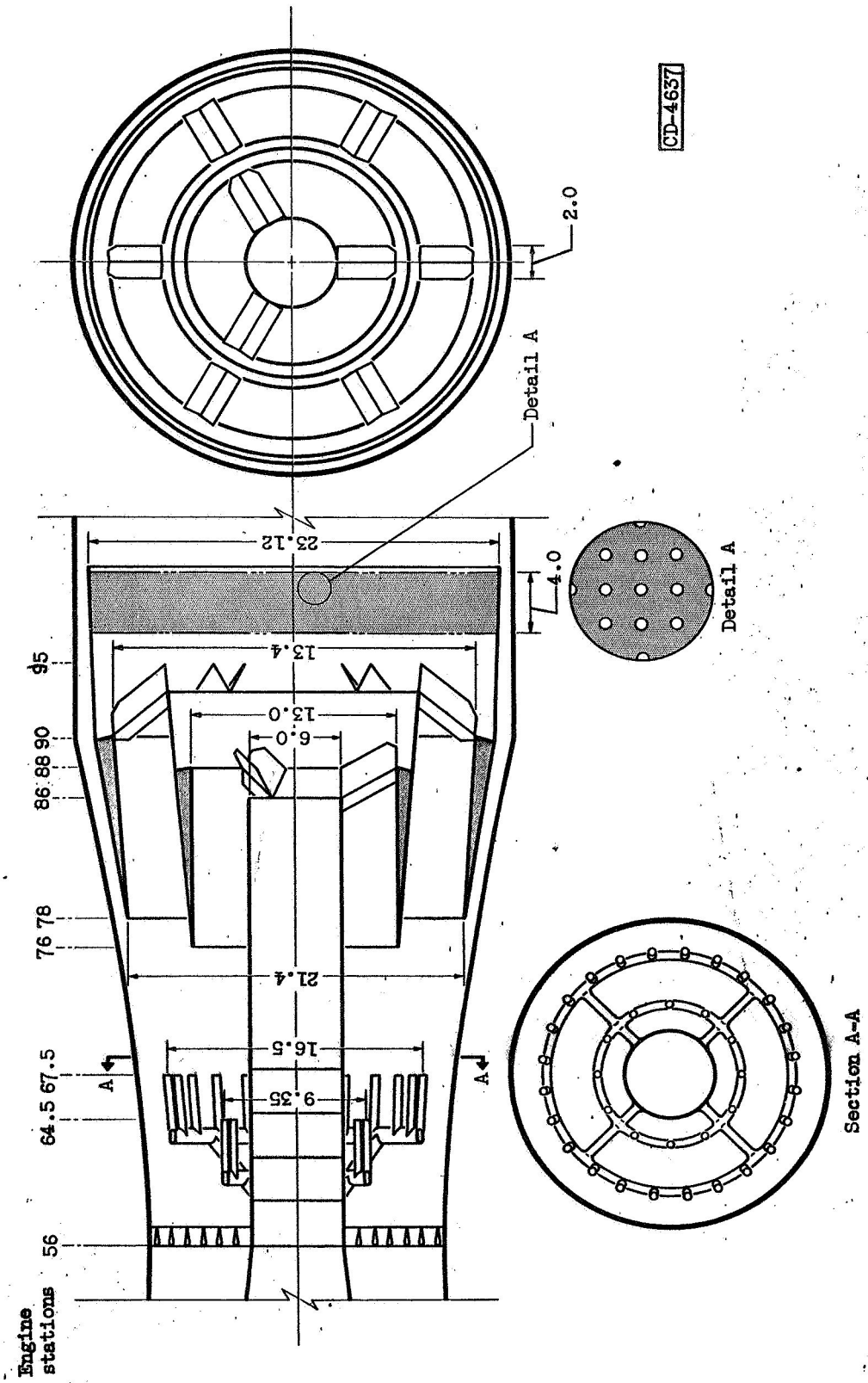

(a) Step-flameholder configuration A.

Figure 8. - Schematic diagram showing four step flameholders and their associated fuel systems. (All dimensions in inches.)

DECLASSIFIED

3816

CX-8

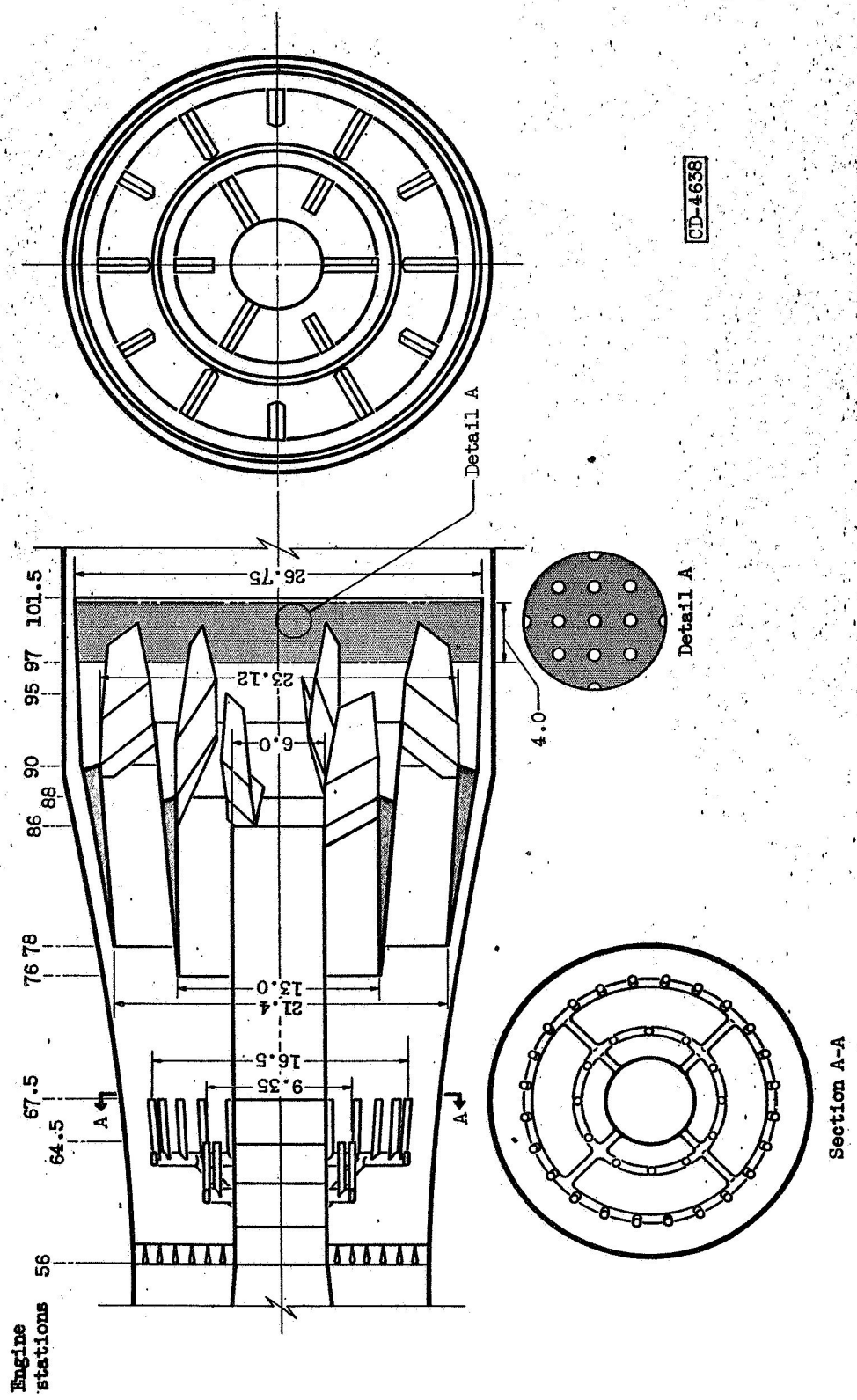

(b) Step-flameholder configuration B.

Figure 8. - Continued. Schematic diagram showing four step flameholders and their associated fuel systems. (All dimensions in inches.)

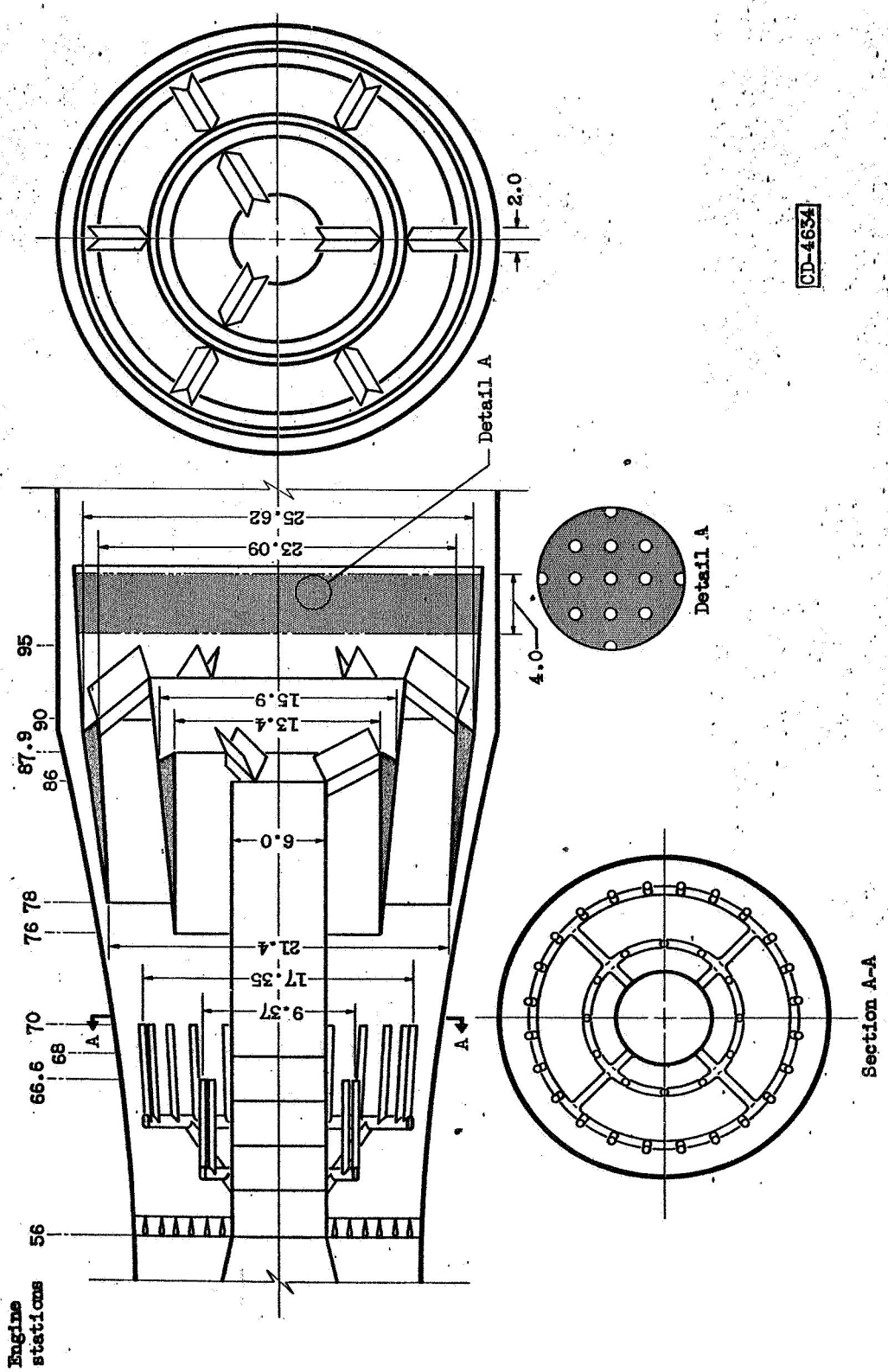

(c) Step-flameholder configuration C.

Figure 8. - Continued. Schematic diagram showing four step flameholders and their associated fuel systems. (All dimensions in inches.)

DECLASSIFIED

3816

CX-8 back

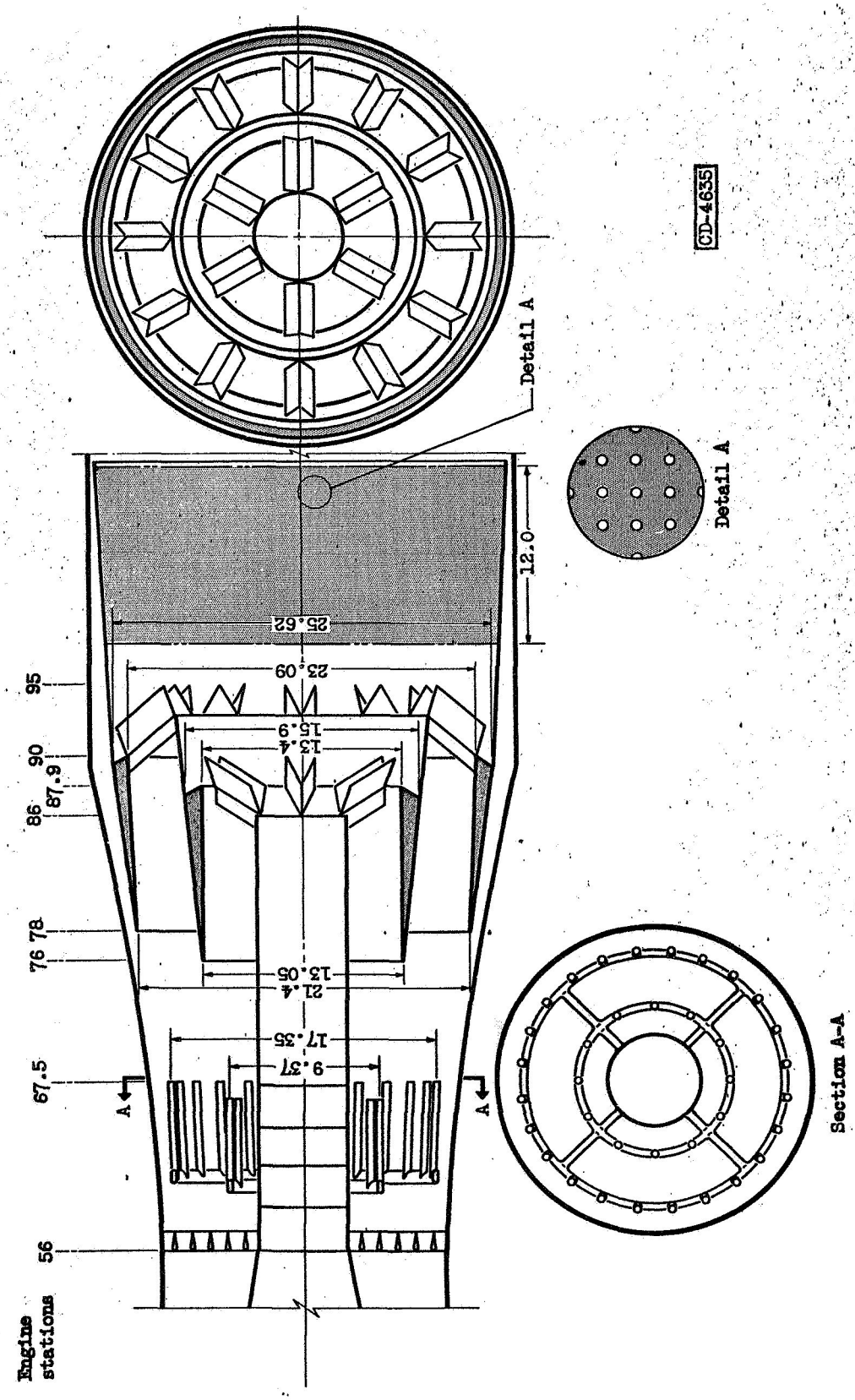

(d) Step-flameholder configuration D.

Figure 8. - Concluded. Schematic diagram showing four step flameholders and their associated fuel systems. (All dimensions in inches.)

DECLASSIFIED

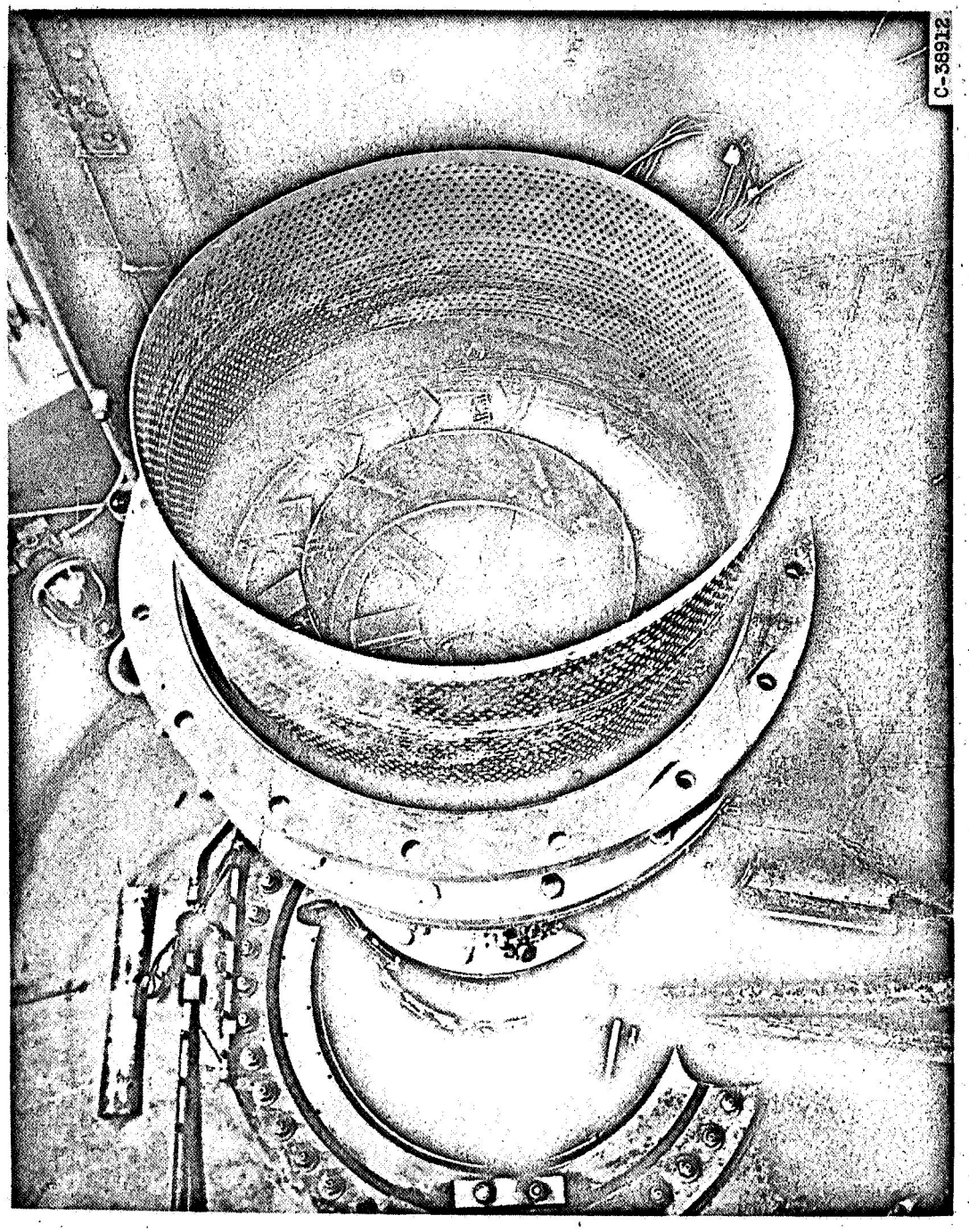

Figure 9. - Step-flameholder configuration D.

DECLASSIFIED

3816

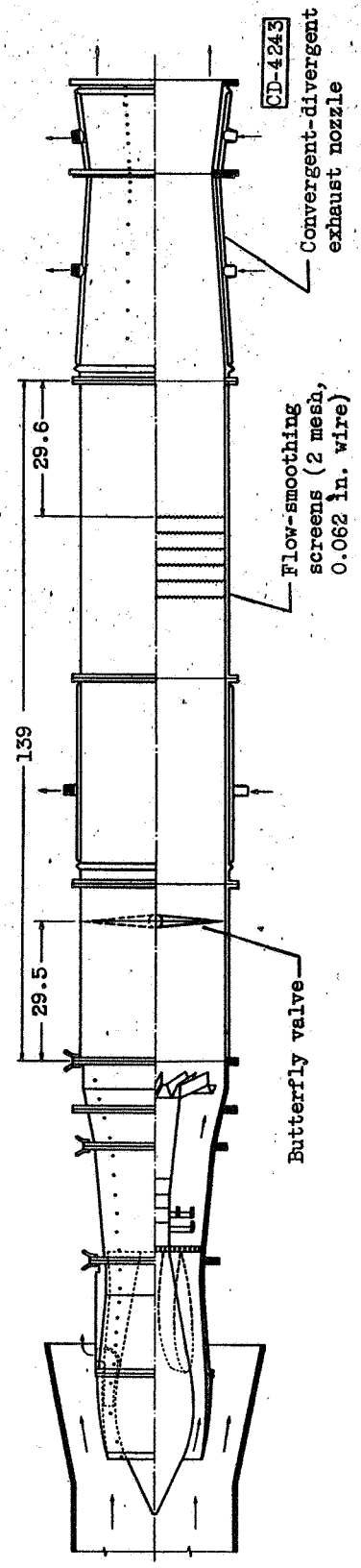

Figure 10. - Air-flow calibrator installation. (All dimensions in inches.)

DECLASSIFIED

3816

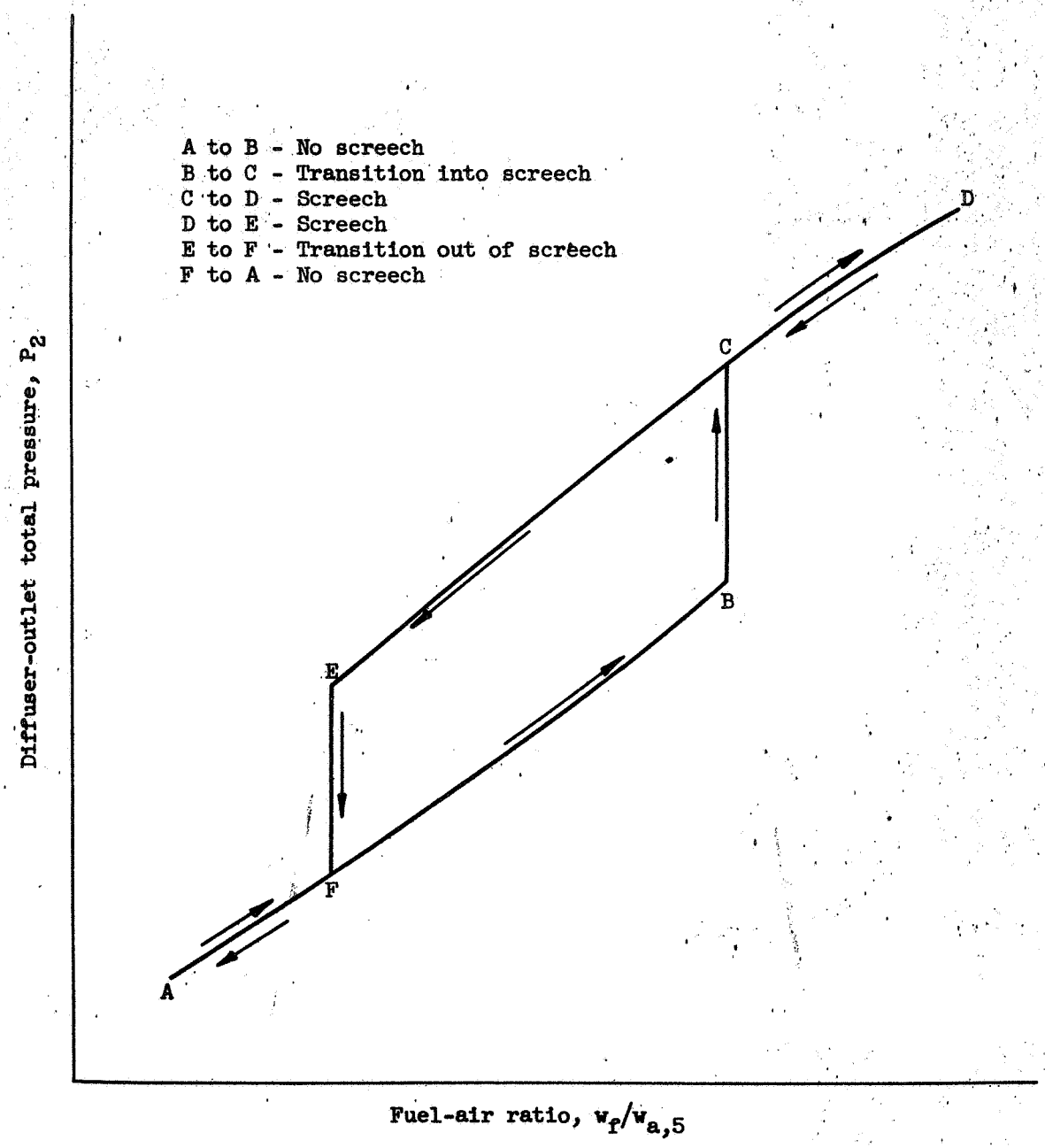

Figure 11. - Schematic plot showing effect of combustor screech on combustor pressure level.

DECLASSIFIED

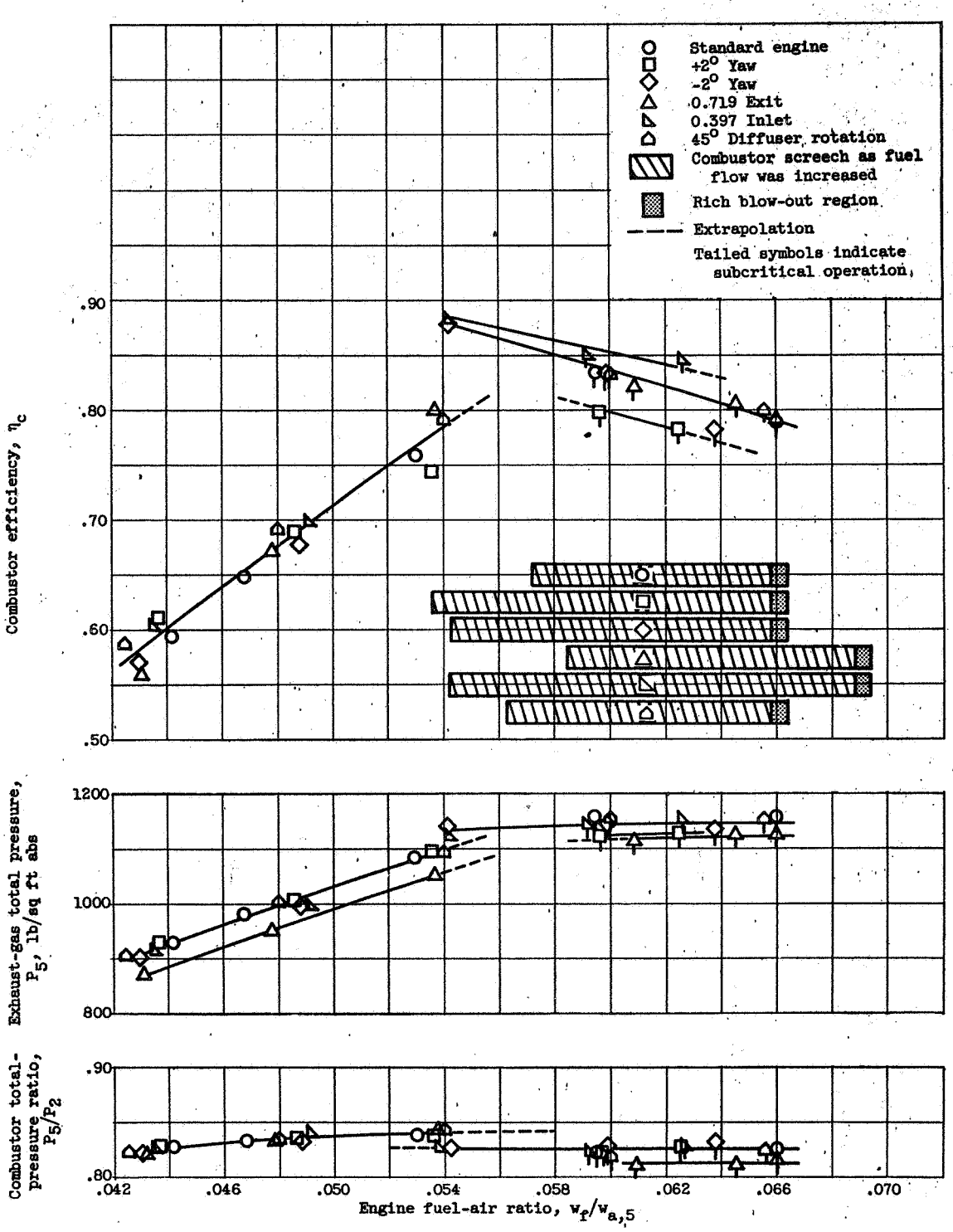

Figure 12. - Effect of yaw, variation of inlet and exit areas, and diffuser rotation on engine performance. Altitude, 60,000 feet; nominal inlet-air temperature, 736° R (MCD); dual-pressure fuel injection; nominal inner-ring fuel-air ratio, 0.037; angle of attack, 0°

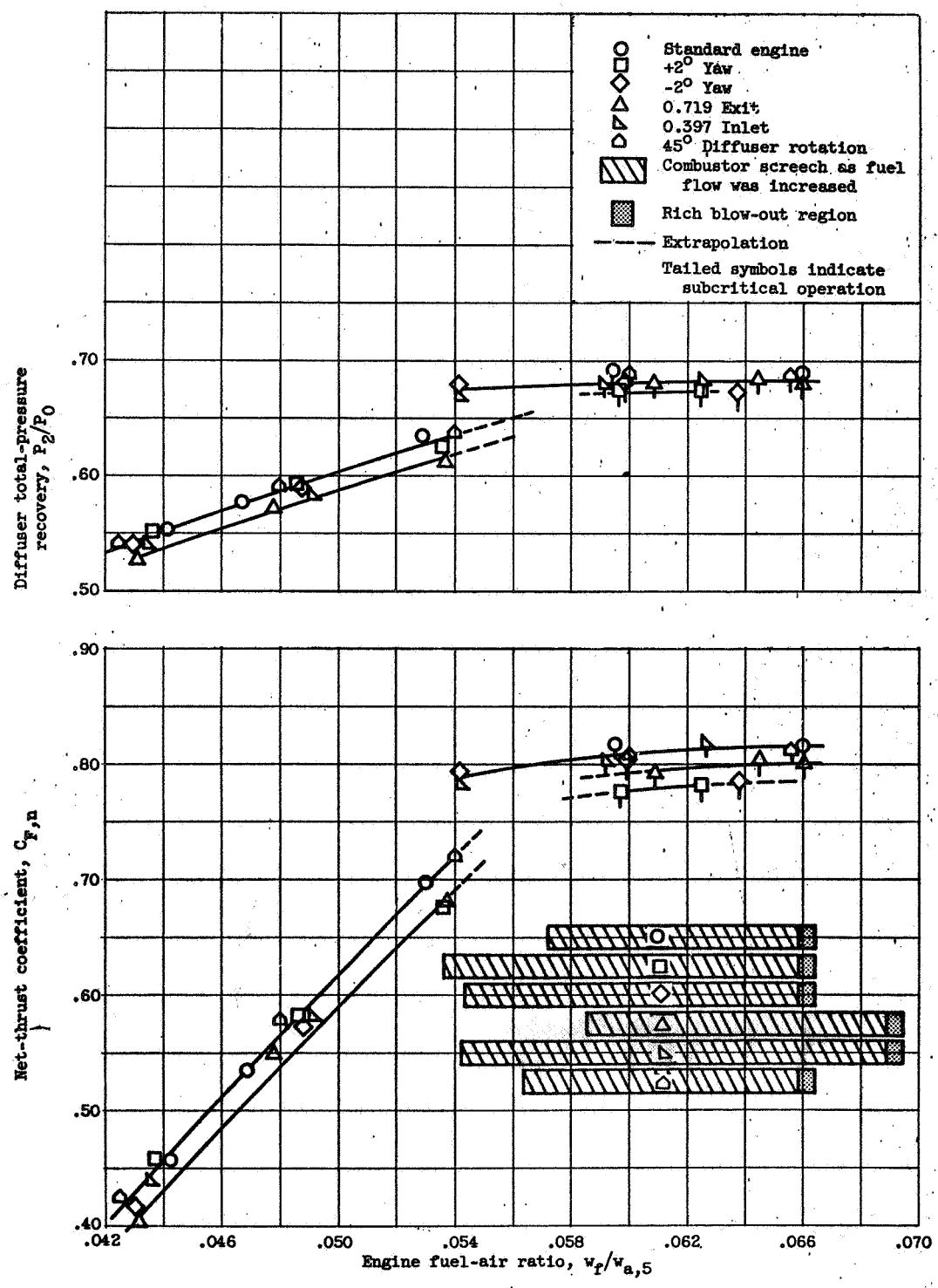

Figure 12. - Concluded. Effect of yaw, variation of inlet and exit areas, and diffuser rotation on engine performance. Altitude, 60,000 feet; nominal inlet-air temperature, 736° R (MCD); dual-pressure fuel injection; nominal inner-ring fuel-air ratio, 0.037; angle of attack, 0°.

3816

DECLASSIFIED

3816

CX-9

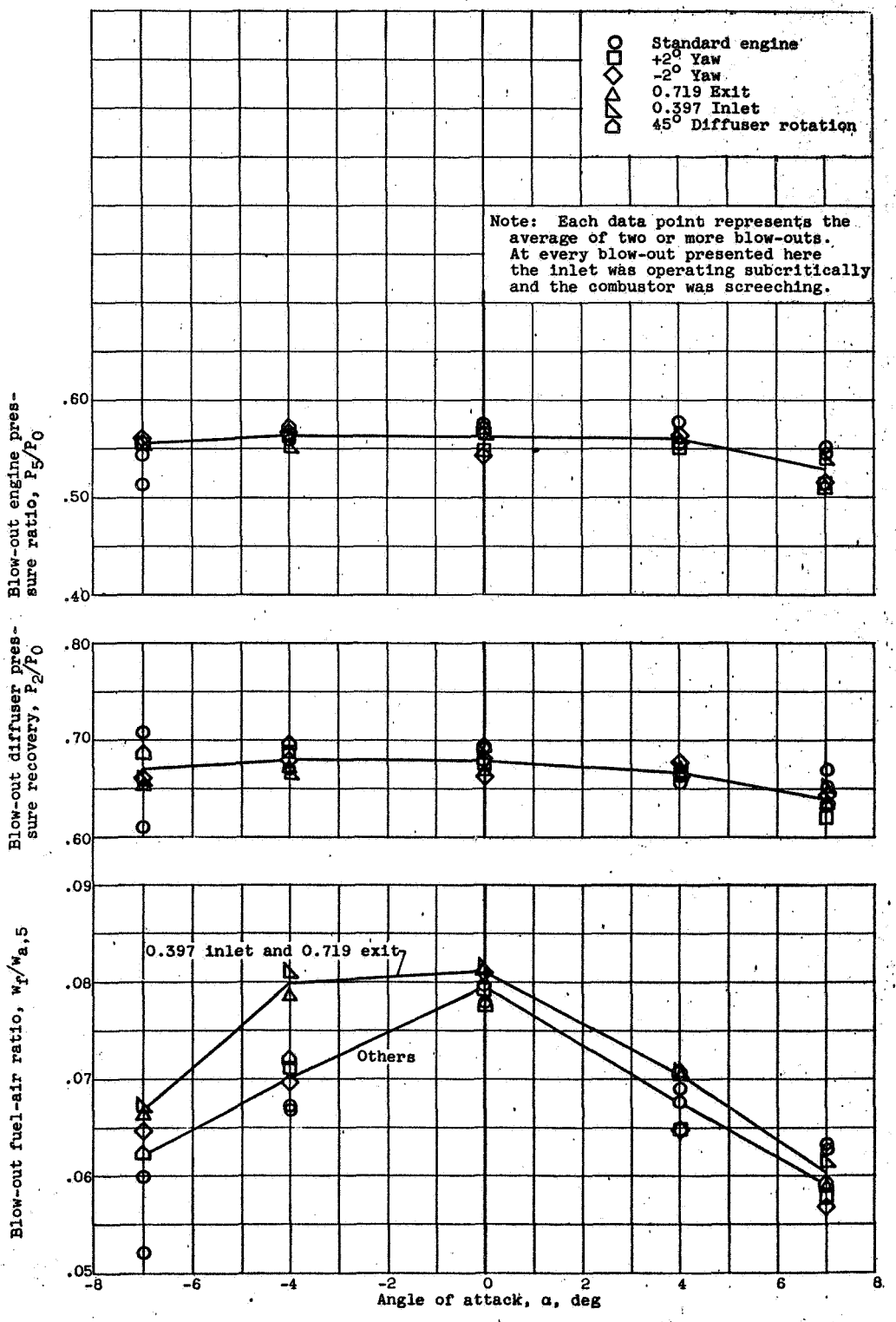

(a) Single-pressure fuel injection; altitude, 50,000 feet; nominal inlet-air temperature, 816° R (MHD).

Figure 13. - Effect of yaw, variation of inlet and exit areas, and diffuser rotation on the engine rich blow-out limits.

3816

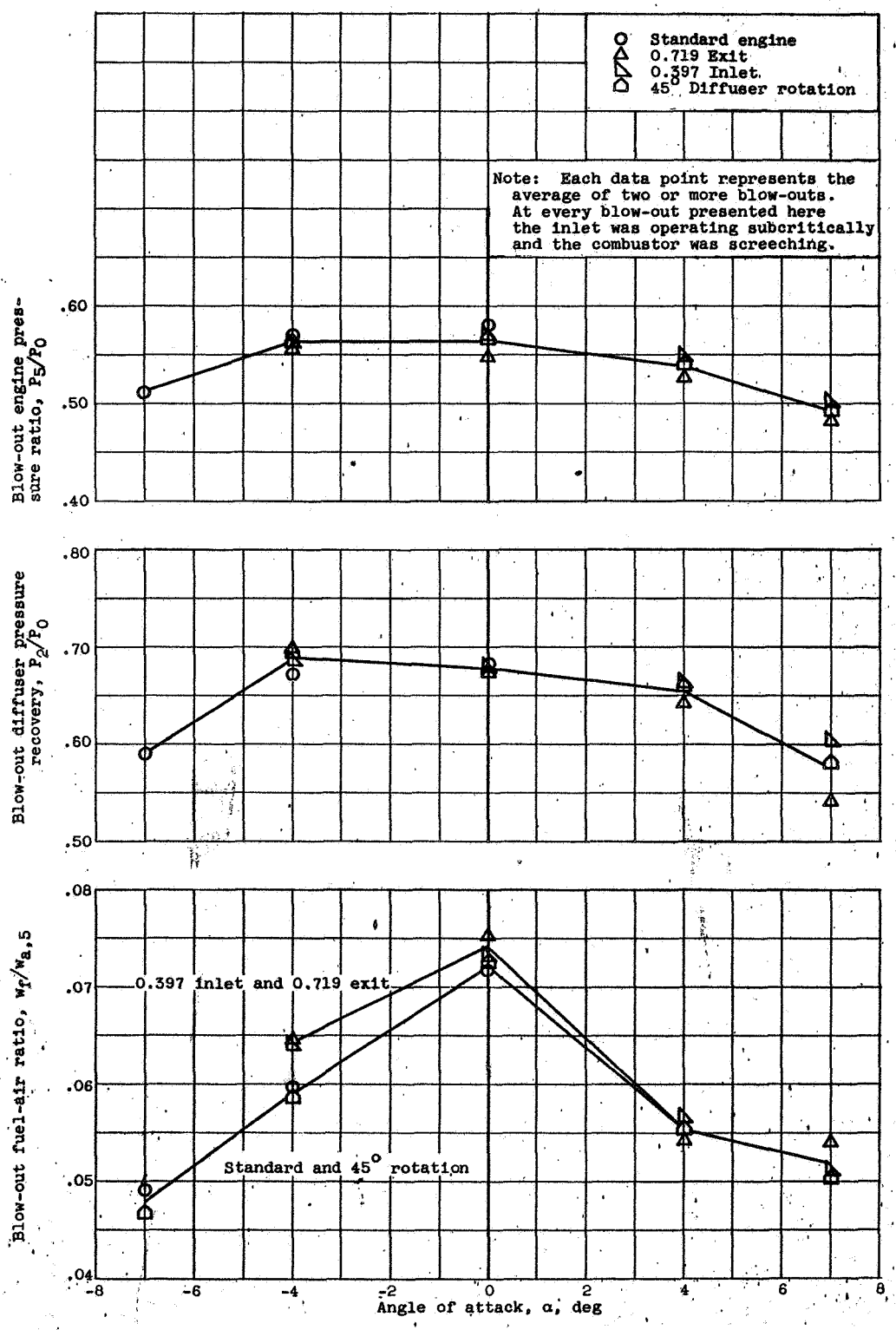

(b) Single-pressure fuel injection; altitude, 50,000 feet; nominal inlet-air temperature, 740° R (MCD).

Figure 13. - Continued. Effect of yaw, variation of inlet and exit areas, and diffuser rotation on the engine rich blow-out limits.

DECLASSIFIED

3816

CX-9 back

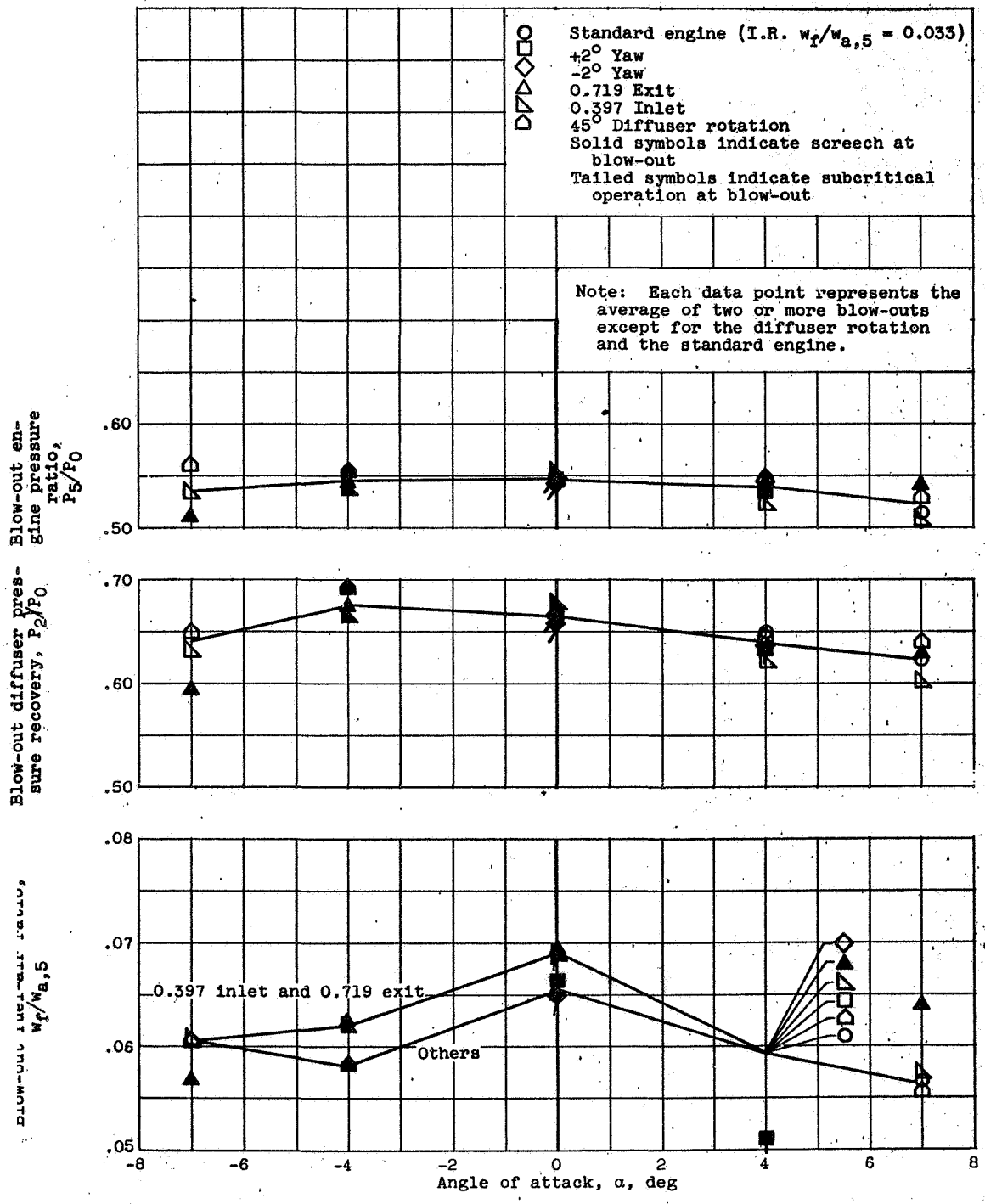

(c) Dual-pressure fuel injection; nominal inner-ring fuel-air ratio, 0.037; altitude, 60,000 feet; nominal inlet-air temperature, 736° R (MCD).

Figure 13. - Concluded. Effect of yaw, variation of inlet and exit areas, and diffuser rotation on the engine rich blow-out limits.

3816

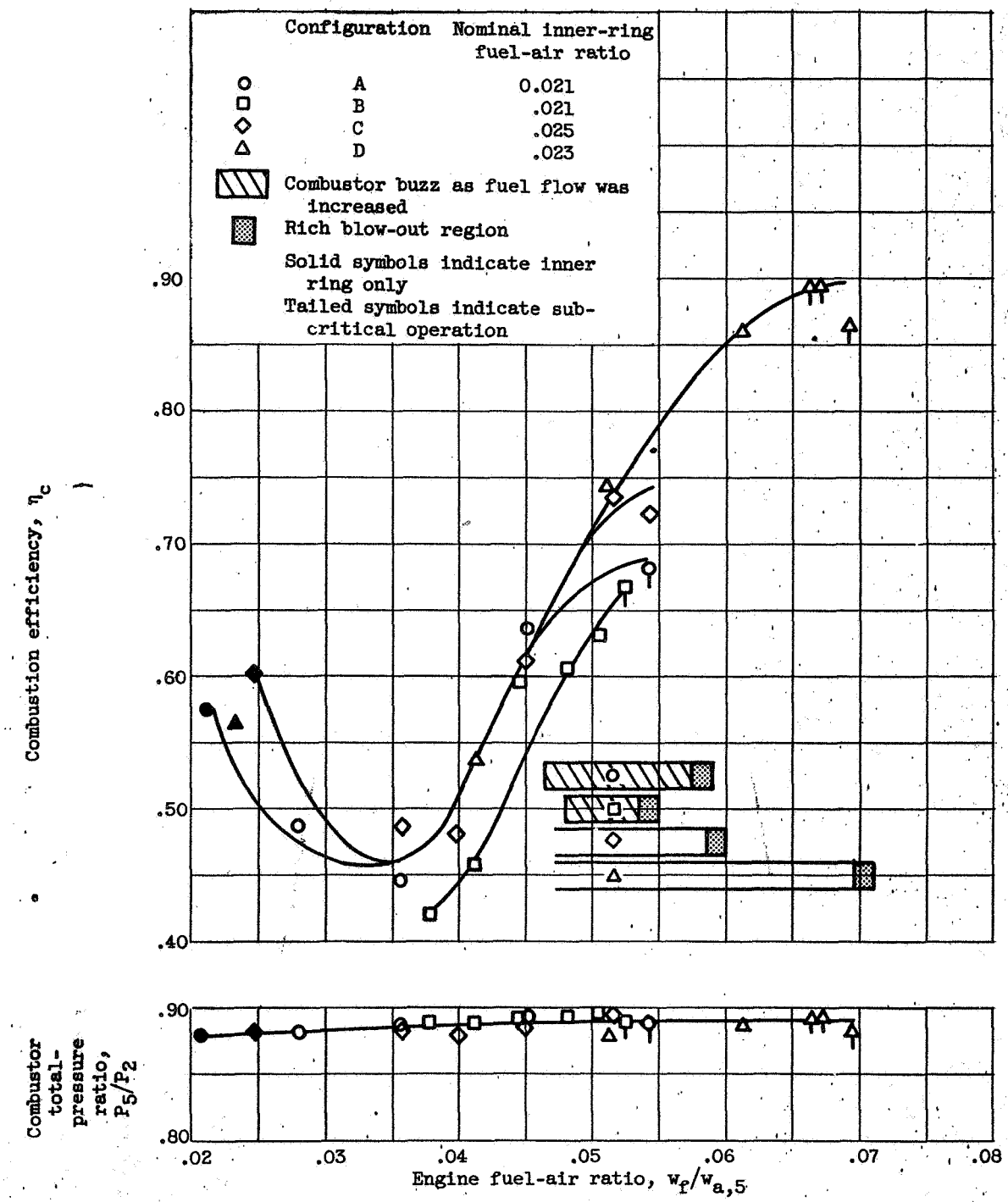

(a) Altitude, 50,000 feet; nominal inlet-air temperature, 740° R (MCD); dual-pressure fuel injection; angle of attack, +4°.

Figure 14. - Comparison of the performance of four step-flameholder configurations.

DECLASSIFIED

3816

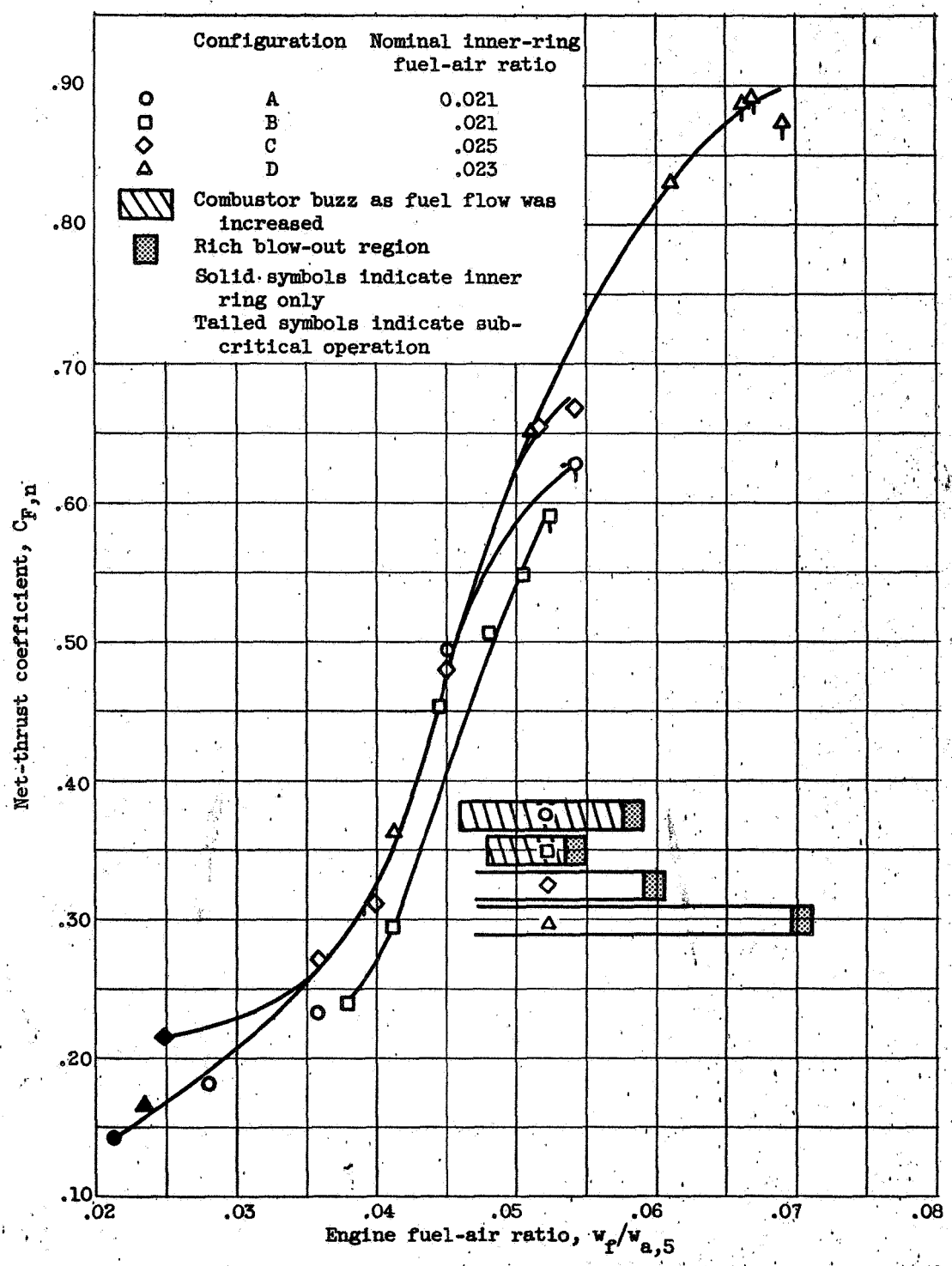

(a) Concluded. Altitude, 50,000 feet; nominal inlet-air temperature, 740° R (MCD); dual-pressure fuel injection; angle of attack, +4°.

Figure 14. - Continued. Comparison of the performance of four step-flameholder configurations.

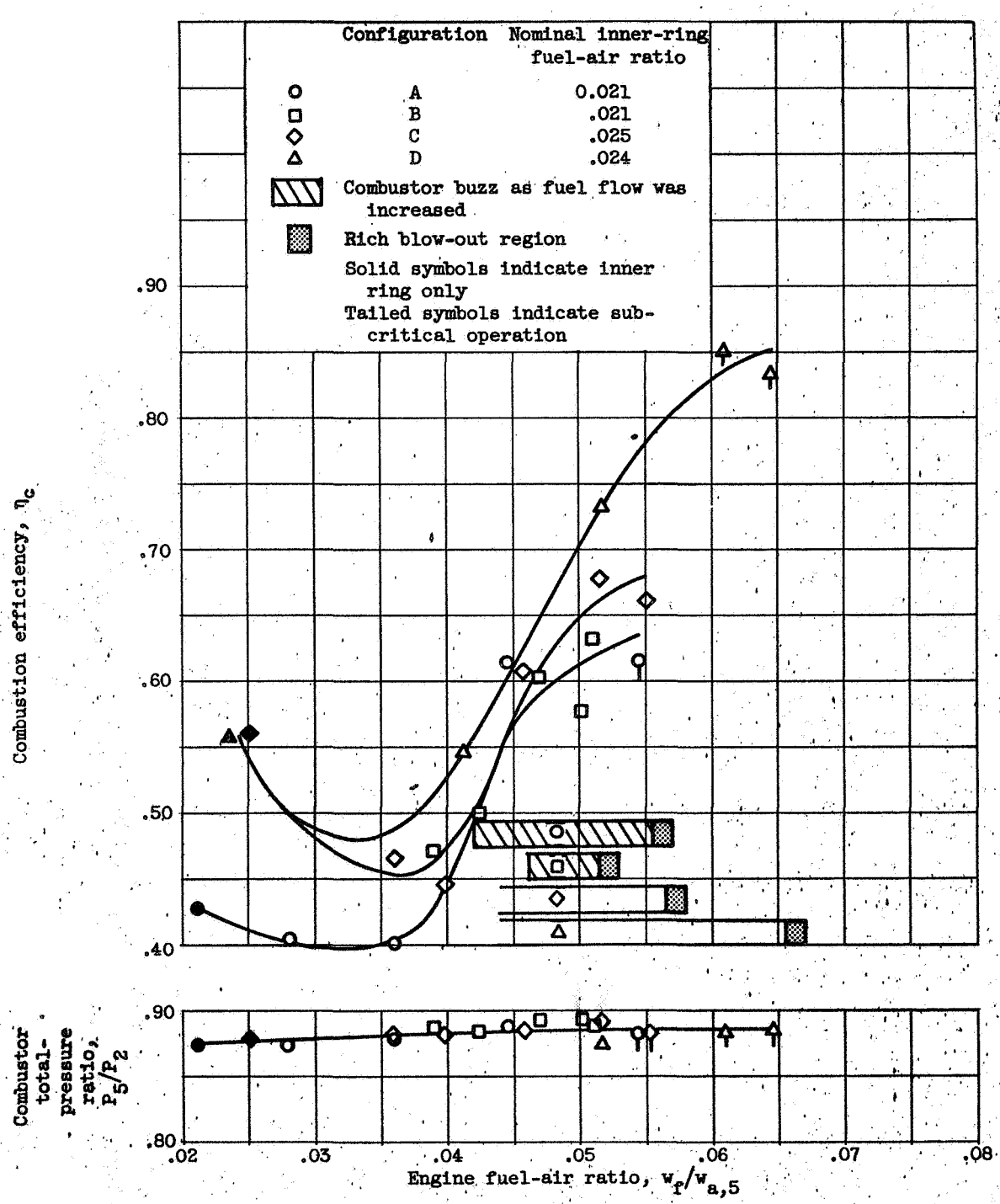

(b) Altitude, 50,000 feet; nominal inlet-air temperature, 740° R (MCD); dual-pressure fuel injection; angle of attack, +7°.

Figure 14. - Continued. Comparison of the performance of four step-flameholder configurations.

DECLASSIFIED

3816

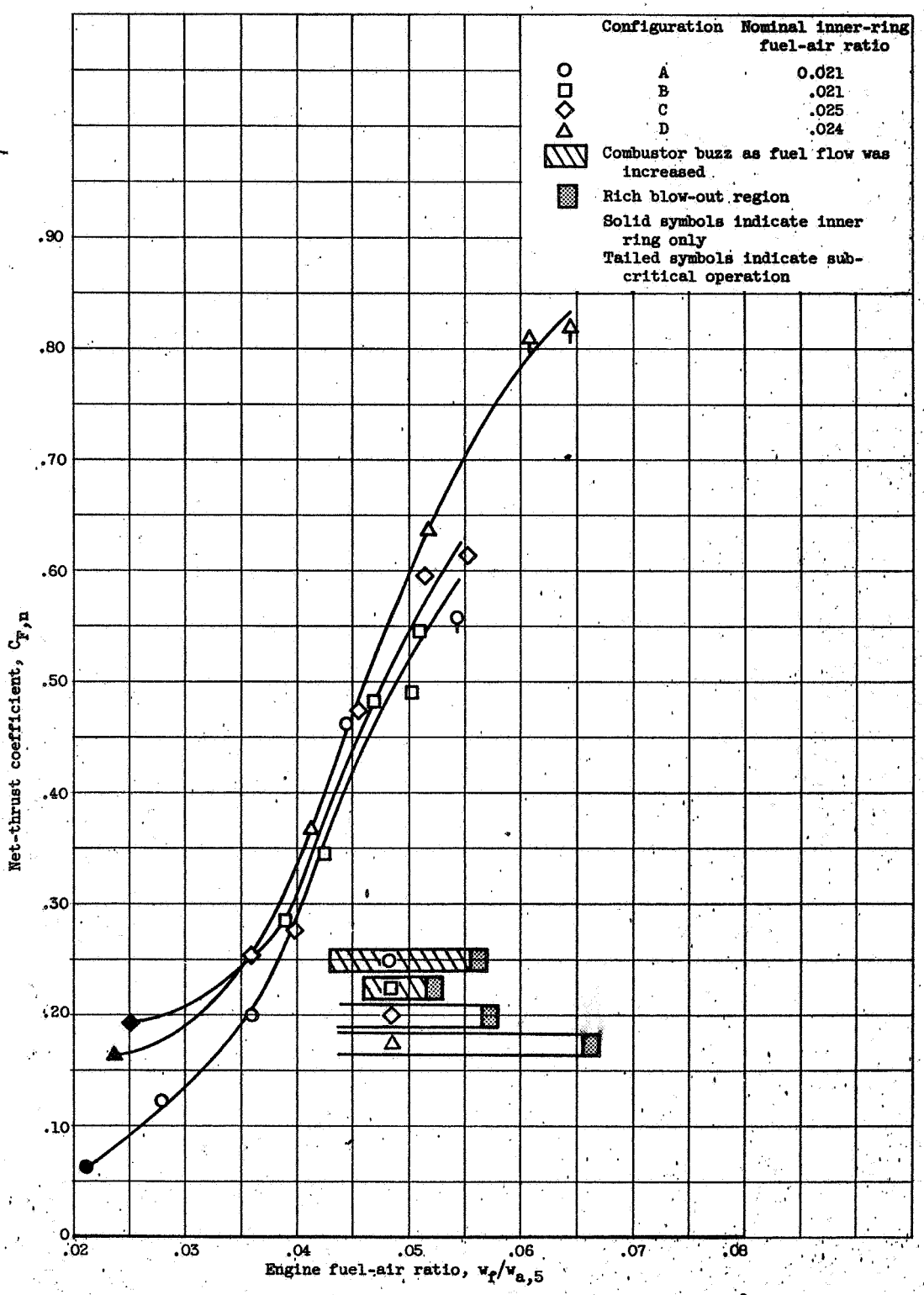

(b) Concluded. Altitude, 50,000 feet; nominal inlet-air temperature, 740° R (MCD); dual-pressure fuel injection; angle of attack, +7°.

Figure 14. - Continued. Comparison of the performance of four step-flameholder configurations.

3816

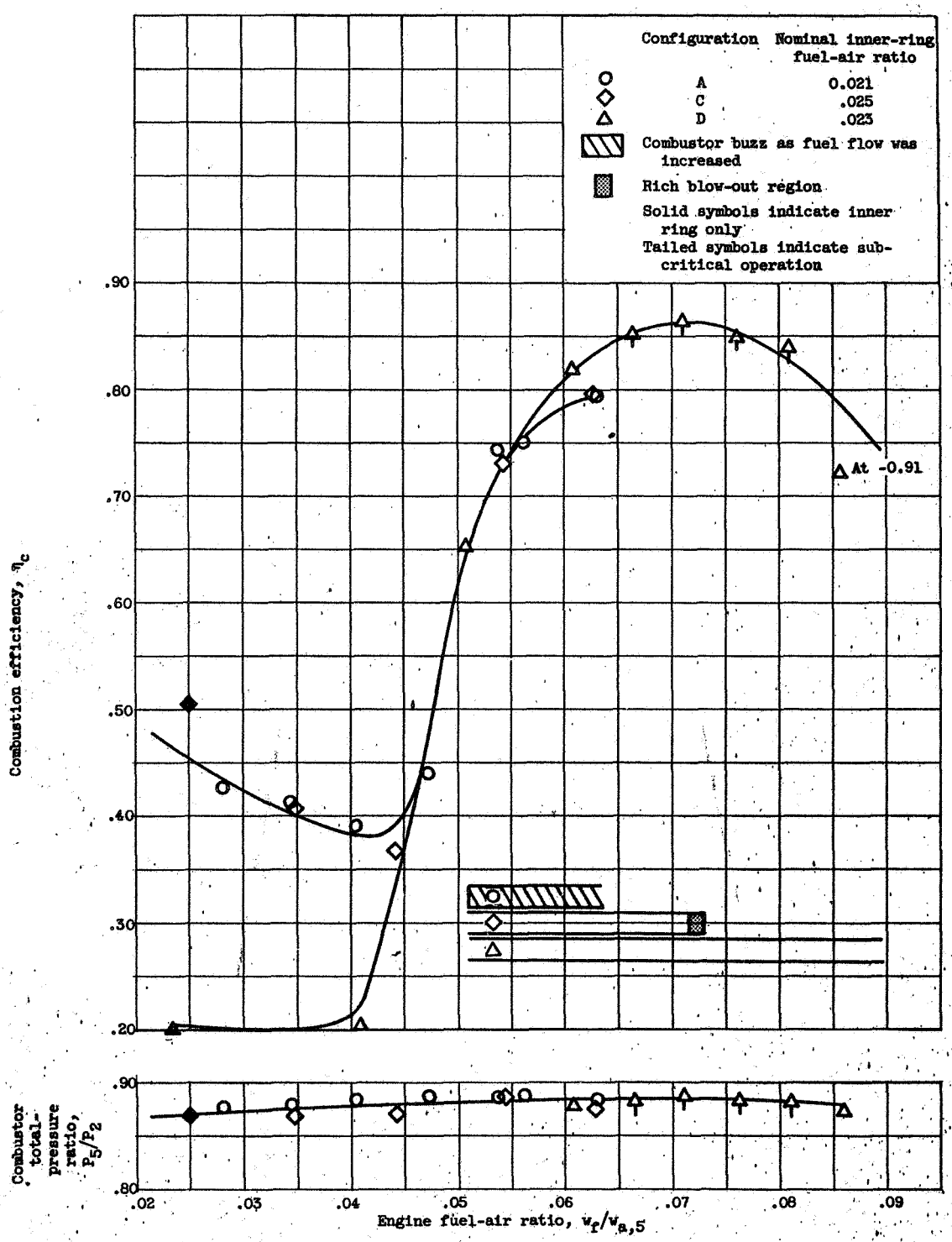

(c) Altitude, 60,000 feet; nominal inlet-air temperature, 740° R (MCD); dual-pressure fuel injection; angle of attack, 0°.

Figure 14. - Continued. Comparison of the performance of four step-flameholder configurations.

DECLASSIFIED

3816

CX-10

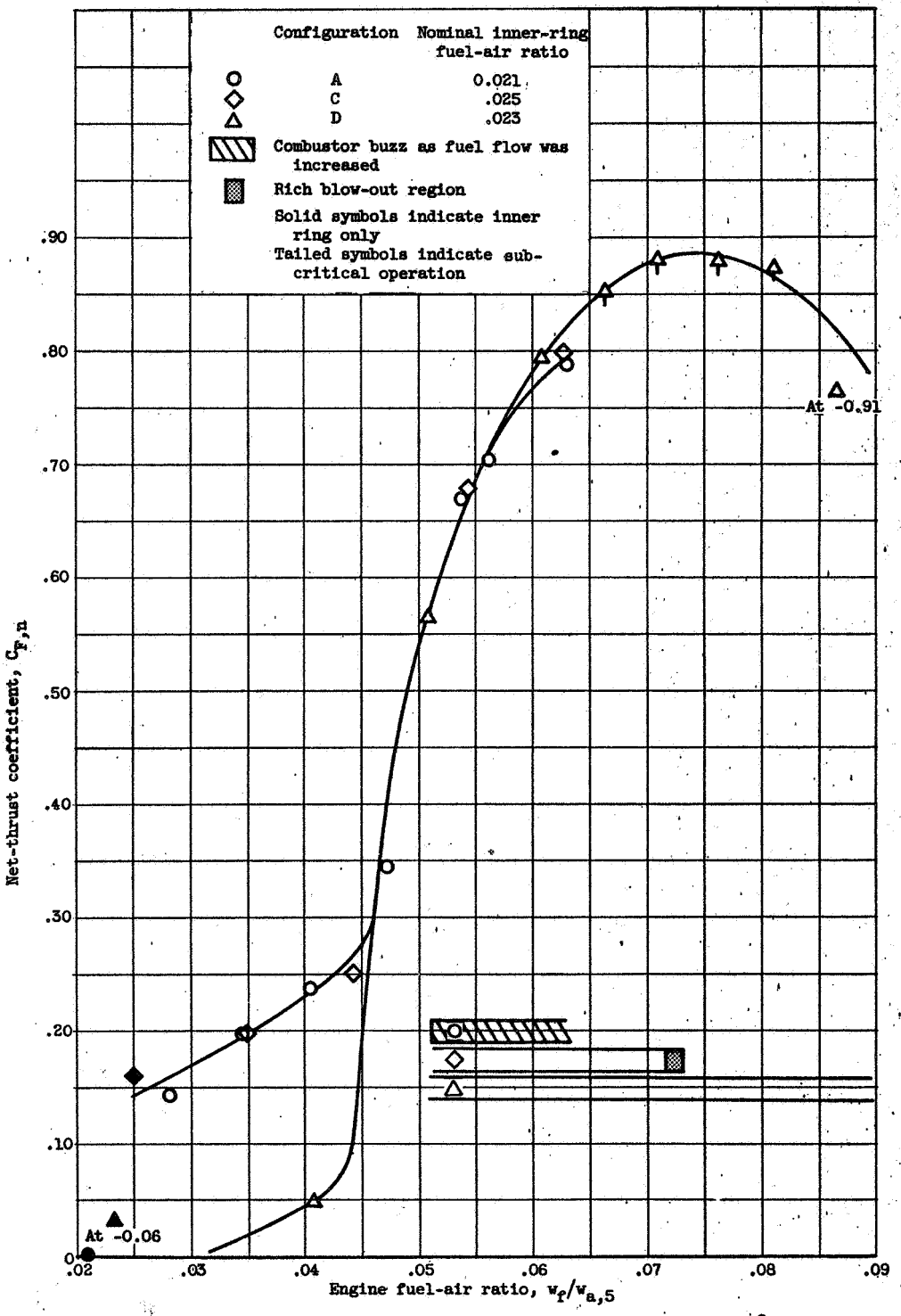

(c) Concluded. Altitude, 60,000 feet; nominal inlet-air temperature, 740° R (MCD); dual-pressure fuel injection; angle of attack, 0°.

Figure 14. - Concluded. Comparison of the performance of four step-flameholder configurations.

3816

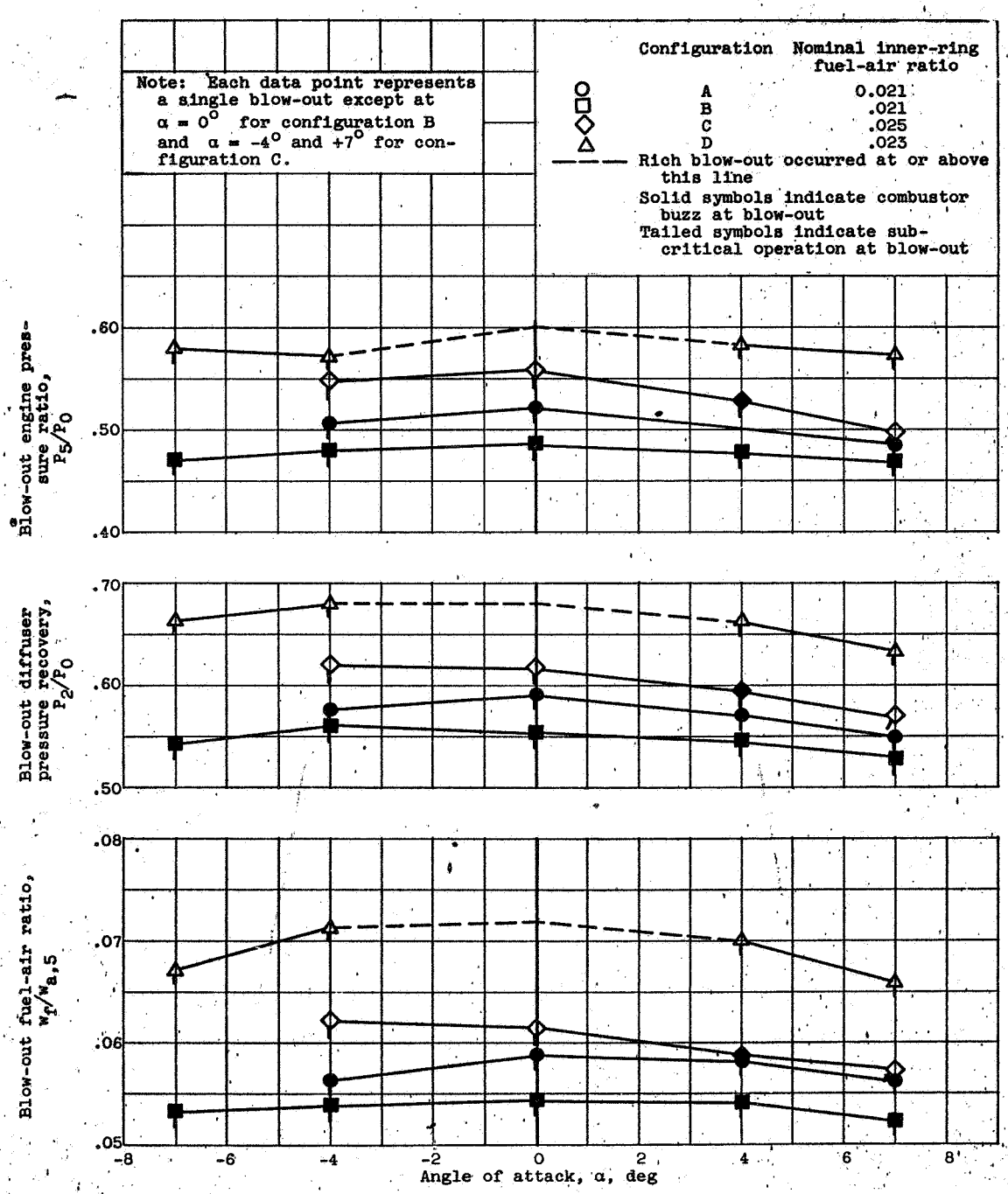

Figure 15. - Comparison of the rich blow-out limits with four step flameholders. Dual-pressure fuel injection; altitude, 50,000 feet; nominal inlet-air temperature, 740° R (MCD).

DECLASSIFIED

3816

CX-10 back

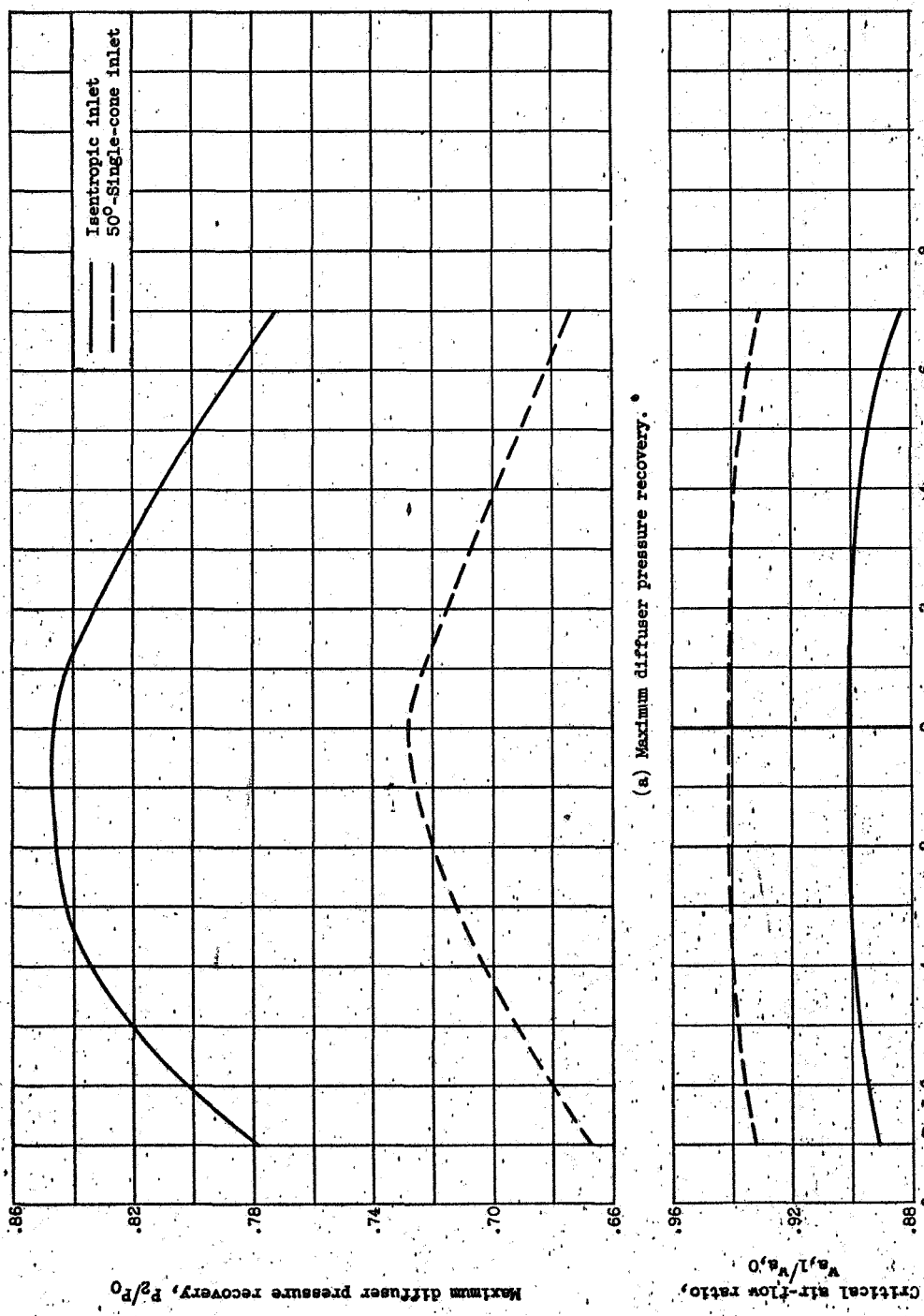

(a) Maximum diffuser pressure recovery.

(b) Critical air-flow ratio.

Figure 16. - Comparison of the isentropic and 50°-single-cone inlet performance. Altitude, 50,000 feet; nominal inlet-air temperature, 816° R (MRD).

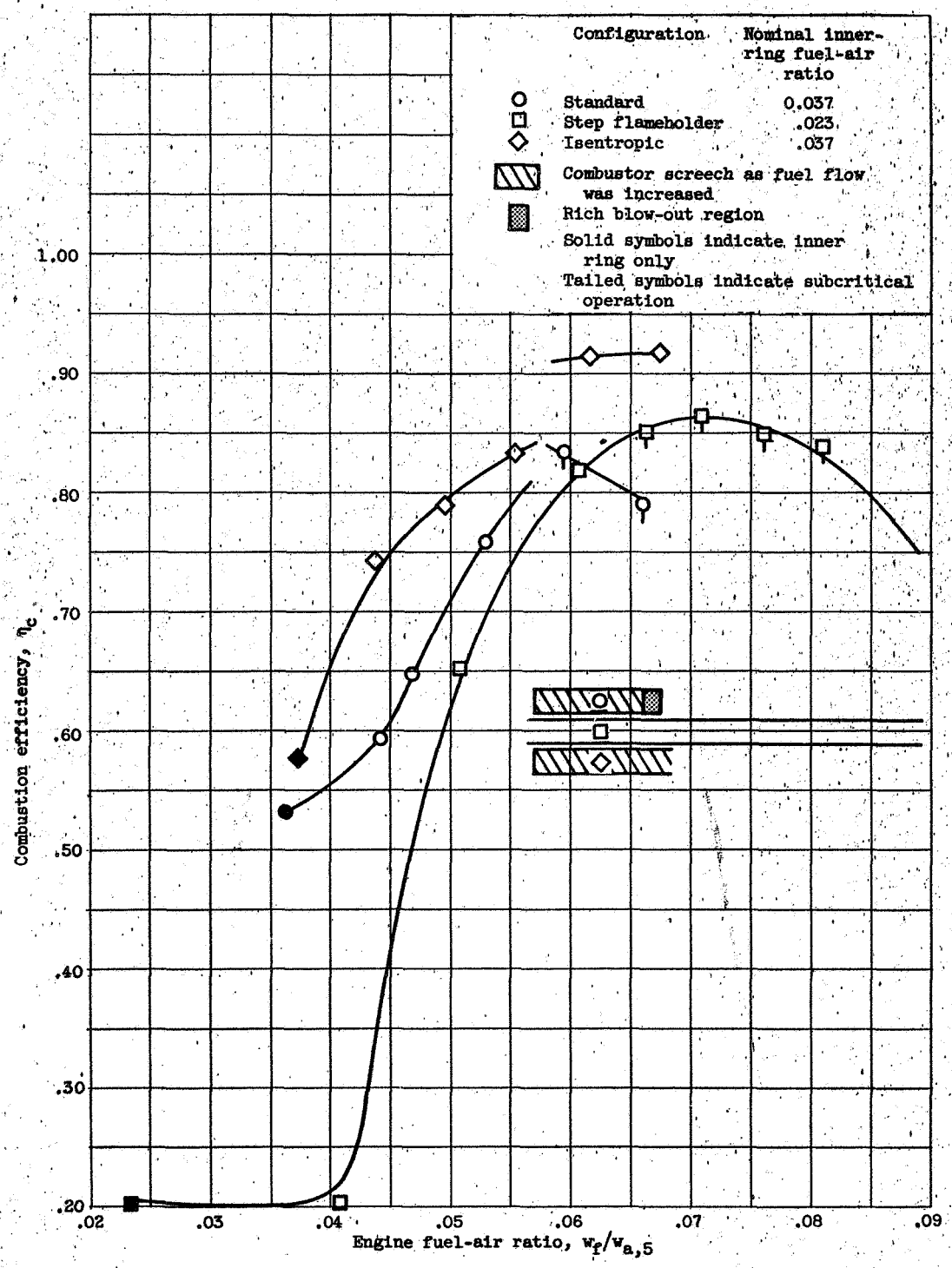

(a) Dual-pressure fuel injection; altitude, 60,000 feet; nominal inlet-air temperature, 740° R (MCD); angle of attack, 0°.

Figure 17. - Comparison of the performance of the standard engine, step-flameholder D, and isentropic configurations.

DECLASSIFIED

3816

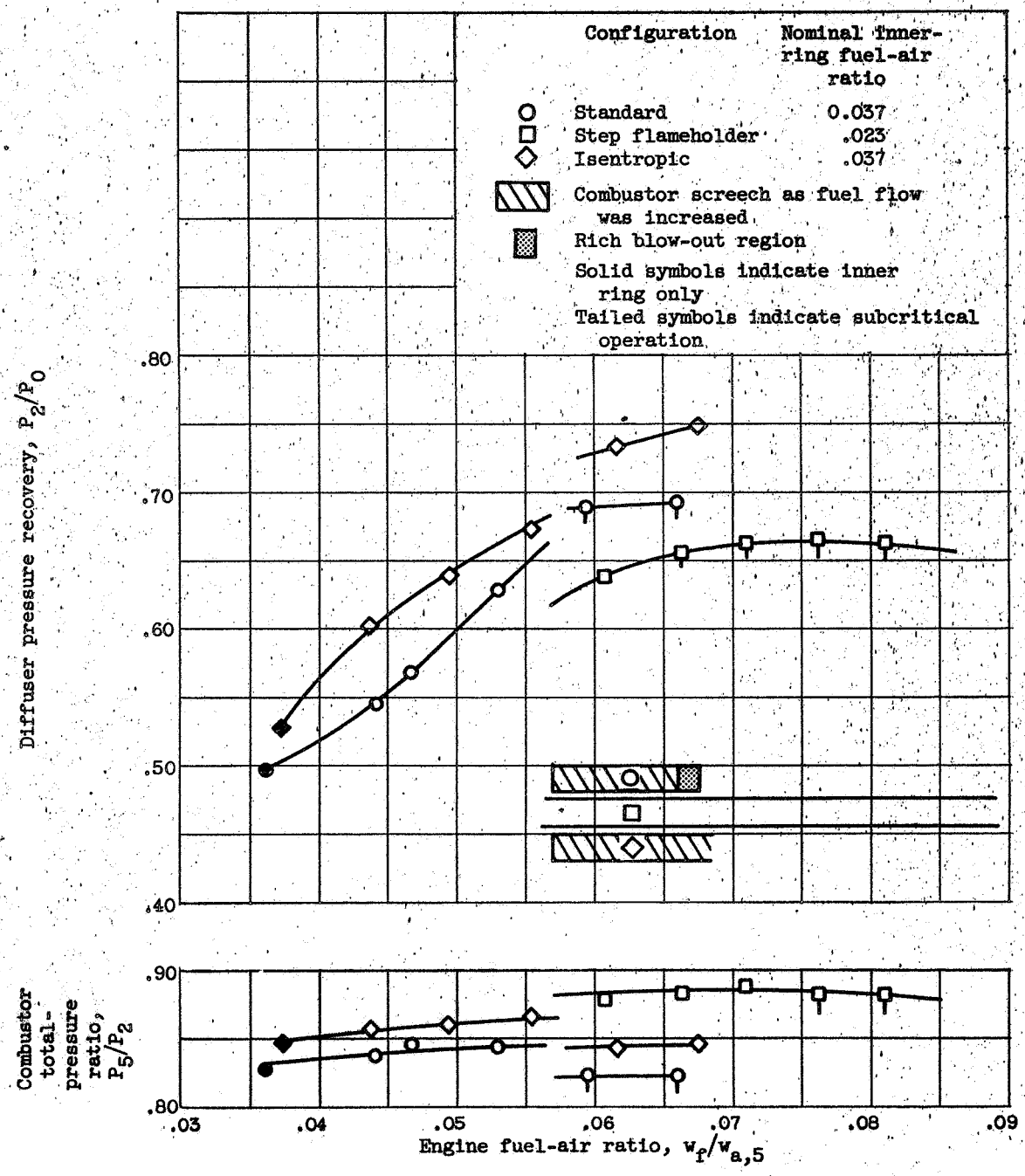

(a) Continued. Dual-pressure fuel injection; altitude, 60,000 feet; nominal inlet-air temperature, 740° R (MCD); angle of attack, 0°.

Figure 17. - Continued. Comparison of the performance of the standard engine, step-flameholder D, and isentropic configurations.

3816

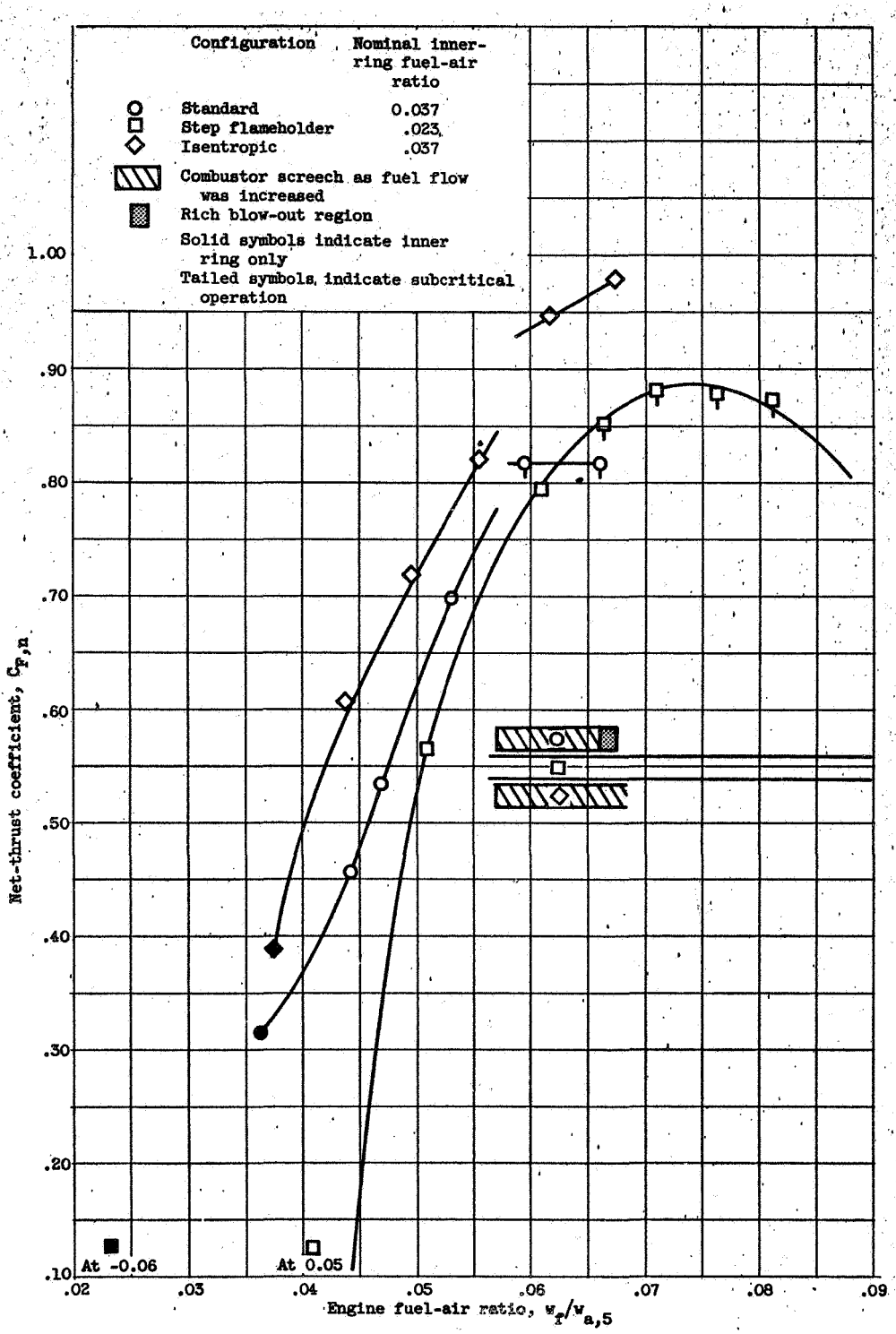

(a) Concluded. Dual-pressure fuel injection; altitude, 60,000 feet; nominal inlet-air temperature, 740° R (MCD); angle of attack, 0°.

Figure 17. - Continued. Comparison of the performance of the standard engine, step-flameholder D, and isentropic configurations.

DECLASSIFIED

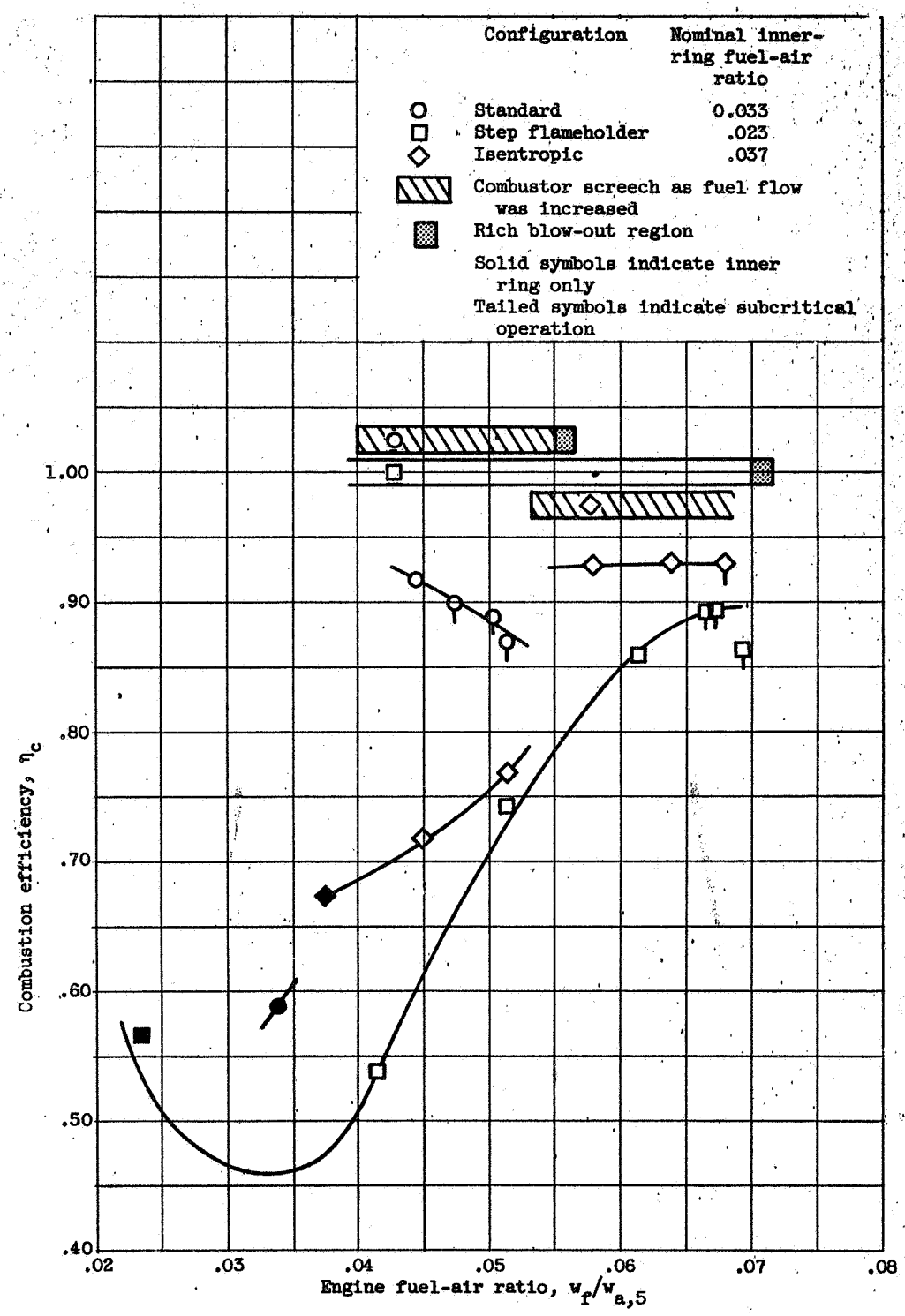

(b) Dual-pressure fuel injection; altitude, 50,000 feet; nominal inlet-air temperature, 740° R (MCD); angle of attack, +4°.

Figure 17. - Continued. Comparison of the performance of the standard engine, step-flameholder D, and isentropic configurations.

3816

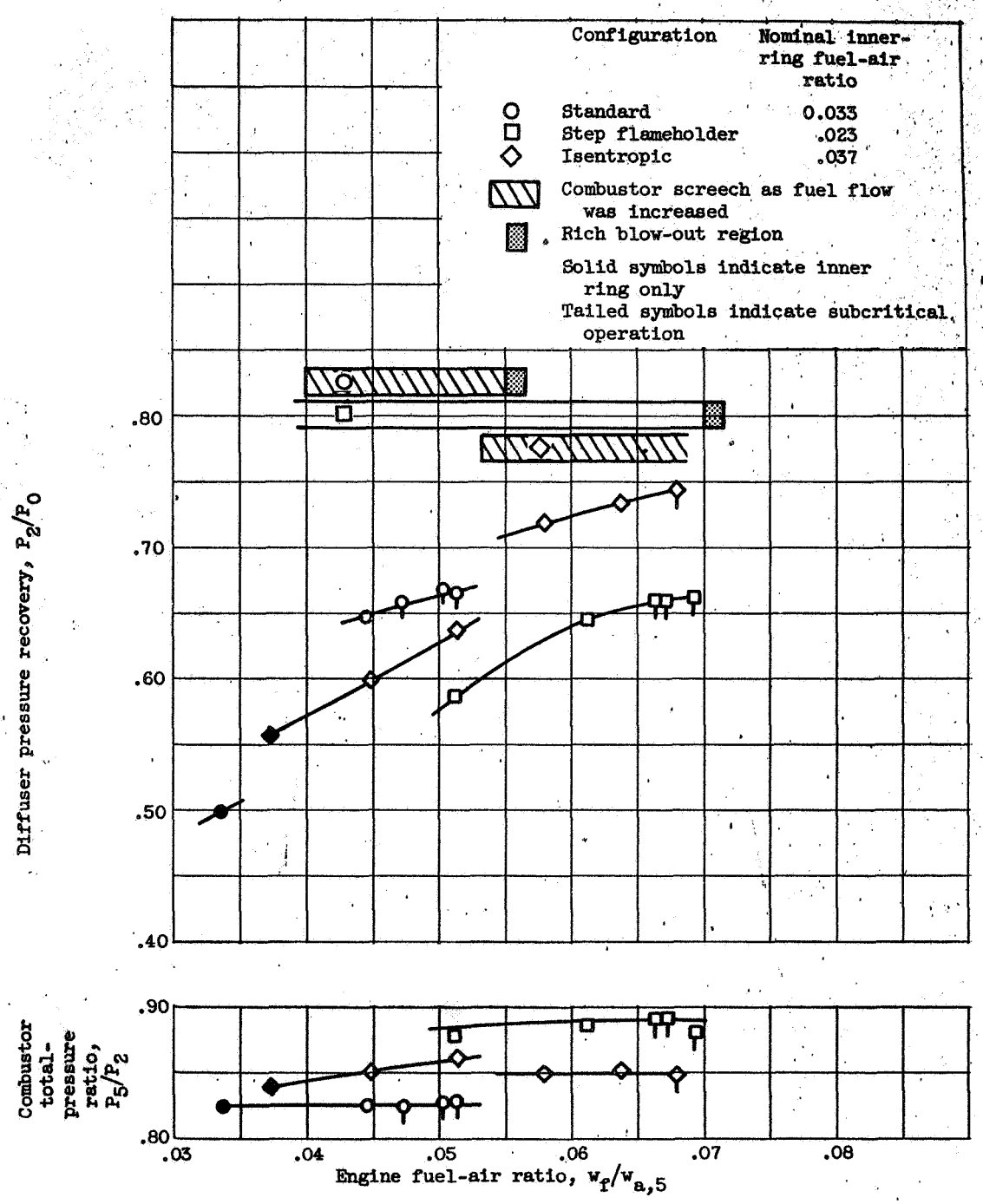

(b) Continued. Dual-pressure fuel injection; altitude, 50,000 feet; nominal inlet-air temperature, 740° R (MCD); angle of attack, +4°.

Figure 17. - Continued. Comparison of the performance of the standard engine, step-flameholder D, and isentropic configurations.

DECLASSIFIED

3816

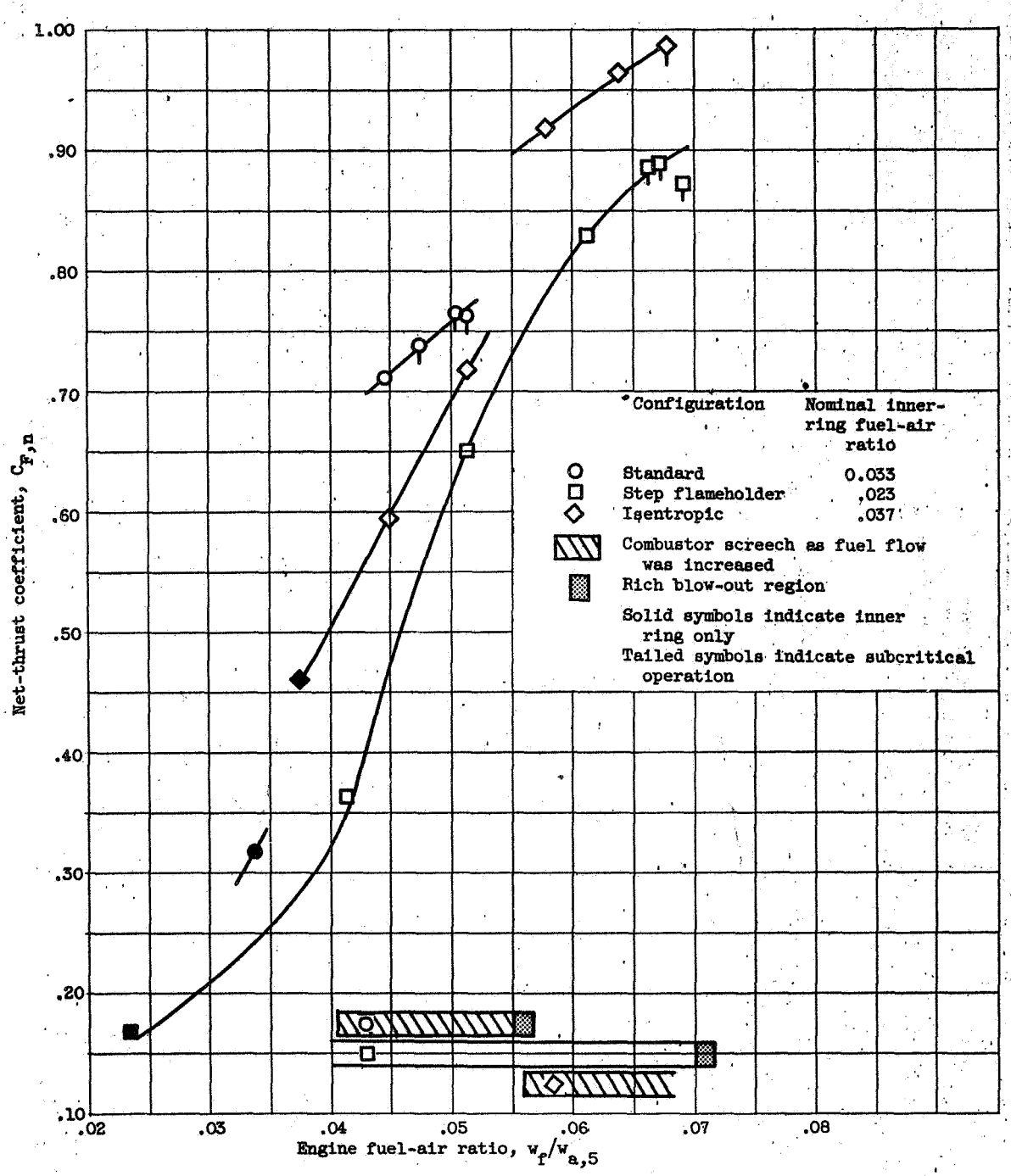

(b) Concluded. Dual-pressure fuel injection; altitude, 50,000 feet; nominal inlet-air temperature, 740° R (MCD); angle of attack, +4°.

Figure 17. - Concluded. Comparison of the performance of the standard engine, step-flameholder D, and isentropic configurations.

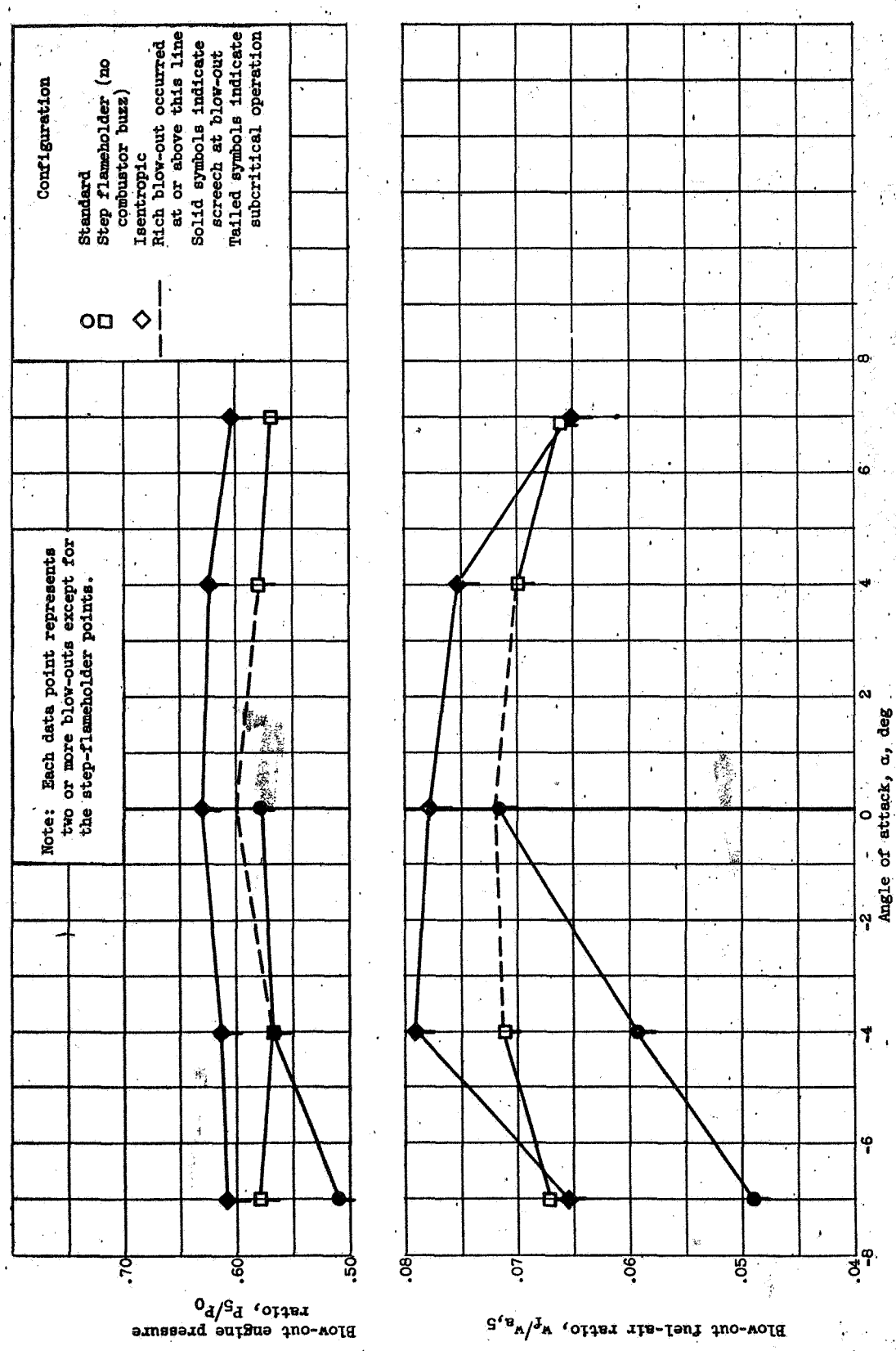

Figure 18. - Comparison of the rich blow-out limits of the standard engine, step-flameholder D, and isentropic configurations. Single-pressure fuel injection; altitude, 50,000 feet; nominal inlet-air temperature, 740° R (MCD).

DECLASSIFIED

3816

DECLASSIFIED

FREE-JET PERFORMANCE OF SEVERAL CONFIGURATIONS

OF THE XRJ43-MA-3 RAM-JET ENGINE

John E. McAulay
John E. McAulay
Aeronautical Research Scientist
Propulsion Systems

Carl E. Campbell
Carl E. Campbell
Aeronautical Research Scientist
Propulsion Systems

Approved:

E. William Conrad
E. William Conrad
Aeronautical Research Scientist
Propulsion Systems

William A. Fleming
for Bruce T. Lundin
Chief
Engine Research Division

mpm - 8/29/55

3816