CONFIDENTIAL

Copy
RM L57F12

3 1176 00160 9388

C3

NACA

RESEARCH MEMORANDUM

STATUS OF SPIN RESEARCH FOR RECENT AIRPLANE DESIGNS

By Anshal I. Neihouse, Walter J. Klinar,
and Stanley H. Scher

Langley Aeronautical Laboratory
Langley Field, Va.

LIBRARY COPY
AUG 19 1957
LANGLEY AERONAUTICAL LABORATORY
LIBRARY, NACA
LANGLEY FIELD, VIRGINIA

NACA Res abs
RN-127
May 16, 1958
6-17-58

CLASSIFIED DOCUMENT

This material contains information affecting the National Defense of the United States within the meaning of the espionage laws, Title 18, U.S.C., Secs. 793 and 794, the transmission or revelation of which in any manner to an unauthorized person is prohibited by law.

NATIONAL ADVISORY COMMITTEE
FOR AERONAUTICS
WASHINGTON
August 16, 1957

CONFIDENTIAL

CONTENTS

Page

SUMMARY 1

INTRODUCTION 1

SYMBOLS 3

I. TECHNIQUES FOR STUDYING THE SPIN AND RECOVERY 9

A. INTERPRETATION OF RESULTS OF SPIN-MODEL RESEARCH 9
Techniques for Study of Developed Spin 9
Langley spin tunnel 10
Spin tunnel as analog computer 10
Interpretation of spin-tunnel results 10
Criterion for satisfactory recovery 11
Scale effect 12
Tunnel technique 13
Techniques for Study of Incipient Spin 14

B. ANALYTICAL SPIN STUDIES 15
Methods and Calculations 15
Equations of motion 15
Rotary-balance aerodynamic data 17
Preliminary analysis 18
Effects of Applying Disturbances 18
Incipient Spin Studies 19

C. TECHNIQUES INVOLVED IN OBTAINING MEASUREMENTS OF VARIOUS PARAMETERS IN THE SPIN 21
Measurements Desired 21
Methods for Obtaining Data 22
Control positions, altitude, and rotational rates . . 22
Angle of attack, angle of sideslip, and resultant velocity 22
Angular accelerations 26
Linear accelerations 26
Space attitude angles 27
Determination of forces and moments 28

II. IMPORTANT FACTORS THAT INFLUENCE THE SPIN AND RECOVERY 28

A. EFFECTIVENESS OF CONTROLS DURING SPINS AND RECOVERIES 28
Developed Spin 29
Recovery From the Spin 30

Page

B. THE INFLUENCE OF LONG NOSES, STRAKES, AND CANARDS IN SPINS 35
Variations in Cross Section 35
Effect of fuselage cross section 35
Effect of altering nose section 37
Conical Noses and Nose Appendages 38
Observed effects on noses having circular or near-circular sections, including strake effects . . . 38
Effect of flap-type surfaces on fuselage noses . . . 39
Induced circulation about the nose 40

III. CORRELATION OF AIRPLANE AND MODEL SPIN AND RECOVERY CHARACTERISTICS FOR RECENT DESIGNS 41

CONCLUSIONS 50

REFERENCES 53

TABLES 56

CHARTS 62

FIGURES 64

NATIONAL ADVISORY COMMITTEE FOR AERONAUTICS

RESEARCH MEMORANDUM

STATUS OF SPIN RESEARCH FOR RECENT AIRPLANE DESIGNS

By Anshal I. Neihouse, Walter J. Klinar,
and Stanley H. Scher

SUMMARY

This report presents the status of spin research for recent airplane designs as interpreted at the Langley Laboratory of the National Advisory Committee for Aeronautics. Major problem areas discussed include:

1. Interpretation of results of spin-model research
2. Analytical spin studies
3. Techniques involved in the measurement of various parameters in the spin
4. Effectiveness of controls during spins and recoveries
5. Influence of long noses, strakes, and canards on spin and recovery characteristics
6. Correlation of airplane and model spin and recovery characteristics

Analyses are made of the existing problems and general conclusions are drawn.

INTRODUCTION

The spin of an airplane and the recovery therefrom, like any other motion, depend on the forces and moments acting on the airplane. A developed spin, in general, has been considered a motion in which an airplane in flight at some angle of attack between the stall and 90° descends rapidly towards the earth while rotating about, and with the wings nearly perpendicular to, a vertical or near-vertical axis. Recently, however, high-speed fighters and research airplanes have apparently exhibited spinning motions at high speeds in which the center of gravity of the airplane has followed a ballistic path.

At one time the developed spin was considered important as a tactical maneuver. At the present, however, the spin is considered significant primarily because it is a motion that can be entered inadvertently and because fighter-type and trainer-type airplanes are required to demonstrate that the developed spin can be terminated satisfactorily. Controls which are effective in normal flight may be inadequate for recovery from the spin unless sufficient consideration has been given to this problem in the design stage. In the past, based on research with many designs, a criterion was established for predicting spin recovery (ref. 1) and for determining the adequacy or inadequacy of controls while the airplane was still in the design stage. However, with the advent of jet- and rocket-propelled airplanes and the accompanying changes in weight and mass distribution, it soon became apparent that this criterion could, in many instances, be inadequate.

Current airplanes have weights which are appreciably larger and have moments of inertia about the Y- and Z-axes which may be ten times as large as those of World War II airplanes. It can not be expected, therefore, that a spin of a current airplane, with its accompanying high angular momentum, can be terminated as effectively as a spin of the earlier airplanes by aerodynamic controls which generally are of similar size. Also, because of short-span thin wings, the moment of inertia about the X-axis of a current airplane is generally relatively low and this can greatly influence the optimum control for spin recovery. It is generally difficult to obtain developed spins today but, when obtained, the same factors that make it difficult to obtain the spin may also make it difficult to recover from the spin. Thus, it may be necessary in the future to resort to auxiliary means - such as extension of canards or strakes, differential elevator deflection, or deflection of the engine jet - to stop the spin.

Current and future airplane designs may be compromised too much for their intended uses in providing adequate control for termination of the developed spin; also, there is a rising problem of pilot disorientation associated with developed spins. As a result, the incipient spin, the transient motion between the stall and the developed spin, must be given more attention than it has in the past, and preventing the developed spin by proper control utilization while the airplane is still in the incipient phase of the spinning motion may become a primary factor.

The present report discusses some of the following major problem areas which are currently being considered in spin research: interpretation of results of spin-model research, analytical spin studies, techniques involved in the measurement of various parameters in the spin, effectiveness of controls during spins and recoveries, influence of long noses, strakes, and canards on spin and recovery characteristics, and correlation of airplane and model spin and recovery characteristics.

SYMBOLS

The body system of axes is used. This system of axes, related angles, and positive directions of corresponding forces and moments are illustrated in figure 1.

C_X longitudinal-force coefficient, $\dfrac{F_X}{\frac{1}{2}\rho V_R{}^2 S}$

C_Y side-force coefficient, $\dfrac{F_Y}{\frac{1}{2}\rho V_R{}^2 S}$

C_Z normal-force coefficient, $\dfrac{F_Z}{\frac{1}{2}\rho V_R{}^2 S}$

C_D drag coefficient, $\dfrac{F_D}{\frac{1}{2}\rho V_R{}^2 S}$

C_l rolling-moment coefficient, $\dfrac{M_X}{\frac{1}{2}\rho V_R{}^2 Sb}$

C_m pitching-moment coefficient, $\dfrac{M_Y}{\frac{1}{2}\rho V_R{}^2 S\bar{c}}$

C_{m_b} pitching-moment coefficient (subscript denotes that pitching moment was nondimensionalized by b rather than by $\bar{c}$), $\dfrac{M_Y}{\frac{1}{2}\rho V_R{}^2 Sb}$

C_n yawing-moment coefficient, $\dfrac{M_Z}{\frac{1}{2}\rho V_R{}^2 Sb}$

c_y section side-force coefficient, $\dfrac{F_Y}{\frac{1}{2}\rho V_R{}^2 S_b}$

T	thrust, lb
F_X	longitudinal force acting along X body axis, lb
F_Y	lateral force acting along Y body axis, lb
F_Z	normal force acting along Z body axis, lb
F_D	drag, lb
M_X	rolling moment acting about X body axis, ft-lb
M_Y	pitching moment acting about Y body axis, ft-lb
M_Z	yawing moment acting about Z body axis, ft-lb
W	weight, lb
X_R	rocket force parallel to X body axis, lb
Y_R	rocket force parallel to Y body axis, lb
Z_R	rocket force parallel to Z body axis, lb
S	wing area, sq ft
S_b	projected area based on chord parallel to flow at angle of sideslip of 0°, sq ft
b	wing span, ft
ρ	air density, slugs/cu ft
V	vertical component of velocity of airplane center of gravity (rate of descent), ft/sec
V_R	resultant linear velocity, ft/sec
u,v,w	components of velocity V_R along X, Y, and Z body axes, respectively, ft/sec
Ω	resultant angular velocity, rps

p,q,r	components of angular velocity Ω about X, Y, and Z body axes, respectively, radians/sec
ω_e	engine rotational rate, radians/sec
μ	airplane relative-density coefficient, $\frac{m}{\rho S b}$
m	mass of airplane, $\frac{\text{Weight}}{g}$, slugs
$\bar{c}$	mean aerodynamic chord, ft
$x/\bar{c}$	ratio of distance of center of gravity rearward of leading edge of mean aerodynamic chord to mean aerodynamic chord
$z/\bar{c}$	ratio of distance between center of gravity and X body axis to mean aerodynamic chord (positive when center of gravity is below X body axis)
x, y, and z	linear distances along three body axes measured from center of gravity, positive in sense indicated in fig. 1, ft
I_X,I_Y,I_Z	moments of inertia about X, Y, and Z body axes, respectively, slug-ft^2
k_X,k_Y,k_Z	radii of gyration about X, Y, and Z body axes, respectively, ft
$I_{X,e}$	polar moment of inertia of engine, slug-ft^2
I_{XZ}	product of inertia about X body axis, positive when principal axis is inclined below reference line at nose, slug-ft^2
$\frac{I_X - I_Y}{mb^2}$	inertia yawing-moment parameter
$\frac{I_Y - I_Z}{mb^2}$	inertia rolling-moment parameter
$\frac{I_Z - I_X}{mb^2}$	inertia pitching-moment parameter

g acceleration due to gravity, taken as 32.17 ft/sec^2

θ_e total angular movement of X body axis from horizontal plane measured in vertical plane, positive when airplane nose is above horizontal plane, radians

ϕ_e total angular movement of Y body axis from horizontal plane measured in YZ body plane, positive when clockwise as viewed from rear of airplane (if X body axis is vertical, ϕ_e is measured from a reference position in horizontal plane), radians

ϕ angle between Y body axis and horizontal measured in vertical plane, positive for erect spins when right wing downward and for inverted spins when left wing downward, radians; or angle of tilt of roll vane about X body axis, positive when vane deflection is to left, deg or radians

α angle of attack, angle between relative wind V_R projected into the XZ plane of symmetry and the X body axis, positive when relative wind comes from below XY body plane, deg

β angle of sideslip, angle between relative wind V_R and projection of relative wind on XZ-plane, positive when relative wind comes from right of plane of symmetry, deg

ψ angle of inclination of a yaw vane with respect to X body axis, positive when vane is inclined to left, deg

ψ_e horizontal component of total angular deflection of X body axis from reference position in horizontal plane, positive when clockwise as viewed from vertically above airplane, radians

F applied force, lb

$$C_{l_p} = \frac{\partial C_l}{\partial\left(\frac{pb}{2V_R}\right)}$$

$$C_{n_p} = \frac{\partial C_n}{\partial\left(\frac{pb}{2V_R}\right)}$$

$$C_{l_r} = \frac{\partial C_l}{\partial\left(\frac{rb}{2V_R}\right)}$$

$$C_{n_r} = \frac{\partial C_n}{\partial\left(\frac{rb}{2V_R}\right)}$$

$$C_{m_q} = \frac{\partial C_m}{\partial\left(\frac{q\bar{c}}{2V_R}\right)}$$

$$C_{m_{\dot{\alpha}}} = \frac{\partial C_m}{\partial\left(\frac{\dot{\alpha}\bar{c}}{2V_R}\right)}$$

$$C_{Y_p} = \frac{\partial C_Y}{\partial\left(\frac{pb}{2V_R}\right)}$$

$$C_{Y_r} = \frac{\partial C_Y}{\partial\left(\frac{rb}{2V_R}\right)}$$

$$C_{Y_{\dot{\beta}}} = \frac{\partial C_Y}{\partial\left(\frac{\dot{\beta}b}{2V_R}\right)}$$

$$C_{l_{\dot{\beta}}} = \frac{\partial C_l}{\partial\left(\frac{\dot{\beta}b}{2V_R}\right)}$$

$$C_{n_{\dot{\beta}}} = \frac{\partial C_n}{\partial\left(\frac{\dot{\beta}b}{2V_R}\right)}$$

$$C_{l_\beta} = \frac{\partial C_l}{\partial \beta}$$

$C_{n_\beta} = \frac{\partial C_n}{\partial \beta}$

$C_{Y_\beta} = \frac{\partial C_Y}{\partial \beta}$

$C_{m_\beta} = \frac{\partial C_m}{\partial \beta}$

$\Delta C_{l,r}$	rolling-moment coefficient due to a rudder deflection
$\Delta C_{l,a}$	rolling-moment coefficient due to an aileron deflection
$\Delta C_{n,a}$	yawing-moment coefficient due to an aileron deflection
$\Delta C_{n,r}$	yawing-moment coefficient due to a rudder deflection
$\Delta C_{m,e}$	pitching-moment coefficient due to an elevator deflection
$\Delta C_{Y,r}$	side-force coefficient due to a rudder deflection
$\Delta C_{Y,a}$	side-force coefficient due to an aileron deflection
$\Delta C_{Z,e}$	normal-force coefficient due to an elevator deflection
$\Delta C_{X,e}$	longitudinal-force coefficient due to an elevator deflection
a_X	resultant acceleration along the X-axis, positive when directed along the positive X-axis, ft/sec^2
a_Y	resultant acceleration along the Y-axis, positive when directed along the positive Y-axis, ft/sec^2
a_Z	resultant acceleration along the Z-axis, positive when directed along the positive Z-axis, ft/sec^2
t	time, sec
TDPF	tail damping power factor (see ref. 1)
R	Reynolds number based on $\bar{c}$
M	Mach number

$l_3 = -\sin \theta_e$

$m_3 = \sin \phi_e \cos \theta_e$

$n_3 = \cos \phi_e \cos \theta_e$

$A = a_X - \dot{u}_t + rv_t - qw_t$

$B = -a_Y + \dot{v}_t - pw_t + ru_t$

$C = -a_Z + \dot{w}_t - qu_t + pv_t$

A dot over a symbol represents derivative with respect to time; for example, $\dot{u} = \frac{du}{dt}$.

Subscripts:

i	indicated
t	true
X	X body axis
Y	Y body axis
Z	Z body axis
aero	aerodynamic moment
HT	horizontal tail
VT	vertical tail
N	indicates coefficient based on plan area of nose

I. TECHNIQUES FOR STUDYING THE SPIN AND RECOVERY

A. INTERPRETATION OF RESULTS OF SPIN-MODEL RESEARCH

Techniques for Study of Developed Spin

Experience has indicated that spins of airplanes and recovery therefrom can be readily investigated safely and at a comparatively moderate cost by means of small dynamic models in a spin tunnel. A dynamic model is one in which geometric similarity between model and airplane is extended to obtain geometric similarity of the paths of motion of corresponding points by maintaining constant, in addition to the scale ratio

of linear dimensions, the ratios: force, mass, and time. (See refs. 2 and 3.)

A spin tunnel is a vertical tunnel, generally with a propeller at the top drawing air vertically upward so that the force of the up-going air balances the weight of the model. Such a tunnel should provide for rapid deceleration and rapid acceleration of the air. Provision should be made for maintaining the model near the center of the tunnel and at a desired height.

Langley spin tunnel.- Originally, the Langley Aeronautical Laboratory had a 15-foot-diameter spin tunnel. (See ref. 4.) This was replaced in 1941 by a 20-foot-diameter tunnel with a maximum speed of approximately 90 feet per second. Views of the Langley tunnel are shown in figures 2 and 3, and a description of the tunnel is given in table I. In this tunnel, models are launched with spinning rotation into the airstream by hand. For recovery, the tunnel operator sets up a magnetic field in the tunnel where the model is spinning by allowing a current to pass through copper coils placed around the periphery of the tunnel. A magnet in the model moves to aline with the magnetic field and, in so doing, trips a catch which allows controls to move, a parachute to open, a rocket to fire, or an item to be jettisoned. Photographs are taken of the spinning motion by a side camera or by synchronized cameras on the side and at the bottom of the tunnel. (See ref. 5.) As the side camera photographs the motion, it also photographs readings of a timing device and of a pitot-static tube; thus, records of time and velocity are registered on film. A six-component rotary balance (table II) is available in the tunnel to obtain force and moment data at spinning attitudes and to provide aerodynamic data for analytical studies. (See ref. 6.)

Spin tunnel as analog computer.- The combination of a spin tunnel and a dynamic model gives what might be termed an analog computer. At the scale tested, the aerodynamic and inertia characteristics of the design are integrated and the "computer" solves the moment and force equations to provide the ensuing spinning and recovery motion for the model.

Interpretation of spin-tunnel results.- Because of the many variables in a spin, interpretation of spin-tunnel results for application to a corresponding airplane is difficult. Lack of quantitative data on the many possible variables has necessitated the isolation of only the primary factors considered important in effecting the spin and recovery. Continuous use has been made of spin-tunnel experience with previous designs tested and of comparisons, whenever available, of model and airplane results. Thus, evaluating the spin and recovery characteristics of a proposed airplane design has not only involved the science of accurately determining test results on the corresponding model but also the art of evaluating the meaning of these results in light of previous model results and corresponding full-scale results. Langley spin-tunnel results are not

interpreted rigidly for a specific control setting, mass, or dimensional configuration but rather are interpreted in terms of the range of results obtained for the combination of mass characteristics, dimensional characteristics, and control settings under investigation by determining the extent to which slight variations in these factors can alter the results.

Criterion for satisfactory recovery.- A criterion has been developed for determining whether a pilot would have adequate control in a spin to enable him to recover satisfactorily. It was assumed that, for most spins, the pilot would probably have the airplane controls set approximately at "normal spinning control configuration" - that is, stick full back and laterally neutral and rudder full with the spin. In order not to compromise the airplane too much for its intended uses, it was felt that, if satisfactory recovery could always be obtained from this control configuration, the airplane design would be considered as having satisfactory recovery characteristics. However, in order to evaluate the recovery characteristics at normal spinning control configuration, a so-called "criterion spin" is selected for which ailerons are set from neutral one-third of their full deflection in an adverse direction for recovery, the stick position is allowed to vary one-third from its full-up setting, and when the rudder is reversed for recovery, it is moved to only two-thirds of its full-against setting; similarly, when ailerons or elevators are used for recovery, they, too, are only deflected to two-thirds of their full positions for recovery. The effect of moderate changes in weight, center of gravity, and moments of inertia is also considered. A criterion for satisfactory recovery for model tests was selected as $2\frac{1}{4}$ turns or less based on analyses of available comparisons with full-scale results. These analyses, in general, indicated that, when recovery in the spin tunnel required more than this number of turns, the controls were not sufficiently effective and the corresponding airplane probably would have unsatisfactory recovery characteristics; this result might, in some instances, be an indication that the controls are so ineffective as not to produce a recovery at all. Also, a relatively large number of turns may contribute to an unsatisfactory situation because of a resulting large loss in altitude and possible pilot confusion and panic. This rule is not a hard and fast one and judgment may be influenced by the nature of the model results.

Thus it can be seen that a fixed correction in moments or forces to allow for Reynolds number by modification to the model is not utilized. It is felt that, in some instances, corrections would be unnecessary, that secondary effects of the corrections applied might possibly be more significant than the corrections themselves and thus lead to erroneous results, and, furthermore, that, even if a scale-effect correction were accurately applied for the developed spin, it might be inadequate and even inaccurate for the recovery phase. The technique setup is an attempt to measure the ability of a control to do something positive and consistent in spite

of such factors as scale, production tolerances on the airplane, and almost unavoidable pilot inconsistencies in control settings. Probably because it is a stalled flow phenomena, spin-research experience has indicated that changes can often be made in aerodynamic and mass characteristics of a design with little or no effect on the spin or recovery up to a certain point, and then even a slight additional change may "trigger" an effect leading to a large difference in results. Thus, it is felt that even the slight dimensional changes of a model due to the wear and tear of testing is a "safety valve" which tends to expose the possible existence of a critical condition. Therefore, instead of attempting to pinpoint a specific result for a specific set of mass and dimensional characteristics, an attempt has been made, as previously mentioned, to evaluate the range of results possible. In this connection, one poor recovery out of several recoveries has been considered almost as undesirable as consistently poor recoveries. The philosophy has been to assume that a proposed design is inadequate for spin recovery unless it can be proved to be satisfactory. As a result, it might be expected that in some isolated instances conservative conclusions might be reached and that a design not being conclusively satisfactory based on spin-tunnel results may nevertheless exhibit satisfactory recovery characteristics.

Because an emergency device is required on the airplane during the spin demonstration tests and, also, because in some instances such a device may be kept permanently on the airplane, such tests are included in the model-test program. The minimum-size tail parachute required to effect recovery within $2\frac{1}{4}$ turns from the criterion spin is determined. The parachute is opened for the recovery attempts by actuating the remote-control mechanism while the controls are held fixed at positions which tend to maintain the spin so that recovery is due to parachute action alone. The parachute towline is generally attached to the bottom rear of the fuselage. The folded spin-recovery parachute is placed on the model in such a position that it does not seriously influence the established spin. A rubber band holds the packed parachute to the model and, when released, allows the parachute to be blown free of the model. On full-scale parachute installations it is desirable to mount the parachute pack within the airplane structure, if possible, and it is recommended that a mechanism be employed for positive ejection of the parachute. Whether parachutes or rockets, another type of emergency spin-recovery device, are used, provision is generally made on the model to compensate for the mass changes associated with installation of the emergency device.

Scale effect.- Models currently tested in the Langley spin tunnel generally range in scale from 1/40 to 1/20 and the corresponding Reynolds numbers of the tests (based on wing chord) range from approximately 50,000 to 200,000. Scale may appreciably affect model results in two predominant ways. There is a possible effect of Reynolds number of the fuselage, particularly if the fuselage nose is long and the projected

area of the fuselage is large relative to the wing area. The cross drag on the fuselage of the model as well as a probable side force on the fuselage may be appreciably different from those on the corresponding airplane. This could have an important bearing on the balance of pitching moments in the spin which, in turn, could affect the balance of yawing moments through variations in angular velocities. It could also affect the balance of yawing moments directly by a variation in what might be called an autorotative moment due to the side force on the fuselage nose. (This effect is discussed in part II B.) Also, there is a possible Reynolds number effect on the wings if the spin is steep enough and the spin rotation high enough so that the outer wing of the model in the spin is near enough to the stall angle to be influenced in such a manner as to give less lift than that on the corresponding airplane. This effect could lead to a variation in the balance of rolling moments and an accompanying difference in wing tilt in the spin. The magnitude of this effect would be dependent on wing section, the magnitude being greater as wing thickness and camber are increased (refs. 7 to 12). The difference in wing tilt could, in turn, lead to a difference in the gyroscopic yawing moments $\left(I_X - I_Y\right)pq$ in the spin. In some instances, the Reynolds number effects may tend to nullify one another - for example, an increased nose-up moment on the model may tend to cause the inner wing to be depressed, whereas a decreased lift on the outer wing may tend to cause the outer wing to be depressed. In specific cases, however, the possible individual effects would have to be considered. In the past, based on rather meager information, there has been a general indication, at least for airplanes up until about five years ago, that the model spun with more outward sideslip than did the airplane. (See refs. 13 and 14.) This could possibly lead to optimistic results in the tunnel for designs having their mass distributed chiefly along the wings but to pessimistic tunnel results when the mass is distributed chiefly along the fuselage (see part II A). This factor is given cognizance in predicting full-scale results from tunnel tests.

Tunnel technique.- A factor which may also lead to differences in model and airplane results may be classified as tunnel technique. The models are launched in a flat attitude with high rotation into the spin tunnel in order to be assured of obtaining any flat spin that may be possible. Because of the high inertias of present-day designs, spinning tendencies may be indicated on the model which may not be readily obtainable, or may not be obtainable at all, on the corresponding airplane because the same high inertias augmenting the spin in the tunnel will tend to make it more difficult for the airplane to rev up to the spinning condition. This can possibly make model results too conservative. However, experience has indicated that, even though airplane spin recoveries sometimes appear to be better than those predicted by model results, oftentimes a spinning condition with poor recovery may be eventually obtained as a result of a violent maneuver, a pitch-up, a directional divergence, or even an inadvertent asymmetric lateral location of the center of gravity. In some instances, because of the initial high angle

of attack at which a model is launched into the spin tunnel, an autorotative moment due to the nose may prevail on the model but may not occur on the airplane because it never gets to a corresponding high angle of attack. There is a possibility, also, that a Reynolds number effect may be present on the model at the initial high angle of attack at which it spins in the tunnel because of launching rotation, which may cause the autorotative tendencies between model and airplane to differ. This possibility is considered in evaluating tunnel results. In addition, because spins of present-day airplanes are often very oscillatory in nature, primarily in roll and yaw, there is sometimes a tendency for the oscillations to resolve themselves into a no-spinning condition without movement of controls. In the spin tunnel, the oscillatory spins are often difficult to obtain, either because of the tendency to resolve into a no spin or because of space limitations. After many repeated attempts, however, the spin can generally be maintained and tested for ease or difficulty of recovery.

It is not too surprising, therefore, that sometimes a spin on an airplane corresponding to that obtained on the model may not be easily obtainable. Eventually, however, possibly because of some fairly insignificant change in the airplane, which may have a critical effect on the spinning tendency, a spin may be obtained on the airplane and, unless proper consideration has been given this likelihood, the airplane may get into trouble and may even be lost in a spin.

Techniques for Study of Incipient Spin

Because of the apparent inability of incorporating into the airplane provision for insuring satisfactory recovery from the developed spin, more attention has recently been given the incipient spin. The incipient spin is considered to be different from that of the developed spin in that the former is a transient motion extending from a point after the stall to just before the spin becomes developed (equilibrium). When and why some designs enter the developed spin quickly and the ease or difficulty of preventing the developed spin altogether are problems of great importance.

Several years ago, a catapult was built for incipient-spin studies (ref. 15) utilizing spin-tunnel models. Although results from this facility have been useful, the technique is inadequate because of space limitations. Currently, a technique is being developed for studying the incipient spin by means of launching radio-controlled models from a helicopter. These models range from 1/10 to 1/6 scale in size. If current and future designs are compromised too much in providing adequate control for termination of the developed spin, it becomes increasingly important to prevent the development of the spin. Recoveries attempted during the incipient phase of the spin may be more readily attainable than those attempted after the spin becomes fully developed because

controls which are ineffective in the developed spin, owing to attitudes, rotation, and gyroscopic effects, may be effective for termination of the incipient spin.

B. ANALYTICAL SPIN STUDIES

During recent years, analytical investigations have been initiated in which spin-entry, developed-spin, and spin-recovery motions of airplanes are studied by calculating time histories of the attitude, velocity, and acceleration variables of the motions through the use of static and rotary aerodynamic data and six-degree-of-freedom equations of motion. It is expected that these investigations will augment the knowledge gained from customary free-spinning dynamic-model tests and full-scale-airplane spin tests and will aid in obtaining a better understanding of these often inadvertent and sometimes dangerous flight motions. In references 16 and 17, calculation methods were described and the results of some initial step-by-step calculations were presented. More recently calculations have been made on an electronic analog computer of the recovery characteristics from a steady developed spin of an unswept-wing fighter-airplane configuration as affected by the application of various amounts of constant applied yawing moments, rolling moments, or thrust force. Calculation methods and rotary-balance aerodynamic data used in obtaining the analog-computer results are presented and discussed. The results are presented as time histories of some of the attitude and velocity variables of the motions. Notes are made regarding the nature of the motions which ensued after the moments or the thrust force were applied and regarding the relative effectiveness of these applied disturbances in causing recovery from the steady developed spin.

Equations and methods used in calculations for incipient-spin studies are also presented.

Methods and Calculations

Equations of motion.- The spin-recovery motions were calculated by an electronic analog computer which solved the following basic equations of motion. These equations represent six degrees of freedom along and about the airplane body system of axes (see fig. 1 for illustration of body axes), which are assumed to be the principal axes:

$$\dot{u} = \frac{V^2}{2ub} C_X + gl_3 + vr - wq \tag{1}$$

$$\dot{v} = \frac{V^2}{2ub} C_Y + gm_3 + wp - ur \tag{2}$$

$$\dot{w} = \frac{V^2}{2ub} C_Z + gn_3 + uq - vp \tag{3}$$

$$\dot{p} = \frac{V^2}{2uk_x^2} C_l + \frac{I_Y - I_Z}{I_X} qr \tag{4}$$

$$\dot{q} = \frac{V^2}{2uk_y^2} C_{m_b} + \frac{I_Z - I_X}{I_Y} rp \tag{5}$$

$$\dot{r} = \frac{V^2}{2uk_z^2} C_n + \frac{I_X - I_Y}{I_Z} pq \tag{6}$$

where

$$\left.\begin{aligned} l_3 &= -\sin \theta_e \\ m_3 &= \sin \phi_e \cos \theta_e \\ n_3 &= \cos \phi_e \cos \theta_e \end{aligned}\right\} \tag{7}$$

In solving these equations, the computer made use of the relationships

$$\alpha = \tan^{-1} \frac{w}{u} \tag{8}$$

and

$$\beta = \frac{v}{V} \tag{9}$$

inasmuch as the rotary-balance data (discussed subsequently) for each aerodynamic coefficient had been plotted as functions of the variables α and β. Also used were the relationships derived in reference 16 but with different symbols:

$$\dot{l}_3 = m_3 r - n_3 q$$

$$\dot{m}_3 = n_3 p - l_3 r$$

$$\dot{n}_3 = l_3 q - m_3 p$$

It was more feasible to solve these differential equations on the computer than to solve directly for the attitude angles θ_e and ϕ_e in terms of their trigonometric functions as written in equations (7).

It should be pointed out that equation (9) is an approximate formula, the complete one for sideslip at the airplane center of gravity being

$$\beta = \sin^{-1} \frac{v}{V_R}$$

However, it was necessary to assume that the velocity V was constant in the equations of motion and to assume that the sideslip angle β was equal to $\sin \beta$ in order that the available electronic analog computer equipment could be adapted for making the calculations.

For the calculations in which a disturbance rolling or yawing moment was applied to the spinning airplane, an incremental value of C_l or C_n, respectively, was added to the aerodynamic value obtained from the rotary-balance data and used in the corresponding equation of motion. This procedure corresponds to inserting a term such as $\frac{F_y}{I_X}$ or $\frac{F_y}{I_Z}$ in equation (4) or (6), respectively. For the calculations in which an applied thrust force was simulated, the term F/m was added to equation (1).

Rotary-balance aerodynamic data.- The basic aerodynamic data used are presented in figure 4. It consists of data obtained on the rotary balance in the Langley 20-foot free-spinning tunnel on a model of the unswept-wing fighter-airplane configuration shown in figure 5, some fairing having been made to the data and some interpolative techniques being necessary in order to adapt it for use on the analog computer. As noted in references 6, 16, and 17, some difficulties were encountered in originally obtaining these data and they are considered to include some inherent inaccuracies. Furthermore, the limited computer equipment available did not allow setting in the proper variations of aerodynamic data as the rate of rotation of the model varied during the recovery motion; therefore, the only data used were those obtained while the model was rotating at the rate of the initial steady, developed spin. Because of the shortcomings of the aerodynamic data and the fairings and interpolative procedure used, the data as presented in figure 4 are considered as being representative only of the general nature of forces and moments

acting on the model. As previously mentioned, a complete description of the rotary balance is contained in reference 6.

Preliminary analysis.- The airplane was considered to be initially in an erect developed, steady spin (as opposed to an inverted spin or to an erect incipient spin motion or to an oscillatory spin) with the characteristics listed in table III. Mass characteristics of the airplane and control dispositions for the spin are also listed in table III. The spin characteristics listed in the table were average values as obtained from free-spinning tests of a 1/20-scale dynamic model of the airplane being considered.

It was necessary to modify the aerodynamic data (in addition to the fairing previously mentioned) so that the electronic computer would indicate the presence of the initial developed, steady spin before a disturbance was applied. It was found that this could be done by adding factors to each of the six aerodynamic coefficients in the equations of motion that were sufficient to cause the computer to indicate constant values of the variables of the motion when instructed to solve the equations of motion without any disturbance applied to the developed spin.

The present investigation is believed to be of value as an indication of trends when various moments or forces are applied for spin recovery.

Effects of Applying Disturbances

Time histories of the computer runs showing the motions resulting after negative yawing moments, positive rolling moments, and thrust forces were applied are shown, respectively, in figures 6, 7, and 8. Presented are time histories of α, β, l_3, m_3, p, q, and r. The specific values of moments or thrust applied are listed in these figures and, in addition, they are listed in table IV along with identifying run numbers and a brief remark concerning the general nature of the result obtained. Some runs were also made in which positive yawing moments (prospin) or negative rolling moments (outboard wing down) were applied and, although the results of these are not presented in figures or in tabular form, they are discussed herein.

The significance of various motions obtained when the disturbances were applied in the developed spin are considered in terms of whether recovery from the spin was achieved in a manner similar to that utilized in references 16 and 17. In brief, an airplane is considered to have recovered from the spin when the angle of attack at the center of gravity is below the stall. Usually, as this is achieved, the airplane enters a steep pull-out dive without rotation; in some cases, however, it may be turning or rolling in a spiral glide or an aileron roll. Also, sometimes,

the airplane may roll or pitch to an inverted attitude from the erect spin and may still have some rotation but is out of the original erect spin.

As may be noted from the time-history curves and table IV, the computer runs were ended whenever α became zero or if some other variable exceeded a limiting value beyond which it could no longer be handled by the particular electronic computer setup used. For example, whenever β reached $\pm 48^{\circ}$, the calculation run ended.

As may be seen from figure 6, the application of negative yawing-moment increments was favorable in that they caused recoveries and in that the time required for recovery decreased proportionately as the negative yawing moment applied was increased within the range of moments applied during the investigation. Conversely, applying positive increments of yawing moments had adverse effects in that they aggravated rather than relieved the spinning motion.

Applying positive increments in rolling moment was also favorable to recovery (fig. 7) but a little less so than were negative yawing moments because recovery took somewhat longer to occur for a given increment of moment applied. Applying negative increments in rolling moment, in general, had adverse effects in that rate of yawing and angle of attack increased.

Generally, the effects of the applied yawing and rolling moments as regards being favorable or unfavorable to recovery for a design with this type of loading (mass distributed primarily along the fuselage) are in agreement with free-spinning tunnel results and analyses made over the years. (See part II A of this paper and references 18 and 19.)

Simulating the application of thrust forces up to three-quarters of the weight of the airplane indicated the relative ineffectiveness of this procedure for spin recovery for the subject configuration. This is emphasized by comparing the results in figure 8 (thrust application) with those in figure 6 (application of negative yawing moments), and this result is consistent with the analysis of part II A of this paper.

Incipient Spin Studies

Because the need is great for knowledge of the effects of design factors and of various control-manipulation techniques in maintaining or in regaining controlled flight and preventing the occurrence of fully developed spins, calculations are being made to study spin-entry motions on an automatic digital computer. Work being done includes the obtaining of aerodynamic stability derivative data, both static and rotary, which are as complete and suitable as possible in order to make the studies as

realistic as possible. The equations of motion being used for spin-entry studies are as follows:

$$\dot{p} = \frac{I_Y - I_Z}{I_X} qr + \frac{I_{XZ}}{I_X} \dot{r} + \frac{I_{XZ}pq}{I_X} + \frac{\rho V_R^2 Sb}{2I_X} C_{l_\beta}\beta + \frac{\rho V_R Sb^2}{4I_X} C_{l_p}p +$$

$$\frac{\rho V_R Sb^2}{4I_X} C_{l_{\dot{\beta}}} \sin \alpha\dot{\beta} + \frac{\rho V_R Sb^2}{4I_X} C_{l_r}r - \frac{\rho V_R Sb^2}{4I_X} C_{l_{\dot{\beta}}} \cos \alpha\dot{\beta} + \frac{\rho V_R^2 Sb}{2I_X} \Delta C_{l,r} +$$

$$\frac{\rho V_R^2 Sb}{2I_X} \Delta C_{l,\alpha} + \frac{Z_R y}{I_X}$$

$$\dot{q} = \frac{I_Z - I_X}{I_Y} pr + \frac{I_{XZ}}{I_Y} r^2 - \frac{I_{XZ}}{I_Y} p^2 - \frac{I_{X,e}\omega_e}{I_Y} r + \frac{\rho V_R^2 S\bar{c}}{2I_Y} C_m + \frac{\rho V_R S\bar{c}^2}{4I_Y} C_{m_q}q +$$

$$\frac{\rho V_R S\bar{c}^2}{4I_Y} C_{m_{\dot{\alpha}}}\dot{\alpha} + \frac{\rho V_R^2 S\bar{c}}{2I_Y} C_{m_\beta}\beta + \frac{\rho V_R^2 S\bar{c}}{2I_Y} \Delta C_{m,e} - \frac{Z_R x}{I_Y}$$

$$\dot{r} = \frac{I_X - I_Y}{I_Z} pq + \frac{I_{XZ}}{I_Z} \dot{p} - \frac{I_{XZ}}{I_Z} qr + \frac{I_{X,e}\omega_e}{I_Z} q + \frac{\rho V_R^2 Sb}{2I_Z} C_{n_\beta}\beta + \frac{\rho V_R Sb^2}{4I_Z} C_{n_r}r -$$

$$\frac{\rho V_R Sb^2}{4I_Z} C_{n_{\dot{\beta}}} \cos \alpha\dot{\beta} + \frac{\rho V_R Sb^2}{4I_Z} C_{n_p}p + \frac{\rho V_R Sb^2}{4I_Z} C_{n_{\dot{\beta}}} \sin \alpha\dot{\beta} + \frac{\rho V_R^2 Sb}{2I_Z} \Delta C_{n,r} +$$

$$\frac{\rho V_R^2 Sb}{2I_Z} \Delta C_{n,a} - \frac{X_R y}{I_Z} + \frac{Y_R x}{I_Z}$$

$$\dot{u} = -g \sin \theta_e + vr - wq + \frac{\rho V_R^2 S}{2m} C_X + \frac{\rho V_R^2 S}{2m} \Delta C_{X,e} + \frac{T}{m} + \frac{X_R}{m}$$

$$\dot{v} = g \cos \theta_e \sin \phi_e + wp - ur + \frac{\rho V_R^2 S}{2m} C_{Y_\beta}\beta + \frac{\rho Sb}{4m} C_{Y_p}p + \frac{\rho Sb}{4m} C_{Y_{\dot{\beta}}} \sin \alpha\dot{\beta} +$$

$$\frac{\rho Sb}{4m} C_{Y_r}r - \frac{\rho Sb}{4m} C_{Y_{\dot{\beta}}} \cos \alpha\dot{\beta} + \frac{\rho V_R^2 S}{2m} \Delta C_{Y,r} + \frac{\rho V_R^2 S}{2m} \Delta C_{Y,a} + \frac{Y_R}{m}$$

$$\dot{w} = g \cos \theta_e \cos \phi_e + uq - vp + \frac{\rho V_R^2 S}{2m} C_Z + \frac{\rho V_R^2 S}{2m} \Delta C_{Z,e} + \frac{Z_R}{m}$$

C. TECHNIQUES INVOLVED IN OBTAINING MEASUREMENTS OF VARIOUS PARAMETERS IN THE SPIN

Measurements Desired

In order to evaluate properly the spin and spin-recovery characteristics of airplanes and to enable comparison of model and full-scale results, measurements of most of the items that are measured in normal-flight testing should suffice. The technique involved in obtaining these items may be somewhat different, however, because of the high angles of attack encountered at spin attitudes. Similar techniques would be involved for any maneuver at high angles of attack such as an incipient spin or a gyration beyond the stall. Time-history measurements should be made to yield the following information during the spin and recovery (in order of importance):

(1) Number of turns in the spin and turns for recovery; position of all-movable controls including landing flaps, leading-edge flaps, dive or speed brakes, and slats

(2) Angle of attack and angle of sideslip at the center of gravity of the airplane

(3) Resultant velocity

(4) Angular rates about the three body axes

(5) Altitude record

(6) Space attitude angles of the airplane

(7) Linear accelerations

(8) Angular accelerations

In addition to the above measurements, it is important to have a proper evaluation of the condition of the airplane at the time spins are started as regards weight, center-of-gravity location, and moments of inertia of the airplane. Power conditions during the spin should also be noted. The pilot's comments concerning the spins and recoveries therefrom should be obtained as a supplement to all the recorded information. Film records of each flight should be made from a ground station and a chase plane, and film records from a gun camera in the airplane undergoing tests may also prove to be valuable.

Methods for Obtaining Data

Some suggested ways of instrumenting the airplane to obtain the items desired are pointed out in the following sections. A discussion of various types of measuring instruments is given in reference 20.

Control positions, altitude, and rotational rates.- The control positions, altitude, and rotational rates may be determined by instruments such as those discussed in reference 20. The angular rate gyros used for measuring rates about body axes should, of course, be alined with the X, Y, and Z body axes to give p, q, and r; and the resultant spin rotational rate about the spin axis Ω is the vectorial summation of these rates. The number of turns in a spin may be obtained from an integration of the time history of the resultant rotational rate Ω about the spin axis.

Angle of attack, angle of sideslip, and resultant velocity.- Determination of the true angle of attack and angle of sideslip at the center of gravity of an airplane is a more involved process in spins than it is in the normal-flight range because the linearizations and approximations made in the correction of vane readings for flight testing at low angles of attack do not apply in the spin. As regards resultant velocity, the pitot-tube type of pickup alined with the fuselage axis used for the normal-flight attitudes no longer gives valid readings when spin attitudes are approached. In addition, the yaw vane ordinarily used to obtain sideslip angles at low angles of attack does not give the sideslip angle at high angles of attack. Methods for obtaining true angle of attack α_t, true sideslip angle β_t, and true resultant velocity $V_{R,t}$ are suggested herein. Before explaining these techniques, however, it would be well to examine the basic reasoning involved in the measurement of aerodynamic angles. (In the discussion that follows, unless otherwise indicated, it is assumed that the velocity and flow-direction pickups are removed from the influence of the airplane and that mechanical inaccuracies that may be introduced, such as boom bending, are negligible.)

The resultant velocity V_R may be broken up into three component velocities u, v, and w along the X, Y, and Z body axes, respectively, as shown in figure 9. The angle of attack α is defined as the angle between the projection of the resultant velocity on the X, Z plane and the fuselage X body axis or

$$\alpha = \tan^{-1} \frac{w}{u}$$

Angle of sideslip is defined as the angle between the relative wind (or resultant velocity) V_R and the projection of the resultant velocity on

the X, Z plane or

$$\beta = \sin^{-1} \frac{v}{V_R}$$

Thus, the angle of attack and angle of sideslip at the position of a flow-direction vane can be determined by making use of a swiveling-type cruciform vane that has two degrees of rotation: one about an axis parallel to the airplane pitch axis and one about an axis that remains perpendicular to the pitch plane of the vane.

An alternate technique consists of using three vanes, each having one degree of rotation: A pitch vane with its axis parallel to the airplane pitch axis that yields the angle of attack α; a yaw vane pivoted about an axis parallel to the body Z axis that yields the angle ψ; and a roll vane pivoted about an axis parallel to the airplane X axis that yields the angle ϕ. (See fig. 9.) A nose boom and a wing-tip boom installation of this type is shown on figure 10. The angle-of-attack vane thus gives an indicated angle of attack which may be corrected to obtain the true angle of attack and the indications of the roll and yaw vanes can be used to obtain an indicated sideslip angle from the following relationship:

$$\beta_i = \sin^{-1} \frac{1}{\sqrt{1 + \cot^2 \phi_i + \cot^2 \psi_i}}$$

From this relationship, the sign of the sideslip angle must be determined from the sign of ψ_i or ϕ_i (if ψ_i and ϕ_i vary between 0° and 180°, the sign of β_i is positive; whereas, if ψ_i and ϕ_i vary between 0° and -180°, the sign of β_i is negative). The sideslip angle can also be computed from the following relationships:

$$\beta_i = \tan^{-1}(\tan \psi_i \cos \alpha_i)$$

and

$$\beta_i = \tan^{-1}(\tan \phi_i \sin \alpha_i)$$

but these relationships become indeterminant at indicated angles of attack of $\pm 90^\circ$ and 0°, respectively.

When these indicated angles are corrected to the center of gravity, the influence of the rotational rates must obviously be considered and the resultant velocity in the vicinity of the recording vanes must be known. The resultant velocity should be obtained from a pickup that swivels so that it will aline with the relative wind. The velocity recorded in utilizing such a technique will be an indicated resultant velocity at the point of measurement $V_{R,i}$; and if α_i, β_i, and $V_{R,i}$ are known, the true angles and true resultant velocity may be computed from the following relationships if the vanes and velocity tube are mounted on a nose boom (fig. 10):

$$\alpha_t = \tan^{-1}\left(\tan \alpha_i + \frac{qx}{V_{R,i} \cos \beta_i \cos \alpha_i}\right)$$

$$V_{R,t} = \left[V_{R,i}{}^2\cos^2\alpha_i \cos^2\beta_i + \left(V_{R,i} \cos \beta_i \sin \alpha_i + qx\right)^2 + \left(V_{R,i} \sin \beta_i - rx\right)^2\right]^{1/2}$$

$$\beta_t = \sin^{-1}\left(\frac{V_{R,i} \sin \beta_i - rx}{V_{R,t}}\right)$$

where the vertical and lateral distances of the indicating vanes from the center of gravity are assumed to be small and velocity components due to p can be neglected. As is indicated in the preceding equation and as can be seen in figures 9 and 10, the linear velocities at the center of gravity are as follows when a nose-boom installation is used:

$$u_t = V_{R,i} \cos \alpha_i \cos \beta_i$$

$$v_t = V_{R,i} \sin \beta_i - rx$$

$$w_t = V_{R,i} \sin \alpha_i \cos \beta_i + qx$$

If a wing-tip installation is used (fig. 10), the reduction of the indicated vane readings is somewhat more involved than it is for a nose-boom installation and, also, it appears possible that for a wing-tip installation shielding of the fuselage may give erroneous readings at high angles

of sideslip and attack. In addition, for a nonoscillatory type of spin in which q is usually small, the angle of attack indicated from a nose-boom installation usually need not be corrected to obtain the true angle of attack; this is not the case for a wing-tip installation. Based on these factors, it would appear more desirable to use a nose-boom installation rather than an installation on the wing tip for flight spin tests.

An alternate technique for obtaining the true angles of attack and sideslip and the true resultant velocity that may be employed when a resultant velocity tube can not be installed on the airplane depends upon the existence of a pitching rate or a yawing rate. When this technique is used, two pitch vanes and a roll (or yaw) vane must be used or two yaw vanes and a pitch (or roll) vane must be installed on a nose boom as indicated in figure 11. The velocity components for the technique utilizing two pitch vanes and a roll vane are:

$$u_t = \frac{q(x_1 - x_2)}{\tan \alpha_2 - \tan \alpha_1}$$

$$v_t = (\tan \phi_1 \tan \alpha_1)u_t - rx_1$$

$$w_t = (\tan \alpha_1)u_t + qx_1$$

and the velocity components for the technique utilizing two yaw vanes and a pitch vane are:

$$u_t = \frac{r(x_1 - x_2)}{\tan \psi_1 - \tan \psi_2}$$

$$v_t = (\tan \psi_1)u_t - rx_1$$

$$w_t = (\tan \alpha_1)u_t + qx_1$$

Thus, if the component velocities of the true resultant velocity are known, the true resultant velocity can be determined and the true angles of attack and sideslip can be computed. In these equations the vertical and lateral distances of the vanes from the center of gravity are assumed to be small and, as a result, velocity components due to these displacements can be neglected. It should be pointed out that utilization of this technique for spin flight testing is subject to certain limitations.

The two-pitch-vane installation will usually record only slight differences in angle of attack for nonoscillatory (or steady-type) spins when reasonable distances between the vanes are used; thus, a two-pitch-vane installation may not be reliable for nonoscillatory type of spins. The two-yaw-vane installation will probably not be useful for airplanes having spinning attitudes approaching $\pm 90^{\circ}$ because the angle of sideslip and resultant velocity may not be determinable.

Angular accelerations.- In order to determine the angular accelerations $\dot{p}$, $\dot{q}$, and $\dot{r}$, an electrical differentiation of the angular rotational rates has been used. If an angular accelerometer is used for determining these angular accelerations in spins, however, a disk or cruciform-type sensing element with the axis of the disk alined with the axis about which the accelerations are desired is preferable to a bar-type accelerometer. The disk-type accelerometer gives a true indication of $\dot{p}$, $\dot{q}$, and $\dot{r}$ whereas a bar-type accelerometer that is pivoted about its center records certain cross-couple angular velocities in addition to $\dot{p}$, $\dot{q}$, and $\dot{r}$. A tabulation of the total measurements of bar-type angular accelerometers (pivoted about their centers) about the three body axes of a spinning airplane follows:

Quantity desired	Alinement of bar	Total measurement
$\dot{q}$ $\dot{q}$	Along X-axis Along Z-axis	$\dot{q} - pr$ (too low) $\dot{q} + pr$ (too high)
$\dot{p}$ $\dot{p}$	Along Y-axis Along Z-axis	$\dot{p} + qr$ (too high) $\dot{p} - qr$ (too low)
$\dot{r}$ $\dot{r}$	Along X-axis Along Y-axis	$\dot{r} + pq$ (too high) $\dot{r} - pq$ (too low)

Linear accelerations.- As regards the linear-acceleration measurements in spins, when the linear accelerometers are displaced from the center of gravity, these accelerations should be corrected for the centrifugal and cross-couple terms as well as the angular acceleration terms. The total readings of linear accelerometers placed along the three body axes are as follows:

Axis	Total measurement
X	$a_X - x\left(r^2 + q^2\right) - y(\dot{r} - pq) + z(\dot{q} + pr)$
Y	$a_Y - y\left(r^2 + p^2\right) + x(\dot{r} + pq) - z(\dot{p} - qr)$
Z	$a_Z + x(\dot{q} - pr) - y(\dot{p} + qr) + z\left(p^2 + q^2\right)$

Space attitude angles.- In order to measure space attitude angles of an airplane, an all-attitude no-gimbal-lock gyroscopic reference unit may be used. Another process, which is very involved but which should give reasonable indications of the space angles if the instrument readings are accurate, involves substitution of most of the quantities already discussed into Euler's force equations. These equations are as follows:

$$g \sin \theta_e = a_X - \dot{u}_t + rv_t - qw_t = A$$

$$g \cos \theta_e \sin \phi_e = -a_Y + \dot{v}_t - pw_t + ru_t = B$$

$$g \cos \theta_e \cos \phi_e = -a_Z + \dot{w}_t - qu_t + pv_t = C$$

Thus,

$$\theta_e = \sin^{-1} \frac{A}{g} \text{ (angle of fuselage inclination)}$$

$$\phi_e = \tan^{-1} \frac{B}{C} \text{ (angle of wing inclination about the X body axis)}$$

and

$$\phi = \sin^{-1}(\sin \phi_e \cos \theta_e)$$

Use of these equations to determine space angles thus involves a differentiation of the true linear velocities along the three body axes to determine $\dot{u}_t$, $\dot{v}_t$, and $\dot{w}_t$.

Determination of the Euler angle ψ_e, the amount that an airplane has rotated about a vertical space axis, is more involved than the determination of the other Euler angles. The rate of rotation about a vertical space axis $\dot{\psi}_e$ can be defined as $\left(\frac{qB + rC}{B^2 + C^2}\right)g$ and the angle ψ_e would then be obtained from an integration of this term.

Determination of forces and moments.- If the airplane is instrumented thoroughly enough to obtain accurate measurements of the various items that have been noted, the forces and moment coefficients in the spin can be determined as follows:

$$C_X = a_X \frac{2\mu b}{V_{R,t}^2}$$

$$C_Y = a_Y \frac{2\mu b}{V_{R,t}^2}$$

$$C_Z = a_Z \frac{2\mu b}{V_{R,t}^2}$$

$$C_l = \left(\dot{p} - \frac{I_Y - I_Z}{I_X} qr\right)\frac{2\mu k_X^2}{V_{R,t}^2}$$

$$C_{m_b} = \left(\dot{q} - \frac{I_Z - I_X}{I_Y} pr + \frac{I_{X,e}}{I_Y} \omega_e r\right)\frac{2\mu k_Y^2}{V_{R,t}^2}$$

$$C_n = \left(\dot{r} - \frac{I_X - I_Y}{I_Z} pq - \frac{I_{X,e}}{I_Z} \omega_e q\right)\frac{2\mu k_Z^2}{V_{R,t}^2}$$

It should be noted that product-of-inertia terms are assumed to be small and are neglected in the preceding equations; also, the pitching-moment coefficient is nondimensionalized on the basis of the wing span.

II. IMPORTANT FACTORS THAT INFLUENCE THE SPIN AND RECOVERY

A. EFFECTIVENESS OF CONTROLS DURING SPINS AND RECOVERIES

A developed spin involves a balance of aerodynamic and inertia moments and forces; thus, the effectiveness of any control in promoting or in terminating the spin depends not only on the aerodynamic moments and forces produced by the control but also on the inertia characteristics of the airplane. A spin about any axis in space might be considered as being made up of rotation of an airplane about an axis through

its center of gravity plus translatory motion in space of the center of gravity. Because a moment is required in order to terminate the rotation, it therefore may be said that the spin is primarily a rotary motion and thus is affected mainly by the moments acting upon it. As previously indicated, the equations for the moments acting in a spin (principal axes being assumed and engine effects being ignored) are:

$$\dot{r} = \frac{C_n V^2}{2\mu k_Z^2} + \frac{I_X - I_Y}{I_Z} pq$$

$$\dot{p} = \frac{C_l V^2}{2\mu k_X^2} + \frac{I_Y - I_Z}{I_X} qr$$

$$\dot{q} = \frac{C_{m_b} V^2}{2\mu k_Y^2} + \frac{I_Z - I_X}{I_Y} rp$$

Developed Spin

Whether an airplane spins steep or flat and what its rate of rotation will be are apparently primarily dependent upon the yawing-moment and pitching-moment characteristics of the airplane. Low damping in yaw at spinning attitudes or high autorotative yawing moments lead to flat (high α), fast rotating (high Ω) spins. The interrelation of the aerodynamic pitching moment, rate of rotation, and angle of attack in the spin for a given mass distribution can be seen from the approximate pitching-moment equation obtained by equating the aerodynamic and inertia pitching moments:

$$\Omega^2 = \frac{-M_{aero}}{\frac{1}{2}\left(I_Z - I_X\right) \sin 2\alpha}$$

From this relation it can be seen that a nose-down (negative) pitching moment may not nose the airplane down but may instead lead to a higher rate of rotation and may in fact flatten the spin. For given directional and lateral characteristics, the pitching moment can influence the motion so that it may vary from a high-rotation spin to a low-rotation trim. Figure 12 shows that, for a normal aerodynamic pitching-moment curve, the corresponding angle of attack and rate of rotation in a spin may assume a wide range of values, depending upon the equilibrium conditions that

satisfy the other two moment equations for the airplane design. If the aerodynamic pitching-moment curve has a steep slope and if the airplane should tend to spin flat, an extremely fast rotating spin may result from which recovery may be difficult to obtain because of the ensuing high angular momentum in the spin possible for current fighter designs with their high moments of inertia. If, however, the pitching-moment curve becomes unstable and shows a trim at a high angle of attack, the corresponding spin may be very flat with very slow rotation. Even when the rotation is stopped, in this instance, the airplane may remain in a trimmed condition at a high angle of attack.

Because of the trend of current designs, the steady developed spin has practically been eliminated and in its place has come a cyclic large-motion oscillation. As pointed out in references 19 and 21, the oscillatory spins, primarily in yaw and roll, are associated with the long fuselage nose lengths and the extreme mass distribution along the fuselage of current designs. Therefore it appears likely that the rolling-moment characteristics at the spinning attitudes can also have a significant influence on the motions being obtained.

Spin rotation and angle of attack also can be influenced by the gyroscopic moment produced by the rotating parts of a jet engine. (See ref. 22.) Because these parts continue to rotate at a fairly high rate even though the engine is throttled back, the gyroscopic effect of the engine on the developed spin and subsequent recovery therefrom must be given proper consideration.

Recovery From the Spin

The effect of any control in bringing about spin recovery depends upon the moments that control provides and upon the effectiveness of those moments in producing a change in angular velocity and thus an upsetting of the spin equilibrium. The effectiveness of the applied moment in upsetting the spin equilibrium, in turn, is influenced by the magnitudes of the moments in balance in the developed spin. The effectiveness of the moments depends greatly upon the mass distribution of the airplane. (See ref. 18.)

Experience has indicated that application of a yawing moment about the Z body axis to oppose the spin rotation is the most effective manner of terminating the spin and bringing about recovery. Thus the effectiveness of a rudder deflection, which generally creates a direct yawing moment on the spin, is dependent upon the magnitude of the yawing moment produced and upon the ability of this moment to affect the existing motion. Similarly, it appears that elevator effectiveness and aileron effectiveness, in the final analysis, depend upon their ability to alter the yawing moments acting. It appears that the most effective way to

influence the spin and to bring about recovery is to obtain a yawing moment by applying a moment about an axis about which there is the least resistance to a change in angular velocity (least moment of inertia). For example, the most proficient way to obtain an antispin yawing moment for recovery may be to roll the airplane (if I_X is relatively low, as it is for current designs) in such a direction that a gyroscopic yawing moment to oppose the spin is obtained. Thus it may be more efficient, and in fact essential, to obtain a yawing moment indirectly by rolling about the X-axis rather than by a direct application of a yawing moment against the resistance of a large angular momentum about the Z-axis, particularly when the moment of inertia about the Z axis I_Z is relatively large because of the concentration of mass in the fuselage. Similarly, if mass is heavily concentrated in the wings, movement of elevators downward may provide the most effective means of applying an antispin yawing moment. This effect can be explained by examination of the equation dealing with yawing motion:

$$\dot{r} = \frac{N_{aero}}{I_Z} + \frac{I_X - I_Y}{I_Z} pq = \frac{C_n V^2}{2\mu k_Z^2} + \frac{I_X - I_Y}{I_Z} pq$$

This equation shows that, for airplanes of 15 or 20 years ago, the rudder was the primary control for recovery. Obtainable changes in the aerodynamic (first) term were relatively large (low μ and low radius of gyration) whereas changes in the inertia (second) term were small $\left(I_X - I_Y \approx 0\right)$. In recent years, increases in mass distribution along the fuselage and in wing loading have tended to make the changes in the inertia term much more significant and at the same time to minimize the changes in the aerodynamic term. For example, modern high-speed fighters and research planes, whose control surfaces are no larger than those of planes of many years ago, have large negative values of $I_X - I_Y$ because the mass is heavily concentrated in the fuselage; thus, it becomes extremely important that the inertia term be made antispin (negative for a right spin) for recovery. This can be done by controlling the algebraic sign of the pitching velocity, for example, by tilting the inner wing (right wing in a right spin) down relative to the spin axis. This tilting of the wing downward makes the pitching velocity q positive ($q \approx \Omega \sin \phi$) and gives rise to a cross-couple inertia effect which acts in a direction to terminate the spinning motion. This effect can be considered to be similar to a so-called "roll divergence," except that it is utilized to diverge (recover) from the spin. Extreme care must be exercised to avoid tilting the outer wing down as this would lead to a prospin moment. During World War II when in many instances fuel, guns, bombs, and engines were put on the wings and, as a result, $I_X - I_Y$ was made positive, the same type of reasoning pointed the way towards use of elevators to provide a nose-down

or negative pitching velocity q. Figure 13 summarizes these results and shows that the effectiveness of the vertical tail in terminating the spin is greatly decreased as mass distribution is increased along the fuselage or along the wings. Because the effectiveness of the rudder in terminating a spin depends on the ability of the rudder to provide a yawing deceleration, its effectiveness is lessened when I_Z is large, such as for extreme loadings along the fuselage or along the wings. Also, because rudder reversal tends to depress the inner wing in a spin, an undesirable prospin increment in yawing moment could ensue because of an unfavorable cross-couple effect when the loading is predominantly along the wings. When the loading is predominantly along the fuselage ($I_X - I_Y$ negative), ailerons with the spin (stick right in a right spin) can generally be utilized to assist the rudder and, in general, experience has indicated that, if the stick is held back longitudinally long enough, the pilot will be able to discern more readily between the spinning motion and the ensuing aileron roll. When the loading is predominantly along the wings ($I_X - I_Y$ positive), elevators down (stick forward) can generally be of assistance for recovery. In the latter case, ailerons against the spin would also be beneficial.

Based on the foregoing reasoning alone, it would be expected that the effect of ailerons for erect spins would reverse when $I_X - I_Y$ changes from negative to positive. Actually experience in the past has indicated that, in the vicinity of $\frac{I_X - I_Y}{mb^2} \times 10^{-4}$ of -50, ailerons with the spin (stick right in a right spin) generally lost their favorable effect and became adverse and for ailerons against the spin the converse happened. (See ref. 18.) This result, it is believed, has been due primarily to a secondary effect associated with positive C_{n_β} of the airplane and a resulting relative prospin increment in yawing moment because of the increment in inward sideslip that invariably occurs when ailerons are set with the spin. This condition shifts the aileron reversal point. Similarly, spin-tunnel experience has shown that, for inverted spins, the aileron effect reverses at a negative value of $I_X - I_Y$, the reversal point occurring in the vicinity of $\frac{I_X - I_Y}{mb^2} \times 10^{-4}$ of -150 because the unshielded vertical tail in the inverted attitude makes C_{n_β} much more significant. Unless otherwise indicated, aileron settings in the inverted spin are given in terms of wing tilt relative to the ground and if the rolling moment is such as to tilt the inner wing (relative to the spin axis) down, that is considered as an aileron-with setting. For example, in an inverted spin rotating to the pilot's left, the inner wing would be the left wing; moving this wing down relative to the ground would be brought about by moving the stick laterally to the pilot's right. The

aileron-reversal points for both erect and inverted spins can also be influenced by the elevator setting somewhat and, in general, elevator-up settings (relative to ground) lead to an aileron-reversal point at a somewhat more negative value of $I_X - I_Y$ than do elevator-down settings.

A factor affecting the spin and recovery that may be likened to an aileron effect is the interaction of wing thickness and camber with mass distribution. In general, adding thickness or camber to a wing will tend to lead to a spin with more inward sideslip which may be favorable or adverse depending upon whether the mass is distributed chiefly along the fuselage ($I_X - I_Y$ negative) or chiefly along the wings ($I_X - I_Y$ positive), respectively.

On some current airplanes, ailerons are being decreased appreciably in size, moved inboard, or eliminated altogether. For such airplanes, if a developed spin is obtained, there may be great difficulty encountered in recovery. In some instances, the design incorporates spoilers, deflectors, slats, leading-edge droops, or chord-extensions. Spoilers are generally ineffective in a developed spin because they are shielded at the spinning attitudes. Because they give little or no rolling moment in the spin, they cannot be substituted for ailerons for spin recovery when a rolling moment is required. Inadvertent settings of the stick laterally against the spin (stick left in a right spin) would, of course, also have no effect for spoilers whereas such a setting could be adverse for ailerons. Spoiler-deflector combinations can have some effect primarily because of the drag and corresponding aerodynamic yawing moment that the deflector provides in the spin. (See ref. 23.) Extension of slats generally leads to an effect similar to ailerons with the spin, stick right in a right spin. (See ref. 24.) Leading-edge droop and chord-extensions may have some effect in a critical case and their effect would be in conformity with the rolling moment and the corresponding wing tilt that they could produce in a spin. Recent experience in the spin tunnel has indicated that use of a differentially operated horizontal tail may be effective for spin recovery as a substitute for or to augment ailerons with the spin.

All service airplanes that are spin demonstrated are required to have an emergency antispin device installed. Tail parachutes are more commonly used although rockets have been used. (See refs. 25 and 26.) At the present time, the size parachute required for a current design must be determined by model tests. This would also be true for determination of rocket forces to supply an adequate antispin moment. An existing report on parachute requirements (ref. 27) is presently considered to be inadequate for current high-speed airplanes loaded heavily along the fuselage. The reason for this inadequacy is that a tail parachute provides both a large pitching moment and a small yawing moment, and the large pitching moment is ineffective for spin recovery when the mass is heavily concentrated in the fuselage and the small yawing moment is inadequate for recovery for the same

reason that the rudder loses its effectiveness for extreme fuselage loadings. Reference 27 is still valid for loadings where mass is concentrated in the wings or for loadings where mass is lightly concentrated in the fuselage because here both the pitching moment and the yawing moment could be conducive in bringing about recovery.

The reason that the yawing moment is the most effective means of terminating a spin and bringing about recovery may be explained by the following analysis. As previously indicated, the spin is generally considered to be a motion at an angle of attack between the stall and 90°, the wings being nearly perpendicular to the spin axis. For such a motion, when there is an application of an antispin (negative for a right spin) yawing moment, the yawing velocity r can be decreased by slowing up the rotation, by decreasing the angle of attack, or both, both changes being conducive of recovery from the spin. Furthermore, lowering the rotation generally leads to a nosing down of the airplane due to the aerodynamic pitching moment acting and to a decrease of the nose-up inertia pitching moment. This condition allows the airplane to become unstalled. On the other hand, application of a nose-down (negative) pitching moment can introduce a negative increment in pitching velocity either by nosing the airplane down or by rolling down the plane's outer wing (left wing in a right spin), or both. Left wing down will be adverse if $I_X - I_Y$ is negative (eq. 1); thus, the yawing velocity is increased, the spin rotation is increased, and possibly the angle of attack is increased rather than decreased. Also, as previously explained, the response to a nose-down aerodynamic moment may actually be an increase in spin rotation Ω because the nose-up inertia pitching moment increases to balance the increase in the aerodynamic moment. Similarly, application of an antispin (negative) rolling moment may roll the outer wing (left in a right spin) down and, if $I_X - I_Y$ is negative, can be adverse and lead to an increase in rate of rotation and angle of attack.

For current designs having extremely long fuselage nose lengths, the criteria presented in references 19 and 21 regarding the nature of the spin and recovery therefrom are inadequate at present, and it appears that, for a proposed design, resort should be made to actual model tests in a spin tunnel. This is primarily a result of the fact that the nose of the airplane can be the source of a strong autorotative moment which can be critically dependent upon cross-sectional shape; also even slight irregularities of the nose due to production tolerances may have a significant effect in some instances. As previously indicated, the relative effects of the nose for model and airplane, in some instances, may be critically dependent upon Reynolds number.

B. THE INFLUENCE OF LONG NOSES, STRAKES, AND CANARDS IN SPINS

Prior to the advent of jet and rocket-powered aircraft, the influence of the fuselage in spinning was generally small. Because of the current trend toward very long nose lengths on contemporary fighters, however, the fuselage effect, or more specifically the effect of the fuselage forward of the wing, may have considerable effect on the way a contemporary fighter spins or recovers. In some instances the forces and moments existing on the forward portion of the fuselage may introduce autorotative tendencies which may dictate the manner in which the airplane may spin. Information available at the present time regarding desirable shapes of the nose portion of the fuselage from the spinning viewpoint and auxiliary means for utilizing the nose portion of the airplane to aid in spin recovery are discussed herein.

Variations in Cross Section

Effect of fuselage cross section.- Of the various forces and moments acting in a spin application of an antispin yawing moment is the most effective means of effecting recovery from a given spinning condition, and provision of a large amount of damping in yaw is the most effective means for the prevention of flat fast spins. Thus, it would appear desirable to incorporate as much aerodynamic damping in yaw as possible in the fuselage to prevent dangerous spin conditions.

As a simplified approach to the problem, first consider the body shown in figure 14, the profile of which is rectangular, as being a fuselage without wings, tail, or canopy and at an angle of attack of 90°. (See fig. 14(a).) The cross-sectional shape of the fuselage in this case is assumed to correspond to a symmetrical airfoil. As shown in figure 14(b) for this shape and flow direction, the assumed body shape corresponds to a rectangular wing at 0° sideslip; changes in sideslip angle on the body at an angle of attack of 90° correspond to angle-of-attack changes on the rectangular wing. Similarly, the rectangular fuselage at an angle of attack less than 90° (fig. 14(c)), corresponds to the rectangular wing being skewed or sideslipped (fig. 14(d)). Thus, an analogy exists between the damping in yaw of a fuselage about the spin axis and the damping in roll of a wing about a roll axis, and it would appear that the various factors that affect the damping in roll of a wing may also affect the damping in yaw of a spinning fuselage. One of the basic factors involved is the sectional lift-curve slope of the wing or, for the corresponding fuselage at spin attitudes, the sectional side-force curve slope. It is desirable that the side-force slope (side force plotted against sideslip angle) be negative and steep at spin attitudes in order to dampen the rotation.

In order to illustrate the manner in which the damping in rotation may affect the angle at which an airplane spins, the fuselage being assumed to act as a skewed wing, the yawing-moment characteristics are considered in relation to pitching and drag characteristics in figure 15. As is indicated, for a given applied yawing moment, decreasing the fuselage damping in yaw (assumed to occur because of a decrease in the slope of the sectional side-force curve) makes for a flatter spin and a higher rotational rate.

Section side-force data for various fuselage cross-sectional shapes are presented in figure 16. These data correspond to an angle of attack of 90° of the fuselage and are presented for a cross-flow Reynolds number of 1,000,000 and/or 200,000. (The data for the elliptic section were obtained from ref. 28 and the data for the other sections, detailed sketches of which are shown in figure 17, were obtained from tests in the Langley high-speed 7- by 10-foot tunnel.) The most pertinent information as regards full-scale airplanes is that for the higher Reynolds number since the fuselage cross-flow Reynolds number of contemporary fighters in spins will be in excess of 1,000,000 except for a small portion near the tip of the nose. On this basis, the sections which would appear to be the most desirable from the standpoint of damping in yaw at an angle of attack of 90° on full-scale airplanes based on variations of side force with sideslip angle are , , and . The section would provide less damping than the foregoing three sections and those indicated as undesirable are , , and . It should be pointed out that the rectangular and square sections with well-rounded corners had opposite effects at the higher and lower Reynolds numbers. This result implies that care must be exercised when models having these sections are tested inasmuch as model and airplane may have opposite effects in the very flat spinning region. For the elliptic section, good damping characteristics are indicated at a Reynolds number of 200,000 and it appears unlikely that this would be altered appreciably at higher Reynolds numbers. Although these data are two-dimensional and were obtained at an angle of attack of 90°, it is felt that they have application in the very flat spinning range. Additional data for three-dimensional bodies at lower spin angles of attack are needed.

In this connection it should be pointed out that some spinning balance tests conducted on airplane models in England about 20 years ago (ref. 29) to determine the effect of fuselage afterbody shapes at low Reynolds number (about 70,000) indicated that sharp-edged rectangular and sharp-edged square shapes provided propelling moments in the moderately flat spinning range for spin rates that would be obtained on contemporary fighters. These data are consistent with the effects that might be anticipated from the section data just discussed. These spinning-balance data on afterbodies also indicate that a sharp-edged rectangular section with a

semicircular top ⌒ was the most undesirable fuselage shape. The afterbody shapes that usually applied the most damping were elliptic sections and a sharp-edged rectangular section with a semicircular bottom ⌓.

Effect of altering nose section.- Inasmuch as the shielding and interference effects of the wing and the interference effects of the tail influence the afterbody of the fuselage, it appears that the sectional characteristics of this portion of the fuselage could be obscured. In fact, spin-tunnel experience has indicated that the effects of fuselage afterbody shape could be neglected in establishing criteria for the design of an airplane for good spin-recovery characteristics. The nose, on the other hand, should be relatively free of such effects and free-spinning model data and force-test data have shown large effects attributable to the nose. A brief summary of some results obtained on a free-spinning model of a contemporary fighter is shown in chart 1, wherein the sectional shape of the nose alternately was a flat-bottom round-top configuration ⌒ or a round-bottom flat-top configuration ⌓. (See fig. 18.) As is shown on chart 1, the spin and recovery characteristics of the ⌓ section were superior to the ⌒ sections, the ⌓ section exhibiting spins only when the ailerons were displaced against the spin or, rather, when, because of both aerodynamic and inertia considerations, the ailerons were displaced to give a prospin yawing moment. The simulation of engine rotation in the opposite sense to the spin (that is, a clockwise engine rotation and a left-hand spin) had little effect and is not presented on the charts. Simulation of engine rotation in the same sense as the spin had an appreciable effect on the poor section shape only (chart 2) in that faster spin rates and poorer recoveries were obtained than without engine rotation simulated. This result is undoubtedly attributable to the fact that the nose-down pitching moment was increased because of the gyroscopic effects of the simulated engine (see ref. 22) and thus, in order to balance this increased pitching moment, the model was required to spin at a faster rate. Under these conditions, recovery from the spin was more difficult.

Brief free-spinning tests were also made on a model of a contemporary fighter wherein the original ellipitically shaped nose section was altered by flattening the bottom portion of the fuselage forward of the wing. The model with the ellipitically shaped nose section was found difficult to spin whereas flat, fast spins were obtained when the bottom of the nose was flattened. These free-spinning data are consistent with the spinning balance data presented in reference 29 on fuselage afterbodies as regards the merit of utilizing a round-bottom flat-top fuselage section or an elliptic section rather than a flat-bottom round-top section.

Conical Noses and Nose Appendages

Observed effects on noses having circular or near-circular sections, including strake effects.- Sharp-pointed noses of nearly circular cross sections have been found to have considerable effects at spin attitudes and, although their effect has not been fully established, some unusual aspects of such nose shapes have been observed both in free-spinning and force tests. On noses of this type at spin attitudes, asymmetric yawing moments oftentimes appear to exist which have a great influence on whether a spin may or may not be obtained. As has been indicated from force-test results, the center of lateral load in such instances is on the nose of the model and such conditions apparently exist because of an early separation on one side of the nose, probably because of an asymmetric vortex formation. Effects similar to this have been previously noted on a sharp-nosed fuselage at angles of attack approaching spin attitudes. (See ref. 30.) Free-spinning model tests indicate that these asymmetric moments may be the result of some slight asymmetry in the nose. Some models, for instance, may spin readily in one direction and not in another whereas at some later time the direction in which the model will spin may reverse, this reversal being observed many times during the course of tests. On one particular sharp-nosed model, merely rotating a very small portion of the tip of the nose through a given angle caused extremes between spinning readily and not spinning; in this particular instance, this condition indicated that slight imperfections near the tip of the nose probably had a large effect on flow separation on the whole forebody of the fuselage. Flight experience on one particular sharp-nosed design (results unpublished) lends evidence to the fact that the asymmetric moments observed in model tests also can occur on full-scale aircraft at spin attitudes. Inasmuch as these asymmetric moments can exist, the possibility of either controlling or providing such moments to aid in the recovery from a spin becomes apparent. One means for doing this is by placing small-span spoiler strips or strakes along one side of the nose of the fuselage as shown in figure 19. Free-spinning model tests have shown that use of such strakes, properly placed and of sufficient width, can provide large yawing moments in the direction desired for spin recovery. The reason for their effectiveness is that by causing an early separation on one side of the nose portion of the fuselage the pressure distribution around the nose becomes asymmetrical and thus a side force is created on the nose and a yawing moment results. This effect is shown pictorially in the smoke-flow photographs presented in figure 20 for a model nose at an angle of attack of 50° and an angle of sideslip of 0°. At the present time the available data are not sufficient to provide generalized strake design criteria and strake size and position will have to be tailored to achieve the desired effects by experimentation on each specific design. The following generalizations, (based on free-spinning and force-test results) can, however, be made: for maximum effectiveness a strake on only the inboard side of the fuselage (right side in a right spin) should be extended during the spin to obtain

recovery; the strake should start close to the tip of the nose of the fuselage; and the vertical location of the strake should be approximately the point of maximum fuselage width.

Some static-force-test results of a sharp-nosed model that exhibited asymmetric yawing moments at 0° sideslip are presented in figure 21. These tests were conducted in the Langley 20-foot free-spinning tunnel and the Langley 300 mph 7- by 10-foot tunnel. As is shown in figure 21, for the Reynolds number range tested (500,000 to 1,400,000), a large negative yawing moment occurred at an angle of attack of 50°, and a large positive yawing moment occurred in the angle-of-attack range from 65° to 70°. The center of the lateral load was in the region of the canopy. To attempt to nullify or reverse the asymmetric yawing moments, the strakes shown in figure 22 were investigated. The data presented in figure 23 show that a single strake placed on the appropriate side of the body (that is, on the left-hand side when an asymmetric yawing moment was obtained to the right) was effective in reversing the direction of the yawing moment when placed at about the maximum width of the body; positioning the single strake lower on the body reduced its effectiveness. Two symmetrically disposed strakes were effective in nearly nullifying the asymmetric yawing moments when the horizontal tail was removed, but asymmetric yawing moments, smaller in magnitude, still occurred when the horizontal tail was installed.

Additional static-test results were conducted to determine the forces and moments acting only on a conical nose when in the presence of the delta-wing—body configuration shown in figure 24. The nose in this instance was of a much lower fineness ratio than the one presented in figure 21 and had a smaller canopy. As the data presented in figure 25 show, no asymmetric yawing moments were observed for this nose shape; at the very flat spin attitudes the resultant force on the nose was the drag force but at the moderate spin attitudes both a lift and drag were generated when sideslip was applied. The contribution of a single strake located on the left-hand side of the nose to the side force or to the incremental yawing moment of the nose about the center of gravity of the model was consistent with that presented in figure 23. The strake contribution was not greatly affected by strake width at the very flat spin attitudes. In the moderate spinning range, however, the larger span strake was much more effective than the shorter span strake, particularly at negative sideslip angles, that is, when the air approached the nose from the side on which the strake was located.

Effect of flap-type surfaces on fuselage noses.- Free-spinning model tests have indicated that extending small flap-type surfaces similar to canards on the nose was effective in aiding spin recovery on some models. In instances where extending such surfaces simultaneously on both sides were effective, the fuselage cross section near the canopy was fairly deep and the surfaces were hinged in the vicinity of the canopy. It was apparent in such instances that the surfaces were effective in increasing the damping in yaw of the nose portion of the fuselage. In instances where

the fuselage is deep and for cases where flat spins are obtained, use of simultaneously actuated surfaces appears to be justified; however, for the steeper spin attitudes, or for slower rotating spins where the inward sideslip on the nose may be small, use of only one surface actuated on the inboard side (right side in a right spin) may be desirable and, if properly positioned, may be as effective as the single strake previously discussed.

The effects of various canard arrangements on the fuselage nose shown in figure 26 are presented in figure 27. These tests were conducted at low Reynolds number and it should be noted that at higher Reynolds number the forces existing on this particular cross-sectional fuselage shape might be different. Test results of the clean model and the model with roughness added to the nose (region in which roughness added is shown in fig. 26) are plotted in figure 27(a) and indicate that the positive slope of the yawing-moment curves of the clean model (indicating a propelling rather than a damping moment) was nullified by the addition of roughness at an angle of attack of 90°, but, for the lower angles, the curves were essentially the same. It is interesting to note that, for this nose shape, a prospinning moment is indicated for angles of attack of 70° and above whereas for the steeper angles of attack the nose provides damping. Regarding the various configurations tested, the results indicate that extension of one large canard surface high on the fuselage or extension of a long strake are the most desirable configurations whereas small symmetrical canards on the bottom of the fuselage are the worst configuration. It is interesting to note that, for angles of attack steeper than 70°, removal of the small canard on the bottom leeward side of the fuselage had favorable effects whereas, for angles flatter than 70°, there was no effect of removing this canard. This result is attributed to the fact that at the flat angles of attack the flow was separated on the bottom of the leeward side whether the small low canard was installed or not, whereas at the steeper angles of attack the small low canard on the leeward side caused the flow to separate. These force-test data are consistent with effects noted for a free-spinning model of the same design.

Induced circulation about the nose.- Another possibility for utilizing the nose to bring about spin recovery is to induce a flow circulation about the nose and thus generate a side force in the direction desired. This has been attempted in the spin tunnel on two models and the circulation was induced by rotating the conical noses on these models. These tests showed that, when a prospin yawing moment was generated by the rotating noses, flat, fast spins were obtained; when a moment was generated in the opposite direction, however, the models would not spin.

III. CORRELATION OF AIRPLANE AND MODEL SPIN AND RECOVERY CHARACTERISTICS FOR RECENT DESIGNS

Free-spinning-tunnel investigations of small dynamic models of airplanes would be of little practical value if the test results could not be interpreted in such a manner as to predict at least the possible and at best the probable spin and recovery characteristics of the airplanes being simulated. In order to aid in maintaining suitable techniques for interpreting the model spins and recoveries and to keep abreast of the effects of various dimensional and mass design features which show up on contemporary and future designs, a continuing check is made by the NACA to determine how well free-spinning-tunnel investigations predict the behavior of full-scale airplanes. An NACA paper dealing with this subject was published in 1950 (ref. 14) and covered 60 designs typical of those in use between 1926 and 1948. During the past year, model and full-scale spin and recovery data for 21 additional designs have been evaluated and this presentation will deal with these more recent configurations.

Most of the full-scale airplane spin and recovery data used in the study were obtained through the cooperation of the Air Force, the Navy, and various aircraft manufacturers. For some of the configurations used, extensive data in the form of time-histories of variables such as angles of attack, airspeed, angular velocities, and control deflections during spin entries, developed spins, and spin-recovery motions were available. For other configurations, only meager information such as pilots' statements were available.

In order to get a reasonable comparison between the full-scale and model results, it was necessary to exclude the incipient-spin portions of the airplane flight records and any recovery attempts made during incipient spins; only the developed spin portions and recoveries therefrom were used. This exclusion of some of the data is made because of differences in the way spins are achieved in flight and in the free-spinning tunnel. (See part I of this paper.) In flight, an airplane enters a spin following roll-off just above the stalling angle of attack after being brought up from lower angles of attack, whereas in the spin-tunnel testing technique, a model is hand-launched into the vertical airstream of the tunnel with rotation applied and at a very high angle of attack above the stall (80° to 90°), from whence it decreases angle of attack as it loses launching rotation and achieves equilibrium in a developed spin. It usually takes an airplane from about two to five turns to attain a fully developed spin after starting the incipient-spin motion, depending upon configuration and control technique; recoveries are generally achieved much more readily if attempted during the incipient phase of the spin than when attempted after the spin becomes fully developed.

On table V are listed some of the physical characteristics of the 21 configurations being considered. The ranges of these physical characteristics encompass a variety of today's operational military aircraft which are normally required to pass spin-demonstration tests.

It should be noted that seldom, if ever, were the model and airplane being compared identical with respect to all such factors as weight, center-of-gravity location, moments of inertia, control manipulation techniques, and all physical design features, and experience has shown that any one of these factors can at times have a critical effect on spin and recovery characteristics.

For each of the 21 designs, a statement follows as to the nature of erect spins and recoveries obtained and as to the degree of agreement or disagreement between model and airplane spin and recovery characteristics as interpreted in this analysis. (The numbering of the paragraphs is consistent with the numbering of the models described in tables V and VI.) Where available, comparisons of inverted spin and recovery characteristics are included. A summary of the results for erect-spin comparisons is presented in table VI. It should be noted that this table lists control movements for optimum recovery for both models and airplanes as determined by analysis of model and flight results, even though the control manipulations used may not have been the optimum. In the following statements, some instances will be discussed which illustrate how close correlation and proper interpretation of spin-tunnel test results have been of immediate practical value for some airplanes.

(1) The model tests indicated spins at an angle of attack of 53° and a spin rate of 0.32 revolution per second from which recoveries could not be obtained. There are no adequate airplane time-history records of attitudes and angular velocities of the spin to use in comparing with the model results. The full-scale report indicates that one spin was obtained on the airplane from which control manipulation could not bring about recovery, and the spin-recovery parachute was used. In at least one other instance, one of these airplanes spun into the ground. Model and airplane results appear to be in good agreement.

(2) Free-spinning-tunnel tests of a model simulating the airplane indicated spins at an angle of attack of 64° and a spin rate of 0.33 revolution per second and the possibility of unsatisfactory recoveries. The full-scale angles of attack and rates of rotation were in agreement with the model results and in some of the full-scale flights it was necessary to use a spin-recovery parachute to save the airplane. This is considered as good agreement between model and airplane.

(3) On the model in its basic clean condition, steep, whipping-type spins occurred and satisfactory recoveries were obtained by rudder reversal.

When the center external store was installed, flatter oscillatory-type spins were obtained with α varying from about 55° to 70° and with a rate of rotation of about 0.4 revolution per second. Satisfactory recoveries were obtained when the ailerons were moved to with the spin (stick right in a right spin) in conjunction with rudder reversal. Full-scale tests, made for the clean condition only, indicated satisfactory recoveries by rudder reversal. No time histories of attitude or angular velocity variables were available. Based on the limited full-scale information available, model and airplane results for this design are considered to be in agreement.

(4) Model results indicated the possibility of "no-spins" and also of spins at 0.22 revolution per second with oscillations in α from 30° to 65°. There are no time-history records in the available flight report, but the general nature of the motions obtained seemed to be similar to the model spins. Model results indicated that good recoveries would be obtained by rudder reversal followed by moving the elevator down. On the airplane satisfactory recoveries were obtained by the same control-manipulation technique, by reversing the elevator alone, or just by releasing the controls. The flight report indicates that the elevator was the effective control for recovery, whereas model results indicated that the rudder was the effective control. Based on the limited full-scale results available, there seems to be general agreement between model and full-scale results, but the apparent difference in effectiveness of rudder and elevator between model and airplane can not be explained, unless the airplane was not in a developed spin but instead in a steep spiral motion which could be unstalled by lowering the elevator or by merely releasing the controls.

(5) Model spins at an angle of attack of 28° and a spin rate of 0.26 revolution per second were obtained. There were no available time-history records of full-scale attitudes or angular velocities. The full-scale report indicates that rapid recovery from spins was obtained by full rudder reversal against the spin, and this is in agreement with model test results.

(6) The model spin was at an angle of attack of 36° and a spin rate of 0.36 revolution per second. According to the available records, the airplane spun flatter and slower, the angle of attack α being approximately 45° and the rotation being 0.19 revolution per second. In spite of these apparent differences in the nature of the spins, similar and satisfactory recoveries were obtained for model and airplane by the normal control-manipulation technique (rudder reversal followed by downward movement of elevator).

(7) Erect spins could not be obtained on the model for normal control settings for spinning. The available full-scale information refers to 5-turn "spins" but includes no time-histories of angle of attack or angular

velocities. These motions ceased upon neutralization of all controls, and it may be that these motions were glides and turns at an angle of attack above the stall with prospin controls held, rather than being fully developed spins. Based on the preceding reasoning and experience in interpreting full-scale and model spin-recovery results, it is considered that the model and airplane results for this design are in agreement.

(8) It was difficult to obtain erect spins on the model, and, when obtained, they were oscillatory at angles of attack of 42° to 52° and rotated at 0.24 revolution per second. Results indicated satisfactory recovery characteristics by simultaneous movement of ailerons to with the spin and rudder to against the spin. Based on limited full-scale information, erect spins were not obtained on the airplane. As regards inverted spins, there was at least one crash which apparently resulted because the rudder was not held full against the spin long enough. Later flights in which inverted spin tests were made indicated that satisfactory recoveries were obtained by full rudder against the spin, and model tests were in agreement. Based on the information available, it is believed that, for this design, model and airplane results are in agreement.

(9) Model tests indicated that the airplane would be reluctant to spin erect. However, if a spin were encountered and allowed to develop fully, it would be a very oscillatory spin (α of 42° to 61° and Ω of 0.26 rev/sec) from which recovery by rudder reversal could be either poor or rapid (no ailerons on the design; spoilers used for lateral control not effective for spin recovery). In the available full-scale data, there were no time histories of attitudes or angular velocities presented. Although the spin attempts are referred to in word descriptions as "5-turn spins," statements are made that they repeatedly changed direction after one turn or so and ceased upon neutralization of the stick or releasing of all controls. These results appear to fit our definition of "no spins." Agreement is indicated in recovery characteristics for inverted spins of airplane and model. It is believed that, for this design, model tests have indicated the range of possible behavior of the airplane.

(10) Model spin tests indicated that it would be extremely difficult to obtain developed erect spins and that, if a fully developed spin were obtained, it would be very oscillatory and have angles of attack ranging from 60° to 75° with a rate of rotation of 0.26 revolution per second. Although moving full rudder against the spin gave some satisfactory recoveries, the characteristics were considered unsatisfactory because poor recoveries were also obtained (no ailerons on the design; spoilers used for lateral control). When erect spins were obtained on the airplane, they were oscillatory but were at a much lower angle of attack and rate of rotation (α about 25° and Ω about 0.12 according to records) than were the spins obtained on the model. No difficulty was encountered in recovering from spins on the airplane by neutralizing the controls.

Besides having no ailerons and thus no adverse lateral control effects, this airplane had small maximum rudder deflections and had yawing moments due to sideslip which remained stabilizing at high angles of attack (unpublished data), and it is known that each of these factors can be favorable as regards preventing divergence into a high-angle-of-attack rapid-rate-of-yawing spin such as some other airplanes exhibit. The motion obtained may have been, in effect, a high-angle-of-attack gliding turn obtained with full prospin controls maintained.

This case can perhaps be considered as a disagreement between airplane spin and recovery characteristics and those predicted as possible by the model tests although it is clear that both model and airplane results indicated the probability of no erect spins. The hard-to-obtain high-angle-of-attack developed erect spin on the model, however, should not be discounted as being impossible to obtain on the airplane. The difference between full-scale and model results may be due to the differences in test technique between model and airplane, as previously mentioned. It should be mentioned here that on one occasion, due (it has been reported) to an erroneous, laterally unbalanced fuel loading condition, a high-angle-of-attack uncontrollable spin was obtained on the spin-demonstration airplane, during which rudder reversal had no effect, and it was necessary to use the spin recovery parachute to save the airplane.

Inverted-spin and recovery characteristics were satisfactory for both model and airplane.

(11) Model tests indicated oscillatory spins between angles of attack of 34° and 62°, a rotation rate of about 0.4 revolution per second, and satisfactory recoveries by movement of ailerons to full with the spin and rudder to full against the spin. No full-scale records of α and Ω were available, but recoveries obtained and control-manipulation techniques required for recoveries on the airplane were similar to those for the model. Both model and airplane results also indicated good recoveries from inverted spins by moving stick left in an inverted spin yawing to the pilot's right (this movement is considered ailerons with the inverted spin; see part II A of this paper) and reversing the rudder to oppose the yawing motion of the spin. Good agreement between model and airplane spin-recovery characteristics is indicated.

(12) Airplane and model results appear to be in good agreement, as regards the oscillatory nature of the spins obtained, the possibility of "no spins" when erect spins were attempted, and the turns and control-manipulation techniques required for satisfactory recovery from both erect and inverted spins. When erect spins were obtained, they averaged about an angle of attack of 40° and 0.23 revolution per second for both model and airplane. The optimum control-manipulation techniques for recovery from both erect and inverted spins were ailerons full with the spin and

rudder full against the spin (for inverted spins, ailerons with the spin is stick left in spin yawing to pilot's right). In one full-scale incident, an airplane was lost after it failed to recover from an inverted spin by rudder reversal, but records salvaged from the crash indicated that the rudder had been held against the spin for only one-half a spinning turn; model tests showed that, whereas, at one-half a turn after rudder reversal, relatively little obvious change had occurred in the spinning motions, at about one turn the model was starting to recover. Subsequent flight tests were made in which it was indicated that maintaining rudder against the inverted spin effected the recovery just as it did on the model. It is considered that the model and full-scale results for this design are in good agreement.

(13) The model spun at an angle of attack of 72° and a spin rate of 0.26 revolution per second. On the spin-demonstration airplane, full prospin controls were held for five full spinning turns on only one spin attempt. Based on analysis of the time-history records for this flight and for other spin-attempt flights, this spin is considered to be the only fully developed one directly comparable with the model results; this airplane spin was at an angle of attack of 65° and a spin rate of 0.19 revolution per second. Both model and airplane tests indicated that optimum recovery technique included movement of ailerons full with the spin. Model tests indicated that even use of optimum controls would not always insure satisfactory recovery. Some time after the spin-demonstration flights, an airplane was lost after being intentionally spun during a pilot-familiarization flight. During this incident, no attempt to recover by moving ailerons to with the spin was made. In at least one other incident, one of these airplanes spun in flat from an unintentional spin starting at 38,000 feet altitude; the control manipulations used are not known. The full-scale and model results are considered to be in good agreement.

(14) Full-scale results indicate agreement with model data as regards the oscillatory nature of spins and the number of turns required for recovery from erect or from inverted spins. Full-scale spins indicate an average angle of attack of 42° and Ω of 0.18 revolution per second. No angle-of-attack or rate-of-rotation data were obtained for the model because its oscillatory behavior made it too difficult to maintain it in the tunnel long enough. For both model and airplane, satisfactory recoveries were obtained from erect spins by simultaneous movement of rudder to against the spin and ailerons to with the spin, whereas, for both model and airplane, satisfactory recoveries from inverted spins were obtained by movement of the rudder alone to against the spin. For this design, the full-scale and model results are considered to be in good agreement.

(15) Free-spinning-tunnel tests of the model indicated spins at an angle of attack of 45° and a spin rate of 0.31 revolution per second and that recoveries would be unsatisfactory unless ailerons were deflected to full with the spin in conjunction with rudder reversal. Full-scale

information available was based on two instances in which airplanes have gone into inadvertent spins. In one instance the pilot held ailerons against the spin and was able to get the airplane out of the spin only after a large number of turns and a dangerous loss of altitude. In the other instance, a fatal crash ensued. Based on the limited information available for the airplane, it is considered that model and airplane results are in agreement.

(16) The possibility of "no-spins" is indicated by both model and airplane results. When spins were obtained, the model spin was at an angle of attack of 45° and had a spin rate of 0.30 revolution per second, and the airplane spin was at an angle of attack of 40° and a spin rate of 0.23 revolution per second. Model results showed that recoveries by rudder against the spin would be poor but, if ailerons were moved to full with the spin as the rudder was reversed, recoveries would be satisfactory. On the airplane, the pilot used this recovery technique and the ailerons were so effective in providing recovery that the airplane rolled over into an inverted spin before he neutralized ailerons to regain normal control. Further model tests were then made and indicated that recovery on this design could be achieved by only partial movement of ailerons to with the spin, a result which was later proven out in flight.

As regards recovery from inverted spins, for this design, available model and airplane results indicated that satisfactory recovery can be obtained by moving the rudder full against the spin. However, on one instance on the airplane, the pilot became disoriented during an inverted spin and applied rudder full with the spin instead of against the spin and finally saved the airplane by using the spin-recovery parachute. Additional model tests were then made to determine whether recovery from inverted spins could be obtained by merely neutralizing the rudder, and the results indicated that satisfactory recoveries could be obtained thereby on this airplane. It is of interest to mention that for this design, which had no powerboost for deflecting the rudder, pilots have experienced very high rudder pedal forces when attempting either to reverse or neutralize the rudder during inverted spins. The full-scale and model results for this design are considered to be in good agreement.

(17) Model results indicated oscillatory spins with angles of attack of 45° to 80° and spin rate of 0.30 revolution per second with marginal recovery characteristics from erect spins by movement of rudder to against the spin and ailerons to with the spin. On the airplane, no trouble was encountered in obtaining recoveries by neutralizing all controls. However, the airplane spins were at considerably steeper angles of attack than were the model spins, averaging about an angle of attack of 35° and spinning at about 0.30 revolution per second. Model and full-scale inverted-spin and recovery test results were in excellent agreement and indicated that, in order to obtain recovery, either full rudder reversal or rudder neutralization accompanied by simultaneous movement of ailerons to full with the spin must be used. One crash ensued after failure to use either of these techniques.

Because of the discrepancy in erect spin and recovery characteristics, which may have been due to the differences in test techniques between model and airplane, this case is considered to be a disagreement.

(18) The basic model spun at an angle of attack of 44° and a spin rate of 0.39 revolution per second and the airplane spin is believed to have been similar. Recoveries on the model were satisfactory by rudder reversal to against the spin and unsatisfactory when the elevator was moved down simultaneously as the rudder was reversed. On the airplane, trouble was also encountered in recovering when the pilot used simultaneous rudder-reversal and stick-forward movements, and he had to fire emergency spin-recovery rockets to save the airplane. In subsequent flights, the pilot used rudder reversal and delayed moving the stick forward until another half turn of the spin, and was able to get satisfactory recoveries. Model tests also showed that strakes were required to provide good recovery when certain external stores were attached, and flight tests indicated these strakes to be necessary and sufficient on the airplane. Inverted-spin and recovery characteristics for model and airplane were also in agreement.

(19) On this design, a major change was made in the airplane after early discussion with NACA spin-tunnel personnel and only the final design was tested in the Langley 20-foot free-spinning tunnel. The model spun at an angle of attack of 50° and at a spin rate of 0.37 revolution per second, and full-scale records indicated a spin at an angle of attack of 47° and 0.34 revolution per second. Spin recoveries for both model and airplane were similar and satisfactory when the rudder was reversed and movement of the elevator down followed. Recoveries from inverted spins were also satisfactory for both model and airplane. Model and full-scale results for this design appear to be in good agreement.

(20) Two possible types of spin were indicated for the model. One was a spin at an angle of attack of 74° and with a spin rate of 0.28 revolution per second and the other was at about an angle of attack of 54° and a spin rate of 0.10 revolution per second. The model was much more prone to spin at the steeper attitude than at the flatter attitude. Recoveries from the steeper spin by rudder reversal were satisfactory but, from the flatter spin, the model would not recover when simultaneous rudder reversal and aileron movement to with the spin were applied. The airplane on several occasions entered a flat developed spin similar to the flatter spin of the model, being at an angle of attack greater than 70° and spinning at approximately 0.22 revolution per second. Recoveries could not be obtained by rudder and aileron movement just as they could not be obtained on the model. In several instances, the spin-recovery parachute had to be used and one test airplane crashed. Model tests at Langley have indicated that the use of fuselage nose strakes on this airplane should have a favorable effect on recovery when full rudder reversal and ailerons to full-with the spin are used. The test results further indicated that for optimum effect of strakes, a strake should be extended

for recovery only on the inboard side of the fuselage (right side in a right spin). Analysis of this effect is given in part II B of this paper. A further advantage of using extendable strakes rather than fixed strakes is to avoid possible worsening of longitudinal stability characteristics at high angles of attack. Brief tests made of the airplane with strakes installed indicate agreement with the model tests with strakes on. In general, it is felt that model results predicted full-scale results adequately.

(21) Model results indicated the possibility of flat-attitude rapidly rotating spins ($\alpha = 83^{\circ}$, $\Omega = 0.49$ rev/sec) from which recoveries were poor as well as of a steeper type oscillatory spin ($\alpha = 62^{\circ}$, $\Omega = 0.22$ rev/sec) from which simultaneous reversal of the rudder to against the spin and movement of the ailerons to with the spin gave good recoveries. Full-scale flight tests are proceeding cautiously and the manufacturer, who has been working in close cooperation with Langley spin-tunnel personnel, has so far been able to avoid the flat rapidly rotating spin. Recoveries have been good from the steeper type of spin, and it has been found essential that ailerons be moved with the spin to achieve these recoveries. Model and airplane results appear to be in agreement.

For 19 of the 21 designs compared, it is considered that free-spinning-tunnel model results were in good agreement with corresponding full-scale airplane spins and recoveries. In the other two cases (numbers 10 and 17) there appear to be some significant differences between model and airplane results. It appears that some of the differences which have been noted between model and airplane behavior during spins and recoveries are due to differences in testing technique between free-spinning tunnel models and airplanes as well as to differences in physical features and control-manipulation techniques and possible scale effects. It should also be borne in mind that many more repeat launching tests are made with models than is possible in flight, and sooner or later some pilot may get into whatever spin condition the model results indicate as possible. Until or unless this happens there may appear to be poor correlation for a particular design. Events similar to this have occurred from time to time in the past.

Another factor which is being encountered today and sometimes gives the wrong impression to a pilot as regards full-scale and model spin correlation occurs because of the high inertias of today's aircraft which causes them to enter what might be termed "trajectory" spins. These can be encountered when the spin is first entered and the airplane is spinning about an axis inclined between the horizontal and vertical. To the pilot who is headed straight down one moment and is horizontal the next, the spin would be termed oscillatory, but it may only seem oscillatory because the spinning motion at the time is about an inclined axis. The same situation could exist at high speeds where the airplane could go out of control and would in effect be in a trajectory spin about a near-horizontal

axis. These types of spin-entry motions as well as inverted spins entered inadvertently during maneuvers or while attempting erect spins or during recovery from some erect spins have accentuated a rising problem of pilot disorientation that sometimes makes it extremely difficult to determine the proper direction in which to move controls for recovery. This pilot disorientation can give the impression of lack of agreement between model and airplane behavior. Reference 31 discusses some of the apparent reasons for pilot's loss of orientation and points out that a disoriented pilot in a confusing inverted or erect spinning motion should attempt to orient himself with respect to direction of turn by referring to the airplane rate-of-turn indicator in order to determine properly the direction of the yawing component of the total spin rotation. In some cases, it may become necessary to provide a convenient automatic device to assure spin recovery from an inadvertent or otherwise confusing spin motion or from a motion in which a pilot cannot physically actuate controls even if he is completely oriented. This latter could happen, for example, when the spin has a high rate of rotation and the pilot is well forward in the airplane and far ahead of the spin axis, for which case accelerations on the pilot as high as 7 or 8g's have been indicated as possible. Even though this acceleration acts transverse to the long axis of his body, this may nevertheless have serious consequences as regards incapacitating him for proper handling of controls. It may be possible to install an automatic system in which rate gyroscopes sensitive to rolling and yawing velocities would actuate servos to move the controls properly for recovery regardless of whether the spin is erect or inverted. Such a system would probably have to be tailored to each airplane design, depending on control manipulation required for optimum recovery. Separate devices may be required for recovery from developed spins and for recovery from incipient-spin motions where the required control technique may vary.

It may be said that free-spinning-tunnel tests of models, properly interpreted, can give good indications of the probable spin and recovery characteristics of corresponding airplanes and have proven to be extremely reliable as a means of determining optimum control technique for best recovery from spins. Proper control over and specification of exact values and configurations for the factors of weight, center-of-gravity location, moments of inertia, control-manipulation techniques, and physical design features during flight spin tests, along with complete instrument time-history records is discussed in part I C of this paper, should aid in allowing better future correlation between aircraft and models.

CONCLUSIONS

A study has been made to determine the status of spin research for recent airplane designs. Major problem areas considered were interpretation of results of spin model research, analytical spin studies,

techniques involved in the measurement of various parameters in the spin, effectiveness of controls during spins and recoveries, influence of long noses, strakes, and canards in spins, and correlation of airplane and model spin and recovery characteristics. The following general conclusions are drawn:

1. Proper interpretation of spin-tunnel results involves accurate consideration of possible scale effects, effects of tunnel technique, and evaluation of results for specific conditions of aerodynamic and mass characteristics and control settings in terms of sensitivity to possible variations at the spinning attitudes.

2. The results of initial studies involving automatic computing machines have indicated the value of analytical techniques in augmenting knowledge gained from free-spinning model tests and airplane spin tests.

3. In order to measure angle of attack and sideslip at spin attitudes a swiveling-type cruciform vane that has two degrees of rotation or, as an alternate, three vanes each having one degree of rotation may be used.

4. The resultant velocity at spin attitudes should be obtained from a tube that swivels to aline with the relative wind.

5. In measuring angular accelerations in spins, an accelerometer should be used that does not also record cross-couple terms.

6. In order to measure flow-direction angles and resultant velocity at spin attitudes, different techniques must be used from those employed at low angles of attack. For the transfer of the indicated measurements in spins to the center of gravity, linearization of the transfer terms is not adequate.

7. The spin is primarily a rotary motion and can most effectively be terminated by a moment or moments. It appears that provision of a yawing moment is most effective for this purpose and that the most effective way of providing such a moment is greatly dependent upon the mass distribution of the airplane.

8. Spin attitude and rate of rotation are apparently greatly dependent upon the pitching-moment characteristics of the airplane and upon the relation of these characteristics to the yawing-moment characteristics. It appears that rolling-moment characteristics may also have an appreciable influence upon the oscillatory nature of the spin.

9. High moments of inertia of current airplanes and possible high angular velocities in the spin may make it extremely difficult to insure satisfactory recovery through use of available controls on an airplane. Furthermore, pilot disorientation in the developed spin may prevent

correct use of controls even when they are sufficiently effective. It thus becomes increasingly important to prevent the developed spin by termination of the motion during the incipient spin phase. Controls ineffective in the developed spin because of attitudes, rotation, and gyroscopic effects may be effective for termination of the incipient spin.

10. For contemporary fighters having long nose lengths, the cross-sectional shape of the fuselage forward of the wing can have a considerable influence on the spin and spin-recovery characteristics.

11. For certain cross-sectional shapes of the nose, the Reynolds number at which the nose is operating during spins may have a considerable influence on whether the nose provides a damping or a propelling moment and may be significant in interpretation of model results.

12. Use of a properly placed extendible strake or extendible canard-type surface actuated on the inboard side of airplanes having long nose lengths (that is, right side in a right spin) may aid in the termination of spins.

13. The results of free-spinning-tunnel model investigations, properly interpreted, are giving good indications of the probable spin and recovery characteristics of airplanes and are extremely reliable as a means of determining optimum control technique for best recovery from spins.

14. For proper correlation of model and airplane spin test results, it is essential that accurate values of mass and dimensional characteristics at the time of the spin tests be stipulated.

15. Existing criteria regarding the nature of the spin and recovery therefrom are considered inadequate for current designs having extremely long fuselage nose lengths. It appears that, at present for a proposed design, resort should be made to actual model tests in a spin tunnel. This is primarily a result of the fact that the nose of the airplane can be the source of a strong autorotative moment which can be critically dependent upon cross-sectional shape. Also even slight irregularities of the nose due to production tolerances may have a significant effect in some instances.

16. For current designs, determination of a proper emergency spin-recovery device should be by model spin tests.

Langley Aeronautical Laboratory,
National Advisory Committee for Aeronautics,
Langley Field, Va., May 29, 1957.

REFERENCES

1. Neihouse, Anshal I., Lichtenstein, Jacob H., and Pepoon, Philip W.: Tail-Design Requirements for Satisfactory Spin Recovery. NACA TN 1045, 1946.

2. Scherberg, Max, and Rhode, R. V.: Mass Distribution and Performance of Free Flight Models. NACA TN 268, 1927.

3. Neihouse, Anshal I., and Pepoon, Philip W.: Dynamic Similitude Between a Model and a Full-Scale Body for Model Investigation at Full-Scale Mach Number. NACA TN 2062, 1950.

4. Zimmerman, C. H.: Preliminary Tests in the N.A.C.A. Free-Spinning Wind Tunnel. NACA Rep. 557, 1936.

5. Scher, Stanley H.: Analysis of the Spin and Recovery From Time Histories of Attitudes and Velocities As Determined for a Dynamic Model of a Contemporary Fighter Airplane in the Free-Spinning Tunnel. NACA TN 3611, 1956.

6. Stone, Ralph W., Jr., Burk, Sanger M., Jr., and Bihrle, William, Jr.: The Aerodynamic Forces and Moments on a 1/10-Scale Model of a Fighter Airplane in Spinning Attitudes As Measured on a Rotary Balance in the Langley 20-Foot Free-Spinning Tunnel. NACA TN 2181, 1950.

7. Seidman, Oscar, and Neihouse, A. I.: Free-Spinning Wind-Tunnel Tests of a Low-Wing Monoplane With Systematic Changes in Wings and Tails. I. Basic Loading Condition. NACA TN 608, 1937.

8. Seidman, Oscar, and Neihouse, A. I.: Free-Spinning Wind-Tunnel Tests of a Low-Wing Monoplane With Systematic Changes in Wings and Tails. II. Mass Distributed Along the Fuselage. NACA TN 630, 1937.

9. Seidman, Oscar, and Neihouse, A. I.: Free-Spinning Wind-Tunnel Tests of a Low-Wing Monoplane With Systematic Changes in Wings and Tails. III. Mass Distributed Along the Wings. NACA TN 664, 1938.

10. Seidman, Oscar, and Neihouse, A. I.: Free-Spinning Wind-Tunnel Tests of a Low-Wing Monoplane With Systematic Changes in Wings and Tails. IV. Effect of Center-of-Gravity Location. NACA Rep. 672, 1939.

11. Seidman, Oscar, and Neihouse, A. I.: Free-Spinning Wind-Tunnel Tests of a Low-Wing Monoplane With Systematic Changes in Wings and Tails. V. Effect of Airplane Relative Density. NACA Rep. 691, 1940.

12. Neihouse, Anshal I.: The Effect of Variations in Moments of Inertia on Spin and Recovery Characteristics of a Single-Engine Low-Wing Monoplane With Various Tail Arrangements, Including a Twin Tail. NACA TN 1575, 1948.

13. Seidman, Oscar, and Neihouse, A. I.: Comparison of Free-Spinning Wind-Tunnel Results With Corresponding Full-Scale Spin Results. NACA WR L-737, 1938. (Formerly NACA MR, Dec. 7, 1938.)

14. Berman, Theodore: Comparison of Model and Full-Scale Spin Test Results for 60 Airplane Designs. NACA TN 2134, 1950.

15. Stone, Ralph W., Jr., Garner, William G., and Gale, Lawrence J.: Study of Motion of Model of Personal-Owner or Liason Airplane Through the Stall and Into the Incipient Spin by Means of a Free-Flight Testing Technique. NACA TN 2923, 1953.

16. Scher, Stanley H.: An Analytical Investigation of Airplane Spin-Recovery Motion by Use of Rotary-Balance Aerodynamic Data. NACA TN 3188, 1954.

17. Burk, Sanger M., Jr.: Analytical Determination of the Mechanism of an Airplane Spin Recovery With Different Applied Yawing Moments by Use of Rotary-Balance Data. NACA TN 3321, 1954.

18. Neihouse, A. I.: A Mass-Distribution Criterion for Predicting the Effect of Control Manipulation on the Recovery From a Spin. NACA WR L-168, 1942. (Formerly NACA ARR, Aug. 1942.)

19. Neihouse, Anshal I.: Effect of Current Design Trends on Airplane Spins and Recoveries. NACA RM L52A09, 1952.

20. Anon.: AGARD Flight Test Manual. North Atlantic Treaty Organization.
Dommasch, Daniel O., ed.: Vol. I - Performance.
Perkins, Courtland D., ed.: Vol. II - Stability and Control.
Durbin, Enoch J., and Seckel, Edward, eds.: Vol. III - Instrumentation Catalog.

21. Stone, Ralph W., Jr., and Klinar, Walter J.: The Influence of Very Heavy Fuselage Mass Loadings and Long Nose Lengths Upon Oscillations in the Spin. NACA TN 1510, 1948.

22. Bowman, James S., Jr.: Free-Spinning-Tunnel Investigation of Gyroscopic Effects of Jet-Engine Rotating Parts (or of Rotating Propellers) on Spin and Spin Recovery. NACA TN 3480, 1955.

23. Healy, Frederick M., and Klinar, Walter J.: Comparison of Effects of Ailerons and Combinations of Spoiler-Slot-Deflector Arrangements on Spin Recovery of Sweptback-Wing Model Having Mass Distributed Along the Fuselage. NACA RM L54I14, 1954.

24. Neihouse, Anshal I., and Pitkin, Marvin: Effect of Wing Leading-Edge Slots on the Spin and Recovery Characteristics of Airplanes. NACA WR L-504, 1943. (Formerly NACA ARR 3D29.)

25. Neihouse, Anshal I.: Spin-Tunnel Investigation to Determine the Effectiveness of a Rocket for Spin Recovery. NACA TN 1866, 1949.

26. Burk, Sanger M., Jr., and Healy, Frederick M.: Comparison of Model and Full-Scale Spin Recoveries Obtained by Use of Rockets. NACA TN 3068, 1954.

27. Malvestuto, Frank S., Jr.: Method of Estimating the Minimum Size of a Tail or Wing-Tip Parachute for Emergency Spin Recovery of an Airplane. NACA RM L8D27, 1948.

28. Zahm, A. F., Smith, R. H., and Louden, F. A.: Forces on Elliptic Cylinders in Uniform Air Stream. NACA Rep. 289, 1928.

29. Irving, H. B., Batson, A. S., and Warsap, J. H.: The Contribution of the Body and Tail of an Aeroplane to the Yawing Moment in a Spin. R. & M. No. 1689, British A.R.C., 1936.

30. Letko, William: A Low-Speed Experimental Study of the Directional Characteristics of a Sharp-Nosed Fuselage Through a Large Angle-of-Attack Range at Zero Angle of Sideslip. NACA TN 2911, 1953.

31. Scher, Stanley H.: Pilot's Loss of Orientation in Inverted Spins. NACA TN 3531, 1955.

TABLE I.- THE LANGLEY 20-FOOT FREE-SPINNING TUNNEL

Speed range, ft/sec	0 to 97
Dynamic pressure, lb/sq ft	0 to 11
Reynolds number, per ft	
Idling	84,000
Maximum	620,000
Test section:	
Position	Vertical
Number of sides	12
Distance across flats, ft	20
Length (vertical), ft	$25\frac{1}{3}$
Type throat	Closed
Return passage	Annular
Tunnel construction:	
Test section	Riveted structural steel frame with steel sheet skin
Housing	Structural steel frame covered with corrugated asbestos
Fan:	
Diameter, ft	21
Number of blades	3
Material	Wood
Speed	Variable
Fan drive:	
Type	Direct
Motor	400 horsepower at 530 rpm; 1,332 horsepower (maximum) at 700 rpm; direct current
Speed control	Armature voltage control, constant field
Location	Exit cone
Cooling	Air
Air flow:	
Smooth and of increasing velocity gradient of 6 percent from center to three-fourths tunnel radius, stable vertical velocity gradient (slight divergence of walls)	
High acceleration of airstream, ft/sec^2	15
High deceleration of airstream, ft/sec^2	25
Method of smoothing:	
Two sets turning vanes downstream end of exit cone; honeycomb and screens in entrance cone	
Energy ratio	0.5
Turbulence factor	2.0
Indicating and recording equipment:	
Motion-picture camera with timer and airspeed indicator (manometer); also, stop watch and tachometer	

TABLE II.- ROTARY BALANCE OF SPIN TUNNEL

Balance:

Type	Resistance strain gage
Components (body axes)	6
Location of measuring elements	Box which fits into model

Load range:

	Large balance	Small balance
Normal force, lb	26	15
Longitudinal force, lb	15	4
Lateral force, lb	4	2
Yawing moment, ft-lb	8	3
Rolling moment, ft-lb	15	3
Pitching moment, ft-lb	12	6

Model support:

Type	Gooseneck rotary arm (can be readily moved to side for free-spinning tests)
Construction	Welded tubular steel

Operation:

Drive	1/2 horsepower; variable-speed alternating-current motor and a right-angle gear head
Speed, rpm	±200
Range of attitude:	
Angle of attack, deg	±90
Angle of sideslip, deg	±180
Spin radius, ft	0 to $2\frac{1}{2}$

Method of attitude changes	Remote control

Indicating equipment:

Airspeed	Manometer
Rotary speed	Tachometer
Forces and moments	Microanmeter

Scale (approximate) of models tested:

Large balance	1/10
Small balance	1/20

TABLE III.- MASS CHARACTERISTICS, CONTROL SETTINGS, AND SPIN CHARACTERISTICS FOR AIRPLANE CONFIGURATION

Mass characteristics:	
Weight, lb	17,835
$\frac{x}{\bar{c}}$	0.212
$\frac{z}{\bar{c}}$	0.009
μ at 15,000-foot altitude	17.35
I_X	17,342
I_Y	37,920
I_Z	53,396
$\frac{I_X - I_Y}{mb^2}$	-147×10^{-4}
$\frac{I_Y - I_Z}{mb^2}$	-110×10^{-4}
$\frac{I_Z - I_X}{mb^2}$	-257×10^{-4}
Control settings:	
Elevator, up (stick back), deg	20
Ailerons, against spin (stick left in spin to pilot's right), deg	14
Rudder with spin (right pedal forward in spin to pilot's right), deg	30
Spin characteristics:	
p, radians/sec	1.5080
q, radians/sec	0.0152
r, radians/sec	1.5610
u, ft/sec	150.058
v, ft/sec	-12.833
w, ft/sec	155.373
V, ft/sec	216
α, deg	46
β, deg	-3.4
θ_e, deg	-44
ϕ_e, deg	0.56

TABLE IV.- CONDITIONS INVESTIGATED AND RESUME OF RESULTS

Run no.	Results on figure	Disturbance applied	Approximate duration of run, sec	Remarks
1	6	$\Delta C_n = -0.01$	7.2	α to 0, p to 0, r approaching 0; recovered
2	6	$\Delta C_n = -0.025$	4.7	Generally similar to run 1, only more rapid recovery
3	6	$\Delta C_n = -0.04$	3.3	Same as run 2
4	7	$\Delta C_l = 0.01$	13.4	α and $\dot{p}$ to 0; r almost to 0; recovered
5	7	$\Delta C_l = 0.03$	6.3	Similar to run 4, only more rapid; of interest is trend to more inward sideslip as C_l is increased
6	7	$\Delta C_l = 0.04$	6.2	About same as run 5
7	8	Thrust, $\frac{W}{4}$	15.5	α approaching 0 rapidly; β oscillations large; may indicate roll-over, recovery imminent
8	8	Thrust, $\frac{3W}{4}$	10.9	β became too large negatively; machine stopped

TABLE V.- SOME PHYSICAL CHARACTERISTICS OF AIRPLANE DESIGNS FOR WHICH

AIRPLANE AND MODEL SPINS AND RECOVERIES WERE COMPARED

Model	Airplane type	Wing sweep, deg	Weight, lb	Wing loading, lb/sq ft	$\frac{I_Y}{I_X}$	$\frac{I_X - I_Y}{mb^2}$	$\frac{I_Y - I_Z}{mb^2}$	$\frac{I_Z - I_X}{mb^2}$
1	Midwing attack	0 at 0.30$\bar{c}$	19,200	35.00	1.32	-49×10^{-4}	-143×10^{-4}	192×10^{-4}
2	Low-wing attack	0 at .50$\bar{c}$	15,175	37.91	1.66	-117	-127	244
3	Low-wing attack	33 at .25$\bar{c}$	13,313	51.24	2.94	-383	-132	515
4	Midwing fighter	0 at .27$\bar{c}$	13,000	52.00	2.52	-205	-108	313
5	Midwing fighter	0 at .50$\bar{c}$	21,500	53.75	2.45	-144	-79	223
6	Midwing fighter	0 at .50$\bar{c}$	31,000	51.14	.80	63	-292	229
7	Midwing fighter	35 at .25$\bar{c}$	20,545	41.42	1.78	-188	-221	409
8	Midwing fighter	35 at .25$\bar{c}$	24,656	46.06	1.87	-174	-183	357
9	Midwing fighter	35 at .25$\bar{c}$	15,600	52.00	2.92	-304	-126	430
10	Midwing fighter	35 at .25$\bar{c}$	14,100	56.40	5.10	-567	-103	670
11	Midwing fighter	40 at .25$\bar{c}$	25,000	76.92	1.79	-210	-179	389
12	Low-midwing fighter	43 at .25$\bar{c}$	26,878	51.79	5.03	-639	-96	735
13	Low-midwing fighter	45 at .25$\bar{c}$	23,996	63.82	5.20	-466	-80	546
14	Low-midwing fighter	45 at .25$\bar{c}$	29,054	65.73	4.44	-557	-105	662
15	High-midwing research	60 at .25$\bar{c}$	6,709	38.56	5.84	-879	-64	943
16	Midwing fighter	Delta 53 at leading edge	16,821	30.20	3.04	-361	-156	517
17	Low-wing fighter	35 at .25$\bar{c}$	16,500	48.72	1.88	-147	-142	289
18	Low-wing trainer	0 at .25$\bar{c}$	8,216	30.31	1.28	-59	-180	239
19	Midwing trainer	0 at .25$\bar{c}$	5,400	29.36	.91	21	-214	193
20	Low-wing fighter	40 at leading edge	36,884	87.99	7.41	-677	-58	735
21	High-wing fighter	42 at .25$\bar{c}$	20,800	53.98	7.55	-840	-77	917
	Maximum	60	36,884	87.99	7.55			
	Minimum	0	5,400	29.36	.80			

TABLE VI.- ERECT SPINS AND RECOVERIES FOR MODELS AND AIRPLANES COMPARED

Model	Model (a)				Airplane (b)				Remarks (See text for details)
	α, deg	Ω, rev/sec	Recovery characteristics satisfactory (yes or no) (c)	Control positions for optimum recovery	α, deg (d)	Ω, rev/sec (d)	Recovery characteristics satisfactory (yes or no)	Control positions for optimum recovery	
1	53	0.32	No	None	N.A.	N.A.	No	None	Agreement
2	64	0.33	No	None	64	0.33	No	None	Agreement
3	e		Yes	R.A., then E.D.	N.A.	N.A.	Yes	R.A., then E.D.	Agreement
4	f,g30 to 65	0.22	Yes	R.A., then E.D.	hN.A.	N.A.	Yes	R.A., then E.D.	Considered an agreement
5	28	0.26	Yes	R.A., then E.D.	N.A.	N.A.	Yes	R.A., then E.D.	Agreement
6	36	0.36	Yes	R.A., then E.D.	45	0.19	Yes	R.A., then E.D.	Agreement
7	No spin				h				Considered an agreement
8	f,g,i42 to 52	0.24	Yes	R.A. and A.W.	No spin				Considered an agreement
j9	f,g,i42 to 61	0.26	No	R.A., then E.D.	hN.A.	hN.A.	Yes	E.N., or R.C.	Considered an agreement
j10	f,g60 to 75	0.26	No	R.A., then E.D.	h25	h0.12	Yes	E.N. and R.N.	Some disagreement
11	f34 to 62	0.40	Yes	R.A. and A.W.	N.A.	N.A.	Yes	R.A. and A.W.	Agreement
12	f,g40	0.23	Yes	R.A. and A.W.	f,g40	0.23	Yes	R.A. and A.W.	Agreement
13	72	0.26	No	R.A. and A.W.	65	0.19	Probably no	R.A. and A.W.	Agreement
14	f,e		Yes	R.A. and A.W.	f42	0.18	Yes	R.A. and A.W.	Agreement
15	45	0.31	Yes	R.A. and A.W.	N.A.	N.A.	k	k	Agreement
16	g45	0.30	Yes	R.A. and A.W.	g40	0.23	Yes	R.A. and A.W.	Agreement
17	f45 to 80	0.30	No	R.A. and A.W.	35	0.30	Yes	E.N. and R.N.	Disagreement
18	44	0.39	Yes	R.A., then E.D.	l44	l0.39	Yes	mR.A., then E.D.	Agreement
19	50	0.37	Yes	R.A., then E.D.	47	0.34	Yes	R.A., then E.D.	Agreement
n20	74	0.28	No	None	>70	0.22	No	None	Agreement
	54	0.10	Yes	R.A. and A.W.					
n21	83	0.49	No	None					
	62	0.22	Yes	R.A. and A.W.	N.A.	N.A.	Yes	R.A. and A.W.	Agreement

[a]Model controls at criterion spin settings; see part IA.
[b]Airplane controls at normal for spinning.
[c]For definition of satisfactory recovery, see part IA.
[d]α and Ω approximate for airplanes.
[e]Rate of descent too great to hold in tunnel for measuring α and Ω.
[f]Oscillatory spin.
[g]"No spins" also obtainable.
[h]May have been "no spin."
[i]Model spins very difficult to obtain.
[j]Spoilers used for lateral control.
[k]Not known because optimum controls not used.
[l]No records, but believed approximately correct based on verbal information.
[m]Very important not to move rudder and elevator together; see text.
[n]Two types of spin obtained with model.

Abbreviations	
N.A.	not available
R.A.	rudder against spin
E.D.	elevator down
A.W.	ailerons with
E.N.	elevator neutral
R.C.	release all controls
R.N.	rudder neutral

CHART 1.- EFFECT OF NOSE CROSS-SECTIONAL SHAPE ON SPIN AND RECOVERY CHARACTERISTICS OF MODEL 1 (SEE FIGURE 18) - NO ENGINE ROTATION SIMULATED

[For aileron-against and aileron-neutral spins recovery attempted by full rudder reversal and simultaneous movement of the ailerons to full-with the spin; for aileron-with spins recovery attempted by rudder reversal (recovery attempted from and steady-spin data presented for, rudder full-with the spin)]

MODEL 1	ATTITUDE ERECT	DIRECTION RIGHT	LOADING: (SEE FIGURE 18)	ENGINE ROTATION NOT SIMULATED
		ALTITUDE 30,000 FT	CENTER OF GRAVITY 33 PERCENT $\bar{c}$	

Model values converted to full scale U - inner wing up D - inner wing down

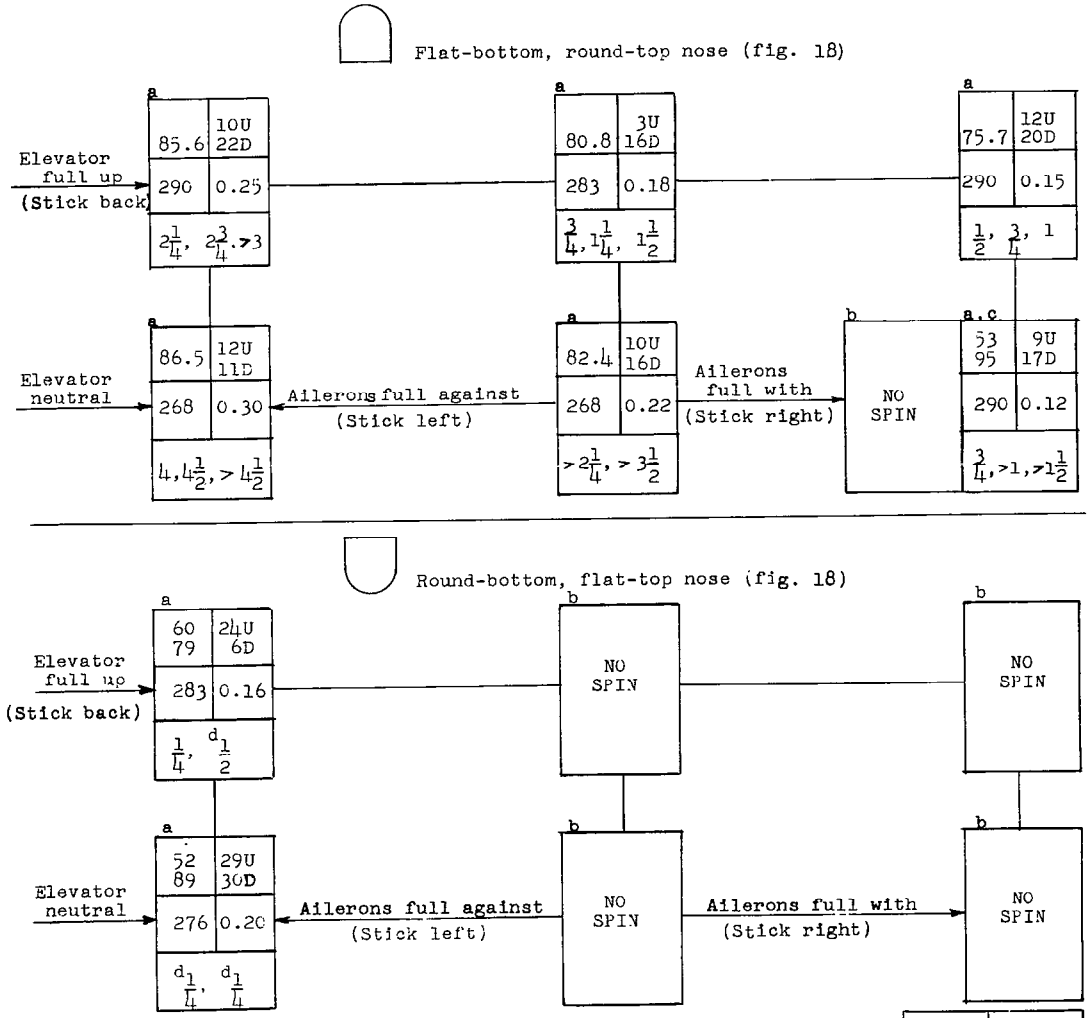

[a]Oscillatory spin. range or average values given.
[b]Model entered a glide.
[c]Two conditions possible.
[d]Upon recovery, model entered a spin in opposite direction.

CHART 2.- EFFECT OF NOSE CROSS-SECTIONAL SHAPE ON SPIN AND RECOVERY CHARACTERISTICS OF MODEL 1 (SEE FIGURE 18) - ENGINE ROTATION SIMULATED

[For aileron-against and aileron-neutral spins recovery attempted by full rudder reversal and simultaneous movement of the ailerons to full-with the spin; for aileron-with spins recovery attempted by rudder reversal (recovery attempted from and steady-spin data presented for, rudder full-with the spin)]

MODEL 1	ATTITUDE ERECT	DIRECTION RIGHT	LOADING: (See Figure 18)	FULL ENGINE SPEED SIMULATED, FLYWHEEL ROTATION CLOCKWISE VIEWED FROM REAR (SAME SENSE AS SPIN DIRECTION)
		ALTITUDE 30,000 FT	CENTER OF GRAVITY 33 PERCENT $\bar{c}$	

Model values converted to full scale U - inner wing up D - inner wing down.

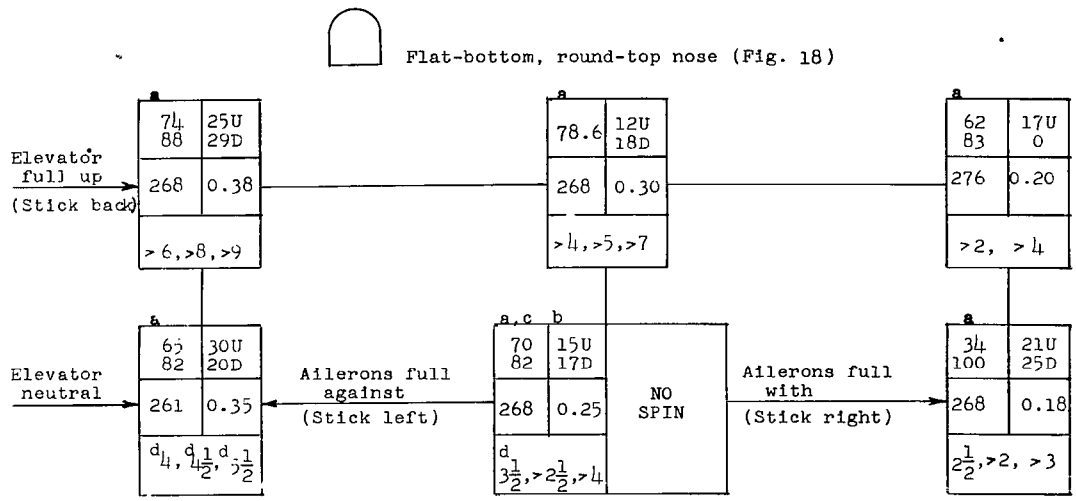

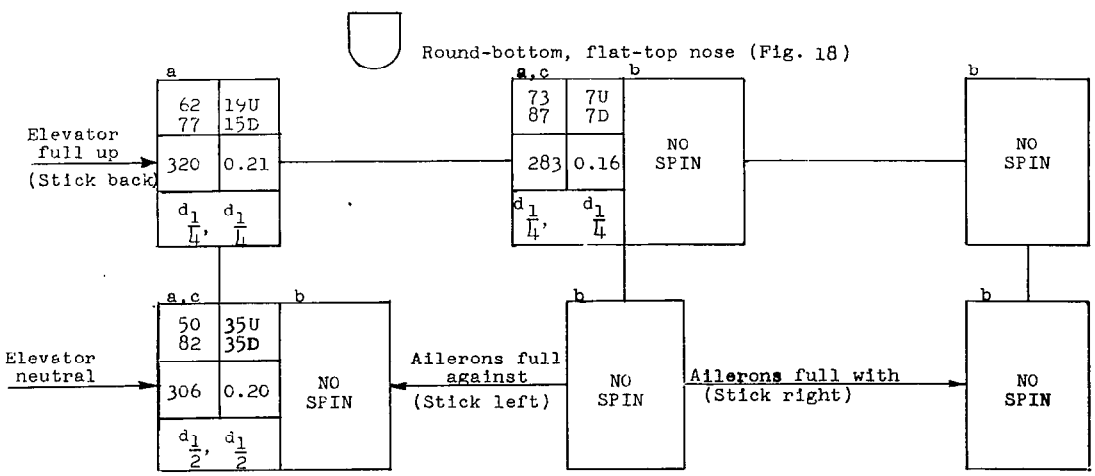

α (deg)	ϕ (deg)
V (fps)	Ω (rps)
Turns for recovery	

[a]Oscillatory spin, range or average values given.
[b]Model entered a glide.
[c]Two conditions possible.
[d]Upon recovery, model entered a spin in opposite direction.

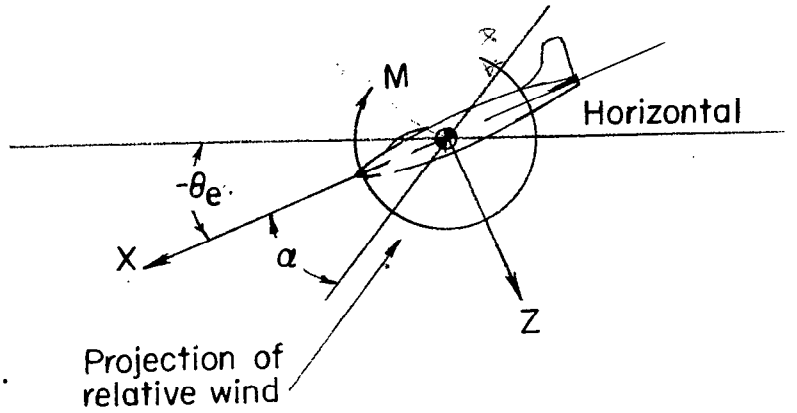

(a) ϕ_e and $\psi_e = 0$.

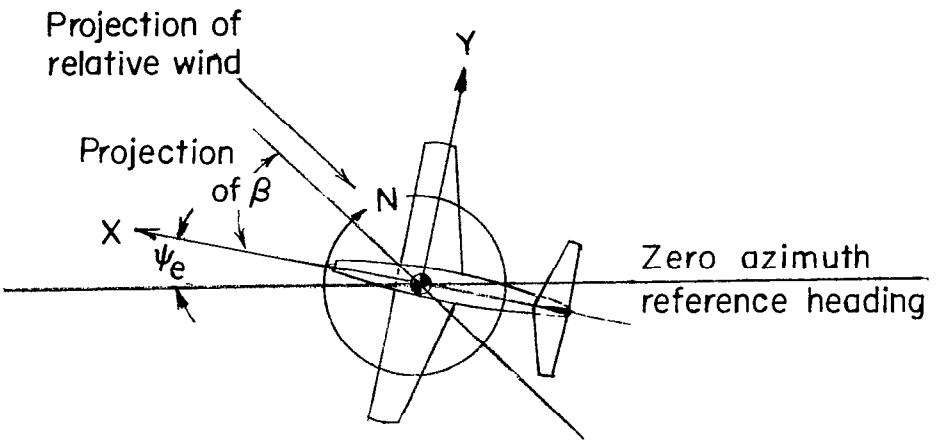

(b) θ_e and $\phi_e = 0$.

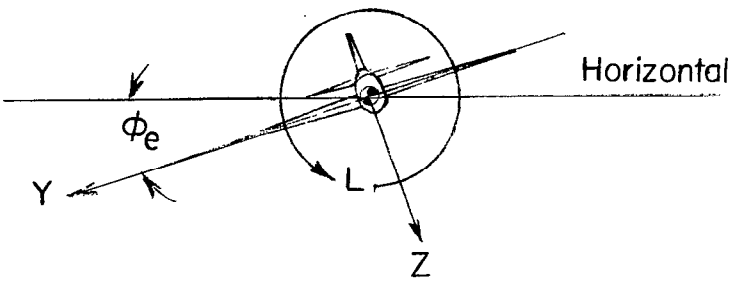

(c) θ_e and $\psi_e = 0$, and in this case $\phi = \phi_e$.

Figure 1.- Body system of axes and related angles.

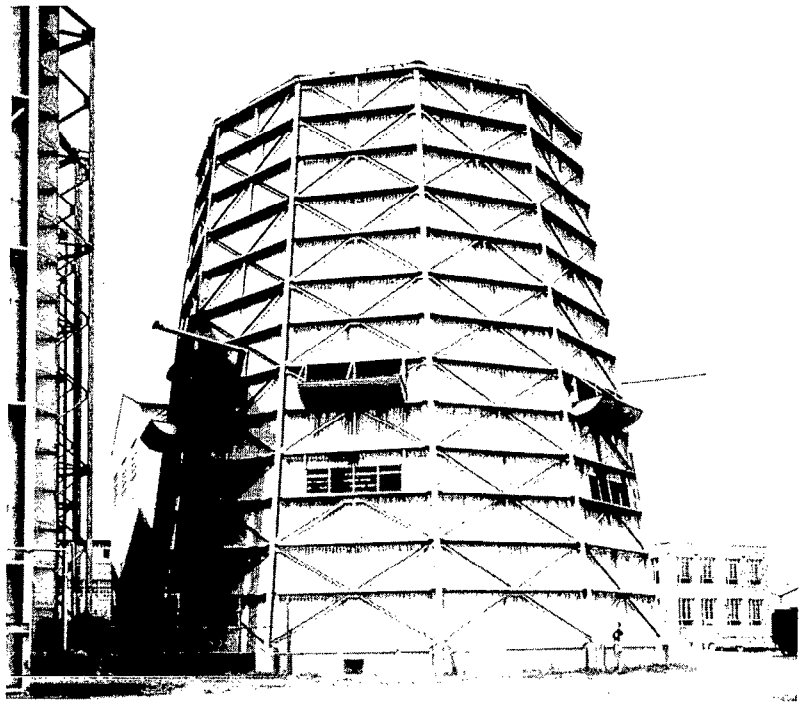

L-86257

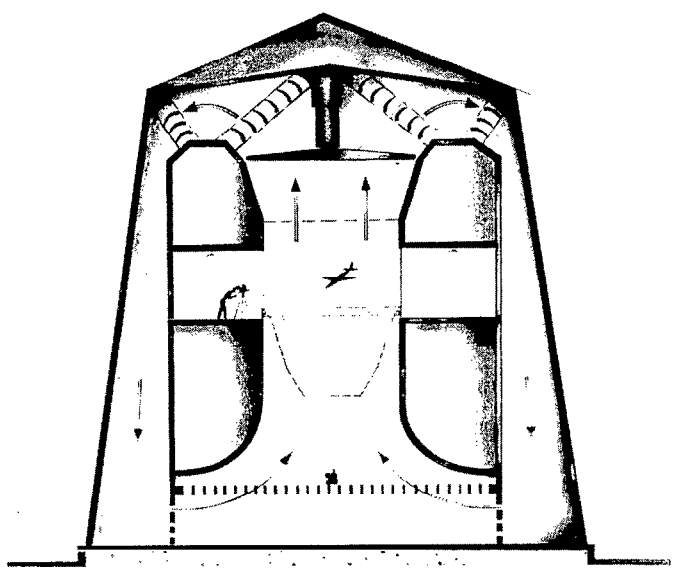

L-86258

Figure 2.- Exterior and cross-sectional views of Langley 20-foot free-spinning tunnel.

Figure 3.- Interior view of tunnel. L-490(

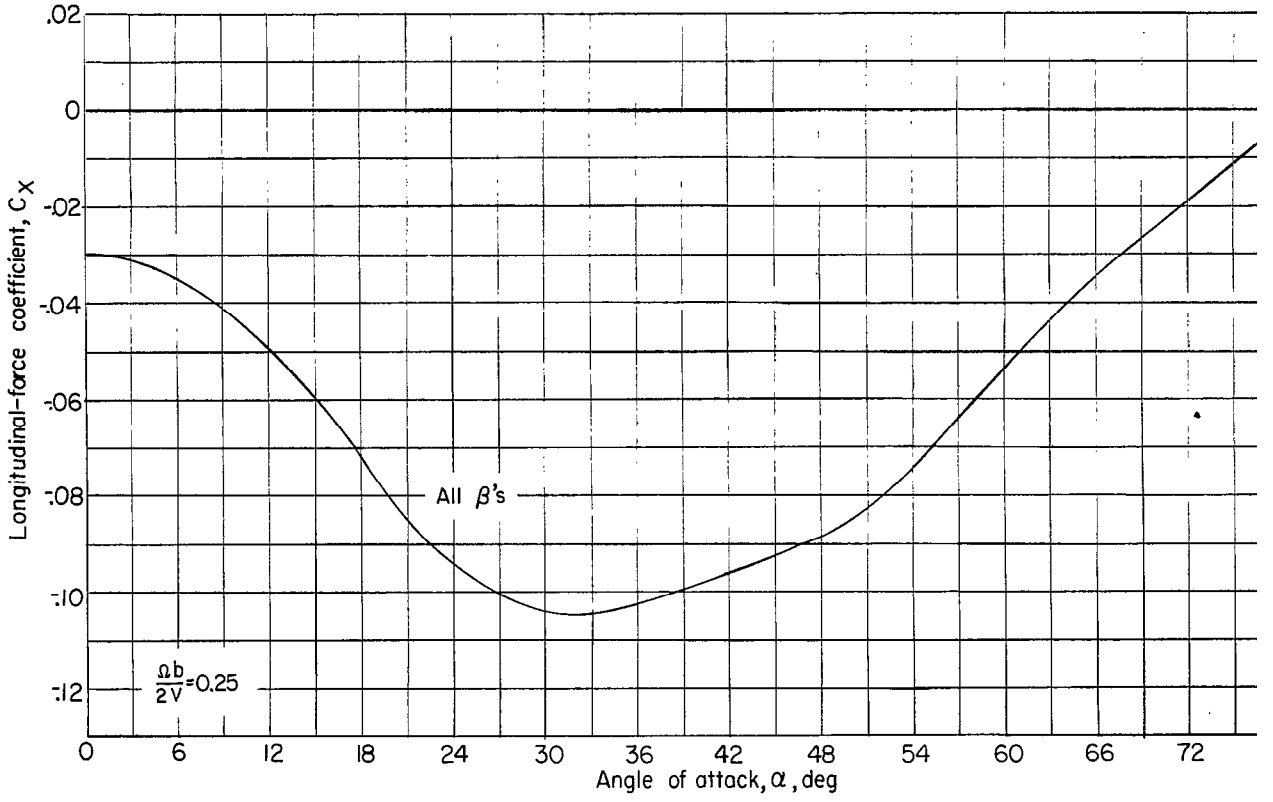

(a) Variation of C_X with α.

Figure 4.- Aerodynamic data.

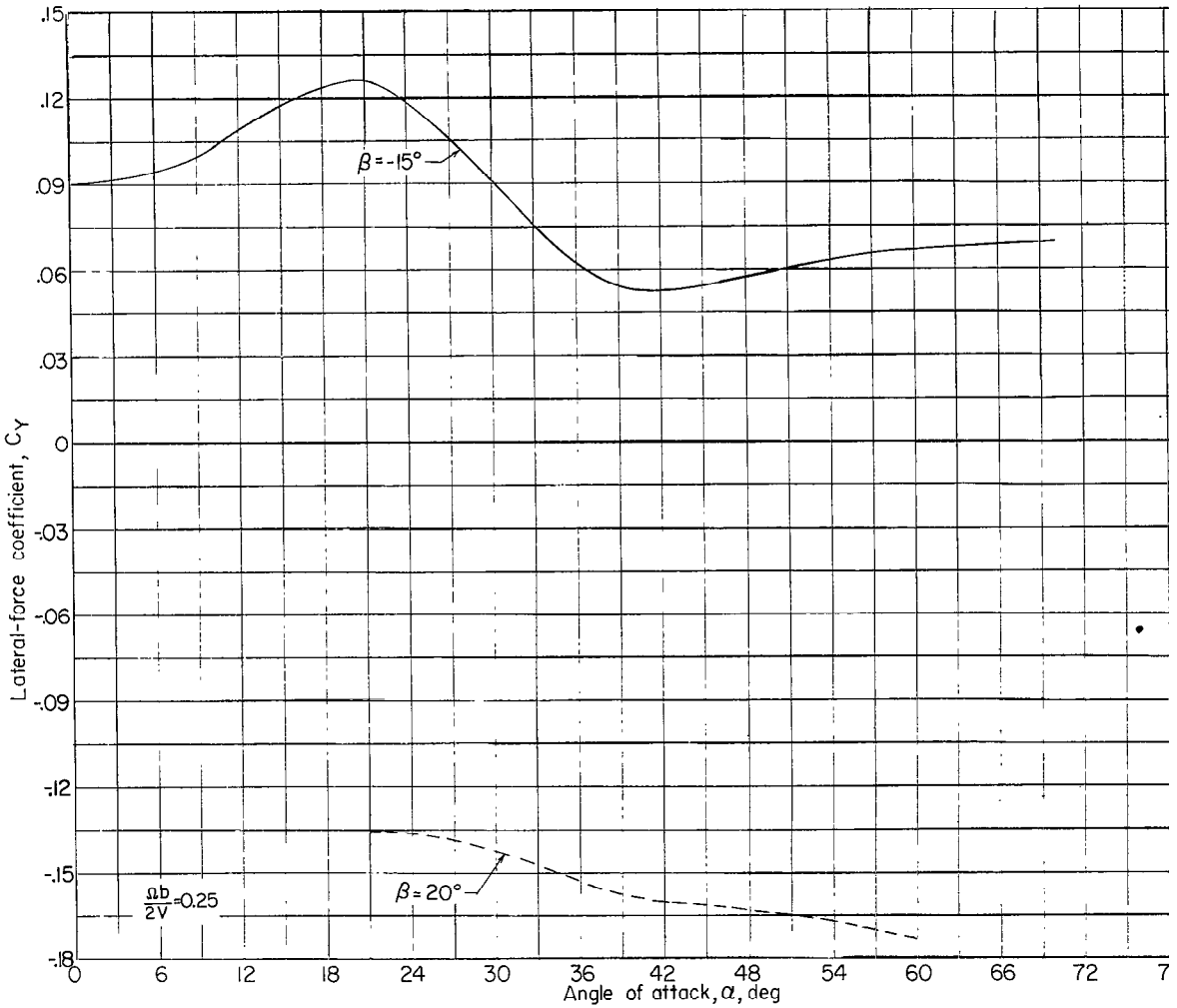

(b) Variation of C_Y with α.

Figure 4.- Continued.

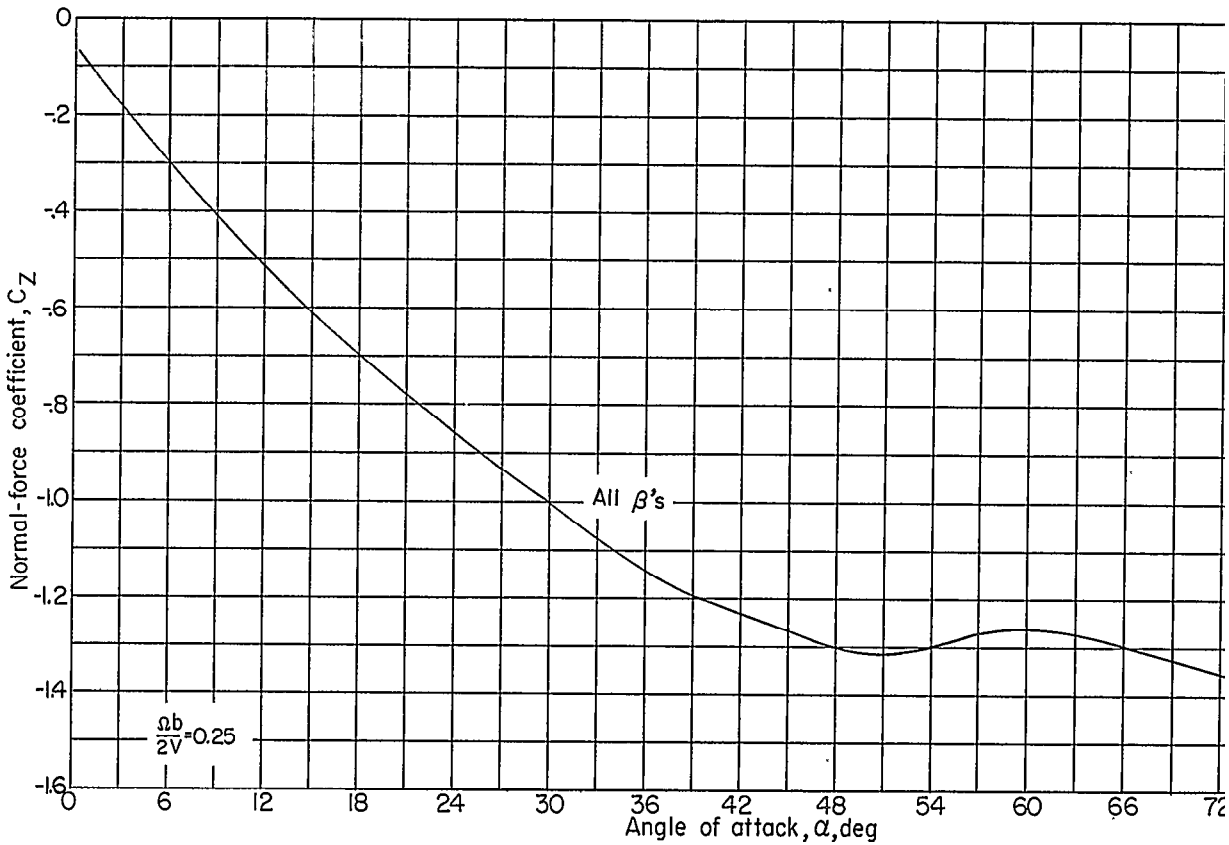

(c) Variation of C_Z with α.

Figure 4.- Continued.

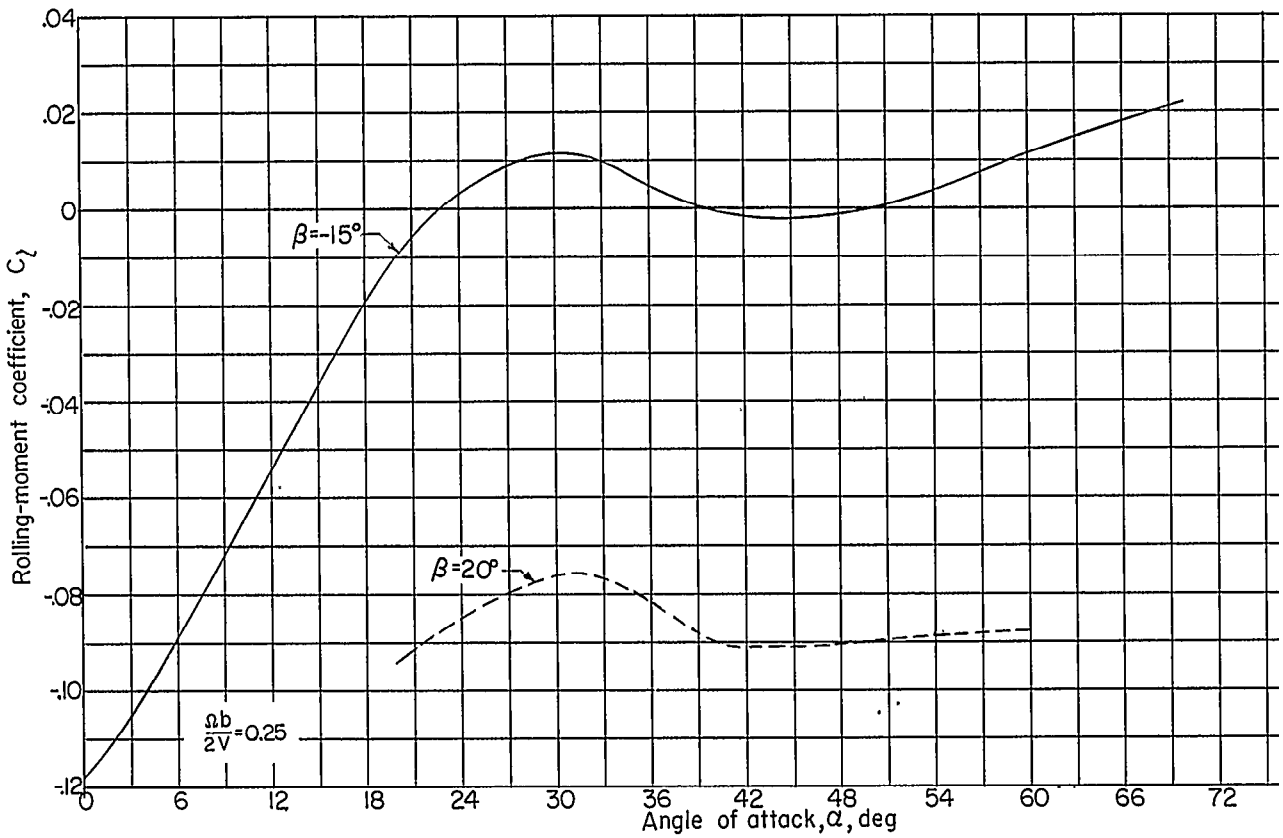

(d) Variation of C_l with α.

Figure 4.- Continued.

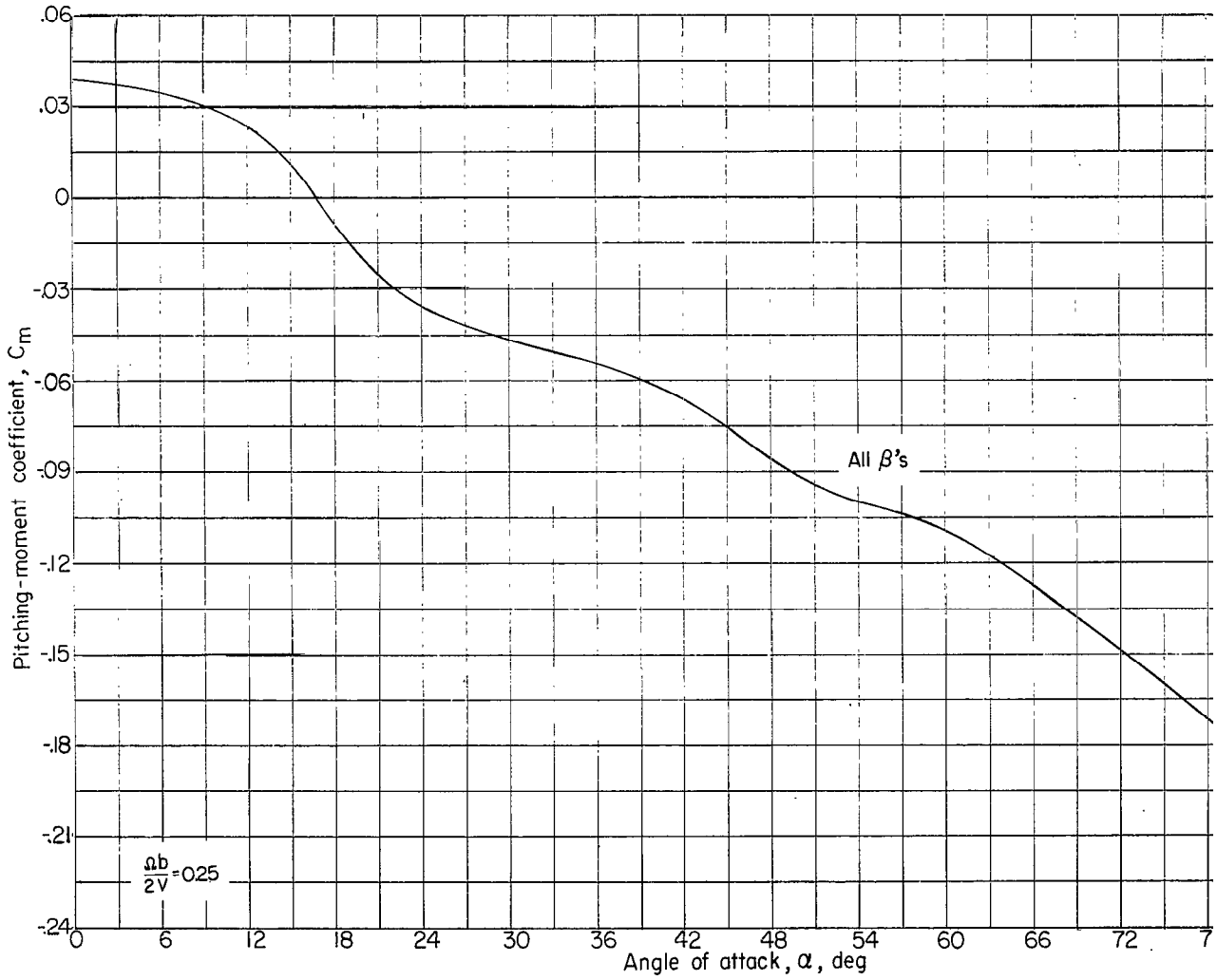

(e) Variation of C_m with α.

Figure 4.- Continued.

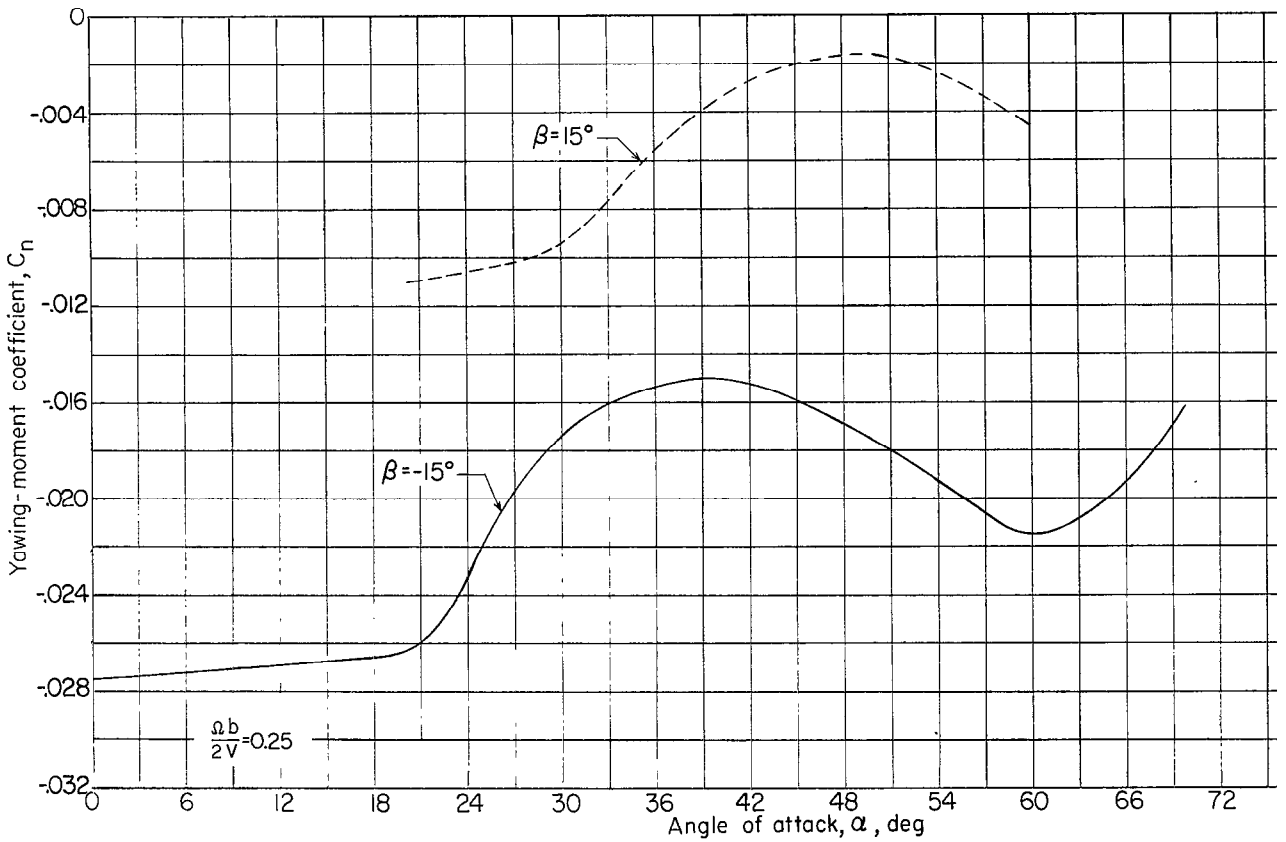

(f) Variation of C_n with α.

Figure 4.- Concluded.

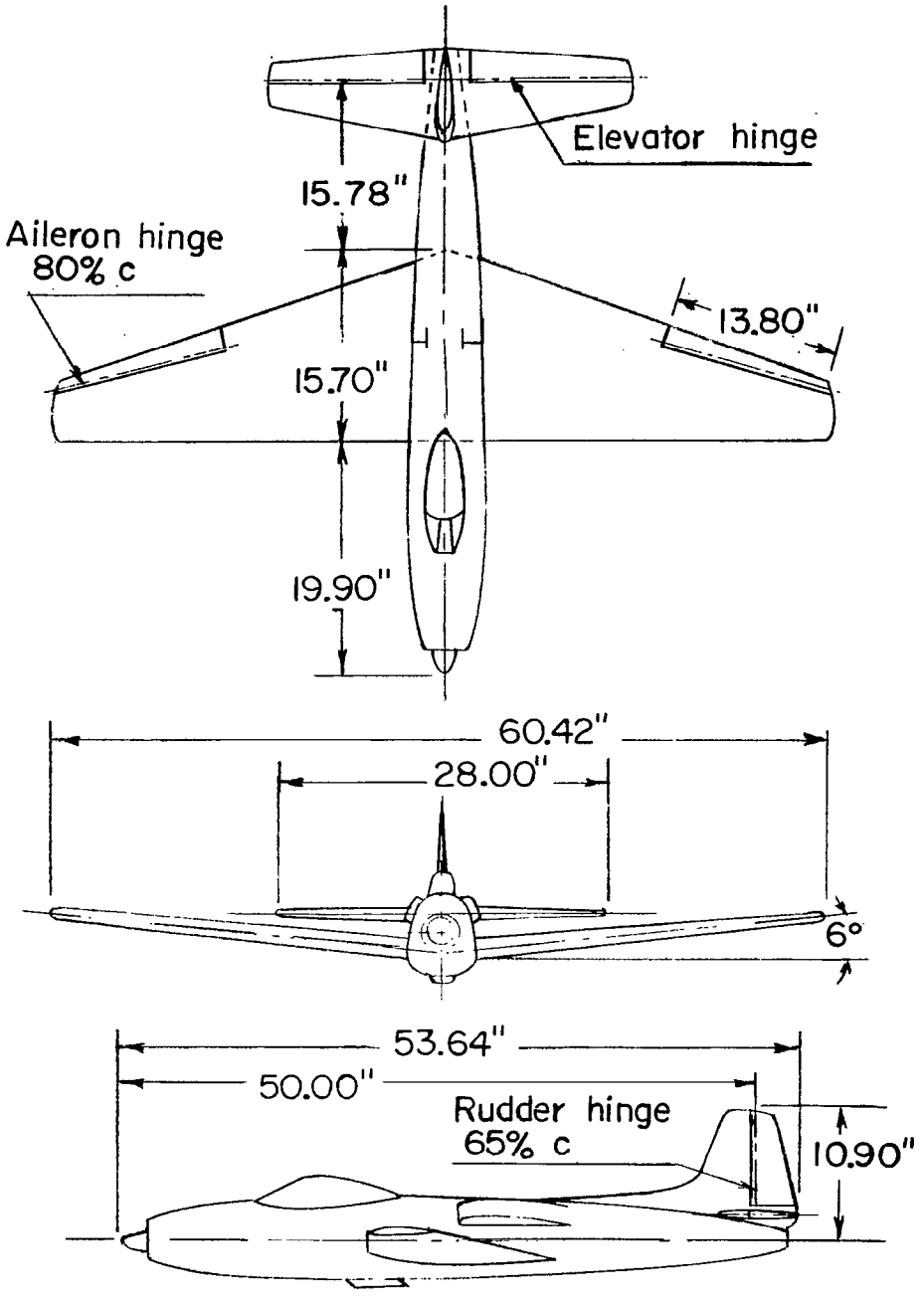

S = 612 square inches;

$\bar{c}$ = 11.52 inches

Figure 5.- Rotary-balance model.

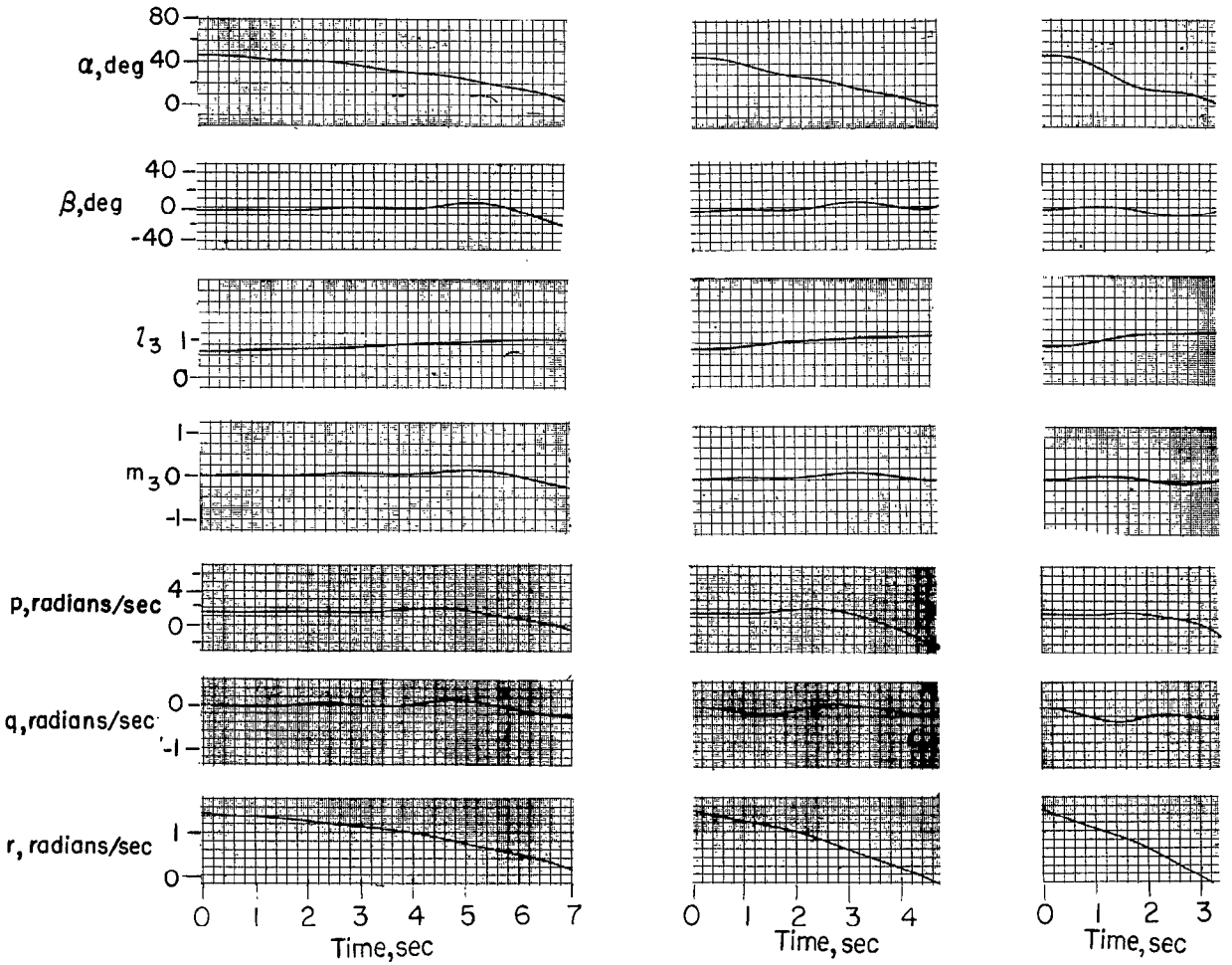

(a) $\Delta C_n = -0.01$. (b) $\Delta C_n = -0.025$. (c) $\Delta C_n = -0$

Figure 6.- Time histories following application of negative yawing moment (momen
steady spin at time zero).

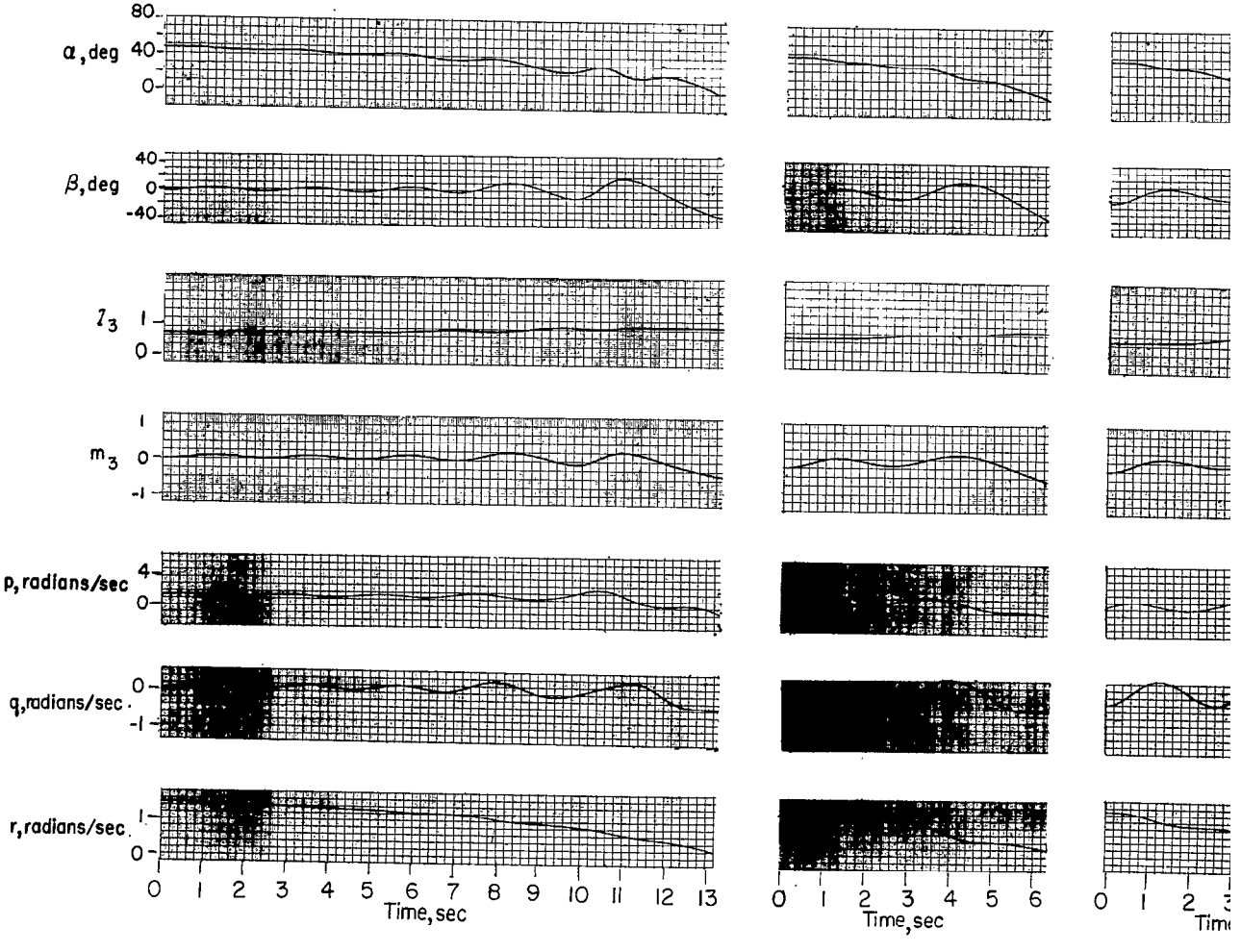

(a) $\Delta C_l = 0.01$. (b) $\Delta C_l = 0.03$. (c) $\Delta C_l = 0.$

Figure 7.- Time histories following application of positive rolling moment (moment steady spin at time zero).

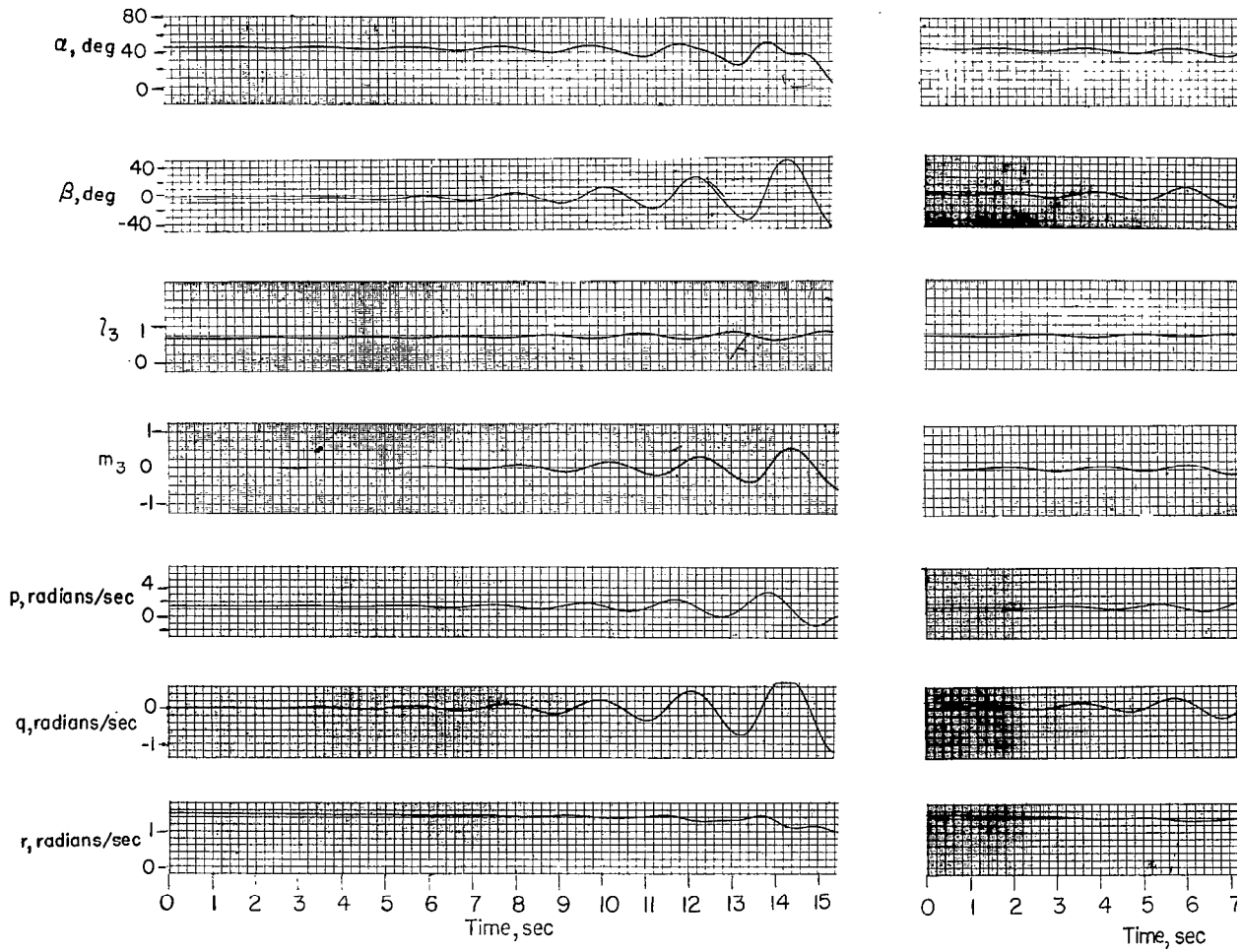

(a) Thrust = $\frac{W}{4}$.

(b) Thrust = $\frac{3W}{4}$.

Figure 8.- Time histories following application of positive thrust (thrust appl
spin at time zero).

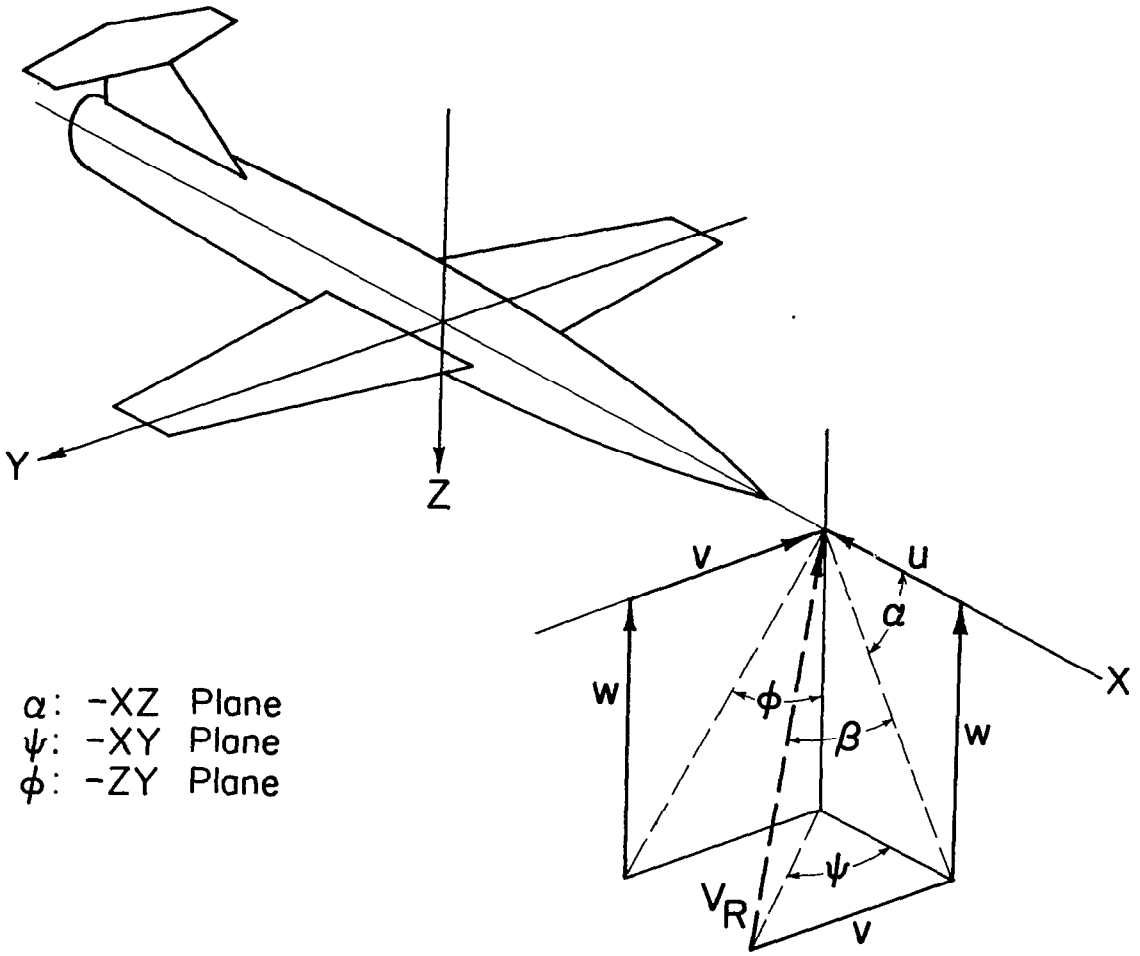

Figure 9.- Determination of α and β.

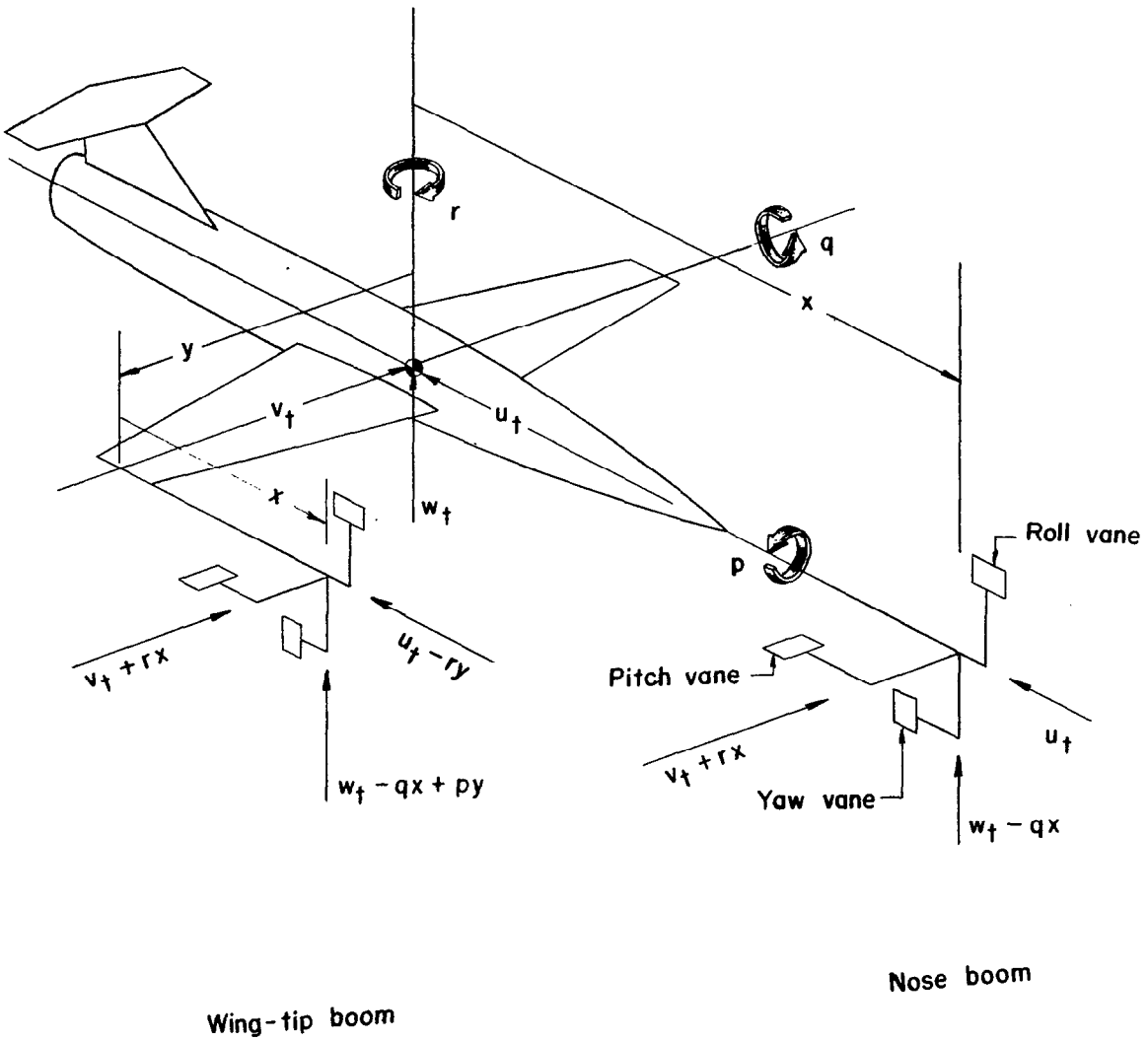

Figure 10.- Three-vane nose boom and wing-tip boom installations.

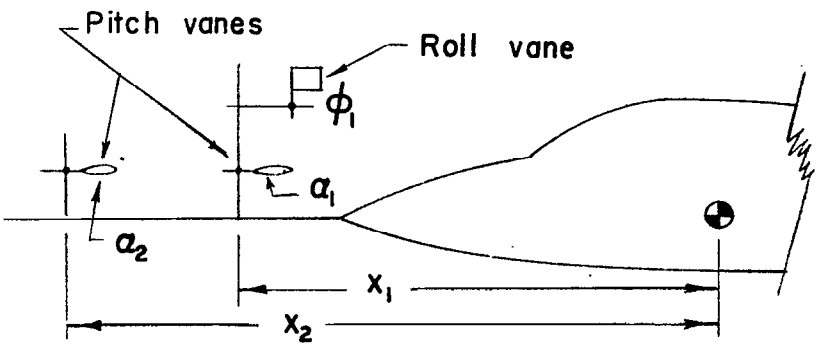

(a) Two pitch vanes and a roll vane.

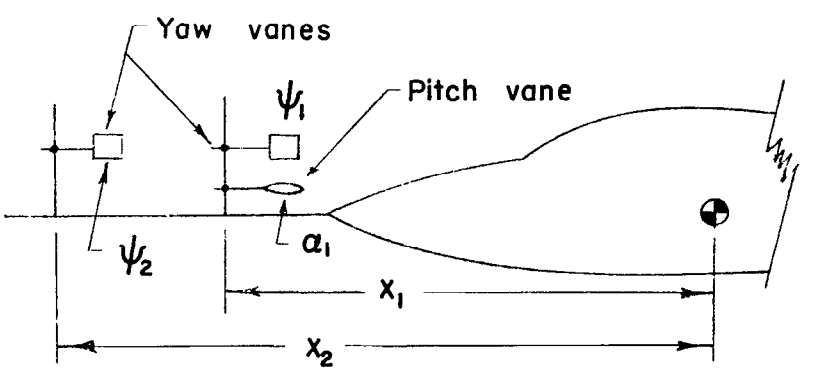

(b) Two yaw vanes and a pitch vane.

Figure 11.- Three-vane technique for measuring angles of attack and side-slip and resultant velocity.

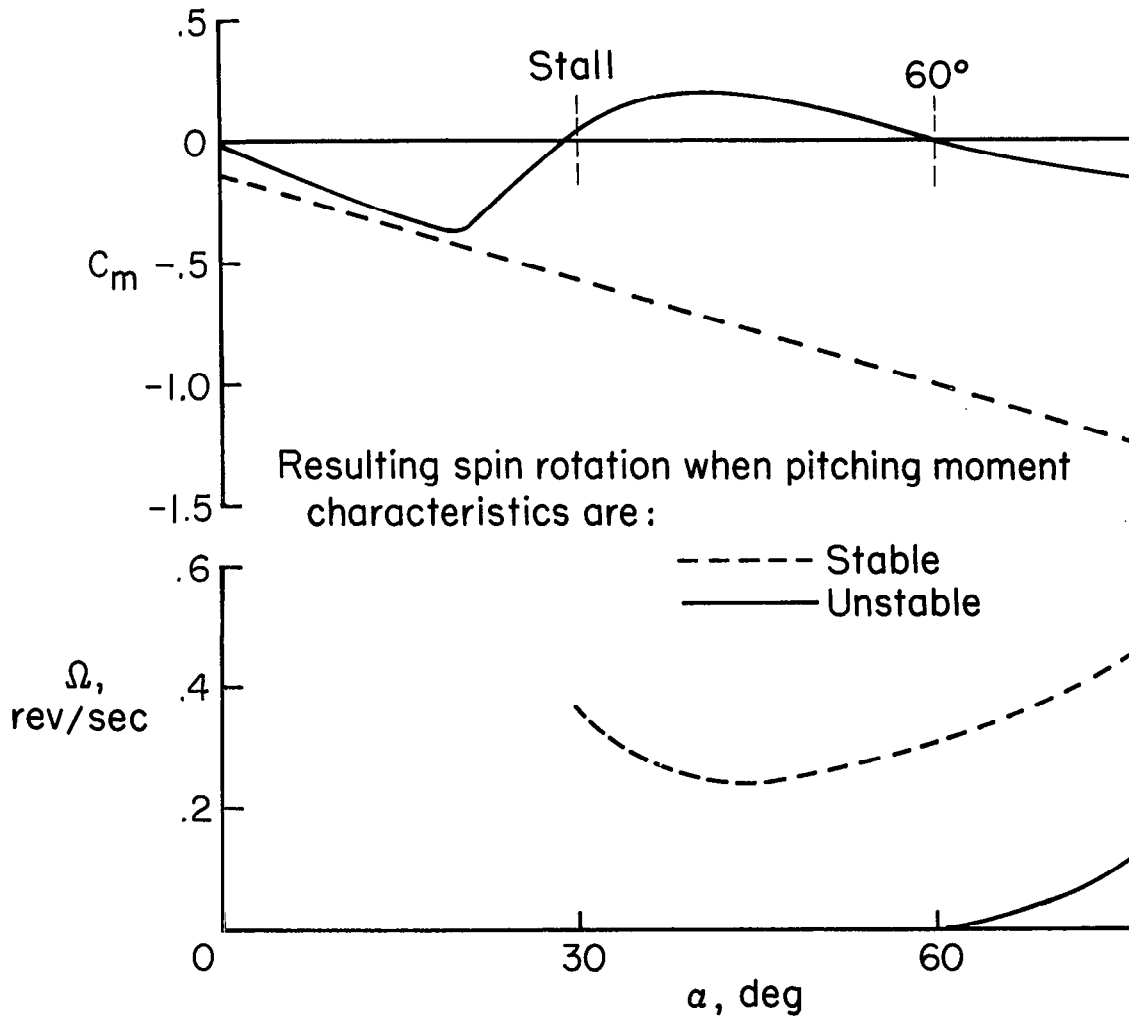

Figure 12.- Effective pitching-moment characteristics on rate of rotation at a
the spin.

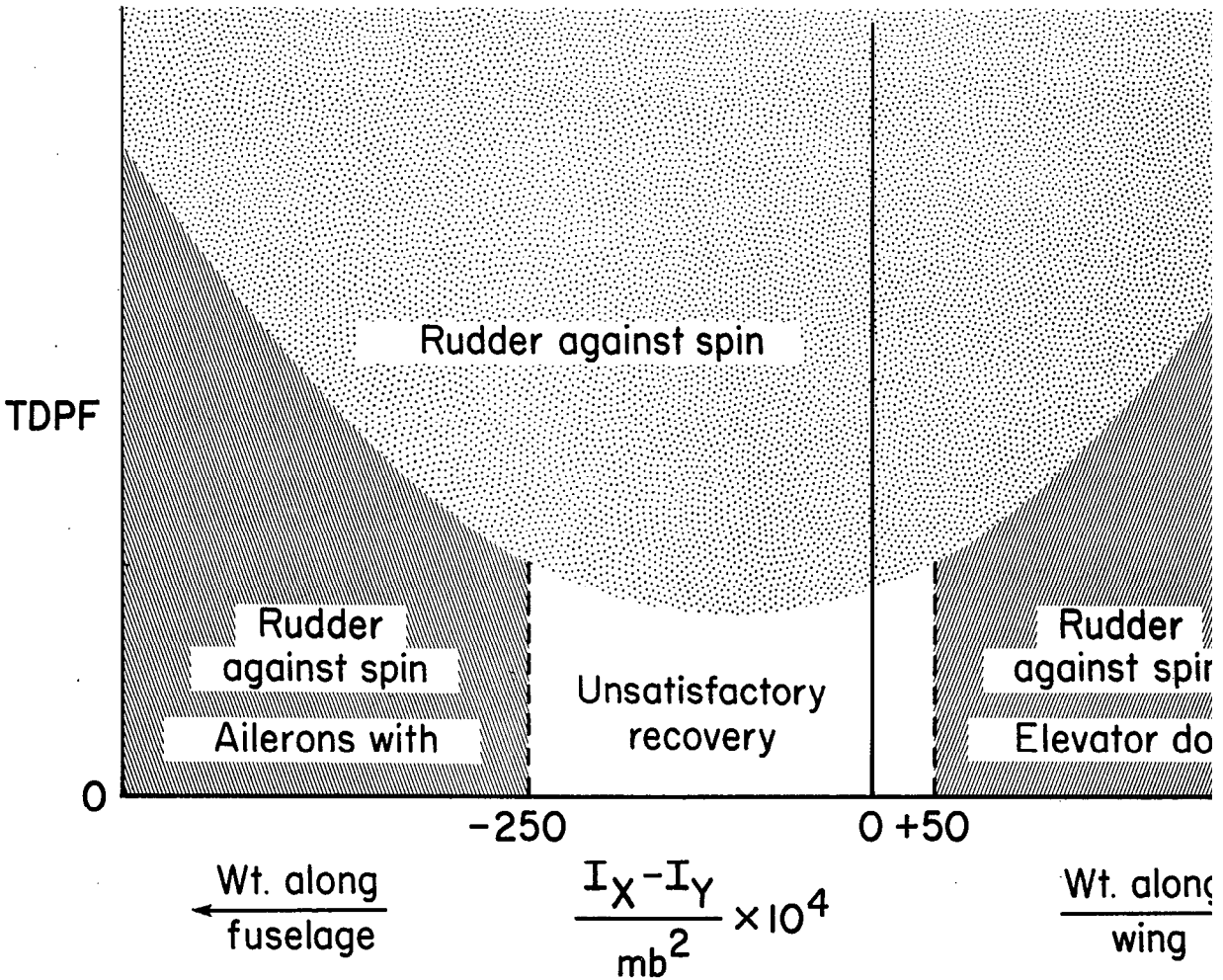

Figure 13.- Influence of mass distribution on optimum control movement for recovery

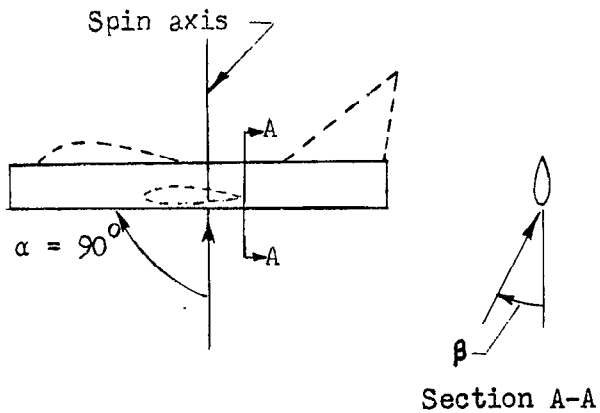

(a) Rectangular fuselage at 90° angle of attack.

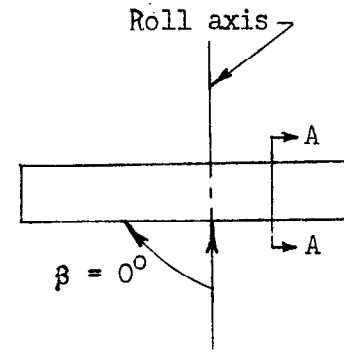

(b) Corresponding wi sideslip.

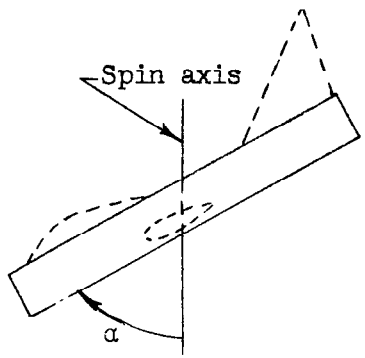

(c) Rectangular fuselage at an angle of attack less than 90°.

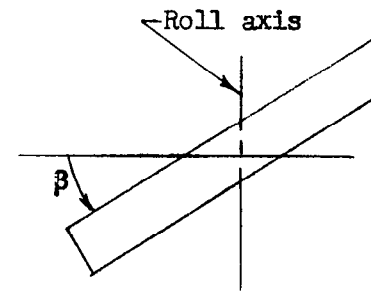

(d) Corresponding wing skew sideslipped.

Figure 14.- Comparison of aerodynamic angles on a rectangular wing at low angles o a rectangular fuselage at spin attitudes.

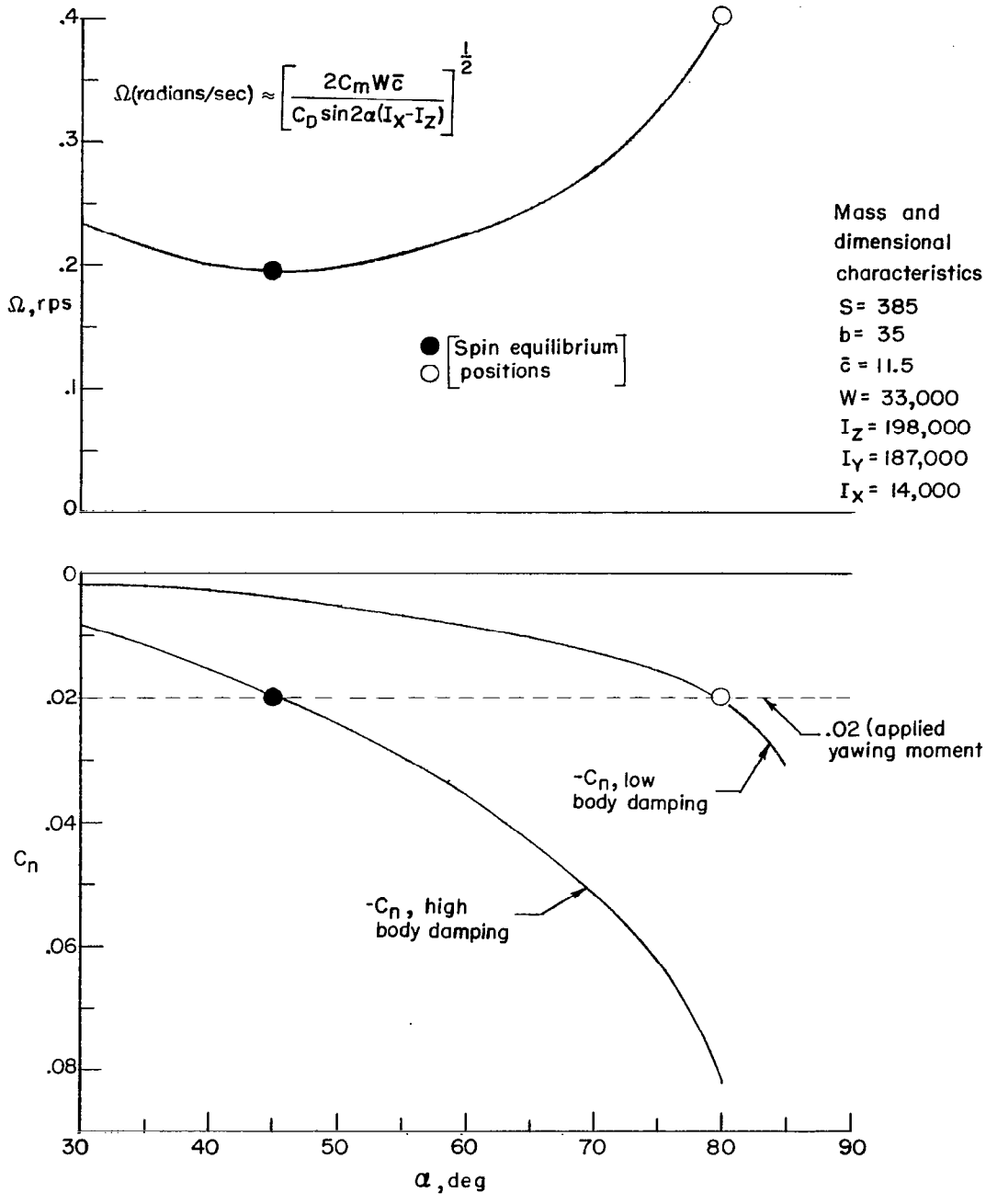

Figure 15.- Illustration of the manner in which the damping in yaw of a fuselage (assumed analogous to the damping in roll of a skewed wing) might affect the spin attitude of a contemporary fighter. An applied yawing-moment coefficient of 0.02 in the spin is assumed.

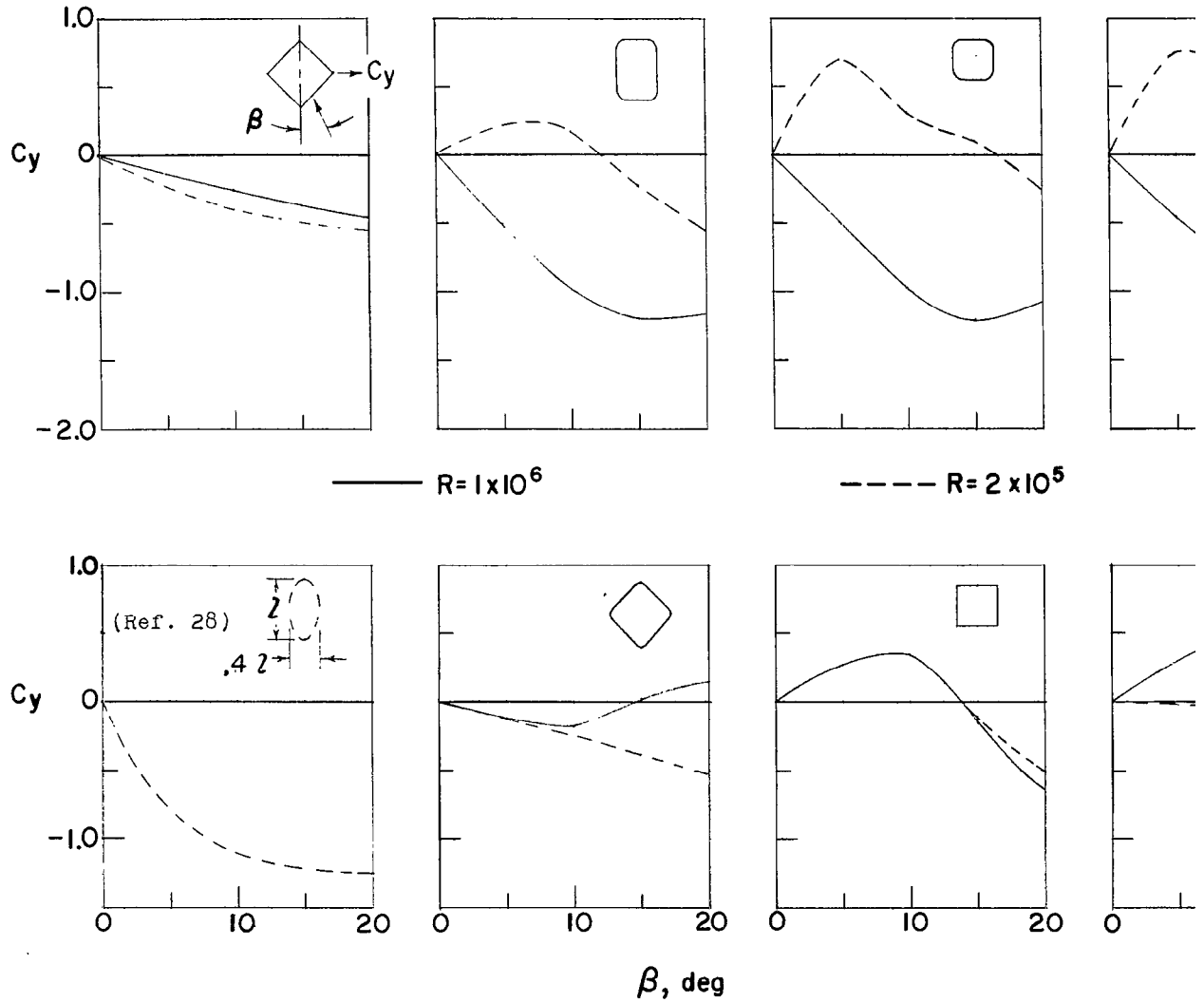

Figure 16.- Two-dimensional side-force data for various fuselage cross-sectional angle of attack.

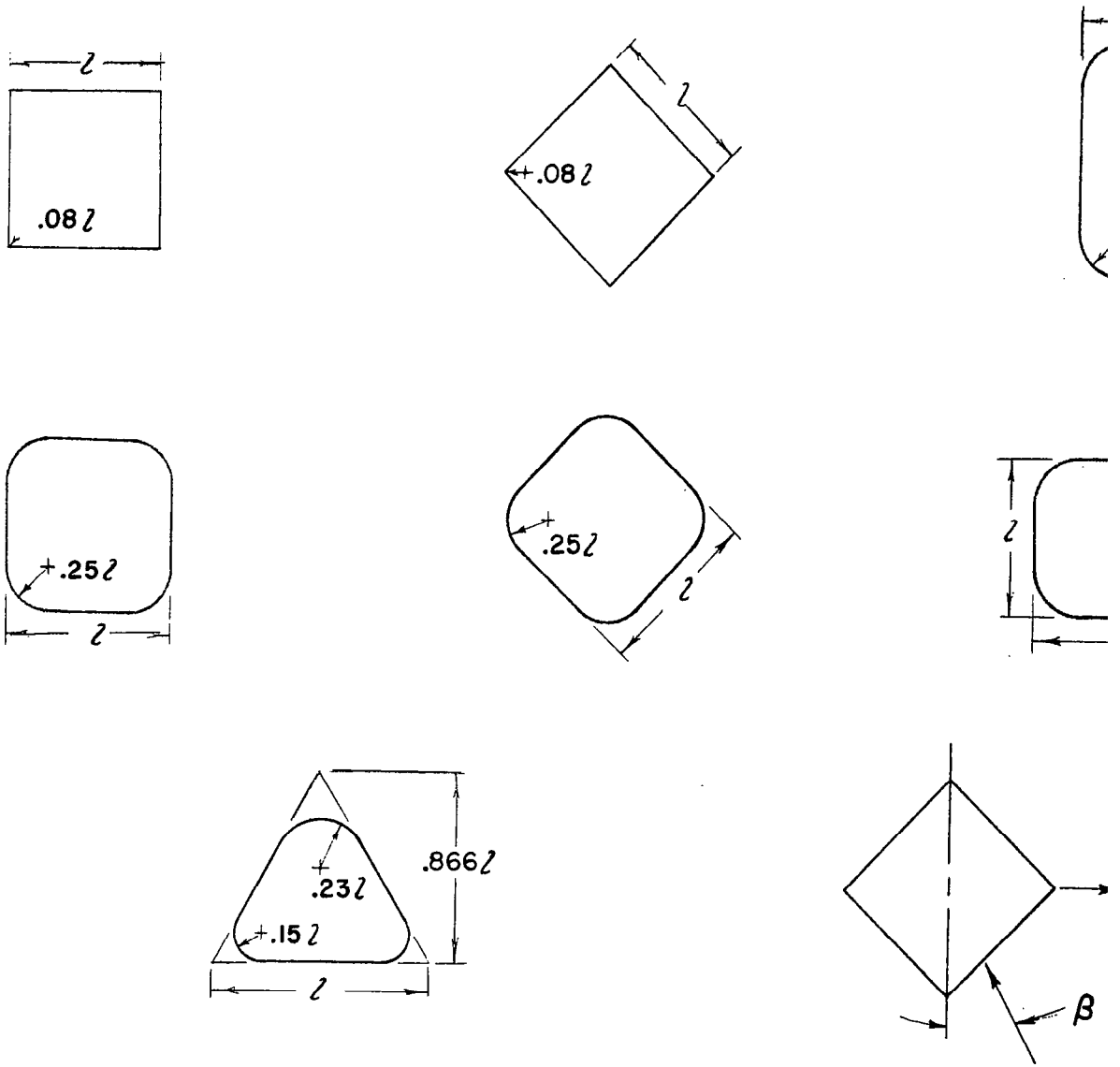

Figure 17.- Detailed dimensions of various shapes presented in figure 1

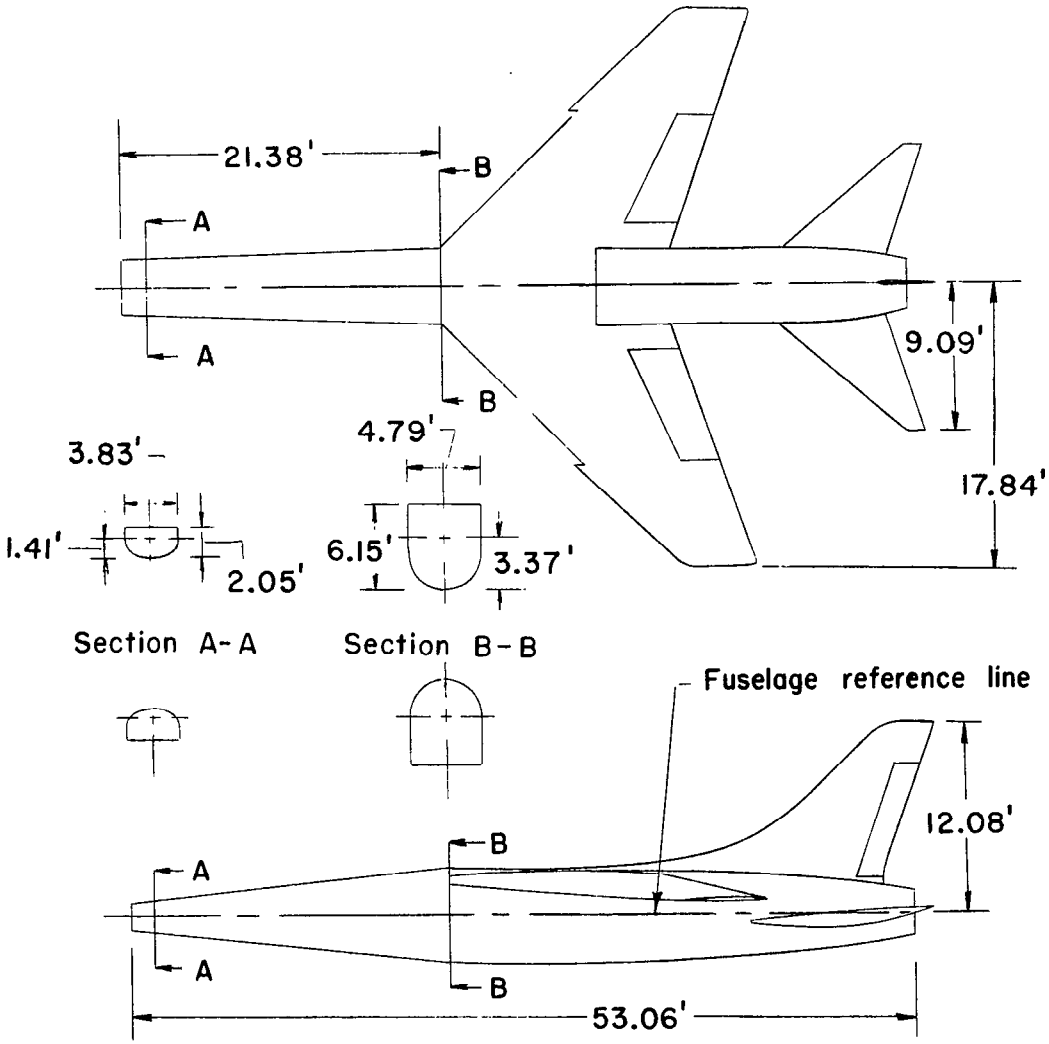

Mass and
charac

S = 3

S_{HT} =

S_{VT} =

I_X = 1

I_Y = 8

I_Z = 8

W = 2

$I_{X,e}$ =

ω_e =

Simulated
altitude

Figure 18.- Cross-sectional shapes of noses investigated on free-spinning mod
(Test data presented on charts 1 and 2.) Full-scale values giver

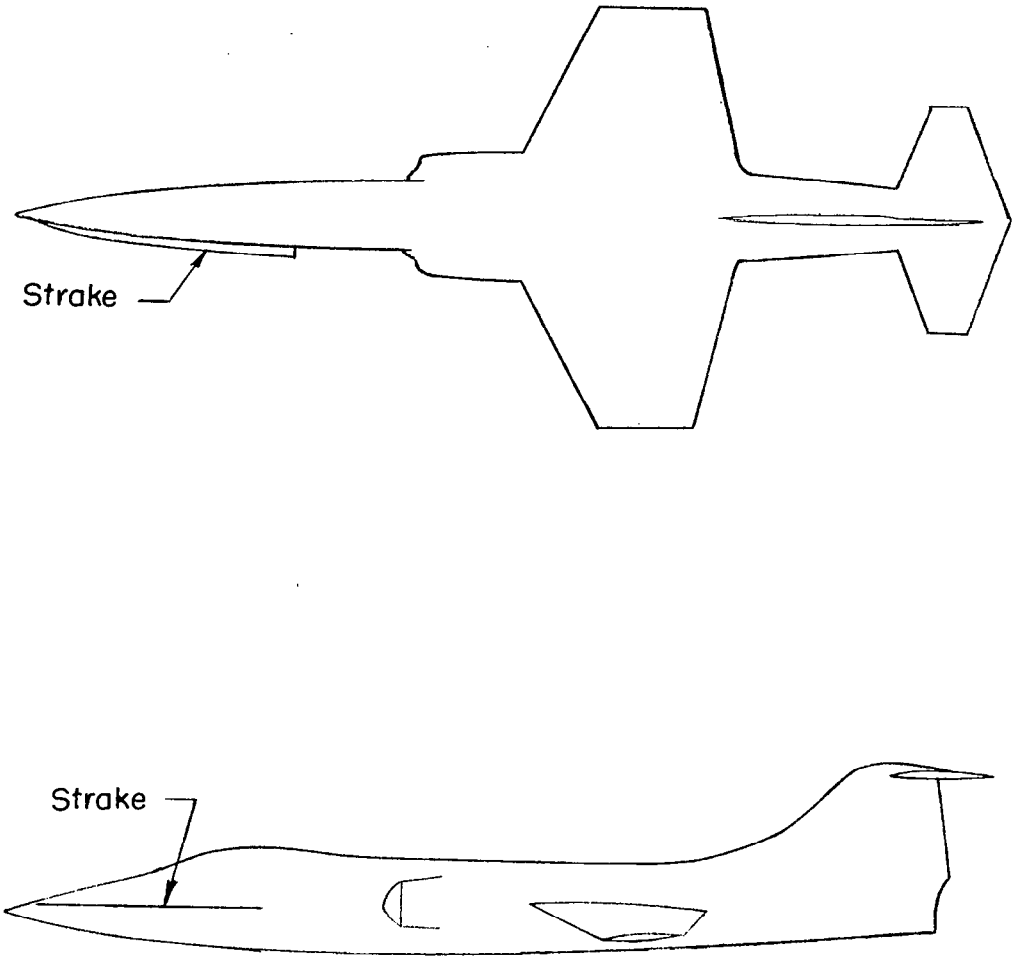

Figure 19.- Illustration of a strake.

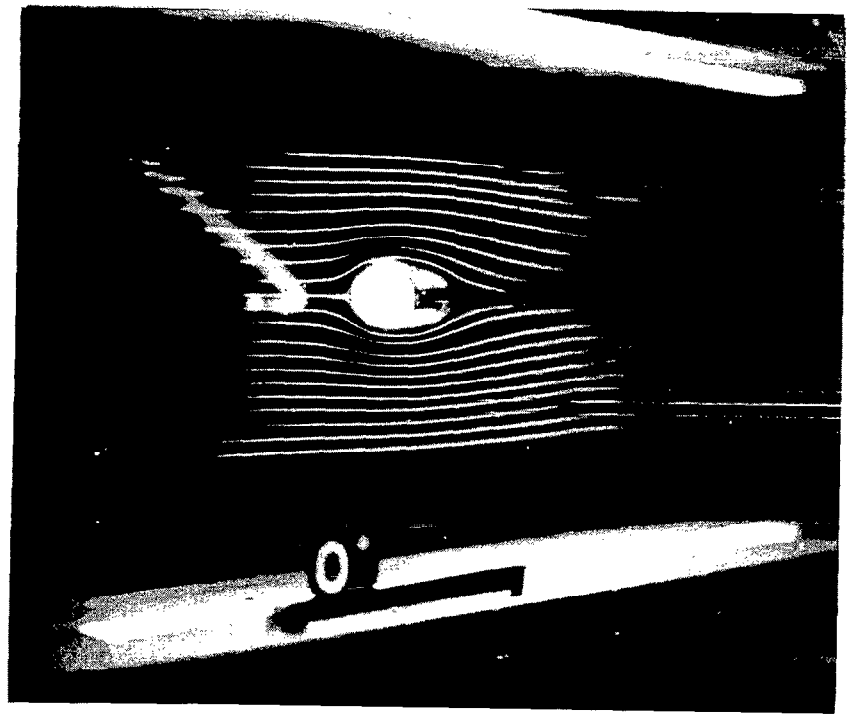

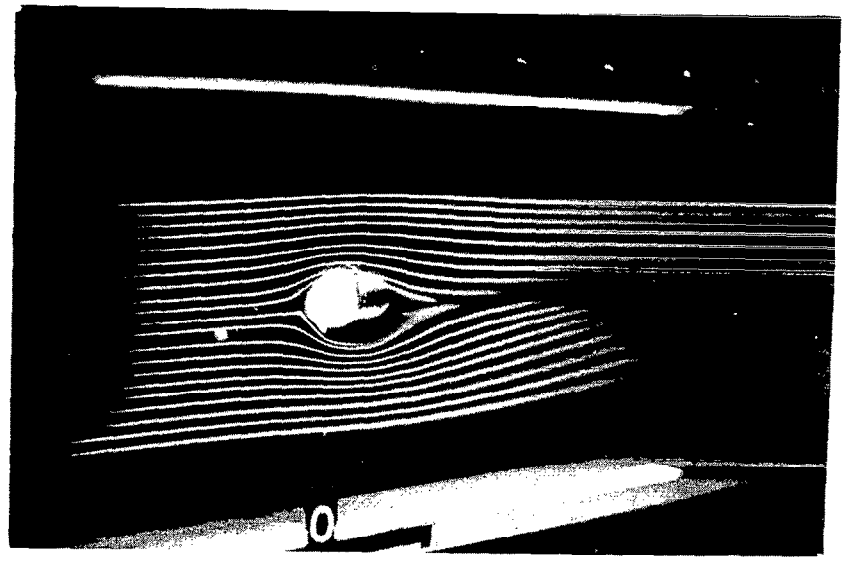

L-57-1608

Figure 20.- Flow lines about a sharp-nosed model with and without a strake installed. $\alpha = 50^{\circ}$; $\beta = 0^{\circ}$.

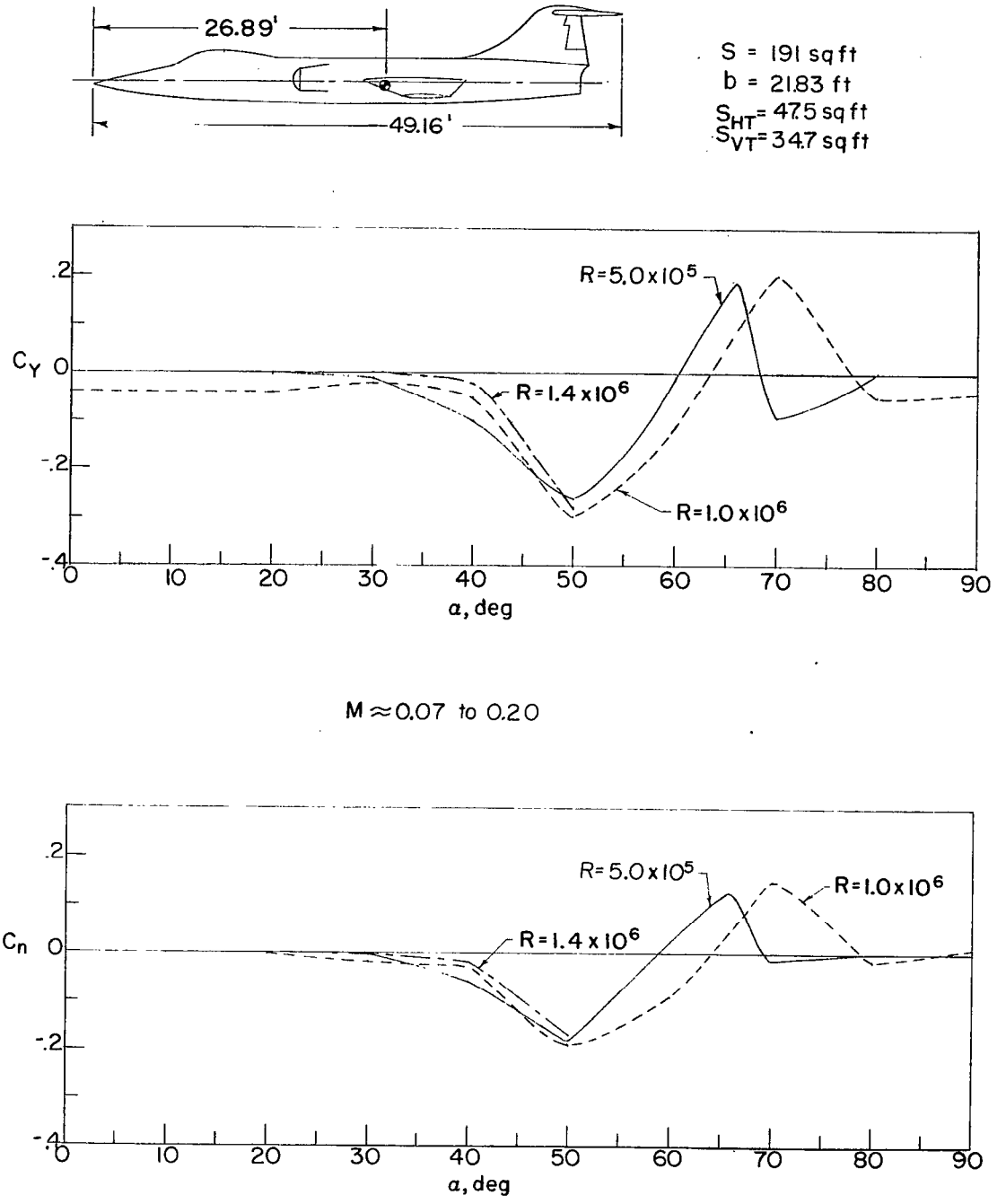

Figure 21.- Variation of yawing moment and side force with angle of attack for model 2. $\beta = 0^{\circ}$. Horizontal tail on. Dimensions given are full scale.

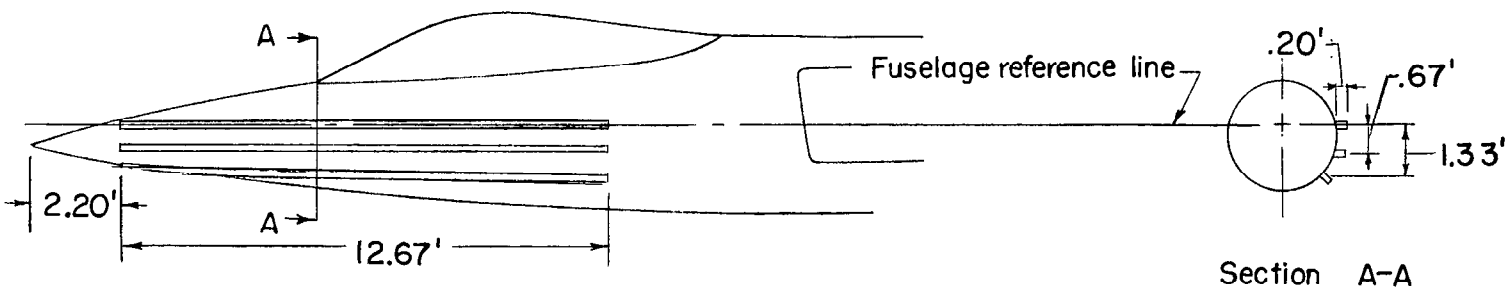

Figure 22.- Strake positions investigated on model 2. Dimensions given are full scale.

(a) Horizontal tail on; $\alpha = 50^{\circ}$.

(b) Horizontal tail off; $\alpha = 50^{\circ}$.

(c) Horivontal tail off; $\alpha = 66^{\circ}$.

(d) Left strake positioned at various vertical locations; horizontal tail off; $\alpha = 50^{\circ}$.

$R = 5.0 \times 10^5$
$M \approx 0.07$

Left strake on reference line
Both strakes on reference line
Right strake on reference line
Strake 0.67′ below reference line
Strake 1.33′ below reference line

Figure 23.- Effect of strakes on yawing moment and side force on model 2. $\beta = 0^{\circ}$. Full-scale dimensional values given.

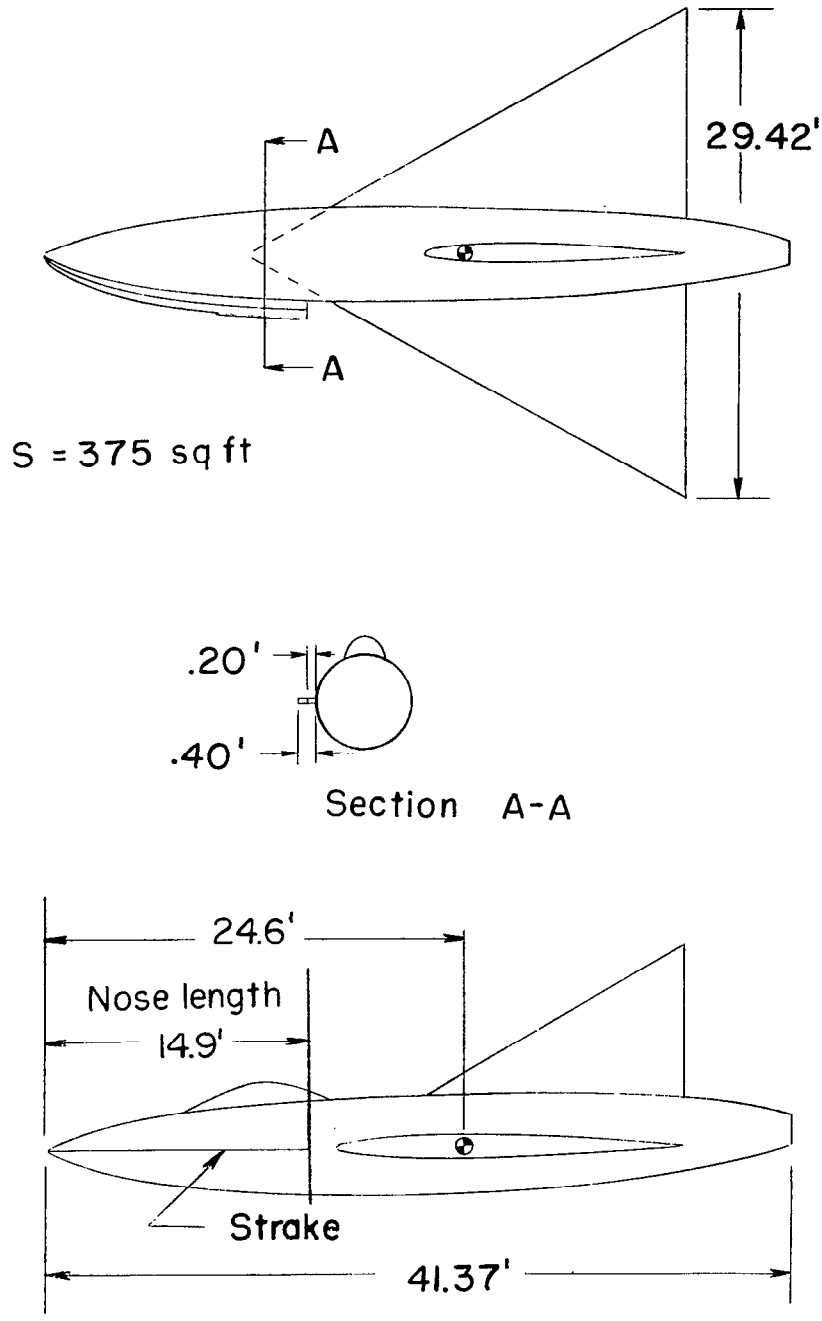

Figure 24.- Strakes investigated on model 3. Full-scale dimensional values given.

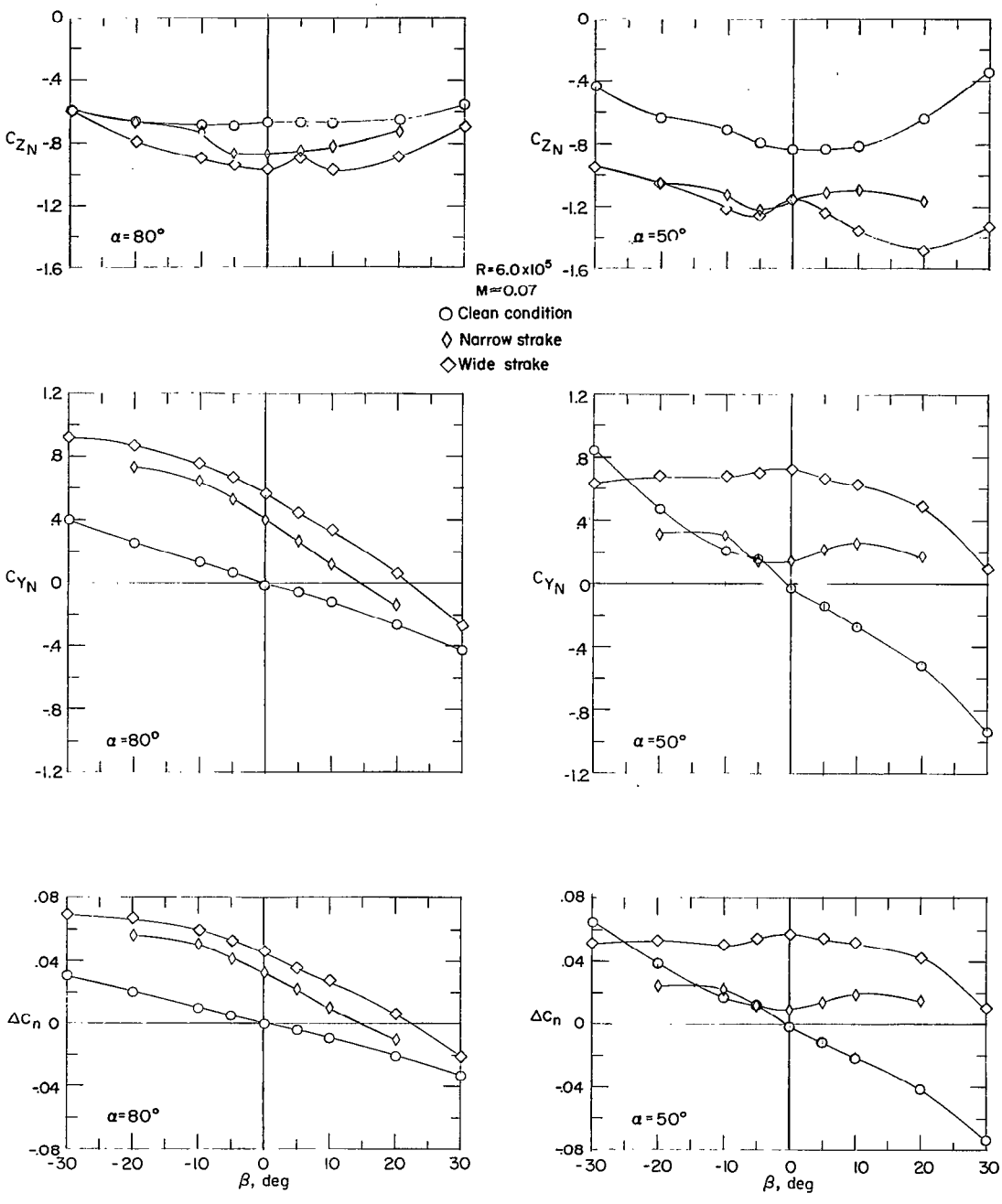

Figure 25.- Normal-force and side-force variation with angle of attack and sideslip on the nose of model 3, and the contribution of the nose of model 3 to the yawing moment about the center of gravity of the model.

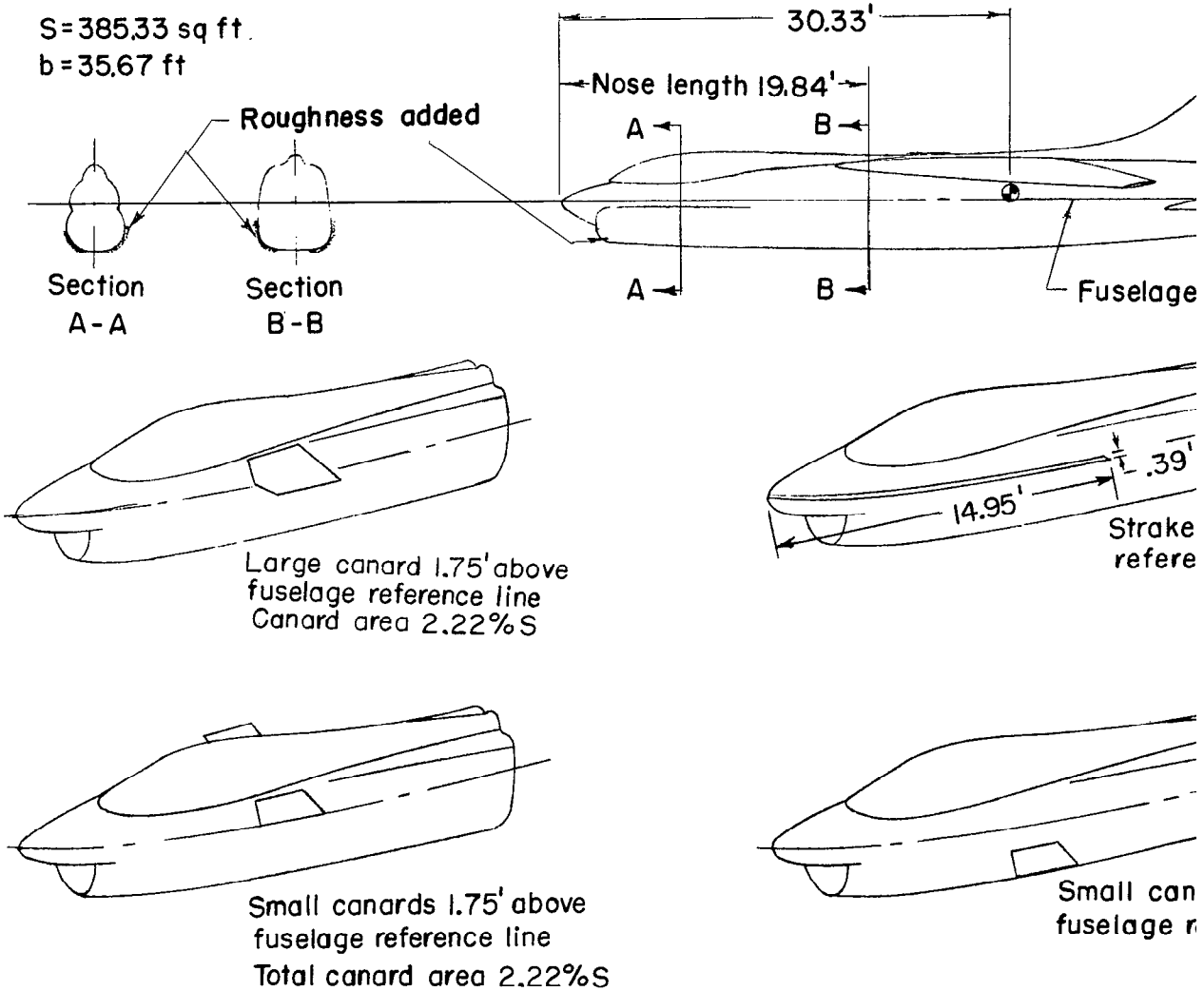

Figure 26.- Canards and strake investigated on model 4. Region in which roug
indicated by shaded areas. Full-scale dimensional values given.

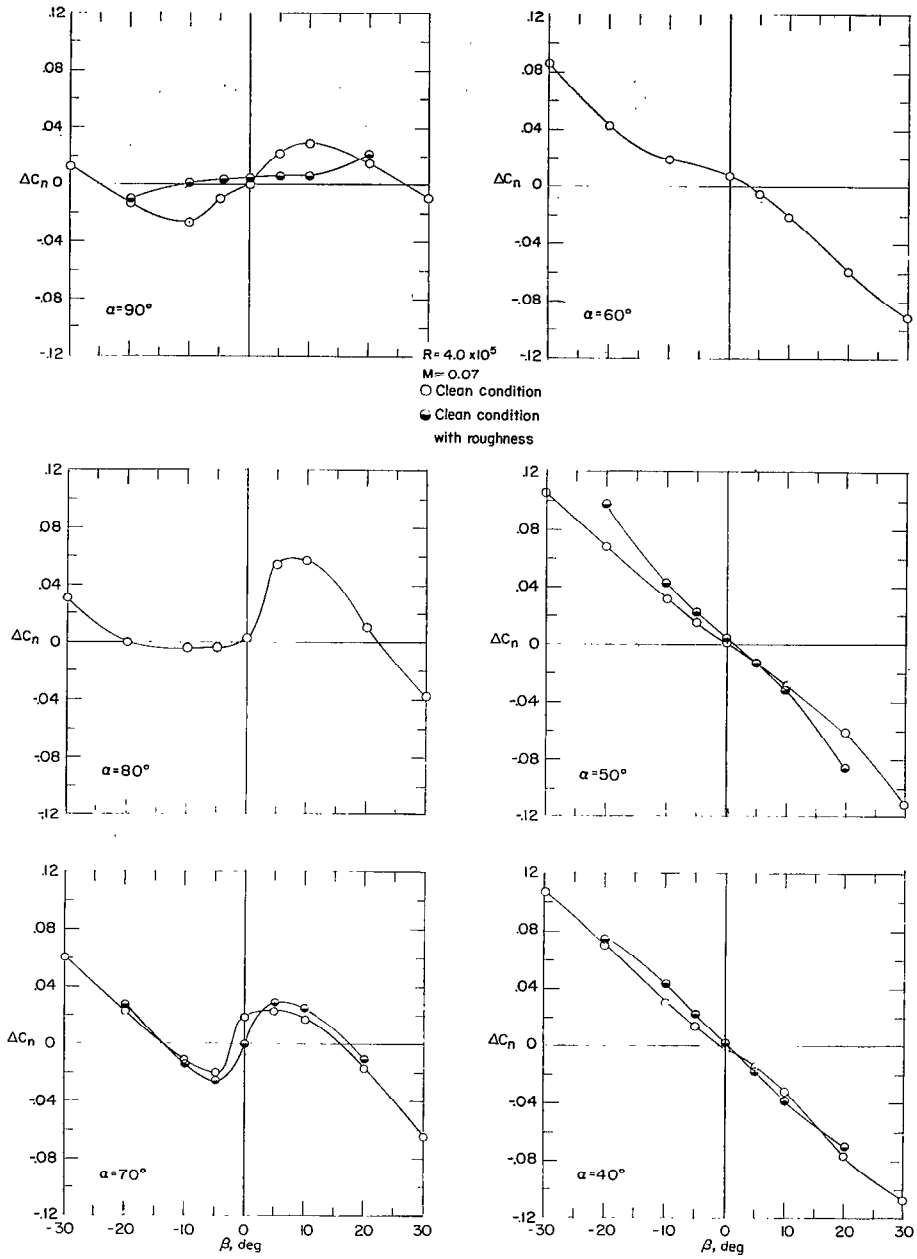

Figure 27.- Contribution of the nose on model 4 to the yawing moment about the center of gravity of the model.

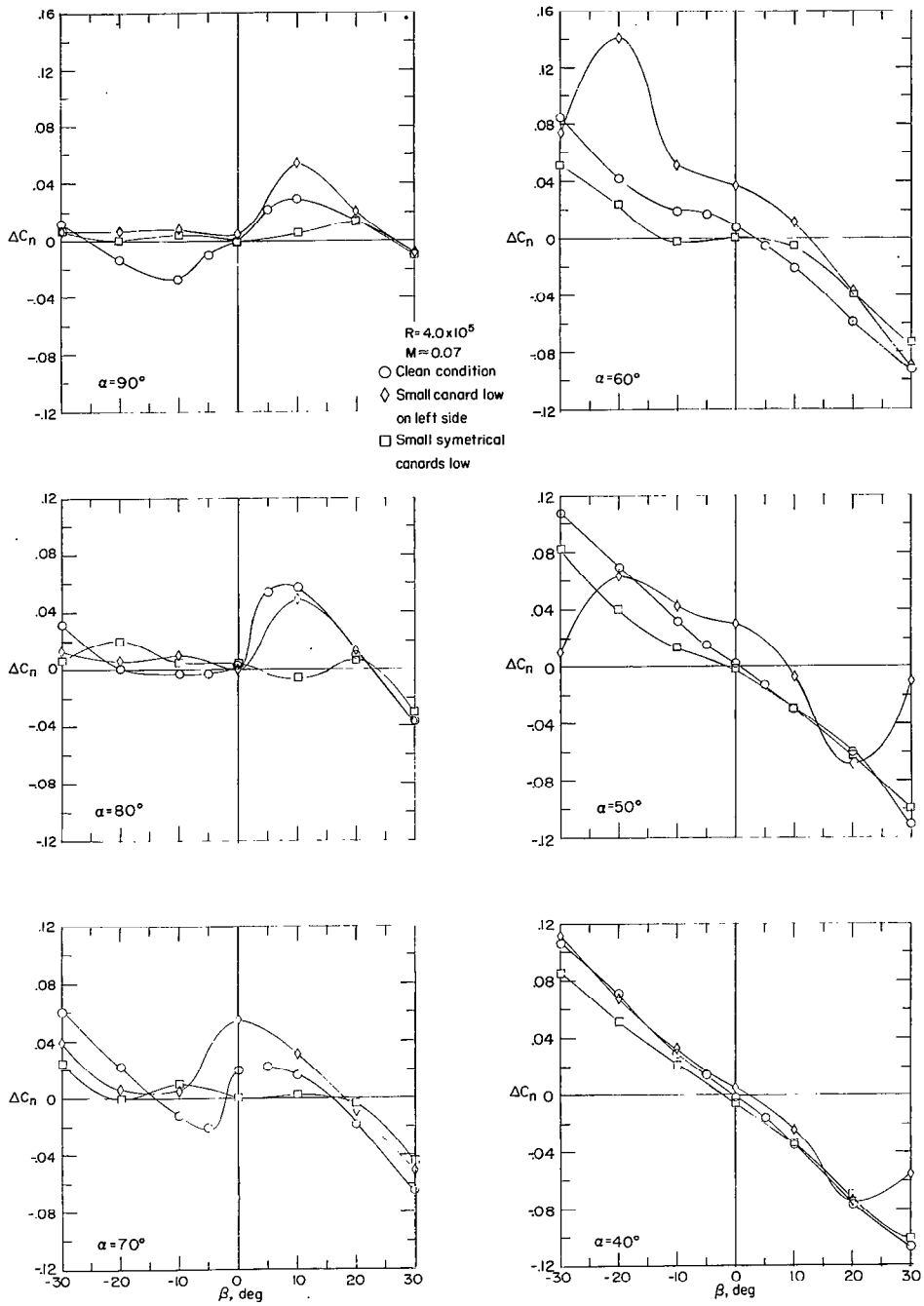

Figure 27.- Continued.

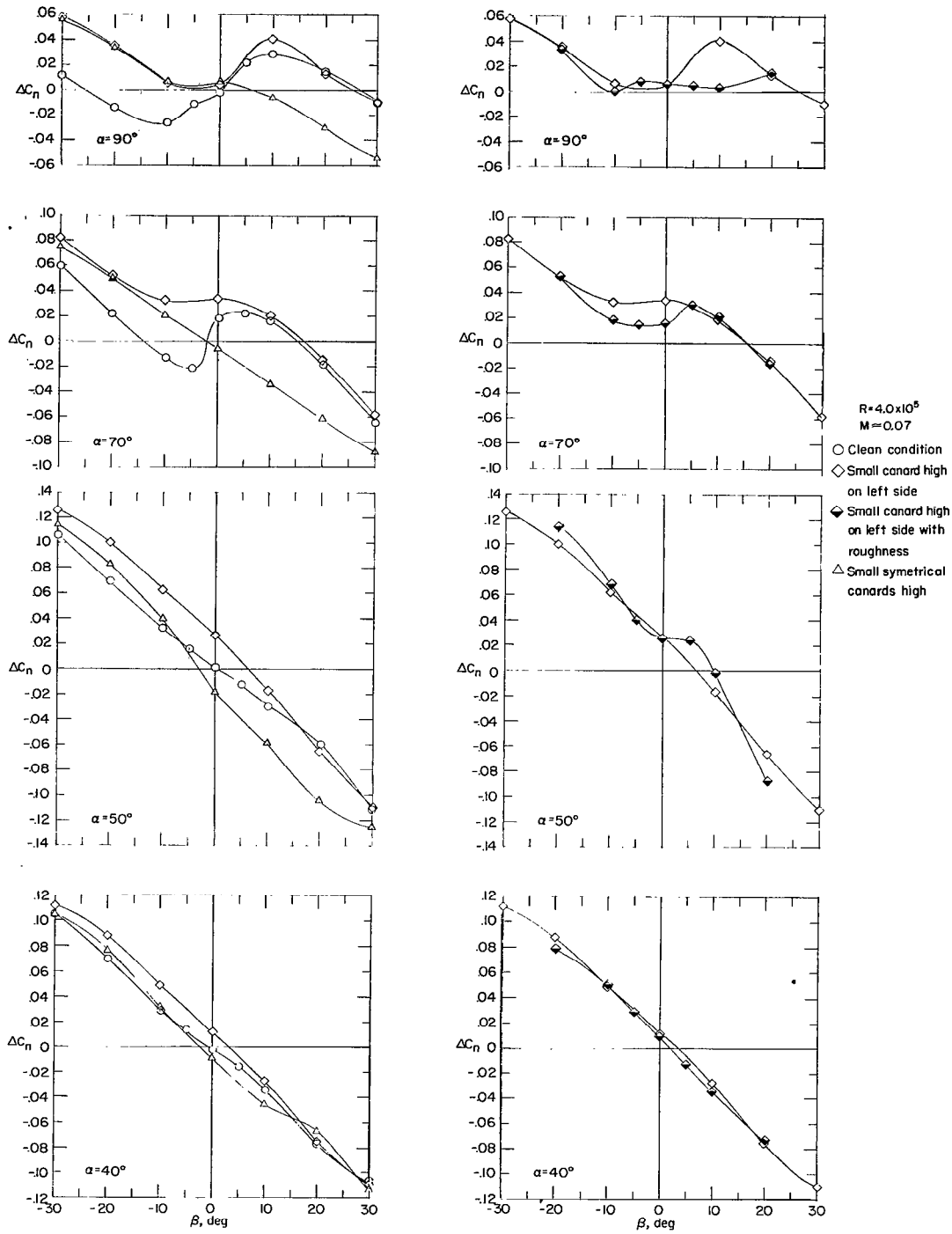

Figure 27.- Continued.