NACA TR 181

NATIONAL ADVISORY COMMITTEE FOR AERONAUTICS

REPORT No. 181

THE INFLUENCE OF THE FORM OF A WOODEN BEAM ON ITS STIFFNESS AND STRENGTH, II

FORM FACTORS OF BEAMS SUBJECTED TO TRANSVERSE LOADING ONLY

By J. A. NEWLIN and G. W. TRAYER

WASHINGTON
GOVERNMENT PRINTING OFFICE
1924

REPRODUCED BY
NATIONAL TECHNICAL
INFORMATION SERVICE
U.S. DEPARTMENT OF COMMERCE
SPRINGFIELD, VA. 22161

AERONAUTICAL SYMBOLS.

1. FUNDAMENTAL AND DERIVED UNITS.

		Metric		English	
		Unit	Symbol	Unit	Symbol
Time	sec.	second	sec.	second (or hour)	sec. (or hr.)
Force	kg.	kilogram-weight (kilogram-force)	kg.	pound-weight (or kilogram-force)	lb.
Power	P.	kg. m/sec.		horsepower	HP
Speed	v.	meter	m. p. s.	mi/hr.	M. P. H.

2. GENERAL SYMBOLS, ETC.

Weight, $W = mg$

Standard acceleration of gravity

$g = 9.8066 \text{ m/sec.}^2 = 32.1726 \text{ ft/sec.}^2$

Mass, $m = \frac{W}{g}$

Density (mass per unit volume), ρ

Standard density of dry air, 0.1247 kg. m.$^{-4}$ sec.^{2} at 15° C. and 760 mm. = 0.00237 lb. ft.$^{-4}$ sec.^{2}

Specific weight of "standard" air, 1.223 kg/m.^{3} = 0.07635 lb/ft.^{3}

Moment of inertia, mk^2 (indicate axis of the radius of gyration, k, by proper subscript).

Area, S; wing area, S_w, etc.

Gap, G

Span, b; chord length, c.

Aspect ratio $= b/c$

Distance from c. g. to elevator hinge, f.

Coefficient of viscosity, μ

3. AERODYNAMICAL SYMBOLS.

True airspeed, V

Dynamic (or impact) pressure, $q = \frac{1}{2}\rho V^2$

Lift, L; absolute coefficient $C_L = \frac{L}{qS}$

Drag, D; absolute coefficient, $C_D = \frac{D}{qS}$

Cross-wind force, C; absolute coefficient

$C_C = \frac{C}{qS}$

Resultant force, R

(Note that these coefficients are twice as large as the old coefficients L_c, D_c.)

Angle of setting of wings (relative to thrust line), ϵ

Angle of stabilizer setting with reference to thrust line, ϵ_s

Dihedral angle, γ

Reynolds Number $= \rho \frac{Vl}{\mu}$, where l is a linear dimension.

e. g., for a model airfoil 3 in. chord, 100 mi/hr., normal pressure, 0°C: 255,000 and at 15.6°C, 230,000;

or for a model of 10 cm. chord, 40 m/sec., corresponding numbers are 299,000 and 270,000.

Center of pressure coefficient (ratio of distance of C. P. from leading edge to chord length), ϕ

Angle of stabilizer setting with reference to lower wing, $(\epsilon_s - \epsilon_w) = \beta$

Angle of attack, α

Angle of downwash, δ

REPORT No. 181

THE INFLUENCE OF THE FORM OF A WOODEN BEAM ON ITS STIFFNESS AND STRENGTH, II

FORM FACTORS OF BEAMS SUBJECTED TO TRANSVERSE LOADING ONLY

By J. A. NEWLIN and G. W. TRAYER
Forest Products Laboratory

[redacted]

Preceding page blank

REPORT No. 181.

FORM FACTORS OF BEAMS SUBJECTED TO TRANSVERSE LOADING ONLY.

By Forest Products Laboratory.

INTRODUCTION.

This publication is one of a series of three reports prepared by the Forest Products Laboratory of the Department of Agriculture for publication by the National Advisory Committee for Aeronautics. The purpose of these papers is to make known the results of tests to determine the properties of wing beams of standard and proposed sections, conducted by the Forest Products Laboratory and financed by the Army and the Navy.

SUMMARY.

Nearly all of the mechanical properties of wood, especially those affecting its flexural strength, have been determined from tests on rectangular specimens and, of all of these properties, the modulus of rupture is the one most used in design. The term modulus of rupture does not correspond to any of the fundamental properties of wood, but it is that value obtained by substituting maximum bending moment in the ordinary beam formula which gives stresses in the extreme fiber for moments within the elastic limit. When confined to rectangular sections, however, the term modulus of rupture in this restricted sense may well be applied to wooden beams. However, when applied to beams of I and box sections we obtain results which are not comparable with those obtained for rectangular beams. The computed values for such sections may, in extreme cases, be 50 per cent less than corresponding values computed for rectangular beams made of material from the same plank.

If the properties of wood as based on tests of rectangular sections are to be used as a basis of design for any other section, a factor whose value is dependent upon the shape of the section must needs be applied to the usual beam formula. For convenience in this discussion this factor, which is the ratio of either the fiber stress at elastic limit or the modulus of rupture of the section to the similar property of a rectangular beam 2 by 2 inches in section made of the same material, will be called a "Form Factor."

Such factors for various sections have been determined from test by comparing properties of the beam in question to similar properties of matched beams 2 by 2 inches in section. Furthermore, formulas more or less empirical in character were worked out, which check all of these test values remarkably well. In the development of these formulas it is necessary to consider the characteristics of timber. The strength of wood in tension and compression along the grain is very different, being much greater in tension. When a wood beam fails it first gives way at the surface on the compression side and these fibers lose some of their ability to sustain load. The adjacent fibers receive a greater stress and with this redistribution of stress the neutral axis moves toward the tension side and shortens the arm of the internal resisting couple, giving a much higher stress in tension. This process continues until tension failure occurs. The compression failures are often not prominent, sometimes being almost invisible. This has often led to the erroneous conclusion that tension failures occur before there is a compression failure.

It has been observed for years that the computed fiber stress at elastic limit in bending was far greater than the fiber stress at elastic limit in compression parallel to the grain. Various

theories have been advanced for this, the one most prominent being the fiber stresses and strains were not proportional to their distances from the neutral axis even within the limits of elasticity. This investigation has led to the belief that stresses within the elastic limit are very nearly proportional to their distances from the neutral axis and that the difference is one of actually greater fiber stress in the beam than in the block under compression parallel to the grain. We account for this ability to take greater stress by the assumption that the *minute wood fibers when subjected to compression along their length act as miniature Euler columns more or less bound together.* These fibers when all stressed alike offer little support one to the other, but when the stress is nonuniform as in a bent beam the fibers nearer the neutral axis being less stressed will not buckle, and will therefore lend lateral support to the extreme fibers causing them to take a higher load. By evaluating this support the relation of the elastic limit for various sections can be determined. The following formula gives such an evaluation:

$$F_E = 0.58 + 0.42\left[0.293\left(\frac{\alpha}{57.3} - \sin\alpha\cos\alpha\right)\frac{t_2 - t_1}{t_2} + \frac{t_1}{t_2}\right]$$

The above formula for the elastic limit form factor can be used to determine the modulus of rupture form factor by a change in constants and we have for such factor

$$F_u = 0.50 + 0.50\left[0.293\left(\frac{\alpha}{57.3} - \sin\alpha\cos\alpha\right)\frac{t_2 - t_1}{t_2} + \frac{t_1}{t_2}\right]$$

As regards the accuracy of the above formulas, we would expect them to check the average of a great number of test values more closely than a few tests of representative material would check such average. Even for beams with extremely thin flanges, at which limit they were not expected to check, it was found that they checked results of tests made on I beams routed beyond all practical limits.

PURPOSE.

The general aim of this study is the achievement of efficient design in wing beams. The purpose of the tests, the results of which are here presented, was to determine factors to apply to the usual beam formula in order that the properties of wood based on tests of rectangular sections might be used as a basis of design for beams of any section, and if practical to develop formulas for determining such factors, and to verify them by experiment.

DESCRIPTION OF MATERIAL.

Because it combines the qualities of lightness, great strength per unit weight, and a considerable degree of toughness, Sitka spruce is the wood most used in aircraft construction. For this reason all test specimens used in this study were built of this species. The material was received from the west coast of the United States and from Alaska. Both air-dried and kiln-dried stock was used and all conformed with Army and Navy specifications as to rate of growth and slope of grain. No material was used having knots or pitch pockets, no matter how small and 0.36 was the minimum specific gravity permitted based on oven-dry weight and volume. The sizes of the plank from which test beams were made varied from 2 by 10 inches by 12 feet long to 4 by 22 inches by 34 feet long.

Cross sections of the beams tested are shown in Figures 1, 2, and 3. The I beams were of single-piece construction. The cheeks or webs of the box beams were attached to the flanges with ordinary hide glue. Filler blocks were placed inside the box beams at the ends and load points. These blocks were not glued in but held in place by small cleats glued to the flanges. The F–5–L beams (fig. 1) were first routed throughout their length and tested with no filler blocks at the load points, later a series was made in which the beams were left unrouted for 6 inches at the ends and for 4 inches at the load points.

The lengths of the beams, sections of which are shown in Figures 1, 2, and 3, varied from 30 inches to 12 feet 6 inches. The span was always of sufficient length to eliminate horizontal shear failures.

MARKING AND MATCHING.

In order to make reliable comparisons between beams of different cross sections, careful matching of the various beams with beams of standard cross section was necessary. Practically all beams of I, box, and other symmetrical or unsymmetrical sections tested were matched with 2 by 2 inch rectangular specimens. These 2 by 2 inch specimens will be referred to as minors and all other beams as major beams or simply majors.

While but one major beam was made from a plank, several minors were cut from the balance of the material, their number depending upon the length of the major beam. The minors were taken from one or both sides of the major beam or if this was impossible, they were cut from one or both ends of the plank depending upon its length. Figure 4 shows the various methods of matching employed.

When minor bending specimens could be obtained from but one end of the plank the specific gravity of specimens cut from them after failure were compared with the specific gravity of specimens cut from the other end of the plank and proper adjustments made in order to obtain the average properties of the plank based on tests of 2 by 2 inch specimens.

OUTLINE OF TESTS.

Following is an outline of the tests of both the major and minor beams:

Major beams.
- Static bending.
  - Center or third-point loading.
  - Moisture determinations.

Minor beams:
- Static bending—2 by 2 by 30 inch specimens.
  - Center loading.
  - Moisture determination.
- Compression parallel—2 by 2 by 8 inch specimens.
  - Load applied parallel to grain.
  - Mositure determination.
  - Specific gravity determination.
- Compression perpendicular—2 by 2 by 6 inch specimens.
  - Specimen cut from static bending specimen after failure.
  - Load applied perpendicular to the grain.
  - Moisture determination.
- Specific gravity—2 by 2 by 6 inch specimens.
  - Specimen cut from static bending specimens after failure or from plank directly where size of plank permitted.
  - Moisture determination.

METHOD OF TESTS.

In some of the earlier tests of the beams shown in Figure 1, both center and two-point loading was used. However, two-point loading proved so much more satisfactory for larger beams that it alone was finally used. The minor bending specimens and those of T, circular, and rectangular section, with diagonal vertical shown in Figure 2, were all tested with load applied at the center at the rate of 0.103 inch per minute. The load was applied to all the larger beams at such a rate that strength values obtained could be compared with strength values of the minors without correcting for rate of loading.

A standard laboratory deflectometer was used to measure deflections of the minor beams. For the major beams deflections were read by observing the movement of a vertical scale, attached to the center of the beam, across a wire fastened to two nails driven in the beam over the supports. Such beams as the Loening (fig. 1) were prevented from bending in more than one plane by using pin-connected horizontal ties spaced not over 10 inches along the beam

(see fig. 8). The rear beam was held very well by these ties, but we found it practically impossible to prevent buckling of the Loening front beam and a consequent reduction in maximum load. The ratio of the moment of inertia about a horizontal axis to that about a vertical axis is about 39 to 1, which is far in excess of what is permissible for beams in other classes of construction which are held even more firmly than are wing beams in the wing. Although it is difficult to fix a value for this ratio, since the rigidity of supports and distance between ribs has a great influence on the allowable moment of inertia about a vertical axis, we would suggest this ratio to be kept below 25 if possible. When this is exceeded, particular attention should be given the above-named factors to insure lateral rigidity.

A standard set-up for a two-point loading test is shown in Figure 5. The compression parallel and compression perpendicular tests and the specific gravity and moisture determinations were all made according to the approved laboratory methods.

DESCRIPTION OF FIGURES AND TABLES.

Figure 1.—These are sections of wing beams in use, four of them are front and four are rear beams. Below is given a table showing the form factors of these sections. As will be pointed out later there is a slight change in the modulus of rupture with a variation in height of rectangular beams and, since practically all tests for the determinations of properties of woods grown in the United States have been made on specimens this size, the 2-inch height has been adopted as a standard for establishing form-factor values.

The test values for the Loening front beam are probably a little low for, as explained under "Method of Tests," it was practically impossible to prevent lateral buckling of this section and a consequent reduction in load.

It will be noted that the moduli of rupture of the following beams as computed by the formula $S=\frac{Mc}{I}$ are from 17 to 38 per cent less and the elastic limit stresses 15 to 27 per cent less than similar properties of the minor 2 by 2 inch specimens.

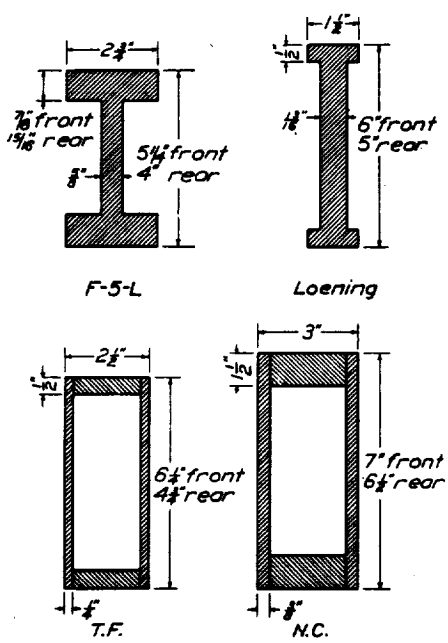

FIG. 1.—Types of wing beams.

Type of beam.	Fiber stress at elastic limit, form factor.		M. of R. form factor.	
F-5-L front	Act.	0.79	Act.	0.72
	Comp.	.73	Comp.	.68
F-5-L rear	Act.	.80	Act.	.70
	Comp.	.77	Comp.	.73
Loening front	Act.	.77	Act.	.75
	Comp.	.82	Comp.	.78
Loening rear	Act.	.85	Act.	.83
	Comp.	.82	Comp.	.79
T. F front	Act.	.75	Act.	.62
	Comp.	.68	Comp.	.62
T. F rear	Act.	.75	Act.	.66
	Comp.	.69	Comp.	.64
N. C. front	Act.	.73	Act.	.72
	Comp.	.76	Comp.	.72
N. C. rear	Act.	.80	Act.	.73
	Comp.	.77	Comp.	.73

Act.=A value determined by test of from 6 to 13 beams, each of which was matched with from 3 to 8 minors. Spans vary from 6 to 12 feet and load was applied at the third points.

Comp.=Values computed by the formulas to be discussed in the analysis.

The dimensions of the above sections are shown in Figure 1. Table I shows the individual results and the average of the minors matched with each beam.

Figure 2.—This figure shows additional sections tested for form factors. They represent a considerable range in form factor, that for modulus of rupture varying from 0.69 for the box beam with equal flanges to 1.41 for the square with diagonal vertical. The extreme sections shown are beyond practical limits but were made and tested to check out the form factor formulas.

Below is given a table showing the modulus of rupture form factor of six of these sections as determined by test and by the formula which will be developed later in this analysis. The circular and the square section with diagonal vertical will be discussed separately.

Type.	Form factor modulus of rupture.	
I section	Test	0.70
	Formula	.70
T section	Test	.78
	Formula	.80
Box section equal flanges	Test	.69
	Formula	.69
Box section unequal flanges	Test	.71
	Formula	.74
Extreme sections:		
Thin flanges	Test	.64
	Formula	.64
Thick flanges	Test	.89
	Formula	.89

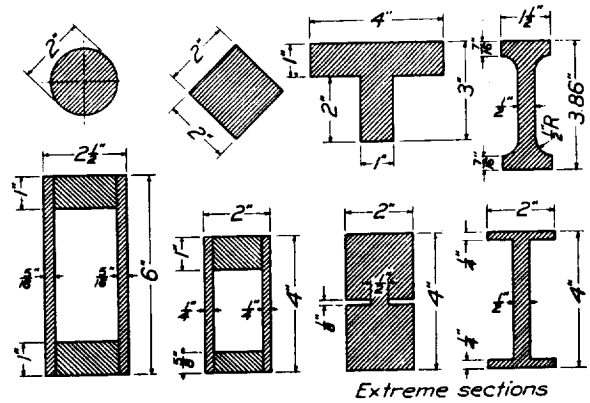

FIG. 2.—Sections of beams tested for form factors.

CIRCULAR SECTIONS.

In the case of the circular section we have a form factor greater than unity. A series of circular beams were tested and the average modulus of rupture computed by the usual beam formula was found to be 115 per cent of the modulus of rupture of matched specimens 2 by 2 inches in section. Let us compare the bending strength of a beam of circular section with a beam of square section, cross sectional areas being equal. The section modulus I/c of the square is approximately 118 per cent of the I/c of the circle, but as stated above the modulus of rupture in the case of the circle was 115 per cent that of the square. This shows that a beam of circular section and one with a square section of equal area will sustain practically equal loads.

SQUARE SECTIONS WITH DIAGONAL VERTICAL.

The moment of inertia of a square about a neutral axis perpendicular to its sides is the same as the moment of inertia about a diagonal. When a beam of square section is tested with the diagonal vertical, however, c, the distance from the neutral axis to the extreme fiber in compression, is $\sqrt{2}$ times as great as c for the same beam tested with two sides vertical. If we use the ordinary beam formula $M=\frac{SI}{c}$, we would anticipate that the loads sustained by the two beams would be to each other as 1 is to 0.707 in favor of the beam with its sides vertical. Tests have shown, however, that this is not the case but that they sustained loads which were practically equal; in fact, the beam with its diagonal vertical was slightly superior in strength, though scarcely more than the normal variation to be expected with careful matching of material. The stress factor then of a rectangular beam loaded with its diagonal vertical is practically 1.414, or when using the usual beam formula with S as determined by tests of 2 by 2 inch specimens a stress factor must be applied, and we have $M=1.414\frac{SI}{c}$.

Figure 3.—This figure gives illustrations of equivalent sections. Although there is a considerable difference in I/c, both beams in each set sustain practically equal loads.

Figure 4.—This figure shows the systems used for matching minor 2 by 2 inch specimens with a major beam which is to be investigated. The minors are shown taken alongside the beam on one or both sides or at one or both ends. When taken from one end specific gravity determinations were made for the other end and adjustments made.

Figure 5.—Figure 5 shows a standard set-up for a two-point loading test. Slender beams like the Loening (Figure 1) were prevented from bending in more than one plane by pin-connected horizontal ties which are shown in Figure 8.

Figure 6.—The theory of variable elastic limit and ultimate stresses in timber under compression along the grain due to the support which a low-stressed fiber may give to one more severely stressed is developed later in this report. When attempting to evaluate the amount of reinforcement received by the extreme compressive fiber from those less stressed or in tension several trials were made to obtain a relation which would check test results and which could be represented by simple mathematical curves. Curve A was the resulting relation.

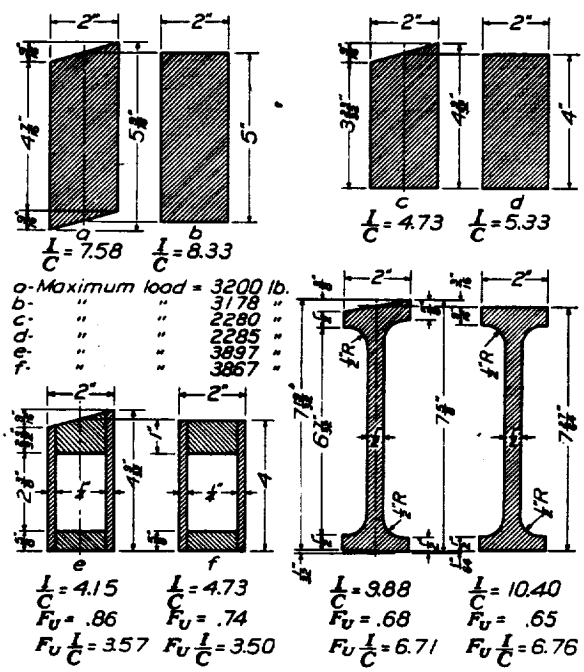

FIG. 3.—Equivalent beam sections.

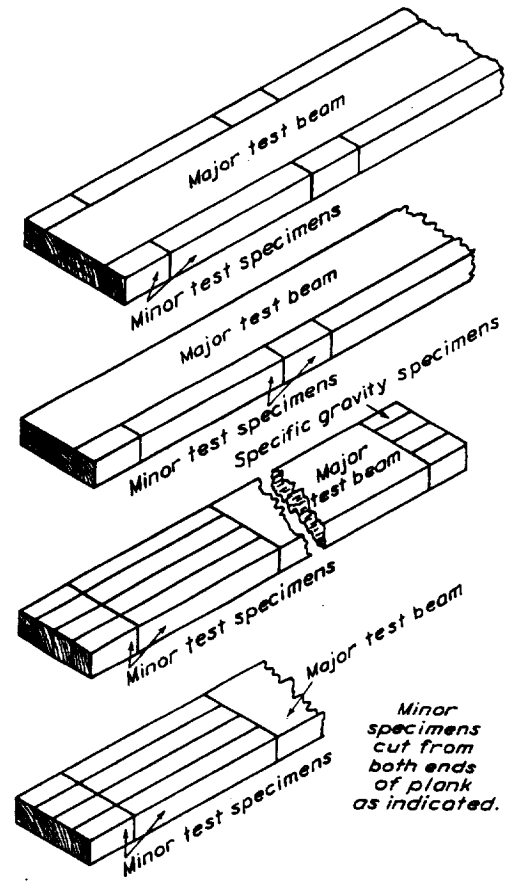

FIG. 4.—Matching diagrams.

Curve B is the supporting ratio of the flange of a box or I beam. The depth of compression flange in per cent of total depth of beam is plotted against the ratio of the area above this flange-depth ratio to the total curve A area.

Figure 7.—This figure shows how the maximum load sustained at the center of a box or I beam varies as material is transferred from the tension to the compression flange, over-all dimensions and area remaining constant.

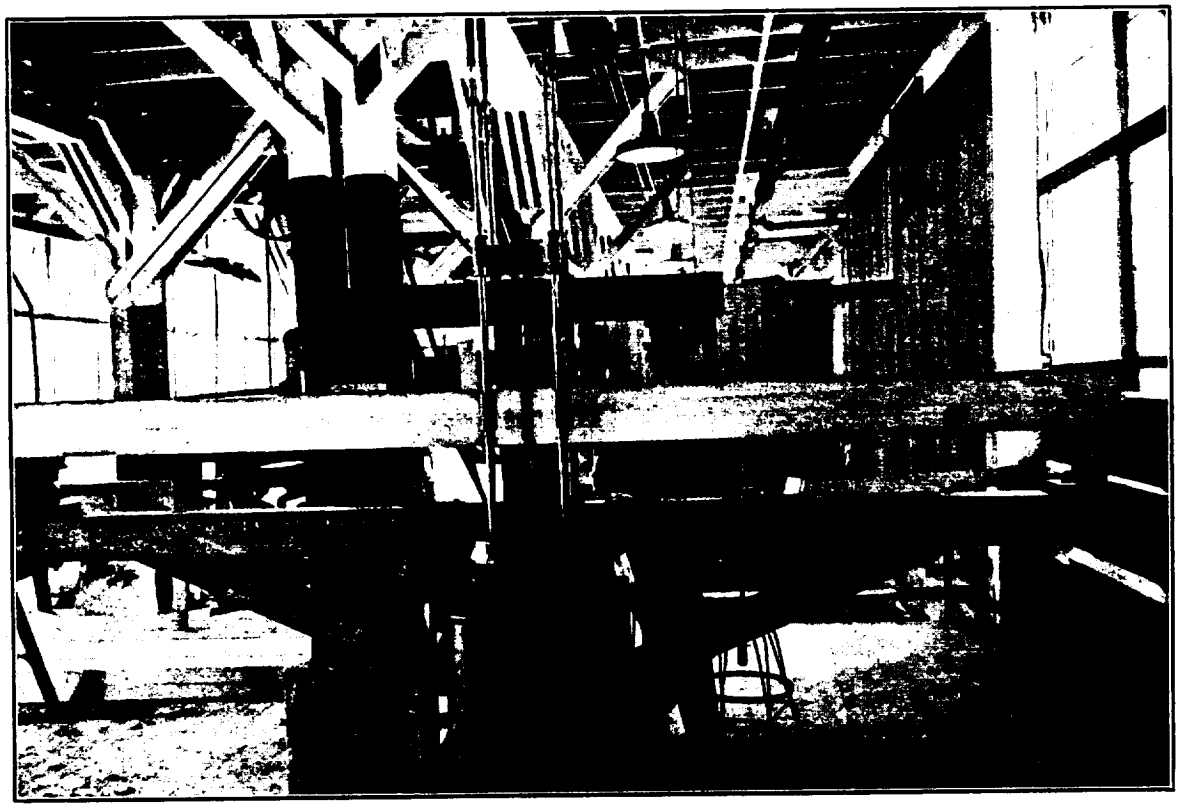

FIG. 5.—Two-point loading test.

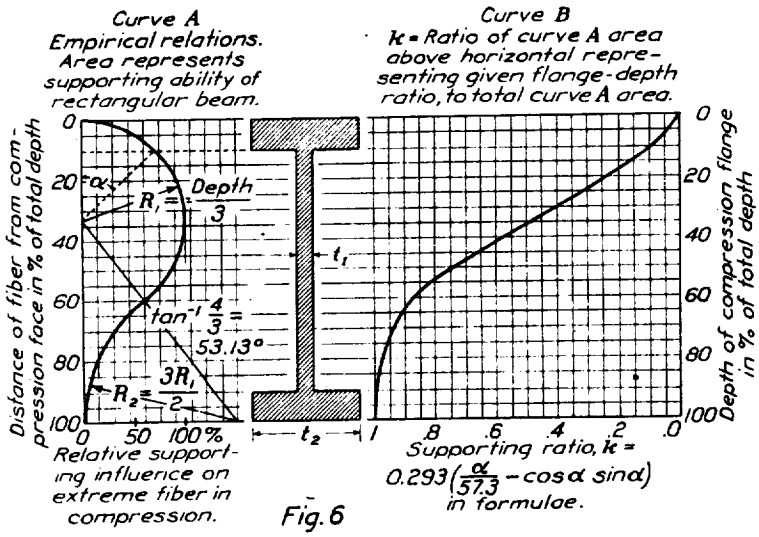

Curves showing empirical relations in stress factor theory based on assumption that less stressed fibers lend support to higher stressed fibers.

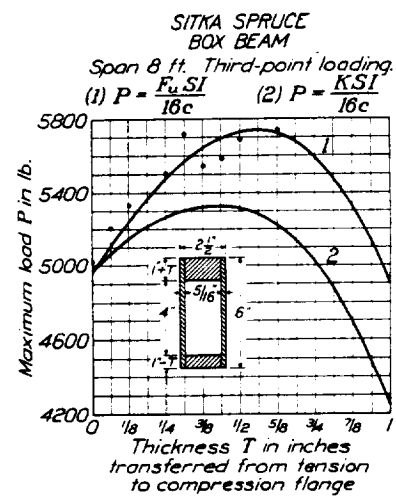

FIG. 7.—Influence of unequal flange depth on strength of box beams.

Figure 8.—This is a photograph of the apparatus used to prevent the bending of beams in more than one plane. When the ratio of the moment of inertia about a horizontal axis to that about a vertical axis is large, lateral buckling causes a considerable reduction in load unless prevented by some such apparatus as shown.

FIG. 8.—Apparatus to prevent lateral buckling.

Table I.—This table shows the properties of the beams, sections of which are shown in Figure 1, together with the average of the properties of the minors matched with each beam. All minor values have been adjusted to the moisture content of the beam. The ratio of a property of the major to that of a minor is expressed as a form factor for that property. Modulus of rupture form factors were determined in this way and also by giving the compression parallel values equal weight with modulus of rupture values. In weighting compression parallel values they were multiplied by $\frac{7,900}{4,300}$, the ratio of modulus of rupture to maximum crushing strength parallel to the grain for spruce at 15 per cent moisture.

TABLE I.—*Strength properties of several standard wing beams with similar properties of matched rectangular specimens 2 by 2 inch section and the relation of similar properties expressed as form factors.*

Beam.	Specific gravity weight oven-dry volume at test.	Specific gravity volume and weight oven-dry.	Moisture.	Beam: Fiber stress at elastic limit.	Beam: Modulus of rupture.	Minors.[1]: Fiber stress at elastic limit.	Minors.[1]: Modulus of rupture.	Minors.[1]: Maximum crushing strength.	Minors.[1]: Maximum crushing strength times 79÷43.	Form factors: From column 5 divided by column 7. F_E	Form factors: From column 6 divided by column 8. F_U	Form factors: From column 6 divided by average of columns 8 and 10. F_U
(1)	(2)	(3)	(4)	(5)	(6)	(7)	(8)	(9)	(10)	(11)	(12)	(13)
			Per cent.	*Lbs. per sq. in.*	*Lbs. per sq. in.*	*Lbs. per sq. in.*	*Lbs. per sq. in.*	*Lbs. per sq. in.*	*Lbs. per sq. in.*			
F5L front beam.												
F-5-D-K..	0.408	0.433	11.2	6,815	8,760	9,370	13,170	6,520	11,980	0.686	0.665	0.696
F-5-D-L...	.428	.449	11.8	6,380	9,380	8,050	11,590	6,300	11,570	.792	.809	.809
F-5-D-P...	.396	.422	11.6	5,950	7,630	7,855	11,340	6,020	11,060	.758	.672	.681
F-5-D-T...	.398	.418	11.9	6,110	7,745	6,760	10,070	5,690	10,450	.901	.769	.755
F-5-D-V...	.389	.414	12.3	5,460	6,870	6,535	9,980	5,660	10,400	.836	.688	.674
Average..	.404	.432	11.8	6,143	8,077	7,714	11,230	6,038	11,092	.795	.721	.723
F5L rear beam.												
F-5-D-M..	0.394	0.429	11.6	6,760	8,045	8,380	11,940	6,010	11,040	0.807	0.674	0.700
F-5-D-N..	.404	.429	11.3	6,260	8,160	7,645	11,570	6,625	12,170	.819	.705	.688
F-5-D-O...	.457	.483	11.3	6,270	9,280	8,300	13,400	6,915	12,700	.755	.693	.711
F-5-D-Q...	.378	.406	10.6	5,840	7,240	6,895	10,160	5,570	10,230	.847	.712	.710
F-5-D-S...	.378	.404	12.4	5,560	7,345	6,995	10,890	5,870	10,780	.795	.674	.678
Average..	.402	.430	11.4	6,138	8,014	7,661	11,592	6,198	11,384	.805	.692	.697
T. P. front beam.												
T-F-D-H..	0.416	0.443	10.7	4,080	7,535	6,835	10,680	6,975	12,810	0.597	0.705	0.642
T-F-D-I...	.411	.435	10.1	4,855	6,830	6,960	11,050	6,440	11,830	.698	.618	.597
T-F-D-J...	.404	.412	11.1	4,740	6,420	6,415	10,470	5,365	9,900	.739	.613	.630
T-F-D-K..	.347	.368	10.8	4,300	5,620	5,960	9,120	4,975	9,140	.722	.616	.615
T-F-D-L..	.379	.404	10.5	5,170	6,050	6,440	10,300	5,305	9,750	.803	.588	.604
T-F-D-M..	.382	.404	11.0	5,220	6,000	6,460	10,310	5,500	10,100	.808	.582	.588
T-F-D-N..	.365	.390	10.0	5,180	6,395	6,560	10,290	5,875	10,790	.790	.622	.607
T-F-D-O..	.359	.378	10.8	4,675	5,585	5,410	9,125	5,120	9,405	.864	.612	.603
T-F-D-P..	.397	.423	10.5	5,000	7,025	6,535	10,730	6,025	11,070	.765	.655	.644
Average..	.384	.406	10.6	4,802	6,384	6,397	10,231	5,739	10,533	.754	.623	.614
T. F. rear beam.												
T-F-D-R..	0.424	0.447	11.9	5,320	6,885	7,680	11,450	5,305	9,750	0.693	0.601	0.649
T-F-D-U..	.382	.412	11.0	4,070	5,745	5,545	8,895	4,515	8,300	.734	.646	.669
T-F-D-V..	.401	.424	11.0	4,070	6,180	5,320	9,345	4,765	8,755	.765	.661	.683
T-F-D-W..	.339	.365	11.3	4,700	5,585	5,525	8,700	4,875	8,960	.850	.643	.633
T-F-D-X..	.347	.374	12.5	4,455	5,650	5,800	8,490	4,480	8,230	.768	.666	.676
T-F-D-Y..	.386	.407	12.5	4,335	6,190	6,025	9,560	4,705	8,645	.719	.648	.680
T-F-D-Z..	.358	.379	11.0	4,475	6,120	6,380	9,325	5,535	10,160	.702	.656	.628
Average..	.377	.401	11.6	4,489	6,051	6,039	9,395	4,883	8,972	.747	.646	.660

Beam.	Specific gravity weight oven-dry volume at test.	Specific gravity volume and weight oven-dry.	Moisture.	Beam: Fiber stress at elastic limit.	Beam: Modulus of rupture.	Minors: Fiber stress at elastic limit.	Minors: Modulus of rupture.	Minors: Maximum crushing strength.	Minors: Maximum crushing strength times 79÷43.	Form factors: From column 18 divided by column 20. F_E	Form factors: From column 19 divided by column 21. F_U	Form factors: From column 19 divided by average of columns 21 and 23 F_U
(14)	(15)	(16)	(17)	(18)	(19)	(20)	(21)	(22)	(23)	(24)	(25)	(26)
			Per cent.	*Lbs. per sq. in.*	*Lbs. per sq. in.*	*Lbs. per sq. in.*	*Lbs. per sq. in.*	*Lbs. per sq. in.*	*Lbs. per sq. in.*			
Loening front beam.												
L-B-B.....	0.411	0.444	11.0	5,540	7,720	6,930	10,965	5,630	10,350	0.800	0.704	0.724
L-B-C.....	.370	.381	8.6	3,359	7,200	4,828	9,925	4,665	8,570	.696	.726	.778
L-B-D.....	.386	.405	10.9	5,410	7,520	7,080	10,410	5,560	10,210	.764	.722	.729
L-B-E.....	.358	.376	8.9	5,800	7,770	7,000	9,620	4,690	8,615	.828	.808	.852
L-B-F.....	.365	.382	10.8	3,758	6,790	4,770	8,710	4,242	7,795	.788	.780	.823
L-B-Q.....	.388	.424	9.8	5,980	7,990	7,580	10,910	5,465	10,040	.789	.732	.763
L-B-R.....	.370	.391	10.3	4,830	6,545	6,775	9,675	4,745	8,720	.713	.677	.712
L-B-S.....	.351	.364	8.6	5,970	7,325	7,620	10,690	5,110	9,390	.783	.685	.730
L-B-T.....	.368	.395	9.2	5,215	7,480	7,385	10,520	5,085	9,345	.706	.711	.753
L-C-Z.....	.391	.406	13.5	4,950	7,800	5,656	9,440	5,150	9,460	.876	.826	.825
L-D-A.....	.404	.431	13.3	4,588	6,955	5,480	9,600	5,290	9,720	.837	.724	.720
L-D-B.....	.407	.434	12.8	4,282	7,370	5,860	9,850	5,635	10,350	.731	.748	.730
L-D-C.....	.415	.443	13.5	4,012	6,670	5,980	10,170	5,305	9,750	.671	.656	.669
Average..	.377	.406	10.9	4,906	7,318	6,380	10,037	5,121	9,409	.768	.746	.754
Loening rear beam.												
L-B-P.....	0.345	0.368	10.2	5,620	7,535	7,060	10,100	4,955	9,100	0.796	0.746	0.784
L-C-Q.....	.383	.404	13.4	5,015	8,185	5,995	9,270	4,805	8,825	.837	.883	.905
L-C-R.....	.402	.429	12.8	5,480	8,720	6,010	10,120	5,140	9,440	.912	.862	.891
L-C-T.....	.426	.452	12.7	5,000	8,545	6,550	10,740	5,955	10,940	.763	.795	.788
L-C-X.....	.427	.460	12.2	5,490	8,635	6,360	10,760	5,955	10,940	.862	.802	.796
L-C-Y.....	.424	.458	12.3	5,985	8,915	6,535	10,980	5,780	10,620	.916	.812	.825
Average..	.401	.428	12.3	5,430	8,422	6,418	10,328	5,432	9,811	.848	.817	.832
N. C. front beam.												
N-C-A-U..	0.407	0.442	12.4	4,640	7,060	6,990	9,410	5,775	10,600	0.664	0.750	0.706
N-C-A-V..	.380	.404	11.9	4,620	7,065	6,780	9,930	5,670	10,410	.682	.712	.694
N-C-A-W.	.425	.456	11.5	5,235	7,620	6,630	10,320	6,280	11,540	.789	.738	.697
N-C-A-Y..	.388	.426	11.6	5,400	8,000	6,995	10,060	5,995	11,010	.772	.795	.760
N-C-A-Z..	.387	.412	11.8	4,595	7,730	6,415	9,470	5,445	10,010	.716	.816	.793
N-C-B-A..	.413	.438	12.4	3,950	7,205	5,455	11,260	5,055	9,285	.724	.640	.702
N-C-B-B..	.459	.499	13.0	5,215	8,090	6,445	11,100	5,875	10,780	.809	.728	.740
N-C-B-D..	.402	.427	12.4	8,948	6,190	5,510	8,620	5,070	9,320	.716	.718	.704
Average..	.408	.438	12.1	4,700	7,370	6,402	10,021	5,646	10,369	.734	.737	.724
N. C. rear beam.												
N-C-A-B-A	0.441	0.470	12.4	5,345	7,660	6,990	10,170	5,785	10,620	0.765	0.753	0.738
N-C-A-B-B	.422	.450	12.2	5,120	7,440	6,647	9,910	5,675	10,420	.770	.751	.732
N-C-A-B-C	.392	.423	11.6	4,415	7,410	6,600	9,670	5,450	10,010	.821	.766	.753
N-C-A-B-D	.382	.415	11.9	5,420	6,830	6,395	9,300	5,255	9,645	.848	.734	.721
N-C-A-B-E	.415	.448	12.2	5,760	7,800	6,810	10,030	6,085	11,180	.846	.778	.735
N-C-A-B-F	.414	.445	12.0	4,760	7,330	6,660	9,525	5,700	10,460	.715	.770	.734
N-C-B-E..	.380	.410	12.8	4,062	5,875	5,225	8,680	4,410	8,100	.777	.677	.700
N-C-B-F..	.383	.414	12.7	4,400	6,285	5,320	8,930	4,300	7,900	.827	.704	.747
N-C-B-H..	.345	.430	11.9	4,695	6,135	5,910	8,940	4,720	8,665	.794	.686	.697
Average..	.397	.434	12.2	4,997	6,974	6,283	9,462	5,264	9,667	.799	.735	.728

[1] The properties given for the minor specimens are the average of from two to eight 2 by 2 inch specimens matched with each major beam and adjusted to the moisture content of the major beam.

Spans of major beams range from 6 to 12 feet and load was applied at the third points.

United States Department of Agriculture, Forest Service, Forest Products Laboratory, Madison, Wis.

ANALYSIS OF RESULTS.

Nearly all of the mechanical properties of wood, especially those affecting its flexural strength, have been determined from tests on rectangular specimens and, of all these properties the modulus of rupture is the one most used in design. Although modulus of rupture is not a true fiber stress, it has been shown that the modulus of rupture of solid rectangular beams of any dimension can be used as a basis of design for solid rectangular beams of practically any other dimensions without introducing errors of any considerable magnitude. The advent of the airplane, however, brought into use wood beams of shapes not commonly used before, such as I and box beams, and it was soon found that the modulus of rupture of rectangular beams could not be satisfactorily used in calculating the ultimate strength of such sections from the ordinary beam formula $M=\frac{SI}{c}$. Since to obtain the modulus of rupture we substitute maximum bending moment in the usual beam formula which is based on the assumption that the limits of elasticity are not exceeded it is not surprising that this computed value varies with the shape of the beam. It seems quite apparent that the cross section would have a tremendous influence on the distribution of stress beyond the elastic limit. What is surprising, however, is the fact that the fiber stress at elastic limit is greatly influenced by the shape of the cross section. There is every reason to believe that the ordinary assumption as to distribution of stress holds quite well up to the elastic limit when considering the stress in the extreme fiber, yet a wood I beam, for example, may have an elastic limit stress 30 per cent less than a solid rectangular beam made of the same material.

A conclusive mathematical explanation of the change with shape in the elastic limit and the so-called modulus of rupture of wood beams is not available, but the following conception of what takes place, has been used in the development of formulas which check experimental results remarkably well.

Consider a rectangular beam of Sitka spruce at 15 per cent moisture content. The elastic limit of this material in compression parallel to the grain is 2,960 pounds per square inch. It might be expected that when the specimen is tested in bending that the elastic limit would be reached when the extreme fiber on the compression side was stressed to 2,960 pounds per square inch as calculated by the standard $f=\frac{Mc}{I}$ formula. Tests show, however, that the elastic limit in bending is not reached until the extreme compressive fiber has a calculated stress of 5,100 pounds per square inch. A similar condition is found at ultimate load. We believe that the common theory of flexure holds quite well up to the elastic limit. What then operates to develop a much greater compressive stress at elastic limit in flexure than under direct compression? If we consider the minute fibers on the compressive side as miniature Euler columns somewhat bound together, we may account for this increase. These little columns when reinforced laterally will exceed the load necessary to cause buckling when unsupported, and as the fibers near the neutral axis are less stressed they may well lend such support. The outside fibers are reinforced by those in the layers below them and so on down through the beam. At the elastic limit the total reinforcement in the example cited amounts to $\frac{5,100-2,960}{2,960}=0.72$ of the strength at elastic limit in compression.

Furthermore, the results of thousands of tests on some 150 species grown in the United States indicate the following realtions at a moisture content of 12 per cent:

$$F_1=19,000\ \sqrt[4]{G^5} \text{ and } F_2=11,000\ \sqrt[4]{G^5}$$

where F_1 = fiber stress at elastic limit in bending in pounds per square inch.

F_2 = fiber stress at elastic limit in compression parallel to the grain in pounds per square inch.

G = specific gravity of the material

whence $\frac{F_1}{F_2}=1.727$.

Another illustration of the effect of lateral supporting action was obtained in the following manner: Several matched pairs of compression specimens 2 by 2 by 8 inches were tested with load applied parallel to the grain. One of each pair was loaded centrically and the other eccentrically, load being applied through plates and knife edges. In the latter case the knife edges were placed one-third of an inch off center. In the case of eccentric loading we might anticipate a maximum of stress on the edge nearest the knife edges and zero on the opposite side, with a total load equal to one-half that obtained by centric loading. A series of such tests showed not one-half but over two-thirds the load sustained by the specimen centrically loaded indicating that for some reason the extreme fiber stress had gone far beyond what might be expected. It seems reasonable that lateral support from the less stressed fibers might account for this increase.

Now, in an I beam such as shown in Figure 6, only those fibers in a width equal to the width of the web get the complete supporting action which obtains in a solid beam. The reinforcing action for the fibers outside the web is necessarily limited to the depth of the compression flange. A beam of this shape, then, is weaker than a solid beam of the same height and same section modulus and has a lower elastic limit. It is necessary, therefore, in designing such an I beam to modify the modulus of rupture of the material as determined by tests of solid sections by applying an appropriate factor such as has already been referred to in this discussion as a form factor.

It is difficult to evaluate the amount of reinforcement received by the extreme compressive fibers from those less stressed. The adjacent fibers could lend considerable reinforcement by virtue of their proximity but they too are stressed nearly as much as the extreme fibers; and those farther away, being under less compressive stress or under tensile stress, could lend considerable lateral support but their ability to lend such support is reduced because of their distance from the extreme fibers. With these two factors in view several trials were made to obtain a relation which would check test results and which could be represented by simple mathematical curves. Curve A, Figure 6, was finally adopted. The abscissae of this curve represent the relative supporting influence of all the fibers.

The total area under the curve represents the total support received by the extreme compressive fiber of a solid beam. The area to a depth equal to the compression flange as compared with the total area represents the relative support of the extreme fiber in the flange of an I or box beam exclusive of that portion which may be considered the web extended through to the top.

If we assume the radius R_1 (Fig. 6) to be unity, the total area between the curve and the vertical axis would then be:

$$1/2\left[\frac{143.13^\circ}{57.3}+\left(\frac{3}{2}\times 2\right)-\frac{53.13^\circ}{57.3}\times\left(\frac{3}{2}\right)^2\right]=A$$

The area of the portion of this figure above the dotted line representing the flange-depth ratio of a routed or box section is:

$$1/2\left(\frac{\alpha}{57.3}-\sin\alpha\cos\alpha\right)=A^1$$

The above formulas represent the conditions when the depth of the compression flange is not more than 60 per cent of the total depth of beam. Curve B, which will be explained later, can be used to determine the relative support for any flange depth.

Within these limits α which is the angle between the vertical and a radius to the point where the horizontal representing the flange-depth ratio intersects the supporting action curve, is the angle whose versed sine $(1-\cos)$ is $3\times\frac{\text{depth of compression flange}}{\text{depth of beam.}}$.

If the width of the flange of an I or box beam is t_2 and the width of the web t_1 the supporting ability of the compression flange would be $\frac{A^1}{A}\,\frac{t_2-t_1}{t_2}$ times the supporting ability of the rectangle

t_2 wide. The supporting ability of the web will be $\frac{t_1}{t_2}$ times the reinforcement of a rectangle t_2 wide.

Now it was shown that in rectangular sections the total lateral support given to the more stressed fibers, by those less stressed, increases the fiber stress at elastic limit in flexure over that in direct compression by practically 72 per cent. The increase of fiber stress at elastic limit for the I or box beam may be expressed as:

$$0.72\left[\frac{A^1}{A}\frac{t_2-t_1}{t_2}+\frac{t_1}{t_2}\right].$$

The ratio of the elastic limit stress in bending to the elastic limit of the material in direct compression will be 1 plus this quantity, and the form factor will be 1 plus this quantity divided by 1.72. Consequently, for the form factor of the I or box section we have by substituting the values of A and A^1:

$$F_E=0.58+0.42\left[0.293\left(\frac{\alpha}{57.3}-\sin\alpha\cos\alpha\right)\frac{t_2-t_1}{t_2}+\frac{t_1}{t_2}\right] \tag{1}$$

in which F_E = form factor at elastic limit. Not only does this formula check test results for all routing within practical limits but extreme cases as well. For the section with the one-eighth-inch saw kerf at the neutral axis (see fig. 2) the formula value checks the average of test results within 2 per cent. This formula which is semiempirical in its nature apparently would not hold for very thin flanges, giving values too low. Experiment, however, showed that with thin flanges (see fig. 2 for extreme cases) factors such as the influence of thickness of material with its resulting buckling and offsetting action when failure starts, cause a reduction in load which offset the apparent inaccuracy of the formula. For thin flanges our test results coincide almost exactly with the formula.

The quantity $0.293\left(\frac{\alpha}{57.3}-\sin\alpha\cos\alpha\right)$ or $\frac{A^1}{A}$ which is the ratio of the area above a horizontal representing the flange-depth ratio to the total area of curve A, Figure 6, can be determined graphically and is so recorded in curve B, Figure 6. If we let K represent this ratio we may then write:

$$F_E=0.58+0.42\left(K\frac{t_2-t_1}{t_2}+\frac{t_1}{t_2}\right).$$

So far we have worked on the assumption that the limits of elasticity were not exceeded. When the limits of elasticity are passed there is practically no theoretical basis for the adoption of a formula such as the above formula (1). It was found, however, that if 0.50 was substituted for both 0.58 and 0.42 the formula gave values which checked experimental results very well and for this reason we have adopted the following formula for the modulus of rupture form factor:

$$F_U=0.50+0.50\left[0.293\left(\frac{\alpha}{57.3}-\sin\alpha\cos\alpha\right)\frac{t_2-t_1}{t_2}+\frac{t_1}{t_2}\right] \tag{2}$$

or

$$F_U=0.50+0.50\left(K\frac{t_2-t_1}{t_2}+\frac{t_1}{t_2}\right)$$

the value of K to be taken from Figure 6.

It is often the case that the top and bottom edges of wing beams are not perpendicular to the vertical axis of the beam. The above formulas (1) and (2) can not be used to determine the form factors of such sections. In order to estimate the strength of such a section it is necessary to consider a section of equal strength which is symmetrical about a vertical axis. It has been found by test that such an equivalent section is one whose height equals the mean height of the original section and whose width and flange areas equal those of the original section.

Figure 3 shows several sections with the equivalent section corresponding to each. An examination of this figure leads to but one conclusion, that the extreme fibers on the beveled compression edge by virtue of greater supporting action carry a higher stress. The loss in I/c is thus compensated for and the two beams of each pair carry equal loads.

The use of the equivalent section not only simplifies calculations but eliminates the necessity of testing for form factors of sections not symmetrical about a vertical axis. Greater accuracy will be obtained by the use of the equivalent section than would be obtained by the use of a form factor for the unsymmetrical section determined from a relatively few tests.

To illustrate the use of the equivalent section let us take the pair of I beams shown in Figure 3. We wish to estimate the moment which the beam with the beveled top flange will sustain but the form factor of this section can not be determined by the formula. The form factor for modulus of rupture of the equivalent section by the formula is found to be 0.65, since $I/c=\frac{38.05}{3.66}$ we have the breaking moment $M=0.65\ S\times\frac{38.05}{3.66}=6.76\ S$. In attempting to check the accuracy of this value the form factor of the original section was found by test to be 0.68. I/c for this section is $\frac{38.0}{3.85}$ and $M=0.68\ S\times\frac{38.0}{3.85}=6.71\ S$. The moment estimated by means of the equivalent section was, therefore, correct within less than 1 per cent.

GENERAL CIRCUMSTANCES TO BE CONSIDERED IN APPLYING STRESS FACTOR FORMULAS.

The form factors determined by test and those obtained by the use of the above formula are based on comparison of properties of the various sections with those of specimens 2 by 2 inches in section. All strength tables used in design by the Aeronautical Bureaus of the Army and Navy Departments are based on tests of such specimens. Some standard must be adopted, since it has been shown by test that the modulus of rupture gradually diminishes as the height of a beam is increased. This decrease may be estimated by the following empirical formula based on tests of beams up to 12 inches in height:

$$D=-0.07\left(\sqrt{\frac{h}{2}}-1\right) \tag{3}$$

and for a rectangle

$$F_U=1-0.07\left(\sqrt{\frac{h}{2}}-1\right)$$

where D = per cent modulus of rupture of beam with height (h) varies from the modulus of rupture of a beam 2 inches in height.

A common method of obtaining a form factor for a proposed section by test has been to compare its modulus of rupture with that of a rectangular beam of the same over-all dimensions. If the form factor of an I beam on the basis of comparison with a specimen 2 inches high is 0.70, for example, and this I beam is compared with a rectangular beam 8 inches high in which we would expect a discrepancy of 0.07 in modulus of rupture the apparent form factor would become $0.70\div0.93$ or 0.75. It would be incorrect to use 0.75 when strength values used in design are based on tests of beams 2 inches in height. If this procedure is adopted a height factor must be introduced to take care of the difference in stress developed in a specimen 2 inches high, and in the particular rectangular beam. The constants in our form factor formulas were chosen so as to compensate for this reduction with height and they have been found to give very accurate results for ordinary box beams and normally routed I beams for heights up to 9 inches. For greater heights a slight error will be introduced which will probably increase with increase in height.

RELIABILITY OF TEST VALUES.

Unless standard methods are employed in making tests it is not expected that test values will check each other or formula values. It is not the purpose of this report to discuss the test methods in great detail, but it might be well to point out a few of the things to guard against in order to obtain reliable results by tests. In applying center loading on a span equal to

fourteen times the depth of beam, the bearing block should have a radius curvature one and one-half times the depth of beam for a chord length equal to the depth of the beam. Greater width of block can be secured by continuing the curvature on a radius two-thirds the above. For beams loaded at the third point double the above radii. Any great departure from this procedure will give results which are not comparable. The properties of wood are considerably influenced by the rate of loading. Consequently, the speed of machine is very important. When but few tests are made to determine a form factor, material should be selected with great care. Taking Sitka spruce, for example, a test piece would not be considered representative material unless the ratio of maximum crushing strength to modulus of rupture fell between 0.52 and 0.57.

CONCLUSIONS.

The strength of I and box beams can not be estimated by applying the strength values of wood as determined from tests on small rectangular beams directly in the usual beam formula.

These strength values can be applied, however, in conjunction with certain correction factors whose values depend upon the shape of the cross section. These factors have been named form factors.

The form factor applied to the modulus of rupture may be as small as 0.50 or, in other words, the modulus of rupture of a section other than rectangular when calculated by the usual beam formula may be only 50 per cent of the modulus of rupture of a small rectangular beam.

The reduction of fiber stress at elastic limit for any section is not as great as the reduction in modulus of rupture.

Form factors are not necessarily all less than unity. A beam of circular section, for example, has a form factor for modulus of rupture of about 1.18.

There is also a reduction of modulus of rupture with height for beams of solid rectangular section. Therefore the value of form factors must be based on some standard height, as practically all tables used in aircraft design are based on tests of small rectangular beams usually 2 by 2 inches in section, the 2-inch height has been taken as this standard.

If the ratio of moment of inertia about a horizontal axis to that about a vertical axis is excessive the full theoretical strength of a beam can not be developed because of lateral buckling. For one standard section tested in connection with this study this ratio was 39 to 1, which is far in excess of what is permissible for beams in other classes of construction which are held even more firmly than beams in the wing. We would suggest that this ratio be kept below 25 if possible, but if this value is exceeded particular attention should be given such factors as the rigidity of the supports, rib spacing, etc., which influence the lateral rigidity.

Heretofore the factors for any adopted or proposed section had to be determined by test. An analysis of the results of a large number of such tests, together with a study of what seemed to be the underlying principles governing these results, furnished a basis upon which to develop formulas for determining form factors for any section. Values obtained by these formulas check test results remarkably well.

All previous methods of estimating the breaking moment of wood beams involved the tensile and compressive properties of the wood and assumed fiber stress at elastic limit and maximum fiber stress in the extreme fiber to be constant for all sections, whereas our assumption is that both these stresses are variable.

As regards the accuracy of the above formulas, we would expect them to check the average of a great number of test values more closely than a few tests of representative material would check such average. Even for beams with extremely thin flanges, at which limit they were not expected to check, it was found that they checked results of tests made on I beams routed beyond all practical limits.

NONSYMMETRICAL SECTIONS.

It is generally know that the ultimate tensile strength of wood is greater than the ultimate compressive strength even when the compression fibers are as fully supported as in a solid rectangular beam. It would appear reasonable, therefore, to proportion a wood beam in some manner which would involve a large compression flange and a smaller tension flange.

Naturally this would only apply to simple or cantilever beams under stress from transverse load only and that not subject to reversal unless the load factor under reversed conditions was much lower than for normal conditions. In combined loading stiffness is an element of strength and is greatest for a symmetrical section.

SECTION MODULUS A MAXIMUM.

It is commonly supposed that the most effective wood section is obtained by so arranging the material that the distances of the extreme tension layers and extreme compression layers from an axis containing the centroid are to each other as the ultimate tensile stress and ultimate compressive stress of the material. Many textbooks present this idea for such materials as wood and cast iron, but by all the assumptions which are made in the development of the common-beam formula, the section modulus I/c should be a maximum if the ultimate stress is considered constant. In neither wood nor cast iron does this occur when the distances from the centroid to the extreme tension and compression fibers are as the ultimate tensile and compression strength, which condition would indicate an equal likelihood of failure by tension or compression. The first failure in wood beams with unequal flanges always occurs on the compression side if the material is normal and distributed between the two flanges so as to give maximum strength.

If the thickness of the tension flange of an I or box beam is gradually diminished and the thickness of the compression flange increased by the same amount, it is found that up to a certain point the quotient I/c increases in value and then begins to decrease. (See fig. 7.) I is the moment of inertia of the section about the axis which contains the centroid and c the distance from this axis to the extreme fiber in compression. We are apt to assume an increase in maximum load practically corresponding to this increase in I/c as the formula $M=S\ I/c$ would indicate, provided, as stated above, that the maximum compressive stress was considered constant as the shape of the beam changed. An increase in strength is obtained, but it is greater than would be anticipated from the I/c increase. This is because the section, by virtue of its change in shape, will develop greater compressive stress in the extreme fiber at failure or what means the same thing, has a larger form factor.

It is the combination of these two factors that gives the increase in efficiency of box or I sections when the flanges are made of unequal area.

Properly both factors should be used in determining the relative areas of the two flanges, yet it has been found sufficiently accurate to use only I/c to determine what section shall be used and both in computing the probable strength of this section. An examination of Figure 7 will show that the maximums of the two full-line curves occur at different flange area ratios. However, both curves are quite flat at the maximum and the difference in strength for a considerable change in flange area ratio is not great. Furthermore, as the theoretical maximum efficiency is approached the beams become more erratic in their behavior due to the inability to detect flaws which may cause tension failures. It appears advisable, therefore, to use only the I/c curve in determining what section shall be used and to introduce the form factors when computing the strength of the section.

RESULT OF TEST.

Figure 7 shows the results of tests of several sets of matched beams with varying ratios of tension flange area to compression flange area. The lower curve is the variation in maximum load we would get if we followed the change in I/c.

$$P=\frac{K\,SI}{16c}$$

But you will note all the tests show a much greater increase.

It is not difficult to account for this increase if we apply the principles outlined in the preceding pages of this report. By transferring material to the compression flange from the tension flange we increase the form factor of the section, or, in other words, the ability of the

extreme fiber to resist compressive stress is enhanced The form factor unlike the I/c value does not reach a maximum and then get less, but continues to increase until all of the material has been transferred from the tension to the compression flange. The variation in load expected when both the form factor and I/c are taken into account is represented by the upper full line of Figure 7.

$$P=\frac{F_u SI}{16c}$$

P = Maximum load.
F_u = Stress factor of section.
$K = F_u$ for section when flanges are equal.
S = M of R of material obtained from solid rectangular beams.
I = moment of inertia of section about axis through its centroid.
c = Distance from centroid to extreme fiber in compression.

The test values follow this line in a general way. The variations from the curve, however, are not greater than would be expected when the difficulties of matching are considered. In order to match nine or more beams of the dimensions indicated it was necessary to use material in relatively large sizes, and two pieces cut from the same plank some distance from each other may differ considerably in specific gravity and accordingly in other properties. The test values were not corrected for density differences.

FORMULA FOR DESIGN.

In order to develop a formula for determining the proper dimensions of the most efficient section with unequal flanges, let us assume a symmetrical I or box section whose bending strength under loads from one direction we aim to improve by transferring material from the tension to the compression flange, total height, width, and area to remain constant. We have but to set up an expression for the section modulus in terms of the variable thickness to be removed from the tension flange and added to the compression flange and to solve this expression for a maximum.

Let

A = area of the cross section.
b = total width.
h = total height.
w = width of flange.
D = distance between flanges.
F = one-half the combined thickness of the flanges.
I_s = moment of inertia of the symmetrical section.
I_1 = moment of inertia of the unsymmetrical section about the axis containing the centroid.
c = distance from the above axis to the extreme fiber on the compression side.
I_2 = moment of inertia of the unsymmetrical section about an axis at midheight.
x = the thickness to be taken from the tension flange and added to the compression flange for maximum efficiency.

Then

$$I_1=I_2-A\left(\frac{h}{2}-c\right)^2$$

or

$$I_1=I_s+\frac{1}{12}wx^3-\frac{1}{12}wx^3+xw\left(\frac{h}{2}-F-\frac{x}{2}\right)^2-xw\left(\frac{h}{2}-F+\frac{x}{2}\right)^2-A\left(\frac{h}{2}-c\right)^2$$

$$I_1=I_s-x^2w\,(h-2F)-A\left(\frac{h}{2}-c\right)^2 \qquad (1)$$

Since the statical moment about an axis through the centroid $=0$, we have

$$A\left(\frac{h}{2}-c\right)=xw\left(c-F-\frac{x}{2}\right)+xw\left(h-c-F+\frac{x}{2}\right) \tag{2}$$

$$\therefore\left(\frac{h}{2}-c\right)=\frac{xw(h-2F)}{A}$$

and

$$c=\frac{h}{2}-\left[\frac{xw(h-2F)}{A}\right] \tag{3}$$

substituting (2) in (1) and dividing by c or its value from (3) we have

$$\frac{I_1}{c}=\frac{I_s-x^2w(h-2F)-A\left[\frac{xw(h-2F)}{A}\right]^2}{\frac{h}{2}-\frac{xw(h-2F)}{A}}$$

Let

$$h-2F=D$$

$$\frac{I_1}{c}=\frac{2(AI_s-Ax^2wD-x^2w^2D^2}{Ah-2\,xwD}$$

Differentiating this expression, equating to zero and canceling, we have:

$$x^2wD(A+wD)-xAh(A+wD)+AI_s=0$$

Substituting bh for $(A+wD)$, we have:

$$x^2wD\;bh-xAbh^2+AI_s=0$$

$$x=\frac{A\;bh^2-\sqrt{A^2b^2h^4-4AI_sbhwD}}{2\;wD\;bh}$$

The minus sign preceding the radical is used to fulfill the second condition for a maximum.

On account of the suddenness of tension failures and the difficulty of inspection which would insure material of high tensile strength it is probably inadvisable to use a ratio of tensile to compressive stress greater than 2½ to 1. In going over the various wing beam sections which the laboratory has had occasion to test there appear to be none in which this ratio limits the application of the above formula.

○

DATE DUE | NAME

NACA - Langley Field, Va.

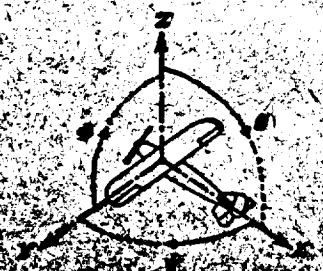

Positive directions of axes and angles (forces and moments)

Axis		Force (parallel to axis) symbol.	Moment about axis.			A
Designation.	Symbol.		Designation.	Symbol.	Positive direction.	Designation.
Longitudinal	X	X	rolling	L	$Y \longrightarrow Z$	roll
Lateral	Y	Y	pitching	M	$Z \longrightarrow X$	pitch
Normal	Z	Z	yawing	N	$X \longrightarrow Y$	yaw

Absolute coefficients of moment

$$C_l = \frac{L}{qbS}, \quad C_m = \frac{M}{qcS}, \quad C_n = \frac{N}{qlS}$$

Angle of set of neutral position, φ (indicate surface by proper subscript.)

4. PROPELLER SYMBOLS.

Diameter, D

Pitch (a) Aerodynamic pitch, p_a

(b) Effective pitch, p_e

(c) Mean geometric pitch, p_m

(d) Virtual pitch, p_v

(e) Standard pitch, p_s

Pitch ratio, p/D

Inflow velocity, V

Slipstream velocity, V_s

Thrust, T

Torque, Q

Power, P

(If "coefficients" are introduced all units used must be consistent.)

Efficiency $\eta = TV/P$

Revolutions per sec., n; per min., N

Effective helix angle $\Phi = \tan^{-1}\left(\frac{V}{2\pi rn}\right)$

5. NUMERICAL RELATIONS.

1 HP = 76.04 kg. m/sec. = 550 lb. ft/sec.

1 kg. m/sec. = 0.01315 HP

1 mi/hr. = 0.44704 m/sec.

1 m/sec. = 2.23693 mi/hr.

1 lb. = 0.45359 kg.

1 kg. = 2.20462 lb.

1 mi. = 1609.35 m. = 5280 ft.

1 m. = 3.28083 ft.

NACA FILE COPY

NASA FILE COPY

PLEASE RETURN TO

REPORT DISTRIBUTION SECTION

LANGLEY RESEARCH CENTER

NATIONAL AERONAUTICS AND

SPACE ADMINISTRATION

JAN 27 1961

NASA FILE COPY

PLEASE RETURN TO

REPORT DISTRIBUTION SECTION

LANGLEY RESEARCH CENTER

NATIONAL AERONAUTICS AND

SPACE ADMINISTRATION