4 MAR 1948

NATIONAL ADVISORY COMMITTEE FOR AERONAUTICS

WARTIME REPORT

ORIGINALLY ISSUED

January 1946 as
Memorandum Report L5K21

FREE-SPINNING, LONGITUDINAL-TRIM, AND TUMBLING TESTS OF $\frac{1}{17.8}$-SCALE MODELS OF THE CORNELIUS XFG-1 GLIDER

By Ralph W. Stone, Jr., and Lee T. Daughtridge, Jr.

Langley Memorial Aeronautical Laboratory
Langley Field, Va.

NACA

WASHINGTON

N A C A LIBRARY
LANGLEY MEMORIAL AERONAUTICAL
LABORATORY
Langley Field, Va.

NACA WARTIME REPORTS are reprints of papers originally issued to provide rapid distribution of advance research results to an authorized group requiring them for the war effort. They were previously held under a security status but are now unclassified. Some of these reports were not technically edited. All have been reproduced without change in order to expedite general distribution.

NASA Technical Library
3 1176 01403 5969

NACA LANGLEY MEMORIAL AERONAUTICAL LABORATORY

MEMORANDUM REPORT

for the

Air Technical Service Command, Army Air Forces

MR No. L5K21

FREE-SPINNING, LONGITUDINAL-TRIM, AND TUMBLING TESTS OF $\frac{1}{17.8}$-SCALE MODELS OF THE CORNELIUS XFG-1 GLIDER

By Ralph W. Stone, Jr., and Lee T. Daughtridge, Jr.

SUMMARY

A series of tests has been performed in the Langley free-spinning tunnels to determine the spin and recovery characteristics, longitudinal-trimming characteristics at extreme angles of attack, and tumbling tendencies of a $\frac{1}{17.8}$-scale model of the Cornelius XFG-1 glider. The tests were made at an equivalent altitude of 15,000 feet.

The effects of loading, mass distribution, and center-of-gravity position upon the model characteristics were determined. The inverted spin characteristics and the spin-recovery parachute requirements were also investigated.

The results of the tests showed that the model would spin in a flat attitude with extreme oscillations. In general, reversal of the rudder alone or extension of the spoilers stopped the spinning rotation, but the model remained in a stalled glide. Movement of the elevator down pitched the model out of this glide. Longitudinal-trim tests indicated that increasing the elevator-down setting to 20° insured pitching the model from this stalled glide, but the spin results indicated that care must be exercised to avoid entering an inverted spin. A 4.5-foot and a 7.5-foot (laid out flat diameter) silk tail parachute effected satisfactory recoveries when opened during spins of the glider for the minimum flying

weight and the fully loaded conditions, respectively. The model would tumble unless the elevators were held against the rotation.

INTRODUCTION

At the request of the Army Air Forces, Air Technical Service Command, a series of tests has been performed in the Langley free-spinning tunnels to determine the spin characteristics, longitudinal-trim characteristics, and tumbling tendencies of a $\frac{1}{17.8}$-scale model of the XFG-1 glider. The wings of the glider are swept forward and are located near the rear of the fuselage and have spoilers to aid in landing. The glider has a conventional vertical tail surface but has no horizontal tail surface, the elevator controls being on the wings inboard of the ailerons.

Two loadings were tested, corresponding to the glider in the minimum flying weight condition, and in the fully loaded condition. The spin and recovery characteristics for both loadings were determined with the spoilers neutral or extended, with the landing gear on and off, with forward and rearward positions of the center of gravity, and with various moderate changes in mass distribution. The inverted-spin characteristics for both loading conditions were also determined, and the effect of increasing the wing dihedral was determined for the minimum flying weight condition. Spin-recovery tail parachute tests were made for both loading conditions. The longitudinal-trimming tendencies of the model mounted free to pitch were investigated, the effects of spoilers, landing gear, and center-of-gravity location being determined.

Tumbling tests were made for the model in the minimum flying weight and fully loaded conditions, during which the effects of center-of-gravity positions, spoilers, and landing gear were determined.

SYMBOLS

S	wing area, square feet
b	wing span, feet
m	mass of glider, slugs
$\bar{c}$	mean aerodynamic chord, feet
$x/\bar{c}$	ratio of distance of center of gravity rearward of leading edge of mean aerodynamic chord to mean aerodynamic chord
$z/\bar{c}$	ratio of distance between center of gravity and fuselage centerline to mean aerodynamic chord (positive when center of gravity is below fuselage centerline)
I_X, I_Y, I_Z	moments of inertia about X, Y, and Z body axes, respectively, slug-feet^2
$\frac{I_X - I_Y}{mb^2}$	inertia yawing-moment parameter
$\frac{I_Y - I_Z}{mb^2}$	inertia rolling-moment parameter
$\frac{I_Z - I_X}{mb^2}$	inertia pitching-moment parameter
$\mu = \frac{m}{\rho S b}$	airplane relative density
ρ	air density, slug per cubic foot
V	full-scale true rate of descent, feet per second
α	angle of attack, degrees

APPARATUS AND METHODS

Model

Two dimensionally identical $\frac{1}{17.8}$-scale models of the XFG-1 glider were built and prepared for testing by Langley. Two models were built in order to expedite the tests in case of excessive damage to one of the models and because a model built to be ballasted for the light loading would be too weak structurally for the heavy loading.

The dimensional characteristics of the full-scale glider are given in table I. A three-view drawing of the model with the landing gear on is presented in figure 1. Photographs showing the model with the spoilers extended, landing gear off and on, are shown in figure 2.

The models were ballasted with lead weights to obtain dynamic similarity to the glider at an altitude of 15,000 feet (ρ = 0.001496). A remote-control mechanism was installed in each model to actuate the controls for the recoveries. The landing gear was independently ballasted so that correct mass characteristics were obtained for the model with landing gear off and on.

Wind Tunnel and Testing Technique

The tests were performed in the Langley free-spinning wind tunnels - the spin and tumbling tests in the 20-foot tunnel, the longitudinal-trim tests in the 15-foot tunnel.

With few exceptions, the operation of the 20-foot tunnel is similar to that of the 15-foot tunnel as described in reference 1. The model launching technique for spin tests has been changed from launching with a spindle to launching by hand with spinning rotation.

Spin tests.- The spin data presented were determined by the methods presented in reference 1 and have been converted to corresponding full-scale values. Because of the oscillatory and wandering motion of the models, quantitative data could generally not be obtained; therefore, only a description of the model motion before,

and the flight path after, control reversal is presented, together with the number of turns it took the model to stop rotating after the control was reversed. The tests were performed for the normal spinning control configuration (elevator full up, ailerons neutral, and rudder full with the spin) and for various other aileron-elevator deflection combinations including neutral and maximum deflections of the surfaces for the various conditions tested.

For the spin-recovery parachute tests, the model was launched into its spinning condition with the rudder set full with the spin. Recovery was then attempted by opening a tail parachute. The parachutes used were the flat circular type made of silk and had a drag coefficient of approximately 0.7 based on the surface area of the canopy. The diameter was measured when the parachute was laid out flat. The towline was attached to the tail cone of the model and the parachute was packed in such a manner so as not to change the spinning condition.

Longitudinal-trim tests.- For the longitudinal-trim tests, the model was mounted on a special rig fixed in the center of the tunnel. (See fig. 3.) The model was restrained from any movement about the roll and yaw axes, but was free to rotate about a pitch axis through an angle of plus or minus 90°. Provision was made for mounting the model at various center-of-gravity locations through a range of from 9 to 19 percent of the mean aerodynamic chord. The model was mass-balanced about the pitch axis for the particular center-of-gravity location desired.

The model was rotated to zero angle of attack by strings attached to the nose and tail. The airspeed in the tunnel was then increased and the model was allowed to assume an angle of trim. In order to determine if there was more than one angle of trim for any condition, the model was rotated by means of the strings, and the trim angle was measured when the strings were released. The trim angles were read by means of a protractor mounted on a tunnel window which was approximately parallel to the plane of symmetry of the model. These tests were arbitrarily performed with an approximate tunnel airspeed of 44 feet per second.

Brief force tests were also run in the free-flight tunnel to determine the neutral point of the model and to obtain data which could be compared with the results of similar balance tests performed at Wright Field.

Tumbling tests.- In order to determine the tumbling tendencies of the model, the model was either released from a nose-up position to simulate a whip-stall or was given an initial pitching rotation about a lateral axis. In the tests in which initial rotation was given the model, because of the confined space of the tunnel, only enough pitching moment was applied by hand to insure that the model would make at least one complete turn before it struck the safety net for cases in which it would tumble, or that the model would make approximately one complete turn before it stopped rotating for cases in which it would not tumble. The number of turns the model took before it ceased to tumble or before it hit the safety net was observed, as well as the behavior of the model while it was tumbling and after it ceased to tumble.

Moving pictures were taken of both types of tumbling tests so that a study of the model motion could be made. Approximate vertical rates of descent of the model during the tumbling tests were determined from the film records of the tumbling maneuver and from the tunnel airspeed. The camera speed being known, the apparent vertical rate of descent was determined from the number of frames of film in which the model moved a certain vertical distance. This apparent vertical rate of descent was added to the tunnel airspeed, giving an approximate vertical rate of descent of the model during the tumbling maneuver. Three rudder-aileron control combinations were tested for elevator full up, neutral, and full down: rudder neutral, ailerons neutral; rudder fully deflected, ailerons neutral; rudder neutral, ailerons fully deflected.

PRECISION

Inasmuch as the motion of the model during spin tests was mostly very wandering and oscillatory, the only precise data obtained were the number of turns the model took to stop rotating after control reversal.

These turns are believed to be the true model values within the following limits:

$\pm\frac{1}{4}$ turn when obtained from film records

$\pm\frac{1}{2}$ turn when obtained from visual observation

These limits may have been exeeded somewhat for cases in which the model was extremely difficult to test. Only approximate values of rates of descent and rotation could be obtained.

The angles of trim of the model obtained from the longitudinal-trim tests are believed to be within $\pm 2^{\circ}$ of their true values.

A comparison of model and airplane spin results (references 1 and 2) indicated that the spin-tunnel results were not always in complete agreement with the full-scale airplane results. In general, models spin at a somewhat smaller angle of attack, at a somewhat higher rate of descent, and with 5° to 10° more outward sideslip. The comparison made in reference 2 showed that 80 percent of the model recovery tests predicted satisfactorily the corresponding full-scale recoveries and that 10 percent overestimated and 10 percent underestimated the full-scale recoveries.

Because of limits of accuracy in ballasting the models and because of inadvertent damage to the models during the spin tests, the measured weight and mass distribution of the model varied from the true scaled-down values by the following limits:

Model ballasted for minimum flying weight condition (with pilot and landing gear)

Weight, percent		0 low, 3 high
Center of gravity		$0.01\bar{c}$ rearward to $0.05\bar{c}$ forward of normal
Moments of inertia, percent	I_X	1 low, 22 high
	I_Y	21 low, 1 low
	I_Z	7 high, 15 high

Model ballasted for fully loaded condition (with pilot and landing gear)

Weight, percent		2 low, 1 low
Center of gravity		$0.05\bar{c}$ rearward to $0.01\bar{c}$ forward of normal
Moments of inertia, percent	I_X	5 high, 17 high
	I_Y	9 low, 15 high
	I_Z	8 high, 32 high

The accuracy of measuring the weight and mass distribution of the model is believed to be within the following limits:

Weight, percent	±1
Center-of-gravity location, percent $\bar{c}$	±1
Moments of inertia, percent	±5

The controls were set with an accuracy of ±1°.

TEST CONDITIONS

Spin tests were made for the model conditions given in table II. The mass characteristics and inertia parameters for the possible loadings of the glider are shown in table III. The values of the corresponding mass characteristics and inertia parameters for the models as tested are presented in table IV. In addition, the inertia parameters for both the models and glider are plotted on figure 4. The basic loadings tested were the minimum flying weight with pilot and landing gear and the fully loaded condition, with pilot and landing gear. These loadings are herein referred to as the minimum flying weight and the fully loaded conditions.

The maximum control deflections used for spin and tumbling tests were:

Rudder	25° right, 25° left
Elevator	30° up, 20° down
Ailerons	20° up, 15° down
Spoilers	90° up

At the start of the spin tests the maximum down-elevator travel was only 10°, but subsequent to the longitudinal-trim tests the elevator-down deflection was changed to 20°. The maximum down-elevator travel used for the tests is noted on each of the tables of results.

Variations in mass distribution were investigated in order to allow for the limits of accuracy of the computed glider and model values and also to allow for any rearrangement of loading which might lead to a spinning condition in which a longer period of time is required for recovery after control reversal.

For the investigation of the effect of wing dihedral on the spinning characteristics of the model, the wing dihedral was increased from 2° to 8°.

The conditions tested for the longitudinal-trim tests and tumbling tests are given in tables V and VI, respectively.

RESULTS AND DISCUSSION

The results of the spin tests are presented in tables VII to XX. Results of right and left spins were quite similar and results for right spins are arbitrarily presented (glider turning to pilot's right). The results of the spin-recovery parachute tests are presented in table XXI, and the results of the longitudinal-trim tests are presented in table XXII. Tables XXIII to XXV contain the tumbling test results.

Spin Tests - Minimum Flying Weight

Normal condition.- The results of the tests for the minimum flying weight condition with the spoilers neutral are presented in table VII. When the controls were set for the normal spinning configuration (elevator full up, ailerons neutral, and rudder full with the spin), a motion oscillatory in roll and pitch took place, with approximately four oscillations per turn of the spin. Although this motion resembled a wide radius spiral, a definite condition of equilibrium appeared to

be present. Reversal of the rudder stopped the rotation in less than one turn, but the model remained in a stalled glide.

Deflecting the ailerons with the spin generally retarded recoveries slightly. Setting the ailerons against the spin was favorable in that the model would not spin when the elevators were neutral or down. When launched with rotation into the tunnel for these latter two conditions, the model oscillated violently and turned over into an inverted attitude. For the spins obtained, the approximate average rate of descent was 120 feet per second, full scale, and the approximate average rate of rotation was $\frac{1}{6}$ revolution per second, full scale.

Simultaneous full reversal of the rudder and elevators for all elevator-up spins resulted in rapid recoveries in which the model went into a steep dive and then over onto its back.

Extension of the spoilers generally decreased the oscillations and caused the model to stop rotating, even when the rudder was full with the spin (table VIII). When the elevators were up, however, the model remained in a stalled glide after the rotation ceased; reversal of the elevators from full up to full down after rotation had ceased caused the model to go into a steep dive. When the elevators were down, a spin could be obtained from which a rapid recovery was effected by full rudder reversal.

The results of tests of the model simulating the condition in which the landing gear has been jettisoned are presented in table IX.

These results, when compared with those with the landing gear installed, show a slight adverse effect on the spin and recovery characteristics of jettisoning the landing gear.

There was little effect of increasing the wing dihedral from 2° to 8° (results in table X).

Mass variations.- The results of tests with moderate mass variations (I_X and I_Z decreased 20 percent I_X, and I_Z increased 17 percent I_X from the normal minimum flying weight condition) are presented in tables XI

and XII. These results are somewhat similar to those obtained with the model in the normal minimum flying weight condition. After being launched in a spinning attitude, the model usually went into a flat stalled attitude, oscillatory about all three axes sometimes with rotation about the vertical spinning axis and sometimes with little or no rotation about the vertical axis. The rotation was stopped by rapid rudder reversal, but the model remained in a stalled glide when the elevators were up or neutral. Results of longitudinal-trim tests indicated that movement of the elevator to the full-down position (20°) after rotation had ceased would have undoubtedly pitched the model into a steep dive.

Center-of-gravity movements.- When the center-of-gravity location was 5 percent of the mean aerodynamic chord rearward of normal (table XIII), the spin and recovery characteristics were similar to those with normal center-of-gravity positions, except that when the elevators were only 10° down, the model remained in a stalled glide after rudder reversal. The longitudinal-trim tests indicated that the model would recover from this stalled glide if the elevators were moved 20° down.

When the center of gravity was moved 5 percent of the mean aerodynamic chord forward of normal (table XIV), the spins were oscillatory and relatively steep when the elevators were neutral or down, but recoveries by rudder reversal were unsatisfactory. The steep attitude of these spins apparently made the rudder ineffective because of shielding of the rudder by the wings and for this reason it is not considered advisable to spin the glider with the center of gravity forward of normal. Recovery may be effected in this loading by holding the elevators full up, reversing the rudder to stop rotation, and after the rotation has stopped, fully reversing the elevator to dive out of the stalled glide.

Inverted spins.- The results of the inverted spin tests are presented in table XV. For inverted spins, the designations of the control configurations are different from those used for erect spins. "Controls together" means that when the right rudder pedal is forward the stick is to the pilot's right, and "controls crossed" means that when the right rudder pedal is forward the stick is to the pilot's left. When the controls are together in an inverted spin, the ailerons

oppose the rolling motion; when the controls are crossed, the ailerons aid the rolling motion. The model would spin only with the controls crossed and the stick forward for the developed spin. Rapid full rudder reversal stopped the spinning rotation; the model, however, remained in a flat inverted position. Movement of the stick full back would pitch the glider from this flat inverted glide, but results indicate that care should be exercised to avoid entering an erect spin when the stick is moved full back. For the other control configurations, the model motion was very oscillatory and the model went into an inverted glide or dive with stick forward and into an erect position with stick neutral and back even though the rudder was held full with the spin.

Spin Tests - Fully Loaded

The results of tests of the model in the fully loaded condition are presented in tables XVI to XX. In general, the results were quite similar to those of the model in the minimum flying weight condition for both erect and inverted spins.

Spin-Recovery Parachute Tests

The results of tests to determine the optimum size of, and towline length for, spin-recovery tail parachutes (table XXI) indicate that a 4.5-foot (flat circular) tail parachute with a 27-foot towline will produce satisfactory recoveries for the minimum flying weight condition. A 7.5-foot diameter tail parachute with 27-foot towline will be satisfactory for the fully loaded condition. These results are based on tests with silk parachutes having a drag coefficient of approximately 0.7.

Longitudinal-Trim Tests

The results of the longitudinal-trim tests of the model presented in table XXII appear to be in good agreement with the results of the spin tests. When the center of gravity was at the normal location (14 percent M.A.C.) the model trimmed only at positive angles of attack when the elevators were full up and only at negative angles of attack when the elevators were down 10°. However,

when the elevators were only $7\frac{1}{2}^{\circ}$ down, the model trimmed at both negative and positive angles of attack, and from the results it appeared that a down-elevator setting of 10° was barely enough to prevent trim conditions at a positive angle of attack. Trim in the normal flight range of angles of attack could not be obtained with the elevators neutral. Brief force tests in the Langley free-flight tunnel indicated that the spin-tunnel model would trim in the normal flight range of angles of attack only with small down-elevator settings. The results of the Langley free-flight tunnel tests and results of Wright Field tests in their 5-foot tunnel are compared in figure 5. The free-flight tunnel tests showed an earlier stall and an upward shift of the pitching-moment curves in the positive direction, and indicated that small elevator-down deflections were needed for trim in the normal flight range. Additional longitudinal trim tests with small elevator-down settings showed this tendency to trim in the normal flight range for the spin-tunnel model.

The position of the spoilers and disposition of the landing gear had no effect on the general trimming characteristics of the model with the center of gravity located at 14 percent of the mean aerodynamic chord.

When the center of gravity was located at 19 percent of the mean aerodynamic chord and the landing gear was off, the results indicate that more than 20° of down elevator is necessary in order to prevent the model from trimming at relatively large positive angles of attack for this condition. Otherwise, the results of the trim tests with the center of gravity moved rearward of normal were very similar to those with the center of gravity at the normal location.

Tumbling Tests

Minimum flying weight condition.- The results of the tumbling tests in which the model was released without initial rotation from a nose-up position to simulate a whip-stall condition are presented in table XXIII. The model did not tumble for any control configuration, but executed a series of extreme oscillations in pitch during which the model would pitch through almost $\pm 180^{\circ}$ measured from the nose-down attitude. An attempt was

made, by means of the film records of these tests, to determine if these oscillations damped out. No damping effect could be observed in the short distance the model had to fall before hitting the safety net (approximately 12 feet).

The results of the tumbling tests in which the model was given initial rotation about the wing axis are presented in table XXIV. For all conditions tested, the model continued to tumble in a positive (nose up) direction when the elevators were up and in the negative (nose down) direction when the elevators were down. The model stopped tumbling, however, when the elevators were set against the pitching motion. With the elevators neutral, the model continued to tumble in either direction when the landing gear was on and the spoilers were retracted when the center of gravity was normal or 5 percent of the mean aerodynamic chord rearward of normal. For the normal center-of-gravity location, when the landing gear was on and the spoilers were extended, the model would tumble in the negative direction with the elevators neutral. Similarly, the model would tumble in the negative direction with neutral elevator when the landing gear was off and the spoilers were closed. When the center of gravity was 5 percent of the mean aerodynamic chord forward of normal, however, the model would not tumble with elevators neutral.

Fully loaded condition.- The results of tumbling tests of the model in the fully loaded condition are presented in table XXV. For these tests, the model was given initial rotation about the wing axis. The model stopped tumbling when the elevators were set against the rotation, but generally, continued to tumble for other elevator positions. The results obtained were generally similar to those obtained with the model in the minimum flying weight condition (with pilot and landing gear).

CONCLUSIONS

Based on the results of tests of $\frac{1}{17.8}$-scale models of the XFG-1 glider, the following conclusions regarding

the spin and recovery and tumbling characteristics of the glider at a test altitude of 15,000 feet have been made:

1. The motion of the glider in a spin will be oscillatory about all three axes. The rotation can be terminated satisfactorily by reversing the rudder, but the elevator must also be moved to a down position of 20° to insure nosing down from the stalled attitude. Care should be exercised by the pilot, however, in order to avoid entering an inverted spin.

2. Extending the spoilers will decrease the oscillations and cause the glider to stop rotating when the elevators are up or neutral even if the rudder is held full with the spin.

3. Jettisoning the landing gear or moving the center of gravity 5 percent of the mean aerodynamic chord forward or rearward of normal will have an adverse effect on recovery characteristics.

4. Increasing the wing dihedral or varying the mass distribution moderately will have no appreciable effect on the spin and recovery characteristics.

5. The glider will spin inverted only when the stick is forward. The rotation can be stopped satisfactorily by reversing the rudder, but the stick must be moved back to insure nosing out of the stalled inverted position. Care should be taken to avoid entering an erect spin when the stick is moved full back.

6. A 4.5-foot diameter silk parachute with a 27-foot towline for the minimum flying weight condition, and a 7.5-foot diameter silk parachute with a 27-foot towline for the fully loaded condition will give satisfactory recoveries by parachute action alone.

7. The glider will tumble, but the tumbling motion can be stopped by deflecting the elevators against the rotation.

Langley Memorial Aeronautical Laboratory
National Advisory Committee for Aeronautics
Langley Field, Va.

REFERENCES

1. Zimmerman, C. H.: Preliminary Tests in the N.A.C.A. Free-Spinning Wind Tunnel. NACA Rep. No. 557, 1936.

2. Seidman, Oscar, and Neihouse, A. I.: Comparison of Free-Spinning Wind-Tunnel Results with Corresponding Full-Scale Spin Results. NACA MR, Dec. 7, 1938.

TABLE I

DIMENSIONAL CHARACTERISTICS OF THE

CORNELIUS XFG-1 FUEL GLIDER

Wing span, ft	54
Length over all, ft	29.4
Wing:	
Area, sq. ft	356
Incidence, deg	
Root	0
Tip	1.5
Aspect ratio	8
Dihedral (variable) along quarter chord, deg	2 to 8
Sweepforward at quarter chord, deg	15
Mean aerodynamic chord, in.	85.82
Ailerons (unbalanced):	
Area, sq ft	31.6
Span, in.	171.25
Chord (rearward of hinge line), percent wing chord	20
Elevator:	
Area, sq ft	36.4
Span, in.	107
Chord (rearward of hinge line), percent wing chord	25
Vertical tail:	
Area, sq ft	43.5
Span (from ℄ of glider), in.	125
Rudder area, sq ft	19.4

NATIONAL ADVISORY
COMMITTEE FOR AERONAUTICS

TABLE II

SPIN TEST CONDITIONS FOR THE $\frac{1}{17.8}$-SCALE MODEL OF THE XFG-1 GLIDER

NATIONAL ADVISORY COMMITTEE FOR AERONAUTICS

No.	Loading	Mass variation	Landing gear	Spoilers	Modification	Type of spin	Data on table
1	Minimum flying weight	None	On	Neutral	None	Erect	VII
2	------do------	---------do---------	----do----	Extended	-----do-----	---do---	VIII
3	------do------	---------do---------	Jettisoned	Neutral	-----do-----	---do---	IX
4	------do------	I_X and I_Z decreased 20 percent of I_X	On	---do---	-----do-----	---do---	X
5	------do------	I_X and I_Z increased 17 percent of I_X	----do----	---do---	-----do-----	---do---	XI
6	------do------	c.g. rearward 5 percent of M.A.C.	----do----	---do---	-----do-----	---do---	XII
7	------do------	c.g. forward 5 percent of M.A.C.	----do----	---do---	-----do-----	---do---	XIII
8	------do------	None	----do----	---do---	-----do-----	Inverted	XIV
9	------do------	---------do---------	----do----	---do---	Wing dihedral changed from 2° to 8°	Erect	XV
10	------do------	---------do---------	----do----	---do---	Spin-recovery parachutes	---do---	XXI
11	Full load	---------do---------	----do----	---do---	None	---do---	XVI
12	------do------	---------do---------	----do----	Extended	-----do-----	---do---	XVII
13	------do------	---------do---------	Jettisoned	Neutral	-----do-----	---do---	XVIII
14	------do------	c.g. forward 5 percent of M.A.C.	On	---do---	-----do-----	---do---	XIX
15	------do------	None	----do----	---do---	-----do-----	Inverted	XX
16	------do------	---------do---------	----do----	---do---	Spin-recovery parachutes	Erect	XXI
17	------do------	c.g. rearward 5 percent of M.A.C.	----do----	---do---	-----do-----	---do---	XXI

TABLE III.- WEIGHTS, CENTER-OF-GRAVITY LOCATIONS, AND MOMENTS OF INERTIA

FOR VARIOUS LOADINGS POSSIBLE ON THE XFG-1 GLIDER

[a]Loading	Weight (lb)	Center-of-gravity location		Moments of inertia (slug-ft^2)			μ at 15,000 ft	μ at sea level	Mass parameters		
		$x/\bar{c}$	$z/\bar{c}$	I_X	I_Y	I_Z			$\frac{I_X - I_Y}{mb^2}$	$\frac{I_Y - I_Z}{mb^2}$	$\frac{I_Z - I_X}{mb^2}$
1 Minimum flying weight with pilot and landing gear	3881.2	0.14	-0.051	5139	4446	8775	4.20	2.65	19.7×10^{-4}	-122.7×10^{-4}	103.0×10^{-4}
2 Minimum flying weight with pilot and 25 gallons of gasoline	3599.3	.16	-.087	4798	4436	8635	3.85	2.45	11.1×10^{-4}	-128.6×10^{-4}	117.5×10^{-4}
3 Minimum flying weight without pilot	3681.2	.19	-.055	5133	4131	8455	3.96	2.49	30.1×10^{-4}	-130.1×10^{-4}	99.9×10^{-4}
5 Full load with pilot and landing gear	7997.2	.14	-.022	5387	4935	9253	8.61	5.43	6.3×10^{-4}	-59.7×10^{-4}	53.5×10^{-4}
4 Full load without pilot and landing gear	7782.2	.19	-.036	4905	4329	8505	8.40	5.30	8.2×10^{-4}	-59.2×10^{-4}	51.0×10^{-4}
6 Full load with pilot, without landing gear	7602.2	.13	-.033	5293	4840	9249	8.19	5.16	6.6×10^{-4}	-64.1×10^{-4}	57.5×10^{-4}

[a]Numbers correspond to numbered points on figure 4.

NATIONAL ADVISORY
COMMITTEE FOR AERONAUTICS

TABLE IV.- FULL-SCALE VALUES OF THE WEIGHTS, CENTER-OF-GRAVITY LOCATIONS, AND MOMENTS OF INERTIA FOR THE LOADINGS TESTED ON THE XFG-1 MODEL

[a]Loading	Weight (lb)	Center-of-gravity location		Moments of inertia (slug-ft^2)			μ at 15,000 ft	μ at sea level	Mass parameters		
		$x/\bar{c}$	$z/\bar{c}$	I_X	I_Y	I_Z			$\frac{I_X - I_Y}{mb^2}$	$\frac{I_Y - I_Z}{mb^2}$	$\frac{I_Z - I_X}{mb^2}$
[1]Minimum flying weight with pilot and landing gear	3846	0.14	-0.052	5084	4369	9365	4.13	2.61	20.3×10^{-4}	-143.5×10^{-4}	123.2×10^{-4}
[2]Minimum flying weight with pilot, landing gear jettisoned	3507	.12	-.035	4789	4275	9096	3.79	2.38	16.2×10^{-4}	-152.0×10^{-4}	135.8×10^{-4}
[4]Minimum flying weight with pilot and landing gear (c.g. rearward 5 percent M.A.C.)	3846	.19	-.052	5084	3844	8840	4.13	2.61	35.6×10^{-4}	-143.5×10^{-4}	107.9×10^{-4}
[3]Minimum flying weight with pilot and landing gear (c.g. forward 5 percent M.A.C.)	3846	.09	-.052	5084	4864	9860	4.13	2.61	6.3×10^{-4}	-143.5×10^{-4}	137.2×10^{-4}
[5]Minimum flying weight with pilot and landing gear (I_X & I_Z increased 17.2 percent of I_X)	4004	.14	-.058	5941	4369	10222	4.30	2.71	43.3×10^{-4}	-161.3×10^{-4}	118.0×10^{-4}
[6]Minimum flying weight with pilot and landing gear (I_X & I_Z decreased 20 percent of I_X)	3890	.14	----	4060	4369	8340	4.20	2.65	-8.7×10^{-4}	-112.5×10^{-4}	121.2×10^{-4}
[1]Full load with pilot and landing gear	7886	.14	-.010	5664	4738	10204	8.51	5.35	13.0×10^{-4}	-76.6×10^{-4}	63.6×10^{-4}
[2]Full load with pilot, landing gear jettisoned	7547	.12	-.023	5384	4655	9930	8.13	5.11	10.7×10^{-4}	-77.4×10^{-4}	66.7×10^{-4}
[3]Full load with pilot and landing gear (c.g. forward 5 percent M.A.C.)	7886	.08	-.010	5664	5738	11203	8.51	5.35	-1.0×10^{-4}	-76.6×10^{-4}	77.6×10^{-4}

[a]Numbers correspond to numbered points on figure 4.

NATIONAL ADVISORY
COMMITTEE FOR AERONAUTICS

TABLE V

LONGITUDINAL-TRIM TEST CONDITIONS ON

THE $\frac{1}{17.8}$-SCALE MODEL OF THE XFG-1 GLIDER

No.	Center-of-gravity location percent M.A.C.	Landing gear	Spoilers	Data on table
1	14	On	Neutral	XXII
2	14	----do----	Extended	↓
3	14	Jettisoned	Neutral	↓
4	14	----do----	Extended	↓
5	19	On	Neutral	↓
6	19	----do----	Extended	↓
7	19	Jettisoned	Neutral	↓
8	19	----do----	Extended	↓

NATIONAL ADVISORY
COMMITTEE FOR AERONAUTICS

TABLE VI

TUMBLING TEST CONDITIONS ON THE $\frac{1}{17.8}$-SCALE

MODEL OF THE XFG-1 GLIDER

No.	Loading	Mass variation	Landing gear	Spoilers	Data on table
1	Minimum flying weight	None	On	Neutral	XXIII & XXIV
2	------do------	---------do--------	Jettisoned	---do---	XXIV
3	------do------	---------do--------	On	Extended	↓
4	------do------	c.g. forward 5 percent of M.A.C.	-----do-----	Neutral	↓
5	------do------	c.g. rearward 5 percent of M.A.C.	-----do-----	---do---	↓
6	Full load	None	-----do-----	---do---	XXV

NATIONAL ADVISORY
COMMITTEE FOR AERONAUTICS

TABLE VII.- RESULTS OF SPIN TESTS OF A $\frac{1}{17.8}$-SCALE MODEL OF THE XFG-1 GLIDER

IN THE MINIMUM FLYING WEIGHT CONDITION WITH SPOILERS NEUTRAL

[Model launched erect with spinning rotation, rudder full right; indicated controls reversed]

Elevator setting	Aileron setting	Description of model motion (before control reversal)	Flight path (after full rudder reversal)	Flight path (after simultaneous full reversal of rudder and elevator)	Flight path (after elevator reversal)
Full up	Full against	Extremely oscillatory; alternate rolling and yawing motion	Made from 1/4 to 3/4 of a turn and went into stalled glide	Made from 1/4 to 1/2 of a turn and went into steep glide or dive	Made 1/4 of a turn and went into steep glide or dive
Do----	Neutral	Very oscillatory, inner wing dropped and model yawed into spin	Made from 1/4 to 1/2 of a turn and went into stalled glide	Made 1/4 of a turn and went into steep glide or inverted spin	Made from 1/4 to 1 turn and went into steep glide or dive
Do----	Full with	Extremely oscillatory; alternate rolling and yawing motion	Made 1/4 of a turn and went into a stalled glide	Made 1/4 of a turn and went into dive	Made from 1/4 to 1/2 of a turn and went into steep glide or dive
Neutral	Full against	Pitched and rolled onto back; went into left spin when launched with rudder against rotation	--------	----------	--------
Do----	Neutral	Very oscillatory, inner wing dropped and model yawed into spin	Made 1/4 of a turn and went into stalled glide	----------	--------
Do----	Full with	---------do---------	Made 1/4 to 1 turn and went into stalled glide	----------	--------
Down (10°)	Full against	Pitched into dive	--------	----------	--------
Do----	Neutral	Extremely oscillatory; alternate rolling and yawing motions	Would probably have gone on its back after approx. $1\frac{1}{2}$ turns	----------	--------
Do----	Full with	---------do---------	Made 1/2 of a turn and rolled on back	----------	--------

NATIONAL ADVISORY
COMMITTEE FOR AERONAUTICS

TABLE VIII

RESULTS OF SPIN TESTS OF A $\frac{1}{17.8}$-SCALE MODEL OF THE XFG-1 GLIDER

IN THE MINIMUM FLYING WEIGHT CONDITION WITH SPOILERS EXTENDED

[Model launched erect with spinning rotation, rudder full right; indicated controls reversed]

Elevator setting	Aileron setting	Description of model motion (before control reversal)	Flight path (after full rudder reversal)	Flight path (after full elevator reversal)
Full up	Full against	Stalled glide	------	------
Do----	Neutral	---------do---------	------	Went into steep dive
Do----	Full with	---------do---------	------	Went into erect spin or inverted dive
Neutral	Full against	---------do---------	------	------
Do----	Neutral	---------do---------	------	------
Do----	Full with	---------do---------	------	------
Down (10°)	Full against	Pitched into dive	------	------
Do----	Neutral	Extremely oscillatory, alternate rolling and yawing motion	Made 1/4 turn and pitched into a dive	------
Do----	Full with	---------do---------	------	------

NATIONAL ADVISORY
COMMITTEE FOR AERONAUTICS

TABLE IX

RESULTS OF SPIN TESTS OF A $\frac{1}{17.8}$-SCALE MODEL OF THE XFG-1 GLIDER IN THE MINIMUM FLYING WEIGHT CONDITION WITH THE LANDING GEAR JETTISONED

[Spoilers neutral; model launched erect with spinning rotation, rudder full right; rudder reversal from full right to full left]

Elevator setting	Aileron setting	Description of model motion (before rudder reversal)	Flight path (after rudder reversal)
Full up (30°)	Full against	Periodically pitched from a flat to a steep attitude	Steep glide, extremely oscillatory in roll and pitch
Do-------	Neutral	Stalled glide, extremely oscillatory in roll	Same as before reversal
Do-------	Full with	Spin very oscillatory in roll and pitch	Made 1/2 of a turn and went into stalled glide
Neutral	Full against	Rolled and pitched on back	Rolled into dive
Do-------	Neutral	Stalled glide, very oscillatory in roll	Same as before reversal
Do-------	Full with	----------do----------	----------do----------
Full down (10°)	Full against	Rolled and yawed into dive or onto back	Stalled glide, extremely oscillatory in roll
Do-------	Neutral	Stalled glide, very oscillatory in yaw and pitch	Stalled glide
Do-------	Full with	Stalled glide	------

NATIONAL ADVISORY
COMMITTEE FOR AERONAUTICS

TABLE X

RESULTS OF SPIN TESTS OF A $\frac{1}{17.8}$-SCALE MODEL OF THE XFG-1 GLIDER

IN THE MINIMUM FLYING WEIGHT CONDITION WITH INCREASED WING DIHEDRAL

[Spoilers neutral; wing dihedral increased to 8°; model launched erect with spinning rotation, rudder full right; rudder reversal from full right to full left]

Elevator setting	Aileron setting	Description of model motion (before rudder reversal)	Flight path (after rudder reversal)
Full up	Full with	Stalled spiral glide	Straight stalled glide approximately 1/4 turn after reversal
Do----	Neutral	----------do----------	Do.
Do----	Full against	----------do----------	Do.
Neutral	Full with	Wandering, wide radius spin	Stalled glide $1\frac{3}{4}$ turns after reversal
Do----	Neutral	----------do----------	Stalled glide 3/4 turn after reversal
Do----	Full against	----------do----------	Stalled glide 1/2 turn after reversal
Full down (20°)	Full with	Spin very oscillatory in pitch and yaw (made approximately 1 turn in flat attitude and 2 in steep attitude, then repeated)	Same as before reversal

NATIONAL ADVISORY
COMMITTEE FOR AERONAUTICS

TABLE X - Concluded

RESULTS OF SPIN TESTS OF A $\frac{1}{17.8}$-SCALE MODEL OF THE XFG-1 GLIDER -Concluded

Elevator setting	Aileron setting	Description of model motion (before rudder reversal)	Flight path (after rudder reversal)
Full down (20°)	Neutral	Steep spin	Went into inverted stalled glide approximately $4\frac{1}{2}$ turns after reversal
Do----	Full against	Went inverted	-------

NATIONAL ADVISORY
COMMITTEE FOR AERONAUTICS

TABLE XI

RESULTS OF SPIN TESTS OF A $\frac{1}{17.8}$-SCALE MODEL OF THE XFG-1 GLIDER IN THE MINIMUM FLYING WEIGHT CONDITION WITH MASS RETRACTED LATERALLY

[I_X and I_Z decreased 20 percent of I_X from normal; spoilers neutral; model launched erect with spinning rotation, rudder full right; rudder reversal from full right to full left]

Elevator setting	Aileron setting	Description of model motion (before rudder reversal)	Flight path (after rudder reversal)
Full up	Full against	Stalled glide, extremely oscillatory in roll, pitch, and yaw	Stalled glide, very oscillatory in roll; rotation stopped in 1 turn
Do----	Neutral	----------do----------	Stalled glide, extremely oscillatory in roll; rotation stopped in 3/4 of a turn
Do----	Full with	Stalled glide, extremely oscillatory in roll	Same as before reversal
Neutral	Full against	----------do----------	Do.
Do----	Neutral	Steep dive	Stalled glide, very oscillatory in roll
Do----	Full with	Stalled glide	Same as before reversal
Full down (10°)	Full against	Model yawed and pitched into steep dive	Do.
Do----	Neutral	Steep glide, very oscillatory in roll	Stalled glide
Do----	Full with	Stalled glide, sometimes dived into inverted position	Model went into dive

NATIONAL ADVISORY COMMITTEE FOR AERONAUTICS

TABLE XII

RESULTS OF SPIN TESTS OF A $\frac{1}{17.8}$-SCALE MODEL OF THE XFG-1 GLIDER

IN THE MINIMUM FLYING WEIGHT CONDITION WITH MASS EXTENDED LATERALLY

[I_X and I_Z increased 17 percent of I_X from normal; spoilers neutral; model launched erect with spinning rotation, rudder full right; rudder reversal from full right to full left]

Elevator setting	Aileron setting	Description of model motion (before rudder reversal)	Flight path (after rudder reversal)
Full up (30°)	Full against	Stalled glide, extremely oscillatory in roll, yaw, and pitch	Stalled glide, very oscillatory in roll
Do----	Neutral	----------do----------	Do.
Do----	Full with	----------do----------	Do.
Neutral	Full against	Model rolled and yawed into steep dive	Same as before reversal
Do----	Neutral	Moderately steep spin, very oscillatory in roll	Made $1\frac{1}{2}$ turns and went into steep stalled glide
Do----	Full with	Stalled glide, yawed and banked	Stalled glide
Full down (10°)	Full against	Rolled and yawed into steep dive	Dive
Do----	Neutral	Very oscillatory spin, whipping motion in roll and yaw	Made more than 1 turn and went into dive
Do----	Full with	----------do----------	--------

NATIONAL ADVISORY
COMMITTEE FOR AERONAUTICS

TABLE XIII

RESULTS OF SPIN TESTS OF A $\frac{1}{17.8}$-SCALE MODEL OF THE XFG-1 GLIDER IN THE MINIMUM FLYING WEIGHT CONDITION WITH THE CENTER OF GRAVITY MOVED 5 PERCENT REARWARD OF NORMAL

[Spoilers neutral; model launched erect with spinning rotation, rudder full right; rudder reversal from full right to full left]

Elevator setting	Aileron setting	Description of model motion (before rudder reversal)	Flight path (after rudder reversal)
Full up	Full against	Violently oscillatory in roll, yaw, and pitch	-------
Do-------	Neutral	Stalled glide, very oscillatory in roll and yaw	-------
Do-------	Full with	Stalled glide, very oscillatory in roll	-------
Neutral	Full against	Pitched and rolled onto back	-------
Do-------	Neutral	Stalled glide, very oscillatory in roll, sometimes rolled onto back	-------
Do-------	Full with	Stalled glide, very oscillatory in roll	-------
Full down (10°)	Full against	Rolled and pitched onto back	-------
Do-------	Neutral	Rolled and pitched into vertical or inverted position	-------
Do-------	Full with	Stalled glide, slightly oscillatory in roll	-------

NATIONAL ADVISORY
COMMITTEE FOR AERONAUTICS

TABLE XIV

RESULTS OF SPIN TESTS OF A $\frac{1}{17.8}$-SCALE MODEL OF THE XFG-1 GLIDER

IN THE MINIMUM FLYING WEIGHT CONDITION WITH THE CENTER OF GRAVITY MOVED 5 PERCENT FORWARD OF NORMAL

[Model launched erect with spinning rotation, rudder full right; rudder reversal from full right to full left]

Elevator setting	Aileron setting	Description of model motion (before rudder reversal)	Flight path (after rudder reversal)
Full up (30°)	Full against	Stalled glide	Stalled glide, oscillatory in roll
Do----	Neutral	----------do----------	Same as before reversal
Do----	Full with	----------do----------	Dive or stalled glide
Neutral	Full against	Steep wandering and very oscillatory spin with whip	Same as before reversal
Do----	Neutral	----------do----------	Went into a steep dive in greater than $1\frac{1}{4}$ turns
Do----	Full with	----------do----------	-------
Full down (10°)	Full against	Steep spin, extremely wandering and oscillatory	Same as before reversal
Do---	Neutral	Steep wandering and oscillatory spin with whip	Went into inverted dive
Do----	Full with	----------do----------	Same as before reversal

NATIONAL ADVISORY
COMMITTEE FOR AERONAUTICS

TABLE XV

RESULTS OF INVERTED SPIN TESTS OF A $\frac{1}{17.8}$-SCALE MODEL

OF THE XFG-1 GLIDER IN THE MINIMUM FLYING WEIGHT CONDITION

[Spoilers neutral; model launched inverted with spinning rotation, rudder full to pilot's right; rudder reversal from full to pilot's right to full to pilot's left]

Elevator setting	Aileron setting	Description of model motion (before rudder reversal)	[1]Flight path (after rudder reversal)
Stick full forward	Stick full right (controls together)	Inverted glide oscillatory in yaw	Made 1/4 of a turn and glided inverted
Do----	Stick neutral	Very oscillatory in yaw, pitched into erect position	Made 1/4 of a turn and dived inverted
Do----	Stick full left (controls crossed)	Spin very oscillatory in roll and yaw	Do.
Stick neutral	Stick full right (controls together)	Oscillatory, pitched into erect stalled glide	Made 1/4 of a turn and dived into erect position

[1]Rudder reversed while model was in flat attitude due to launching rotation

NATIONAL ADVISORY
COMMITTEE FOR AERONAUTICS

TABLE XV - Concluded

RESULTS OF INVERTED SPIN TESTS - Concluded

Elevator setting	Aileron setting	Description of model motion (before rudder reversal)	[1]Flight path (after rudder reversal)
Stick neutral	Stick neutral	Oscillatory, pitched into erect position; erect stalled glide once	Made 1/4 of a turn and went into erect stalled glide
Do----	Stick full left (controls crossed)	Oscillatory, pitched into erect position	Made 1/4 of a turn and dived inverted
Stick full back	Stick full right (controls together)	Oscillatory, pitched into erect stalled glide	Made from 1/4 to 1/2 of a turn and dived into erect stalled glide
Do----	Stick neutral	----------do----------	Made 1/2 of a turn and dived into erect position
Do----	Stick full left (controls crossed)	----------do----------	- Do.

[1]Rudder reversed while model was in flat attitude due to launching rotation

NATIONAL ADVISORY
COMMITTEE FOR AERONAUTICS

TABLE XVI

RESULTS OF SPIN TESTS OF A $\frac{1}{17.8}$-SCALE MODEL
OF THE XFG-1 GLIDER IN THE FULLY LOADED CONDITION

[Spoilers neutral; model launched erect with spinning rotation, rudder full right; rudder reversal from full right to full left]

Elevator setting	Aileron setting	Description of model motion (before rudder reversal)	Flight path (after rudder reversal)
Full up	Full with	Stalled spiral glide	-------
Do----	Neutral	Stalled glide	-------
Do----	Full against	----------do----------	-------
Neutral	Full with	Spiral dive	-------
Do----	Neutral	Made 1/2 turn, dived a short distance; motion is repeated	Same as before reversal
Do----	Full against	Very oscillatory with wide radius; might be spin or spiral glide	Made 1/4 turn and glided (moderately steep)
Full down (20°)	Full with	Wandering spin with large pitching oscillations; very steep	Made 1 to $2\frac{1}{2}$ turns and went into inverted spins
Do----	Neutral	----------do----------	Same as before reversal
Do----	Full against	Pitched into inverted spin	-------

NATIONAL ADVISORY
COMMITTEE FOR AERONAUTICS

TABLE XVII

RESULTS OF SPIN TESTS OF A $\frac{1}{17.8}$-SCALE MODEL OF THE XFG-1 GLIDER

IN THE FULLY LOADED CONDITION WITH SPOILERS EXTENDED

[Model launched erect with spinning rotation, rudder full right; reversal from full right to full left]

Elevator setting	Aileron setting	Description of model motion (before rudder reversal)	Flight path (after rudder reversal)
Full up	Full with	Spiral glide	-------
Do----	Neutral	----------do----------	-------
Do----	Full against	----------do----------	-------
Neutral	Full with	----------do----------	Same as before reversal
Do----	Neutral	----------do----------	Do.
Do----	Full against	Wandering spin; one yawing oscillation per turn of spin	Made 1/2 turn and went into stalled glide
Full down (20°)	Full with	Spiral dive	Made 1/4 turn and went into inverted dive
Do----	Neutral	----------do----------	Made 3/4 turn and went into inverted dive
Do----	Full against	Went into inverted spin	-------

NATIONAL ADVISORY
COMMITTEE FOR AERONAUTICS

TABLE XVIII

RESULTS OF SPIN TESTS OF A $\frac{1}{17.8}$-SCALE MODEL OF THE XFG-1 GLIDER

IN THE FULLY LOADED CONDITION WITH LANDING GEAR JETTISONED

[Spoilers neutral; model launched erect with spinning rotation, rudder full right; rudder reversal from full right to full left]

Elevator setting	Aileron setting	Description of model motion (before rudder reversal)	Flight path (after rudder reversal)
Full up	Full with	Stalled glide	-------
Do----	Neutral	----------do----------	-------
Do----	Full against	----------do----------	-------
Neutral	Full with	Wide spiral glide oscillatory in pitch	Same as before reversal
Do----	Neutral	----------do----------	Do.
Do----	Full against	Wide radius spin	Made 1/2 turn and dived
Full down (20°)	Full with	Spin, oscillatory in roll, pitch, and yaw	Same as before reversal
Do----	Neutral	Spin, oscillatory in pitch and yaw	Do.
Do----	Full against	Spin, oscillatory in roll, pitch, and yaw	Made 3/4 turn and went into stalled glide; or made 1/4 turn and went into steep inverted dive

NATIONAL ADVISORY
COMMITTEE FOR AERONAUTICS

TABLE XIX

RESULTS OF SPIN TESTS OF A $\frac{1}{17.8}$-SCALE MODEL OF THE XFG-1 GLIDER IN THE FULLY LOADED CONDITION WITH THE CENTER OF GRAVITY MOVED 5 PERCENT FORWARD OF NORMAL

[Spoilers neutral; model launched erect with spinning rotation, rudder full right; rudder reversal from full right to full left]

Elevator setting	Aileron setting	Description of model motion (before rudder reversal)	Flight path (after rudder reversal)
Full up	Full with	Went into a stalled glide	-------
Do----	Neutral	----------do----------	-------
Do----	Full against	----------do----------	-------
Neutral	Full with	Steep spin	Same as before reversal
Do----	Neutral	----------do----------	Do.
Do----	Full against	----------do----------	Dived out after approximately 1 turn

NATIONAL ADVISORY
COMMITTEE FOR AERONAUTICS

TABLE XX

RESULTS OF INVERTED SPIN TESTS OF A $\frac{1}{17.8}$-SCALE MODEL

OF THE XFG-1 GLIDER IN FULLY LOADED CONDITION

[Spoilers neutral; model launched inverted with spinning rotation, rudder full to pilot's right; rudder reversal from full to pilot's right to full to pilot's left]

Elevator setting	Aileron setting	Description of model motion (before rudder reversal)	Flight path (after rudder reversal)
Stick full forward	Stick full right (controls together)	Went into erect dive	Model immediately rolled with ailerons into erect position, pitched into inverted position, pitched back into erect position and dived.
Do----	Stick neutral	Spun with violent rolling and pitching oscillations	Came out in a steep erect or inverted dive after 1/4 turn, model tended to pitch into flat inverted position
Stick neutral	Stick full right (controls together)	Went erect	-------

NATIONAL ADVISORY
COMMITTEE FOR AERONAUTICS

TABLE XX-- Concluded

RESULTS OF INVERTED SPIN TESTS - Concluded

Elevator setting	Aileron setting	Description of model motion (before rudder reversal)	Flight path (after rudder reversal)
Stick neutral	Stick neutral	Went erect	-------
Stick full back	Stick full right (controls together	---------do---------	-------
Do----	Stick neutral	---------do---------	-------
Do----	Stick full left (controls crossed)	Increased rolling oscillations caused model to go into erect stalled glide	-------

NATIONAL ADVISORY
COMMITTEE FOR AERONAUTICS

TABLE XXI

EFFECT OF SPIN-RECOVERY PARACHUTES ON RECOVERY

CHARACTERISTICS OF MODELS OF THE XFG-1 GLIDER

[Loading as indicated; parachute towline attached to tailcone; spoilers closed; ailerons neutral; recovery attempted by opening parachute; rudder full with the spin during recovery attempt; right erect spins]

Elevator position	Center-of-gravity position, percent M.A.C	Parachute data		Rate of vertical descent (fps) (full-scale) (a)	Turns for recovery
		Diameter (feet) (full scale)	Towline length (feet) (full scale)		
Minimum flying weight					
Full up	14	3.6	27	150	$\frac{1}{2}$, [b]$\frac{1}{2}$
Full down	14	3.6	27	150	$2\frac{1}{4}$, $2\frac{3}{4}$
Full up	14	4.5	27	150	$\frac{3}{4}$, 1
Full down	14	4.5	27	150	$1\frac{1}{4}$, $1\frac{1}{2}$

[a]Because of the wandering and oscillatory nature of the spins, the values of the airspeed are very approximate.
[b]Visual estimate.

NATIONAL ADVISORY
COMMITTEE FOR AERONAUTICS

TABLE XXI - Continued

EFFECT OF SPIN-RECOVERY PARACHUTES - Continued

Elevator position	Center-of-gravity position, percent M.A.C.	Parachute data		Rate of vertical descent (fps) (full scale) (a)	Turns for recovery
		Diameter (feet) (full scale)	Towline length (feet) (full scale)		
Fully loaded					
Full up	14	5.5	27	250	1, $1\frac{1}{4}$, 2
Full down	14	5.5	27	250	1, $2\frac{3}{4}$
Full up	14	7.1	27	250	$\frac{1}{4}$, $\frac{3}{4}$
Full down	14	7.1	27	250	$1\frac{1}{4}$, 2
Full up	19	7.1	27	250	$\frac{1}{2}$
Full up	14	7.1	13.5	250	$\frac{1}{4}$, $\frac{1}{4}$

[a]Because of the wandering and oscillatory nature of the spins, the values of the airspeed are very approximate.

NATIONAL ADVISORY
COMMITTEE FOR AERONAUTICS

TABLE XXI - Concluded

EFFECT OF SPIN-RECOVERY PARACHUTES - Concluded

Elevator position	Center-of-gravity position, percent M.A.C.	Parachute data		Rate of vertical descent (fps) (full scale) (a)	Turns for recovery
		Diameter (feet) (full scale)	Towline length (feet) (full scale)		
Fully loaded					
Full down	14	7.1	13.5	250	1, $1\frac{3}{4}$
Full up	19	7.1	13.5	250	No effect of parachute
Full down	19	7.1	13.5	250	$\frac{1}{4}$, $\frac{3}{4}$

[a]Because of the wandering and oscillatory nature of the spins, the values of the airspeed are very approximate.

NATIONAL ADVISORY
COMMITTEE FOR AERONAUTICS

TABLE XXII.- RESULTS OF LONGITUDINAL-TRIM TESTS

OF THE $\frac{1}{17.8}$-SCALE MODEL OF THE XFG-1 GLIDER

[Minimum flying weight with pilot and landing gear; center of gravity as indicated; spoilers and landing gear as indicated; ailerons neutral; rudder neutral]

Elevator setting (deg)	Spoilers	Landing gear	C.G. location (percent MAC)	Trim angles of attack, α, deg			Remarks
				Normal flight range	Large positive	Inverted	
Free	Neutral	On	14	----	45	-27½	
30U	---do---	----do----	14	----	53	----	
2U	---do---	----do----	14	----	33	-25	
N	---do---	----do----	14	----	34	-26	
1D	---do---	----do----	14	0	35	-27½	Trimmed momentarily at 0° (approx.)
2D	---do---	----do----	14	----	34	-29	
5D	---do---	----do----	14	----	26½	-34	
7½D	---do---	----do----	14	----	25	-36½	
10D	---do---	----do----	14	----	----	-37	
Free	Extended	----do----	14	----	41	-40	
30U	---do---	----do----	14	----	62½	----	
10U	---do---	----do----	14	----	38	-18	
5U	---do---	----do----	14	----	33	-22	
N	---do---	----do----	14	----	32½	-26½	
2½D	---do---	----do----	14	----	27½	-26½	
5D	---do---	----do----	14	----	25	-30	
10D	---do---	----do----	14	----	----	-39	
Free	Neutral	Jettisoned	14	----	24½	-28	
30U	---do---	----do----	14	----	57½	----	
N	---do---	----do----	14	----	26	-27	
1D	---do---	----do----	14	-3	35	-28	Trimmed momentarily at -3° (approx.)
2D	---do---	----do----	14	----	32½	-30	Very sensitive
3D	---do---	----do----	14	----	30	-28	
5D	---do---	----do----	14	----	25	-32½	
7½D	---do---	----do----	14	----	23	-36	Very little force required for change from erect to inverted attitude
10D	---do---	----do----	14	----	----	-36	
Free	Extended	----do----	14	----	37	-37	
30U	---do---	----do----	14	----	58	----	
N	---do---	----do----	14	----	24½	-30	
5D	---do---	----do----	14	----	27½	-29½	
7½D	---do---	----do----	14	----	24	-33	
10D	---do---	----do----	14	----	----	-44	
Free	Neutral	On	19	----	59	-55	Slightly oscillatory in both attitudes
30U	---do---	----do----	19	----	----	----	Erect attitude, too oscillatory to determine reading
N	---do---	----do----	19	----	35½	-45	
10D	---do---	----do----	19	----	25	----	
15D	---do---	----do----	19	----	----	-62½	
Free	Extended	----do----	19	----	----	----	Oscillated between -65° and -74½°. Did not trim at any attitude
30U	---do---	----do----	19	----	26½	----	Oscillatd at times between 26½° and 33½°.
N	---do---	----do----	19	----	35½	----	
10D	---do---	----do----	19	----	----	-63	
Free	Neutral	Jettisoned	19	----	46½	-59	Both attitudes were oscillatory. Elevators were at maximum deflections for both attitudes.
30U	---do---	----do----	19	----	68	----	Erect attitudes were oscillatory sometimes.
N	---do---	----do----	19	----	39	-44	
10D	---do---	----do----	19	----	28	-56	
15D	---do---	----do----	19	----	20	-55	
20D	---do---	----do----	19	----	22	-64	
25D	---do---	----do----	19	----	22	-69	Paused at erect attitude, then rotated into inverted attitude.
30D	---do---	----do----	19	----	----	-69	
Free	Extended	----do----	19	----	----	-51	Erect attitude, too oscillatory to determine reading.
30U	---do---	----do----	19	----	62	-10	Erect attitude, was sometimes oscillatory.
N	---do---	----do----	19	----	37½	-41	
10D	---do---	----do----	19	----	26	-60	Both attitudes slightly oscillatory.

NATIONAL ADVISORY
COMMITTEE FOR AERONAUTICS

TABLE XXIII

TUMBLING TESTS OF THE XFG-1 GLIDER MODEL

WITHOUT INITIAL ROTATION

[Model released in a nose-up attitude simulating a whip stall. Minimum flying weight; spoilers neutral]

Elevator setting	Aileron setting	Rudder setting	Tunnel airspeed (full scale) (fps)	Rate of descent (full scale) (fps)	Behavior of model
30°U	N	N	38	100	Oscillated in pitch through almost ±180° measured from nose-down attitude
N	---do---	---do--	38	102	Do.
10°D	---do---	---do--	38	----	Oscillated in pitch through almost ±180° measured from nose-down attitude into erect stalled attitude
30°U	---do---	25°L	38	----	Oscillated in pitch through almost ±180° measured from nose-down attitude
N	---do---	25°L	38	----	Do.
10°D	---do---	25°L	38	----	Do.
30°U	RAD, LAU	N	49	----	Do.
N	---do---	---do--	49	----	Oscillated in pitch through almost ±180° measured from nose-down attitude into erect stalled attitude
10°D	---do---	---do--	49	----	Do.

N - Neutral
RAD - Right aileron down
LAU - Left aileron up

NATIONAL ADVISORY
COMMITTEE FOR AERONAUTICS

TABLE XXIV.- TUMBLING TESTS OF THE XFG-1 GLIDER MODEL WITH INITIAL ROTATION

[Model given initial pitching rotation about lateral axis
Tunnel airspeed for all tests was 63 feet per second, full scale

Model loading	Model condition	Elevator setting	Aileron setting	Rudder setting	Direction of initial pitching rotation	Rate of descent (full scale) (fps)	Behavior of model
Minimum flying weight	Landing gear on spoilers neutral	30°U	N	N	Negative	----	Stopped tumbling and pitched into dive with oscillations in pitch
Do------	-------do-------	N	---do---	---do---	----do----	96	Did not stop tumbling
Do------	-------do-------	10°D	---do---	---do---	----do----	87	Do.
Do------	-------do-------	30°U	---do---	25°L	----do----	----	Stopped tumbling and pitched into dive with oscillations in pitch
Do------	-------do-------	N	---do---	25°L	----do----	----	Did not stop tumbling
Do------	-------do-------	10°D	---do---	25°L	----do----	----	Do.
Do------	-------do-------	30°U	RAD, LAU	N	----do----	----	Stopped tumbling in inverted position and rolled to pilot's left into erect attitude
Do------	-------do-------	N	---do---	---do---	----do----	----	Did not stop tumbling
Do------	-------do-------	10°D	---do---	---do---	----do----	----	Do.
Do------	-------do-------	30°U	N	---do---	Positive	----	Do.
Do------	-------do-------	N	---do---	---do---	----do----	97	Do.
Do------	-------do-------	10°D	---do---	---do---	----do----	----	Stopped tumbling and pitched into dive with oscillations in pitch
Do------	-------do-------	30°U	---do---	25°L	----do----	----	Did not stop tumbling
Do------	-------do-------	N	---do---	25°L	----do----	----	Do.
Do------	-------do-------	10°D	---do---	25°L	----do----	----	Stopped tumbling and pitched into dive with oscillations in pitch
Do------	-------do-------	30°U	RAD, LAU	N	----do----	----	Did not stop tumbling
Do------	-------do-------	N	---do---	---do---	----do----	----	Do.
Do------	-------do-------	10°D	---do---	---do---	----do----	----	Stopped tumbling and pitched into dive with oscillations in pitch
Do------	Spoilers neutral landing gear jettisoned	30°U	N	---do---	Negative	----	Stopped tumbling and pitched into an erect stalled attitude
Do------	-------do-------	N	---do---	---do---	----do----	----	Did not stop tumbling
Do------	-------do-------	10°D	---do---	---do---	----do----	----	Do.
Do------	-------do-------	20°D	---do---	---do---	----do----	88	Do.
Do------	-------do-------	30°U	---do---	---do---	Positive	91	Do.
Do------	-------do-------	N	---do---	---do---	----do----	----	Stopped tumbling and pitched into dive with oscillations in pitch
Do------	-------do-------	10°D	---do---	---do---	----do----	----	Stopped tumbling and pitched into inverted stalled attitude
Do------	-------do-------	20°D	---do---	---do---	----do----	----	Do.
Do------	Landing gear on spoilers extended	30°U	---do---	---do---	Negative	----	Stopped tumbling and pitched into erect stalled position
Do------	-------do-------	N	---do---	---do---	----do----	----	Did not stop tumbling
Do------	-------do-------	10°D	---do---	---do---	----do----	----	Do.
Do------	-------do-------	20°D	---do---	---do---	----do----	95	Do.
Do------	-------do-------	30°U	---do---	---do---	Positive	95	Do.
Do------	-------do-------	N	---do---	---do---	----do----	----	Stopped tumbling and pitched into dive with oscillations in pitch
Do------	-------do-------	10°D	---do---	---do---	----do----	----	Do.
Do------	-------do-------	20°D	---do---	---do---	----do----	----	Do.
c.g. 5 percent forward	Landing gear on spoilers neutral	30°U	---do---	---do---	Negative	----	Do.
Do------	-------do-------	N	---do---	---do---	----do----	----	Do.
Do------	-------do-------	10°D	---do---	---do---	----do----	----	Did not stop tumbling
Do------	-------do-------	20°D	---do---	---do---	----do----	----	Do.
Do------	-------do-------	30°U	---do---	---do---	Positive	----	Do.
Do------	-------do-------	N	---do---	---do---	----do----	----	Stopped tumbling and pitched into dive with oscillations in pitch
Do------	-------do-------	10°D	---do---	---do---	----do----	----	Do.
Do------	-------do-------	20°D	---do---	---do---	----do----	----	Do.
c.g. 5 percent rearward	-------do-------	30°U	---do---	---do---	Negative	----	Do.
Do------	-------do-------	N	---do---	---do---	----do----	----	Did not stop tumbling
Do------	-------do-------	10°D	---do---	---do---	----do----	----	Do.
Do------	-------do-------	20°D	---do---	---do---	----do----	----	Do.
Do------	-------do-------	30°U	---do---	---do---	Positive	----	Do.
Do------	-------do-------	N	---do---	---do---	----do----	----	Do.
Do------	-------do-------	10°D	---do---	---do---	----do----	----	Do.
Do------	-------do-------	20°D	---do---	---do---	----do----	----	Stopped tumbling and pitched into dive with oscillations in pitch
Do------	-------do-------	30°D	---do---	---do---	----do----	----	Do.

RAD - Right aileron down
LAU - Left aileron up

TABLE XXV

TUMBLING TESTS OF A $\frac{1}{17.8}$-SCALE MODEL OF THE XFG-1 GLIDER IN THE FULLY LOADED CONDITION WITH INITIAL ROTATION

[Spoilers neutral; ailerons and rudder neutral; model given initial rotation about the lateral axis; the tests were run at an airspeed of 102.1 feet per second, full scale]

Elevator setting	Direction of initial pitching rotation	Behavior of model
Full up	Negative	Stopped tumbling and dived
Neutral	------do------	Did not stop tumbling
Full down	------do------	Do.
Full up	Positive	Do.
Neutral	------do------	Stopped tumbling and pitched into dive
Full down	------do------	Stopped tumbling

NATIONAL ADVISORY
COMMITTEE FOR AERONAUTICS

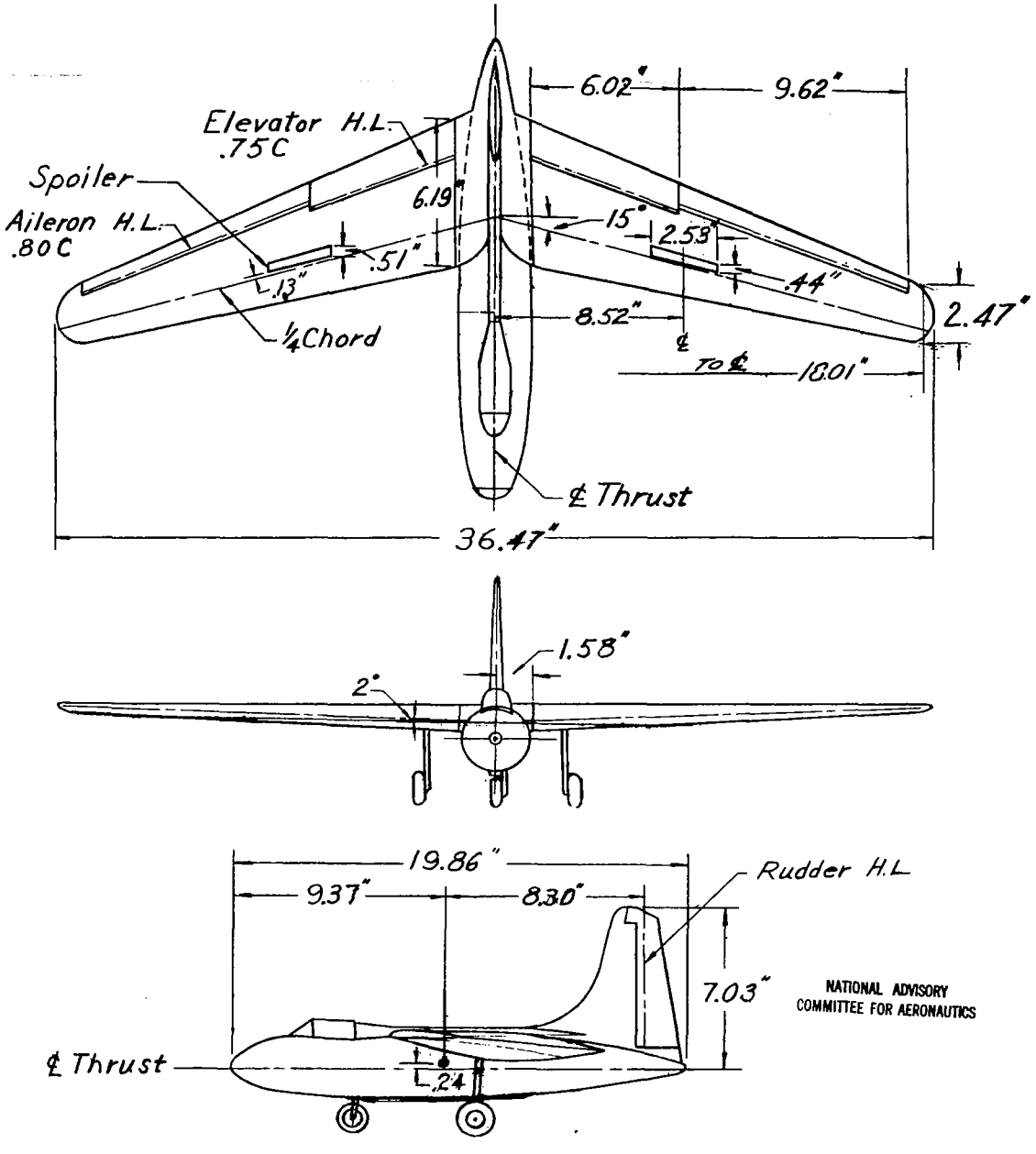

Figure 1. Sketch of the $\frac{1}{17.8}$ scale model of the Cornelius XFG-1 glider as tested in the free-spinning tunnel. Center-of-gravity position shown for the minimum flying weight condition

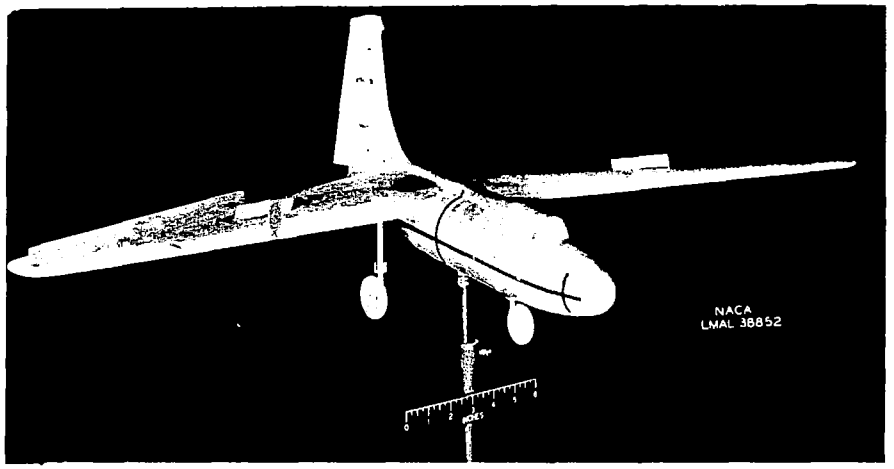

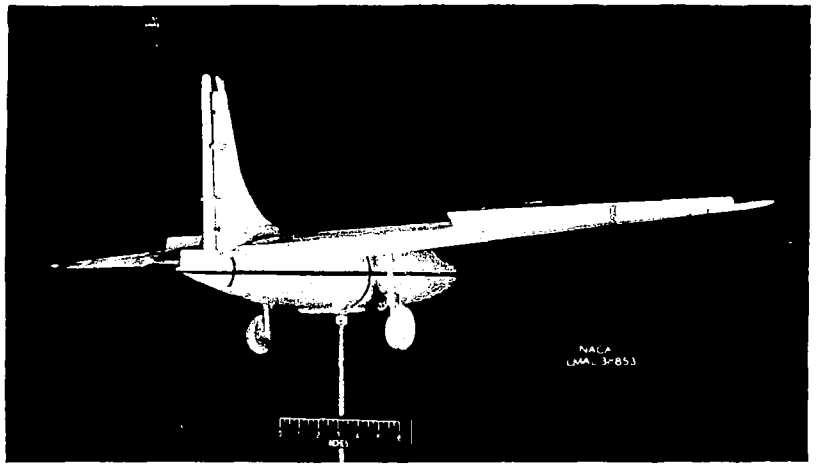

Normal condition, spoilers extended.

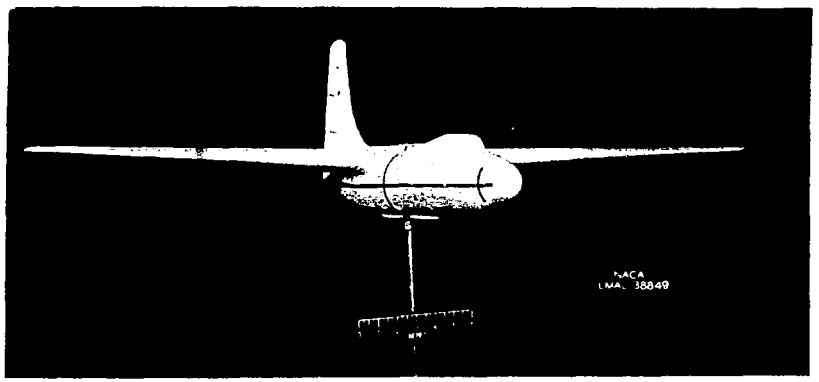

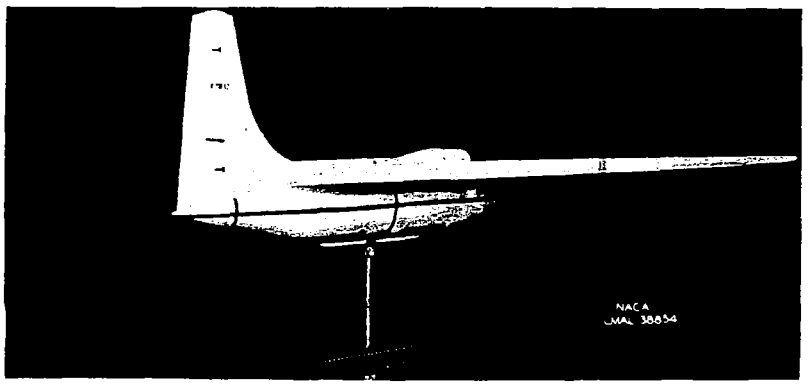

Normal condition-landing gear jettisoned.

Figure 2.- Photographs of the $\frac{1}{17.8}$-scale model of the Cornelius XFG-1 glider.

NATIONAL ADVISORY COMMITTEE FOR AERONAUTICS
LANGLEY MEMORIAL AERONAUTICAL LABORATORY - LANGLEY FIELD, VA.

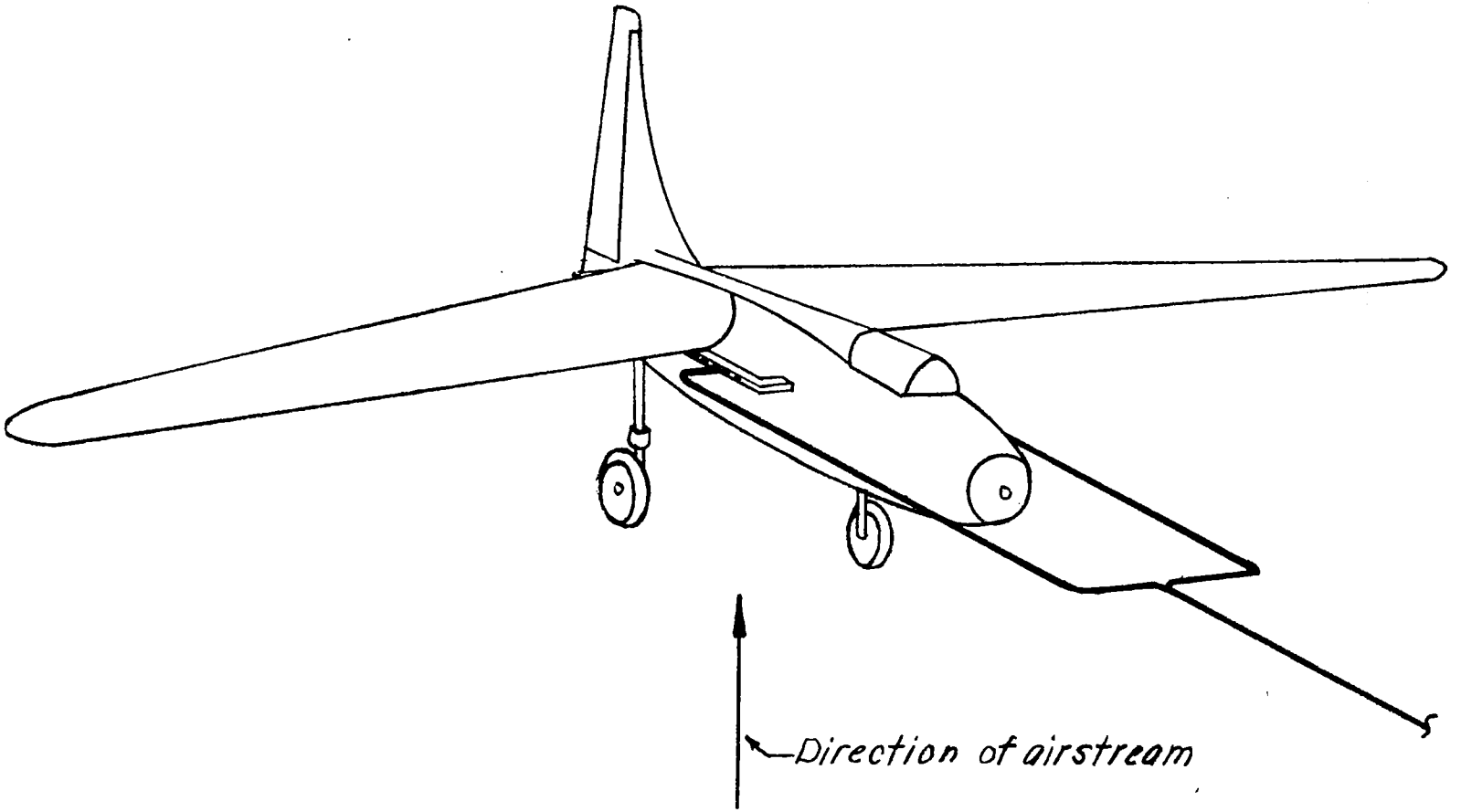

NATIONAL ADVISORY
COMMITTEE FOR AERONAUTICS

Figure 3 .- Sketch showing a 1/12.8-scale model of the XFG-1 glider in the wire rig used for the longitudinal trim tests.

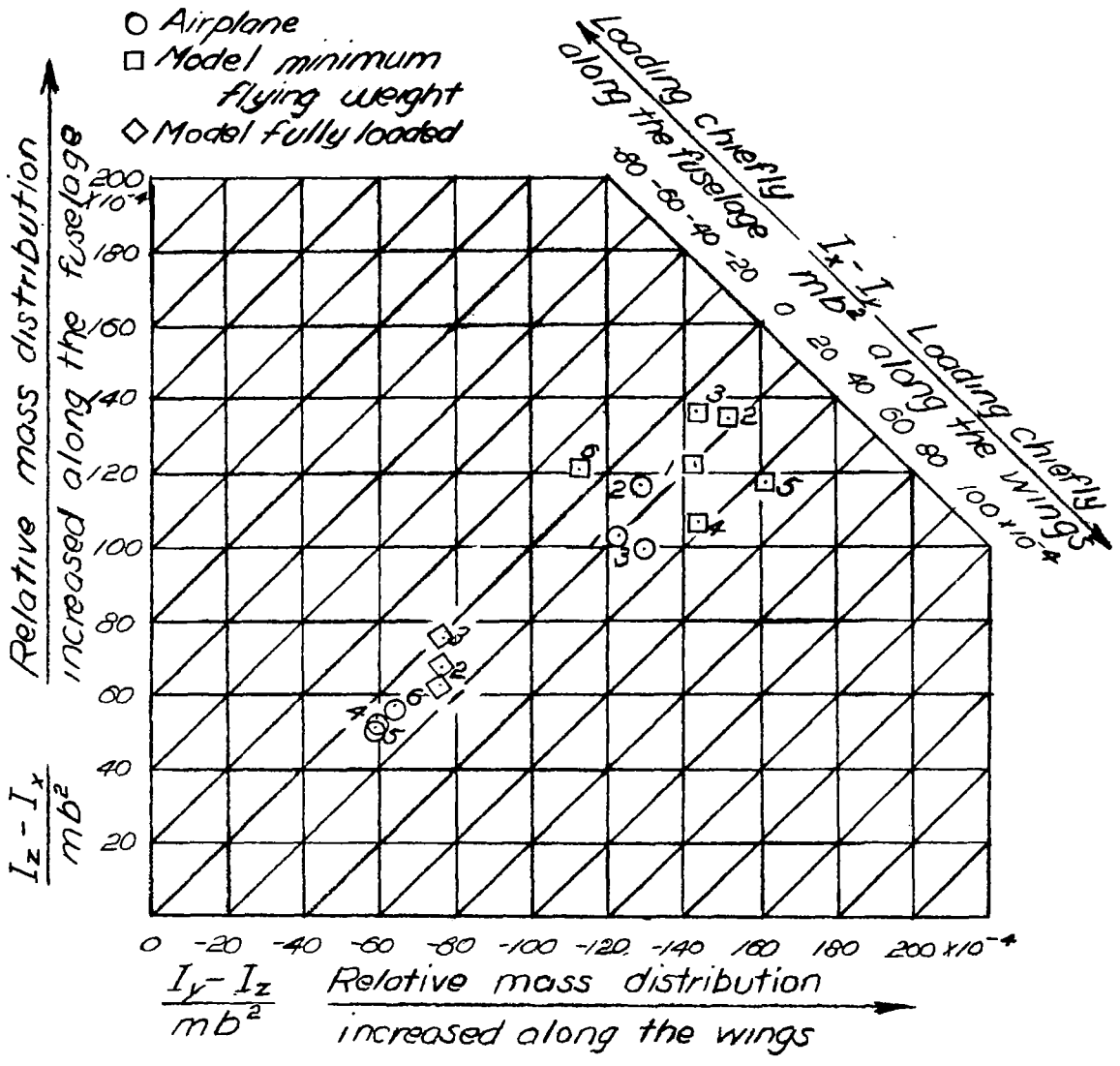

Figure 4 Mass parameters for loadings possible on the XFG-1 glider and for loadings tested on the model. (Points are for loadings listed in table III and IV.)

NATIONAL ADVISORY COMMITTEE FOR AERONAUTICS

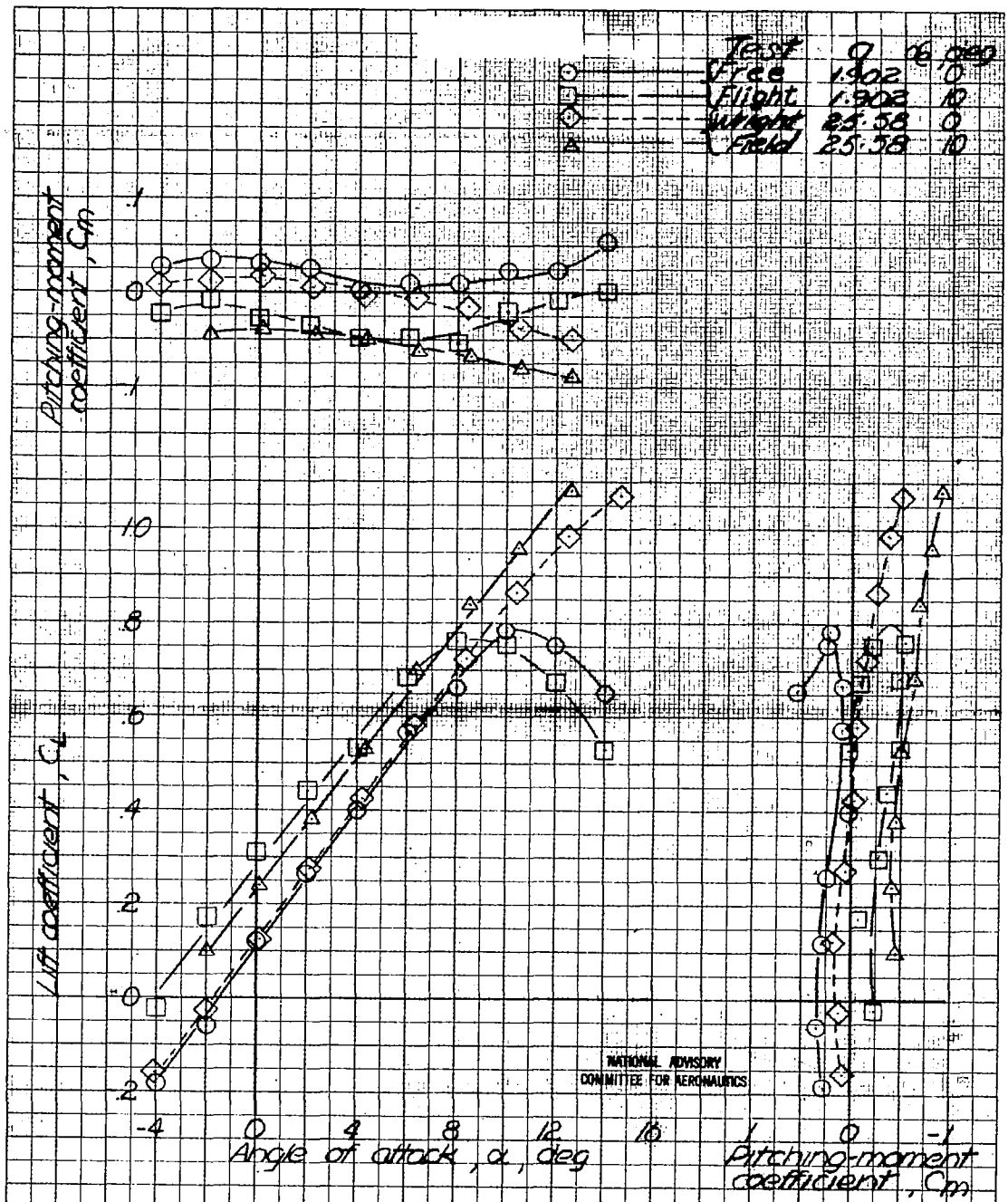

Figure 5.- Comparison of lift and pitching moment characteristics of .056 scale wind-tunnel model and Wright Field model of Cornelius KE-1 airplane. $\psi = 0°$; $\delta_f = 0°$; wheels off; spoilers off.

NASA Technical Library
3 1176 01403 5969